TRAFFIC GATES INDICATING LIGHTS

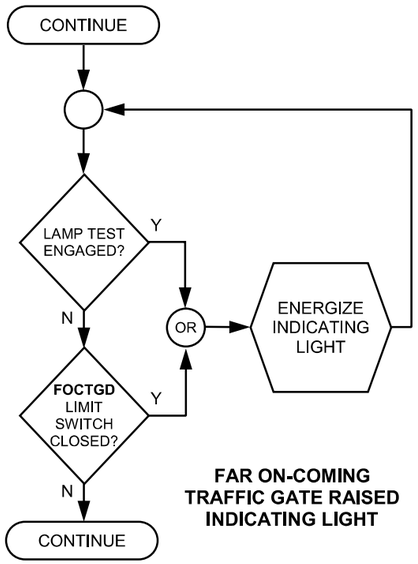

FAR ON-COMING TRAFFIC GATE RAISED INDICATING LIGHT

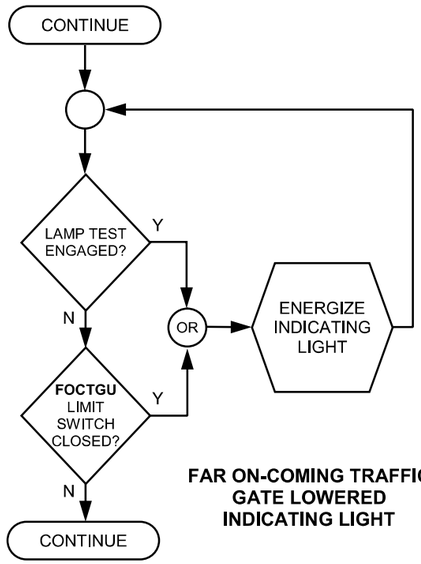

FAR ON-COMING TRAFFIC GATE LOWERED INDICATING LIGHT

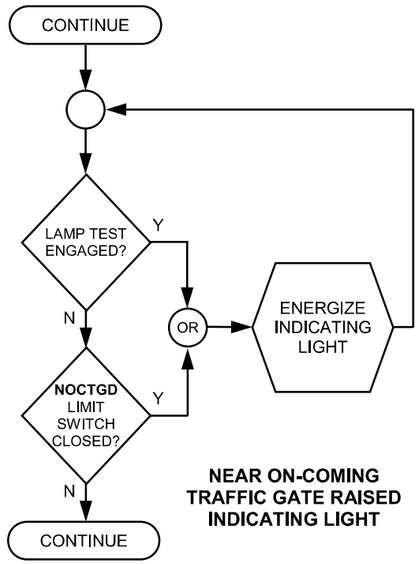

NEAR ON-COMING TRAFFIC GATE RAISED INDICATING LIGHT

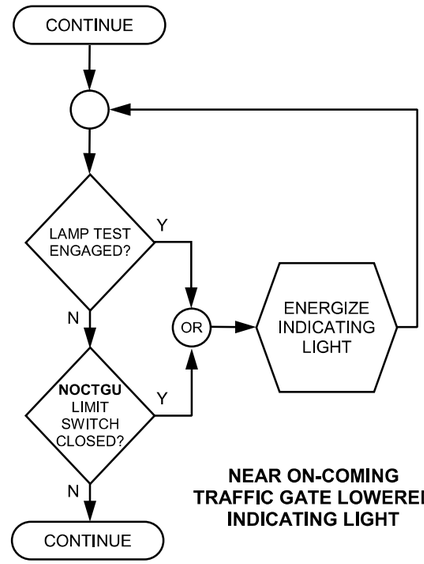

NEAR ON-COMING TRAFFIC GATE LOWERED INDICATING LIGHT

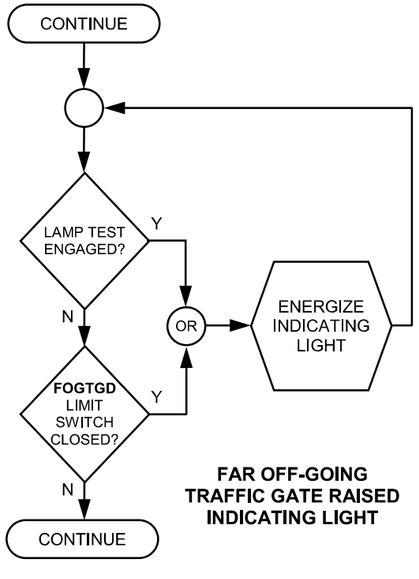

FAR OFF-GOING TRAFFIC GATE RAISED INDICATING LIGHT

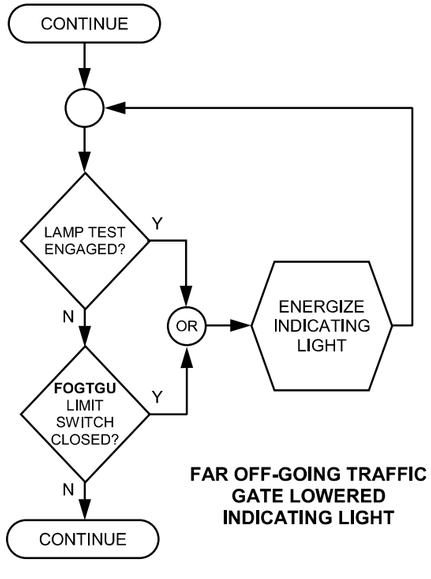

FAR OFF-GOING TRAFFIC GATE LOWERED INDICATING LIGHT

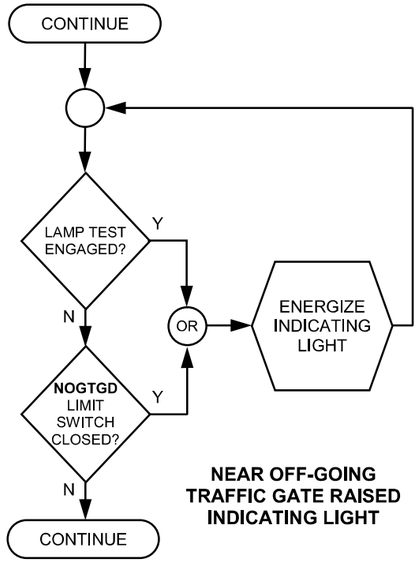

NEAR OFF-GOING TRAFFIC GATE RAISED INDICATING LIGHT

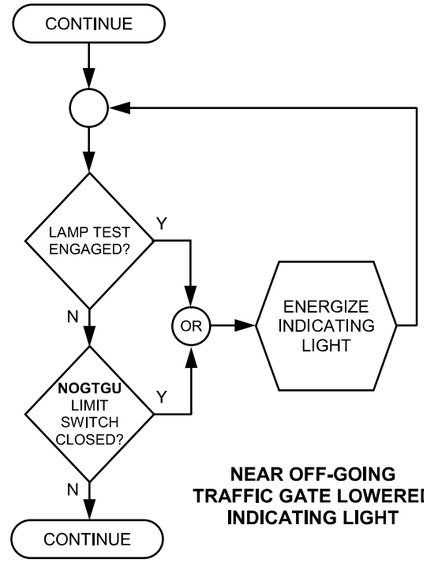

NEAR OFF-GOING TRAFFIC GATE LOWERED INDICATING LIGHT

SPAN LOCKS INDICATING LIGHTS

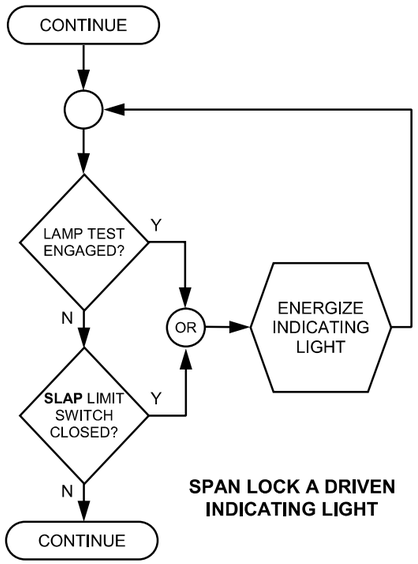

SPAN LOCK A DRIVEN INDICATING LIGHT

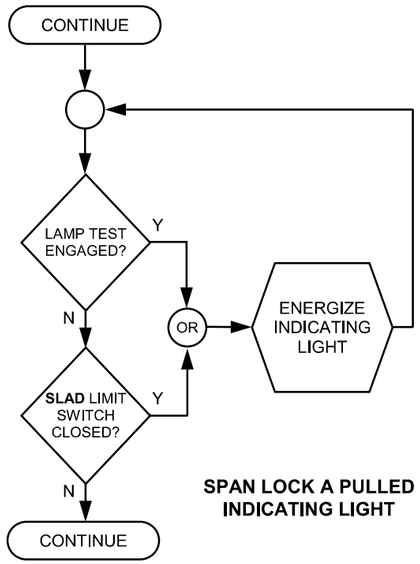

SPAN LOCK A PULLED INDICATING LIGHT

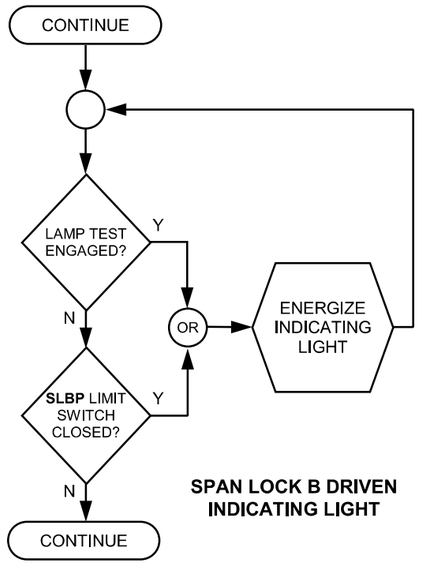

SPAN LOCK B DRIVEN INDICATING LIGHT

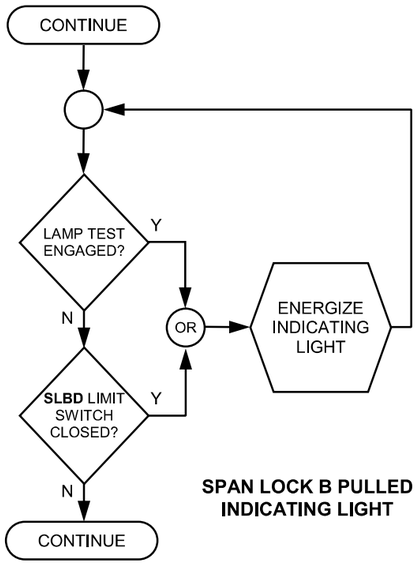

SPAN LOCK B PULLED INDICATING LIGHT

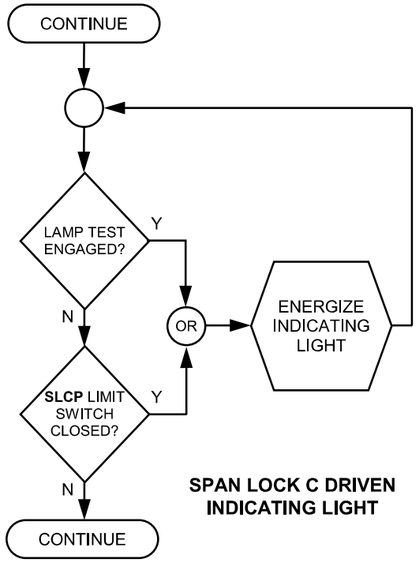

SPAN LOCK C DRIVEN INDICATING LIGHT

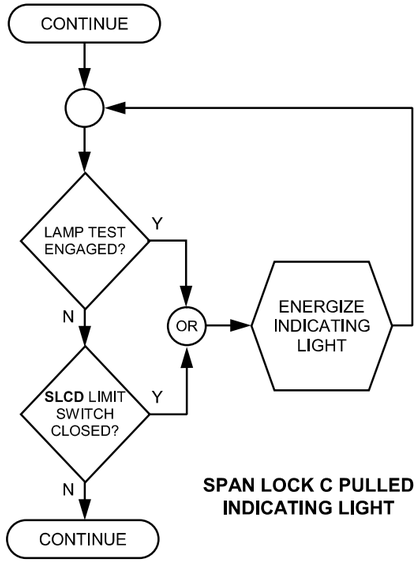

SPAN LOCK C PULLED INDICATING LIGHT

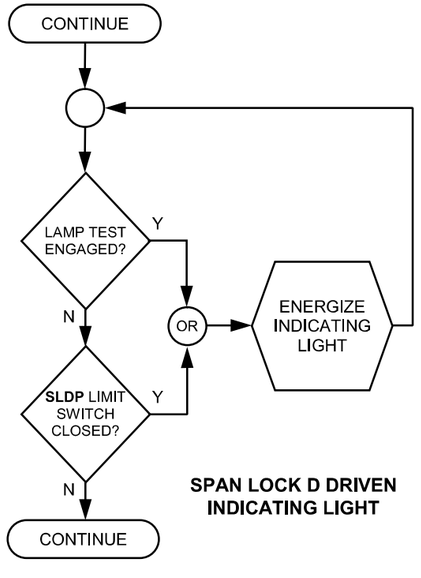

SPAN LOCK D DRIVEN INDICATING LIGHT

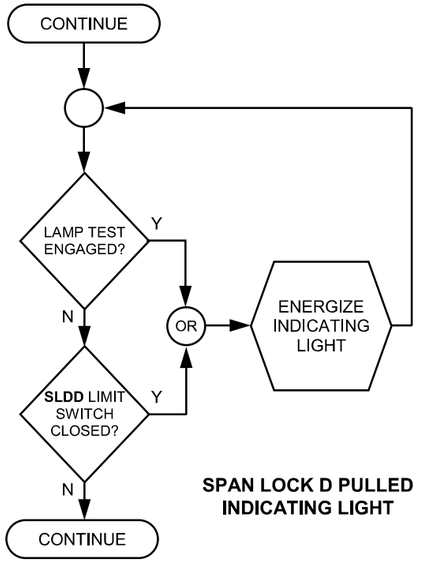

SPAN LOCK D PULLED INDICATING LIGHT

MOTOR / MACHINERY BRAKES INDICATING LIGHTS – 1 OF 4

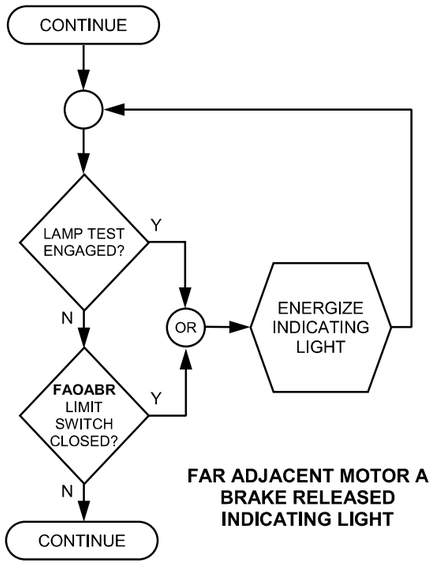

FAR ADJACENT MOTOR A BRAKE RELEASED INDICATING LIGHT

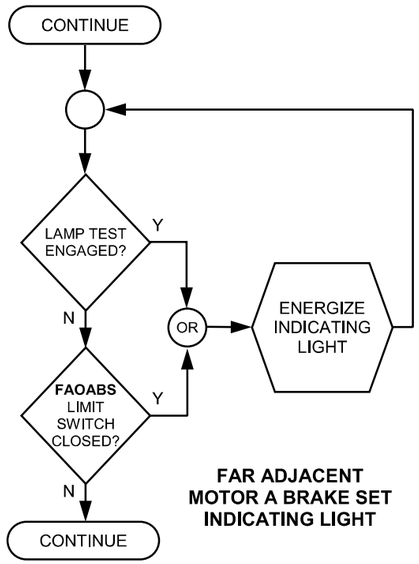

FAR ADJACENT MOTOR A BRAKE SET INDICATING LIGHT

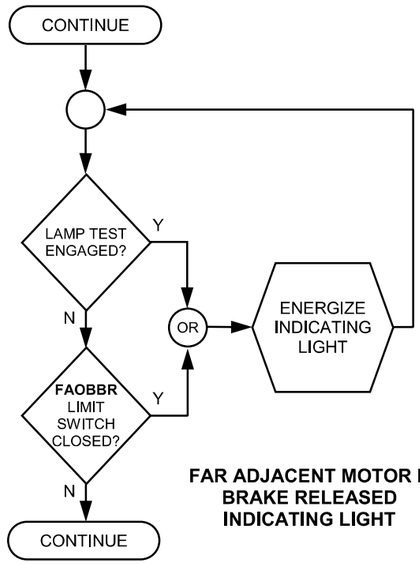

FAR ADJACENT MOTOR B BRAKE RELEASED INDICATING LIGHT

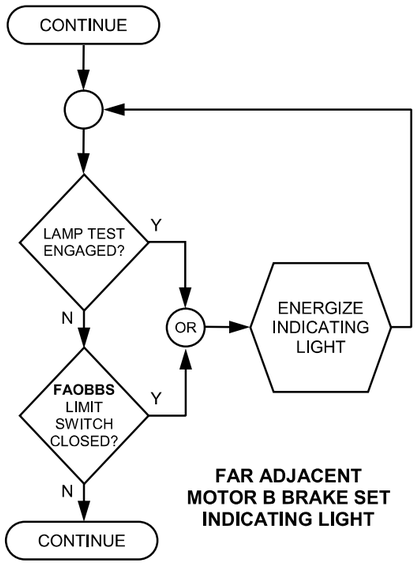

FAR ADJACENT MOTOR B BRAKE SET INDICATING LIGHT

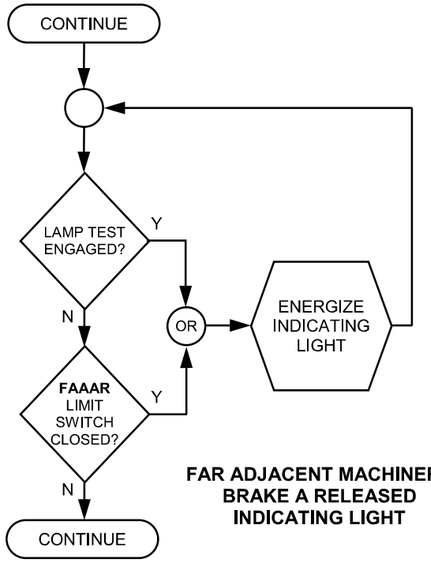

FAR ADJACENT MACHINERY BRAKE A RELEASED INDICATING LIGHT

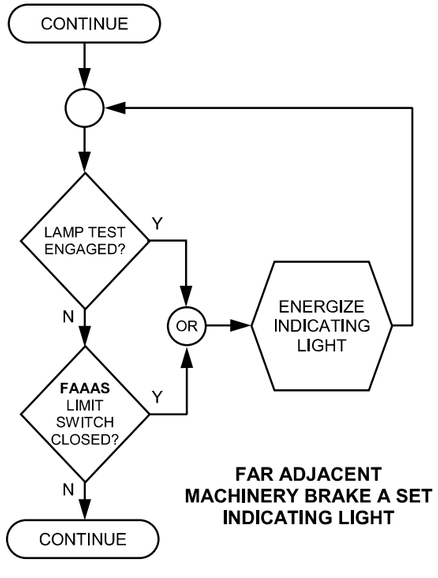

FAR ADJACENT MACHINERY BRAKE A SET INDICATING LIGHT

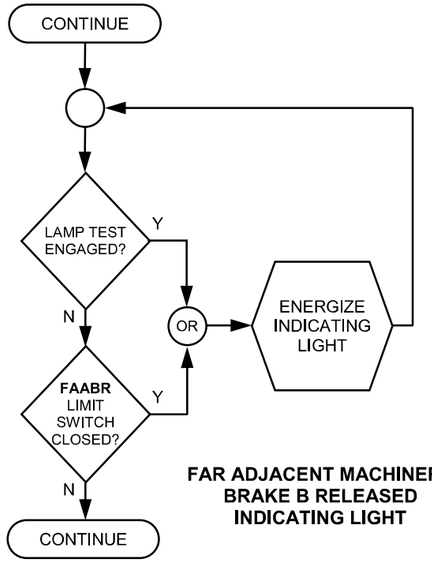

FAR ADJACENT MACHINERY BRAKE B RELEASED INDICATING LIGHT

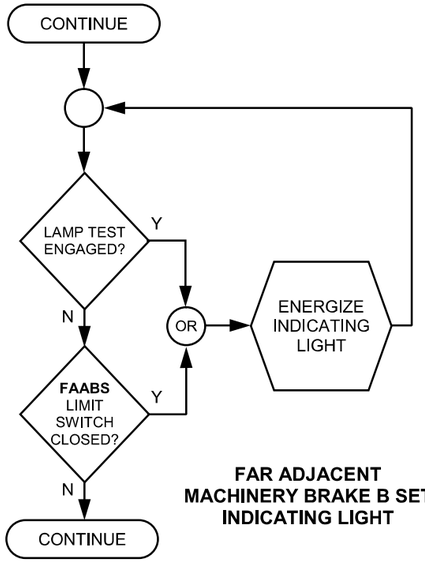

FAR ADJACENT MACHINERY BRAKE B SET INDICATING LIGHT

MOTOR / MACHINERY BRAKES INDICATING LIGHTS – 2 OF 4

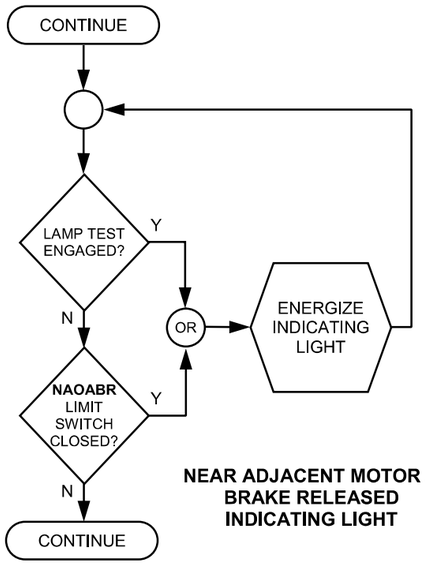

NEAR ADJACENT MOTOR A BRAKE RELEASED INDICATING LIGHT

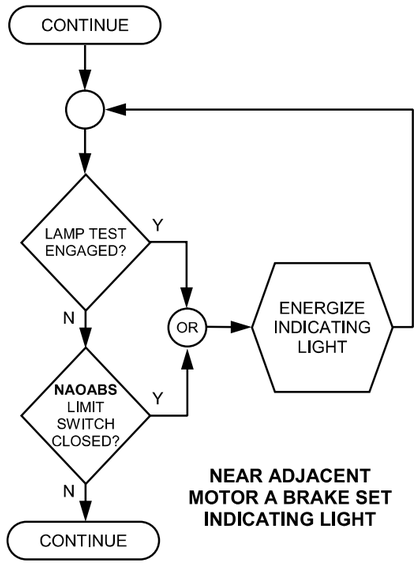

NEAR ADJACENT MOTOR A BRAKE SET INDICATING LIGHT

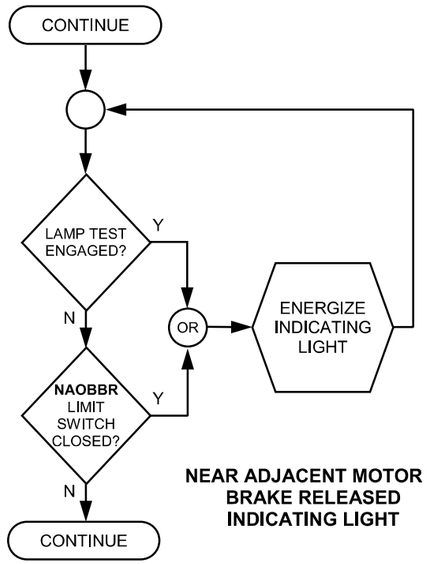

NEAR ADJACENT MOTOR B BRAKE RELEASED INDICATING LIGHT

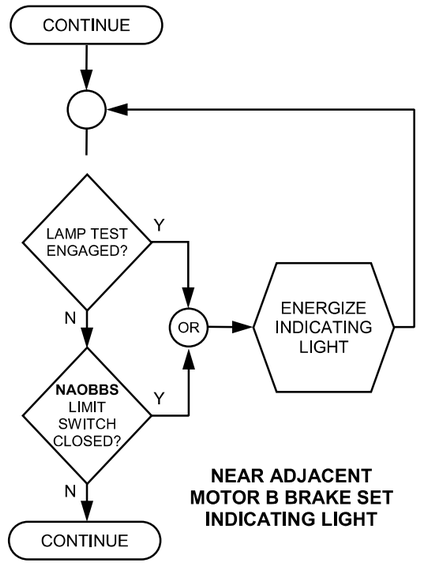

NEAR ADJACENT MOTOR B BRAKE SET INDICATING LIGHT

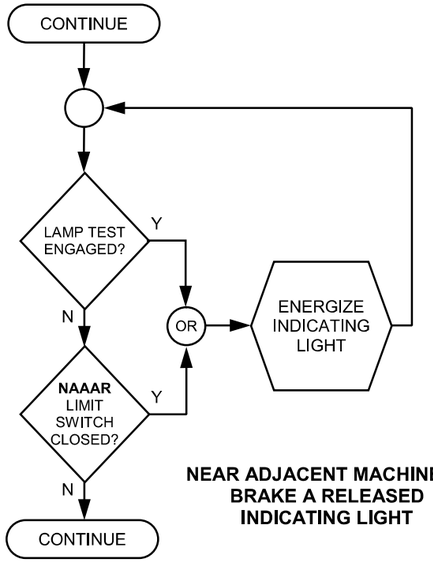

NEAR ADJACENT MACHINERY BRAKE A RELEASED INDICATING LIGHT

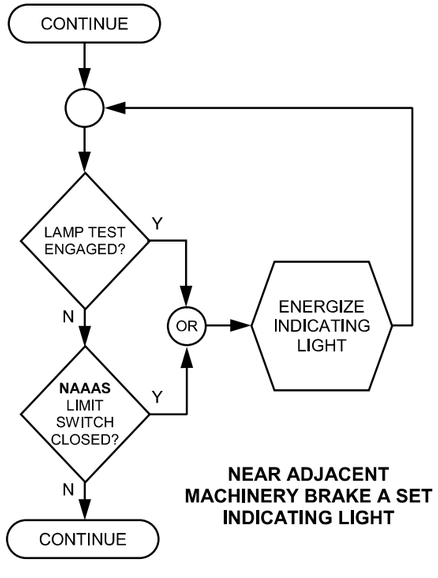

NEAR ADJACENT MACHINERY BRAKE A SET INDICATING LIGHT

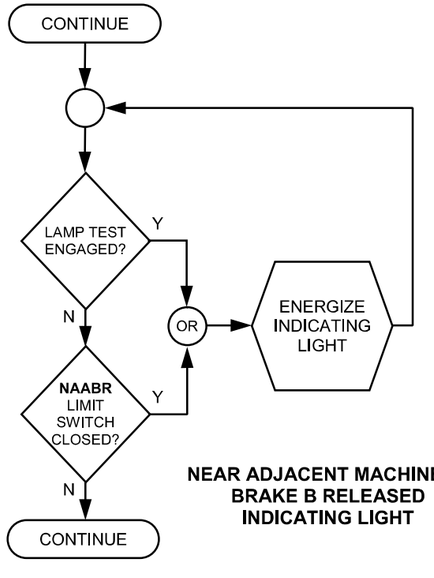

NEAR ADJACENT MACHINERY BRAKE B RELEASED INDICATING LIGHT

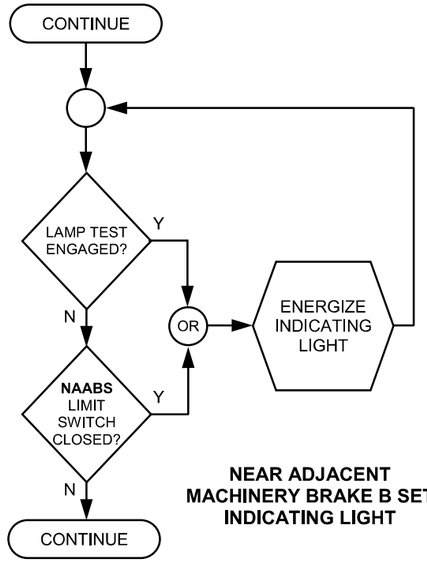

NEAR ADJACENT MACHINERY BRAKE B SET INDICATING LIGHT

MOTOR / MACHINERY BRAKES INDICATING LIGHTS – 3 OF 4

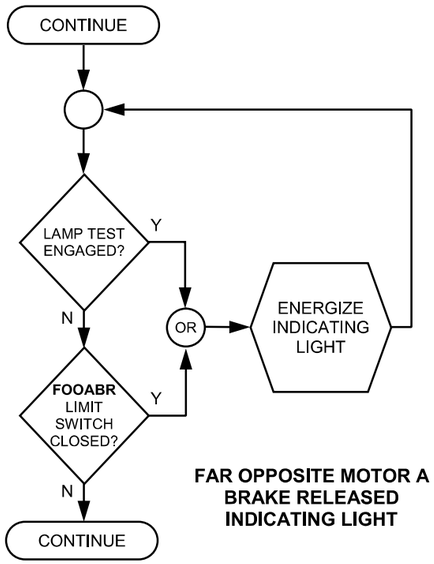

FAR OPPOSITE MOTOR A BRAKE RELEASED INDICATING LIGHT

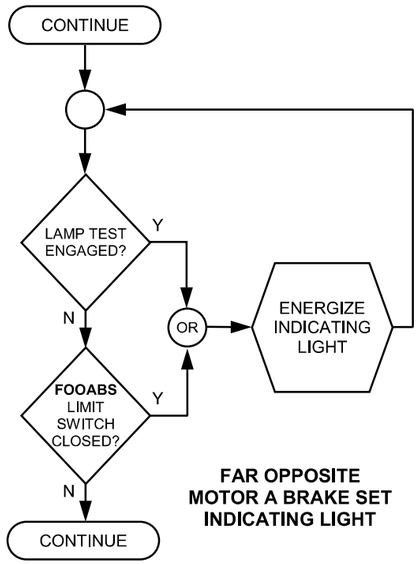

FAR OPPOSITE MOTOR A BRAKE SET INDICATING LIGHT

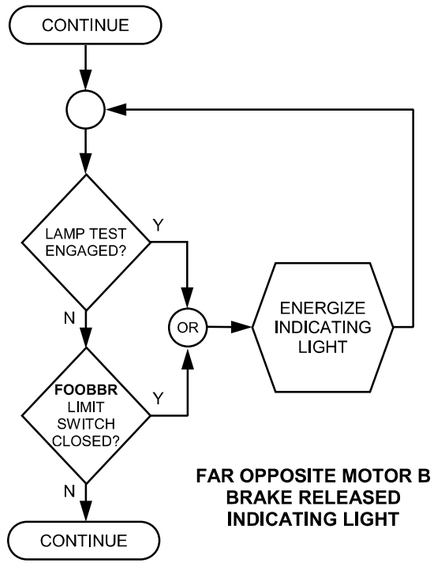

FAR OPPOSITE MOTOR B BRAKE RELEASED INDICATING LIGHT

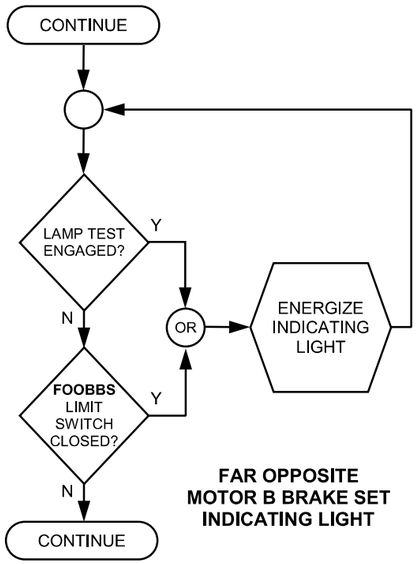

FAR OPPOSITE MOTOR B BRAKE SET INDICATING LIGHT

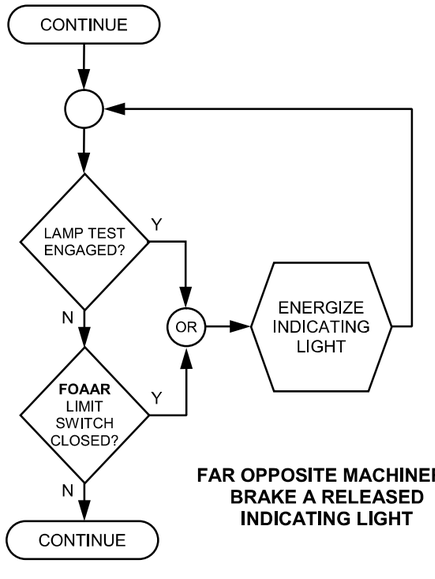

FAR OPPOSITE MACHINERY BRAKE A RELEASED INDICATING LIGHT

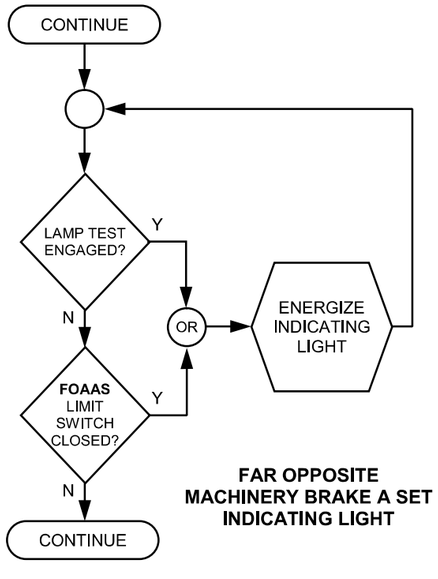

FAR OPPOSITE MACHINERY BRAKE A SET INDICATING LIGHT

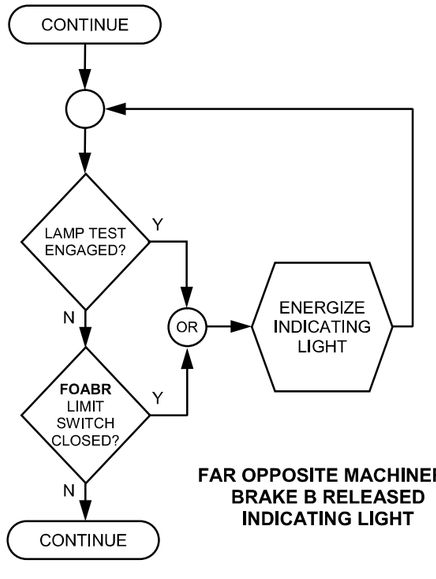

FAR OPPOSITE MACHINERY BRAKE B RELEASED INDICATING LIGHT

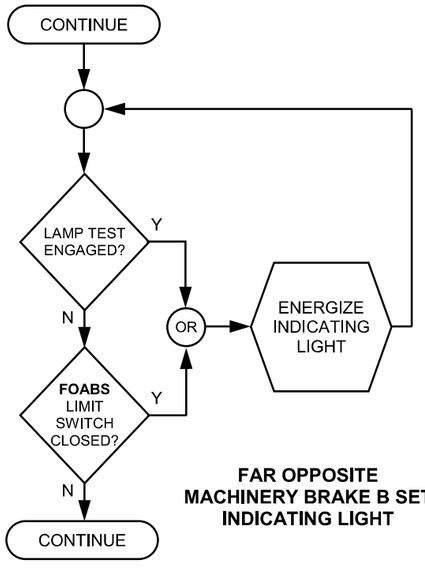

FAR OPPOSITE MACHINERY BRAKE B SET INDICATING LIGHT

MOTOR / MACHINERY BRAKES INDICATING LIGHTS – 4 OF 4

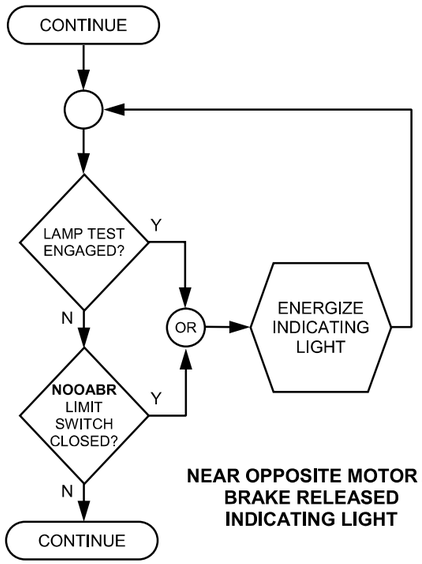

NEAR OPPOSITE MOTOR A BRAKE RELEASED INDICATING LIGHT

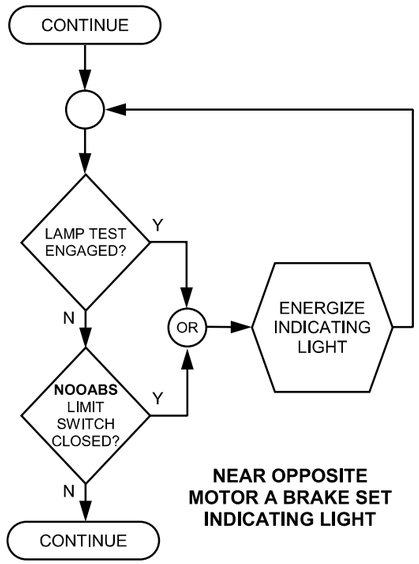

NEAR OPPOSITE MOTOR A BRAKE SET INDICATING LIGHT

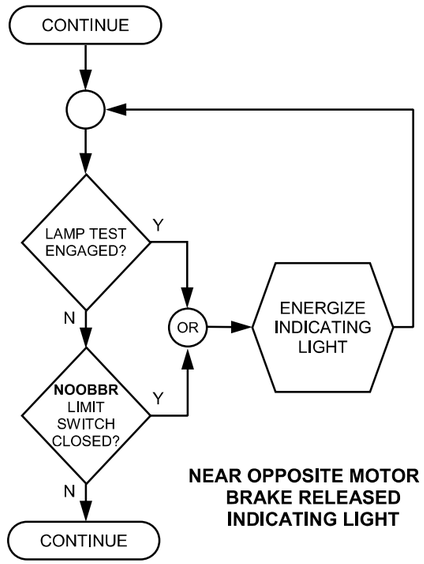

NEAR OPPOSITE MOTOR B BRAKE RELEASED INDICATING LIGHT

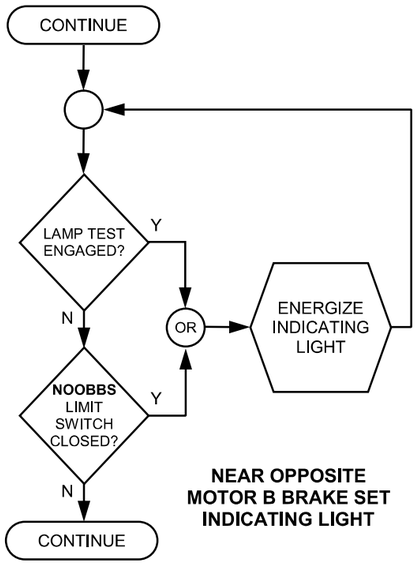

NEAR OPPOSITE MOTOR B BRAKE SET INDICATING LIGHT

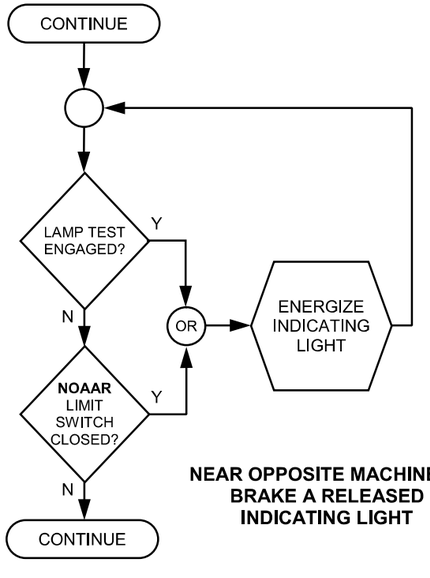

NEAR OPPOSITE MACHINERY BRAKE A RELEASED INDICATING LIGHT

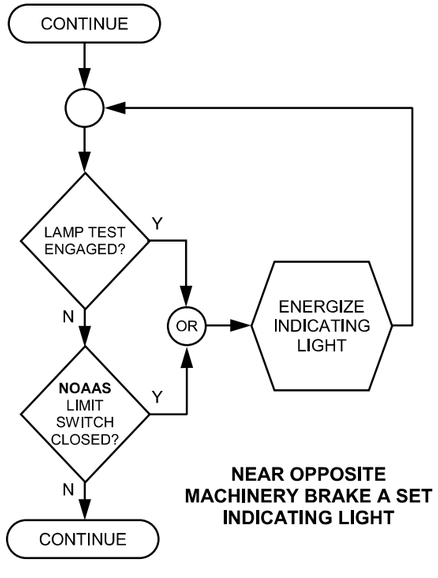

NEAR OPPOSITE MACHINERY BRAKE A SET INDICATING LIGHT

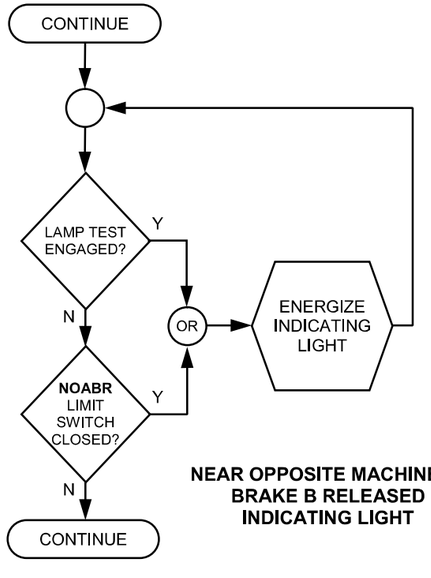

NEAR OPPOSITE MACHINERY BRAKE B RELEASED INDICATING LIGHT

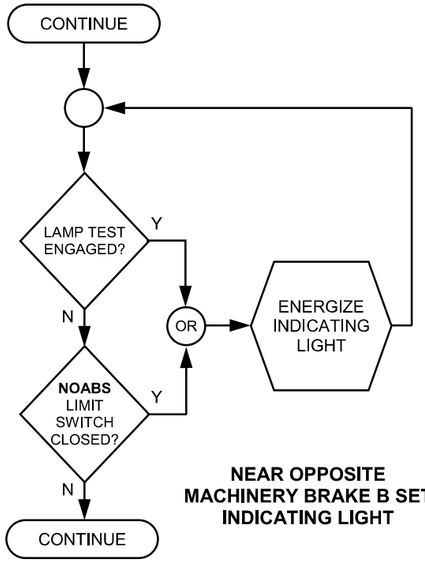

NEAR OPPOSITE MACHINERY BRAKE B SET INDICATING LIGHT

SIDEWALK GATES INDICATING LIGHTS

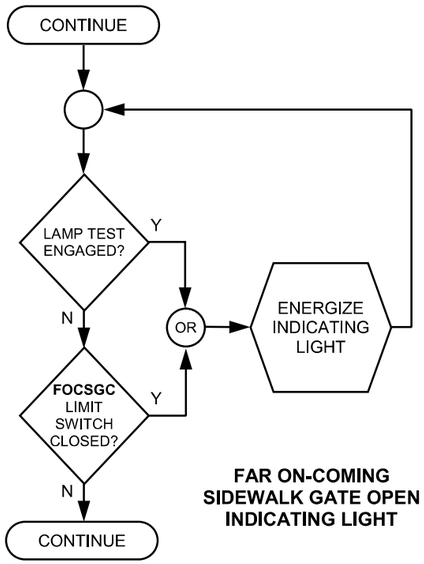

FAR ON-COMING SIDEWALK GATE OPEN INDICATING LIGHT

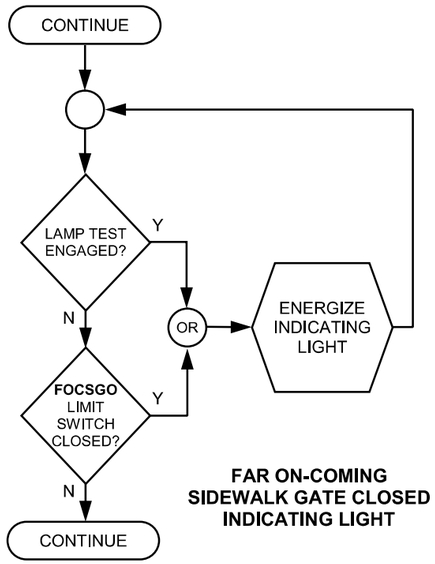

FAR ON-COMING SIDEWALK GATE CLOSED INDICATING LIGHT

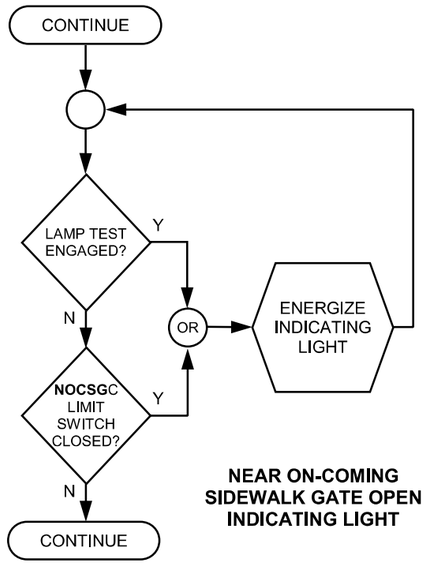

NEAR ON-COMING SIDEWALK GATE OPEN INDICATING LIGHT

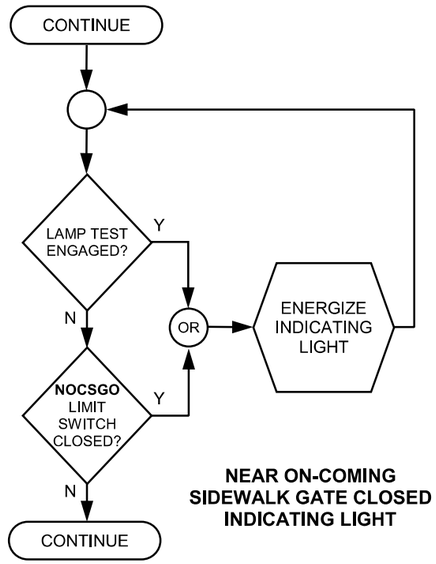

NEAR ON-COMING SIDEWALK GATE CLOSED INDICATING LIGHT

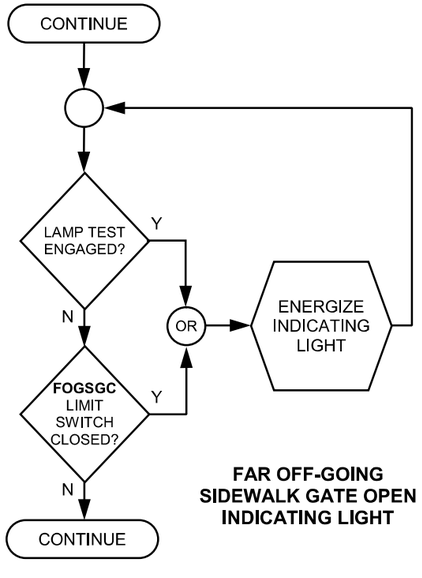

FAR OFF-GOING SIDEWALK GATE OPEN INDICATING LIGHT

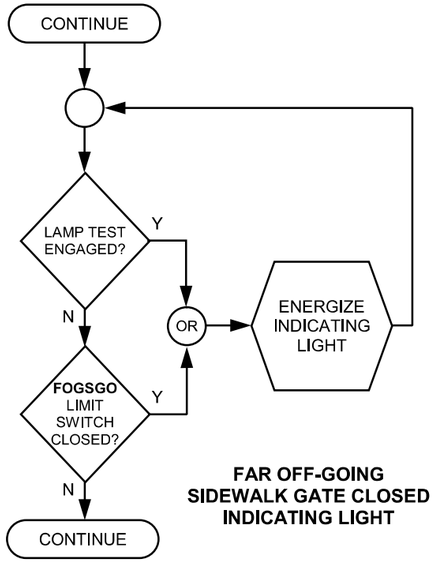

FAR OFF-GOING SIDEWALK GATE CLOSED INDICATING LIGHT

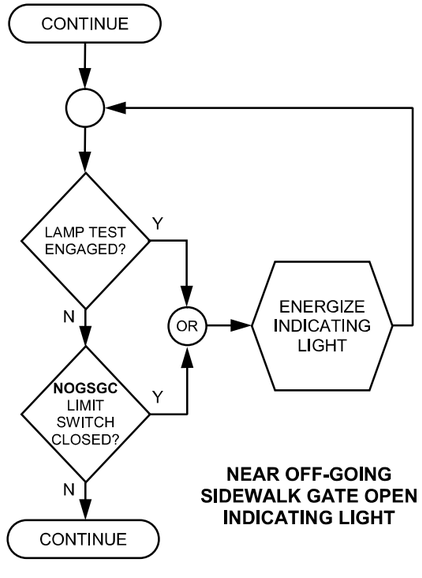

NEAR OFF-GOING SIDEWALK GATE OPEN INDICATING LIGHT

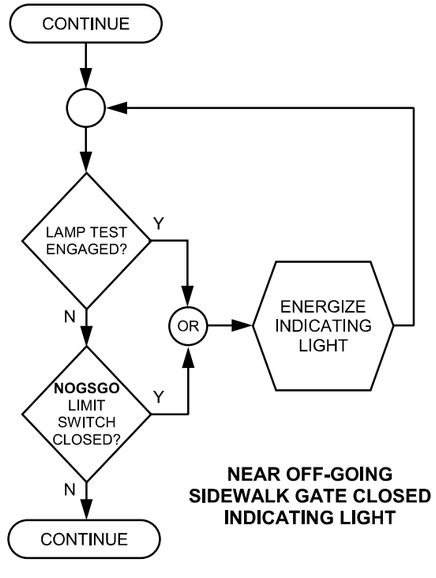

NEAR OFF-GOING SIDEWALK GATE CLOSED INDICATING LIGHT

TRAFFIC BARRIER INDICATING LIGHTS

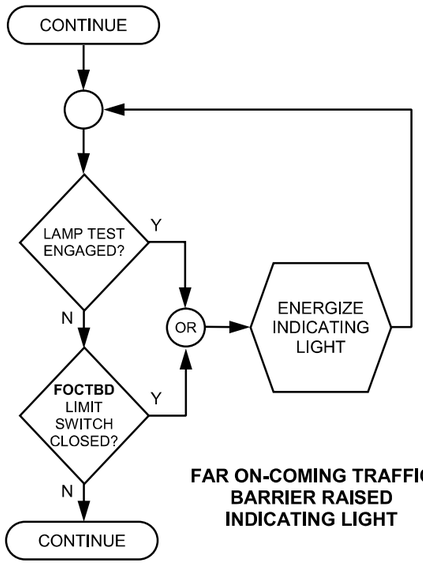

FAR ON-COMING TRAFFIC BARRIER RAISED INDICATING LIGHT

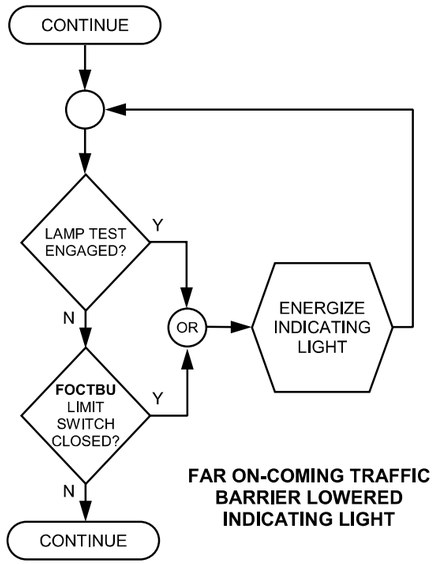

FAR ON-COMING TRAFFIC BARRIER LOWERED INDICATING LIGHT

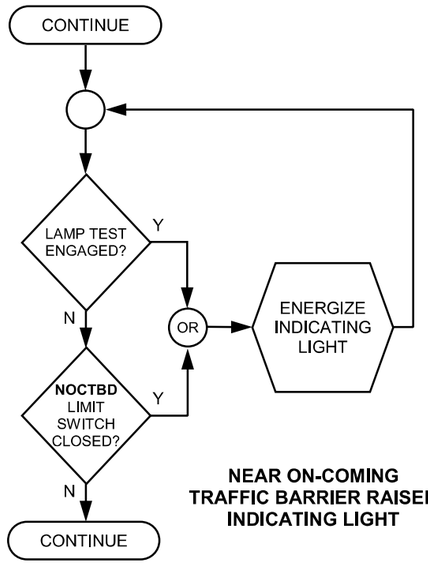

NEAR ON-COMING TRAFFIC BARRIER RAISED INDICATING LIGHT

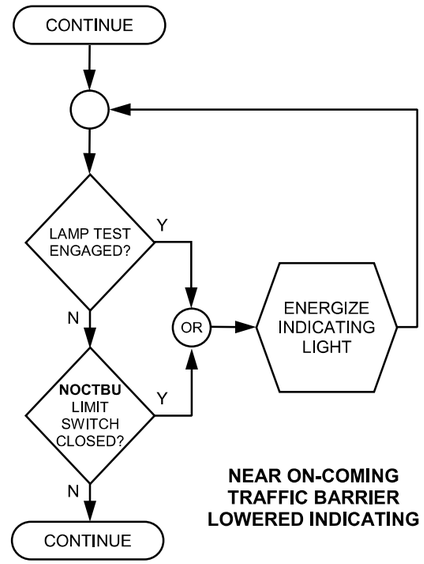

NEAR ON-COMING TRAFFIC BARRIER LOWERED INDICATING

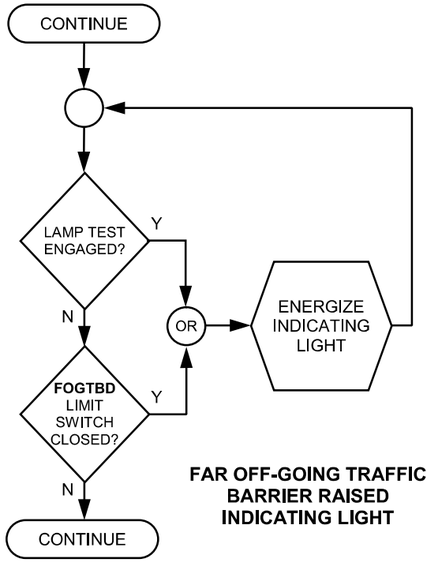

FAR OFF-GOING TRAFFIC BARRIER RAISED INDICATING LIGHT

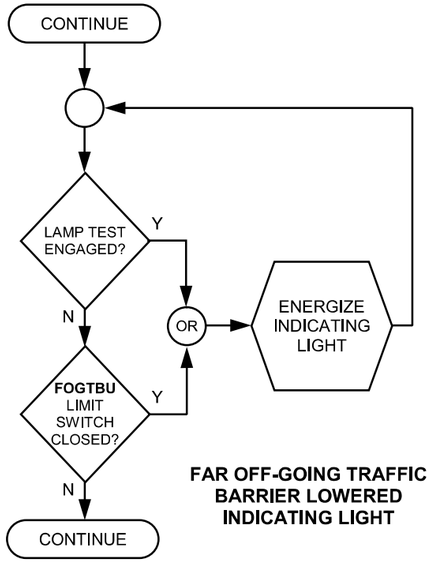

FAR OFF-GOING TRAFFIC BARRIER LOWERED INDICATING LIGHT

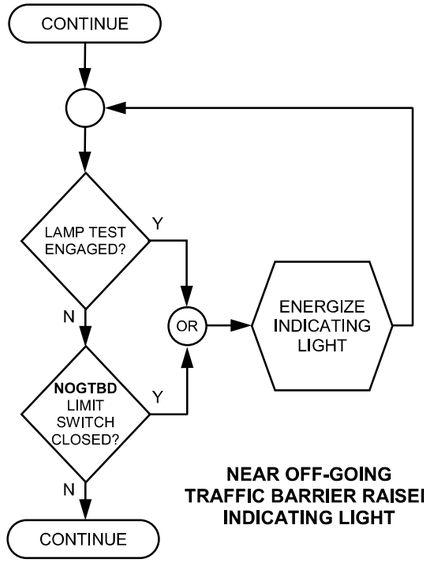

NEAR OFF-GOING TRAFFIC BARRIER RAISED INDICATING LIGHT

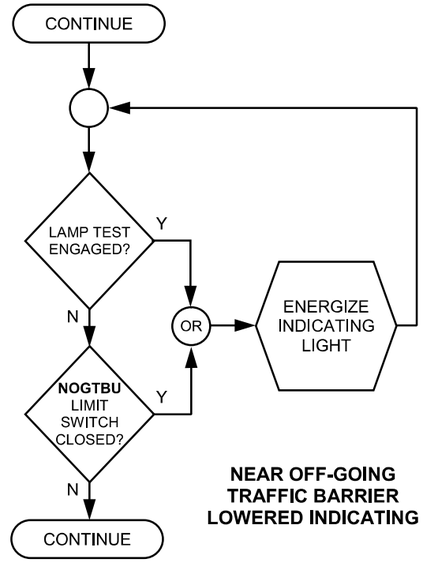

NEAR OFF-GOING TRAFFIC BARRIER LOWERED INDICATING

FULLY / NEARLY OPEN / CLOSED LEAF INDICATING LIGHTS – 1 OF 4

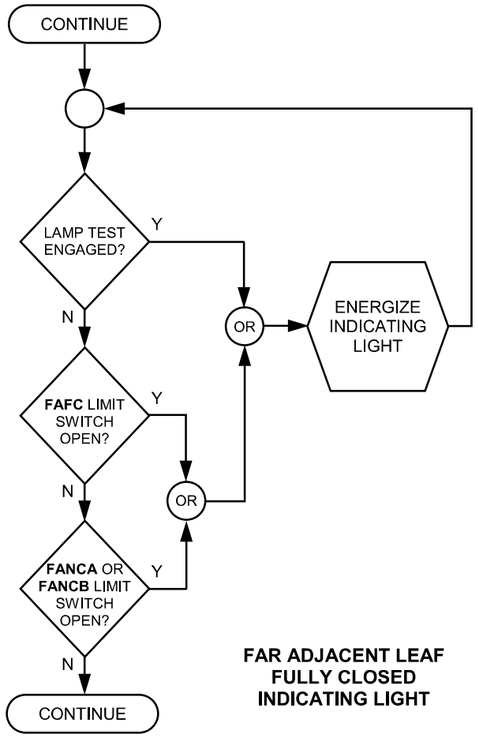

FAR ADJACENT LEAF FULLY CLOSED INDICATING LIGHT

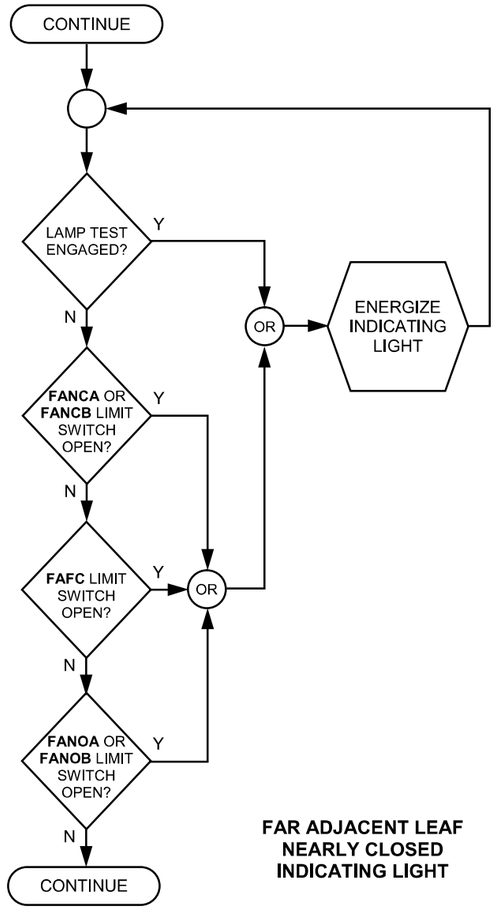

FAR ADJACENT LEAF NEARLY CLOSED INDICATING LIGHT

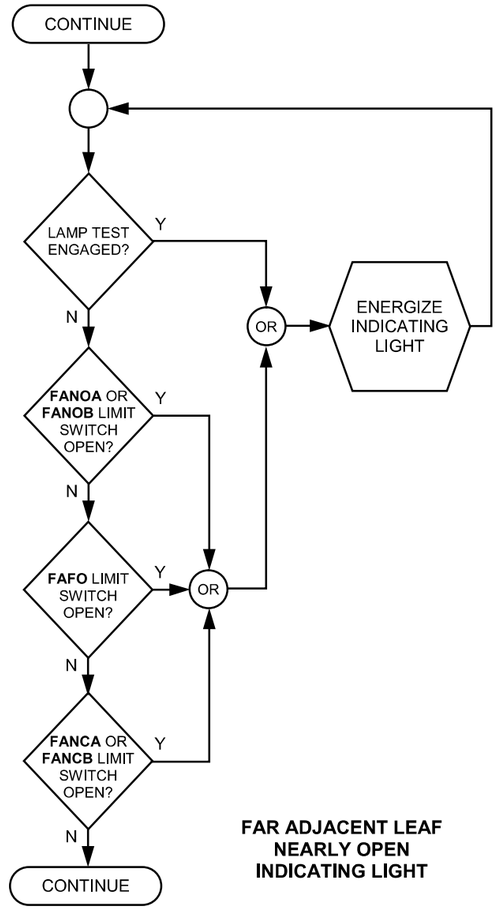

FAR ADJACENT LEAF NEARLY OPEN INDICATING LIGHT

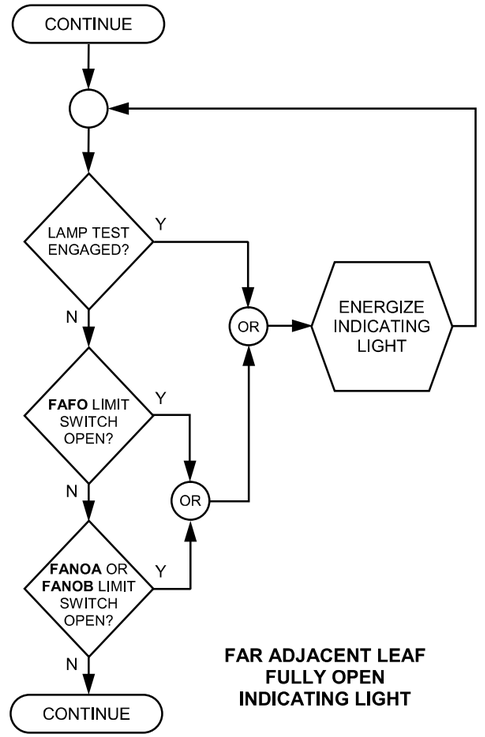

FAR ADJACENT LEAF FULLY OPEN INDICATING LIGHT

FULLY / NEARLY OPEN / CLOSED LEAF INDICATING LIGHTS – 2 OF 4

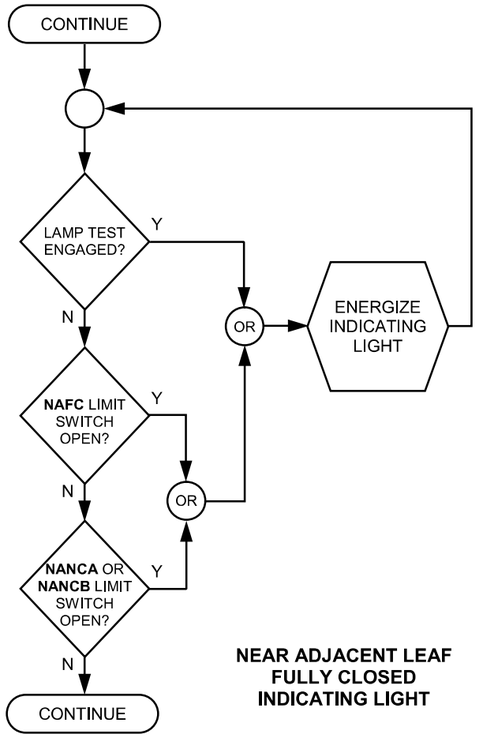

NEAR ADJACENT LEAF FULLY CLOSED INDICATING LIGHT

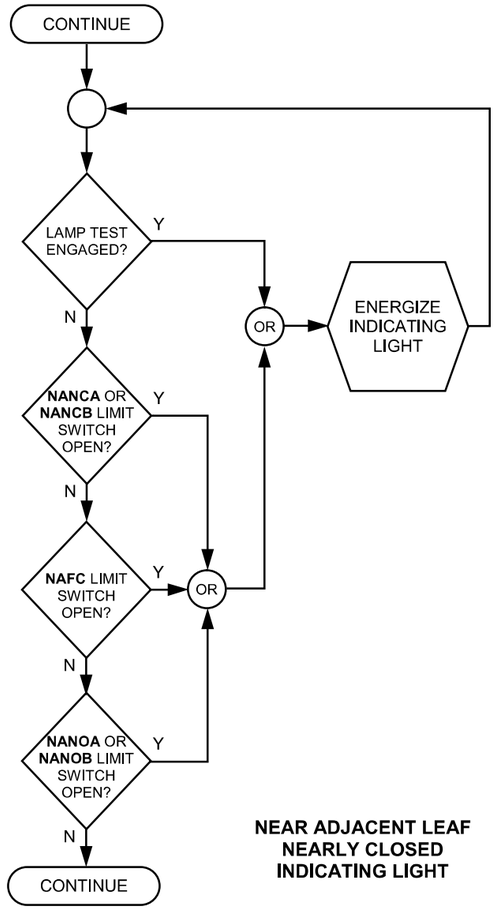

NEAR ADJACENT LEAF NEARLY CLOSED INDICATING LIGHT

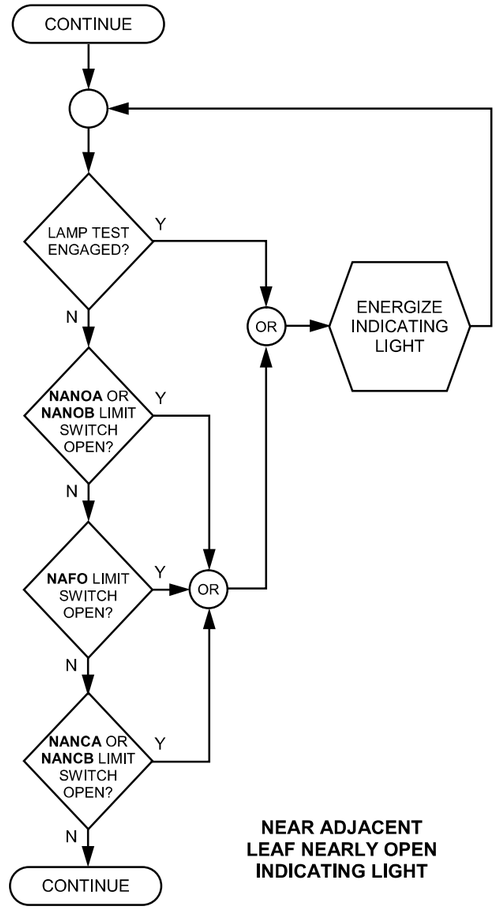

NEAR ADJACENT LEAF NEARLY OPEN INDICATING LIGHT

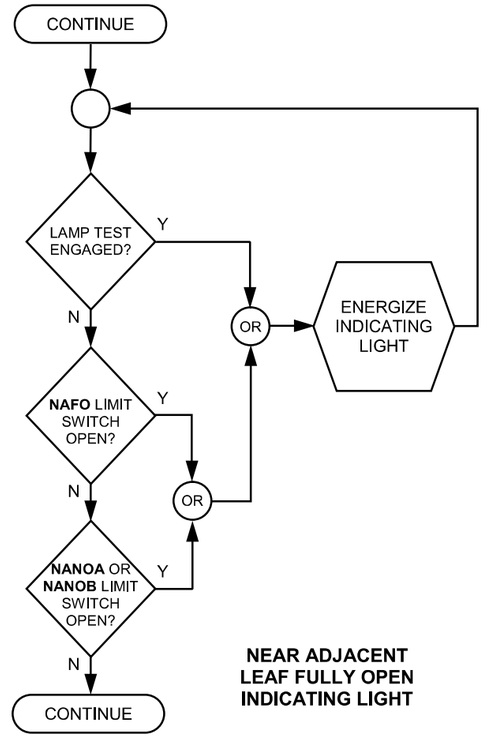

NEAR ADJACENT LEAF FULLY OPEN INDICATING LIGHT

FULLY / NEARLY OPEN / CLOSED LEAF INDICATING LIGHTS – 3 OF 4

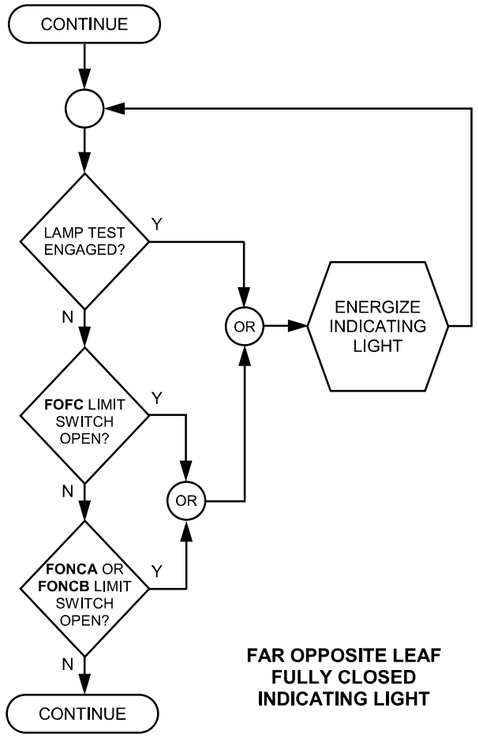

FAR OPPOSITE LEAF FULLY CLOSED INDICATING LIGHT

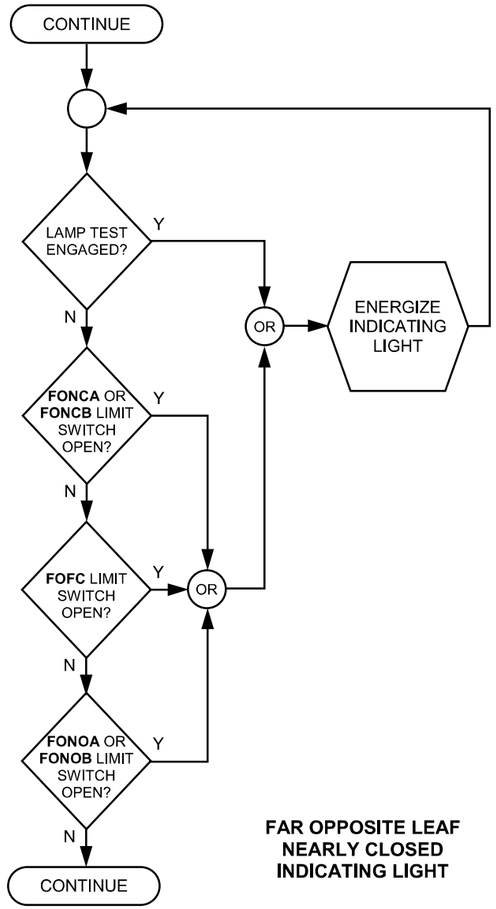

FAR OPPOSITE LEAF NEARLY CLOSED INDICATING LIGHT

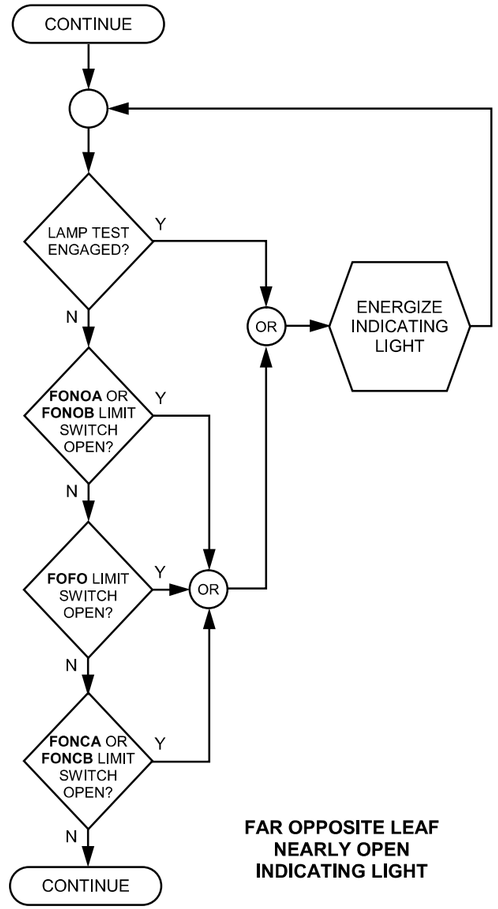

FAR OPPOSITE LEAF NEARLY OPEN INDICATING LIGHT

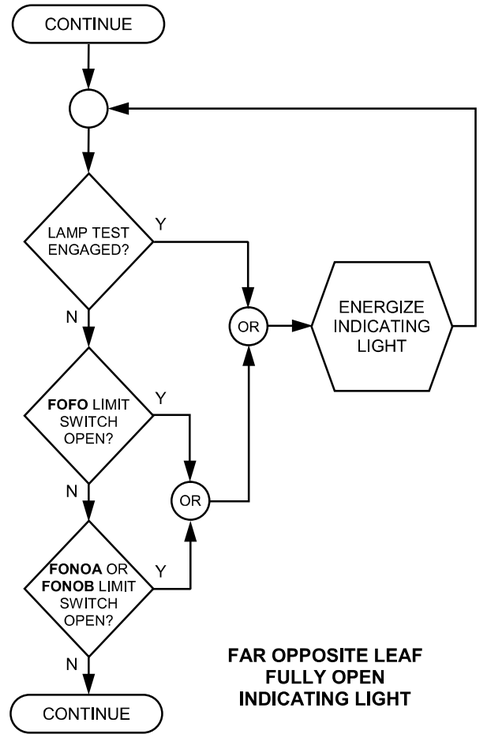

FAR OPPOSITE LEAF FULLY OPEN INDICATING LIGHT

FULLY / NEARLY OPEN / CLOSED LEAF INDICATING LIGHTS – 4 OF 4

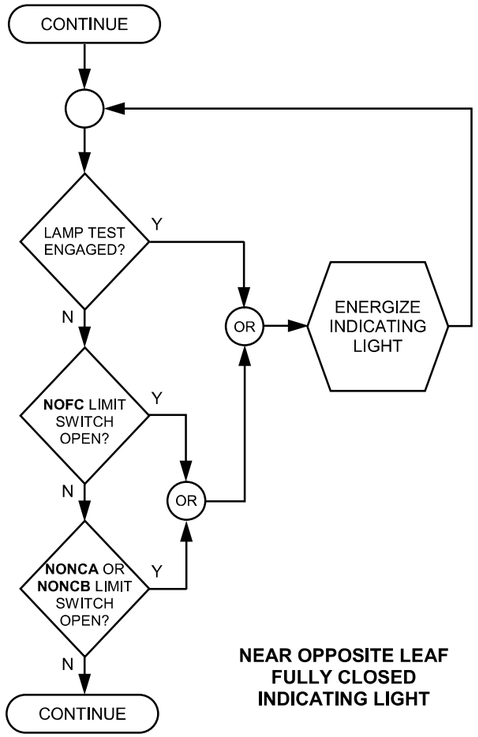

NEAR OPPOSITE LEAF FULLY CLOSED INDICATING LIGHT

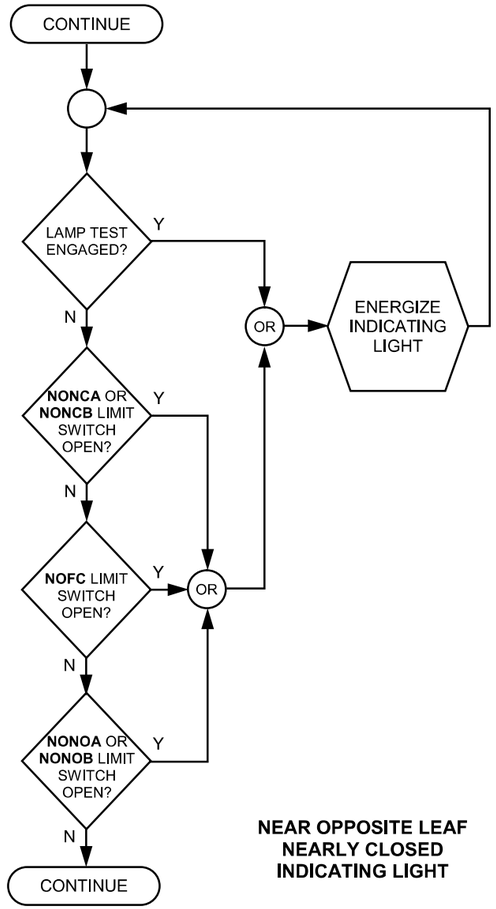

NEAR OPPOSITE LEAF NEARLY CLOSED INDICATING LIGHT

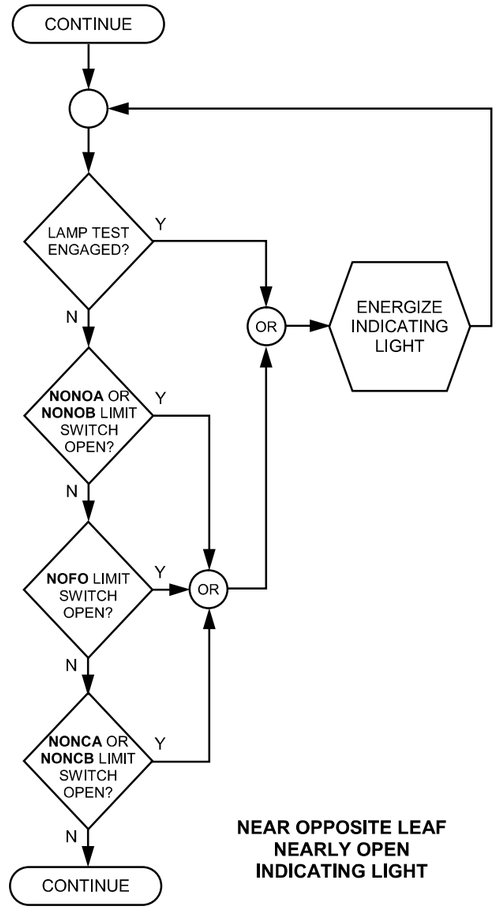

NEAR OPPOSITE LEAF NEARLY OPEN INDICATING LIGHT

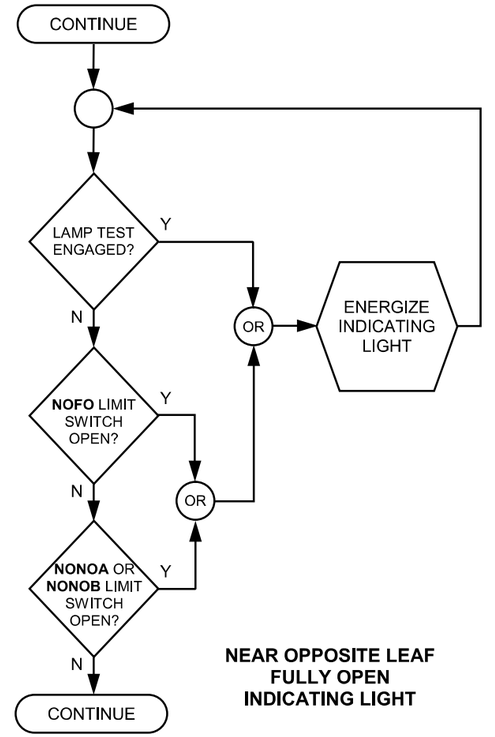

NEAR OPPOSITE LEAF FULLY OPEN INDICATING LIGHT