ALLOWABLE CONNECTION TYPES FOR MISCELLANEOUS ATTACHMENTS - SUBSTRUCTURES

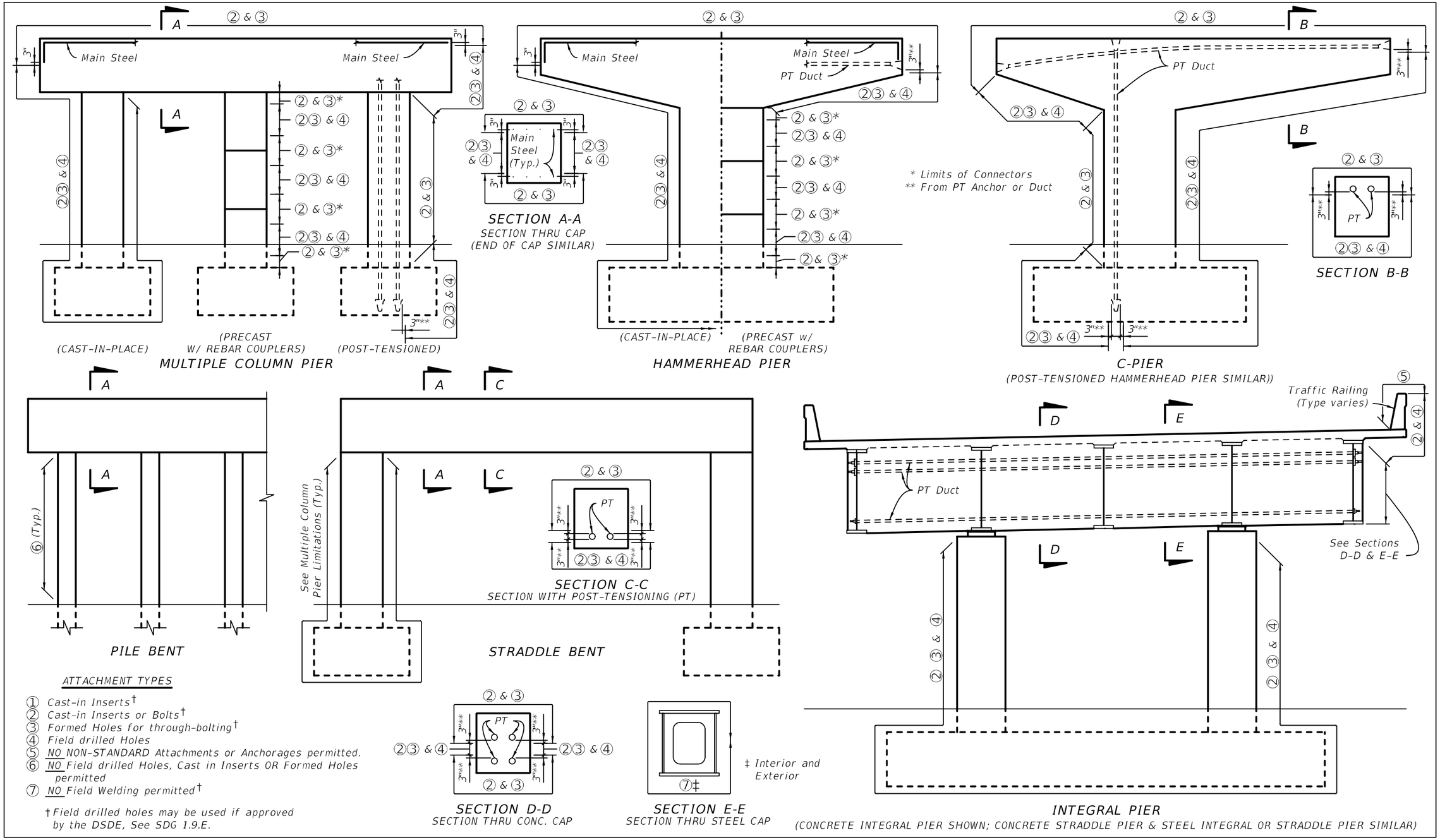

ATTACHMENT TYPES

① *Cast-in Inserts*†
② *Cast-in Inserts or Bolts*†
③ *Formed Holes for through-bolting*†
④ *Field drilled Holes*
⑤ *NO NON-STANDARD Attachments or Anchorages permitted.*
⑥ *NO Field drilled Holes, Cast in Inserts OR Formed Holes permitted*
⑦ *NO Field Welding permitted*†

† *Field drilled holes may be used if approved by the DSDE, See SDG 1.9.E.*

ALLOWABLE CONNECTION TYPES FOR MISCELLANEOUS ATTACHMENTS - SUPERSTRUCTURES

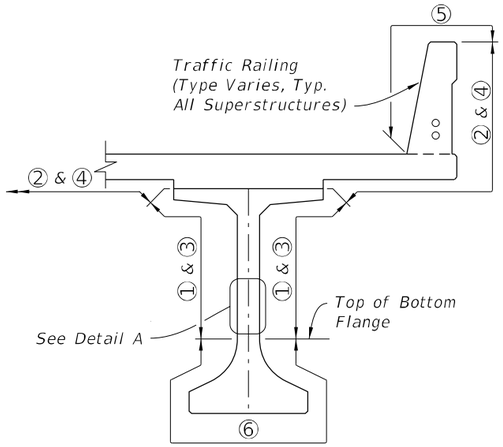

PRETENSIONED CONCRETE I-BEAMS
(Florida-I Beam shown; AASHTO, Inverted-T & Florida Bulb-T Beams similar)

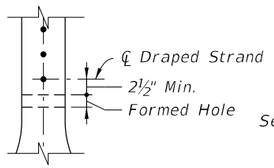

DETAIL A
Special Detail for Draped Strands

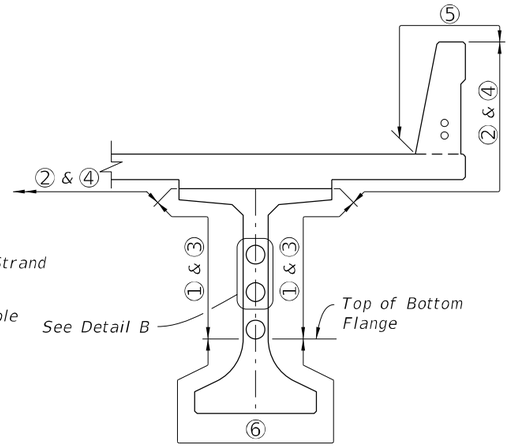

PRETENSIONED/POST-TENSIONED CONCRETE I-BEAMS
(Florida-I Beam shown; AASHTO & Florida Bulb-T Beams similar)

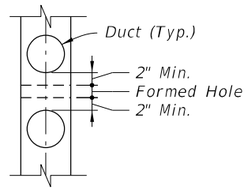

DETAIL B

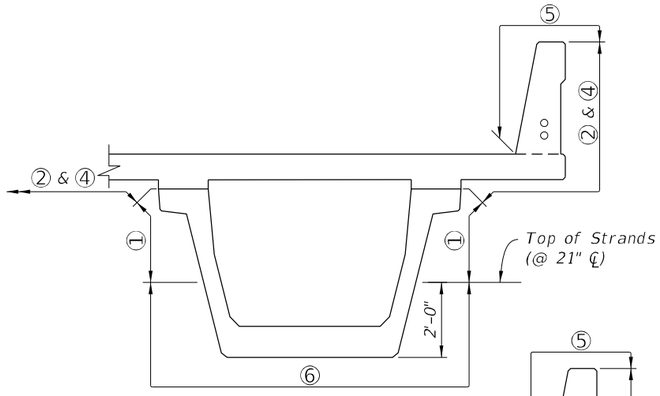

PRETENSIONED CONCRETE FLORIDA-U BEAMS

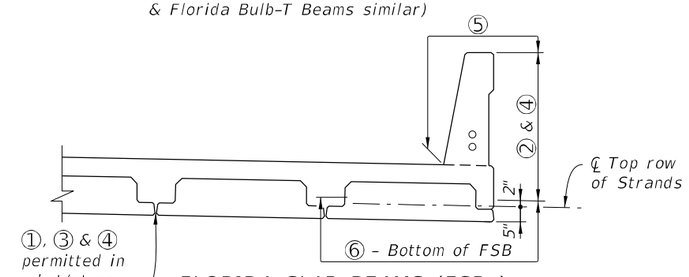

FLORIDA SLAB BEAMS (FSBs)
(FSB SHOWN; OTHER SLAB BEAMS/UNITS SIMILAR)

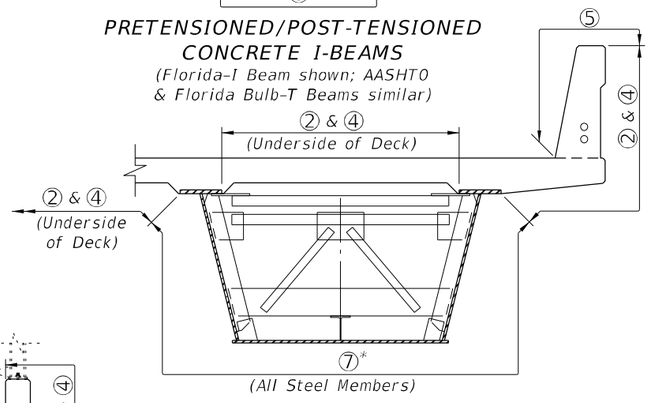

STEEL BOX GIRDERS

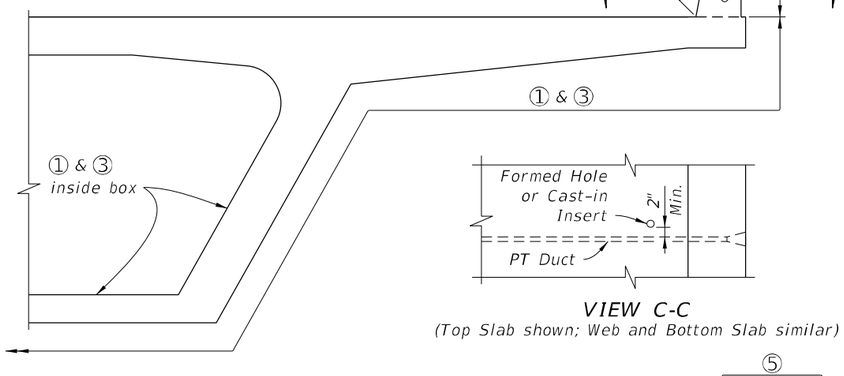

POST-TENSIONED CONCRETE BOX GIRDERS

VIEW C-C
(Top Slab shown; Web and Bottom Slab similar)

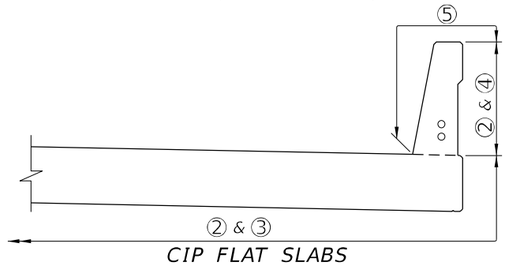

CIP FLAT SLABS

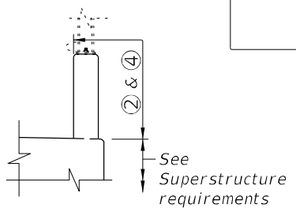

PEDESTRIAN RAILING DETAIL
(Typical All Superstructures)

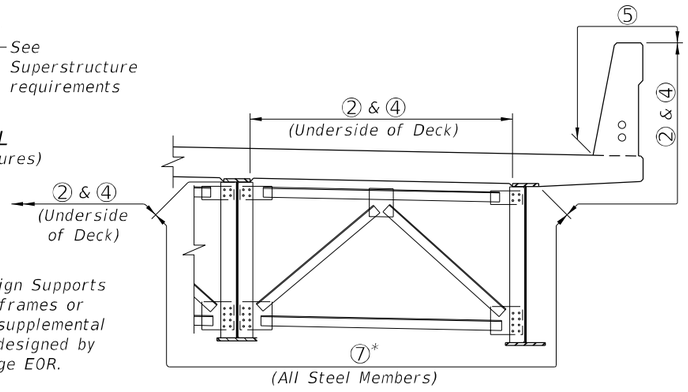

STEEL I-GIRDERS

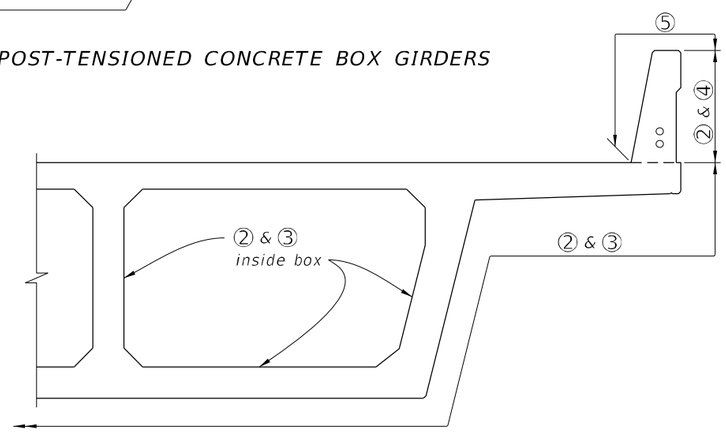

CIP CONCRETE BOX GIRDERS
(No Post-tensioning)

ATTACHMENT TYPES

① Cast-in Inserts†
② Cast-in Inserts or Bolts†
③ Formed Holes for through-bolting†
④ Field drilled Holes
⑤ NO NON-STANDARD Attachments or Anchorages permitted.
⑥ NO Field drilled Holes, Cast in Inserts OR Formed Holes permitted
⑦ NO Field Welding permitted†

†Field drilled holes may be used if approved by the DSDE, See SDG 1.9.E.

*Attach Sign Supports at Crossframes or provide supplemental bracing designed by the Bridge EOR.