FDOT Structures Design Office
Topic No: 625-020-018



2027 Structures Manual

Effective January 1, 2027

STRUCTURES MANUAL INTRODUCTION

I.1 GENERAL

The Structures Design Office publishes the ***Structures Manual*** (FDOT Topic No. 625-020-018) to provide engineering and detailing standards, criteria, and guidelines to designers and detailers who design structures for the Florida Department of Transportation.

The requirements given in the ***Structures Manual*** apply to all projects. The Structures Manual, however, is not intended to set comprehensive design requirements for complex structure types such as cable-stayed structures, cable-suspended tied-arch spans, etc. Unless otherwise noted, for any complex structure type it is the responsibility of the Engineer of Record to establish and submit appropriate load combinations and other design requirements to the SSDE for approval.

The Structures Manual commentary is included for information only and is not intended to be part of the governing design criteria. The commentary is not intended to provide a complete historical background concerning the development of the current or previous criteria in the Structures Manual, nor is it intended to provide a detailed summary of the studies and research data reviewed in formulating the provisions of the criteria.

Special requirements for Non-Conventional Projects, e.g. Design-Build Projects and all Non-Design-Bid-Build Public-Private-Partnership Projects, are shown in a "Modification for Non-Conventional Projects" box as seen in the following example:

Modification for Non-Conventional Projects:
Delete ***SDG*** 4.2.2.C and insert the following: C. For “Major Widenings” and “Minor Widenings” (see criteria in SDG Chapter 7) the thickness of C.I.P. bridge decks on beams or girders is 8-inches unless otherwise indicated in RFP.

These boxes are located immediately before or after the section which is to be modified and are only applicable to Non-Conventional Projects.

*Commentary: The goal of this format is to better clarify the requirements for Non-Conventional Projects. Some requirements of the **Structures Manual** have been relaxed/waived for Non-Conventional Projects because they were a Department preference or deemed as good engineering practice rather than mandatory requirements. The Engineer of Record on a Non-Conventional Project may choose to follow these requirements even though they are not specifically mandated.*

*The **Structures Manual** as well as companion documents are intended to address five distinct audiences listed below:*

1. *The Engineer of Record on a Non-Conventional Project. The Structures Manual requirements apply except where specifically modified by a "Modification for Non-Conventional Projects" Box.*
2. *The Engineer of Record on a Conventional Design-Bid-Build Project. The Structures Manual requirements apply.*
3. *The Author of the Request for Proposal on a Non-Conventional Project. Standard boilerplate language is to be used as a starting point in developing RFPs on all Department Non-Conventional projects. Section V of the Design-Build boilerplate establishes Department, FHWA and AASHTO manuals, guidelines, and design codes that serve as design constraints to be used in the performance of the work. The governing regulations list in Section V cannot be modified without the approval of the State Construction Office. The standard boilerplate language is available at the FDOT Construction Office website.*

   Pre-scoping questions have been developed to aid in establishing project constraints to be included in the RFP. See link below: ***https://www.fdot.gov/docs/default-source/construction/DesignBuild/DBRules/DB-PrescopingQuestions.pdf***
4. *Contractor's Engineer of Record or Specialty Engineer on a Non-Conventional or Design-Bid-Build Project. Structures Manual, Structures Design Guidelines, Chapter 11 applies.*
5. *Consultant Performing Professional Services during the PD&E Phase of a Non-Conventional or Design-Bid-Build Project. The Structures Manual requirements apply.*

Refer to the Design-Bid-Build and Design-Build FDOT Standard Specifications for Road and Bridge Construction, Section 1 for Definitions.

The ***Structures Manual*** and its Appendices are provided in PDF format and are accessible via the ***Structures Design Office Internet Website***. Links to resources outside of the control of the FDOT Structures Design Office access the default web page of the host site.

Please note that while it is possible for those with PDF editing software to download and modify the ***Structures Manual*** and the Appendices, the only recognized official versions are the documents provided on the ***Structures Design Office Internet Website***.

I.2 CONTENTS

Volume 1 - Structures Design Guidelines

The ***Structures Design Guidelines*** (***SDG***) incorporate technical design criteria and includes additions, deletions, or modifications to the requirements of the ***AASHTO LRFD Bridge Design Specifications*** (***LRFD***).

The ***SDG*** provides engineering standards, criteria, and guidelines for developing and designing bridges and retaining walls for which the Structures Design Office (SDO) and District Structures Design Offices (DSDO) have overall responsibility.

Volume 2 - Structures Detailing Manual

The ***Structures Detailing Manual*** (***SDM***) provides guidance for drafting and detailing criteria and methods used in preparing Florida Department of Transportation (FDOT) contract plans for structural elements or systems. These elements or systems include bridges, overhead sign structures, earth retaining structures and miscellaneous highway structures. The ***SDM*** includes preferred details and examples of general component plan sheets.

Volume 3 - FDOT Modifications to LRFDLTS-1

This Volume contains FDOT modifications to ***LRFD Specifications for Structural Supports for Highway Signs, Luminaires and Traffic Signals (LRFDLTS-1)***

Volume 4 - Fiber Reinforced Polymer Guidelines

The ***Fiber Reinforced Polymer Guidelines (FRPG)*** incorporates technical design criteria and associated plan content requirements for structures and components of structures constructed using Fiber Reinforced Polymer (FRP) composites including FRP reinforcing bars, FRP prestressing strands, FRP structural shapes, and FRP composite systems for strengthening and repairs.

I.3 AUTHORITY

Sections 334.048(3) and 20.23(3)(a), Florida Statutes (F.S.)

I.4 SCOPE

The use of the ***Structures Manual*** is required of anyone performing structural design or analysis on either Conventional or Non-Conventional projects for the Florida Department of Transportation.

I.5 ACRONYMS

ACI	American Concrete Institute
AISC	American Institute of Steel Construction
AREMA	American Railway Engineering and Maintenance-of-Way Association
AWS	American Welding Society
DSDE	District Structures Design Engineer
DSDO	District Structures Design Office
DSME	District Structures Maintenance Engineer
DSMO	District Structures Maintenance Office

FHWA	Federal Highway Administration
FDOT	Florida Department of Transportation
LRFD	Load and Resistance Factor Design
FDM	FDOT Design Manual
SDG	Structures Design Guidelines
SDM	Structures Detailing Manual
SDO	Structures Design Office
SSDE	State Structures Design Engineer
SSPC	Society for Protective Coatings
TAG	Technical Advisory Group
SDB	Structures Design Bulletin
SPI	Standard Plans Instructions

I.6 REFERENCES

A. Except where modified in the ***Structures Manual***, conform to the requirements of the specifications, codes, manuals, and design requirements referenced in this section.

B. AASHTO Publications

1. AASHTO/AWS D1.5M/D1.5- Bridge Welding Code, 2025 9th Edition.
2. Construction Handbook for Bridge Temporary Works, 2nd Edition (2017)
3. Guide Design Specifications for Bridge Temporary Works, 2nd Edition (2017)
4. The Manual for Bridge Evaluation (MBE), 3rd Edition (2018) with 2020 Interims.
5. LRFD Bridge Design Specifications, 10th Edition. This document is referenced throughout the Structures Manual as "***LRFD***".
6. LRFD Movable Highway Bridge Design Specifications, 2nd Edition (2007) with 2008, 2010, 2011, 2012, 2014, 2015 and 2018 Interims
7. LRFD Specifications for Structural Supports for Highway Signs, Luminaires and Traffic Signals, 1st Edition (2015) with 2017, 2018, 2019, 2020, and 2022 interims
8. Guide Specifications for Bridges Vulnerable to Coastal Storms, 1st Edition (2008) with 2023 interims.
9. LRFD Guide Specifications for the Design of Pedestrian Bridges (2009) with 2015 Interims
10. Manual for Assessing Safety Hardware, 2nd Edition (2016)
11. AASHTO LRFD Bridge Design Guide Specifications for GFRP-Reinforced Concrete, 2nd Edition (2018)
12. AASHTO Guide Specification for the Design of Concrete Bridge Beams Prestressed with CFRP Systems

C. FDOT Publications (latest editions)

1. FDOT Design Manual (Topic No. 625-000-002)
2. Drainage Manual (Topic No. 625-040-001)
3. Standard Plans (Topic No. 625-010-003)
4. CADD Manual (Topic No. 625-050-001)
5. FDOT Standard Specifications for Road and Bridge Construction
6. Bridge Load Rating Manual (Topic No. 850-010-035)
7. Geotechnical Design Manual (Topic No. 625-020-019)

D. Other Publications

1. AISC Steel Construction Manual
2. ACI 318 Building Code Requirements for Structural Concrete. This document is referenced throughout the Structures Manual as "***ACI CODE-318***".
3. FHWA GEC 11 (FHWA-NHI-10-024 & FHWA-NHI-10-025) Design and Construction of Mechanically Stabilized Earth Walls and Reinforced Soil Slopes - Volumes 1 & 2.
4. AREMA Manual for Railway Engineering
5. Code of Federal Regulations 23 CFR 635.410
6. ASCE Standard ASCE/SEI 7 Minimum Design Loads for Buildings and Other Structures
7. Florida Accessibility Code
8. Florida Building Code
9. Life Safety Code
10. AWS D1.1/D1.1M: Structural Welding Code – Steel

I.7 COORDINATION

A. Coordinate all plans production activities and requirements between the ***Structures Manual***, ***FDM*** and ***AASHTO LRFD Bridge Design Specifications (LRFD)***. Each of these documents has criteria pertaining to bridge or structures design projects, and, normally, all must be consulted to assure proper completion of a project for the Department.

B. Direct all questions concerning the applicability or requirements of any of these or other referenced documents to the appropriate FDOT Structures Design Engineer. For a list of Structures Contacts, see the contacts section of the SDO website.

Modification for Non-Conventional Projects:

Delete ***SM*** I.7.B and insert the following:

B. Prior to Procurement or After Award: Direct all questions concerning the applicability or requirements of any of these or other referenced documents to the appropriate FDOT Project Manager or to the appropriate FDOT Structures Design Engineer. For a list of Structures Contacts, see the contacts section of the SDO website.

During Procurement: Direct all questions after the pre-bid meeting as instructed.

C. Collaborate with the roadway engineer prior to completion of Phase II roadway plans or the BDR, whichever is earlier, to assure an efficient and economical design. In particular provide structural input that will impact roadway geometrics (***FDM*** 210 and 211) and the traffic control plan (***FDM*** 240-243)

Modification for Non-Conventional Projects:

Delete ***SM*** I.7.C and insert the following:

C. Collaborate with the roadway engineer to assure coordination between roadway and structure design elements and the traffic control aspects during construction. Ensure that the design approach meets the minimum traffic restriction requirements given in the RFP. In particular provide structural input that will impact roadway geometrics (***FDM*** 210 and 211) and the traffic control plan (***FDM*** 240-243).

I.8 DISTRIBUTION

This ***Structures Manual*** is furnished via the SDO web page at no charge. The user must regularly check for additions, modifications and bulletins. Address questions regarding this ***Manual*** and any modifications to:

Florida Department of Transportation
Structures Design Office
Mail Station 33
Attn: Structures Manual Editor
605 Suwannee Street
Tallahassee, Florida 32399-0450
Tel.: (850) 414-4255
http://www.fdot.gov/structures
email: FDOT-StructuresManual@dot.state.fl.us

I.9 ADMINISTRATIVE MANAGEMENT

Administrative Management of the ***Structures Manual*** is a cooperative effort of SDO staff and the nine members of the Technical Advisory Group (TAG).

I.9.1 The Technical Advisory Group (TAG)

The TAG comprises the State Structures Design Engineer (SSDE), the seven District Structures Design Engineers and the Turnpike Enterprise Structures Design Engineer (DSDEs).

I.9.2 SDO Staff

SDO Staff comprises the Assistant State Structures Design Engineers and Senior Structures Design Engineers selected by the SSDE.

I.10 REVISIONS

Revisions to the ***Structures Manual*** may be the result of changes in FDOT specifications, FDOT organization, Federal Highway Administration (FHWA) regulations, and AASHTO requirements; or occur from recent experience gained during construction, through maintenance, and research.

Structures Manual users are encouraged to suggest modifications and improvements such as design procedures, text clarity, technical data, or commentary. Address questions regarding the ***Structures Manual*** and any proposed modifications to the Structures Design Office contact listed in Section I.8 above.

I.10.1 Adoption of Revisions

Structures Manual revisions are issued by the SDO as ***Structures Design Bulletins*** (***SDBs***) or Permanent Revisions following a formal adoption process. To receive notification of ***SDB*** postings or other important updates, sign up for the FDOT Contact Mailer list.

I.10.2 Structures Design Bulletins

A. ***SDBs*** are mandatory, supersede the current ***Structures Manual,*** and will be issued when the SSDE deems a change essential to production or structural integrity issues and in need of immediate implementation. ***SDBs*** may address issues in plans production, safety, structural design methodology, critical code changes, or new specification requirements.

B. ***SDBs*** are effective for up to 360 calendar days unless superseded by subsequent ***SDBs*** or Permanent Revisions to the ***Structures Manual***. ***SDBs*** automatically become proposed Permanent Revisions unless withdrawn from consideration by the SSDE.

C. ***SDBs*** indicate their effective date of issuance and are numbered sequentially with reference to the year of issuance and version number. For example, ***Structures Design Bulletin No. 10-2*** would be the second ***Bulletin*** issued in 2010.

D. ***SDBs*** may be proposed by any DSDE, DSME or PE in the ***SDO*** for consideration by the SSDE. The author must research all affected FDOT policies, criteria and specifications. Proposed ***SDBs*** must be submitted to one of the Assistant SSDEs for review, comment and concurrence. If the Assistant SSDE concurs with the proposal, it will be sent to the SSDE for consideration, final approval and publication on the SDO's website.

E. ***SDBs*** that significantly affect other offices must be composed with the assistance of the affected office. ***SDBs*** that significantly affect construction will be issued as a ***Joint Bulletin*** with the State Construction Office (coordinate with the State Construction Office on the proper Construction ***Bulletin*** number).

F. Proposed ***SDBs*** must be formatted to include Requirements, Commentary, Background, Implementation and Contact sections:

   1. Requirements: This section codifies exceptions, revisions and/or additions to policies or criteria as specified in current adopted specifications (i.e. ***Structures Manual***, ***AASHTO LRFD Bridge Design Specifications***, etc.). Requirements must reference the specific section) in the ***Structures Manual*** or other documents where they are to be incorporated. Revisions to the Department's ***Standard Specifications*** will be handled through the Specifications Office.

   2. Commentary: This section provides the essential technical support behind the new requirement and is intended to be brief. It includes references to the literature, both pro and con, that influenced the decision. This information will not be included in the ***Structures Manual***, ***FDM*** etc. Include commentary that needs to be included in the ***Structures Manual***, ***FDM*** etc. in the Requirements section of the ***SDB*** in italics.

3. Background: This section discusses the circumstances that prompted the ***SDB***. It should not duplicate the Commentary but simply facilitate the reader's understanding of situations that occurred and the SDO's response to them. Include background information including history of a practice, problem issues, references, sources of information, etc. This information will not be included in the ***Structures Manual***, ***FDM*** etc.
4. Implementation: This section specifies the timeline upon which the requirements are to be implemented. Factors to be considered in the implementation plan include funding sources to implement changes to existing design and construction contracts, effect on adopted work program, etc. Implementation plans typically include effective, publishing and letting dates for the Requirements.
5. Contact: Although the SSDE is the responsible author of all ***SDBs***, this section lists the ***SDB's*** champion who will also be the key contact person for questions and comments related to the ***SDB***. This section lists the ***SDB's*** key contact name, title, work telephone number and email address.

I.10.3 Permanent Revisions

Permanent Revisions to the ***Structures Manual*** are made annually or "as-needed." If the SDO considers an individual revision or addition, or an accumulation of revisions or additions, to be substantive, the ***Structures Manual*** may be completely rewritten. The following steps are required for adoption of a revision or addition:

A. SDO Staff will assess proposed revisions and additions to the ***Structures Manual***, conduct any necessary research and will coordinate the proposed revision or addition with all other affected offices. If the proposed revision or addition is deemed appropriate, SDO Staff will prepare a complete, written draft with any needed commentary. Substantive revisions or additions that result in policy change will be coordinated with the Executive Committee for concurrence.

B. Proposed revisions or additions are distributed in draft form to the DSDEs. The DSDE coordinates the review of the proposed revisions or additions with other affected district offices. The goal is to resolve criteria and procedural issues before revisions are adopted. DSDEs provide review comments on the proposed revisions and additions to the SDO. These comments are addressed and resolved by SDO Staff and modifications are made to the proposed revisions or additions as required.

C. Revisions and additions to the ***Structures Manual*** are adopted or rejected by the SSDE. The SSDE's approval signifies the SDO's position on the proposed revision or addition. Requirements mandated by FHWA or State Rules will be coordinated with the DSDEs and affected offices within the Central Office and are considered compulsory.

D. Unless agreed otherwise, the revised ***Structures Manual*** will be issued within 4 weeks after approval by the SSDE. This period allows the Forms and Procedures Office to update the ***Standard Operating System, Procedure No. 025-020-002***

(Reference: ***Sections 20.23(3)(a) and 334.048(3), F.S.)*** and any electronic media before electronic distribution of the ***Structures Manual***.

I.11 TRAINING

No specific training is necessary for the use of the ***Structures Manual***. Major revisions are often presented and discussed at conferences and annual ***FDM*** update training.

I.12 ADDITIONAL LINKS

Structures Detailing Manual Examples

LRFD Design Examples



2027 FDOT STRUCTURES MANUAL

Volume 1: Structures Design Guidelines

INTRODUCTION

I.1 GENERAL

A. The FDOT ***Structures Design Guidelines*** (***SDG***) is Volume 1 of the ***Structures Manual***. See the ***Structures Manual Introduction*** for additional information including authority, scope, distribution and process for making revisions to the ***Manual***.

B. The ***SDG*** incorporates technical design criteria and includes additions, deletions, or modifications to the requirements of the ***AASHTO LRFD Bridge Design Specifications (LRFD)***.

C. This volume of the ***Structures Manual*** provides engineering standards, criteria, and guidelines for developing and designing bridges and retaining walls for which the Structures Design Office (SDO) and District Structures Design Offices (DSDO) have overall responsibility.

D. Information on miscellaneous roadway appurtenances as well as general administrative, geometric, shop drawing, and plans processing may be found in the ***FDOT Design Manual (FDM) Topic No. 625-000-002***.

I.2 FORMAT

A. The ***SDG*** chapters are organized more by "component," "element," or "process" than by "material" as is the ***LRFD***. As a result, the chapter numbers and content of the ***SDG*** do not necessarily align themselves in the same order or with the same number as ***LRFD***. ***LRFD*** references are provided to quickly coordinate and associate ***SDG*** criteria with that of ***LRFD***. The ***LRFD*** references may occur within article descriptions, the body of the text, or in the commentary. See Table I.3-1 for a cross reference of the ***SDG*** to ***LRFD*** and Table I.3-2 for a cross reference of the ***SDG*** to ***AASHTO LRFD Movable Highway Bridge Design Specifications.*** These cross references are provided only as an aid to the Designer and are not necessarily a complete listing of ***SDG*** and ***LRFD*** requirements.

B. Chapters 1 through 10 of the ***SDG*** are written in the active voice to Structural Designers, Professional Engineers, Engineers of Record, Structural Engineers, and Geotechnical Engineers working on either Conventional or Non-Conventional projects for the Florida Department of Transportation.

C. Chapter 11 of the ***SDG*** is written in the active voice to Specialty Engineers, Contractor's Engineers of Record and Prequalified Specialty Engineers working on either Conventional or Non-Conventional projects for the Florida Department of Transportation.

I.3 CROSS REFERENCES

See the following tables for cross references between the ***Structures Design Guidelines*** and ***LRFD***:

Table I.3-1 Cross Reference Between *AASHTO LRFD* & *SDG*

SECTION NO.		DESCRIPTION
LRFD	***SDG***	
1.3.4	2.10	Redundancy Factors
1.3.5	2.10	Operational Importance Factors
2.5.2.2	4.6.2	Access and Maintenance
2.5.2.6	1.2	Deflection and Span-to-Depth Ratios
2.6	3.3	Foundation Scour Design
2.6.6	6.6	Deck Drainage
3.4.1	2.1.1	Load Factors and Load Combinations
3.4.1-2	4.6.5	Design Requirements for Cantilever Bridges with Fixed Pier Tables
3.4.2	2.4.3	Wind Loads During Construction
3.5.1	2.2	Dead Loads
3.6	2.1.2	Live Loads
3.6.1.1.2	4.6.9	Transverse Deck Loading, Analysis & Design (Mult. Presence Factors)
3.6.1.2.2	4.6.9	Transverse Deck Loading, Analysis & Design (Axle loads HL 93 truck)
3.6.1.2.3	4.6.9	Transverse Deck Loading, Analysis & Design (Axle loads design tandem)
3.6.1.2.5	4.6.9	Transverse Deck Loading, Analysis & Design (Tire Contact Area)
3.6.1.3.2	1.2	Deflection and Span-to-Depth Ratios
3.6.1.4.2	2.12.3	Frequency
3.6.5	2.6	Vehicular Collision Force
3.8.1	2.4.1	Wind Loads on Completed Structures: WL and WS
3.10.9.2	2.3.2	Seismic Design for Widenings
3.12.2	2.7.1	Uniform Temperature
3.12.2	6.3	Temperature Movement
3.12.3	2.7.2	Temperature Gradient
3.14	2.11	Vessel Collision
3.14.1	2.11.8	Scour with Vessel Collision
3.14.3	2.11.4	Design Methodology - Damage Permitted
3.14.4	2.11.3	Design Vessel
3.14.5.3	2.11.3	Design Vessel LOA
3.14.14	2.11.9	Application of Impact Forces
3.14.14.2	2.11.10	Impact Forces on Superstructure
4.6.2.2	2.8	Barriers and Railings
4.6.2.2	2.9	Live Load Distribution Factors
4.7.4	2.3.1	Seismic Provisions
5.4.2.4	1.4.1	Concrete Modulus of Elasticity
5.4.3	4.1.2	Reinforcing Steel
5.4.5	4.5.1-1	Prestress (Strand Couplers prohibited)
5.5.4.3	4.1.3, 4.3.4	Girder Stability
5.6.7	5.6.5	Transverse Concrete Deck Analysis
5.7.3	4.1.4	Shear Design

Table I.3-1 Cross Reference Between *AASHTO LRFD* & *SDG*

SECTION NO.		DESCRIPTION
LRFD	***SDG***	
5.7.4	1.15	Interface Shear Transfer-Shear Friction
5.9.2.3.2b	4.5.4	Principal Tensile Stress Limits (Service)
5.9.2.3.3	4.5.4	Principal Tensile Stresses (General)
5.9.3.3	4.3.1.C.6	Pretensioned Beams (When calculating Service Limit State)
5.9.3.4	4.3.1.C.6	Pretensioned Beams (When calculating Service Limit State)
5.10.3	3.6.11	Minimum Reinforcement Spacing
5.10.6	3.11.2	Shrinkage and Temperature Reinforcement
5.10.6	4.2.4	Shrinkage and Temperature Reinforcement
5.10.1	1.4.2	Concrete Cover
5.12.1	4.2	Decks
5.12.2.3	4.4	Precast Flat Slab Superstructures
5.12.3.2.2	4.3.3	Minimum Web Thickness
5.12.5	4.5	Post-Tensioning, General
5.12.5.3.3	4.5.4	Principal Tensile Stress Limits (Construction)
5.12.5.3.4B	2.13.2	Substructures for Segmental Bridges
5.12.5.3.6	4.6.6	Creep and Shrinkage strains - Relative Humidity of 75%
5.12.8.6	3.11.2	Shear in Slabs and Footings
5.12.9.4	3.5.1	Prestressed Concrete Piles
5.12.9.5.2	3.6.11	Minimum Reinforcement Spacing
6.4.1	5.3	Structural Steel
6.4.3.1	5.4	Bolts
6.7.2	5.2	Dead Load Camber
6.7.3	5.5	Minimum Steel Dimensions
6.7.4	5.6.3	Cross Frames
6.7.4	5.7	Diaphragms and Cross Frames for "I-Girders"
6.7.5	5.6.4	Lateral Bracing
6.10.1.7	4.2.4	Minimum Negative Flexure Concrete Deck Reinforcement
6.10.11.1	5.8	Transverse Intermediate Stiffeners
6.10.11.2	5.9	Bearing Stiffeners
6.10.11.3	5.10	Longitudinal Stiffeners
6.13	5.11	Connections and Splices
6.13.2.8	5.11.1	Slip Resistance
6.13.3	5.11.2	Welded Connections
6.13.6.2	5.11.3	Welded Splices
9.7.1.3	4.2.9	Skewed Decks
9.7.2	4.2.4	Deck Design
9.7.2.4	4.2.4.A.	Empirical Design Method for Category 1 Structures not staged.
9.7.2.5	4.2.4	Deck Design
9.7.3	4.2.4	Deck Design
10.5.5	3.5.7	Resistance Factors
10.5.5	3.6.4	Resistance Factors

Table I.3-1 Cross Reference Between *AASHTO LRFD* & *SDG*

SECTION NO.		DESCRIPTION
LRFD	***SDG***	
10.5.5 & 10.6	3.8.1	Spread Footings
10.7.1.2	3.5.3	Minimum Pile Spacing and Clearances
10.7.1.2	3.11.2	Minimum Pile Spacing, Clearances, and Embedment into Cap
10.7.1.4	3.5.7	Battered Piles
10.7.1.6.2	3.5.5	Drag Load
10.7.2.4	3.5.4	Horizontal Pile Foundation Movement
10.7.3.3	3.5.9	Anticipated Pile Lengths
10.7.3.8	3.5.11	Load Tests
10.7.3.8.6	3.5.12	Pile Driving Resistance
10.7.3.12	3.4	Lateral Load
10.7.6	3.5.8	Minimum Tip Elevation (Piles)
10.7.9	3.5.10	Test Piles
10.8.1.5	3.6.5	Minimum Tip Elevation (Drilled Shafts)
10.8.3.5.6	3.5.11	Load Tests
10.8.3.8	3.4	Lateral Load
10.8.3.9.3	3.6.11	Minimum Reinforcement Spacing
11.5.1	3.13.2.C	Minimum Service Life
11.10	3.13.2	Mechanically Stabilized Earth Walls
11.10.1	3.13.2.E	Bin Walls
11.10.2.1	3.13.2.F	Minimum Length of Soil Reinforcement
11.10.2.2	3.13.2.G	Minimum Front Face Wall Embedment
11.10.2.3	3.13.2.H	Facing
11.10.5	3.13.2.I	External Stability
11.10.6.3.2	3.13.2.J	Apparent Coefficient of Friction
11.10.6.4	3.13.2.K	Soil Reinforcement Strength
11.10.6.4.4	3.13.2.L	Reinforcement/Facing Connection
13.7	6.7	Traffic Railing
13.7.2	6.7.6	Requirements for Test Levels 5 and 6
13.11	6.2	Curbs and Medians
14.4	6.4.2	Movement
14.5.1	6.4.1	Expansion Joint Design Provisions
14.5.3.2	6.4.2	Movement
14.6.2-1	6.5.1	Bearings - Design

Table I.3-2 Cross Reference between *AASHTO LRFD-MHBD & SDG*

SECTION NO.		DESCRIPTION
LRFD-MHBD	***SDG***	
1.4.4	8.1.9	Movable Bridge Traffic Signals and Safety Gates
1.4.4.6.2	8.8.15	Navigation Lights
1.5	8.6.3	Span Balance
5.4	8.5.1	Requirements for Mechanical Drive Systems
5.4.2	8.5	Speed Control for Leaf-driving Motors
5.6	8.6.7	Brakes
6.4.1.4	8.6.11	Anchors
6.7.5	8.6.5	Open Gearing
6.7.6	8.6.4	Speed Reducers
6.7.7	8.6.10	Bearings (Sleeve and Anti-Friction)
6.7.8	8.6.1	Trunnions and Trunnion Bearings
6.7.9.3	8.6.8	Couplings
6.7.13	8.6.7	Brakes
6.7.15	8.6.12	Fasteners
6.8.1.2	8.6.2	Racks and Girders
6.8.1.3	8.6.1	Trunnions and Trunnion Bearings
6.8.1.5.1	8.6.6	Span Locks
7	8.5.2	Requirements for Hydraulic Drive Systems
7	8.7	Hydraulic Systems
7.5.5	8.7.1	Hydraulic Pumps
7.5.6	8.7.3	Control Components
7.9.1	8.7.4	Hydraulic Lines
8	8.8	Electrical
8.1	8.8.1	Electrical Service
8.3.8	8.8.19	Automatic Transfer Switch
8.3.9	8.8.18	Engine Generators
8.4	8.8.8	Electrical Control
8.4.1	8.8.11	Safety Interlocking
8.4.2.3	8.8.9	Programmable Logic Controllers
8.4.4	8.8.10	Limit and Seating Switches
8.4.5	8.8.12	Instruments
8.4.6	8.8.13	Control Console
8.5	8.8.7	Alternating Current Motors
8.6	8.8.6	Motor Controls
8.9	8.8.2	Conductors
8.9.5	8.8.16	Electrical Connections between Fixed and Moving Parts
8.9.7	8.8.17	Electrical Connections across the Navigable Channel
8.11	8.8.5	Service Lights
8.12	8.8.3	Grounding and Lightning Protection
8.13	8.8.3	Grounding and Lightning Protection

1 GENERAL REQUIREMENTS

1.1 GENERAL

This Chapter clarifies, supplements, and contains deviations from the information in ***LRFD*** Sections 2, 5, and 6. These combined requirements establish material selection criteria for durability to meet the 75-year design life requirement established by the Department.

1.1.1 Design Review

See ***FDM*** 121 for definitions of Category 1 and Category 2 bridges and design review responsibilities.

1.1.2 Substructure and Superstructure Definitions

See the substructure and superstructure definitions in the FDOT ***Standard Specifications for Road and Bridge Construction***, Section 1-3 Definitions, and note the following:

A. Box culverts and bulkheads are substructures. Retaining walls, including MSE walls, have their own environmental classification procedure.

B. Approach slabs are superstructure; however, Class II Concrete (Bridge Deck) will be used for all environmental classifications.

1.1.3 Clearances

A. Vertical Clearances

1. The vertical clearance of bridges over water is the minimum distance between the underside of the superstructure and the normal high water (NHW) for navigable water crossings or the mean high water (MHW) for coastal crossings. See ***FDM*** 260 for vertical clearance requirements over water. When applicable, vertical clearance is measured at the inside face of the fender system.
2. The vertical clearance for grade separations over roads or railroads is the minimum distance between the underside of the superstructure or substructure, as applicable, and road or railroad. See ***FDM*** 260.
3. See ***SDG*** 8.1.4 for Movable Bridge clearance requirements.
4. For prestressed beam/girder superstructures, measure vertical clearance to a chord drawn between the tops of the bearing pads/beveled bearing plates at their centerlines as shown in Figure 1.1.3-1.

Commentary: The Department has encountered several projects where the theoretical final camber of prestressed concrete beams was included in the vertical clearance calculations. When the beams did not camber as predicted, which is not uncommon, the resulting vertical clearance was deficient.

Figure 1.1.3-1 Vertical Clearance Schematic for Prestressed Beams/Girders

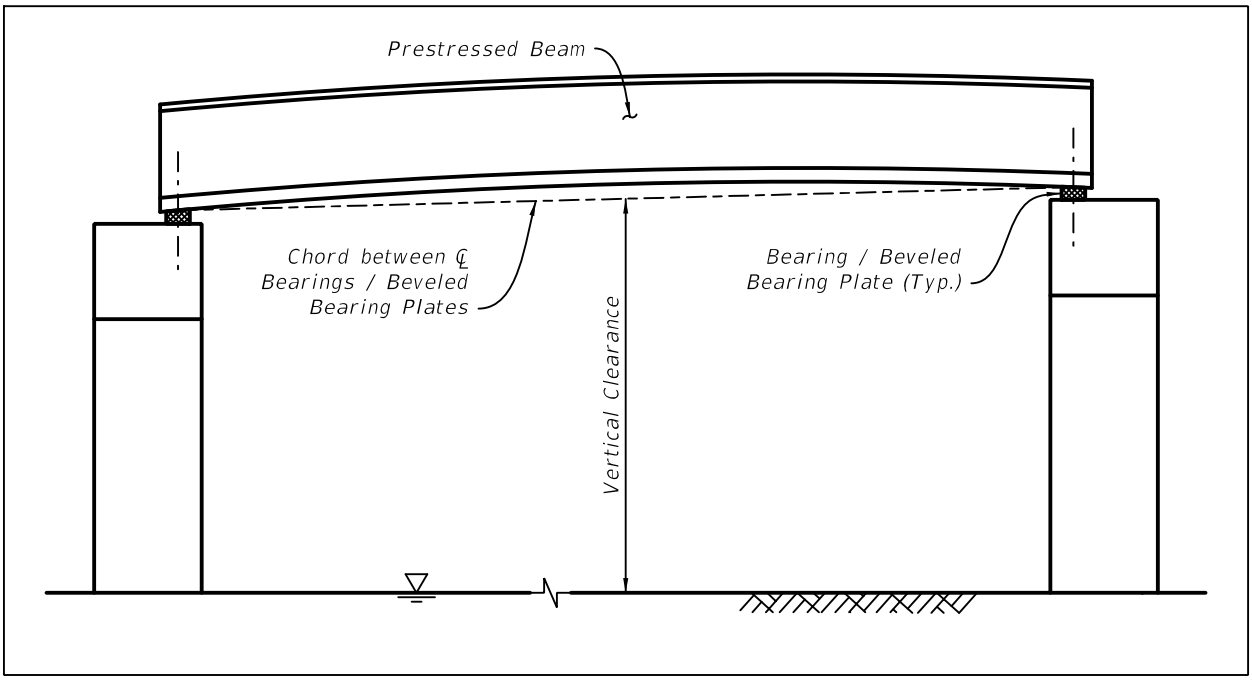

B. Horizontal Clearances

1. Design all fixed bridges over navigable waterways to provide horizontal clearance as required by the United States Coast Guard (USCG), the Army Corps of Engineers and the Florida Inland Navigation District.

Modification for Non-Conventional Projects:
Delete ***SDG*** 1.1.3.B.1 and see the RFP for requirements.

2. See ***SDG*** 8.1.5 for Movable Bridge horizontal clearance requirements.
3. See ***SDG*** 3.14 for Fender System requirements.
4. See ***FDM*** 215 for roadside safety related clearance requirements for bridges over roadways.

1.1.4 Bridge Height Classifications

FDOT classifications of bridges over water are based on the following vertical clearances:

A. Low Level: Less than 20-feet.
B. Medium Level: 20-feet or greater but less than 45-feet.
C. High Level: 45-feet or greater.

1.1.5 Product and Source of Supply

See ***FDM*** 110 for Build America Buy America provisions on Federal Aid Projects.

1.1.6 ADA on Bridges

Sidewalks on bridges and approaches must comply with the Americans with Disabilities Act (ADA) and Florida Accessibility Code. Generally, the maximum longitudinal slope of sidewalks along any grade or vertical curve, including the effects of superelevation transition, should be limited to 5%. Continuous handrails and landing areas are required for the portions of sidewalks with longitudinal slopes in excess of 5%. Sidewalk cross slopes must not exceed 2%. See ***Structures Detailing Manual*** (***SDM***) ***SDM*** Chapter 18 for sidewalk and landing area details for use when longitudinal slopes exceed 5% and for details of expansion joint treatments. See also ***ADA Standards for Transportation Facilities***, Section 405 (Ramps) and Section 505 (Handrails).

1.1.7 Target Service Life

If the structure target service life exceeds the ***LRFD*** 75-year design life, coordinate with the State Materials Office to develop the required materials specifications and the SSDE for other related design and detailing requirements.

1.2 DEFLECTION AND SPAN-TO-DEPTH RATIOS (LRFD 2.5.2.6)

Satisfy either the Span-to-Depth Ratios in ***LRFD*** 2.5.2.6.3 or the criteria for deflection in ***LRFD*** 2.5.2.6.2 and 3.6.1.3.2, except as follows:

A. For the design of bridges with pedestrian traffic or bridges where vehicular traffic is expected to queue, the criteria for deflection in ***LRFD*** 2.5.2.6.2 and 3.6.1.3.2 are mandatory.

B. For the design of bridges with framing systems that incorporate straddle piers or where bearings are not directly beneath the beams or girders, the criteria for deflection in ***LRFD*** 2.5.2.6.2 and 3.6.1.3.2 are mandatory.

C. For Flat Slab type bridges with a span to depth ratio up to 33, the deflection criteria need not be checked.

D. For the structure types where deflection criteria are mandatory as identified above, the deflection limits shall apply to all points within a span from coping to coping accounting for the stiffness of the substructure and superstructure structural system.

*Commentary: Whereas **LRFD** refers to deflection limits for simple and continuous spans, the deflection limits also apply to more complex framing systems and support conditions, e.g. straddle piers and integral framing systems where bearings are not directly beneath the beams or girders.*

1.3 ENVIRONMENTAL CLASSIFICATIONS

1.3.1 General

A. The Geotechnical Engineer of Record will recommend the environmental classifications for all new bridge sites. Environmental classification is required for major widenings (see definitions in ***SDG*** Chapter 7) and may be required for minor widenings. This determination will be made before or during the development of the Bridge Development Report (BDR)/30% Plans Stage (see ***FDM*** 121) and the results will be included in the documents. The bridge site will be tested, and separate classifications will be determined for both superstructure and substructure.

Modification for Non-Conventional Projects:
Delete ***SDG*** 1.3.1.A and see the RFP for requirements.

B. In the bridge plans "General Notes," include the environmental classification for both the superstructure and substructure according to the following classifications:
   1. Slightly Aggressive
   2. Moderately Aggressive
   3. Extremely Aggressive

C. For the substructure, additional descriptive data supplements the environmental classification. After the classification, note in parentheses the source and magnitude of the environmental classification parameters resulting in the classification.

Commentary: As an example, for a proposed bridge located in a freshwater swampy area where the substructure is determined to be in an Extremely Aggressive environment due to low soil pH of 4.5 and the superstructure to be in a Slightly Aggressive environment, the format on the bridge plans will be:

ENVIRONMENTAL CLASSIFICATION:
Substructure: Extremely Aggressive (Soil - pH = 4.5)
Superstructure: Slightly Aggressive

D. The substructure will not be classified less severely than the superstructure.

1.3.2 Classification Criteria

A. Bridge substructure and superstructure environments will be classified as “Slightly Aggressive”, “Moderately Aggressive”, or “Extremely Aggressive” environments according to the following criteria and as shown in Figure 1.3.3-1. Components classified as “Extremely Aggressive” may have category designations for “marine structures” and “splash zone” where additional corrosion mitigation measures are required. The superstructure is defined as all components from the bearings upward. Conversely, every element below the bearings is classified as substructure.

B. Marine Structures: Structures located over or within 2,500-feet of a body of water containing chloride above 2,000 ppm are considered to be marine structures and all other structures will be considered non-marine structures. Only chloride test results are required to determine if a structure is classified as marine. Results of chloride tests for most locations are available on SharePoint at the following address: using the ArcGIS ***Environmental Classification Viewer*** and ***Corrosion Inspection Database***.

NOTE: Access to the Corrosion Inspection Database is currently limited to FDOT personnel only. Consultants needing information from this database should contact the appropriate district office for assistance.

Classify superstructure and substructure as follows:

1. For structures over or within 2,500-feet of a body of water with chloride concentrations in excess of 6,000 ppm, both superstructure and substructure will be classified as extremely aggressive.
2. For structures over any water with chloride concentrations of 2,000 to 6,000 ppm, the substructure will be classified as extremely aggressive. Superstructures located within the splash zone will be classified as extremely aggressive. Superstructures located above the splash zone will be classified as moderately aggressive. See ***SDG*** 1.4 for definition of splash zone.
3. For structures within 2,500-feet of any body of water with a chloride concentration of 2,000 to 6,000 ppm, but not directly over the body of water, the superstructure will be classified as moderately aggressive. The substructure will follow the nonmarine criteria in Table 1.3.2-1.

C. Non-Marine Structures: All structures that do not meet the criteria above are considered non-marine structures.

1. Substructure: Classify all non-marine substructures in contact with water and/or soil as follows:

Table 1.3.2-1 Criteria for Substructure Environmental Classifications

Classification	Environmental Condition	Units	Steel		Concrete	
			Water	Soil	Water	Soil
Extremely Aggressive (If any of these conditions exist)	pH		< 6.0		< 5.0	
	Cl	ppm	> 2,000		> 2,000	
	SO_4	ppm	N.A.		> 1,500	> 2,000
	Resistivity	Ohm-cm	< 1,000		< 500	
Slightly Aggressive (If all of these conditions exist)	pH		> 7.0		> 6.0	
	Cl	ppm	< 500		< 500	
	SO_4	ppm	N.A.		< 150	< 1,000
	Resistivity	Ohm-cm	> 5,000		> 3,000	
Moderately Aggressive	This classification must be used at all sites not meeting requirements for either slightly aggressive or extremely aggressive environments.					
pH = acidity ($-\log_{10}H^+$; potential of Hydrogen), Cl = chloride content, SO_4 = Sulfate content.						

2. Superstructure: Any superstructure located within 2,500-feet of any coal burning industrial facility, pulpwood plant, fertilizer plant, or any other similar industry classify as Moderately Aggressive. All others classify as Slightly Aggressive.

D. For MSE wall environmental requirements, see ***SDG*** 3.12.C. MSE wall environmental requirements are partially based on air contaminants. See ***Standard Plans*** Index 548-020 for concrete class and cover requirements based on resulting FDOT Wall Type.

E. Requirements for the use of uncoated weathering steel superstructures are as follows. See also ***SDG*** 5.12.

1. Uncoated weathering steel superstructures may be used if the structure is located 4.0-miles or more from the coast or the intracoastal waterway (whichever is closer) regardless of the superstructure environmental classification. Vertical and horizontal clearances to a body of water shall comply with the following requirements:

   a. For structures over a body of water, the superstructure must be located above the splash zone for a body of water with chloride concentrations less than 6,000 ppm and located at least 25-feet above mean or normal high water for a body of water with chloride concentrations equal to or greater than 6,000 ppm. See ***SDG*** 1.4 for definition of splash zone.

   b. For structures adjacent to a body of water, the minimum horizontal clearance shall be at least 25-feet from a body of water with chloride concentrations less than 6,000 ppm and at least 100-feet from a body of water with chloride concentrations equal to or greater than 6,000 ppm.

2. For structures located within 4.0-miles of the coast or the intracoastal waterway, the use of uncoated weathering steel superstructures may be considered if site

conditions, as determined by the State Materials Office, satisfy each of the following criteria:

a. The maximum airborne salt deposition rate, as determined by ASTM Test G140, is less than 5 mg/m2/day (measured over a 30-day period).

b. The maximum average concentration for SO_2, as determined by ASTM Test G91, does not exceed 60 mg/m2/day (measured over a 30-day period).

c. Yearly average Time of Wetness (TOW), as determined by ASTM Test G84, does not exceed 60%.

Vertical and horizontal clearances to a body of water shall be site specific as determined by the State Materials Office. At a minimum, steel superstructures must be located above the splash zone.

Modification for Non-Conventional Projects:
Follow the requirements of ***SDG*** 1.3.2.E unless otherwise shown in the RFP.

1.3.3 Chloride Content

A. To optimize the materials selection process, the Designer and/or District Materials Engineer have the option of obtaining representative cores to determine chloride intrusion rates for any superstructure within 2,500-feet of any major body of water containing more than 6,000-ppm chlorides. The District Materials Engineer will take core samples from bridge superstructures in the immediate area of the proposed superstructure. The sampling plan with sufficient samples representing the various deck elevations will be coordinated with the State Materials Office. The Corrosion Laboratory of the State Materials Office will test core samples for chloride content and intrusion rates.

Commentary: Generally, all superstructures that are within line-of-sight and within 2,500- feet of the Atlantic Ocean or the Gulf of America are subject to increased chloride intrusion rates on the order of 0.016 lbs/cy/year at a 2-inch concrete depth. The intrusion rate decreases rapidly with distance from open waters and/or when obstacles such as rising terrain, foliage or buildings alter wind patterns.

Modification for Non-Conventional Projects:
Delete ***SDG*** 1.3.3.A and see the RFP for requirements.

B. After representative samples are taken and tested, Table 1.3.3-1 will be used to correlate the core results (the chloride intrusion rate in lbs/cy/year at a depth of 2-inch) with the classification.

Table 1.3.3-1 Chloride Intrusion Rate/Environmental Classification

Chloride Intrusion Rate	Classification
≥ **0.016** lbs/cy/year	Extremely Aggressive
< **0.016** lbs/cy/year	Moderately Aggressive

See Figure 1.3.3-1 Flow Chart for determining Environmental Classification.

Figure 1.3.3-1 Flow Chart for Environmental Classification of Structures

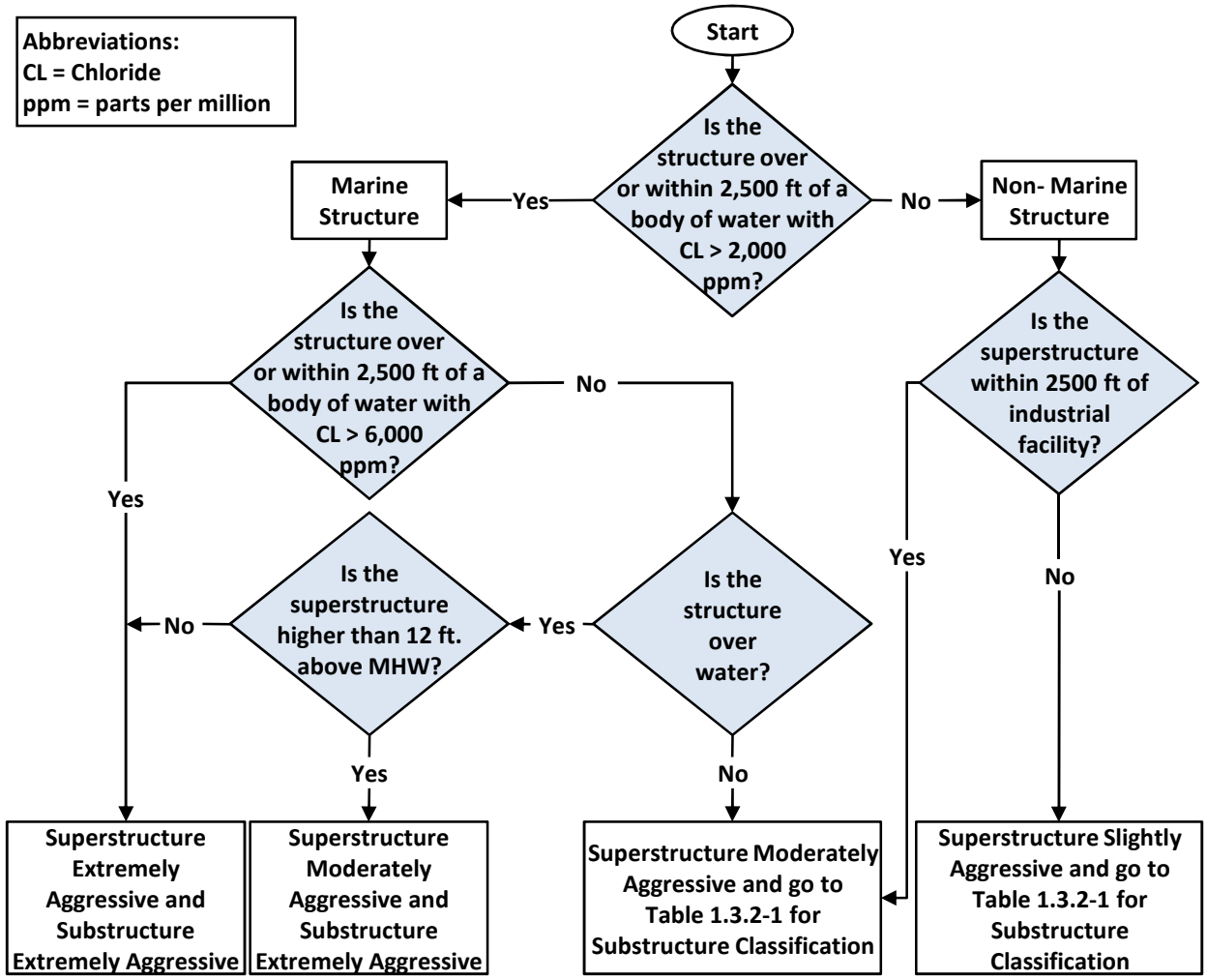

1.4 CONCRETE AND ENVIRONMENT (LRFD 5.14.1)

1.4.1 General

A. Use $\mathbf{K_1}$ = 1.0 as the correction factor when calculating the Modulus of Elasticity in ***LRFD*** 5.4.2.4. Use $\mathbf{w_c}$ = 0.145 kcf.

*Commentary: These values are based on the use of Florida limerock aggregate. The K_1 factor has been revised to be consistent with new Modulus of Elasticity equations in the **LRFD** 2015 Interims.*

Modification for Non-Conventional Projects:

Delete ***SDG*** 1.4.1.A and insert the following:

A. If Florida limerock coarse aggregate or other similar limerock aggregate is used in design, use $\mathbf{K_1}$ = 1.0 as the correction factor when calculating the Modulus of Elasticity in ***LRFD*** 5.4.2.4. For concrete made with limerock coarse aggregate, use $\mathbf{w_c}$ = 0.145 kcf.

B. Use the following reinforcing steel for concrete design:

- ASTM A615, Grade 60 deformed carbon-steel bar;
- ASTM A1064, Grade 75 deformed welded wire reinforcement (WWR).

Use the following steel reinforcing for concrete design with prior approval from the SSDE:

- ASTM A615, Grades higher than Grade 60;
- ASTM A955 Grade 60 or 75, or ASTM A276, UNS S31603 or S31803 deformed stainless steel bar;
- ASTM A1035, Grade 100 deformed low-carbon chromium steel bar. Do not consider the use of this reinforcing steel as adding any additional resistance to corrosion.

Specify the required type and grade of reinforcing steel in the Plans. See ***SDM*** 5.2.

Modification for Non-Conventional Projects:

Delete ***SDG*** 1.4.1.B and insert the following:

B. Use the following reinforcing steel for concrete design unless otherwise shown in the RFP:

1. ASTM A615, Grade 60 deformed carbon-steel bar;
2. ASTM A1064, Grade 75 deformed welded wire reinforcement (WWR).

Specify the required type and grade of reinforcing steel in the Plans. See ***SDM*** 5.2.

C. Do not specify epoxy coated reinforcing steel.

Commentary: The epoxy coated reinforcing steel issues encountered by the Department in the 1980s (gap manufacturing defects in the coating and delamination of the coating at bend locations) have since been minimized; however, other concerns still remain such as lack of steel passivation from contact with the

concrete and spalling from localized blooms of corrosion, which are caused by coating damage from transportation, handling and installation.

D. The use of lightweight concrete for structural applications requires prior approval of the DSDE for Category 1 Structures and the SSDE for Category 2 Structures.

Commentary: Based on the results of FDOT Research Project BDV90-977-22, lightweight concrete is acceptable in structural applications including pre-tensioned components. There is a higher cost associated with lightweight aggregate due to its manufacturing processes, limited number of vendors, and the proximity to Florida. Therefore, prior approval is required to ensure the use of lightweight concrete is an appropriate economical decision.

Modification for Non-Conventional Projects:
Delete ***SDG*** 1.4.1.D and insert the following: D. Lightweight concrete is not permitted for use in post-tensioned components.

E. Do not specify aluminum items (coated or uncoated) to be embedded in concrete components.

Commentary: Aluminum reacts with alkalis in the cement producing hydrogen gas. Additionally, there have been fatigue issues with aluminum expansion joints.

1.4.2 Concrete Cover

Delete ***LRFD*** 5.10.1 and substitute the following requirements:

A. The requirements for concrete cover over carbon-steel reinforcing are listed in ***SDG*** Table 1.4.2-1. Examples of concrete cover are shown in Figures 1.4.2-1 through 1.4.2-6. The covers shown are applicable to permanent components, and temporary components that will remain in the completed structure, e.g., stay in place forms. See ***Volume 4*** - ***Fiber Reinforced Polymer Guidelines*** for concrete cover over FRP reinforcing. For concrete cover over stainless steel reinforcing, use the concrete cover for FRP reinforcing.

Commentary: Cover requirements are based on successful past practices, construction tolerances, concrete placement considerations and concrete class.

Figure 1.4.2-1 End Bent (All Environments)

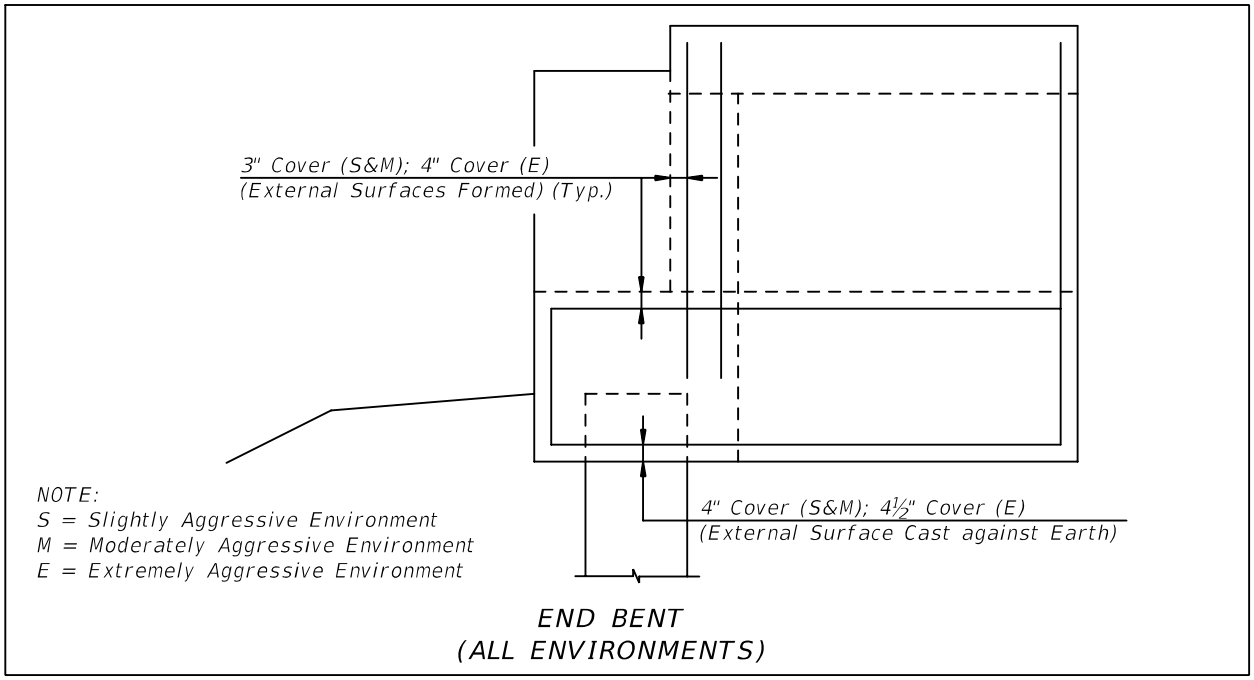

Figure 1.4.2-2 Piers (All Environments) (1 of 3)

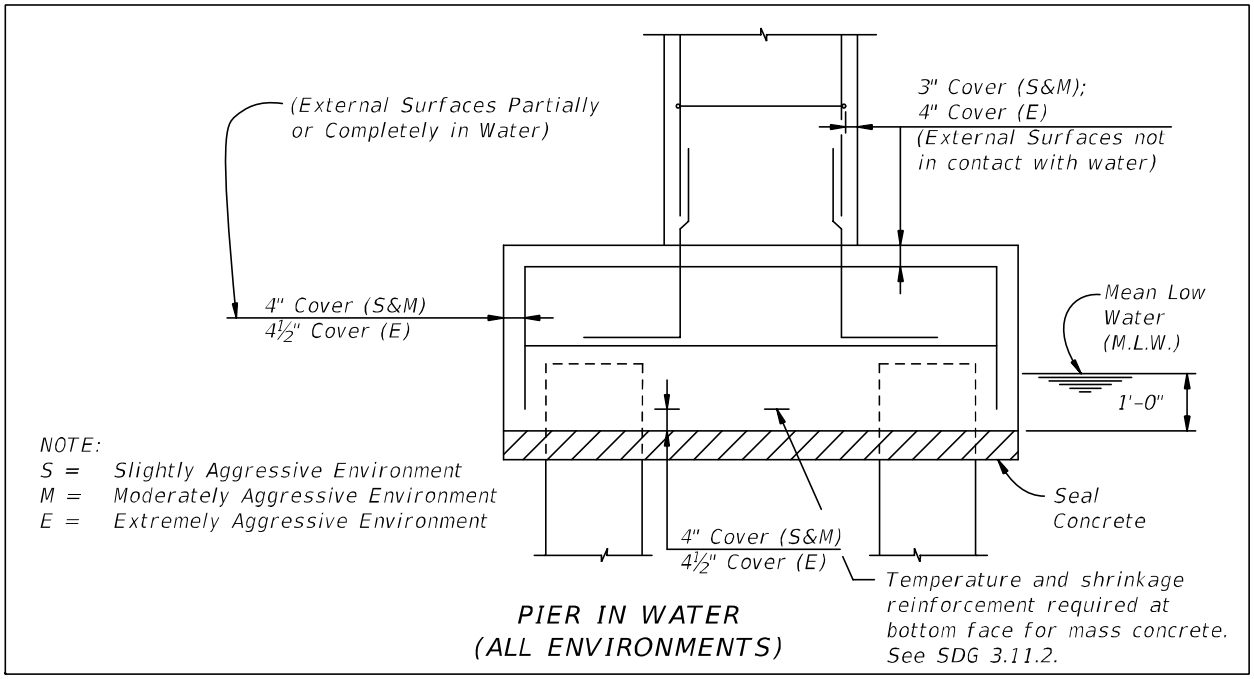

Figure 1.4.2-3 Piers (All Environments) (2 of 3)

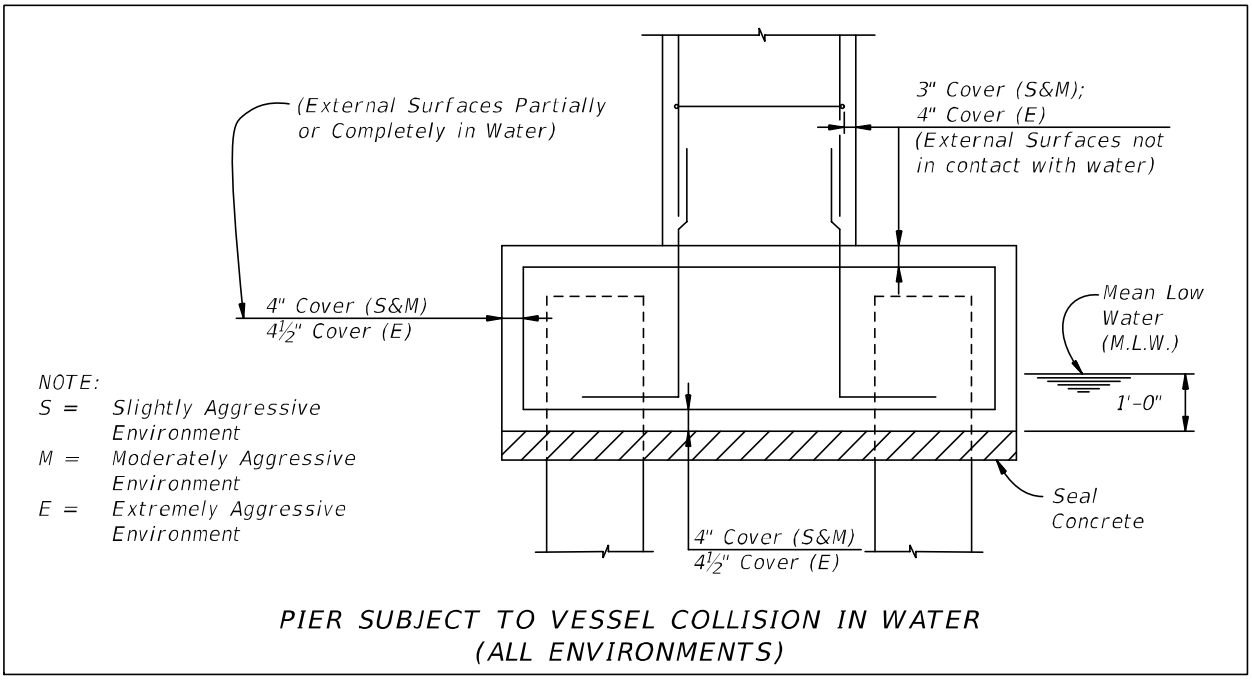

PIER SUBJECT TO VESSEL COLLISION IN WATER
(ALL ENVIRONMENTS)

Figure 1.4.2-4 Piers (All Environments) (3 of 3)

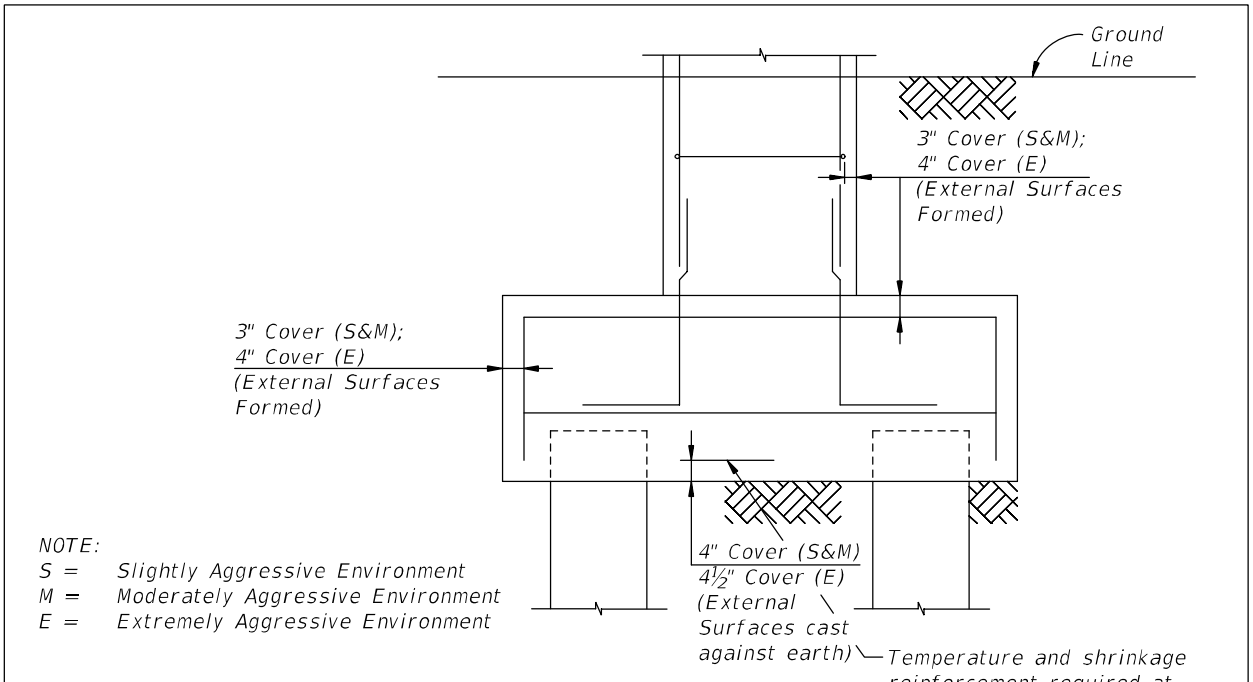

PIER ON LAND
(ALL ENVIRONMENTS)

Figure 1.4.2-5 Pier Cap and Intermediate Bent (All Environments)

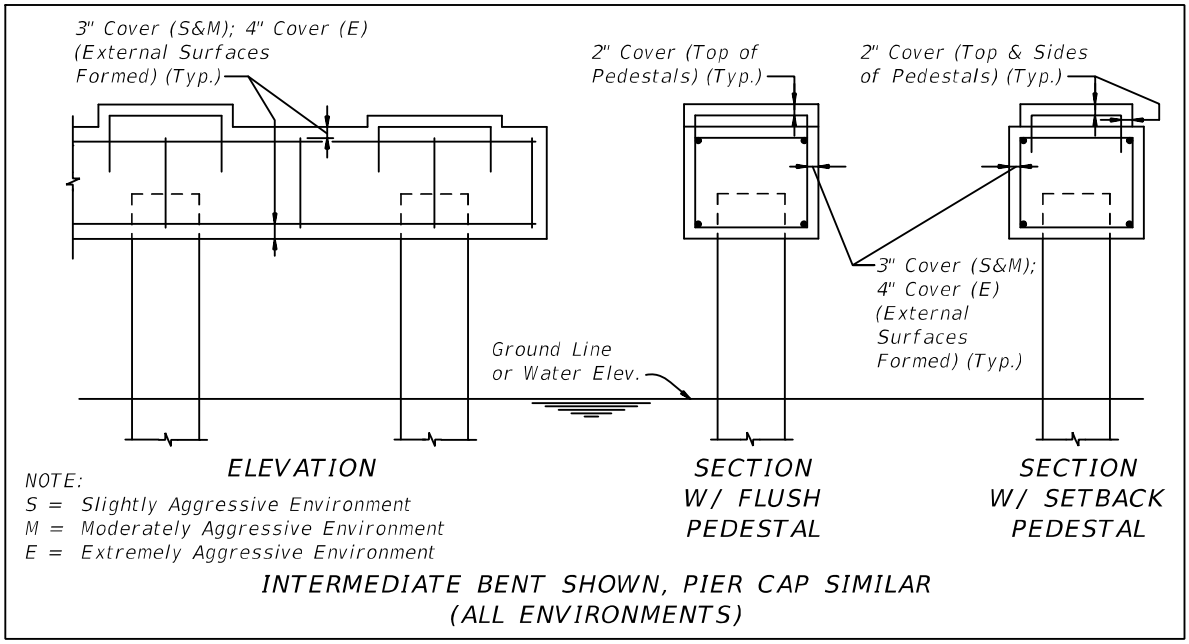

Figure 1.4.2-6 Cast-in-Place Deck / Beam Supported Superstructure (All environments)

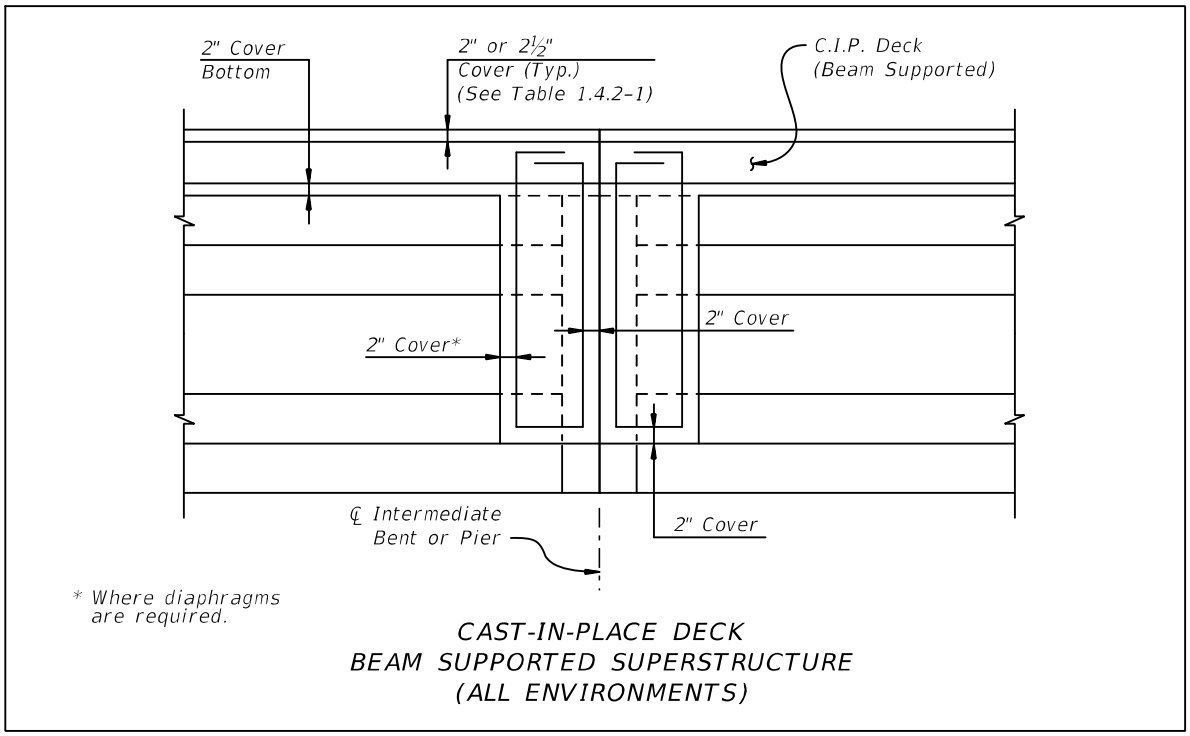

B. When deformed reinforcing bars are in contact with other embedded items such as post-tensioning ducts, the actual bar diameter, including deformations, must be taken into account in determining the design dimensions of concrete members and in applying the design covers of Table 1.4.2-1.

Table 1.4.2-1 Concrete Cover

Component (Precast and Cast-in-Place)	Concrete Cover (inches)	
	S or M[1]	E[1]
Superstructure		
All internal and external surfaces (except riding surfaces) of segmental concrete boxes, and external surfaces of prestressed beams (except the top surface)	2	
Top surface of beam top flange	¾ (min.)	
Top deck surfaces: Short Bridges[2]	2	
Top deck surfaces: Long Bridge[2]	2½[3]	
All components and surfaces not included above (including wall copings and traffic and pedestrian railings which are not allowed to be constructed using the slip forming method)	2	
Front and back surfaces of pedestrian railings and traffic railings, other than single-slope traffic railings, which may be constructed using the slip forming method	3	
Front and back surfaces of single-slope traffic railings which may be constructed using the slip forming method	2½	
Noise Wall Posts and Panels	2	
Precast Concrete Perimeter Wall Posts and Panels	1¾	
Substructure		
External surfaces cast against earth and surfaces in contact with water (excluding Drilled Shafts)	4	4½
Exterior formed surfaces, columns, and tops of footings not in contact with water and all components or surfaces not included elsewhere	3	4
Internal surfaces	3	
Beam/Girder Pedestals, Cheekwalls & MSE Wall Interface Lugs	2	
Prestressed Piling	3	
Spun Cast Cylinder Piling[4]	2	
Drilled Shafts	6	
Auger Cast Piles	4	
Micropiles	2	3
Retaining Walls (Excluding MSE walls[5] and external surfaces cast against earth)	2	3
Box and Three-sided Culverts (including wingwalls and wingwall footings)	2	3
Bulkheads	4	

1. S = Slightly Aggressive; M = Moderately Aggressive; E = Extremely Aggressive.
2. See Short & Long Bridge Definitions and exempted bridge types in ***SDG*** Chapter 4.
3. Cover dimension includes a 0.5-inch allowance for planing; see ***SDG*** 4.2.2.
4. Concrete for spun cast cylinder piling to be used in an extremely aggressive environment must have a documented chloride ion penetration apparent diffusion coefficient with mean

value of 0.005 in^2/year or less, otherwise 3-inch concrete cover is required. See ***SDG*** 3.5.18 for further limits on splicing of these piles.

5. See ***SDG*** 3.13 for MSE wall cover requirements.

1.4.3 Class and Corrosion Protection

The "General Notes" for both bridge plans and wall plans require the clear identification of, and delineation of use for, concrete class and corrosion protection used for strength and durability considerations.

The splash zone as it applies to marine structures is dependent on local site conditions, exposure, and elevation as described. The splash zone is generally defined as the vertical distance from 4-feet below MLW to 12-feet above MHW and higher elevations or areas subject to wetting by personal watercraft (e.g., jet skis), high energy wake from boat and vessel activities, and significant oceanfront or back bay wave and wind action. See ***SDG*** 1.3.2 for definition of marine structures.

Modification for Non-Conventional Projects:

Delete the second paragraph of ***SDG*** 1.4.3 and insert the following:

See the RFP for splash zone limits for marine structures. See ***SDG*** 1.3.2 for definition of marine structures.

Commentary: Personal watercraft often have a visibility spout as a safety feature, shooting a pressurized stream of water vertically into the air making them more visible to operators of larger watercraft. Several bridges have experienced significant corrosion due to personal watercraft spraying chloride water onto the underside of the bridge. BDV27 977-18 documented accelerated corrosion in protected back bay bridge locations at elevations above 12-feet which exceeded that of much lower elevations in the splash zone.

A. Use the class of concrete as shown in Table 1.4.3-1 for a given component or usage based on the environmental classification unless otherwise directed or approved by the DSDE for Category 1 Structures or the SSDE for Category 2 Structures.

Modification for Non-Conventional Projects:

Delete ***SDG*** 1.4.3.A and substitute the following:

A. Unless otherwise shown in the RFP, use the class of concrete as shown in Table 1.4.3-1 for a given component or usage based on the environmental classification, or a higher class of concrete required for the same component or usage located in a more aggressive environment.

Table 1.4.3-1 Structural Concrete Class Requirements

Component or Usage		Environmental Classification		
		Slightly Aggressive	Moderately Aggressive	Extremely Aggressive
Superstructure	Cast-in-Place (other than Bridge Decks)	Class II	Class IV	
	Cast-in-Place Bridge Deck (Including Diaphragms)	Class II (Bridge Deck)	Class IV	
	Approach Slabs	Class II (Bridge Deck)		
	Precast or Prestressed	Class III, IV, V, VI or VII	Class IV, V, VI or VII	

Table 1.4.3-1 Structural Concrete Class Requirements

Component or Usage		Environmental Classification		
		Slightly Aggressive	Moderately Aggressive	Extremely Aggressive
Substructure	Cast-in-Place (except as listed below)	Class II	Class IV	Class IV or V
	Precast or Prestressed (other than piling)	Class III, IV, V, VI or VII	Class IV, V, VI or VII	
	Cast-in-Place Columns located directly in splash zone	Class II	Class IV	
	Piling	Class V, VI or VII		
	Drilled Shafts	Class IV (Drilled Shafts)		
	Retaining Walls	Class II or III	Class IV	
	Seals	Class I (Seal)		
See Table 1.4.3-2 for minimum 28-day compressive strengths.				

B. For design, use the minimum 28-day compressive strengths given in ***SDG*** Table 1.4.3-2.

Modification for Non-Conventional Projects:

Delete ***SDG*** 1.4.3.B and replace with the following.

B. Limit concrete compressive design strength to 10 ksi.

Table 1.4.3-2 Concrete Classes and Strengths

Class of Concrete	Minimum 28-Day Compressive Strength (ksi)
Class I	3.0
Class II	3.4
Class II (Bridge Deck)	4.5
Class III	5.0
Class IV	5.5
Class IV (Drilled Shaft)	4.0
Class V	6.5
Class VI	8.5
Class VII	10.0

C. Corrosion Protection: Structural components located in Moderately or Extremely Aggressive environments utilize Class IV, V, VI or VII Concrete. These concrete classes may require use of Highly Reactive Pozzolans (HRP), to reduce permeability and increase resistivity of the concrete in the splash zone and acidic environments. Specify inclusion of HRP with minimum Surface Resistivity (SR) requirements as shown in Table 1.4.3-3.

The use of other corrosion protection measures to enhance durability must be consistent with the strategies outlined in Table 1.4.3-3. The Engineer of Record may request additional measures to be approved by the State Materials Office and the DSDE. Technical Special Provisions may be required for their implementation.

Modification for Non-Conventional Projects:

Delete the second paragraph of ***SDG*** 1.4.3.C.

D. HRP and SR above 29 kΩ-cm are not required when all reinforcing and prestressing materials in the concrete member are FRP for marine structures.

Table 1.4.3-3 Corrosion Protection of Concrete Components

Location/Environment	Component	Corrosion Protection
Superstructure in Extremely Aggressive Marine Environment	Pretensioned concrete beams and other components located within the splash zone. See ***SDG*** 4.3.1.	Coordinate with the State Materials Office and the DSDE for guidance on design mix requirements, cover and which alternative reinforcing materials are best suited for the project demands.
	Decks exposed to chloride water spilling from trailered boats due to nearby ramps or beach access	
Substructure in Extremely Aggressive Marine Environment	Piles with carbon or stainless steel strand, spirals and/or reinforcing[1]. See ***SDG*** Table 3.5.1-1	Design mix to include HRP and SR ≥ 29 kΩ-cm, except when FRP reinforcement is exclusively used in the concrete element.
	Pile bent caps with stainless steel reinforcing. See ***SDG*** 3.1	
	Substructure elements located within the splash zone	
	Retaining walls, including MSE walls[2] located within the splash zone and within 50-feet of the shoreline	
	Waterline footings and drilled shafts	Design mix to include HRP and SR ≥ 29 kΩ-cm, except when FRP reinforcing is exclusively used in the concrete element. Only metakaoline or ultrafine fly ash permitted for HRP options. *(Silica fume is not permitted due to shrinkage and other constructability concerns).*
Substructure in Extremely Aggressive Environments due to pH less than 5	Piles of pile bents	Design mix to include HRP and SR ≥ 29 kΩ-cm required.
	Substructure elements, located in soil or water with low pH	
	Retaining walls, including MSE walls[2] located in the water and within 50-feet of the high waterline	

1. See ***Standard Plans*** Index 455-001 and 455-101 for more detail on corrosion protection of piles.
2. See ***Standard Plans*** Index 548-020 “FDOT MSE RETAINING WALL CLASSIFICATION TABLE” for more detail on corrosion protection of MSE walls.

Modification for Non-Conventional Projects:
Delete the entire first row of ***SDG*** Table 1.4.3-3 (Superstructure in Extremely Aggressive Marine Environment) and see the RFP for requirements.

Commentary: To properly identify the concrete corrosion protection in the Plans, the corrosion protection shall be listed in the General Notes adjacent to the Concrete Class. For example, a bridge located in an extremely aggressive marine environment that has substructure components within the splash zone, the splash zone upper limit is El. 12.3. The EOR would specify the corrosion protection adjacent to the concrete class in the General Notes as follows. Ensure “HRP” is defined in the abbreviations list:

Concrete Class	Min. 28-day Compressive Strength (psi)	Min. 28-day Surface Resistivity (kΩ-cm)	Location of Concrete in Structure
IV	5,500	N/A	C.I.P. Substructure (UNO)
IV with HRP	5,500	29	C.I.P. Columns and Caps whose portion is below El. 12.3

1.4.4 Mass Concrete

A. Consider Mass Concrete requirements in selecting member sizes and avoid Mass Concrete if practical; however, when its use is unavoidable, indicate which portions are Mass Concrete.

B. Mass Concrete is defined as: "Any large volume of cast-in-place or precast concrete with dimensions large enough to require that measures be taken to cope with the generation of heat and attendant volume change so as to minimize cracking."

C. Criteria for Denoting Mass Concrete in Plans.

1. All Bridge components except drilled shafts and segmental superstructure pier and expansion joint segments: when the minimum dimension of the concrete exceeds 3-feet and the ratio of volume of concrete to the surface area is greater than 1-foot, provide for mass concrete.

    a. The surface area for this ratio includes the summation of all the surface areas of the concrete component being considered, including the full underside (bottom) surface of footings, caps, construction joints, etc.

    b. Volume and surface area calculations are in units of feet.

c. Assume a homogeneous section when calculating the volume and surface area for end bents and pile caps. Do not reduce the volume or increase the surface area due to the presence of piles.

2. Drilled Shafts: All drilled shafts with design diameters greater than 6-feet shall be designated as mass concrete.

3. Segmental Superstructure Pier and Expansion Joint Segments: Provide for mass concrete when design concrete strengths greater than 6,500 psi are used regardless of the ratio of volume to surface area. For design concrete strengths less than or equal to 6,500 psi, provide for mass concrete when the ratio of volume to surface area is greater than 1-foot. Consider interior core volume and use only the surface area exposed to air. Do not include wings, as well as flange or web extensions beyond the core. Make no deductions for post-tensioning ducts, minor utilities less than 6-inches diameter, etc. See ***Appendix*** 1B for a representation of the "interior core" (shown in red) to be considered. For cases when typical precast segments are used as a form "shell" for cast-in-place diaphragm core concrete, do not consider the "shell" concrete dimensions in determining the ratio. Consider only the monolithically-poured core concrete limits for volume and the surface area of that volume that is exposed to air.

Commentary: The intent is to consider the full volume of monolithically-poured concrete contributing to heat of hydration, neglecting the large surface area regions in the outer extremities that would tend to unconservatively skew the calculation. Also, neglecting the core surface area not directly exposed to air is a conservative assumption accounting for the fact that these regions are partially insulated by the adjacent concrete.

The volume to surface ratio is not used to determine if mass concrete provisions are necessary for pier and expansion joint segments when design concrete strengths greater than 6,500 psi are used. Instead, all such segments are assumed to be constructed of mass concrete because of the potential for the development of higher heat of hydration temperatures that are associated with higher strength concrete mixes.

4. Straddle and Integral Pier Caps: Provide for mass concrete when design concrete strengths greater than 6,500 psi are used regardless of the ratio of volume to surface area. For design concrete strengths less than or equal to 6,500 psi, provide for mass concrete when the ratio of volume to surface area is greater than 1-foot.

Commentary: These requirements are based on those used for segmental superstructure pier and expansion joint segments. See also Commentary above.

D. Take precautionary measures to reduce concrete cracking in large volumes of concrete. To prevent or control cracking in Mass Concrete, analyze the placement of construction joints and reinforcing steel. Refer to other methods as outlined in ***ACI PRC-207***, ***ACI PRC-224***, and ***ACI PRC-308***.

E. For estimated bridge pay item quantities, include separate pay item numbers for Mass Concrete (Substructure) and Mass Concrete (Superstructure). Do not consider seal Concrete as Mass Concrete.

Modification for Non-Conventional Projects:
Delete ***SDG*** 1.4.4.E.

1.4.5 Concrete Surface Finishes

A. The use of a Class 2 Surface Finish is preferred for all concrete elements except for bridge decks and concrete approach slabs. Textures, striations and/or graphics that are compliant with Department requirements may be used where appropriate at the discretion of the EOR for all structures other than noise, perimeter and retaining walls. Approval by the District Design Engineer (DDE) is required for the use of textures or graphics other than those shown in ***Standard Plans*** Index 534-200 for retaining walls and noise walls. Allowable textures for the front face of perimeter walls are limited to those used for commercially and readily available masonry blocks. The back face of masonry blocks and precast wall panels used for perimeter walls shall be smooth. Class 5 coatings, tints or stains may be considered for concrete elements as described in Paragraphs B and C below.

B. Approval by the DDE is required for the use of Class 5 coatings, tints or stains on bridges and noise, perimeter and retaining walls. The use of Class 5 coatings, tints or stains on the outside of concrete traffic railings and parapets mounted on bridges and retaining walls (i.e. traffic railing surfaces that are visible from a vantage point off of the bridge) are typically considered when enhanced aesthetic treatments are required because of their close proximity to and/or high visibility from important or popular locations with the following land uses: historical, tourism, commercial, recreational or residential. The use of Class 5 coatings, tints, and stains on median traffic railings and the inside and top surfaces of outside shoulder traffic railings and parapets mounted on bridge and retaining walls require additional justification when seeking approval by the DDE (Class 5 coatings have shown to collect debris and mildew faster on these surfaces due to traffic proximity). All noise walls in non-urban locations and all structures not specifically listed above are typically not considered candidates for the use of Class 5 coatings, tints, or stains. See ***FDM*** 215 for the companion policy on the use of Class 5 coatings, tints and stains on roadway concrete barrier walls.

Commentary: The use of a Class 5 coating should be thoughtfully considered. Class 5 coatings have shown to collect debris and mildew faster due to the coarse texture resulting in a diminished appearance of the structure, especially for surfaces that are more directly exposed to traffic (median traffic railings and the inside and top surfaces of outside shoulder traffic railings). The Class 2 Surface Finish is preferred by the Department as it results in a more aesthetic appearance of the structure during its entire service life, typically requiring no maintenance.

C. The Department will cover the cost for coatings, tints or stains on bridges and noise, perimeter and retaining walls only as described above. If a Local Maintaining Agency desires a bridge or noise, perimeter or retaining wall with coatings, tints or stains and the structure does not qualify for such treatment as determined by the Department, the structure may be treated with approval by the District Secretary. The Local Maintaining Agency shall provide the additional construction funding for the coatings, tints or stains and shall commit to cover the associated maintenance costs for the service life of the structure.

D. Determine the need for sacrificial or non-sacrificial anti-graffiti coatings based on project specific requirements. Use anti-graffiti coatings on the back face of noise or perimeter walls only if the back face of the wall is immediately adjacent to a public or common area. Coordinate the use of anti-graffiti coatings on other structures and/or in other locations with the District Maintenance Office.

E. See also ***SDM*** 4.4 for examples of how to depict surface finish requirements in the plans.

Modification for Non-Conventional Projects:
Delete ***SDG*** 1.4.5 and see the RFP for requirements.

1.5 EXISTING HAZARDOUS MATERIAL

A. Survey the project to determine if an existing structure contains hazardous materials such as lead-based paint, asbestos-graphite bearing pads, asbestos-cement drain pipes (scuppers), other asbestos-containing materials, etc. Information will be provided by the Department or by site testing to make this determination. Coordinate with the District Contamination Impact Coordinator.

Modification for Non-Conventional Projects:
Delete first sentence of ***SDG*** 1.5.A and see the RFP for requirements.

B. If lead based paint or asbestos containing materials exist anywhere on the existing structure, indicate on the plans that the structure contains lead based paint or asbestos containing materials, as appropriate, for the purpose of triggering the protection, or removal and disposal requirements in the ***Specifications***.

Commentary: Previous FDOT Standards and Specifications called for the use of lead based paint beneath bearing plates on both steel and concrete bridges and on steel members prior to erection and adjacent concrete placement. This paint has not been removed during subsequent repainting or maintenance operations because it is encapsulated in concrete or is located between faying surfaces.

Previous FDOT Standards allowed the use of asbestos-cement (transite) pipes for some bridge deck scuppers. These pipes may exist in some older bridges.

C. When an existing structure has been identified as having hazardous material, develop adequate abatement plans and provisions for worker safety, handling, storage, shipping, and disposal of the hazardous material. If proposed work will disturb identified hazardous materials, include in the project documents, protection, handling, and disposal requirements.

D. When a project involves hazardous materials, the FDOT design project manager will provide assistance in preparing the construction documents and the technical special provisions for handling and disposal of hazardous materials. Asbestos abatement plans must be developed by licensed asbestos consultants using the National Institute of Building Sciences (NIBS) ***Model Guide Specifications for Asbestos Abatement and Management in Buildings***.

Modification for Non-Conventional Projects:
Delete first sentence of ***SDG*** 1.5.D and see the RFP for requirements.

E. See also ***FDM*** 110.5.2.

1.6 POST-INSTALLED ANCHOR SYSTEMS

1.6.1 General

A. Post-Installed Anchor Systems are used to attach new construction to structurally sound concrete. Post-Installed Anchor Systems shall be limited to:

1. Adhesive Bonded Anchor Systems with adhesive bonding material listed on the Department's ***Approved Products List*** (***APL***).
2. Undercut Anchor and Screw Anchor Systems as approved on a project-by-project basis by the DSDE and the SSDE.

Delete ***LRFD*** 5.13. Design criteria and specific usage limitations for these anchor systems are provided in the following sections.

B. Specify an Adhesive Bonded, Undercut, or Screw Anchor System based on the specific usage limitations contained herein, product availability, installation and testing requirements, construction sequence and potential associated traffic control requirements, and all associated costs.

Commentary: Consider the adhesive bonding material cure time required between installation and field testing of adhesive bonded anchors when developing construction sequence and/or traffic control plans.

C. For pre-approved adhesive bonding material systems, refer to the ***APL***. Comply with Section 937 of the ***Specifications***. Require that Adhesive Bonded Anchors be installed in accordance with manufacturer's recommendations for hole diameter and hole cleaning technique and meet the requirements of Section 416 of the ***Specifications***.

D. When using Undercut or Screw Anchors, the designer must submit a request to the District Specifications Office to use ***Developmental Specifications*** Dev416 and Dev937 for Post-Installed Anchor Systems which includes provisions for Adhesive Bonded Anchors, Undercut Anchors, and Screw Anchors.

Modification for Non-Conventional Projects:
Delete ***SDG*** 1.6.1.A.2 and ***SDG*** 1.6.1.D. If Undercut or Screw Anchors are used, then ***Developmental Specifications*** 416 and 937 will be incorporated.

1.6.2 Adhesive-Bonded Anchors and Dowels Systems

A. Adhesive Bonded Anchor Systems consist of adhesive bonding material and steel bar anchors installed in clean, dry holes drilled in hardened concrete. Anchors may be deformed reinforcing bars or threaded rods depending upon the application. Except where specifically permitted by the ***Structures Manual*** or ***Standard Plans***, do not use Adhesive Bonded Anchor Systems to splice with existing reinforcing bars in either non-prestressed or prestressed concrete applications unless special testing is performed and special, proven construction techniques are utilized.

*Commentary: Installation of Adhesive Anchor Systems in saturated, surface-dry holes; i.e., holes with damp surfaces but with no standing water, is not pre-approved or recommended by the Department. However, in the event such a condition is encountered during construction, the Department may consider approving continued installation, but only on an adjusted, case-by-case basis. The damp hole strength of products on the **APL** has been determined to be approximately 75% of the required dry hole strength.*

B. Only use adhesive-bonded anchor and dowel systems for the following installations:

1. As specifically shown in the ***Structures Manual*** or ***Standard Plans***
2. Traffic Railing Retrofits
3. Pedestrian Railing Anchorage
4. Prestressed concrete pile splices (see Section 455 of ***Specifications*** for requirements)

Commentary: Due to concerns with long-term creep under permanent tension load and sensitivity of the installation, the Department limits the use of adhesive-bonded anchor and dowel systems to installations that comply with the following: (1) Vertically downward, downwardly inclined or horizontal; (2) Permanent component of the factored tension load does not exceed 30% of the factored tensile resistance; (3) Load-path redundant component. The use of multiple adhesive bonded anchors or dowels within a nonredundant component does not qualify as redundant.

C. Unless special circumstances dictate otherwise, design Adhesive Bonded Anchor Systems for a ductile failure. A ductile failure requires embedment sufficient to

ensure that failure will occur by yielding of the steel. In order to produce ductile failure, the following embedments may be assumed:

1. For Anchors in Tension: The embedment length necessary to achieve 125% of the specified yield strength or 100% of the specified tensile strength, whichever is less.
2. For Anchors in Shear: An embedment equal to 70% of the embedment length determined for anchors in tension.

D. In circumstances where ductile failure is not required, the design may be based upon the design strength of either the steel anchor or the adhesive bonding material, whichever is less.

Commentary: Characteristics to consider when determining when a ductile failure is not required, include:

1. *The amount of over-strength resistance provided beyond the factored design loads by the anchorage system;*
2. *Potential ductile failure of multiple members within the load path preempting failure of the anchorage system;*
3. *The number of anchors provided that may result in alternative system level redundancy;*
4. *The inherent value of a ductile failure mode to provide advance warning of an impending failure by excessive deflection or redistribution of loads;*
5. *The dominate failure mode, tension, shear, or creep.*
6. *36" Single-Slope traffic railing retrofits, utilizing reinforcing configurations substantially similar to* ***Standard Plans*** *Index 521-427, need only meet the 12 kip design strength of the steel anchor, except that the adhesive bonding material strength for the tension reinforcing within 3-feet of an open joint should meet 125% of the yield strength. This recommendation is based on test results from FHWA/TTI Report No. 05/9-8132-3 (March, 2005).*

E. Use Type HV for the design of Adhesive Bonded Anchors for structural applications. Only use Type HSHV adhesive bond strengths for the design of traffic railing retrofit anchorages where anchors will be installed in the vertical downward position and not subjected to sustained loading.

Commentary: Type HSHV adhesives are only intended for use in traffic railing retrofit applications where the use of through bolting, undercut anchors or threaded inserts is not practical and the predominant loading is from very short term loading under vehicular impact. The creep test and horizontal installation requirements for accepting Type HSHV and Type HV adhesives are the same, therefore lower bound bond strength (Type HV) shall be used for designs with sustained loading or horizontal installations.

F. Notation

The following notation is used in this Article:

Ae = effective tensile stress area of steel anchor (shall be taken as 75% of the gross area for threaded anchors). [in^2]

$\mathbf{A_{n0}}$ = $\langle \mathbf{16d} \rangle^2$, effective area of a single Adhesive Anchor in tension; used in Calculating $\psi_{\mathbf{gn}}$ (See Figure 1.6.2-1). [in^2]

$\mathbf{A_n}$ = effective area of a group of Adhesive Anchors in tension; used in calculating $\psi_{\mathbf{gn}}$, defined as the rectangular area bounded by a perimeter spaced **8d** from the center of the anchors and limited by free edges of concrete (See Figure 1.6.2-1). [in^2]

$\mathbf{A_{v0}}$ = $\mathbf{4.5}\ \langle \mathbf{c} \rangle^2$ effective breakout area of a single Adhesive Anchor in shear; used in calculating $\psi_{\mathbf{gv}}$ (See Figure 1.6.2-2). [in^2]

$\mathbf{A_v}$ = effective area of a group of Adhesive Anchors in shear and/or loaded in shear where the member thickness, **h**, is less than **1.5c** and/or anchor spacing, **s**, is less than **3c**; used in calculating $\psi_{\mathbf{gv}}$ (See Figure 1.6.2-2). [in^2]

c = anchor edge distance from free edge to centerline of the anchor [in]. (must also meet ***SDG*** Table 1.4.2-1 Cover Requirements.)

d = nominal diameter of Adhesive Anchor. [in]

$\mathbf{f'_c}$ = minimum specified concrete strength. [ksi]

$\mathbf{f_y}$ = minimum specified yield strength of Adhesive Anchor steel. [ksi]

$\mathbf{f_u}$ = minimum specified ultimate strength of Adhesive Anchor steel. [ksi]

h = concrete member thickness. [in]

$\mathbf{h_e}$ = embedment depth of anchor. [in]

$\mathbf{N_c}$ = tensile design strength as controlled by bond for Adhesive Anchors. [kips]

$\mathbf{N_n}$ = nominal tensile strength of Adhesive Anchor. [kips]

$\mathbf{N_o}$ = nominal tensile strength as controlled by concrete embedment for a single Adhesive Anchor. [kips]

$\mathbf{N_s}$ = design strength as controlled by Adhesive Anchor steel. [kips]

$\mathbf{N_u}$ = factored tension load. [kips]

s = Adhesive Anchor spacing (measured from centerlines of anchors). [in]

ψ_m = Modification factor for breakout compression field effect (1.0 when **z ≥ 1.5h**).

z = Internal lever arm for restrained concrete breakout calculated in accordance with the theory of elasticity.

When using Type HSHV adhesives, the minimum anchor spacing is **12d**.

*Commentary: The use of higher bond strengths with close anchor spacing can potentially result in concrete breakout failure under tensile loading that may not be accounted for in the current equations. A check of the concrete breakout strength for groups of anchors in accordance with **ACI CODE-318**, would provide a conservative concrete capacity under tensile loading and justification of closer anchor spacing for HSHV adhesives.*

V_c = shear design strength as controlled by the concrete embedment for Adhesive Anchors. [kips]

V_s = design shear strength as controlled by Adhesive Anchor steel. [kips]

V_u = factored shear load. [kips]

T' = 1.08 ksi nominal bond strength for general use products on the ***APL*** (Type V and Type HV). 1.83 ksi nominal bond strength for Type HSHV adhesive products on the ***APL*** for traffic railing barrier retrofits only.

ϕ_c = 0.85, capacity reduction factor for adhesive anchor controlled by the concrete embedment (ϕ_c =1.00 for extreme event load case)

ϕ_s = 0.90, capacity reduction factor for adhesive anchor controlled by anchor steel.

ψ_e = modification factor, for strength in tension, to account for anchor edge distance less than **8d** (1.0 when c ≥ 8d).

ψ_{gn} = strength reduction factor for Adhesive Anchor groups in tension (1.0 when **s ≥ 16d**).

ψ_{gv} = strength reduction factor for Adhesive Anchor groups in shear and single Adhesive Anchors in shear influenced by member thickness (1.0 when **s ≥ 3.0c** and **h ≥ 1.5c**).

G. Design Requirements for Tensile Loading

Use Equation 1-2 to determine the design tensile strength for Adhesive Anchor steel:

$$\phi N_s = \phi_s A_e f_y \quad \text{[Eq. 1-2]}$$

Use Equation 1-3 to determine the design tensile strength for Adhesive Anchor bond:

$$\phi N_c = \phi_c \psi_e \psi_{gn} \psi_m N_o \quad \text{[Eq. 1-3]}$$

Where:

$$N_O = T' \pi d h_e \quad \text{[Eq. 1-4]}$$

For anchors with a distance to a free edge of concrete less than **8d**, but greater than or equal to **3d**, a reduction factor, ψ_e, as given by Equation 1-5 must be used. For anchors located less than **3d** from a free edge of concrete, an appropriate strength reduction factor must be determined by special testing. For anchors with an edge distance greater than **8d**, ψ_e shall be taken as 1.0. Edge distance for all anchors must also meet ***SDG*** Table 1.4.2-1 Cover Requirements.

$$\psi_e = 0.70 + 0.30\ (c / 8d) \quad \text{[Eq. 1-5]}$$

For anchors loaded in tension and spaced closer than **16d**, a reduction factor, ψ_{gn}, given by Equation 1-6 must be used. For anchor spacing greater than **16d**, ψ_{gn} must be taken as 1.0.

$$\psi_{gn} = (A_n / A_{no}) \quad \text{[Eq. 1-6]}$$

For anchors loaded in tension where a compressive restraint or reaction is provided within the projected concrete breakout area, the modification factor **m**, given by Equation 1-6a may be used. For anchors where **c < 8d**, and the compressive reaction is not located between the anchor and the free edge of the concrete, the effects of this modification factor should be neglected.

$$\psi_m = 2 - z / (1.5 * h_e) \quad \text{[Eq. 1-6a]}$$

H. Design Requirements for Shear Loading

1. Adhesive Anchors loaded in shear must be embedded not less than **6d** with an edge distance not less than the greater of **3d** or that distance required to meet the concrete cover requirements of ***SDG*** Table 1.4.2-1.
2. For Adhesive Anchors loaded in shear, the design shear strength controlled by anchor steel is determined by Equation 1-7:

$$\phi V_s = \phi s\ 0.7\ A_e f_y \quad \text{[Eq. 1-7]}$$

3. For Adhesive Anchors loaded in shear, the design shear strength controlled by concrete breakout for shear directed toward a free edge of concrete is determined by Equation 1-8:

$$\phi V_c = \phi_c\ \psi_{gv}\ 0.4534\ c^{1.5}\sqrt{f'_c} \quad \text{[Eq. 1-8]}$$

4. For anchors spaced closer than **3.0c** and/or member thickness less than **1.5c**, a reduction factor, ψ_{gv}, given by Equation 1-9 must be used. For anchor spacing greater than **3.0c** with member thickness greater than **1.5c**, ψ_{gv} must be taken as 1.0.

$$\psi_{gv} = A_v / A_{vo} \quad \text{[Eq. 1-9]}$$

I. Interaction of Tensile and Shear Loadings

1. The following linear interaction between tension and shear loadings given by Equation 1-10 must be used unless special testing is performed:

$$(\mathbf{Nu} / \phi\mathbf{N_n}) + (\mathbf{V_u} / \phi\mathbf{V_n}) \leq \mathbf{1.0} \qquad \text{[Eq. 1-10]}$$

2. In Equation 1-10, $\phi\mathbf{N_n}$ is the smaller of the design tensile strength controlled by the Adhesive Anchor steel (Equation 1-2) or the design tensile strength as controlled by Adhesive Anchor bond (Equation 1-3). $\phi\mathbf{V_n}$ is the smaller of the design shear strength controlled by the Adhesive Anchor steel (Equation 1-7) or the design shear strength as controlled by concrete breakout (Equation 1-8).

Commentary: If Adhesive Anchor Systems are required to act as dowels from existing concrete components such that the existing reinforcing steel remains fully effective over its length, then the Adhesive Anchor System must be installed to a depth equal to the development length of the existing reinforcing steel. In this case, the required reinforcing steel spacing, covers, etc. apply to both the existing reinforcing steel and the Adhesive Anchor System. There is, however, no additional benefit to the Adhesive Anchor System to install anchors to a greater depth than required by this Article.

See Figure 1.6.2-1 Effective Tensile Stress Areas of Adhesive Anchors.

See Figure 1.6.2-2 Effective Shear Stress Areas of Adhesive Anchors.

Click to download a Mathcad program ***Adhesive Anchor v1.01***.

Click to view ***Adhesive Bonded Anchor Design Examples***.

Figure 1.6.2-1 Effective Tensile Stress Areas of Adhesive Anchors

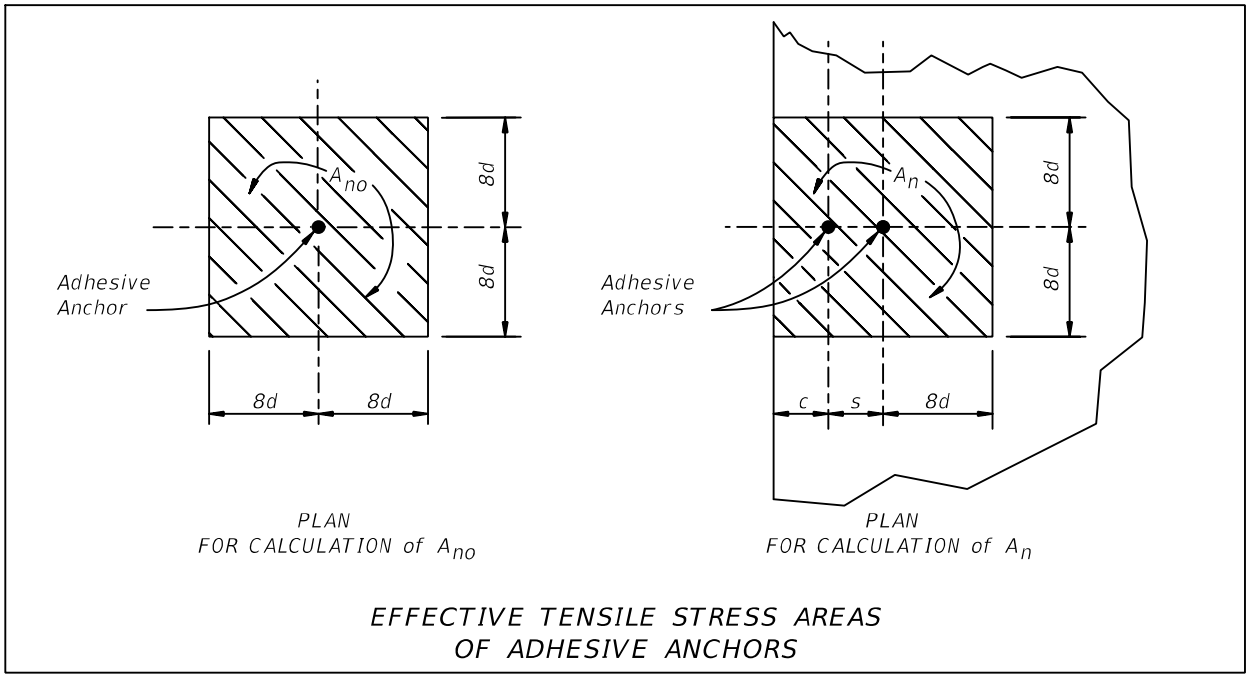

Figure 1.6.2-2 Effective Shear Stress Areas of Adhesive Anchors

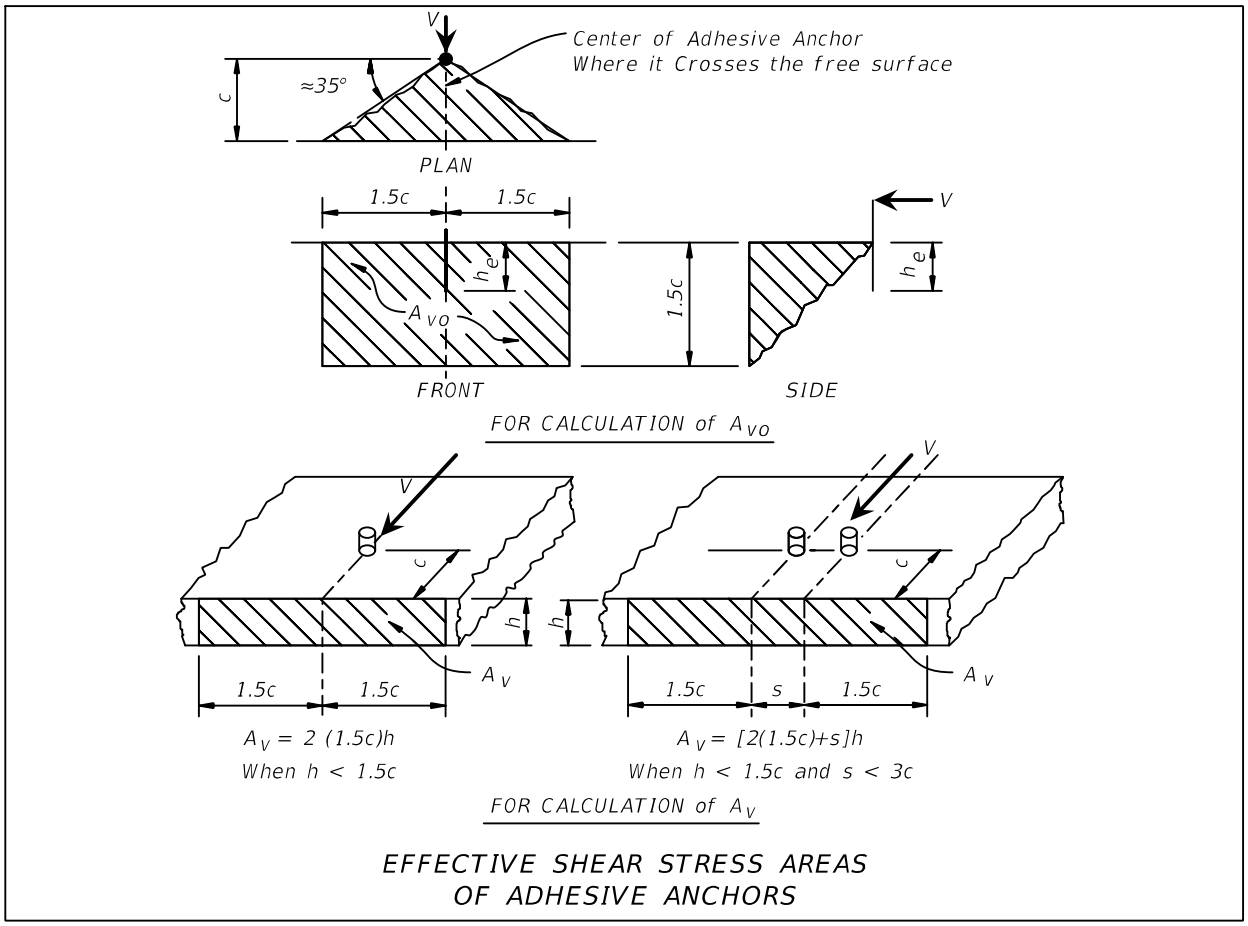

1.6.3 Undercut and Screw Anchor Systems

A. Undercut and Screw Anchors are primarily intended for overhead applications and applications with predominately sustained tension loads (permanent component of the factored tension load exceeds 30% of the factored tensile resistance) where Adhesive Bonded Anchors are precluded. They may be used for anchorages on other applications in lieu of Adhesive Bonded Anchors where appropriate and applicable.

B. EOR's Design Criteria

1. Use the following criteria for providing factored design load(s), bolt diameter, embedment depth and anchor configuration in the Plans for each Undercut Anchor location.

2. The designer must submit a request to the District Specifications Office to use Developmental Specifications Dev416 and Dev937. Contact the SSDE for additional design guidance.

3. Design Undercut and Screw Anchors in accordance with ***ACI CODE-318***, Chapter 17, using the product data provided by the ***ACI CODE-355.2*** product evaluation report, except using a concrete breakout resistance factor of 0.75 for Screw Anchors.

4. Do not account for supplementary reinforcement at potential concrete failure surfaces in any structural member receiving an Undercut or Screw Anchor (Condition B per ***ACI CODE-318***, Chapter 17).
5. Use only Category 1 Undercut Anchor Systems as defined in ***ACI CODE-318***, Chapter 17.
6. Use only Undercut or Screw Anchor Systems qualified for use in cracked concrete. Use the effectiveness factor for cracked concrete (k_c or k_{cr}) as taken from the ***ACI CODE-355.2*** product evaluation report.
7. Use ***LRFD*** Section 3 for determining design loads when evaluating resistance using ***ACI CODE-318***, Chapter 17.
8. Use stainless-steel anchors for permanent outdoor applications. Screw Anchors for permanent outdoor applications may be mechanically galvanized in lieu of stainless-steel for locations not within the splash zone.

Commentary: Stainless-steel Undercut Anchors are required for permanent outdoor applications due to the potential for crevice corrosion.

1.7 LOAD RATING

A. When load rating structures, perform a ***LRFR*** load rating analysis as defined in the ***AASHTO Manual for Bridge Evaluation (MBE)***, Section 6, Part A and as modified by the Department's ***Bridge Load Rating Manual***. See ***SDG*** Figure 7.1.1-1 for widenings and rehabilitations.

B. See ***FDM*** 121 for phase submittal requirements.

1.8 POST-DESIGN SERVICES

A. The ***Construction Project Administration Manual (CPAM)*** contains instructions needed to complete the administrative portion of Department of Transportation construction contracts. It is designed to give details to Department representatives for administering items mandated in Florida Statutes, rules and/or contract specifications and for the successful completion of construction contracts. The ***CPAM*** ensures consistency in carrying out Department of Transportation policies and helps ensure that all construction contracts are successfully administered on a fair and equal basis.

B. When responding to "Request for Information" (RFI), "Request for Modification" (RFM), and "Request For Correction" (RFC), refer to ***CPAM*** 8.11 and ***CPAM*** 10.10 for Engineer of Record's responsibilities and required Department involvement. Project related questions that arise during construction that are not covered by specific Department policies or Contract Documents, contact appropriate Department personnel for input and concurrence.

Commentary: The reason for getting Department input is to avoid setting unwanted precedence, to ensure uniformity between projects and Districts and to provide a mechanism for policy feedback.

Modification for Non-Conventional Projects:
Delete ***SDG*** 1.8 and see ***CPAM***.

1.9 MISCELLANEOUS ATTACHMENTS TO BRIDGES

A. Miscellaneous attachments include but are not limited to signs, lights, traffic signals, conduits, drain pipes, utilities and other similar non-standardized items.

B. Design and detail miscellaneous attachments to bridges using the allowable connection types shown in ***Appendix*** 1A and show the details in the plans. See ***SDG*** 1.6 for specific requirements related to post-installed anchor systems. See ***Volume 3*** Section 2.6.1 for additional bridge mounted sign requirements.

C. Coordinate locations and attachment details with other disciplines in accordance with ***FDM*** 215. Coordinate utilities accommodation with the District Utilities Engineer.

D. Attach supports for sign structures and other similar miscellaneous items to the back face of New Jersey Shape, F-Shape, Vertical Face and structurally continuous Post and Beam outside shoulder traffic railings using the details shown in Figure 1.9-1. See also ***FDM*** 215 for additional requirements. Contact the SSDE for guidance when attaching supports to all other traffic railing types. Do not attach supports to traffic railings within 5-feet of an open joint in the railing. Check the capacity of the traffic railing and the deck at the support location using the Strength III, Service I and Extreme Event II load combinations. Although intended for use with the outside shoulder traffic railing types listed, the details presented in Figure 1.9-1 can also be used for attaching items to concrete pedestrian railings.

Commentary: The criteria and details for miscellaneous attachments to traffic railings are intended to preserve the crashworthiness of the traffic railings.

Figure 1.9-1 Special Details for Attaching Miscellaneous Items to Traffic Railings

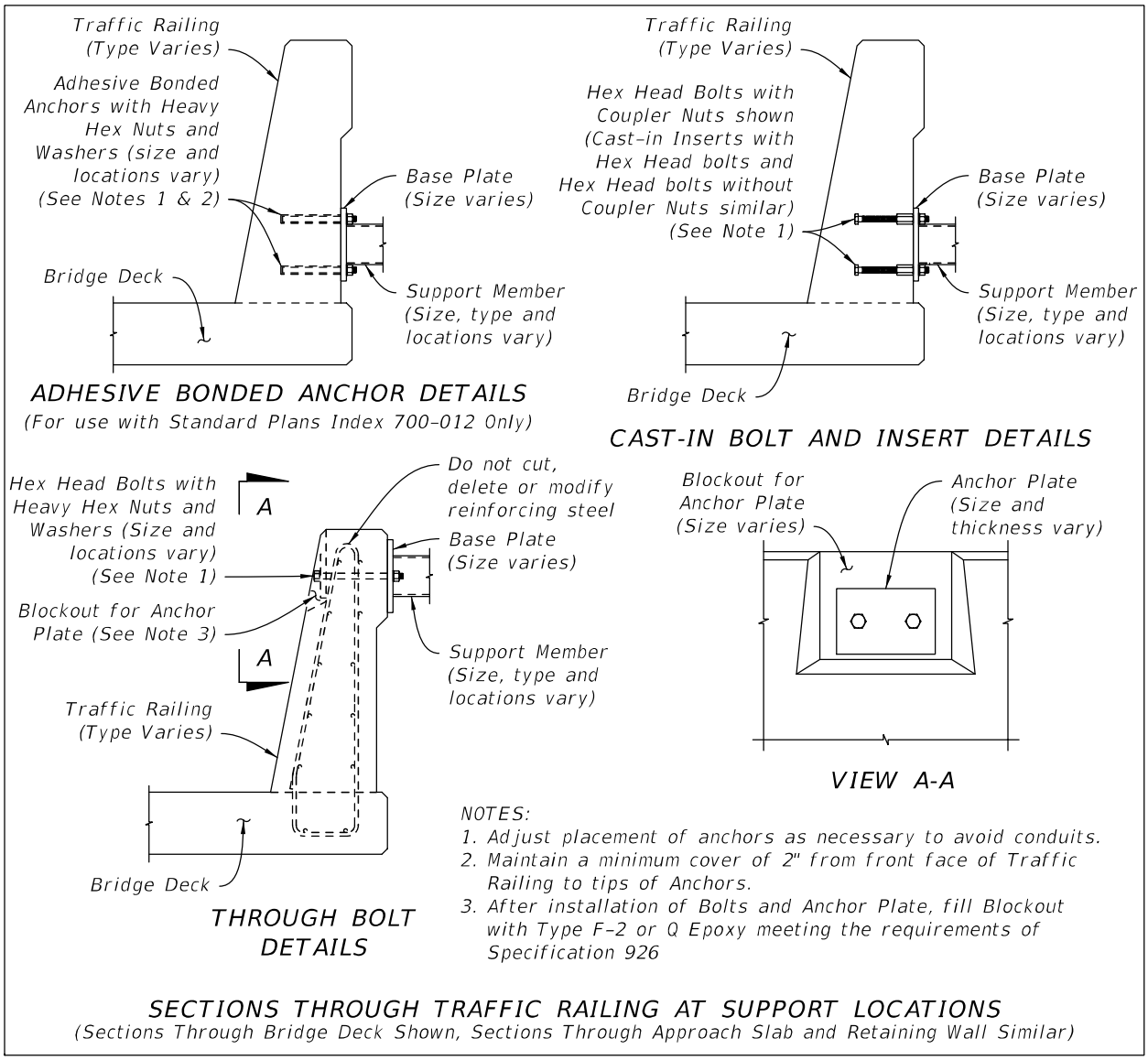

E. When field drilling of existing structures at locations shown in ***Appendix*** 1A is permitted by the DSDE, include plan notes and/or develop Technical Special Provisions to address special requirements, e.g., locating reinforcing steel, prestressing steel and/or post-tensioning tendons in existing concrete structures prior to field drilling, drilling into any steel members, etc.

1.10 LIMITATIONS ON BRIDGE SKEW ANGLE

The maximum allowable skew angle at bridge supports shall be limited to 50° unless otherwise required by geometric constraints such as when supports have to be placed within narrow skewed medians of underlying roadways. In no case shall the skew angle

be greater than 60° unless approved by the SSDE. See ***SDM*** 2.14 for the definition of skew angle.

Modification for Non-Conventional Projects:
Delete the second to last sentence of ***SDG*** 1.10 and replace with the following: In no case shall the skew angle be greater than 60° unless otherwise stated in the RFP.

*Commentary: Highly skewed bridge supports are generally discouraged and should be avoided whenever possible. Highly skewed supports complicate design and detailing, and require complex fabrication, erection, and construction efforts. Skewed supports also require longer and more expensive substructures. Designers are often lured into the perceived advantages that skewed supports can offer such as matching underlying alignments to reduce span lengths and deck area. The increased complexity resulting from highly skewed supports significantly escalates the overall cost of the structure. Lengthening the span by minimizing the skew angle or squaring the supports can potentially be more economical when rationally compared to the cost of using highly skewed supports. See also **SDM** 12.5.H.*

1.11 POST-TENSIONING (LRFD 5)

1.11.1 General

A. Design and detail post-tensioned structures in accordance with the requirements of ***LRFD*** as modified by this section and the ***Standard Plans*** using post-tensioning systems that meet the requirements of the ***Specifications***.

B. Design and detail all tendons that utilize flexible filler to be unbonded, fully replaceable, meet anchorage clearance requirements of ***SDG*** Table 1.11.1-1, and have clearance at the anchorages for jacking and future tendon replacement operations. Prior approval from the SSDE is required for the following cases:

   1. Design for replaceable tendons that requires complete or partial removal of deck or diaphragm concrete.
   2. Stressing end anchorages located in locations that require demolition to replace tendons.
   3. Anchorage blisters on the exterior face of a fascia I-beam or girder other than as shown in ***SDM*** Figure 23.7-1 and ***SDM*** Figure 23.7-2, on the exterior of a U-beam or girder, or on the exterior of a box girder.

Table 1.11.1-1 Minimum Clearance Requirements at Anchorages for Replaceable Strand and Wire Tendons

Anchorage Type and Location	Minimum Clearance Requirement	Example Detail
Stressing End Anchorage Near Deviator	Dimension B[1]	***SDM*** Figure 20.8-1
Stressing End Anchorage at Intermediate Diaphragm Near Minor Obstruction[2]	Dimension A[1] + 1'-0" (min.)	***SDM*** Figure 20.8-2
Non-Stressing End Anchorage Near Abutment	2'-6" + Δ_T Δ_T = Maximum Design Thermal Expansion	***SDM*** Figure 20.8-3 ***SDM*** Figure 23.7-3
Non-Stressing End Near Other Structure	2'-6" + $\sum\Delta_T$ $\sum\Delta_T$ = Summation of Maximum Design Thermal Expansion of both adjacent structures	***SDM*** Figure 20.8-4 ***SDM*** Figure 23.7-4
Stressing End Anchorage at Other Locations	Dimension A[1] + Δ_T (if applicable) + sufficient clearance for pulling existing tendon and installation of new tendon (Prior SSDE approval is required to use this approach at locations other than webs of I-girders as shown in ***SDM*** Figures 23.7-1 and 23.7-2)	***SDM*** Figure 23.7-1 ***SDM*** Figure 23.7-2
Non-Stressing End Anchorage at Other Locations	2'-6" + Δ_T (if applicable)	-

1. See ***SDG*** Figure 1.11.1-1 and ***SDG*** Table 1.11.1-2.
2. A minor obstruction is a bridge component or projection that does not impede future tendon replacement operations.

*Commentary: In general, permanent strand tail extensions will not be required for replaceable tendons. The use of non-stressing ends of tendons located at bridge end diaphragms is desirable due to reduced clearance requirements at the anchorages. Visible anchorage blisters, such as web blisters, are generally not desirable for aesthetic reasons. Anchorages embedded within a thickened web section that are not visibly distinct are preferred (see **SDM** Figure 23.7-1 and **SDM** Figure 23.7-2).*

Figure 1.11.1-1 Jack Envelope Dimensions for Design and Detailing

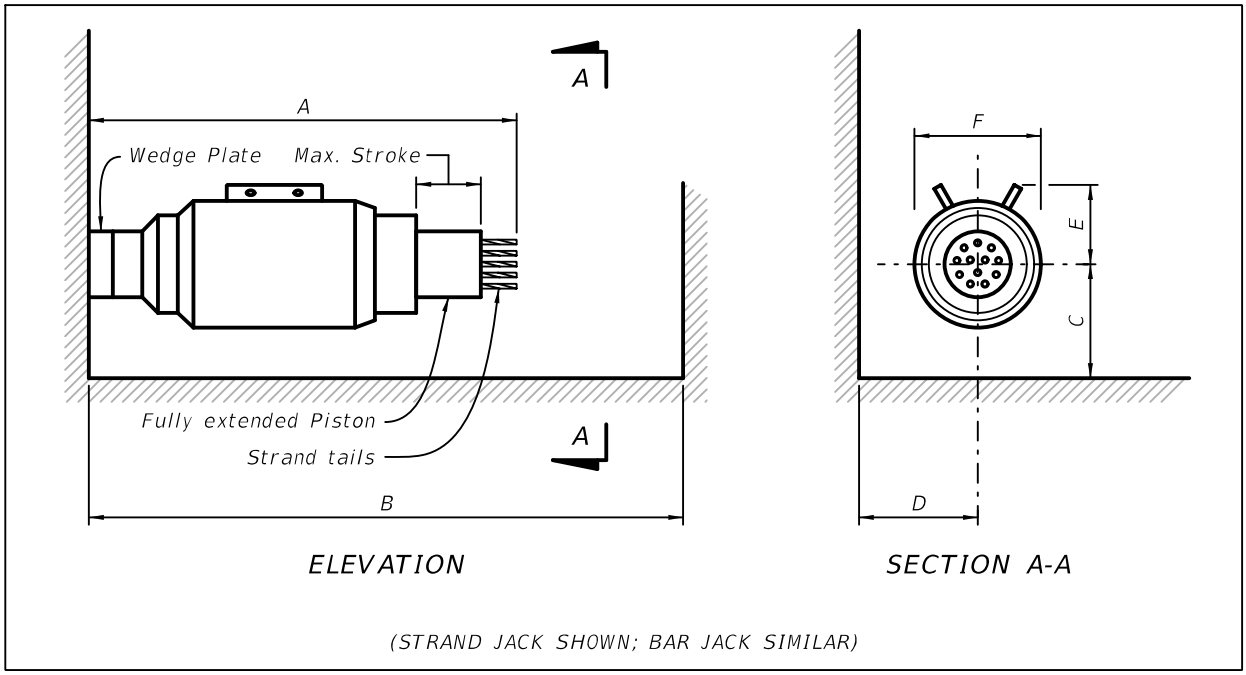

Table 1.11.1-2 Jack Envelope Dimensions for Design and Detailing

Tendon Size & Type	Jack Envelope Dimensions (in)					
	A	B[1]	C	D	E	F
4 - 0.6” Strands	50	86	15	15	17	11
7 - 0.6” Strands	51	92	15	15	17	15
12 - 0.6” Strands	51	92	15	15	14	15
15 - 0.6” Strands	60	120	15	15	17	19
19 - 0.6” Strands	60	120	15	15	17	19
27 - 0.6” Strands	60	120	15	15	19	24
31 - 0.6” Strands	60	120	18	18	19	25
1" Diameter Bar	42	72	15	15	10	11
1-1/4" Diameter Bar	43	72	15	15	10	11
1-3/8" Diameter Bar	43	72	15	15	10	11
1-3/4" Diameter Bar	51	92	15	15	12	15
2-1/2" Diameter Bar	56	92	15	15	13	16
3" Diameter Bar	60	120	15	15	17	19

1. See ***SDG*** Table 1.11.1-1 for required dimension for Tendons with Flexible Filler.

Table 1.11.1-3 Minimum Post-Tensioning Anchorage Spacing

System Size	Minimum "e1" Dimension (in.)	Minimum "e2" Dimension (in.)	Minimum "s" Dimension (in.)
4 - 0.6" Strands	11.75	4.5	19.5
7 - 0.6" Strands	9	NA	13
12 - 0.6" Strands	10	NA	16.75
19 - 0.6" Strands	12	NA	21
22 - 0.6" Strands	13.5	NA	23
27 - 0.6" Strands	15	NA	24
31 - 0.6" Strands	15	NA	25.25

Note: Dimensions are based on a concrete strength of 3,500 psi.

Modification for Non-Conventional Projects:

Add the following footnote to table ***SDG*** 1.11.1-3:

2. Table 1.11.1-3 Minimum Post-Tensioning Anchorage Spacing may be superseded by project specific requirements as directed by the Post-Tensioning Vendor and the Engineer of Record.

Figure 1.11.1-2 Anchorage Layout

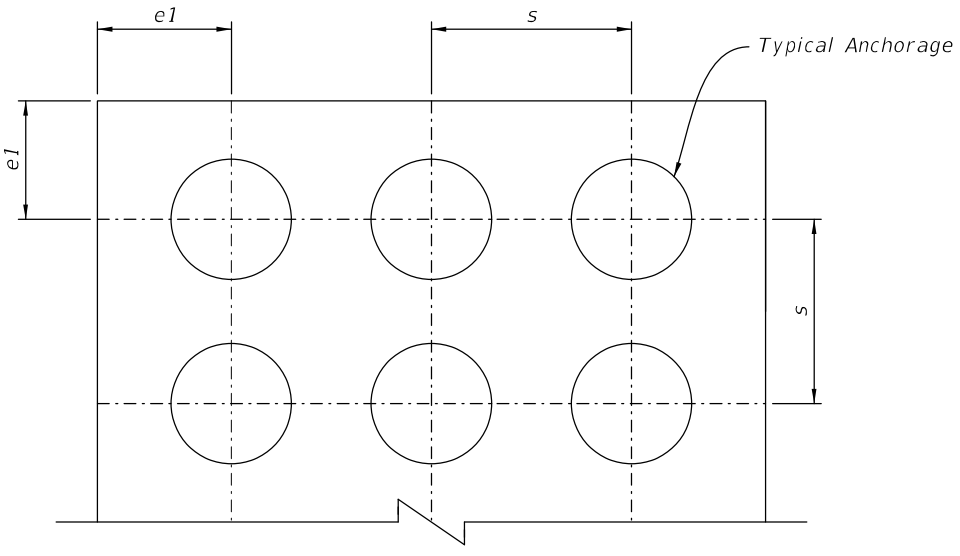

e1 = minimum horizontal or vertical edge distance
s = minimum anchorage spacing from center to center

Figure 1.11.1-3 Anchorage Layout for Transverse Tendons in Box Girders or Deck Slabs

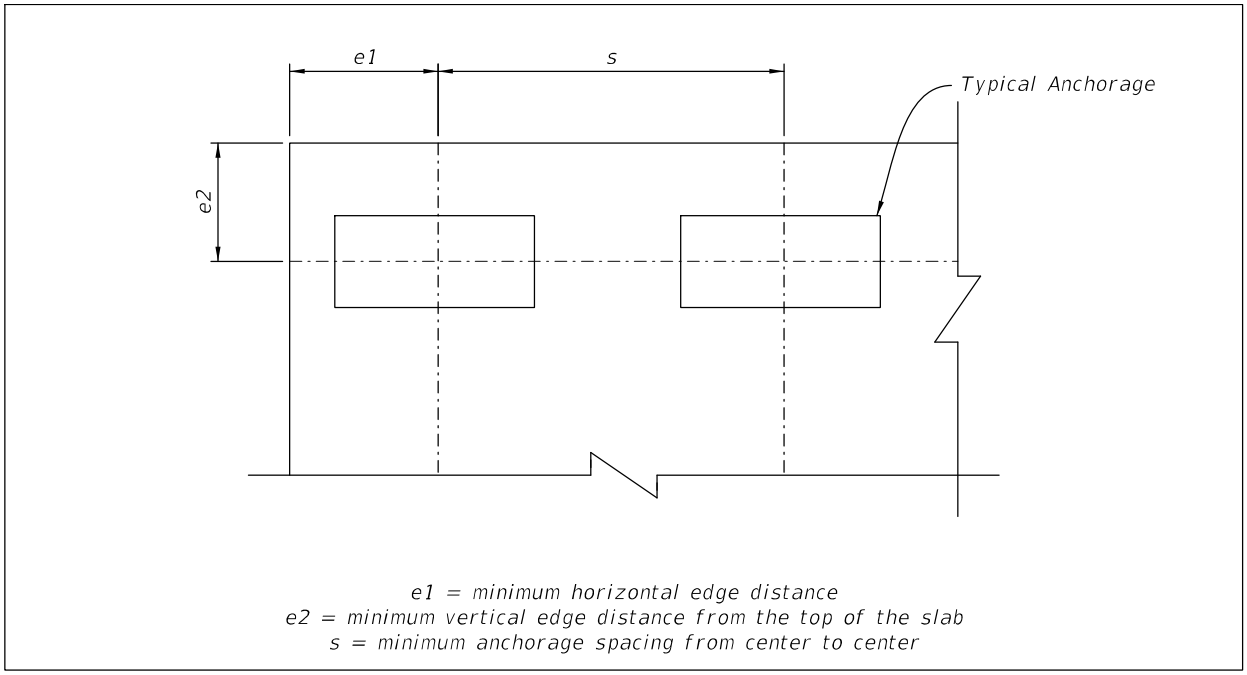

C. Design and detail strand tendons in a manner that will accommodate competitive systems using standard anchorage sizes and jack envelope dimensions for 4, 7, 12, 15, 19, 27 and 31 - 0.6-inch diameter strand tendons. Design tendons with intermediate numbers of strands using the next largest size anchorage, e.g., a 17 strand tendon can be used if the anchorage zones can accommodate a 19 strand tendon anchorage. Strand couplers as described in ***LRFD*** 5.4.5 are not allowed. Strand anchorages cast into concrete structures are not allowed. See Figure 1.11.1-1 and Table 1.11.1-2 for jack envelope dimensions.

D. Design and detail bar tendons in a manner that will accommodate competitive systems using 1-inch, 1¼-inch, 1⅜-inch, 1¾-inch, 2½-inch and 3-inch diameter deformed bars and associated jack envelope dimensions. See Figure 1.11.1-1 and Table 1.11.1-2 for jack envelope dimensions.

E. Design and detail parallel wire tendons in a manner that will accommodate competitive systems. Parallel wire couplers as described in ***LRFD*** 5.4.5 are not allowed. Parallel wire anchorages cast into concrete structures are not allowed.

Modification for Non-Conventional Projects:

Delete ***SDG*** 1.11.1.C, D and E and insert the following:

C. Design and detail strand tendons using the selected post-tensioning supplier's standard anchorage sizes and jack envelope dimensions for 4, 7, 12, 15, 19, 27 and 31 - 0.6-inch diameter strand tendons. Design tendons with intermediate numbers of strands using the next largest size anchorage, e.g., a 17 strand tendon can be used if the anchorage zones can accommodate a 19 strand tendon anchorage. Strand couplers as described in ***LRFD*** 5.4.5 are not allowed. Strand anchorages cast into concrete structures are not allowed.

D. Design and detail bar tendons using the selected post-tensioning supplier's 1-inch, 1¼-inch, 1⅜-inch, 1¾-inch, 2½-inch and 3-inch diameter deformed bars and associated anchorages and jack envelope dimensions.

E. Design and detail parallel wire tendons using the selected post-tensioning supplier's standard anchorage sizes for the selected tendon size. Parallel wire couplers as described in ***LRFD*** 5.4.5 are not allowed. Parallel wire anchorages cast into concrete structures are not allowed.

F. Design and detail joints between precast elements using match-casting with a segmental epoxy bonding system or closure pour as follows. Dry joints are not allowed.

1. For match-cast precast elements use a segmental epoxy bonding system that meets the requirements of ***Specifications*** Section 926 applied to both faces of adjacent precast elements.

Commentary: Match-cast precast elements with a segmental epoxy bonding system are used for precast balanced cantilever and span by span superstructures and may be used for precast pier columns. The use of dry joints has led to intrusion of moisture and chlorides in superstructure and substructure post-tensioned tendons in Florida.

2. Use grout for closure pours 6-inches wide or less.

Commentary: Grouted joints are typically used between a pier segment and the adjacent segment in span by span construction with external tendons, and between adjacent pier column segments or a footing and pier column segment in piers with external tendons.

3. Use cast-in-place concrete for closure pours greater than 6-inches wide. See ***SDG*** Chapter 4 for cast-in-place concrete closure pour requirements for posttensioned segmental box girders, I-beams, and U-beams.

Commentary: Closure pours are typically used in precast balanced cantilever construction between the tips of cantilevers, and at end spans in precast balanced cantilever construction between the tip of the cantilever and adjacent precast

segments erected on falsework. Closure pours are also required for posttensioned I-beams and U-beam structures.

G. Prepare tendon mockup details in accordance with ***Standard Plans Instructions (SPI)*** Index 462-000 Series and ***Specifications*** Section 462 and include them in the Plans.

*Commentary: Per **Specifications** Section 462, the Contractor is required to use the tendon mockup details that are shown in the Plans in conjunction with the Grouting Operations Plan and/or Wax Injection Operations Plan, as applicable, to demonstrate satisfactory injection of grout and/or wax*

1.11.2 Corrosion Protection

A. Include the following corrosion protection strategies in the design and detailing of post-tensioned structures:

1. Completely sealed ducts and permanent anchorage caps
2. Ducts and anchorage caps completely filled with approved filler
3. Multi-level anchorage and tendon protection
4. Watertight bridges
5. Multiple tendon paths

B. Three levels of protection are required for strand, wire, and bar tendons as follows:

1. Within a concrete element:
    a. Internal Tendons
        i. Concrete cover
        ii. Polypropylene or polyethylene duct and couplers
        iii. Complete filling of the duct with grout or flexible filler
    b. External Tendons
        i. Hollow box structure itself
        ii. Polyethylene duct and approved couplers
        iii. Complete filling of the duct with flexible filler
2. At the segment face or construction joint (Internal and External Tendons):
    a. Epoxy seal (precast construction) or wet cast joint (cast-in-place construction)
    b. Continuity of the duct and/or duct coupler
    c. Complete filling of the duct with grout or flexible filler

C. External tendons are not permitted for use with I-beam or girder superstructures except for repair, retrofit or strengthening scenarios.

D. Four levels of protection are required for anchorages on interior surfaces, e.g., at interior diaphragms or along the bottom slab in box girder bridges, within hollow pier columns, etc., as follows:

1. Grout or flexible filler within anchorage cap
2. Permanent anchorage cap
3. Elastomeric seal coat
4. Concrete box structure

E. Four levels of protection are required for anchorages on exterior surfaces, e.g. tops and ends of pier caps, at end diaphragms/expansion joints in box girder bridges, at diaphragms or along the deck in I-girder bridges, etc., as follows:

1. Grout or flexible filler within anchorage cap
2. Permanent anchorage cap
3. Encapsulating pour-back
4. Seal coat (Elastomeric seal coat on non-riding surfaces; Methyl Methacrylate on riding/top of deck surfaces)

F. See ***Standard Plans*** Index 462-002 and ***Standard Plans Instructions*** Index 462000 Series for additional anchorage protection requirements and details.

G. Deck overlays are not considered a level of protection for tendons or anchorages.

H. Temporary internal post-tensioning bars used for erection with acceptable ducts, cover, and filler material may remain in the structure with no additional protection required. Do not incorporate the force effects from these bars in the service stress or strength calculations for the structure except in cases where the effects are detrimental.

I. Epoxy coated strands are not permitted.

1.11.3 Design Values

A. Use the following values for the design of post-tensioned members. Concrete strengths (f'c):

Precast components	5.5 ksi min., 10.0 ksi max.
Closure pours and joints	5.5 ksi min., 6.5 ksi max.
Cast-in-place components	5.0 ksi min., 8.5 ksi max.

See ***SDG*** 1.4.3 for additional requirements.

B. Post-Tensioning Steel:

Strand	ASTM A416, Grade 270, low relaxation, 0.6-inch diameter
Parallel wires	ASTM A421, Grade 240
Bars	ASTM A722, Grade 150, Type II

C. Anchor set:

Strand	3/8-inch
Parallel wires	1/2-inch
Bars	1/16-inch

D. Wobble coefficient (K) and Coefficient of friction (μ):

Type of Tendon	Type of Duct	Tendon Location	K	μ
Wire or Strand	Corrugated polypropylene duct	Internal	0.0003	0.14
	Smooth polyethylene duct	Internal	0.0002	0.14
	Smooth polyethylene duct	External	0.0	0.14
Bar	Corrugated polypropylene duct	Internal	0.0003	0.30
	Smooth polyethylene duct	Internal	0.0002	0.30
	Smooth polyethylene duct	External	0.0	0.30

1.11.4 Ducts

Use the following criteria in lieu of ***LRFD*** 5.4.6.2:

A. Design and detail using smooth wall polyethylene (PE) duct and associated couplers that meet the requirements of ***Specifications*** Section 960 for all external tendons, and for internal tendons with flexible filler.

B. Design and detail using corrugated polypropylene (PP) duct and associated couplers that meet the requirements of ***Specifications*** Section 960 for grouted internal tendons.

C. Design and detail using the maximum duct external dimensions shown in Table 1.11.4-1 for laying out tendon geometries and checking for clearances and required concrete cover in post-tensioned members.

Modification for Non-Conventional Projects:

Delete ***SDG*** 1.11.4.C and insert the following:

C. Design and detail using project specific maximum duct external dimensions for laying out tendon geometries and checking for clearances and required concrete cover in post-tensioned members.

Table 1.11.4-1 Maximum Duct External Dimensions for Detailing

Tendon Size and Type	Corrugated Duct Outside Diameter		Smooth Wall Duct Outside Diameter	
	For use with Strand and Wire Tendons, and Bar Tendons without Couplers	For use with Bar Tendons with Couplers[1]	For use with Strand and Wire Tendons, and Bar Tendons without Couplers	For use with Bar Tendons with Couplers[1]
4 - 0.6” strands	1.54" x 3.55" (Flat duct)	N/A	3.50"	N/A
7 - 0.6” strands	2.87"	N/A	3.50"	N/A
12 - 0.6” strands	3.63"	N/A	3.50"	N/A
15 - 0.6” strands	3.95"	N/A	4.50"	N/A
19 - 0.6” strands	4.57"	N/A	4.50"	N/A
27 - 0.6” strands	5.30"	N/A	5.563"	N/A
31 - 0.6” strands	5.95"	N/A	5.563"	N/A
1" diameter bar	2.87"	4.09"	3.50"	3.50"
1¼" diameter bar	2.87"	4.09"	3.50"	3.50"
1⅜" diameter bar	2.87"	4.09"	3.50"	3.50"
1¾" diameter bar	3.63"	4.57"	3.50"	4.50"
2½" diameter bar	3.95"	5.95"	4.50"	5.563"
3" diameter bar	4.57"	7.00"	4.50"	6.625"

1. Use duct dimensions as shown for bar tendons with couplers:
   a. For the full length of the bar tendon if its length exceeds 45-feet (including the length of bar needed for stressing and anchoring) and coupler locations are not known, or cannot be designed for and specified in the Plans.
   b. For a minimum distance of 3 times the coupler length at specified coupler locations, e.g. for bar tendons used in precast segmental piers and vertical bar tendons in C-piers that extend from the footings, through the columns and into the caps.

Modification for Non-Conventional Projects:

Delete ***SDG*** Table 1.11.4-1 and use the appropriate maximum duct external dimensions from the selected post-tensioning system. Accommodate the use of bar tendon couplers as required.

D. Specify duct geometry in the plans measured to the centerline of the tendon (C.G.S). Design the tendon profile to meet or exceed the minimum tangent lengths shown in Table 1.11.4-2 and Figure 1.11.4-1 for curved tendons adjacent to anchorages. For tendons that follow circular curvature, the profile shall meet the minimum radii shown in Table 1.11.4-2.

Commentary: The minimum tangent length at the anchorage is provided to alleviate fatigue concerns at the anchorages, and strand slippage at the wedges by minimizing the angular change of the strands.

Table 1.11.4-2 Minimum Duct Radius and Tangent Length

Tendon Size	Minimum Duct Radius R1*, Between Two Tangents (feet)	Minimum Duct Radius and Tangent Length Adjacent to Anchorages (see Figure 1.11.4-1)	
		Minimum Radius R2 (feet)	Minimum Tangent Length L (feet)
4 - 0.6" diameter strands	6	9	2
7 - 0.6" diameter strands	6	9	3
12 - 0.6" diameter strands	8	11	3
15 - 0.6" diameter strands	9	12	3
19 - 0.6" diameter strands	10	13	3
27 - 0.6" diameter strands	13	16	3.5
31 - 0.6" diameter strands	13	16	3.5

* For circular curvature away from the anchorages

Figure 1.11.4-1 Minimum Duct Radius and Tangent Length Adjacent to Anchorages

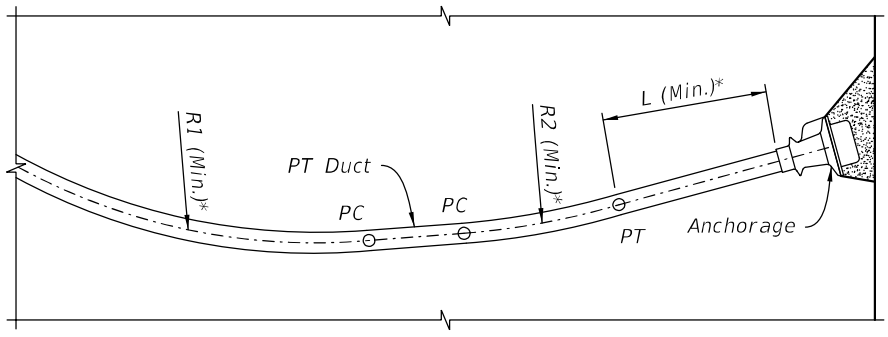

NOTE: Internal tendon shown, external tendon similar.

* See Table 1.11.4-2

E. Design and detail ducts for external tendons as follows:

1. Design and detail duct geometry using circular Diabolos at the faces of all pier diaphragms, deviators, and blisters without anchorages. See ***SDM*** Figure 20.8-10 for Diabolo details.
2. At pier diaphragms with anchorages and at blisters without anchorages, design and detail using ducts that are embedded in the concrete and not removable as shown in ***SDM*** Figure 20.8-5, ***SDM*** Figure 20.8-6 and ***SDM*** Figure 20.8-7.
3. At pier diaphragms without anchorages and at deviators, design and detail using smooth round formed holes and completely removable ducts that are external to the concrete as shown in ***SDM*** Figure 20.8-8 and ***SDM*** Figure 20.8-9.
4. To allow room for the installation of duct couplers, design and detail all external tendons to provide a 1½-inch clearance between the outer duct surface and the adjacent face of the concrete as shown in ***SDM*** Figure 20.8-9.

F. Design and detail using segmental duct couplers for all internal tendon ducts at all joints between precast elements. Lay out internal tendon ducts with segmental duct couplers as shown in Figure 1.11.4-2.

Figure 1.11.4-2 Layout of Internal Tendons with Segmental Duct Couplers

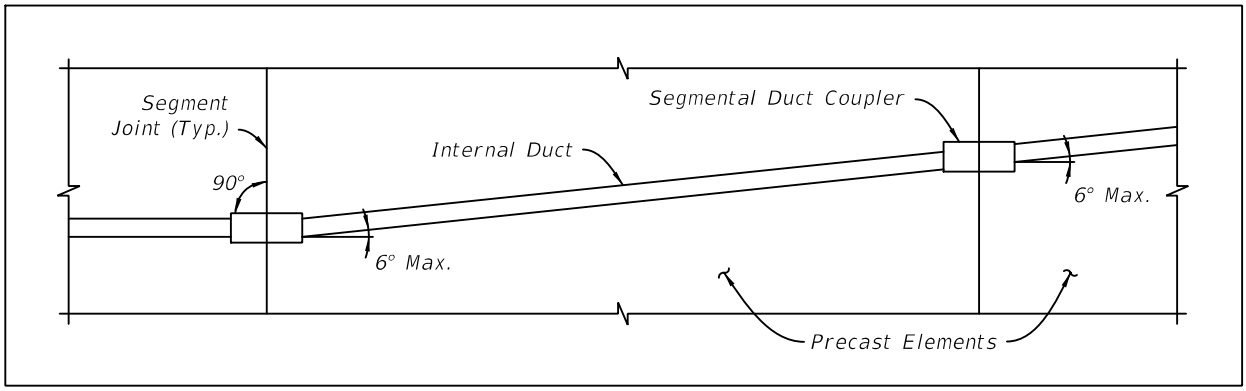

Commentary: Segmental duct couplers shall be made normal to joints to allow stripping of the bulkhead forms. Theoretically, the tendon must pass through the coupler without touching the duct or coupler. Over-sizing couplers allows for standardized bulkheads and avoids the use of curved tendons.

1.11.5 Tendon Design

A. Design and detail all tendons to be unbonded except those listed in Paragraphs B and C below. For unbonded tendons, specify the use of flexible filler in the ***Standard Plans*** Index 462-000 Series data tables and include the data tables in the Plans.

B. Design and detail the following internal strand tendons with predominantly flat geometries in the bridge deck to be bonded:

1. Top slab cantilever longitudinal tendons in segmental box girders
2. Top slab transverse tendons in segmental box girders
3. Tendons that are draped 2'-0" or less in post-tensioned slab type superstructures

For bonded tendons, specify the use of grout in the ***Standard Plans*** Index 462-000 Series data tables and include the data tables in the Plans.

Commentary: The top slabs of segmental box girders and slab type superstructures are subject to direct application and impact of live load. Flexible filler provides no structural rigidity, therefore, grout filler is required at these locations to maintain concrete integrity at the duct locations.

C. Design and detail the following tendons to be bonded or unbonded:

1. Straight strand or parallel wire tendons other than continuity tendons in U-beams and girders.
2. Bar tendons (predominately vertical or horizontal)
3. Top continuity tendons for balanced cantilever segmental bridges. Unbonded top continuity tendons must be external.

For these tendons, specify the use of grout for bonded designs or flexible filler for unbonded designs in the ***Standard Plans*** Index 462-000 Series data tables and include the data tables in the Plans.

D. Design and detail all other tendon types for which grout is not specifically required or allowed as unbonded. For these tendons, specify the use of flexible filler in the ***Standard Plans*** Index 462-000 Series data tables and include the data tables in the Plans.

Commentary: Many of the past corrosion problems with grouted post-tensioning have been encountered on continuity tendons, which are generally long with undulating profiles.

E. For post-tensioned concrete bridges using bonded and/or unbonded tendons, use ***LRFD*** 5.7.3.3 General Procedure to design for shear and torsion, except replace ***LRFD*** Equation 5.7.3.3-2 with the following:

$$V_n \leq 0.15 f'_c b_v d_v + V_p \quad \text{or} \quad 0.379 \sqrt{f'_c}\, b_v d_v + V_p \text{ , whichever is greater}$$

Check principal stresses in the webs using ***LRFD*** 5.9.2.3.3.

F. Use ***LRFD*** 5.6.3.1.2 for predicting unbonded PT ultimate average stress. Use Figure 1.11.5-1 for determination of the number of support hinges (N_s).

Figure 1.11.5-1 Support Hinge Locations

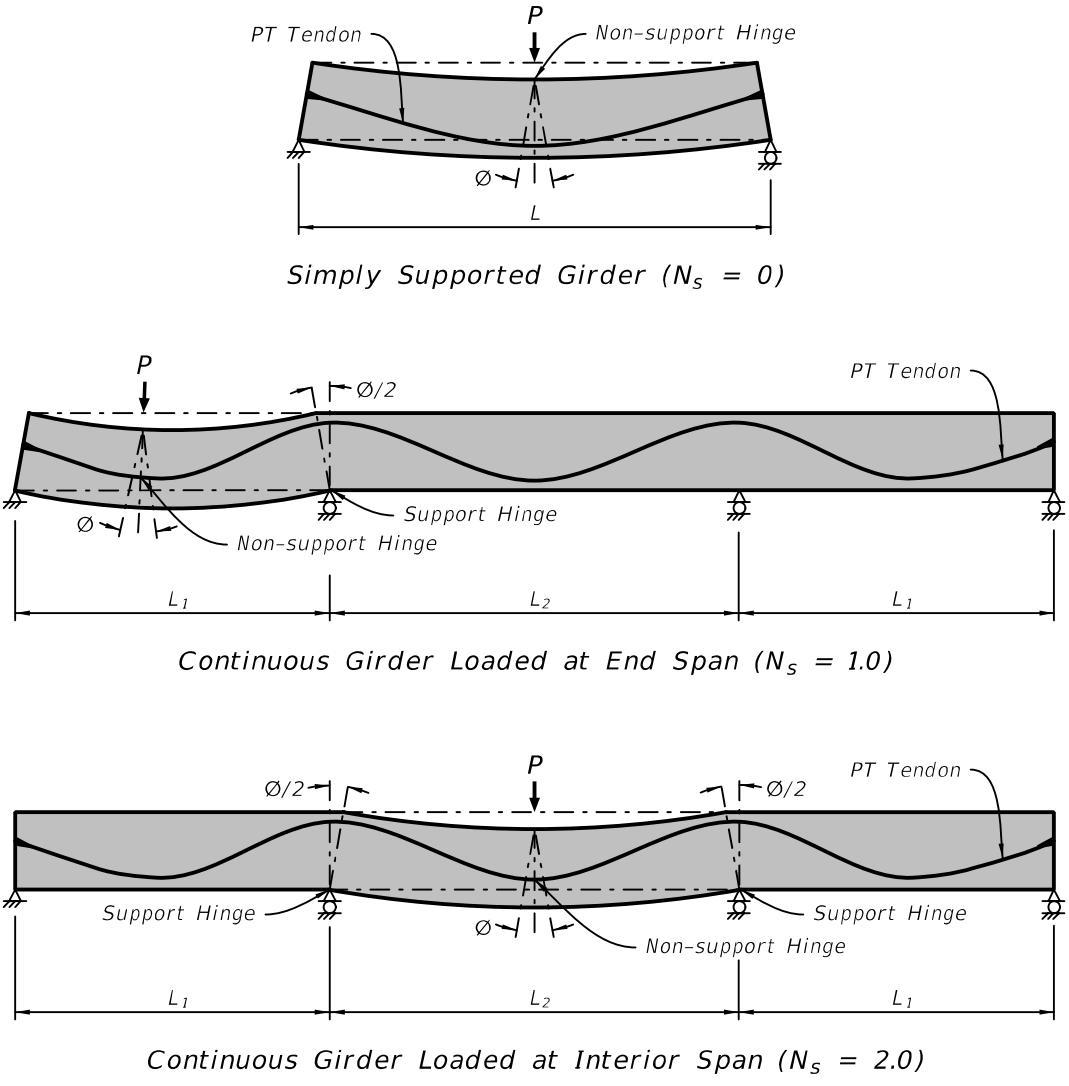

G. Use the maximum outside duct diameter to determine the effective web width at a particular level per ***LRFD*** 5.7.2.8 and 5.12.5.3.8a.

H. Limit the external tendon unsupported length to 100-feet. For external tendons longer than 100-feet, provide hangers to restrain the tendon laterally and vertically. At the hanger contact point with the external tendon duct, provide a neoprene sheet to protect the duct from damage.

1.11.6 Integrated Drawings

A. Show congested areas of post-tensioned concrete structures on integrated drawings with an assumed post-tensioning system. Such areas include anchorage zones, areas containing embedded items for the assumed post-tensioning system, areas

where post-tensioning ducts deviate both in the vertical and transverse directions, and other highly congested areas as determined by the Engineer and/or the SSDE.

Modification for Non-Conventional Projects:

Delete ***SDG*** 1.11.6.A and insert the following:

A. Show congested areas of post-tensioned concrete structures on integrated drawings with the selected post-tensioning system. Such areas include anchorage zones, areas containing embedded items for the selected post-tensioning system, areas where post-tensioning ducts deviate both in the vertical and transverse directions, and other highly congested areas as determined by the Engineer and/or the SSDE.

B. Detail integrated drawings utilizing the assumed system to a scale and quality required to show double-line reinforcing and post-tensioning components in two-dimensions (2-D) and, when necessary, in complete three-dimension (3-D) drawings and details.

C. For strand and parallel wire tendons, space anchorages to accommodate spirals based on the anchorage size and not on the number of strands or parallel wires in the tendon. See also ***SDG*** 1.11.1.C.

D. Check required clearances for stressing jacks. Do not detail structures or provide construction sequences that require curved stressing noses for jacks.

1.11.7 Erection Schedule and Construction Sequence

A. Include a description of the construction method upon which the design is based.

B. Include in the design documents, in outlined, schematic form, a typical erection schedule and anticipated construction system.

C. State assumed erection loads and support reactions in the plans, along with times of application and removal of each of the erection loads.

D. Refer to ***SDM*** Chapter 20 and ***SDM*** Chapter 23 for additional requirements, detailing considerations and general erection procedures for segmental bridges and spliced girder bridges, respectively.

E. Prove the final design by a performing a full longitudinal analysis taking into account the assumed stage-by-stage construction process and final long-term service condition, including all time dependent related effects.

Commentary: Temporary load conditions often control the design and detailing of segmental and spliced girder structures. Ensure the structure components have been sized for the temporary and final conditions and loadings of the bridge. For large projects, the use of more than one method of construction may be necessary based on project specific site constraints.

1.12 FIRE SUPPRESSION SYSTEMS

See ***FDM*** 110.5.8 for fire suppression system prohibitions.

1.13 METHODS OF STRUCTURAL ANALYSIS

A. Use one of the following methods of structural analysis for the superstructure:

1. A Line Girder Analysis (LGA) meeting ***LRFD*** 4.6.2 and in accordance with the following:
    a. ***SDG*** 2.9 for concrete beams.
    b. ***SDG*** 5.13.2 for straight steel I-girder units.
2. A Refined Method of Analysis (RMA) meeting ***LRFD*** 4.6.3 is required for the following situations:
    a. To account for the effects of the substructure and/or foundation stiffness for structure types such as, but not limited to, the following:
        i. Continuous girder superstructure units supported on straddle piers or integral pier caps.
        ii. Continuous girder superstructure units supported on hammerhead piers with cantilevers > 20-feet or C-piers with cantilevers > 15-feet. Cantilevers are measured from the face of the column to the centerline of exterior girder.
        iii. Bridge widenings where the existing bridge is supported by substructure elements of different stiffness than the widened section. See also ***SDG*** 7.3.1.B.
    b. For skewed straight steel I-girder units not meeting the LGA requirements of ***SDG*** 5.13.1.
    c. For horizontally curved steel I-girder units per ***SDG*** 5.14.
    d. For determining live load distribution factors for beam or girder supported superstructures where the beams or girders are not parallel, or approximately parallel, to the direction of traffic on the bridge, e.g. bridges used in conjunction with braided ramps.
    e. For all other superstructures not meeting ***LRFD*** 4.6.2.

B. Delete the third paragraph of ***LRFD*** 4.6.3.1 and add the following:

Show the name, version, and version release date of the software used for the superstructure design on the General Notes and on the FDOT Load Rating Summary Tables. State whether the live load distribution factors were determined by ***LRFD*** 4.6.2, RMA, or RMA 3D-FEA.

1.14 NON-FDOT STRUCTURES PLACED OVER, ON, OR UNDER FDOT RIGHT-OF-WAY

See ***FDM*** chapters 121 and 266 for design and review requirements for all non-FDOT structures placed over, on, or under FDOT right-of-way, functioning vehicular roadways, pedestrian walkways, railroads, or navigable waterways.

1.15 INTERFACE SHEAR TRANSFER - SHEAR FRICTION (LRFD 5.7.4)

A. At Construction Joints that Connect Nonredundant Concrete Components: Design the joint using cohesion and friction factors for concrete placed against a clean concrete surface, free of laitance, but not intentionally roughened. Include a plan note requiring the contact surfaces to be intentionally roughened to a minimum 1/4-inch amplitude. Show the limits of roughening in the Plans. See also ***SDG*** 4.1.A.

Commentary: This requirement excludes interfaces where a localized shear friction failure would preclude the bridge from collapse, such as the interface shear area between a conventional prestressed beam and composite concrete deck, or a full length horizontal construction joint typically encountered in inverted-T straddle pier caps. Furthermore, as an additional level of safety, an intentionally roughened contact surface is required to be shown in the Plans.

B. At Construction Joints that Connect Redundant Concrete Components: Design the joint using the cohesion and friction factors according to the assumed surface condition. If necessary, add a plan note requiring the contact surfaces to be intentionally roughened to a minimum 1/4-inch amplitude and show limits of the roughening in the Plans.

C. Sections 1.15.A and 1.15.B as shown above do not apply to concrete placed monolithically.

2 LOADS AND LOAD FACTORS

2.1 GENERAL

This Chapter contains information related to loads, loadings, load factors, and load combinations. It also contains deviations from ***LRFD*** regarding Loads and Load Factors as well as characteristics of a structure that affect each.

2.1.1 Load Factors and Load Combinations (LRFD 3.4.1)

A. In ***LRFD*** Table 3.4.1-1, under Load Combination: LL, IM, etc., Limit State: Extreme Event I, use $\gamma_{eq} = \mathbf{0.0}$

B. See ***SDG*** 2.7.2 for additional temperature gradient requirements.

C. For pretensioned/post-tensioned I-Beams and U-Girders, in addition to the load combinations required by ***LRFD***, satisfy the following limit state neglecting strand tendons that are grouted with cementitious material:

$$1.25(D) + 1.75(LL) \leq 1.4(RN^*) \qquad \text{[Eq. 2-1]}$$

Where:

D = All applicable permanent load components of ***LRFD*** Table 3.4.1-1

LL = All applicable transient load components of ***LRFD*** Table 3.4.1-1

RN* = Nominal capacity (moment or shear) at any section using only the replaceable strand tendons with flexible filler, all permanent bar tendons, mild reinforcing steel and pretensioning strands.

2.1.2 Live Loads (LRFD 3.6)

A. Replace bullet point 3 of ***LRFD*** 3.6.1.3.1 with the following:
For negative moment between points of contraflexure under permanent load, and for reaction at all interior supports of multi-span structures regardless of superstructure continuity, 90 percent of the effect of the uniform lane load on all spans combined with 90% of the effect of two design trucks spaced a minimum of 50-feet between the lead axle of one truck and the rear axle of the other truck. The distance between the 32.0-kip axles of each truck shall be taken as 14-feet. The two design trucks shall be placed in adjacent spans to produce maximum force effects.

B. Investigate possible future changes in the physical or functional clear roadway width of the bridge. (***LRFD*** 3.6.1.1)

Commentary: Frequently bridges are widened and areas dedicated to pedestrian traffic become travel lanes for vehicular traffic. In the future, the sidewalk could also be simply eliminated in order to provide additional space to add a traffic lane.

Modification for Non-Conventional Projects:
Delete ***SDG*** 2.1.2.A and see the RFP for requirements.

C. In addition to the vehicular loads contained in ***LRFD***, satisfy the load rating requirements of ***SDG*** 1.7.

Commentary: Load Rating may control the design in some cases.

2.2 DEAD LOADS

A. Future Wearing Surface: See ***SDG*** Table 2.2-1 regarding the allowance for a Future Wearing Surface.

B. Sacrificial Concrete: Bridge decks subject to the profilograph requirements of ***SDG*** Chapter 4 require an added thickness of sacrificial concrete, which must be accounted for as added Dead Load but cannot be utilized for bridge deck section properties.

C. Stay-in-Place Forms: Design all beam and girder superstructures (except segmental box girder superstructures) to include the weight of stay-in-place metal forms, where permitted. For clear spans between beams or girders greater than 14-feet, verify the availability of non-cellular forms and include any additional dead load allowance greater than 20 psf or specify the use of cellular forms (where permitted) or noncellular forms with cover sheets.

Modification for Non-Conventional Projects:
Delete ***SDG*** 2.2.C.

D. See Table 2.2-1 Miscellaneous Dead Loads for common component dead loads.

Table 2.2-1 Miscellaneous Dead Loads

ITEM	UNIT	LOAD
General		
Concrete, Counterweight (Plain)	Lb/cf	145
Concrete, Structural (Steel-RC/PC)	Lb/cf	150
Concrete, Structural (FRP-RC/PC)	Lb/cf	145
Future Wearing Surface	Lb/sf	15[1]
Soil; Compacted	Lb/cf	115
Stay-in-Place Metal Forms	Lb/sf	20[2]

Table 2.2-1 Miscellaneous Dead Loads

ITEM	UNIT	LOAD
Traffic Railings		
Rectangular Tube Retrofit (Index 460-490)	Lb/ft	30
42” Vertical Shape (Index 521-422)	Lb/ft	590
32” Vertical Shape (Index 521-423)	Lb/ft	385
36" Single-Slope Median (Index 521-426)	Lb/ft	645
36" Single-Slope (Index 521-427)	Lb/ft	430
42" Single-Slope (Index 521-428)	Lb/ft	580
Thrie-Beam Retrofit (Index 460-471, 460-475 & 460-476)	Lb/ft	40
Thrie-Beam Retrofit (Index 460-472, 460-473 & 460-474)	Lb/ft	30
Vertical Face Retrofit with 8” curb height (Index 521-480 to 521-483)	Lb/ft	270
Traffic Railing /Noise Wall (8'-0") (Index 521-509)	Lb/ft	985
Pedestrian/Bicycle Railings & Fences		
Pedestrian /Bicycle Railing (27" Concrete Parapet only) (Index 521-820)	Lb/ft	225
Aluminum Pedestrian/Bicycle Bullet Railing (1 or 2 rails) (Index 521-820, 515-021 & 515-022)	Lb/ft	10
Bridge Fencing (Vertical) (Index 550-010)	Lb/ft	25
Bridge Fencing (Curved Top) (Index 550-011)	Lb/ft	40
Bridge Fencing (Enclosed) with 5 ft. clear width (Index 550-012)	Lb/ft	85
Bridge Picket Railing (Steel) (Index 515-051)	Lb/ft	30
Bridge Picket Rail (Aluminum) (Index 515-061)	Lb/ft	15
Maintenance of Traffic		
Temporary Barrier (Based on Index 102-110)	Lb/ft	430
Prestressed Beams[3]		
AASHTO Type II (Index 450-120)	Lb/ft	385
AASHTO Type III (Archived Index 20130)	Lb/ft	585
AASHTO Type IV (Archived Index 20140)	Lb/ft	825
AASHTO Type V (Archived Index 20150)	Lb/ft	1055
AASHTO Type VI (Archived Index 20160)	Lb/ft	1130
Florida Bulb-T 72 (Archived Index 20172)	Lb/ft	940
Florida Bulb-T 78 (Archived Index 20178)	Lb/ft	1150

Table 2.2-1 Miscellaneous Dead Loads

ITEM	UNIT	LOAD
Florida-U 48 Beam (Index 450-248)	Lb/ft	1260[4]
Florida-U 54 Beam (Index 450-254)	Lb/ft	1330[4]
Florida-U 63 Beam (Index 450-263)	Lb/ft	1440[4]
Florida-U 72 Beam (Index 450-272)	Lb/ft	1545[4]
Inverted-T Beam (20-inch) (Archived Index 20320)	Lb/ft	270
Florida-I 36 Beam (Index 450-036)	Lb/ft	840
Florida-I 45 Beam (Index 450-045)	Lb/ft	906
Florida-I 54 Beam (Index 450-054)	Lb/ft	971
Florida-I 63 Beam (Index 450-063)	Lb/ft	1037
Florida-I 72 Beam (Index 450-072)	Lb/ft	1103
Florida-I 78 Beam (Index 450-078)	Lb/ft	1146
Florida-I 84 Beam (Index 450-084)	Lb/ft	1190
Florida-I 96 Beam (Index 450-096)	Lb/ft	1278

1 The Future Wearing Surface allowance applies only to new short bridges (see ***SDG*** 4.2. Bridge Length Definitions) and to widenings of existing bridges originally designed for a Future Wearing Surface which will not be selected for deck planing (see ***SDG*** 7.1.4 Widening Classifications and Definitions).
2 Unit load of metal forms and concrete required to fill the form flutes. Apply load over the projected plan area of the metal forms. See ***SDG*** *2.2.C*.
3 Weight of buildup concrete for camber and cross slope not included.
4 Weight of interior intermediate or end diaphragms not included.

2.3 SEISMIC PROVISIONS (LRFD 3.10.9, 3.10.9.2 AND 4.7.4)

2.3.1 General

All bridges shall meet the seismic design requirements except the exempted bridges. For exempted bridges, only the minimum bearing support dimensions need to be satisfied as required by ***LRFD*** 4.7.4.4. Exempted bridges include:

1. Those with design spans less than or equal to 75-feet.
2. Those with simple or continuous span superstructures of any length supported entirely on elastomeric bearings.

For all non-exempt single span bridges, the horizontal design connection force in the restrained direction between the substructure and the superstructure shall be 0.05 times the tributary permanent loads. For all other non-exempt bridges, the horizontal design connection force in the restrained direction between the superstructure and substructure shall be 0.12 times the tributary permanent loads. The acceleration coefficient, $\mathbf{A_S}$, for the state of Florida is less than 0.05. Only the connections between the superstructure and substructure need to be designed for the seismic forces.

2.3.2 Seismic Design for Widenings

A. When seismic design is required for a major widening (see definitions in ***SDG*** Chapter 7), all new bridge elements must comply with the seismic provisions for new construction.

B. FDOT will consider seismic provisions for minor widenings on an individual basis.

Modification for Non-Conventional Projects:
Delete ***SDG*** 2.3.2.B and insert the following: Do not design minor widenings for seismic provisions unless otherwise required by the RFP.

2.3.3 Lateral Restraint

When lateral restraint of the superstructure is required due to seismic loading, comply with the provisions and requirements of ***SDG*** Chapter 6, "Lateral Restraint."

2.4 WIND LOADS

2.4.1 Wind Loads on Completed Structures: WL and WS (LRFD 3.8)

A. Design Wind Speed

Use the design 3-second gust wind speed, V, from Table 2.4.1-1 in lieu of ***LRFD*** Figure 3.8.1.1.2-1.

Table 2.4.1-1 Design Wind Speed, V

County (Dist)	Design Wind Speed (mph)	County (Dist)	Design Wind Speed (mph)	County (Dist)	Design Wind Speed (mph)
Alachua (2)	130	Hardee (1)	150	Okaloosa (3)	170
Baker (2)	130	Hendry (1)	150	Okeechobee (1)	150
Bay (3)	150	Hernando (7)	150	Orange (5)	150
Bradford (2)	130	Highlands (1)	150	Osceola (5)	150
Brevard (5)	170	Hillsborough (7)	150	Palm Beach (4)	170
Broward (4)	170	Holmes (3)	150	Pasco (7)	150
Calhoun (3)	130	Indian River (4)	170	Pinellas (7)	150
Charlotte (1)	170	Jackson (3)	130	Polk (1)	150
Citrus (7)	150	Jefferson (3)	130	Putnam (2)	130
Clay (2)	130	Lafayette (2)	130	St. Johns (2)	150
Collier (1)	170	Lake (5)	150	St. Lucie (4)	170
Columbia (2)	130	Lee (1)	170	Santa Rosa (3)	170
DeSoto (1)	150	Leon (3)	130	Sarasota (1)	170
Dixie (2)	130	Levy (2)	150	Seminole (5)	150
Duval (2)	130	Liberty (3)	130	Sumter (5)	150
Escambia (3)	170	Madison (2)	130	Suwannee (2)	130
Flagler (5)	150	Manatee (1)	150	Taylor (2)	130
Franklin (3)	150	Marion (5)	150	Union (2)	130
Gadsden (3)	130	Martin (4)	170	Volusia (5)	150
Gilchrist (2)	130	Miami-Dade (6)	170	Wakulla (3)	130
Glades (1)	150	Monroe (6)	170	Walton (3)	150
Gulf (3)	150	Monroe Islands (6)[1]	180	Washington (3)	150
Hamilton (2)	130	Nassau (2)	130		

1 For non-bridge structures use 170 mph or as modified by Vol. 3

Modification for Non-Conventional Projects:

See the RFP for possible supplemental requirements to ***SDG*** 2.4.1.A.

B. Pressure Exposure and Elevation Coefficient, **K_z**

Use Ground Surface Roughness Category C unless Ground Surface Roughness Category D applies. For noise and perimeter walls, the structure height, Z, used in calculating K_z may be taken less than 33-feet provided that K_z is greater than or equal to 0.85.

C. Gust Effect Factor, **G**

Delete ***LRFD*** Table 3.8.1.2.1-1. Delete the definition of **G** shown under ***LRFD*** Equation 3.8.1.2.1-1 and replace with the following:

G = gust effect factor. Use 0.85 for all load combinations and all structures, including noise walls and perimeter walls.

*Commentary: The term all structures does not include ancillary structures (structural support for signs, signals, lighting, ITS, and tolling). See **SDG** 2.4.2.*

D. Wind Loads on Noise and Perimeter Walls

Treat noise and perimeter walls as sound barriers in accordance with ***LRFD***. Noise and perimeter walls may be designed assuming the wind pressure is applied in incremental strips (e.g. per each foot of wall height).

E. Phase Construction

SDG 2.4.1 applies to permanent portions of phase constructed bridges that support traffic in a temporary condition.

2.4.2 Wind Loads on Ancillary Structures

See ***Volume 3*** for wind loading on structural supports for signs, signals, lighting, ITS, and tolling.

2.4.3 Wind Loads During Construction (LRFD 3.4.2)

A. See also ***SDG*** 6.10 Erection Scheme and Beam/Girder Stability.

B. Use construction wind loads to evaluate beam/girder stability during construction.

C. Calculate wind loads during construction per ***LRFD*** Equation 3.8.1.2.1-1 using the load factors **γ_{WS}** and design wind speeds (V) in Table 2.4.3-1, the drag coefficient, (**C_D**), in ***SDG*** 2.4.3.D or ***SDG*** 2.4.3.E, the Pressure Exposure and Elevation Coefficient (**K_z**) in ***SDG*** 2.4.1.B and the Gust Effect Factor (**G**) in ***SDG*** 2.4.1.C.

Table 2.4.3-1 Load Factors and Design Wind Speed During Construction

Load Combination Limit State	(γ_{WS})	Design Wind Speed, V	
		Construction Inactive	Construction Active
Strength III	1.0	90 mph	30 mph or expected wind speed, if higher
Service I	1.0	90 mph	30 mph or expected wind speed, if higher

Commentary: The design 3-second gust wind speed of 90-mph represents a Mean Recurrence Interval that is reduced from that used for final design and is not intended to address hurricane force winds.

Where:

Construction Inactive = periods during which construction activities associated with the superstructure do not take place. Ex: For a typical beam/girder bridge, this includes nonwork hours during which the beam/girder bracing is to be present.
Construction Active = periods during which construction activities take place. Ex: For a typical beam/girder bridge, this includes beam/girder erection, form placement and deck concrete placement. It can be assumed that the construction active period for deck placement is in effect until the deck concrete hardens.

Check limit states separately for Construction Inactive and Construction Active wind speeds.

D. Drag Coefficient During Construction

For an I-shaped beam/girder superstructure with 5 or less beam/girder lines and a beam/girder spacing to depth ratio (S/D) of 3 or less, apply wind pressure to the projected area using the drag coefficient specified in Table 2.4.3-2. For superstructures with more than 5 beam/girder lines, apply a wind pressure to the projected area of the first 5 beams/girders, and apply a wind pressure to the full height of each subsequent beam/girder using the drag coefficient specified in Table 2.4.3-2.

For an I-shaped beam/girder superstructure with a beam/girder spacing to depth ratio (S/D) greater than 3, apply a wind pressure to the full height of each beam/girder using the drag coefficient specified in Table 2.4.3-2.

For U-shaped, flat slab, steel box girder or segmental box girder superstructures, apply a wind pressure to the projected area using the drag coefficient specified in Table 2.4.3-2.

The projected area shall be the sum of all areas of all components as seen in elevation at 90 degrees to the longitudinal axis of the structure.

Table 2.4.3-2 Drag Coefficient During Construction

Component Type		Drag Coefficient (C_D)				
		S/D ≤ 3		S/D > 3		
		Beams/ Girders 1-5	Beam/ Girder 6+	Beam/ Girder 1	Beam/ Girder 2	Beam/ Girder 3+
Superstructure	I-Shaped Steel Girder	2.2	1.1	2.5	0	1.1
	I-Shaped Concrete Beam/Girder	2.0	1.0	2.0	0	1.0
	U-Shaped Beam/ Girder or Steel Box Girder	2.2				
	Flat Slab or Segmental Box Girder	1.5				
Substructure		1.6				

Where:

- S = Beam/Girder Spacing (ft)
- D = Beam/Girder Depth (ft)

E. Drag Coefficient During Construction for Single Brace or Cross-Frame Design

Use Table 2.4.3-3 to determine the wind load applied to a single brace or cross frame between two beams/girders. Apply wind pressure to the height of a single beam/girder.

Table 2.4.3-3 Drag Coefficient During Construction: Single Brace or Cross-Frame Design

Component Type	Drag Coefficient (C_D)
I-Shaped Steel Girder	2.9
I-Shaped Concrete Beam/Girder	2.6
U-Shaped or Steel Box Beam/Girder	3.3

Commentary: The conventional method for applying a wind load to beams/girders is to apply the wind pressure to the projected area. The projected area is defined as the summation of all component areas as seen in elevation at 90 degrees to the longitudinal axis of the structure. During construction, the projected area is usually the beam/girder height and the additional height caused by the cross-slope of the superstructure multiplied by the beam/girder spacing. Previous code requirements implied that the downwind beams/girders were shielded.

Lateral wind loads are calculated using a drag coefficient which is a dimensionless quantity that relates the wind pressure on an object to its size and shape. When two or more beams/girders are present, the leading beam/girder acts as a windbreak and disrupts the airflow over subsequent beams/girders, resulting in a phenomenon referred to as aerodynamic interference (or shielding). The effect of shielding is dependent on a number of factors including beam/girder shape, wind angle, beam/girder spacing, and number of beams/girders. In general, all beams/girders in the cross-section are subjected to wind loads and, in some cases, the drag coefficient can be negative (e.g. suction).

The prescribed drag coefficients and the use of the projected area method is intended to produce forces in the windward beam/girder and beam/girder system similar to forces measured in the wind tunnel tests. The prescribed drag coefficients do not indicate the exact shielding behavior.

2.5 WAVE LOADS

When bridges vulnerable to coastal storms cannot practically meet the wave crest clearance requirement of the ***Drainage Manual*** Section 4.9.5, all relevant design information shall be submitted to the SSDE to assist in the following determinations:

1. The level of importance of a proposed bridge (“Critical”, “Repairable”, or “Ordinary”; See Commentary below)
2. The design strategy and the associated performance objective (“Service Immediate” or “Repairable Damage”; See ***AASHTO Guide Specifications for Bridges Vulnerable to Coastal Storms*** Article 5.1)
3. The appropriate level of analysis (Level I, II, or III; See ***AASHTO Guide Specifications for Bridges Vulnerable to Coastal Storms*** Article 6.2)

The above determinations will be made by the SSDE in consultation with the DSDO, Traffic Engineer, Environmental Engineer, Hydraulic Engineer, and/or Coastal Engineer and will be included in the PD & E documents. As a minimum, the items listed below will be considered in the determinations:

- Age and condition of existing bridge structure and the feasibility/cost of retrofitting to resist wave forces (if applicable)
- Proposed bridge location and elevation alternatives (elevation relative to the design wave crest)
- Estimated cost of elevating the superstructure 1-foot above the design wave crest, and/or the justification of why it cannot be done
- Affect of varying wave loading on construction costs (due to location and/or height adjustments)
- Existing and projected traffic volumes
- Route impacts on local residents and businesses

- Availability and length of detours
- Evacuation/emergency response routes
- Duration/difficulty/cost of bridge damage repair or replacement
- Other safety and economic impacts due to the loss of the structure

Except where bridges satisfy the “wave crest clearance”, are deemed “Ordinary”, or satisfy the “wave force threshold” criteria outlined in Section 4.9.5 of the ***Drainage Manual***, the structures designer shall calculate and apply wave forces according to the ***AASHTO Guide Specifications for Bridges Vulnerable to Coastal Storms*** using the determinations defined above along with the necessary hydraulic data provided by the coastal engineer.

Commentary: Selecting a design strategy will depend on the importance/criticality of the bridge considering the consequences of bridge damage caused by wave forces. If a bridge is deemed “Critical”, it would typically be designed to resist wave forces at the Strength Limit State to the “Service Immediate” performance level. If a bridge is deemed “Repairable”, it would generally be designed to resist the wave forces at the Extreme Event Limit State to a “Repairable Damage” performance level. Bridges that are deemed “Ordinary” will not be evaluated for wave forces.

Modification for Non-Conventional Projects:
Delete ***SDG*** 2.5 and replace with the following: See the RFP for bridge level of importance, design strategy, and required level of analysis. If required, calculate and apply wave forces according to the ***AASHTO Guide Specifications for Bridges Vulnerable to Coastal Storms.***

2.6 VEHICULAR COLLISION FORCE (LRFD 3.6.5)

2.6.1 General

The provisions of ***SDG*** 2.6 address protection of structures from vehicular collision. See ***FDM*** 215 for roadside safety. Design for vehicular collision forces according to Article 3.6.5 of the ***AASHTO LRFD Bridge Design Specifications, 8th Edition*** and ***SDG*** 2.6. With the exception of ***SDG*** 2.6.5, all references to ***LRFD*** in ***SDG*** 2.6 pertain to the 8th Edition. Replace the term "edge of roadway" in ***LRFD*** 3.6.5.1 with "edge of traveled way". Traveled way is defined in ***FDM*** 102.

Retaining walls of all types (MSE, CIP, sheet pile, GRS, etc.) and end bents behind any type of retaining wall are exempt from vehicular collision.

2.6.2 New Piers

The term pier as used in this section includes and applies to new piers and new portions of existing piers being lengthened for bridge widenings.

Provide structural resistance for piers that are within 30-feet of the edge of traveled way, or if the edge of traveled way of a planned widening or future roadway realignment will be within 30-feet of the pier.

Commentary: The Department's policy is to provide structural resistance to resist the vehicular collision force, as this can be achieved at minimal cost. Redirecting or absorbing the vehicular collision force can be used in addition to providing structural resistance when considering redundancy of the pier, superstructure redundancy (multiple-load-path, superstructure continuity at the pier), and other factors such as the combination of geometry and design speed of the roadway adjacent to the pier.

Modification for Non-Conventional Projects:

Add the following to the above paragraph:

See the RFP for information and requirements related to planned widenings and future roadway realignments.

If shear reinforcement is used to achieve structural resistance for vehicular collision, it must be placed from the bottom of the pier column to a distance 8-feet above the adjacent ground surface. Consider the ground surface of a planned widening or future roadway realignment such that the shear reinforcement will extend at least 8-feet above the future ground surface.

See ***SDG*** 3.11.6 for voided or hollow piers located within 30-feet of the edge of traveled way.

Do not use intermediate pile bents within 30-feet of the edge of traveled way. When widening a bridge with existing intermediate pile bents within 30-feet of the edge of traveled way, use ***Standard Plans*** Index 521-002, Pier Protection Barrier or other DSDE approved strengthening to protect both the existing and proposed portions of the bent.

2.6.3 Existing Piers

The term pier as used in this section includes and applies to piers and intermediate pile bents.

Determine whether site conditions qualify for exemption from vehicular collision using the procedure given in ***LRFD*** C3.6.5.1. Grade separation bridges carrying Interstate or other high-speed limited access roadways are considered critical. Determine the ADTT based on the design year AADT of the roadway adjacent to the pier being considered.

Modification for Non-Conventional Projects:

Add the following to the above paragraph:

See the RFP for grade separation bridges not carrying Interstate or other high-speed limited access roadways.

Existing piers qualify for exemption from vehicular collision if the Design Speed of the roadway adjacent to the pier is 35 mph or less.

When site conditions do not qualify for exemption and the existing pier does not have the structural capacity to resist the vehicular collision force, then address pier protection as follows:

A. When the design choice is redirecting or absorbing the collision load:

1. If the pier is shielded by one of the following concrete barriers, in good condition, then leave the existing barrier in place:

   a. 32-inch or 42-inch ***Design Standards*** Index 410 (2017 and earlier versions)

   b. New Jersey Shape

   c. F-Shape

Coordinate with the District Design Office and the District Maintenance Office when assessing the condition of existing barriers to be left in place. See item 2 below if replacement is necessary.

Modification for Non-Conventional Projects:
Delete paragraph A above and replace with the following: See the RFP for the disposition of existing concrete barriers serving as pier protection.

Commentary: These barriers have provided overall satisfactory performance in shielding bridge piers for many years. Therefore, replacement of existing installations of these barriers with ***Standard Plans*** *Index 521-002, Pier Protection Barrier is not warranted at most locations, unless there is a history of truck pier collision events.*

2. If the pier is not shielded by one of the existing barriers listed above, or if the existing barrier requires replacement due to condition, then use ***Standard Plans*** Index 521-002, Pier Protection Barrier as follows:

   a. If the offset from the barrier gutterline to the pier is less than 10'-9", use a 56-inch barrier.

   b. If the offset from the barrier gutterline to the pier is greater than or equal to 10'-9", use a 44-inch barrier.

When Resurfacing, Restoration, Rehabilitation (RRR) criteria applies, and on Limited Access facility (Interstate, Expressway, and Freeway) resurfacing projects: If the minimum required site distance cannot be provided with ***Standard Plans*** Index 521-002, Pier Protection Barrier or other project constraints warrant strengthening and is approved by the DSDE, then strengthen the existing pier in accordance with paragraph 'B' below in a way that does not impair sight distance. If pier strengthening is not

feasible, then ***Standard Plans*** Index 521-001, Concrete Barrier Walls may be considered as pier protection; however, a Design Variation for pier strength is required.

B. When the design choice is providing structural resistance, strengthen existing piers by providing integral crash walls, struts, collars, etc. See ***SDG*** 7.3.4 for requirements when using collars to strengthen existing piers.

Commentary: Redirecting or absorbing the collision load should be considered first, however, strengthening existing piers may be appropriate where the use of ***Standard Plans*** *Index 521-002, Pier Protection Barrier would adversely affect adjacent pedestrian facilities, utilities, sight distances on adjacent roadways, MOT patterns, etc.*

2.6.4 Piers Adjacent to Railroads

The provisions of this section apply to piers adjacent to railroad tracks (heavy rail) and light rail tracks.

Follow the ***AREMA Manual for Railway Engineering*** and the requirements of the railroad agency in identifying the need for and the design of crash walls. Crash walls are not required at retaining walls of all types (MSE, CIP, sheet pile, GRS, etc.) and at end bents behind any type of retaining wall. See ***FDM*** 220 for railroad horizontal clearance requirements.

For bridge widenings over railroads, identify the need for crash walls for existing piers, new piers, and for the existing and new portions of piers being widened.

Modification for Non-Conventional Projects:
Add the following to ***SDG*** 2.6.4: See the RFP for project specific railroad crash wall requirements.

2.6.5 Design and Analysis Methods

In addition to the general design recommendations presented in ***LRFD***, use the following design and analysis methods:

A. Consider the vehicular collision force per ***LRFD*** as a point load acting on the pier column (no distribution of force due to frame action within the pier, foundation and superstructure). Further analysis of the piles, footings, pier cap, other columns, etc., is not required.

Commentary: Field observation of bridge piers that have been impacted and crash testing of other roadside hardware items indicate little opportunity for an impacted structure to distribute the dynamic impact force during the extremely brief duration of a crash event. The theoretical behavior of a modeled pier when loaded with the equivalent static impact force will likely be substantially different than the behavior of an actual pier subjected to the dynamic impact force from a vehicle crash. Thus,

a more refined analysis of the force distribution within the pier, foundation and into the superstructure using the equivalent static force is not warranted.

B. Check the column shear capacity assuming failure along two shear planes inclined at 45-degree angles above and below the point of force application.

Commentary: Based on the observed failure mechanism of pier columns involved in large truck collisions, an acceptable method of calculating the column strength to resist the vehicular collision force is to assume failure along two shear planes inclined at 45-degree angles above and below the point of force application. Reference Research Report No. FHWA/TX-10/9-4973-1.

2.7 FORCE EFFECTS DUE TO SUPERIMPOSED DEFORMATIONS (LRFD 3.12)

2.7.1 Uniform Temperature

A. In lieu of ***LRFD*** 3.12.2, Procedures A and B, substitute the following table:

Table 2.7.1-1 Temperature Range by Superstructure Material

Superstructure Material	Temperature Range (Degrees Fahrenheit)			
	Mean	High	Low	Range
Concrete Only	70	105	35	70
Concrete Deck on Steel Girder	70	110	30	80
Steel Only	70	120	30	90

B. Note the minimum and maximum design temperatures on drawings for girders, expansion joints and bearings.

C. For detailing purposes, take the normal mean temperature from this table.

D. In accordance with ***LRFD*** Table 3.4.1-1, base temperature rise and fall on 120% of the maximum value given in Table.

2.7.2 Temperature Gradient (LRFD 3.12.3)

Delete the second paragraph of ***LRFD*** 3.12.3 and substitute the following:

“Include the effects of Temperature Gradient in the design of continuous concrete superstructures only. The vertical Temperature Gradient shall be taken as shown in ***LRFD*** Figure 3.12.3-2."

2.8 BARRIERS AND RAILINGS (LRFD 4.6.2.2)

2.8.1 Distribution for Beam-Slab Bridges

Distribute barrier and railing permanent loads in accordance with ***LRFD*** 4.6.2.2.

*Commentary: This **LRFD** requirement is repeated here for clarity because previous versions of the **SDG** contained a different methodology for distributing railing loads across the width of the bridge deck.*

2.8.2 Limit State Checks (LRFD 2.5.2.6, 3.4.1 and 4.6.3)

Traffic and pedestrian railings and raised sidewalks are not to be used for the determination of deflections or for service or fatigue limit state checks.

2.9 LIVE LOAD DISTRIBUTION FACTORS (LRFD 4.6.2.2 AND 4.6.3.1)

A. For bridge superstructures with concrete beams meeting the requirements of ***LRFD*** 4.6.2.2, live load distribution factors (LLDF) shall not be less than the values given by the approximate methods. For bridge superstructures with straight steel I-girders, see ***SDG*** 5.13.

B. In ***LRFD*** 4.6.2.2.2, extend the Range of Applicability as follows:

1. ***LRFD*** Table 4.6.2.2.2b-1:
    a. For Florida-U beam bridges (Type "c" cross-section) change the depth parameter range to $18 < d < 72$, and the span length parameter range to $20 < L < 170$.
    b. For prestressed concrete slab beam bridges (Type "f" cross-section) change the width parameter to $29 < b < 60$, and the number of beams parameter range to $4 \leq N_b \leq 20$.
    c. For prestressed concrete I-beam bridges (Type "k" cross-section) change the longitudinal stiffness parameter range to $10{,}000 < Kg < 8{,}500{,}000$.
2. ***LRFD*** Table 4.6.2.2.3a-1:
    a. For Florida-U beam bridges (Type "c" cross-section) change the depth parameter range to $18 < d < 72$, and the span length parameter range to $20 < L < 170$.
    b. For prestressed concrete slab beam bridges (Type "f" cross-section) change the number of beams parameter range to $4 \leq N_b \leq 20$, the width parameter to $29 < b < 60$, and the moment of inertia range to $5{,}700 < I < 610{,}000$.
3. ***LRFD*** Table 4.6.2.2.3b-1: for prestressed concrete slab beam bridges (Type "f" cross-section) change the width parameter to $29 < b < 60$.
4. ***LRFD*** Table 4.6.2.2.3c-1:
    a. For Florida-U beam bridges (Type "c" cross-section) change the depth parameter range to $18 < d < 72$, and the span length parameter range to $20 < L < 170$.
    b. For prestressed concrete slab beam bridges (Type "f" cross-section) change the depth parameter range to $12 < d < 60$, the width parameter to $29 < b < 60$, and the number of beams parameter range to $4 \leq N_b \leq 20$.

*Commentary: The **LRFD** distribution factor equations are largely based on work conducted in NCHRP Project 12-26. When one or more of the parameters are outside the listed range of applicability, the equation could still remain valid, particularly when the value(s) is (are) only slightly outside the range. The extended values given in the **SDG** which are considered slightly outside of the **LRFD** range of applicability allow the use of the FDOT standard prestressed concrete beams. If one or more of the parameters greatly exceed the range of applicability, engineering judgment needs to be exercised.*

C. When widening existing AASHTO and Florida Bulb-T beam bridges with Florida-I Beams, the live load distribution factors may be calculated using the ***LRFD*** 4.6.2.2 approximate method.

*Commentary: The **LRFD** approximate method produces distribution factors that are conservative when compared to refined analyses even though the beam stiffnesses and spacings vary significantly.*

2.10 REDUNDANCY AND OPERATIONAL IMPORTANCE (LRFD 1.3.4 AND 1.3.5)

Use redundant (multiple-load-path) superstructure systems unless otherwise permitted by ***SDG*** 4.1.A or ***SDG*** 5.1.D.

A. Redundancy (LRFD 1.3.4)

Delete the Redundancy Factors for the strength limit state, η_R, in ***LRFD*** 1.3.4 and use η_R = **1.0** except as defined below:

Table 2.10-1 Redundancy Factors

Component	η_R **Factor**
Steel I-Girders in Two Girder Cross Sections[1]	1.20
Concrete I-Beams in Two Beam Cross Sections[2]	1.10
Truss/Arch Bridges (excluding steel pedestrian trusses meeting the Category 1 conditions of ***FDM*** 266.4)	1.20
Steel Floor beams with Spacing > 12-feet and Non-Continuous Deck[3]	1.20
Steel Floor beams with Spacing > 12-feet and Continuous Deck[3]	1.10
Steel Elements (Integral Caps, Non-integral Caps, Columns, C-piers, Straddle Piers, and Straddle Pier Caps)	1.20

Concrete Elements (C-piers, Integral Caps, Frame Straddle Piers, and Straddle Pier Caps)	1.10

1 With at least three evenly spaced intermediate cross-frames/diaphragms or floor beams (excluding end diaphragms) in each span.
2 Provide full-depth end diaphragms and full-depth intermediate diaphragms at quarter points along the span length.
3 Contact the SSDE for direction on non-standard steel floor beams or complex floor systems.

Modification for Non-Conventional Projects:

Delete Footnote 3 in Table 2.10-1 and replace with the following:

3 Do not use transverse floor beam systems for vehicular bridges unless permitted in the RFP.

Table 2.10-2 Redundancy Factors for Steel Box Girders

Number of Box Girders in Cross Section	η_R Factor[1]	
	With Exterior Diaphragms[2]	Without Exterior Diaphragms
2	1.05	1.20

1 Top flange spacing more than 14-feet is not permitted.
2 With at least three evenly spaced exterior intermediate diaphragms (excluding end diaphragms) in each span. See ***SDG*** 5.6.3 for additional requirements.

The following requirements are applicable to the redundancy factor:

1. Applied at the component level. For girder components, the redundancy factor shall not be applied to the girder reactions for the bearing, substructure and foundation designs. For the substructure components including straddle or integral pier caps, the redundancy factor shall not be applied to the foundation if they are separate components (e.g. in a C-pier supported by a pile cap and piles, the redundancy factor is not applied to the pile design). For non-framed straddle or integral pier caps, the redundancy factor shall not be applied to the column and foundation designs.
2. Applied to flexural and axial effects of the component. For girder components, the redundancy factor is applied to splices, connections and cross-frames/ diaphragms or floor beam designs.
3. For steel components and mildly reinforced concrete components, apply the redundancy factor to the Strength I, II, and IV Limit State. For concrete post-tensioned components, apply the redundancy factor to the Strength I and Service I Limit State.

4. Applicable to Pedestrian bridges.
5. Not Applicable to ***LRFD*** 3.4.2, Load Factors for Construction Loads.

For special structures (e.g. cable, suspension, and other structures not normally used by FDOT), submit a redundancy factor to the SSDE for approval.

Modification for Non-Conventional Projects:
Delete the above sentence and insert the following: For special structures (e.g. cable, suspension, and other structures not normally used by FDOT), submit the redundancy factor in the ATC, unless otherwise noted in the RFP.

Commentary: The intent is to apply η_R at the component level. For example, η_R of 1.2 for two steel box girders without exterior diaphragms is applicable to the design of the box girders only and not to other bridge components such as the bearings, substructure and foundation. Furthermore, several NCHRP reports (e.g. 406 and 776) have addressed redundancy in highway bridge superstructures. Due to NCHRP Report 776 findings that continuous steel girders with non-compact negative moment sections may not substantiate a decreased redundancy factor, the previous distinction between simple and continuous girders has been eliminated.

B. Ductility ***LRFD*** 1.3.3 and Operational Importance ***LRFD*** 1.3.5. Delete the values for Ductility, η_D, and Operational Importance, η_I, in ***LRFD*** 1.3.3 and 1.3.5 and use η_D = **1.0** and η_I = **1.0**

Modification for Non-Conventional Projects:
Delete ***SDG*** 2.10.B and see the RFP for requirements.

*Commentary: The redundancy factor section first appeared in the **SDG** by the implementation of Temporary Design Bulletin C06-01 and was revised in subsequent years. The original and current intent is to apply the redundancy factor only at the component level. Furthermore, research through several NCHRP reports (e.g. 406 and 776) have addressed redundancy in highway bridge superstructures. Due to NCHRP Report 776 findings that continuous steel girders with non-compact negative moment areas may not substantiate a decreased redundancy factor, the previous distinction between simple and continuous girders has been eliminated for now.*

2.11 VESSEL COLLISION (LRFD 3.14)

2.11.1 General (LRFD 3.14.1)

A. The design of all bridges over navigable waters must include consideration for possible Vessel Collision (usually from barges or ocean going ships). Conduct a vessel risk analysis to determine the most economical method for protecting the bridge. The marine vessel traffic characteristics are available for bridges located across inland waterways and rivers carrying predominately barges. The number of vessel passages and the vessel sizes are embedded as an integral part of the Department's Vessel Collision Risk Analysis Software. The vessel traffic provided is based on the year 2000 and an automatic traffic escalation factor is provided by the software for the various past points which one selects. It is recommended that the engineer compare the total vessel trip count being used in the risk analysis with the latest total vessel trip count provided for the appropriate section of waterway as published by the Army Corps. The escalation factor provided by the software can be modified by the engineer. The importance classification is provided for existing bridge sites and will be provided by the Department for any new bridge location. Port facilities and small terminals handling ships are not covered by the catalog of vessel traffic characteristics. In these cases, on-site investigation is required to establish the vessel traffic characteristics. Utilize the ***LRFD*** specification and comply with the procedure described hereinafter.

Modification for Non-Conventional Projects:
Add the following at the end of ***SDG*** 2.11.1.A: See the RFP for the importance classification.

B. The use of dolphins and islands to protect bridges from vessel collision requires the approval of the SSDE.

Commentary: Dolphins and islands can be used to protect existing bridge substructures that were not designed to resist vessel collision loads and in some cases are used to protect the substructures of bridges at port facilities. The use of dolphins and islands will require customized designs and usually will include extensive hydraulic and geotechnical evaluations.

Modification for Non-Conventional Projects:
Delete ***SDG*** 2.11.1.B and see the RFP for requirements.

2.11.2 Research and Information Assembly

(When not provided by the Department)

A. Data Sources:

1. U.S. Army Corps of Engineers, Waterborne Commerce Statistics Center, P.O. Box 61280, New Orleans, LA 70161. Telephone: (504) 862-1472.
2. U.S. Army Corps of Engineers, ***Navigation Data Center*** (https://www.usace.army.mil/Missions/Civil-Works/Navigation)
3. U.S. Army Corps of Engineers, "Waterborne Commerce of the United States (WCUS), Parts 1 & 2," Water Resources Support Center (WRSC), Fort Belvoir, VA.
4. U.S. Army Corps of Engineers, "Waterborne Transportation Lines of the United States," WRSC, Fort Belvoir, VA.
5. U.S. Army Corps of Engineers (COE), District Offices.
6. U.S. Coast Guard, Marine Safety Office (MSO).
7. Port Authorities and Water Dependent Industries.
8. Pilot Associations and Merchant Marine Organizations.
9. National Oceanic and Atmospheric Administration (NOAA), "Tidal Current Tables; Tidal Current Charts and Nautical Charts," National Ocean Service, Rockville, Maryland.
10. Bridge tender record for bascule bridge at the District Maintenance Office.
11. Local tug and barge companies.

B. Assembly of Information:

The EOR must assemble the following information:

1. Characteristics of the waterway including:
   a. Nautical chart of the waterway.
   b. Type and geometry of bridge.
   c. Preliminary plan and elevation drawings depicting the number, size and location of the proposed piers, navigation channel, width, depth and geometry.
   d. Average current velocity across the waterway.
2. Characteristics of the vessels and traffic including:
   a. Ship, tug and barge sizes (length, width and height)
   b. Number of passages for ships, tugs and barges per year (last 5-years and prediction to end of 25-years in the future).
   c. Vessel displacements.
   d. Cargo displacements (deadweight tonnage).
   e. Draft (depth below the waterline) of ships, tugs and barges.

f. The overall length and speed of tow.

3. Accident reports.

4. Bridge Importance Classification.

2.11.3 Design Vessel (LRFD 3.14.4 and 3.14.5.3)

When utilizing the FDOT's Mathcad software for conducting the Vessel Collision risk analysis, a "Design Vessel," which represents all the vessels, is not required. The software computes the risk of collision for several vessel groups with every pier. When calculating the geometric probability, the overall length of each vessel group (LOA) is used instead of the LOA of a single "Design Vessel."

2.11.4 Design Methodology - Damage Permitted (LRFD 3.14.13)

In addition to utilizing the general design recommendations presented in ***LRFD*** (except as noted herein), the EOR must also use the following design methodology:

A. At least one iteration of secondary effects in columns must be included; i.e., axial load times the initial lateral deflection.

B. The analysis must include the effects of force transfer to the superstructure. Bearings, including neoprene pads, transfer lateral forces to the superstructure. Analysis of force transfer through the mechanisms at the superstructure/ substructure interface must be evaluated by use of generally accepted theory and practice.

C. The nominal bearing resistance (R_n) of axially loaded piles must be limited to the maximum pile driving resistance values given in ***SDG*** Table 3.5.13-1. Load redistribution is not permitted when the maximum pile driving resistance is reached.

Modification for Non-Conventional Projects:
Delete ***SDG*** 2.11.4.C and substitute the following: C. Load redistribution is not permitted when the maximum pile driving [RC] resistance is reached.

D. Lateral soil-pile response must be determined by concepts utilizing a coefficient of sub-grade modulus provided or approved by the Geotechnical Engineer. Group effects must be considered.

E. For the designer's Vessel Collision risk analysis, the FDOT will determine whether a bridge is critical or non-critical. A list is provided with the Department's software.

F. Use Load Combination "Extreme Event II" as follows:

(PermanentLoads) + **WA** + **FR** + **CV** [Eq.2-2]

With all load factors equal to 1.0. Nonlinear structural effects must be included and can be significant. It is anticipated that the entire substructure (including piles) may have to be replaced and the superstructure repaired if a bridge is subjected to this

design impact load; however, the superstructure must not collapse. For scour considerations, see ***SDG*** 2.11.8.

Commentary: Further refinement or complication of this load combination is unwarranted.

G. Distribute the total risk per pier as uniformly as possible while allowing practical construction considerations. Ignore any benefit provided to the channel piers if a fender system is provided.

H. Pier strengths for the first two piers on each side of the channel shall be proportioned such that the Annual Frequency of Collapse per pier shall be less than the Acceptable Risk of Bridge Collapse divided by the total number of piers within a distance of 6 times LOA of the longest vessel group.

2.11.5 Widenings

Major widening of bridges spanning navigable waterways must be designed for Vessel Collision. Minor widenings of bridges spanning navigable waterways will be considered on an individual basis for Vessel Collision design requirements. (see ***SDG*** 7.1.4)

Modification for Non-Conventional Projects:
Delete second sentence of ***SDG*** 2.11.5 and see the RFP for requirements.

2.11.6 Movable Bridges

For movable bridges, comply with the requirements of this chapter.

2.11.7 Channel Span Unit

A. The length of the main span between centerlines of piers at the navigable channel must be based upon the Coast Guard requirements, the Vessel Collision risk analysis (in conjunction with a least-cost analysis), and aesthetic considerations.

Modification for Non-Conventional Projects:
Delete ***SDG*** 2.11.7.A and see the RFP for requirements.

B. When vessel traffic volume at high level fixed bridges is such that the risk analysis results in channel pier strength requirements in excess of 1,500 kips, provide a channel span unit consisting of one of the following:

1. A minimum 3-span steel continuous unit in which the channel span is not an end span of the unit.
2. A minimum 3-span continuous post-tensioned concrete unit in which the channel span is not an end span of the unit.
3. Prestressed beams made continuous only for live load with a minimum 3-span continuous deck and a single monolithic full-width continuity diaphragm at each

interior pier. The channel span shall not be an end span of the continuous unit. See ***SDG*** 4.1.7

Commentary: For channel span units subject to high vessel impact loads, structural redundancy is required from a risk standpoint to maximize survivability of the unit in the case of a vessel collision with one of the piers.

2.11.8 Scour with Vessel Collision (LRFD 3.14.1)

A. Substructures must be designed for an extreme Vessel Collision load by a ship or barge simultaneous with scour. Design the substructure to withstand the following two Load/Scour (**LS**) combinations:

1. Load/Scour Combination 1:

   LS$_{(1)}$= Vessel Collision @ 1/2 Long-term Scour [Eq. 2-3]

   Where:

   Vessel Collision: Assumed to occur at normal operating speed.

   Long-Term Scour: Defined in Chapter 4 of the ***FDOT Drainage Manual.***

2. Load/Scour Combination 2:

   LS$_{(2)}$ = Minimum Impact Vessel @ 1/2 100-Year Scour [Eq. 2-4]

   Where:

   Min. Impact Vessel as defined in ***LRFD*** 3.14.1 with related collision speed.

   100-Year Scour as defined in Chapter 4 of the ***FDOT Drainage Manual.***

B. When preparing the soil models for computing the substructure strengths, and when otherwise modeling stiffness, analyze and assign soil strength parameters to the soil depth that is subject to Local and Contraction Scour that may have filled back in. The soil model must utilize strength characteristics over this depth that are compatible with the type of soil that would be present after having been hydraulically redeposited.

Commentary: In many cases, there may be little difference between the soil strength of the natural streambed and that of the soil that is redeposited subsequent to a scour event.

2.11.9 Application of Impact Forces (LRFD 3.14.14)

Apply the vessel impact forces per ***LRFD*** 3.14.14 as shown in Figure 2.11.9-1.

Figure 2.11.9-1 Application of Vessel Impact Forces on Footings, Piers, and Columns

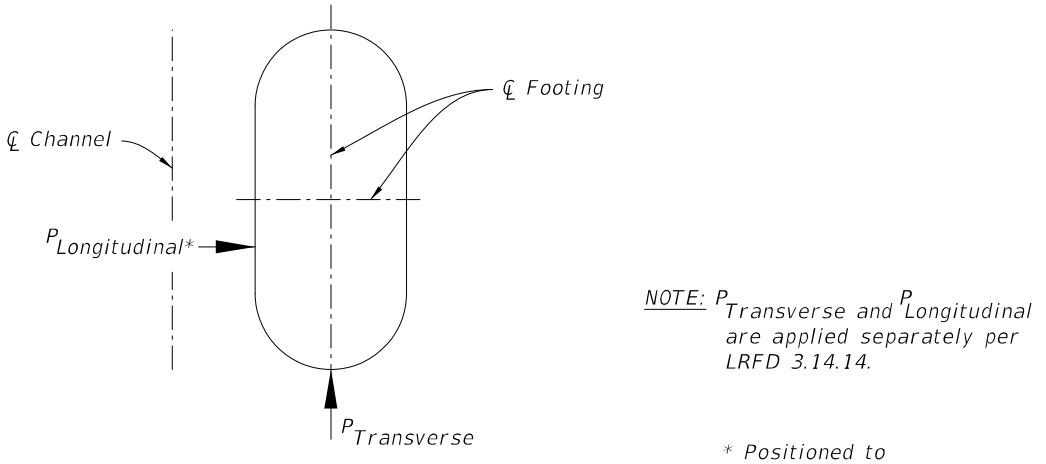

FOOTING PLAN
(Stadium shape footing shown, other footing, pier and column shapes similar)

2.11.10 Impact Forces on Superstructure (LRFD 3.14.14.2)

Apply Vessel Impact Forces (superstructure) in accordance with ***LRFD*** 3.14.14.2.

2.11.11 Footing, Pier, and Column Shapes

Design and detail all substructure bridge components within 3xLOA on either side of the centerline of the channel subject to direct vessel impact, such as waterline footings, piers and columns supported on mudline footings, and bascule piers to have rounded faces adjacent to approaching vessels. See Figure 2.11.11-1 for examples.

Commentary: Research conducted at the University of Florida has shown that the magnitude of the force imparted onto the structure by an aberrant barge during a collision is largely dependent on the pier/footing geometry. The internal steel structure of the barge consists of longitudinal steel frames that are spaced at 2 to 3-feet. As the barge bow engages the structure, the force imparted onto the structure is proportional to the number of frames engaged in the impact simultaneously. A flat surface impact will engage and buckle all the frames simultaneously whereas a curved or rounded shape will engage and buckle the longitudinal frames sequentially, thus reducing the impact force imparted onto the pier/footing.

Figure 2.11.11-1 Rounded Footing, Pier, and Column Shapes

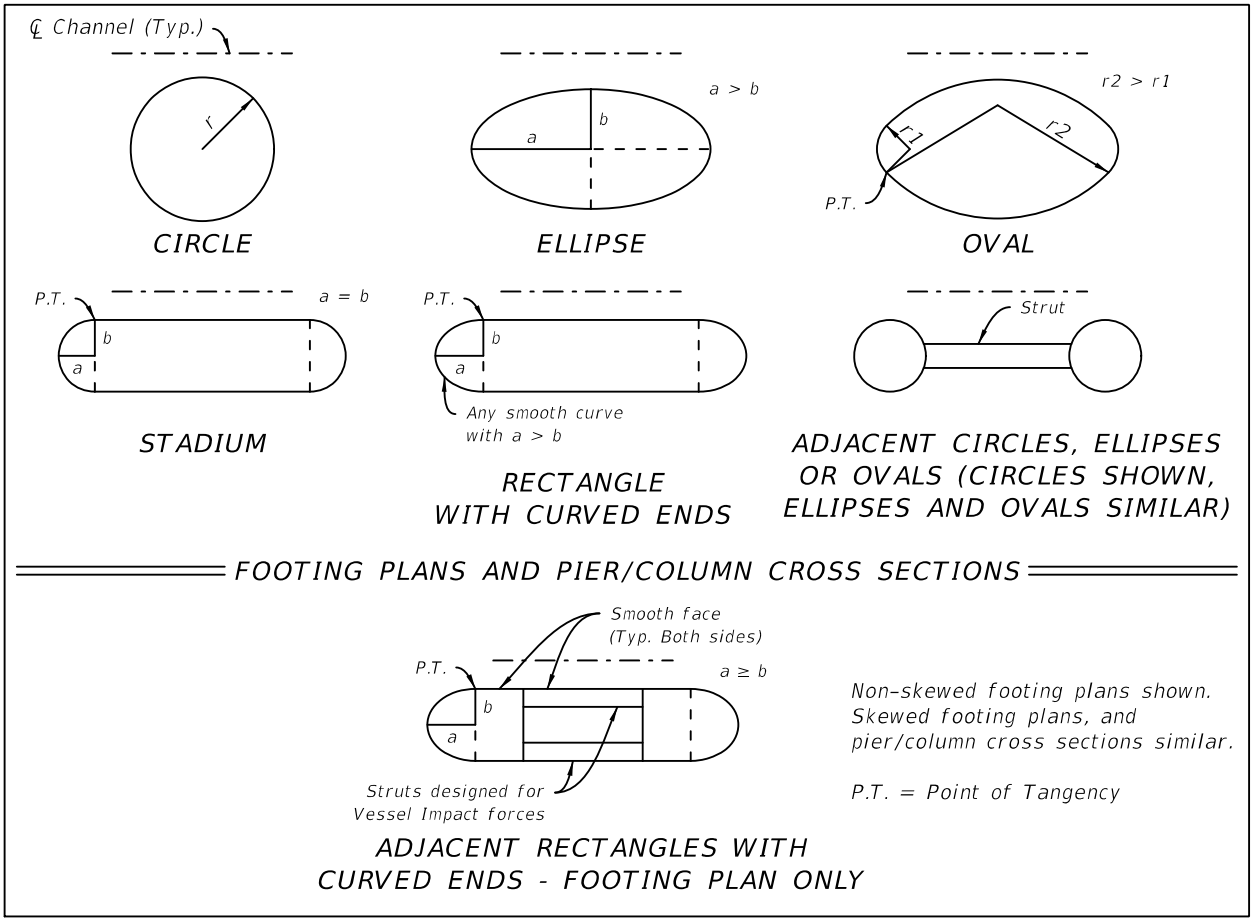

2.12 LIMIT STATES

Delete ***LRFD*** 2.6.4.4.4 and use the following criteria.

2.12.1 Strength and Service (always required)

A. Use load combinations as specified in ***LRFD*** Table 3.4.1-1 with the most severe case of scour, including the 100-year flood event.

B. Tensile stresses in post-tensioned concrete members oriented transverse to the direction of supported traffic (e.g. straddle piers, C-piers and integral caps) shall be evaluated at the Service I limit state.

2.12.2 Extreme Event (if required)

Use ***LRFD*** load combination Extreme Event II for collision by vessels, collision by vehicles, and check floods as modified below.

A. If vessel collision is considered, use load combination groups as specified in ***SDG*** 2.11.4, Paragraph F and utilizing scour depths as specified in ***SDG*** 2.11.8.

B. See ***SDG*** 2.6 if vehicular collision is considered.

C. If scour is predicted, check for stability during the superflood event using the following load combination (most severe case of scour including the 500-year flood).

$$\gamma_{\mathbf{p(DC)}} + \gamma_{\mathbf{p(DW)}} + \gamma_{\mathbf{p(EH)}} + \gamma_{\mathbf{p(EL)}} + \mathbf{0.5(L)} + \mathbf{1.0(WA)} + \mathbf{1.0(FR)} \quad \text{[Eq. 2-5]}$$

Where, **L = LL + IM + CE + BR + PL + LS**

(All terms as per ***LRFD***)

2.12.3 Fatigue (LRFD 3.6.1.4.2)

When designing for the Fatigue II limit state, use the following procedure to calculate the $ADTT_{SL}$ (***LRFD*** 3.6.1.4.2):

A. Calculate the AADT Growth Rate, GR, using the opening year and design year traffic data per ***SDM*** 7.2.D.

$$GR = (AADT_{20}/AADT_0)^{1/20} \quad \text{[Eq. 2-6]}$$

Where : $AADT_0$ = opening year

$AADT_{20}$ = design year (+20)

Use AADT if available, if not use ADT.

B. Calculate the estimated AADT at the mid-service life of the bridge, $AADT_{38}$.

$$AADT_{38}=AADT_0 \cdot GR^{38} \cdot D \quad \text{[Eq. 2-7]}$$

Where: D = directionality factor. Use D = 1 for bridges supporting one lane of traffic in both directions. This accounts for a future condition where the bridge is a one directional two-lane bridge.

The $AADT_{38}$ per lane is limited to 20,000 ($AADT_{38}$ / number of lanes ≤ 20,000).

*Commentary: The design year traffic data is typically 20 years from the opening date and is included in the roadway Typical Section package. The +20-year traffic data uses traffic forecasting procedures as referenced in **FDM** 120. Due to the number of uncertainties in traffic forecasting for a bridge service life of 75 years, the procedure described here uses an approximate growth factor using the opening and +20-year traffic data and extrapolates out to 38 years which is at the middle of the bridge service life. The $AADT_{38}$ is assumed to be an average AADT over the 75-year service life of the bridge and is used for the Fatigue II limit state. If another design year and/or bridge service life is used, adjust the GR and mid-life AADT accordingly.*

C. Calculate the $ADTT_{SL}$.

$$ADTT_{SL}=AADT_{38} \cdot T \cdot p \quad \text{[Eq. 2-8]}$$

Where: T = percentage of truck traffic (round to next whole number; from Traffic Data, see ***SDM*** 7.2.D).

p = fraction of truck traffic in a single lane (***LRFD*** Table 3.6.1.4.2-1)

D. For the following roadways with a Limited Access functional classification (Interstate, Expressway, and Freeway), the $ADTT_{SL}$ needs to be equal to or greater than:

- Ramps (1 lane): 1700,
- Ramps (2 or more lanes): 3100,
- Mainlines and Collector-Distributor (C-D): 3100.

Commentary: It is anticipated that many cross-frames connections will be designed for the Fatigue II Limit State.

2.13 CONSTRUCTION LOADS

2.13.1 Constructability Limit State Checks

In the absence of more accurate information, the following construction loads can be assumed for investigation of the strength and service limit states during construction in accordance with ***LRFD*** 3.4.2 and ***SDG*** 2.4.3, and for investigation of deck overhang bracket force effects in accordance with ***LRFD*** 6.10.3.4. These loads are applicable to conventional beam or girder superstructures with cast-in-place decks. All construction loads assumed in the design of the structure shall be listed in the plans.

A. Finishing machine load: The finishing machine load shall be per the manufacturer's specifications and be applied as a moving load positioned to produce the maximum response. In the absence of manufacturer's specifications, assume the following loads:

W = Bridge Width (ft)	Total Weight of Finishing Machine (kips)
$26 \le W \le 32$	13
$32 < W \le 56$	15
$56 < W \le 80$	17
$80 < W \le 120$	20

B. Construction live load: 20 lb/sf extended over the entire bridge width and 50-feet in longitudinal length centered on the finishing machine.

C. Removable deck cantilever forms with overhang brackets: 15 lb/sf

D. Live load at or near the outside edge of deck during deck placement: 75 lb/ft applied as a moving load over a length of 20-feet and positioned to produce the maximum response.

Modification for Non-Conventional Projects:

Delete ***SDG*** 2.13.1 and insert the following:

List in the plans all construction loads assumed in the design of the structure.

2.13.2 Substructures for Segmental Bridges

When the reduced load factor as allowed by ***LRFD*** C5.12.5.3.4b is used for substructures supporting segmental bridges, the reduced load factor for CLL shall not be less than 1.35 for Strength I and 1.25 for Strength V. A reduction in the load factor for WE is not allowed.

*Commentary: **LRFD** currently allows for a reduced load factor as appropriate for CLL and WE but has not defined a lower limit.*

2.13.3 Erection Equipment

For beam or girder superstructures (non-segmental) utilizing erection equipment supported by any part of the bridge structure (e.g., gantries and beam shifters), check all applicable strength and service limit states per ***LRFD*** 3.4.2 for the temporary loading conditions considering all phases of construction. Include wind loads imparted by the erection equipment on the structure from the Construction Inactive and Construction Active conditions per ***SDG*** 2.4.3. Satisfy the crack control requirements of ***SDG*** 3.10.A. See also ***SDG*** 6.10. Include in the General Notes the erection equipment loads assumed in the design.

3 SUBSTRUCTURE AND RETAINING, NOISE AND PERIMETER WALLS

3.1 GENERAL

A. This Chapter supplements ***LRFD*** Sections 2, 3, 5, 10, 11 and 15 and contains deviations from those sections. This Chapter also contains information and requirements related to soil properties, foundation types and design criteria, fender pile considerations, cofferdam design criteria to be used in the design of bridge structures and culvert design criteria. The term “noise wall” is used herein in lieu of the term “sound barrier” which is used in ***LRFD***.

B. The Structural Engineer, with input from the Geotechnical and Hydraulic Engineers, must determine the structure loads and the pile/shaft section or spread footing configuration. The Structural Engineer and the Geotechnical Engineer must consider constructability in the selection of the foundation system. Issues such as existing underground and overhead utilities, pile-type availability (including Buy America provisions), use of existing structures for construction equipment, phase construction, conflicts with existing piles and structures, effects on adjacent structures, etc. must be considered in evaluating foundation design.

C. Support all bridges on drilled shafts, spread footings, driven concrete piles or driven steel piles unless alternative foundations are authorized by the State Structures Design Engineer.

D. Bridge driven pile foundation designs require 100% dynamic testing unless otherwise directed by the Director, Office of Design.

Modification for Non-Conventional Projects:
Delete ***SDG*** 3.1.D and insert the following: D. Bridge driven pile foundation designs require 100% dynamic testing.

E. Design all substructures to incorporate bearings or provide fixed connections to the superstructure. Freyssinet and all forms of reinforced concrete hinges/pins are not permitted.

Commentary: Reinforced concrete hinges/pins are not permitted due to cracks which have historically formed at the hinge locations and allowed accelerated corrosion to occur.

F. Determine pile and drilled shaft loads and design footings and bent caps using plan pile and drilled shaft locations. Use a minimum design pile embedment of 12-inches for piles that are not required to be developed. A design pile embedment of 12-inches is considered a pinned head condition. See ***SDG*** 3.5.1 for requirements when developing the bending capacity of concrete piles. For bent, footing and foundation detailing requirements and considerations, see ***SDM*** 11.6, ***SDM*** 11.7 and ***SDM*** 12.5.

G. Corrosion Mitigation Measures for Steel Piles and Wall Anchor Bars are as follows:

1. To account for a reduction in steel cross section due to corrosion, add coatings and/or sacrificial steel thickness to all permanent steel substructure and wall components as shown in ***SDG*** Table 3.1-1. Coat steel piles fabricated with weathering steel in the same manner as steel piles fabricated with conventional steels. Depict design ground surface or the design scour depth in plans.

2. Closed-End Pipe piles with a cast-in-place concrete core (full internal redundancy) may be used in any environment. The concrete core must extend the full length of the pile. The upper portion of the concrete core must be reinforced to resist all design loads without any contribution from the steel pipe. At a minimum, the reinforcement must extend from the pile head to the minimum tip elevation required for lateral stability. Design the concrete core using Class IV (Drilled Shaft) Concrete, 1'-0" or greater stirrup spacing, 2-inch clearance between the stirrups and the inside of the pipe, and a minimum clear distance between main reinforcement of $3d_{max}$ (3 x maximum aggregate size) or 3-inch, whichever is greater. The sacrificial thickness specified in ***SDG*** Table 3.1-1 and painting per ***Specifications*** Section 560 are not required for the steel pipe.

Commentary: In this case the Closed-End Pipe pile is essentially a permanent casing and is not considered as a load carrying element. The design requirements for the reinforced concrete core are intended to result in proper concrete consolidation within the pile.

H. When Closed-End Steel Pipe piles are required, include the detail shown in ***SDM Figure*** 11.6.3-1 in the Plans. Specify the weld sizes and the thickness of the seal plate and stiffener plates. The minimum fillet weld size is ¼-inch.

Commentary: The use of commercial pile tips or "shoes" is not precluded. However, when considering commercial pile tips, detrimental characteristics such as reduction in side friction due to protruding welds, should be carefully considered during design.

I. The default foundation for Noise Walls and Perimeter Walls is auger cast-in-place (ACIP) piles, however, alternative foundations may be used if soil conditions warrant. ACIP piles may also be used to support miscellaneous structures.

J. For end bent design, perform the overturning analysis and establish the foundation forces using the following loads from the approach slab in combination with other appropriate loads:

- 50% of the dead load of the approach slab and any other approach slab supported components including the asphalt overlay, traffic/pedestrian railings, raised sidewalks, traffic separators, etc.
- The maximum reaction from an HL-93 live loading applied to the approach slab supported as specified in ***SDG*** 4.9.

Apply these loads at the centerline of the top of the end bent backwall. See ***SDG*** 3.13 and ***SDM*** Chapter 12 for additional end bent design and detailing requirements.

K. For pile bent caps located within the splash zone, use FRP or stainless steel reinforcing. See ***SDG*** 1.4 for definition of splash zone. When using stainless steel reinforcing, use materials for embedded items that are compatible with stainless steel; do not use mild reinforcing or other embedded items made of CFRP or carbon steel. For FRP reinforcing, see ***Volume 4 - Fiber Reinforced Polymer Guidelines*** for design requirements.

Commentary: Embedded items made of CFRP and carbon steel are not compatible with stainless steel and will experience accelerated corrosion due to electrical contact with the stainless steel.

L. Apply the Dynamic Load Allowance (IM), to the design of the following partially buried substructure and foundation components:

1. The portion of the pier above the footing.
2. Piles in a pile bent, including the portion of the piles below the groundline or mudline. The groundline or mudline is the permanent condition after scour considerations.
3. Partially buried drilled shafts, including drilled shafts that support a pier column (i.e., configurations where the columns are a vertical continuation of the shaft).

This applies to determining the pile loads for the design of the structural footing or bent/pier cap, as well as determining the Nominal Bearing Resistance (NBR) for the pile or drilled shaft.

*Commentary: This policy clarifies the intent of **LRFD**, which is the entire component must be buried in order to qualify for relief from IM. Examples of partially buried components subject to IM include piles in intermediate pile bents, and the portions of waterline pier piles that are below the mudline.*

M. Design connections between tension piles and footings using the details in ***SDM*** 11.6.2. The number of adhesive bonded dowels shown in ***SDM Figure*** 11.6.2-1 is for example only. The designer must determine the size and number of adhesive bonded dowels required. The minimum bar size for adhesive bonded dowels is #8. When designing tension pile connections considering interface shear transfer per LRFD 5.7.4, use a cohesion value of 0 ksi.

Table 3.1-1 Usage Limitations and Corrosion Mitigation Measures for Steel Piles and Wall Anchor Bars

Steel Component	Embedment	Corrosion Protection	Minimum Required Sacrificial Thickness (inches) and Usage Limitations Based on Substructure Environmental Classification and Pile/Wall Anchor Bar Location			
			Slightly Aggressive	Moderately Aggressive	Extremely Aggressive (excluding the splash zone)	
			Land and/or Water	Land and/or Water	Land	Water
Pipe and H-Piles	Completely Buried	None[1]	0.075	0.15	0.225[2]	Use Internally Redundant Pipe Piles Only, See ***SDG*** 3.1.G.2
	Partially Buried	***Specifications*** Section 560	0.09	0.18	0.27[2]	N/A
		None[1]	0.15	0.30	Use Internally Redundant Pipe Piles Only, See ***SDG*** 3.1.G.2	
Anchored or Cantilever Sheet Piles	All	***Specifications*** Section 560	0.068[4]	0.135[4]	0.203[4]	
Wall Anchor Bars	All	See Footnote[3]	0.09	0.18	0.27	

1. Include a note in the plans stating pipe and H-piles are not to be coated.
2. In extremely aggressive environments (Per ***SDG*** Table 1.3.2-1), steel H-piles or pipe piles without internal redundancy are only permitted if no surface water is present and if all of the following criteria are met for ground water and soil: Chlorides < 2,000 ppm, Resistivity > 5,000 Ohm-cm, and pH > 4.9. Otherwise, use Internally Redundant Pipe Piles, See ***SDG*** 3.1.G.2.
3. Use an epoxy-mastic heat shrink wrap or duct and grout to provide corrosion protection. At the connection to wall, use a coal tar-epoxy mastic coating.
4. Assume 50% corrosion rate on buried face wall with 30-year corrosion protection coating.

Commentary: The criteria listed below were used to determine the required sacrificial steel thickness. These corrosion rates are not intended for use in the marine tidal zone where corrosion rates are at least double those listed below.

Environmental Classification versus Corrosion Rate per side for partially buried piles and wall anchor bars:

Slightly Aggressive: 0.001 inches/year

Moderately Aggressive: 0.002 inches/year

Extremely Aggressive: 0.003 inches/year

Environmental Classification versus Corrosion Rate per side for completely buried piles:

Slightly Aggressive: 0.0005 inches/year

Moderately Aggressive: 0.001 inches/year

Extremely Aggressive: 0.0015 inches/year

Design Life:

*Pipe and H-Piles without coating per **Specifications** Section 560:*

75 years (sacrificial thickness required)

*Pipe, Sheet and H-Piles with coating per **Specifications** Section 560 and Wall Anchor Bars with corrosion protection measures:*

75 years (coating or corrosion protection measures provide 30 years and sacrificial thickness provides 45 years).

Application:

Partially buried Pipe Piles and H-Piles: Two Sided Attack at soil and/or water line.

Completely buried Pipe Piles and H-Piles: Two Sided Attack below ground line as shown in table above; single sided attack if Pipe Piles are concrete filled.

Sheet Piles: Two Sided Attack at soil and/or water line, with half the exposed face corrosion rate applied to the buried face.

3.2 GEOTECHNICAL REPORT

A. The Geotechnical Engineer of Record will issue a Geotechnical Report for most projects including the following:

1. Detailed Soil conditions.
2. Recommended environmental classifications per ***SDG*** 1.3.1.
3. Foundation recommendations.

4. Design parameters. Consider the effects of construction activities such as preforming, jetting, installation or extraction of sheetpile, excavation, or other activities that may be required for successful completion of the project.
5. Constructability considerations.
6. Background information that may assist the Structural Engineer in determining appropriate pile lengths.
7. Soil parameters for FB-MultiPier for the evaluation of minimum tip elevation.
8. Input and output of geotechnical analysis software.
9. Completed FHWA Report ***Checklist and Guidelines for Review of Geotechnical Reports and Preliminary Plans and Specifications.***
10. Core boring drawings reflecting the foundation data acquired from field investigations.
11. Required Load tests.

B. The Geotechnical Engineer of Record will contact the District Construction Office and District Geotechnical Engineer, as needed, to obtain local, site-specific foundation construction history.

C. Prepare the report in accordance with the Department's ***Geotechnical Design Manual (GDM)***. Geotechnical Reports will conform to the ***FHWA Report Checklist and Guidelines for Review of Geotechnical Reports and Preliminary Plans and Specifications*** prepared by the Geotechnical and Materials Branch, FHWA, Washington, D.C., October 1985. Contact the District Geotechnical Engineer to receive a copy of this document.

D. In the event that a contracted geotechnical firm prepares the Geotechnical Report, both the State and District Geotechnical Engineers generally will review it for Category 2 Structures and the District Geotechnical Engineer for Category 1 Structures (see ***FDM*** 121 for category definitions).

E. Final acceptance of the report is contingent upon the District Geotechnical Engineer's approval. Concurrence by the State Geotechnical Engineer is required for all foundations of Category 2 Structures.

F. Verify the scope of services, as well as the proposed field and laboratory investigations, with the District Geotechnical Engineer before beginning any operations.

3.3 FOUNDATION SCOUR DESIGN (LRFD 2.6)

A. This is a multi-discipline effort involving Geotechnical, Structures, and Hydraulics/ Coastal Engineers. The process described below will often require several iterations. The foundation design must satisfactorily address the various scour conditions and furnish sufficient information for the Contractor to provide adequate equipment and construction procedures. These three engineering disciplines have specific responsibilities in considering scour as a step in the foundation design process.

1. The Structures Engineer determines the preliminary design configuration of a bridge structure utilizing all available geotechnical and hydraulic data and performs lateral stability evaluations for the applicable loadings described in ***SDG*** 2.12 Substructure Limit States (do not impose arbitrary deflection limits except on movable bridges). A preliminary lateral stability analysis generally will occur during the BDR phase of the project, and a final evaluation will occur subsequent to the selection of the final configurations. The Structures Engineer must apply sound engineering judgment in comparing results obtained from scour computations with available hydrological, hydraulic, and geotechnical data to achieve a reasonable and prudent design.

Modification for Non-Conventional Projects:

Delete ***SDG*** 3.3.A.1 and insert the following:

1. The Structures Engineer determines the preliminary design configuration of a bridge structure utilizing all available geotechnical and hydraulic data and performs lateral stability evaluations for the applicable loadings described in ***SDG*** 2.12 Substructure Limit States (do not impose arbitrary deflection limits except on movable bridges). The Structures Engineer must apply sound engineering judgment in comparing results obtained from scour computations with available hydrological, hydraulic, and geotechnical data to achieve a reasonable and prudent design.

2. The Hydraulics Engineer provides the predicted scour elevation and scour countermeasure recommendations using the criteria and methodologies described in Chapter 4 of the FDOT ***Drainage Manual.***
3. The Geotechnical Engineer provides the nominal axial (compression and tension) capacity curves, mechanical properties of the soil and foundation recommendations based on construction methods, pile availability, similar nearby projects, site access, etc.

B. Locate spread footings on soil or erodible rock so that the bottom of footing is below scour depths determined for the check flood for scour. Design spread footings on scour-resistant rock to maintain the integrity of the supporting rock.

   Locate the bottom of GRS abutments below scour depths determined for the check flood for scour.

   Design deep foundations with mud line footings to place the top of the footing below the estimated contraction scour depth where practical to minimize obstruction to flood flows and resulting local scour.

   See also the FDOT ***Drainage Manual*** and ***Drainage Design Guide*** for more information.

C. It is not necessary to consider the scour effects on temporary structures unless otherwise directed by the Department.

Modification for Non-Conventional Projects:
Delete ***SDG*** 3.3.C and see the RFP for requirements.

3.4 LATERAL LOAD (LRFD 10.7.3.12 AND 10.8.3.8)

Use a resistance factor of 1.0 for lateral analysis.

3.5 PILES

3.5.1 Prestressed Concrete Piles (LRFD 5.12.9.4)

A. For prestressed piling not subjected to significant flexure under service or impact loading, design strand development in accordance with ***LRFD*** 5.9.4.3 and 5.7.2.2. Bending that produces cracking in the pile, such as that resulting from ship impact loading, is considered significant. Comply with the tensile stress limits in ***LRFD*** 5.9.2.3.2b for all piling and apply the “severe corrosive conditions" to substructures with an Extremely Aggressive environment classification.

B. When providing the minimum pile design embedment length of 12-inches into a cast-in-place reinforced concrete component (pile cap, footing, or bent cap), assume a lower-bound stiffness using a pinned pile connection boundary condition. For an upper-bound stiffness evaluation with 12-inch pile embedment, assume a maximum design strength of the pile at the face of the connecting member is equal to 30% of the pile nominal flexural capacity (with no axial load considered). For combined axial load and bending moment, apply the P-M interaction diagram while limiting the stress in the prestressing strands within the tension zone to $0.2f_{pu.}$

C. For the standard, square, FDOT prestressed concrete piles (12-inch through 30-inch), a pile embedment of 48-inches into a cast-in-place reinforced concrete component (pile cap, footing, or bent cap) is considered adequate to develop the full bending capacity of the pile. For design pile embedment between 12-inches and 48-inches, use linear interpolation to estimate the pile section capacity. See ***SDM*** 11.6 for pile cutoff and pile embedment detailing requirements. The pile must be solid (or the pile void filled with structural concrete) for a length of no less than 8-feet (4-feet of embedment length plus 4-feet below the bottom of the reinforced concrete component). Connections made by removing the pile concrete, exposing the strands and then placing the reinforced concrete component to bond with the pile strands are not considered adequate to develop the full bending capacity of the pile.

D. Grouting a pipe or reinforcing bar cage into the void can strengthen a voided pile. With this detail, the full composite section capacity of the pile and pipe/cage can be developed. The required length of this composite pile section is a function of the loading but must be no less than 8-feet (4-feet below the bottom of the pile cap). To accommodate pile driving practices, specify ***Standard Plans*** Index 455-031 when 30-inch square piles with high moment capacity are required by design.

E. Bending capacity versus pile cap embedment length relationship for prestressed piles of widths or diameters larger than 30-inches will require custom designs based upon ***LRFD*** specifications, SSDE approval, and may require strand development/pile embedment tests.

Commentary: The FDOT Structures Research Center conducted full scale testing of 18-inch and 30-inch square prestressed concrete piles. The piles, which were embedded 4-feet into a reinforced pile cap, developed the calculated theoretical bending strength of the section without strand slip. The piles embedded 9-inches, developed 37% of the calculated theoretical bending strength with a strand slip failure mode. See ***FDOT Report No 98-9 Testing of Pile-to-Pile Cap Moment Connection for 30" Prestressed Concrete Pile-Pile*** *and* ***FDOT Report BED29-977-09 Evaluation of Concrete Pile to Footing or Cap Connections****. It was concluded that the confinement effects of the cast-in-place pile cap serve to improve the bond characteristics of the strand.*

F. Minimum size and material requirements:

1. Fender Systems: 14-inch square piles with uncoated strand per ***Specifications*** Section 933, carbon steel reinforcing bar and spiral per ***Specifications*** Section 931, and concrete and admixtures per ***SDG*** Table 1.4.3-1 and ***SDG*** Table 1.4.3-3.
2. Vehicular and Pedestrian Bridges and Fishing Piers per Table 3.5.1-1:

Table 3.5.1-1 Concrete Pile Size and Material Requirements

Pile Location	Minimum Square Pile Size (inches)		Minimum Cylinder Pile Diameter (inches)	Material Properties for All Pile Sizes[1]		
	Vehicular Bridges	Pedestrian Bridges & Fishing Piers		Strand Type	Spiral Type	Reinforcing Bar Type
On land or in water in environments that are Extremely Aggressive due to chlorides[2]	24[3]	18	54	Carbon steel Spec 933	Carbon steel Spec 931	Carbon steel Spec 931
	18	14	54	CFRP Spec 933	CFRP Spec 932	FRP Spec 932
				Stainless steel Spec 933	Stainless steel Spec 931	Stainless steel Spec 931
On land or in water in all other environments	18	14	54	Carbon steel Spec 933	Carbon steel Spec 931	Carbon steel Spec 931

1. See ***SDG*** 1.4.3 for concrete class and admixture requirements.
2. The use of CFRP or stainless steel strand and reinforcing is required for piles of pile bents located in the water and may be used at other locations upon approval by the District Structures Maintenance Engineer. If approved by the District Structures Maintenance Engineer, piles of pile bents with carbon steel strand and reinforcing (of the minimum sizes shown with admixtures) may be allowed in the water for minor widenings. This decision is dependent upon site-specific conditions, anticipated structure life, and the history of piles in the vicinity.
3. If approved by the District Structures Maintenance Engineer, a minimum pile size of 18 inches may be allowed for piles of pile bents for minor widenings in the water. This decision is dependent upon site-specific conditions, anticipated structure life, and the history of piles in the vicinity.

Modification for Non-Conventional Projects:

Delete Footnotes 2 and 3 of ***SDG*** Table 3.5.1-1 and insert the following:

1. See the RFP for minimum pile size requirements.

G. The use of stinger piles will not be permitted unless approved by the State Structures Design Engineer.

H. Neglect the self-weight of the pile in calculating the Nominal Bearing Resistance (NBR).

Commentary: The weight of the pile is accounted for in the construction QC method during the installation process.

3.5.2 Concrete Cylinder Piles

A. Plant produced, post-tensioned segmented cylinder piles (horizontally assembled, stressed and grouted) or pretensioned wet cast cylinder piles are allowed by the Department. Provide internal redundancy of segmented cylinder piles by the number of strands (maximum of 3 strands per duct.) If cylinder piles are included in the final design at a water location, provide alternate designs utilizing 54-inch and 60-inch cylinder pile sizes. If cylinder piles are used in the final design on a land project and the anticipated lengths are too long for transport by truck, provide alternate design for drilled shafts or square precast piles.

Modification for Non-Conventional Projects:

Delete ***SDG*** 3.5.2.A and insert the following:

A. Plant produced, post-tensioned segmented cylinder piles (horizontally assembled, stressed and grouted) or pretensioned wet cast cylinder piles are allowed by the Department. Provide internal redundancy of segmented cylinder piles by the number of strands (maximum of 3 strands per duct).

B. For concrete cover on cylinder pile reinforcement, see ***SDG*** Table 1.4.2-1 Minimum Concrete Cover Requirements.

C. For cylinder piles in water and designed for vessel impact, fill the void with concrete to prevent puncture; see ***SDG*** 3.11.6.D for required plug lengths.

D. For cylinder piles on land and within the clear zone, fill the void with concrete plug to prevent puncture from vehicular impact; see ***SDG*** 3.11.6.C for required plug lengths.

3.5.3
3.5.3 Minimum Pile Spacing and Clearances (LRFD 10.7.1.2)

Delete the first sentence of ***LRFD*** 10.7.1.2 and substitute the following:

"Center-to-center pile spacing at and below the design ground elevation shall be not less than 3.0 pile diameters. For 10-inch diameter or smaller micropiles, the spacing shall be not less than 30-inches".

3.5.4 Horizontal Pile Foundation Movement (LRFD 10.7.2.4)

Delete ***LRFD*** Table 10.7.2.4-1 and substitute the following:

Table 3.5.4-1 Pile P-Multipliers, P_m for Multiple Row Shading

Pile CTC spacing (in the direction of loading)	P-Multipliers, P_m		
	Row 1	Row 2	Row 3 and Higher
2.5B	0.75	0.3	0.2
3B	0.8	0.4	0.3
5B	1.0	0.85	0.7

3.5.5 Drag Load (LRFD 10.7.1.6.2)

Drag load is defined as the resulting load applied to a deep foundation element due to the relative displacement of the adjacent ground. Downdrag is the downward movement (settlement) of a deep foundation element in response to the applied drag load.

A. Geotechnical considerations addressing drag load calculations are provided in the ***Geotechnical Design Manual***.

B. Include drag loads in the plans.

C. Evaluate drag load at the structural strength limit state in accordance with ***LRFD***.

D. For pile foundations, the drag load is the ultimate skin friction above the neutral point (the loading added to the pile due to settlement of the surrounding soils) plus the dynamic resistance above the neutral point (the resistance that must be overcome during the driving of the pile). The dynamic resistance typically equals 0.50 to 1.0 times the ultimate skin friction depending on the soil type. See the ***Geotechnical Design Manual*** for guidance in estimating the proper multiplier.

E. Do not discount scourable soil layers to reduce the predicted drag load.

Commentary: Scour may or may not occur as predicted, therefore the presence of scourable soil layers must be accounted for.

3.5.6 Resistance Factors (LRFD 10.5.5)

Delete ***LRFD*** Table 10.5.5.2.3-1 and substitute ***SDG*** Table 3.5.6-1 for piles.

Table 3.5.6-1 Resistance Factors for Piles (all structures)

Pile Type	Loading	Design Method	Construction QC Method	Resistance Factor, φ
Driven Piles with 100% Dynamic Testing	Compression	Davisson Capacity	100% Dynamic Testing[1]	0.75
			100% Dynamic Testing[2, 7]	0.80
			100% Dynamic Testing[1] & Static Load Testing[3]	0.85
			100% Dynamic Testing[1] & Statnamic Load Testing[3]	0.80
	Uplift	Skin Friction	100% Dynamic Testing[1]	0.60
			100% Dynamic Testing[2, 4]	0.65
			100% Dynamic Testing[1] & Static Uplift Testing[3]	0.65
			Grouted Pile in Preformed Hole	0.50

Table 3.5.6-1 Resistance Factors for Piles (all structures)

Pile Type	Loading	Design Method	Construction QC Method	Resistance Factor, φ
Driven Piles with ≥5% Dynamic Testing	Compression	Davisson Capacity	Driving criteria based on Dynamic Testing and Analysis	0.65
			Driving criteria based on Dynamic Testing and Analysis & Static Load Testing[3]	0.75
			Driving criteria based on Dynamic Testing and Analysis & Statnamic Load Testing[3]	0.70
	Uplift	Skin Friction	Driving criteria based on Dynamic Testing and Analysis	0.55
			Driving criteria based on Dynamic Testing and Analysis & Static Uplift Testing[3]	0.60
			Grouted Pile in Preformed Hole	0.50
All piles	Lateral	FBPier[3]	Standard Specifications	1.00
			Lateral Load Test[6]	1.00

1. With signal matching analysis of Pile Driving Analyzer (PDA) data, Goble Pile Check (GPC) data or "FDOT Method" analysis of Embedded Data Collector (EDC) data of at least 10% of all Piles in each Bent and Pier Footing. Ensure all soil conditions encountered are analyzed. See ***Geotechnical Design Manual***.
2. With top and tip EDC instrumentation and FDOT method of analysis on all piles.
3. Static & Statnamic Load Testing results must confirm the interpretation of Dynamic Load Testing.
4. Evaluation of uplift resistance based on FDOT method of analysis on all affected piles.
5. Or comparable lateral analysis program.
6. When uncertain soil conditions are encountered.
7. Prepare Pile Data Tables using a default Resistance Factor of 0.75 for axial resistance.

Modification for Non-Conventional Projects:
Delete Footnote 7 in Table 3.5.6-1.

Commentary: The increased confidence in achieving the required nominal resistance when dynamic measurements are used to determine pile bearing of all piles is reflected in the use of an increased resistance factor.

EDC systems have not been developed for use with steel pipe piles or steel H-piles. EDC systems are not currently required for concrete cylinder piles because EDC

*systems have not been tested in cylinder piles. EDC systems are installed in solid and voided square prestressed concrete piles as shown in **Standard Plans** Index 455-003.*

3.5.7 Battered Piles (LRFD 10.7.1.4)

A. Plumb piles are preferred; however, if the design requires battered piles, a single batter, either parallel or perpendicular to the centerline of the cap or footing, is preferred.

B. If the design requires a compound batter, orient the pile so that the direction of batter will be perpendicular to the face of the pile.

C. With input from the Geotechnical Engineer, the Structures Engineer must evaluate the effects of length and batter on the selected pile size. Do not exceed the following maximum batters, measured as the horizontal-to-vertical ratio, h:v:

1. End bents and abutments: 1:6
2. Piers without Ship Impact: 1:12
3. Intermediate bents: 1:6
4. Piers with Ship Impact: 1:4

Commentary: When driven on a batter, the tips of long, slender piles tend to deflect downward due to gravity. This creates undesirable flexure stresses and may lead to pile failure, especially when driving through deep water and in very soft/loose soil. Hard subsoil layers can also deflect piles outward in the direction of batter resulting in pile breakage due to flexure. The feasibility of battered piles must be determined during the design phase.

3.5.8 Minimum Tip Elevation (LRFD 10.7.6)

A. The minimum pile group tip elevation must be the deepest of the minimum elevations that satisfy uplift and lateral stability requirements for the three limit states. The minimum tip for pile group lateral stability requirements must be established by the Structures Engineer with the concurrence of the Geotechnical Engineer. The minimum tip elevation may be set lower by the Geotechnical Engineer to ensure soft soil strata are penetrated to satisfy post construction settlement concerns.

B. Use the following procedure to establish the Minimum Tip Elevation for lateral stability requirements for each design ground surface (or design scour) elevation:

1. Establish a high end bearing resistance such that the pile tip will not settle due to axial forces. Apply p-multipliers as necessary depending on the pile group geometry and spacing.
2. Apply the controlling lateral load cases, raising the pile tips until the foundation becomes unstable. Perform the analysis in intervals no greater than 5 feet
3. Generate a graph of the relationship between tip elevation and pile head displacement for the limit state under analysis (See Figure 3.5.8-1). Determine the geotechnical critical embedment depth as the point at which additional

penetration results in a differential decrease in lateral deflection at the pile head of no more than one tenth of an inch. Add 5-feet to the critical depth to establish the minimum geotechnical embedment.

4. Determine the depth to fixity using the second point of inflection on the deflection graph in accordance with ***LRFD*** Figure C6.15.2-1.
5. Set the minimum tip to be the deeper of the elevations computed in steps 3 and 4. Confirm the requirements of ***LRFD*** 10.7.6 have been met.
6. Confirm the minimum tip elevation satisfies the lateral deflection limits at the Service Limit State established by the EOR. In the structural calculations, include graph of pile head displacement vs. pile tip elevation for all limit states analyzed.

Commentary: Neither the assumed soil/pile skin friction resistance or the geotechnical design parameters used for lateral analysis are modified using this procedure. It is assumed that the difference in axial capacity predicted during this portion of the design phase versus what is established during construction is due to end bearing only. Actual axial compressive resistance is assured by the bearing requirements in the Specifications. Note that for bridges designed to sustain Vessel Collision, driven piles are not the preferred foundation type when refusal conditions may occur above the computed minimum tip elevation during construction.

Figure 3.5.8-1 Example Minimum Tip Elevation Determination

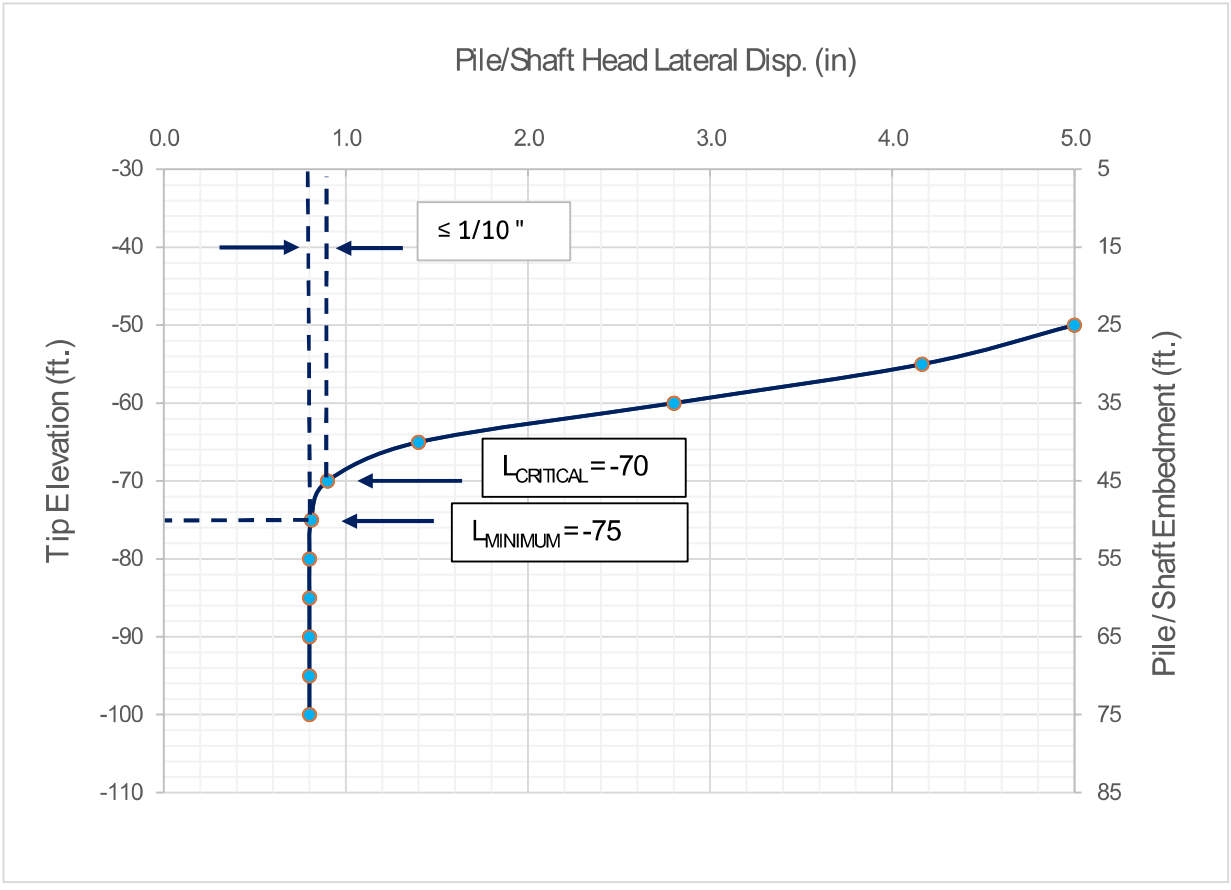

3.5.9 Anticipated Pile Lengths (LRFD 10.7.3.3)

A. Test Pile Projects - Anticipated pile lengths are used only to estimate quantities and set test pile lengths. These lengths are determined by using the lower of the minimum tip elevations specified on the plans or the axial capacity elevations predicted by the pile capacity curves (FB DEEP Davisson Capacity Curves). Provide Test Pile lengths in the plans. Pile order lengths will be determined during construction based on the results of the Test Piles.

Modification for Non-Conventional Projects:

Delete ***SDG*** 3.5.9.A and insert the following:

A. The total estimated quantity for each bridge is the sum of all Test Pile and Production Pile lengths. Calculate Production Pile quantities for each bent or pier by subtracting 15-feet from the corresponding Test Pile length shown in the Pile Data Table in the RFC plans.

B. Predetermined Pile Length Projects - In cases where the Department makes the determination that Test Piles are not required, Pile Order Lengths will be provided in the Plans. The geotechnical engineer reviews the anticipated pile lengths and the core borings to determine a pile length which will provide sufficient capacity with a high degree of certainty. This length will normally be longer than the anticipated pile length.

3.5.10 Test Piles (LRFD 10.7.9)

A. Test piles include both static and dynamic load test piles, which are driven to determine soil capacity, pile-driving system, pile drivability, production pile lengths, and driving criteria.

B. Test Piles are required to determine the authorized pile lengths during construction when the geotechnical investigation does not provide enough information to predetermine pile lengths with a high degree of reliability. The decision to use test piles should be based on overall project economy.

Modification for Non-Conventional Projects:

Delete ***SDG*** 3.5.10.B and insert the following:

B. Test Piles are required to determine the authorized pile lengths during construction.

C. If Test Piles are omitted (See ***SDG*** 3.5.9.B), Production Piles with Dynamic Load Tests are required for all projects unless, in the opinion of the District Geotechnical Engineer, pile-driving records for the existing structure include enough information (i.e., stroke length, hammer type, cushion type, etc.) to adequately determine the driving criteria.

D. When test piles are specified in the plans, at least one test pile must be located approximately every 200-feet of bridge length with a minimum of two test piles per bridge or per twin parallel bridges. These requirements apply for each size and pile type in the bridge except at end bents. For bascule piers and high-level crossings that require large footings or cofferdam-type foundations, specify at least one test pile at each pier. Consider maintenance of traffic requirements, required sequence of construction, geological conditions, and pile spacing when determining the location of test piles. For single bridges and twin parallel bridges that are constructed in phases, locate test piles in the first phase of construction. The Geotechnical Engineer must verify the suitability of the test pile locations.

Modification for Non-Conventional Projects:

Delete ***SDG*** 3.5.10.D and insert the following:

D. Provide sufficient frequency of test piles to determine reliable pile lengths and installation requirements, with a minimum of two test piles per bridge or per twin parallel bridges. For bascule piers and high-level crossings that require large footings or cofferdam-type foundations, specify at least one test pile at each pier. Consider maintenance of traffic requirements, required sequence of construction, geological conditions, and pile spacing when determining the location of test piles. For single bridges and twin parallel bridges that are constructed in phases, test piles may be located in the first phase of construction. The Geotechnical Engineer must verify the suitability of the test pile locations.

E. When test piles are specified in the plans, test piles should be at least 15-feet longer than the estimated length of production piles. Additional length may be required by the load frame geometry when static load tests are used. The Structural Engineer must coordinate the recommended test pile lengths and locations with the District Geotechnical Engineer and Geotechnical Consultant before finalization of the plans.

3.5.11 Load Tests (LRFD 10.7.3.8 and 10.8.3.5.6)

A. Load test options include static load tests, dynamic load tests, Bidirectional (Osterberg type), and Statnamic load tests. Both design phase and construction phase load testing should be investigated. When evaluating the benefits and costs of load tests, consider soil stratigraphy, design loads, foundation type and number, type of loading, testing equipment, and mobilization.

Commentary: In general, the more variable the subsurface profile, the less cost-effective static load tests are. When soil variability is an issue, other options include additional field exploration, more laboratory samples, in-situ testing, and pullout tests.

B. Static Load Test ***LRFD*** 10.7.3.8: When static load tests are required, show on the plans: the number of required tests, the pile or shaft type and size, and test loads. Piles must be dynamically load tested before static load testing. Static load tests should test the pile or drilled shaft to failure as required in Section 455 of the ***Specifications***. The maximum loading of the static load test must exceed the nominal capacity of the pile or twice the factored design load, whichever is greater.

Confirmation of the unit skin friction and end bearing values used in design (if any end bearing was considered) is required in order to use the associated resistance factor.

Commentary: Test piles or drilled shafts can be subjected to static compression, tension, or lateral test loads. Static load tests may be desirable when foundation investigations reveal sites where the soils cause concern regarding the development of the required pile capacity at the desired depths, and/or the possibility that considerable cost savings will result if higher soil capacities can be obtained. Furthermore, static load tests will reduce the driving effort since a higher Performance Factor is applied to the Ultimate Bearing Capacity formula.

C. Dynamic Load Test ***LRFD*** 10.7.3.8.3: All test piles must have dynamic load tests. Indicate this requirement with a note on the foundation layout sheet.

Commentary: Dynamic load testing of piles employs strain transducers and accelerometers to measure pile force and acceleration during driving operations. A Pile Driving Analyzer (PDA) unit (or similar) is used for this purpose.

D. Statnamic Load Test: When Statnamic load tests are required, show on the plans: the number of required tests, the size and type of pile or shaft, and test loads. Piles must be dynamically load tested before Statnamic load testing. Equivalent static load tests derived from Statnamic load tests shall test the pile or drilled shaft to failure in accordance with Section 455 of the ***Specifications***. The maximum derived static loading must exceed the nominal capacity of the pile or twice the factored design load, whichever is greater.

E. Special Considerations: Load testing of foundations that will be subjected to subsequent scour activity requires special attention. The necessity of isolating the resistance of the scourable material from the load test results must be considered.

3.5.12 Pile Driving Resistance (LRFD 10.7.3.8.6)

A. The Geotechnical Engineer calculates the required nominal bearing resistance ($\mathbf{R_n}$) as:

(**Factored Design Load + Net Scour Resistance + Drag Load)** / $\varphi < \mathbf{R_n}$ [Eq. 3-1]

Where: φ is the resistance factor taken from ***SDG*** Table 3.5.6-1.

B. Typically, $\mathbf{R_n}$ will be the required driving resistance. Nominal bearing resistance values given in the Pile Data Table must not exceed the following values unless specific justification is provided and accepted by the Department's District Geotechnical Engineer for Category 1 structures or the State Geotechnical Engineer for Category 2 structures:

Modification for Non-Conventional Projects:
Delete ***SDG*** 3.5.12.B and insert the following: B. Typically, **Rn** will be the required driving resistance.

Table 3.5.12-1 Maximum Pile Driving Resistance for Prestressed Concrete Piles

Pile Size[1]	Resistance (tons)
14-inch	200
18-inch	300
24-inch	450
30-inch	600
54-inch concrete cylinder	900
60-inch concrete cylinder	1,000

1. See ***SDG*** 3.5.1.F for applicability.

Modification for Non-Conventional Projects:
Delete ***SDG*** Table 3.5.12-1 and insert the following: 14-inch square piles can only be used in pedestrian bridge applications.

C. When the minimum tip requirements govern over bearing requirements, construction methods may need to be modified so that pile-driving resistance never exceeds the values given above. Construction methods such as preforming or jetting may be required at these locations. See the Pile Data Table in the ***SDM*** and ***Standard Plans Instructions (SPI)***.

Modification for Non-Conventional Projects:
Delete ***SDG*** 3.5.12.C.

D. The values listed above are based on upper bound driving resistance of typical driving equipment. The maximum pile driving resistance values listed above should not be considered default values for design. These values may not be achievable in certain areas of Florida based on subsoil conditions. Local experience may dictate designs utilizing substantially reduced nominal bearing resistance. Contact the District Geotechnical Engineer for guidance in the project area.

Modification for Non-Conventional Projects:
Delete ***SDG*** 3.5.12.D.

E. Design all piles within the same pier or bent to have the same required driving resistance, except piles in wingwalls of end bents may be designed to a lower driving resistance.

3.5.13 Pile Jetting and Preforming

A. When jetting or preforming is allowed, the depth of jetting or preforming must comply with all the design criteria. For projects with scour, jetting or preforming will not normally be permitted below the 100-year scour elevation **EL_{100}**. If jetting or preforming elevations are deeper than **EL_{100}**, the lateral confinement around the pile must be restored to **EL_{100}**. If jetting or preforming is utilized, the Net Scour Resistance to that depth is assumed to be equal to 0.0 kips (provided the hole remains open or continuous jetting is being done).

B. Refer to the ***Geotechnical Design Manual*** for the required soil parameters used in the evaluation of preformed or jetted zones.

C. Verify that jetting will not violate environmental permits before specifying it in the contract documents.

D. Indicate in the Plans when casing is expected to be needed for preformed pile holes, and include the associated pay item.

3.5.14 Pile Data Table

A. For projects with test piles include in the plans a Pile Data Table and notes as shown in the ***Standard Plans Instructions (SPI)***, Index 455-001 or 455-101 as appropriate for the environment.

B. For projects without test piles include in the plans a modified Pile Data Table and notes as shown in the ***Standard Plans Instructions (SPI)***, Index 455-001 or 455-101 as appropriate for the environment.

C. For items that do not apply, place "N/A" in the column but do not revise or modify the table.

D. Round loads up to the nearest ton. Round minimum tip elevations down and pile lengths up to the nearest foot. Round cut-off elevations to the nearest tenth-of-a foot.

E. The Pile Data Table is not required in the Geotechnical Report; however, the Geotechnical Engineer of Record must review the information shown on the Plans for these tables. Use Equation 3-1 to determine the required Nominal Bearing Resistance value (**R_n**) for the Pile Data Table.

F. For projects with temporary cofferdam or temporary sheet pile within five pile diameters to the edge of the pile group perimeter, include the required Additional Resistance Due to Temporary Sheet Pile in the Pile Data Table.

3.5.15 Plan Notes

Additional Plan Notes:

1. Minimum Tip Elevation is required _____ (reason must be completed by designer, for example: "for lateral stability", "to minimize postconstruction settlements" or "for required tension capacity").
2. When a required jetting or preformed elevation is not shown on the table, do not jet or preform pile locations without prior written approval of the District

   Geotechnical Engineer. Do not advance jets or preformed pile holes deeper than the jetting or preformed elevations shown on the table without the prior approval of the District Geotechnical Engineer. If actual jetting or preforming elevations differ from those shown on the table, the District Geotechnical Engineer will determine the required driving resistance.

3.5.16 Fender Piles

See ***SDG*** 3.14 Fender Systems

3.5.17 Concrete Piling Spliced with Steel Devices

Concrete piling spliced with steel devices (e.g., welded connection or locking devices) shall only be used where the splices will be at least 4-feet below the lower of the design ground surface or the design scour depth.

3.5.18 Micropiles

A. Use of micropiles for bridges requires authorization of the SSDE.

B. Use of micropiles for bridges requires the use of ***Developmental Specifications*** Dev455MP.

C. The diameter of the micropiles shall not be less than the minimum sizes shown in ***SDG*** Table 3.5.18-1

D. Permanent casing shall extend at least 10-feet or to the bearing layer, whichever is deeper.

E. The design diameter of the bonded zone shall not exceed the larger of the casing size or auger diameter used to construct the pile.

F. All Piles must have a continuous reinforcing bar to allow the Engineer to perform verification load test in tension at any pile.

Table 3.5.18-1 Minimum Micropile Size (inches) for Bridges

		Vehicular Bridges	Pedestrian Bridges
		OD (inches)	OD (inches)
		Micropiles	Micropiles
Pile Bents	Single or Double Row	9.5	7
Pile Footings	4 or more piles per footing	7	5
	3 or fewer piles per footing	9.5	7

Modification for Non-Conventional Projects:

Insert the following at the beginning of ***SDG*** 3.5.18:

Micropiles are not permitted except where specifically allowed in the RFP.

3.5.19 Auger Cast Piles

A. Use of Auger Cast Piles (ACP) for bridges requires authorization of the SSDE.

B. Use of ACP for bridges requires the use of ***Developmental Specification*** Dev455ACP.

C. The structural resistance of ACP is determined in the same manner and subject to the same requirements as drilled shafts, including the use of a full length cage.

D. Use of ACP for bridges requires at least one static load test for each soil profile for each bridge.

E. Pile bents must contain two rows of piles with a minimum 1D spacing between the centerlines of the rows of piles.

F. The design diameter of the pile shall not exceed the auger diameter used to construct the pile.

G. The minimum ACP diameters are shown in Table 3.5.19-1 below.

H. The maximum resistance factors are shown in Table 3.5.19-2 below.

Table 3.5.19-1 Minimum ACP Diameter (inches) for Bridges

	Vehicular Bridges	Pedestrian Bridges	Miscellaneous Structures
Single Row Pile Bents	Not Allowed	Not Allowed	N/A
Double Row Pile Bents	24	24	N/A
Pile Footings 3 piles	Not Allowed	Not Allowed	18
Pile Footings 4 or more piles	24	24	18

Table 3.5.19-2 Resistance Factors for ACP (Bridge Foundations)

Loading	Design Method	Construction QC Method	Resistance Factor, ϕ
Compression	Cohesionless Soil: Beta method[1]	Static Load Test	0.5
	Cohesive Soil: Alpha method[1]	Static Load Test	0.6
	Rock and Cohesive IGM[2,3,4]	Static Load Test	0.6
Uplift	Cohesionless Soil: Beta method[1]	Static Load Test	0.4
	Cohesive Soil: Alpha method[1]	Static Load Test	0.5
	Rock and Cohesive IGM[2,3,4]	Static Load Test	0.5
Lateral	FB-Multipier[5]	Specifications	0.9
		Lateral Load Test	1.0

1. Refer to FHWA-IF-99-025
2. Design shall not include contribution of soil layers above or below the rock/IGM socket.
3. Cohesive Intermediate Geomaterial (IGM) defined as material with unconfined compression strength > 10 ksf and < 100 ksf.
4. Design in accordance with ***Geotechnical Design Manual***, Appendix A.
5. Or comparable lateral analysis program.

Note: Nonredundant foundations are not allowed.

Commentary: Considering ultimate unit skin friction values are not developed at the same level of displacement along the pile length, soil above or below the rock/IGM socket is not considered in design to avoid strain incompatibility between strata.

3.6 DRILLED SHAFT FOUNDATIONS

3.6.1 Minimum Sizes

The minimum diameter for drilled shaft bridge foundations is 42-inches except that nonredundant shafts as defined in ***SDG*** 3.6.10 must be no less than 48-inches in diameter. Design all shafts for miscellaneous structures (e.g. mast arms, overhead signs, etc.) in accordance with ***LTSM***.

Commentary: The minimum drilled shaft diameter for bridges with redundant foundations was increased from 36-inches to 42-inches to alleviate construction difficulties observed on several projects. Rebar cages for 42-inch shafts have less flexibility issues during installation, pose less congestion and consolidation issues during concreting and permit more tremie options than cages for 36-inch shafts.

3.6.2 Minimum Spacing

The minimum center-to-center spacing for drilled shafts is 3 times the shaft diameter.

3.6.3 Drag Load

Drag load is defined as the resulting load applied to a deep foundation element due to the relative displacement of the adjacent ground. Downdrag is the downward movement (settlement) of a deep foundation element in response to the applied drag load.

A. Drag load shall be considered at the geotechnical service limit state when the deep foundation element is embedded and tipped in granular cohesionless soil. Perform settlement calculations accordingly.

B. Consider drag load at the geotechnical strength limit state when the deep foundation element is tipped in cohesive soil, cohesive intermediate geomaterial, or rock. Follow the procedure outlined in Appendix C of the ***Geotechnical Design Manual***.

C. Perform the structural strength limit state check in accordance with the LRFD.

D. Include drag loads in the plans.

E. For drilled shaft foundations, the drag load is the ultimate skin friction above the neutral point (the loading added to the drilled shaft due to settlement of the surrounding soils).

F. Do not discount scourable soil layers to reduce the predicted drag load.

Commentary: Scour may or may not occur as predicted, therefore the presence of scourable soil layers must be accounted for.

3.6.4 Resistance Factors (LRFD 10.5.5)

A. Drilled Shafts

Delete ***LRFD*** Table 10.5.5.2.4-1 and substitute ***SDG*** Table 3.6.4-1 for drilled shafts.

Table 3.6.4-1 Resistance Factors for Drilled Shafts (Bridge Foundations)

Loading	Design Method	Construction QC Method	Resistance Factor, Φ	
			Redundant	Nonredundant[1]
Compression	For soil: FHWA alpha or beta method[2]	Specifications	0.6	0.5
	For rock socket: McVay's method[2] neglecting end bearing	Specifications	0.6	0.5
	For rock socket: McVay's method[2] including 1/3 end bearing	Specifications	0.55	0.45
	For rock/sand: side shear + end bearing[2]	Statnamic Load Testing	0.7	0.6
	For all materials: side shear + end bearing[2]	Static Load Testing	0.75	0.65
Uplift	For clay: FHWA alpha method[3]	Specifications	0.35	0.25
	For sand: FHWA beta method[3]	Specifications	0.45	0.35
	For rock socket: McVay's method[2]	Specifications	0.5	0.4
	All materials	Static Load Test	0.6	0.5
Lateral	FBPier[4]	Specifications	0.9	0.9
		Lateral Load Test	1.0	1.0

1. As defined in ***SDG*** 3.6.10.
2. Refer to FDOT ***Geotechnical Design Manual***.
3. Refer to FHWA-IF-99-025, soils with N<15 correction suggested by O'Neill.
4. Or comparable lateral analysis program.

Load testing must mobilize and confirm 100% of the final design side shear and end bearing values. End bearing design values mobilized by tip movements greater than those tolerated by the structure must be pre-mobilized by pressure grouting, bidirectional load test cells or similar methods.

*Commentary: **LRFD** resistance factors are based on the probability of failure (P_f) of an element or group of elements resisting structural loads. When resistance factors were calibrated, the state of practice utilized redundant drilled shaft foundations, therefore, the design P_f for each drilled shaft is larger than the design P_f for the entire bent or pier because multiple drilled shafts would have to fail before the bent or pier could fail. In a nonredundant foundation, the P_f for each foundation element shall be the design P_f for the entire bent or pier because of the consequence of failure. Therefore, the resistance factor for nonredundant foundation element shall be smaller than that of the redundant foundation units.*

The resistance factors for nonredundant drilled shaft foundations have not yet been calibrated. Due to the consequences of failure for this foundation type, the values for nonredundant drilled shafts shown in Table 3.6.4-1 have been reduced by 0.10 in general accordance with NCHRP Report 507.

When using the resistance factors associated with load tests, the designer must determine the number of load tests that will be required. For a project site with a fairly uniform subsurface, it may be appropriate to specify relatively few load tests, however, multiple load tests may be necessary at a site with variable subsoil conditions. A load test may be required for each different soil profile if a representative soil profile for the site cannot be established.

B. Micropiles

Delete ***LRFD*** Table 10.5.5.2.5-1 and substitute ***SDG*** Table 3.6.4-2 for micropiles.

Table 3.6.4-2 Resistance Factors for Geotechnical Resistance of Micropiles

Limit State	Design Method / Ground Condition	Resistance Factor
Compression Resistance of Single Micropile, Φ_{stat}	Side Resistance (Bond Resistance): ***Geotechnical Design Manual*** Appendix B	0.55[1]
	Side Resistance and Tip Resistance Load Test	≤ 0.70[2]
Block Failure, Φ_{bl}	Clay	0.60

Table 3.6.4-2 Resistance Factors for Geotechnical Resistance of Micropiles

Limit State	Design Method / Ground Condition	Resistance Factor
Uplift Resistance of Single Micropile, Φ_{up}	***Soils and Foundations Handbook*** Appendix B	0.55[1]
	Tension Load Test	0.60
Group Uplift Resistance, Φ_{ug}	Sand & Clay	0.50

1. Presumptive grout-to-ground bond values are only allowed for the design of micropiles for miscellaneous structures.
2. Design for bridge support requires confirmation through load testing. Base design unit skin friction values for cohesive intermediate geomaterial or rock on the procedure in Appendix A of the ***Geotechnical Design Manual***.

3.6.5 Minimum Tip Elevation (LRFD 10.8.1.5)

A. The minimum drilled shaft tip elevation must be the deepest of the minimum elevations that satisfy all axial capacity and lateral stability requirements for the three limit states. The minimum tip for lateral stability requirements must be established by the Structures Engineer with the concurrence of the Geotechnical Engineer. The minimum tip elevation may be set lower by the Geotechnical Engineer to ensure axial compressive and tensile requirements are satisfied and to ensure soft soil strata are penetrated to satisfy post construction settlement concerns.

B. Use the following procedure to establish the Minimum Tip Elevation for lateral stability requirements for each design ground surface (or design scour) elevation:

   1. Establish a high end bearing resistance such that the shaft tip will not settle due to axial forces;
   2. Apply the controlling lateral load cases, raising the shaft tips until the foundation becomes unstable;
   3. Establish the critical embedment depth as the point at which additional penetration results in a differential decrease in lateral deflection at the shaft head of no more than one tenth of an inch. Perform the analysis in 5 feet intervals. See Figure 3.5.8-1.
   4. Establish Minimum Tip Elevation by adding 5-feet or 20% of the penetration, whichever is less, to the critical embedment.

Commentary: Neither the assumed soil/shaft side resistance or the geotechnical design parameters used for lateral analysis are modified using this procedure. It is assumed that the difference in axial resistance predicted during this portion of the design phase versus what is established during construction is due to end bearing only.

3.6.6 Load Tests (LRFD 10.8.3.5.6)

See ***SDG*** 3.5.11.

3.6.7 Drilled Shaft Data Table

A. For projects with drilled shafts, include in the plans, a Drilled Shaft Data Table. See ***SDM*** Chapter 11.

B. For items that do not apply, place "N/A" in the column but do not revise or modify the table.

C. The "Drilled Shaft Data Table" is not required in the Geotechnical Report; however, the Geotechnical Engineer of Record must review the information shown on the plans for these tables.

D. The Min. Top of Rock Elevation is the highest elevation determined by the

Geotechnical Engineer where the material qualities meet or exceed those which are suitable to be included in the rock socket.

1. In somewhat variable conditions where pilot holes will be required, the Geotechnical Engineer should provide a best estimate of the elevation.
2. In highly variable conditions where pilot holes will be required, use an asterisk " * " in place of the elevation, and refer to ***SDG*** 3.6.7.C.

E. The Geotechnical Engineer calculated the required nominal bearing resistance (R_n)

as: (Factored Design Load + Drag Load) / $\emptyset < R_n$

F. The Geotechnical Engineer calculated the required nominal uplift resistance ($R_{n\text{-uplift}}$)

as: (Factored Design Load -Factored Effective Shaft Weight) / $\emptyset < R_{n\text{-uplift}}$

G. For projects with temporary cofferdam or temporary sheet pile in proximity to drilled shafts where a loss of resistance is anticipate due to sheet pile extraction, include the required additional resistance in the Drilled Shaft Data Table.

3.6.8 Plan Notes

A. Include Plan Notes bellow the Drilled Shaft Data Table. See ***SDM*** 11.5. Modify the note for minimum tip elevation as follows:

Minimum Tip Elevation is required _____ (reason must be completed by the designer, for example: “for lateral stability”, “to minimize post-construction settlements” or “for required tension capacity”).

B. For Drilled Shaft projects with lateral load tests, add the following to Note 2 above:

The Engineer may revise this elevation based on pilot holes or lateral load tests, if performed.

C. For Drilled Shaft projects in highly variable soil conditions with pilot holes required, refer to ***SDG*** 3.6.7.E and replace Note 3 above with:

The District Geotechnical Engineer will provide the Min. Top of Rock Elevation based on the required pilot holes.

Modification for Non-Conventional Projects:
Delete ***SDG*** 3.6.8.C. and insert the following: C. For Drilled Shaft projects in highly variable soil conditions, complete all borings and testing before finalizing the design.

D. For Drilled Shafts with pressure-grouted tips, add the following note:

NOTE: A.H. Beck Foundation Company, Inc. owns U.S. Patent No. 6,371,698 entitled "Post-Stressed Pier." You are advised that the Department has, in any case, obtained a patent license agreement with A.H. Beck Foundation Company, Inc. that provides royalty free use of U.S. Patent No. 6,371,698 in the design, manufacture and construction of the post-grouted drilled shafts on this Department project, and no royalties will be asserted by A.H. Beck Foundation Company, Inc. against the Department, the prime contractor, subcontractors, manufacturers, or suppliers as to the post-grouted drilled shafts for this project. For more information as to U.S. Patent No. 6,371,698, contact:

A.H. Beck Foundation, Inc.
5123 Blanco Road
San Antonio, Texas 78216
Phone (210) 342-5261

3.6.9 Construction Joints

For pier columns founded directly on single shafts located in water containing more than 2,000 ppm chloride (see ***SDG*** 1.3.3), detail the shaft to extend without a construction joint above the splash zone or bottom of the cap, whichever is lower.

Commentary: It is preferred that taller shafts extend to the bottom of the cap without a construction joint.

3.6.10 Nonredundant Drilled Shaft Bridge Foundations

A. Refer to the ***Geotechnical Design Manual*** for special design phase investigation and construction phase testing and inspection requirements for nonredundant drilled shafts.

B. In addition to those shafts deemed nonredundant per ***LRFD*** 1.3.4, drilled shafts supporting the following bridge substructure units are considered nonredundant:

1. Two column bents and piers with one or both of the columns supported by one or two drilled shafts.

2. Single column piers with a total of three or fewer drilled shafts.
3. Portions of bents and piers constructed in phases with a total of two or fewer drilled shafts supporting live load at the completion of the phase.

Commentary: E.g., if phase 1 of a bent has two drilled shafts, those shafts are nonredundant. If phase 2 adds another shaft (total of 3) and the phase boundary has sufficient moment capacity to transfer load, the shafts are no longer considered nonredundant.

4. Portions of bents and piers constructed for bridge widenings with two or fewer drilled shafts regardless of whether they are connected to the original structure.

Commentary: The connection to the existing structure usually does not have sufficient moment capacity to transfer load.

5. All other bents and piers with a total of two or fewer drilled shafts.

C. Add a note to the Foundation Layout Sheet(s) requiring additional pilot holes at nonredundant drilled shaft locations when the original design phase borings are insufficient. See the ***Geotechnical Design Manual*** for requirements. Require the pilot holes to be performed two weeks prior to shaft excavation. Require additional pilot holes during construction, where shafts are lengthened or shaft locations are modified.

D. For all nonredundant drilled shaft bridge foundations, include Note 4 as shown in ***SDM*** Figure 11.5-1 to ensure shaft cleanliness at the time of concrete placement and integrity of the completed shaft. Note 4 can be deleted if all drilled shaft bridge foundations are redundant.

3.6.11 Minimum Reinforcement Spacing (LRFD 5.12.9.5.2 and 10.8.3.9.3)

A. For drilled shafts, provide a minimum clear distance between reinforcement of 6-inches to allow for proper concrete consolidation.

B. Double-cage shafts will not be permitted unless approved by the State Geotechnical Engineer. Inner column cages that develop column reinforcing steel at the top of the drilled shaft are exempted from this requirement.

Commentary: Multiple reinforcing cages in drilled shafts create constructability problems and are highly discouraged. A minimum 12-inch spacing between cages will be required when double cages are proposed for consideration in lieu of a larger diameter shaft.

Modification for Non-Conventional Projects:
Delete ***SDG*** 3.6.11.B.

3.6.12 Axial Resistance of Drilled Shafts (LRFD 5.6.4.4)

For determining the factored axial resistance for drilled shafts as compression members per ***LRFD*** 5.6.4.4, reduce the gross area of section, A_g to the area bounded by the

outside diameter of the spiral or tie plus 2-inches of concrete cover. Use the reduced section for both axial and lateral loading.

*Commentary: The Department requires that 6-inches of concrete cover be detailed for all drilled shafts. Applying the construction tolerances listed in the Specifications, a minimum cover of 4.5-inches is obtained. The structural equations given in **LRFD** 5.6.4.4 were based on testing performed on columns with a concrete cover less than this.*

3.7 COFFERDAMS AND SEALS

A. Design the seal concrete thickness using the maximum differential water head. See ***SDM*** 13.5 for detailing requirements.

B. For design of the cofferdam seal, use a Load Factor of 1.0 and assume the maximum service load stresses from ***SDG*** Table 3.7-1 which apply at the time of complete dewatering of the cofferdam.

C. In the event greater stress values are required, employ mechanical connectors such as weldments or shear connectors for the contact surfaces of the foundation and seal. When connectors are used to increase shear capacity, detail the connections, and note the locations on the drawings. Provide substantiating calculations.

Table 3.7-1 Cofferdam Design Values

Maximum service load stresses at time of complete dewatering of the cofferdam	
Maximum tension in seal concrete from hydrostatic pressure	250 psi*
Adhesive shear stress between seal concrete and concrete piles or shafts	75 psi*
Adhesive shear stress between seal concrete and steel piles or casings	36 psi*
*Values have been adjusted for appropriate Resistance Factors.	

Commentary: Generally, cofferdams are designed and detailed by the Contractor and reviewed by the EOR as a shop drawing. In many instances, however, the EOR must design the seal because it constitutes a significant load for the foundation design, and a seal quantity is often required for bidding purposes.

3.8 SHALLOW FOUNDATIONS

3.8.1 Spread Footings (LRFD 10.5.5 and 10.6)

A. The Geotechnical Report will provide the maximum soil pressures, the minimum footing widths, the minimum footing embedment, and the ***LRFD*** Table 10.5.5.2.2-1 Resistance Factors (φ).

B. Determine the factored design load and proportion the footings to provide the most cost effective design without exceeding the recommended maximum soil pressures. Communicate with the Geotechnical Engineer to ensure that settlements due to service loads do not exceed the tolerable limits.

C. Verify sliding, overturning, and rotational stability of the footings.

3.8.2 Geosynthetic Reinforced Soil (GRS) Abutments

A. GRS abutments are a shallow foundation option that may reduce the construction time and cost of bridges. AASHTO and FHWA documents refer to GRS Abutments as GRS-IBS (Geosynthetic Reinforced Soil Integrated Bridge System).

B. GRS abutments are constructed with coarse aggregate or Graded Aggregate Base (GAB) backfill and geosynthetic soil reinforcement.

C. C. GRS bridge abutments consist of the following:

1. 4,000 psi 8-inch high masonry facing blocks or other approved facing material.
2. Geosynthetic reinforcement with ultimate tensile strength ≥ 4,800 lb/ft.
3. Geosynthetic reinforcement spacings of less than 12-inches with smaller spacings in different portions of the GRS abutment.

D. Use of GRS abutments on limited access highways requires the approval of the SSDE.

Modification for Non-Conventional Projects:
Delete ***SDG*** 3.8.2.D and insert the following: The use of GRS abutments on limited access highways is not allowed unless specifically stated in the RFP.

E. GRS details are shown in the plans using ***Developmental Standard Plans*** D549-025.

3.9 MASS CONCRETE

See ***SDG*** 1.4.4 for Mass Concrete requirements.

3.10 CRACK CONTROL

A. Limit service tension stresses in the outer layer of longitudinal reinforcing steel for all mildly reinforced footings with length to effective depth (de) ratios greater than 2.2 per ***SDG*** 3.11.2, pier columns, pier caps and bent caps under construction loading and Service III Loading to 24 ksi regardless of the grade of steel used. Use a live load factor of 0.8 for the Service III load combination. The service biaxial bending tension stresses in longitudinal column reinforcing may be approximated by taking the square root of the sum of the squares in each direction.

Commentary: The tensile limit 24 ksi for mild reinforcing, combined with proper distribution of reinforcement, is intended to ensure the durability of footings, pier columns, pier caps and bent caps by limiting crack widths.

B. The maximum number of layers of mild main reinforcing is four. See ***SDM*** 4.3.11 for bar size and bundle limitations.

Commentary: Areas of highly congested mild reinforcement can compromise concrete consolidation and structural integrity. Additionally, reinforcement in the rows nearest to the extreme tension fiber are the most effective under service level loads based on strain compatibility. Designs with only mild reinforcement should be thoroughly investigated by increasing component dimensions prior to considering post-tensioning.

C. Long Walls and other similar construction:

1. Limit the length of a section to a maximum of 30-feet between vertical construction joints. See the limits of concrete pours in tall piers (***SDG*** 3.11).

Commentary: Based on experience with casting longer sections of walls, the distance between construction joints is intended to minimize the development of full height and depth shrinkage cracks at intermediate locations along the length of the wall.

2. Clearly detail required construction joints on the plans.
3. Specify construction or expansion joints fitted with a water barrier when necessary to prevent water leakage.

D. Footings: Specify that footings be cast monolithically. Attach struts and other large attachments as secondary castings.

E. Keyways: Do not place keyways in horizontal construction joints except that a keyway will be used at the junction of a cast-in-place concrete wall and footing. Provide keyways at formed surfaces of vertical construction joints and elsewhere as necessary to transfer applied loads from one cast section to an adjacent, second pour. Specify or detail trapezoidal keyways for ease of forming and stripping. For example, a typical joint will have a keyway about 1 1/2-inches deep and about 6-inches wide (or one third the thickness of the member for members less than 18-inches in thickness) running the full length.

F. In ***LRFD*** 5.6.7, the maximum service limit state stress (f_{ss}) is 0.80 F_y for steel reinforcement with F_y < 75 ksi. Use a Class 1 exposure condition for all location/ components, except those listed as requiring a Class 2 exposure condition and the portions of box culverts described in ***SDG*** 3.15.7. Any concrete cover thickness greater than the minimum required by ***SDG*** Table 1.4.2-1 may be neglected when calculating $\mathbf{d}_c$ and **h**, if a Class 2 exposure condition is used. A Class 2 exposure condition may be used in lieu of a Class 1 exposure condition when the minimum concrete cover required by ***SDG*** Table 1.4.2-1 is used.

3.11 PIER, CAP, COLUMN, AND FOOTING DESIGN

3.11.1 General

A. When using a refined method (e.g., P-delta) to evaluate slenderness effects for mildly reinforced substructures, use a reduced column and/or cap stiffness (e.g., cracked section) consistent with the anticipated behavior.

B. See ***SDG*** 3.11.6 for design and detailing requirements for voided and hollow piers. If applicable, see ***SDM*** Chapter 25 for requirements and guidance on the design and detailing of precast components.

Commentary: Pier components can be constructed as voided or hollow sections to reduce weight. Voided sections are typically constructed with interior form materials that remain in place (e.g., embedded polystyrene blocks), and the voided areas are not large enough to allow human access for inspection and maintenance, even if the interior form material were removed. Hollow sections, typically constructed with post-tensioned match-cast precast segments as shown in Figure 3.11.1-2, have larger interior areas that require human access for inspection and maintenance.

C. For precast struts set into, cast into, or placed against cast-in-place concrete within the splash zone, maintain concrete cover over the entire interfacing surfaces of both the precast strut and the cast-in-place concrete. Connect precast struts to cast-in-place concrete using only stainless steel or non-metallic reinforcement.

Commentary: Experience has shown that C.I.P. concrete pulls away from a precast strut at their interface allowing water and/or chlorides to enter and initiate corrosion.

D. On structures over water, vertical post-tensioning strand or parallel wire tendons (except in cylinder piles) cannot extend below the top of the splash zone, regardless of the Environmental Classification. Post-tensioning bar tendons are excluded from this restriction.

E. Post-tensioning applied to piers must be located internal to the concrete or within a voided or hollow cross section and not external to the pier.

F. Design and detail post-tensioned substructure elements to meet or exceed the minimum number of tendons in accordance with Table 3.11.1-1. In addition, design post-tensioned substructures such that any unbonded tendon can be removed and replaced one at a time utilizing the ***LRFD*** Table 3.4.1-1 Service I load combination with the live load placed only in the striped lanes. Under this load combination, limit tension stresses for precast substructure elements with match cast joints to $0.0948\sqrt{f'_c}$ (ksi), and to $0.19\sqrt{f'_c}$ (ksi) for CIP substructure elements.

G. Design and detail post-tensioned substructure elements to meet or exceed the minimum center-to-center duct spacings in accordance with Table 3.11.1-2 using duct diameters shown in ***SDG*** Table 1.11.4-1.

H. Design and detail post-tensioned substructure elements to meet or exceed the minimum dimensions in accordance with Table 3.11.1-3 in lieu of ***LRFD*** 5.4.6.2.

I. For additional post-tensioning requirements see ***SDG*** 1.11, and ***SDG*** 4.5.2.

J. For interface shear transfer or shear friction requirements, see ***SDG*** 1.15.

Table 3.11.1-1 Minimum Number of Tendons for Post-Tensioned Substructure Elements

Post-Tensioned Bridge Element	Minimum Number of Tendons
Hammerhead Pier Cap	6
Straddle Beam Cap	
Framed Straddle Pier Column	
C-Pier Column and Cap	
All other Pier Types and Substructure Components Not Listed	
C-Pier Footing	8
Hollow Cast Pier Column	

The term “tendon” in Table 3.11.1-1 refers to both strand tendons and bar tendons.

Table 3.11.1-2 Minimum Center-to-Center Duct Spacing

Post-Tensioned Substructure Element	Minimum Center-to-Center Vertical Spacing “d” between Ducts	Minimum Center-to-Center Horizontal Spacing “s” between Ducts[1]
C.I.P. Hammerhead, Straddle Beam, Pile/Drilled Shaft or C-Pier Cap (see ***SDG*** Figure 3.11.1-1)	Outer duct diameter plus 1.5 times maximum aggregate size, or outer duct diameter plus 2-inches, whichever is greater.	Outer Duct diameter plus 3-inches.
Precast Segmental Hammerhead, Straddle Beam, Pile/Drilled Shaft or C-Pier Cap (see ***SDG*** Figure 3.11.1-1)	2 times outer duct diameter plus 1-inch, or outer segmental coupler diameter plus 2-inches, whichever is greater.	2 times outer duct diameter plus 1-inch, or outer segmental coupler diameter plus 2-inches, whichever is greater.
C.I.P. Solid or Hollow Pier Column (see ***SDG*** Figure 3.11.1-2)	N/A	Outer duct diameter plus 3-inches
Precast Segmental Solid or Hollow Pier Column (see ***SDG*** Figure 3.11.1-2)	N/A	2 times outer duct diameter plus 1-inch, or outer segmental coupler diameter plus 2-inches, whichever is greater.

1. Usually ducts are placed in-line with P.T. anchors. P.T. anchor spacing is typically controlled by the size of the spirals and anchor plates.

Figure 3.11.1-1 Section Through Post-Tensioned Pier/Beam Caps Showing Duct Spacings

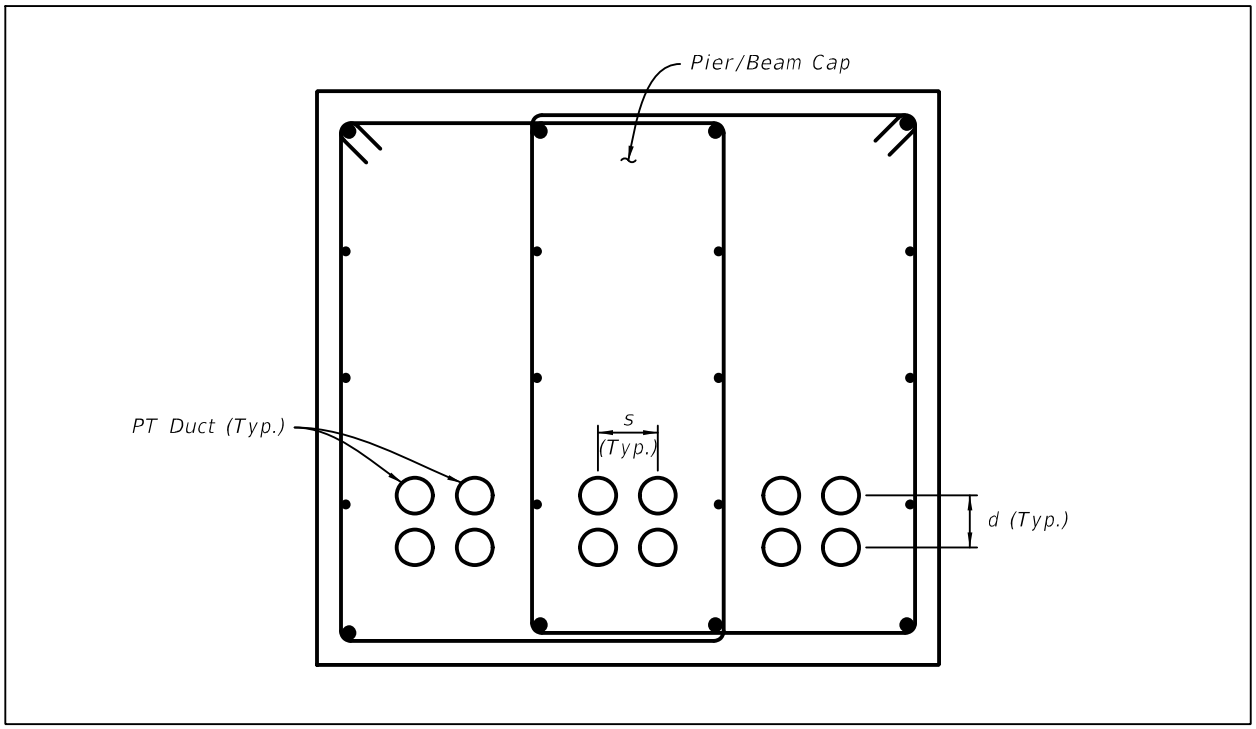

Figure 3.11.1-2 Section Through Post-Tensioned Columns Showing Duct Spacings

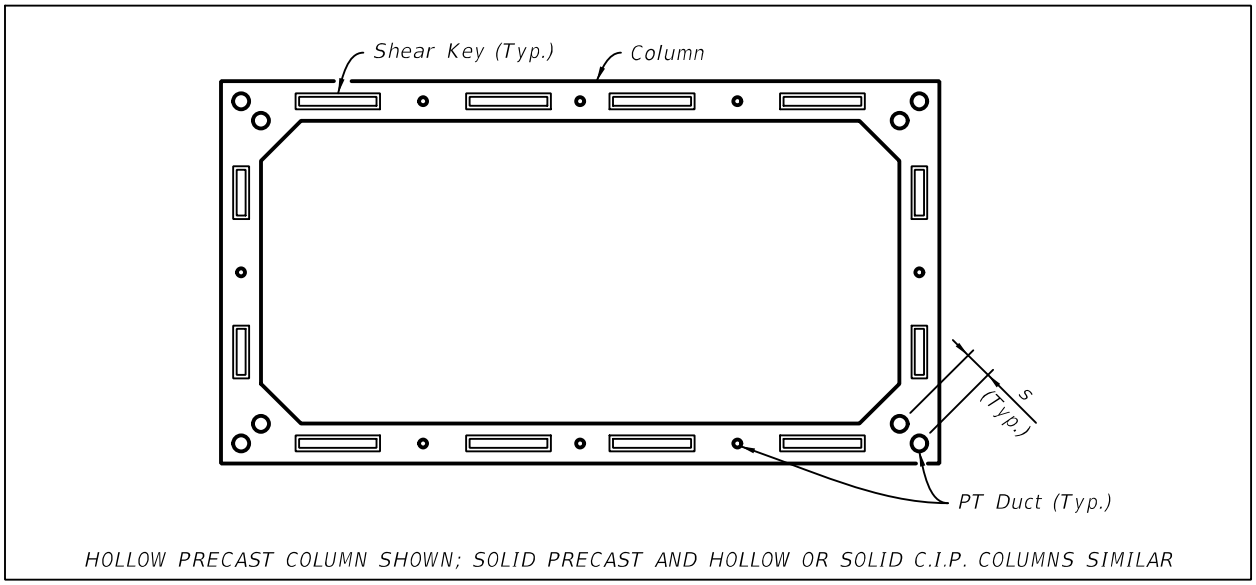

Table 3.11.1-3 Minimum Dimensions for Substructure Elements Containing Post-Tensioning Tendons[1]

Post-Tensioned Substructure Element	Minimum Dimension
Pier Caps with rectangular or Inverted-T cross sections, and Webs of Pier Caps with I-Girder and Box-Girder cross sections	For single column of ducts: Sufficient width to accommodate anchorage placement, 8-inches thick, or outer duct diameter[2] plus 2 x cover plus 2 x stirrup dimension (deformed bar diameter), and allowances for construction tolerances; whichever is greater. For two or more ducts set side by side: Sufficient width to accommodate anchorage placement, concrete covers, outer duct diameter[2] for longitudinal PT, 3-inch min. horizontal spacing between ducts, reinforcing (deformed bar diameters), plus construction tolerances.
End Blocks of Pier Caps with I-Girder cross sections	Length (including transition) not less than 1.5 x depth of pier cap
Walls of Pier Columns with internal post-tensioning	12-inches
Walls of Pier Columns with external post-tensioning	10-inches

1. The information in Table 3.11.1-3 applies to both strand tendons and bar tendons.
2. The duct dimension is the largest outside dimension of the duct measured at the ribs.

3.11.2 Footing Design (LRFD 5.10.6, 5.12.8.6, and 10.7.1.2)

A. Provide temperature and shrinkage steel per ***LRFD*** 5.10.6 at the bottom face of pier footings meeting the mass concrete criteria of ***SDG*** 1.4.4.

Commentary: It has been commonly accepted practice to position the main bottom mat of reinforcement in pier footings above the tops of the piles for constructability, which results in an unreinforced region of concrete at the bottom of the footing. However, temperature and shrinkage steel must be placed on the bottom face when the pier footing meets mass concrete criteria.

B. Size footings such that the effective depth, d_v, is sufficient to resist one-way shear without the contribution of shear reinforcement per ***LRFD*** 5.12.8.6. Neglect pile-to-cap interface friction for the calculation of two-way punching shear resistance.

C. A 3D finite element analysis is required for footings where the ratio of the horizontal length measured in any direction from the face of the column measured to the

extreme corner of the footing divided by the effective depth (d_e) of the footing is greater than 2.2.

Commentary: When calculating pile reactions, standard practice has been to assume that the footing is a rigid body; however, this assumption is only valid when the length-to-thickness ratio of the cantilever is less than or equal to 2.2. This limitation is based on the findings of the following study: Duan, L. and McBride, S. The Effects of Cap Stiffness on Pile Reactions, Concrete International, 1995.

D. For water crossings:

1. Locate the bottom of all footings, excluding seals, a minimum of 1-foot below MLW or NLW. When tides consistently expose piles for extended periods, contact SMO for direction.

Modification for Non-Conventional Projects:
Delete ***SDG*** 3.11.2.C.1 and insert the following: 1. Locate the bottom of all footings, excluding seals, a minimum of 1-foot below MLW or NLW. See the RFP for additional requirements.

Commentary: This requirement prevents pile exposure to wet/dry cycles. Due to their greater mass, footings are more resilient to wet/dry cycles than piles.

2. Locate the top of waterline footings a minimum of 1-foot above MHW or NHW.

Commentary: This requirement makes the top of the footing visible to watercraft operators at high tide.

3. For submerged footings, consider the type of boating traffic and waterway use when determining the clearance between MLW or NLW and the top of footing.

Modification for Non-Conventional Projects:
Delete ***SDG*** 3.11.2.C.3 and see the RFP for requirements.

4. In navigation channels coordinate all footing elevations with the Coast Guard, the Florida Inland Navigation District (FIND) and the appropriate water management district as required.

5. For footings with plumb piles, connect stay-in-place precast "bathtub" forms or precast seals to cast-in-place footings using stainless steel or non-metallic reinforcement. For "bathtub" forms, a mechanical connection across the interface between the form and the footing, e.g., shear keys, may be used in lieu of reinforcement.

E. Completely bury all spread, pile supported or drilled shaft supported footings, grade beams and other similar components used for land piers. Provide a minimum of 3-feet from the finish grade to the top of the footing, except for certain bridge widenings (***SDG*** 7.3.2). Provide this minimum embedment for footings buried in

sloped embankments as shown in Figure 3.11.2-1. Mounding of fill above the adjacent finish grade so as to bury a footing is not permitted.

F. For footings designed to resist vessel collision, wave loads, or other large lateral loads with the full bending capacity of the pile developed per ***SDG*** 3.5.1.C:

1. Determine the minimum horizontal dimension from the edge of the exterior pile to the nearest footing edge as the largest of the following (rounded up to nearest inch):

   a. Edge distance required for lateral resistance

   b. One-half the width or diameter of the pile (for piles widths or diameters 24-inches and larger)

   c. 9-inches (***LRFD*** 10.7.1.2 minimum offset) + 3-inches (horizontal driving tolerance) + Σ diameters of reinforcing bars for punching shear (horizontal & vertical bars) + 2-inches minimum clearance to pile face

2. Develop the main top and bottom reinforcing bars into the perimeter edge region of the footing with 90-degree hooks.

Commentary: These requirements address cracking and durability concerns with waterline footings designed to resist vessel collision or wave loads, where premature deterioration could result in unacceptable repair costs and user impacts.

Figure 3.11.2-1 Minimum Footing Depth on Sloped Embankments

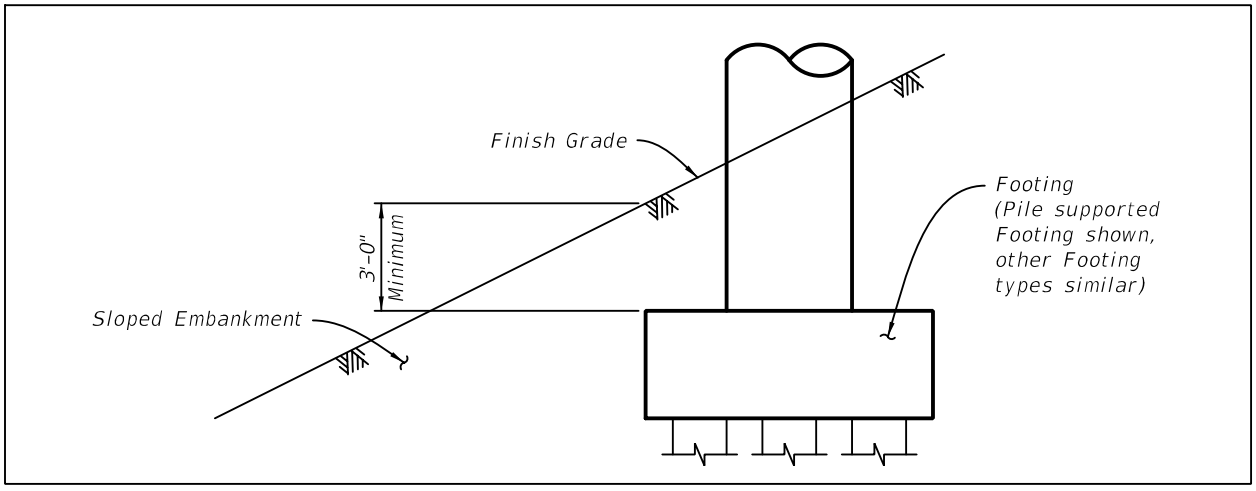

3.11.3 Column Design

A. For tall piers or columns, detail construction joints to limit concrete lifts to 25-feet. When approved by the SSDE, a maximum lift of 30-feet may be allowed to avoid successive small lifts (less than approximately 16-feet) which could result in vertical bar splice conflicts or unnecessary splice length penalties. Coordinate the lift heights and construction joint locations with the concrete placement requirements of the specifications.

Commentary: The 25-foot limitation is in place to mitigate complications from hydrostatic pressure in the column formwork design.

B. Detail splices for vertical reinforcing at every horizontal construction joint; except that the splice requirement may be disregarded for any lift of 10-feet or less.

Modification for Non-Conventional Projects:
Delete ***SDG*** 3.11.3.A and B.

Commentary: This requirement prevents the Contractor from bracing long bar segments that extend vertically from a construction joint.

C. Precast pier sections with spliced sleeve connections for mild reinforcing are allowed.

D. See ***SDG*** Table 3.11.1-3 for minimum wall thickness requirements.

3.11.4 Cap Design

A. A minimum height of 4-inches is required for all pedestals not poured monolithically. See ***SDG*** 6.5.C for pedestal requirements when using multirotational (MR) bearings. The maximum allowable pedestal height is 15-inches. If the pedestal exceeds 15-inches, step or slope the cap to reduce the pedestal height. Bents or piers with beams of different heights are exempt from the 15-inch maximum height. See also ***SDM*** Chapter 12.

Commentary: The 4-inch minimum pedestal height is based on 2-inches of cover, two layers of #4 bars and a 1-inch minimum gap beneath the bars to ensure concrete placement. The Department encourages designers to limit the pedestal height to 12-inches for aesthetics.

B. For Inverted-T shaped pier caps, the entire length of ledges must be uniform and continuous (i.e., no discontinuities, notches, or cut-outs). For ledges that do not extend the full length of the cap, provide tapered transitions (1:1 maximum) at the end of each ledge. Locate all longitudinal reinforcing and post-tensioning tendons required for both strength and service within the stem plus $2H_L$. Provide additional longitudinal reinforcing of the same size and spacing in the remainder of the cap width. See Figure 3.11.4-1 Inverted-T Pier Cap Detail. Provide supplementary reinforcement consisting of #6 bars (min.) spaced at 6-inches (maximum) within the "W + d_e" zone at each bearing location in addition to the reinforcement required for ledge design. Do not consider the supplementary reinforcement in the design. See Figure 3.11.4-2 Inverted-T Pier Cap Supplementary Reinforcement Details and ***SDG*** 4.2.6.C.2 and ***SDM*** 15.3.E for superstructure requirements related to inverted T-pier caps.

Commentary: Inverted-T pier caps are inherently prone to cracking at the stem/flange interface near the superstructure reactions. The supplemental reinforcement shown in Figure 3.11.4-2 mitigates the concerns with cracking and the inherent sensitivity of inverted-T pier caps to the location of superstructure reactions (along the beam centerline), which could vary significantly from the designer's assumptions due to thermal movements and live load rotations.

C. See ***SDG*** 4.1.4 for additional requirements.

Figure 3.11.4-1 Inverted-T Pier Cap Detail

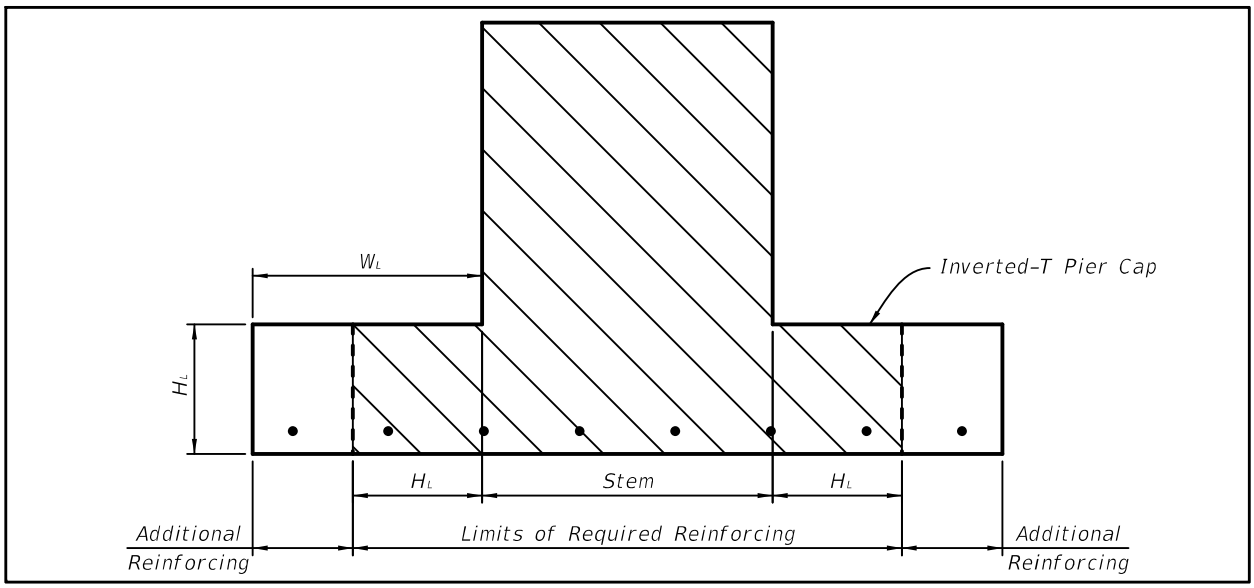

Figure 3.11.4-2 Inverted-T Pier Cap Supplementary Reinforcement Details

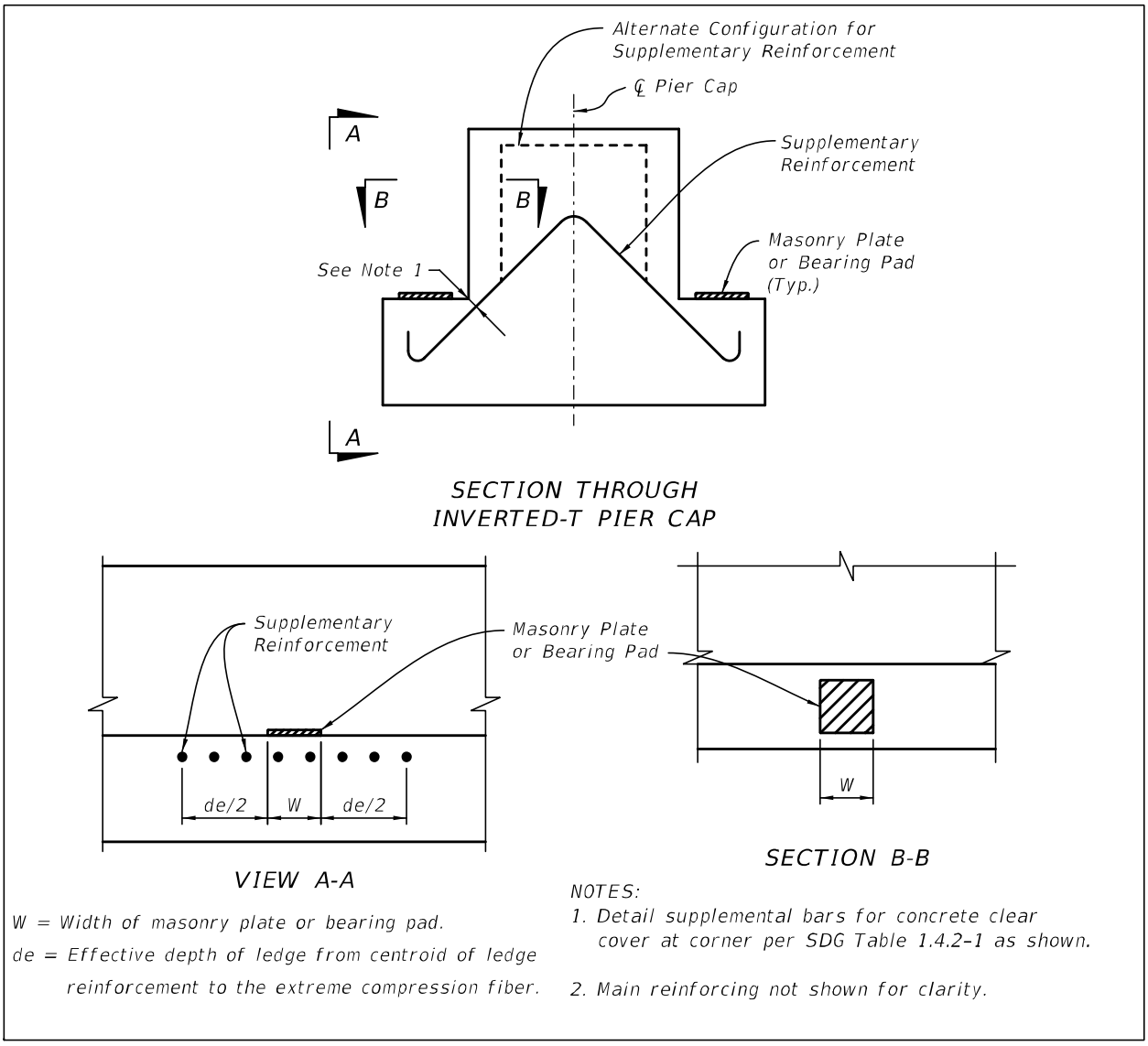

3.11.5 Rigidly Framed Concrete Straddle Piers

A. Account for the soil stiffness when analyzing the framed structure or provide a tension tie between the column footings.

B. Develop the longitudinal cap steel to the longitudinal column steel at the corners of the frame (column/cap interface).

Commentary: A standard 90° hook at the end of longitudinal cap steel is not sufficient to carry the moment at the column/cap interface. (i.e., 90º hooks need to be extended to provide the necessary lap length to transfer tension from the cap steel to the column steel).

C. For post-tensioned straddle piers, account for secondary moments, elastic shortening and time dependent effects in the analysis of the framed pier.

D. If a tension tie is used between columns or column footings, completely bury the tension tie and provide a minimum of 3-feet from the finish grade to the top of the tension tie.

3.11.6 Voided and Hollow Piers

A. All voided and hollow piers must be sealed from possible sources of leaks and contain free-exiting drains or weep-holes to drain away water that may collect from any source including condensation.

B. Drains in voided and hollow piers may be formed using 2-inch diameter permanent plastic pipes set flush with the top of the bottom slab or solid section. Slope interior top of solid base toward drains or weep-holes. Provide weep-holes with vermin guards. Show in the Contract Drawings, locations and details for drains taking into account bridge grade and cross-slope.

C. For all grade separation land projects, voided or hollow substructure piers and columns located within 30-feet of the edge of traveled way must be filled with concrete to 8-feet above the finished grade, regardless of the presence of guardrail or barriers. Class NS concrete may be used for the fill section. Show the fill section to be cast against two layers of roofing paper.

D. For bridges designed for vessel collision, voided or hollow substructure piers and columns must be filled with concrete from 15-feet above MHW or NHW to 2-feet below Mean Low Water Level (MLW) or Normal Low Water Level (NLW). Class NS concrete may be used for the fill section. Show the fill section to be cast against two layers of roofing paper.

Commentary: The above requirement is sufficient for barge collision. Ship collision will be taken on a case-by-case basis. Coordinate with the SSDE.

E. Where post-tensioning tendons extend from the underside of pier caps into hollow sections, provide a one half-inch by one half-inch drip recess around the tendon duct.

F. Provide locked inspection and maintenance access for all hollow piers as outlined below. Coordinate the inspection access details with the DSME and the SSDE. See Other Box Sections in ***SDG*** 4.6.2 for electrical and lighting requirements.

1. Locate an access opening near the top of the pier column, with the bottom of the opening approximately 8-feet below the bottom of the pier cap.

2. Provide a permanent platform and ladder system inside the hollow pier. Provide handrails and a transition to the ladder system. The ladder system must extend the entire vertical distance of the pier column interior to facilitate inspection and maintenance. Design ladders and platforms per OSHA and ***Title 29 Code of Federal Regulations (CFR), Part 1910, Section 27***. The clearance between rungs and obstructions should be 12-inches but not less than 7-inches. Specify

hot dip galvanized steel or other accepted materials for ladders and platforms as directed by the District.

Modification for Non-Conventional Projects:

Delete ***SDG*** 3.11.6.F and insert the following:
F. Submit the proposed details for hollow pier inspection access as an ATC.

3.12 RETAINING WALL TYPES

A. Using site-specific geotechnical information, the Structures EOR, in cooperation with the geotechnical engineer, will determine all wall system requirements. Consider site, economics, aesthetics, maintenance, and constructability when determining the appropriate wall type.

B. Partial height walls such as perched and toe-walls are not desirable in some locations due to maintenance issues related to mowing access and maintaining adjacent fill slopes. Perched walls can be very useful for limiting wall heights, limiting wall settlements and avoiding the need for two-phase walls, however, full height walls better facilitate future widenings. See Figure 3.12-1.

Commentary: Consideration of partial height walls may be necessary in special circumstances such as adjacent to pond excavations.

Modification for Non-Conventional Projects:

Delete ***SDG*** 3.12.B and Commentary and insert the following:
B. See Figure 3.12-1 and the RFP for requirements.

Figure 3.12-1 Partial Height MSE Retaining Wall Types

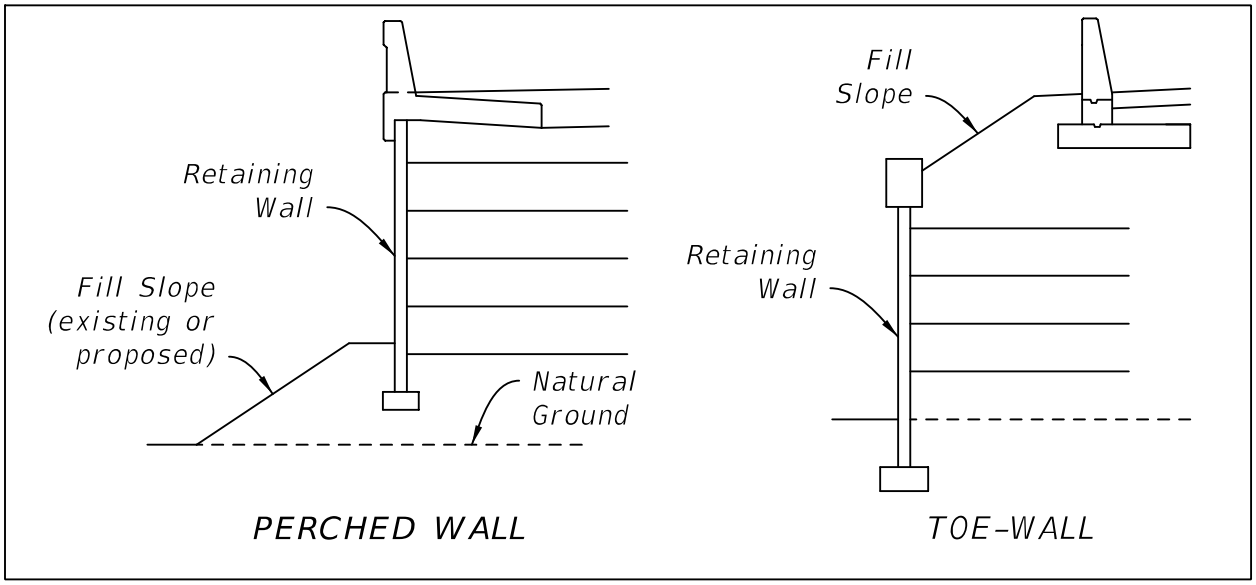

C. Use the following guidance for selecting permanent retaining wall types. See also the associated ***Standard Plans Instructions (SPI)*** and ***Standard Plans*** where applicable.

Permanent Retaining Wall Selection Guidance:

1. Gravity Wall
   a. Settlement Limits:
      i. C.I.P. Concrete (***Standard Plans*** Index 400-011) — Total Settlement ≤ 2-inches; Differential Settlement ≤ 0.2%
      ii. Segmental Block Wall (SBW) (***Developmental Design Standard*** D400-011B) — See #2.a below
   b. Height Limit: 5-feet
   c. Excavation Requirements: See ***Standard Plans*** Instructions for Index 400-011 and Instructions for ***Developmental Design Standards*** for Index D400-011B
   d. FDOT Wall Types: C.I.P. Concrete - FDOT Wall Type 1E; SBW - See #2 below
2. Segmental Block MSE Wall
   a. Settlement Limits: Total Settlement ≤ 6-inches; Differential Settlement ≤ 0.5%
   b. Height Limit: 40-feet*
   c. Excavation Requirements: 0.7H to H + (OSHA safe slope or braced excavation) ≥ 8-feet
   d. Restrictions:
      i. Cannot support bridge on spread footing foundation
      ii. Batter of facing blocks must not impact clearance to curb, etc. generally 2° (1H:32V) batter
      iii. Supported traffic lanes must be 0.5H from back of wall facing
   e. Environmental Classification: No formal classification
   f. FDOT Wall Types
      i. Wall outside of 100-year flood plain water with chloride > 2,000 ppm: FDOT Wall Type 4A (SBW with of any reinforcement)
      ii. Wall in 100-year flood plain of water with chloride > 2,000 ppm: FDOT Wall Type 4B (SBW with nonmetallic MSE reinforcement)

*The wall height is the vertical distance from the top of leveling pad to the top of coping. Where tiered or terraced walls are utilized, the 40-foot limit shall be measured as the vertical distance from top of leveling pad of the lower wall to the top of coping of the upper wall.

3. Reinforced Concrete Panel MSE Wall (***Standard Plans*** Index 548-020)

a. Settlement Limits: Total Settlement ≤ 6-inches
Differential Settlement (DS):
Panels ≤ 5-feet wide and ≤ 30ft^2 area - DS ≤ 1.0%
Panels > 5-feet wide or > 30ft^2 area - DS ≤ 0.5%

b. Height Limit: 40-feet**

c. Excavation Requirements: 0.7H to H + (OSHA safe slope or braced excavation) ≥ 8-feet

d. Environmental Classification:

Based on wall proximity to 100-year flood plain of water with chloride content > 2,000 ppm, and Distance **D** to closest of SHWL shoreline to a body of water with chloride content above 2,000 ppm or to a source releasing air contaminants (coal burning industrial facility, pulpwood plant, fertilizer plant or similar industry).

e. FDOT Wall Types

i. Wall in Seasonal High Water Level (SHWL) flood plain and **D** ≤ 50-feet: FDOT Wall Type 2F

ii. Wall in 100-year flood plain of water with chloride > 2,000 ppm and **D** ≤ 50-feet: FDOT Wall Type 2F

iii. Wall in SHWL flood plain and **D** > 50-feet: FDOT Wall Type 2E

iv. Wall in 100-year flood plain of water with chloride > 2,000 ppm and **D** > 50-feet: FDOT Wall Type 2E

v. **D** ≤ 50-feet*: FDOT Wall Type 2D

vi. 50-feet < **D** ≤ 300-feet*: FDOT Wall Type 2C

vii. 300-feet < **D** ≤ 2,500-feet*: FDOT Wall Type 2B

viii. **D** > 2,500-feet*: FDOT Wall Type 2A

* Wall not in 100-year flood plain of water with chloride content above 2,000 ppm

** The wall height is the vertical distance from the top of leveling pad to the top of coping. Where tiered or terraced walls are utilized, the 40-feet limit shall be measured as the vertical distance from top of leveling pad of the lower wall to the top of coping of the upper wall.

4. Sheet Pile Wall
   a. Concrete - Use ***Standard Plans*** Index 455-400 for walls in slightly or moderately aggressive environments. Use ***Standard Plans*** Index 455-440 for walls in environments that are extremely aggressive due to chlorides.
      i. Install by jetting; use another option or preforming if embedment into rock or clay is required.
   b. Steel and Other Materials - a project specific design is required
      i. Use FRP Reinforcement for all new Bulkheads in extremely aggressive environment.
      ii. Steel - sacrificial thickness (see ***SDG*** Table 3.1-1) requirements may eliminate wall type.
      iii. Polymer - cantilever height limit approximately 5-feet
5. Soldier Pile & Panel Wall
   a. Concrete - a project specific design is required
   b. Steel - a project specific design is required
      - Sacrificial thickness (see ***SDG*** Table 3.1-1) requirements may eliminate wall type.
6. Cast-In-Place Concrete Cantilever Wall (***Standard Plans*** Index 400-010)

a. Settlement Limits: (Settlement can be limited by deep foundations if needed)	Total Settlement ≤ 2-inches Differential Settlement ≤ 0.2%
b. Height Limit:	None, however, practical limit is approximately 25-feet
c. Excavation Requirement:	0.5H to 0.7H + OSHA safe slope or braced excavation
d. Environmental Classification:	Same as Bridge Substructure (see ***SDG*** 1.3.1.E)
e. FDOT Wall Types	
i. Extremely Aggressive within 50-feet of SHWL Shoreline of water with > 2,000 ppm Chlorides:	FDOT Wall Type 1D
ii. Extremely Aggressive beyond 50-feet of SHWL Shoreline of water with > 2,000 ppm Chlorides:	FDOT Wall Type 1C
iii. Moderately Aggressive:	FDOT Wall Type 1B
iv. Slightly Aggressive:	FDOT Wall Type 1A

3.12.1 Mechanically Stabilized Earth (MSE) Walls

A. Metallic soil reinforcements are sensitive to the electrochemical properties of the back fill material and to the possibility of a change in the properties of the back fill materials due to submergence in water classified as Extremely Aggressive from heavy fertilization, salt contamination or partial contact with flowable fill.

Commentary: Straps extending through dissimilar materials, such as flowable fill versus soil, can experience an electrochemical gradient which can lead to accelerated metal deterioration.

B. Geosynthetic soil reinforcement may be required depending on environmental conditions of site. See ***FDM*** 262. Also, site space limitations may preclude the use of MSE walls because of the inability to place the soil reinforcement.

C. MSE walls are generally the most economical of all wall types when the area of retaining wall is greater than 1,000 square feet, and the wall is greater than 5-feet in height.

D. When total or differential settlements exceeding those in ***SDG*** 3.12.C.3 are anticipated, a two-phased MSE wall system is necessary.

Commentary: The term "two-phased MSE wall system" used here defines the first phase as constructing the MSE wall without the permanent MSE wall panels and allowing settlement to reach an acceptable level, then in Phase Two the permanent MSE wall panels/fascia are attached. This procedure is sometimes referred to as "two-stage" in other documents.

E. Preapproved MSE wall systems utilizing reinforced concrete facing panels are listed on the ***Approved Products List***.

F. Segmental Block MSE walls (SBW) can be less expensive and more aesthetic than reinforced concrete panel MSE walls. SBWs are reinforced with non-metallic components, so they are permitted in all environments.

G. Temporary MSE walls are applicable in temporary fill situations. The soil reinforcement may be either steel or geogrid. Pre-approved temporary MSE wall systems are listed on the ***Approved Products List***.

H. Use of a mixture of metallic and non-metallic soil reinforcement within the height of a given wall, or in adjacent walls with overlapping reinforcement, is strictly prohibited.

I. Include the cost of backfill for the finished graded surface in the cost of embankment or borrow excavation as per the ***Standard Specifications*** Section 548-12. See ***FDM*** 262.2.3 (3).

3.12.2 Steel Sheet Pile Walls

A. Generally, steel sheet pile walls can be designed as cantilevered walls up to approximately 15-feet in height. Steel sheet pile walls over 15-feet are tied back with prestressed soil anchors or dead men.

B. Steel sheet pile walls are relatively expensive initially and require periodic maintenance (i.e., painting, cathodic protection).

C. In permanent sheet pile wall applications, concrete facing can be added to address maintenance and aesthetic concerns.

D. For temporary steel sheet pile wall applications, refer to Section 3.13.3.1 and ***Standard Plans***, Index 455-500.

3.12.3 Concrete Sheet Piles

A. Concrete sheet piles are primarily used as bulkheads in either fresh or saltwater.

B. Rock and other obstructions above the tip elevation are a concern with this type of wall as they are normally installed by jetting.

C. Concrete sheet piles when used as bulkheads are normally anchored with dead men.

3.12.4 Soil Nails

A. A soil nail wall is similar to an MSE wall except the nails are installed into the soil volume without excavating the soil.

B. Soil nail walls may not be used to support bridges or other structures on shallow foundations.

3.12.5 Soldier Pile/Panel Walls

This type of wall is similar to sheet pile walls, however, the panels between the piles only extend to the bottom of the retained soil. The panels are supported by laterally loaded piles embedded into the foundation soil/rock. Soil anchors are sometimes used to limit the stress in the pile.

3.12.6 Modular Block Walls

Modular block walls consist of unreinforced blocks, which are sometimes used as a gravity wall and sometimes used as a wall facing for an MSE variation normally utilizing a geogrid for soil reinforcement.

3.12.7 Geosynthetic Reinforced Soil (GRS) Walls

A. GRS walls are constructed with coarse aggregate or Graded Aggregate Base (GAB) backfill and geosynthetic soil reinforcement.

B. GRS walls consist of the following:

1. 4,000 psi 8-inch high masonry facing blocks or other approved facing material.
2. Geosynthetic reinforcement with ultimate tensile strength ≥ 4,800 lb/ft.
3. Geosynthetic reinforcement spacings of less than 12-inches with smaller spacings in different portions of the GRS wall.

C. GRS details are shown in the plans using ***Developmental Standard Plans*** D549-025.

3.13 RETAINING WALL DESIGN

3.13.1 General

A. See ***FDM*** 262 and ***SDM*** Chapter 19 for retaining wall plans preparation and administrative requirements in conjunction with the design requirements of this Section. Refer to ***SDG*** Chapter 1 for the retaining wall concrete class (excluding MSE Walls) and reinforcing steel cover requirements.

B. Rankine earth pressure may be used in lieu of Coulomb earth pressure.

C. During the design process, review wall locations for conflicts with existing or proposed structure foundations, drain pipes and drainage structures located beneath or adjacent to the proposed wall and/or reinforced soil zone. Analyze for constructability, settlement effects, wall stability, maintenance repair access, potential for removal or relocation of the structure foundation, drain pipe or drainage structure, etc. as appropriate.

D. Design all drainage conveyances and structures within or adjacent to retaining walls and embankments confined by retaining walls in accordance with the requirements of the ***Drainage Manual***.

E. Coordinate the design of drainage conveyances and structures within and adjacent to retaining walls with the Drainage EOR.

F. During the design process, review wall locations for conflicts with existing or proposed utilities beneath or adjacent to the proposed wall and/or reinforced soil volume. Coordinate wall and utility locations and designs with the District Utilities Engineer. Follow the requirements of the ***Drainage Manual.*** See the ***Utilities Accommodation Manual*** for more information.

3.13.2 Mechanically Stabilized Earth Walls (LRFD 11.10)

Commentary: ***FHWA Publication No. FHWA-NHI-00-043, "Mechanically Stabilized Earth Walls and Reinforced Soil Slopes Design & Construction Guidelines"****, contains background information on the initial development of MSE wall design and is referenced by* ***LRFD*** *11.10.1 as the design guidelines for geometrically complex MSE walls.*

A. For concrete class and cover requirements, refer to the ***Standard Plans*** for the FDOT Wall Type as determined using ***SDG*** 3.12.C:

B. For MSE walls, delete ***LRFD*** 11.10.10.3 and substitute the following:

For MSE walls located in areas not listed below, use compacted select backfill and do not account for differential hydrostatic pressure in the design, unless required to address project specific conditions. For locations requiring or using coarse aggregate backfill in MSE walls as detailed below, use compacted select backfill

above the coarse aggregate backfill. See ***SDM*** 19.2.2 for wall control drawing requirements. See the ***Drainage Manual*** for scour and erosion protection requirements.

1. FEMA Flood Zone AE (no Moderate Wave Action): When the 100-year flood elevation is above the lowest adjacent ground surface, use select compacted backfill and account for differential hydrostatic pressure in the design. Use effective unit weights in the calculations for internal and external stability beginning at levels below the application of differential hydrostatic pressure. Alternatively, differential hydrostatic pressure can be neglected if coarse aggregate backfill is used in lieu of select compacted backfill to an elevation at least 1-foot above the 100-year flood elevation. For MSE walls supporting spread footing abutments (See Section O below), use coarse aggregate backfill to an elevation at least 1-foot above the 100-year flood elevation. When using coarse aggregate backfill, apply a differential hydrostatic pressure using a height of water equal to the difference in elevation between the 500-year and the top of coarse aggregate elevation.
2. FEMA Flood Zone AO: When the 100-year flood elevation is above the lowest adjacent ground surface, use coarse aggregate backfill to an elevation at least 1-foot above the 100-year flood elevation. Apply a differential hydrostatic pressure using a height of water equal to the difference in elevation between the 500-year and the top of coarse aggregate elevation.
3. FEMA Flood Zone VE and Zone AE (with Moderate Wave Action): When the 100-year flood elevation is above the lowest adjacent ground surface, use coarse aggregate backfill to an elevation at least 1-foot above the 100-year flood elevation. Hydrostatic pressure does not need to be accounted for within the coarse aggregate. This requirement is also applicable for temporary walls that serve as or provide access to evacuation routes.
4. Within or adjacent to a stormwater detention or retention facility: When the peak stage water elevation is above the lowest adjacent ground surface, use coarse aggregate backfill to an elevation at least 1-foot above the peak stage water elevation. Hydrostatic pressure does not need to be accounted for within the coarse aggregate.

Commentary: Coarse aggregate is an open-graded free-draining material comprised of natural stones meeting the requirements of Section 901 of the ***Standard Specifications****, with a size distribution of any of the listed aggregate gradations inclusive of Size No. 57 through Size No. 89 that minimizes the likelihood of developing differential hydrostatic pressure. Using coarse aggregate backfill does not preclude the need to implement drawdown analysis for the determination of the phreatic surface profile.*

C. Minimum Target Service Life (***LRFD*** 11.5.1)

1. Design permanent walls for a target service life of 75-years, except those supporting abutments on spread footings. Design walls supporting abutments on spread footings for a target service life of 100-years.
2. Design temporary walls for the length of contract or a target service life of three years, whichever is greater.

D. Leveling Pad

1. All permanent walls with panel facing will have a non-structural, unreinforced concrete leveling pad as a minimum. The entire bottom of the wall panel will have bearing on the concrete leveling pad.
2. All permanent walls with block facing will have a non-structural compacted aggregate or unreinforced concrete leveling pad.

E. Acute Corners of MSE Walls (***LRFD*** 11.10.1)

1. When two walls intersect forming an internal angle of less than 70-degrees, design the nose section as a bin wall. Submit calculations for this special design with the shop drawings for review and approval.
2. Design structural connections between wall facings within the nose section to create an at-rest bin effect without eliminating flexibility of the wall facings to allow tolerance for differential settlements.
3. For wall facings without continuous vertical open joints, such as square or rectangular panels, design the nose section to settle differentially from the remainder of the structure with a slip joint. Facing panel overlap, interlock or rigid connection across vertical joints is not permitted.
4. Design soil reinforcements to restrain the nose section by connecting directly to each of the facing elements in the nose section. Run soil reinforcement into the backfill of the main reinforced soil volume to a plane at least 3-feet beyond the Coulomb (or Rankine) failure surface. See Figure 3.13.2-1.
5. Design of facing connections, pullout and strength of reinforcing elements and obstructions must conform to the general requirements of the wall design.

Figure 3.13.2-1 Design Criteria for Acute Corners of MSE Walls

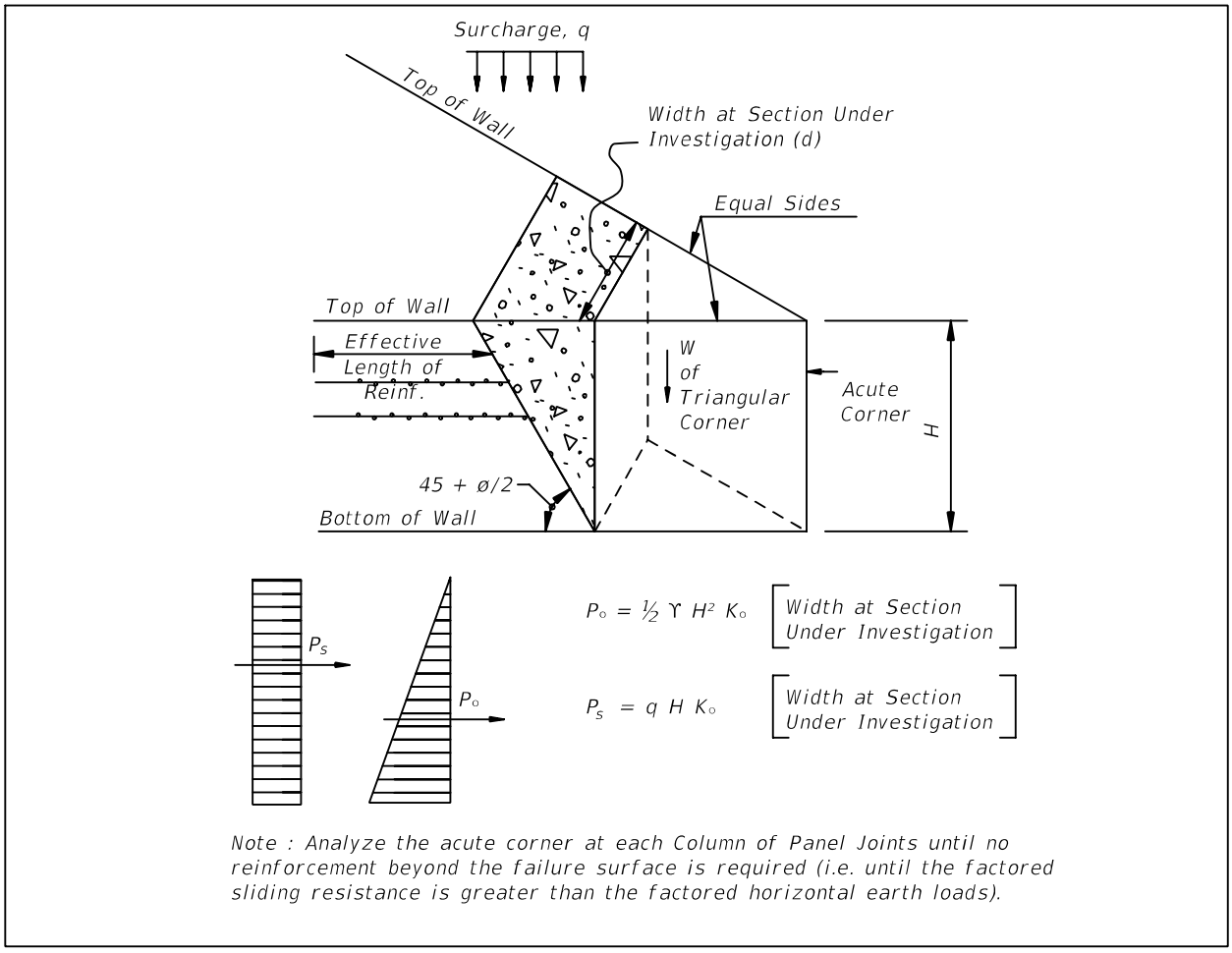

F. Minimum Length of Soil Reinforcement (***LRFD*** 11.10.2.1)

In lieu of the requirements for minimum soil reinforcement lengths in ***LRFD*** C11.10.2.1 use the following:

The minimum soil reinforcement length, "**L**", measured from the back of the facing element, must be the maximum of the following:

Walls surrounding Embankments, and Abutments on Piling **L** ≥ **8**-feet and **L** ≥ **0.7H**.

Walls Supporting Abutments on Spread Footings **L** ≥ **0.6**(**H** + **d**) + **6.5**-feet (**d** = fill height above wall) and **L** ≥ **0.7H**

Where: **H** = height of wall, in feet, and measured from the top of the leveling pad to the top of the wall coping. **L** = length in feet, required for external stability design.

*Commentary: As a rule of thumb, for a MSE wall with reinforcement lengths equal to 70% of the wall height, the anticipated factored bearing pressure (**q**$_{uniform}$) can be estimated to be about 200% of the overburden weight of soil and surcharge. It may be necessary to increase the reinforcement length for external stability to assure that the factored bearing pressure does not exceed the factored bearing resistance (**q**$_r$) of the foundation soil at this location.*

G. Minimum Front Face Wall Embedment (***LRFD*** 11.10.2.2)

1. Consider scour and bearing capacity when determining front face embedment depth.
2. Consider drainage and geotechnical issues in determining the elevation of the top of leveling pad.
3. In addition to the requirements for minimum front face embedment in ***LRFD*** 11.10.2.2, the minimum front face embedment for permanent walls must comply with both a minimum of 24-inches to the top of the leveling pad and Figure 3.13.2-2. Also, consider normal construction practices. See ***SDM*** Chapter 19 for additional details.

Figure 3.13.2-2 MSE Wall Minimum Front Face Embedment

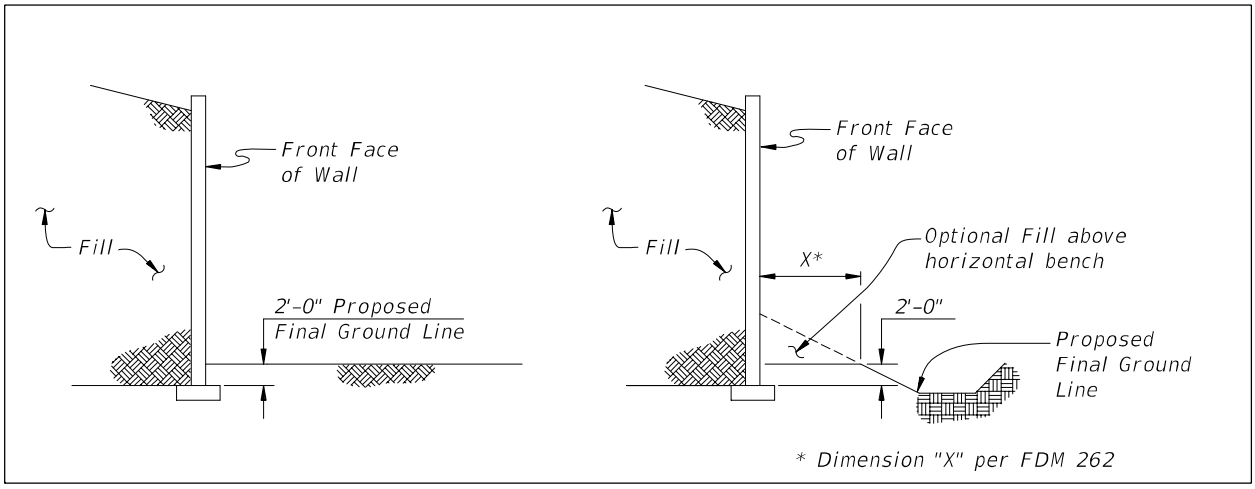

H. Facing (***LRFD*** 11.10.2.3)

1. The typical reinforced concrete square panel size is 5-feet by 5-feet (nominal) and shall not exceed 30-square feet in area.
2. The typical non-square (i.e., diamond shaped, not rectangular) panel size shall not exceed 40-square feet in area.
3. Special panels (top out, etc.) shall not exceed 50-square feet in area.
4. Full-height facing panels shall not exceed 5-feet in width.
5. The reinforcing steel concrete cover shall comply with the ***Standard Plans*** for the FDOT Wall Type.
6. Segmental Block Wall facing blocks are typically 15-inches (or less) high.

I. External Stability (***LRFD*** 11.10.5)

The reinforced backfill soil parameters for analysis are:

1. Sand Backfill (Statewide except Miami-Dade and Monroe Counties)
   - i Moist Unit Weight: 105-lbs per cubic foot
   - ii Friction Angle: 30-degrees

2. Limerock Backfill (Miami-Dade and Monroe Counties only)
    a. Moist Unit Weight: 115-lbs per cubic foot
    b. Friction Angle: 34-degrees

Modification for Non-Conventional Projects:

Delete ***SDG*** 3.13.2.I.1 and 2 and insert the following:

I. External Stability (***LRFD*** 11.10.5)

1. When the reinforced backfill materials are not known, the reinforced backfill soil parameters for analysis are:
    a. Sand Backfill
        iii. Moist Unit Weight: 105-lbs per cubic foot
        iv. Friction Angle: 30-degrees
    b. Limerock Backfill
        i. Moist Unit Weight: 115-lbs per cubic foot
        ii. Friction Angle: 34-degrees
2. When the reinforced backfill materials are known, the reinforced backfill soil parameters for analysis are:
    a. Sand Backfill
        i. Unit Weight: minimum density for acceptance
        ii. Friction Angle: value determined by lab testing, not to exceed 36-degrees
    b. Limerock Backfill
        i. Unit Weight: 95% of AASHTO T-180 maximum density
        ii. Friction Angle" value determined by lab testing, not to exceed 42-degrees.

3. Flowable Fill Backfill
    a. Total Unit Weight: 45 to 125-lbs per cubic foot
    b. f'c: minimum 75 psi
4. In addition to the horizontal backslope with traffic surcharge figure in ***LRFD***, Figure 3.13.2-3 illustrates a broken backslope condition with a traffic surcharge. If a traffic surcharge is present and located within 0.5H of the back of the reinforced soil volume, then it must be included in the analysis. Figure 3.13.2-4 illustrates a broken backslope condition without a traffic surcharge.

Figure 3.13.2-3 Broken Backslope with Traffic Surcharge

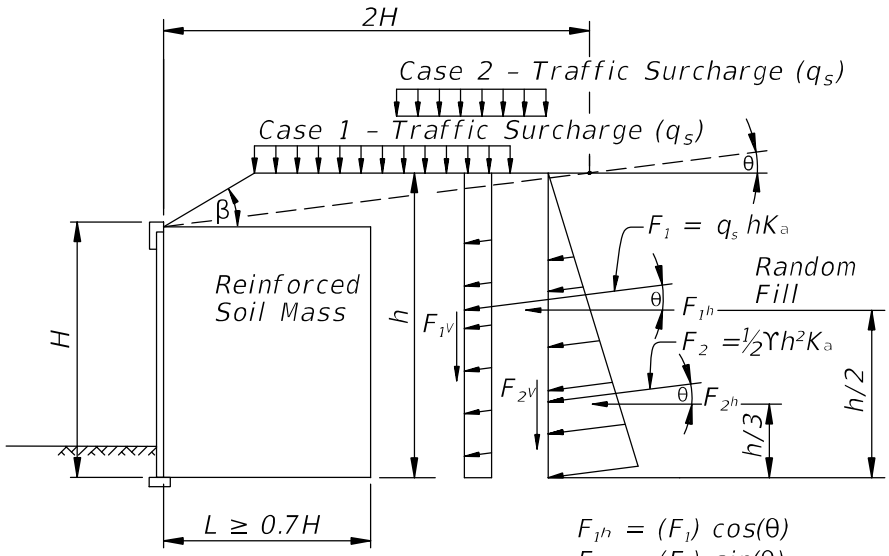

$F_{1h} = (F_1)\cos(\theta)$
$F_{1V} = (F_1)\sin(\theta)$
$F_{2h} = (F_2)\cos(\theta)$
$F_{2V} = (F_2)\sin(\theta)$

Case 1 – used for bearing resistance, reinforcement tensile resistance and overall stability calculations.

Case 2 – used for sliding, eccentricity, and reinforcement pullout resistance calculations.

K_a *For Random Fill :* $K_a = \cos(\theta)\left[\frac{\cos(\theta) - \sqrt{\cos^2(\theta) - \cos^2\varnothing}}{\cos(\theta) + \sqrt{\cos^2(\theta) - \cos^2\varnothing}}\right]$

$\varnothing$ *= friction angle of backfill or foundation, whichever is lowest.*

Loads shown are unfactored. Use appropriate load and resistance factors in analysis. (See SDG 3.13.2.H.6 for a link to the LRFD External Stability Analysis for MSE Walls program).

Figure 3.13.2-4 Broken Backslope without Traffic Surcharge

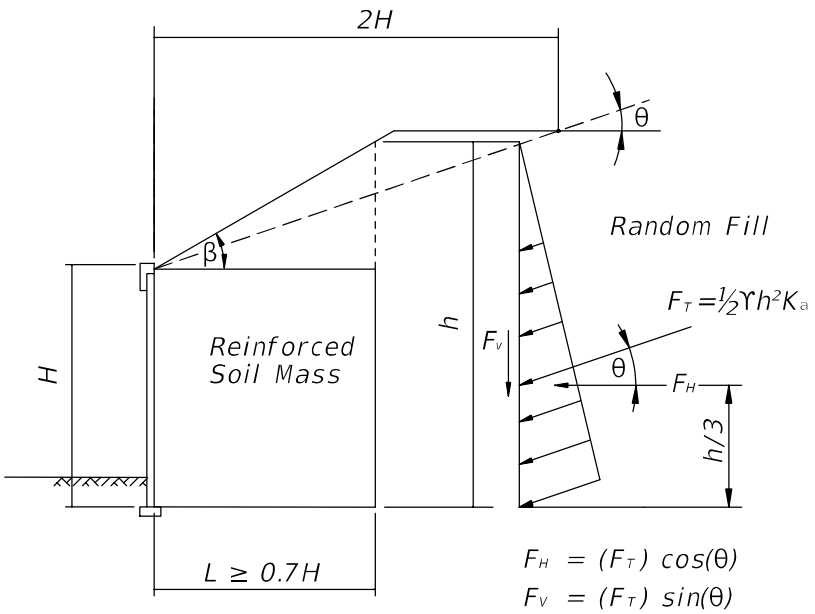

$F_H = (F_T)\cos(\theta)$

$F_v = (F_T)\sin(\theta)$

For Infinite Slope $\theta = \beta$

K_a For Random Fill : $K_a = \cos(\theta)\left[\frac{\cos(\theta) - \sqrt{\cos^2(\theta) - \cos^2\varnothing}}{\cos(\theta) + \sqrt{\cos^2(\theta) - \cos^2\varnothing}}\right]$

$\varnothing$ = friction angle of backfill or foundation, whichever is lowest.

Loads shown are unfactored. Use appropriate load and resistance factors in analysis. (See SDG 3.13.2.H.6 for a link to the LRFD External Stability Analysis for MSE Walls program).

5. The Geotechnical Engineer of Record for the project is responsible for designing the reinforcement lengths for the external conditions shown in Figure 3.13.2-5 and any other conditions that are appropriate for the site.

Figure 3.13.2-5 Proprietary Retaining Walls

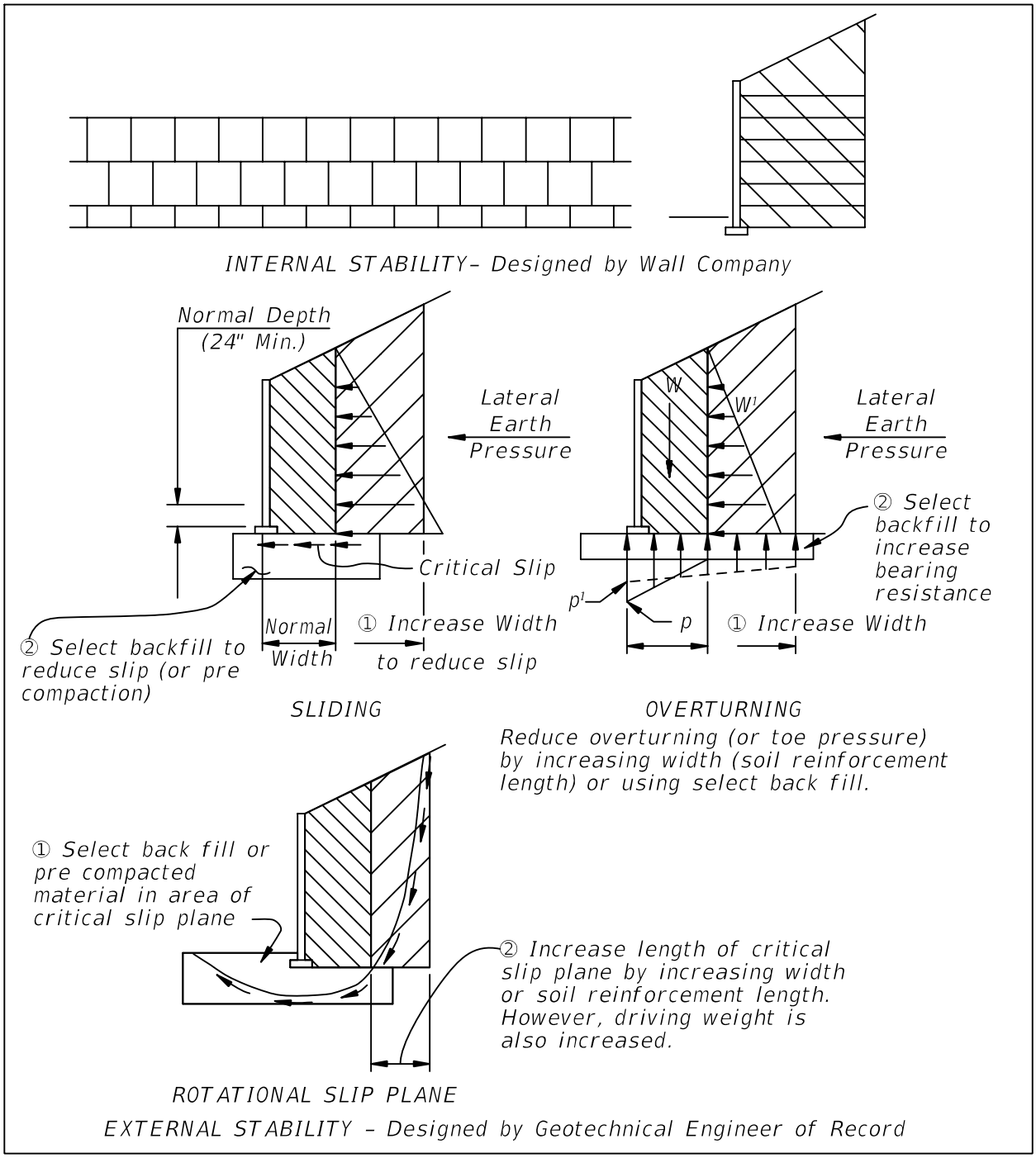

6. Click for the ***LRFD External Stability Analysis for MSE Walls***.

J. Apparent Coefficient of Friction (***LRFD*** 11.10.6.3.2)

The pullout friction factor (F*) and the resistance factor for pullout (Ø) need not be modified for the design of soil reinforcement below the design flood elevation when the angle of internal friction is determined for saturated conditions.

K. Soil Reinforcement Strength (***LRFD*** 11.10.6.4)

1. In lieu of the corrosion rates specified in ***LRFD*** 11.10.6.4.2a, substitute the following requirements: The following corrosion rates for metallic reinforcement apply to permanent MSE Walls within non-corrosive environments only (low and moderate air contaminants where distance (D) from the wall to an Environmental Source of Interest is greater than 300-feet. See ***SDG*** 3.12.C for more information.):
    i Zinc (first 2 years) 0.58 mils/year
    ii Zinc (subsequent years to depletion) 0.16 mils/year
    iii Carbon Steel (after depletion of zinc to 75 years) 0.47 mils/year
    iv Carbon Steel (75 to 100 years) 0.28 mils/year
2. Use a minimum corrosion rate of 6 mils/year for Temporary MSE Walls with:
    i non-stainless metallic reinforcement below the 100-year flood elevation with chloride content above 2,000 ppm.
    ii structural connections (two Phase walls) exposed to extreme air contaminants (where distance (D) from the wall to an Environmental Source of Interest is less than or equal to 300-feet See ***SDG*** 3.12.C for more information).
3. Do not use metallic soil reinforcement if the wall is located within the 100-year flood plain and either of the following apply:
    i the nearby water chloride content is greater than 2,000 ppm, or
    ii the groundwater or surface water pH is less than 4.5.
4. Epoxy coated reinforcement mentioned in ***LRFD*** C11.10.6.4.2a is not permitted. Passive metal soil reinforcement (i.e., stainless steel, aluminum alloys, etc.), is permitted only with written SSDE approval.
5. For geosynthetic reinforcements use R-3 geosynthetics meeting the requirements of ***Specifications*** Section 985. Limit T_{max} and T_o (***LRFD*** 11.10.6.4.1) to $T_{2\%}$ for permanent walls and $T_{5\%}$ for temporary walls.
6. For geosynthetic reinforcement, supplement ***LRFD*** Table 11.10.6.4.3b-1 with the following default value:

Application	Total Reduction Factor, RF
Critical temporary wall applications with non-aggressive soils and polymers meeting the requirements listed in Table 11.10.6.4.2b-1.	7.0

7. For permanent wall systems using welded wire soil reinforcement, the minimum wire size in both the longitudinal and transverse directions shall be W10 for walls with a 75-year service life and W11 for walls with a 100-year service life.

8. Do not design soil reinforcement to be skewed more than 15 degrees from a position normal to the wall panel unless necessary and clearly detailed for acute corners. In these instances, follow the pre-approved bin wall details shown in the ***APL*** Vendor Drawings.

Commentary: There are times when the 15 degree criteria cannot be met due to vertical obstructions such as piling, drainage structures or bridge obstructions with angles. In these cases, clearly detail the soil reinforcement skew details in the Shop Drawings.

9. Do not design soil reinforcement to be skewed more than 15 degrees from a horizontal position in elevation view to clear horizontal obstructions.

10. Soil reinforcement must not be attached to piling, and abutment piles must not be attached to any retaining wall system.

L. Reinforcement/Facing Connection (***LRFD*** 11.10.6.4.4)

1. Design the soil reinforcement to facing panel connection to assure full contact of the connection elements. The connection must be able to be inspected visibly during construction.

Commentary: Normally mesh and bar mats are connected to the facing panel by a pin passing through loops at the end of the reinforcement and loops inserted into the panels. If these loops are not aligned, then some reinforcement will not be in contact with the pins causing the remaining reinforcement to be unevenly stressed and/or over stressed. If the quality of this connection cannot be assured through pullout testing and quality control during installation, then the strength of the soil reinforcement and its connections shall be reduced accordingly.

M. Flowable Fill Backfill

1. Flowable fill backfill will prevent the MSE wall from adapting to differential settlements as well as sand or limerock backfilled MSE walls, however, the use of flowable fill may speed wall construction. Flowable fill backfill is permitted only with written SSDE approval.

Modification for Non-Conventional Projects:
Delete ***SDG*** 3.13.2.M.1

2. Prior to requesting approval, verify external stability, the accommodation of anticipated settlements and the cost effectiveness of flowable fill backfill.

Modification for Non-Conventional Projects:
Delete ***SDG*** 3.13.2.M.2

3. Provide 1'-0" flowable fill cover in all directions between metallic soil reinforcement and adjacent sand or limerock backfill. Provide 3-feet of sand or limerock backfill between the top of the flowable fill and the bottom of the roadway base.

Commentary: Galvanic cells may occur if the metallic soil reinforcement crosses the interface between the flowable fill and the sand or limerock backfill. Galvanic cells rapidly accelerate corrosion which has led to the sudden catastrophic failure of MSE walls.

4. Indicate the minimum and maximum flowable fill unit weights which will satisfy all external stability requirements with a range of at least 10 pcf.
5. Provide for drainage of water between the flowable fill and the MSE wall panels.

N. End Bents on Piling or Drilled Shafts behind MSE Walls

1. Locate MSE Walls adjacent to end bents so as to avoid any conflicts with the end bent foundation elements. See ***SDM*** 19.1 and ***SDM*** 19.6.
2. The minimum clear distance shall be 24-inches for the following:
    i Between the front face of the end bent cap or footing and the back of wall facing.
    ii For battered piles, at the base of the wall between the face of piling and the leveling pad. Note: The 24-inch dimension is based on the use of 18-inch piles. For larger piles and drilled shafts, increase the clear distance between the wall and pile or drilled shaft such that no soil reinforcement is skewed more than 15 degrees.

Commentary: Paragraphs 1 and 2 above work together to ensure adequate space to compact the soil between the back of the wall panels and the piles or drilled shafts considering placement tolerances.

3. Soil reinforcement attached to end bents can be used to resist lateral forces and/or overturning moments if analysis shows it is necessary. The backwall soil reinforcement loading shall take into consideration pile driving and drilled shaft placement tolerances per ***Specifications*** Section 455. Avoid attaching soil reinforcement to end bents on projects without MSE walls. If the total settlement of the soil above the bottom of the end bent cap exceeds 2-inches, the soil reinforcement must not be attached to the end bent and a special wall behind the backwall must be designed to resist the earth load. A wall similar to an FDOT Type 3 wall (but without wire facing or baskets) that is designed and constructed using the criteria for permanent walls may be used for this purpose. See also ***SDM*** 12.3.

Commentary: Lateral forces and overturning moments at end bents may be resisted by moment connections between the piles/drilled shafts and the end bent cap (pile embedment must be more than 1-foot), frame action within the end bent itself if pile/drilled shaft supported wingwalls are used, and/or soil reinforcement attached to or placed against backwalls. Soil reinforcement attached to or placed against backwalls is generally not required for other end bents supporting shallow depth

*superstructures and most other end bents with pile/drilled shaft supported wingwalls. Additionally, it is both impractical and inefficient for contractors to procure hardware and soil reinforcement from wall vendors for attachment to end bents on projects without MSE walls. When evaluating the potential need to use soil reinforcement attached to or placed against backwalls, consider all the dead loads applied to the end bent including a portion of the dead load of the approach slab per **SPI** 400-090 and 400-091. The 2-inch deflection limit is intended to prevent drag loads and/or overturning forces from being imparted to the end bent from the settling soil beneath the approach slab.*

Modification for Non-Conventional Projects:

Delete ***SDG*** 3.13.2.N.3 and insert the following:

Soil reinforcement attached to end bents can be used to resist lateral forces and/or overturning moments if analysis shows it necessary. If the total settlement of the soil above the bottom of the end bent cap exceeds 2-inches, the soil reinforcement must not be attached to the end bent and a special wall behind the backwall must be designed to resist the earth load. A wall similar to an FDOT Type 3 wall (but without wire facing or baskets) that is designed and constructed using the criteria for permanent walls may be used for this purpose. See also ***SDM*** 12.3.

O. Spread Footing Abutments on MSE Walls:

1. Size the spread footing so that the bearing pressure due to service loading does not exceed 4,000 psf.
2. Locate the edge of the spread footing a minimum of 1-foot behind the back of the wall panel.
3. Size and locate the spread footing so that the distance between the centerline of bearing of the footing and the back of the wall panel is a minimum of 4-feet.
4. Include the vertical and horizontal design loads per square foot and show limits of loading in the plans such that the MSE wall system can be designed by the proprietary wall vendor. Provide both service and factored loads.
5. Except as permitted below, spread footing abutments behind MSE walls are only allowed for single span structures or for multi-simple-span structures where the deck is made discontinuous over the first interior support. Spread Footing Abutments on MSE Walls may be permitted for continuous superstructures, but only when the superstructure has been designed for the worst-case boundary conditions utilizing the following design assumptions:

   a. Zero settlement of the interior supports.

   b. Initial settlement of the spread footing due to weight of bridge superstructure and approach slab.

   c. Long term settlement of spread footing up to day 10,000.

6. Include details, e.g., troughs, gutters and/or pipes, that will capture all water from a potentially failed bridge deck expansion joint and convey it to a Stormwater Management Facility.
7. Use the same soil reinforcing length, strength and placement frequency away from the spread footing as is required to support the spread footing.

Commentary: Use of the same soil reinforcing across the length of the wall allows for the bridge to be widened in the future using the same spread footing foundation system.

8. Use steel reinforcement only.
9. Segmental Block MSE Walls may not be used to support spread footing abutments.

P. Back-To-Back MSE Walls:

Design Back-to-back MSE walls for the two cases shown as follows:

Figure 3.13.2-6 Back-to-Back MSE Walls

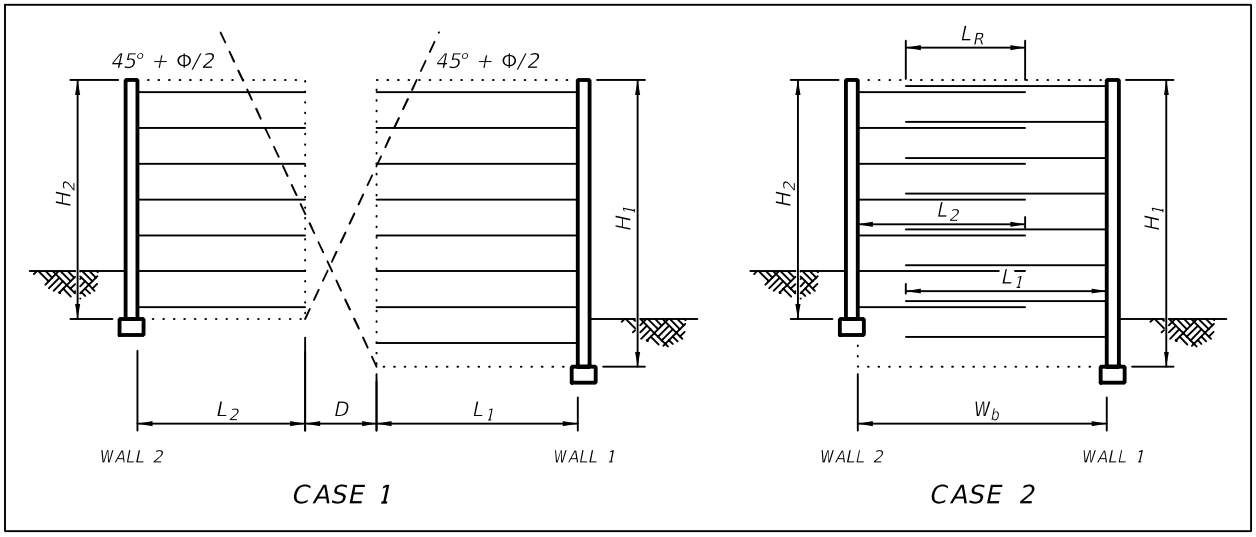

Case 1

For Case 1 as shown in Figure 3.13.2-6, the overall base width is large enough so that each wall behaves and can be designed independently. In particular, there is no overlapping of the reinforcements. Theoretically, if the distance, D, between the two walls is shorter than $D = H_1 \tan(45° - \Phi°/2)$ where H_1 is the height of Wall 1, the taller of the parallel walls, then the active wedges at the back of each wall cannot fully spread out and the active thrust is reduced. When $0.50H_2 < D < 0.50H_1$ assume the full active thrust is mobilized against Wall 2, however, a reduced active thrust may be considered against Wall 1. For values of $D > 0.50H_1$ assume the full active thrust is mobilized against Wall 1.

Case 2

For Case 2 as shown in Figure 3.13.2-6, there is an overlapping of the reinforcements such that the two walls interact. When the overlap, L_R, is greater than $0.3H_2$, where

H_2 is the height of Wall 2, the shorter of the parallel walls, no active earth thrust from the backfill needs to be considered on Wall 2 for external stability calculations. For the instances when $0.3H_2 < L_R < 0.3H_1$ the horizontal earth pressure diagram acting on Wall 1 is shown schematically in Figure 3.13.2-7.

For intermediate geometries between $D = 0.50H_1$ (in Case 1) and $L_R > 0.30H_2$ (in Case 2), the active earth thrust may be linearly interpolated from the full active case to zero.

Figure 3.13.2-7 Horizontal Earth Pressure on Taller Back-to-Back MSE Wall

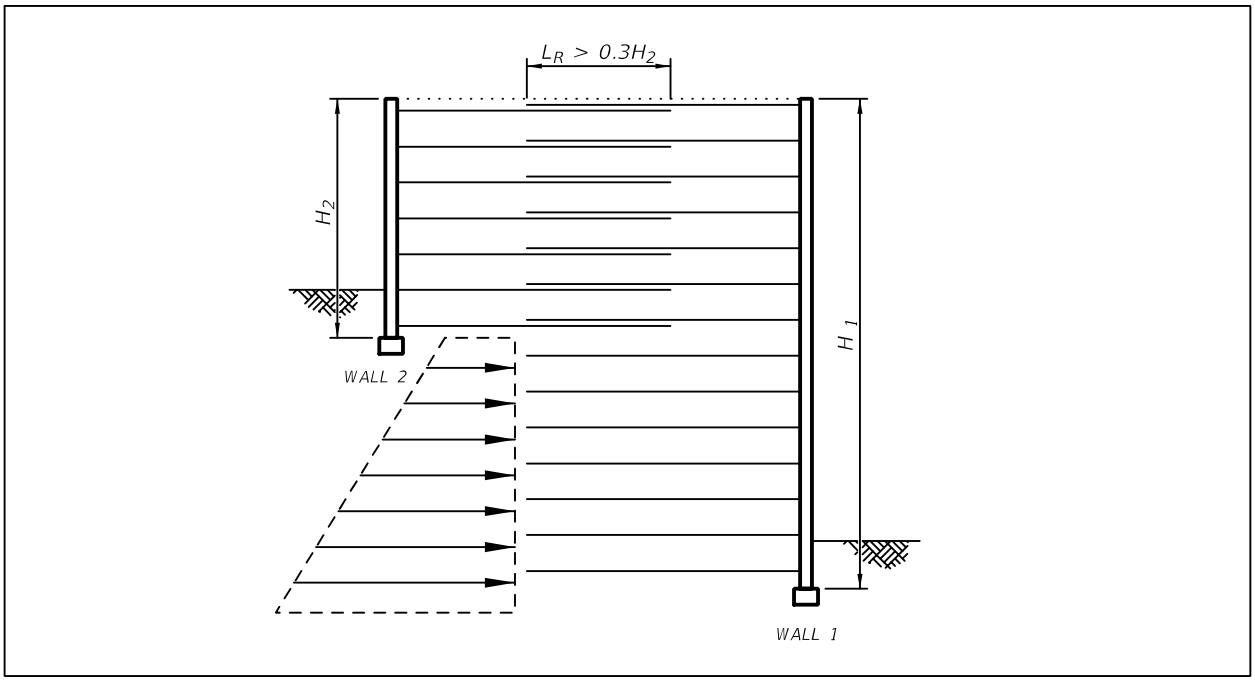

For Case 2 geometries where the horizontal earth pressure acting on Wall 2 is assumed to be zero for external stability:

1. Overlaps (L_R) shall be greater than $0.3H_2$,
2. $L_1/H_1 \geq 0.6$ where L_1 and H_1 are the length of the reinforcement and height, respectively, of the taller wall,
3. $L_2/H_2 \geq 0.6$ where L_2 and H_2 are the length of the reinforcement and height, respectively, of the shorter wall.

For all Case 2 geometries:

1. $W_b \geq 0.7H_2$ where W_b is the base width as shown in Figure 3.13.2-6 and H_2 is the height of the shorter wall. In stacked back to back wall geometries such as shown in Figure 3.13.2-8, ensure the base $W_b \geq 0.7H_1$ and $W_c \geq 0.7H_3$.
2. Do not use single layers of reinforcements connected to both wall facings.

Figure 3.13.2-8 Horizontal Earth Pressure on Stacked Back-to-Back MSE Walls

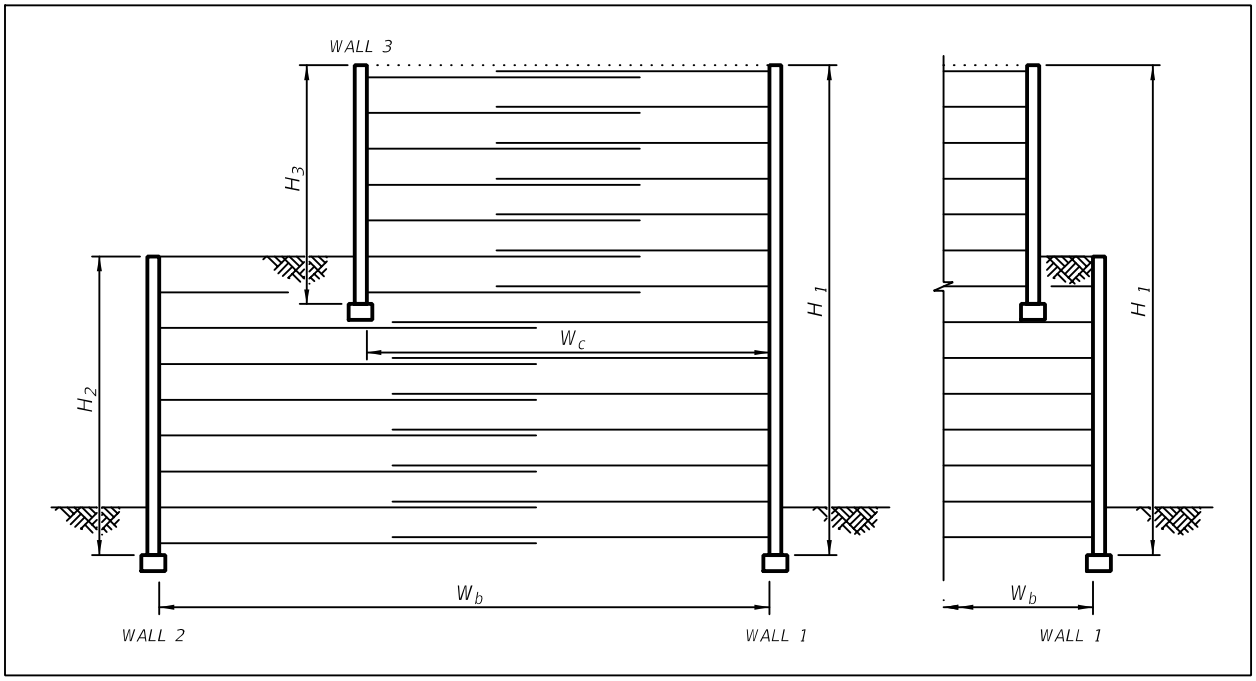

Q. For stacked walls to be considered separately for internal stability, determine the minimum offset distance "D" as shown in Figure 3.13.2-9 using the following equation:

$$\mathbf{D} \geq \mathbf{H_2} \tan(\mathbf{45}^\circ - (\Phi_\mathbf{2} / \mathbf{2})) \qquad \text{[Eq. 3-1]}$$

Where:

H_2 = total height of the lower wall

Φ_2 = friction angle of the reinforced backfill for the lower wall

Figure 3.13.2-9 Offset Distance For Independent Walls

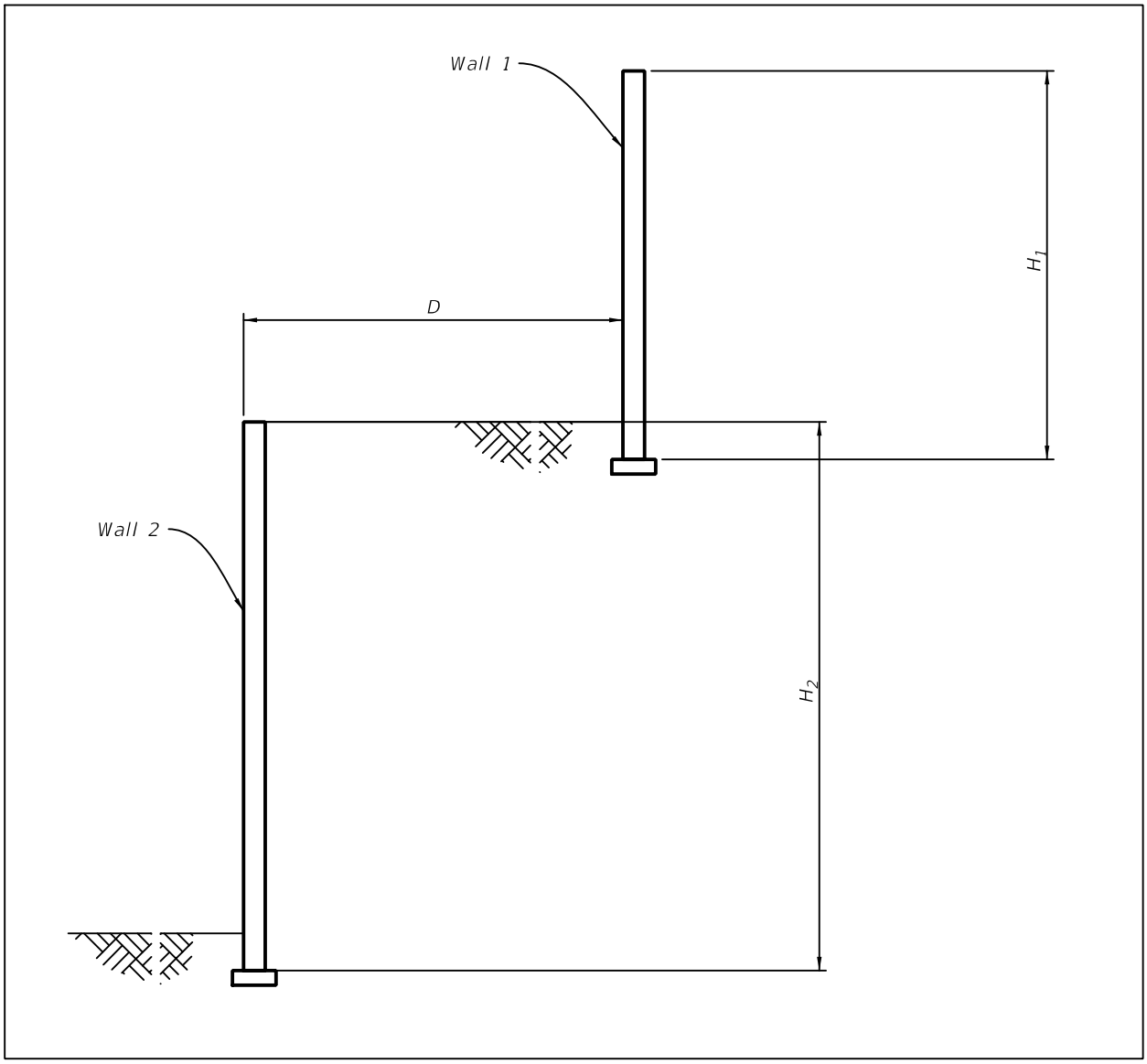

R. Whenever practical, provide a design geometry that will allow the contractor to provide a Segmental Block MSE wall in lieu of an MSE wall with reinforced concrete panels:

1. Ensure the battering of the wall face from the top to the toe will not impact maintenance berms, features in front of the wall or required offset distances.
2. Provide a minimum horizontal distance between the edge of the travel lane and the wall equal to one-half of the wall height. (The shoulder, guardrail and guardrail offsets may be within this distance.)
3. Indicate on the wall control drawings which MSE walls may be Segmental Block MSE walls.

4. Provide a TSP compatible with ***Specifications*** Section 548 for the Segmental Block Wall when it is not part of a GRS-IBS using Developmental Specifications Dev549.

3.13.3 Permanent and Temporary Sheet Pile Walls

The requirements below for the design of permanent walls also apply for the design of temporary critical and non-critical walls that are not covered by ***Standard Plans***, Index 455-500.

A. Determine the required depth of sheet pile embedment (**D**) using the procedure outlined in ***LRFD*** 11.8.4 and described in detail in ***LRFD*** C11.8.4.1 with load factors of 1.0 and the appropriate resistance factor from ***LRFD*** 11.6.3.7.

B. Determine the required sheet pile section in accordance with ***LRFD*** 11.8.5, using the normal load and resistance factors for each load case.

C. When the supported paved roadway will not be paved or resurfaced after the wall deflects, the design horizontal deflection shall not exceed 1 1/2- inches.

D. When the supported paved roadway will be paved or resurfaced after the wall deflects, or the supported roadway is unpaved, the design horizontal deflection shall not exceed 3-inches.

E. When the wall maintains the structural integrity of a utility, the design horizontal deflection shall be established on a case-by-case basis in cooperation with the utility owner.

Commentary - The above deflection limits for Cases C and D are intended to maintain confinement of the subsoils supporting the roadway. The increased limit in Case D above assumes the lost confinement will be restored by the compaction effort exerted during resurfacing. The deflection limit for Case E will vary by the sensitivity of the utility and its location in the supported embankment.

F. For permanent concrete sheet pile walls, comply with the tensile stress limits in ***LRFD*** 5.9.2.3.2b and apply the "severe corrosive conditions" to walls with an Extremely Aggressive environment classification.

Figure 3.13.3-1 Definition of Critical Temporary Walls

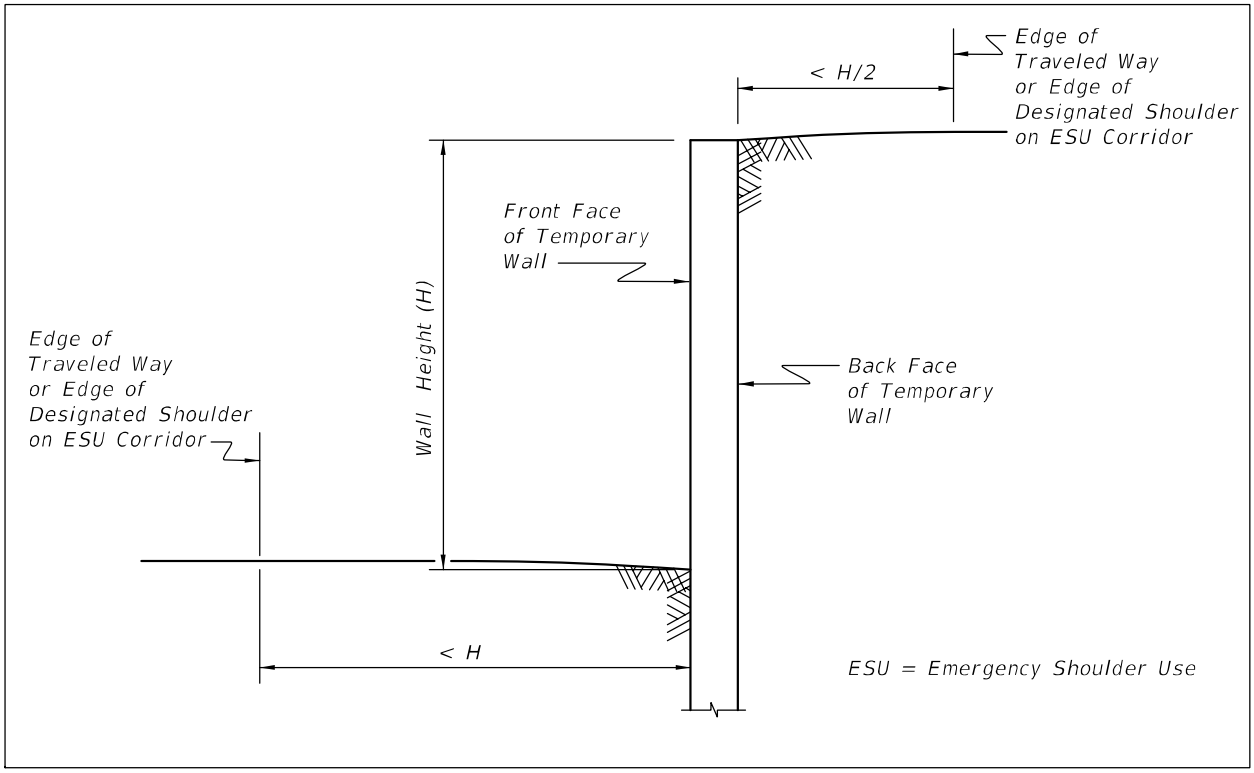

3.13.3.1 Steel Sheet Piles

A. Permanent Steel Sheet Piles

1. Design and detail the sheet pile section sizes and shapes for both cold-rolled and hot-rolled sections where possible. Include the required additional sacrificial steel thickness when establishing the sheet pile section properties shown in the plans. When bending stress controls, design the cold-rolled section using flexural section properties that are 120% of the hot-rolled section values. When deflection controls, design the cold-rolled section using the hot rolled section properties.

Modification for Non-Conventional Projects:

Delete ***SDG*** 3.13.3.1.A.1 and insert the following:

1. Include the required additional sacrificial steel thickness when establishing the sheet pile section properties shown in the plans. When bending stress controls, design the cold-rolled section using flexural section properties that are 120% of the hot-rolled section values. When deflection controls, design the cold-rolled section using the hot rolled section properties.

2. Detail wall components such as caps and tie-backs to work with both the hot-rolled and cold-rolled sections where possible.

Modification for Non-Conventional Projects:
Delete ***SDG*** 3.13.3.1.A.2.

3. See ***SDM*** 19.5.2 for plans requirements.

B. Temporary Steel Sheet Piles

For temporary critical and non-critical walls use ***Standard Plans***, Index 455-500 and implement the following:

1. See ***SDM*** 19.7.2 for plans requirements.
2. When bending stress controls, design the cold-rolled section using flexural section properties that are at least 120% of the hot-rolled section values. When deflection controls, design the cold-rolled section using the hot rolled section properties.
3. Assure that standard shapes meeting the required properties are readily available from domestic suppliers.

Modification for Non-Conventional Projects:
Delete ***SDG*** 3.13.3.1.B.3.

4. The use of hollow bars as tie-backs (prestressed soil anchors or soil nails), where grout is injected through the bar during drilling operations, is not allowed for permanent applications.

Commentary: Tests have shown that cold-rolled sheet pile sections fail in bending at about 85% of their full-section capacity, while hot-rolled sections develop full capacity. There is also some question on the availability of hot-rolled sheet piles; so, by showing the required properties for both types, the Contractor can furnish whichever is available.

*The corrosion rate of weathering steel in contact with soil and water is the same as for ordinary carbon steel. The benefits, if any, associated with the use of weathering steel are questionable in partial burial applications like sheet pile walls. Therefore, weathering steel sheet piles are to be coated in the same manner as carbon steel sheet piles in accordance with **Specifications** Section 560.*

3.13.4 GRS Walls and Abutments

*Commentary: FHWA Publication No. **FHWA-HRT-11-026 "Geosynthetic Reinforced Soil Integrated Bridge System Interim Implementation Guide"** (GRS Guide) outlines recommended practice for the design and construction of GRS-IBS. FHWA Publication **FHWA-HRT-11-027 "Geosynthetic Reinforced Soil Integrated Bridge System Synthesis Report"** provides background information and fundamental characteristics of GRS-IBS.*

A. Design GRS abutments in accordance with the ***LRFD*** methodology contained in Appendix C of the ***FHWA-HRT-11-026 "Geosynthetic Reinforced Soil Integrated Bridge System Interim Implementation Guide***, except as otherwise described in this section.

B. GRS abutments may be used to support single span bridges. GRS Abutments may also be considered for multi-span bridges with simply supported end spans if an expansion joint is located at the first and last interior pier(s).

C. Coordinate with the Drainage/Hydraulics Engineer to determine the design scour depth at the abutment with respect to the distance between abutments.

D. Detail the top of the Reinforced Soil Foundation (RSF) at the scour elevation for the 100-year storm event, the design storm or 6-inches below the finished ground surface, whichever is deeper.

E. Ensure the minimum length of the bottom layer of GRS backfill reinforcement "B" is not less than 6-feet.

F. The bottom beam seat reinforcement layer length is 4-feet to 6-feet long with a conventional 4-foot long tail. Subsequent beam seat reinforcement layer lengths are L with a conventional 4-foot tail.

G. Ensure the thickness of the RSF is 24-inches or 0.25B, whichever is greater.

H. Extend the RSF a distance of at least 24-inches or 0.25B, whichever is greater, in front of the wall facing.

I. Do not exceed the maximum vertical spacing of Geosynthetic Reinforcement as described for each on the following zones:

1. RSF = 12-inches
2. GRS Backfill = height of one course of facing block or 8-inches, whichever is less
3. Bearing Bed = 4-inches
4. Beam Seat = 4-inches
5. GRS-GAB Transition = 9-inches
6. Integrated Approach = 9-inches

J. Use actual dimensions of facing blocks and soil reinforcement thicknesses when designing, detailing, and specifying elevations in the GRS-IBS.

K. GRS Walls are designed as GRS Abutments but without the "Bearing Bed Zone" or "Beam Seat Zone" shown in the ***Developmental Standard Plans Index*** D549-025. Ensure the Abutment Width and Wingwall Lengths accommodate a whole number of facing blocks. Half width blocks may be used at the end of the wingwalls in order to accommodate the interlacing of blocks at the corner with the abutment walls

L. Based on testing by the State Materials Office, assume the following GRS backfill design values of:

1. Graded Aggregate (GAB) γ_{NAT} = 140 pcf, φ_f = 42 deg, C = 0
2. Coarse aggregate (#57 or #67 stone) γ_{NAT} = 105 pcf, φ_f = 42 deg, C = 0

M. For the RSF, use a woven geotextile listed in Section 985 of the ***Specifications*** and approved for use in GRS (Type R-1) with a minimum ultimate tensile strength of 4800 lb/ft in both the machine and cross directions and a maximum Apparent Opening Size (AOS) of 0.035-inches.

N. For GRS backfill reinforcement, use a biaxial geogrid or woven geotextile reinforcement consisting of structural geosynthetic listed in Section 985 of the ***Specifications*** and approved for use in GRS (Type R-1) with a minimum ultimate tensile strength of 4,800 lb/ft in both the machine and cross directions.

O. Ensure the width of GRS Abutments exceeds 0.8 times the sum of the GRS height and the superstructure depth.

3.14 FENDER SYSTEMS

3.14.1 General

A. Bridge fender systems serve primarily as navigation aids to vessel traffic by delineating the navigation channel beneath bridges. Fender systems must be robust enough to survive a multitude of impacts and scrapes from barge traffic, while being sufficiently flexible to absorb kinetic energy. It is expected that this type of design will minimize the potential for damage to vessels and fenders during a minor collision.

B. The Department determines when fender systems or other protective features are required and requests U.S. Coast Guard (USCG) concurrence with plan details and locations. Coordination with the Army Corps of Engineers and local government agencies is also encouraged as they may have plans that could affect the channel alignment/depth and/or type/volume of vessel traffic. A fender system will be required for the majority of bridges over navigable waterways in Florida under the jurisdiction of the USCG. In some cases, circumstances such as deep water, poor soil conditions and /or heavy vessel traffic will lead to long span designs of bridges. If the bridge span is approximately 2.5 times the required navigation channel width and the navigation channel is centered on the span, omit a fender system unless required by the USCG. Each bridge site is unique and the USCG will evaluate the Department's plans based on local characteristics such as accident history, water velocities and cross currents, geometry of the channel, etc.

   The fender system requirements for geometric layout, energy absorption, navigation lighting, clearance gauges, and maintenance access are developed by the Department’s EOR in accordance with ***SDG*** 3.14.2 and included in the Plans. The Contractor’s EOR performs the design of the fender system in accordance with the Plans, ***SDG*** 3.14.3, and the ***Specifications***. The fender system design package is submitted to the District Structures Design Office by the Contractor for review approval using the shop drawing process. A fender system design by the Contractor's EOR is not required when ***Standard Plans***, Index 471-030 is used.

Modification for Non-Conventional Projects:

Delete ***SDG*** 3.14.1.B and insert the following:

B. Provide fender system per the RFP or as required by the U.S. Coast Guard permit, whichever is more stringent.

3.14.2 EOR's Design Procedure

A. Determine if barge traffic is present using the Past Point map link below: http://www.fdot.gov/structures/pastpointmaps/vppm.shtm

1. If there is no defined Past Point at the fender location, specify the use of ***Standard Plans*** Index 471-030 unless otherwise directed by the District. See the ***Standard Plans Instructions (SPI)*** Index 471-030 for more information and plan content requirements.
2. If there is a defined Past Point at the fender location, proceed with the following steps.

B. Establish fender locations to provide the required horizontal navigational clearance. Provide an offset of 10-feet between the back of the fender system and the near face of the adjacent pier, footing or bent. Specify in the Plans that the maximum allowable deflection of the fender system is 10-feet. Do not connect fender systems to piers, footings or bents unless it is geometrically impossible to do otherwise. Establish fender flare locations at the same points directly opposite each other measured perpendicular to the centerline of the navigation channel. The minimum distance from the superstructure coping to the beginning of the fender flare is 10-feet. See ***SDM*** Chapter 24 for additional information and plan content requirements.

*Commentary: Fender flare placement requirements are based on the approval of this configuration by the USCG. The overall geometry of fender flares as shown in **SDM** Chapter 24 was also approved by the USCG and is based on fender geometries that have been used for many decades in Florida.*

C. Using Table 3.14.2-1 and the Past Point number, determine the Minimum Energy Absorption Capacity (EAC). Minimum EAC values not included in Table 3.14.2-1 must be determined on a project specific basis.

Commentary: The minimum EAC as provided in Table 3.14.2-1 is based on the fender system location and the weighted average vessel weight and speed at that location.

Table 3.14.2-1 Table of Past Points and Associated Minimum Energies

Past Point	Minimum Energy (k-ft)
9, 10, 11, 12, 16, 29, 41, 42, 43	50[1]
4, 6, 7, 13, 20, 21, 32, 33, 35, 36, 46, 49	250
1, 2, 15, 17, 18, 22, 23, 25, 26, 27, 31, 34, 37, 40, 51	500
5, 14, 24, 28, 44, 45, 47, 48, 50, 52	1,000
3, 8, 19, 30, 38, 39	Project Specific

1. Specify the use of ***Standard Plans***, Index 471-030

D. In coordination with the District, determine the Required EAC, which is defined as the Minimum EAC previously obtained from Table 3.14.2-1 plus any Additional EAC based on history of fender impacts or site-specific characteristics that increase the probability of damage to the fender system.

Commentary: Additional EAC can be considered to account for site-specific characteristics, collision history, and maintenance records. The District will coordinate with SDO, as needed, to determine the additional EAC.

Modification for Non-Conventional Projects:
Delete ***SDG*** 3.14.2.D and see the RFP.

E. Use Fiber Reinforced Polymer (FRP) Composites for all members (wales, piles, spacer blocks, catwalk, and handrail components), unless project specific conditions warrant the use of alternate materials for the piling. Coordinate with the District if alternate piling material use is required, meeting the applicable Specification Section for that pile type. Do not specify the use of timber wales except for minor repairs to existing fender systems.

F. Investigate and resolve conflicts between the proposed fender system and existing utilities or structures. Show adjacent existing utilities and structures in the plans.

G. Design Navigation Lighting and Clearance Gauge Details as follows:

1. Design navigation lighting, lateral lighting, daymarks and vertical clearance gauges for bridges over navigable waterways per ***Title 33 Code of Federal Regulations (CFR) Part 118***, the ***USCG Bridge Lighting and Other Signals Manual*** and as directed by the District. Design these same items for bridges over other waterways as directed by the District.

Modification for Non-Conventional Projects:
Delete ***SDG*** 3.14.2.G.1 and see the RFP.

2. See ***Standard Plans*** Index 510-001 Navigation Light System Details (Fixed Bridges) and the associated ***Standard Plans (SPI)*** for additional navigation and clearance gauge light requirements and details.
3. Design clearance gauges to extend from 1'-0" below Mean Low Water to the top of the fender system. Provide Plan details for the clearance gauges in accordance with ***SDM*** Chapter 24.

H. Contact the DSME for access ladder, platforms, and catwalk requirements. If catwalks are used, a minimum catwalk width of 2’-4” is recommended.

1. Design ladders and platforms per OSHA and ***Title 29 Code of Federal Regulations (CFR), Part 1910, Section 27***. The clearance between rungs and obstructions should be 12-inches but not less than 7-inches. Specify hot dip galvanized steel or other accepted materials for ladders and platforms as directed by the District.
2. Specify FRP lumber decking or FRP open grating for catwalks as directed by the District using the example General Notes as shown in ***SDM*** Chapter 24.

Modification for Non-Conventional Projects:
Delete ***SDG*** 3.14.2.H and see the RFP.

Commentary: Maintenance access to fender mounted navigation lighting is typically provided by boat or ladders and platforms from the bridge to the fender catwalk.

I. See ***SDM*** Chapter 24 for examples of applicable information and plan content requirements. In addition, list any restrictions on fender system materials and project specific information needed to complete the design as determined above.

3.14.3 Contractor's EOR Design Procedure

A. Develop designs and details for fender systems that meet the requirements of the Plans, this section, and the ***Specifications***. Design fender systems to limit deflection due to avoid contact of the fender system with adjacent piers, footings, or bents. Do not connect fender systems to piers, footings, or bents unless shown in the Plans. If a fender system is to be connected to an adjacent pier, footing or bent, or if additional stiffness of a fender system is needed locally to limit its deflection adjacent to a pier, footing or bent, design the fender system to be incrementally stiffer along its length approaching the pier, footing, or bent. Such an incremental increase in stiffness will reduce the potential for damage to, and maintenance of, the fender system. Avoid abrupt changes in the stiffness of the fender system along its length.

Commentary: Flexibility of the fender system is necessary in order for it to maintain its ability to absorb kinetic energy.

B. Use the following criteria in conjunction with the schematic fender system geometry and other requirements shown in the Plans:

- Only include wales and piles in the structural capacity of the fender system to absorb the vessel impact energy. Do not include other fender system

components in the structural capacity and energy absorption including but not limited to access ladders, platforms, catwalks, and handrails.

- Provide bolted connections with maintenance access to all fasteners. Adhesives are not allowed as a structural fastening method.
- Design and detail fenders to facilitate repair and replacement of individual components.
- Fender System height above MHW or NHW shall be the lesser of 8'-0" or 70% of the vertical clearance at MHW or NHW.
- The maximum distance between the bottom of the lowermost wale and MLW or NLW shall be 1'-0".
- The minimum size of fender piles is 12-inches.
- Maximum center-to-center pile spacing shall be determined by the designer based on the strength and continuity of the wales (not to exceed 16-feet), also considering torsional effects, strength of the connections and a maximum vertical deflection of L/200 under self-weight between piles where L is the distance between piles. For the flared sections of the fender system, use a pile spacing that is not greater than half of the pile spacing used in the tangent sections (not to exceed 8-feet). Use the same piles (size and type) for the entire fender system.
- Provide a pile cluster at each end of the fender with a minimum of three-times the stiffness of the typical pile section as detailed along the length.
- Provide a pile cluster with a minimum of two piles at each wale splice location.
- Provide a minimum clear space of 2'-6" between piles or pile clusters.
- Provide wales with a maximum height of 1'-0". All wales must be able to resist the critical lateral load (applied at mid-span) that is used to establish the minimum EAC.
- Provide an 8-inch minimum to 1'-0" maximum (nominal) open space between wales.
- Provide spacer blocks between wales at all pile locations.
- Provide a 2-inch offset between the front face of wales and the front face of spacer blocks.
- Provide all hardware and fasteners per Section 471 of the ***Specifications***.
- The use of a curved configuration for the flared section of the fender system that is comparable to the chorded configuration shown is only permitted when utilizing pre-curved wales. A Technical Special Provision is required to address the testing and fabrication requirements of pre-curved wales.
- Provide progressive transitions in pile spacings to avoid abrupt changes in lateral stiffness, with a minimum reduction of 25% span length between successive piles or pile clusters.

C. Design Criteria and Methodology for Structural Members:

1. Use the project specific design information and limitations as shown in the plans.
2. For FRP composite structural members, see the ***Structures Manual***, ***Volume 4***, Fiber Reinforced Polymer Guidelines for design criteria and additional guidance. For FRP composite members use an environmental reduction factor of 20%, applicable only for the strength limit state to account for degradation of the materials over their target service life.
3. Use a computer program that allows modeling of cantilevered piles embedded in soil representing the project's in-situ soil profile. The program must also incorporate soil strengths using P-Y curves and allow modeling of pile-to-wale interaction.

Commentary: The use of FB-MultiPier is preferred and referenced below. When using other software packages to model the fender system, select the comparable settings as appropriate for that software to emulate the settings described herein for an FB-MultiPier analysis.

4. Include capacities of, and interaction between, the wales and piles in the analysis.
5. Model the soil profile using the Report of Core Borings sheets included in the Plans and remove all soils above ½ of 100-year Scour Elevation.

Commentary: The ½ of 100-yr Scour Elevation = Existing ground elevation - (0.5 x predicted 100-year scour).

6. For FB-MultiPier, select "Full Section Properties" for the Section Type and "NonLinear" for the behavior of the main structural members. Similar selections should be used for other analysis programs.

Commentary: The analysis is a two-step process:

i. Run linear analysis to convergence to meet the energy requirement.
ii. Run non-linear analysis to determine maximum displacement and maximum wale and pile forces.

7. Determine the minimum pile tip elevation (E_{min}) as follows. Model a single cantilever pile. Load the top of the pile with a transverse load that generates the ultimate moment resistance of the pile. Determine the unstable embedment depth (E_o) by raising the pile tip elevation until pile deflections become unreasonable or the program does not converge. Determine E_{min} as the lowest of the following elevations:
   i. E_{min} = ½ of 100-year Scour Elevation - E_o - 6-feet
   ii. E_{min} = ½ of 100-year Scour Elevation - 1.2(E_o + 1-foot)
   iii. E_{min} = ½ of 100-year Scour Elevation - 10-feet
8. Design the fender system members as follows. Create a model of the fender system using the geometry shown in the Plans. For simplicity, the fender system

may be modeled as a straight fender system with no angle breaks between sections and a straight length equal to the length of the entire system along the straight and flared portions. Use pile embedments no less than E_{min} as determined above. Consider both wale and pile moment capacities to determine magnitude(s) and location(s) of the critical load(s). Create multiple load cases applying incrementally increasing lateral static load(s) located between and directly at the piles or pile clusters. Apply these concentrated load(s) for each load case within the middle unit (typically, the middle 8-feet) of the fender model. These loads may be equally distributed between the two uppermost wales.

Commentary: Increasing the pile tip embedment beyond E_{min} may have the beneficial effect of reducing deflections.

Due to the current modeling limitations of FB-MultiPier for "extra members", the following loading configuration on the two uppermost wales is suggested for analysis while considering the load case resulting in the maximum wale design forces:

1. *On the top wale, place one load at midspan between piles. (Use this member to determine maximum design forces in the wales)*
2. *On the lower wale, split the remaining load into two equal vectors and apply one each directly to the piles on the right and left of the span.*

9. Determine the fender system EAC as follows. Develop a force versus displacement diagram from the analysis, then compute the EAC based on the area under the curve. A conservative approximation by using the triangular area under the curve is acceptable. This area represents the fender system's capacity to develop the required EAC to redirect or possibly bring an errant vessel to rest. Report the minimum calculated EAC from the multiple load cases as the "EAC" in the shop drawings. This EAC must be greater than or equal to the Required EAC shown in the plans.

10. Determine the maximum fender system deflection. Report this as the fender system deflection in the shop drawings. This deflection must be less than or equal to the Maximum Allowable Fender System Deflection shown in the plans.

11. Design pile-to-wale connections and wale splices to resist member forces and reactions as determined by the analysis described above.

12. Detail the terminus of the fender system with a three-pile cluster (using the same pile section as detailed along the length of the fender system) or an alternate section having section proprieties greater than or equal to that of a composite three-pile cluster.

Commentary: This terminal three-pile cluster need not be designed to meet the Required EAC from a direct barge hit. No separate design or analysis is required for these members.

13. Perform a constructability review including manufacturing, transportation and installation.

14. Perform a Pile Installation Constructability Review by the Geotechnical Engineer to verify that the pile tips shown in the plans can be reasonably obtained and the use of any proposed penetration aids (jetting, preforming, etc.) will not jeopardize adjacent structures.

3.15 CONCRETE BOX AND THREE-SIDED CULVERT DESIGN

3.15.1 General

Use ***FDM*** 265 for culvert plans preparation in conjunction with the design requirements of this Section. Refer to ***SDG*** Chapter 1 for the box culvert concrete class (***SDG*** Table 1.4.3-1) and reinforcing steel (***SDG*** Table 1.4.2-1) cover requirements.

3.15.2 Design Method

Design new reinforced concrete culverts and extensions to existing culverts (precast or cast-in-place, four-sided or three-sided) subjected to either earth fill and/or highway vehicle loading in accordance with ***LRFD***.

Investigate the need for culvert barrel weep holes to relieve uplift pressure. When culvert barrel weep holes are determined to be necessary, show the requirement in the plans. Typical weep hole size, location, and filter materials used to intercept the flow and prevent formation of piping channels is found in ***Specifications*** Sections 400 and 410.

3.15.3 Dead Loads and Earth Pressure (LRFD 3.5, 3.11.5 and 3.11.7)

A. The dead load on the top slab consists of the pavement, soil, and the concrete slab. For simplicity in design, the pavement may be assumed to be soil.

B. Use the following design criteria in determining dead load and earth pressures:

Soil = 120 pcf
Concrete = 150 pcf
Horizontal earth pressure (At-Rest) for:

Maximum load effects = 60 pcf (assumes soil internal friction angle = 30°)

Minimum load effects = 30 pcf (50% of maximum load effects)

C. Modify vertical earth pressures in accordance with ***LRFD*** 12.11.2.2.1, Modification of Earth Loads for Soil Structure Interaction (Embankment Installations) for both box and three-sided culverts.

3.15.4 Live Load

Design reinforced concrete culverts for HL-93. Lane loading is required for the design of culverts with spans greater than 15-feet in lieu of the exemption in ***LRFD*** 3.6.1.3.3.

*Commentary: Concurrent lane loading is necessary for **LRFD** designs because the SU4 Florida Legal Load produces greater flexural moments than HL-93 without lane loading for spans exceeding 18-feet.*

3.15.5 Wall Thickness Requirements

A. Determine the exterior wall thickness for concrete culverts based on the design requirements, except that the following minimum thickness requirements have been established to allow for a better distribution of negative moments and corner reinforcement in rectangular structures:

CLEAR SPAN	MINIMUM EXTERIOR WALL THICKNESS
< 8-feet	7-inch (Precast); 8-inch. (C.I.P.)
8-feet to < 14-feet	8-inch
14-feet to < 20-feet	10-inch
20-feet and greater	12- inch

B. The interior wall thickness in multi-cell culverts must not be less than 7-inches for precast culverts and 8-inches for cast-in-place culverts.

C. Increase the minimum wall thickness by 1-inch for concrete culverts in extremely aggressive environments (3-inch concrete cover).

3.15.6 Concrete Strength and Class

Design reinforced concrete culverts for the following concrete strengths in accordance with the ***SDG*** Chapter 1:

Precast:

$\mathbf{f'_c}$ = 5,000 psi (Class II or Class III) in Slightly Aggressive Environments

$\mathbf{f'_c}$ = 5,500 psi (Class IV) in Moderately and Extremely Aggressive Environments

Cast-in-place:

$\mathbf{f'_c}$ = 3,400 psi (Class II) in Slightly Aggressive Environments

$\mathbf{f'_c}$ = 5,500 psi (Class IV) in Moderately and Extremely Aggressive Environments

3.15.7 Reinforcement

A. Reinforcement may be deformed bars, smooth welded wire reinforcement, or deformed welded wire reinforcement. Use a yield strength of 60 ksi for deformed bar reinforcement and 65 ksi for welded wire reinforcement.

B. For the maximum service load stress in the design of reinforcement for crack control, comply with ***LRFD*** 12.11.4 using the following exposure factors for ***LRFD*** 5.6.7:

γ_e = 1.00 (Class 1) for inside face reinforcement in slightly to moderately aggressive environments, and extremely aggressive environments where a minimum 3-inches of concrete cover is provided;

γ_e = 0.75 (Class 2) for outside face reinforcement in all environments.

C. Investigation of fatigue in accordance with ***LRFD*** 5.5.3.2 is not required for reinforced concrete box culverts.

Commentary: AASHTO voted to exclude box culverts from fatigue design at the May 2008 meeting.

D. Provide minimum reinforcement in accordance with ***LRFD*** 5.6.3.3 for cast-in-place culverts and simple span top slabs of precast culverts, and ***LRFD*** 12.11.5.3.2 and 12.14.5.8 for precast culverts, with the following exceptions for precast culverts with earth fill cover equal to or greater than 2-feet:

   1. Where reinforcement is distributed on both inside and outside faces, the ratio of minimum reinforcement area to gross concrete area at each face may be reduced to 0.001, but not less than the area of reinforcement required to satisfy 1.33 times the factored flexural moment for reinforcement ratios less than 0.002.
   2. Walls or slabs with a thickness equal to or less than 13-inches may contain only a single layer of reinforcement, located at the tension face when the opposite face is permanently in compression and in contact with the soil.

E. Provide distribution reinforcement as described in ***LRFD*** 9.7.3.2, transverse to the main flexural reinforcement in the bottom of the top slab of reinforced concrete box culverts for earth fill cover heights less than 2-feet as follows:

   1. For skews ≤ 60°, provide the amount of distribution reinforcement required in ***LRFD*** 9.7.3.2 first equation.
   2. For skews > 60°, provide the amount of distribution reinforcement required in ***LRFD*** 9.7.3.2 second equation.

F. Do not use shear reinforcement in concrete culverts. Design slab and wall thickness concrete shear capacity in accordance with ***LRFD*** 5.7 and 5.12.7.3.

3.15.8 Reinforcement Details

A. Design the main reinforcement in the top and bottom slabs perpendicular to the sidewalls in cast-in-place culverts and non-skewed units of precast culverts. For reinforcement requirements of skewed precast culverts, see ***SDG*** 3.15.9.

B. The minimum inside bend diameter for negative moment reinforcement (outside corners of top and bottom slabs) must satisfy the requirements of ***LRFD*** 5.10.2.3 and be not less than 4.0 db for welded wire reinforcement.

C. Top and bottom slab transverse reinforcement must be full-length bars, unless spliced to top and bottom corner reinforcement.

3.15.9 Skewed Culverts

A. Design and detail skewed precast concrete culverts with non-skewed interior units designed for the clear span perpendicular to the sidewalls and skewed end units designed for the skewed clear span.

B. For a cast-in-place concrete box culvert with a skewed end, the top and bottom slab reinforcement will be "cut" to length to fit the skewed ends. The "cut" transverse bars have the support of only one culvert sidewall and must be supported at the other end

by edge beams (headwall or cutoff wall). See ***Standard Plans*** Index 400-289 for layout details.

Commentary: Precast concrete culverts with skewed ends usually cannot use edge beams as stiffening members because of forming restrictions. The transverse reinforcement must be splayed to fit the geometry of the skew. This splaying of the reinforcement will increase the length of the transverse bars and, more importantly, the design span of the end unit. For small skews, the splayed reinforcement is usually more than adequate. However, large skews will require more reinforcement and may require an increased slab thickness or integral headwalls.

3.15.10 Deflection Limitations (LRFD 2.5.2.6.2)

Ensure that top slab deflection due to the live load plus impact does not exceed 1/800 of the design span. For culverts located in urban areas used in part by pedestrians, this deflection must not exceed 1/1,000 of the design span. Determine deflections in accordance with ***LRFD*** 2.5.2.6.2. Gross section properties may be utilized.

3.15.11 Analysis and Foundation Boundary Conditions

A. Analyze culverts using elastic methods and model the cross section as a plane frame (2D) using gross section properties.

B. For box culverts restrain the bottom slab by any of the following methods:

   1. Fully pinned support at one corner and pin-roller support at the opposite corner;
   2. Vertical springs (linear-elastic or non-linear soil springs) at a minimum of tenth points and a horizontal restraint at one corner;
   3. Beam on elastic foundation and a horizontal restraint at one corner. Obtain the modulus of subgrade reaction from the Geotechnical Engineer when performing the more refined analyses in 2. and 3.

C. Three-sided culverts on spread footings shall be designed at critical sections for the governing case of either, a fully pinned support condition and a pin-roller support condition. A refined analysis of the pin-roller support condition is permitted if soil springs (linear-elastic or non-linear) are substituted for the horizontal supports allowing for 1-inch movement at the maximum horizontal reaction for the governing factored load case.

Commentary: Designers of three-sided culverts typically compute moments, shears, and thrusts based on fully pinned support conditions that are able to resist horizontal forces and prevent horizontal displacements. These boundary conditions may not be appropriate for most foundations in Florida. Fully pinned support conditions could be used if site and construction conditions are able to prevent any horizontal displacement of frame leg supports. Such a condition may exist if footings are on rock or pile supported, and frame legs are keyed into footings with adequate details and construction methods.

3.15.12 Span-to-Rise Ratios

Span-to-rise ratios that exceed 4-to-1 are not recommended. As span-to-rise ratios approach 4-to-1, frame moment distribution is more sensitive to support conditions, and positive moments at midspan can significantly exceed computed values even with relatively small horizontal displacement of frame leg supports. If it is necessary to use a three-sided frame with a span-to-rise ratio in excess of 4-to-1, the structure must be analyzed for midspan positive moment using pin-roller support conditions.

3.15.13 Load Rating Requirements

A. Load rate bridge-size culverts (see definition in ***FDM*** 265,) in accordance with ***SDG*** Chapter 1. Calculations must be signed and sealed by a professional engineer currently approved to perform Minor Bridge Design under Rule 14-75 of the Florida Administrative Code.

B. Cast-in-place culverts load ratings must be performed by the licensed professional engineer designer. Show the load rating summary in the Contract Plans. Precast culverts must be load rated by the Contractor's Engineer of Record (see definition in the ***Specifications*** Section 1-3) and the load rating shown on the approved shop drawings.

3.16 NOISE WALL DESIGN

3.16.1 Scope (LRFD 15.1)

Add the following to ***LRFD*** 15.1:

Use the general requirements of ***FDM*** 264 in conjunction with the structural design requirements of ***LRFD*** as modified by the FDOT ***Structures Design Guidelines***.

3.16.2 General Features - Panel Height (LRFD 15.4) and Post Spacing

Nominal post spacing shall be a minimum of 10-feet and a maximum of 20-feet. Actual post spacing at corner posts may vary slightly to optimize the use of standard panel lengths.

Add the following section to ***LRFD*** 15.4:

Total wall heights range from a minimum of 12-feet to a maximum of 22-feet. The height of individual precast panels must be a minimum of 6-feet, except for the following: the panel height may be a minimum of 4-feet when required due to low clearance conditions or when graphics must be accommodated in walls with total heights between 12-feet and 14-feet Where fire hose access holes are required, the bottom panel must be at least 6-feet high to allow forming of the access hole. Where an access door is required, the bottom panel must be a minimum of 8-feet high to allow forming and installation of a 6-foot high door.

3.16.3 General Features - Concrete Strength and Class (LRFD 15.4)

Add the following section to ***LRFD*** 15.4:

All concrete noise wall components shall be Class IV as defined in ***Specifications*** Section 346. The concrete cover on all reinforced and prestressed concrete designs shall be per ***SDG*** Table 1.4.2-1.

3.16.4 Wind Loads (LRFD 3.8.1 and 15.8.2)

See ***SDG*** 2.4.1 for wind loads on ground mounted noise walls.

3.16.5 Vehicular Collision Forces (LRFD 15.8.4)

In ***LRFD*** 15.8.4, replace paragraphs 4 through 9 with the following:

On flush shoulder roadways, locate noise walls outside the clear zone unless shielded, and as close as practical to the right-of-way line. On urban curbed roadways, the front face of the noise wall posts shall be a minimum of 4-feet behind the face of the curb. Additional setbacks may be required to meet minimum sidewalk requirements. Noise walls may be combined with traffic railings on a common foundation if the combination meets the crash test requirements of the ***Manual for Assessing Safety Hardware (MASH)*** Test Level 4 criteria.

Noise walls should not be located on bridge structures where feasible alternative locations exist. Noise walls on bridge structures cause a disproportionate increase in bridge cost because of strengthening of the deck overhang and exterior girder. In addition, noise walls on bridges interfere with normal maintenance inspection access and detract from the aesthetic quality of the structure. See ***Standard Plans***, Index 521-509 and 521-510 for acceptable crash tested 8-feet bridge and retaining wall mounted noise walls.

Traffic railing mounted noise walls and combination traffic railing / noise walls must meet the requirements of ***FDM*** 215. The criteria specified in ***LRFD*** 15.8.4 may be used to design test specimens for crash testing.

3.16.6 Foundation Design (LRFD 15.9)

Add the following to ***LRFD*** 15.9.1:

Use the FDOT ***Geotechnical Design Manual***, Appendix B for design of auger cast piles.

3.16.7 Lateral Earth Pressures (LRFD 3.11.5.10)

In the first and second sentence of ***LRFD*** 3.11.5.10, change "may be used" to "shall be used".

3.17 CONCRETE DRAINAGE STRUCTURES

3.17.1 General

Use ***FDM*** 916 for drainage structure plans preparation in conjunction with the design requirements of this Section for special designs not included in the ***Standard Plans***. Refer to ***SDG*** Chapter 1 for the box culvert concrete class (***SDG*** Table 1.4.3-1) and reinforcing steel (***SDG*** Table 1.4.2-1) cover requirements for non-standard drainage structures.

3.17.2 Design Method

Design new reinforced concrete drainage structures subjected to either earth fill and/or highway vehicle loading in accordance ***LRFD***.

3.17.3 Dead Loads and Earth Pressure (LRFD 3.5, 3.11.5 and 3.11.7)

A. The dead load on the top slab consists of the pavement, soil, slab self weight, and riser section with grates or covers if applicable. For simplicity in design, the pavement may be assumed to be soil.

B. The following criteria shall be used in determining dead load and earth pressures for design:

   Soil = 120 pcf

   Concrete = 150 pcf

   Horizontal earth pressure (At-Rest) for:

      Maximum load effects = 60 pcf (assumes soil internal friction angle = 30°)

      Minimum load effects = 30 pcf (50% of maximum load effects)

C. Do not modify vertical earth pressures in accordance with ***LRFD*** 12.11.2.2.1, Modification of Earth Loads for Soil Structure Interaction (Embankment and Trench Conditions).

D. Use abutment conditions for determining live load surcharge earth pressures for all structures within the clear zone.

3.17.4 Live Load

Design drainage structures within the clear zone for HL-93, except that structures located behind curb or paved shoulders need only meet the Strength Limit State for load combinations with HL-93. Lane loading is required for design of structures with spans greater than 15-feet in lieu of the exemption in ***LRFD*** 3.6.1.3.3.

*Commentary: Concurrent lane loading is necessary for **LRFD** designs because the SU4 Florida Legal Load produces greater flexural moments then HL-93 without lane loading for spans exceeding 18-feet.*

3.17.5 Hydrostatic Loading

Unless more refined hydraulic data is available, design drainage structures located in predominantly granular soils, for a maximum differential hydrostatic head of 10-feet when determining the external soil pressures. For structures located in cohesive soils consider fully saturated soils for the full height of the structure.

Commentary: Most soils in Florida can be considered cohesionless, especially for embankment construction where the deepest drainage structures are usually located. Due to the high permeability of these soils, any condition resulting in a differential water elevation exceeding 10-feet is considered very temporary and does not warrant further

investigation. For structures located in cohesive soils or permanently submerged conditions the hydrostatic loading duration warrants a more rigorous analysis.

3.17.6 Wall Thickness Requirements

A. Determine the wall thickness for rectangular drainage structures based on the design requirements, except that the following minimum thickness requirements have been established to allow for constructability and better distribution of reinforcement:

Clear Span	Minimum Wall Thickness
≤ 6-feet	6-inches (Precast); 8-inches. (C.I.P.)
> 6-feet to ≤ 10-feet	8-inches
≥ 10-feet	9 inches

B. A single layer of reinforcing is permitted for 8-inch thick walls when the reinforcing is located in the center third of the wall thickness.

C. Increase the minimum wall thickness for structures located in extremely aggressive environments to accommodate a 3-inches concrete cover.

3.17.7 Slab Thickness Requirements

A. Determine the slab thickness for drainage structures based on the design requirements, except that the following minimum thickness requirements have been established to allow for constructability and better distribution of reinforcement:

Clear Span	Minimum Slab Thickness
≤ 6-feet	6-inches (Precast); 8-inches (C.I.P.)
> 6-feet to ≤ 10-feet	8-inches
≥ 10-feet	9-inches

B. A single layer of reinforcing is permitted for 12-inch thick slabs when the reinforcing is located adjacent to the tension face under permanent loading (underside for top slabs, upper face for bottom slabs).

C. Increase the minimum slab thickness for structures located in extremely aggressive environments to accommodate a 3-inch concrete cover.

3.17.8 Concrete Strength and Class

Design drainage structures for the following concrete strengths:

Precast:

f'c = 3,400 (Class II) or 4,000 psi (ASTM C478) in Slightly and Moderately Aggressive Environments;

f'c = 5,500 psi (Class IV) in Extremely Aggressive Environments.

Cast-in-place:

f'c = 3,400 psi (Class II) in Slightly and Moderately Aggressive Environments;

f'c = 5,500 psi (Class IV) in Extremely Aggressive Environments.

Designation of an Extremely Aggressive Environments for drainage structures must be approved by the District Drainage Engineer and a note added to the plans in accordance with ***FDM***.

Modification for Non-Conventional Projects:
Delete last paragraph of ***SDG*** 3.17.8 and see the RFP for requirements.

3.17.9 Reinforcement

A. Reinforcement shall be either deformed bar reinforcement, welded wire reinforcement (plain), deformed welded wire reinforcement or structural fiber reinforcing. Use a yield strength of 60 ksi for deformed bar reinforcement, 65 ksi for smooth welded wire reinforcement and 70 ksi for deformed welded wire reinforcement. Structural fiber reinforcing is limited to circular structures with a maximum inside diameter of 12-feet and rectangular structures with a maximum inside wall length of 6-feet.

B. The maximum service load stress in the design of reinforcement for crack control shall be in accordance with ***LRFD*** 12.11.4 using the following exposure factors for ***LRFD*** 5.6.7:

   γ_e = 1.00 (Class 1) for inside face reinforcement in slightly to moderately aggressive environments, and extremely aggressive environments where a minimum 3 inches of concrete cover is provided;

   γ_e = 0.75 (Class 2) for outside face reinforcement in all environments.

C. Investigation of fatigue in accordance with ***LRFD*** 5.5.3.2 is not required for buried reinforced concrete drainage structures.

Commentary: AASHTO voted to exclude box culverts from fatigue design in May 2008. This determination has been extended to other buried drainage structures by the Department.

D. Minimum reinforcement shall be provided in accordance with ***LRFD*** 5.6.3.3 except for structures using structural fiber reinforcing.

E. Provide distribution reinforcement as described in ***LRFD*** 9.7.3.2, transverse to the main flexural reinforcement in the bottom of the top slab of rectangular drainage structures for earth fill cover heights less than 2-feet.

F. Do not use shear reinforcement in concrete drainage structures. Slab and wall thicknesses must be designed to have adequate concrete shear capacity in accordance with ***LRFD*** 5.7 and 5.12.7.3.

3.17.10 Structural Fiber Reinforcement

A. Design structures utilizing structural fiber reinforcement in accordance with Section 18 of the *fib* Model Code 2020 (CEB-FIP). As an alternative to the *fib* Model Code 2020 design method and testing criteria, certain minor precast structure types can utilize fiber reinforced concrete design methods based on Evaluation Reports (ER) from providers accredited to ***ISO/IEC 17065*** (including ICC-ES and IAPMO ES). The residual strength of fiber–reinforced concrete test beams will be determined in accordance with ASTM C 1399 (Standard Test Method for Obtaining Average Residual-Strength of Fiber-Reinforced Concrete).The walls and bottom slabs of the following structure types can be designed using an equivalent strength basis when Evaluation Reports are provided to the EOR:

   1. Type P Structures Bottoms (***Standard Plans*** Index 425-010);
   2. Manhole Risers, Grade Rings and Conical Tops equal or less than 4'-6" diameter (***Standard Plans*** Index 425-001 Type 8)
   3. Drainage Inlet Bottoms with inside wall lengths equal or less than 4'-6" (***Standard Plans*** Indexes 425-022, 425-023, 425-030-Types 1 & 2, and 425-031 to 425-041);
   4. Ditch Bottom Inlets Types A, B, C, D, E, F & J (***Standard Plans*** Index 425-050, 425-051, 425-052, 425-053 & 425-054);
   5. U-Type Concrete Endwalls (***Standard Plans*** Index 430-011);
   6. Flared End Sections (***Standard Plans*** Index 430-020).

B. Plain carbon steel fibers are allowed in slightly and moderately aggressive environments. Galvanized, stainless steel, or carbon FRP fibers are permitted in all environmental classifications. Other non-corrosive fiber materials such as basalt may be considered when approved by the State Materials Office. Polymer fibers are not permitted as primary structural reinforcement for buried structures due to the potential for long term creep.

C. A Technical Special Provision (TSP), reviewed and approved by the State Materials Office, will be required for the Contract Documents to establish and verify the characteristic material properties such as the residual flexural tensile strength corresponding to the load-crack mouth opening displacement (CMOD) of the fiber-reinforced concrete mix design. For precast concrete elements, producers must submit shop drawings for design approval to the State Drainage Engineer based on an approved FRC Mix Design and include a technical specification to establish and verify the characteristic material properties in lieu of a TSP. These documents and any other necessary guidelines for production and quality control will be maintained as an addendum to the producer's Quality Control Plan.

D. These requirements are intended for wet-cast concrete only.

3.17.11 Deflection Limitations (LRFD 2.5.2.6.2)

Top slab deflection due to the live load plus impact must not exceed 1/800 of the design span, except on culverts located in urban areas used in part by pedestrians, where the

ratio must not exceed 1/1,000 of the design span. Deflections shall be determined in accordance with ***LRFD*** 2.5.2.6.2 and may utilize gross section properties.

3.17.12 Analysis and Boundary Conditions

A. Analyze drainage structures using elastic methods and model the cross section as a plane frame or plate model (2D) using gross section properties.

B. For plane frame models of structure walls, assume that the presence of pipe openings increases the flexural moments at the corners by 10% and the midspan flexural moments by 25%.

Commentary: Finite Element Analysis by the SDO investigating several configurations of rectangular structures concluded that pipe openings in opposite or adjacent faces resulted in localized peak moment increases of approximately 10% of the corner moments and 20% to 30% of the midspan moments.

C. In lieu of a more refined analysis the following equation may be used for determining the maximum flexural moments ($M_{x.max}$) for horizontal reinforcing in the walls of rectangular structures with different aspect ratios, assuming uniform pressure distribution:

$M_{x.max} = \psi_s * w * L_{long}^2 / K_m$ (lbf-ft)

where:

ψ_s = Moment reduction factor for locations adjacent to slabs

w = Uniform lateral earth pressure (psf)

L_{long} = Clear distance between walls (longest span) (ft.)

L_{short} = Clear distance between walls (shortest span) (ft.)

K_m = Flexural moment coefficient from the following table:

Wall Aspect Ratio[1] (L_{short}/L_{long})	Positive Flexural Moment Coefficient (K_m, Mid Span)	Negative Flexural Moment Coefficient (K_m, Corners)
0.1	20.3	13.2
0.2	18.2	14.3
0.3	16.9	15.2
0.4	16.2	15.8
0.5	16.0	16.0
0.6	16.2	15.8
0.7	16.9	15.2
0.8	18.2	14.3
0.9	20.3	13.2
1.0	24.0	12.0

1. Interpolation for determining K_m with other aspect ratios is permitted.

Flexural moments along the horizontal axis of structure walls, may be reduced adjacent to slab connections when hinged boundary conditions are assumed. In lieu of a more refined analysis the following values may be used for design:

Height Above Slab/Span[1] (y/L_{long})	Flexural Moment Reduction Factor (ψ_s , Mid Span)
> 0.50	1.00
0.45	0.90
0.30	0.75
0.15	0.50

1. Interpolation for determining ψ_s with other aspect ratios is permitted.

The minimum flexural moment for the vertical reinforcing in structure walls without full moment connections to bottom or top slabs must be at least 50% of the maximum midspan moment:

$M_{y.max} = 0.50*w*L_{long}^2/K_m$ (lbf-ft)

D. For walls with length to height ratios less than 1.2, and bottom slabs with length to width ratios less than 1.5, two-way bending may be assumed. Unless the wall reinforcing is fully developed in the adjoining slab, the boundary conditions at these connections must be modeled as pinned or hinged connections.

3.18 PERIMETER WALL DESIGN

3.18.1 Scope (LRFD 15.1)

Design all perimeter walls using the general requirements of ***FDM*** 264. Design precast concrete perimeter walls and the foundations of masonry perimeter walls using the structural design requirements of ***LRFD*** Chapter 15 as modified by the ***SDG***. Design masonry perimeter walls using the structural design requirements of ***ACI CODE-530/530.1***. Use ***Standard Plans*** Index 534-250 unless a project specific design is required.

3.18.2 General Features - Panel Height (LRFD 15.4) and Post Spacing

Typical post spacing measured from centerline to centerline of posts is 20-feet. Actual post spacing at corner posts may vary slightly to optimize the use of standard panel lengths. Use post spacings less than 20-feet only at changes in horizontal alignment, wall terminations or to accommodate steep grades.

Add the following section to ***LRFD*** 15.4:

Total wall height above the ground line is limited to 8-feet. Precast walls may be built using two equal height panels or a single full height panel.

3.18.3 General Features - Concrete Strength and Class (LRFD 15.4)

Add the following section to ***LRFD*** 15.4:

All precast concrete perimeter wall components shall be Class IV as defined in ***Specifications*** Section 346. The concrete cover shall be per ***SDG*** Table 1.4.2-1.

3.18.4 Wind Loads (LRFD 3.8.1 and 15.8.2)

See ***SDG*** 2.4.1 for wind loads on ground mounted perimeter walls.

3.18.5 Vehicular Collision Forces (LRFD 15.8.4)

In ***LRFD*** 15.8.4, replace paragraphs 4 through 9 with the following:

On flush shoulder roadways, locate perimeter walls outside the clear zone, and as close as practical to the right-of-way line. On urban curbed roadways, the front face of the perimeter wall posts shall be a minimum of 4-feet behind the face of the curb. Additional setbacks may be required to meet minimum sidewalk requirements.

3.18.6 Foundation Design (LRFD 15.9)

Add the following to ***LRFD*** 15.9.1:

Use the FDOT ***Geotechnical Design Manual***, Appendix B for design of auger cast piles.

3.18.7 Lateral Earth Pressures (LRFD 3.11.5.10)

In the first and second sentence of ***LRFD*** 3.11.5.10, change "may be used" to "shall be used".

3.19 CONNECTIONS BETWEEN PRECAST ELEMENTS

A. Make connections between individual precast elements using reinforced and/or posttensioned closure pours, grouted reinforced pockets or voids, or commercially available reinforcing steel mechanical couplers, e.g., grouted sleeve couplers.

B. Form voids for making connections between precast elements using removable corrugated ducts or pipes or wedge shaped forms.

C. Commentary: Although these requirements are written for connections that are primarily used between precast substructure elements, the concepts and requirements are also applicable to superstructure elements. See also ***SDM*** Chapter 25.

4 SUPERSTRUCTURE – CONCRETE

4.1 GENERAL

This Chapter contains information related to the design, reinforcing, detailing, and construction of concrete components. It also contains deviations from ***LRFD*** that are required in such areas as deck reinforcing and construction, pretensioned concrete components, and post-tensioning design and detailing.

A. Only the structurally nonredundant concrete bridge superstructure systems listed below are permitted:

   1. Non-framed non-integral straddle pier caps.
   2. Integral pier caps.
   3. Two I-beam cross sections when approved by the SSDE. See ***SDG*** 10.2 for pedestrian bridges.
   4. Arch bridges when approved by the SSDE.

Modification for Non-Conventional Projects:
Delete ***SDG*** Section 4.1.A and replace with the following: A. Nonredundant concrete bridge superstructure systems are not permitted except for integral pier caps and non-framed non-integral straddle pier caps. See ***SDG*** 10.2 for pedestrian bridges.

B. For interface shear transfer or shear friction requirements, see section ***SDG*** 1.15

4.1.1 Concrete Cover

See ***SDG*** Table 1.4.2-1 Minimum Concrete Cover in ***SDG*** 1.4 Concrete and Environment.

4.1.2 Reinforcing Steel (LRFD 5.4.3)

See ***SDG*** 1.4.1 for Reinforcing Steel requirements.

4.1.3 Girder Transportation (LRFD 5.5.4.3)

The EOR is responsible for investigating the feasibility of transportation of heavy, long and/or deep girders. In general, the EOR should consider the following during the design phase:

A. Whether or not multiple routes exist between the bridge site and a major transportation facility.

B. That the transportation of girders longer than 145-feet or weighing more than 160,000 pounds requires coordination through the Department's Permit Office during the design phase of the project. Shorter and/or lighter girders may be required if access to the bridge site is limited by roadway(s) with sharp horizontal curvature or weight restrictions.

C. Routes shall be investigated for obstructions for girder depths exceeding 9'-0", or if posted height restrictions exist on the route.

D. Size precast sections of horizontally curved spliced U-girders such that the total hauling width does not exceed 16-feet.

E. When the use of heavy, long and/or deep girders is being evaluated and transportation of the girders over land is required, contact at least one prestressed girder manufacturer, and ask for their input regarding girder transportation. At least one combination of viable casting location and transportation route is required.

Commentary: Length of travel significantly increases the difficulty to transport girders. Alternative transportation should be considered as well for heavy, long and/or deep girders. Please note that transportation of girders weighing more than 160,000 pounds may require analysis by a Specialty Engineer, bridge strengthening, or other unique measures.

4.1.4 Shear Design (LRFD 5.7.3)

A. When calculating the shear capacity, use the area of stirrup reinforcement intersected by the distance $\mathbf{0.5d_v cot}\theta$ on each side of the design section, as shown in ***LRFD*** Figure C5.7.3.3-2.

B. Use twin leg closed stirrups or multiple sets of twin leg closed stirrups as shear reinforcement in beam members except where open stirrups are required to avoid conflicts with other components, e.g., in pile bent caps directly over the tops of the piles and in post-tensioned beams where access is required for PT tendon installation. Do not use single leg stirrups.

C. Use the following methodology to determine the transverse spacings of shear reinforcement in beam members:

Nominal Shear Stress Range	**Maximum Transverse Spacing of Stirrup Legs S_w as shown in Figure 4.1.4-1**
$v_n \le 0.08\sqrt{f'_c}$	$S_w \le$ 42-inches
$0.08\sqrt{f'_c} < v_n \le 0.16\sqrt{f'_c}$	$S_w \le d_v$ or 24-inches, whichever is less
$v_n > 0.16\sqrt{f'_c}$	$S_w \le 0.5d_v$ or 12-inches, whichever is less

Where: v_n = Nominal shear stress = $\frac{\mathbf{V_u}}{\boldsymbol{\phi} \mathbf{b_v d_v}}$

V_u = Factored shear force per ***LRFD*** Chapter 5

b_v = Effective web width per ***LRFD*** Chapter 5

d_v = Effective shear depth per ***LRFD*** Chapter 5

f'_c = Compressive strength of concrete per ***LRFD*** Chapter 5

ϕ = Resistance factor per ***LRFD*** Chapter 5

Commentary: Beam members with transverse stirrup spacings exceeding these requirements can experience cracks which initiate at the interior of the member and propagate to the surface.

Figure 4.1.4-1 Shear Reinforcement Layout in Beam Members

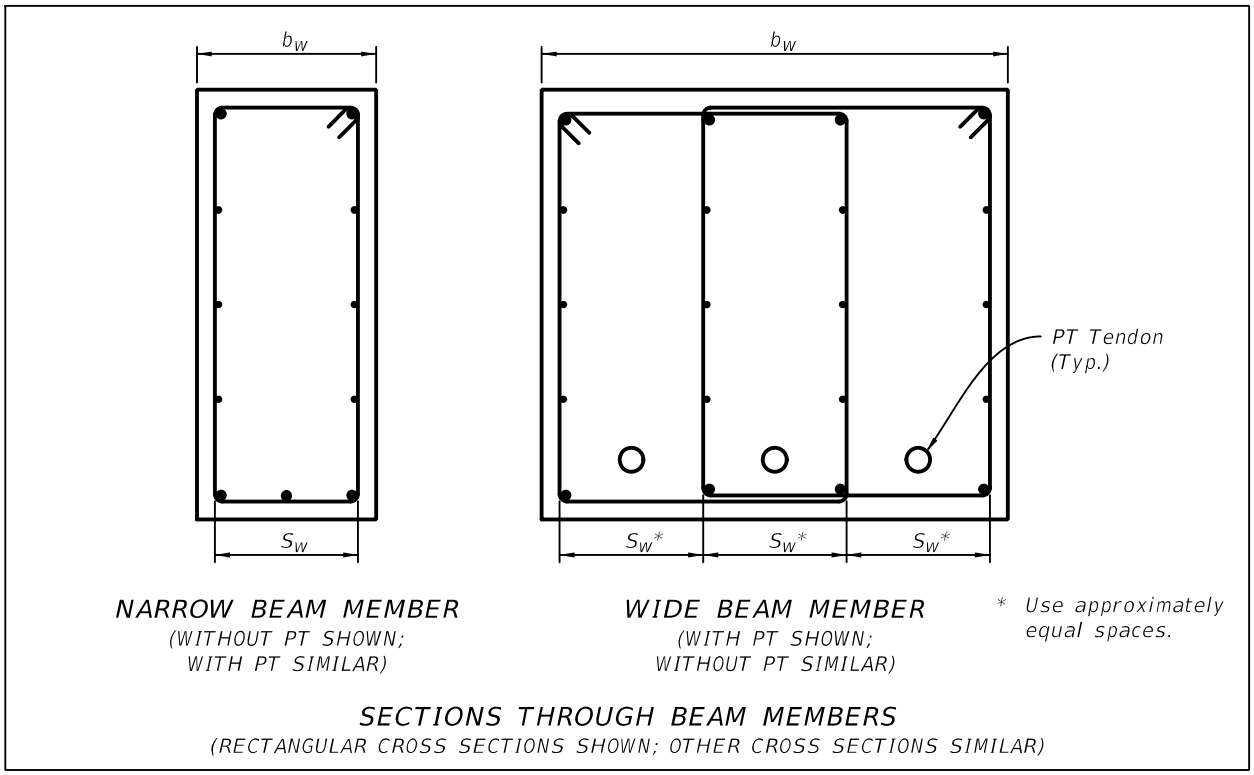

4.1.5 Minimum Reinforcement Requirements (LRFD 5.6.3.3)

A. Apply the minimum reinforcement requirements of ***LRFD*** 5.6.3.3 to all sections being analyzed except at the ends of simply supported bridge girders.

B. The length of the girder from the simply supported end for which the minimum reinforcement will not be checked is defined below.

   1. Do not check the minimum reinforcing for prestressed concrete girders for a distance equal to the bonded development length (e.g. for 270 ksi strand with $\mathbf{f_{pe}}$ = 157 ksi, 1/2-inch diameter, strand yields 11.0-feet and 0.6-inch diameter, yields 13.2-feet) from the ends of the simply supported girder.

   2. Do not check the minimum reinforcing for reinforced concrete girders for a distance equal to 2.5 times the superstructure depth from the centerline of bearing of the simply supported end.

C. For span lengths less than 27-feet for simple span bridges, check the minimum reinforcement at mid-span.

Commentary: The use of a minimum reinforcement check was developed to ensure a ductile failure mode for lightly reinforced deep beams. Bridge girders are slender

*and do not generally meet the definition of a deep beam. Deep beams are defined as members having a clear span less than 4 times the overall depth (as defined by **ACI CODE-318**). The use of the minimum reinforcing check has evolved in the specifications from checking the critical section to checking every section. This evaluation at every section is justified in buildings where heavy concentrated loads may be present near supports. In bridges, this condition does not exist and the critical section for bending is not near the support for simply supported bridge beams. The ends of simply supported bridge girders are dominated by shear, not bending moment. At these locations it is unnecessary to check minimum reinforcing for bending in an area dominated by shear.*

4.1.6 Dapped Beam Ends

Dapped beam ends are not permitted.

Commentary: Dapped beam details are inherently prone to cracking due to the abrupt change in cross-section and the resulting complex flow of internal stresses.

4.1.7 Continuity of Precast Beams

A. Use only post-tensioning to splice beam segments within simple spans and/or to establish continuity between adjacent spans except for channel span units as defined below. The post-tensioning must extend the full length of single simple spans, and the full length of continuous units composed of adjacent spans.

Commentary: Proposed methods other than post-tensioning that are used to establish live load continuity, such as link slabs and continuous end diaphragms, result in compromised strength and durability. Due to long term creep and camber growth, these connections can result in overstressing of the beams, cracked end diaphragms and poor deck performance. Additionally, the use of such details on grade separation structures complicates the replacement of the beams and decks that are sometimes required due to over-height vehicle hits.

B. For channel span units subject to vessel impact loads in excess of 1,500 kips, establish continuity between adjacent spans using one of the following techniques:

   1. Use full or partial length post-tensioning.
   2. Use prestressed simple span concrete beams made continuous only for live load. In this method, the maximum span length is 200-feet, and the beams are required to be a minimum of 90-days old when the deck is cast to minimize detrimental consequences of time dependent effects.

C. If prestressed simple span concrete beams made continuous for live load are used, provide the following:

   1. Provide beams of the same type, depth and spacing for all spans within the main span unit.
   2. Provide full depth continuity diaphragms monolithic with the bridge deck at all internal supports.

3. Provide bottom tension ties between beam ends in adjacent spans over the interior supports. Design the ties using the simplified method per ***LRFD*** 5.12.3.3.4 and including the effects of Temperature Gradient per ***SDG*** 2.7.2.
4. Design deck reinforcement in the negative moment regions to resist the force effects due to live load, superimposed dead load and temperature.
5. Show a deck and diaphragm casting sequence in the plans using one of the following options:

   Option 1:

   a. Cast the positive moment regions of the deck after the beams have reached a minimum age of 90-days. The individual positive moment deck pours in a continuous unit may be made concurrently or sequentially.

   b. Cast the continuity diaphragms and the associated negative moment regions of the deck without a construction joint between them after the positive moment regions of the deck have cured for a minimum of 72-hours. The individual combination diaphragm and deck pours in a continuous unit may be made concurrently or sequentially.

   Option 2:

   a. Cast the deck on one of the end spans of the continuous unit up to the first continuity diaphragm with the pour allowed to proceed in either direction after the beams have reached a minimum age of 90-days.

   b. Show the deck on the second span and the first continuity diaphragm to be cast without a construction joint between the deck and the diaphragm. Show the deck pour starting at the far end of the second span, proceeding towards the end span and culminating with pouring of the continuity diaphragm after the end span has cured for a minimum of 72-hours.

   c. Repeat step "b" for successive spans in the continuous unit.

4.1.8 Crack Control

A. In ***LRFD*** 5.6.7, change the maximum service limit state stress (f_{ss}) to 0.80 F_y for steel reinforcement with F_y < 75 ksi. Use a Class 1 exposure condition for all location/ components, except those listed as requiring a Class 2 exposure condition. Any concrete cover thickness greater than the minimum required by ***SDG*** Table 1.4.2-1 may be neglected when calculating d_c and h, if a Class 2 exposure condition is used. A Class 2 exposure condition may be used in lieu of a Class 1 exposure condition, when the minimum concrete cover required by ***SDG*** Table 1.4.2-1 is used. See ***SDG*** 1.4.4 for Mass Concrete requirements.

B. Check tension related to transverse analysis in Florida Slab Beam and other prestressed slab beam/unit superstructures using Service I Limit State.

*Commentary: This requirement is similar to the **LRFD** requirement for checking tension related to transverse analysis of segmental girders.*

4.1.9 Expansion Joints

Expansion joints within spans are not allowed (e.g., 1/4 point and midspan hinges).

Commentary: Hinges within a span are prone to severe cracking and excessive deformations related to long-term creep and shrinkage.

4.2 DECKS (LRFD 5.12.1 AND 9.7)

4.2.1 Bridge Length Definitions

For establishing profilograph and deck thickness requirements, bridge structures are defined as Short Bridges or Long Bridges. The determining length is the length of the bridge structure measured along the Profile Grade Line (PGL) from front face of backwall at Begin Bridge to front face of backwall at End Bridge of the structure. Based upon this established length, the following definitions apply:

A. Short Bridges: Bridge structures less than or equal to 100-feet in PGL length.

B. Long Bridges: Bridge structures more than 100-feet in PGL length.

Commentary: The dimension of 100-feet is based on the shortest length for which a California-type bridge profilograph can be effectively used.

4.2.2 Deck Thickness Determination

A. For new construction of "Long Bridges" except pedestrian bridges and movable spans, the minimum thickness of bridge decks cast-in-place (C.I.P.) on beams or girders is 8½-inches. The 8½-inch deck thickness includes a 2½-inch cover on the top of the deck, the top one-half inch of which is a sacrificial thickness. The upper one-quarter inch of this sacrificial thickness will be planed-off per ***Specifications*** Section 400; consider this as a temporary dead load that will be removed. The lower one-quarter inch of the sacrificial deck thickness may or may not be planed-off per ***Specifications*** Section 400; include this as a long-term permanent dead load. Except for post-tensioned structures, omit the entire ½-inch sacrificial thickness from the superstructure section properties. For post-tensioned structures, design for the worst case using section properties with and without the ½-inch sacrificial thickness in place.

B. For new construction of "Short Bridges", the minimum thickness of bridge decks cast-in-place (C.I.P.) on beams or girders is 8-inches.

C. For "Major Widenings" and "Minor Widenings" (see criteria in ***SDG*** Chapter 7) the thickness of C.I.P. bridge decks on beams or girders is 8-inches. However, whenever a Major Widening is selected by the Department to meet profilograph requirements, a minimum deck thickness of 8½-inches to meet the requirements and design methodology for new construction of the preceding paragraph, must be used.

Modification for Non-Conventional Projects:

Delete ***SDG*** 4.2.2.C and insert the following:

C. For "Major Widenings" and "Minor Widenings" (see criteria in ***SDG*** Chapter 7) the thickness of C.I.P. bridge decks on beams or girders is 8-inches unless otherwise indicated in RFP.

D. The thickness of C.I.P. bridge decks on beams or girders for deck rehabilitations will be determined on an individual basis but generally will match the thickness of the adjoining existing deck.

E. For bascule spans regardless of length, provide a minimum concrete deck cover of 2-inches with no allowance for a one-half inch sacrificial thickness.

F. The thickness of all other C.I.P. or precast concrete bridge decks is based upon the reinforcing cover requirements of ***SDG*** Table 1.4.2-1.

G. Establish bearing elevations by deducting the determined thickness before planing, from the Finish Grade Elevations required by the Contract Drawings.

H. The design thickness of the deck is defined by the top of the stay-in-place metal form to the finished decked surface, excluding the ½-inch sacrificial thickness. The superstructure concrete quantity does not include the concrete required to fill the form flutes.

4.2.3 Grooving and Planing

A. New cast in place concrete bridge decks that will not be surfaced with asphaltic concrete will be either grooved, or planed and grooved, in accordance with ***Specifications*** Section 400-15. See ***SDG*** 7.4.5 for the treatment of new portions of bridge decks on widening projects.

B. Quantity Determination: Determine the quantity of bridge deck grooving in accordance with the provisions of ***Specifications*** Section 400-22. For “Short Bridges” use Pay Item No. 400-7 - Bridge Deck Grooving. For “Long Bridges” use Pay Item No. 400-7 - Bridge Deck Grooving and No. 400-9 - Bridge Deck Planing.

Modification for Non-Conventional Projects:

Delete ***SDG*** 4.2.3.B

4.2.4 Deck Design - General (LRFD 5.10.6, 6.10.1.7, 9.7.2 and 9.7.3)

A. Design C.I.P. bridge decks on steel beams or girders, and prestressed concrete beams with top flanges < 4'-0" wide and/or with center to center beam spacings > 14'-0", using the Traditional Design Method of ***LRFD*** 9.7.3 and the requirements of the ***SDG***.

B. Design C.I.P. bridge decks on prestressed concrete beams with top flanges ≥ 4'-0" wide and with center to center beam spacings ≤ 14'-0" using the Empirical Design Method of ***LRFD*** 9.7.2 in combination with the following additional criteria:

1. Deck thickness = 8-inches or 8½-inches in accordance with ***SDG*** 4.2.2.A
2. Utilize No. 5 bars spaced at 1'-0" centers in each layer. Use reduced bar spacings at centerline bridge and midspan as required to accommodate bridge specific geometry.
3. Stagger the top layers of reinforcing (except for supplemental longitudinal bars required per ***SDG*** 4.2.6 and ***SDG*** 4.2.8) over the bottom layers of reinforcing by 6-inches.

Commentary: Staggered bars provide better steel distribution for enhanced crack control, especially considering the reduction in steel quantity resulting from the Empirical Design Method. Stacking bars places both bars in a single plane thus increasing the chances of a crack at that location when shrinkage occurs.

4. Design and detail deck cantilevers supporting traffic railings in accordance with 4.2.5 and the applicable ***Standard Plans***.
5. Unless otherwise required per ***SDG*** 4.3.1.G, utilize thickened deck ends and supplemental reinforcing as shown in ***SDM*** 15.5. Cross-frames or diaphragms used throughout the cross-section at lines of support is not a required condition to use the Empirical Design Method when utilizing thickened deck ends with supplemental reinforcing.
6. For phase constructed decks, locate construction joints as shown in Figure 4.2.4-1.
7. For widening of existing bridge decks that were designed using the Empirical Design Method, see ***SDG*** 7.4.4.
8. See ***SDG*** 4.2.6, ***SDG*** 4.2.7, and ***SDG*** 4.2.9 for additional requirements.

*Commentary: The applicability limits and the detailing requirements for the Empirical Design Method are based on testing conducted at the Structures Research Center. Research has shown that the exterior bay of slab on Florida-I Beams can support live load without the **LRFD** 9.7.2.4 Bullet no.8 requiring a minimum overhang of 3-5 times the slab thickness. Staggered reinforcing bars provide a better distribution of steel for enhanced crack control. Bar placement where the top and bottom bars align vertically increases the chance of shrinkage cracking.*

Figure 4.2.4-1 Phase Constructed Empirical Deck Detail

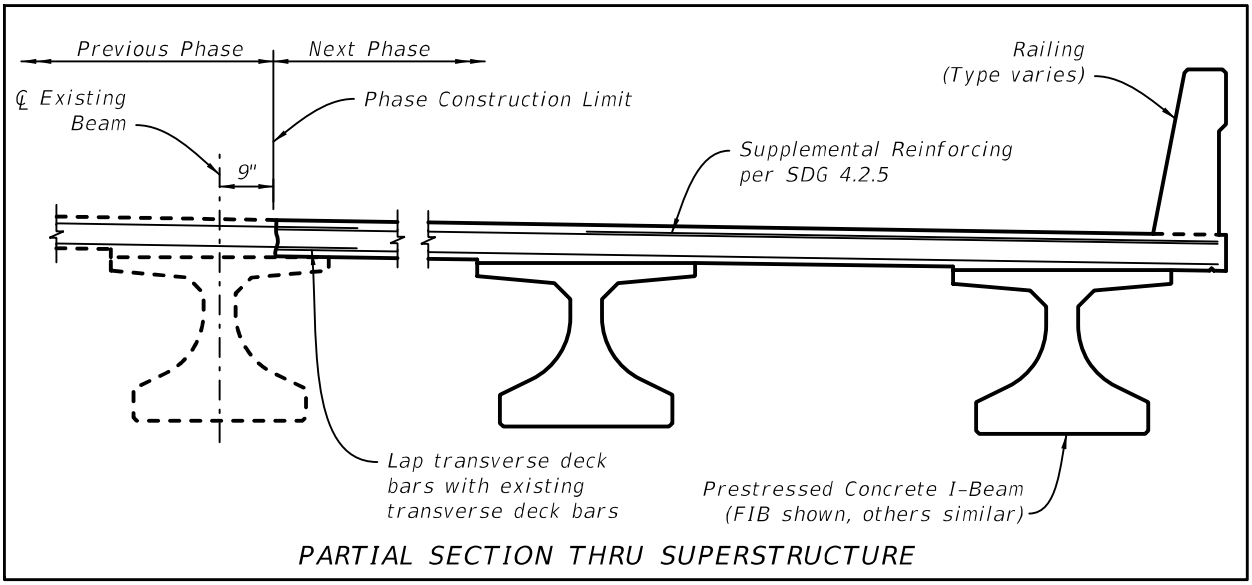

C. Design temperature and shrinkage reinforcement per ***LRFD*** 5.10.6 for C.I.P. decks that are designed using the Traditional Design Method except do not exceed 1'-0" spacing and the minimum bar size is No. 4.

D. For continuous beam or girder superstructures, any location where the top of the deck is in tension under any combination of dead load and live load is considered a negative flexural region.

E. Provide thickened deck ends at locations of deck discontinuity that are not supported by full depth diaphragms. See ***SDM*** Chapter 15 for thickened deck end details for use with Florida-I Beams. Use similar details for decks on steel girders, AASHTO Type II beams and Florida-U Beams (between beams). Do not thicken the deck at intermediate supports within simple span units where the deck is continuous.

F. To minimize shrinkage and deflection induced cracking, develop a designated casting sequence for decks on continuous beam/girder superstructures and simple span beam/ girder superstructures with continuous decks. Indicate on the plans the sequence and direction of each pour so as to minimize cracking in the freshly poured concrete and previously cast sections of deck or superstructure. Provide construction joints as required to limit the volume of concrete cast in a given pour to between 200 cy and 400 cy.

Commentary: Casting sequences and the location of the construction joints should be sized so that the concrete can be placed and finished while the concrete is in a plastic state and within an 8-hour work shift. A reasonable limit on the size of a superstructure casting is 200 cy to 400 cy. For small projects, the 200 cy per day production rate is a reasonable upper casting limit. For larger projects, the 400 cy per day maximum casting volume may be more reasonable. Plan the location of

construction joints so the concrete can be placed using a pumping rate of 60 cy/hr for each concrete pumping machine. Site specific constraints (e.g. lane closure restrictions on the lower roadway, etc.) should be taken into account when determining the size of a deck casting and/or location of construction joints.

Providing construction joints in the Plans as specified will allow most Contractors to accomplish the work without the need for extra equipment or personnel. The use of larger or combined pours, if proposed by a Contractor, should be considered and may be acceptable provided that the necessary engineering work has been performed by the Contractor's Engineer, e.g. recalculation of camber and deflection diagrams for continuous girders, incorporation of additional reinforcing steel and or sealed V-grooves for crack control, etc.

Modification for Non-Conventional Projects:

Delete ***SDG*** 4.2.4.F and Commentary and insert the following:

F. To minimize shrinkage and deflection induced cracking, develop a designated casting sequence for decks on continuous beam/girder superstructures and simple span beam/girder superstructures with continuous decks. Indicate on the plans the sequence and direction of each pour so as to minimize cracking in the freshly poured concrete and previously cast sections of deck or superstructure.

G. When checking longitudinal tension stresses in decks and when developing deck casting sequences and camber or build-up diagrams for continuous beam or girder superstructures, use the appropriate deck concrete strength based on the day the structure is being analyzed. Use the values in Table 4.2.4-1 to approximate the deck concrete strength gain (use interpolation to obtain other values). See also ***SDG*** 5.2.

Table 4.2.4-1 Deck Concrete Strength Gain Values

Day	Class II (Bridge Deck) (psi)	Class IV (psi)
3	2,740	3,720
6	3,180	4,210
9	3,610	4,340
12	3,840	4,550
15	4,020	4,820
18	4,160	5,040
21	4,290	5,220
24	4,390	5,390
27	4,500	5,500

4.2.5 Decks Supporting Traffic Railings

A. For decks supporting traffic railings, the minimum transverse reinforcing (A_s) shown in Table 4.2.5-1 may be used without further analysis where the indicated minimum deck thicknesses and maximum deck overhangs are provided.

Table 4.2.5-1 Minimum Transverse Reinforcing Required for Decks Supporting Traffic Railings

Traffic Railing (Test Level)	Minimum Deck Thickness[1] (inches)	Railing located adjacent to Coping Line		Inboard Railing[2]
		Maximum Deck Overhang Measured from CL Beam, Girder or Web (except as noted) (feet)	Minimum A_s[3] (sq in / linear ft)	Minimum A_s[4] (sq in / linear ft)
32" F-Shape (TL-4)	8	6	0.80	0.48 T 0.31 B
32" Vertical Face (TL-4)	8 (with 6-inch sidewalk)	6	0.40[5]	N/A
32" Corral Shape (TL-4)	8	6	0.80	0.48 T 0.31 B
32" F-Shape Median (TL-4)	8	N/A	N/A	0.40 T 0.31 B
8'-0" Noise Wall (TL-4)	8	1.5-feet beyond outer edge of top flange of exterior beam or girder	0.93[6]	0.56 T 0.37 B
	10		0.66[6]	0.40 T 0.31 B
42" F-Shape (TL-5)	10	6	0.75	0.45 T 0.31 B
42" Vertical Face (TL-4)	8 (with 6-inch sidewalk)	6	0.40[4]	N/A
36" Single-Slope Median (MASH TL-4)	8	N/A	N/A	0.51 T 0.34 B
36" Single-Slope (MASH TL-4)	8	6	0.80	0.48 T 0.31 B
42" Single-Slope (MASH TL-5)	10	6	0.93	0.56 T 0.37 B

1. The extra thickness required for deck planing is not included. The thickness applies to the portion of the deck supporting the traffic railing. For inboard railings (See Note 2), the required deck thickness applies to the transverse deck span in which the traffic railing is located. The transverse deck span is measured between centerline of beams, girders, or webs.
2. Inboard railings are those located inside the exterior beam or girder, or centerline of exterior web of Florida-U beam, steel box girder, or U-girder.

3. Minimum reinforcing required in the top of the deck. If the required reinforcing is less than or equal to twice the nominal deck reinforcing, the extra reinforcing must be cut-off 12-inches beyond the midpoint between the two exterior beams or girders, or between the webs of an exterior Florida-U beam. If the required reinforcing is greater than twice the nominal deck reinforcing, then half of the extra reinforcing or up to 1/3 the total reinforcing must be cut-off midway between the two exterior beams or girders, or the webs of an exterior Florida-U beam. The remaining extra reinforcing must be cut off at 3/4 of the two exterior beam or girder spacing, or the webs of an exterior Florida-U beam, but not closer than 2-feet from the first cutoff.
4. T and B are for top and bottom. The reinforcing in excess of the nominal transverse deck reinforcing must extend from the traffic face of the railing (toe of railing) in both directions to the centerline of each adjacent beam, girder or web. Develop the bars past the centerline of each beam, girder, or web.
5. Minimum reinforcing based on the 32-inch or 42-inch vertical face traffic railing mounted on a 6-inch thick sidewalk above an 8-inch deck with 2-inch cover to the top reinforcing in both the deck and sidewalk. Specify No. 4 Bars at 6-inch spacing placed transversely in the top of the raised sidewalk. See ***SDM*** Chapter 15.5 for connection details between sidewalk and deck.
6. For the eight foot noise wall, the area of top deck reinforcing 6-feet each side of deck expansion joints must be increased by 30% to provide a minimum of 1.21 square inches per foot for an 8-inch thick deck and 0.86 square inches per foot for a 10-inch thick deck. Evaluate the development length of this additional reinforcing and detail hooked ends for all bars when necessary.

B. In lieu of using the values shown in Table 4.2.5-1, or when the cantilever length exceeds the limits shown in Table 4.2.5-1 for all traffic railings except the 8'-0" Noise Wall, the following design values and methodology may be used to design the transverse deck reinforcing for the traffic railing types listed. The minimum deck thicknesses shown in Table 4.2.5-1 apply.

Table 4.2.5-2 Values for Designing Reinforcing Steel for Decks Supporting Traffic Railings

Traffic Railing (Test Level)	Railing located adjacent to Coping Line		Inboard Railing[2]		L_c (ft)
	M_c (kip-ft/ft)	T_u (kips/ft)	M_c (kip-ft/ft)	T_u (kips/ft)	
32" F-Shape (TL-4)	15.7	7.1	9.4	4.3	5.0
32" Vertical Face (TL-4)	16.9	7.1	N/A	N/A	5.0
32" Corral Shape (TL-4)	15.7	7.1	9.4	4.3	5.0
32" F-Shape Median (TL-4)	N/A	N/A	15.3	3.5	5.0
8'-0" Noise Wall (TL-4)	20.1[1]	5.9[1]	12.1[1]	3.5[1]	13
42" F-Shape (TL-5)	20.6	9	12.4	5.4	10.25
42" Vertical Face (TL-4)	25.8	10.6	N/A	N/A	9
36" Single-Slope Median (MASH TL-4)	N/A	N/A	12.5	4.8	5.4
36" Single-Slope (MASH TL-4)	15.8	9.4	9.5	5.6	5.5
42" Single-Slope (MASH TL-5)	27.5	11.0	16.5	6.6	11.1

1. For the 8'-0" noise wall, increase the ultimate deck moment and tensile force by 30% for a distance of 6-feet each side of all deck expansion joints, except on approach slabs.

   Where:

   M_c = Ultimate deck moment at the traffic railing face (gutter line) from traffic railing impact.

   T_u = Ultimate tensile force to be resisted.

   L_c = Critical length of yield line failure pattern per ***LRFD*** A13.3.1

2. Inboard railings are those located inside the exterior beam or girder, or centerline of exterior web of Florida-U beam, steel box girder, or U-girder.

The following relationship must be satisfied:

$$(T_u / \phi P_n) + (M_u / \phi M_n) \leq 1.0$$

Where:

$\phi = 1.0$

P_n = Nominal tensile capacity of the deck (kips/ft.) over the distance L_d.

$$P_n = A_s f_y$$

A_s = Area of transverse reinforcing steel in the top of the deck (sq. in.) within the distance L_d.

f_y = The reinforcing steel yield strength (ksi).

M_u = Total ultimate deck moment from traffic railing impact and factored dead load at the gutter line over the distance L_d (kips-ft/ft).

$$M_u = M_c + 1.00 \times M_{DeadLoad}$$

M_n = Nominal moment capacity of the deck at the gutter line determined by traditional rational methods for reinforced concrete (kip-ft/ft) over the distance L_d.

L_d = Distribution length (ft):

Near a traffic railing open joint $L_d = L_c$ + traffic railing height + **2D**(tan 45º)

At open transverse deck joints $L_d = L_c$ + traffic railing height + **D**(tan 45º)

Where "**D**" equals the distance from the gutter line to the critical deck section. Along the base of the traffic railing at the gutter line **D** = 0.

*Commentary: Temporary barriers are frequently used on bridge widening and replacement projects. The values of M_c, T_u and L_c provided in Table 4.2.5-2 were determined from analyses based on how the **LRFD** traffic railing design forces are carried into the supporting deck by the rigidly anchored permanent railings. The Department does not have a policy that addresses decks supporting temporary barriers because no appropriate traffic railing force has been established for them. The following guidance is offered when checking decks supporting **Standard Plans**, Index 102-110, Type K or similar Temporary Barriers.*

*Type Ks in Freestanding Option: Check deck strength to resist the self-weight of the Type K, the wheel loads near the barrier, and the **LRFD** TL-3 vertical downward design force. The wheel loads and vertical downward design force are checked as two separate load cases, both of which include the self-weight of the Type Ks. The vertical force is considered to be a load that is checked using the Extreme Event II load combination and is intended to represent the weight of the impacting TL-3 vehicle should it come to rest on top of the barrier (see **LRFD** CA13.2). For this check, the distribution length L_v can be assumed as the length of a barrier unit.*

*Type Ks in Anchored Option: The same two checks as described for the freestanding mode should be made, but no additional loads should be applied to account for the **LRFD** TL-3 transverse design force due to the failure mode of the Type Ks. During a severe crash, the Type K barriers crack over their full height, the toe of the barriers surrounding the anchor bolts break out, and the anchor bolts yield and bend over. This behavior dissipates the crash energy that is represented by the*

LRFD *transverse design force. Note that the equivalent static transverse design force was derived from crash tests on barriers that were rigidly anchored to the deck, not discreetly bolted barriers such as the Type Ks.*

C. When more than 50% of the total transverse reinforcing must be cut off, a minimum of 2-feet must separate the cut-off locations.

4.2.6 Decks on Simple Span Concrete Beam Superstructures

A. The use of C.I.P. decks that are continuous over two or more adjacent spans of simple span concrete beams is preferred. Determine the maximum length of the continuous deck based on the limitations of the expansion joints and bearings that are to be used.

Commentary: The use of decks that are continuous over multiple simple span concrete beams, in conjunction with the following detailing and construction requirements, has been the typical successful practice on Florida bridges for decades. The beams supporting these decks are designed as simple spans for dead and live loads.

B. When C.I.P. decks on simple span concrete beams are continuous over intermediate piers or bents, provide supplemental longitudinal reinforcing in the tops of the decks as follows:

1. Use No. 5 Bars placed between the continuous, longitudinal reinforcing bars in the top of the deck.
2. Use bars 2/3 of the average span length, with the bar length not to exceed 35-feet.
3. Show the bars placed about the centerline of the intermediate pier or bent as shown in Figure 4.2.6-1.

Figure 4.2.6-1 Schematic Plan View of Supplemental Longitudinal Bar Placement for Simple Span Concrete Beam Superstructures

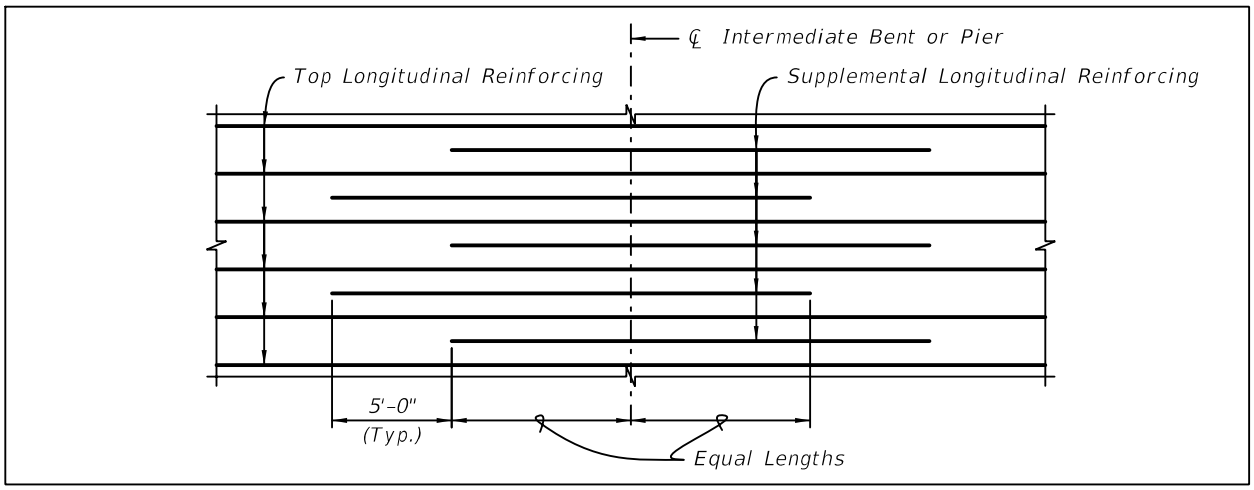

C. When C.I.P. decks on simple span concrete beams are cast continuous over intermediate bents or piers, include both of the following casting sequences in the plans for each continuous deck unit with a note stating that either casting sequence may be used at the Contractor's option. See also ***SDM*** 15.5 and ***SDM*** 15.8 for details.

1. Design and detail a casting sequence in which the continuous deck unit is cast in sections that extend the full length of each span with a construction joint located at each bent or pier. Show the casting sequence to begin with the span at one end of the continuous deck unit with the pour allowed to proceed in either direction. Show succeeding spans to be cast with the pour starting at the far end of the span and proceeding towards the previously cast span. Include the construction joint detail and call for its use at all intermediate bent or pier locations. Include the following plan note:

   A minimum of 72-hours is required between adjacent deck pours in a given continuous deck unit. Alternatively, the next successive deck pour in a given continuous deck unit may be placed after the previous deck pour has attained a compressive strength of 0.6 f'_c based on cylinder testing in accordance with Section 400 of the Specifications.

2. Design and detail a casting sequence in which the continuous deck is cast for the full length of the deck unit without construction joints at each bent or pier. Include the tooled V-groove detail and call for its use at all intermediate bent or pier locations. For simple-span concrete beams with decks continuous over inverted T-pier caps, include tooled V-grooves in the deck aligned with each face of the inverted T-pier cap and see ***SDM*** 15.3.E for the associated traffic railing joint requirements.

Modification for Non-Conventional Projects:

Delete ***SDG*** 4.2.6.C and insert the following:

C. When C.I.P. decks on simple span concrete beams are cast continuous over intermediate bents or piers, include one of the following casting sequences in the plans for each continuous deck unit. See also ***SDM*** 15.5 and ***SDM*** 15.8 for details.

1. Design and detail a casting sequence in which the continuous deck unit is cast in sections that extend the full length of each span with a construction joint located at each bent or pier. Show the casting sequence to begin with the span at one end of the continuous deck unit with the pour allowed to proceed in either direction. Show succeeding spans to be cast with the pour starting at the far end of the span and proceeding towards the previously cast span. Include the construction joint detail and call for its use at all intermediate bent or pier locations. Include the following plan note:

   A minimum of 72-hours is required between adjacent deck pours in a given continuous deck unit. Alternatively, the next successive deck pour in a given continuous deck unit may be placed after the previous deck pour has attained a compressive strength of 0.6 f'_c based on cylinder testing in accordance with Section 400 of the *Specifications*.

2. Design and detail a casting sequence in which the continuous deck is cast for the full length of the deck unit without construction joints at each bent or pier. Include the tooled V-groove detail and call for its use at all intermediate bent or pier locations. For simple-span concrete beams with decks continuous over inverted T-pier caps, include tooled V-grooves in the deck aligned with each face of the inverted T-pier cap and see ***SDM*** 15.3.E for the associated traffic railing joint requirements.

*Commentary: The Contractor's selection of an approved concrete design mix which ensures complete placement of deck concrete for the full length of the continuous deck is essential if the second casting sequence described above is used. See **Specifications** Section 400-7 for additional requirements.*

D. Develop build-up diagrams taking into account the theoretical deflections of the beams due to self weight, prestress forces and superimposed dead loads. See ***Standard Plans*** Indexes 450-199 and 450-299 and the associated ***SPI*** for each standard.

4.2.7 Decks on Continuous Concrete Beam/Girder Superstructures

For continuous concrete beam/girder superstructures, develop build-up diagrams taking into consideration the deck casting sequence, time dependent effects, and the effect on the changing cross section characteristics of the superstructure. Assume a time interval of 3 days between successive pours in a given continuous unit. Use the appropriate deck concrete strength values from Table 4.2.4-1 and the project specific beam concrete strengths for the time dependent analysis. Include the following plan notes:

1. A minimum of 72-hours is required between successive pours in a given continuous unit.
2. The deck casting sequence may not be changed unless the Contractor's Specialty Engineer performs a new structural analysis, new build-up diagrams are developed, revised deck reinforcing steel layouts and bar lists are developed, and a new load rating is performed.

Modification for Non-Conventional Projects:

Delete ***SDG*** 4.2.7 and insert the following:

For continuous concrete beam/girder superstructures, develop camber diagrams taking into consideration the deck casting sequence, time dependent effects, and the effect on the changing cross section characteristics of the superstructure. Include the following plan notes:

1. A minimum of 72-hours is required between successive pours in a given continuous unit.
2. The deck casting sequence may not be changed unless a new structural analysis is performed, new build-up diagrams are developed, revised deck reinforcing steel layouts and bar lists are developed, and a new load rating is performed.

Commentary: Alternative deck casting methods including the use of simultaneous pours, continuous pours, retardant admixtures, etc. may be considered on a case by case basis.

Commentary: Generally, for continuous concrete beam/girder superstructures, all of the positive moment sections of the deck are cast first, followed by the negative moment sections.

4.2.8 Decks on Simple Span and Continuous Steel Beam/Girder Superstructures

A. For simple span and continuous steel beam/girder superstructures, develop camber diagrams taking into consideration the deck casting sequence and the effect on the changing cross section characteristics of the superstructure. Include the following plan note for all steel beam/girder superstructures:

   The deck casting sequence may not be changed unless the Contractor's Specialty Engineer performs a new structural analysis, new camber diagrams are developed, revised deck reinforcing steel layouts and bar lists are developed, and a new load rating is performed.

   Include the following plan note for continuous steel beam/girder superstructures:

   A minimum of 72-hours is required between successive pours in a given continuous unit.

Commentary: Generally for continuous steel girder superstructures, all of the positive moment sections of the deck are cast first, followed by the negative moment sections.

Modification for Non-Conventional Projects:

Delete ***SDG*** 4.2.8.A and insert the following:

A. For simple span and continuous steel beam/girder superstructures, develop camber diagrams taking into consideration the deck casting sequence and the effect on the changing cross section characteristics of the superstructure. Include the following plan note for all steel beam/girder superstructures:

> The deck casting sequence may not be changed unless a new structural analysis is performed, new camber diagrams are developed, revised deck reinforcing steel layouts and bar lists are developed, and a new load rating is performed.

Include the following plan note for continuous steel beam/girder superstructures:

> A minimum of 72-hours is required between successive pours in a given continuous unit.

Commentary: Alternative deck casting methods including the use of simultaneous pours, continuous pours, retardant admixtures, etc. may be considered on a case by case basis.

B. On continuous superstructures, check longitudinal tension stresses in previously cast sections of deck during the deck casting sequence per ***LRFD*** 6.10.3.2.4. Assume a time interval of 3-days between successive pours in a given continuous unit. Use the appropriate deck concrete strength values from Table 4.2.4-1 for the longitudinal tension stress check.

C. For longitudinal reinforcing steel within the negative flexural regions of continuous, composite steel girder superstructures, comply with the requirements of ***LRFD*** 6.10.1.7 and 6.10.3.2.4. Terminate supplemental longitudinal reinforcing as shown in ***SDG*** Figure 4.2.8-1.

Figure 4.2.8-1 Schematic Plan View of Supplemental Longitudinal Bar Placement on Steel Superstructures

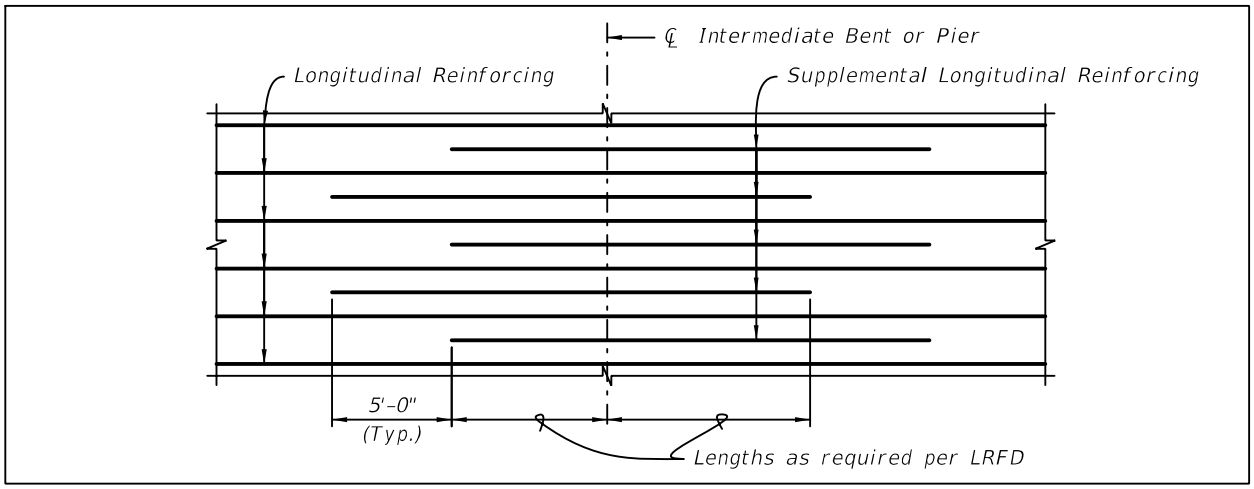

D. Units composed of multiple simple span steel girders with continuous decks are not allowed due to the flexibility of the girders.

4.2.9 Skewed Decks (LRFD 9.7.1.3 and 9.7.2.5)

A. Reinforcing placement when the deck skew is 15 degrees or less:

Place the transverse reinforcement parallel to the skew for the entire length of the deck.

B. Reinforcing placement when the deck skew is more than 15 degrees:

1. Place the transverse reinforcement perpendicular to the centerline of the span.
2. In the triangular shaped portions of the ends of the deck at open joints:
    a. The transverse reinforcement must be doubled when using the Empirical Design Method and increased by 25% when using the Traditional Design Method Table A4-1.
    b. The longitudinal reinforcement must be doubled for a distance along the span equal to the beam spacing (for spans with variable beam spacing, use maximum spacing) for the full width of the deck.
3. For all bridges, except those with a thickened deck end per ***SDG*** 4.3.1.G three No. 5 bars at 6-inch spacing, full width, must be placed parallel to the end skew in the top mat of each end of the deck.

C. Regardless of the angle of skew, the traffic railing reinforcement cast into the deck need not be skewed.

4.2.10 Stay-in-Place Forms

A. Clearly state in the "General Notes" for each bridge project, whether or not stay-in-place forms are permitted for the project and how the design was modified for their use; e.g., dead load allowance.

B. Design and detail for the use of stay-in-place metal forms, where permitted, for all beam and girder superstructures (except segmental box girder superstructures) in all environments.

Commentary: Polymer laminated non-cellular SIP metal forms are permitted for forming bridge decks of superstructures with moderately or extremely aggressive environmental classifications.

Modification for Non-Conventional Projects:
Delete ***SDG*** 4.2.10.B.

C. Precast, reinforced concrete, stay-in-place forms may be used for all environmental classifications; however, the bridge plans must be specifically designed, detailed, and prepared for their use.

D. Precast reinforced or prestressed concrete stay-in-place forms that are composite with bridge decks are not permitted.

Commentary: This form type is prohibited due to failures on past projects requiring Interstate bridge deck replacements.

E. Welding of S.I.P. form supports or connections to structural steel components is prohibited. See ***SDM*** Figure 15.9-3, Figure 15.9-4, Figure 15.9-5, and Figure 15.9-6.

4.2.11 Phase Constructed Decks

A. Provide a 2'-0" minimum wide deck closure pour between phase constructed sections of steel girder superstructures. Evaluate the need for deck closure pours between phase constructed sections of concrete beam superstructures.

Commentary: For steel superstructures, closure pours are required. For concrete, the need for closure pours is evaluated based on span length, beam stiffness and spacing.

B. Within a given section of a phase constructed superstructure, account for potential deck casting induced differential deflections between the beam or girder along the phase construction line and the adjacent inner beam or girder. Similarly, account for potential differential deflections between adjacent sections of a phase constructed superstructure. If differential deflections are significant, show individual beam or girder dead load deflections per phase separately in the plans.

Commentary: During deck casting, beams or girders along the phase construction line will be loaded differently than inner beams or girders if the tributary weight of wet concrete in the deck over them is not the same. For beams or girders of equal stiffness, the result of this will be a differential deflection which must be accounted for in the design and detailing of the superstructure. Beam and girder dead load deflections per phase are required in order for Contractors to set screed elevations and to ensure proper reinforcing cover.

C. For decks constructed in phases, live load on previously constructed portions of the superstructure can induce vibration and deflection into the newly constructed portion of the superstructure. Evaluate these live load induced effects on deck casting and curing and minimize them where possible.

Commentary: Where possible, live load should be shifted away from newly constructed portions of the deck during casting and curing operations so as to minimize or eliminate deflection and vibration effects. This can be a significant issue on long span or flexible superstructures, especially steel superstructures. Coordinate with the Traffic Control Plans.

4.2.12 Drip Grooves

Provide a ½-inch deep continuous V-groove adjacent to deck copings as shown in Figure 4.2.12-1 for all concrete decks. For beam and girder supported concrete decks, provide sufficient cantilever length on both sides of the deck to accommodate the V-grooves.

Commentary: V-grooves prevent staining of the fascia girder from rain water flowing down the back of the traffic railing.

Figure 4.2.12-1 Drip Groove Details

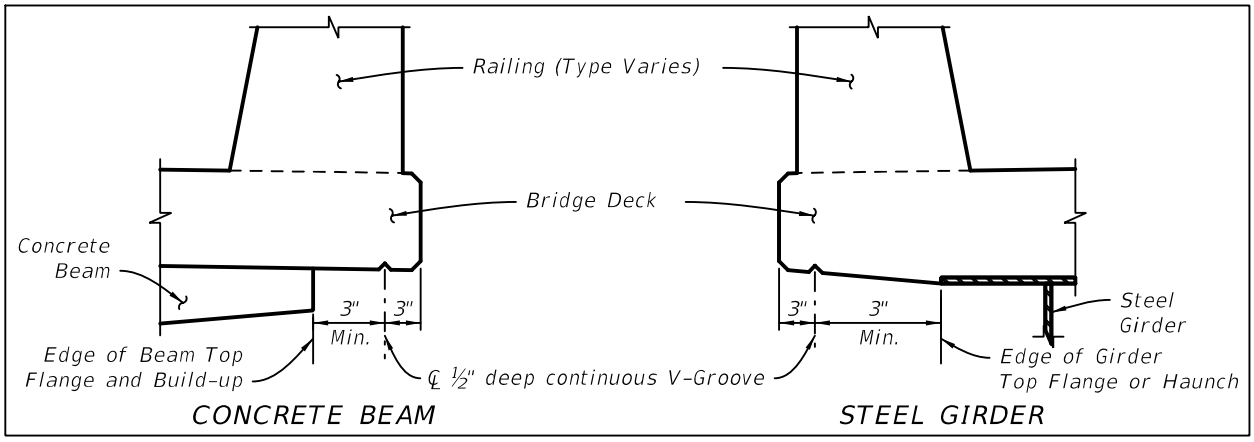

4.2.13 Decks on Perpendicularly Oriented Beams and Girders

Extend the deck across all beam or girder lines and utilize a constant deck thickness for superstructures where the supporting beams or girders are not parallel, or approximately parallel, to the direction of traffic on the bridge, e.g. bridges used in conjunction with braided ramps.

4.3 PRETENSIONED BEAMS

4.3.1 General

The Florida-I Beams and the AASHTO Type II Beam are the Department's standard prestressed concrete I-shaped beams and will be used in the design of all new bridges and bridge widenings with I-shaped beams as applicable. The Florida-U Beams are the

Department's standard prestressed concrete U-shaped beams and will be used in the design of all new bridges and bridge widenings with U-shaped beams as applicable. Square all beam ends on Florida-I Beam and AASHTO Type II Beam simple span superstructures. Florida Bulb-T Beams and AASHTO Beams other than the AASHTO Type II Beam will not be used in new designs or widenings. The following requirements apply to simply supported, fully pretensioned beams, whether of straight or depressed (draped) strand profile, except where specifically noted otherwise.

Modification for Non-Conventional Projects:

Delete the first paragraph of ***SDG*** 4.3.1 and insert the following:

The Florida-I Beams and the AASHTO Type II Beam are the Department's standard prestressed concrete I-shaped beams. Square all beam ends on Florida-I Beam and AASHTO Type II Beam simple span superstructures. The following requirements apply to simply supported, fully pretensioned beams, whether of straight or depressed (draped) strand profile, except where specifically noted otherwise.

Commentary: Squared beam ends are required to minimize cracking and spalling that occur on beams with skewed ends. When pretensioning is applied, the beam will shorten, camber upwards and drag across the casting bed causing cracks to develop at the acute end.

A. Prestressing strands

1. ASTM A416, Grade 270, low-relaxation strands are the standard strand type used for the design of pretensioned beams. Do not use stress-relieved strands. Straight strand configurations are preferred over draped strand configurations.

Commentary: Draped strand designs are usually more efficient and have fewer issues with cracking at the beams ends due to the distribution of the prestress force over the height of the beam end. However, straight strand designs have been standard practice in Florida for decades. There are worker safety concerns with anchoring the hold-down devices, and non-standardized drape points require precasters to drill multiple holes in their casting beds for anchorage hold-down points.

2. For pretensioned concrete beams located within the splash zone, use CFRP or stainless steel prestressing strands. See ***SDG*** 1.4 for definition of splash zone. Coordinate with the DSDE and the State Materials Office for guidance.

Modification for Non-Conventional Projects:

Delete ***SDG*** 4.3.1.A.2 and see the RFP for requirements.

3. For CFRP strands, see ***Volume 4 – Fiber Reinforced Polymer Guidelines*** for design requirements.
4. For stainless steel strands, use the following design requirements and guidance:

a. Use ASTM A1114, Grade 240, low-relaxation, stainless steel prestressing strands for the design of pretensioned beams. Use only straight strand configurations.

b. Use materials for mild reinforcing and other embedded items that are compatible with stainless steel. Do not use mild reinforcing or other embedded items made of CFRP or carbon steel.

Commentary: Grade 75 stainless steel reinforcing is the preferred compatible material for design efficiency and simplicity in construction. Glass & basalt FRP reinforcing are also compatible with stainless steel. CFRP and carbon steel reinforcing are not compatible and will experience accelerated corrosion due to electrical contact with stainless steel.

c. Use the following design values:

i. Resistance factor φ of 0.75 for flexure. Include this value on the Load Rating Summary Sheet.

ii. Maximum steel stress immediately prior to transfer, f_{pbt}, of $0.65f_{pu}$.

iii. Modulus of elasticity of prestressing strand, E_{ps}, of 24,000 ksi

d. Use equilibrium and strain compatibility for design as follows:

i. In the absence of a more exact concrete stress distribution, use the stress distribution from the ***AASHTO Guide Specification for the Design of Concrete Bridge Beams Prestressed with CFRP Systems***.

ii. In the absence of the manufacturer's material properties, the following stress-strain relationship for the stainless steel strand can be used:

$$f_p = E_{ps} \cdot \varepsilon_p \left[0.06 + \frac{1-0.06}{\left[1+\left(101 \cdot \varepsilon_p\right)^{6.45}\right]^{\frac{1}{6.45}}} \right] \leq 240ksi \qquad \text{[Eq. 4-1]}$$

where:

ε_p= strain in the strands (in/in)

f_p= stress in the strands (ksi)

iii. The prestressing strand failure (rupture) is defined to occur when the strain in the extreme strand layer reaches the ultimate tensile strain (ε_{pu}) of 0.014.

iv. Meet the following minimum reinforcement limit for designs controlled by strand rupture:

$$\frac{c}{d} \geq \left(\frac{9.2f_c' + 0.48f_{pe} - 3.9}{1000} \right) \qquad \text{[Eq. 4-2]}$$

where:

c = distance from the extreme compression fiber to the neutral axis (in)

d = distance from the extreme compression fiber to the bottom layer of strands (in)

f'_c = compressive design strength of deck concrete (ksi)

f_{pe} = effective stress in prestressing steel after losses (ksi)

Commentary: The design requirements for stainless steel strands are based on results from research report FDOT BDV30-977-22.

B. Bridges with varying span lengths, skew angles, beam spacing, beam loads, or other design criteria may result in very similar individual designs. Consider the individual beam designs as a first trial subject to modifications by combining similar designs into groups of common materials and stranding based upon the following priorities:

1. 28-Day Compressive Concrete Strength (**f '$_c$**)
2. Stranding (size, number, and location)
3. Compressive Concrete Strength at Release (**f '$_{ci}$**)
4. Full Length Shielding (Debonding) of prestressing strands is prohibited.

Commentary: Grouping beam designs in accordance with the priority list maximizes casting bed usage and minimizes variations in materials and stranding.

Modification for Non-Conventional Projects:
Delete ***SDG*** 4.3.1.B and associated Commentary and insert the following: B. Full Length Shielding (Debonding) of prestressing strands is prohibited.

C. In order to achieve uniformity and consistency in designing beams, the following parameters apply:

1. Provide a strand pattern that is symmetrical about the centerline of the beam. Utilize the standard strand pattern grids for standard FDOT prestressed beams. See the applicable ***Standard Plans*** and the appropriate ***Standard Plans Instructions (SPI)*** for more information.

Modification for Non-Conventional Projects:
Delete ***SDG*** 4.3.1.C.1 and insert the following: 1. Provide a strand pattern that is symmetrical about the centerline of the beam.

2. Utilize debonded strands in accordance with ***LRFD*** 5.9.4.3.3 only to the extent required to satisfy design stress limits.

Commentary: Strand debonding is a frequently used method of reducing pretensioned beam end stresses; however, it is not advised to debond more than required to meet design stress limits. Concerns with excessive debonding are its potential to reduce shear strength and the inherent reduction in the beam's mechanical tension tie.

3. When analyzing stresses of simple span beams, limit stresses in accordance with ***LRFD*** Table 5.9.2.3.1b-1 with the exception that for the outer 15 percent of the design span of straight longitudinal beams, tensile stress at the top of beam at release may be taken as **0.24** $\sqrt{f'_{ci}}$ [**ksi**] (**7.5** $\sqrt{f'_{ci}}$ [**psi**]) when the lesser of ***LRFD*** C5.9.2.3.1b or Table 4.3.1-1 minimum tension reinforcement is developed in the section.

Table 4.3.1-1 Minimum Top Flange Longitudinal Reinforcing in Beam Ends

Beam Type	Minimum A_s (in^2)	Standard Plans A_s (in^2)
AASHTO Type II	0.79	0.790
FIB36 to FIB63	1.5	1.580
FIB 72 & FIB78	2.1	2.100
FIB 84 & FIB96	2.3	2.372
FUB48 to FUB72	2.7	2.730

For transient loads during construction the tensile stress limit may be taken as **6**$\sqrt{f'_c}$ [psi]. It is not necessary to check tensile stresses in the top of simple span beams in the final condition

*Commentary: Since the mid 1980's, the Department has allowed a limit **12**$\sqrt{f'_{ci}}$ [psi] tension in the top of the beam at release knowing the actual tension was less due to the additional compression provided by the top partially stressed (dormant) strands. Now that design software accounts for partially stressed top strands, a **12**$\sqrt{f'_{ci}}$ [psi] tension limit is no longer justified. When the minimum areas of tension reinforcement shown in the table are provided, refined analysis shows top tensile beam stresses are within reasonable limits. Since the method suggested in **LRFD** C5.9.2.3.1b may give an unreasonably large required area of reinforcement at locations near the prestress transfer length, minimum reinforcement areas (mild and prestressed) are given in the table for FDOT standard beams.*

4. The design value of f'_{ci} shall not exceed the following:
   a. 0.80 f'_c for Class III, IV, V and VI concrete
   b. 0.75 f'_c for Class VII concrete. Values of f'_{ci} up to 0.80 f'_c may be considered for Class VII concrete. Contact precast producers for cost information when considering values of f'_{ci} exceeding 0.75 f'_c for Class VII concrete.

Commentary: The limit of 0.75 f'_c for Class VII concrete is based on cost feedback obtained from precast producers (2020). Increasing f'_{ci} delays strand release resulting in higher costs.

Modification for Non-Conventional Projects:

Delete ***SDG*** 4.3.1.C.4 and insert the following:

4. The design value of f'_{ci} shall not exceed 0.8 f'_c.

5. Design and specify prestressed beams to conform to concrete classes and related compressive strengths of concrete as shown in ***SDG*** Table 1.4.3-1.

*Commentary: Preapproved mix designs are readily available for the concrete classes and compressive strengths shown in **SDG** Table 1.4.3-1 and **SDG** Table 1.4.3-2.*

Modification for Non-Conventional Projects:

Delete ***SDG*** 4.3.1.C.5 and insert the following:

5. Design and specify prestressed beams to conform to classes and related strengths of concrete as shown in ***SDG*** Table 1.4.3-1 as minimum values.

6. When calculating the Service Limit State capacity for pretensioned concrete flat slabs and girders, use the transformed section properties as follows: at strand transfer; for calculation of prestress losses; for live load application. For precast, pretensioned, normal weight concrete members designed as simply supported beams, use ***LRFD*** 5.9.3.3, Approximate Estimate of Time-Dependent Losses. For all other members use ***LRFD*** 5.9.3.4 with a 180-day differential between girder concrete casting and placement of the deck concrete.

Commentary: The FDOT cannot practically control, nor require the Contractor to control, the construction sequence and materials for simple span precast, prestressed beams. To benefit from the use of refined time-dependent analysis, literally every prestressed beam design would have to be re-analyzed using the proper construction times, temperature, humidity, material properties, etc. of both the beam and the yet-to-be-cast composite slab.

7. Stress and camber calculations for the design of simple span, pretensioned components must be based upon the use of transformed section properties.

8. When wide-top beams such as Florida-I, bulb-tees and AASHTO Types V and VI beams are used in conjunction with stay-in-place metal forms, evaluate the edges of flanges of those beams to safely and adequately support the self-weight of the forms, concrete, and construction load specified in Section 400 of the ***Specifications***. For Florida-I Beams, the Standard top flange reinforcing allows for a beam spacing up to 14-feet with an 8½-inch deck.

D. The maximum prestressing force ($\mathbf{P_u}$) from fully bonded strands at the ends of prestressed beams must be limited to the values shown in the ***Standard Plans Instructions (SPI)***. For non-standard single web prestressed beam designs, modify the requirements of ***LRFD*** 5.9.4.4.1 to provide vertical reinforcement in the ends of pretensioned beams with the following splitting resistance:

- 3% **P_u** from the end of the beam to h/8, but not less than 10”;
- 5% **P_u** from the end of the beam to h/4, but not less than 10”;
- 6% **P_u** from the end of the beam to 3h/8, but not less than 10-inches.

Do not apply losses to the calculated prestressing force (P_u). The minimum length of debonding from the ends of the beams is half the depth of the beam. Do not modify the reinforcing in the ends of the beams shown in the Standard Drawings without the approval of the SSDE.

*Commentary: The maximum splitting force from bonded prestressing strands has been increased in order to minimize horizontal and diagonal web cracking, and also to compensate for the longer splitting force distribution length (h/4) adopted by **LRFD** in 2002. An additional splitting zone from h/4 to 3h/8 has been added to control the length of potential cracks, consistent with previous standard FDOT designs.*

E. Provide embedded bearing plates in all prestressed I-Girder beams deeper than 60-inches. Provide embedded bearing plates for all Florida-I beams. Include beveled bearing plates for all I-beam and U-beam designs where the beam grade exceeds 2%.

Commentary: Bearing plates add strength to the ends of the concrete beams to resist the temporary loadings created in the bearing area by the release of prestressing forces and subsequent camber and elastic shortening.

F. Standard prestressed beam properties are included in the ***Standard Plans Instructions (SPI)***.

G. For pretensioned simple span AASHTO Type II and Florida-I Beam bridges, eliminating the permanent end diaphragms is the preferred option except as noted in Paragraph I below, ***SDG*** Table 2.10-1, and ***SDG*** 4.7. However, in cases where there are significant lateral loads, partial depth, permanent end diaphragms may be used. See ***SDM*** Chapter 15 for partial depth diaphragm details. For spans requiring end diaphragms, determine if diaphragms are necessary for every bay. For spliced post-tensioned girder bridges, diaphragms at the splice and anchorage location are required.

Modification for Non-Conventional Projects:
Delete ***SDG*** 4.3.1.G.

H. Analyze spans subject to significant lateral loads to determine if diaphragms are needed. When investigating the effect of significant lateral loads such as vessel collision or wave loads, check the stresses at the interface of the beam top flange and the beam web, from each end of the beam to a longitudinal distance approximately equivalent to the beam height.

I. Provide full depth end diaphragms where the beams or girders are not parallel, or approximately parallel, to the direction of traffic on the bridge, e.g. bridges used in conjunction with braided ramps.

4.3.2 Beam Camber/Build-Up over Beams

A. Unless otherwise required as a design parameter, beam camber for computing the build-up shown on the plans must be based on 120-day old beam concrete.

Modification for Non-Conventional Projects:
Delete ***SDG*** 4.3.2.A.

B. On the build-up detail, show the age of beam concrete used for camber calculations as well as the value of camber due to prestressing minus the dead load deflection of the beam.

C. Consider the effects of horizontal curvature with bridge deck cross slope when determining the minimum buildup over the tip of the inside flange.

Commentary: In the past, the FDOT has experienced significant deck construction problems associated with excessive prestressed, pretensioned beam camber. The use of straight strand beam designs, higher strength materials permitting longer spans, stage construction, long storage periods, improperly placed dunnage, and construction delays are some of the factors that have contributed to camber growth. Actual camber at the time of casting the deck equal to 2 to 3 times the initial camber at release is not uncommon.

D. Design pretensioned beams so that the theoretical design camber at the end of construction is positive (upward) after all non-composite and composite dead loads are applied.

4.3.3 Minimum Web Thickness (LRFD 5.12.3.2.2)

The minimum web thicknesses for prestressed beams are:

AASHTO Type II, Florida-I and Florida-U Beams	per the ***Standard Plans***
Non-standard beams with single stirrups	5½-inches
Non-standard beams with double stirrups	6-inches
Post-Tensioned Beams	See ***SDG*** Table 4.5.1-1

Commentary: These minimum web thicknesses are necessary for constructability.

4.3.4 I-Beam Stability (LRFD 5.5.4.3)

A. Analyze concrete beams for stability during each stage of construction in accordance with Paragraphs B and C below. See ***SDM*** 15.5 for Plan content requirements. See ***SDG*** 11.6 for the Contractor's bracing design requirements.

B. For simple-span prestressed Florida-I Beams (FIBs) and AASHTO Type II Beams, analyze stability for the following stages using the loads and limits shown below.

1. Stage 1 - Crane release
    a. Begin analysis with beams sitting on bearings without end bracing
    b. Loads: Construction Active design wind speed (***SDG*** 2.4.3)
    c. Beam Limits:
        i. Factor of Safety Against Cracking ≥ 1.0.
        ii. Factor of Safety Against Rollover ≥ 1.5.
    d. At a minimum, brace all I-Beams with spans greater than or equal to 160-feet at their ends prior to crane release.

*Commentary: The **SDG** previously specified that the Factor of Safety Against Wind must be greater than or equal to 2.0 at Stage 1. This requirement is satisfied for I-Beams with spans less than 160-feet without end bracing at crane release. For I-Beams with spans greater than or equal to 160-feet, end bracing is required to satisfy the Factor of Safety Against Wind. See Section 5 of the **Specifications** for bracing requirements for the Construction Inactive condition prior to Stage 2.*

2. Stage 2 - Beams erected
    a. Begin analysis with beam ends braced and no deck forms.
    b. Loads: Construction Inactive design wind speed (***SDG*** 2.4.3)
    c. Beam Limits: Factor of Safety Against Cracking ≥ 1.0.
    d. The following minimum Stage 2 bracing applies:
        i. AASHTO Type II, FIB 63 and FIB 72 - end bracing and mid-span bracing
        ii. FIB 78 - end bracing and quarter point bracing
        iii. FIB 84 and 96 – end bracing and quarter point bracing with 3 beams erected and braced together within 24 hours.
    e. Specify end bracing only for FIB 36, 45 and 54 unless calculations show that intermediate bracing is required.

Commentary: Due to their high stability, FIB 36, 45 and 54 generally do not require intermediate bracing in most situations. Additionally, installation of moment resisting bracing for these beam sizes is difficult because of their shallow and stocky shapes.

3. Stage 3 - Deck Casting
    a. Begin analysis with Stage 2 bracing

b. Loads: Construction Active design wind speed (***SDG*** 2.4.3) and Construction Loads (***SDG*** 2.13).

c. Beam Limits:

i. Principal stresses at midspan ≤ ***LRFD*** Stress Limits after losses (***LRFD*** Table 5.9.2.3.2a-1).

ii. Deck overhang deflection at the coping line due to beam rotation ≤ ¼" (assume the deck overhang formwork is rigid).

C. For I shapes other than FIBs and AASHTO Type II beams, and prestressed I-beams erected using temporary shoring and/or spliced together using post-tensioning, investigate stability during each stage of construction using the criteria in Paragraph B above and include additional bracing types and/or details in the Plans.

D. References

1. “Lateral Stability of Long Prestressed Concrete Beams- Part 2”, Mast, R., PCI Journal. Vol. 38, No. 1, January-February 1993, pp. 70-88.)
2. “Determination of Brace Forces Caused by Construction Loads and Wind Loads During Bridge Construction”, Consolazio, G., FDOT Contract No. BDK75-977-70, April 2014.
3. “Distribution Factors for Construction Loads and Girder Capacity Equations”, Consolazio, G., FDOT Contract No. BDV31-977-46, March 2017.

4.4 FLAT SLAB SUPERSTRUCTURES (LRFD 5.12.2)

4.4.1 General

A. Design those portions of flat slab superstructures that support traffic railings in accordance with ***SDG*** 4.2.5 with the following exceptions:

1. The transverse moment due to the traffic railing dead load may be neglected.
2. Provide the following minimum areas of transverse top slab reinforcing for use with traffic railings located adjacent to coping lines:

a. For TL-4 traffic railings: 0.30-sq in/ft within 4-feet of the gutter line

b. For TL-5 traffic railings: 0.40-sq in/ft within 10-feet of the gutter line

B. Provide a ½-inch deep continuous V-groove adjacent to copings as shown in Figure 4.2.12-1.

Commentary: V-grooves prevent staining of the slab underside.

C. Provide a minimum 8-inch cover from the top of the slab to the top of post-tensioning ducts used for unbonded tendons.

D. Provide a minimum 8-inch cover from the top of the slab to the top of voids in a voided slab.

Commentary: The 8-inch cover requirement in Paragraphs C and D above is intended to prevent cracking of the slab from direct application and impact of live load. Flexible filler used for unbonded tendons provides no structural rigidity.

4.4.2 C.I.P. Flat Slab Superstructures

A. For simple and continuous span C.I.P. flat slab superstructures, develop deflection diagrams indicating the deflection of the spans due to self weight of the slab, railings, raised sidewalks, etc.

B. For simple span C.I.P. flat slab superstructures, design and detail a casting sequence with construction joints located as required.

C. For continuous C.I.P. flat slab superstructures, design and detail a casting sequence with construction joints at one-quarter and/or three-quarter points in the spans as required to minimize cracking in the negative moment regions.

D. Include the following plan notes for all C.I.P. flat slab superstructures:

The slab casting sequence may not be changed unless the Contractor's Specialty Engineer performs a new structural analysis and new deflection diagrams and revised slab reinforcing steel layouts and bar lists are developed.

A minimum of 72 hours is required between successive pours in a given unit.

Commentary: For C.I.P. flat slab superstructures, the Contractor is responsible for determining the deflection of the formwork due to the weight of the wet slab concrete, screed and other construction loads in conjunction with the casting sequence shown in the plans.

4.4.3 Precast Flat Slab Superstructures

A. Design pretensioned slab beams and units so that the theoretical design camber at the end of construction is positive (upward) after all non-composite and composite dead loads are applied. Unless otherwise required as a design parameter, base beam or unit camber that is used for designing and detailing and that is to be shown on the plans on 120-day-old beam or unit concrete. The design camber shown on the plans is the value of camber due to prestressing minus the dead load deflection after all prestress losses.

Modification for Non-Conventional Projects:

Delete ***SDG*** 4.4.3.A and insert the following:

A. Design pretensioned slab beams and units so that the theoretical design camber at the end of construction is positive (upward) after all non-composite and composite dead loads are applied. The design camber shown on the plans is the value of camber due to prestressing minus the dead load deflection after all prestress losses.

B. Design precast flat slab superstructures with transverse post-tensioning to meet the following requirements:

1. Design precast flat slab superstructures using prestressed slab beams that are transversely post-tensioned together using keyways between adjacent beams that are filled with non-shrink grout.
2. Incorporate a double duct system for the post-tensioning in the prestressed slab beams. The outer duct must be cast into the slab beam and sized to accommodate a differential camber of 1-inch between adjacent beams. The inner duct must be continuous across all joints and sized based upon the number of strands for strand tendons or the diameter of the bar coupler for bar tendons. Specify that both the inner duct and the annulus between the ducts be grouted.
3. Address camber over the length of the span, differential camber between adjacent slab beams and ride smoothness required per ***Specifications*** Section 400 by using one of the following techniques:
    a. Use a reinforced composite C.I.P. concrete topping.
    b. Provide additional concrete cover on the tops of the slab beams that will be planed off.

C. Design precast flat slab superstructures that are not transversely post-tensioned using slab beams that are connected using a reinforced composite C.I.P. concrete topping and a reinforced C.I.P. concrete keyway or pocket between adjacent beams. The keyway or pocket must be integral with, and cast in conjunction with, the reinforced composite C.I.P. concrete topping.

Commentary: These requirements are based on the historical reflective cracking problems and poor performance of precast flat slab systems constructed side-by-side without a reinforced C.I.P. concrete keyway or pocket (Sonovoids and Prestressed Slab Units).

4.5 POST-TENSIONING, GENERAL (LRFD 5.12.5)

A. This section applies to all post-tensioned superstructure components.

B. See ***SDG*** 1.11 for additional requirements.

4.5.1 Minimum Dimensions

Design and detail post-tensioned superstructure elements to meet or exceed the minimum dimensions in accordance with Table 4.5.1-1 in lieu of ***LRFD*** 5.4.6.2.

Table 4.5.1-1 Minimum Dimensions for Superstructure Elements Containing Post-Tensioning Tendons[1]

Post-Tensioned Superstructure Element	Minimum Dimension
Webs of I-Girder and U-Girders with external tendons (no internal tendons)	8-inches thick
Webs of I-Girder and U-Girder Bridges with unbonded internal tendons	The largest of the following: • 9½-inches thick • Outer duct diameter[2] plus 2 x [cover[3] plus stirrup diameter plus tie bar diameter (deformed bar diameters)] plus construction tolerances • 2.5 x outer duct diameter • As required by design; whichever is greater. See also Figure 4.5.1-1 for reinforcing requirements.
End Blocks of I-Girder Bridges	Length (including transition) not less than 1.5 x depth of girder
Regions of Slabs without longitudinal tendons	8-inches thick, or as required to accommodate planing, concrete covers, outside dimensions of ducts[2] for transverse PT and adjacent longitudinal PT, top and bottom mild reinforcing mats, and allowances for construction tolerances; whichever is greater.
Regions of slabs containing longitudinal internal tendons	9-inches thick, or as required to accommodate planing, concrete covers, outside dimensions of ducts[2] for transverse PT and longitudinal PT, top and bottom mild reinforcing mats, and allowances for construction tolerances; whichever is greater.
Clear Distance Between Circular Voids in C.I.P. Voided Slab Bridges	Outer duct diameter[2] plus 2 x cover plus 2 x stirrup dimension (deformed bar diameter); or outer duct diameter[2] plus vertical reinforcing plus concrete cover; whichever is greater.
Segment Pier Diaphragms containing external post-tensioning	6-feet thick.[4]

Webs of C.I.P. Boxes with unbonded internal tendons	For single column of ducts: 12-inches thick. For two or more ducts set side by side, the largest of the following: • Summation of total duct outer diameter^2 plus 2 x [cover plus stirrup diameter (deformed bar diameters)] plus summation of horizontal clearance between ducts plus construction tolerances • 2.5 x summation of outer duct diameter^2 • Effective shear web width (b_v) + 1.3 x summation of outer duct diameter^2 • As required by design
Deviator for external tendons	4-feet thick (including Diabolos).

1. The information in Table 4.5.1-1 applies to both strand tendons and bar tendons unless specifically stated otherwise.
2. The duct dimension is the largest outside dimension of the duct measured at the ribs.
3. 1-inch cover minimum at top of web where a deck will be cast over the beam.
4. Post-Tensioned pier segment halves are acceptable. See also ***SDG*** 1.11.4 for duct geometry requirements that may also affect diaphragm thickness.

Figure 4.5.1-1 Additional Reinforcing for Webs of I-Girder and U-Girder Bridges with Unbonded Internal Tendons

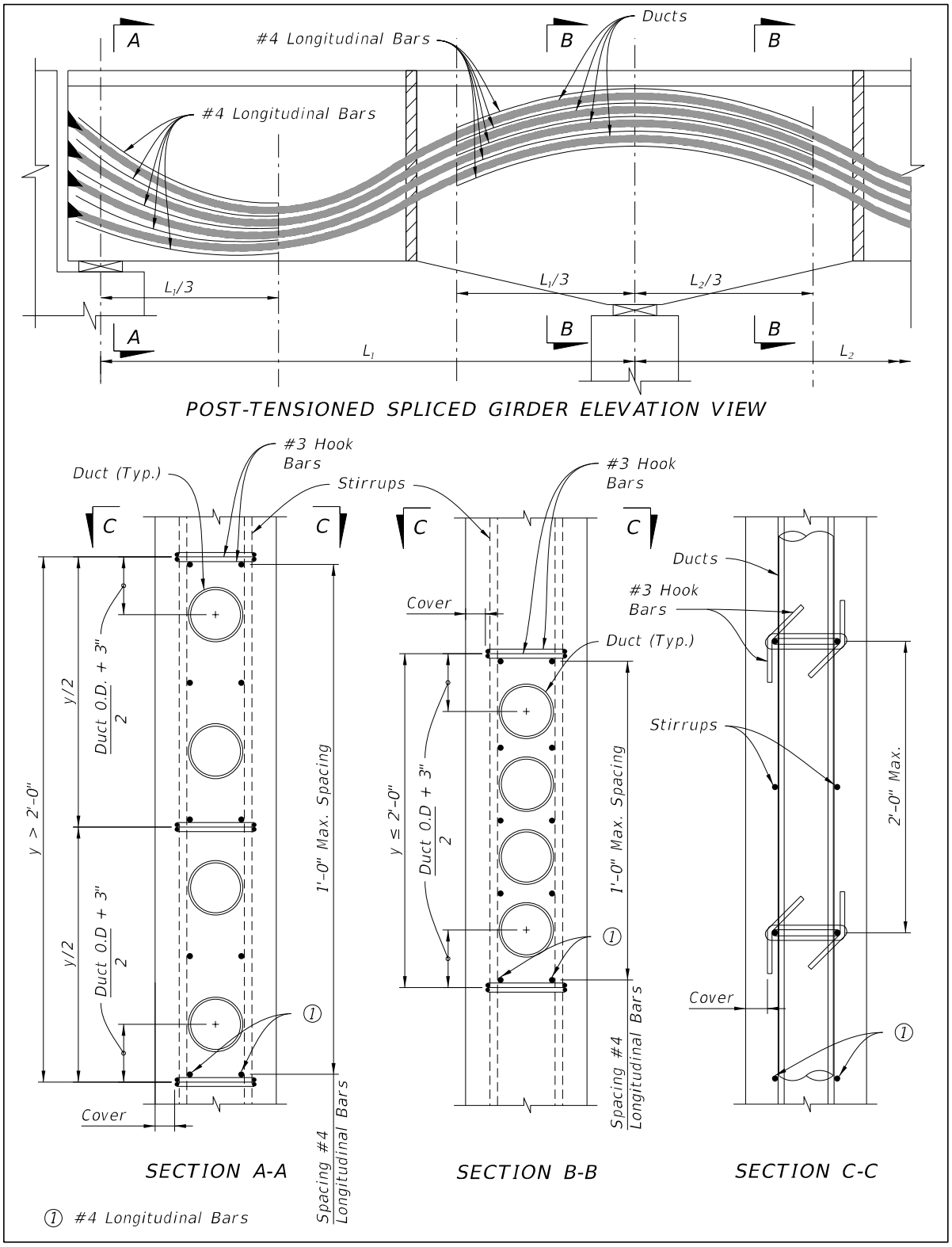

Commentary: The minimum dimensions given in Table 4.5.1-1 are based on successful historical past practices in regard to constructability and serviceability. The reinforcing and duct spacing requirements shown in Figure 4.5.1-1 are based on research using strut and tie models to study shear flow in webs around ducts filled with flexible filler.

4.5.2 Minimum Number of Tendons

Design and detail post-tensioned superstructure elements to meet or exceed the minimum number of tendons in accordance with Table 4.5.2-1. In addition, design post-tensioned superstructures and substructures such that any unbonded tendon can be removed and replaced one at a time utilizing the ***LRFD*** Table 3.4.1-1 Service I load combination and/or Service III load combination, as applicable with the live load placed only in the striped lanes. Under this load combination, limit tension stresses for precast superstructure and substructures elements with match cast joints to $0.0948\sqrt{f'c}$ (ksi), and to $0.19\sqrt{f'c}$ (ksi) for all other concrete superstructure and substructures elements.

For segmental box girder bridges, in addition to the above requirements, provide future post-tensioning tendons per ***LRFD*** 5.12.5.3.9c. Provisions for future post-tensioning are not required for negative moment cantilever tendons.

Table 4.5.2-1 Minimum Number of Tendons Required for Post-Tensioned Superstructure Elements

Post-Tensioned Superstructure Element	Minimum Number of Tendons
Balanced Cantilever Segmental Bridges	Two positive moment external draped continuity tendons[3] per web that extend to adjacent pier diaphragms
Mid Span Closure Pour of C.I.P. and Precast Balanced Cantilever Segmental Bridges	Bottom slab – two tendons per web Top slab – See ***SDG*** 4.6.3.B for tendon[3] number, size, and anchorage requirements per cell
Span by Span Segmental Bridges	Four tendons[3] per web
C.I.P. Multi-Cell Bridges and Post-Tensioned U-Girder Bridges[1]	Three tendons[3] per web
Post-Tensioned I-Girder Bridges[2]	Three tendons[3] per girder
Unit End Spans of C.I.P. and Precast Balanced Cantilever Segmental Bridges	Three tendons[3] per web
Integral Pier Caps (Hammerhead, Straddle, etc.)	See ***SDG*** Table 3.11.1-1
Expansion Joint Diaphragms- Vertically Post-Tensioned on the tension face	Four bars[3] per face, per cell
Segment- Vertically Post-Tensioned (Required when principal stress limits are exceeded)	Two bars[3] per web

1. Two U-Girders minimum per span.
2. Three I-Girders minimum per span.
3. The term "tendon" refers to multi-strand tendons, and "bar" refers to post-tensioning bar.

Commentary: The minimum number of tendons shown in Table 4.5.2-1 are intended to provide component-level internal redundancy, which is not to be confused with load path redundancy.

4.5.3 Duct Spacing

Design and detail post-tensioned superstructure elements to meet or exceed the minimum center-to-center duct spacings in accordance with Table 4.5.3-1 using duct diameters shown in ***SDG*** Table 1.11.4-1.

Table 4.5.3-1 Minimum Center-to-Center Duct Spacing

Post-Tensioned Superstructure Type	Minimum Center To Center Vertical Spacing "d" between Longitudinal Ducts[1]	Minimum Center To Center Horizontal Spacing "s" between Longitudinal Ducts[1]
Precast Balanced Cantilever Segmental Bridges (see Figure 4.5.3-1)	2 times outer duct diameter plus 1-inch, or outer segmental coupler diameter plus 2-inches, whichever is greater.	2 times outer duct diameter plus 1-inch, or outer segmental coupler diameter plus 2-inches, whichever is greater.
C.I.P. Balanced Cantilever Segmental Bridges (see Figure 4.5.3-1)	Outer duct diameter plus 1.5 times maximum aggregate size, or outer duct diameter plus 2-inches, whichever is greater.	Outer duct diameter plus 2½-inches.
Post-Tensioned I-Girder and U-Girder Bridges[2] (see Figure 4.5.3-2)	Outer duct diameter plus 1.5 times maximum aggregate size, or outer duct diameter plus 2-inches, whichever is greater (measured along the slope of webs or flanges).	Outer duct diameter plus 2½-inches.
C.I.P. Solid or Voided Slab Bridges and C.I.P. Multi-Cell Bridges (see Figure 4.5.3-3)	Outer duct diameter plus 1.5 times maximum aggregate size, or outer duct diameter plus 2-inches, whichever is greater.	Outer duct diameter plus 3-inches.
Integral Pier Caps (See Figure 3.11.1-1)	See ***SDG*** Table 3.11.1-2	See ***SDG*** Table 3.11.1-2

1. Bundled ducts are not allowed.
2. Detail draped tendons in post-tensioned I-Girders and U-Girders utilizing round ducts only.

Commentary: The duct spacing requirements and prohibiting the use of bundled ducts provides space for proper concrete placement and consolidation around the ducts and couplers. Round ducts are required for use with draped tendons in girders due to web splitting that occurred on projects using oval shaped ducts in the 1980s and 1990s.

Figure 4.5.3-1 Section Through Segmental Box Girder Showing Duct Spacings

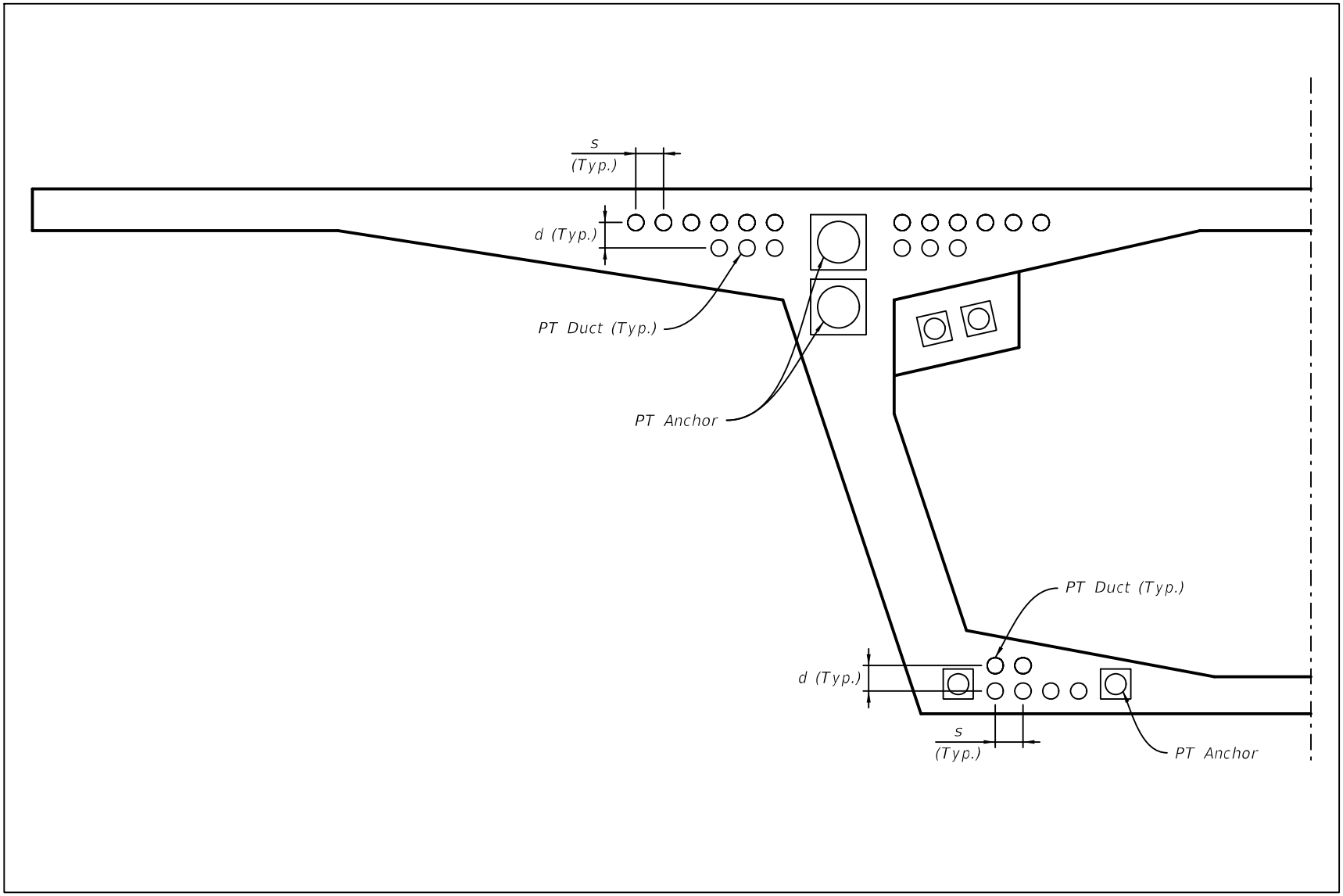

Figure 4.5.3-2 Section Through Post-Tensioned I-Girder Showing Duct Spacings

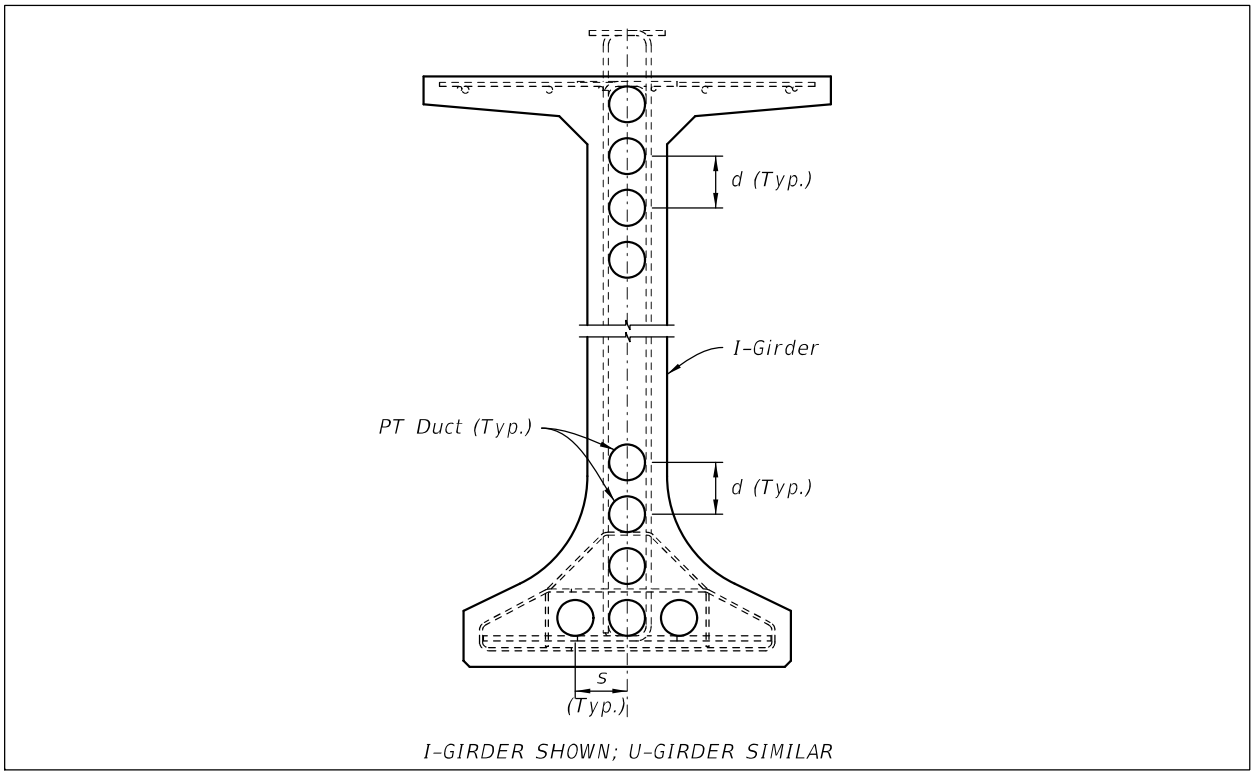

Figure 4.5.3-3 Section Through Slab or Multi-Cell Box Girder Bridge Showing Duct Spacings

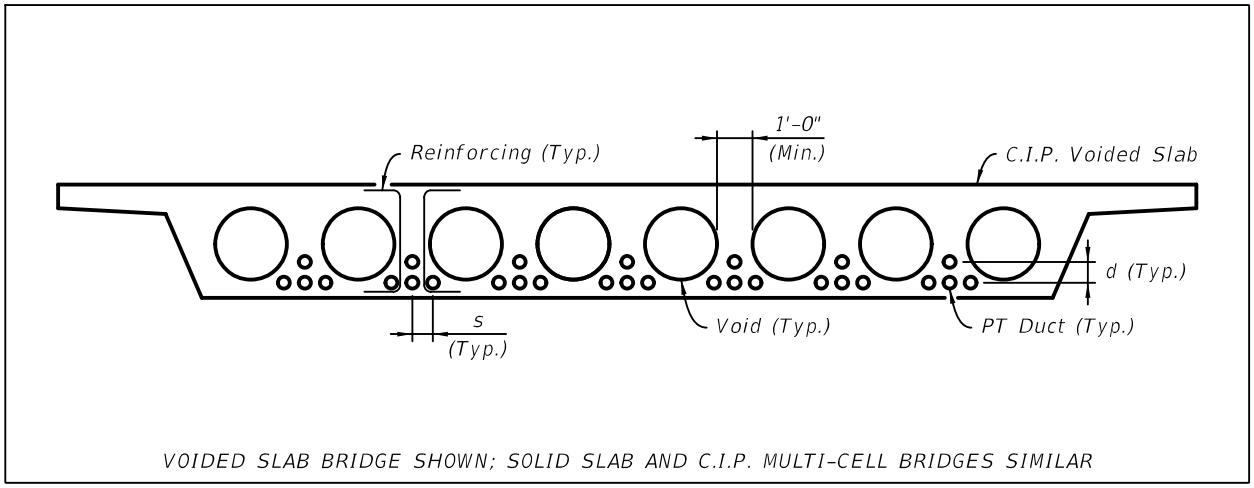

4.5.4 Principal Tensile Stresses (LRFD 5.9.2.3.2b, 5.9.2.3.3 and 5.12.5.3.3)

The design of I-girder, U-girder and segmental box girder bridges without the use of vertical post-tensioning in the webs is preferred. High principal stresses shall first be reduced by either extending the section depth and/or thickening the web. When vertical post-tensioning is required, limit its use to the lesser of (1) the first two segments from the pier segment/table or (2) ten percent of the span length.

Commentary: Occasionally in C.I.P. balanced cantilever segmental box girder construction, vertical PT bars supplying a nominal vertical compression are used at select locations to control web cracking.

4.5.5 Expansion Joints

Design and detail expansion joints to be set at time of construction for the following conditions:

A. Allowance for opening movements based on the total anticipated movement resulting from the combined effects of creep, shrinkage, and temperature rise and fall. For box girder structures, compute creep and shrinkage from the time the expansion joints are installed through day 10,000.

B. Provide a table in the plans giving precompression settings according to the prevailing conditions. Size expansion devices and set to remain in compression through the full range of design temperature from their initial installation until a time of 10,000 days.

Commentary: The loss of prestress is considered to be diminished at 10,000 days. This is the international standard established by the fib (CEB-FIP).

C. Provide a table of setting adjustments to account for temperature variation at installation in the plans. Indicate the ambient air temperature at time of installation, and note that adjustments must be calculated for the difference between the ambient air temperature and the mean temperature given in ***SDG*** 2.7.

4.6 SEGMENTAL BOX GIRDERS

A. Segmental bridges are inherently complex to design and build. They require a coordinated effort between designers and detailers in order to develop integrated plans that address all design, detailing and constructability issues. The information contained herein is only part of the requirements necessary to successfully accomplish this task. For additional requirements see ***SDM*** Chapter 20.

B. Provide continuous typical longitudinal mild reinforcing through all segment joints for cast-in-place segmental construction.

C. Provide a ½-inch deep continuous V-groove adjacent to copings as shown in Figure 4.2.12-1.

D. Use unreinforced cast-in-place concrete for closure pours greater than 6-inches and less than 12-inches. Use reinforced cast-in-place concrete for closure pours 12-inches wide and greater.

E. See ***SDG*** 1.11 and ***SDG*** 4.5 for additional requirements.

4.6.1 Maximum Web Spacing for Precast Segmental Box Girders

The maximum web spacing for single and multiple cell precast segmental box girders is 32'-0" as shown in Figure 4.6.1-1. See ***SDG*** 4.5 for post-tensioning requirements.

*Commentary: These requirements work with **SDG** 4.6.3 to address shear lag issues associated with the distribution of post-tensioning tendons across wide segmental box girders.*

Figure 4.6.1-1Maximum Web Spacing for Precast Box Girders

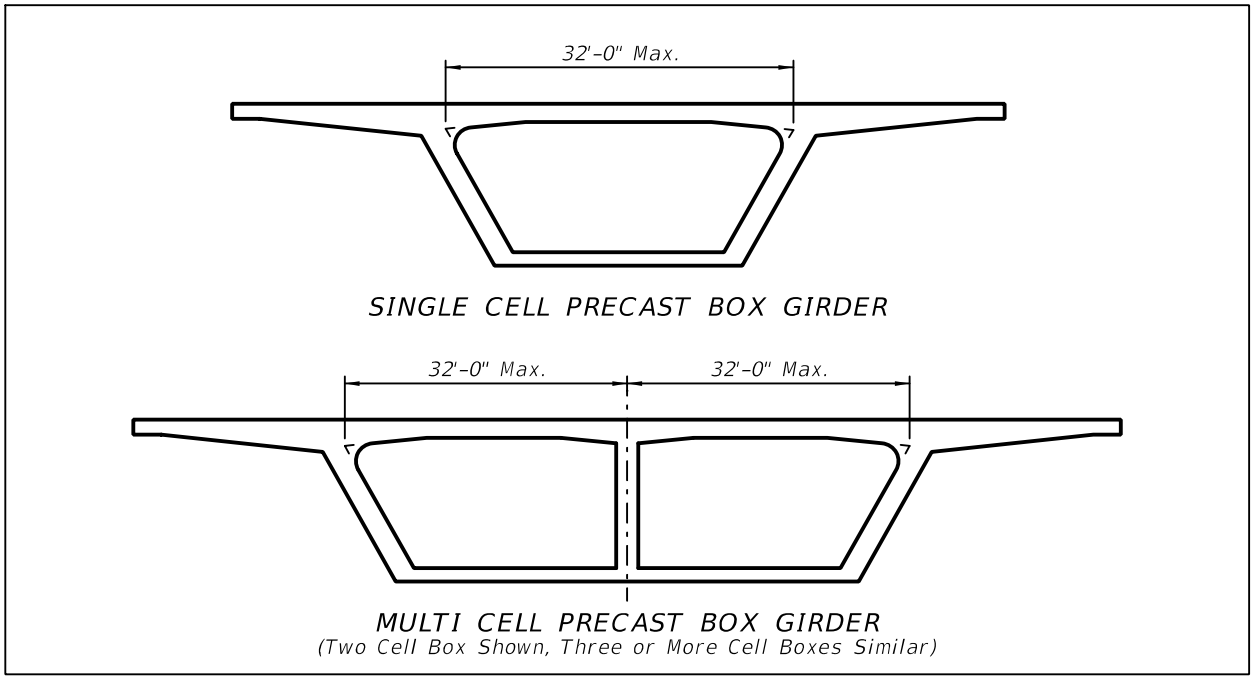

4.6.2 Access and Maintenance

During preliminary engineering and when determining structure configuration give utmost consideration to accessibility and to the safety of bridge inspectors and maintenance. Precast, pretensioned (non-post-tensioned) Florida-U-Beams are exempt from special requirements for inspection and access.

A. Height: ***LRFD*** 2.5.2.2

For maintenance and inspection, the minimum interior, clear height of box girders is 6-feet.

B. Electrical:

1. Design and detail interior lighting and electrical outlets in accordance with ***Standard Plans*** Index 715-240.
2. Show interior lighting and electrical outlets at the following locations:
    a. all ingress/egress access openings
    b. both sides of diaphragms where girder is continuous
    c. at the inside face of diaphragms where the girder is discontinuous, e.g. at end bents and expansion joints.
    d. spaced between the above locations at approximately equal intervals not to exceed 50-feet.

    Only a single interior light and electrical outlet are required if any of the above locations coincide.
3. Where interior height permits, show lighting mounted along center of box.
4. Locate switches at each end of each span and at every access opening.

C. Access:

1. Access Openings in Bottom Flanges
    a. Design box sections with ingress/egress access openings in the bottom flanges located at maximum 600-foot spacing. Space access openings along the length of the box girder such that the distance from any location within the box girder to the nearest opening is 300-feet or less. Provide a minimum of two access openings per box girder line. Whenever feasible and in areas not deemed problematic for access by unauthorized persons or due to bridge security issues, place an access opening near each abutment. Provide additional access openings along the length of the box girder as required to meet the maximum spacing requirement. Avoid placing access openings over traffic lanes, the use of which would require extensive maintenance of traffic operations and at other locations such as over sloped embankment, over water or locations which would otherwise negatively affect the safety of inspectors or the traveling public. Contact the District Maintenance Office for final guidance in establishing access opening locations.

Commentary: The maximum spacing of 600-feet for access openings is based on the 300-foot maximum length of an air-supplied respirator hose per 42 CFR Part 84 subpart J, Table 8.

    b. The minimum access opening size is 32-inches x 42-inches, or 36-inch diameter. Indicate on the plans that access openings are to remain clear and are not to be used for utilities, drain pipes, conduits or other attachments. If these items are required, provide additional openings.
    c. Analyze access opening sizes and bottom flange locations for structural effects on the box girder. Generally, do not place access openings in zones where the bottom flange is in compression under permanent loads.

d. Specify an Access Hatch Assembly in accordance with ***Standard Plans*** Index 460-251 to be provided at each 36-inch diameter access opening. If other size access openings are used or if this Design Standard cannot otherwise be used, develop custom project specific designs based on the standard using inswinging, hinged, solid steel access hatches with steel hardware and a lockable hasp on the outside of the hatch. Require suitable keyed commercial grade, weather resistant padlocks with a 2-inch shackle for all access hatches. Require that all padlocks on an individual bridge be keyed alike.

2. Access Openings in Interior Diaphragms

a. Provide an access opening with a flat bottom through all interior diaphragms. If the bottom of the diaphragm access opening is not flush with the top of the bottom slab, provide concrete ramps to facilitate equipment movement. The maximum allowable slope on the ramp is 15%.

b. The minimum diaphragm access opening size is 32-inches wide x 42-inches tall. Indicate on the plans that diaphragm access openings are to remain clear and are not to be used for utilities, drain pipes, conduits or other attachments. If these items are required, provide additional areas or openings. In all other areas of the box, provide a minimum continuous maintenance/inspection access envelope 6'-0" high x 2'-6" wide along the length of the box. The 6'-0" height dimension of the envelope, to be measured from top of the bottom slab of the box, shall clear all tendon ducts, anchorages, blisters, deviation saddles, etc.

c. Specify Access Door Assemblies at both ends of simple span box girders and at both ends of continuous box girder units. Specify inswinging, hinged steel access doors with steel expanded metal mesh and steel hardware. Expanded metal mesh shall be ½-inch No. 16 expanded carbon steel metal mesh in accordance with ASTM F 1267, Type I or II, Class 2, Grade A. Equip access doors with a lockable latch that can be opened from both sides of the door. Require suitable keyed commercial grade, weather resistant padlocks with a 2-inch shackle for access doors at abutments. Require that all padlocks on an individual bridge be keyed alike.

Commentary: The size of the openings in the expanded metal mesh was specifically selected to exclude the Brazilian Free-tailed Bat, Tadarida brasiliensis, but the small mesh size will also exclude other species of bats found in Florida and most, if not all, birds.

D. Other Exterior Openings:

1. Design each box girder with minimum 2-inch diameter ventilation or drain holes located in the bottom flange on both sides of the box spaced at approximately 50-feet or as needed to provide proper drainage. Place additional drains at all low points against internal barriers. Locate drains to accommodate bridge grade.

2. Provide drains to prevent water (including condensation) from ponding near post-tensioning components, face of diaphragms, blisters, ribs, deviators, and other obstructions. Show details on Contract Drawings. Include the following:

a. Specify a 2-inch diameter permanent plastic pipe (PVC with UV inhibitor) set flush with the top of the bottom slab.

b. A ½-inch deep continuous V-groove around bottom of pipe insert.

c. Drains at all low points against internal barriers, blisters, etc.

d. Drains on both sides of box, regardless of cross slope (to avoid confusion.)

e. Vermin guards for all drains and holes.

f. A note stating, "Install similar drains at all low spots made by barriers introduced to accommodate means and methods of construction, including additional blocks or blisters."

3. Require ¼-inch screen on all exterior openings not covered by a door. This includes holes in webs through which drain pipes pass, ventilation holes, drain holes, etc.

E. Other Box Sections - Provide accessibility to box sections, such as precast hollow pier segments, in a manner similar to that for box girders, particularly concerning the safety of bridge inspectors and maintenance personnel. During preliminary engineering and when determining structure configuration, give utmost consideration to box girder accessibility and the safety of bridge inspectors and maintenance personnel. Due to the wide variety of shapes and sizes of hollow sections such as precast concrete pier segments, numerous site constraints and environmental conditions, each application will be considered on an individual, project-by-project basis. In all cases, coordinate the inspection access and safety measures with the DSME and the SSDE.

4.6.3 Tendons

A. Lay out cantilever internal tendons in precast segmental box girder superstructures as shown in Figure 4.6.3-1. Combinations of one anchorage and two anchorages per web may be used. See also ***SDG*** 1.11 for additional requirements. All segments shall be supported by cantilever tendons originating from the pier segment/pier table.

B. Provide external or bonded internal top slab continuity tendons across mid span and end spans closure pours in balanced cantilever bridges as follows.

1. For boxes with wing lengths less than or equal to 0.6 x W (see Figure 4.6.3-3), provide top slab continuity tendons across mid span closure pours as shown in Table 4.6.3-1.

2. For boxes with wing lengths greater than 0.6 x W (see Figure 4.6.3-3), use the following methodology to determine top slab continuity tendon configurations:

a. Determine lateral distribution of tendon force across the top slab using ***LRFD*** C4.6.2.6.2 (the ***LRFD*** 30-degree model).

b. Locate top slab continuity tendon anchorages sufficient distances back from the closure pour to ensure full distribution of tendon forces across the closure pour and so that the tendons overlap a minimum of one pair of cantilever

tendons. Do not anchor top slab continuity tendons in the segments adjacent to the closure pour.

c. Provide a minimum of 75 psi compression across the top slab assuming a uniform stress of P/A on the top slab area only (see Figure 4.6.3-3). Neglect the effects of the bottom slab continuity post-tensioning for this calculation.

d. Locate top slab continuity tendon anchorages adjacent to the webs as shown in Figure 4.6.3-3. Provide additional tendons evenly spaced across each cell and within the wings as required to provide the required uniform minimum compression.

Figure 4.6.3-1 Internal Tendon Layout Schematics for Precast Segmental Box Girders

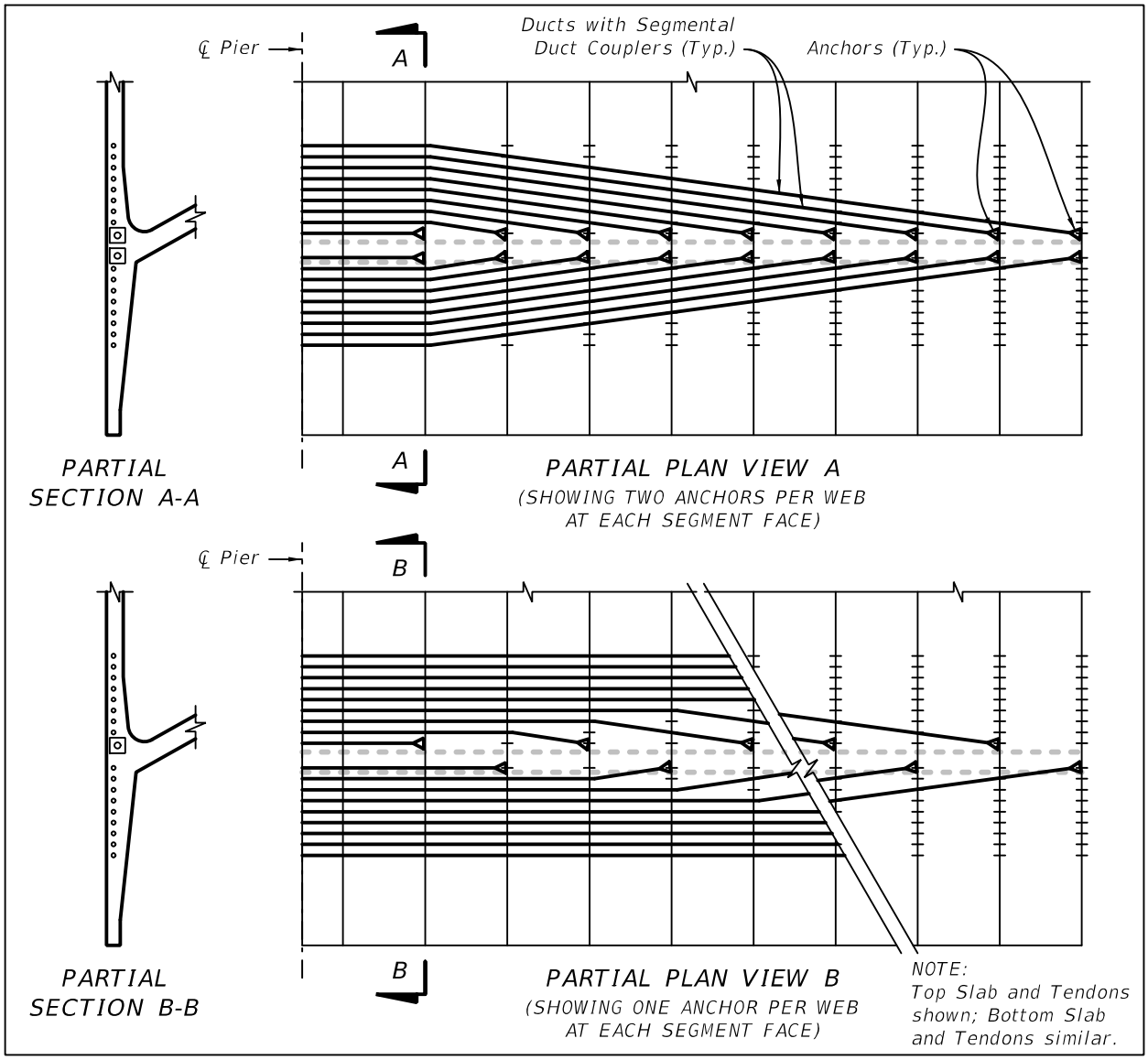

Figure 4.6.3-2 Cantilever Tendon Layout Schematic for Cast-In-Place Box Girders

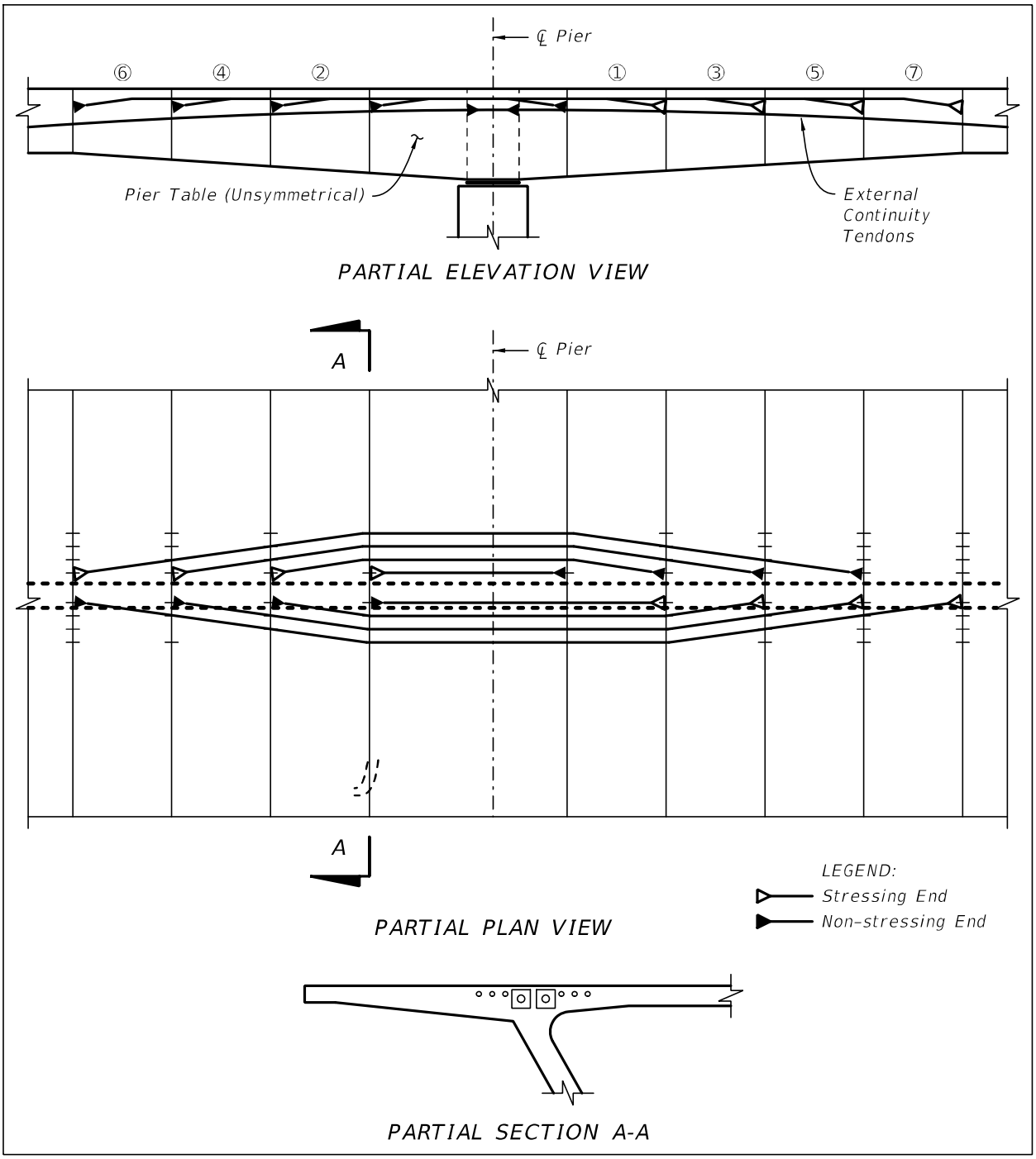

Table 4.6.3-1 Minimum Member, Size and Anchorage Location of Top Slab Continuity Tendons Across Mid Span Closure Pours

Web Spacing per cell - See Figure 4.6.3-3	Number and size of Tendons per cell[1]	Tendon Anchorage Locations referenced from adjacent face of Closure Pour[2]
W ≤ 12-feet	Two tendons - 4-0.6" diameter	One adjacent to each web anchored in 2nd Segment back
12-feet < W ≤ 20feet	Two tendons - 4-0.6" diameter	One adjacent to each web anchored in 3rd Segment back
20-feet < W ≤ 25feet	Two tendons - 7-0.6" diameter	One adjacent to each web anchored in 3rd Segment back
25-feet < W ≤ 30-feet	Four tendons - two with 7-0.6" diameter and two with 4-0.6" diameter	One adjacent to each web anchored in 2nd Segment back and one adjacent to each web anchored in 3rd Segment back
W > 30-feet	Four tendons - 7-0.6" diameter	One adjacent to each web anchored in 3rd Segment back and two evenly spaced across cell anchored in 4th Segment back

1. Alternate strand, parallel wire or PT bar tendon configurations which provide an equivalent force may be substituted for tendon configuration shown.
2. The resulting distance from tendon anchorage location to adjacent face of closure pour is the minimum. Locate top slab tendon anchorages longitudinally so that the tendons overlap a minimum of one pair of cantilever tendons.

C. Provide bottom slab continuity tendons according to Table 4.5.2-1. Distribute anchorage/blister locations longitudinally such that no more than one pair of symmetrical tendons are anchored in a single segment (e.g. one on each side of the web). Use a fillet (haunch) in each corner of the bottom flange as required to accommodate internal tendons. See Figure 4.5.3-1.

Figure 4.6.3-3 External Top Slab Continuity Tendon Layout versus Web Spacing at Mid Span Closure Pours

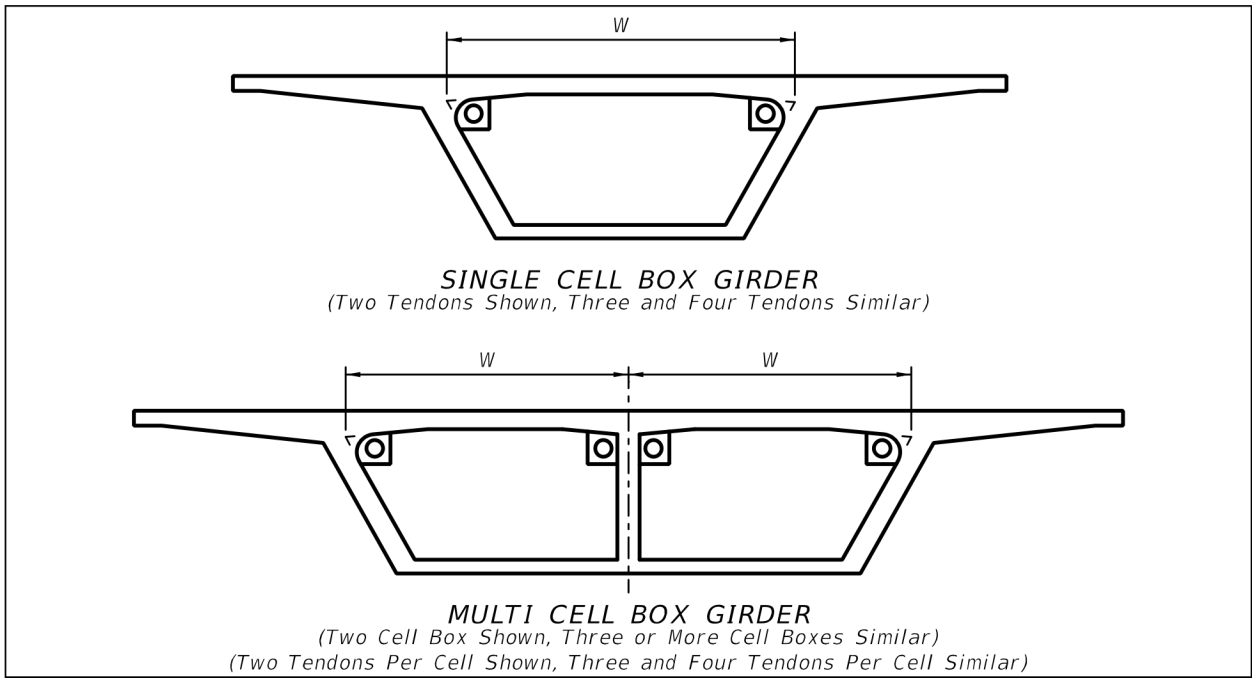

Commentary: This is a minimum requirement and is not to be added to those required by the longitudinal analysis, i.e. if the number and size of top slab tendons across closure pours required by the longitudinal analysis exceeds these minimums, no additional tendons are required.

D. Design and detail all future post-tensioning utilizing external tendons (strands, parallel wires, or bars). Design and detail future post-tensioning so that any one span can be strengthened independently of adjacent spans. For each future tendon, provide one duct/anchorage location for expansion joint diaphragms, based on the largest size of tendons provided.

Figure 4.6.3-4 Top Continuity Tendons Alternatives

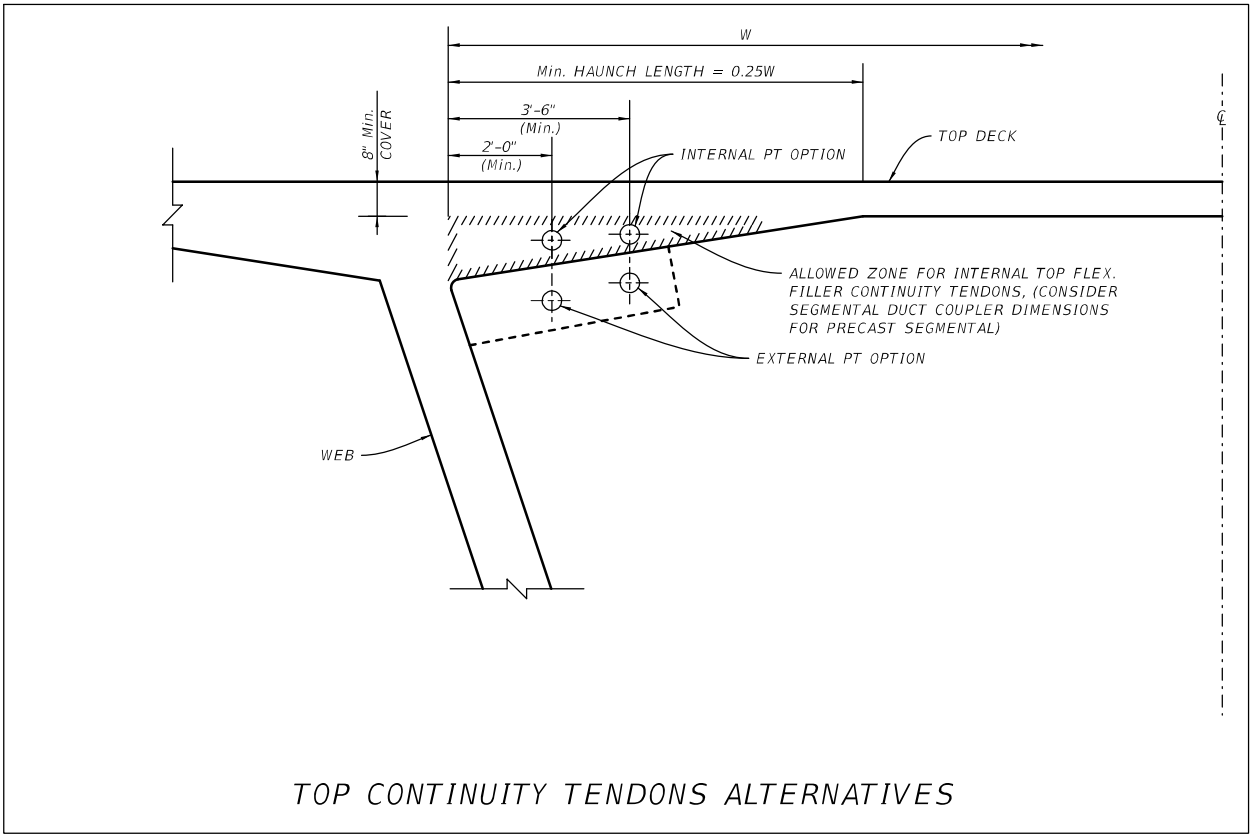

Figure 4.6.3-5 Partial Plan View Of Typical Mid Span Top Continuity Tendons Layout

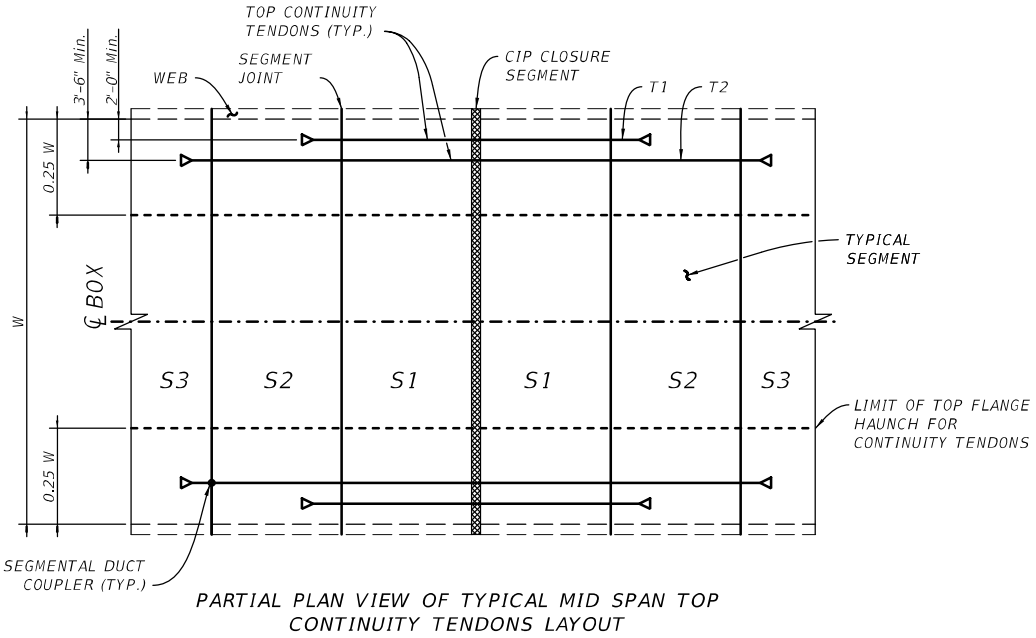

PARTIAL PLAN VIEW OF TYPICAL MID SPAN TOP CONTINUITY TENDONS LAYOUT

Figure 4.6.3-6 Partial View Of Typical End Span Top Continuity Tendons

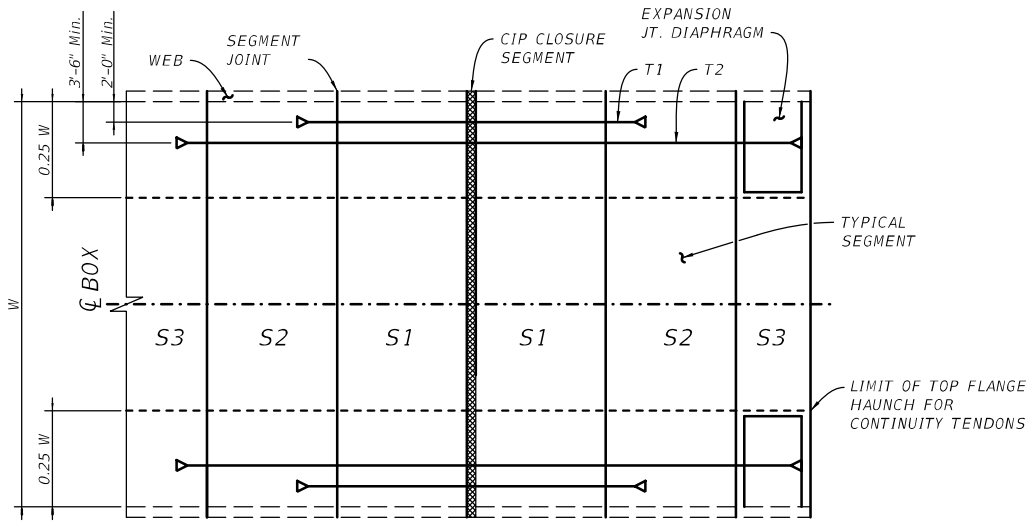

PARTIAL PLAN VIEW OF TYPICAL END SPAN
TOP CONTINUITY TENDONS

4.6.4 Anchorage, Blister and Deviator Details

A. When anchorages for temporary or permanent tendons are required in the top or bottom slab of box girders, design and detail interior blisters, face anchorages or other SSDE approved means. Blockouts that extend to either the interior or exterior surfaces of the slabs are not permitted.

Commentary: Blockouts are prohibited due to difficulties filling and sealing them after tendon installation.

B. Detail anchorage blisters so that tendons terminate no closer than 12-inches to a joint between segments.

C. Detail all interior blisters set back a minimum of 12-inches from the joint. Provide a ½-inch deep minimum V-groove around the top slab blisters to isolate the anchorage from any free water.

D. Transverse bottom slab ribs are to be avoided. In cases where the transverse ribs are structurally required, provide a concrete ramp. The ramp requirements stated in Section 4.6.2 apply.

Figure 4.6.4-1 Deviator Diaphragm Detail

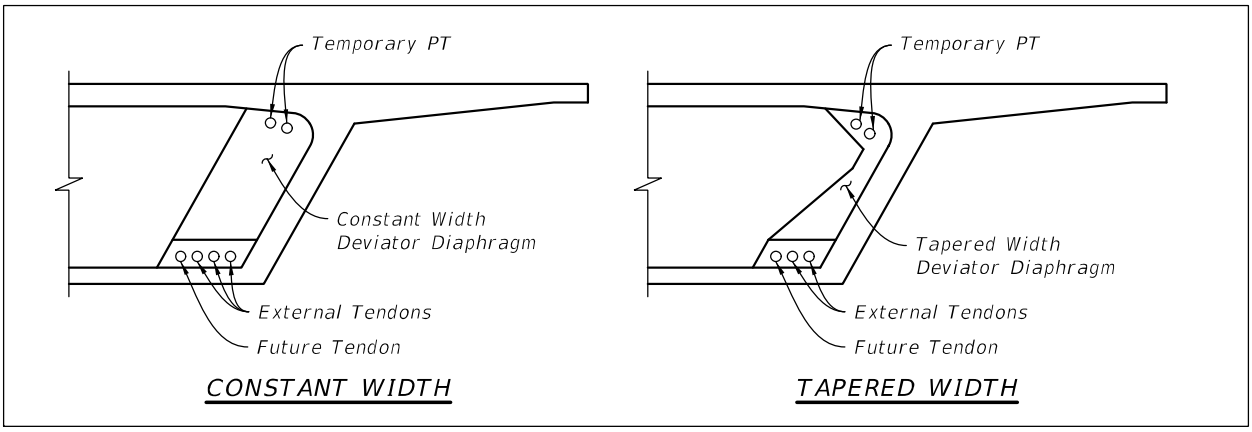

E. Raised corner recesses in the top corner of pier segments at closure joints are not allowed. Extend the typical cross section to the face of the diaphragm. Locate tendon anchorages to permit jack placement.

F. Design and detail clearance at anchorages for future inspection and replacement of unbonded tendons. See ***SDG*** 1.11.1.B for clearance requirements at anchorages.

G. Use full height deviator diaphragms as shown in Figure 4.6.4-1. The maximum number of deviated tendons that can be used in tapered width diaphragms is three, including future tendons. Use constant width diaphragms when deviating four or more tendons.

Figure 4.6.4-2 Inside Corner Detail at Pier Segments

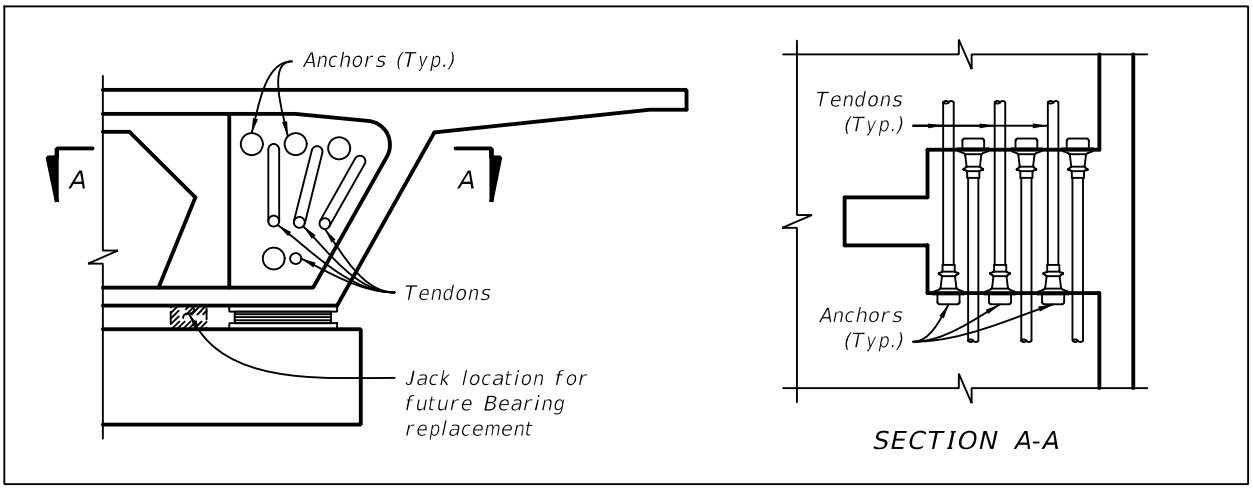

4.6.5 Design Requirements for Cantilever Bridges with Fixed Pier Tables

A. Design superstructures and substructures to accommodate erection tolerances of **L**/1,000 (where **L** is the cantilever length from center of pier to the cantilever tip) for precast superstructures. Structure stresses shall be enveloped assuming a worst case condition ($\mathbf{L_A}$/1,000 high on Cantilever A and $\mathbf{L_B}$ /1,000 low on adjacent Cantilever B and vice-versa) assuming uncracked sections. Check the service limit state assuming these locked-in erection stresses, "**EL**" in ***LRFD*** Equation 3.4.1-2.

Figure 4.6.5-1 Elevation and Detail - Typical Cantilever Concrete Segmental Box with Fixed Pier Tables

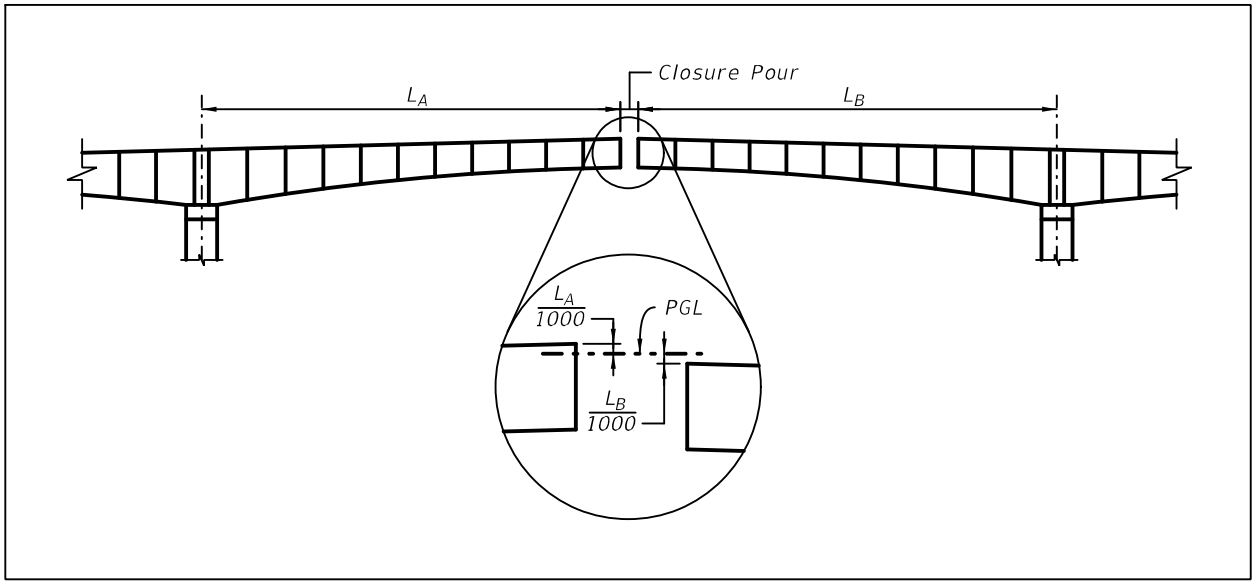

B. The service load stresses of the column and column-superstructure connection, including crack control of the column shall also be checked for both erection and final structure.

Commentary: Field correction for geometry control for framed bridges built in balanced cantilever can result in high stresses in both the superstructure and substructure. These stresses need to be accommodated for by the designer. These stresses are the result of the clamping force of the two tips with the strong back.

4.6.6 Creep and Shrinkage (LRFD 5.12.5.3.6)

Calculate creep and shrinkage strains and effects using a Relative Humidity of 75%. For segmental bridges, perform the time-dependent analysis at all critical intermediate stages of construction/erection, at the end of construction, and at day 10,000.

Commentary: An accurate assumption about the relative humidity is critical for the development of accurate creep and shrinkage related calculations, especially for segmental bridges. The rate of creep and shrinkage is considered negligible at 10,000 days. This is the international standard established by the fib (CEB-FIP).

4.6.7 Expansion Joints

A. At expansion joints, provide a recess and continuous expansion joint device seat to receive the assembly, anchorage bolts, and frames of the expansion joint, i.e. a finger or modular type joint. In the past, blockouts have been made in such seats to provide access for stressing jacks to the upper longitudinal tendon anchorages set as high as possible in the anchorage block. Lower the upper tendon anchorages and re-arrange the anchorage layout as necessary to provide access for the stressing jacks.

B. At all expansion joints, protect anchorages from dripping water by means of skirts, baffles, V-grooves, or drip flanges. Ensure that drip flanges are of adequate size and shape to maintain structural integrity during form removal and erection.

Figure 4.6.7-1 Details at Expansion Joints

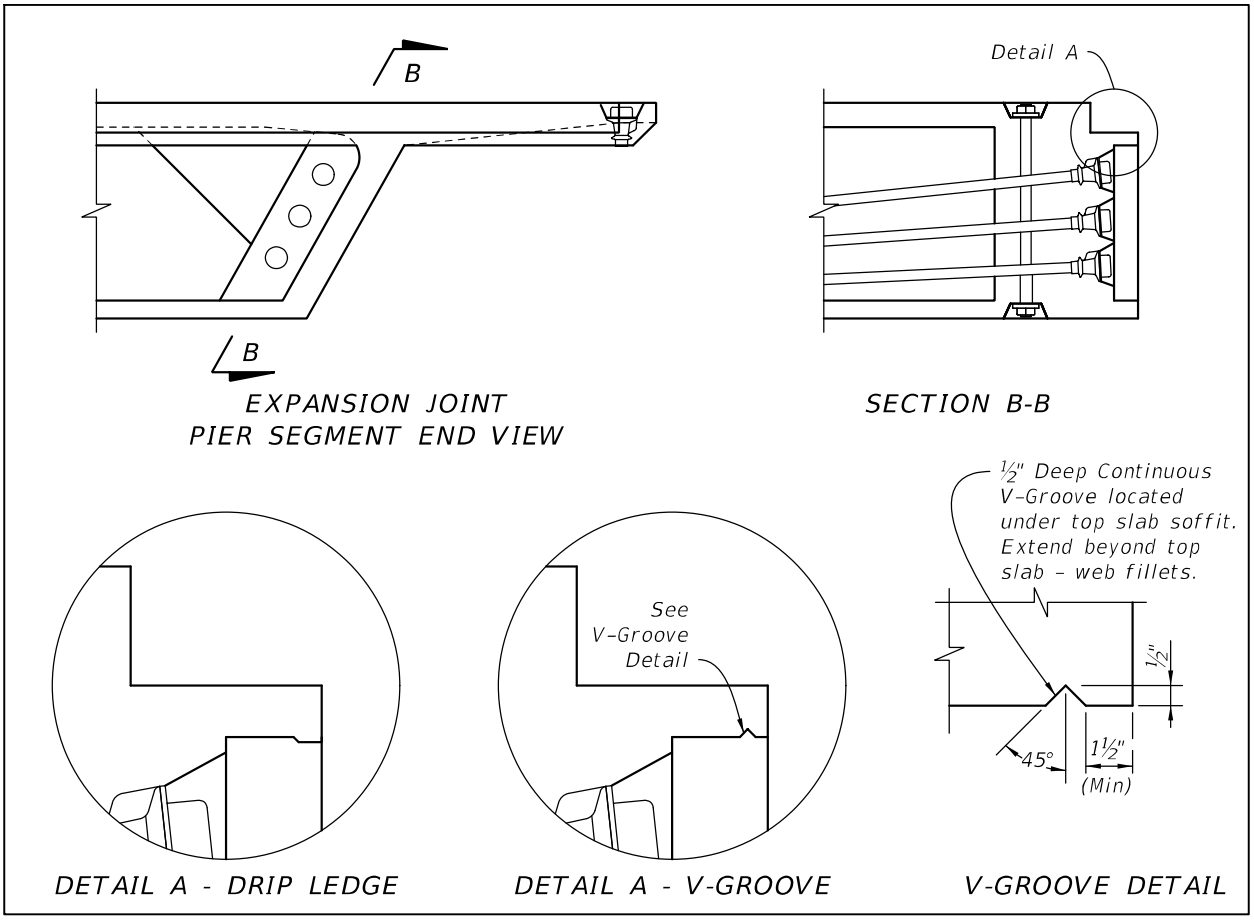

4.6.8 Construction Data Elevation and Camber Curve for Box Girders

A. General: Base Construction Data Elevations on the vertical and horizontal highway geometry. Calculate the Camber Curve based on the assumed erection loads used in the design and the assumed construction sequence.

B. Construction Data Elevations: Show construction data elevations in 3D space with "x", "y", and "z" coordinates. Locate the data points at the centerline of the box and over each web of the box.

C. Camber Curve: Provide Camber Curve data at the centerline of the box. Camber curve data is the opposite of deflections. Camber is the amount by which the concrete profile at the time of casting must differ from the theoretical geometric profile grade (generally a straight line) in order to compensate for all structural dead load, post-tensioning, long and short term time dependent deformations (creep and shrinkage), and effects of construction loads and sequence of erection. For segmental box girders, the Specialty

Engineer shall provide the camber curves, and the EOR shall check them. For other bridge types, the EOR shall provide and check the camber curves.

Commentary: Experience has shown more accurate casting curve geometry may be achieved by using the composite section properties with grouted tendons.

4.6.9 Transverse Deck Loading, Analysis & Design

A. The loading for the transverse design of box girders shall be limited to axle loads without the corresponding lane loads. Axle loads shall be those that produce the maximum effect from either the HL-93 design truck or the design tandem axles (***LRFD*** 3.6.1.2.2 and 3.6.1.2.3, respectively). The Multiple Presence Factors (***LRFD*** 3.6.1.1.2) shall also be included in the transverse design. The Tire Contact Area (***LRFD*** 3.6.1.2.5) shall not be included in the transverse design of new bridges when using influence surface analysis methods to calculate fixed-end moments.

B. The prestressed concrete deck shall be designed for Strength I and Service I Load Combination excluding all wind effects. All analyses will be performed assuming no benefit from the stiffening effects of any traffic railing barrier.

C. In ***LRFD*** 5.6.7, use a Class 2 exposure condition for the transverse design of segmental concrete box girders for any loads applied prior to attaining full nominal concrete strength.

*Commentary: The Tire Contact Area (**LRFD** 3.6.1.2.5) may be used when evaluating the transverse operating rating of existing prestressed concrete box girder decks.*

D. Design and detail all box girder top slabs to be transversely post-tensioned. Reduce critical eccentricities over the webs, and at or near the center of each cell within the box, from theoretical to account for the tendon profile within the duct and by an additional ¼-inch from theoretical to account for construction tolerances.

E. Design those portions of box girder top slabs supporting traffic railings using the values and applicable methodology shown in ***SDG*** 4.2.5.

4.6.10 Span-by-Span Segmental Diaphragm Details

A. Design external tendons so that the highest point of alignment is below the bottom mat of the top slab reinforcing in the diaphragm segment.

Commentary: The requirement is intended to eliminate conflicts between longitudinal tendons and top slab reinforcement in heavily congested pier segments.

B. Design tendon filler ports and vents so that they do not pierce the top slab of a structural section.

Commentary: On span-by-span segmental bridges, filler and injection ports for longitudinal tendons can be positioned along the diaphragm faces so as to not go through the top slab of boxes. Ports exiting through the top slab present too great of an opportunity for water to enter the duct through a loose or missing fitting or plug.

4.6.11 Analytical Methods for the Load Rating of Post-tensioned Box Girder Bridges

Perform load rating in accordance with ***AASHTO MBE*** Section 6, Part A as modified by the Department's ***Bridge Load Rating Manual.*** For general references, see ***New Directions for Florida Post-Tensioning Bridges, Vol. 10 A "Load Rating Post-Tensioned Concrete Segmental Bridges"***. ***Volume 10A*** can be found on the Structures Design web site at the following address: www.fdot.gov/structures/posttensioning.shtm.

4.7 PRETENSIONED/POST-TENSIONED I-BEAMS

A. In the design of pretensioned beams made continuous by field-applied post-tensioning, the pretensioning applied to each beam field section shall be designed such that, as a minimum, the following conditions are satisfied:

   1. The pretensioning shall meet the minimum steel provisions of ***LRFD*** 5.6.3.3.
   2. The pretensioning shall be capable of resisting all loads applied prior to post-tensioning, including a superimposed dead load equal to 50% of the uniform weight of the beam, without exceeding the stress limitations for pretensioned concrete construction.

Commentary: The 50% extra dead load is intended to address dynamic effects during handling, shipment and placement of the beam field sections.

   3. The pretensioning force shall be of such magnitude that the initial midspan camber of the beam field section at release, including the effect of the dead load of the beam, is at least ½-inch. In computing the initial camber, the value of the modulus of elasticity shall be in accordance with ***SDG*** 1.4.1 for the minimum required strength of concrete at release of the pretensioning force, and the pretensioning force in the strands shall be reduced by losses due to elastic shortening and steel relaxation.

Commentary: The pretensioning force requirement is intended to prevent the beam sections from sagging prior to the application of the post-tensioning.

B. Full-depth diaphragms are required at all splice (closure pour) and anchorage locations. At closure pour locations, cast intermediate diaphragms with the closure pours. Design diaphragms for out-of-plane loads for chorded girders on a horizontal curve.

Commentary: Full-depth diaphragms at the closure pours provide stability to the individual beam sections during and after the stressing of the post-tensioning. The diaphragms also help maintain structural integrity of the bridge system and compensate for slight misalignments that are inevitable due to fabrication and placement tolerances.

C. Use reinforced concrete closure pours with a minimum length of 2’-0” between adjacent beam sections.

D. Integrated drawings in accordance with ***SDG*** 4.5 are required for anchorage zones of post-tensioning ducts and for beams in which ducts deviate both horizontally and vertically.

Commentary: Integrated drawings are required due to reinforcing congestion at these locations.

E. Design and detail clearance at anchorages for future inspection and replacement of unbonded tendons. See ***SDG*** 1.11.1.B for clearance requirements at anchorages.

F. Use strain compatibility to determine section capacities utilizing bonded and unbonded post-tensioning tendons, mild reinforcing steel and pretensioning strands.

4.8 PRETENSIONED/POST-TENSIONED U-GIRDERS

A. Pretensioned/post-tensioned U-Girder bridges, whether curved or straight, with full span or spliced girders, are inherently complex to design and build. They require a coordinated effort between designers and detailers in order to develop integrated plans that address all design, detailing and constructability issues. The information contained herein is only part of the requirements necessary to successfully accomplish this task.

Commentary: Pretensioned/post-tensioned U-girders are primarily intended for use on sharply curved bridges in lieu of steel or concrete segmental box girders. In order to facilitate longer spans, they can also be used on straight or slightly curved bridges in lieu of steel or other concrete girders, or ***Standard Plans****, Index 450-000 Series prestressed concrete U-beams. However, due to the inherent complexity of designing and constructing pretensioned/post-tensioned U-girders, the use of* ***Standard Plans****, Index 450-000 Series prestressed concrete U-beams is preferred where possible if a multi-box superstructure is to be used.*

B. Design and detail clearance at anchorages for future inspection and replacement of unbonded tendons. See ***SDG*** 1.11.1.B for clearance requirements at anchorages.

C. Use strain compatibility to determine section capacities utilizing bonded and unbonded post-tensioning tendons, mild reinforcing steel and pretensioning strands.

4.8.1 General

A. The minimum section depth for post-tensioned U-girders is 72". To optimize U-girder formwork standardization and utilization, use the 72", 84" and 96" ***U-girders*** developed by PCI and adopted by FDOT.

B. Develop internally haunched girder sections up to 96" deep by maintaining the outside shape and dimensions of standard U-girder sections and thickening the bottom slab internally, or by deepening a standard U-girder shape (longitudinally sloping the bottom of the bottom flange) while maintaining the side slope of the webs. The minimum bottom flange clear width within a haunched section is 2'-0" measured along the top of the bottom flange between inside corner chamfers. For haunched girders, the use of an internal, mildly reinforced, secondary cast bottom flange build-up is permitted provided that the secondary cast concrete is made

composite with bottom flange using properly distributed and anchored mechanical reinforcing through the interface. Evaluate effects of differential shrinkage between such a build-up and the girder and specify the use of shrinkage reducing admixtures for the build-up concrete as required.

C. A minimum of two girder lines is required.

D. Cast-in-place lid slabs are required for all curved structures; precast lid slabs are not permitted in any configuration. Lid slabs are typically constructed only after the girder sections are erected. Design open girder sections for torsional stresses.

Commentary: This form type is prohibited due to failures on past projects requiring Interstate bridge deck replacements.

E. Maximum stress in the longitudinal mild reinforcing steel in the deck is limited to 24 ksi for the Service III limit state.

F. Minimum horizontal radius of a curved U-girder is 500-feet (measured along centerline girder).

G. Use reinforced concrete closure pours with a minimum length of 2’-0” between adjacent beam sections.

H. Include the necessary plan notes and details to address construction issues associated with geometry control including provisions for providing a settlement monitoring program of the temporary towers and the ability to make field adjustments to the U-girder sections prior to post-tensioning by jacking, etc.

I. List on the plans the assumed construction live load, weight of screed machine and weight of formwork used for the constructability limit state checks.

J. Include the necessary plan notes and details to address all the other construction issues listed in, or associated with, the above requirements.

4.8.2 Access and Maintenance

During preliminary engineering and when determining structure configuration give utmost consideration to accessibility and to the safety of bridge inspectors and maintenance. Design post-tensioned U-girders for the following special requirements for inspection and access. Precast, pretensioned (non-post-tensioned) U-girders are exempt from these requirements.

A. Utilities and longitudinal or vertical conveyance drain pipes are not permitted inside U-girders. Where possible, locate drainage inlets adjacent to piers and place associated vertical drain pipes outside of U-girders. Utilize external concrete bump-outs or shrouds to conceal pipes as required. See ***SDM*** Chapter 22 for Pier Drainage Details.

Commentary: The inside of U-girders are relatively small making it very difficult to access and maintain items located within the girder.

B. Electrical:

1. Provide interior lighting and electrical outlets at all ingress/egress access openings and at midspan of each span. Only a single interior light and electrical outlet are required if these locations coincide.
2. Specify in the plans that all electrical and lighting components shall meet the material requirements of ***Standard Plans*** Index 715-240.

C. Access:

1. Access Openings in Bottom Flanges

   a. Design U-Girder sections with ingress/egress access openings in the bottom flanges located at maximum 600-foot spacing. Space access openings along the length of the U-Girder such that the distance from any location within the U-Girder to the nearest opening is 300-feet or less. Provide a minimum of two access openings per U-Girder girder line. Whenever feasible and in areas not deemed problematic for access by unauthorized persons or due to bridge security issues, place an access opening near each abutment. Provide additional access openings along the length of the U-Girder as required to meet the maximum spacing requirement. Avoid placing access openings over traffic lanes, the use of which would require extensive maintenance of traffic operations and at other locations such as over sloped embankment, over water or locations which would otherwise negatively affect the safety of inspectors or the traveling public. Contact the District Maintenance Office for final guidance in establishing access opening locations.

Commentary: The maximum spacing of 600-feet for access openings is based on the 300-foot maximum length of an air-supplied respirator hose per 42 CFR Part 84 subpart J, Table 8.

   b. The minimum access opening size is 24-inches x 42-inches or 36-inch diameter. Indicate on the plans that access openings are to remain clear and are not to be used for utilities, drain pipes, conduits or other attachments. If these items are required, provide additional openings.

   c. Analyze access opening sizes and bottom flange locations for structural effects on the U-Girder. Generally, do not place access openings in zones where the bottom flange is in compression.

   d. Specify an Access Hatch Assembly to be provided at each access opening. Develop custom project specific Access Hatch Assembly designs similar to ***Standard Plans*** Index 460-251 using inswinging, hinged, solid steel access hatches with steel hardware and a lockable hasp on the outside of the hatch. Require suitable keyed commercial grade, weather resistant padlocks with a 2-inch shackle for all access hatches. Require that all padlocks on an individual bridge be keyed alike.

2. Access Openings in Interior Diaphragms

   a. Provide a 36-inch diameter access opening through all interior diaphragms. Indicate on the plans that diaphragm access openings are to remain clear and

are not to be used for utilities, drain pipes, conduits or other attachments. If these items are required, provide additional areas or openings.

b. If the bottom of the diaphragm access opening is not flush with the bottom flange, provide 2-feet wide minimum concrete or wood ramps at diaphragms to facilitate inspection and equipment movement. Provide ramps with a 1V:4H maximum grade (not including grade of girder) and that are continuous through the access opening. Concrete ramps shall be non-composite and may be constructed as a secondary pour. Composite internal bottom flange build-ups used for haunched girders may serve as ramps. Design wood ramps with plywood decking. Specify marine grade plywood meeting the requirements of BS 1088 for the decking and all other wood to meet the treatment requirements of ***Specifications*** Section 955-2.2 for pedestrian bridges.

c. Specify Access Door Assemblies at both ends of simple span U-Girders and at both ends of continuous U-Girder units. Specify inswinging, hinged steel access doors with steel expanded metal mesh and steel hardware. Expanded metal mesh shall be ½-inch No. 16 expanded carbon steel metal mesh in accordance with ASTM F 1267, Type I or II, Class 2, Grade A. Equip access doors with a lockable latch that can be opened from both sides of the door. Require suitable keyed commercial grade, weather resistant padlocks with a 2-inch shackle for access doors at abutments. Require that all padlocks on an individual bridge be keyed alike.

Commentary: The size of the openings in the expanded metal mesh was specifically selected to exclude the Brazilian Free-tailed Bat, Tadarida brasiliensis, but the small mesh size will also exclude other species of bats found in Florida and most, if not all, birds.

D. See ***SDG*** 4.6.2 Paragraph D for requirements for other exterior openings.

4.8.3 Initial Prestressing

A. Design U-Girder segments to be initially prestressed in the casting yard by pretensioning or post-tensioning. The use of U-Girder segments that are only mildly reinforced is not permitted. Design the initial prestressing such that, as a minimum, the following conditions are satisfied:

1. The initial prestressing shall meet the minimum steel provisions of ***LRFD*** 5.6.3.3.
2. The initial prestressing shall be capable of resisting all loads applied prior to field-applied post-tensioning, including a superimposed dead load equal to 30% of the uniform weight of the girder segment, without exceeding the stress limitations for pretensioned concrete construction.

Commentary: The 30% extra dead load is intended to address dynamic effects during handling, shipment and placement of the beam field sections.

3. The initial prestressing force shall be of such magnitude that the initial deflection at release, including the effect of the dead load of the girder, shall be zero or in the positive direction. In computing the initial deflection, the value of the Modulus

of Elasticity shall be in accordance with ***SDG*** 1.4.1 for the minimum required strength of concrete at release of the prestressing force. Reduce the effective prestressing force in the strands to account for losses due to elastic shortening and steel relaxation.

4. The bottom prestress for lifting of the negative moment section must be applied prior to shipping. It is not required to be applied in the bed. Lifting stresses and form suction must be accounted for in determining the reinforcement prior to application of prestress force.

4.8.4 Post-Tensioning

A. Design and detail for an additional 10% future post-tensioning force by using oversized anchorages, ducts, and all associated hardware for the replaceable tendons.

B. Provide integrated drawings in accordance with ***SDG*** 4.5 for anchorage zones of post-tensioning ducts and girder segments in which ducts deviate both vertically and horizontally (not including the horizontal curvature of a curved girder segment itself).

Commentary: Integrated drawings are required due to reinforcing congestion at these locations.

4.8.5 Transverse Concrete Deck Analysis

For U-girder bridges, perform a transverse deck analysis at the Service I and Strength I load combinations using the truck and tandem portion of the HL-93 live load (do not include the lane load). For deck design, do not include the wind effects for the Service I load combination. All analyses will be performed assuming no benefit from the stiffening effects of any traffic or pedestrian railing and with a maximum multiple presence factor not greater than 1.0. For the Service I load combination in transversely prestressed concrete decks, limit the outer fiber stress due to transverse bending to $0.095\sqrt{\mathbf{f'_c}}$ [ksi] ($3\sqrt{\mathbf{f'_c}}$ [psi]) for aggressive environments and $0.19\sqrt{\mathbf{f'_c}}$ [ksi] ($6\sqrt{\mathbf{f'_c}}$ [psi]) for all other environments. For the Service I load combination in reinforced concrete decks, see ***LRFD*** 5.6.7.

4.8.6 Principal Stresses in Spliced U-Girder Webs

For U-girder bridges, the principal tensile stresses in the webs during the life of the structure including construction shall meet the Service III limit state requirements of ***LRFD*** 5.9.2.3.3.

4.9 APPROACH SLABS

A. Utilize reinforced concrete approach slabs with a minimum thickness of 1'-0" at each end of each bridge.

B. Design and detail approach slabs:

1. To be a minimum length as shown in Figure 4.9-1.

Commentary: Significant settlement issues were encountered with 20-foot long approach slabs. The 30-foot minimum length allows the approach slab to be supported by completely compacted fill farther away from the backwall, reducing settlements to an acceptable amount.

2. To be pin supported on the top of the end bent backwall, to span unsupported for a minimum of 10'-0" measured perpendicular from the back face of the end bent backwall and for the remainder of the approach slab to be supported on an elastic foundation.
3. To be shaped in plan view as shown in Figure 4.9-1.
4. To have a minimum 1.75-inch thick asphalt overlay if the approach roadway has flexible pavement.

Figure 4.9-1 Approach Slab Geometry Schematic

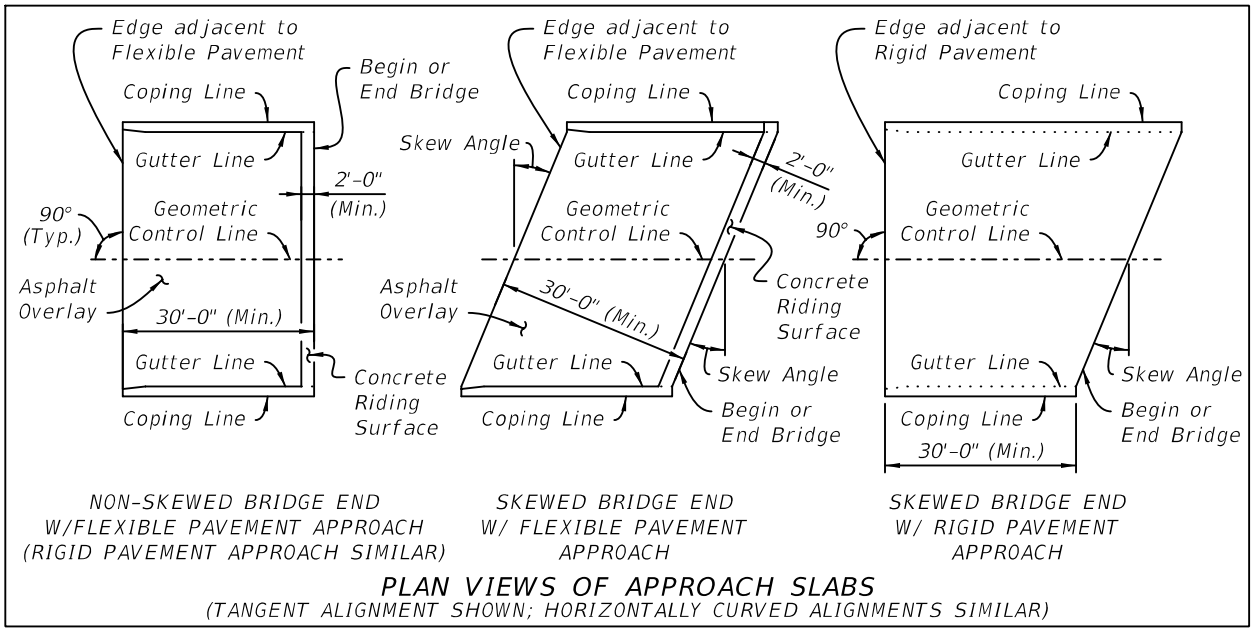

5 SUPERSTRUCTURE – STEEL

5.1 GENERAL

A. In addition to ***LRFD*** Section 4, see ***SDG*** 5.13 for straight steel I-girder units and ***SDG*** 5.14 for horizontally curved steel I-girder units.

B. Design and detail the cross-frames for steel I-girder superstructures for Steel Dead Load Fit (SDLF). No Load Fit (NLF) and Erected Fit (EF) may be used where appropriate. Total Dead Load Fit (TDLF) is not permitted unless approved by the SSDE, except for phase or widening construction in which the cross-frames located in the closure pour bay must be detailed for TDLF. See ***SDG*** 5.7 and ***SDG*** 7.5.

C. Refer to the following AASHTO/NSBA Steel Collaboration Guidelines (available at http://www.aisc.org/nsba/) with the exceptions as detailed in this chapter:

1. G1.4 - 2006 ***Guidelines for Design and Details***
2. G12.1 - 2020 ***Guidelines to Design for Constructability,***
3. G13.1 - 2019 ***Guidelines for Steel Girder Bridge Analysis***.

D. Only the nonredundant steel superstructure systems listed below are permitted. See ***SDG*** 5.3.2.

1. I-girders in two girder cross sections when approved by the SSDE. See ***SDG*** 10.2 for pedestrian bridges.
2. Truss /arch bridges when approved by the SSDE. See ***SDG*** 10.2 for pedestrian bridges.
3. Box girders in two girder cross sections.
4. Non-framed non-integral straddle pier caps
5. Integral pier caps
6. Bascule bridge main girders
7. Nonredundant steel girders or floor beam systems used with continuous or noncontinuous decks when approved by the SSDE. See ***SDG*** 2.10 for additional requirements and limitations.

Modification for Non-Conventional Projects:

Delete ***SDG*** 5.1.D and replace with the following:

D. Only the nonredundant steel superstructure systems listed below are permitted. See ***SDG*** 5.3.2.

1. Box girders in two girder cross sections.
2. Non-framed non-integral straddle pier caps
3. Integral pier caps
4. Bascule bridge main girders
5. Two-girder cross sections for pedestrian bridges. See ***SDG*** 10.2.

5.1.1 Corrosion Prevention

A. To reduce corrosion potential, utilize special details that minimize the retention of water and debris.

B. Consider special coatings developed to provide extra protection in harsh environments.

Modification for Non-Conventional Projects:
Delete ***SDG*** 5.1.1.B and see the RFP for requirements.

C. Consider the corrosion potential of box structures versus plate girders. Box Girders are preferred compared to plate girders when located in extremely aggressive environments.

Modification for Non-Conventional Projects:
Delete ***SDG*** 5.1.1.C and see the RFP for requirements.

Commentary: Box girders are expected to experience fewer corrosion issues than plate girders due to the cross frames, bearing, jacking and transverse stiffeners being internal to the boxes. Additionally, the bottom flange of the I-girder is much smaller than the box girder and is exposed to the environment.

D. See ***FDM*** 260 for minimum vertical clearances.

5.1.2 Girder Transportation

The EOR is responsible for investigating the feasibility of transportation for heavy, long and/or deep girder field sections. In general, the EOR should consider the following during the design phase:

A. Whether or not multiple routes exist between the bridge site and a major transportation facility.

B. The transportation of field sections longer than 145-feet or weighing more than 160,000 pounds requires coordination through the Department's Permit Office during the design phase of the project. Shorter and/or lighter field sections may be required if access to the bridge site is limited by roadway(s) with sharp horizontal curvature or weight restrictions.

C. Where field splice locations required by design result in lengths greater than 130-feet, design, and detail "Optional Field Splices" in the plans.

D. For curved steel box girders, trusses, and integral pier cap elements, size field pieces such that the total hauling width does not exceed 16-feet.

Modification for Non-Conventional Projects:
Delete ***SDG*** 5.1.2.C and ***SDG*** 5.1.2.D.

E. Routes shall be investigated for obstructions for girder depths exceeding 9'-0," or if posted height restrictions exist on route.

Commentary: Show erection sequence in the plans consistent with typical crane capacities, reach limitations and based on girder stability requirements. In many cases, field sections can be spliced on the ground, at the site, prior to lifting into place.

Length of travel significantly increases the difficulty to transport girders. Alternative transportation should be considered as well for heavy, long and/or deep girders. Please note that transportation of girders weighing more than 160,000 pounds may require analysis by a Specialty Engineer, bridge strengthening, or other unique measures.

5.1.3 Dapped or Tapered Girder Ends at Simple Supports

Dapped steel box girders or dapped steel plate girders are not permitted. Girder end tapers with a maximum slope of 1:12 are permitted with SSDE approval.

Commentary: Dapped beam details are inherently prone to cracking due to the abrupt change in cross-section and the resulting complex flow of internal stresses.

5.1.4 Decks

See ***SDG*** 4.2 for deck requirements.

5.1.5 Expansion Joints

Expansion joints within spans, i.e., ¼ point hinges, are not allowed.

Commentary: Midspan or quarter point hinges result in corbel like details which are inherently prone to cracking due to the abrupt change in cross-section and the resulting complex flow of internal stresses. Undesirable live load deflections are also an issue with hinges.

5.1.6 Composite Sections (LRFD 6.10)

Design straight longitudinally continuous steel girders with a concrete deck as composite sections and provide shear connectors along the entire length of the girder.

5.1.7 Shored Construction (LRFD 6.10 and 6.11)

Shored construction is prohibited.

*Commentary: **LRFD** C6.10.1.1.1a states that shored construction is not recommended. Additionally, FDOT Research Project BE929 evaluated shored construction and its results were inconclusive but showed the complications in determining creep and shrinkage stresses for shored construction and that these stresses could be significant.*

5.1.8 Tension Flanges with Holes (LRFD 6.10.1.8)

Add the following to ***LRFD*** 6.10.1.8:

For tension flanges that have cross-frame tab plates with bolt holes that do not remove more than 15% of the gross area of the flange, the holes can be ignored.

5.2 DEAD LOAD CAMBER (LRFD 6.7.2)

A. Design the structure, including the deck, with a sequence for placing the concrete deck. Show the placement sequence on the plans.

B. Develop camber diagrams to account for the deck placing sequence. Analyze the superstructure geometry and properties and use the appropriate level of analysis to determine deflections and camber.

Commentary: Fabricate steel girders to both match the profile grade with an allowance for dead load deflection and minimize build-up when the deck is placed.

5.3 STRUCTURAL STEEL

5.3.1 Materials (LRFD 6.4.1)

A. Use weathering steel (ASTM A 709 Grades 50W, HPS 50W, and HPS 70W) left uncoated for all new steel I-girder and Box-girder bridges unless prohibited by site conditions or otherwise approved by the Chief Engineer of Production. Use ASTM A 709 Grades 36, 50, 50W, HPS 50W or HPS 70W steel for all new steel I-girder and Box-girder bridges that will be coated. Miscellaneous hardware, including shapes, plates, and threaded bar stock (except when used on uncoated weathering steel structures) shall conform to ASTM A709, Grade 36. Do not use ASTM A 709 Grade HPS 100W steel without prior approval of the SSDE. ***SDG*** 1.3 provides guidelines on suitable site conditions.

Modification for Non-Conventional Projects:

Delete ***SDG*** 5.3.1.A and insert the following:

A. Use weathering steel (ASTM A 709 Grades 50W, HPS 50W, and HPS 70W), left uncoated, for all new steel bridges unless prohibited by site conditions or otherwise stated in the RFP. Miscellaneous hardware, including shapes, plates, and threaded bar stock (except when used on uncoated weathering steel structures) shall conform to ASTM A709, Grade 36. Do not use ASTM A 709 Grade HPS 100W steel. ***SDG*** 1.3 provides guidelines on suitable site conditions.

B. Use ASTM A 709 HPS 50W or HPS 70W for steel substructure nonredundant elements excluding piles. This shall also include all steel integral or straddle pier caps regardless of their substructure/superstructure designation. The designer is responsible for investigating the availability of HPS steel and for evaluating the potential impact of its use on the construction schedule.

Commentary: HPS steel is the preferred material for steel substructure elements because of its added toughness.

C. Show the ASTM A709 designation on the contract documents.

5.3.2 Fracture (LRFD 6.6.2)

A. Replace rows 10 and 11 in ***LRFD*** Table 6.6.2.1-1 as shown below. Members in row 11 are exempt from Charpy V-notch testing. See ***SDM*** 2.14 for the definition of skew angle.

Diaphragm and cross-frame members and mechanically fastened or welded cross-frame gusset plates in straight I-girder bridges, skewed straight I-girder units that are designated as Case 1, 2, or 3 (see ***SDG*** 5.13.1), and in horizontally curved I-girder bridges satisfying all the conditions specified in Article 4.6.1.2.4b (for neglecting the effects of curvature)	Secondary
Diaphragm and cross-frame members and mechanically fastened or welded cross-frame gusset plates in straight I-girder units that are designated as Case 4 or 5 (see ***SDG*** 5.13.1), and in horizontally curved I-girder bridges not satisfying one or more of the conditions specified in Article 4.6.1.2.4b (for neglecting the effects of curvature)	Primary

B. Add the following to row 13 of the ***LRFD*** Table 6.6.2.1-1:

Intermediate external diaphragms provided in accordance with ***SDG*** 5.6.3.D are primary members.

C. Nonredundant Steel Tension Members (NSTM) are defined as tension members or tension components of nonredundant members whose failure would result in the collapse of the structure. This includes but is not limited to the following:

1. All tension components of two I-girder superstructures.
2. All tension components in the positive moment region of two box superstructures. Negative moment regions over the piers have four top flanges and are therefore considered redundant.
3. All tension components of straddle and integral piers.
4. All tension components of a two-truss superstructure, except those classified as Category 1 (refer to ***FDM*** 266.4).

D. Avoid NSTM. Nonredundant Steel Tension requirements are expensive due to the intensive welding procedures, base metal and weld tests, and inspections after fabrication.

E. Delete the 2nd paragraph of ***LRFD*** 6.6.2.2 related to System Redundant Members.

Commentary: The identification and use of System Redundant Members are not allowed by **FDOT.**

F. Designate on the plans, all:

1. Primary (main) members. Also, identify areas of primary members that are subject to tension and stress reversal, and designate that CVN testing is required,

Commentary: Primary members have additional fabrication and inspection criteria per Section 460 of the ***Specifications*** *and AASHTO/AWS D1.5 Bridge Welding Code which includes but not limited to material traceability, material testing, bolt hole fabrication, welding procedures, and inspection.*

2. NSTM. In addition, for steel girders that are composite along any part of their length, and whose webs are subject to tension, the entire web depth shall be designated as an NSTM. Do not show tension zone limits for the web depth.

3. Splice plate testing requirements. Splice plates are to be tested to the requirements of the tension components to which they are attached.

5.3.3 Fatigue (LRFD 6.6.1.2)

Use ***LRFD*** Table 6.6.1.2.3-1 to reference Detail Categories referred to below.

A. In addition to ***LRFD*** 6.6.1.2.3***,*** components and details on longitudinal primary members having Detail Categories A, B, B', C and C' must meet the Fatigue I limit state.

B. Do not use Detail Category E or E'. Category E' welds are allowed for use in cross-frame connections.

C. For NSTM, use fatigue details classified as Detail Category C or better (except for Note D below). For steel truss bridges, submit details for SSDE approval.

D. Use Detail Category D for drain and ventilation (vent) holes required by ***SDG*** 5.6.2.

5.4 BOLTS (LRFD 6.4.3.1 and 6.13.2)

A. Design structural bolted connections as either bearing or slip-critical connections in accordance with ***LRFD*** 6.13.2 and as modified by the following:

1. ***SDG*** 5.13.1 and ***SDG*** 5.14.

2. For composite box girder bridges, design all connections of primary members with slip-critical connections. Secondary members may be designed using bearing connections.

3. Use slip-critical connections for steel integral and/or straddle caps (regardless of their classification of superstructure or substructure).

B. Use standard size holes for all bearing-type connections.

C. Use ASTM F3125 Grade A325 high-strength bolts. Use Type 1 bolts for painted non-weathering steel connections. Use Type 3 bolts for weathering steel connections (uncoated or painted).

D. ASTM F3125 Grade A490 bolts require approval by the SSDE and a Technical Special Provision (TSP). The items to be addressed in the TSP include, but are not limited to, the following: handling, lubrication, installation, tightening, testing, and corrosion protection.

E. Non-high-strength bolts shall conform to ASTM A307.

F. Bolt diameters of 3/4, 7/8, 1, or 1 1/8-inch typically should be used. Larger bolts may be used with prior approval by the SSDE. Use one diameter and grade of bolt for any individual connection. Specify bolt grade, diameter, associated hole diameter/ size (round/slotted), layout and spacing in the Plans. Maintain minimum edge distance requirements. See also ***SDM*** Chapter 16.

5.5 MINIMUM STEEL DIMENSIONS (LRFD 6.7.3)

A. The following minimum dimensions have been selected to reduce distortion caused by welding and to improve girder stiffness for shipping and handling.

1. The minimum thickness of plate girder and box girder webs is 7/16-inch.
2. The minimum flange size for plate girders and top flanges of box girders is ¾-inch x 12-inches.
3. The minimum box girder bottom flange thickness is 1/2-inch.
4. The minimum stiffener thickness is 1/2-inch.

B. Specify flange plate widths and web plate depths in 1-inch increments. Keep flange widths constant within field sections.

C. Specify plates in accordance with the commonly available thicknesses of Table 5.5-1.

D. Minimize the different flange plate thicknesses so that the fabricator is not required to order small quantities. See ***SDM*** Chapter 16.

Table 5.5-1 Thickness Increments for Common Steel Plates

THICKNESS INCREMENT	PLATE THICKNESS
1/8-inch (1/16-inch for web plates)	up to 2-1/2-inches
1/4-inch	> 2-1/2-inches

Modification for Non-Conventional Projects:
Delete ***SDG*** 5.5.B, ***SDG*** 5.5.C, ***SDG*** 5.5.D, and ***SDG*** Table 5.5-1.

5.6 BOX SECTIONS

5.6.1 General

A. Single box sections are not permitted except for use as straddle pier caps.

B. During preliminary engineering and when determining structure configuration, give utmost consideration to accessibility and to the safety of bridge inspectors and maintenance. See ***SDM*** Chapter 16.

5.6.2 Access and Maintenance

A. Height:

For maintenance and inspection, the minimum interior height of box girders is 6-feet measured perpendicular from the top of the bottom flange to the bottom of the top flanges.

B. Electrical:

1. Design and detail interior lighting and electrical outlets in accordance with ***Standard Plans*** Index 715-240.
2. Show interior lighting and electrical outlets at the following locations:
   a. all ingress/egress access openings
   b. both sides of diaphragms where girder is continuous
   c. at the inside face of diaphragms where the girder is discontinuous, e.g. at end bents and expansion joints.
   d. spaced between the above locations at approximately equal intervals not to exceed 50-feet.

   Only a single interior light and electrical outlet are required if any of the above locations coincide.
3. Where interior height permits, show lighting mounted along center of box.
4. Locate switches at each end of each span and at every access opening.

C. Access:

1. Access Openings in Bottom Flanges
   a. Design box sections with ingress/egress access openings in the bottom flanges located at maximum 600-foot spacing. Space access openings along the length of the box girder such that the distance from any location within the box girder to the nearest opening is 300-feet or less. Provide a minimum of two access openings per box girder line. Whenever feasible and in areas not deemed problematic for access by unauthorized persons or due to bridge security issues, place an access opening near each abutment. Provide additional access openings along the length of the box girder as required to meet the maximum spacing requirement. Avoid placing access openings over

traffic lanes, the use of which would require extensive maintenance of traffic operations and at other locations such as over sloped embankment, over water or locations which would otherwise negatively affect the safety of inspectors or the traveling public. Contact the District Maintenance Office for final guidance in establishing access opening locations.

Commentary: The maximum spacing of 600-feet for access openings is based on the 300-foot maximum length of an air-supplied respirator hose per 42 CFR Part 84 subpart J, Table 8.

b. The minimum access opening size is 32-inches x 42-inches or 36-inch diameter. Indicate on the plans that access openings are to remain clear and are not to be used for utilities, drain pipes, conduits or other attachments. If these items are required, provide additional openings.

c. Analyze access opening sizes and bottom flange locations for structural effects on the box girder. Generally, do not place access openings in zones where the bottom flange is in compression.

d. Specify Access Hatch Assemblies in accordance with ***Standard Plans*** Index 460-250 to be provided at each 36-inch diameter access opening. If other size access openings are used or if this ***Standard Plan*** cannot otherwise be used, develop custom project specific designs based on the standard using inswinging, hinged, solid steel access hatches with steel hardware and a lockable hasp on the outside of the hatch. Do not specify ladder braces at locations where the access opening is not accessible using an extension ladder, e.g., bottom flange heights greater than 25-feet above the ground. Require suitable keyed commercial grade, weather resistant padlocks with a 2-inch shackle for all access hatches. Require that all padlocks on an individual bridge be keyed alike.

2. Access Openings in Interior Diaphragms

a. Provide an access opening through all interior diaphragms.

b. The minimum diaphragm access opening size is 32-inches wide x 42-inches tall or 36-inch diameter. Indicate on the plans that diaphragm access openings are to remain clear and are not to be used for utilities, drain pipes, conduits or other attachments. If these items are required, provide additional areas or openings.

c. Specify Access Door Assemblies in accordance with ***Standard Plans*** Index 460-252 to be provided at both ends of simple span box girders and at both ends of continuous box girder units. When this Design Standard cannot be used, develop custom project specific designs based on the standard using inswinging, hinged steel access doors with steel expanded metal mesh and steel hardware. Expanded metal mesh shall be ½-inch No. 16 expanded carbon steel metal mesh in accordance with ASTM F 1267, Type I or II, Class 2, Grade A. Equip access doors with a lockable latch that can be opened from both sides of the door. Require suitable keyed commercial grade, weather

resistant padlocks with a 2-inch shackle for access doors at abutments. Require that all padlocks on an individual bridge be keyed alike.

Commentary: The size of the openings in the expanded metal mesh was specifically selected to exclude the Brazilian Free-tailed Bat, Tadarida brasiliensis, but the small mesh size will also exclude other species of bats found in Florida and most, if not all, birds.

D. Other Exterior Openings:

1. Design each box girder with minimum 2-inch diameter ventilation (vent) and 2-inch diameter drain holes.
    a. Place drain holes at the low side of the bottom flange located at each end bent, pier, and the low point of the unit, as applicable. Locate drain holes approximately 3’-0” from bearing stiffeners. Place drain holes at all low points against internal barriers.
    b. Place vent holes in both webs of each box spaced at approximately 50’-0” along the entire girder length. Locate vent holes ¼ to ½ of the web height from the top flanges.
2. Require ¼-inch mesh screen on all exterior openings not covered by a door. This includes holes in webs through which pass utility pipes, ventilation holes, drain holes, etc. Welding of screen to structural steel components is prohibited. Show screen to be attached to structural steel components with epoxy per ***SDM*** Figure 16.11-4 Note "A".
3. Design flexible barriers to seal openings between expansion joint segments of adjacent end units to prevent birds from roosting on the box end ledges. Barriers shall be UV and weather resistant and easily replaceable.

5.6.3 Cross Frames (LRFD 6.7.4)

A. Design external cross frames as an "X-frame" or a "K-frame" as noted for "I-girders".

B. Design internal cross frames as a "K-frame”. Show internal cross frames to be connected by welding or bolting to stiffeners in the fabrication shop.

C. Detail cross frames to be attached to box girders at stiffener locations.

Commentary: An "X-frame" internal diaphragm is easier to fabricate and erect than a "K-frame," but the "K-frame" allows easier inspection access in box girders.

D. Exterior intermediate diaphragms required by ***SDG*** 2.10 shall be plate diaphragms complying with the following:

1. Diaphragms shall be full-width connecting the box girders. Each box girder shall have an interior plate diaphragm colinear with each exterior diaphragm. The interior plate diaphragm top flange size shall be equal to or greater than the exterior diaphragm top flange size. The interior diaphragm top flange shall be connected to the exterior diaphragm top flange.

2. Diaphragms shall be I-shaped, full-depth and have a web thickness equal to or larger than the smallest used in the outer box girder. A full-depth diaphragm is defined as having its web top and bottom aligned with the top and bottom of the box girder web.
3. The diaphragms shall have top and bottom flanges, each flange having a size that is equal to or larger than the smallest top flange used in the outer box girder.
4. Provide a minimum of two rows of shear studs on the diaphragm top flange at a maximum pitch of 12-inches and embedded into the concrete deck.
5. The diaphragm connection to the boxes shall be designed for all applicable limit states for the calculated force effects but not less than the 75 percent resistance provisions of ***LRFD*** 6.13.1.
6. On the Plans, designate diaphragms as primary members and the connections as slip-critical.

Commentary: Minimum component sizes for the exterior intermediate diaphragms are based on the recommendations provided in the following report: Connor, R.J. et al. 2019. A Simplified Approach for Designing SRMs in Composite Continuous Twin-Tub Girder Bridges, Purdue University.

5.6.4 Lateral Bracing (LRFD 6.7.5)

A. For box girders, design an internal lateral bracing system in the plane of the top flange using a Warren-type configuration. Pratt-type configurations are not permitted.

B. When setting haunch heights, include height necessary to avoid conflicts between lateral bracing and stay-in-place metal forms.

Commentary: A Warren-type configuration is preferred over an "X-diagonal" configuration for ease of fabrication and erection. The Pratt configuration is prohibited for multiple reasons. The torsional sensitivity of Pratt configurations can produce relative vertical displacements between top flanges 2 to 3 times greater than a Warren configuration. The Pratt configuration is sensitive and unforgiving to changes in deck pouring sequence, making it difficult to ensure that tension will control in each panel of continuous spans as intended. Additionally, there are formulas that can be used to estimate the forces for Warren configurations that are not available for Pratt configurations. Instead, the Pratt configuration forces must be obtained from a 3D finite element analysis.

5.6.5 Transverse Concrete Deck Analysis

For steel box girder bridges, perform a transverse deck analysis at the Service I and Strength I load combinations using the HL-93 live load. For deck design, do not include the wind effects for the Service I load combination. All analyses will be performed assuming no benefit from the stiffening effects of any traffic railing barrier. For the Service I load combination in transversely prestressed concrete decks, limit the outer

fiber stress due to transverse bending to $3\sqrt{f'c}$ for aggressive environments and $6\sqrt{f'c}$ for all other environments. For the Service I load combination in reinforced concrete decks, see ***LRFD*** 5.6.7.

5.7 DIAPHRAGMS AND CROSS FRAMES FOR I-GIRDERS LRFD (LRFD 6.7.4)

A. Design cross frames and diaphragms (cross frames at piers and abutments) with bolted connections at transverse and bearing stiffener locations. Generally, a "K-frame" detailed to eliminate variation from one cross-frame to another is the most economical arrangement and should be used. See ***SDM*** 16.7. For straight bridges with a constant cross section, parallel girders, and a girder-spacing-to-girder-depth ratio less than one, an "X-frame" design is generally the most economical and must be considered.

Modification for Non-Conventional Projects:
Delete ***SDG*** 5.7.A.

B. For straight I-girder units where supports are parallel and all supports are skewed less than or equal to 20°, orient cross frames parallel to the supports. For all other cases, orient cross frames radial or normal to girder lines.

C. Provide diaphragms and cross-frames between portions of bridges constructed using phased or widening construction. See ***SDG*** 4.2.11, ***SDG*** 7.5, ***SDM*** 16.7 and ***SDM*** 16.11 for additional details and requirements.

Commentary: Closure pours have inherent weaknesses because the transverse deck reinforcement is not continuous across the bay, and because the closure pour concrete has a tendency to shrink away from the adjacent deck sections. The closure pour concrete is subjected to differential vertical movement due to live load while the closure pour cures and after the concrete hardens. Without cross frames to tie the adjacent girders together, long-term maintenance problems will develop immediately or sometime later.

D. Lean-on bracing systems are not permitted.

E. For Case 1 and 2 steel I-girder units (see ***SDG*** 5.13.1), slotted holes in the cross-frame connections are not allowed except as permitted in cross-frame bays that are located under a closure pour. For other skewed steel I-girder units, slotted holes in the cross-frame connections are not preferred but may be used if the structural analysis considers such effects. See ***SDM*** Figure 16.3-2.

5.8 TRANSVERSE INTERMEDIATE STIFFENERS (LRFD 6.10.11.1)

A. Specify that transverse intermediate stiffeners providing cross frame connections be fillet welded to the compression flange and fillet welded or bolted to the tension flange or flanges subject to stress reversal. If bolted tab plates are used, specify that the bolts are to be installed prior to making welds.

Commentary: On tension flanges, welded connections are preferred because of the lower cost, but the design of the flange must consider the appropriate fatigue detail category. A bolted connection is acceptable if the cost is justified.

B. For straight I-girder bridges, specify that transverse intermediate stiffeners without cross frame connections have a "tight-fit" or be cut-back at the tension flange and be fillet welded to the compression flange. For curved I-girder bridges, transverse stiffeners shall be attached to both flanges.

C. For straight box girder bridges, specify that intermediate stiffeners not used as connection plates be fillet welded to the compression flange and cut back at the tension and stress reversal flanges.

D. Detail all intermediate stiffeners and connection plates normal to the top flange unless in an area of complex framing.

5.9 BEARING STIFFENERS (LRFD 6.10.11.2)

A. For I-girder units with grades greater than 4%, require bearing stiffeners to be vertical under full dead load. For grades less than or equal to 4% bearing stiffeners may be placed normal to the bottom flange. In this case, the effect of the grade must be considered in design of the stiffener.

B. For I-girder units, use Half-Round Bearing Stiffeners (HRBS) at supports having skew angles equal to or greater than 45 degrees, when the load requirements of 5.9.2 can be met. For skew angles greater than 30 degrees, the EOR has the option to use HRBS subject to the same requirements of 5.9.2.

C. For box girder bridges, place bearing stiffeners normal to the bottom flange.

5.9.1 BEARING STIFFENERS: PLATES OR ANGLES

A. For bearing stiffeners that provide diaphragm connections, specify a "finish-to-bear" finish on the bottom flange and specify fillet welded connections to both the top and bottom flanges.

B. In negative moment regions only, stiffeners with attached diaphragms may be bolted to the top flange.

Commentary: In negative moment regions, welded connections are preferred because of the lower cost, but the design of the flange must consider the appropriate fatigue detail category.

C. For bearing stiffeners, consider the width of the exterior girder stiffener plate to allow connection of diaphragms for future bridge widening.

Commentary: Drilling and bolting to the existing bearing stiffener plates is difficult or impossible when bearing stiffeners are too narrow or when skewed structures result in congested regions at the girder ends.

5.9.2 BEARING STIFFENERS: HALF-ROUND BEARING STIFFENERS (HRBS)

Use 5/8” wall thickness for HRBS. The minimum connection plate thickness is 5/8”. The ***LRFD*** 6.10.11.2.2 minimum thickness requirement is waived.

Clip the corners at the top and bottom of the HRBS. For “finish to bear” and other criteria, see ***SDM*** Figure 16.6-6 for details.

A. Load requirements for use of HRBS:

   1. For Strength I, III and V loading combinations, horizontal forces in the end cross-frame must not exceed 150 kips.

   2. The Fatigue I loading combination horizontal force in the end cross-frame must not exceed 55 kips.

B. Weld HRBS to both girder flanges and web. Use the fatigue resistance of the girder flange (or web) to HRBS connection per Detail Category 4.2 of ***LRFD*** Table 6.6.1.2.3, with the exception that the fillet weld must not be continuous but instead terminate at the clips.

C. Weld the connection plate to both girder flanges (except as noted below) and HRBS. Use the fatigue resistance per Detail Category 7.3. Use a 5/16” fillet weld (both sides). At the girder flange connection, provide a minimum weld length of 3 inches except if using a bolted tab plate. Use a bolted tab plate for the top flange to connection plate attachment when located at a continuous interior support with a skew angle greater than 45 degrees.

D. The HRBS cannot extend beyond the girder flanges. The HRBS radius must be a minimum of a quarter of the flange width and may be sized to be a minimum of one inch from the flange edge.

E. Add the following note to the plans:

   Half-round bearing stiffeners (HRBS) material can either be ASTM A847 or ASTM A709 Grade 50W. HRBS shall either be cut to dimensions from a hollow structural section (HSS) or cold bend out of plate material. If HSS is used, weld in accordance with AWS D.1.1. For plate material, when cold bending is done by bump rolling, perform bending using a tool with a minimum radius of 1 7/8”. Cold bend the plate at a minimum of 18 locations (10-degree bends) to eliminate kinks.

F. Match the coating of the exposed surface of the HRBS to that required on the girder(s). Keep the inside face of the HRBS as uncoated weathering steel.

G. Use an HRBS on the fascia side of the exterior girders to account for future widening.

5.10 LONGITUDINAL STIFFENERS (LRFD 6.10.11.3)

Longitudinal stiffeners on webs are not permitted.

Commentary: Longitudinal stiffeners are not permitted because the details required to avoid intersecting welds at transverse stiffener locations are time and labor intensive, and if not done properly will lead to fatigue cracking in the girder web and stiffeners.

5.11 CONNECTIONS AND SPLICES (LRFD 6.13)

A. Specify and detail bolted (not welded) field connections. Field welding of sole plates (without sliding surfaces) to the bottom flange of steel I-girders is permissible. Details shall be included in the plans in accordance with ***SDM*** 16.11. Other field welding is allowed only by prior written approval by the SSDE.

Commentary: Field welding is not permitted due to quality issues on past projects. Field welding of sole plates is permitted in order to accommodate construction tolerances in the placement of the pier, girder and bearing. Fatigue of the sole plate to bottom flange weld is not a concern because longitudinal tension stresses in bottom flanges at girder ends are usually very low, and the bottom flanges at intermediate supports are in compression.

B. Where cantilever brackets are connected to exterior girders and tie plates are used to connect the top flange of the bracket to the top flange of the floor beam, do not show the tie plates connected to the girder top flange. To account for alignment tolerances, detail short, slotted holes in the top flange of the cantilever brackets (perpendicular to the bracket web). Reduce the allowable bolt stress accordingly.

C. For cross-frames, the strength of the bolted connections can be based on the bolt shear strength with threads excluded from the shear plane when a Plan Note is included requiring that the washer and direct-tension-indicator (DTI), if used, be placed under the nut and the thickness of the connecting parts (e.g., connection plate, gusset plate, and chord member as applicable), meet the following:

    1. When using 7/8-inch diameter bolts, all connecting parts must be 1/2-inch minimum.
    2. When using 1-inch diameter bolts, one of the connecting parts must be 5/8-inch minimum and the other part must be 1/2-inch minimum.

*Commentary: The requirements for excluding threads are contained in **LRFD** C6.13.2.7.*

5.11.1 Slip Resistance (LRFD 6.13.2.8)

Design slip-critical bolted connections using the following faying surface conditions:

A. Unpainted weathering steel: Class B

B. Weathering steel painted on one side of the connection: Class A

C. Painted steel (including weathering steel painted on both sides of the connection): Class A

*Commentary: Painted slip-critical bolted connections are required to be designed with a Class A surface condition even though the primer coat as required by Sections 460 and 975 of the **Specifications** provides a Class B surface condition.*

5.11.2 Welded Connections (LRFD 6.13.3)

A. Do not show a specific, pre-qualified, complete-joint penetration weld designation on the plans unless a certain type of weld; i.e., "V," "J," "U," etc., is required. See ***SDM*** Chapter 16, Structural Steel Girders.

Commentary: The fabricator should be allowed to select the type of complete-joint penetration weld to optimize fabrication costs, and all welds should be shown on the shop drawings.

Modification for Non-Conventional Projects:
Delete ***SDG*** 5.11.2.A.

Commentary: This information will enable inspection personnel to identify the type and extent of testing required. Also, the shop drawings will further identify these areas.

B. Show on the Plans the weld filler metal strength (F_{exx}) for fillet welds assumed in the design.

5.11.3 Welded Splices (LRFD 6.13.6.2)

A. At flange transitions, do not reduce the cross-sectional area by more than one-half the area of the larger flange plate.

Commentary: These proportions will allow a smooth flow of stress through the splice.

B. Maintain constant flange widths within each field-bolted section.

Commentary: By having constant width flange plates in a field section, the fabricator may order plates in multiples of the flange width, butt weld the plates full width, and then strip-out the flanges. Thus, the fabricator is required to make a minimum number of butt welds, handle a minimum number of pieces, and, thereby, minimize his fabrication costs.

C. There are several items to consider when determining if a flange transition is warranted: 1) savings in steel weight, 2) reduction in bolts (if adjacent to a bolted field splice), and 3) fabricator's preference.

1. Compare the number of pounds $\Delta\mathbf{w}$, saved to either of the two methods below.
    a. Method 1:
        i. For 36 ksi material: $\Delta\mathbf{w} = 300 + (25.0) \times$ (area of the smaller flange plate, in^2)
        ii. For 50 ksi material: $\Delta\mathbf{w} = 250 + (21.3) \times$ (area of the smaller flange plate, in^2)

iii. For 70 ksi material: $\Delta \mathbf{w}$ = 220 + (18.8) x (area of the smaller flange plate, in^2)

b. Method 2: Refer to ***AASHTO/NSBA Steel Bridge Collaboration G 12.1 - 2020 Guidelines to Design for Constructability*** Article 1.5.4.

2. When a girder flange area reduction is adjacent to a bolted field splice, consider the savings in the reduction of the number of bolts if it is the controlling flange.
3. Contact a local fabricator for guidance when comparing costs between a welded splice and savings in steel weight.

D. In general, the number of flange splices within a field section should not be greater than two. For long spans (>250-feet), additional flange splices may be warranted.

E. Keep the flange plates of adjacent girders the same thickness where possible. See ***SDG*** 5.13 for additional requirements.

F. Size plates based on the rolled sizes available from the mills. See ***SDG*** 5.5.D.

G. Keep the number of different plate thicknesses reasonable for the size of the project.

Modification for Non-Conventional Projects:

Delete ***SDG*** 5.11.3.A through ***SDG*** 5.11.3.G and insert the following:

At flange transitions, do not reduce the cross-sectional area by more than one-half the area of the larger flange plate.

Commentary: These proportions will allow a smooth flow of stress through the splice.

H. For flange and web shop splices:

1. Do not specify welds located in compression zones to be ground flush except as noted below.
2. Specify welds to be ground flush for exterior faces of fascia girder webs and all bottoms of top and bottom flanges.
3. For other locations where the weld is in tension or stress reversal, specify the weld to be ground flush if the fatigue stress range does not meet ***LRFD*** Detail Category 5.3 but meets Detail Category 5.1.

5.12 CORROSION PROTECTION

A. The default treatment for new steel I-girder and box-girder bridges is uncoated weathering steel where site conditions warrant (see ***SDG*** 1.3.1.E). An Inorganic Zinc Coating System shall be used where site conditions preclude uncoated weathering steel and may be used elsewhere with approval of the Chief Engineer of Production. Use of a High-Performance Coating System to any extent for new Steel I-Girder or Box-Girder bridges requires written approval from the Chief Engineer of Production. Other systems must be approved by the State Materials Office (SMO).

Modification for Non-Conventional Projects:

Delete ***SDG*** 5.12.A and insert the following:

A. The default treatment for new steel I-girder and box-girder bridges is uncoated weathering steel where site conditions warrant (see ***SDG*** 1.3.1.E). An Inorganic Zinc Coating System shall be used where site conditions preclude uncoated weathering steel. See the RFP for project specific requirements.

B. Specify method of protection and locations on structure. Specify one of the following for treatment of exterior and/or interior girders:

1. Uncoated Weathering Steel. See ***SDG*** 1.3 for suitable site requirements for the use of uncoated weathering steel. See ***SDM*** Chapter 16 for preferred details.
2. Inorganic Zinc Coating System. Specify an Inorganic Zinc Coating System in accordance with ***Specifications*** Section 975.
3. High Performance Coating System. Specify a High Performance Coating System in accordance with ***Specifications*** Section 975. The default color is a uniform gray similar to SAE AMS-STD-595, Color No. 36622. Other colors or a gloss finish must be approved by the District in consultation with the State Materials Office (SMO).

5.12.1 Environmental Testing for Site Specific Corrosion Issues

A. Contact the State Materials Office (SMO) early in the BDR phase of the project to determine if the bridge location meets the environmental conditions for the use of uncoated weathering steel.

B. Where coating of steel is required the following site specific criteria may require specialty corrosion protection systems:

1. Locations where the pH of the rainfall or condensation is less than 4 or greater than 10.
2. Locations subject to salt spray and salt laden run-off.
3. Locations subject to concentrated pollution caused by the following sources: coal burning power plant, phosphate plant, acid manufacturing plant, any site yielding high levels of sulfur compounds.

C. For sites with any of the above conditions, a review and recommendation from the SMO is required to identify the appropriate corrosion control coating system.

Modification for Non-Conventional Projects:

Delete ***SDG*** 5.12.1 and see the RFP for requirements.

5.12.2 Galvanizing

A. Galvanizing of Bolts for Bridges: Specify all anchor bolts and rods, nuts, washers, and other associated tie-down hardware to be galvanized.

*Commentary: Section 460 of the **Specifications** requires Grade A325 field installed bolts to be galvanized for painted steel bridges because of corrosion issues that were the result of incomplete surface preparation prior to painting and the sharp corners on the bolts that are difficult to coat with paint. Regarding surface preparation, it is nearly impossible to completely clean away all of the lubricant on the bolts. Some of the lubricant seeps out at the bolt/nut/washer interfaces and remains there before the paint is applied, thus preventing the paint from bonding in these areas. Over time, corrosion will initiate when the unbonded paint fails at these locations.*

B. Specify all ladders, platforms, grating and other miscellaneous steel items to be hot-dip galvanized.

5.13 STRAIGHT STEEL I-GIRDER UNITS

5.13.1 Design Cases

A. Design straight steel I-girder (SSI-G) units in accordance with the criteria in Table 5.13.1-1. Configure steel units to meet either Case 1 or 2. If Case 1 or 2 cannot be met due to roadway geometry constraints and limitations, meet the lowest case number possible shown in the Table. See ***SDM*** 2.14 and ***LRFD*** 4.6.3.3.2 for definitions of skew angle, θ, and skew index, I_s. See ***SDG*** 5.3.2 for the designation of primary and secondary members for cross-frames.

Commentary: It is preferrable that a steel unit is configured to meet either Case 1 or 2. These cases allow for a simpler analysis method (LGA) for design and load rating which decreases design costs and the potential for design errors. It also improves economy by designating cross-frames as secondary members with bearing connections. Although roadway geometry may dictate a higher case number, the EOR should attempt to meet the lowest case number possible. For further information regarding the development of Case 1 and 2 criteria, see FDOT Research Projects BE535 and BEB13. Criteria was developed by FDOT and the referenced research reports.

B. For phase construction, analyze and design each phase separately as Case 1 or Case 2 as applicable when the following criteria is met:

    1. All phases meet either Case 1 or 2 criteria per Table 5.13.1-1.
    2. The skew index for the entire unit at final condition (entire cross-section) is less than or equal to 0.45.
    3. The construction sequence follows the requirements of ***SDG*** 4.2.11 and ***SDG*** 5.1.B.

Otherwise, use the skew index for the final condition (entire cross-section) of the unit to select Case 3, 4, or 5 per Table 5.13.1-1.

C. Steel framing systems that have the following configurations or elements, but not limited to: haunched girders, non-continuous longitudinal girders (i.e., bifurcated), or substringers are to be designated as either Case 4 or 5.

Table 5.13.1-1 Design Criteria for Straight Steel I-Girder Units

Case	SDG Section	Skew Angle (θ)	Skew Index (I_s)	Cross-Frame Configuration	Required Method(s) of Analysis[3]	Cross-Frame Connection Type	Calculate Cross-Frame Rating Factor
1[1]	5.13.2 & 5.13.3	θ ≤ 20°	$I_s \leq 0.45$	contiguous[2] and parallel to skew angle	LGA [***LRFD*** 4.6.2.2]	Bearing	No
2[1]	5.13.2 & 5.13.4	20° < θ ≤ 50°	$I_s \leq 0.3$	contiguous[2] and normal to girders	LGA [***LRFD*** 4.6.2.2]	Bearing	No
3	5.13.5	θ ≤ 50°	$I_s \leq 0.45$	Any[5]	LGA and RMA [***LRFD*** 4.6.2.2 & 4.6.3]	Bearing	No
4	5.13.6	θ ≤ 50°	$I_s \leq 0.6$	Any[5]	RMA [***LRFD*** 4.6.3]	Slip-critical	No[6]
5	5.13.7	θ ≤ 60°	Any	Any[5]	RMA 3D-FEA [***LRFD*** 4.6.3]	Slip-critical	Yes

1. Staggered cross-frame arrangements (similar to the term “discontinuous” as defined in ***LRFD*** 6.2) are not permitted.
2. As defined in ***LRFD*** 6.2. This configuration may consist of removed nuisance cross-frames from a contiguous line in the vicinity of a support as discussed in ***LRFD*** C6.7.4.2. There must be an end cross-frame line located along each skewed support.
3. LGA refers to a line girder analysis defined as analyzing an individual straight girder from the rest of the superstructure system using classical force and displacement methods or finite element model in which the live load forces are determined using the LLDF defined in ***LRFD*** 4.6.2.2. RMA refers to a refined method of analysis as defined in ***LRFD*** 4.6.3.
4. See ***SDG*** 1.10 for skew angle limitation.
5. See ***SDG*** 5.7.B.
6. Cross-frame(s) (or any structural element) can be load rated at the discretion of the EOR.

5.13.2 Design Criteria for Case 1 and 2

This section covers the criteria for both Case 1 and 2. For additional requirements for Case 1 or Case 2, see ***SDG*** 5.13.3 and ***SDG*** 5.13.4, respectively.

A. Meet the supplemental conditions to ***LRFD*** 4.6.2.2 as shown in Table 5.13.2-1. When the number of girders equals three, the bridge must meet the same range of applicability for S, t_s, and L as stated for four or more girders.

Table 5.13.2-1 Supplemental Conditions to LRFD 4.6.2.2

Supplemental Conditions[1]	**LRFD 4.6.2.2 Conditions**
1. Width of deck can vary up to 5 degrees[2]	Width of deck is constant
2. Girder spacing can be non-parallel up to 5 degrees[2,3]	Girders are parallel
3. The beam spacing must meet the range of applicability	For beam spacing exceeding the range of applicability as specified in tables in Articles 4.6.2.2.2 and 4.6.2.2.3, the live load on each beam is based on the lever rule.
4. $10{,}000 \le K_g \le 10{,}000{,}000$	$10{,}000 \le K_g \le 7{,}000{,}000$
5. Difference between skew angles of two adjacent supports does not exceed 10 degrees	Not explicitly addressed
6. $d_e / S \le 0.35$	Not explicitly addressed
7. $0.95 \le S/D_w \le 2.00$	Not addressed
8. RDDP < 175 (see ***SDG*** 5.13.2.K)	Not addressed

1. Consider software limitations and methodologies when using Table 5.13.2-1 Supplemental Conditions to comply with these design criteria.
2. The angle is measured between the centerline of bridge (or a line parallel to) and the edge of deck or girder line. If each side of the bridge width varies, the two angles are to be summed and then compared to the limit.
3. Calculate LLDF using the girder spacing at the 2/3 point along the span toward the wider end.

Commentary: Considering that the general geometry for SSI-G units consist of girder spacings between 9-feet and 12-feet and spans between 150-feet and 240-feet, an optimized d_e/S ratio is in the range of 0.10 to 0.20.

B. Distribute all non-composite dead loads equally (i.e., uniformly) to all girders.

C. For girders with variable moment of inertia, compute a single weighted average value for K_g that is used for the entire girder to calculate the moment live load distribution factor (LLDF) in ***LRFD*** Table 4.6.2.2.2b-1.

Commentary: For a continuous girder, K_g may be calculated at evenly spaced points along each span, and then an average K_g value calculated for each span. The single weighted average value of K_g is calculated by multiplying each span K_g value by its corresponding span length, summing the resulting values for each span together, and then dividing by the total girder length. An alternate weighted average method is using the length of each girder section, between shop or field splices, multiplied by its K_g value and then summing the resulting values and dividing by the total girder length.

D. For continuous girders, calculate the moment LLDF for each span using the single weighted average value of K_g. Then use the maximum value for the LGA.

E. For continuous girders, calculate the shear LLDF for each span and then use the maximum value for the LGA.

F. Apply the skew correction factor per ***LRFD*** 4.6.2.2.3c including the LLDF determined by the lever rule (***LRFD*** C4.6.2.2.1) and the rigid cross-section method (***LRFD*** 4.6.2.2.2d).

G. The skew correction factor for continuous spans is calculated for each span using the single weighted average value of K_g, and the largest skew correction factor is applied to the shear LLDF. The skew correction factor needs to be applied to each side of an interior support

H. Do not use the reduction of LLDFs for moment in ***LRFD*** 4.6.2.2.2e.

Commentary: The method described for calculating the moment and shear LLDF (using a single weighted average value for K_g) was the basis for using an LGA (i.e., the AISC/NSBA LRFD Simon Version 10.4.0.0 software was used for LGA in the FDOT Research Project BEB13).

I. If using the optional live load deflection criteria (see ***SDG*** 1.2), calculate the girder deflection due to live load using the moment LLDF per ***LRFD*** 4.6.2.2.

J. All girders in the unit must be the same. Varying girder plate lengths (i.e., field splice locations) or cross-frames spacings is permitted to avoid conflicts or due to non-parallel girder spacings and/or supports (contact a local fabricator for guidance).

Commentary: The criterion for keeping all the girders in the unit the same is a basic assumption in the development of the recommendations for Case 1 and 2 used in the FDOT Research Project BEB13.

K. Calculate the rigid differential deflection parameter, RDDP, as follows:

$$RDDP = DDP \cdot \cos\theta \cdot \left(\frac{L_{eff}}{100}\right) \quad \text{[dimensionless]} \qquad \text{[Eq. 5-1]}$$

Where:

$$DDP = x\left(\frac{L^3 - 2Lx^2 + x^3}{K_g}\right) \quad \text{[dimensionless]} \qquad \text{[Eq. 5-2]}$$

$$x = w_g \cdot \tan\theta \quad \text{[ft]} \qquad \text{[Eq. 5-3]}$$

L = maximum span length in the unit [ft]

K_g = longitudinal stiffness parameter per ***LRFD*** 4.6.2.2.1 [in^4].

L_{eff} = Effective span length [ft]. For simple spans, the effective span length is the span length. For continuous spans, the effective span length is equal to the distance between a simple support and a point of non-composite dead load contraflexure, or between points of non-composite dead load contraflexure. For a 2-span unit, use the maximum effective span length. For three or more continuous spans, use the largest of: 1) effective span length of the maximum interior span, 2) 50% of the maximum interior span length or 3) 65% of the effective length of the maximum end span.

Commentary: The results from FDOT Research Project BEB13 showed that bridges with similar skew indexes had significantly different cross-frame loads and that the proposed recommendations resulted in highly conservative design forces for many of the bridges. FDOT re-evaluated the data and developed the rigid differential deflection parameter, RDDP, as an additional indicator of skew effects. Using this parameter in conjunction with the criteria for Case 2, reveals that bridges with similar skew indexes could have significantly different RDDP values. It was found that bridges with higher RDDP values also had higher bottom chord cross-frame forces.

L. When calculating the exterior girder fatigue moment range, use the procedure below in lieu of the LLDF in ***LRFD*** 4.6.2.2 when the steel unit meets all of the following conditions:

- Applies only only to Case 1 continuous spans and Case 2 units,
- Has 4 or more girders,
- All spans in the unit have lengths greater than or equal to 150-feet.,
- The girder spacing is greater than or equal to 9-feet.,
- The d_e/S ratio is less than or equal to 0.26.

1. Calculate the LLDF ($g_{interior}$) per ***LRFD*** Table 4.6.2.2.2b-1 using the “One Design Lane Loaded” equation (do not divide by 1.2 per ***LRFD*** 3.6.1.1.2).
2. The term e_M used below is synonymous with ‘e’ per ***LRFD*** Table 4.6.2.2.2d-1 with the value not to exceed 1.0.
3. Calculate the fatigue moments (maximum and minimum) using the following equation for the LLDF in the LGA:

   $$LLDF_{mfatEXT}=1.2\cdot e_M\cdot g_{interior} \qquad \text{[Eq. 5-4]}$$

4. Calculate the fatigue moment range by taking the difference between the maximum and minimum fatigue moments.
5. In addition, use the following modifications to the fatigue moment range:
   a. For continuous steel units (see Figure 5.13.2-1)

i. Zone 1: In the vicinity of interior supports, use the ***LRFD*** LLDF (lever rule or rigid cross-section analysis) at the location of the support. Transition from the ***LRFD*** LLDF to the $LLDF_{mfatEXT}$ from the point of support to a distance of 10% of the span length. This applies to each side of the support.

ii. Zone 2: Increase the fatigue moment range by the skew correction factor, SCF_{mfat}, per Table 5.13.2-2, where applicable.

iii. Zone 3: Case 2 only. For areas where the bottom flange is in tension, reduce the maximum value by the reduction factor, RF_{Zone3} (as a "%"). Use the reduced value as shown in Figure 5.13.2-1

$$RF_{Zone3} = 0.09*RDDP \qquad \text{[Eq. 5-5]}$$

b. For Case 2 single span steel units, increase the fatigue moment range by the skew correction factor, SCF_{mfat}, per Table 5.13.2-2, where applicable.

Figure 5.13.2-1 Fatigue Moment Range Modifications

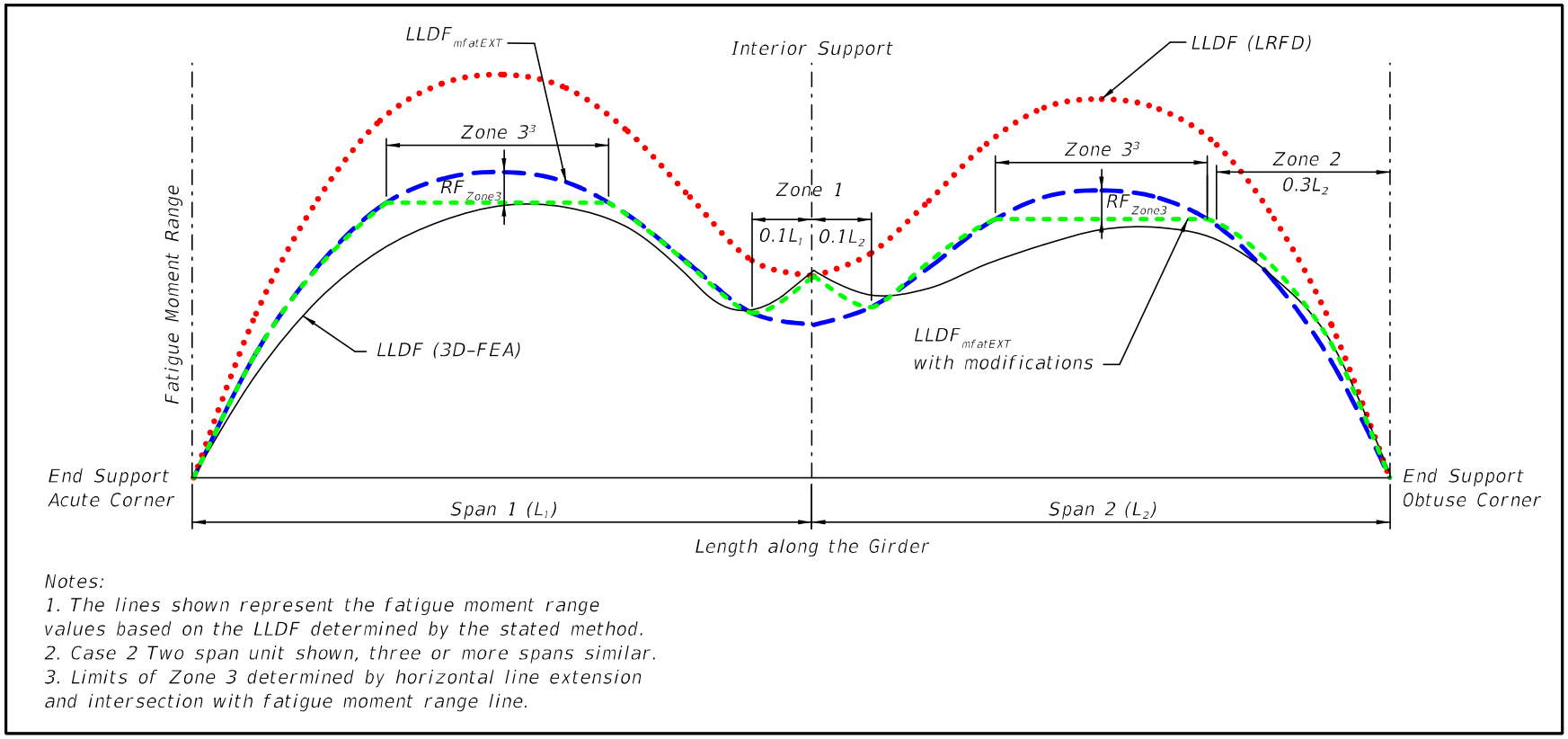

Notes:
1. The lines shown represent the fatigue moment range values based on the LLDF determined by the stated method.
2. Case 2 Two span unit shown, three or more spans similar.
3. Limits of Zone 3 determined by horizontal line extension and intersection with fatigue moment range line.

Table 5.13.2-2 Fatigue Moment Range Skew Correction Factor, SCF_{mfat}

	Simple Spans[1,2]	Continuous Spans[1,2]
Length of Applicability	$0.4L_{span}$	$0.3L_{span}$
Case 1	Not Applicable	1.1
Case 2	$1.33(1 + 0.06 * RDDP^{0.3}) - 0.33 \leq 1.35$	$1.5(1 + 0.03 * RDDP^{0.4}) - 0.5 \leq 1.35$

1. Only applicable at end supports at the obtuse corner of the span(s).
2. Decrease the SCF_{mfat} value linearly to a value of 1 at the end of the length of applicability.

*Commentary: The **LRFD** LLDF for determining the fatigue truck maximum and minimum moments (i.e., moment range) for the exterior girder is based on using the lever rule (**LRFD** Table 4.6.2.2.2d-1) or the rigid cross-section analysis (**LRFD** 4.6.2.2.2d). FDOT Research Project BEB13 demonstrated that these formulas are significantly conservative when compared to values determined by a 3D-FEA, and in many cases, Fatigue I can govern the design of the girder. The above procedure is based on using a single LLDF ($LLDF_{mfatEXT}$) that is approximately one standard deviation above the average positive fatigue moment LLDFs determined using a 3D-FEA. Furthermore, the modifications are for specific areas where the single LLDF ($LLDF_{mfatEXT}$) is unconservative or conservative when compared to the results of a 3D-FEA. At end support locations of Case 2 units, the sum of the longitudinal girder fatigue moment stress range and the flange lateral bending fatigue stress range may necessitate a bolted tab plate (see **SDG** 5.8.A and **SDM** 16.6.F) if the cost is justified. If a bolted tab plate is used, it should only be detailed for specific locations and not at all connection plates along the girder length.*

M. For intermediate cross-frames, use only load combinations for Strength I, Fatigue I or II, and Constructability. Also meet the stability bracing requirements of ***LRFD*** 6.7.4.2.2. Use “K” frames for intermediate cross-frames as shown in ***SDM*** Figure 16.7-1. Evenly space cross-frames, with a spacing not to exceed 30-feet.

N. For end cross-frames located at the end of a unit below a free edge of the concrete deck (see ***SDM*** Figure 16.7-1 End Cross-frame) and at interior supports located below a continuous concrete deck, use only load combinations for Strength I, Strength III, Fatigue I or II, and Constructability.

O. For skewed steel units, the girder will layover (twist) at the end support due to geometric compatibility with the intermediate and end cross-frames. The girder layover (the relative horizontal movement of the top flange to the bottom flange) due to the non-composite dead loads (i.e., self-weight of the steel girder and the concrete deck including the SIP forms) can be calculated using the following procedure:

1. Determine the girder vertical deflection at the 1/10th point, $\Delta_{0.1Ls}$ (ft), (usually given in the LGA) along the span under consideration from the end support.
2. Calculate the girder major-axis bending rotation, α (radians), at the end support by the following equation:

$\alpha = \Delta_{0.1Ls} / (0.1*L_s)$ [Eq. 5-6]

where: L_s = the span length under consideration (ft)

3. Calculate the girder major-axis bending twist, φ (radians), at the end support by the following equation:

$\varphi = (\alpha) (\tan \theta)$ [Eq. 5-7]

4. Calculate the girder layover (inch) at the end support by the following equation:

Layover = (D)(φ) [Eq. 5-8]

where: D = depth of the girder (inch).

*Commentary: The girder twist needs to be evaluated in the joint and bearing design per **LRFD** 14.4.1. Refer to **LRFD** 6.7.2 for discussion regarding girder layovers.*

5.13.3 Additional Criteria for Case 1

A. The girder flange lateral bending stresses due to skew effects are taken equal to zero.

B. The forces to design the intermediate and end cross-frame members and connections are shown in Table 5.13.3-1.

Table 5.13.3-1 Cross-Frame Component Forces

Load Case	Top Chord	Diagonals	Bottom Chord
Intermediate Cross-Frames			
Strength I[1] (kips)	40	60	100
Fatigue Range[2] (kips)	10	10	15
Constructibility[3] (kips)	15	10	15
End Cross-Frames			
Strength I[1,4] (kips)	40	35	40
Fatigue Range[2] (kips)	10	10	10
Constructibility[3,4] (kips)	5	5	5

1. The forces shown for Strength I are already factored.
2. Apply load factors for Fatigue I or II loading combinations as applicable. In addition, apply a factor of 0.65 (***LRFD*** 3.4.5).
3. The values are for the unfactored force induced into the cross-frames due to the non-composite weight of the concrete deck and SIP forms. Apply other force effects as applicable.
4. For end cross-frames directly supporting a free edge of the concrete deck, these forces do not include effects of the concrete edge beam weight and a local wheel load.

5.13.4 Additional Criteria for Case 2

A. For exterior girders use the multiplicative factors shown in Table 5.13.4-1. The multiplicative factors are in addition to the ***LRFD*** skew correction factor. The multiplicative factors for the Fatigue Live Load Vertical Shear Force Range are applied at the support and the value decreased linearly to 1.0 at the mid-span of the exterior girder.

Table 5.13.4-1 Factors Applicable to Exterior Girder

	Simple Span	Continuous Spans
Fatigue Live Load Vertical Shear Force Range	1.2	1.3[1]
Absolute Maximum Fatigue Live Load Vertical Shear Force	1.0	
Bearing Reactions	1.0	1.15/1.0 (Uplift)[1]

1. Apply to the obtuse corner of an interior support and at the obtuse corner of an end span support.

*Commentary: The factor for the Absolute Maximum Fatigue Live Load Vertical Shear Force (i.e., used for designing the web per **LRFD** 6.10.5.3) is 1.0 because it is reasonably predicted by an LGA. However, because of the lack of conservatism in the LGA analysis for predicting the minimum fatigue live load vertical shear force, it is necessary to augment the Fatigue Live Load Vertical Shear Force Range (i.e., used for designing the shear connectors per **LRFD** 6.10.10) by the specified factors.*

B. Use the girder flange lateral bending stresses due to skew effects as shown in Table 5.13.4-2.

Table 5.13.4-2 Girder Flange Lateral Bending Stresses Due to Skew Effects

Girder	Location[1]	Unfactored f_L[2] (ksi)	Fatigue Range f_L[3] (ksi)	Constructability f_L[5] (ksi)
Exterior	Near Support at the obtuse corner for Simple Spans	7.5	3.5	1
	Near End Supports at the obtuse corner for Continuous Units	7.5 ≤ [2.5+(RDDP/135) *10] ≤ 12	5.5	3
	Near Interior Supports of Continuous Units	4.5	N/A[4]	3
	Within Span	0	0	0
Interior	Near Supports for Simple Spans	7.5	2.5	1
	Near End Supports for Continuous Units	10	4.5	2
	Near Interior Supports of Continuous Units	7.5	N/A[4]	2
	Within Span	0	0	0

1. Near is defined as the first two cross-frame lines adjacent to the support. Transition the flange lateral bending stress from the value in the table at the first cross-frame location to a value of zero at the second cross-frame location.
2. Apply a 1.6 or 1.2 load factor for the Strength I and Service II loading combination, respectively. These are weighted average load factors (i.e., includes dead and live loads) recommended in the FDOT Research Project BEB13.
3. Apply load factors for Fatigue I or II loading combinations as applicable. In addition, apply a factor of 0.65 (***LRFD*** 3.4.5).
4. Does not need to be considered for the top flange due to the contribution of the concrete deck; or the bottom flange since the flange lateral bending stress range is small and the flange is generally in compression.
5. The values are for the unfactored flange lateral bending stress induced into the girder due to the weight of the concrete deck and SIP forms.

C. The forces to design the intermediate and end cross-frames members and connections are shown in Table 5.13.4-3.

Table 5.13.4-3 Cross-Frame Component Forces

Load Case	Top Chord	Diagonals	Bottom Chord
Intermediate Cross-Frames Simple Spans			
Strength I[1] (kips)	40	70	1.3*RDDP + 85*(S/D_w) – 115 ≥ 100
Fatigue Range[2] (kips)	10	12	0.10*RDDP + 3*(S/D_w) + 5 ≥ 15
Constructibility[3] (kips)	15	10	20
Intermediate Cross-Frames Continuous Spans			
Strength I[1] (kips)	50	0.35*RDDP + 20*(S/D_w) +20 ≥ 70	1.3*RDDP + 85*(S/D_w) – 90 ≥ 100
Fatigue Range[2] (kips)	10	0.05*RDDP +11	0.20*RDDP + 8*(S/D_w) - 2 ≥ 15
Constructibility[3] (kips)	40	20	40
End Cross-Frames			
Strength I[1,4] (kips)	100	100	75
Fatigue Range[2] (kips)	10	15	15
Constructibility[3,4] (kips)	10	10	10

1. The forces shown for Strength I are already factored.
2. Apply load factors for Fatigue I or II loading combinations as applicable. In addition, apply a factor of 0.65 (***LRFD*** 3.4.5).
3. The values are for the unfactored force induced into the cross-frames due to the weight of the concrete deck and SIP forms. Apply other forces effects as applicable.
4. For end cross-frames directly supporting a free edge of the concrete deck, these forces do not include effects of the concrete edge beam weight and a local wheel load.

5.13.5 Design Criteria for Case 3

A. Design the girders using a LGA with the LLDF per ***LRFD*** 4.6.2.2 using the criteria in ***SDG*** 5.13.2 A through J. The supplemental conditions 5, 6, 7, and 8 of Table 5.13.2-1 do not apply for Case 3 bridges. Use the use the multiplicative factors in ***SDG*** 5.13.4.A, except for the bearing reactions.

B. Use an RMA to determine fatigue stress ranges, bearing reactions, flange lateral bending stresses, girder cambers, and cross-frame forces.

C. For design of the intermediate cross-frames, use only Load Combinations for Strength I, Fatigue I or II, and Constructability. Also meet the stability bracing requirements of ***LRFD*** 6.7.4.2.2.

D. For end cross-frames located at the end of a unit below a free edge of the concrete deck and at interior supports located below a continuous concrete deck, use only load combinations for Strength I, Strength III, Fatigue I or II, and Constructability.

E. If the requirements of this Section cannot be met, use Case 4 criteria.

Commentary: Case 3 applies to steel I-girder units where the structural systems do not meet Case 1 or 2 criteria, but the girder is designed using a LGA to ensure its capacity is still sufficient in the final condition without relying on the cross-frames to transfer gravity loads. This allows the cross-frames to be designated as secondary members with bearing connections. The force effects stated in 5.13.5.B could not be estimated accurately using either upper value bounds or empirical formulas; therefore, an RMA is required to determine these force effects.

5.13.6 Design Criteria for Case 4

Use a refined Method of Analysis (***LRFD*** 4.6.3) for Case 4 as defined in Table 5.13.1-1.

5.13.7 Design Criteria for Case 5

Use a 3D-FEA Refined Method of Analysis (***LRFD*** 4.6.3) for Case 5 as defined in Table 5.13.1-1. The 3D-FEA analysis requirements include, but are not limited, to the following:

A. Model the superstructure fully in three dimensions.

B. Model the girder flanges using beam, plate, shell, or solid elements.

C. Model the girder webs using plate, shell, or solid elements.

D. Model the intermediate and end cross-frames components using beam, truss, or plate elements.

E. Model the deck using plate, shell, or solid elements.

5.14 HORIZONTALLY CURVED STEEL I-GIRDER UNITS

Design horizontally curved steel I-girder units in accordance with ***LRFD*** and the following requirements:

A. For horizontally-curved I-girder units satisfying all the conditions specified in ***LRFD*** 4.6.1.2.4b, design the cross-frame connections as bearing connections. Do not calculate a load rating factor for the intermediate or end cross-frames.

B. For horizontally-curved I-girder units not satisfying all the conditions specified in ***LRFD*** 4.6.1.2.4b, design the cross-frame connections as slip-critical connections. Do not calculate a load rating factor for the intermediate or end cross-frames except as noted in Number C.1 below.

C. Use a 3D-FEA (see ***SDG*** 5.13.7 for requirements) refined method of analysis (***LRFD*** 4.6.3) when:

   1. The ***LRFD*** bridge skew index is greater than 0.6 (see also ***SDG*** 1.10). Calculate a rating factor for the intermediate cross-frames and end cross-frames.

   2. The central angle (any span in the unit) is greater than 0.06 radians and the ***LRFD*** bridge skew index is greater than 0.4 but less than or equal to 0.6. Do not calculate a load rating factor for the intermediate or end cross-frames.

5.15 GLOBAL DISPLACEMENT AMPLIFICATION IN NARROW I-GIRDER BRIDGE UNITS

This section supplements ***LRFD*** 6.10.3.4.2. In lieu of using the sum of the largest total factored girder moments, use the sum of the largest factored positive girder moments during the deck placement within the span under consideration. In lieu of ***LRFD*** Equation 6.10.3.4.2-1, calculate the elastic global lateral-torsional buckling resistance as follows:

$$M_{gs} = C_g C_b C_c \frac{\pi^2 w_g E}{L^2} \sqrt{I_{eff} I_x} \qquad \text{[Eq. 5-9]}$$

Where:

C_g = factor for number of girders

= 1.0 for two girder systems

= 1.22 for three girder systems

C_b = moment gradient modifier

= 1.12 for uniform vertical load

= 1.0 for all loading conditions for systems with top flange lateral bracing at each end of the span.

C_C = span continuity factor

= 1.0 for single spans

= 1.6 for continuous spans following the concrete deck placement sequence per ***SDM*** Figure 15.5-5

= 1.1 otherwise

All other terms as per ***LRFD*** 6.10.3.4.2.

6 SUPERSTRUCTURE COMPONENTS

6.1 GENERAL

This Chapter contains information and criteria related to the design, reinforcing, detailing, and construction of bridge superstructure elements and includes deviations from ***LRFD***. This chapter covers erection schemes, beam and girder stability requirements, railings, curbs, joints, bearings, and deck drains. For additional information on concrete beams, decks, and steel girders, see ***SDG*** Chapter 4 and ***SDG*** Chapter 5.

6.2 CURBS AND MEDIANS (LRFD 13.11)

A. For bridge projects that utilize curbs, match the curb height and batter on the roadway approaches.

B. When the roadway approaches have a raised median, design the bridge median to match that on the roadway.

6.3 TEMPERATURE MOVEMENT (LRFD 3.12.2)

For all bridges other than longitudinally post-tensioned, segmental concrete bridges, calculate movement due to temperature variation (range) with an assumed mean temperature of 70 degrees Fahrenheit at the time of construction. Base joint and bearing design on the expansion and contraction for temperature ranges of ***SDG*** Table 2.7.1-1.

6.4 EXPANSION JOINTS

A. For new construction, use only expansion joint types listed in Table 6.4-1.

B. When an expansion joint is required, use one of the standardized expansion joints or details if possible. When a non-standardized expansion joint is required (e.g. finger joints and modular joints), design the joint using the following criteria:

Table 6.4-1 Expansion Joint Width Limitations by Joint Type

Expansion Joint Type	Maximum Open Width "W" (measured in the direction of travel at deck surface)
Hot Poured or Poured Joint without Backer Rod	3/4-inch
Poured Joint with Backer Rod	3-inches
Armored Strip Seal (Single gap)	Per ***LRFD*** 14.5.3.2
Modular Joint (Multiple modular gaps)	Per ***LRFD*** 14.5.3.2
Finger Joint	Per ***LRFD*** 14.5.3.2

Commentary: The joint types listed in Table 6.4-1 have historically been the most reliable and cost effective to construct and maintain. The maximum open width for the poured joint with backer rod is limited to 3-inches to reduce the potential for the joint seal material to be damaged by debris being pushed down into the joint from tires.

6.4.1 General Design Provisions (LRFD 14.5.1)

A. Open expansion joints for new construction are not permitted except adjacent to or between moveable spans.

B. Provide upturned joints adjacent to the gutter line of sufficient height to contain runoff from the bridge deck at the following locations:

   1. On the low side of decks
   2. On the high side of decks if the cross slope at the joint is less than 1%
   3. On the high side of deck sections within sidewalks if the spread within the sidewalk will extend the full width of the sidewalk

Commentary: The requirement is in place to prevent water, dirt and debris from falling through the open joint and damaging and staining the bearings, girder ends and supporting piers and bents. It is also consistent with environmental permit requirements for containing runoff on bridges over waterways.

C. Expansion joint details in sidewalks must meet all applicable requirements of the Americans with Disabilities Act. To meet these requirements, use slip resistant galvanized steel sidewalk cover plates at all expansion joints located within sidewalks. Specify sidewalk cover plates to be in accordance with ***Specifications*** Section 458. For modular and finger expansion joints, design the cover plates to extend over the entire metallic portions of the joints when the joints are in the full open positions. See ***Standard Plans*** Indexes 458-100 and 458-110 for details of sidewalk cover plates that are used with poured and strip seal type expansion joints. Provide similar details in the plans for modular and finger expansion joints.

D. Do not design expansion joints to facilitate vertical extension to accommodate a future wearing surface unless a wearing surface is specifically required or planned to be used on the bridge.

6.4.2 Movement (LRFD 14.4 and 14.5.3)

The width, "**W**", of the joint must meet the requirements of ***LRFD*** 14.5.3.2, except that "**W**" for the different joint types must not exceed the appropriate value from ***SDG*** Table 6.4-1. When designing and specifying in the Plans the joint opening at 70 degrees Fahrenheit, either the design width "**W**" must be decreased by the amount of anticipated movement due to creep and shrinkage, or the joint opening must be set to the minimum width for installing the joint, whichever results in the initial wider joint opening.

6.4.3 Expansion Joints for Bridge Widenings

A. Contact the District Maintenance Office to determine the type and condition of all existing expansion joints on bridges that are to be widened. For the purposes of these requirements, existing expansion joint types defined by group are:

   1. Group 1: Armored Strip Seal, compression seal, poured rubber, open joint, poured joint with backer rod, copper water-stop, and "Jeene."

2. Group 2: Sliding Plate, finger joint, and modular.

See specific requirements for these groups in the following sections.

B. When existing joints are to be extended into a bridge widening, determine the extent of existing concrete deck to be removed. Where required, limit removal of existing concrete to what is necessary to remove the existing joint armor and to permit proper anchorage of the new joint armor. Detail the existing joint removal and note that the Contractor must not damage the existing deck reinforcing steel when installing the new joint.

C. For all bridge widenings regardless of expansion joint type, include requirements in the Plans that all concrete spalls adjacent to existing expansion joints that are to remain are to be repaired. Include project specific details and notes as required.

Modification for Non-Conventional Projects:

Delete ***SDG*** 6.4.3 and see the RFP for requirements.

6.4.4 Bridge Widenings - Group 1 Expansion Joints

A. If the existing expansion joint is an Armored Strip Seal and the edge rails and adjacent deck sections are in good condition, remove the existing elastomeric seal element, portions of the edge rails as required and upturned edge rail ends (if present), install new compatible edge rails in the widened portion of the bridge and provide a new continuous elastomeric seal element across the entire deck that is compatible with both the existing and new edge rails. Be aware of and make provisions in the Plans for the differences between the various proprietary strip seal expansion joints that have historically been used in Florida.

B. If the existing expansion joint is an armored compression seal and the armor and adjacent deck sections are in good condition, remove the existing compression seal, portions of the armor as required and upturned armor ends (if present), match the open joint width in the widened portion of the bridge and install a new poured joint with backer rod, poured rubber joint or leave the joint open. The use of joint armor in the widened portion of the bridge deck is not mandatory.

C. If the existing armored joint is in poor or irreparable condition, remove the existing seal and armor as required, repair or replace the damaged concrete and armor as required, and install a new Group 1 Joint other than a compression seal or copper water stop.

Commentary: Armored joints made from angles or extruded shapes with horizontal legs that are anchored into the concrete deck with welded shear studs are prone to breaking loose from the deck due to fatigue of the welded shear stud connection. The horizontal leg experiences loading from every passing wheel. Additionally, the horizontal leg tends to trap air, bleed water and debris during deck casting creating a void between the leg and the concrete. The combination of the void and the wheel loading fatigues the welded shear studs.

D. If the existing joint consists of poured rubber with or without a copper waterstop, remove the upper portion of the existing joint material as required to install a new poured joint with backer rod, extend the joint gap into the widening, and install a new poured joint with backer rod across the entire bridge width.

Commentary: Poured rubber joints with or without copper waterstops were commonly used on prestressed concrete beam bridges through the 1960s.

E. If the existing joint is a poured joint with backer rod that is performing satisfactorily, extend the joint gap into the widening and install a compatible poured joint with backer rod, header material, armor, etc., in the widening. Splice the new compatible poured joint onto the existing poured joint that is to remain in place. If the existing poured joint is not performing satisfactorily, determine the cause of the problem, evaluate the appropriateness of the continued use of a poured joint, and if appropriate use a poured joint with backer rod in the widening as described above. Include requirements and details for the repair or replacement of the existing poured joint, header material, armor, etc., as part of the construction of the bridge widening as necessary.

Commentary: When properly installed, newly poured silicone material should adhere well to existing silicone material. Splicing the new section of joint onto the existing joint may simplify the MOT.

F. If the existing joint is an open joint and is performing satisfactorily as an open joint, extend the joint gap and open joint into the widening. If it is not performing satisfactorily, determine the cause of the problem, evaluate the appropriateness of the continued use of an open joint, and if appropriate extend the joint gap into the widening and use a poured joint with backer rod across the entire width of the bridge as described above.

G. If the existing joint is a Jeene Joint and is performing satisfactorily, extend the joint gap and any necessary blockouts, armor, headers, etc. into the widening, remove the existing Jeene Joint seal and provide a new continuous Jeene Joint seal across the entire width of the deck. If it is not practicable to install a new Jeene Joint, provide a new joint system from the Group 1 list other than a compression seal or copper water stop.

Modification for Non-Conventional Projects:
Delete ***SDG*** 6.4.4 and see the RFP for requirements.

6.4.5 Bridge Widenings - Group 2 Expansion Joints

A. If the existing expansion joint is in good condition or repairable, extend it into the widened portion of the bridge using the same type of expansion joint. Include details for any needed repairs of the existing section of joint to remain and installation of new continuous seal elements as required. Require that lengthening be performed in conformance with the expansion joint manufacturer's recommendations. Be aware of and make provisions in the Plans for the differences between the various proprietary modular expansion joints that have historically been used in Florida.

B. If the existing expansion joint is proprietary and no longer available, it should be replaced with a Group 2 Joint that will accommodate the same calculated movement.

Modification for Non-Conventional Projects:
Delete ***SDG*** 6.4.5 and see the RFP for requirements.

6.4.6 Post Tensioned Bridges

See ***SDG*** 4.6.7 Expansion Joints.

6.5 BEARINGS

A. Bridge bearings must accommodate the movements of the superstructure and transmit loads to the substructure supports. The type of bearing depends upon the amount and type of movement as well as the magnitude of the load.

B. In general, simple-span, prestressed concrete beams, simple-span steel girders, and some continuous beams can be supported on composite neoprene bearing pads (elastomeric bearings). Larger longitudinal movements can be accommodated by using PTFE polytetrafluoroethylene (Teflon) bearing surfaces on external steel load plates.

C. Structures with large bearing loads and/or multi-directional movement might require other bearing devices such as pot, spherical, or disc bearings. Spherical bearings require a Modified Special Provision that addresses materials, design, fabrication, testing, and installation requirements. For typical details and plan notes for multirotational (MR) bearings, see ***SDM*** 15.10. Use a minimum pedestal height of 5-inches and dimension the minimum required embedment of the pedestal reinforcing in the Plans. Detail the pedestal reinforcing to provide an embedment that is one-inch greater than the minimum required embedment shown in the Plans.

Commentary: The additional one-inch embedment provides some tolerance to accommodate vertical adjustment should the actual MR bearing height be less than the height assumed during the design. If more than one-inch of vertical adjustment is needed, the plan notes require the Contractor to submit revisions to the Engineer for approval.

D. For cast-in-place flat slab superstructures, use unreinforced bearing strips with a minimum thickness of ¾-inch. Bearing strips must extend the full width of the bridge and may be continuous for their full length or may be a series of discontinuous segments 5-feet or longer placed end to end. For prestressed slab beams or units, use individual unreinforced bearing strips or pads with a minimum thickness of 1-inch.

E. For steel bridge bearings refer to AASHTO/NSBA Steel Collaboration Standard G9.1-2022 Steel Bridge Bearing Guidelines (with the exceptions as detailed in this chapter) available at https://www.aisc.org/nsba/nsba-publications/aashto-nsba-collaboration/

F. Uplift restraints are undesirable and should only be considered when all other alternatives have been evaluated and only when approved by the SSDE.

Commentary: The use of concrete counterweights in the form of thickened diaphragms or slabs should be investigated before considering uplift restraints.

G. For segmental box bridges, provide a minimum of two bearings at the end of a unit or at the abutment.

Commentary: Single bearings at the end of a unit or at the abutment are not permitted due to issues with structural stability during construction, and the effects of live load induced torsion and rotation on the expansion joint.

H. Uplift on all bearing types is undesirable at Service and Strength Limit States, and requires SSDE approval. The erection sequence shown in the plans must provide a statically stable support system that ensures the bearings are in compression for all construction load combinations. Uplift on reinforced elastomeric bearings, without bonded top and/or bottom load plates during construction, shall be limited and approved by the SSDE on a case-by-case basis. For curved segmental bridges constructed in balanced cantilever, temporary bearing uplift may be avoided through the use of counterweights or tie-downs. See also ***SDM*** 20.9.1.

6.5.1 Design

A. For bridge bearings specify composite elastomeric bearing pads and other bearing devices that have been designed in accordance with ***LRFD*** Method B, the ***Specifications***, and this document. Specify elastomeric bridge bearing pads by thickness, area, lamination requirement and shear modulus. For normal applications, specify a shear modulus of either 0.110 ksi, 0.130 ksi or 0.150 ksi (at 73 degrees F). For unusual applications, the shear modulus may vary from 0.095 to 0.2 ksi (at 73 degrees F). Do not apply the 1.20 load factor in ***LRFD*** Table 3.4.1-1 to the thermal movements (TU) for elastomeric bearing pad design when using ***LRFD*** Method B to determine the total shear deformation in each direction per ***LRFD*** 14.7.5.3.2. Include the effects of Dynamic Load Allowance for Live Load.

*Commentary: Since the calculation of the shear strain in each direction is based on 60% of the total movement, the Department's interpretation of the **LRFD** Specification is that the 1.2 factor is already built into the empirical equation of **LRFD** 14.7.5.3.2.*

B. For ancillary structures (noise walls, pedestrian or traffic railings, etc.) use plain elastomeric bearings as typically used on flat-slab bridges and for other applications. Design pads in accordance with ***LRFD*** Method A, and specify by thickness, area (length and width), and hardness (durometer) or shear modulus (G).

C. Whenever possible, and after confirming their adequacy, standard designs should be used. See ***Standard Plans*** Index 400-510 and the associated ***Standard Plans Instructions (SPI)***, for standard composite elastomeric bearing pads. Only when the neoprene capacities of the standard pads have been exceeded or when site conditions or constraints dictate provisions for special designs (such as multi-rotational capability) should other bearing systems or components be considered. If other bearing systems or

components are considered, the bearing types must be selected based on a suitability analysis. Comply with ***LRFD*** Table 14.6.2-1, Bearing Suitability, to select an appropriate bearing type. The special design requirements of ***LRFD*** covers specific material properties, mating surfaces, and design requirements such as coefficient of friction, load resistance, compressive stress, compressive deflection, and shear deformation, as applicable to the various bearing systems.

Commentary: If the resistance factor for a bearing is other than 1.0, the design calculations must include the method for obtaining such a factor.

D. For elastomeric bearing pads, use the following criteria to establish bearing seat (pedestal) geometry and usage of beveled bearing plates considering beam grade, camber, and skew effects.

1. For beam grades less than 0.5%, show bearing seats to be finished level and do not use beveled bearing plates.
2. For beam grades between 0.5% and 2%, show bearing seats to be finished parallel to the underside of the beam and do not use beveled bearing plates.
3. For beam grades greater than 2%, show bearing seats to be finished level and use beveled bearing plates.
4. Use transversely beveled or compound beveled bearing plates or bearing seats for all transversely sloped bearing conditions when the change in elevation across the width of the bearing pad is greater than or equal to 1/8-inch. Do not use a combination of level bearing seats and shims in lieu of sloped bearing seats.
5. When possible, bearing seats at each end of the beam should have the same slope.
6. When using FIBs with standard bearing pads which meet the requirements above, the beam end rotations due to beam camber (at 120 days) and deflection may be neglected if the combined effect is less than 0.0125 radians (1.25%).

Commentary: The effects of static rotation (beam camber and dead load rotation) are not considered critical due to the propensity of the neoprene to creep over time and redistribute internal stresses. Additionally, inherent inaccuracies in the estimation of beam cambers and the compensating effects of dead load and live load rotations generally do not warrant refinement in the calculation of beam seat slopes.

In lieu of a refined analysis, the rotation at the end of simple span prestressed beams from camber, dead load or live load deflection may be calculated using the following equation:

$$Rotation = 4 \left(y_{mid} / L \right)$$

Where:

Rotation = *Rotation at end of beam (radians)*

y_{mid} = *Deflection at mid span (inches)*

L = *Span length between centerline of bearing (inches)*

6.5.2 Maintainability

A. The following provisions apply to all bridges with the exception of flat slab superstructures (cast-in-place or precast):

   1. Design and detail superstructures using bridge bearings that are reasonably accessible for inspection and maintenance.

   2. Design bearing connections to allow for bearing replacement without having to remove the masonry plate or sole plate. Detail all steel bearing components with sliding surfaces (e.g., stainless-steel plates or PTFE plates), masonry plates and elastomeric components to be replaceable. Welded attachments are not considered a replaceable connection. For permissible steel I-girder connections, see ***SDG*** 5.11.A.

   3. Design and detail provisions for the replacement of bearings, such as jacking locations, jacking sequence, jack load, etc. Verify that the substructure and superstructure widths are sized and detailed to accommodate the jacks and any other required provisions. Simple span pretensioned beams are exempt from this requirement.

B. Separate details and notes describing jacking procedures are required for steel girder and segmental concrete box girder bridges. For steel I-girder bridges, design, and detail so that jacks can be placed directly under girder lines. For steel and segmental concrete box girder bridges, design, and detail so that jacks can be placed directly under pier diaphragms. Always include a plan note stating that the jacking equipment is not part of the bridge contract.

Commentary: Few concrete I-beam bridges have required elastomeric bearing pad replacement. Occasional replacement of these pads does not justify requiring these provisions for every bridge.

6.5.3 Lateral Restraint

A. Determine if lateral restraint of the superstructure of a bridge is required and make necessary provisions to assure that the bridge will function as intended. These provisions include considerations for the effects of geometry, creep, shrinkage, temperature, and/or seismic on the structure. When lateral restraint of the superstructure is required, develop the appropriate method of restraint as described hereinafter.

B. Provide lateral restraint as follows for superstructures supported on elastomeric bearings:

   1. For concrete beam or girder superstructures, when the required restraint exceeds the capacity of the bearing pad under the ***LRFD*** Table 3.4.1-1 Extreme Event I or II load combinations, provide concrete blocks (shear lugs) cast on the substructure and positioned to not interfere with bearing pad replacement. Do not use concrete blocks (shear lugs) to resist lateral forces from other load combinations.

2. For all steel I-girder superstructures supported on elastomeric bearings, provide extended sole plates and swedged anchor bolts/rods with double nuts as shown in ***SDM*** Figure 13.7-3. Design anchor bolts/rods as follows:

$$D_{min} = 2\left(\frac{0.4 \cdot R_{DL} \cdot H}{\pi \cdot f_y \cdot N_{Bolts}}\right)^{0.333} \quad \text{[Eq. 6-1]}$$

Where:

D_{min} = minimum Anchor Bolt/Rod Diameter (1-inch minimum) (inches)

R_{DL} = Service (Unfactored) Dead Load Reaction per girder (kips)

H = Bearing Pad Height + (Sole Plate Thickness / 2) (inches)

f_y = minimum specified yield strength of Anchor Bolts/Rods (ksi)

N_{Bolts} = number of Anchor Bolts/Rods per girder (2 minimum and preferred; 4 if required)

Final Anchor Bolt/Rod Diameter = D_{min} rounded up to the nearest ¼-inch.

Minimum Anchor Bolt/Rod Embedment (inches) = Final Anchor Bolt/Rod Diameter (inches) times 10.

Minimum Anchor Bolt/Rod Length (Inches) = Minimum Anchor Bolt/Rod Embedment into Pier/Bent Cap (inches) + Anchor Bolt/Rod Extension above Pier/Bent Cap (inches)

Final Anchor Bolt/Rod Length = Minimum Anchor Bolt/Rod Length rounded up to the nearest inch.

For simplicity and uniformity of detailing and construction, minimize the use of different diameter anchor bolts/rods for a given bridge. Provide larger diameter and/or more anchor bolts/rods, or other restraint/anchorage devices, when the required restraint exceeds the capacity of the minimum number and diameter of the anchor bolts/rods as determined above.

Commentary: The dynamic response of relatively light and flexible steel superstructures, in combination with cyclical dimensional changes from thermal effects, requires that the bridge be secured longitudinally and transversely with anchor rods to prevent the potential for walking.

*The design methodology presented above utilizes 10% of the dead load vertical reaction as a horizontal load acting on the anchor bolts/rods which are allowed to yield in bending. The minimum anchor bolt/rod diameters, numbers and embedment lengths determined using this methodology and the associated minimum requirements are similar to those required by the **AASHTO Standard Specifications for Highway Bridges**. Larger diameter and/or more anchor bolts/rods may be required to resist seismic or vessel collision loads.*

3. For all steel box girder superstructures supported on elastomeric bearings, provide anchor bolts/rods designed using the methodology and associated requirements presented in Paragraph 2 above, except in lieu of using extended sole plates, position the anchor bolts/rods to extend through the bottom flange and into the box girder.

C. Mechanically Restrained Bearings: Bearings that provide restraint through guide bars or pintles (e.g., pot bearings), must be designed to provide the required lateral restraint. When unidirectional restraints are required, avoid multiple permanent unidirectional restraints at a given pier location to eliminate binding. Where multiple unidirectional restraints are necessary at a given pier, require bearings with external guide bars that are adjustable and include a detailed installation procedure in the plans or specifications that ensure that the guide bars are installed parallel to each other.

Commentary: Guide bars can be difficult to properly align to accommodate thermal movements of the superstructure. The difficulties are due to construction tolerances for girder fabrication and bearing placement, tight clearances between guide bars and the bearing, and design assumptions regarding the direction of thermal movement on curved bridges. Multiple guided bearings at a single pier further complicate the issue.

6.5.4 Longitudinal Restraint

For steel bridges with continuous units, longitudinally fix at least one support within each continuous unit. For steel bridges with simple spans, longitudinally fix at least one support within each span.

Commentary: Steel structures are inherently prone to walking over time due to their flexibility and relatively high live-load to dead-load ratios.

6.6 DECK DRAINAGE (LRFD 2.6.6)

See ***SDM*** Chapter 22 for drainage requirements on bridges.

6.7 TRAFFIC RAILING (LRFD 13.7)

6.7.1 General

A. Unless otherwise approved by the SSDE, all new bridge and approach slab traffic railings, retaining wall mounted concrete barriers, concrete barrier/noise wall combinations, and traffic railing/visual barrier combinations proposed for use in new construction, resurfacing, restoration, rehabilitation (RRR) and widening projects must:

1. Have been successfully crash tested to, or evaluated and determined to meet, the following ***LRFD*** and ***MASH*** criteria for permanent installations:

   a. Test Level 3 (minimum)

i. Traffic railings at the back of raised sidewalks (Design Speed ≤ 45 mph)

ii. Traffic railing retrofits not located on Interstates or other high speed limited access facilities

iii. Traffic railings located on bascule bridges (Design Speed ≤ 45 mph)

b. Test Level 4 (minimum), Test Level 5 or Test Level 6 (as appropriate)

i. Traffic railing retrofits located on Interstates or other high speed limited access facilities

ii. All other traffic railings not noted in 1.a above.

2. Meet the appropriate strength and geometric requirements of ***LRFD*** Section 13 for the given test levels and crash test criteria.

3. Be upgraded on both sides of a structure when widening work is proposed for only one side and the existing traffic railing on the non-widened side does not meet the criteria for new traffic railings or the requirements of Section 6.7.4.A.2.

4. Be constructed on decks reinforced in accordance with ***SDG*** Chapter 4 for permanent installations on new construction, widenings, and partial deck replacements.

5. Be constructed on decks and walls meeting the requirements of Section 6.7.4 for retrofit construction.

B. The traffic railings shown on the following ***Standard Plans*** have been determined to meet the ***MASH*** crashworthiness requirements for permanent installations as listed above:

521-422

521-423

521-426

521-427

521-428

460-470 Series

521-480 Series

521-500 Series

521-610

521-620

Use these standard traffic railings for permanent installations on bridges and retaining walls as shown in ***FDM*** unless approval to use a non-standard or modified traffic railing is obtained per ***SDG*** 6.7.2.

C. See ***FDM*** 215.4.1.4 for temporary barrier requirements.

D. See ***SDG*** 1.6 for restrictions on the use of Post-Installed Anchor Systems with traffic railings.

E. Do not use weathering steel guardrail.

Commentary: This policy reflects FHWA guidance on weathering steel guardrail.

F. Provide conduits in traffic railings and/or parapets on bridges and walls in accordance with ***Standard Plans*** Index 630-010. On Limited Access facilities (Interstate, Expressway, and Freeway), provide the maximum number of conduits as permitted by the ***Standard Plans*** in all bridge and wall traffic railings and/or parapets. For adjacent mainline bridges on Limited Access facilities with back-to-back traffic railings having a clear gap of 5-feet or less, provide the maximum number of conduits in only one of the two traffic railings. For non-Limited Access facilities, coordinate with the District Utilities Engineer, ITS designer, highway lighting designer and/or navigation lighting designer as appropriate to determine the present and future uses of the conduit embedded in concrete at the project location. Label conduits that are not required for present use as “future use”. Where a traffic railing and a parapet are located together on one side of the bridge (e.g., sidewalk or shared use path), conduits are typically provided in the feature located closest to the coping. Conduits are not permitted in ***Standard Plans*** Index 521-480 Series traffic railings.

Modification for Non-Conventional Projects:

Delete ***SDG*** 6.7.1.F and replace with the following:

Unless otherwise specified in the RFP, provide the maximum number of conduits in traffic railings and/or parapets on bridges and walls in accordance with ***Standard Plans*** Index 630-010.

6.7.2 Non-Standard or New Railing Designs

A. The use of a non-FDOT standard or new structure mounted traffic railing requires the prior approval of the SSDE. Proposed modifications to standard traffic railings also require prior SSDE approval. Such proposed modifications may include but are not limited to reinforcement details, surface treatments, material substitutions, geometric discontinuities along the length of the railing, non-standardized attachments that do not meet the requirements of ***SDG*** 1.9, non-standardized and unfilled pockets or block-outs, end transition details and traffic face geometry.

B. Submit all proposed non-FDOT standard, new or modified structure mounted traffic railing designs to the SSDE for review and possible approval. Make this submittal early in the design process preferably prior to submittal of the Typical Section Package.

Modification for Non-Conventional Projects:

Delete ***SDG*** 6.7.2.B and insert the following:

B. Use only the structures mounted traffic railings shown in the ***Standard Plans*** unless otherwise specified or permitted in the RFP.

C. A non-FDOT standard or new structure mounted traffic railing design may be approved by the SSDE if it meets the requirements of No. 1 and Nos. 2 or 3 below:

1. The SDO has determined that the design will provide durability, constructability, maintainability, and behavior under ultimate loading conditions equivalent to the standard FDOT traffic railing designs.
2. It has been successfully crash tested in accordance with ***MASH*** criteria for permanent installations.
3. It has been evaluated by the SDO and identified as similar in strength and geometry to another traffic railing that has been successfully crash tested in accordance with ***MASH*** criteria for permanent installations.

*Commentary: The background for this policy is based on the Test Level Selection Criteria as defined in **LRFD** Section 13 and on historical construction costs and in-service performance of standard FDOT Test Level 4 traffic railings used in permanent installations. This background can be summarized as follows:*

a. In general, a greater potential exists for overtopping or penetrating a shorter height, lower test level traffic railing versus a similarly shaped Test Level 4 traffic railing. This potential is further aggravated on tall bridges and on bridges over intersecting roadways or water deep enough to submerge an errant vehicle. Vehicle performance during higher speed impacts is also more critical on lower test level traffic railings.

b. Little construction cost savings can be realized by using a lower test level traffic railing. In some cases, particularly with the more elaborate or ornate traffic railing designs, initial construction costs and long term repair and maintenance costs could actually be greater than those for a standard FDOT Test Level 4 design.

c. On bridges and retaining walls with sidewalks where special aesthetic treatments are desired or required, the use of an aesthetic pedestrian railing located behind a Test Level 4 traffic railing is a more appropriate solution. The aesthetics of the traffic railing should complement the pedestrian railing.

D. For more detailed information on FDOT structure mounted traffic railings, refer to the ***Standard Plans***. For additional information about crash-tested traffic railings currently available or about traffic railings currently under design or evaluation, contact the SSDE.

E. Any surface textures or patterns must be evaluated as part of the crash tested traffic railing system.

F. Patterns or textures must be cast into or otherwise integral with the traffic face or top of traffic railings. Do not specify textures, patterns or features, e.g. brick, stone, or tile veneers, etc. on the traffic face or top of traffic railings that have to be attached as a separate element. Such features may be considered for attachment to the back face of traffic railings and pedestrian railings on a project by project basis in locations not over or directly beside other travelways.

Commentary: Textured railings can result in more vehicular body damage in a crash due to increased friction even if crash performance remains within acceptable limits.

Aesthetic attachments to the back of the traffic railing may become dislodged when the railing is impacted and create a hazard to roadways located under or beside the structure. For this reason, aesthetic attachments shall not be used on the back of railings located over or directly beside other travelways. Railings with aesthetic features generally cannot be slip formed resulting in increased construction time and cost.

The selection of a proposed railing texture or pattern should take into account the overall aesthetic concept of the structure, maintainability of the feature and the long service of the structure. Shapes of traffic railings create the major aesthetic impression, colors, textures, and patterns are secondary. Form liners that try to imitate small scale detail are wasted at highway speeds but may be appropriate for areas with pedestrian traffic.

6.7.3 FHWA Policy

FHWA bridge traffic railing guidelines can be found at the following website:

https://highways.dot.gov/safety/RwD

The AASHTO/FHWA Joint Implementation Agreement for ***MASH***, the Federal-aid reimbursement process for safety hardware devices, FHWA's crash test laboratory accreditation requirements and lists of crashworthy hardware can also be found on this website.

6.7.4 Existing Traffic Railings

A. General

1. FDOT promotes highway planning that replaces or upgrades traffic railing on existing bridges in order to meet current standards, or that at least increases the strength or expected crash performance of these traffic railings. FDOT has developed ***Standard Plans*** Index 460-470 and 521-480 Series, Index 460-477 and Index 460-490 for retrofitting specific types of existing traffic railings with designs that have performed well in crash tests and are reasonably economical to install. Detailed instructions and procedures for the use of these ***Standard Plans*** are included in the ***Standard Plans Instructions (SPI)***.

2. Evaluate existing bridge, approach slab and retaining wall mounted traffic railings following the minimum requirements shown in Table 6.7.4-1 and replace or retrofit railings where specified. As used in Table 6.7.4-1, the terms “RRR Criteria” and

"Widenings" refer to project level design criteria. Additionally, the requirements specified under the "Widening" headings apply to the existing traffic railings that will remain after the bridge and/or roadway is widened. Existing bridge decks, wing walls and retaining walls supporting traffic railings shown in ***SPI*** 536-002, "A Historical Compilation of Superseded Florida Department of Transportation 'Structures Standard Drawings' for 'F' and 'New Jersey' Shape Structure Mounted Traffic Railings" do not require a Design Variation for vehicular impact loads. The requirements for treating existing guardrail to bridge railing transitions specified in ***FDM*** 215 and/or pedestrian related requirements may necessitate retrofitting or replacing existing traffic railings beyond the minimum requirements specified in Table 6.7.4-1 Existing traffic railings must be in good condition for them to be left in place with no action required or where the railings are required to be retrofitted per Table 6.7.4-1. See ***FDM*** 215 for additional requirements.

Table 6.7.4-1 Treatment of Existing Traffic Railings

Existing Traffic Railing	Required Minimum Treatment of Existing Traffic Railing Installations			
	Design Speed ≤ 45 mph		Design Speed ≥ 50 mph	
	RRR criteria	Widenings (Treatment of remaining railing)	RRR criteria	Widenings (Treatment of remaining railing)
32" F-Shape 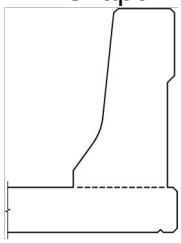 See ***SPI 536-002*** for details 32" New Jersey Shape 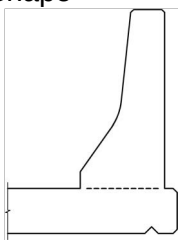 See ***SPI 536-002*** for details	No action required.			On Interstates and other high speed limited access facilities, retrofit outside shoulder installations and back-to-back inside shoulder installations with more than a 2'-0" separation using ***Index 460-490***; or replace with ***Index 521-426***, ***521-427***, ***521428*** or ***521-509***. No action required on all other facilities.

Table 6.7.4-1 (Continued) Treatment of Existing Traffic Railings

Existing Traffic Railing	Required Minimum Treatment of Existing Traffic Railing Installations			
	Design Speed ≤ 45 mph		Design Speed ≥ 50 mph	
	RRR criteria	Widenings (Treatment of remaining railing)	RRR criteria	Widenings (Treatment of remaining railing)
32” F-Shape Median 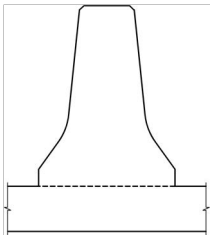 32” New Jersey Shape Median 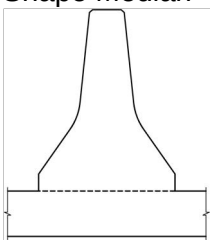	No action required.			
32” Vertical Shape with Pedestrian Railing at the back of raised sidewalks 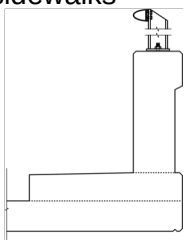 See ***Index 521-423*** for details	Retrofit the joints/splices and ends of the Pedestrian Railing per the requirements stated in ***FDM*** 215.		Retrofit with ***Index 460-470 Series*** or ***521-480 Series***; or replace with ***Index 521-426, 521-427, 521-428*** or ***521-509***.	

Table 6.7.4-1 (Continued) Treatment of Existing Traffic Railings

Existing Traffic Railing	Required Minimum Treatment of Existing Traffic Railing Installations			
	Design Speed ≤ 45 mph		Design Speed ≥ 50 mph	
	RRR criteria	Widenings (Treatment of remaining railing)	RRR criteria	Widenings (Treatment of remaining railing)
42” Vertical Shape at the back of raised sidewalks 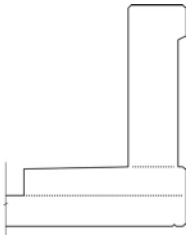 See ***Index 521-422*** for details	No action required for bridge traffic railing.		Retrofit with ***Index 460-470 Series*** or ***521-480 Series***; or replace with ***Index 521-426***, ***521-427***, ***521-428*** or ***521-509.***	
42” F-Shape 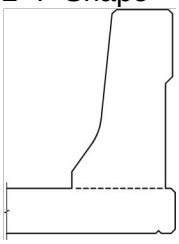	No action required.			

Table 6.7.4-1 (Continued) Treatment of Existing Traffic Railings

Existing Traffic Railing	Required Minimum Treatment of Existing Traffic Railing Installations			
	Design Speed ≤ 45 mph		Design Speed ≥ 50 mph	
	RRR criteria	Widenings (Treatment of remaining railing)	RRR criteria	Widenings (Treatment of remaining railing)
32” Corral Shape 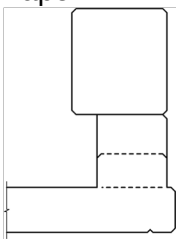	No action required.			On Interstates and other high speed limited access facilities, retrofit outside shoulder installations and back-to-back inside shoulder installations with more than a 2’-0” separation using ***Index 460-490***; or replace with ***Index 521-426***, ***521-427***, ***521-428*** or ***521-509***. No action required on all other facilities.

Table 6.7.4-1 (Continued) Treatment of Existing Traffic Railings

Existing Traffic Railing	Required Minimum Treatment of Existing Traffic Railing Installations			
	Design Speed ≤ 45 mph		Design Speed ≥ 50 mph	
	RRR criteria	Widenings (Treatment of remaining railing)	RRR criteria	Widenings (Treatment of remaining railing)
8’ Concrete Barrier/Noise Wall 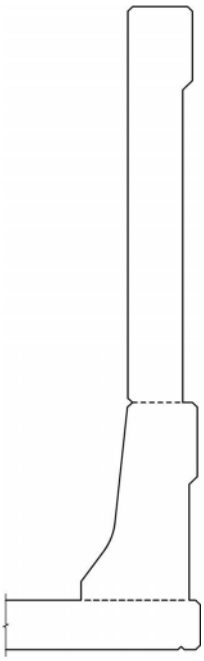 See ***Index 521-509*** for details	No action required.			
Thrie Beam Retrofit 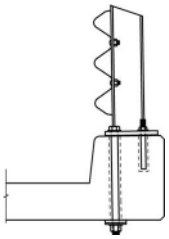 See ***Index 460-470 Series*** for details (curb width varies)	No action required.			On Interstates and other high speed limited access facilities, replace with ***Index 521-426***, ***521-427***, ***521-428*** or ***521-509***. No action required on all other facilities.

Table 6.7.4-1 (Continued) Treatment of Existing Traffic Railings

Existing Traffic Railing	Required Minimum Treatment of Existing Traffic Railing Installations			
	Design Speed ≤ 45 mph		Design Speed ≥ 50 mph	
	RRR criteria	Widenings (Treatment of remaining railing)	RRR criteria	Widenings (Treatment of remaining railing)
34” Vertical Face Retrofit 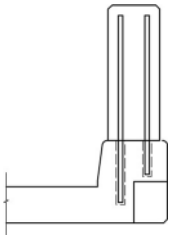 See ***Index 521-480 Series*** for details (curb width varies) Concrete Safety Barrier 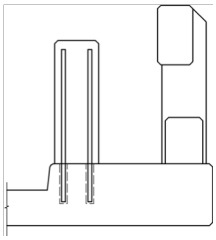 See ***1987*** thru ***2000 Roadway and Traffic Design Standards Index 401*** Schemes 1 and 19 for details	No action required.			On Interstates and other high speed limited access facilities, retrofit outside shoulder installations and back-to-back inside shoulder installations with more than a 2’-0” separation using ***Index 460-490***; or replace with ***Index 521-426***, ***521-427***, ***521-428*** or ***521-509.*** No action required on all other facilities.

Table 6.7.4-1 (Continued) Treatment of Existing Traffic Railings

Existing Traffic Railing	Required Minimum Treatment of Existing Traffic Railing Installations			
	Design Speed ≤ 45 mph		Design Speed ≥ 50 mph	
	RRR criteria	Widenings (Treatment of remaining railing)	RRR criteria	Widenings (Treatment of remaining railing)
Narrow and Recessed Curb Continuous Post and Beam 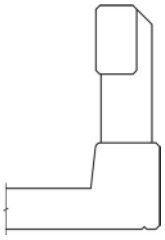 See ***SPI 521-404*** for details	No action required if all of the following three criteria are met: • there is no crash history or evidence of any impact • no structural work is being performed on the bridge • the approach roadway alignment or cross section are to remain unchanged Otherwise, retrofit with ***Index 460-470 Series***, ***460-477*** or ***521-480 Series***; or replace with ***Index 521-422*** (with raised sidewalk), ***521-423*** (with raised sidewalk), ***521-426, 521-427, 521-428*** or ***521-509***.	Retrofit with ***Index 460-470 Series*** or ***521-480 Series***; or replace with ***Index 521-422*** (with raised sidewalk), ***521-423*** (with raised sidewalk), ***521-426, 521-427, 521-428*** or ***521-509.***	On Interstates and other high speed limited access facilities, replace with ***Indexes 521-426, 521-427, 521-428*** or ***521-509.*** On all other facilities, no action required if all of the following three criteria are met: • there is no crash history or evidence of any impact • no structural work is being performed on the bridge • the approach roadway alignment or cross section are to remain unchanged Otherwise, retrofit with ***Index 460-470 Series*** or ***521-480 Series***; or replace with ***Index 521-426, 521-427, 521-428*** or ***521-509.***	On Interstates and other high speed limited access facilities, replace with ***Index 521-426, 521-427, 521-428 or 521-510***. On all other facilities, retrofit with ***Index 460-470 Series*** or ***521-480 Series***; or replace with ***Index 521-426, 521-427, 521-428*** or ***521-509***.

Table 6.7.4-1 (Continued) Treatment of Existing Traffic Railings

Existing Traffic Railing	Required Minimum Treatment of Existing Traffic Railing Installations			
	Design Speed ≤ 45 mph		Design Speed ≥ 50 mph	
	RRR criteria	Widenings (Treatment of remaining railing)	RRR criteria	Widenings (Treatment of remaining railing)
Wide Curb Continuous Post and Beam 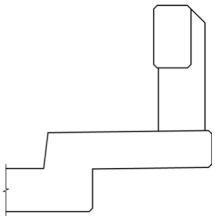 See ***SPI 521-405*** for details	No action required if all of the following three criteria are met: • there is no crash history or evidence of any impact • no structural work is being performed on the bridge • the approach roadway alignment or cross section are to remain unchanged Otherwise, retrofit with ***Index 460-470 Series or 521-480 Series***; or replace with ***Index 521-422*** (with raised sidewalk), ***Index 521-423*** (with raised sidewalk), ***521-426, 521-427, 521-428*** or ***521-509***.	Retrofit with ***Index 460-470 Series*** or ***521-480 Series***; or replace with ***Index 521-422*** (with raised sidewalk), ***521-423*** (with raised sidewalk), ***521-426, 521-427, 521-428*** *or* ***521-509***.	On Interstates and other high speed limited access facilities, replace with ***Indexes 521-426, 521-427, 521-428*** or ***521-509***. On all other facilities, retrofit with ***Index 460-470 Series*** or ***521-480 Series***; or replace with ***Index 521-426, 521-427, 521-428*** *or* ***521-509***	

Table 6.7.4-1 (Continued) Treatment of Existing Traffic Railings

Existing Traffic Railing	Required Minimum Treatment of Existing Traffic Railing Installations			
	Design Speed ≤ 45 mph		Design Speed ≥ 50 mph	
	RRR criteria	Widenings (Treatment of remaining railing)	RRR criteria	Widenings (Treatment of remaining railing)
Narrow and Recessed Curb Continuous Post and Beam w/ Thrie Beam Overlay Retrofit 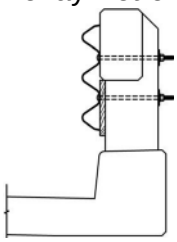 See ***SPI 521-404*** and ***SPI 460-477*** for details	No action required if all of the following three criteria are met: • there is no crash history or evidence of any impact • no structural work is being performed on the bridge • the approach roadway alignment or cross section are to remain unchanged Otherwise, retrofit with ***Index 460-470 Series*** or ***521-480 Series***; or replace with ***Index 521-422*** (with raised sidewalk), ***Index 521-423*** (with raised sidewalk), ***521-426, 521-427, 521-428*** or ***521-509***.	Retrofit with ***Index 460-470 Series*** or ***521-480 Series***; or replace with ***Index 521-422*** (with raised sidewalk), ***521-423*** (with raised sidewalk), ***521-426, 521-427, 521-428*** or ***521-509***.	On Interstates and other high speed limited access facilities, replace with ***Index 521-426, 521-427, 521-428*** or ***521-509***. On all other facilities, no action required if all of the following three criteria are met: • there is no crash history or evidence of any impact • no structural work is being performed on the bridge • the approach roadway alignment or cross section are to remain unchanged Otherwise, retrofit with ***Index 460-470 Series***, ***521-480 Series***; or replace with ***Index 521-426, 521-427, 521-428*** or ***521-509***.	On Interstates and other high speed limited access facilities, replace with ***Index 521-426, 521-427, 521-428*** or ***521-509***. On all other facilities, retrofit with ***Index 460-470 Series*** or ***521-480 Series***; or replace with ***Index 521-426, 521-427, 521-428*** or ***521-509***.

Table 6.7.4-1 (Continued) Treatment of Existing Traffic Railings

Existing Traffic Railing	Required Minimum Treatment of Existing Traffic Railing Installations			
	Design Speed ≤ 45 mph		Design Speed ≥ 50 mph	
	RRR criteria	Widenings (Treatment of remaining railing)	RRR criteria	Widenings (Treatment of remaining railing)
27” New Jersey Shape without metal railing 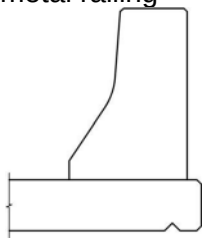 27” New Jersey Shape with discontinuous metal railing 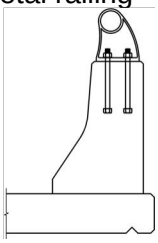 25” Vertical Shape w/ Discontinuous Metal Rail 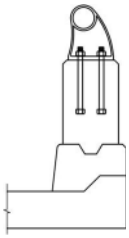	Retrofit with Elliptical / Rectangular Tube & Posts; or replace with ***Index 521-422*** (with raised sidewalk), ***521-423*** (with raised sidewalk), ***521-426, 521-427, 521-428*** or ***521-509***. Contact SDO for details of the Elliptical / Rectangular Tube & Posts Retrofit.		Retrofit with Elliptical / Rectangular Tube & Posts; or replace with ***Index 521-426, 521-427, 521-428*** or ***521-509***. Contact SDO for details of the Elliptical / Rectangular Tube & Posts Retrofit.	

Table 6.7.4-1 (Continued) Treatment of Existing Traffic Railings

Existing Traffic Railing	Required Minimum Treatment of Existing Traffic Railing Installations			
	Design Speed ≤ 45 mph		Design Speed ≥ 50 mph	
	RRR criteria	Widenings (Treatment of remaining railing)	RRR criteria	Widenings (Treatment of remaining railing)
27” New Jersey Shape with continuous metal railing (39” min. total height) 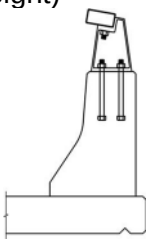	No action required.		Retrofit with Elliptical / Rectangular Tube & Posts; or replace with ***Index 521-426, 521-427, 521-428*** or ***521-509***. Contact SDO for details of the Elliptical / Rectangular Tube & Posts Retrofit.	

Table 6.7.4-1 (Continued) Treatment of Existing Traffic Railings

Existing Traffic Railing	Required Minimum Treatment of Existing Traffic Railing Installations			
	Design Speed ≤ 45 mph		Design Speed ≥ 50 mph	
	RRR criteria	Widenings (Treatment of remaining railing)	RRR criteria	Widenings (Treatment of remaining railing)
27” New Jersey Shape w/ Elliptical Tube Retrofit (39” min. total height) 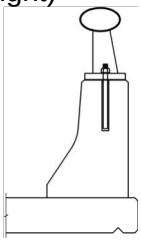 25” Vertical Shape w/ Elliptical Tube Retrofit (36” min. total height) 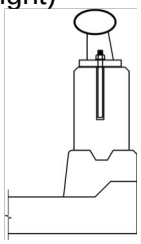	No action required.			

Table 6.7.4-1 (Continued) Treatment of Existing Traffic Railings

Existing Traffic Railing	Required Minimum Treatment of Existing Traffic Railing Installations			
	Design Speed ≤ 45 mph		Design Speed ≥ 50 mph	
	RRR criteria	Widenings (Treatment of remaining railing)	RRR criteria	Widenings (Treatment of remaining railing)
Discontinuous Concrete Post and Beam 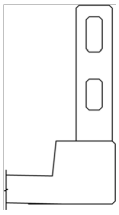 Concrete Parapet or Post and Beam with Metal Posts and Pipes 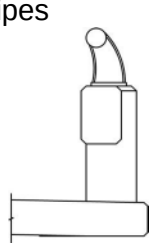 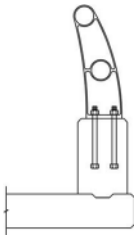 Any railing with a “safety curb” 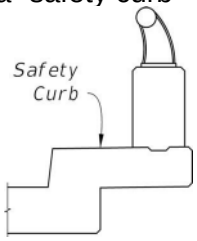	Retrofit with ***Index 460-470 Series*** (if applicable) or ***521-480 Series*** (if applicable); or replace with ***Index 521-422*** (with raised sidewalk), ***521-423*** (with raised sidewalk), ***521-426, 521-427, 521-428*** or ***521-509***.		On Interstates and other high speed limited access facilities, replace with ***Index 521-426, 521-427, 521-428 or 521-509***. On all other facilities, retrofit with ***Index 460-470 Series*** (if applicable) or ***521-480 Series*** (if applicable); or replace with ***Index 521-426, 521-427, 521-428 or 521-509***.	

Table 6.7.4-1 (Continued) Treatment of Existing Traffic Railings

Existing Traffic Railing	Required Minimum Treatment of Existing Traffic Railing Installations			
	Design Speed ≤ 45 mph		Design Speed ≥ 50 mph	
	RRR criteria	Widenings (Treatment of remaining railing)	RRR criteria	Widenings (Treatment of remaining railing)
W-Beam Guardrail Continuous Across Bridge 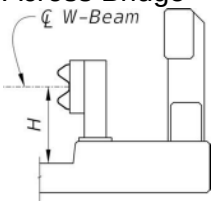 See ***1987*** thru ***2000 Roadway and Traffic Design Standards Index 401*** Scheme 16 for details	No action required if all of the following five criteria are met: • there is no history of severe crashes at the site • no structural work is being performed on the bridge • the approach roadway alignment or cross section are to remain unchanged • dimension "H" is ≥ 1'-8" and ≤ 1'-10" (see figure) • the Approach Transition is in accordance with ***2013 Design Standards Index 403*** Otherwise, replace with ***Index 521-422*** (with raised sidewalk), ***521-423*** (with raised sidewalk), ***521-426, 521-427***, ***521-428, 460-470 Series***, ***521-480 Series***, or ***521-509***.	Replace with ***Index 521-422*** (with raised sidewalk), ***521-423*** (with raised sidewalk), ***521-426***, ***521-427***, ***521-428, 460-470 Series***, ***521-480 Series***, or ***521-509***.	On Interstates and other high speed limited access facilities, replace with ***Index 521-426***, ***521-427***, ***521-428***, or ***Index 521-509***. On all other facilities, replace with ***Index 521-426***, ***521-427***, ***521-428, 460-470 Series***, **521-*480 Series*** or ***Index 521-509***.	

Modification for Non-Conventional Projects:
Delete ***SDG*** 6.7.4.A.2 and Table 6.7.4-1 and see the RFP for requirements.

B. Traffic Railing Retrofit Concepts and Standards

Existing non-crash tested traffic railings designed in accordance with past editions of the AASHO and ***AASHTO Standard Specifications for Highway Bridges*** will likely not meet current crash test requirements and will also likely not meet the strength and height requirements of ***LRFD***. The retrofitting of these existing non-crash tested traffic railings reduces the separate but related potentials for vehicle snagging, vaulting and/ or penetration that can be associated with many obsolete, non-crash tested designs.

The Thrie Beam Guardrail Retrofit and Vertical Face Retrofit ***Standard Plans*** Index 460-470 and 521-480 Series, respectively, are suitable for retrofitting specific types of obsolete structure mounted traffic railings that incorporate curbs. The Rectangular Tube Retrofit ***Standard Plans*** Index 460-490 is suitable for retrofitting New Jersey Shape, F-Shape, Corral Shape and certain Vertical Shape structure mounted traffic railings. These retrofits provide a more economical solution for upgrading obsolete traffic railings when compared with replacing the obsolete traffic railings and portions of the existing bridge decks or walls that support them. Detailed guidance and instructions on the design, plans preparation requirements and use of these retrofits are included in the ***Standard Plans Instructions (SPI)***.

When selecting a retrofit or replacement traffic railing for a structure that will be widened or rehabilitated, or for a structure that is located within the limits of a RRR project, evaluate the following aspects of the project:

1. Elements of the structure.
    a. Width, alignment, and grade of roadway along structure.
    b. Type, aesthetics, and strength of existing railing.
    c. Structure length.
    d. Potential for posting speed limits in the vicinity of the structure.
    e. Potential for establishing no-passing zones in the vicinity of the structure.
    f. Approach and trailing end treatments (guardrail, crash cushion or rigid shoulder barrier).
    g. Strength of supporting bridge deck or wall.
    h. Load rating of existing bridge.
2. Characteristics of the structure location
    a. Position of adjacent streets and their average daily traffic.
    b. Structure height above lower terrain or waterway.

c. Approach roadways width, alignment, and grade.

d. Design speed, posted speed, average daily traffic and percentage of truck traffic.

e. Accident history on the structure.

f. Traffic control required for initial construction of retrofit and for potential future repairs.

g. Locations and characteristics of pedestrian facilities / features (if present).

3. Features of the retrofit designs

a. Placement or spacing of anchor bolts, rods or dowels.

b. Reinforcement anchorage and potential conflicts with existing reinforcement, voids, conduits, etc.

c. Self weight of retrofit railing.

d. End treatments.

e. Effects on pedestrian facilities.

C. Evaluation of Existing Supporting Structure Strength for Traffic Railing Retrofits.

1. ***Standard Plans*** Indexes 460-470 and 521-480 Series

The Thrie Beam Guardrail and Vertical Face traffic railing retrofits are based on designs that have been successfully crash tested in accordance with ***NCHRP Report 350*** to Test Level 4 or have been previously tested and then accepted at Test Level 4. The original designs have been modified for use with some of the wide variety of traffic railings and supporting deck and wing wall configurations that were historically constructed on Florida bridges. In recognition of the fact that the traffic railings and supporting elements were designed to meet the less demanding requirements of past AASHO and AASHTO Bridge Specifications, modifications have been made to the original retrofit designs in order to provide for better distribution of vehicle impact force through the traffic railing retrofit and into the supporting bridge deck or wing wall. For Thrie Beam Guardrail Retrofit installations on narrow curbs and or lightly reinforced decks or walls, a smaller post spacing is used on bridge decks. In addition, through-bolted anchors are used for some Thrie Beam Guardrail Retrofit installations. For the Vertical Face Retrofit, additional longitudinal reinforcing steel and dowel bars at the open joints are used within the new railing.

Existing bridge decks and walls that will support a traffic railing retrofit must be evaluated to determine if sufficient strength is available to ensure that the retrofit will perform in a manner equivalent to that demonstrated by crash testing. Existing structures may contain Grade 33 reinforcing steel if constructed prior to 1952 or Grade 40 reinforcing steel if constructed prior to 1972. Use 90% of the ultimate tensile strength of these materials when determining the existing capacity for both tension and moment from traffic railing impacts ($\mathbf{f_s}$ = 49.5 ksi for Grade 33, $\mathbf{f_s}$ = 60 ksi for Grade 40). For existing structures containing Grade 60 reinforcing steel,

only use the yield strength of this material (f_s = 60 ksi). For bridges with varying spacings and sizes of transverse reinforcing steel in the deck or curb, the average area of transverse steel for the span may be used.

Existing cast-in-place reinforced concrete bridge decks shall be analyzed at a section through the deck at the gutter line for the appropriate FDOT traffic railing retrofit Standard Indexes using the following design values:

Traffic Railing Type	Standard Plans Index No.	M_g	T_u
Thrie-Beam Retrofit	460-471, 460-475, & 460-476	5.8	4.7
Thrie-Beam Retrofit	460-472 & 460-474	8.3	6.7
Thrie-Beam Retrofit	460-473	9.7	7.9
Vertical-Face Retrofit	521-481 to 521-483	12.9	7.5

M_g (kip-ft/ft) - Ultimate deck moment at the gutter line from the traffic railing impact.

T_u (kip/ft) - Total ultimate tensile force to be resisted.

The following relationship must be satisfied at the gutter line:

$$(T_u/\Phi P_n) + (M_u/\Phi M_n) \leq 1.0 \qquad \text{[Eq. 6-2]}$$

Where:

Φ = 1.0

$P_n = A_s f_s$ (kips/ft) - Nominal tensile resistance based on the areas of transverse reinforcing steel in both the top and bottom layers of the deck (A_s) and the nominal reinforcing steel strength (f_s). This reinforcing steel must be fully developed at the critical section through the deck at the gutter line.

M_u = Total ultimate deck moment from traffic railing impact and factored dead load at the gutter line. (M_g**+1.00*$M_{Dead\ Load}$**) (kip/ft/ft).

M_n = Nominal moment resistance at the gutter line determined by traditional rational methods for reinforced concrete (kip-ft/ft). The bottom layer of steel must not be included unless a strain compatibility analysis is performed to determine the steel stress in this layer with the compressive strain in the concrete limited to 0.003.

Flat slab bridge decks constructed with only a bottom mat of reinforcing must be evaluated using Eq. 6-2 with the following parameters redefined for structural plain concrete resistance:

$\Phi = 0.67$

$\mathbf{P_n} = \mathbf{A_g f_t}$ (kips/ft) - Nominal tensile resistance based on the gross cross sectional area of concrete ($\mathbf{A_g}$) and the nominal concrete tensile resistance ($\mathbf{f_t}=0.158\sqrt{\mathbf{f'_c}}$).

$\mathbf{M_n} = \mathbf{S_m f_t}$ (kip-ft/ft) - Nominal moment resistance at the gutter line determined using the elastic section modulus ($\mathbf{S_m}$) with the nominal concrete tensile resistance ($\mathbf{f_t}$). The bottom layer of steel reinforcing must not be included in the analysis.

*Commentary: This type of flat slab deck was typically constructed for very short span bridges in Florida before the 1950's. Although tensile strength of concrete has traditionally been neglected in Strength Limit State design it is acceptable for analysis of these types of existing structures at the Extreme Event II Limit State. The equations for flexural resistance are based on **ACI CODE-318** for structural plain concrete with a modified resistance factor value based on the same ratio of Extreme Event/Strength Limit State used for reinforced concrete in **LRFD** (0.67 = 0.6*1.00/ 0.90).*

Decks constructed of longitudinally prestressed, transversely post-tensioned voided or solid slab units generally only contain minimal transverse reinforcing ties. Retrofitting bridges with this type of deck requires approval from the SSDE. For these type bridges, the strength checks of the deck at the gutter line will not be required. Only ***Standard Plans*** 460-475 or 521-480 series retrofits should be used to retrofit these bridges.

In addition to checking the existing deck capacity at the gutter line, the following minimum areas of reinforcing steel per longitudinal foot of span must also be satisfied unless a more refined analysis is performed to justify a lesser area of steel at these locations:

Minimum Steel Area (in^2/ft) for Standard Plans Index No.					
Reinforcing Steel Location	**Grade**	**460-471,460-475 & 460-476**	**460-472 & 460-474**	**460-473**	**521-481 - 521-483**
Transverse in top of curb beneath post	33	0.32	0.4	0.4	NA
	40 & 60	0.25	0.31	0.31	NA
Vertical in face of curb for thickness "**D**"	33	0.2	2.25/(D-2)[1]	2.65/(D-2)[1]	3.30/(D-2)[1]
	40 & 60	0.20[2]	1.80/(D-2)[1]	2.10/(D-2)[1]	2.60/(D-2)[1]

1 Minimum area of reinforcing steel must not be less than 0.16 square inches/foot. Where: **D** (inches) = Horizontal thickness of the curb at the gutter line.

2 0.16 sq inches/foot is acceptable for **D** equal to or greater than 15-inches. If the minimum areas of reinforcing in the curb given above are not satisfied, the

following design values may be used for a refined analysis of the existing curb beneath the post for the ***Standard Plans*** Index 460-470 Series retrofits:

Traffic Railing Type	Standard Plans Index No.	M_p	T_u
Thrie-Beam Retrofit	460-471, 460-475 & 460-476	9.7	7.9
Thrie-Beam Retrofit	460-472, 460-473, & 460-474	12	9.9

M_p (kip-ft/ft) - Ultimate deck moment in the curb at centerline of post from the traffic railing impact.

T_u (kip/ft) - Total ultimate tensile force to be resisted.

The following relationship must be satisfied in the curb at centerline of post:

$$(T_u/\Phi P_n) + (M_u/\Phi M_n) \leq 1.00 \quad \text{[Eq. 6-3]}$$

Where:

$\Phi = 1.0$

$P_n = A_s f_s$ (kips/ft) - Nominal tensile capacity based on the areas of transverse reinforcing steel in both the top and bottom layers of the deck (**A_s**) and the nominal reinforcing steel strength (**f_s**). This reinforcing steel must be fully developed at the critical section.

M_u = Total ultimate deck moment in the curb from traffic railing impact and factored dead load at centerline of post (**$M_p + 1.00 * M_{Dead\ Load}$**) (kip/ft/ft).

M_n = Nominal moment capacity of the curb at centerline of post determined by traditional rational methods for reinforced concrete (kip-ft/ft). The bottom layer of steel in the curb must not be included unless a strain compatibility analysis is performed to determine the steel stress in this layer with the compressive strain in the concrete limited to 0.003.

The ultimate moment capacity of existing wing walls and retaining walls supporting the traffic railing retrofits must not be less than 9.7 kip-ft/ft for Index 460-470 Series retrofits (3'-1½" maximum post spacing) and 12.0 kip-ft/ft for Index 521-480 Series retrofits. Wing walls for Index 521-480 Series retrofits must also be a minimum of 5feet in length and pile supported. For Index 521-480 Series retrofits only, wing walls that do not meet these criteria must not be used to anchor the ends of guardrail transitions and must be shielded by continuous guardrail as shown on the ***Standard Plans***. For both 460-470 and 521-480 Series retrofits, retaining walls must be continuous without joints for a minimum length of 10-feet and adequately supported to resist overturning.

A Design Variation will be required for bridges or components of bridges that do not meet the preceding strength requirements. The potential for damage to the existing bridge deck or wing walls due to a very severe crash, such as that modeled by full

scale crash testing, may be acceptable in specific cases. Contact the SSDE for additional guidance and assistance in these cases.

2. ***Standard Plans*** Index 460-490

Existing bridge decks and walls that will support a ***Standard Plans*** Index 460-490 traffic railing retrofit are considered to be structurally adequate to resist vehicular impact loads on the traffic railing and are not required to be structurally evaluated.

D. Evaluation of Existing Decks with Tall Barriers using Yield-Line Analysis.

When evaluating an existing deck with tall barriers such as Traffic Railing/Noise Walls (***Standard Plans*** Index 521-510 Series) using ***LRFD*** A13.3.1 yield-line analysis, the following assumptions may be made:

- Impact within a Wall Segment - Distribute the impact force to the top of deck by a length L_c + 2H along the base of the wall, centered around the impact location.
- Impact near End of Wall Segment - Distribute the impact force to the top of deck by a length L_c + H beginning at the wall joint and extending along the base of the wall.

*Commentary: **LRFD** A13.3.1 shows the impact force is acting at the top of the concrete wall. For tall barriers this may not be the case since the assumed impact height (H_e) may be much less than wall height (H). However, the approach shown is consistent with FDOT practice of determining the critical length (L_c) based on the full height (H) of the wall. The distribution length of the impact force at deck level is assumed to be a projection of 45° in both directions from the critical length (L_c) that is located at the top of the wall.*

6.7.5 Historic Bridges

A. Federal Law protects Historic Bridges and special attention is required for any rehabilitation or improvement of them. The Director of the Division of Historical Resources of the Florida Department of State serves as Florida's State Historic Preservation Officer (SHPO). The SHPO and FDOT are responsible for determining what effect any proposed project will have on a historic bridge. See ***FDM*** 121.

B. Bridges that are designated historic or that are listed or eligible to be listed in the National Register of Historic Places present a special railing challenge because the appearance of the bridge may be protected even though the historic railing may not meet current standards. When a project is determined to involve a historically significant bridge, contact the SSDE for assistance with evaluating the existing bridge railings.

C. Original railing on a historic bridge is not likely to meet:

1. Current crash test requirements.
2. Current standards for railing height (a minimum of 36-inches for Test Level 4) and for combination traffic and pedestrian railings.

3. Current standards for combination traffic and pedestrian railings, e.g. a minimum height of 42-inches and the limit on the size of openings in the railing (small enough that a 6-inch diameter sphere cannot pass.)

D. Options for upgrading the railing on historic bridges usually include the following:

1. Place an approved traffic railing inboard of the existing railing, leaving the existing railing in place. This is sometimes appropriate when a pedestrian walkway exists on or is planned for the bridge.
2. Replace the existing railing with an approved, acceptable railing of similar appearance.
3. Remove the current railing and incorporate it into a new acceptable railing. This may be appropriate in rare instances where an existing railing is especially decorative.
4. Design a special railing to match the appearance of the existing railing. It may not be necessary to crash test the new railing if the geometry and calculated strength equal or exceed a crash tested traffic railing.

Modification for Non-Conventional Projects:
Delete ***SDG*** 6.7.5 and see the RFP for requirements.

6.7.6 Requirements for Test Levels 5 and 6 (LRFD 13.7.2)

A. Provide TL-5 bridge traffic railings adjacent to bridge structural components including pylons, arches, trusses, pier columns of upper level bridges, cable stays, and hangers if the gutter line is within 5-feet of the structural component.

B. Consider providing traffic railings that meet the requirements of Test Levels 5 or 6 when any of the following conditions exist:

1. The volume of truck traffic is unusually high.
2. A vehicle penetrating or overtopping the traffic railing would cause high risk to the public or surrounding facilities.
3. The alignment is sharply curved with moderate to heavy truck traffic.

C. Contact the DDE for guidance if a Test Level 5 or 6 traffic railing is being considered.

Modification for Non-Conventional Projects:
Delete ***SDG*** 6.7.6 and see the RFP for requirements.

6.7.7 Design Variation

A. In the rare event that an upgrade to the traffic railing on an existing bridge could degrade rather than improve bridge safety, during the early phases of a project consult the SSDE about a possible Design Variation.

B. Factors to consider include the following:

1. Remaining time until scheduled replacement or major rehabilitation of structure.

2. Design speed and operating speed of traffic in the structure location, preferably no greater than 45 mph.
3. Resistance to impact of the existing railing.
4. Whether the structure ends are intersections protected by stop signs or traffic signals.
5. Whether the geometry is straight into, along and out of the structure.
6. Overall length of the structure.
7. Whether traffic on the structure is one-way or two-way.
8. Accident history on the structure, including damages to and repairs of the existing railing.
9. Risk of fall over the side of the structure.
10. Whether the bridge has an intersecting roadway or railroad track below.
11. Whether a railing upgrade will further narrow an already narrow lane, shoulder, or sidewalk.
12. Load rating of the existing bridge.
13. Special historic or aesthetic concerns.

C. Deviations from the requirements of this Article must be approved in accordance with ***FDM*** 122.

Modification for Non-Conventional Projects:
Delete ***SDG*** 6.7.7 and see the RFP for requirements.

6.7.8 Miscellaneous Attachments to Traffic Railings

See ***FDM*** 215.

6.7.9 Impact Loads for Railing Systems with Footings or on Retaining Walls (LRFD 13.7.3.1.2)

For sizing the moment slab for TL-3 and TL-4 traffic railings constructed with footings or on to top of retaining walls, use the following methodology.

A. Sliding of the Traffic Railing-Moment Slab

The factored nominal static sliding resistance ($\varphi \mathbf{R_n}$) to sliding of the traffic railing-moment slab system along its base shall satisfy the following condition (see Figure 1):

$$\varphi \mathbf{R_n} \geq \gamma \mathbf{F_{ts}}$$

where:

φ = resistance factor (0.8, ***LRFD*** Table 10.5.5.2.2-1)

$\mathbf{R_n}$ = nominal static sliding resistance (kips)

γ = load factor (1.0, extreme event)

$\mathbf{F_{ts}}$ = equivalent transverse static impact load (10 kips)

The nominal static sliding resistance ($\mathbf{R_n}$) shall be calculated as:

$\mathbf{R_n} = W \tan \varphi_s$

where:

W = weight of the monolithic section of traffic railing-moment slab between joints (with an upper limit of 60-feet) plus the weight of the traffic railing and any pavement or backfill material laying on top of the moment slab

φ_s = friction angle of the soil–moment slab interface (°)

B. Overturning of the Traffic Railing-Moment Slab

The factored nominal static moment resistance ($\varphi\mathbf{M_n}$) of the traffic railing–moment slab system to overturning shall satisfy the following condition (see Figure 1):

$\varphi\mathbf{M_n} \geq \gamma\mathbf{F_{ts}h_A}$

where:

φ = resistance factor (0.9)

$\mathbf{M_n}$ = nominal static overturning resistance (kips)

γ = load factor (1.0, extreme event)

$\mathbf{F_{ts}}$ = equivalent transverse static impact load (10 kips)

$\mathbf{h_A}$ = moment arm taken as the vertical distance from the point of impact due to the dynamic force to the point of rotation A

The nominal static moment resistance $\mathbf{M_n}$ shall be calculated as:

$\mathbf{M_n} = \mathbf{W}\ \boldsymbol{l_A}$

where:

W = weight of the monolithic section of traffic railing-moment slab between joints (with an upper limit of 60-feet) plus any pavement or backfill material laying on top of the moment slab

$\boldsymbol{l_A}$ = horizontal distance from the center of gravity of the traffic railing-moment slab W to the point of rotation A

*Commentary: Research conducted as part of NCHRP Report 663, Design of Roadside Barrier Systems Placed on MSE Retaining Walls, concludes that a traffic railing–moment slab stability analysis using a 10 kip transverse static load provides for a sufficient design. The report also confirms that a 54 kip load is appropriate for the traffic railing structural capacity as recommended in **LRFD** Section 13.*

Figure 6.7.9-1 Traffic Railing-Moment Slab System (Sliding and Overturning)

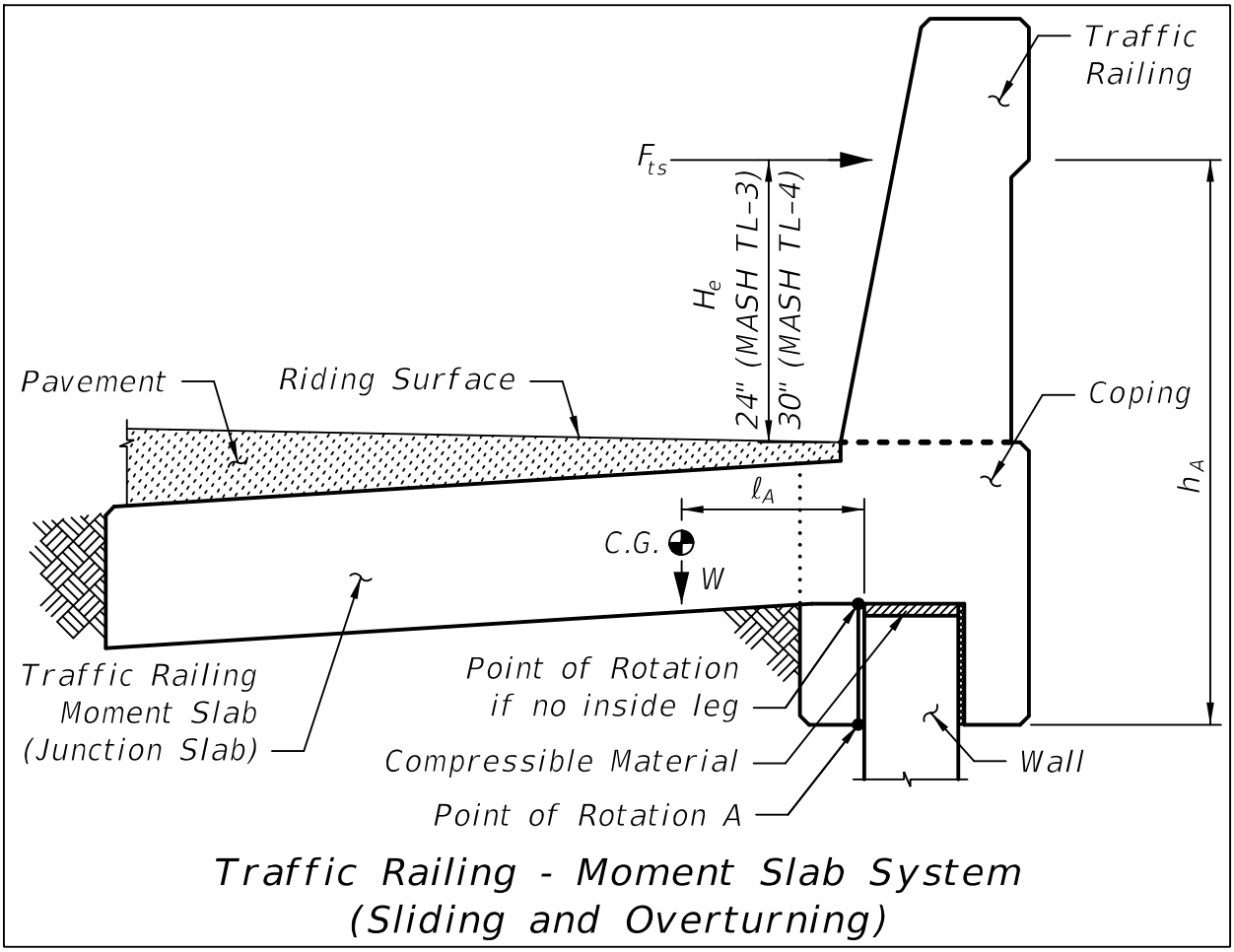

6.8 PEDESTRIAN AND BICYCLE RAILINGS (LRFD 13.8 AND 13.9)

6.8.1 General

A. Design pedestrian and bicycle railings according to ***LRFD*** and this section.

B. Design ADA compliant handrails according to the ***ADA Standards for Transportation Facilities***, Section 505 (Handrails), the Florida Building Code and this section.

C. Design for a 75-year target service life.

D. See ***FDM*** 222-225 for additional information.

6.8.2 Geometry

A. The standard height of pedestrian and bicycle railings is 42-inches. Utilize special height bicycle railings only where specifically called for in ***FDM*** 222-225.

B. For pedestrian railings without curbs or parapets that are installed on bridges over traffic, sidewalks, trails and waterways, the lowermost clear opening shall reject the passage of a 2-inch diameter sphere. For pedestrian railings without curbs or parapets that are installed on all other bridges and in other locations, the lowermost clear opening shall reject the passage of a 4-inch diameter sphere.

C. In addition to the ***LRFD*** clear opening requirements, for pedestrian railing installations subject to Florida Building Code provisions or other applicable Department owned installations as defined below, a 4-inch diameter sphere shall not pass through openings below a 42-inch height except as specified in the preceding paragraph for the lowermost opening. However, providing adequate sight distance always takes priority over providing smaller opening sizes that meet the 4-inch diameter sphere requirement. Examples of applicable locations include but are not limited to the following:

   1. Highway rest areas and travel information centers
   2. Parking garages
   3. View points on bridges where seating is provided
   4. Fishing piers or bridges where fishing is permitted along the sidewalk
   5. Adjacent to other public gathering areas with amenities (e.g. seating, interpretive displays, drinking fountains, etc.)

Commentary: Pedestrian railings on bridges and other structures adjacent to sidewalks having standard widths generally do not have to meet the 4-inch sphere requirement.

6.8.3 Design Live Loads

A. Top and Bottom Rails, Posts and Base Plates: per ***LRFD*** 13.

B. Handrails: per the ***Florida Building Code***

C. Pickets and Infill areas: Concentrated 200 lb. load applied transversely over an area of 1.0-square foot.

Commentary: The use of this design load for pickets and infill areas is intended to result in a more vandal resistant design.

6.8.4 Deflection

Total combined deflection of the pedestrian railing system including the resilient or neoprene pads, due to the top rail design live loads, shall not exceed 1.5-inches when measured at midspan of the top rail.

Commentary: The deflection limit is based on testing conducted at the Structures Research Center.

6.8.5 Welding of Aluminum Pedestrian/Bicycle Railings

In ***LRFD*** 7.4.1, the maximum tension limit for welded aluminum alloy 6061-T6 ($F_{tyw6061}$) in pedestrian/bicycle railings shall be taken as 20 ksi.

*Commentary: The welded aluminum tensile yield strength of 20 ksi for design using alloy 6061-T6 has been in use since at least 1994. The 2013 **LRFD** Interims reduced the welded tensile yield strength to match the 2010 **Aluminum Design Manual** (The Aluminum Association). Successful in-service performance and anecdotal evidence from testing in the FDOT Structures Research Center indicate that 20 ksi is an acceptable limit for pedestrian/bicycle railing structures and shall remain in effect until further research is completed.*

6.9 BRIDGES WITH SIDEWALKS OR TRAFFIC SEPARATORS

Design bridges with traffic separators or sidewalks located behind traffic railings for the governing of the following two cases:

1. The initial design configuration with traffic and pedestrian live load, and traffic railing, traffic separator and pedestrian railing dead loads present (as applicable), or,
2. The possible future case where the traffic separator or traffic railing between the travel lanes and the sidewalk is removed (as applicable), and vehicular traffic is placed over the entire deck surface (no pedestrian loads present).

Commentary: In the future, the sidewalk or traffic separator could be simply eliminated in order to provide additional space to add a traffic lane. For bridges with sidewalks, two options are viable:

1. *Construct a second traffic railing at the back of the sidewalk instead of a standard Pedestrian / Bicycle Railing as part of the original bridge construction. A vertical face traffic railing is preferred for this application if ADA compliant handrails are required due to the grade of the sidewalk. Design the cantilever within the sidewalk deck area to resist vehicle impact forces and wheel loads.*
2. *Construct a standard Pedestrian / Bicycle Railing as part of the original construction of the bridge and then demolish it and replace it with a traffic railing when necessary. If the deck cantilever is adequately reinforced to resist vehicle impact forces and wheel loads, only the railing needs to be replaced. Dowel the new vertical steel into the deck.*

6.10 ERECTION SEQUENCE AND BEAM/GIRDER STABILITY

A. For all bridges, investigate the stability of beams or girders subjected to wind loads during construction. For the evaluation of stability during construction use wind loads, limit states and temporary construction loads included in ***SDG*** 2.4, ***SDG*** 2.13 and ***LRFD***.

B. For pretensioned beams, see ***SDG*** 4.3.4.

C. The following bridge types require a workable erection sequence to be shown in the Plans: steel girders, C.I.P. or precast segmental, C.I.P. box girders, pretensioned beam channel span units made continuous for live load, bridges with straddle or integral caps, and components and/or construction techniques not normally used on Department projects. A workable erection sequence must include step-by-step phases detailing how to support and stabilize the bridge during erection. Coordinate the erection sequence and temporary support locations with the Temporary Traffic Control Plans (TTCP). For the purpose of this article, a major phase of erection is a temporary condition of a structure at the end of a work shift (construction inactive condition per ***SDG*** 2.4.3). At a minimum, the erection sequence must meet the following requirements:

   1. Investigate stability for the construction inactive condition for all major phases of erection.
   2. Include notes describing each major phase of erection with plan and elevation views to fully convey stability requirements. Show traffic lanes at the time of construction and include notes for required lane closures consistent the TTCP.
   3. Show temporary and permanent bracing needed to achieve stability for each major phase of erection. Do not show beams or girders held or braced with cranes for the construction inactive condition. Account for work shift limitations for installation of temporary and permanent bracing.
   4. Address the following and provide notes and details in the Plans accordingly:
      a. Temporary support locations and the associated loads assumed in the design. For curved spliced U-girders where temporary supports are located only at the ends of segments, show the required service torsional and vertical reactions.
      b. Maximum allowable vertical displacements of the temporary supports as required for fit up, alignment, and stability, or where settlements would affect stresses of the permanent structure.
      c. Investigate feasibility of temporary support foundations for conditions with limited headroom or with TTCP restrictions. Examples of limited headroom conditions are where temporary support is needed to make modifications to existing structures.
      d. Investigate vehicular collision protection for temporary supports that are adjacent to the traveled way. The traveled way is defined in ***FDM*** 102. Ensure

that vehicular collision protection for temporary supports is shown in the TTCP.

5. For bridge construction sites that have limited access and space, provide plan views with diagrams that address crane access, staging and erection operations (i.e., crane reach, boom angle, tail swing, etc.). Also address girder delivery and storage. Plan notes referring to the PD&E documents or BDR are not allowed.

Modification for Non-Conventional Projects:
Delete ***SDG*** 6.10.C.5 and see the RFP for possible requirements.

Commentary: The EOR is required to provide a workable erection sequence in the Plans to demonstrate constructibility and coordination with Temporary Traffic Control Plans. For conventional design-bid-build projects, these requirements also address concerns with biddability. The Contractor is responsible for evaluating the stability of individual components during erection and may choose to use a different erection sequence. Shallow foundations for temporary supports may not be appropriate under certain circumstances due to the impacts of settlement on the permanent structure.

D. For information not included in the ***SDG*** or ***LRFD***, refer to the ***AASHTO Guide Design Specifications for Bridge Temporary Works*** and the ***AASHTO Construction Handbook for Bridge Temporary Works***.

7 WIDENING AND REHABILITATION

7.1 GENERAL REQUIREMENTS

7.1.1 Load Rating

A. Before preparing widening or rehabilitation plans, review the inspection report and the existing load rating. If the existing load rating is inaccurate or was performed using an older method (e.g. Allowable Stress or Load Factor), perform a new ***LRFR*** load rating (***MBE*** Section 6, Part A) of the existing bridge in accordance with ***SDG*** 1.7. If any ***LRFR*** design Inventory or any FL120 Permit rating factors are less than 1.0, calculate rating factors using *LFR* (***MBE*** Section 6, Part B). If any ***LRFR*** or ***LFR*** inventory load rating factors are less than 1.0, a revised load rating may be performed using one of the additional procedures in C.1, C.2 or C.3 to obtain a satisfactory rating. If any ***LFR*** inventory rating factors remain less than 1.0, replacement or strengthening is required unless a Design Variation is approved (see section B). Calculate ratings for all concrete box girders (segmental) using only ***LRFR*** (***MBE*** Section 6, Part A).

B. Perform an ***LRFR*** load rating for the final condition. Do not isolate and evaluate the widened portion of the bridge separately from the rest of the bridge, except as permitted in ***SDG*** 7.5.3. After preparing widening or rehabilitation plans, if any ***LRFR*** design inventory or any FL 120 permit rating factors (***MBE*** Section 6, Part A) are less than 1.0, calculate rating factors using ***LFR*** (***MBE*** Section 6, Part B). If any ***LFR*** inventory rating factors remain less than 1.0, replacement or strengthening is required unless a Design Variation is approved. If any ***LRFR*** or ***LFR*** inventory load rating factors are less than 1.0, a revised load rating may be performed using one of the additional procedures in C.1, C.2 or C.3 to obtain a satisfactory rating.

C. Additional procedures may be performed to obtain a satisfactory inventory load rating. Only one of the following is allowed per rating factor.

1. Approximate Method of Analysis: When using ***LRFD*** approximate methods of structural analysis and live load distribution factors, a rating factor of 0.95 may be rounded up to 1.0 for the existing portion of the bridge.

Commentary: This criteria allows for flexibility in accepting load ratings considering material variability, accuracy of modeling techniques and vehicle characteristics.

2. Refined Method of Analysis: Refined methods of structural analyses (e.g., using finite elements) may be performed in order to establish an enhanced live load distribution factor and improved load rating. For continuous post-tensioned concrete bridges, a more sophisticated, time-dependent construction analysis is required to determine overall longitudinal effects from permanent loads.

Commentary: Generally, the Department will only accept a load rating that uses one method of analysis for the entire structure; however, for special cases the Department may consider a load rating where more than one method of analysis is used. For

instance, more than one method of analysis could be considered for a bridge that has independent superstructure units with significant differences in structure type or complexity. See the ***FDOT Bridge Load Rating Manual*** *for more information.*

3. Service Limit State for pretensioned concrete beams without post-tensioning: If a Service Limit State rating factor is less than 1.0 and the current bridge inspection is showing no signs of either shear or flexural cracking, the capacity may be established using the Strength Limit State. Submit a Design Variation for a Service Limit State inventory load rating factor of less than 1.0 to the SSDE.

D. See Figure 7.1.1-1 for a flow chart of the widening/rehabilitation decision making process.

Figure 7.1.1-1 Widening / Rehabilitation Load Rating Flow Chart

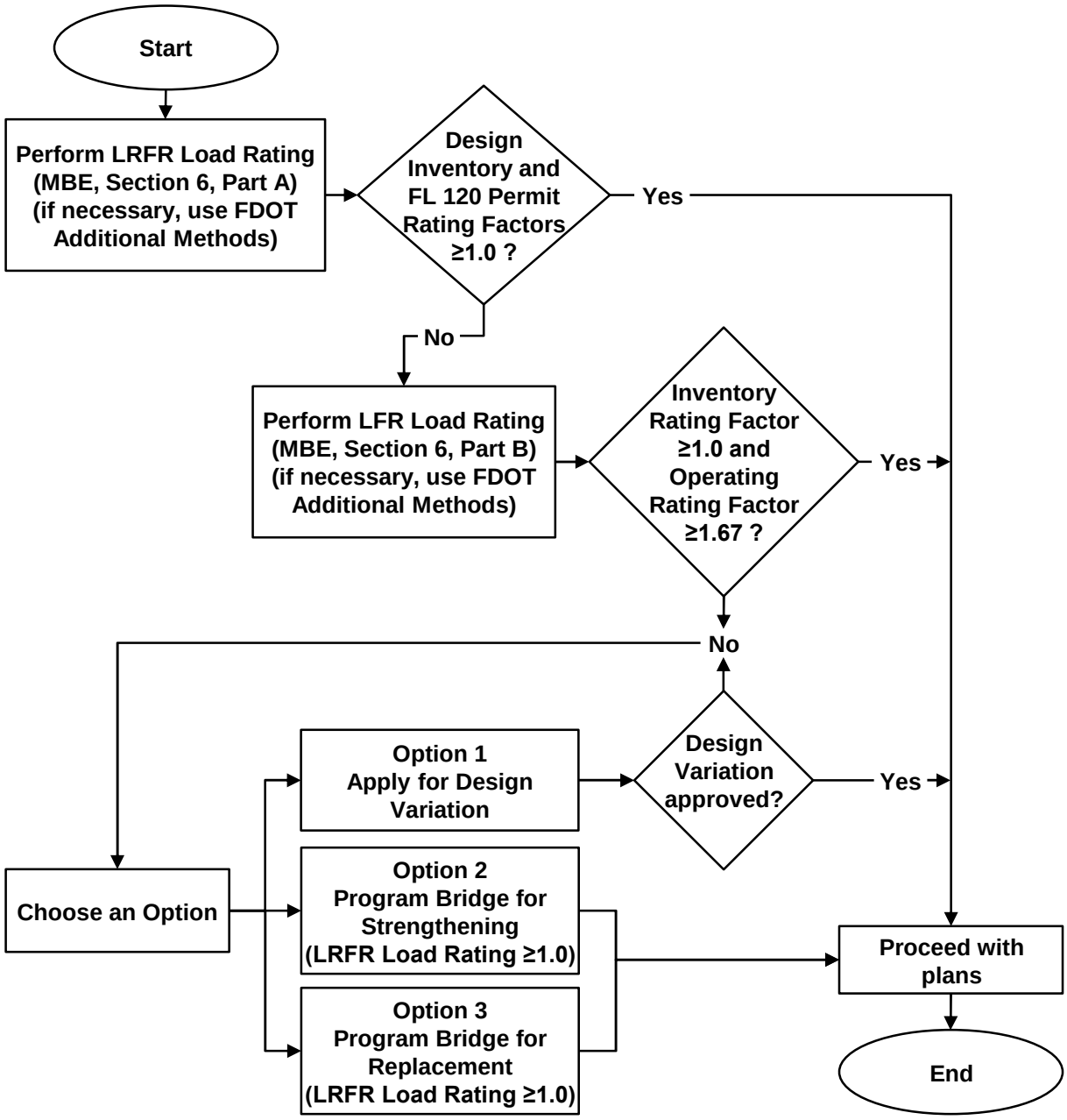

Modification for Non-Conventional Projects:
Delete ***SDG*** 7.1.1.A, ***SDG*** 7.1.1.B, ***SDG*** 7.1.1.C, ***SDG*** 7.1.1.D, and Figure 7.1.1-1 and see the RFP for requirements.

E. Use a consistent load rating method for the entire bridge and report the lowest controlling rating factor for each limit state. When evaluating the existing and

widened portions of the completed bridge, report the lowest controlling rating factor and location.

Commentary: Paragraph E is intended to address bridges which are composed of a combination of superstructure types (e.g., simple-span prestressed concrete beam approaches with a continuous-span steel plate girder channel unit).

Commentary: Bridge widening and rehabilitation projects require major capital expenditures therefore it is appropriate to update existing bridges within the project to the current design specification. Because of heavy traffic and high volumes of overweight permit vehicles, Design Variations should be considered only for bridges off the National Highway System.

7.1.2 Data Collection

A. Request the entire bridge file from the DSME for existing bridges to be widened, rehabilitated, or otherwise modified (i.e. original contract plans, as-built plans, shop drawings, design calculations, foundation records, RFM, RFC, etc.).

B. Obtain minimum mechanical properties of the existing structure from the original contract plans or shop drawings. When the minimum mechanical properties are unknown, use values based on the year of construction in accordance with the ***FDOT Bridge Load Rating Manual***. Perform material sampling and testing if the aforementioned documents do not provide definitive information.

Modification for Non-Conventional Projects:
Delete ***SDG*** 7.1.2.A and ***SDG*** 7.1.2.B and see the RFP.

C. Provide back-up documentation that the proposed widening/rehabilitation design and details are based on actual field conditions determined by field survey for the following items, at a minimum:

1. Bridge location
2. Vertical and horizontal clearances
3. Stationing
4. Skew angles
5. Substructure locations and elevations
6. Span lengths
7. Deck finish grade elevations
8. Number and type of beams
9. Outside dimensions of all structural components
10. Bridge mounted utilities

11. Bridge mounted signs and support structures

Provide the back-up documentation preferably with the BDR but no later than the 60% Submittal. Notify the Department's Project Manager of any discrepancies that are critical to the continuation of the widening design.

Modification for Non-Conventional Projects:

Delete ***SDG*** 7.1.2.C and insert the following:

B. Provide back-up documentation with each 90% Component Plan Submittal confirming that the proposed widening/rehabilitation design and details are based on actual field conditions determined by field survey for the following items, at a minimum:
    1. Bridge location
    2. Vertical and horizontal clearances
    3. Stationing
    4. Skew angles
    5. Substructure location and elevations
    6. Span lengths
    7. Deck finish grade elevations
    8. Number and type of beams
    9. Outside dimensions of all structural components
    10. Bridge mounted utilities
    11. Bridge mounted signs and support structures

D. For widenings of overpass structures, contact the District Maintenance Office for a history of overheight vehicle impacts.

Modification for Non-Conventional Projects:

Delete ***SDG*** 7.1.2.D and see the RFP for requirements.

7.1.3 Design Specifications

Design all new portions of widenings and rehabilitations in accordance with ***LRFD.***

7.1.4 Classifications and Definitions

A. "Major Widening" is new construction work to an existing bridge which does any of the following:
   1. Doubles the total number of traffic lanes of the existing bridge facility.
   2. Doubles the bridge deck area of the existing bridge facility.
   3. Results in a ratio of 2.0 or greater for the total proposed bridge deck area (including widening and existing) to the existing bridge deck area to remain. This ratio is considered for each individual existing bridge.

Calculate bridge deck areas using the transverse coping-to-coping dimension and cut line as applicable.

B. "Minor Widening" is new construction work to an existing bridge facility that does not meet the criteria of a major widening.

Commentary: The term "facility" describes the total number of structures required to carry a transportation route over an obstruction. In this context, adding two lanes of traffic to one bridge of twin, two-lane bridges would be a minor widening because the total number of lanes of resulting traffic (six) in the finished "facility" is not twice the sum number of lanes of traffic (four), of the unwidened, existing twin bridges.

7.1.5 Vertical Clearance

A. Satisfy the vertical clearance requirements of ***FDM*** 260.

Modification for Non-Conventional Projects:
Delete ***SDG*** 7.1.5.A and insert the following: A. Satisfy the vertical clearance requirements of ***FDM*** 260 unless otherwise allowed by the RFP.

7.1.6 Construction Sequence

A. Show on the preliminary plans a construction sequence which takes into account the Traffic Control requirements.

B. Submit Traffic Control Plans for traffic needs during construction activities on the existing structure such as installation of new joints, deck grooving, etc.

C. Include in the final plans, a complete outline of the order of construction along with the approved Traffic Control Plans. Include details for performing any necessary repairs to the existing bridge.

7.1.7 Aesthetics

A. Design widenings to match the aesthetic level of the existing bridge.

B. Additions to existing bridges should not be obvious "add-ons".

C. When widening an existing bridge that does not have an existing Class 5 coating, follow the requirements of ***SDG*** 1.4.5. When widening a bridge that has an existing Class 5 coating, coat the new portions of the bridge and clean and recoat corresponding portions of the existing bridge as required with Class 5 coating in accordance with ***SDG*** 1.4.5. Remove the existing Class 5 coating from existing portions of the bridge as appropriate and if required so that the complete widened bridge presents a uniform appearance.

7.1.8 Bridge Mounted Support Structures and Signs

See ***Volume 3*** Chapter 18.

7.2 ANALYSIS AND DESIGN

7.2.1 Materials

Materials used in the construction of the widening should have the same thermal and elastic properties as those of the existing structure. Do not mix concrete and steel beams in the same span.

Commentary: This requirement follows the fundamental engineering principal that beams or girders within the same span must have stiffnesses and thermal properties that are the same or similar. Mixing concrete beams and steel girders (different stiffnesses and thermal properties) within the same span will cause detrimental bridge responses that include the following: potential overstress of existing beams (stiffer beams will attract more load); deck overstress due to differential live load induced vertical movement across the deck bay; differential longitudinal thermal movements between existing and new beams or girders due to different coefficients of thermal expansion.

7.2.2 Load Distribution

A. See ***SDG*** 2.9.B.

B. When determining the distribution of the dead load, consider the construction sequence and degree of interaction between the widening and the existing structure after completion.

7.3 SUBSTRUCTURE AND RETAINING WALLS

7.3.1 General

A. As with any bridge structure, when selecting the foundation type and layout for a bridge widening, consider the recommendations of the District Geotechnical Engineer. For bridges over water, also consider the effects from scour per ***SDG*** 3.3 with input from the District Drainage Engineer. Provide ample clearance between proposed driven piles and existing piles, utilities, or other obstructions. This is especially critical for battered piles.

Commentary: Constructing a new foundation for a bridge widening in close proximity to an existing foundation can be problematic. Vibrations from pile driving have caused settlement issues on existing bridges. Drilled shaft excavations adjacent to existing piles or shafts are also a concern. Be aware of the foundation geometry shown on the original construction plans and the as-built plans, if available. This is especially critical when battered piles were used in the existing structure or are to be used in the widening.

B. Design widened portions of substructures and foundations to meet or exceed the stiffness and lateral restraint of the existing substructure. This includes, but is not limited to, piles (types, arrangements, and orientations), bearings (types and orientations), and end bent backwall restraint. A flexibility analysis of the entire structure is required when the stiffness and lateral restraint of widened substructure and foundations does not meet or exceed the existing to clearly demonstrate that the behavior and load conditions of the existing structure are unchanged.

7.3.2 Footings

When widening an existing bridge by attaching a new section of footing to an existing footing, match the embedment of the existing footing.

When widening an existing bridge using separate footings, match the embedment of the existing footing or provide a minimum embedment of 2-feet from the finish grade to the top of the new footing, whichever results in the top of the new footing being lower.

7.3.3 Evaluation Criteria for Existing Substructures

A. When any of the conditions listed below exist, evaluate existing substructures, including foundations, in accordance with ***LRFD*** for all stages of construction and the final condition. Otherwise, analysis of the existing substructure is not required.

   1. The existing substructure is being modified. See “D” below for minor modifications to pier cantilever tips.
   2. The existing substructure shows signs of distress or has an NBI rating of 6 or below.
   3. The position of the existing beam bearing locations change in the final condition.
   4. The existing substructure supports additional beams/girders in the final condition.
   5. The existing substructure type includes any of the following: prestressed components (excluding piles of pile bents), inverted-T pier caps, or components listed in ***SDG*** Table 2.10-1.
   6. The superstructure type is other than any of the following: beam-slab (reinforced concrete deck on concrete or steel beams/girders), cast-in-place flat slab, or precast flat slab.

7. The structure height “Z” per ***LRFD*** 3.8.1.2 is greater than 35-feet above ground or MHW.
8. The bridge crosses over a navigable waterway under the jurisdiction of the U.S. Coast Guard.
9. The unfactored dead load superstructure reactions during any stage of construction or due to the final condition increases or decreases by more than 5% for any of the existing beams.
10. The percent change in the live load distribution factor for any of the existing beams increases by more than 5%. See “C” below.
11. The sum of the percent change for any of the existing beams (unfactored dead load superstructure reactions and live load distribution factor) increases or decreases by more than 8%. See “C” below.

B. Strengthening or replacement of the existing substructure may be required if the ***LRFD*** evaluation shows deficiencies. Contact the SSDE for guidance.

Modification for Non-Conventional Projects:

Delete ***SDG*** 7.3.3.B and insert the following:

B. Strengthen or replace the existing substructure if the ***LRFD*** evaluation shows deficiencies.

C. Calculate live load distribution factors in accordance with ***LRFD*** for the existing bridge configuration and the final condition.

D. For bridge widening/rehabilitation that require minor modifications to the pier cantilever tip (e.g., due to space restrictions) but do not meet conditions 2 through 11 in “A” above, strengthening of the existing pier cantilever cap is not required if the reinforcing bar development lengths are adequate for all stages of construction and for the final condition.

7.3.4 Strengthening Piers for Vehicular Collision

A. The minimum requirements listed below apply when using collars to strengthen existing piers, columns, or pile bents to resist the ***LRFD*** vehicular collision force. See ***SDG*** 2.6.3 for evaluating existing piers for vehicular collision.

1. Place the collar from the bottom of the pier column to a minimum distance of 8-feet above the adjacent ground surface.
2. Provide a grid of mechanical connections between the existing concrete and the concrete collar at a maximum horizontal and vertical spacing of 6-inches. Show the existing concrete cover removed to reveal the vertical bars inside the stirrups or spirals.
3. Use a Shrinkage Reducing Admixture for the collar concrete.

4. Roughen the existing concrete interface surface to a minimum amplitude of 1/4-inch.
5. The existing concrete interface surface shall have a Saturated Surface Dry condition when placing the concrete collar.

7.3.5 MSE Walls

This section addresses requirements for the widening or modification of MSE walls on construction projects. If an existing MSE wall with metallic soil reinforcement will be widened or modified on a construction project, and the existing soil reinforcement provides resistance for the proposed configuration, perform an analysis confirming that the remaining service life of the existing wall is not less than the target service life of the proposed construction project. Determine the remaining thickness of the metallic soil reinforcing using the corrosion rates provided in ***SDG*** 3.13.2 and the existing MSE wall shop drawings. Collect field samples from the existing MSE wall backfill and perform direct shear tests and environmental corrosion tests in accordance with the ***Geotechnical Design Manual***. Perform internal and external stability analyses using the lowest soil friction angle from the direct shear tests and the calculated remaining thickness of the metallic reinforcing. Remove top panels from the existing wall as needed, including the associated straps and backfill, such that the top of the existing panels is a minimum of 4-feet below the roadway base course or bottom of rigid pavement. See also ***SDM*** 19.6.L. See ***FDM*** 262 for submittal requirements.

7.4 SUPERSTRUCTURE – CONCRETE

7.4.1 General

A. Coordinate the use of non-standard height prestressed concrete beams with the DSDE.

Commentary: So as to preserve the shape of the side forms used to construct standard beams, the standard beam heights should not be decreased by reducing the web, bottom or top flange heights, or increased by increasing the web or bottom flange heights. The top flange height can be increased or the entire top flange can be eliminated without changing the shape of the standard side forms.

B. Obtain prior approval from the SSDE to widen an existing post-tensioned bridge which has bonded (grouted) tendons with a new section of bridge which will have unbonded tendons (tendons with flexible filler).

Modification for Non-Conventional Projects:
Delete ***SDG*** 7.4.1.B and see the RFP for requirements.

Commentary: The structural behavior of components with bonded post-tensioning differs from that of components with unbonded post-tensioning and must be accounted for in the design of a widening.

7.4.2 Concrete I-Beams

A. For widening AASHTO, Bulb-T, and cast-in-place concrete beam bridges, use Florida-I beams or AASHTO Type II beams. For widening existing AASHTO Type II Beam bridges, investigate the most economical option for using either AASHTO Type II Beams or FIB 36 Beams. For all other widenings, use the same superstructure type and depth where possible.

Commentary: The increased span and load carrying capacity of the Florida-I will generally allow designers to widen bridges using shallower beam depth than existing beams. For example the designer can use FIB 54 to widen an existing AASHTO type V bridge.

B. When widening with AASHTO Type II or Florida-I Beams, squaring beam ends, placing bearing pads orthogonally and eliminating permanent end diaphragms are the preferred options. However, skewed beam ends, skewed bearing pads and end diaphragms may be used at the discretion of the DSDE.

Modification for Non-Conventional Projects:
Delete ***SDG*** 7.4.2.B.

Commentary: Beams with squared off ends are easier to construct and less likely to spall off when the prestressing is released. Skewed ends may be necessary when matching the width of existing bents or pier caps.

C. Where the existing bridge uses end diaphragms and diaphragms are proposed for the widening, connect the new diaphragm to the existing diaphragm. Drill and epoxy rebar into the adjacent existing diaphragm. Do not drill into existing beams.

Commentary: Drilling into the existing beams at their ends is prohibited to prevent damaging the reinforcing steel and strand.

D. See ***SDG 4.3.4*** for prestressed beam temporary bracing requirements.

7.4.3 Voided Slabs

Voided-slab bridges require special attention. Contact the DSDE for guidance. The DSDE will coordinate with the SDO to establish recommendations and criteria for the widening of the particular structure.

Modification for Non-Conventional Projects:
Delete ***SDG*** 7.4.3 and see the RFP for requirements.

7.4.4 Bridge Deck

A. The transverse reinforcement in the new deck should be spaced to match the existing spacing. Different bar sizes may be used if necessary.

B. When detailing connections and selecting or permitting construction methods, consider the amount of differential camber present prior to placing the new deck.

C. Evaluate existing beam and girder supported decks for the temporary partially demolished condition.

Commentary: This is primarily applicable to exterior bays when the cantilevered portion of deck has been removed back to, or near, the centerline of the fascia beam/girder.

D. For existing decks designed using the empirical deck design, and where the distance from the centerline of the exterior girder or exterior box web to the saw-cut line of the overhang is less than 5.0 times the existing deck thickness per ***LRFD*** 9.7.2.4, restrict traffic from the following locations:

- the first outer bay for I beam superstructures; or
- over the exterior beam for Florida-U Beam superstructures; or
- over the exterior box for steel box girder superstructures.

E. Avoid open or sealed longitudinal joints in the riding surface (safety hazards).

F. See ***SDG 4.2*** for deck design requirements.

G. See ***SDG 4.2.11*** for deck construction requirements.

7.4.5 Deck Grooving

A. For widened superstructures where at least one traffic lane is to be added, contact the DSDE for direction regarding grooving of the existing and new bridge deck sections.

Modification for Non-Conventional Projects:
Delete ***SDG*** 7.4.5.A and see the RFP for requirements.

Commentary: The decision to groove the widened deck is made on a case-by-case basis considering factors that include the existing deck thickness and grooving, and the grooving requirements of the widened deck.

B. For projects with shoulder widening only, add a note to the plans specifying that the bridge floor finish match that of the existing bridge deck surface. If the existing bridge deck surface is in poor condition, contact the DSDO for direction.

C. Contact the DSDO for guidance for the required bridge surface finish for unusual situations or for bridge deck surface conditions not covered above.

Modification for Non-Conventional Projects:
Delete ***SDG*** 7.4.5.C and see the RFP for requirements.

D. Quantity Determination: Determine the quantity of bridge deck grooving in accordance with the provisions of ***Specifications*** Section 400-22. Use Pay Item No. 400-7 - Bridge Deck Grooving regardless of bridge length.

Modification for Non-Conventional Projects:
Delete ***SDG*** 7.4.5.D.

E. Specify the application of a penetrant sealer after grooving existing bridge decks if the cover to the top mat of steel does not meet current reinforcing steel cover requirements and the superstructure environment is Extremely Aggressive due to the presence of chlorides.

F. Do not specify penetrant sealers for new / widened portions of bridge structures or if the existing deck is not to be grooved.

7.4.6 Approach Slabs

Design and detail approach slabs in accordance with ***SDG*** 4.9 with the following exceptions:

A. The minimum approach slab length is 20-feet in lieu of 30-feet as shown in Figure 4.9-1.

B. Utilize an asphalt overlay only if the existing approach slab has an asphalt overlay.

7.4.7 Overlays

A. Coordinate with the District Maintenance Office when evaluating the need for and type of bridge deck overlay. Generally, polymer overlays are preferred over asphalt or concrete overlays. Existing bridge deck asphalt overlays that were not installed to address poor rideability should be permanently removed except where the overlay was part of the original design. Existing bridge deck asphalt overlays that were installed to address poor rideability can remain or be replaced provided that the bridge load rating verifies the capacity to support the overlay load. Field verify the existing overlay thickness. Mill and resurface bridge deck asphalt overlays at the same time as the roadway.

When an existing asphalt overlay is to be milled for resurfacing or permanently removed, add the following General Note to the plans:

“Use extreme care when removing asphalt from the existing bridge deck. Repair any damage at no cost to the Department."

Commentary: Bridge deck asphalt overlays have been used in special cases to address poor rideability and should typically remain for that reason. Sometimes, the roadway asphalt pavement operation was continued across the bridge on older resurfacing projects, especially on shorter bridges. Years of this practice may have resulted in excessive asphalt overlay thicknesses which could exceed the design allowance.

B. For existing bridges with water spread drainage issues that may require sloping overlays, consult with the DSDE.

7.5 SUPERSTRUCTURE – STEEL

7.5.1 General

Provide a concrete closure pour in the deck between the new and existing structure.

7.5.2 Steel I-Girders

A. Provide diaphragms and cross-frames between new and existing girders, spaced to line up with existing diaphragms and cross-frames.

B. For widenings consisting of 2 or more girders, the end diaphragm located between the existing and proposed girders may consist of only a top strut, unless the design requires otherwise (e.g., stability during erection, transfer of lateral loads, etc.).

C. Attach cross-frame connection stiffeners to existing girder webs and flanges by angles or bent plates. Field drill and bolt to existing girders, except as permitted in ***SDG*** 7.5.5.C.

D. For major widenings where the existing cross-frame connection plates are not connected to the flanges, contact the SSDE for direction regarding retrofitting the existing connection plates by attaching to the flanges in accordance with Section C above and ***SDG*** 7.5.5.

Modification for Non-Conventional Projects:
Delete ***SDG*** 7.5.2.D and see the RFP for requirements.

7.5.3 Existing Steel I-Girders

For existing straight steel I-girder units, see Table 7.5.3-1 for criteria regarding the requirements for level of analysis, load rating, and strengthening of the existing cross-frames. Analyze the existing steel I-girder unit and analyze and design the widening separately as Case 1 or Case 2 as applicable when all the following conditions are met:

1. Both the existing and widening meet Case 1 or Case 2 criteria per Table 7.5.3-1.
2. The skew index for the entire unit (existing and proposed widening in the final condition) unit is less than 0.45.
3. The cross-frames are designed and detailed in accordance with ***SDG*** 5.1.B.

Otherwise, use the skew index for the entire unit (i.e., final condition) to select Case 3, 4, or 5 per Table 5.13-1. See ***SDG*** 5.13 for additional information.

Table 7.5.3-1 Cross-Frame Load Rating and Strengthening Requirements

Case[1]	Calculate Cross-Frame RF[2]	Strengthen Existing Cross-Frames
1	No	No
2	No	No
3	No	No[3,4]
4	No	If the demand exceeds the load-carrying capacity and/or Footnote 3.
5	Yes	Strengthen if RF ≤ 1.00

1. See ***SDG*** Table 5.13-1 for cross-frame configuration and required level of analysis.
2. RF = Rating Factor
3. Strengthening of the existing cross-frames is not required unless otherwise determined in the Bridge Analysis during the PD&E phase.
4. Perform a LGA and RMA. If the RMA indicates overstress in the existing cross-frames, perform another RMA without including the existing intermediate cross-frames in the structural model. If the girders have a sufficient load rating for all analyses, then load rating and strengthening of the existing intermediate cross-frames is not required.

7.5.4 Remaining Fatigue Life Estimate for Steel Bridges

A. During the PD&E phase, perform an evaluation of the fatigue limit state if any portion of a steel superstructure unit is retained. Using the procedure listed below, include 1 through 5 in the Bridge Analysis. If Detail Categories D, E, or E' are present in primary members, include calculations in the BDR as shown in 6 below:

    1. Evaluate the existing conditions for each steel unit and document any deficiencies to the structural steel framing system. Refer to ***SDG*** 7.1.2.
    2. Classify each steel unit for redundancy (i.e. NSTM). Refer to ***SDG*** 5.3.2.C.
    3. For each steel I-girder unit, determine the case number according to ***SDG*** 7.5.3.
    4. Determine the primary members in each steel unit. Refer to ***SDG*** 5.3.2.A and B.
    5. Determine the Detail Categories per ***LRFD*** Table 6.6.1.2.3-1 that exist on the primary members in each steel unit. Tabulate the information by separating the transverse primary members from the longitudinal primary members. If Detail Categories D, E, or E' are not present on any primary members, then further evaluation is not required.

6. For primary members in each steel unit that contain a Detail Category D, E, or E', follow the steps below:

Step 1: Calculate the fatigue live load stress range at the location of each Detail Category. Since the same Detail Category can exist in multiple locations on the member, several locations may need to be evaluated.

Step 2: Determine if the Fatigue I limit state criteria is met for all Detail Categories and locations. If so, further evaluation is not required. If Fatigue I is not met, the Fatigue II limit state applies and proceed to Step 3.

Step 3: For Detail Categories where the Fatigue II limit state applies:

a. Determine the $ADTT_{SL}$ per ***LRFD*** 3.6.1.4 using the ADTT information available. The ADTT should be approximately at the mid-point of the assumed 75-year service life of the existing steel superstructure unit.

b. Calculate the approximate remaining fatigue life, FL_{remain}, for the detail as follows:

$$FL_{remain} = FL_{expected} - FL_{service} \quad \text{[Eq. 7-1]}$$

Where:

$FL_{expected}$ = the expected fatigue life of the detail per ***LRFD*** 6.6.1.2.5 assuming the detail as new.

$FL_{service}$ = the number of years the bridge has been in service.

c. Tabulate the information by separating the transverse primary members from the longitudinal primary members. State in the BDR that FL_{remain} is an estimate based on the approximate procedure provided in the ***SDG*** and does not necessarily represent the actual remaining fatigue life of the member or detail and further evaluation may be required.

B. For steel bridges containing NSTM(s) and the Fatigue II limit state applies, contact the SDO for guidance.

Modification for Non-Conventional Projects:
Delete ***SDG*** 7.5.4

C. For steel I-girder units where the cross-frames are not required to be strengthened per Table 7.5.3-1, the fatigue limit state evaluation for the cross-frames is not required.

7.5.5 Field Welding

A. When welding is required during widening or rehabilitation of an existing structure, show the type of existing base metal on the Plans. If the base metal type cannot be determined, or if the type is not an approved base metal included in the most current edition of the AASHTO/AWS D1.5 Bridge Welding Code, consult with the State

Materials Office to obtain recommendations on how the welding should be specified. Some destructive sampling of the existing structure may be required in order to provide these recommendations. The welding inspection for the rehabilitation or modification for bridge structures should follow the current AASHTO/AWS D1.5 requirements suitable for the type of weld and service conditions and be specified on the Plans. Inspection criteria may change based on the actual field conditions.

Modification for Non-Conventional Projects:
Delete ***SDG*** 7.5.5.A and see the RFP for requirements.

B. Field welding to existing girder webs, tension flanges, and flanges subject to stress reversal is prohibited.

C. Field welding to the compression flanges of existing girders is allowed, with approval of the SSDE, but only if the compression flange is embedded in the concrete deck and bolted connections are not easily accommodated.

Modification for Non-Conventional Projects:
Delete ***SDG*** 7.5.5.C and see the RFP for requirements.

D. Field welding to the existing bearing stiffeners is allowed, with approval of the SSDE, but only if a bolted connection to the existing structure cannot be accommodated.

Modification for Non-Conventional Projects:
Delete ***SDG*** 7.5.5.D and see the RFP for requirements.

7.6 SUPERSTRUCTURE COMPONENTS

7.6.1 Expansion Joints

See ***SDG 6.4***.

7.6.2 Bearings

A. Bearing fixity and expansion devices should be the same in both the widened and existing bridges.

B. Refer to ***SDG 6.5*** for bearing requirements.

7.6.3 Traffic Railing

See ***SDG 6.7***.

7.7 ATTACHMENT TO EXISTING STRUCTURE

7.7.1 Drilling

A. When drilling into heavily reinforced areas, specify exposure of the main reinforcing bars by chipping.

B. Specify that drilled holes have a minimum edge distance of three times the metal anchor diameter (**3d**) from free edges of concrete and 1-inch minimum clearance between the edges of the drilled holes and existing reinforcing bars.

C. Specify core drilling for holes with diameters larger than 1½-inches or when necessary to drill through reinforcing bars.

D. Adhesive Anchor Systems must be SDO approved and comply with the criteria and requirements of ***SDG*** Chapter 1.

7.7.2 Dowel Embedments

Ensure that reinforcing bar dowel embedments meet minimum development length requirements whenever possible. If this is not possible (e.g., traffic railing dowels into the existing slab or deck), the following options are available:

A. Reduce the allowable stresses in the reinforcing steel by the ratio of the actual embedment divided by the required embedment.

B. If embedded anchors are used to develop the reinforcing steel, use Adhesive Anchor Systems (see ***SDG*** 1.6) designed in accordance with ***SDG*** Chapter 1.

7.7.3 Surface Preparation

Specify that surfaces be prepared for concreting in accordance with “Removal of Existing Structures” in Sections 110 and 400 of the ***Specifications***.

7.7.4 Connection Details

A. Figure 7.7.4-1, Figure 7.7.4-2, Figure 7.7.4-3 and Figure 7.7.4-4 are details that have been used successfully for bridge widenings for the following types of bridge superstructures.

B. Flat Slab Bridges (Figure 7.7.4-1): A portion of the existing slab should be removed in order to expose the existing transverse reinforcing for splicing. If the existing reinforcing steel cannot be exposed, the transverse slab reinforcing steel for the widening may be doweled directly into the existing bridge without meeting the normal splice requirement. When splicing to the existing steel is not practical, Adhesive Anchor Systems (see ***SDG*** 1.6), designed in accordance with ***SDG*** Chapter 1, must be utilized for the slab connection details as shown in Figure 7.7.4-1 and Figure 7.7.4-4.

C. T-Beam Bridges (Figure 7.7.4-2): The connection shown in Figure 7.7.4-2 for the deck connection is recommended.

D. Steel and Concrete Girder Bridges (Figure 7.7.4-3): The detail shown in Figure 7.7.4-3 for the deck connection is recommended for either prestressed concrete or steel beam superstructures.

Commentary: These figures are for general information and are not intended to restrict the judgment of the EOR.

Figure 7.7.4-1 Flat Slab Widening

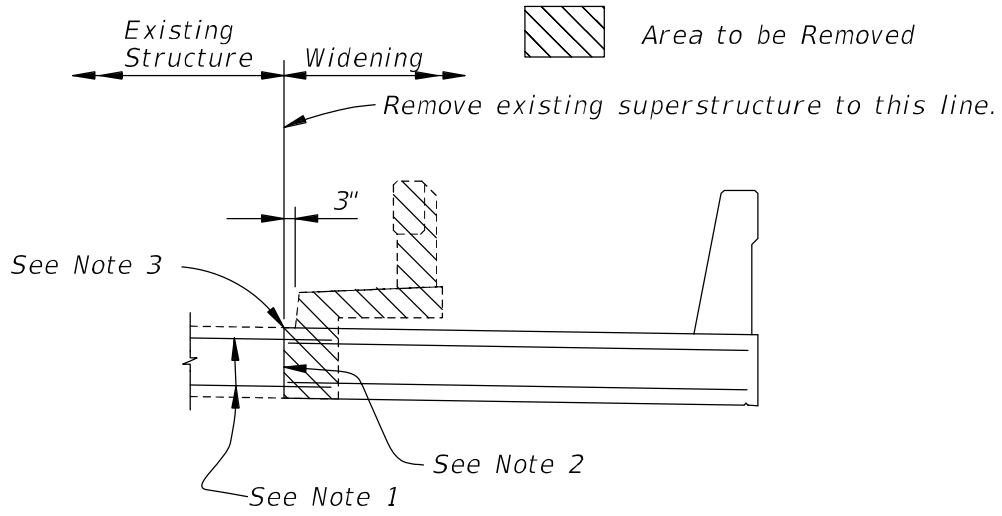

NOTES:

1. Existing transverse reinforcing to remain in place. Clean bars, straighten and embed into the slab widening. If bars are broken or otherwise determined to be unsatisfactory by the Engineer, replace with dowel bars as shown in Figure 7.7.4–4.

2. Clean all contacting surfaces between the old and new concrete immediately before casting concrete.

3. Score concrete for full length of span by sawing to top of reinforcing. Avoid damaging reinforcing steel during sawing operation and slab removal.

WIDENING DETAIL FOR FLAT SLAB SUPERSTRUCTURE

Figure 7.7.4-2 Monolithic Beam and Deck Widening

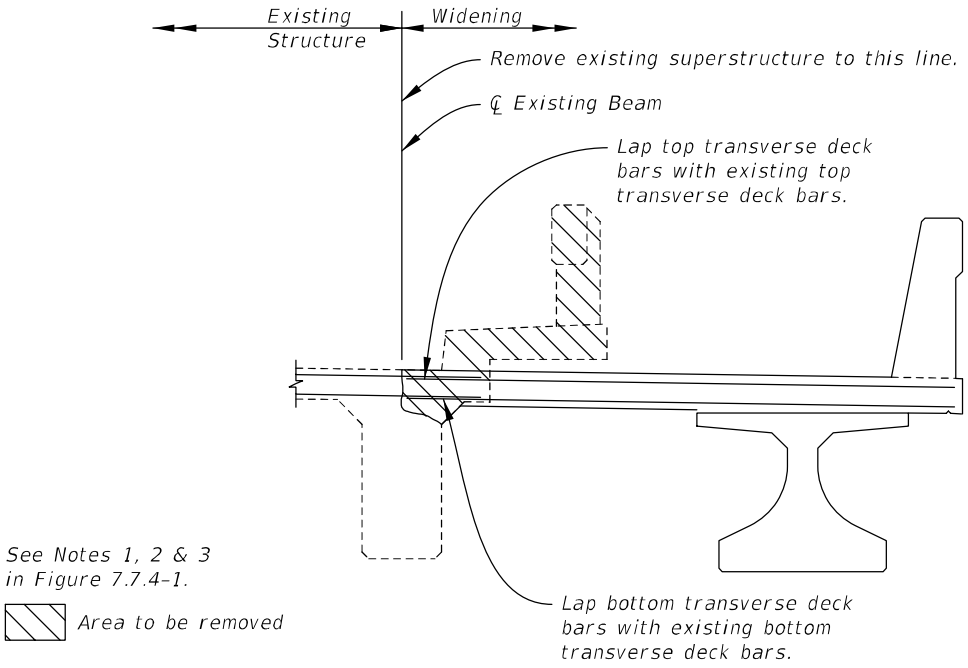

WIDENING DETAIL FOR MONOLITHIC BEAM AND SLAB SUPERSTRUCTURE

Figure 7.7.4-3 AASHTO Beam Superstructure Widening

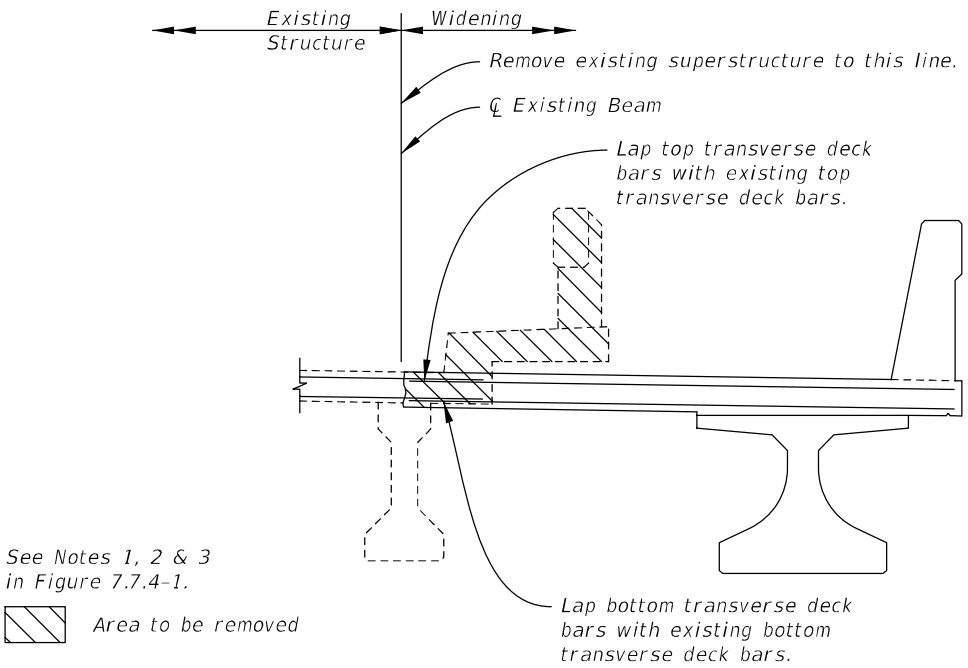

WIDENING DETAIL FOR AASHTO BEAM SUPERSTRUCTURE

Figure 7.7.4-4 Dowel Installation

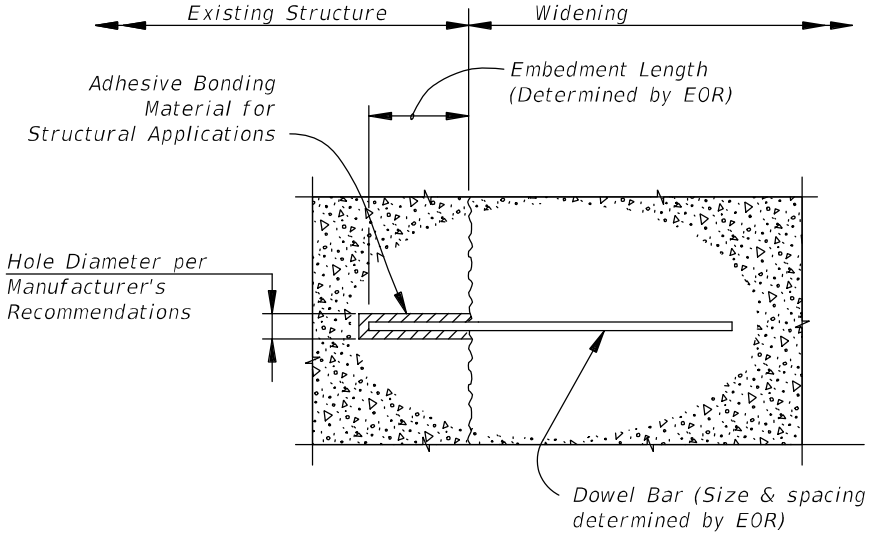

NOTES:

1. Verify that holes for Dowel Bars are thoroughly clean and dry prior to placing bonding material.
2. Comply with Sections 416 & 937 of the Specifications.
3. Shift dowel hole locations if existing reinforcing steel is encountered.

WIDENING DETAIL SHOWING DOWEL INSTALLATION

8 MOVABLE BRIDGES

8.1 GENERAL

This chapter contains information and criteria related to the design of movable bridge projects. It sets forth the basic Florida Department of Transportation (FDOT) design criteria that are modifications and/or additions to those specified in the ***AASHTO LRFD-Movable Highway Bridge Design Specifications***, Second Edition, 2007 with 2008,

2010, 2011, 2012, 2014, 2015 and 2018 Interim Revisions and herein referred to as ***LRFD-MHBD Specifications***. Where applicable, other sections of this ***SDG*** also apply to the design of movable bridges.

On new movable bridge, movable bridge rehabilitation or movable bridge replacement projects, include a bridge plan “General Note” which requires the Contractor to assume full responsibility for the operation and maintenance of the movable bridge(s) throughout the duration of construction. Use the “Technical Special Provisions” issued by the SDO.

8.1.1 Applicability

A. The design criteria of this chapter are applicable for new bridges and the electrical/machinery design for rehabilitation of existing bridges. The requirements for structural rehabilitation will be determined on a bridge-by-bridge basis, based on evaluations during the Bridge Development Report (BDR) phase and approval by the SSDE. Projects for which the criteria are applicable will result in designs that preferably, provide new bascule bridges with a "two leafs per span" configuration.

Commentary: Single leaf bascules are not allowed, but may be considered for small channel openings where navigational and vehicular traffic is low and with approval from the SSDE.

Modification for Non-Conventional Projects:

Delete ***SDG*** 8.1.1.A and associated Commentary and insert the following:

A. The design criteria of this chapter are applicable for new bridges and the electrical/machinery design for rehabilitation of existing bridges. See the RFP for structural rehabilitation requirements.

B. Examine and evaluate alternative bridge configurations offering favorable life cycle cost benefits. Consider improved design or operational characteristics providing advantage to the traveling public. Incorporate design and operational features that are constructible, can be safely operated and easily maintained by Department forces. Maintain consistency of configuration, when feasible, for movable bridges throughout the State.

Modification for Non-Conventional Projects:

Delete ***SDG*** 8.1.1.B and insert the following:

B. Provide bridge configurations that provide favorable life cycle cost benefits. Provide operational characteristics that minimize disruptions to the traveling public. Incorporate design and operational features that can be safely operated, and that can be easily maintained by Department forces.

C. Design drive systems for new bascule bridges consisting of electric motors with gears. See ***SDG*** 8.1.2.

Commentary: Assure reliable operation of movable bridges through redundancy features in drive and control systems, for both new and rehabilitation projects.

D. Do not design non-counterweighted or reduced counterweighted bascules. Design a concrete counterweight with drained pockets for counterweight blocks (concrete, cast-iron or steel). Do not design steel-slab counterweight systems unless encapsulated in concrete. (see ***SDG*** 8.6.3)

E. Provide clearances to accommodate thermal expansion of leaf.

F. Design trunnion assemblies, support systems and drive machinery, accounting for future weight changes to the bascule leaf. (see ***SDG*** 8.6.1)

G. Design deck grading and leaf rear joints to protect machinery (including trunnion assemblies) from rain and dirt. Provide gutters to drain water away from machinery areas and provide seals at deck joints. Shield trunnions and bearings when required.

H. Closed concrete decks with partial filled grating using lightweight concrete or similar system are required for new bridges. Connect closed deck systems to framing members using shear connectors and full-depth concrete.

I. Show location of all temporary bracing required for stability prior to the deck placement.

8.1.2 Redundancy

A. Include recommendations for redundant drives and control systems in the BDR/30% plans submittal. For bridges having low rates of anticipated bridge openings or average daily traffic, application of redundant drive and control systems may not be cost effective. In this event, submit such information in the BDR and provide appropriate recommendations for omission of redundant systems.

Modification for Non-Conventional Projects:

Delete ***SDG*** 8.1.2.A and see the RFP for requirements. Refer to Commentary below for Redundant drive configurations.

Commentary: Redundant drive configurations include:

1. *Hydraulic drive systems, for bridge rehabilitations, consisting of multiple hydraulic cylinders or hydraulic motors. In these systems, a pump drive motor, or its hydraulic pump, can be isolated and bridge operations can continue while repairs are accomplished.*
2. *Gear driven systems that can drive the leaf through one gear train into a single rack of a two-rack bridge.*

B. Provide two rack drives actuated by dual motor drive systems either of which will be capable of operating the bridge leaf. Normal operation of this configuration will involve operation of one drive/motor system. Provide an alternator to alternate drives/ motors for each opening. Specify dual drives (single drives powering both motors are not allowed).

C. Do not use Master/Slave configurations for Commentary 2 above. Design the system so that either drive can be taken off-line without affecting the operation. Provide central control allowing A, B, or A+B operation.

D. Rehabilitations: Design hydraulic cylinder actuated drive to function in spite of loss of a main pump motor, hydraulic pump, or drive cylinder. Design the system to include all necessary valves, piping, equipment and devices, to permit safe and expeditious changeover to the redundant mode. Specify a permanent plaque displayed in a convenient location on the machinery platform describing actions (valve closures and openings, electrical device deactivation, etc.) necessary for operation in the redundant mode.

E. When operating with either a single rack drive or asymmetric hydraulic cylinder forces applied to the leaf, design the structure for Movable Bridge - Specific load combinations, strength BV-I and BV-II. Reduce the load factors for strength BV-I to 1.35 from 1.55 (***LRFD-MHBD*** Table 2.4.2.3-1).

8.1.3 Trunnion Support Systems for New Bridges

A. Provide trunnion support systems as follows: (see ***SDG*** 8.6.1 and ***SDG*** 8.2)

1. Simple, rotating trunnion configuration, with bearing supports, on towers, on both inboard and outboard sides of the trunnion girder.
2. Specify sleeve bearings for use on small bascule bridges only. Provide design constraints and cost justification.

Modification for Non-Conventional Projects:
Delete ***SDG*** 8.1.3.A.2 and see the RFP for requirements.

3. Design trunnion supports on each side of the main girder with similar stiffness vertically and horizontally.

B. Design concrete trunnion columns; do not use steel trunnion towers.

8.1.4 Vertical Clearance Requirements

Design bascule leaf for unlimited vertical clearance between the fenders in the full open position. Any encroachment of the leaf into the horizontal clearance zone must receive Coast Guard approval.

8.1.5 Horizontal Clearance Requirements

Design all movable bridges over navigable waterways to provide horizontal clearance as required by the United States Coast Guard (USCG), the Army Corps of Engineers and the Florida Inland Navigation District. Obtain permission from the SSDE if clearances over 110-feet between fenders are required.

Commentary: Since 1967 the exclusive control of navigable waters in the U.S. has been under the direction of the USCG. The USCG is required to consult with other agencies, which may have navigational impacts, before approving USCG permits for bridges over navigable waterways. The USCG was contacted by the Army Corps of Engineers expressing their needs for a wider channel along the Miami River, due to future dredging operations proposed by the Army Corps. After consultation between FDOT, USCG and the Army Corps it was agreed that a 110-foot horizontal channel clearance, between fenders, would be provided on future crossings of the Miami River in locations designated as navigable. This requirement for movable bridges would also apply to other waterways, which might be subject to dredging by the Army Corps to maintain water depths. The 110-foot clearance was established as equal to the Army Corps of Engineers designs for locks along the major rivers in the United States. It is anticipated that where no known dredging operations are required by the Army Corps, smaller horizontal clearances as established by the USCG and published in the Federal Registry will still be permitted by the USCG. Since the cost of movable bridges vary roughly by the square of the span length, these smaller horizontal clearances should be submitted for approval where dredging is not anticipated. The USCG and Army Corps of Engineers has committed to working with the FDOT before making the final decision on required clearances. The Florida Inland Navigation District may require wider horizontal clearances than the USCG.

Modification for Non-Conventional Projects:
Delete ***SDG*** 8.1.5 and see the RFP for requirements.

8.1.6 Bridge Operator Parking

In all new bridge designs, provide two parking spaces for bridge operators on the control house side of the bridge.

8.1.7 Definitions and Terms

A. Auxiliary Drive: Hand crank, gearmotor with disconnect-type coupling, portable hydraulic pump, drill, etc., that can be used to lower leafs for vehicular traffic or raise the leafs for marine traffic if the main drives fail.

B. Creep Speed: Not more than 10% of full speed, final creep speed will be determined by bridge conditions.

C. Emergency Stop: Leaf stops within 3±1 seconds of depressing the EMERGENCY STOP push-button or in the event of a power failure. All other rotating machinery stops instantly.

D. End-of-Travel Function: Contact connection where a closed contact allows operation and an open contact stops operation (i.e., leaf limit switches).

E. Fully Seated: Leaf is at rest on live load shoes, interlock OK to drive span locks.

F. Fully Open: Tip of leaf clears fender of a vertical line as defined by Coast Guard.

G. Hard Open: Leaf opening such that counterweight bumper blocks come in contact with pier bumper blocks.

H. Indicating Function: Contact connection where a closed contact indicates operation and an open contact indicates no operation (i.e., indicating lights).

I. Interlocks or Safety Interlocks: Ensure events occur in sequence and no out-of-sequence events can occur.

J. Leaf Tail: FDOT term for what ***LRFD-MHBD*** calls leaf heel.

K. Leaf Tip: FDOT term for what ***LRFD-MHBD*** calls leaf toe.

L. Mid-Cycle Stop: Leaf(s) stop following normal ramping after depressing the STOP push-button when in the middle of an opening or closing cycle.

M. Near Closed: A point 8 to 10 degrees (approximately, final position to be field determined) before FULL CLOSED, drive to creep speed.

N. Near Open: A point 8 to 10 degrees (approximately, final position to be field determined) before FULL OPEN, drive to creep speed.

O. Ramp: Rate of acceleration or deceleration of leaf drive.

8.1.8 Movable Bridge Terminology

See Figure 8.1.8-1: for standard bridge terminology.

Figure 8.1.8-1 Movable Bridge Terminology

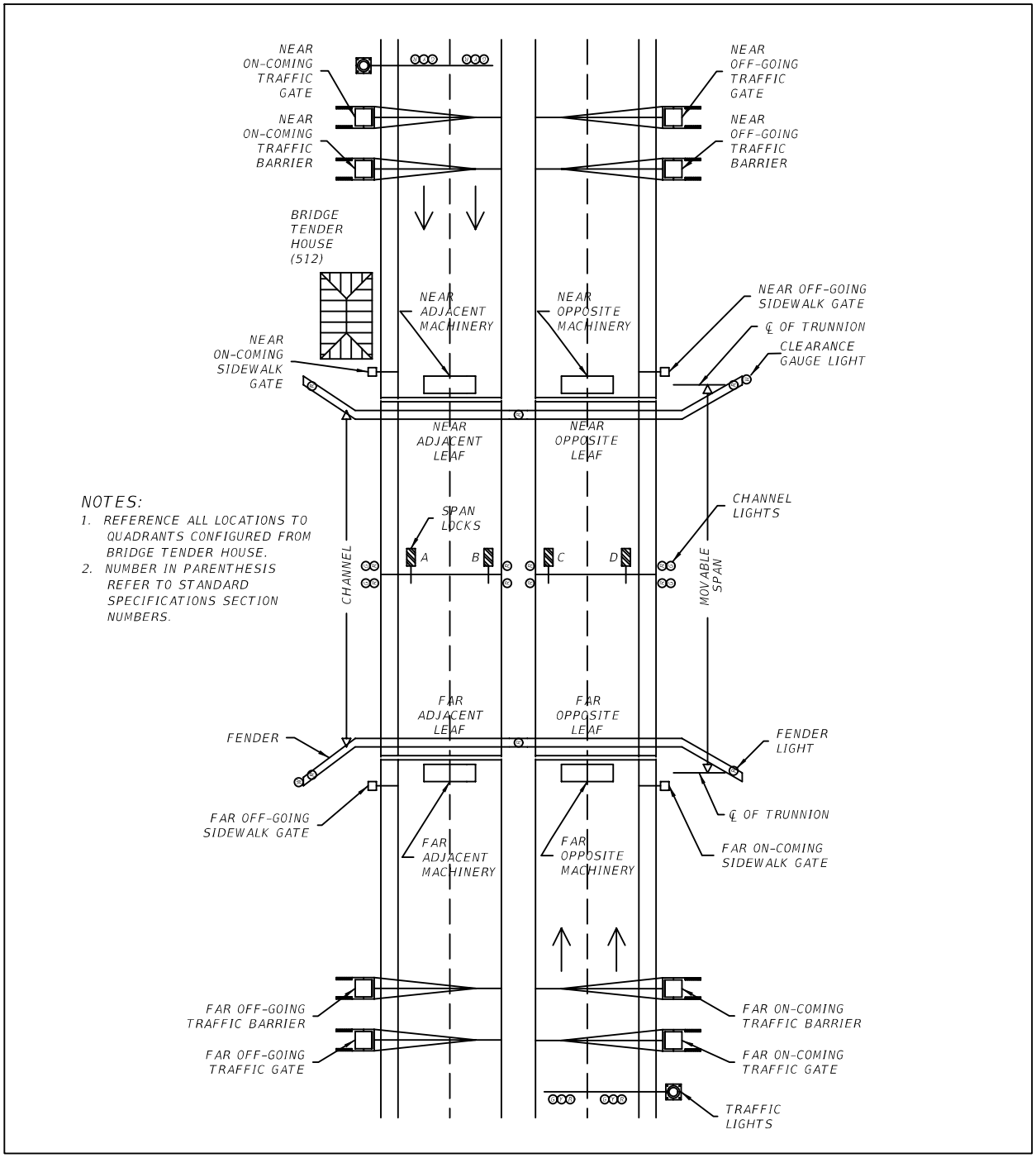

8.1.9 Movable Bridge Traffic Signals, Traffic Gates, and Pedestrian Gates (LRFD-MHBD 1.4.4)

A. Refer to ***Standard Plans*** Index 508-T01 for Traffic Control Devices for Movable Span Bridge Signals. Provide separate traffic gates and swing-style pedestrian gates for movable bridges with a sidewalk or shared use path, even if the traffic gate spans the pedestrian facility. See Figure 8.1.9-1 for examples of swing-style pedestrian gates. Locate pedestrian gates a minimum of 10-feet from the movable span to provide a refuge area. Provide advanced warning of restricted sidewalk or shared use path access in accordance with the ***Traffic Engineering Manual (TEM)*** 2.6.6.

Figure 8.1.9-1 Swing – Style Pedestrian Gate Examples

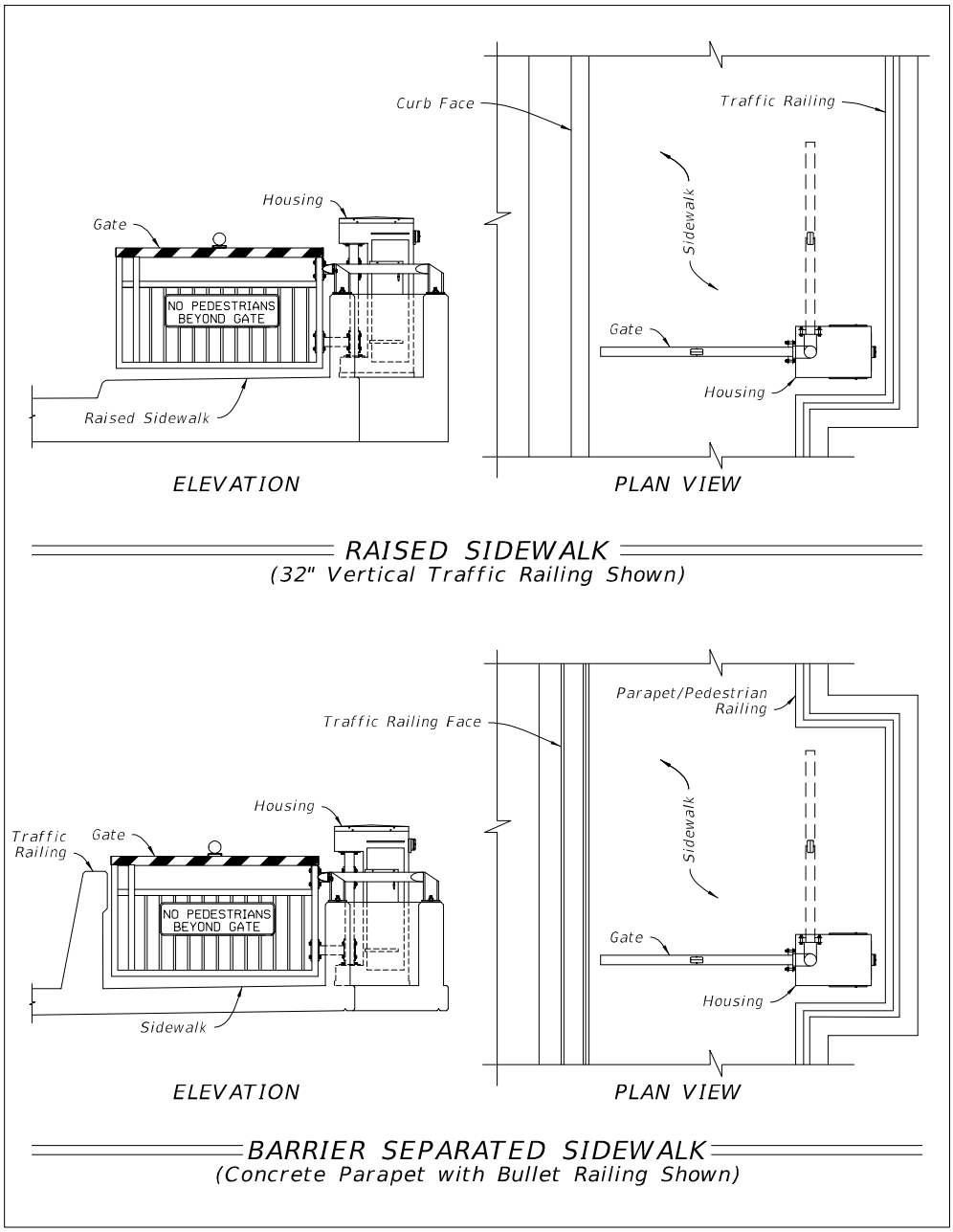

B. Coordinate with the District Maintenance Office to evaluate the need for additional pedestrian safety design elements for movable bridges with restricted sightlines, high volumes of pedestrian traffic, or frequent movable span operations. Additional pedestrian safety design elements may include secondary pedestrian gates, pedestrian detection technologies, remote monitoring, or cameras. See ***TEM*** 5.3 for more information on pedestrian detection technologies.

Modification for Non-Conventional Projects:
Delete ***SDG*** 8.1.9.B and see the RFP for requirements.

8.1.10 Functional Checkout

A. Develop and specify an outline for performing system checkout of all mechanical/electrical components to ensure contract compliance and proper operation. Specify in-depth testing by the Contractor.

B. Functional testing for the electrical control system consists of two parts. Perform the first part before delivery and the second part after installation on the bridge. Ensure that both tests are comprehensive. Perform the off-site functional testing to verify that all equipment is functioning as intended.

C. Make all repairs or adjustments before installation on Department property. For new bridges and complete electrical rehabilitations, ensure all major electrical controls are assembled and tested in one place, at one time. The test must include as a minimum: control console, PLC, relay back-up system, Motor Control Center, motors, drives, dynamometer load tests, and all other equipment required, in the opinion of the Electrical Engineer of Record, to complete the testing to the satisfaction of the SSDE. For partial rehabilitations, the shop functional checkout must include all components being rehabilitated, other components not available at the shop must be simulated to the extent possible.

D. If not satisfactory, repeat the testing until an acceptable result is obtained. All equipment must be assembled and inter-connected (as they would be on the bridge) to simulate bridge operation. Do not force any inputs or outputs. Provide indicating lights to show operation. Use hand operated toggle switches to simulate field limit switches.

E. Specify delivery and installation of the equipment after successful completion of the off-site testing. Re-test the entire bridge control system before placing the bridge in service. The field functional testing must include, but is not necessarily limited to, the off-site testing procedure.

F. Test all brakes, prior to the first operation of a bridge leaf with the motors, for correct torque settings. Test all brake controls and interlocks with motor controls for correct operation. Do not allow the operation of the leaf, even for “testing” purposes, with brakes manually released or with interlocks bypassed.

8.1.11 Functional Checkout Tests

At a minimum, require the following tests of Control Functions for both manual and semi-automatic operations:

Commentary: The Electrical Engineer of Record is encouraged to include tests for other equipment not included in the minimum tests listed below.

A. Demonstrate the correct operation of the bridge sequence as described in the Technical Special Provisions and in the drawings.

B. Demonstrate EMERGENCY STOP of each span (leaf) at, or during, each phase of opening and closing the bridge (phases include ramping up or down, full-speed, and creep-speed).

C. Demonstrate EMERGENCY STOP does prevent energization of all rotating machinery in any mode of operation.

D. Demonstrate that the leafs do not come to a sudden stop on a power failure, and that when bridge operation resumes, it will continue at the same step where the operation was prior to power loss.

E. Interlocks:

   1. Simulate the operations of each limit switch to demonstrate correct operation and interlocking of systems.
   2. Demonstrate BYPASS operation for each failure for each required bypass.
   3. Simulate each failure for which there is an alarm message to demonstrate correct message displays.
   4. Include sufficient testing of interlocks to demonstrate that unsafe, or out of sequence, operations are prevented.
   5. Observe Position Indicator readings with bridge closed and full open to assure accurate readings.

F. Navigation Lights:

   1. Demonstrate that all fixtures are working.
   2. Demonstrate proper change of channel lights from red to green.

G. Traffic Gates, Sidewalk Gates, and Traffic Railings:

   1. Demonstrate proper operation of each gate arm.
   2. Demonstrate opening or closing times do not exceed 15 seconds in either direction.
   3. Demonstrate door switch safety interlocks and manual operations using hand crank.
   4. Demonstrate that gate arms are perpendicular to the roadway when RAISED and parallel to the roadway when LOWERED.

5. Demonstrate that the Traffic Lights turn RED when a traffic gate arm or a traffic railing arm moves off the full upright position.

H. Span Locks:

1. Operate each span lock through one complete cycle and record, with chart recorder, motor power (watts) throughout the operation, record lockbar to guide and lockbar to receiver clearances.
2. Operate each lock with hand crank or manual pump for one complete cycle.
3. Record time of operation (not to exceed 10 seconds), stroke, and maximum operating and relief pressures for each lock bar and power unit.
4. Verify lock bar to guides and receiver clearances and parallelism.
5. Verify that there is no movement of the leafs caused by the operation of the span locks, when the locks are pulled and driven with the bridge fully seated.
6. Demonstrate hydraulic power unit fluid level and containment in all span positions.

I. Bumper Blocks: Demonstrate bumper block contact points relative to leaf position and contact face parallelism. Record clearances between bumper blocks with leaf open to normal full open position.

J. Bridge Machinery:

1. Demonstrate operation of all lubrication systems.
2. Demonstrate live load shoe contacts and alignment of the bascule leaf rear and center span joints.
3. Operate each leaf through six continuous cycles at full speed, three cycles for each electric motor. During this test, inspect the machinery for proper function. Correct any abnormal conditions to the satisfaction of the Engineer, and retest in entirety.

K. Span Brakes Control:

1. During the span raise and lower operations, verify and record the normal automatic set and release operation of the brakes.
2. Demonstrate brake hand release, each brake, one at a time, and monitor the hand release indication through the PLC.
3. With the Span in non-permissive operation mode (span locks driven, drives not energized), manually activate the brake set and release switches and monitor their set/released indication at the control desk.

L. Emergency Power:

1. The complete installation must be initially started, and checked-out for operational compliance, by a factory-trained representative of the manufacturer of the generator set and the Automatic Transfer Switch. The supplier of the generator set must provide the engine lubrication oil and antifreeze recommended by the manufacturer for operation under the environmental conditions specified.

2. Upon completion of initial start-up and system checkout, the supplier of the generator set must notify the Engineer in advance and perform a field test to demonstrate load-carrying capability, stability, voltage, and frequency.
3. Specify a dielectric absorption test on generator winding with respect to ground. A polarization index must be determined and recorded. Submit copies of test results to the Engineer.
4. Make phase rotation test to determine compatibility with load requirements.
5. Engine shutdown features such as low oil pressure, over-temperature, overspeed, over-crank, and any other feature as applicable must be function-tested.
6. In the presence of the Engineer, perform resistive load bank tests at 100% nameplate rating. Loading must be 25%-rated for 30 minutes, 50%-rated for 30 minutes, 75%-rated for 30 minutes, and 100%-rated for 2 hours. Maintain records throughout this period and record water temperature, oil pressure, ambient air temperature, voltage, current, frequency, kilowatts, and power factor. Record the above data at 15 minute intervals throughout the test.

M. Automatic Transfer Switch:

1. Perform automatic transfer by simulating loss of normal power and return to normal power.
2. Monitor and verify correct operation and timing of: normal voltage sensing relays, engine start sequence, time delay upon transfer, alternate voltage sensing relays, automatic transfer operation, interlocks and limit switch function, timing delay and retransfer upon normal power restoration, and engine shut-down feature.

N. Programmable Logic Controller (PLC) Program:

1. Require a demonstration of the completed program's capability prior to installation or connection of the system to the bridge. Arrange and schedule the demonstration with the Engineer and the Electrical Engineer of Record.
2. Require a detailed written field test procedure to the Electrical Engineer of Record for approval. Require testing as listed below:
    a. Exercise all remote limit switches to simulate faults including locks, gates, traffic lights, etc. Readouts must appear on the alphanumeric display.
    b. After completing the local testing of all individual remote components, check all individual manual override selections for proper operation at the console. When all override selections have been satisfactorily checked-out, switch the system into semi-automatic (PLC) mode and exercise for a full raise and lower cycle. Verify that operation is as diagrammed on the plan sheet for the sequence of events.
    c. Initiate a PLC sequence of operation interweaving the by-pass functions with the semi-automatic functions for all remote equipment.

d. Remove the power from the input utility lines. The Automatic Transfer Switch (ATS) starts the engine-generator to supply power. Raise and lower the bridge again. Verify that the bascule leafs operate in sequence; i.e., one side of the channel at a time. Upon completion of the test, re-apply utility power to ATS. The load shall switch over to utility power for normal operation.

e. Certify that all safety features are included in the program, and that the program will not accept commands that are contrary to the basic sequence diagram. Submit failure mode testing as part of the written field test procedure.

O. Hydraulic Functions:

1. Main Power Unit: Operate main hydraulic power units of each of the leafs under the following conditions; record flow and pressure, and angle of opening versus time during operation.

   a. Operation with both pumps and all cylinders on line.

   b. Operation with one pump and all cylinders on-line (one test per pump).

   c. Operation with both pumps and two cylinders; take two cylinders off line and disconnect from the leaf.

2. Demonstrate operation of temperature and low level switches:

   a. Lower fluid level to just above low-level point and attempt operation of the leaf.

   b. Heat hydraulic fluid to shutdown temperature with immersion heater.

3. Hydraulic Cylinders: Demonstrate manual release of fluid in cylinders back to tank under no power condition.

P. Submarine Cable Assembly (Submarine Cables if used):

1. Require the following tests, using a 1,000-volt megger, on each conductor of the installed submarine cable:

   a. Insulation Resistance (IR): Measure and record the IR of each conductor to the rest of the conductors and to the cable armor. Measure and record the IR of each conductor to ground.

   b. Calculate and record the Polarization Index (PI) for each conductor as discussed in IEEE 62-1995 Revision using the 60 second and 10 minute readings.

2. IR readings of less than 100 MΩ are unacceptable. PI readings of less than 1.0 are unacceptable.

3. If more than 10 percent of conductors of any cable assembly fail the PI or the IR measurements, then the cable is deemed to be defective and has to be replaced.

4. If, at any time during construction, or after the initial testing described above, the submarine cable assembly is damaged, then perform the IR and PI tests again except that the IEEE 62-1995 Revision 30 second and 60 second readings can be used to determine the PI.

5. Require that the testing be submitted to the Engineer and EOR for review and approval.

Q. Submarine Cable Assembly (Wired HDPE Conduits if used):

1. Require the following tests, using a 1,000 volt megger, on each conductor of the installed submarine cable assembly:
   a. Insulation Resistance (IR): Measure and record the IR of each conductor to the rest of the conductors in the conduit. Measure and record the IR of each conductor to ground.
   b. Calculate and record the Polarization Index (PI) for each conductor as discussed in IEEE 62-1995 Revision using the 60 second and 10 minute readings.
2. IR readings of less than 100 MΩ are unacceptable. PI readings of less than 1.0 are unacceptable.
3. If more than 10 percent of conductors in any conduit fail the PI or the IR measurements then all the conductors are deemed to be defective and have to be replaced.
4. If, at any time during construction, or after the initial testing described above, any of the conduits in the submarine cable assembly is damaged, then perform the IR and PI tests again on the conductors in that conduit except that the IEEE 62-1995 Revision 30 second and 60 second readings can be used to determine the PI.
5. Require that the testing be submitted to the Engineer and EOR for review and approval.

Modification for Non-Conventional Projects:
Add the following sentence at the end of ***SDG*** 8.1.11: See the RFP for additional requirements.

8.2 MAINTAINABILITY

8.2.1 General

These maintainability guidelines apply to new bridges and existing bridge rehabilitations.

8.2.2 Trunnion Bearings

A. Design trunnion bearings so that replacement of bushings can be accomplished with the leaf jacked 1/2-inch and in a horizontal position. Provide suitable jacking holes or puller grooves in bushings to permit extraction. Jacking holes must utilize standard bolts pushing against the housing that supports the bushing.

B. Specify trunnion bushings and housings of split configuration. The bearing cap and upper-half bushing (if an upper-half bushing is required) must be removable without leaf jacking or removal of other components.

8.2.3 Leaf-Jacking of New Bridges

A. Stationary stabilizing connector points are located on the bascule pier. These points provide a stationary support for stabilizing the leaf, by connection to the leaf stabilizing connector points. Locate one set of leaf-jacking surfaces under the trunnions (normally, this will be on the bottom surface of the bascule girder). Locate a second set on the lower surface at the rear end of the counterweight. Estimate jacking loads at each location and indicate on the drawings. Include jacking related notes as needed.

B. Locate leaf stabilizing connector points on the bascule girder forward and back of the leaf jacking surfaces. The stationary stabilizing connector point (forward) must be in the region of the Live Load Shoe. Locate stationary stabilizing connector points (rear) on the cross girder support at the rear of the bascule pier. Provide connector points to attach stabilizing structural steel components.

Commentary: Position the stationary jacking surface at an elevation as high as practical so that standard hydraulic jacks are usable.

C. The following definitions of terms used above describe elements of the leaf-jacking system:

1. Leaf-jacking Surface: An area located under the trunnion on the bottom surface of the bascule girder.
2. Leaf Stabilizing Connector Point (forward): An area adjacent to the live load shoe point of impact on the bottom surface of the bascule girder.
3. Leaf Stabilizing Connector Point (rear): An area at the rear end of the counterweight on the lower surface of the counterweight girder. (NOTE: For bascule bridges having tail locks, the leaf stabilizing connector point may be located on the bottom surface of the lockbar receiver located in the counterweight.)
4. Stationary Jacking Surface: The surface located on the bascule pier under the leaf jacking surfaces. The stationary jacking surface provides an area against which to jack in lifting the leaf.

8.2.4 Trunnion Alignment Features

A. Specify center holes in trunnions to allow measurement and inspection of trunnion alignment. Leaf structural components must not interfere with complete visibility through the trunnion center holes. Specify individual adjustment for alignment of trunnions.

B. Detail a permanent walkway or ladder with work platform to permit inspection of trunnion alignment.

8.2.5 Lock Systems

A. Do not specify tail locks for new bridge designs unless required by the bridge design and approved by the SSDE.

B. Design lock systems to allow disabling an individual lock, for maintenance or replacement, without interfering with the operation of any of the other lockbars on the bascule leaf.

C. Design tail locks, when required, so that the lockbar mechanism is accessible for repair without raising the leaf. The lockbar drive mechanism must be accessible from a permanently installed platform within the bridge structure.

D. Detail adjustable lockbar clearances for wear compensation.

8.2.6 Machinery Drive Systems

Design machinery drive assemblies so that components are individually removable from the drive system without removal of other major components of the drive system.

Commentary: For example, a gearbox assembly is removable by breaking flexible couplings at the power input and output ends of the gearbox.

8.2.7 Lubrication Provisions

A. Bridge system components requiring lubrication must be accessible without use of temporary ladders or platforms. Detail permanent walkways and stairwells to permit free access to regions requiring lubrication. Lubrication fittings must be visible, clearly marked and easily reached by maintenance personnel.

B. Designs for automatic lubrication systems must provide for storage of not less than three months supply of lubricant without refilling. Detail a vandal-proof connection box located on the bridge sidewalk, clear of the roadway, for refilling. Blockage of one traffic lane during this period is permitted.

8.2.8 Drive System Bushings

All bearing housings and bushings in open machinery drive and lock systems must utilize split-bearing housings and bushings and must be individually removable and replaceable without affecting adjacent assemblies.

8.2.9 Local Switching

A. Specify “Hand-Off-Automatic” switching capability for maintenance operations on traffic gate controllers, barrier gate controllers, sidewalk gate controllers, brakes and motors for span and tail-lock systems. Specify pushbuttons and indicating lights on MCC for local “hand” operation.

B. Specify “On-Off” switching capability for maintenance operations on main drive motor(s) and machinery brakes, and motor controller panels.

C. Specify lockable remote switches for security against vandalism.

8.2.10 Service Accessibility

A. Specify a service area not less than 30-inches wide around system drive components.

B. Specify a permanent walkway from bascule pier to fender system to allow access to fender-mounted components.

8.2.11 Service Lighting and Receptacles

A. Specify lighting of machinery and electrical rooms as necessary to assure adequate lighting for maintenance of equipment, but with a minimum lighting level of 20 fc.

B. Specify switching so that personnel can obtain adequate lighting without leaving the work area for switching. Specify master switching from the control tower.

C. Specify each work area with receptacles for supplementary lighting and power tools such as drills, soldering and welding equipment. Specify 20 ampere circuits and do not show more than six receptacles connected to a circuit.

8.2.12 Communications

Specify permanent communications equipment between the control tower and areas requiring routine maintenance (machinery drive areas, power and control panel locations, traffic gates and waterway).

8.2.13 Diagnostic Reference Guide for Maintenance

Specify diagnostic instrumentation and system fault displays for mechanical and electrical systems. Display malfunction information on a control system monitor located in the bridge control house. Record all data. System descriptive information, such as ladder diagrams and wiring data, must be available on the system memory to enable corrective actions on system malfunctions and to identify areas requiring preventive maintenance.

8.2.14 Working Conditions for Improved Maintainability

Specify, for either new or rehabilitated bascule bridge design, enclosed machinery or electrical equipment areas with air-conditioned areas containing electronic equipment to protect the equipment as required by the equipment manufacturer and the SSDE.

8.2.15 Weatherproofing

A. Incorporate details to prevent water drainage and sand deposition into machinery areas on new and rehabilitated bascule bridge designs. Avoid details that trap dirt and water; provide drain holes, partial enclosures, sloped floors, etc., to minimize trapping of water and soil.

B. Specify a 2-inch concrete pad under all floor mounted electrical equipment.

8.3 CONSTRUCTION SPECIFICATIONS AND DESIGN CALCULATIONS

A. Use the "Technical Special Provisions" issued by the SDO as a boilerplate. Additional or modified specifications may be required.

B. Provide detailed calculations to justify all equipment and systems proposed with the 60% Plans Submittal. Provide catalog cuts or sketches showing centerlines, outlines and dimensions.

Modification for Non-Conventional Projects:

Delete ***SDG*** 8.3.B and insert the following:

B. Provide detailed calculations to justify all equipment and systems proposed with the 60% component superstructure submittal. These calculations shall be included in the 90% component superstructure submittal when a 60% submittal is not required in the RFP. Provide catalog cuts or sketches showing centerlines, outlines, and dimensions.

C. Submit calculations in an 8½-inch x 11-inch binder.

8.4 DOUBLE LEAF BASCULE BRIDGES

For the design of double leaf bascule bridges, assume the span locks are driven (engaged) to transmit live load to the opposite leaf. In addition, use the Strength II Limit State, with HL93 live load, assuming the span locks are not engaged to transmit live load to the opposite leaf. Use the Redundancy Factors in ***SDG*** 2.10 as appropriate.

For load rating of double leaf bascule bridges, use the system factors given in the ***FDOT Bridge Load Rating Manual***. Ensure the Design Inventory and FL120 Permit load ratings are greater than 1.0 assuming the span locks are driven (engaged) to transmit live load to the opposite leaf. In addition, ensure the Strength I Design Operating load rating is greater than 1.0 assuming the span locks are not engaged to transmit live load to the opposite leaf. Report the load ratings in the plans along with the span lock assumptions.

For both cases, assume the live load to be on the tip side (in front) of the trunnion.

Commentary: Consistency is achieved between Design and Load Rating since the Design Strength II Limit State has the same 1.35 live load factor as the Load Rating Strength I Limit State under Design Operating. Requiring a Strength I Design Operating load rating factor of one with the span locks removed ensures a safe structure in a worst case span lock condition.

8.5 SPEED CONTROL FOR LEAF-DRIVING SYSTEMS (LRFD-MHBD 5.4)

A. Design a drive system that is capable of operating the leaf in no more than 70 seconds (see Figure 8.5-1) under normal conditions.

Figure 8.5-1 Speed Ramp

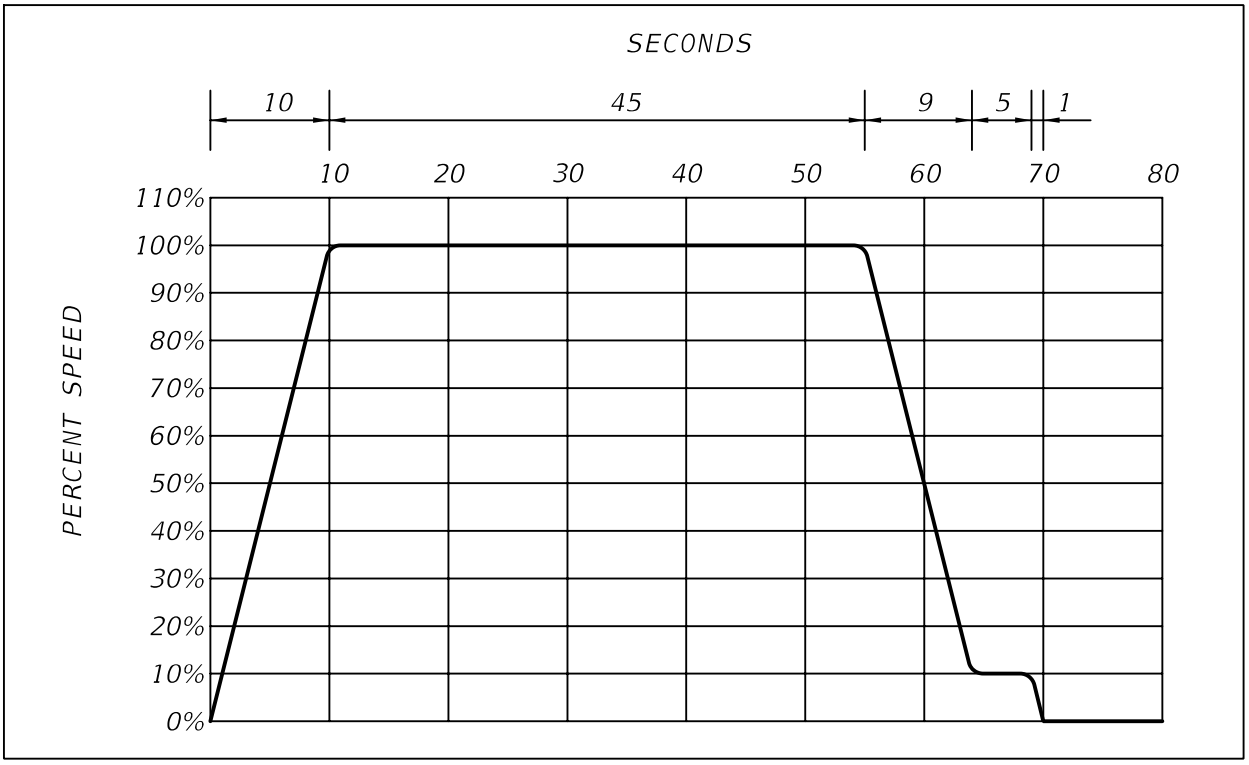

B. Clearly indicate on the plans the following required torques:

1. T_A - the maximum torque required to accelerate the leaf to meet the required time of operation.
2. T_S - the maximum torque required for starting the leaf.
3. T_{CV} - the maximum torque required for constant velocity.

8.5.1 Mechanical Drive Systems (LRFD-MHBD 5.4)

A. Specify a drive capable of developing the torques stated above and operating the leaf (at full speed) in the 70 seconds time limit.

B. Compute the acceleration torque for the inertia and the loading specified for the maximum constant velocity torque ***LRFD-MHBD*** 5.4.2. In addition the drive must be capable of meeting the maximum starting torque requirements, and the machinery must be capable of holding the leaf against 20 psf wind load in full open leaf position ***LRFD-MHBD*** 5.4.2.

8.5.2 Hydraulic Drive Systems (LRFD-MHBD 7)

A. Specify hydraulic drive systems only for rehabilitations. See ***SDG*** 8.7.

B. Design a drive capable of developing the acceleration torque required for the inertia and the loading specified for the maximum constant velocity torque ***LRFD-MHBD*** 5.4.2 and operating the leaf at full speed in the 70 seconds time limit stated above.

C. Operation under abnormal conditions is allowed to exceed 70 seconds. Do not exceed 130 seconds under any condition.

8.6 MECHANICAL SYSTEMS

8.6.1 Trunnions and Trunnion Bearings (LRFD-MHBD 6.8.1.3)

A. Trunnions:

1. Provide shoulders with fillets of appropriate radius. Provide clearances for thermal expansion between shoulders and bearings.
2. Do not show keys between the trunnion and the hub.
3. For trunnions over 8-inch diameter, provide a hole 1/5 the trunnion diameter lengthwise through the center of the trunnion. Extend the trunnion at least 5/8inch beyond the end of the trunnion bearings. Specify a 2-inch long counter bore concentric with the trunnion journals at each of the hollow trunnion ends.
4. In addition to the shrink fit, detail drill and fit dowels of appropriate size through the hub into the trunnion after the trunnion is in place.
5. For rehabilitation of existing Hopkins trunnions, verify that trunnion eccentrics have capability for adjustment to accommodate required changes in trunnion alignment and are a three-piece assembly. If not, provide repair recommendations.

B. Hubs and Rings:

1. Detail Hubs and Rings with a mechanical shrink fit.
2. See Figure 8.6.1-1, for minimum requirements.

Figure 8.6.1-1 Trunnion Hubs

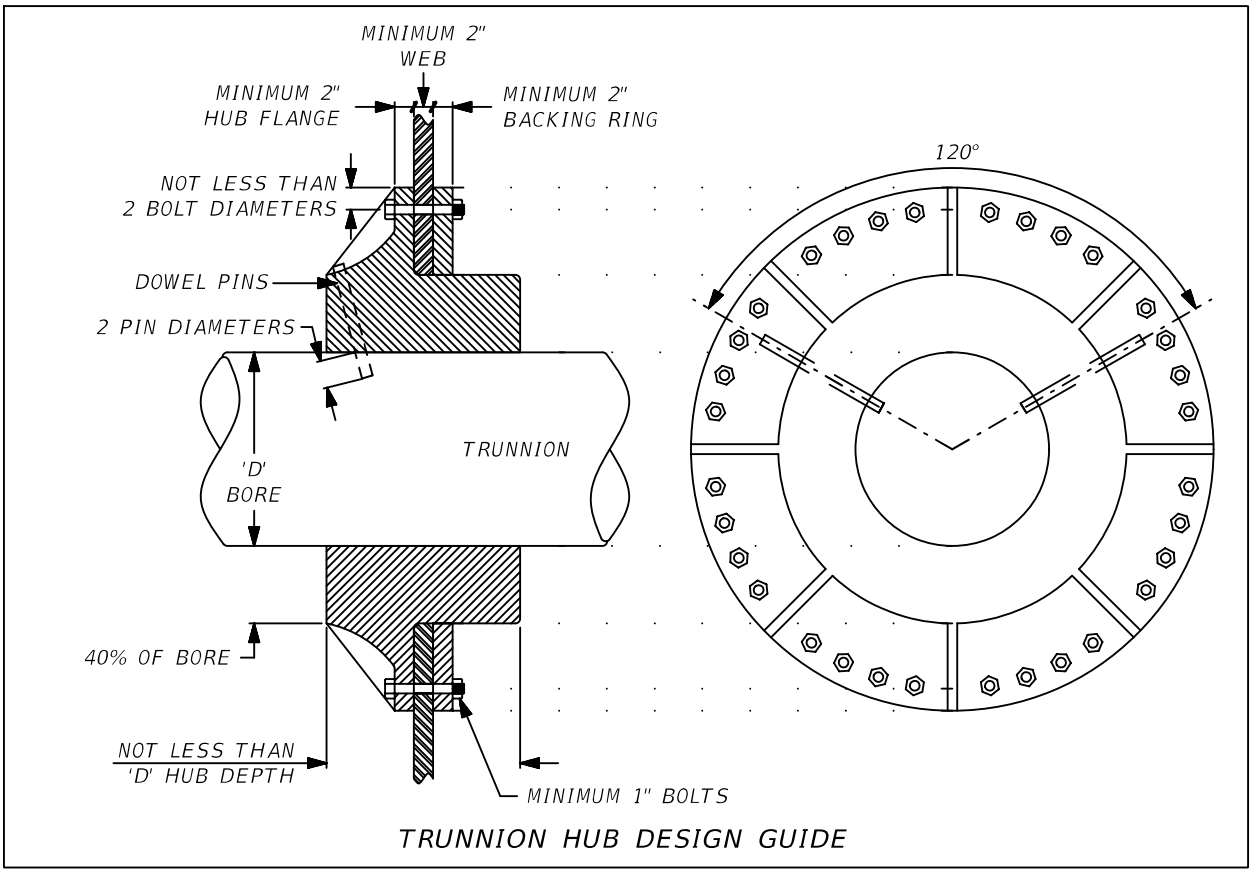

C. Trunnion Bearings:

1. When specifying anti-friction trunnion bearings, verify that the trunnion surface finish conforms to the bearing manufacturer's recommendations. Calculate deflections of the trunnion under load and compare with the manufacturer specified clearances to ensure that the journals do not bottom out and bind, particularly on rehabilitation and Hopkins frame bridges. Adjust clearances if necessary.
2. Specify a self-contained or freestanding welded steel support for each trunnion bearing. Design the pedestal such that the height will not exceed 2/3 of the larger dimension of the bearing footprint. Specify non-shrink epoxy grout at the support base and stainless steel shims at the bearing base for leveling and alignment. Design the footprint of the support at least 40% larger than the bearing footprint. Provide a minimum of 1.5-inches of grout thickness.
3. Design bearing mounting bolts and anchor bolts to be accessible.
4. Use full-size shims to cover entire footprint of bearing base.
5. Call out flatness and parallelism tolerances for bearing support machining. Call out position, orientation, and levelness tolerances for the support and bearing installation.
6. Detail machine surfaces per ***LRFD-MHBD*** 6.7.8.

8.6.2 Racks and Girders (LRFD-MHBD 6.8.1.2)

Detail a mechanical, bolted connection between the rack/rack frame and girder. Specify a machined finish for the connecting surfaces. Specify parallelism, perpendicularity, and dimension tolerances for rack.

8.6.3 Leaf Balance (LRFD-MHBD 1.5)

A. New Construction:

1. Design new bascule bridges such that the center of gravity is adjustable vertically and horizontally.
2. Design mechanical drive system bridges to meet following requirements:
   a. The center of gravity is forward (leaf heavy) of the trunnion and is located at an angle (α) 20 degrees to 50 degrees above a horizontal line passing through the center of trunnion with the leaf in the down position.
   b. Ensure the leaf is tail (counterweight) heavy in the fully open position.
3. Design both single and double leaf bascule for a leaf heavy out of balance condition that will produce an equivalent force of two kips minimum at the tip of the leaf when the leaf is down. Design the live load shoe to resist this equivalent leaf reaction in addition to other design loads.
4. Ensure that the maximum unbalance force is four kips at the tip of the leaf when the leaf is in the down position.
5. Include tight specifications on concrete density and pour thicknesses for controlling the weight balance in case of solid decks.
6. Do not specify lead counterweight blocks.

B. Rehabilitation Projects:

Optimal balance might not be possible when rehabilitating an existing leaf. When adjusting leaf balance, adhere to the following procedures:

1. If gears are used, apply provisions A.2, A.3, and A.4 above.
2. If hydraulics are specified, ensure the balance is such that the center of gravity is forward (leaf heavy) of the trunnion throughout the operating (opening) angle.

Include detailed leaf balance adjustment plans, including the location and weight of any ballast to be furnished and installed to achieve an acceptable balance condition.

Inform the SSDE if these conditions cannot be met.

Modification for Non-Conventional Projects:
Delete the last sentence of ***SDG*** 8.6.3.B.

C. Design Unbalance: For new and rehabilitated bridges, state the design unbalance in the plans using "**W**", "**L**" and "α".

Where: α = angle of inclination of the center of gravity above a horizontal line through the trunnion when the leaf is closed. **W** = total weight of the leaf. **L** = distance from the trunnion axis to the leaf center of gravity. Show center of gravity of leaf and counterweight.

8.6.4 Main Drive Gearboxes (LRFD-MHBD 6.7.6)

A. Specify and detail gearboxes to meet the requirements of the latest edition of ***ANSI/ AGMA 6013 Standard for Industrial Enclosed Gear Drives***. Specify and detail gearing to conform to ***ANSI/AGMA 2015-1-A01***, Accuracy Grade A8 or better using a Service Factor of 1.0 or higher and indicating input and output torque requirements.

B. Allowable contact stress numbers, "Sac," must conform to the current AGMA 2001 Standard for through hardened and for case-hardened gears.

C. Allowable bending stress numbers, "Sat," must conform to the current AGMA 2001 Standard for through hardened and for case-hardened gears.

Commentary: These allowable contact and bending stress numbers are for AGMA Grade 1 materials. Grade 2 allowables are acceptable only with an approved verification procedure and a sample inspection as required per the SSDE.

D. Indicate that all gearboxes on a bridge are models from one manufacturer. Include gear ratios, dimensions, construction details, and AGMA ratings on the Drawings.

E. Specify a gearbox capable of withstanding an overload torque of 300% of full-load motor torque. This torque must be greater than the maximum holding torque for the leaf under the maximum brake-loading conditions.

F. Specify gears with spur, helical, or herringbone teeth. Bearings must be anti-friction type and must have an L-10 life of 40,000 hours as defined in AASHTO, except where rehabilitation of existing boxes requires sleeve-type bearings. Housings must be welded steel plate or steel castings. The inside of the housings must be sandblast-cleaned prior to assembly, completely flushed, and be protected from rusting. Specify exact ratios.

G. Specify units with means for filling and completely draining the case. Specify drains with shutoff valves to minimize spillage. Furnish each unit with a moisture trap breather of the desiccant type with color indicator to show desiccant moisture state.

H. Specify an inspection cover to permit viewing of all gearing (except the differential gearing, if impractical), and both a dipstick and a sight oil level gauge to show the oil level. Specify sight oil-level gauges of rugged construction and protected from breakage.

Commentary: If specifying a pressurized lubrication system for the gearbox, include a redundant lubrication system. The redundant system must operate whenever the primary system is functioning.

I. Design and detail each gearbox with its associated brakes and motors mounted on a welded support. Do not use vertically stacked units and components. Detail and dimension the supports. Size and locate all mounting bolts and anchor bolts. Use non-shrink epoxy grout at support base.

8.6.5 Open Gearing (LRFD-MHBD 6.7.5)

Limit the use of open gearing. When used, design open gearing per AGMA specifications. Design and specify guards for high-speed gearing. Provide Accuracy Grade A9 or better per ***ANSI/AGMA 2015-1-A01***.

8.6.6 Span Locks (LRFD-MHBD 6.8.1.5.1)

A. General:

1. Locate span locks in traffic railings. Provide inspection and maintenance access from the interior side of the traffic railing.
2. Provide span lock hydraulic cylinders and linear actuators with a 1-inch minimum reserve stroke.
3. Specify a 4-inch x 6-inch minimum rectangular lock bars, unless analysis shows need for a larger size. Submit design calculations and the selection criteria for review and approval.
4. Install the bar in the guides and receivers with bronze wear fittings top and bottom, properly guided and shimmed. Provide lubrication at the sliding surfaces. Both the front and rear guides are to have a "U" shaped wear-plate that restrains the bar sideways as well as vertically. The receiver is to have a flat wear-plate to give freedom horizontally to easily insert the lock-bar in the opposite leaf. The total vertical clearance between the bar and the wear-shoes must be 0.010-inch to 0.025-inch. Specify the total horizontal clearance on the guides to be 1/16-inch ±1/ 32-inch.
5. Mount guides and receivers with 1/2-inch minimum shims for adjusting. Slot wear-plate shims for insertion and removal. Consider the ease of field replacing or adjusting shims in the span lock design.
6. Specify alignment and acceptance criteria for complete lock bar machinery, the bar itself in both horizontal and vertical, and for the bar with the cylinder.
7. Specify lubrication fittings at locations that are convenient for routine maintenance.
8. Mount actuation elements on the lock to activate limit switches to control each end of the stroke. Incorporate a means to adjust the limit switch actuation. Taper the receiver end of the lock-bar to facilitate insertion into the receivers of the opposite leaf.
9. Ensure the connection of the lock-bar to the hydraulic cylinder allows for the continual vibration due to traffic on the bridge. Specify self-aligning rod-end couplers or cylinders with elongated pinholes on male clevises. Mount limit

switches for safety interlocks to sense lock-bar position. Mount limit switches for span lock operator controls to sense rod position.

10. Specify a hydraulic power system utilizing a reversing motor-driven pump or a unidirectional pump with 4-way directional valve, and associated valves, piping, and accessories. Specify relief valves to prevent over pressure should the lock-bar jam. Specify pilot operated check valves in the lines to the cylinder to lock the cylinder piston in place when hydraulic pressure is removed. Provide a hydraulic hand pump and quick-disconnect fittings on the piping to allow pulling or driving of the lock-bar on loss of power. Specify the time of driving or pulling the bar at 5 to 9 seconds.

B. Lock Design Standards:

1. The empirical formula, Equation 8-1 listed below, can be used to determine double leaf bascule lock loads with acceptable results; however, more exact elastic analysis can be used if the solution thus obtained is not accurate enough.

$$S = (P/4)\,(A/L)^2\,(3-A/L) \qquad \text{[Eq. 8-1]}$$

S = Shear in lock in kips for a given load on the span, "**P**."

A = Distance in feet from the support to the given load, "**P**."

L = Distance in feet from the support to the center lock.

See Figure 8.6.6-1: for diagrammatic sketch of "**S**," "**A**," and "**L**."

Position trucks both transversely (multiple lanes) and longitudinally on the leaf such that the load on the lock bar is maximized.

Figure 8.6.6-1 Lock Design Criteria

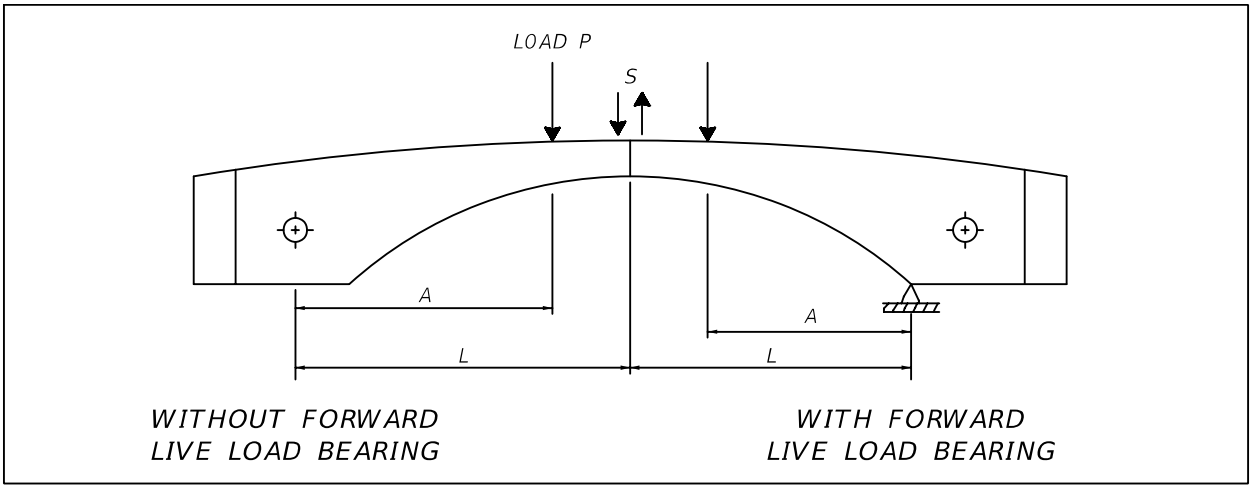

2. Use a Dynamic Load Allowance of 100% for Lock Design on a double-leaf bascule span expected to carry traffic with ADTT (Average Daily Truck Traffic) > 2,500.

8.6.7 Brakes (LRFD-MHBD 5.6 and 6.7.13)

A. Specify thrustor type brakes. Specify double pole, double throw limit switches to sense brake fully set, brake fully released, and brake manually released.

B. Provide a machinery brake and a motor brake. Submit calculations justifying the brake torque requirements. Specify AISE-NEMA brake torque rating in the plans. Ensure that both dimensions and torque ratings are per AISE Technical Report No. 11, September 1997. Show brake torque requirements on plans.

C. Carefully consider machinery layout when locating brakes. Avoid layouts that require removal of multiple pieces of equipment for maintenance of individual components.

D. Ensure that brakes are installed with base in horizontal position only.

8.6.8 Couplings (LRFD-MHBD 6.7.9.3)

A. Submit calculations and manufacturer's literature for coupling sizes specified.

B. Provide coupling schedule on plans. Include torque ratings, and bore sizes, key sizes, and number of keys for the driver and driven sides.

C. Specify coupling guards.

D. Specify low maintenance couplings.

8.6.9 Clutches

Rate clutches for emergency drive engagement for the maximum emergency drive torque. The engaging mechanism must be positive in action and designed to remain engaged or disengaged while rotating at normal operating speed. Make provisions so that the main operating drive is fully electrically disengaged when the clutch is engaged. Specify double pole, double throw limit switches to sense fully engaged and fully disengaged positions.

8.6.10 Bearings (Sleeve and Anti-Friction) (LRFD-MHBD 6.7.7)

A. Sleeve Bearings must be grease-lubricated bronze bushings 8-inches in diameter and less and must have grease grooves cut in a spiral pattern for the full length of the bearings. Provide cast-steel base and cap for bearings. Specify caps with lifting eyes with loads aligned to the plane of the eye.

B. Anti-Friction Bearing pillow block and flange-mounted roller bearings must be adaptor mounting, self-aligning, expansion and/or non-expansion types.

   1. Specify cast steel housings capable of withstanding the design radial load in any direction, including uplift. Specify that same supplier shall furnish the bearing and housing.

   2. Specify bases cast without mounting holes so that at the time of assembly with the supporting steel work, mounting holes are "drilled-to-fit" in the field.

3. Specify that seals must retain the lubricant and exclude water and debris.
4. Specify high-strength steel cap bolts on pillow blocks. The cap and cap bolts must be capable of resisting the rated bearing load as an uplift force. Where clearance or slotted holes are used, fill the clearance space, after alignment, with a nonshrink grout suitable for steel to ensure satisfactory side load performance.

C. Bearing Supports:

1. Detail a self-contained, welded, steel support for each pair of pinion bearings. Avoid shapes and conditions that trap water, or collect debris.
2. Mount bearings and supports in horizontal position only, along both the axes.
3. Indicate or specify flatness and parallelism, position, levelness, and orientation tolerances for the supports.
4. Machine the mounting surface per ***LRFD-MHBD*** 6.7.8.
5. Design to assure that the anchor bolts will be accessible for hydraulic tensioning.
6. Provide a minimum of 30-inches service clearance all-around.

8.6.11 Anchors (LRFD-MHBD 6.4.1.4)

A. For machinery supports anchored to concrete, design for the maximum forces generated in starting or stopping the leaf plus 100% impact. Design hydraulic cylinder supports for 150% of the relief valve setting or the maximum operating loads plus 100% impact, whichever is greater. Detail machinery supports anchored to the concrete by preloaded anchors such that no tension occurs at the interface of the steel and concrete under any load conditions.

B. Mechanical devices used as anchors must be capable of developing the strength of reinforcement without damage to the concrete. All concrete anchors must be undercut bearing, expansion-type anchors. Develop the anchorage by expanding an anchor sleeve into a conical undercut to eliminate direct lateral stresses found in the setting of conventional anchors. The expansion anchors must meet the ductile failure criteria of American Concrete Institute (ACI) ***CODE-349,*** Appendix B. Design an expansion anchoring system that can develop the tensile capacity of the bolt without slip or concrete failure. The bolt must consistently develop the minimum specified strength of the bolting material to provide a favorable plastic stretch over the length of the bolt prior to causing high-energy failure. Require pullout testing of anchors deemed to be critical to the safe operation of the bridge machinery system. Perform pullout verification tests at not less than 200% of maximum operational force levels.

C. Design the conical undercut and the nut to transfer the bolt tension load into direct bearing stress between the conical nut and expansion sleeve and the expansion sleeve and conical concrete surface. The depth and diameter of the embedment must be sufficient to assure steel failure, with concrete cone shear strength greater than the strength of the bolting material.

D. Anchor Bolt Design:

1. Design anchor bolts subject to tension at 200% of the allowable basic stress and shown, by tests, to be capable of developing the strength of the bolt material without damage to the concrete.
2. Base the design strength of embedment on the following maximum steel stresses:
   a. Tension, $\mathbf{fs_{max} = 0.9f_y}$
   b. Compression and Bending, $\mathbf{fs_{max} = 0.9f_y}$
   c. Shear, $\mathbf{fs_{max} = 0.55f_y}$ (apply shear-friction provisions of ***ACI CODE-318***, Section 11.7)
   d. Reduce the permissible design strength for the expansion anchor steel to 90% of the values for embedment steel.
   e. For bolts and studs, consider the area of steel required for tension and shear based on the embedment criteria as additive.
   f. Calculate the design pullout strength of concrete, $\mathbf{P_{c'}}$ in pounds, as:

      $$\mathbf{P_{C'} = 3.96\varphi\sqrt{f'_C}*A}$$

      Where:

      $\boldsymbol{\varphi}$ = Capacity reduction factor, **0.65**

      A = Projected effective area of the failure cone, in^2

      $\mathbf{f'_c}$ = Specified compressive strength of concrete, psi

   g. Steel strength controls when the design pullout strength of the concrete, $\mathbf{P_{c'}}$ exceeds the minimum ultimate tensile strength of the bolt material.
   h. The effective stress area is the projected area of the stress cone radiating toward the concrete surface from the innermost expansion contact surface between the expansion anchor and the drilled hole.
   i. The effective area must be limited by overlapping stress cones, by the intersection of the cones with concrete surfaces, by the bearing area of anchor heads, and by the overall thickness of the concrete. The design pullout strength of concrete must be equal to or greater than the minimum specified tensile strength (or average tensile strength if the minimum is not defined) for the bolting material.

8.6.12 Fasteners (LRFD-MHBD 6.7.15)

A. Ensure all bolts for connecting machinery parts to each other and to supporting members are shown on the plans or specified otherwise and conform to one of the following types:

1. High-strength bolts.
2. Turned bolts, turned cap screws, and turned studs.
3. High-strength turned bolts, turned cap screws, and turned studs.

B. Specify fasteners as per the requirements of ***LRFD-MHBD***.

C. Turned bolts, turned cap screws, and turned studs must have turned shanks and cut threads. Turned bolts must have semi-finished, washer-faced, hexagonal heads and nuts. All finished shanks of turned fasteners must be 0.06-inch larger in diameter than the diameter of the thread, which must determine the head and nut dimensions.

D. Threads for cap screws must conform to the Unified Coarse Thread Series, Class 2A. For bolts and nuts, the bolt must conform to the Coarse Thread Series, Class 2A. The nut must be Unified Coarse, Class 2B. in accordance with the ANSI B1.1 Screw Threads.

E. Furnish positive locks of an approved type for all nuts except those on ASTM F3125 Grade A325 Bolts. If double nuts are used, use them for all connections requiring occasional opening or adjustment. Provide lock washers made of tempered steel if used for securing.

F. Specify high-strength bolts with a hardened plain washer meeting ASTM F436 at each end.

G. Wherever possible, insert high strength bolts connecting machinery parts to structural parts or other machinery parts through the thinner element into the thicker element.

H. Specify cotters that conform to SAE standard dimensions and are made of half-round stainless steel wire, ASTM A276, Type 316.

8.7 HYDRAULIC SYSTEMS FOR REHABILITATIONS (LRFD-MHBD 7)

A. Perform complete analysis and design of hydraulic systems utilized for leaf drive and control, including evaluation of pressure drops throughout the circuit for all loading conditions. Calculate pressure drops for all components of their circuits including valves, filters, hoses, piping, manifolds, flow meters, fittings, etc. Determine power requirements based upon pressure drops at the required flows and conservative pump efficiency values.

B. Design the system so that normal operating pressure is limited to 2,500 psi. During short periods in emergency operations, pressure can increase to 3,000 psi, maximum. Correlate hydraulic system strength calculations with the structure loading analysis.

C. Design the power unit and driving units for redundant operation so that the bridge leafs can operate at a reduced speed with one power unit or one driving unit out of service. Design the power unit to permit its installation and removal in the bridge without removing any major components. Design the power unit to allow the removal of each pump, motor, filter, and main directional valves without prior removal of any other main components. Ensure operation of the redundant components is possible with the failed component removed from the system.

D. Design all leaf operating hydraulic components within the pier enclosure to prevent any escape of oil to the environment. Specify a drip pan extending beyond the outermost components of the power unit and flange connections to prevent spilling oil leakage on the machinery room floor. Specify sump pumps and other clean up devices suitable for safe collecting and removing of any spilled oil.

E. Design the hydraulic system to limit the normal operating oil temperature to 170° F during the most adverse ambient temperature conditions anticipated.

F. Specify acceptance criteria for hydraulic systems to require pressure uniformity among multiple cylinders of the same leaf.

8.7.1 Hydraulic Pumps (LRFD-MHBD 7.5.5)

Specify minimum pressure rating of pumps to be 1.5 times the maximum operating pressure. Specify pumps of the Pressure Compensated type. Variation of the pressure setting, including ±50 cst viscosity change must be ±2.5% maximum. Overall minimum efficiency must be 0.86. Boost pumps of any power, and auxiliary or secondary pumps less than 5 hp, need not be pressure compensated.

8.7.2 Cylinders

A. Design the hydraulic cylinder drive systems to prevent sudden closure of valves, and subsequent sudden locking of cylinders, in the event of a power failure or emergency stop. Specify cylinders designed according to the ASME Boiler and Pressure Vessel Code, Section VIII. Specify cylinders with a minimum static failure pressure rating of 10,000 psi as defined by NFPA Standards; and designed to operate on biodegradable hydraulic fluid unless otherwise approved by the SSDE. Specify ports on each end of the cylinder for pressure instrumentation and bleeding.

B. For all non-drive cylinders, specify stainless steel rods with chrome plated finish 0.005 to 0.012-inches thick per SAE AMS 2406L, Class 2a or others as approved by the SSDE.

C. Specify rod-end and cap-end cushions.

D. Design the main lift cylinders with pilot operating counterbalance or other load protection valves. Specify manual over-ride valve operators to allow lowering the leaf without power. Ensure they are manifolded directly to ports of cylinder barrel and hold load in position if supply hoses leak or fail.

8.7.3 Control Components (LRFD-MHBD 7.5.6)

A. Flow Control Valves: Limit the use of non-compensated flow control valves to applications where feed rates are not critical and where load induced pressure is relatively constant. Where load induced pressure is variable, specify pressure compensated flow control valves.

B. Directional Valves: Avoid vertical mounting of solenoid Directional Valves where solenoids are hanging from the valve; horizontal mounting is recommended. Solenoid operated directional control valves provided with a drain connection to reduce response times must always be mounted horizontally.

C. Relief Valves: Specify relief valves to protect all high-pressure lines.

D. Check Valves: Specify poppet type check valves on main circuits or located to hold loads.

8.7.4 Hydraulic Lines (LRFD-MHBD 7.9.1)

A. Piping: Specify stainless steel piping material conforming to ASTM A312 Grade TP316L. For pipe, tubing, and fittings, the minimum ratio of burst pressure rating divided by design pressure in the line must be four. Provide calculations indicating that the velocity of fluid is at or below 4.3 ft/s in suction lines, 6.5 ft/s in return lines, and 21.5 ft/s in pressure lines.

B. Manifolds: Specify the use of manifolded components.

C. Flexible Hose: Specify flexible hose only in cases where motion or vibration makes the use of rigid piping undesirable. Ensure that the minimum ratio of burst pressure rating divided by design pressure in the line is four.

D. Seals: Specify all seals, including the ones installed inside hydraulic components, to be fully compatible with the hydraulic fluid being used and adequate for the maximum pressure and temperature operating at that point.

8.7.5 Miscellaneous Hydraulic Components

A. Receivers (Reservoirs): Ensure tanks in open loop systems have a capacity greater than the maximum flow of three minutes operation of all pumps connected to the tank plus 10%, and/or the capacity of the total oil volume in the system. Tanks must have an adequate heat dissipation capacity to prevent temperatures above 170° F. Tanks in closed-loop hydrostatic systems must circulate, filter, and cool enough oil to maintain a maximum oil temperature of 170° F. Specify suction port strainers with oil shut-off valves. Specify tanks with easy drainage and provided with adequate openings that allow easy cleaning of all surfaces from the inside. Specify sumps with magnetic traps to capture metal particles. Specify Stainless Steel ASTM A316L tank

material. Specify the use of air bladders to avoid water contamination from air moisture condensation due to the breathing effect of the tank.

B. Filtration: Design and specify a filtering system so that filters can be easily serviced and filter elements can be changed without disturbing the system. Do not specify valves that can be left in the closed position. Strainers are allowed in the suction lines between the tank and the main pumps. Use filters if the system is capable of maintaining enough static head under all operating conditions at the pumps' inlets. Require absolute pressure (vacuum) sensors to stop the pumps if adequate suction head is not available at the pumps' inlets and specify pressure line filters capable of at least 10-micron filtration between the pump outlet and the rest of the hydraulic system. The system must have filters with relief-check, by-pass valve and visual clogged filter indicators. Specify a remote sensing pressure switch to indicate a clogged filter. The relief-check, bypass-valve lines must also be filtered.

C. Hydraulic Fluids: Ensure that the manufacturers of the major hydraulic components used in the bridge approve the hydraulic fluid specified for use.

8.8 ELECTRICAL SYSTEMS (LRFD-MHBD 8)

8.8.1 Electrical Service (LRFD-MHBD 8.3)

A. Wherever possible, design bridge electrical service for 277/480 V, three-phase, "wye."

Modification for Non-Conventional Projects:
Delete ***SDG*** 8.8.1.A and see the RFP for requirements.

B. Size feeders to limit voltage drop to not more than 5% from point of service to farthest load.

C. Do not apply a diversity factor when calculating loads.

D. Provide calculations for transformer and motor inrush current, short circuit currents, and voltage drop.

8.8.2 Conductors (LRFD-MHBD 8.9)

A. Single conductor stranded insulated wire. Specify XHHW-2 rated 600 VAC. Specify USE-2, or RHW-2 insulated wire for incoming services. Use 75° C to calculate allowable ampacities.

B. Do not specify aluminum conductors of any size. Do not specify solid copper conductors.

C. Do not specify wire smaller than No. 12 AWG for power and lighting circuits and smaller than No. 14 AWG for control wiring between cabinets, except that control wiring within a manufactured cabinet may be No. 16 AWG. Minimum field wire size is No. 12 AWG for control conductors between cabinets and field devices and No. 10 AWG for motor loads. Specify No. 14 AWG pigtails, no longer than 12-inches, for connection of field devices that cannot accommodate a No. 12 AWG wire. Use No.

10 AWG for 20 A, 120 VAC, branch circuit home runs longer than 75-feet, and for 20 A, 277 VAC, branch circuit home runs longer than 200-feet.

D. Do not show power and control conductors in the same conduit.

E. If more than three current carrying conductors are included in a conduit, derate the conductors per Table 310.15(B)(2)(a) of the NEC. For derating purposes, consider all power conductors, other than the ground conductors, as current carrying. This requirement does not apply to control wires.

8.8.3 Grounding and Lightning Protection (LRFD-MHBD 8.12 and 8.13)

A. Provide the following systems:

1. Lightning Protection System: Design per the requirements of NFPA 780 Lightning Protection Code. Protect the bridge with Class II materials.
2. Surge Suppression System: Design the surge suppression system to protect all power, control, signaling, and communication circuits and all submarine conductors that enter or leave the control house. It is imperative to maintain proper segregation of protected and non-protected wiring within the Bridge Control House.
3. Grounding and Bonding System: Bond together all equipment installed on the bridge/project by means of a copper bonding conductor running the entire length of the project (Traffic Light to Traffic Light). All metal bridge components (i.e., handrail, roadway light poles, traffic gate housings, leafs, etc.) will be connected to the copper-bonding conductor. The copper-bonding conductor must remain continuous across the channel by means of the submarine bonding cable.

B. Require earth grounds at regular intervals with no less than two driven grounds at each pier and one driven ground at each overhead traffic light structure and traffic gate.

C. All main connections to the copper-bonding conductor must be cadwelded.

D. In areas where the copper-bonding conductor is accessible to non-authorized personnel, enclose in Schedule 80 PVC conduit with stainless steel supports every 5-feet.

8.8.4 Conduits (LRFD-MHBD 8.10)

A. Do not specify aluminum, IMC, or EMT conduits. Specify conduit types as follows:

1. 1-inch minimum size Schedule 80 PVC for underground installations and in slab above grade (embedded)
2. 1-inch minimum diameter size rigid galvanized steel (PVC coated) for outdoor locations, above grade, exposed (leafs) and exposed in dry locations (in pier, control house)
3. 1-inch minimum size Schedule 80 PVC for wet and damp locations (fender)

4. Schedule 80 HDPE conduit for submarine cable installation only, UL listed for 600 V electrical applications
5. 3/4-inch minimum diameter (nominal size) liquid-tight flexible metal conduit for the connection of motors, limit switches, and other devices that need to be periodically adjusted.
6. Limit liquid-tight flexible metal conduit to 2-feet in length and specify a bonding jumper.

B. Specify conduit supports at no more than 5-foot spacing.

C. Show no more than the equivalent of three 90-degree bends between boxes.

8.8.5 Service Lights (LRFD-MHBD 8.11)

Provide minimum of 20 fc in all areas of the machinery platform.

8.8.6 Motor Controls (LRFD-MHBD 8.6)

A. Specify full-size NEMA rated starters. Do not use IEC starters unless space constraints require their use, and then, only by obtaining prior approval from the SSDE.

B. Provide seal-in functions at starters only using auxiliary starter contacts, do not use separate relays or PLC outputs.

C. Do not include panelboards and transformers in the Motor Control Center (MCC) unless space constraints require it, and then, only by obtaining prior approval from the SSDE.

D. Provide local disconnect switches for all motors per the requirement of the NEC.

1. For main drive motors 75 hp or larger, connected to an AC or DC variable speed controller, a local disconnect is not required provided that the controller is equipped with a disconnecting means, operable without opening the controller door, capable of being locked in the open position.
2. Provide a permanent sign or placard, close to the motor, indicating the location of the controller.

E. Never directly connect a PLC output to a motor starter.

F. See ***SDG*** 8.2.9 Local Switching for more requirements.

8.8.7 Alternating Current Motors (LRFD-MHBD 8.5)

Size and select motors per ***LRFD-MHBD*** requirements. On hydraulic systems, provide 25% spare motor capacity. Specify motors that comply with the following requirements:

A. Design Criteria for Start-Ups: 12 per hour, 2 per ten-minute period.

B. Power Output, Locked Rotor Torque, Breakdown or Pullout Torque: NEMA Design B Characteristics.

C. Testing Procedure: ANSI/IEEE 112, Test Method B. Load test motors to determine freedom from electrical or mechanical defects and compliance with performance data.

D. Motor Frames: NEMA Standard T-frames of steel or cast iron (no aluminum frames allowed) with end brackets of cast iron with steel inserts. Motors 10 Hp and larger must be TEFC.

E. Thermistor System (Motor Sizes 25 Hp and Larger): Three PTC thermistors embedded in motor windings and epoxy encapsulated solid-state control relay for wiring into motor starter.

F. Bearings: Grease-lubricated, anti-friction ball bearings with housings equipped with plugged provision for relubrication, rated for minimum AFBMA 9, L-10 life of 20,000 hours. Calculate bearing load with NEMA minimum V-belt pulley with belt centerline at end of NEMA standard shaft extension. Stamp bearing sizes on nameplate.

G. Nominal Efficiency: Meet or exceed values in ANSI Schedules at full load and rated voltage when tested in accordance with ANSI/IEEE 112.

H. Nominal Power Factor: Meet or exceed values in ANSI Schedules at full load and rated voltage when tested in accordance with ANSI/IEEE 112.

I. Insulation System: NEMA Class F or better, or NEMA Class H for inverter duty motors.

J. Service Factor: 1.0.

8.8.8 Electrical Control (LRFD-MHBD 8.4)

A. Design an integrated control system. Develop a control interface that matches the operating needs and skill levels of the bridge operators and maintenance personnel that will be using the system. Design a system configuration, select control devices, and program the Programmable Logic Controller (PLC) to produce the desired interface that will comply with the Operation Sequence furnished by the SDO.

Modification for Non-Conventional Projects:
Delete ***SDG*** 8.8.8.A and insert the following: A. Design an integrated control system. Develop a control interface that is easy to operate. See the RFP for additional requirements.

B. Do not specify touch-screen controls for permanent installations.

C. Ensure that no control component or electrical equipment requires manual reset after a power failure. Ensure all systems return to normal status when power is restored.

D. Specify an uninterruptible power supply to power the bridge control system.

E. EMERGENCY-STOP (E-STOP) stops all machinery in the quickest possible time but in no less than 3 seconds main drives only. In an emergency, hit this button to stop machinery and prevent damage or injury. Specify a button resettable by twisting clockwise (or counterclockwise) to release to normal up position.

F. At a minimum, provide alarms for the following events:

1. All bridge control failures.
2. All generator/Automatic Transfer Switch failures.
3. All traffic signal failures.
4. All navigation light failures.
5. All traffic gate failures.
6. All span-lock failures.
7. All brake failures (if applicable).
8. All leaf limit switch failures.
9. All drive failures; including motor high temperature (motors larger than 25 Hp) and all hydraulic system failures.
10. Near and far-leaf total openings (not an alarm but part of the monitoring function).
11. All uses of bypass functions, type, and time (not an alarm but part of the monitoring function).

G. See Chapter 8 Appendices for Movable Bridge Alarms, Sequence, Sequence Flowcharts, Limit Switches, Indicating Lights, and Naming Conventions.

8.8.9 Programmable Logic Controllers (LRFD-MHBD 8.4.2.3)

Refer to the Technical Special Provisions issued by the SDO.

Modification for Non-Conventional Projects:
Delete ***SDG*** 8.8.9 and see the RFP for requirements.

8.8.10 Limit and Seating Switches (LRFD-MHBD 8.4.4)

A. Design each movable leaf with FULL-CLOSED, NEAR-CLOSED, NEAR-OPEN, FULL-OPEN, and FULL-SEATED limit switches. Specify NEMA 4, corrosion resistant metallic housings which have a high degree of electrical noise immunity and a wide operating range. Specify that NEAR-OPEN and NEAR-CLOSED limit switches be mounted, initially, approximately eight degrees from FULL-OPEN and FULLCLOSED,

respectively. Final adjustment of NEAR-OPEN and NEAR-CLOSED will depend upon bridge configuration, drive machinery, and bridge operation.

Commentary: The FULL-CLOSED switch controls the drive stop and the FULL-SEATED switch is the safety interlock to allow driving the locks.

B. Do not connect limit switches in series between different drives. Connect each limit switch to a relay coil (use interpose relays to connect to a PLC input.) Provide position transmitter (potentiometer or other type) to drive leaf position indicators on control console. The position transmitter will also provide a signal to the PLC to use as a reference to determine leaf limit switch failure. Connect limit switches in the following configurations:

   Traffic Gates: End-Of-Travel configuration.

   Span Locks: End-Of-Travel configuration.

   Leaf(s): End-Of-Travel configuration.

   Safety Interlocks: Indicating configuration.

Commentary: "End-Of-Travel" is a NOHC (Normally Open Held Closed) limit switch that opens to stop motion and "Indicating" is a NO (Normally Open) limit switch that closes to indicate position has been reached.

C. Do not use electronic limit switches. Plunger type switches are optional.

D. Show End-Of-Travel limit switches connected directly to the HAND-OFF-AUTO switches on the MCC so that manual operation of equipment from the MCC is possible independent of the condition of the control system.

8.8.11 Safety Interlocking (LRFD-MHBD 8.4.1)

A. Traffic Lights: Traffic gates LOWER permissive is not enabled until traffic lights RED. Provide bypass capability labeled TRAFFIC LIGHT BYPASS to allow traffic gates LOWER without traffic lights RED.

B. Traffic Gates:

   1. Bridge Opening: Span locks PULL permissive is not enabled until all traffic gates (on that span) are fully down (or TRAFFIC GATE BYPASS has been engaged).

   2. Bridge Closing: Traffic lights GREEN permissive is not enabled until all traffic gates (on that span) are fully raised (or TRAFFIC GATE BYPASS has been engaged).

   3. Provide bypass capability labeled TRAFFIC GATE BYPASS to allow span lock PULL without all traffic gates LOWERED or traffic lights GREEN without all traffic gates RAISED.

C. Span Locks:

   1. Bridge Opening: Leaf RAISE permissive is not enabled until all span locks are fully pulled (or SPAN LOCK BYPASS has been engaged).

2. Bridge Closing: Traffic gate RAISE permissive is not enabled until all span locks are fully driven (or SPAN LOCK BYPASS has been engaged).
3. Provide bypass capability and label SPAN LOCK BYPASS to allow leaf RAISE without all span locks pulled or traffic gate RAISE without all span locks DRIVEN.

D. Leaf:

1. Span locks DRIVE is not enabled until leaf (s) is (are) FULLY SEATED (as indicated by the FULLY SEATED switch).
2. Provide bypass capability and label LEAF BYPASS to allow span lock DRIVE without leaf (s) FULLY SEATED.

E. Any traffic gate arm moving off the full upright position will start RED flashing lights on the gate arm and will turn corresponding traffic lights RED, independent of the condition of the control system.

8.8.12 Instruments (LRFD-MHBD 8.4.5)

Provide, on the control console, wattmeter for each drive motor or HPU pump motor and provide leaf position indication for each leaf.

8.8.13 Control Console (LRFD-MHBD 8.4.6)

A. Specify a Control Console that contains the necessary switches and indicators to perform semi-automatic and manual operations as required by the standard FDOT Basic Sequence Diagram.

B. Ensure all wiring entering or leaving the Control Console is broken and terminated at terminal blocks.

C. Do not specify components other than push buttons, selector switches, indicating lights, terminal blocks, etc., in the Control Console.

8.8.14 Communications Systems

Design and specify a Public Address System, an Intercom System, and a Marine Radio System for each movable bridge. The three systems must work independent of each other and meet the following criteria:

A. Public Address System: One-way handset communication from the operators console to multiple zones (marine channel, roadway, machinery platforms, and other rooms). Specify an all call feature so that the operator may call all zones at once. Specify and detail loudspeakers mounted on the pier wall facing in both directions of the channel, one loudspeaker mounted at each overhead traffic signal, facing the oncoming gate, and loudspeakers at opposite ends of the machinery platform.

B. Intercom System: Specify a two-way communication system that works similar to an office telephone system with station-to-station calling from any station on the system and all call to all stations on the system from the main intercom panel. Each station must have a hands free capability. A call initiated from one station to another must

open a channel and give a tone at the receiving end. The receiving party must have the capability of answering the call by speaking into the open speaker channel, or by picking up the local receiver and speaking into it. All intercom equipment must be capable of operation in a high noise, salt air environment. Specify a handset mounted adjacent to the control console, in each room on the bridge and on each machinery platform.

C. Marine Radio System: Hand held, portable, operable on or off the charger, tuned to the proper channels, and a 120- volt charger located adjacent to the control console.

8.8.15 Navigation Lights (LRFD-MHBD 1.4.4.6.2)

A. Design a complete navigation light and aids system in accordance with all local and federal requirements. Comply with the latest edition of the ***Code of Federal Regulations*** (CFR) Title 33, Chapter 1, Part 118, and Coast Guard Requirements.

B. Specify LED array fixtures with a minimum of 50,000 hour life on fenders and center of channel positions to reduce effort required for maintenance of navigation lights.

8.8.16 Electrical Connections between Fixed and Moving Parts (LRFD-MHBD 8.9.5)

Specify extra flexible wire or cable.

8.8.17 Electrical Connections across the Navigable Channel (LRFD-MHBD 8.9.7)

A. Specify a bridge submarine cable assembly and bridge submarine cable termination cabinets complete with disconnect type terminal blocks.

   1. Show as many conduits as required plus two spare.
   2. Minimum conductor size for power is No. 10 AWG.
   3. Minimum conductor size for controls is No. 12 AWG. Maximum voltage allowed in a control conductor is 120 V.

B. Provide as many conductors as required plus 25% spares. Do not mix power and controls conductors in the same conduit.

C. Ground cable is single conductor No. 4/0 AWG.

D. Specify NEMA Type 4X, type 316 stainless steel bridge submarine cable termination cabinets, of ample size per the NEC, and arranged so that terminal strips, supports and other devices are readily accessible for maintenance, repair, and replacement.

E. Show the conduits across the channel permanently buried in a trench. Show power, signal and control, ground, and spare conduits in the same trench.

8.8.18 Engine Generators (LRFD-MHBD 8.3.9)

A. Design per the requirements of the latest edition of NFPA 110. Specify only diesel-fueled generators. Specify day tank with a minimum 10-gallon capacity. Do not use

the day tank capacity as part of the main tank capacity. Submit calculations justifying recommended fuel tank size.

B. New Bridges:

1. Provide two generators: Main Generator to power leaf drives and House Generator to power "house" loads.

Commentary: Bridges are requiring bigger generators to operate because of the increase in main drive power requirements. It is not cost effective to run these generators continuously to power miscellaneous loads and generator manufacturers do not recommend running diesel generators at low loads for extended periods.

2. Size Main Generator with enough capacity to open one side of the channel (one side of the bridge) at a time. Main Generator to run during bridge openings only.
3. Size House Generator to power the house loads like traffic lights, navigation lights, control house air conditioner, and house lights. House Generator to run continuously during power outage and is inhibited from transferring to the 480-volt bus when the Main Generator is running.
4. Size the fuel tank to hold enough fuel to run the Main Generator, at 100% load, for 12 hours and the House Generator, at 75% load, for 72 hours (minimum 50 gallons).

C. Rehabilitations:

1. Size generator so that one side of the channel (one side of the bridge) can be opened at a time concurrent with traffic lights, navigation lights, control house air conditioner(s), and house lights.
2. Size the fuel tank to hold enough fuel to run the generator, at 100% load, for 24 hours (minimum 50 gallons)

8.8.19 Automatic Transfer Switch (LRFD-MHBD 8.3.8)

A. Design switch in conformance with the requirements of the latest edition of NFPA 110.

B. Specify Automatic Transfer Switch with engine generator. Specify an Automatic Transfer Switch rated to protect all types of loads, inductive and resistive, from loss of continuity of power, without de-rating, either open or enclosed.

C. Specify withstand, closing, and interrupting ratings sufficient for voltage of the system and the available short circuit at the point of application on the drawings. Provide short circuit calculations to justify ATS proposed.

8.8.20 Video Equipment

A. Cameras: Specify cameras as needed to provide a full view of both vehicular and pedestrian traffic in each direction and at channel as needed where view is limited. Pay particular attention to sidewalk areas, directly under balconies, and behind traffic railings, that cannot be seen from inside the house.

B. Monitors: Two; one showing all cameras (spilt screen) and the second showing full view of selected camera.

C. Require 30-day recording capabilities for each camera.

8.9 CONTROL HOUSE

A. A control house is the facility designed as part of a movable bridge and occupied by the bridge operator. This facility houses the business functions, spaces, and mechanical & electrical systems required to operate the bridge. This includes equipment such as pumps, motors, generators, etc. and systems such as controls, lighting, plumbing, and HVAC.

B. The design of new control houses and renovation of existing control houses must comply with the requirements of the FLORIDA BUILDING CODE (FBC), the FLORIDA ACCESSIBILITY CODE (FAC) and the LIFE SAFETY CODE (LSC).

Commentary: Under the 2010 ***ADA Standards for Accessible Design (ADA)*** *and the current adopted edition of the Florida Accessibility Code (****FAC)****, which adopted and modified the 2010* ***ADA****, accessibility is not required for movable bridge control houses per* ***ADA*** *Section 203 and* ***FAC*** *Section 201.*

C. Operation areas contain business functions. Equipment areas contain mechanical and electrical equipment.

8.9.1 General

A. These Architectural guidelines address the design of new control houses but many items apply to renovations of existing houses.

B. The operator must be able to see and hear all traffic (vehicular, pedestrian and marine) from the primary workstation in the operation area.

C. Heat gain can be a problem. Where sight considerations permit, detail insulated walls as a buffer against heat gain. Provide 4 to 5-foot roof overhangs.

D. The preferred wall construction is reinforced concrete; minimum 6-inches thick with architectural treatments such as fluted corner pilasters, arches, frieze ornamentation, horizontal banding or other relief to blend with local design considerations.

E. Finish exterior of house with stucco, Class V coating or spray-on granite or cast stone.

F. Design the Bridge Control House with a minimum of 250-square feet of usable floor space. This allows enough room for a toilet, kitchenette, and coat/mop closet as well as wall-hung desk and control console. Add additional interior square footage for stairwells, or place stairs on exterior of structure.

G. Show windowsills at no more than 34-inches from the floor. This allows for operator vision when seated in a standard task chair. Ensure that window mullions will not be so deep as to create a blind spot when trying to observe the sidewalks or traffic gates.

H. Consider lines of sight from control station when determining sizing, location and spacing of columns. Ensure column size and layout do not limit lines of sight between control house and all traffic (vehicular, pedestrian, and marine). The operator must be able to view all traffic from the control station.

I. For operator standing at control console, verify sight lines to:

   1. Traffic gates for both directions of vehicular traffic.
   2. Marine traffic for both directions of the navigable channel.
   3. Pedestrian traffic (sidewalks), pedestrian gates and other locations where pedestrians normally stop.
   4. Under side of bridge, at channel.

J. For windows installed in the restroom, install the bottom of window a minimum of 60-inches above finished floor.

K. Specify the control house exterior wall framing and surfaces to be bullet resistant; capable of meeting the standards of UL 752, Level 2 (357 magnum).

8.9.2 Floor Tile

A. Specify non-skid quarry tile on operator's level.

B. Do not specify vinyl floor tiles or sheet goods.

8.9.3 Epoxy Flooring

A. Specify fluid applied non-slip epoxy flooring for electrical rooms, machinery rooms and machinery platforms.

B. Ensure that the products used are guaranteed by the manufacturer and are installed per their instructions.

C. Do not specify painted floors.

8.9.4 Roof

A. Do not specify flat roofs, "built-up" roofs, etc.

B. Design: Hip roof with minimum 4:12 pitch and 4 to 5-foot overhang.

C. Roof Material: Specify and detail either standing seam 18 gauge metal or glazed clay tiles. Note: many of the coastal environments will void the manufacturer's warranty for metal. Before specifying a metal roof determine if the manufacturer will warrant the roof in the proposed environment, if not, use tiles meeting or exceeding the Grade I requirements of ASTM C 1167.

D. Soffit: Specify ventilated aluminum.

E. Fascia: Specify aluminum, vinyl or stucco.

F. Design for uplift forces per Florida Building Code and applicable wind speeds on roof, roof framing, decking, fascia, soffit, anchors, and other components. Include roof load and uplift calculations in 60% submittal.

Modification for Non-Conventional Projects:

Delete ***SDG*** 8.9.4.F and insert the following:

F. Design for uplift forces per Florida Building Code and applicable wind speeds on roof, roof framing, decking, fascia, soffit, anchors and other components. Include roof load and uplift calculations in the 60% component superstructure submittal. These calculations shall be included in the 90% component superstructure submittal when a 60% submittal is not required in the RFP.

G. During design, consider underlayment, eave, and ridge protection, nailers and associated metal flashing.

H. Provide for concealed lightning protection down conductors.

8.9.5 Windows

A. Specify windows complying with the American Architectural Manufacturers Association standards (AAMA) for heavy commercial windows.

B. Specify double-hung, marine glazed heavy commercial (DHHC) type extruded aluminum windows.

C. Specify all exterior windows as meeting, or exceeding, the requirements of the Florida Building Code's Wind-Born Debris Region and wind speed requirements (see figure 1609 of the Florida Building Code). Ensure all glazing meets the requirements of the Large Missile Test.

Commentary: District Structures Maintenance Engineer can require the use of frames and glazing meeting the ballistic standards of UL 752, Level 2 (.357 magnum).

Modification for Non-Conventional Projects:

Delete the Commentary for ***SDG*** 8.9.5.C and see the RFP for requirements.

D. Specify counter balanced windows to provide 60% lift assistance.

E. Specify operating hardware and insect screens.

F. Specify perimeter sealant.

G. Structural Loads: Design to ASTM E330-70, with 60 lb/sq ft exterior uniform load and 60 lb/sq ft interior load applied for 10 seconds with no glass breakage, permanent damage to fasteners, hardware parts, actuating mechanisms, or any other damage.

H. Air Leakage: No more than 0.35 cfm/min/sq ft of wall area, measured at a reference differential pressure across assembly of 1.57 psf as measured in accordance with ASTM E283.

I. Water Leakage: None, when measured in accordance with ASTM E331 with a test pressure of 6 psf applied at 5 gallons per hour per square ft.

J. Locate windows to allow line-of-sight to all marine, vehicular, and pedestrian traffic from both standing and seated positions at the control console.

8.9.6 Doors and Hardware

A. Specify and detail armored aluminum entry doors. All exterior doors, frames and glazing ballistics meeting the standards of UL 752, Level 2 (357 magnum).

B. Interior Doors:

1. Passage - Solid core or solid wood.
2. Closets - Louvered.

C. Hardware:

1. Specify corrosion resistant, heavy-duty, commercial ball-bearing hinges and levered locksets and dead bolts for entry doors.
2. Specify adjustable thresholds, weather-stripping, seals and door gaskets.
3. Specify interior locksets.
4. Call for all locks keyed alike and spare keys.
5. Require the use of panic bar hardware for the electrical room door and have doors swing out.

D. Do not specify the use of a card reader.

8.9.7 Pipe and Fittings

A. Specify pipe fittings, valves, and corporation stops, etc.

B. Show hose bib outside the control house and at each machinery platform.

C. Specify wall-mounted, corrosion resistant (fiberglass or plastic) hose hanger and 50-foot, nylon reinforced, 3/4-inch garden hose. Mount in a secure area.

D. Specify stops at all plumbing fixtures, primed floor drains, air traps to eliminate/reduce water hammer, and ice maker supply line.

8.9.8 Site Water Lines

A. Specify pipe and fittings for site water lines including domestic water line, valves, fire hydrants and domestic water hydrants. Size water lines to provide adequate water pressure at the bridge. Provide detailed drawings to show location and extent of work.

B. Specify disinfection of potable water distribution system and all water lines per the requirements of American Water Works Association (AWWA).

8.9.9 Site Sanitary Sewage System

A. Gravity lines to manholes are preferred. Avoid the use of lift stations. If lift stations are required, consider daily flows as well as pump cycle times in the design. Low daily flows result in long cycle times and associated odor problems. Include pump and flow calculations and assumptions in 60% submittal.

Modification for Non-Conventional Projects:

Delete ***SDG*** 8.9.9.A and insert the following:

A. Gravity lines to manholes are preferred. Avoid the use of lift stations. If lift stations are required, consider daily flows as well as pump cycle times in the design. Low daily flows result in long cycle times and associated odor problems. Include pump and flow calculations and assumptions in the 60% component superstructure submittal. These calculations shall be included in the 90% component superstructure submittal when a 60% submittal is not required in the RFP.

B. For bridges not served by a local utility company, where connection is prohibitively expensive, and where septic tanks are not permitted or practical, coast guard approved marine sanitation devices are acceptable.

8.9.10 Toilet and Bath Accessories

A. Specify a mirror, soap dispenser, tissue holder, paper towel dispenser, and a waste paper basket for each bathroom.

B. Specify a bathroom exhaust fan.

C. Specify porcelain water closet and lavatory.

8.9.11 Plumbing Fixtures

A. Specify a single bowl, stainless steel, self-rimming kitchen counter sink, a sink faucet, a lavatory, a lavatory faucet with lever handles, and an accessible height elongated toilet.

B. Do not specify ultra-low flow fixtures unless the bridge has a marine digester system.

C. Specify all trim, stops, drains, tailpieces, etc. for each fixture.

D. Specify instant recovery water heater for kitchen sink and lavatory.

8.9.12 Heating, Ventilating and Air Conditioning

A. A central split unit is preferred but multiple, packaged units may be acceptable for rehabs. Design HVAC system with indoor air handler, ductwork, and outdoor unit(s).

B. Perform load calculations and design the system accordingly. Include load calculations in 60% submittal.

Modification for Non-Conventional Projects:

Delete ***SDG*** 8.9.12.B and insert the following:

B. Perform load calculations and design the system accordingly. Include load calculations in 60% component superstructure submittal. These calculations shall be included in the 90% component superstructure submittal when a 60% submittal is not required in the RFP.

C. For highly corrosive environments, use corrosive resistant equipment.

D. Specify packaged terminal air conditioning units.

E. Specify packaged terminal heat pump units.

F. Specify and detail wall sleeves and louvers.

G. Specify controls.

H. Specify and show ceiling fans on floor plan.

I. Specify ventilation equipment for machinery levels and attic.

8.9.13 Interior Luminaires

A. Specify energy efficient fixtures.

B. Avoid the use of heat producing fixtures.

C. Pay particular attention when designing the lighting in the control house to reduce the inability to see out of the windows at night when the interior lights are on.

8.9.14 Stairs, Steps and Ladders

A. Detail stair treads at least 3-feet wide and comply with NFPA 101 - Life Safety Code and Florida Building Code concerning riser and tread dimensions. Comply with OSHA requirements. The preferred tread is skid-resistant open grating. Avoid the use of ladders or stair ladders.

B. Stairs and landings may be on the exterior of the house.

Commentary: This reduces heating and cooling requirements as well as providing more usable floor space.

C. For interior stairwells, spiral stairs (Minimum 6-foot diameter) are acceptable although not preferred. Pay special attention to clearances for moving equipment into or out of a control house. Design stair assembly to support live load of 100-lbs/sq ft with deflection of stringer not to exceed 1/180 of span. Include calculations in the 60% submittal.

Modification for Non-Conventional Projects:

Delete ***SDG*** 8.9.14.C and insert the following:

C. For interior stairwells, spiral stairs (Minimum 6-foot diameter) are acceptable although not preferred. Pay special attention to clearances for moving equipment into or out of a control house. Design stair assembly to support live load of 100 lbs/sq ft with deflection of stringer not to exceed 1/180 of span. Include calculations in the 60% component superstructure submittal. These calculations shall be included in the 90% component superstructure submittal when a 60% submittal is not required in the RFP.

D. In situations where there is no space for stairs, use ship ladders, as a last option, in applications limited to a vertical height of 48-inches.

8.9.15 Handrails, Guards, Railing and Grating

A. Specify steel or aluminum pipe handrails, guards and railing with corrosion-resistant coatings or treatment.

B. Exterior railing must meet the requirements of the applicable Index 515-050 Series or 515-060 Series and the appropriate ***Standard Plans Instructions (SPI)***.

C. Interior railing must meet the requirements of the ***Florida Building Code*** (***FBC***) and ***Life Safety Code*** (***LSC***) for size, height, and strength.

D. Handrails attached to guards or railing must meet the requirements of the ***FBC*** and ***LSC*** for size, strength, and continuity. Continuous, smooth pipe is required for handrails.

E. Welded pipe rails are not preferred for guards and railing.

F. Include structural calculations in 60% submittal.

Modification for Non-Conventional Projects:

Delete ***SDG*** 8.9.15.F and insert the following:

F. Include structural calculations in the 60% component superstructure submittal. These calculations shall be included in the 90% component superstructure submittal when a 60% submittal is not required in the RFP.

G. Specify Grating and Floor Plates which have skid resistant open grating, except at control level.

8.9.16 Framing and Sheathing

Include a specification section for the following items if used:

A. Structural floor, wall, and roof framing.

B. Built-up structural beams and columns.

C. Diaphragm trusses fabricated on site.

D. Prefabricated, engineered trusses.

E. Wall and roof sheathing.

F. Sill gaskets and flashing.

G. Preservative treatment of wood.

H. Fire retardant treatment of wood.

I. Telephone and electrical panel back boards.

J. Concealed wood blocking for support of toilet and bath accessories, wall cabinets, and wood trim.

K. All other sections applicable to control house design and construction.

8.9.17 Desktop and Cabinet

A. Specify and detail a wall-hung desktop with drawer mounted 29.5-inches above finished floor. Show desktop.

B. Specify and detail a minimum 7-feet of 36-inch base cabinets and 7-feet of 24-inch or 36-inch wall cabinets.

C. Specify cabinet hardware and solid-surfacing material counter-tops and desktop.

8.9.18 Insulation

A. Design the control house so that insulation meets the following requirements: Walls - R19, Roof assembly - R30.

B. Specify rigid insulation for underside of floor slabs, exterior walls, and between floors separating conditioned and unconditioned spaces.

C. Specify batt Insulation in ceiling construction and for filling perimeter and door shim spaces, crevices in exterior wall and roof.

8.9.19 Fire-Stopping

Specify, design, and detail fire stopping for wall and floor penetrations.

A. Main Floor Walls: 1 Hour.

B. Stair Walls (Interior): 2 Hours.

C. Interior Partitions: 3/4 Hour.

8.9.20 Veneer Plaster (Interior Walls)

Specify 1/4-inch plaster veneer over 1/2-inch moisture-resistant gypsum wallboard (blueboard), masonry and concrete surfaces.

8.9.21 Gypsum Board (Interior Walls)

A. Specify 1/2-inch blueboard for plaster veneer.

B. Specify 1/2-inch fiberglass reinforced cement backer board for tile.

8.9.22 Painting

Specify paint for woodwork and walls.

8.9.23 Wall Louvers

A. Specify rainproof intake and exhaust louvers and size to provide required free area.

B. Design with minimum 40% free area to permit passage of air at a velocity of 335 ft/min without blade vibration or noise with maximum static pressure loss of ¼-inch measured at 375 ft/m in.

8.9.24 Equipment and Appliances

A. Specify a shelf mounted or built-in 1.5-cubic foot microwave with digital keypad and user's manual.

B. Specify an under counter refrigerator with user's manual.

C. Specify a Type 10-ABC fire extinguisher for each room.

8.9.25 Furnishings

A. Specify two, gas lift, front-tilt task chairs.

B. Provide one R5 cork bulletin board.

C. Specify window treatment (blinds or shades).

8.9.26 Fire and Security Alarm System

A. Specify smoke detection in each of the machinery areas, and in each room of the control house.

B. Specify audible and visual alarm devices in each of the machinery areas and in each room of the control house.

9 BDR COST ESTIMATING

9.1 GENERAL

Modification for Non-Conventional Projects:
Delete ***SDG*** Chapter 9.

A. The purpose of the Bridge Development Report (BDR) is to select the most cost efficient and appropriate structure type for the site under consideration. This chapter describes a three-step process to estimate bridge costs based on FDOT historical bid data. The first step is to utilize the average unit costs to develop an estimate based on the completed preliminary design. Unless noted otherwise, the unit costs are for the final installed product including fabrication, testing, delivery, installation, etc. The second step is to adjust the total bridge cost for the unique site conditions by use of the site adjustment factors. The third and final step is to review the computed total bridge cost on a cost per square foot basis and compare this cost against the historical cost range for similar structure types. This process should produce a reasonably accurate cost estimate. However, if a site has a set of odd circumstances, which will affect the bridge cost, account for these unique site conditions in the estimate. If the estimated cost is outside the cost range in step three, provide documentation supporting the variance in cost.

B. The three-step process described in this chapter for conventional alternates is not suitable for cost estimating structure types without repeatable bid history. Estimates for unique structures such as movable, cable stayed, cast-in-place on form travelers, arches and tunnels are based on construction time, labor, materials, and equipment.

C. Click to view or download a ***BDR bridge cost estimate spreadsheet for conventional alternates.***

D. When prefabricated alternates are required to be investigated during the BDR phase per the feasibility questions and assessment matrix of ***FDM*** 121.19, both direct costs (hard dollars) and indirect costs (soft dollars) are required to be reported for each alternate. An assessment matrix methodology allows for alternate selection based on less than perfect knowledge.

E. To date, the FDOT does not have sufficient historical bid data for prefabricated bridge alternates in order to develop reasonable cost estimates from average unit material costs. Contact the SDO for additional information.

9.2 BDR BRIDGE COST ESTIMATING

The applicability of this three-step process is explained in the general section. The process stated below is developed for estimating the bridge cost after the completion of the preliminary design, which includes member selection, member size and member reinforcing. This process will develop costs for the bridge superstructure and substructure from beginning to end bridge. Costs for all other items including but not limited to the following are excluded from the costs provided in this chapter: mobilization, operation

costs for existing bridge(s), removal of existing bridge or bridge fenders, lighting, walls, deck drainage systems, embankment, fenders, approach slabs, maintenance of traffic, load tests, and bank stabilization.

Step One:

Utilizing the costs provided herein, develop the cost estimate for each bridge type under consideration.

9.2.1 Substructure

A. Prestressed Concrete Piling; cost per linear foot (furnished and installed)

Size of Piling	Driven Plumb or 1" Batter[1]	Driven Battered[1]
18-inch w/ carbon steel strand[2]	$170	$190
24-inch w/ carbon steel strand[2]	$200	$220
30-inch w/ carbon steel strand[2]	$225	$245
18-inch w/ CFRP or Stainless Steel Strand	$190	$210
24-inch w/ CFRP or Stainless Steel Strand	$210	$230
30-inch w/ CFRP or Stainless Steel Strand	$320	$340

1 When highly reactive pozzolans are used, add $10 per LF to the piling cost.

2 When heavy mild steel reinforcing is used in the pile head, add $350.

B. Steel Piling: cost per linear foot (furnished and installed)

14 x 73 H Section	$130
14 x 89 H Section	$140
18" Pipe Pile	$200
20" Pipe Pile	$250
24" Pipe Pile	$300
30" Pipe Pile	$400

C. Drilled Shaft

1. Drilled Shaft: cost per LF (not including Shaft Excavation)

Shaft Diameter (in)	42	48	60	72	84	96	108
On land with casing salvaged	$1,000	$1,100	$1,500	$1,900	$2,300	$2,900	$3,400
In water with casing salvaged	$1,500	$1,600	$2,000	$2,500	$2,900	$3,500	$4,000
In water with permanent casing	$1,900	$2,000	$2,500	$3,200	$3,600	$4,400	$5,000

2. Shaft Excavation: cost per LF

Shaft Diameter (in)	42	48	60	72	84	96	108
Excavation	$450	$500	$650	$800	$1,000	$1,200	$1,400

D. Reinforcing Bars and Post-tensioning Steel

1. Steel Reinforcing Bars; cost per pound

Carbon Steel, ASTM A615, Gr. 60 or 75	$1.50
Low-Carbon Chromium Steel, ASTM A1035, Gr. 100	$1.90
Stainless Steel, ASTM A955, Gr. 60 or 75, or ASTM A276, UNS S31653 or S31803	$7.00

2. FRP Reinforcing Bars, ***Specifications*** Section 932-4; cost per linear foot. Add $2.00 per hook, or bend for stirrups, and $2.00 per revolution for circular spirals. Add a lump sum of $5,000 per bar size for each lot of FRP reinforcing bars to account for the cost of testing.

#3	#4	#5	#6	#7	#8	#9	#10	#11
$1.50	$2.00	$2.30	$2.70	$3.50	$4.50	$5.80	$7.20	$8.50

3. Post-tensioning Steel with Grout Filler; cost per pound

Strand	$16
Bar	$20

Note: Post-tensioning steel cost includes components of post-tensioning system (anchors, duct, and filler)

4. Post-tensioning Steel with Flexible Filler; cost per pound

Strand	$48
Bar	$60

Note: Post-tensioning steel cost includes components of post-tensioning system (anchors, duct, and filler)

E. Substructure Concrete: cost per cubic yard

Substructure Concrete Class II:	$1,800
Substructure Mass Concrete Class II:	$1,600
Substructure Concrete Class IV:	$2,000
Substructure Mass Concrete Class IV:	$1,500
Seal Concrete:	$1,600
Bulkhead Concrete:	$2,400

For calcium nitrite, add $100 per cubic yard. (@ 4.5 gal per cubic yard)
For highly reactive pozzolans, add $100 per cubic yard. (@ 60 lbs. per cubic yard)

F. Retaining Walls.

1. MSE Walls; cost per square foot

Permanent	$70
Temporary	$30

Note: Contact at least two contractors for their input regarding wall cost when using coarse aggregate backfill (MSE walls in Flood Zones). See ***SDG*** 3.13.2.

2. Sheet Pile Walls

Prestressed concrete cost per linear foot:	10" x 30"		$210
	12" x 30"		$260
	12" x 30" with FRP		$370
Steel cost per square foot:	Permanent	Cantilever	$45
		Anchored	$80[1]
	Temporary	Cantilever	$25
		Anchored	$50[1]

1 Includes the cost of anchors, waler steel, miscellaneous steel for permanent/temp. walls and concrete face for permanent walls.

3. Traffic Railings with Junction Slabs; cost per linear foot

32" Vertical Face	$460
42" Vertical Face	$500

36" Single-Slope	$450
42" Single-Slope	$490

G. Noise Wall; Cost per square foot: $60

H. Box Culverts:

Class II Concrete	$1,900 / cu. yd.
Class IV Concrete	$2,000 / cu. yd.
Carbon Reinforcing Steel	$1.50 / lb.

9.2.2 Superstructure

A. Bearings

Bearing Type	Unit Cost
1. Composite Neoprene Bearing Pads:	$1,800 per Cubic Foot
2. Plain Neoprene Bearing Pads:	$1,600 per Cubic Foot
3. Multirotational Bearings (Capacity in Kips)	Cost per Each
1-250	$10,000
251-500	$12,000
501-750	$14,000
751-1000	$15,000
1001-1250	$16,000
1251-1500	$18,000
1501-1750	$21,000
1751-2000	$24,000
>2000	$27,000

B. Bridge Girders

1. Structural Steel; Cost per pound (includes coating costs.)

Plate girders; straight	$4.60
Plate girders; curved	$5.50
Box girders; straight	$5.50
Box girders; curved	$6.00

When uncoated weathering steel is used, reduce the price by $0.15 per pound. Inorganic zinc coating systems have an expected life cycle of 20 years.

2. Prestressed Concrete Girders and Slabs; cost per linear foot.

Florida-U Beam; 48"	$1,100[1]
Florida-U Beam; 54"	$1,200[1]
Florida-U Beam; 63"	$1,250[1]
Florida-U Beam; 72"	$1,300[1]
Florida Slab Beam; 12" x 48"	$340[2]
Florida Slab Beam; 12" x 60"	$410[2]
Florida Slab Beam; 15" x 48"	$410[2]
Florida Slab Beam; 15" x 60"	$540[2]
Florida Slab Beam; 18" x 48"	$500[2]
Florida Slab Beam; 18" x 60"	$640[2]
AASHTO Type II Beam	$280
Florida-I Beam; 36	$350
Florida-I Beam; 45	$380
Florida-I Beam; 54	$410
Florida-I Beam; 63	$440
Florida-I Beam; 72	$470
Florida-I Beam; 78	$480
Florida-I Beam; 84	$500
Florida-I Beam; 96	$540

1. Price is based on ability to furnish products without any conversions of casting beds and without purchasing of forms. If these conditions do not exist, add the following cost: $1,000,000.
2. Interpolate between given prices for intermediate width FSBs.
3. When using alternative reinforcing materials per ***SDG*** 4.3.1, contact at least two precasters for their input regarding cost.

C. Concrete

1. Cast-in-Place Superstructure Concrete; cost per cubic yard.

Box Girder Concrete; straight	$2,000
Box Girder Concrete; curved	$2,400
Deck Concrete Class II	$1,400
Deck Concrete Class IV	$2,000
Precast Deck Overlay Concrete Class IV	$1,800
Approach Slab Concrete	$900
Topping Concrete for slab beams and units (including cost of shrinkage reducing admixture)	$1,400

2. Concrete for Pre-cast Segmental Box Girders; cantilever construction; price per cubic yard. For deck area between 300,000 and 500,000 interpolate between the stated cost per cubic yard.

Less than or equal to 300,000 SF	$2,600
Greater than 300,000 SF and less than or equal to 500,000 SF	$2,500
Greater than 500,000 SF	$2,400

D. Reinforcing Bars and Post-tensioning Steel

1. Steel Reinforcing Bars; cost per pound:

Carbon Steel, ASTM A615, Gr. 60 or 75	$1.40
Low-Carbon Chromium Steel, ASTM A1035, Gr. 100	$1.80
Stainless Steel, ASTM A955, Gr. 60 or 75, or ASTM A276, UNS S31653 or S31803	$6.50

2. FRP Reinforcing Bars, FDOT Standard ***Specifications*** 932-4; cost per linear foot. Add $2.00 per hook, or bend for stirrups, and $2.00 per revolution for circular spirals. Add a lump sum of $5,000 per bar size for each lot of FRP reinforcing bars to account for the cost of testing.

#3	#4	#5	#6	#7	#8
$1.50	$2.00	$2.30	$2.70	$3.50	$4.50

3. Post-tensioning Steel with Grout Filler; cost per pound

Strand; longitudinal	$16
Strand; transverse	$20
Bar	$20

Note: Post-tensioning steel cost includes components of post-tensioning system (anchors, duct, and filler)

4. Post-tensioning Steel with Flexible Filler; cost per pound

Strand; longitudinal	$48
Bar	$60

Note: Post-tensioning steel cost includes components of post-tensioning system (anchors, duct, and filler)

E. Railings and Expansion Joints

1. Traffic, Pedestrian and Bicycle Railings, cost per linear foot.

Traffic Railings:[1]

32" Vertical Face	$170
42" Vertical Face	$190
36" Single-Slope Median	$190
36" Single-Slope	$200
42" Single-Slope	$260
Thrie Beam Retrofit	$330
Thrie Beam Panel Retrofit	$200
Vertical Face Retrofit	$230
Rectangular Tube Retrofit	$190

Pedestrian/Bicycle Railings:

Concrete Parapet (27")[1]	$120
Single Bullet Railing[1]	$80
Double Bullet Railing[1]	$100
Panel/Picket Railing (42") steel (Type 1 & 2)	$180
Panel/Picket Railing (42") steel (Type 3-5)	$240
Panel/Picket Railing (42") aluminum (Type 1 & 2)	$130
Panel/Picket Railing (42") aluminum (Type 3-5)	$200
Panel/Picket Railing (48") steel (Type 1 & 2)	$210
Panel/Picket Railing (48") steel (Type 3-5)	$270
Panel/Picket Railing (48") aluminum (Type 1 & 2)	$160
Panel/Picket Railing (48") aluminum (Type 3-5)	$220

1 Combine cost of Bullet Railings with Concrete Parapet or Traffic Railing, as appropriate.

2. Expansion joints; cost per linear foot.

Poured joint with backer rod	$100
Strip Seal	$550
Finger Joint < 6”	$1,900
Finger Joint > 6”	$3,300

Modular 6”	$1,100
Modular 8”	$1,600
Modular 12”	$2,000

F. Miscellaneous

Bridge Deck Planing: cost per square yard: $9.00

Bridge Deck Grooving for Short Bridge: cost per square yard: $12.00

Bridge Deck Grooving for Long Bridge: cost per square yard: $8.00

Note: See ***SDG*** 4.2 for the definition of Short Bridge and Long Bridge

Detour Bridge; Cost per square foot: $90*

* Using FDOT supplied components. The cost is for the bridge proper (measured out-to-out) and does not include approach work, surfacing, or guardrail.

Coating New Structural Steel; cost per pound of steel.	
High Performance Coating System	TBD*
Inorganic Zinc Coating System	TBD*
Galvanized Steel Coating System	TBD*
Thermal Sprayed (Metalized) Coating System	TBD*

*FDOT does not have sufficient historical cost data for Coating Systems in order to develop reasonable cost estimates from average unit costs. Once the project specific coating system has been determined per **SDG** 5.12, contact at least one coating system supplier for their input regarding cost.*

9.2.3 Design Aid for Determination of Reinforcing Steel

In the absence of better information, use the following quantities of reinforcing steel pounds per cubic yard of concrete.

Pile abutments	135
Pile Bents	145
Single Column Piers; Tall (>25 ft)	210
Single Column Piers; Short (<25 ft)	150
Multiple Column Piers; Tall (>25 ft)	215
Multiple Column Piers; Short (<25 ft)	195
Bascule Piers	110
Decks; Standard	205
Decks; Isotropic	125
Concrete Box Girders; Pier Segment	225
Concrete Box Girders; Typical Segment	165
Cast-in-Place Flat Slabs (30 ft span x 15" deep)	220
Approach Slabs	200

Step Two:

After developing the total cost estimate utilizing the unit cost, modify the cost to account for site condition variables. If appropriate, the cost will be modified by the following variables:

1. For construction over open water, floodplains that flood frequently or other similar areas, increase construction cost by 3 percent.
2. For construction over traffic and/or phased construction, i.e. construction requiring multiple phases to complete the entire cross section of a given bridge, add a 20 percent premium to the affected units of the structure.

Step Three:

The final step is a comparison of the cost estimate with historic bridge cost per square foot data. These total cost numbers are calculated exclusively for the bridge cost as defined in the General Section of this chapter. Price computed by Steps 1 and 2 should be generally within the range of cost of as supplied herein. Include a written explanation in the BDR if the cost falls outside the provided range.

New Construction (2023 Cost Per Square Foot)		
Bridge Type	**Low**	**High**
Short Span Bridges [1]		
CIP Reinforced Concrete Flat Slab	$140	$320
Florida Slab Beam (FSB) with CIP Topping	$180	$300
Medium Span Bridges [1]		
Florida-I Beam (FIB) with CIP Deck; FIB36 thru FIB84	$110	$200
Florida-I Beam (FIB) with CIP Deck; FIB96	$190	$270
AASHTO Type II Beam with CIP Deck	$110	$230
Steel I-Girder with CIP Deck; Simple Span [2]	$200	$320
Steel I-Girder with CIP Deck; Continuous Span [2]	$210	$330
Steel Box Girder with CIP Deck; Span Range from 150-feet to 280-feet (add 15% for horizontal curvature) [2]	$220	$340
Segmental Concrete Box Girders; Cantilever Construction	Insufficient Data	
Movable Bridge; Bascule Spans and Piers	Insufficient Data	
Demolition Cost		
Typical	$45	$90
Bascule	Insufficient Data	
Project Type	**Low**	**High**
Widening (Construction Only)	$165	$240
Widening Removal Work	$115	$215

1 Increase the cost by 20% for phased construction.

2 Cost range based on limited data due to use of non-conventional contracts.

9.3 HISTORICAL BRIDGE COSTS

The unadjusted bid cost for selected bridge projects are provided as a supplemental reference for estimating costs. The costs in the tables below represent the cost during the year of letting and do not account for inflation. The costs have been stripped of all supplemental items such as mobilization, so that only the superstructure and substructure cost remain.

The provided latitude and longitude can be entered into online map applications (e.g., Google Maps) to view satellite and street level photos of each bridge.

The Construction Cost Index (CCI) published by the Office of Forecasting and Performance may be used to estimate the costs of past projects in current dollars: ***https://www.fdot.gov/fpo/fpc/reports/fdot-cci.***

9.3.1 Florida-I Beam

Florida-I 36 Beam					
Bridge Number	**Project Name and Description**	**Latitude, Longitude**	**Letting Date**	**Deck Area (SF)**	**Cost per SF**
610171	SR-10 Over Holmes Creek	30.778, -85.615	2021	22,682	$131
570189	SR-4 Over Blackwater River	30.833, -86.733	2019	37,664	$124
150308	SR-687 NB & SB / 4th Street N Over Big Island Gap	27.895, -82.638	2021	14,641	$141
150309				11,222	$132
870943	NB C-D Over SR-836, CSXT RR, & NW 12th St.	25.782, -80.385	2019	31,419	$132
750646	SR-91 NB & SB (Turnpike Mainline) Over Jones Road	28.553, -81.653	2021	5,943	$144
750647				5,943	$148
861018	SR-869 Over Atlantic Boulevard	26.233, -80.296	2022	15,719	$155

Florida-I 45 Beam					
Bridge Number	**Project Name and Description**	**Latitude, Longitude**	**Letting Date**	**Deck Area (SF)**	**Cost per SF**
020051	SR-589 NB & SB Over Wildlife Crossing	28.704, -82.499	2017	4,502	$106
020052				4,502	$106
364191	NE 36th Ave. Over Access Rd SE	29.210, -82.086	2019	8,454	$117
020059	Suncoast Parkway 2 NB & SB Over Grover Cleveland Blvd.	28.804, -82.508	2017	9,328	$122
020058			2017	9,328	$122
484268	Bratt Road Over Canoe Creek	30.956, -87.347	2018	4,449	$126
080061	SR-589 Over US-98	28.688, -82.500	2017	11,797	$120

Florida-I 54 Beam					
Bridge Number	**Project Name and Description**	**Latitude, Longitude**	**Letting Date**	**Deck Area (SF)**	**Cost per SF**
164523	Ramp G Over Bartow Eagle Lake Rd	27.987, -81.748	2022	16,230	$130
150298	SR-55 U-Turn Overpass Bridge	28.019, -82.737	2022	24,961	$134
114099	CR-455 Over SR-91 TPK	28.560, -81.682	2021	14,533	$134
874036	SR-847 Over Snake Creek	25.927, -80.375	2018	11,908	$132
164521	SR-570B Over Thornhill Rd - South Crossing	28.010, -81.821	2022	4,928	$159
164522	Ramp H Over Old Bartow Eagle Lake Rd	27.987, -81.748	2022	15,036	$159
364190	NE 36th Over CSX RR	29.210, -82.086	2019	11,218	$152
020070	SR-589 NB & SB Over SR-44	28.864, -82.509	2022	9,584	$182
020071				10,472	$191

Florida-I 63 Beam					
Bridge Number	**Project Name and Description**	**Latitude, Longitude**	**Letting Date**	**Deck Area (SF)**	**Cost per SF**
130155	I-75 (SR-93) NB & SB Over SR-70	27.441, -82.459	2018	16,917	$98
130154				14,061	$101
130160	I-75 (SR-93) NB & SB Over University Pkwy	27.388, -82.448	2015	17,109	$102
130161				17,109	$103
024056	CR-490 Over SR-589 (Suncoast Pkwy)	28.834, -82.516	2017	14,045	$124
280073	SR-223 SB	29.972, -82.122	2016	5,613	$120
080060	SR-589 SB Over US-98	28.687, -82.498	2017	11,797	$124
940233	St Lucie W Blvd EB Over I-95 (SR-9)	27.311, -80.413	2021	25,868	$145
770143	EE Williamson Road Over I-4	28.712, -81.378	2019	20,710	$147
130162	I-75 (SR-93) SB Ramp D2 Over SR-64	27.491, -82.472	2017	9,135	$142

Florida-I 72 Beam					
Bridge Number	**Project Name and Description**	**Latitude, Longitude**	**Letting Date**	**Deck Area (SF)**	**Cost per SF**
750650	CR-438 (Oakland Ave) Over SR-91 TPK	28.550, -81.646	2021	15,125	$137
754172	CR-527 (Orange Ave) NB & SB Over SR-91 TPK	28.359, -81.387	2016	13,684	$118
754171				13,684	$131
164516	SR-570B Westbound Over SR-540	28.010, -81.847	2022	12,886	$156
164515	SR-570B Eastbound Over SR-540	28.010, -81.847	2022	10,168	$157
164517	Ramp B Over SR-540	28.010, -81.847	2022	8,960	$163
110614	SR-91 NB & SB Minneola Interchange to Obrien Rd	28.623, -81.754	2022	10,475	$191
110615				10,772	$186

Florida-I 78 Beam					
Bridge Number	**Project Name and Description**	**Latitude, Longitude**	**Letting Date**	**Deck Area (SF)**	**Cost per SF**
080088	SR-50 EB & WB Over CSXT Railroad	28.507, -82.157	2021	8,624	$127
080089				6,635	$120
770109	SR-429 EB Over CR-431	28.807, -81.363	2017	21,447	$110
860596	SR-838 Over SR-91	26.135, -80.219	2015	22,697	$120

Florida-I 84 Beam					
Bridge Number	**Project Name and Description**	**Latitude, Longitude**	**Letting Date**	**Deck Area (SF)**	**Cost per SF**
770103	SR-429 NB & SB Over Lake Markham Rd	28.813, -81.388	2017	15,423	$133
770104				16,855	$107
110607	SR-91 NB & SB Over Old Highway 50	28.559, -81.677	2021	12,859	$139
110608				12,859	$163
720801	I-295 NB Ramp AA	30.402, -81.563	2013	13,357	$136

Florida-I 96 Beam					
Bridge Number	**Project Name and Description**	**Latitude, Longitude**	**Letting Date**	**Deck Area (SF)**	**Cost per SF**
703008	NASA Causeway EB & WB Over Indian River	28.527, -80.765	2021	20,520[1]	$274
703009				25,810[1]	$268
871230	Okeechobee Rd from East of NW 107th Avenue to East of NW 116th Way.	25.879, -80.356	2021	26,992[1]	$189

1 Deck area for the superstructure portion with FIB-96 beams. Substructure cost prorated based on deck area.

9.3.2 AASHTO Type II Girder

Bridge Number	Project Name and Description	Latitude, Longitude	Letting Date	Deck Area (SF)	Cost per SF
260120	SR-20 WB Over Little Orange Creek	29.594, -82.066	2017	9,720	$109
594067	CR-375 Over Smith Creek	30.167, -84.655	2018	4,400	$119
720858	SR 5 Over Broward River	30.437, -81.642	2022	18,824	$134
504156	CR-65A Over Juniper Creek	30.530, -84.737	2019	3,263	$136
180083	SR-50 EB over Little Withlacoochee River	28.524, -82.096	2021	13,918	$144
394009	CR-231 Over New River	29.950, -82.345	2019	16,801	$137
564069	CR-67 Over Yellow Creek	30.283, -84.752	2021	7,334	$177
484261	Sandy Hollow Rd Over Sandy Hollow Creek	30.941, -87.466	2017	1,679	$164
484269	Hanks Rd Over Breastworks Creek	30.950, -87.404	2018	2,210	$171

9.3.3 Florida-U Beam

Bridge Number	Project Name and Description	Latitude, Longitude	Letting Date	Deck Area (SF)	Cost per SF
460133	SR-30 EB & WB Over SR-368 23rd Street	30.185, -85.730	2015	11,588	$88
460134				11,589	$88
460135	SR-30 Eastbound Entrance Ramp	30.183, -85.727	2015	16,342	$173

9.3.4 Florida Slab Beam

Bridge Number	Project Name and Description	Latitude, Longitude	Letting Date	Deck Area (SF)	Cost per SF
164554	Ewell Rd Over Poley Creek	27.952, -82.007	2018	2,156	$166
344009	CR-339 Over Waccasassa River	29.490, -82.706	2019	6,462	$176
876420	NW 34th Ave Over Comfort Canal	25.786, -80.251	2019	1,940	$199
720843	18th Ave North Over Hopkins Creek	30.305, -81.399	2017	2508	$195
720844	20th Ave North Over Hopkins Creek	30.307, -81.400	2017	1932	$193
540043	CR-259 (Lake Rd) Over Ward Creek	30.604, -83.893	2017	5,934	$196
524200	Valee Rd Over Blue Creek	30.763, -85.945	2018	2,437	$214
524219	Hicks Rd Over West Pittman Creek	30.893, -85.962	2018	2,672	$236
344014	CR-456 (Airport Rd) Over Daughtry Bayou	29.137, -83.043	2017	7,296	$230

9.3.5 Cast-In-Place Slab

Bridge Number	Project Name and Description	Latitude, Longitude	Letting Date	Deck Area (SF)	Cost per SF
510076	SR-22 Over Wetappo Creek	30.144, -85.304	2021	10,753	$171
870944	SR-821 Ramp C-1 Over Snapper Creek Canal	25.785, -80.384	2019	5,694	$168
484254	CR-97A Over Boggy Creek	30.773, -87.493	2016	6,893	$160
480293	SR-289 Over Carpenters Creek	30.471, -87.213	2020	6000	$179
150313	SR-55 Over Pedestrian Thru-way	28.033, -82.738	2022	4,163	$204
484266	CR-168 Over Unnamed Branch	30.987, -87.412	2019	2,365	$206
350069	WB I-10 Over Piddlin Creek	30.435, -83.526	2022	3,504	$286
504157	CR-159 Over Swamp Creek	30.655, -84.452	2021	9,883	$295

9.3.6 Steel I-Girder

Bridge Number	Project Name and Description	Latitude, Longitude	Letting Date	Deck Area (SF)	Cost per SF
160359	SR-60 Over US-27	27.897, -81.600	2020	23,673	$182
100635	SR-589 Ramp A Over CSX RR	28.039, -82.558	2013	14,308	$175
871233	SR-25 Over Ramp B	25.879, -80.356	2021	27,677	$230
871201	NE 203RD Street Ramp B Bridge Over FEC RR	25.963, -80.147	2021	23,182	$267
164519	SR-570B EB & WB Over Thornhill Rd - North Crossing	28.010, -81.821	2022	10,107	$301
164518				10,244	$311

9.3.7 Steel Box Girder

Bridge Number	Project Name and Description	Latitude, Longitude	Letting Date	Deck Area (SF)	Cost per SF
100634	SR-589 Anderson Ramp B Over SR-589	28.034, -82.545	2013	14,308	$175
110095	US-441 SB to SR-46 EB	28.796, -81.625	2017	22,803	$188
750644	SR-91 Ramp C2 Flyover SR-417	28.368, -81.389	2016	74,602	$184
750611	Sr-91 Ramp A2 Flyover SR-417	28.367, -81.390	2016	81,867	$191

9.3.8 Post-tensioned Concrete Box Girder, Segmental Bridges

Project Name and Description	Letting Date	Deck Area (SF)	Cost per SF
A1A over ICWW (St. Lucie River)(Evans Crary) (890158)	97/98	297,453 Span by Span	$80.50
Palm Beach Airport Interchange at I-95 (930480)	99/00	77,048 Balanced Cantilever	$100.73
Palm Beach Airport Interchange at I-95 (930477)	99/00	20,925 Balanced Cantilever	$96.31
Palm Beach Airport Interchange at I-95 (930479)	99/00	69,233 Balanced Cantilever	$88.49
Palm Beach Airport Interchange at I-95 (930482)	99/00	47,466 Balanced Cantilever	$104.96
Palm Beach Airport Interchange at I-95 (930482)	99/00	81,059 Balanced Cantilever	$101.44
Palm Beach Airport Interchange at I-95 (930483)	99/00	90,926 Balanced Cantilever	$101.57
Palm Beach Airport Interchange at I-95 (930484)	99/00	41,893 Balanced Cantilever	$115.11
Palm Beach Airport Interchange at I-95 (930478)	99/00	20,796 Balanced Cantilever	$95.16
17th Street over ICWW (Ft. Lauderdale) (860623)	96/97	13,5962 Balanced Cantilever	$74.71
SR 704 over ICWW Royal Palm Way (930507 & 930506)	00/01	43,173 each C.I.P. on Travelers	$163.88
US 92 over ICWW (Broadway Bridge) Daytona (790188)	97/98	145,588 Balanced Cantilever	$81.93
US 92 over ICWW (Broadway Bridge) Daytona (790187)	97/98	145,588 Balanced Cantilever	$81.93
SR 789 over ICWW (Ringling Bridge) (170021)	00/01	329,096 Balanced Cantilever	$81.43
US 98 over ICWW (Hathaway Bridge) (460012)	00/01	575,731 Balanced Cantilever	$87.72
SR 9 Overpass (over Road/railroad) (720761)	06/07	122,500 Segmental	$125.26

9.3.9 Post-tensioned Cast-in-place Concrete Box Girder Bridge (low level overpass)

Project Name and Description	Letting Date	Deck Area (SF)	Cost per SF
SR 858 over ICWW Hallandale Beach (860619 & 860618)	97/98	29,888 each	$83.25
SR 858 Flyover Hallandale Beach (860620)	97/98	21,777	$81.99
4th Street over I-275	94/95	12,438	$75.21

9.3.10 Bascule Bridge Cost

Deck area is calculated to be coping-to-coping width times overall bascule length including both bascule pier lengths and main span. Costs include all cost for movable span, gates, and bascule piers.

Closed Deck Bascule Bridges			
Project Name and Description	**Letting Date**	**Deck Area (SF)**	**Cost per SF**
SR 45 over ICWW Venice (170170 & 170169)	99/00	8,785 each	$768
Royal Palm Way SR 704 over ICWW (930507 & 930506)	00/01	11,535 each	$1,089
SR 858 over ICWW Hallandale Beach (860618 & 860619)	97/98	14,454 each	$811
Ocean Ave. over ICWW Boynton Beach (930105)	98/99	11,888	$1,157
17th Street over ICWW Ft. Lauderdale (860623)	96/97	34,271	$865
2nd Avenue over Miami River (874264)	99/00	29,543	$1,080
SR 699 John’s Pass (150253)	04/05	16,500 includes Bascule and approach span	$1,728
SR 699 John’s Pass (150254)	04/05	16,500 includes Bascule and approach span	$1,697
SR 933 12nd Ave over Miami River (870662)	04/05	74,470 includes Bascule (30,910) and approach spans (43,560)	$595 (Bascule $1,287) (App. spans $105)
SR 7 (5 St/7 Ave) Over the Miami River (870990)	04/05	21,546	$1,950

9.4 BRIDGE DEBRIS QUANTITY ESTIMATION

Requirements for making bridge debris available to other agencies are stated in the ***Project Management Guide*** and ***FDM*** 121.8.2 and 110.5.2.3. Use the following values for calculating the approximate volume of concrete debris that will be generated by demolishing a bridge. For bridge components not shown, use project specific dimensions and details to calculate the approximate volume of debris. Include the estimated volume of debris in the BDR.

Component	CY/LF
18" Inverted T Beam:	0.066
AASHTO Type II Beam:	0.095
AASHTO Type III Beam:	0.144
AASHTO Type IV Beam:	0.203
AASHTO Type V Beam:	0.261
AASHTO Type VI Beam:	0.279
72" Florida Bulb T Beam:	0.237
78" Florida Bulb T Beam:	0.284
48" Florida-U Beam:	0.311
54" Florida-U Beam:	0.328
63" Florida-U Beam:	0.355
72" Florida-U Beam:	0.381
14" Square Pile:	0.050
18" Square Pile:	0.083
24" Square Pile:	0.148
30" Square Pile (w/18" diameter void):	0.166

Component	CY/LF
32" New Jersey Shape Traffic Railing:	0.075
32" F Shape Traffic Railing:	0.103
32" F Shape Median Traffic Railing:	0.120
36" Single-Slope Median Traffic Railing	0.159
36" Single-Slope Traffic Railing	0.107
42" Single-Slope Traffic Railing	0.143
Florida-I; 36	0.207
Florida-I; 45	0.224
Florida-I; 54	0.240
Florida-I; 63	0.256
Florida-I; 72	0.272
Florida-I; 78	0.283
Florida-I; 84	0.294
Florida-I; 96	0.315

10 PEDESTRIAN BRIDGES

10.1 GENERAL

A. The criteria in this chapter applies to steel and concrete pedestrian bridge superstructures, and the associated substructures, ramps, stairs, etc. crossing over or placed on Department right-of-way. For non-Department pedestrian bridges crossing over or placed on Department right-of-way, the criteria also apply to the supports that are outside of Department right-of-way. See ***SDG*** 10.15.

B. All sections of the ***Structures Manual*** that apply to vehicular bridges also apply to pedestrian bridges unless specifically addressed herein.

C. Minor timber or aluminum structures associated with boardwalks, docks or fishing pier projects are not covered by these policies except that the loading shall meet requirements defined herein.

D. Wooden trusses or timber beam structures shall not cross over Department right-of-way.

E. Aluminum pedestrian bridges are not allowed.

F. See ***Volume 4 - Fiber Reinforced Polymer Guidelines*** for limitations on the use of fiber reinforced polymer (FRP) (i.e., plastic, carbon fiber, or fiberglass) for pedestrian bridges.

G. Comply with ADA requirements. See ***SDG*** 1.1.6 (ADA on Bridges).

H. See ***FDM*** 266 for designer qualifications and additional requirements.

10.2 DESIGN

A. Design and detail all pedestrian bridge structures in accordance with the following:

- ***AASHTO LRFD Bridge Design Specifications (AASHTO)***
- ***AASHTO LRFD Guide Specifications for the Design of Pedestrian Bridges (Guide Spec.)***
- ***FDOT Design Manual*** (***FDM***)
- ***FDOT Structures Manual***

B. Design pedestrian bridges with two or more concrete I-beams, steel I-girders, or prefabricated steel truss lines.

C. Design and detail prefabricated steel truss pedestrian bridges satisfying the Category 1 conditions of ***FDM*** 266.4 as follows:

1. Fully design and detail foundation and substructure in the plans.
2. Fully design and detail all approach structures including non-truss approach spans, ramps, steps/stairways, approach slabs, retaining walls, etc. in the plans.

3. Include general plan and elevation indicating minimum aesthetic requirements for the prefabricated steel truss bridge in the plans (see ***FDM*** Example 266.4.1).
4. Prefabricated steel truss superstructure is to be designed and detailed by the Contractor's EOR Design Firm after award of the construction contract. Design calculations, technical specifications, and fully detailed shop drawing are to be submitted to the Engineer for review and approval prior to fabrication. Components to be included in the shop drawings include trusses, floor system, lateral bracing, deck, railing/fencing, deck joints, bearing assemblies, etc.

D. Prefabricated steel truss pedestrian bridges not satisfying the Category 1 conditions of ***FDM*** 266.4 shall be custom designed and fully detailed in the Plans.

Modification for Non-Conventional Projects:
Delete ***SDG*** 10.2.C and ***SDG*** 10.2.D.

E. Design all pedestrian bridges for a 75-year target service life.

F. Clearance criteria for pedestrian bridges shall be as follows:
1. Minimum vertical clearance on pedestrian bridges shall be in accordance with ***FDM*** Figure 266.3.1.
2. Minimum vertical clearance under pedestrian bridges shall be in accordance with ***FDM*** 260.6 and ***FDM*** 260.8.
3. Lateral offset under pedestrian bridges shall be in accordance with ***FDM*** 215.2.4 and account for identified future widening of the roadway.

G. Camber DL/LL Deflections - In lieu of the information in Article 5 of the ***LRFD Guide Specifications for the Design of Pedestrian Bridges***, use the following to determine maximum deflections for pedestrian bridges:
1. Pedestrian Load Span/500
2. Truck Load Span/500
3. Cantilever arms due to service pedestrian live load . . . . . Cantilever Length/300
4. Horizontal deflection due to lateral wind load Span/500
5. The pedestrian bridge shall be built to match the plan profile grade after all permanent dead load has been applied.

H. See ***SDG*** 3.5.1.F for minimum pile size requirements.

I. In the design of Steel Hollow Structural Sections (HSS), use a design wall thickness of 0.93 times the nominal wall thickness.

J. Use cast-in-place concrete decks. Design and detail using the following criteria:
1. For SIP forms, refer to ***SDG*** 4.2.10. The capacity of the SIP forms must not be included in the deck design.
2. The minimum deck thickness is 6-inches with no allowance for a sacrificial thickness.

3. The deck design thickness is defined as the top of the SIP metal forms to the finished deck surface.
4. Use design methodology per ***LRFD*** 4.6.2.1 using the strip method.
5. The minimum reinforcing steel is No. 4 bars at 12-inch spacing in each direction.
6. If the deck is continuous over supports, refer to ***SDG*** 4.2.6, 4.2.7, or 4.2.8 for applicable criteria.
7. For drip grooves, refer to ***SDG*** 4.2.12.
8. For concrete deck finish see ***Specifications*** Section 400-15.2.5.2.

K. For the fatigue resistance of structural tubing connections according to Chapter 4 of the ***LRFD*** *Guide Specifications for the Design of Pedestrian Bridges*, modify ***LRFD*** LTS-1 Fatigue Detail Category 5.5 to be applicable to square and rectangular structural tubing with fillet or CJP welded connections. Use the largest side dimension of the structural tubing for the value of “r”.

10.3 LOADING

This section supplements the ***LRFD Guide Specifications for the Design of Pedestrian Bridges***.

A. Design all pedestrian bridges for wind speeds specified in ***SDG*** Table 2.4.1-1.

B. Calculate design wind loads on truss type pedestrian bridges according to the ***LRFD Specifications for Structural Supports for Highway Signs, Luminaires, and Traffic Signals***. For all other types of pedestrian bridges calculate design wind loads according to ***SDG*** 2.4.1 and the ***LRFD Bridge Design Specifications***.

C. For pedestrian bridges over 75-feet high or with unusual structural features, submit wind load calculations to the SSDE for approval.

D. A special wind analysis may be required for pedestrian bridges with enclosures, decorative features, architectural cladding, etc. For the purposes of considering the need for a special wind analysis, the bridge fencing per ***Standard Plans*** Index 550-012 is not considered an enclosure. Consult the SDO early in the planning process to determine the need for a special wind analysis, as this could have a significant impact on the project design budget and schedule.

E. The Truck-Induced Gust Pressure, P_{TG}, must be applied to a 12’ length of structure and moved to create a maximum stress range. A reduction for vehicle speed is not allowed. For prefabricated steel truss pedestrian bridges using structural tubing connections with a span length greater than 100’ and not going over a traveled way, the fatigue loads are to include a Truck-Induced Gust Pressure of 25% P_{TG}. When the bridge is over a traveled way, the reduction factor for height must not be less than 25%.

10.4 MATERIALS

A. Require that all materials be in compliance with the applicable ***Specifications***.

B. Careful attention shall be given in selecting combinations of metal components that do not promote dissimilar metals corrosion.

C. Specify ASTM A500 Grade B or C for structural tubing. The minimum thickness for structural tubing is 1/4-inch for top and bottom chords and 3/16-inch for verticals and diagonals. See SDG 5.3.2 for primary members, CVN testing, and NSTM requirements.

D. For steel I-girder superstructures, see ***SDG*** 5.3 for the structural steel material requirements.

Modification for Non-Conventional Projects:
Delete ***SDG*** 10.4.D and see the RFP for requirements.

E. Aluminum is allowed only for railing, and fence enclosure elements. Isolate aluminum from concrete components at the material interface.

10.5 STEEL CONNECTIONS

A. Field welding is not allowed except as provided in ***SDG*** 5.11.

B. Welding must meet the requirements of ***Specifications*** Section 460.

C. Bolting Criteria:

1. Design bolted connections per ***SDG*** Chapter 5 with the following exception.
2. Bearing type connections are permitted only for bracing members.

D. Tubular Steel Connections:

1. Cap all ends of structural tubing using a minimum 3/16-inch thick plate.
2. Require that all field splices be shop fit.
3. Specify or show field sections bolted together using splice plates.

4. When through bolting is necessary, stiffen the tubular section to ensure the shape of the tubular section is retained after final bolting. See Figure 10.5-1.

Figure 10.5-1 Tubular Truss Splice Detail

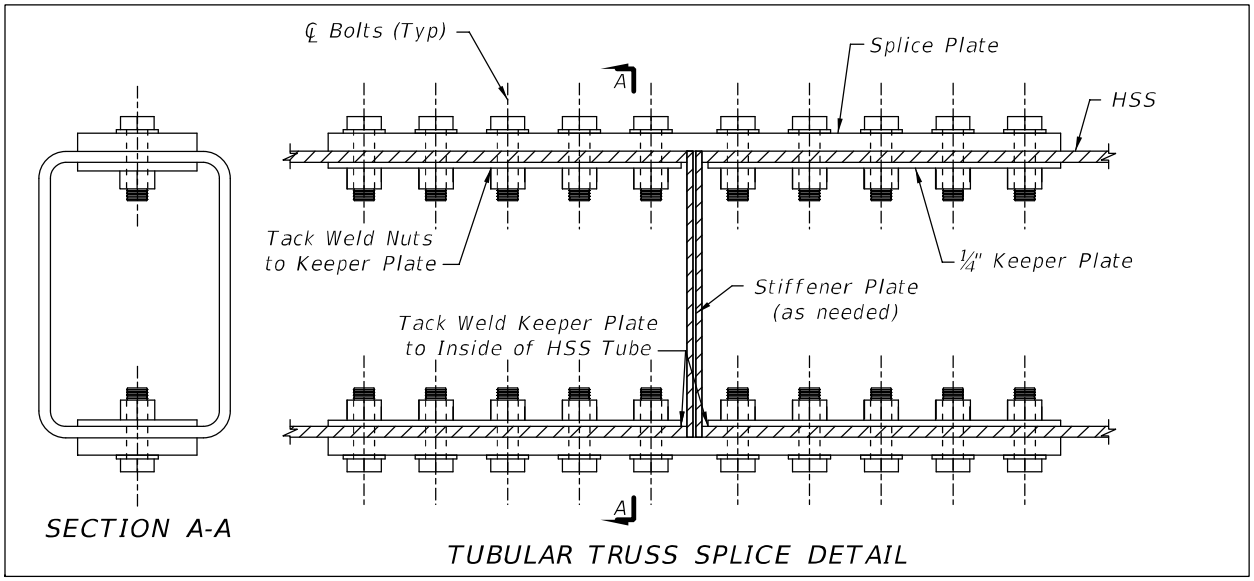

E. Vibrations: Limits on vibration shall be as specified in ***LRFD*** Guide Specifications for the Design of Pedestrian Bridges. Vibration frequency shall be checked under temporary construction conditions.

10.6 CABLE-STAYED PEDESTRIAN BRIDGES

A. Design stay systems to meet the same durability and protection requirements as FDOT post-tensioning systems for anchors, tendons, or P.T. bars. See ***SDG*** 4.5.

B. Design cable-stay structures for stay removal and replacement such that any one stay can be removed.

10.7 PAINTING/GALVANIZING

A. Prefabricated steel trusses are required to be galvanized.

1. Specify galvanizing in accordance with Section 962 of the ***Specifications***.
2. For closed members, provide drain and/or vent holes to accommodate the galvanizing process. All holes must be drilled prior to galvanizing and left open after galvanizing. See ***FDM*** 266.4 for painting over the galvanized finish for aesthetics.
3. Welding components together after galvanizing is not acceptable.

B. For steel I-girders, see ***SDG*** 5.12

10.8 ERECTION

A. Design and detail pedestrian bridge plans to minimize the disruption of traffic during bridge erection.

B. Include a note on the plans that the Contractor's Specialty Engineer is responsible for designing a falsework system capable of supporting portions of the superstructure during erection.

Modification for Non-Conventional Projects:
Delete ***SDG*** 10.9.B.

C. The erection of pedestrian structures will be inspected per ***Specifications*** 460 or 450.

10.9 RAILING AND FENCING

A. Design pedestrian railings in accordance with ***SDG*** 6.8.

B. Provide ADA compliant handrails as required. Occasional use of the bridge by maintenance or emergency vehicles generally does not warrant the use of a crash tested combination pedestrian / traffic railing.

C. Provide railing options as directed by the District as follows:

1. 42" Pedestrian/Bicycle railing (minimum)
2. 48" Special Height Bicycle railing
3. Open top fence / railing combination
4. Full enclosure fence / railing combination
5. Open top cladding / railing combination (glass, steel panel, concrete panel, etc.)
6. Full enclosure cladding / railing combination

D. Utilize FDOT standard fence designs or connection details from ***Standard Plans*** Index 550-010, 550-011, 550-012 and 550-013 where applicable.

10.10 ENCLOSURES, DECORATIVE FEATURES, AND ATTACHMENTS

A. A decorative feature (architectural cladding, etc.) attached to a pedestrian bridge is a Community Aesthetic Feature that must be approved by the Department. See ***FDM*** 127.

B. For pedestrian bridges other than prefabricated steel trusses, connections for enclosures, decorative features, lighting, signs, traffic signals, and other attachments (architectural cladding, etc.) must be designed by the Project Engineer of Record (EOR) with the details included in the Plans. Do not defer to the shop drawings for the design and detailing of these connections. For prefabricated steel truss pedestrian bridges designed by the Contractor’s EOR, the Project EOR must review the connection details through the shop drawing process in accordance with Section 5 of the ***Specifications***.

C. Provide access for inspection and maintenance of the connections for enclosures, decorative features, and other attachments. The tapping of holes into structural steel tubular members is not allowed.

D. For an enclosed pedestrian bridge with or without climate control, establish the environmental classification based on the assumption that the enclosure is not present. The Department does not consider the presence of an enclosure or climate control to provide protection from the surrounding environmental conditions, as those items could be removed in the future.

E. Design and detail enclosures, decorative features, and other attachments to provide complete inspection access to all superstructure components, connections, and bearing areas. See ***SDG*** 10.15 for more information on inspection and maintenance.

F. For wind loads, design attachments for enclosures, decorative features, lighting, signs, and traffic signals as per the ***AASHTO LRFD Bridge Design Specifications*** and the ***LRFD Specifications for Structural Supports for Highway Signs, Luminaires, and Traffic Signals***. See ***SDG*** 10.3 for special wind analysis considerations.

G. Design and detail drainage from enclosures, decorative features, and other attachments as required by ***SDM*** Chapter 22.

10.11 DRAINAGE

A. Design and detail drainage systems as required. See ***SDM*** Chapter 22.

B. Provide curbs, drains, pipes, or other means to drain the superstructure pedestrian deck. Drainage of the superstructure onto the roadway underneath is not allowed.

C. Conform to ADA requirements for drainage components.

10.12 CORROSION RESISTANT DETAILS

A. Provide designs such that water and debris will quickly dissipate from all surfaces of the structure.

B. See ***SDG*** 5.12 Corrosion Protection.

10.13 LIGHTING

A. Design lighting levels in accordance with ***FDM*** 231.3.5 .

10.14 MAINTENANCE AND INSPECTION

A. Inspections and maintenance will be performed in accordance with the Department's current procedure and criteria and the FDOT maintenance guidelines.

B. The inspection and maintenance criteria of private permitted bridges crossing over or placed on Department right-of-way are the same as for Department-owned bridges. The Department has inspection authority for the supports of private permitted pedestrian bridges that cross over Department right-of-way even if those supports are outside of Department right-of-way.

10.15 PERMIT STRUCTURES

A. Provide independent bridge supports whenever possible (i.e., not attached to or integral with a building structure). The Department has design review authority for bridge supports that are outside of the Department right-of-way. See ***FDM*** 121.18 for review of non-Department-owned projects. A private permitted pedestrian bridge to be supported by a building structure requires approval of the SSDE. Submit the following to the SSDE for review: justification for why independent bridge supports cannot be provided, proposed design code, design methodology, design calculations, and support details. The details must demonstrate that complete access to the supports will be provided for inspection and maintenance.

B. Obtain approval to use ***Developmental Specifications*** on private permitted pedestrian bridges that cross over Department right-of-way. This applies to the supports for the spans that cross Department right-of-way even those supports are outside of Department right-of-way.

C. See ***SDG*** 1.14 for more information regarding permit structures.

11 TEMPORARY WORKS

11.1 GENERAL

This chapter is intended for use by Specialty Engineers, Contractor's Engineers of Record and Prequalified Specialty Engineers. For the design of all temporary works affecting public safety, provisions 11.2, 11.3, 11.4 and 11.6 apply.

11.2 WELDS

For any and all welds which in the event of their failure might pose a hazard to the public, insert a plan note in the shop drawings stating that such welds must be performed by welders qualified under AWS D1.5 for the type of weld being performed.

11.3 ADHESIVE BONDED ANCHORS

A. Adhesive Bonded Anchor Systems are not permitted for tension tie-downs for any structural element under any circumstances.

B. For all other adhesive bonded anchor applications, use the design procedures given in ***SDG*** 1.6. Do not use Adhesive Bonded Anchor Systems for installations with a combination of predominately sustained tension loads (permanent component of the factored tension load exceeds 30% of the factored tensile resistance) and/or lack of structural redundancy where durations of temporary work shall be considered as sustained loading.

C. Except where prohibited above, where Adhesive Bonded Anchors are loaded in tension or a combination of tension and shear which in the event of their failure might pose a hazard to the public, insert the following plan/shop drawing note:

   “For Adhesive Bonded Anchors loaded in tension, test anchors to at least 150% of the required factored tension load. For Adhesive Bonded Anchors loaded in a combination of tension and shear, test anchors to 150% of the factored resultant combined tension and shear loads. Apply the test load along the axis of the anchor as a tension load.”

11.4 FALSEWORK FOUNDED ON SHALLOW FOUNDATIONS

When vertical displacement limits are provided in the plans, and when shallow foundations such as spread footings and/or mats are being proposed, submit shop drawings and applicable calculations of the falsework system including the subsurface conditions and settlement estimate. Design the falsework system for the worst case differential settlements.

11.5 BRIDGE DECK OVERHANG FALSEWORK FOR STEEL I-GIRDERS

When required by Section 400 of the ***Specifications***, provide shop drawings and calculations for steel I-girders with bridge deck overhang falsework supporting screed rails. Limit screed rail deflections to achieve the deck profile, thickness and concrete

cover as required by the Contract Documents. Evaluate deformations such as local web deformations, top and bottom flange lateral deformations, and out-of-plane rotation of steel I-girders. Perform the evaluation using a finite element analysis. Show all falsework components and any temporary bracing in the shop drawings.

Commentary: The Contractor's EOR or Specialty Engineer is responsible to investigate the need for temporary bracing because the size and spacing of the deck overhang falsework and the construction loads are only known at the time of construction. Typically, the deck overhang falsework bears against steel I-girder webs during deck placement, supporting the overhang formwork, wet deck concrete, screed machine and construction loads. Under certain conditions, the steel I-girder supporting these loads can experience excessive web plate deformations, top and bottom flange lateral bending deformations, and out-of-plane rotations, especially between cross frame bracing points. The girder deformations and rotations translate to vertical deflections of the screed rails which can result in poor bridge deck profiles, loss of structural bridge deck concrete thickness, loss of concrete cover for bridge deck reinforcing steel, and ponding of water along the toe of traffic railings. Figure 11.5-1 is included with this commentary to illustrate the potential steel I-girder distortion between cross frame locations.

Figure 11.5-1 Illustration of Potential Steel I-Girder Distortion from Bridge Deck Overhang Falsework

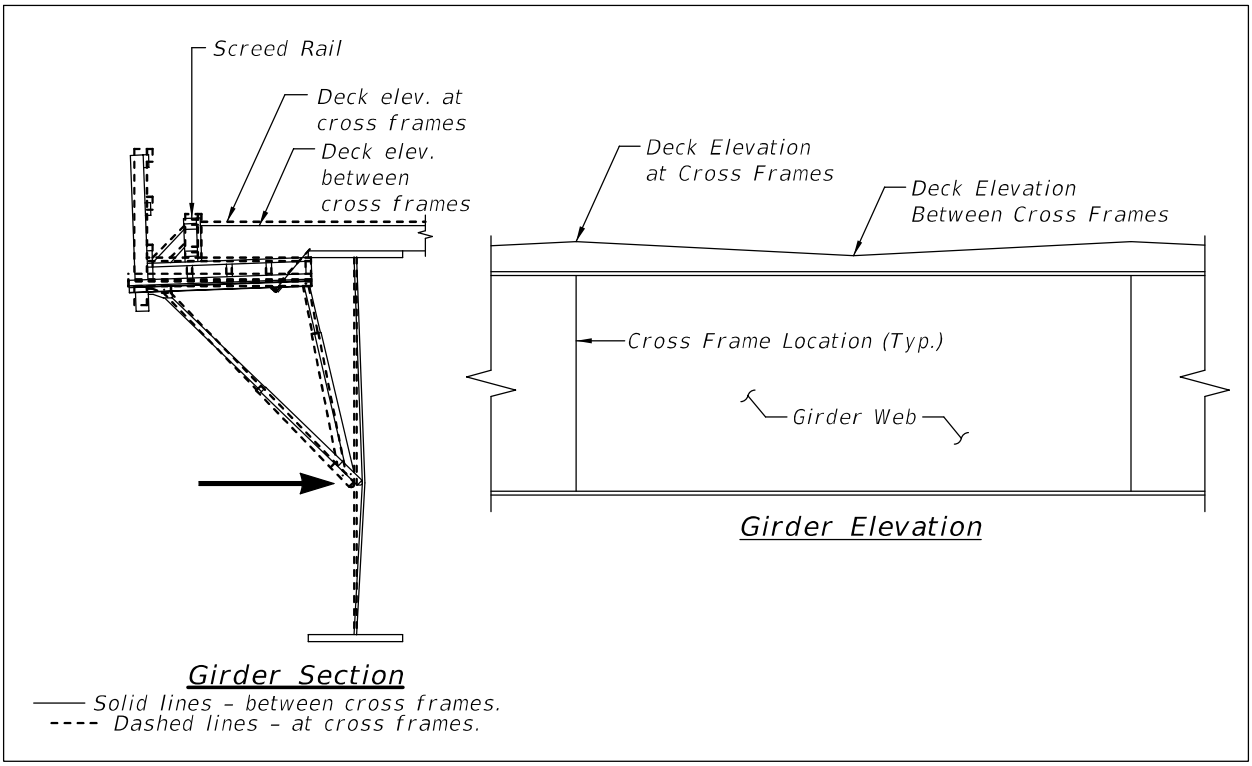

11.6 PRESTRESSED I-BEAM TEMPORARY BRACING DESIGN

11.6.1 General

As required by Section 5 of the ***Specifications***, provide shop drawings and calculations for the temporary bracing design. Design temporary beam bracing in accordance with the FDOT ***Structures Manual***, the ***Specifications*** and the information contained in the Contract Documents.

11.6.2 Beam Stability

For stage definitions and I-beam stability requirements, see ***SDG*** 4.3.4.

11.6.3 Temporary Bracing Member Design

A. Anchor bracing, if required for the first beam placed, may be designed on a skew parallel with the centerline of bearing. Design all other bracing as moment resisting frames perpendicular to the beams (intermediate horizontal strut bracing alone provides no measurable gain in system capacity, see Reference 1). Place end bracing no greater than 4'-0" from the centerline of bearings (applies to one end of bracing for skewed bridges). For Stage 2 Bracing, use the same bracing in all bays. See the 'TABLE OF PRESTRESSED I-BEAM TEMPORARY BRACING MINIMUM REQUIREMENTS AND LOADS' in the Structures Plans for the minimum number of braces required to ensure beam stability.

B. Design bracing systems (members and connections) for the applied forces given in the 'TABLE OF PRESTRESSED I-BEAM TEMPORARY BRACING MINIMUM REQUIREMENTS AND LOADS'. For braced beams under wind loading (Stage 2), use the ***LRFD*** Strength III horizontal load to determine the brace forces. Assume the Stage 2 horizontal loads are applied perpendicular to the beam web at mid-height. For braced beams during deck casting (Stage 3), use the ***LRFD*** Strength I overturning moment to determine the brace forces. Assume the Stage 3 overturning moments are applied at the centerline of the beam at the top of the top flange. For simplicity, a 2D model with boundary conditions as shown in Figure 11.6-1 may be used to determine brace forces (see Reference 1). Apply Stage 2 and Stage 3 loads as separate load cases.

Figure 11.6-1 Recommended Structural Analysis Models for Determining X-brace and K-brace Forces

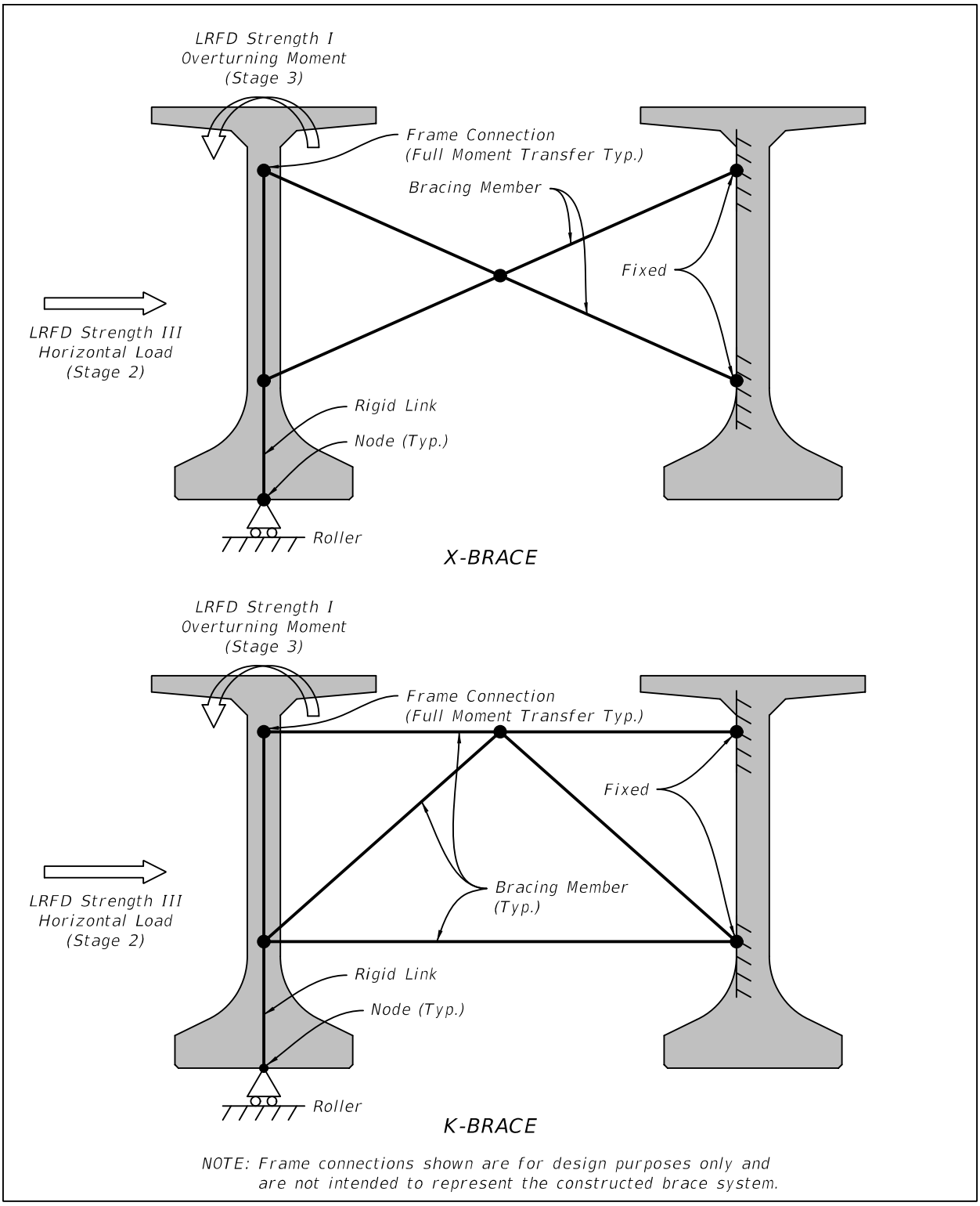

C. In addition to designing individual brace members based on the member forces, check the final brace system capacity C ≥ 1.0 of FIB beams using the following equations (not required for AASHTO Type II beams):

$$\mathbf{C = C_0 + \frac{\omega \cdot 620 \cdot k_{brace} \cdot e^{\frac{(-L)}{30}}}{k_{brace} + 1000000} - \frac{\sqrt{P_{avg}}}{1000000} \cdot [8 \cdot L^2 + 0.004 \cdot L \cdot k_{brace} - 5100 \cdot L - k_{brace} + 900000] - \frac{D \cdot P_U}{48 \cdot w_{beam}}}$$

$$\mathbf{C \geq 1.0}$$

$$\mathbf{C_0 = 47e^{\frac{-L}{42}} + 0.5}$$

Where:

C_0 = the capacity of an unanchored two beam FIB system in zero wind conditions (in terms of g), with sweep due to fabrication tolerances and thermal effects.

C = the capacity of a two beam FIB system considering the effects from bracing, wind, and aerodynamic lift (in terms of g).

L = span length (ft)

ω = empirical scale factor to account for capacity increase from bracing at interior points. For end bracing only ω = 1, for the combination of end bracing and mid-span bracing ω = 1.4, for the combination of end bracing and quarter point bracing ω = 1.7.

k_{brace} = effective brace stiffness (kip-ft/rad). Determine k_{brace} by using the recommended structural model in Figure 11.6-3

D = FIB cross-section depth (in)

P_U = 1.5 times the unshielded wind load (psf)

P_{avg} = 1.5 times the average wind load pressure per beam for a 2 beam system considering skew (psf). For a zero skew bridge $P_{avg} = P_U /2$ since the second girder is shielded for its entire length.

w_{beam} = beam self-weight (lbf/ft)

For simplicity, a 2D model with a unit torque and boundary conditions as shown in Figure 11.6-2 may be used to determine brace system stiffness (see Reference 1).

Figure 11.6-2 Recommended Structural Analysis Model for Determining K-brace System Stiffness (X-brace similar)

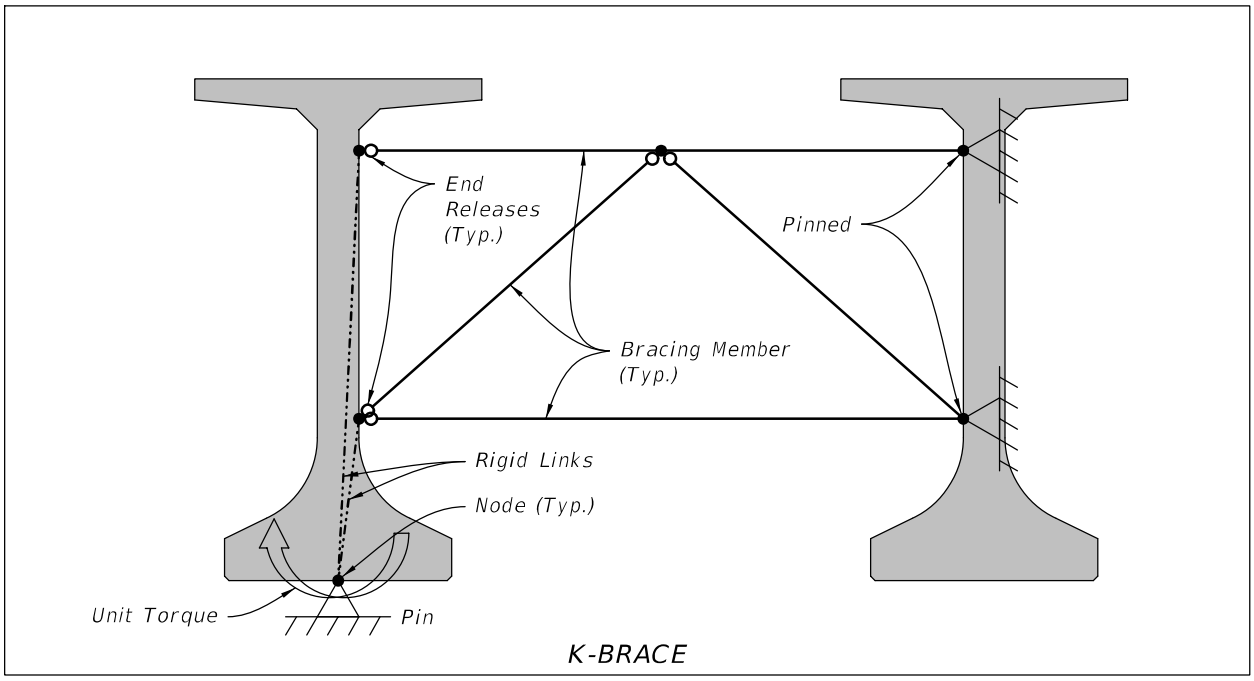

11.6.4 References

[1] Consolazio, G., Gurley, K., and Harper, Z. (2013). Bridge Girder Drag Coefficients and Wind-Related Bracing Recommendations, Structures Research Report No. 2013/87322, University of Florida, Gainesville, FL.

[2] Consolazio, G., and Edwards, T. (2014). Determination of Brace Forces Caused by Construction Loads and Wind Loads During Bridge Construction, Structures Research Report No. 2014/101350, University of Florida, Gainesville, FL.

[3] Consolazio, G. (2017). Distribution Factors for Construction Loads and Girder Capacity Equations, FDOT Contract No. BDV31-977-46. University of Florida, Gainesville, FL.

11.7 TEMPORARY ACCESS AND LIFTING HOLES IN TOP SLABS OF SEGMENTAL BOX GIRDERS

11.7.1 Temporary Access Holes

Temporary access holes in the top slab of segmental box girders to facilitate access for erection, jacking and tendon filling operations are permitted using the following criteria.

A. The maximum number and associated temporary access hole sizes are:

   1. One 30-inch x 42-inch (maximum) temporary access hole per span, or

2. Two 12-inch x 12-inch (maximum) temporary access holes per span. Access hole dimensions are measured at the top of the top slab.

B. Locate top slab temporary access holes within the positive moment sections of the completed structure.

C. Locate the top edges of top slab temporary access holes:
   1. A minimum of 1'-0" from adjacent ducts or anchorages for longitudinal tendons in the top slab
   2. A minimum of 3-inches from adjacent ducts and a minimum of 1'-0" from adjacent anchorages for transverse tendons in the top slab
   3. A minimum of 1'-0" measured horizontally from anchorages in the bottom slab accounting for longitudinal grade and cross slope

D. Detail the sides of temporary access holes to be sloped at 1H:6V.

E. Utilize threaded reinforcing bar couplers/inserts for bars that must be cut and made discontinuous at the temporary access holes. Do not show cut reinforcing bars to extend into temporary access holes and be bent out of the way temporarily to facilitate access.

F. Provide supplemental reinforcing bars placed parallel to each side and diagonally at each corner of temporary access holes.

G. Specify temporary access holes to be filled in accordance with ***Specifications*** Section 462.

11.7.2 Lifting Holes

Round lifting holes in the top slab of segmental box girder segments are permitted using the following criteria.

A. Utilize through holes in lieu of embedded anchor assemblies.

B. Design and detail lifting holes to have a constant maximum diameter of 2-inches or to have sloping sides with a 2-inches maximum diameter.

C. Locate lifting holes a minimum of 1-inch from adjacent ducts and a minimum of 1'-0" from adjacent anchorages.

D. Specify the use of removable forming devices and materials, and that they are to be removed prior to filling lifting holes.

E. Specify lifting holes to be filled in accordance with ***Specifications*** Section 462.

2027 FDOT STRUCTURES MANUAL

Volume 2: Structures Detailing Manual

INTRODUCTION

I.1 GENERAL

A. The FDOT ***Structures Detailing Manual*** (***SDM***) is Volume 2 of the ***Structures Manual***. See the ***Structures Manual Introduction*** for additional information including authority, scope, distribution and process for modifications to the ***Structures Manual***.

B. This volume of the Structures Manual provides criteria for drafting, detailing and modeling for use in preparing Florida Department of Transportation (FDOT) contract plans for structural elements or systems. These elements or systems include bridges, overhead sign structures, earth retaining structures and other miscellaneous highway structures. The ***SDM*** includes preferred details and examples of general component plan sheets. The information required to be shown on each type of sheet includes but is not limited to the items listed for the sheet in the ***SDM*** chapters.

*Commentary: The **SDM** addresses the delivery of traditional two-dimensional plan sets. In some locations, the **SDM** acknowledges and contemplates the creation of traditional two-dimensional plan sets or sheets using model-centric CADD resources. At this time, the Department has not developed the criteria and standards for the delivery of model-centric structures component plans, or the signing and sealing of three-dimensional structures component models delivered digitally. The Department will continue to work with and support their partners in the engineering and construction industries to meet the demand for the model-centric delivery of structures component plans.*

C. Additional information on overhead sign structures, high-mast light poles, and miscellaneous roadway appurtenances as well as general administrative, geometric, shop drawing, and plans processing may be found in the ***FDOT Design Manual (FDM)*** Topic No. 625-000-002.

D. As a supplement to the ***SDM***, a series of examples which represent some of the many situations a designer may encounter when designing a bridge has been compiled. These ***Structures Detailing Manual Examples*** are provided to convey detailing and organizational requirements and not to present actual design examples. In the event that any detail and/or design information shown in these examples does not meet the requirements set forth in the ***Structures Manual***, the ***Structures Manual*** requirements shall prevail.

I.2 FORMAT

A. The ***SDM*** provides standard engineering criteria and guidelines to be used in the development of engineering drawings of structures for which the Structures Design Office (SDO) and the District Structures Design Office (DSDO) have overall responsibility.

B. The ***SDM*** is intended to be used in conjunction with the ***Structures Design Guidelines (SDG)***, ***Standard Plans***, ***FDOT Design Manual (FDM)*** (Topic No. 625-000-002), the ***CADD Manual*** (Topic No. 625-050-001), and the ***Basis of Estimates Manual*** (Topic No. 600-000-002).

C. The ***SDM*** is written primarily in the active voice to Structural Designers, Professional Engineers, Engineers of Record, Structural Engineers, and Geotechnical Engineers engaged in work for the Florida Department of Transportation.

D. Refer to the ***CADD Manual*** for FDOT Drafting and Modeling Standards related to file naming convention, feature definitions, level names, line weights, line styles and color, text fonts, size, weight and color and dimension styles for Structures QC electronic plan submittal requirements.

I.3 COORDINATION

See ***Structures Manual Introduction*** I.7.

I.4 QUANTITY CALCULATIONS AND REPORTS

A. The ***Basis of Estimates Manual*** describes the method of measurement, basis of payment and required rounding accuracy for frequently used items. Calculate quantities to one additional decimal place of precision compared to Designer Interface/AASHTOWare Project input.

B. Calculate quantities by construction phase for each individual component e.g. end bents, deck, traffic and pedestrian railings, expansion joints, bearings, reinforcing steel, riprap, slope pavement, etc. For multiple adjacent bridges, whether built in phases or at the same time, include quantities and quantity breakdowns with the individual bridge they are associated with. For adjacent bridges with continuous slope treatments or other similar features, e.g. median separated bridges, clearly indicate the quantity breakdowns for each bridge in the plans. For pay items with a secondary unit measurement, calculate the secondary unit, and report the quantities as directed by the ***FDM***.

C. See the ***CADD Manual*** for directory location and file format used for the upload of project pay item data into Designer Interface/AASHTOWare Project.

D. Input pay item quantities (for each bridge) into Designer Interface/AASHTOWare Project. Verify that any manual updates match the Estimated Quantities Report.

Modification for Non-Conventional Projects:
Delete ***SDM*** I.4.

I.5 STRUCTURES QUANTITIES

A. See ***FDM*** 902 for information regarding the generation and submittal of the Estimated Quantities (EQ) Report.

B. The Design Comments Column may be used to clarify quantities, or add extra quantity details; e.g. includes 14.2 cy for pedestals.

C. For more information on EQ Report and Summary Tables see the ***Basis of Estimates Manual***, Chapter 8.

D. Review the final Contract Documents to ensure that a clear method of payment is conveyed for all items of work on the project.

Modification for Non-Conventional Projects:
Delete ***SDM*** I.5.

I.6 PHASE SUBMITTAL REQUIREMENTS

During the design process, submittals will be made at various stages of project development. The purpose of these phase submittals is to ensure the design meets the Department's intent for a given project and that the work done matches the scope agreed upon at the initiation of the contract. For a summary of phase submittals, see ***FDM*** 121.

Modification for Non-Conventional Projects:
Delete ***SDM*** I.6 and see the RFP for requirements.

1 DRAFTING AND PRINTING REQUIREMENTS

1.1 GENERAL

This chapter contains references to general detailing standards and requirements for various bridge components. The instructions are also applicable to most other highway related structures such as retaining walls, pile-supported roadways, etc. Refer to the ***CADD Manual*** for specific instructions related to computer aided drafting.

1.2 DRAFTING REQUIREMENTS

A. Draw all elements at full scale (1:1) to ensure that the plans accurately depict the intended design. A minimum standard of care shall be employed to maintain the accuracy of dimensions shown in relationship to the plans and details as they are drawn to avoid potential design errors and construction conflicts. Exaggerated vertical scales may be used where required for clarity, e.g. Plan and Elevation sheets, Wall Control Drawing Elevation Views, etc.

B. Differentiate outline and dimension line weights.

C. Ensure that the relative line weight and the chosen lettering provides uncompromised legibility when reproduced by normal printing procedures.

D. See the ***FDOT Design Manual*** (***FDM***) and the ***CADD Manual*** for additional drafting and modeling requirements.

1.3 QUALITY ASSURANCE

FDM 124 explains the processes for Quality Assurance and Quality Control. ***FDM*** 131 discusses acceptable printing methods, paper size, and quality of the media and print. From time to time, the Department may conduct an audit of a firm's Quality Assurance/ Quality Control (QA/QC) process to ensure the QA/QC plan outlined at the beginning of the project is being followed. All QA/QC documentation, including check prints, design calculations, quantity computations, etc., shall be kept on file until construction of the project is complete at a minimum.

Modification for Non-Conventional Projects:

Delete ***SDM*** 1.3 and insert the following:

See the RFP for Quality Management Plan (QMP) requirements which describes the Quality Control (QC) procedures to be utilized to verify, independently check, and review all design drawings, specifications, and other documentation prepared as a part of the contract. In addition, the QMP shall establish a Quality Assurance (QA) program to confirm that the Quality Control procedures are followed. From time to time, the Department may conduct an audit of a firm's QMP process to ensure the submitted plan for the project is being followed. All QA/QC documentation, including check prints, design calculations, etc., shall be kept on file until construction of the project is complete at a minimum.

1.4 DRAWING REVISIONS

A. When changes are required prior to contract award, follow the procedures outlined in ***FDM*** 131.

B. When changes are required after the contract award, follow the procedures outlined in Chapter 5.12 of the ***Construction Project Administration Manual***.

Modification for Non-Conventional Projects:

Delete ***SDM*** 1.4.A and 1.4.B and insert the following:

When changes are required after the plans are released for construction, follow the procedures outlined in Chapter 5.12 of the ***Construction Project Administration Manual***. All affected plan sheets shall be resubmitted to the Department for review, and after they have been reviewed and approved, they shall be re-stamped "Released for Construction".

2 DETAILING INSTRUCTIONS

2.1 DETAILING AIDS

The following detailing aids can assist the detailer in efficiently creating a set of plans.

A. When using FDOT programs (Reinforcing Bar Lists, etc.), use the forms and user's manuals provided by the Structures Design Office and/or the Production Support CADD Office (CADD Office) as listed on the following web sites: http://www.fdot.gov/structures; http://www.fdot.gov/cadd/

B. Plan the drawings by determining which details and information need to be placed on each sheet, the scale to be used, the number of sheets required and the sequence of the sheets.

C. The Structures Cell Library contains many commonly used cells in the development of structures plans. Refer to the ***CADD Manual*** for a list of available Structures Cells.

2.2 STRUCTURES IDENTIFICATION NUMBERS

A. FDOT assigns identification numbers to bridges, overhead signs, high-mast light poles and traffic signal mast arms. Structures supporting Intelligent Transportation System (ITS) and tolling equipment may be similar to overhead signs or high-mast light poles, these structures are also assigned identification numbers.

B. Contact the District Structures Maintenance Engineer early in the design process to obtain structure identification numbers.

Modification for Non-Conventional Projects:

Delete ***SDM*** 2.2.B and insert the following:

B. Request bridge and miscellaneous structure numbers from the District Structures Maintenance Office before the 90% plans submittal.

C. New numbers will be assigned to all new and replacement bridges. Widened bridges generally retain their existing numbers. If the widening joins existing structures, the District Structures Maintenance Engineer will decide which bridge number to retain.

D. Show the bridge number on the lower right side above the Title Block of all sheets. For ancillary structures (overhead signs, high mast light poles and traffic signal mast arms) the structure identification number shall be shown on the appropriate plan sheet, including data table sheets, above the title block.

E. Place the bridge number of any bridge that shows up in the plan view, including existing bridges to be removed, on the actual bridge. Only the subject bridge number shall appear in the lower right corner of the sheet.

2.3 BRIDGE LENGTHS AND HORIZONTAL CONTROL

A. A bridge's length is the distance measured along the Station Line between begin and end of bridge (front faces of end bent backwall or end of adjoining approach slabs for end bents with no back wall.)

B. Horizontal Control Lines

1. Alignment Line: Show the alignment control line that applies within the limits of the bridge.

2. Station Line: This is the horizontal control line from which basic distances, lines and angles are referenced for locating bridge components in the field. This line is usually the same line as the Alignment Line. Use the centerline of construction (℄), Base Line Survey, Profile Grade Line or Baseline (℅) to show the stations along the project. Refer to this as the "Station Line."

2.4 FINANCIAL PROJECT NUMBER AND FEDERAL-AID PROJECT NUMBER

A. Show the Financial Project Identification Numbers (FPID) in the Title Block on all bridge plans. Place the FPID Number on the existing bridge plans if included in the submittal.

B. Do not show Federal-Aid Project Numbers (F.A.P. No.) on the bridge plans. Federal-Aid Project Numbers shall be shown on the Key Sheet only.

2.5 INITIAL BLOCK

Include the initials or name of the person performing each function and the date completed for each sheet. If a function is not applicable, place a dash through the name and date block.

2.6 TITLE BLOCK

In upper case letters, include the following information in the title block, of each plan sheet:

A. Sheet title

B. Project Name (a project description and bridge location)

C. Sheet Number

D. Initials (Detailers', Designers', and Checker's)

E. EOR information as required by 61G15, ***Florida Administrative Code***.

F. Financial Project ID Number

G. County (or counties if project covers more than one county)

H. Road number (Show the State or County road number including "SR" or "CR" as appropriate; leave blank if there is no road number)

I. When applicable, descriptions of revisions using the format and process described in ***FDM*** 131.

Modification for Non-Conventional Projects:
Add ***SDM*** 2.6.J as follows: J. Design Build Firm Name

2.7 ORTHOGRAPHIC PROJECTION

A. Use orthographic projection (a multi view system using as many dimensioned views as necessary) to show an object's features. In general, detail objects using more than one view.

B. Use perspective and isometric views to clarify complicated details.

2.8 VIEWS, SECTIONS, DETAILS AND NOTES

A. Before starting a drawing, study the bridge or component and determine the views, sections, details and notes required to describe it fully and to the best advantage. Plan the layout and detail accordingly, allowing sufficient space for dimensions.

B. All details throughout the bridge plans shall be oriented consistently. Show layouts with stationing increasing from left to right. Detail End Bent 1 looking back station; detail all other substructure elements looking ahead station. Detail superstructure sections looking ahead station.

C. Cross-reference all views, sections, details or notes on a drawing.

D. Use a planned system to arrange details on a sheet. Do not randomly place views and sections on the drawing. Avoid crowding elements on a sheet. In general, it is preferred to lay out a sheet with the plan view in the upper left, elevation aligned with plan view in lower left, side/section views on upper right and notes on lower right.

E. A section cut line is an imaginary line extending between right angles at the location of the section. Use section arrows to indicate the direction of the section view.

F. Place the identification letters of the section on the interior side of the cut line. For sections located on another sheet, provide cross-reference notes on both sheets.

G. When an enlarged detail of a certain area in a view is required, place a circle or an ellipse large enough to encompass the area that is to be shown in the enlarged detail. Annotate the circle/ellipse with a leader line and a label such as: See Detail "A", Sheet _. Entitle the enlarged detail: DETAIL "A". If the Detail is located on another sheet, provide cross-reference notes on both sheets.

H. Do not use the letters “I”, “O”, or “Q” in designations for views, sections, or details.

2.9 SCALES

Select a scale large enough to clearly show required details when printed to 11-inch x 17-inch size with a minimum of 5/8-inch left and right margins. Do not indicate scale on the drawings. Set the annotation scale and active scale through the Bar Menu and save settings to ensure consistency. The following scales are recommended:

A. Plan and Elevation: Depending on the size of the bridge and/or how congested the sheet will be, use 1"= 10' through 1"= 50'.

B. Foundation Layout: 1"= 10' or to fit the sheet (longitudinal and lateral scales may be different and piling may be exaggerated in size for clarity).

C. Substructures

   1. Plan and Elevation views 3/8"= 1'-0"
   2. Sections and Details 3/4"= 1'-0" or larger

D. Superstructure

   1. Plan View 1/4"= 1'-0"
   2. Cross Sections 3/8"= 1'-0"3. Details 3/4"= 1'-0" or larger.

2.10 STRENGTH AND CONTRAST OF LINES

A. Contrast between various line weights shall be in the width of the line and not in the intensity. The exception is topo file and other reference files which shall be screened back to reduce intensity. Verify that all lines are legible on prints.

B. Vary the line weight to accentuate important features. Use consistent line weights for similar purposes. (See the ***CADD Manual***.)

C. When showing existing and proposed construction in the same view, show existing elements using dashed/dotted lines per the ***CADD Manual.***

2.11 DIMENSIONING

2.11.1 General

A. A dimension is a linear measurement used to describe an object's size.

B. A value is a quantity used to express a magnitude. An integer used to quantify a number of items such as bars, spacing, bolts, holes, etc. (e.g., 10 spaces @ 4", 10 ~ 4A1). See Figure 2.11.1-1.

Figure 2.11.1-1 Stirrup Bar Detail

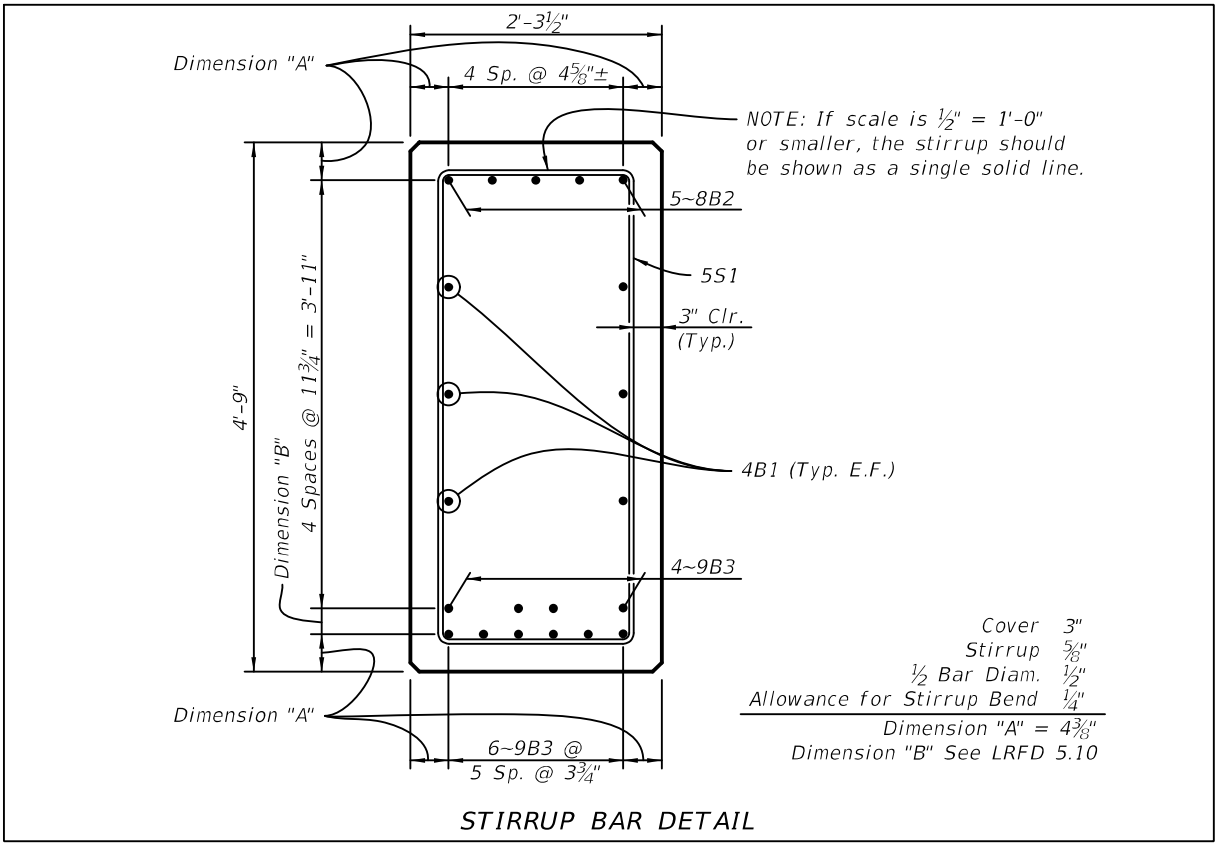

C. A unit is a precise quantity in terms of a reference for measurement.

D. Linear dimension: Use a value in conjunction with a unit of measurement (e.g., 5'-6¼").

E. Elevation: The unit for elevations is feet (ft). Do not show the unit as it is understood. Show most elevations to three decimal places (e.g., 25.384). Use an elevation leader line as shown in Figure 2.11.1-2 Elevation Callouts, do not use dimension or note style leader lines. See also Section 2.11.3 for details.

Figure 2.11.1-2 Elevation Callouts

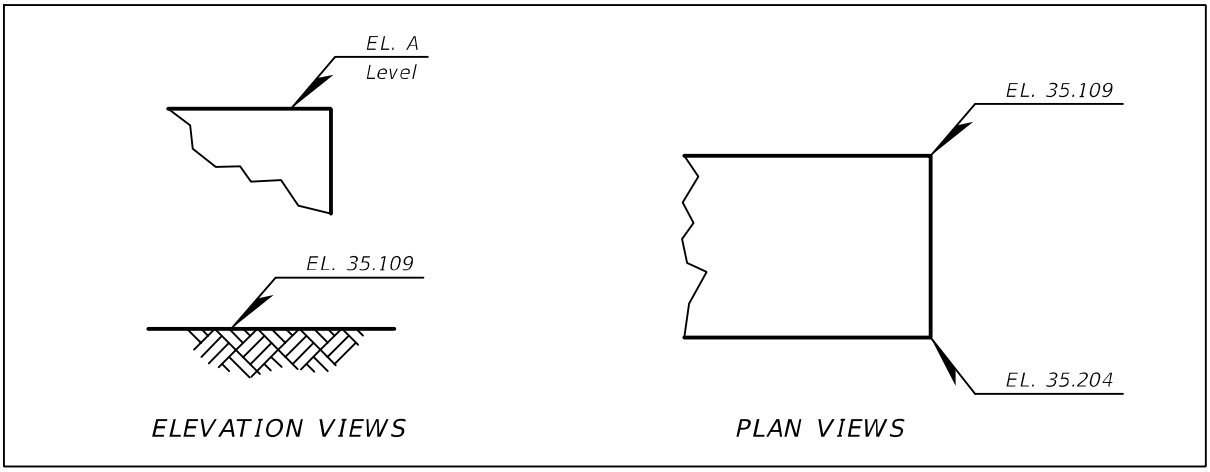

F. Angle: Show angles to needed accuracy up to the nearest second.

G. Sizes of Structural Steel and Aluminum members: When showing size, show all applicable units. Use industry standards such as ASTM or show the manufacturer's size when applicable. Examples of how to designate structural steel and aluminum members are as follows:

1. For solid shapes such as plates and bars - Thickness" x Width" x Length"
2. For W-Shapes - W 30 x 90
3. For Channels - C 10 x 15.3
4. For Angles - L 4 x 4 x ¼
5. For Structural Tees - WT 16.5 x 59

2.11.2 Dimensions and Text

A. Dimensions are displayed by associating Values and Units. Show dimensions clearly, accurately and tied to a control line. Not all dimensions shown on a drawing are for construction purposes; many are engineering dimensions given for convenient reference and checking.

B. Compressed dimensions, due to limited space, may be shown without sacrificing legibility. See Figure 2.11.2-1 for examples.

Figure 2.11.2-1 Compressed Dimensions

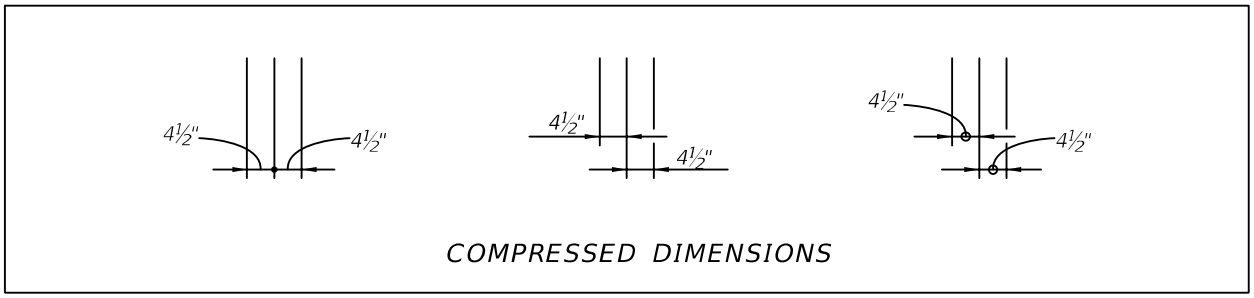

C. Dimension lines should be spaced about 3/4-inch from the object when plotted.

D. Parallel dimension lines should be spaced 3/8-inch minimum when plotted.

E. Dimensions should be kept outside the views (between Extension Lines), but occasionally may be placed inside views or at the end of a leader line.

F. Show dimensions in units of feet and inches. Show dimensions of 12-inches or more in feet, inches and fractions of an inch, and when the inch dimension is less than a full inch include the zero placeholder, e.g. 4'-0½". Show dimensions greater than 1-inch but less than 12-inches in inches and fractions of an inch. Show dimensions less than one inch in fractions of an inch without a leading zero, e.g. ¾-inches. Some exceptions to this rule are component or member designations (i.e., 24-inch Square Piling, Existing 36-inch Steel Beam, etc.) and elevations.

G. Dimensions are to be read from the following directions (see Figure 2.11.2-2):

1. Place numerals on horizontal dimension lines so that they can be read from the bottom of the drawing.
2. Place numerals on vertical dimension lines so that they can be read from the right side of the drawing.
3. Place numerals on inclined dimension lines so that they can be read horizontally by rotating the sheet through the smallest possible angle.

Figure 2.11.2-2
Text Orientation

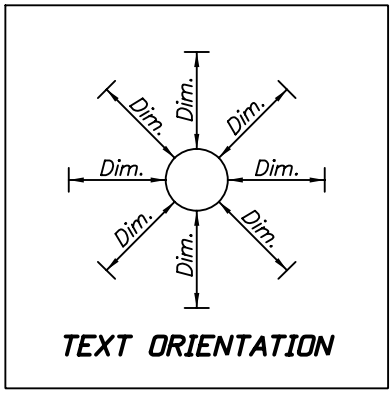

H. Show all dimension numerals parallel to the dimension line.

I. When dimension numerals occupy more space than provided by the dimension line, show on extension lines or by leader lines to the dimension line.

J. Ensure the sum of string dimensions equals the total overall dimension. If this presents a mathematical impossibility without violating the accuracy standards in Section 2.11.3 of this Chapter, use the (+) or (-) signs to indicate heavy or light dimensions. When dimensioning a series of spaces, show incremental dimensions. Avoid the use of "Equal Spaces".

K. When it is necessary to include a dimension between certain points in a detail, small filled circles may be used to emphasize the extremities of the line being measured.

L. Terminate dimension lines with arrowheads. Arrowheads should be a uniform size.

M. Double arrowheads on a dimension line are used on partial views, in congested areas, or when it is not necessary to show the dimension line to its termination. Note dimension numerals on the line along with a description of the magnitude or boundaries in parenthesis. Double arrowheads should not be terminated at extension lines. See Figure 2.11.2-3.

Figure 2.11.2-3 Dimensions

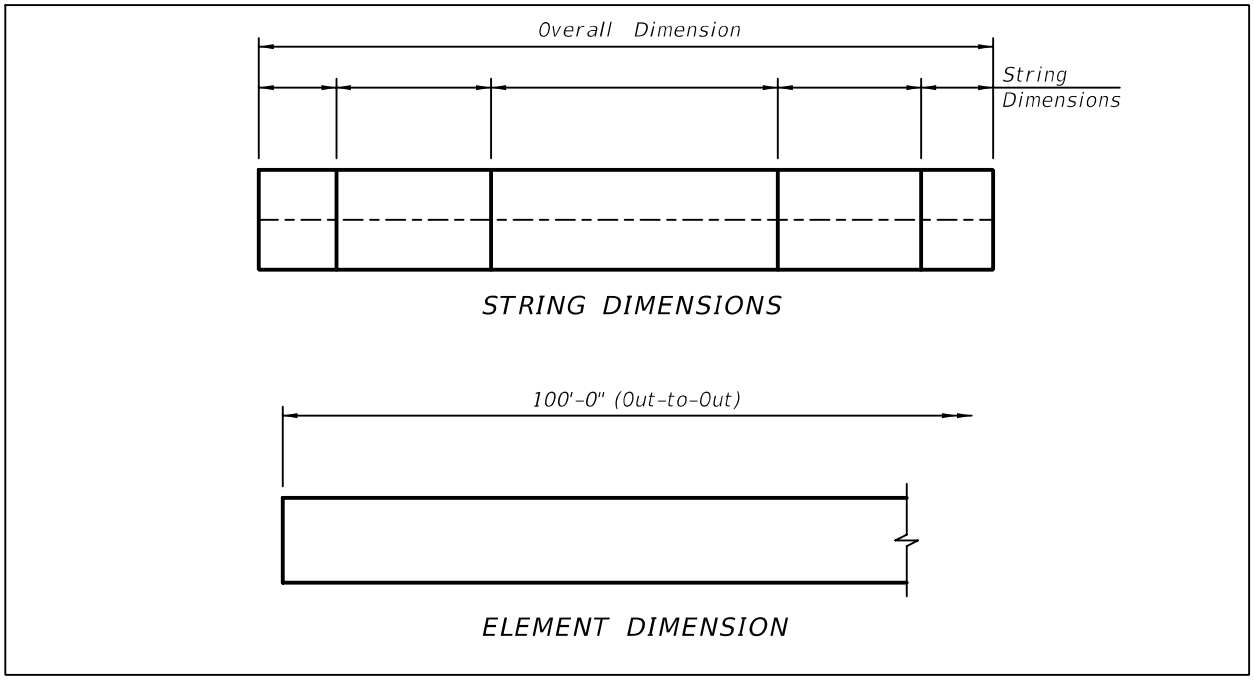

N. Mark centerlines with the centerline symbol. Do not use a centerline as a dimension line, though it may serve as an extension line.

O. Show leader lines with straight lines or continuous curves. Leader lines may cross extension and object lines but may not cross dimension lines.

P. Extend extension lines beyond the point of the arrowhead and leave a gap from the object.

Q. Label radii, surface finishes, and angles as required. Show angles and bearings without hyphens. See Figure 2.11.2-4 and Figure 2.11.2-5.

Figure 2.11.2-4 Angles

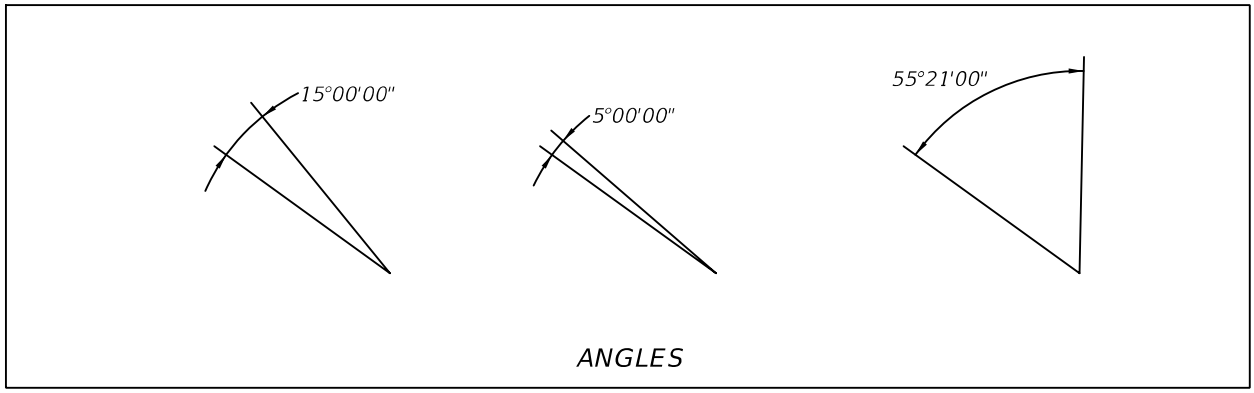

Figure 2.11.2-5 Radii

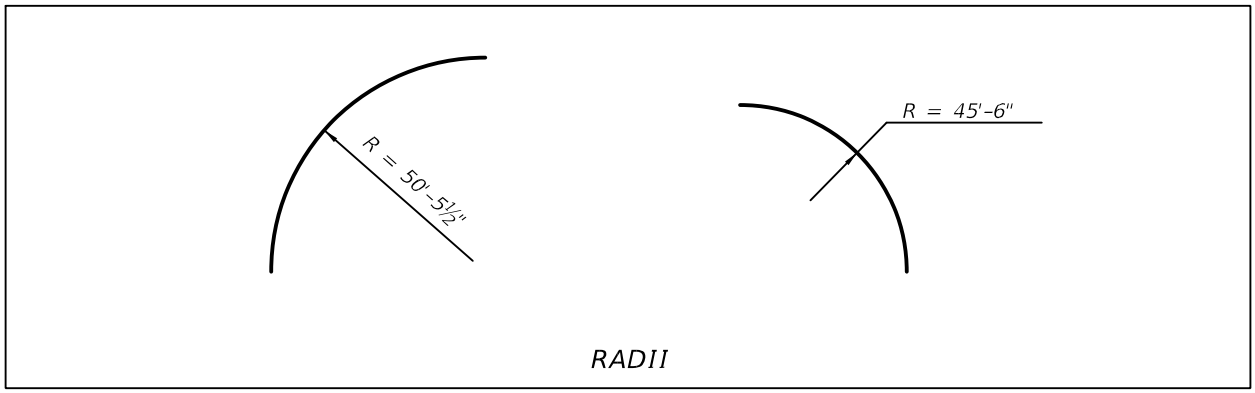

R. For non-level surfaces with extremities not specifically defined by vertical dimensions, note to slope "down" a specific vertical dimension over a defined horizontal length or at a uniform rate.

S. For non-plumb surfaces with extremities not specifically defined by horizontal and vertical dimensions, note to bevel at a uniform rate with the bevel symbol. See Figure 2.11.2-6. For the batter of non-plumb piling, note to batter with the bevel symbol or the amount of batter noted and connected to piling by leader lines with the direction of pile batter clearly shown on the drawings.

Figure 2.11.2-6 Bevel Symbol Detail

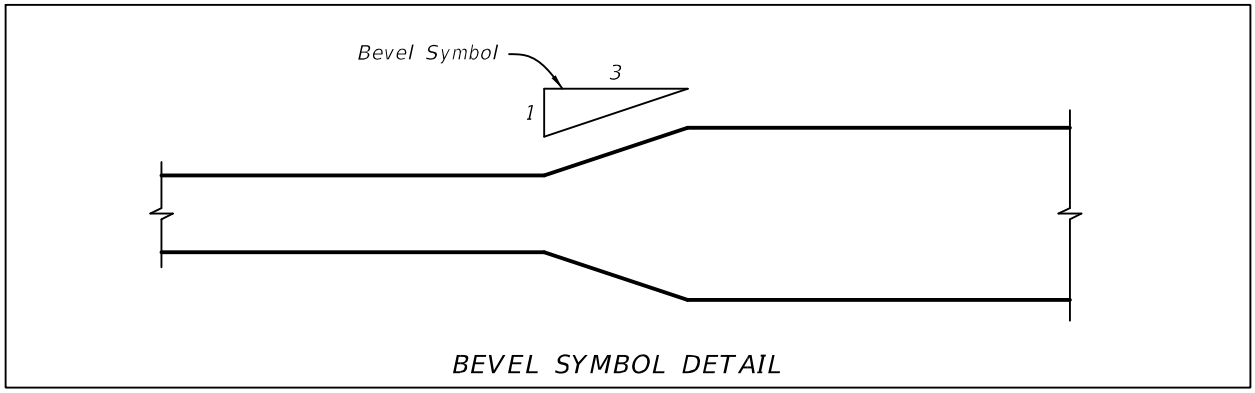

T. When dimensions are shown by methods other than described above, the unit shall be provided. In this event, dimensions are defined as text (i.e., titles, sub-titles, headings, labels, notes, and free standing texts). For free standing texts, the unit may be spelled out to add clarity. If the dimensional text used to describe the size of an object is placed at the end of a leader line pointing directly to the object, show the units.

2.11.3 Dimensioning Precision

A. Show dimensions in feet, inches and fraction of an inch and elevations in decimal of a foot.

B. Dimension concrete to the nearest 1/8-inch.

C. Dimension structural steel to the nearest 1/16-inch.

D. Dimension partial lengths of reinforcing steel to nearest 1/4-inch; dimension overall lengths to the nearest inch.

E. Show stations and offsets to the nearest 0.01-foot.

F. Show layout dimensions (dimensions along tangents, etc.) to the nearest 1/16-inch.

G. Show foundation layout dimensions to the nearest 1/8-inch or 0.01-foot stationing.

H. Show dead load camber and dead load and live load deflections to the nearest 1/16-inch.

I. Show elevations to the nearest 0.001-foot, except pile cut off elevations to the nearest 0.1-foot and water elevations and groundline elevations to nearest 0.01-foot.

J. Show angles and bearings to the nearest second.

   Example: 69° 38' 32", N 69° 38' 32" E

K. Show spacing of reinforcing steel to the nearest 1/4-inch.

L. Show manufactured items to industry standards.

2.12 SYMBOLS AND PATTERNS

A. To simplify the construction and clarity of details, patterns may be used to represent certain materials.

B. Use only enough material indication to clarify details.

C. Verify legibility when the drawings are reproduced to 11-inch x 17-inch print size.

D. Common symbols and patterns are included in the FDOT Structures Cell Library.

E. Use the symbologies (layers, linestyles, and line weights) appropriate to each element of the drawing, based on the levels or feature definitions provided in the Structures CADD seed file provided by the CADD Office with the FDOT CADD software, and the requirements of the ***CADD Manual***.

2.13 ARCHITECTURAL TREATMENT

A. Do not use architectural treatments such as shades and shadows on bridge drawings.

B. Keep required pictorial views with shades and shadows separate from the bridge details.

2.14 SKEW ANGLE AND COMPLEMENTARY SKEW ANGLE

A. A skew angle is the acute angle measured between a line perpendicular to the longitudinal axis of the bridge and the centerline of support. See Figure 2.14-1.

Figure 2.14-1 Skew Angle and Complementary Angle

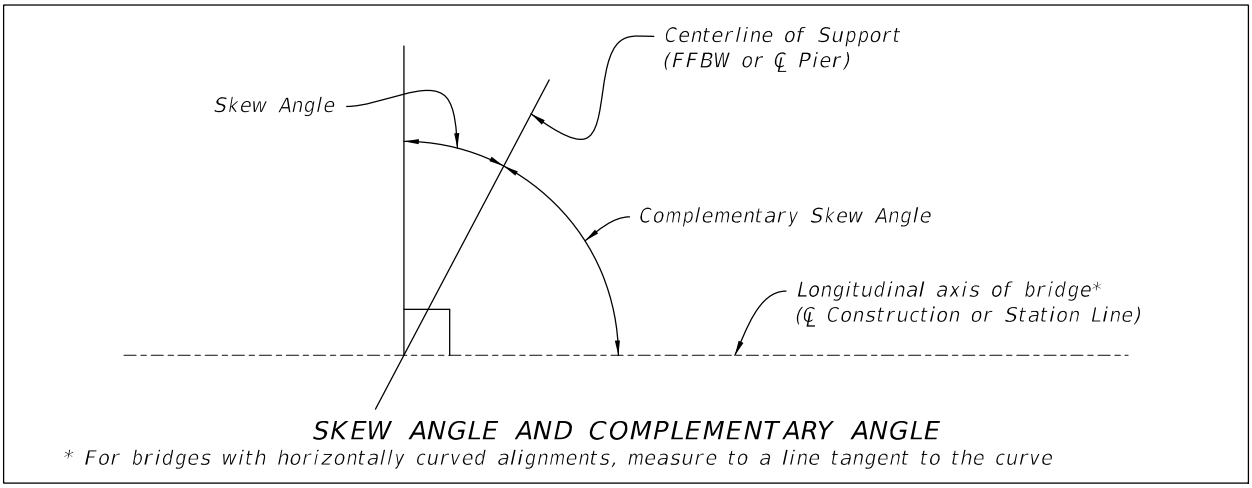

B. The sum of the skew angle and the complementary skew angle is 90 degrees.

C. The complementary skew angle is the angle to show on the plans.

2.15 USING ABBREVIATIONS AND ACRONYMS

A. Do not use abbreviations or acronyms when the meaning may be in doubt.

B. Avoid abbreviations in titles, subtitles, and notes.

C. See ***Standard Plans*** for a list of standard abbreviations and acronyms. Use periods after all abbreviations not shown on this list.

D. Define non-standard abbreviations and acronyms in the General Notes or by placing a legend on the sheet containing the abbreviations or acronyms.

2.16 ARROWS

A. North Arrow - Place North Arrows on drawings to aid in orienting the drawings to the actual site and bridge (or structure) location and orientation.

B. Direction of Stationing Arrow - Use an arrow to indicate the direction of stationing on plan views, superstructures, substructures etc., as well as orientation references of details and sections. Refer to ***SDM*** 2.8 regarding plan orientation.

C. Directional Arrow for Water Flow - Use an arrow to indicate direction of stream and/or tidal flow of water. The tidal flow arrow cell is located in the Structures Cell Library.

D. Use the North Arrow or Direction of Stationing Arrow on all sheets requiring directional orientation. See instructions for individual sheets for more information.

E. Arrows for labeling - Use a leader line with standard dimensioning arrow for component call-outs, for labeling or identifying features or characteristics of components and for labeling centerlines, baselines, etc. Small components, e.g. reinforcing bars shown in section, and other special features may be labeled using a leader line with a small circle placed around the component or feature. When pointing to the surface or body of a component or feature, use a tilde in addition to an arrow. See Figure 2.16-1.

Figure 2.16-1 Labeling Arrow Detail

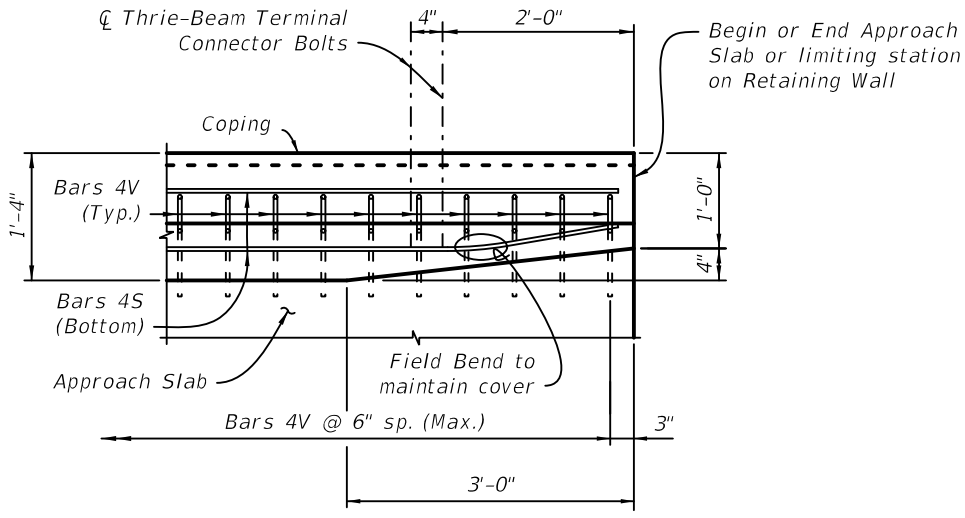

PLAN - Railing End Transition
(Showing Bars 4V and 4S)

3 COMPOSITION OF PLAN SET

3.1 STRUCTURES SHEET NUMBERS

A. Bridge, concrete box culvert and three-sided culvert plans are a component set of plans and may include walls. When structures are prepared as a component set of plans, assemble the drawings as a separate plan set complete with a key sheet, all bridge, culvert and wall sheets and the existing bridge plans. Number the sheets consecutively with the sheet numbers prefixed by the letter and letter/number combinations "B" for common sheets, "B1" for the first bridge or culvert, "B2" for the second bridge or culvert, "B3" for the third bridge or culvert, etc., "BW" sheets for walls, and ending with the existing bridge plans, "BX1", "BX2", "BX3", etc., if applicable.

B. Start the sheet numbering with the Key Sheet numbered "B-1" and continue the “B” prefix numbering for sheets with details common to all bridges. Begin the sheet numbering for the first sheet of the first bridge or culvert with "B1-1". Continue to use the "B1" prefix for all sheets with details pertaining to the first bridge or culvert ("B12", "B1-3", etc.). Number the second series of sheets for the next bridge or culvert, if included, "B2-1", "B2-2", "B2-3", etc., continuing to use the "B2" prefix for all sheets of the second bridge or culvert. Continue incrementing sheet prefix numbers, "B3-1", "B4-1", etc., for each additional bridge or culvert included in the plans. To further divide bridge sheets on complex bridge projects, use a Reference Drawing Number box in the lower right hand corner of the sheet (see ***SDM*** 3.5). After all the bridge and culvert plans, place all the wall drawings (including cast-in-place retaining walls, proprietary wall control plans, temporary walls, noise walls and perimeter walls) using a "BW" sheet prefix. To further divide wall sheets by wall number or type, use the Reference Drawing Number box in the lower right hand corner of the sheet (see ***SDM*** 3.5). At the end of the plan set, place all existing bridge sheets for each bridge in one PDF file named "B1ExistingPlans.pdf" for the first bridge (number sheets sequentially "BX1-1", "BX1-2", etc.) and "B2ExistingPlans.pdf" for the second bridge, etc.

C. Number other miscellaneous structures (signs, signals, lighting, etc.) for the appropriate component set (see ***FDM*** 901) but place the drawing files in the Roadway Plan (see the ***CADD Manual***). Use the Roadway border with initials found in the Structures Cell Library for miscellaneous structures.

D. The preferred sheet order along with the file naming conventions and other CADD requirements are shown in the ***CADD Manual***. All the sheets given in the Table may not be required in a given set of plans, while in others, additional sheets may be necessary. Any sheet name not listed in the table will be flagged and not checked for compliance by the Quality Control checker tool. The sheet order should correspond to the work sequence.

3.2 SHEET TITLES

If more than one sheet is required for a particular sheet type, add sheet numbers in the Sheet Title Block; e.g.: "General Notes (1 of 2)", "General Notes (2 of 2)".

The table below defines the Department's Structures standard file names; each must include sequence numbering. Sheet Order reflects placement within the Structures Component of the Contract Plan Set, but it is modifiable to suit project specific requirements.

Structures Plans Naming Convention and Numbering Convention

* - Design Format ** - Lead or Component Key Sheet *** - Optional ## - Sheet Sequence Number

Sheet Order	File Name	File Title / Description	Control File	File Group	Sheet Prefix	Drawing Prefix
1	KeySheet*	Bridge Key Sheet **	STRUCTURES	PLAN SHEETS		
2	SIGNST*	Signature Sheet	STRUCTURES	PLAN SHEETS		
3	B#Index*	Index of Sheets	STRUCTURES	PLAN SHEETS	B-##	***
4	B#SumOfPayItems*	Summary of Pay Items Sheet *(For Structures as Lead Component Only Projects)*	STRUCTURES	PLAN SHEETS	B-##	***
5	B#SumOfQuantities*	Summary of Structures Quantities	STRUCTURES	PLAN SHEETS	B#-##	***
6	B#GeneralNotes*	General Notes	STRUCTURES	PLAN SHEETS	B#-##	***
7	B#SurfaceFinishDet*	Surface Finish Details	STRUCTURES	PLAN SHEETS	B1-##,B2-##	***
8	B#PlanElev*	Plan and Elevation	STRUCTURES	PLAN SHEETS	B1-##,B2-##	***
9	B#VertCurveSuperEL*	Profile Grade and Superelevation Transition	STRUCTURES	PLAN SHEETS	B1-##,B2-##	***
10	B#BridgeHydro*	Bridge Hydraulic Recommendations	STRUCTURES	PLAN SHEETS	B1-##,B2-##	***
11	B#Boring*	Report of Core Borings	GEOTECH	GEOTECHNICAL FOR STRUCTURES (DGN)	B1-##,B2-##	***
12	B#CPTGeo*	Cone Penetration Test (CPT) Soundings	GEOTECH	GEOTECHNICAL FOR STRUCTURES (DGN)	B1-##,B2-##	***
13	B#ConstNotes*	Construction Notes	STRUCTURES	CONSTRUCTION	B1-##,B2-##	***
14	B#ConstDet*	Construction Details	STRUCTURES	CONSTRUCTION	B1-##,B2-##	***
15	B#ConstSeq*	Construction Sequence	STRUCTURES	CONSTRUCTION	B1-##,B2-##	***
16	B#ConstAcc*	Construction Access	STRUCTURES	CONSTRUCTION	B1-##,B2-##	***
17	B#RemoveExist*	Removal of Existing Structures	STRUCTURES	CONSTRUCTION	B1-##,B2-##	***
18	B#TypicalSection*	Typical Section Through Bridge Deck	STRUCTURES	MISCELLANEOUS	B1-##,B2-##	***
19	B#RiprapRubble*	Rubble Riprap	STRUCTURES	EROSION PROTECTION	B1-##,B2-##	***
20	B#RiprapSand*	Sand Cement Riprap	STRUCTURES	EROSION PROTECTION	B1-##,B2-##	***
21	B#SlopePavementConcrete*	Concrete Slope Pavement	STRUCTURES	EROSION PROTECTION	B1-##,B2-##	***
22	B#ScourPlan*	Plan View of Scour Protection	STRUCTURES	SCOUR PROTECTION PLAN	B1-##,B2-##	SP-##
23	B#ScourProf*	Profile of Scour Protection	STRUCTURES	SCOUR PROTECTION PLAN	B1-##,B2-##	SP-##
24	B#BotContourMap*	Bottom Contour Map	STRUCTURES	SCOUR PROTECTION PLAN	B1-##,B2-##	SP-##
25	B#ScourDetail*	Scour Protection Details	STRUCTURES	SCOUR PROTECTION PLAN	B1-##,B2-##	SP-##
26	B#FoundLay*	Foundation Layout	STRUCTURES	SUBSTRUCTURE	B1-##,B2-##	***
27	B#PileData*	Pile Data Table	STRUCTURES	SUBSTRUCTURE	B1-##,B2-##	***

Structures Plans Naming Convention and Numbering Convention

* - Design Format ** - Lead or Component Key Sheet *** - Optional ## - Sheet Sequence Number

Sheet Order	File Name	File Title / Description	Control File	File Group	Sheet Prefix	Drawing Prefix
28	B#PileDet*	Pile Details	STRUCTURES	SUBSTRUCTURE	B1-##,B2-##	***
29	B#DrillShaft*	Drilled Shaft Data Table	STRUCTURES	SUBSTRUCTURE	B1-##,B2-##	***
30	B#DrillShaftDet*	Drilled Shaft Details	STRUCTURES	SUBSTRUCTURE	B1-##,B2-##	***
31	B#EndBent*	End Bent	STRUCTURES	SUBSTRUCTURE	B1-##,B2-##	***
32	B#EndBentDet*	End Bent Details	STRUCTURES	SUBSTRUCTURE	B1-##,B2-##	***
33	B#IntBent*	Intermediate Bent	STRUCTURES	SUBSTRUCTURE	B1-##,B2-##	***
34	B#IntBentDet*	Intermediate Bent Details	STRUCTURES	SUBSTRUCTURE	B1-##,B2-##	***
35	B#Footing*	Footing	STRUCTURES	SUBSTRUCTURE	B1-##,B2-##	***
36	B#FootingDet*	Footing Details	STRUCTURES	SUBSTRUCTURE	B1-##,B2-##	***
37	B#Pier*	Pier	STRUCTURES	SUBSTRUCTURE	B1-##,B2-##	***
38	B#PierDet*	Pier Details	STRUCTURES	SUBSTRUCTURE	B1-##,B2-##	***
39	B#PrecastPierDet*	Precast Pier Details	STRUCTURES	SUBSTRUCTURE	B1-##,B2-##	***
40	B#PierCapSegDim*	Pier Cap Segment Dimensions	STRUCTURES	SUBSTRUCTURE	B1-##,B2-##	***
41	B#PTPierDet*	Pier Post-Tensioning (PT) Details	STRUCTURES	POST-TENSIONING	B1-##,B2-##	***
42	B#BearingPads*	Neoprene Bearing Pads	STRUCTURES	SUPERSTRUCTURE	B1-##,B2-##	***
43	B#BearingPlates*	Beveled Bearing Plates	STRUCTURES	SUPERSTRUCTURE	B1-##,B2-##	***
44	B#PotBearingDet*	Pot Bearing Details	STRUCTURES	SUPERSTRUCTURE	B1-##,B2-##	***
45	B#DiscBearingDet*	Disc Bearing Details	STRUCTURES	SUPERSTRUCTURE	B1-##,B2-##	***
46	B#BearingDet*	Bearing Details	STRUCTURES	SUPERSTRUCTURE	B1-##,B2-##	***
47	B#BeamLay*	Beam Layout	STRUCTURES	SUPERSTRUCTURE	B1-##,B2-##	***
48	B#BeamLayAASHTO*	AASHTO Beam Layout	STRUCTURES	SUPERSTRUCTURE	B1-##,B2-##	***
49	B#BeamLayFIB*	Florida-I Beam (FIB) Layout	STRUCTURES	SUPERSTRUCTURE	B1-##,B2-##	***
50	B#BeamLayFSB*	Florida Slab Beam (FSB) Layout	STRUCTURES	SUPERSTRUCTURE	B1-##,B2-##	***
51	B#BeamLayBTB*	Bulb-T Beam Layout	STRUCTURES	SUPERSTRUCTURE	B1-##,B2-##	***
52	B#BeamLayFUB*	Florida-U Beam (FUB) Layout	STRUCTURES	SUPERSTRUCTURE	B1-##,B2-##	***
53	B#BeamLayITB*	Inverted T Beam Layout	STRUCTURES	SUPERSTRUCTURE	B1-##,B2-##	***
54	B#BeamLayTB*	T Beam Layout	STRUCTURES	SUPERSTRUCTURE	B1-##,B2-##	***
55	B#PrestSlab*	Prestressed Slab Units	STRUCTURES	SUPERSTRUCTURE	B1-##,B2-##	***
56	B#DataTableBeams*	*(Beam Name)*Table of Beam Variables	STRUCTURES	SUPERSTRUCTURE	B1-##,B2-##	***
57	B#FramingPlan*	Framing Plan	STRUCTURES	SUPERSTRUCTURE	B1-##,B2-##	***
58	B#SteelGirder*	Steel Girder	STRUCTURES	SUPERSTRUCTURE	B1-##,B2-##	***

Structures Plans Naming Convention and Numbering Convention

* - Design Format ** - Lead or Component Key Sheet *** - Optional ## - Sheet Sequence Number

Sheet Order	File Name	File Title / Description	Control File	File Group	Sheet Prefix	Drawing Prefix
59	B#SteelDet*	Steel Girder Details	STRUCTURES	SUPERSTRUCTURE	B1-##,B2-##	***
60	B#DiaphragmSteelDet*	Diaphragm Details *(w/ steel beams/girders)*	STRUCTURES	SUPERSTRUCTURE	B1-##,B2-##	***
61	B#CrossFrameDet*	Cross Frame Details	STRUCTURES	SUPERSTRUCTURE	B1-##,B2-##	***
62	B#Stiffener*	Stiffener Details	STRUCTURES	SUPERSTRUCTURE	B1-##,B2-##	***
63	B#FieldSplice*	Bolted Field Splice	STRUCTURES	SUPERSTRUCTURE	B1-##,B2-##	***
64	B#FieldSpliceDet*	Bolted Field Splice Details	STRUCTURES	SUPERSTRUCTURE	B1-##,B2-##	***
65	B#FloorBeam*	Floor Beams	STRUCTURES	SUPERSTRUCTURE	B1-##,B2-##	***
66	B#Camber*	Camber Diagrams	STRUCTURES	SUPERSTRUCTURE	B1-##,B2-##	***
67	B#Superst*	Superstructure Plan	STRUCTURES	SUPERSTRUCTURE	B1-##,B2-##	***
68	B#SuperstSect*	Superstructure Section	STRUCTURES	SUPERSTRUCTURE	B1-##,B2-##	***
69	B#SuperstDet*	Superstructure Details	STRUCTURES	SUPERSTRUCTURE	B1-##,B2-##	***
70	B#ClosureJointDet*	Closure Joint Details	STRUCTURES	SUPERSTRUCTURE	B1-##,B2-##	***
71	B#DiaphragmConcDet*	Diaphragm Details *(w/ concrete beams/girders)*	STRUCTURES	SUPERSTRUCTURE	B1-##,B2-##	***
72	B#SegLayout*	Segment Layout	STRUCTURES	SUPERSTRUCTURE	B1-##,B2-##	***
73	B#SegJointCoord*	Segment Joint Coordinates	STRUCTURES	SUPERSTRUCTURE	B1-##,B2-##	***
74	B#TypSegDim*	Typical Segment Dimensions	STRUCTURES	SUPERSTRUCTURE	B1-##,B2-##	***
75	B#TypSegDet*	Typical Segment Details	STRUCTURES	SUPERSTRUCTURE	B1-##,B2-##	***
76	B#TypSegReinf*	Typical Segment Reinforcing	STRUCTURES	SUPERSTRUCTURE	B1-##,B2-##	***
77	B#DevSegDim*	Deviation Segment Dimensions	STRUCTURES	SUPERSTRUCTURE	B1-##,B2-##	***
78	B#DevSegDet*	Deviation Segment Details	STRUCTURES	SUPERSTRUCTURE	B1-##,B2-##	***
79	B#DevSegReinf*	Deviation Segment Reinforcing	STRUCTURES	SUPERSTRUCTURE	B1-##,B2-##	***
80	B#PierSegDim*	Pier Segment Dimensions	STRUCTURES	SUPERSTRUCTURE	B1-##,B2-##	***
81	B#PierSegDet*	Pier Segment Details	STRUCTURES	SUPERSTRUCTURE	B1-##,B2-##	***
82	B#PierSegReinf*	Pier Segment Reinforcing	STRUCTURES	SUPERSTRUCTURE	B1-##,B2-##	***
83	B#AbutSegDim*	Abutment Segment Dimensions	STRUCTURES	SUPERSTRUCTURE	B1-##,B2-##	***
84	B#AbutSegDet*	Abutment Segment Details	STRUCTURES	SUPERSTRUCTURE	B1-##,B2-##	***
85	B#AbutSegReinf*	Abutment Segment Reinforcing	STRUCTURES	SUPERSTRUCTURE	B1-##,B2-##	***
86	B#ExpJointSegDim*	Expansion Joint Segment Dimensions	STRUCTURES	SUPERSTRUCTURE	B1-##,B2-##	***
87	B#ExpJointSegDet*	Expansion Joint Segment Details	STRUCTURES	SUPERSTRUCTURE	B1-##,B2-##	***
88	B#ExpJointSegReinf*	Expansion Joint Segment Reinforcing	STRUCTURES	SUPERSTRUCTURE	B1-##,B2-##	***
89	B#ClosurePourDet*	Closure Pour Details	STRUCTURES	SUPERSTRUCTURE	B1-##,B2-##	***
90	B#ClosurePourReinf*	Closure Pour Reinforcing	STRUCTURES	SUPERSTRUCTURE	B1-##,B2-##	***

Structures Plans Naming Convention and Numbering Convention

* - Design Format ** - Lead or Component Key Sheet *** - Optional ## - Sheet Sequence Number

Sheet Order	File Name	File Title / Description	Control File	File Group	Sheet Prefix	Drawing Prefix
91	B#PTTendLayLong*	Longitudinal Post-Tensioning (PT) Tendon Layout	STRUCTURES	POST-TENSIONING	B1-##,B2-##	***
92	B#PTTendLayCont*	Continuity Post-Tensioning (PT) Tendon Layout	STRUCTURES	POST-TENSIONING	B1-##,B2-##	***
93	B#PTTendLayFuture*	Future Post-Tensioning (PT) Tendon Layout	STRUCTURES	POST-TENSIONING	B1-##,B2-##	***
94	B#PTDet*	Post-Tensioning (PT) Details	STRUCTURES	POST-TENSIONING	B1-##,B2-##	***
95	B#PTTransPierSegDet*	Pier Segment Transverse Post-Tensioning (PT) Details	STRUCTURES	POST-TENSIONING	B1-##,B2-##	***
96	B#PTTransAbutSegDet*	Abutment Segment Transverse Post-Tensioning (PT) Details	STRUCTURES	POST-TENSIONING	B1-##,B2-##	***
97	B#PTTransExpJtSegDet*	Expansion Joint Segment Transverse Post-Tensioning (PT) Details	STRUCTURES	POST-TENSIONING	B1-##,B2-##	***
98	B#PTTransDet*	Transverse Post-Tensioning (PT) Details	STRUCTURES	POST-TENSIONING	B1-##,B2-##	***
99	B#PTConstSeq*	Construction Sequence Post-Tensioning (PT)	STRUCTURES	POST-TENSIONING	B1-##,B2-##	***
100	B#ErectSeq*	Erection Sequence	STRUCTURES	CONSTRUCTION	B1-##,B2-##	***
101	B#ErectProced*	Erection Procedure for Launching Girder	STRUCTURES	CONSTRUCTION	B1-##,B2-##	***
102	B#AccessHatch*	Access Hatch Assembly	STRUCTURES	SUPERSTRUCTURE	B1-##,B2-##	***
103	B#AccessDoor*	Access Door Assembly	STRUCTURES	SUPERSTRUCTURE	B1-##,B2-##	***
104	B#MaintLight*	Maintenance Lighting Plan	STRUCTURES	LIGHTING	B1-##,B2-##	***
105	B#MaintLightDet*	Maintenance Lighting Details	STRUCTURES	LIGHTING	B1-##,B2-##	***
106	B#FinishGrEL*	Finish Grade Elevations	STRUCTURES	SUPERSTRUCTURE	B1-##,B2-##	***
107	B#ExpJointDet*	Expansion Joint Details	STRUCTURES	SUPERSTRUCTURE	B1-##,B2-##	***
108	B#DrainDet*	Drain Details	STRUCTURES	DETAILS	B1-##,B2-##	***
109	B#SidewalkDet*	Sidewalk Details	STRUCTURES	DETAILS	B1-##,B2-##	***
110	B#TrafficRailing*	Traffic Railing	STRUCTURES	SUPERSTRUCTURE	B1-##,B2-##	***
111	B#PedRailing*	Pedestrian Railing	STRUCTURES	SUPERSTRUCTURE	B1-##,B2-##	***
112	B#SlidingPlate*	Traffic / Pedestrian Railing Sliding Plate Assembly	STRUCTURES	SUPERSTRUCTURE	B1-##,B2-##	***
113	B#ConduitDet*	Conduit Details	STRUCTURES	DETAILS	B1-##,B2-##	***
114	B#JunctBoxDet*	Junction Box Details	STRUCTURES	DETAILS	B1-##,B2-##	***
115	B#LadderDet*	Ladder Details	STRUCTURES	DETAILS	B1-##,B2-##	***
116	B#JackingDet*	Jacking Details	STRUCTURES	SUPERSTRUCTURE	B1-##,B2-##	***
117	B#MiscDet*	Miscellaneous Details	STRUCTURES	DETAILS	B1-##,B2-##	***
118	B#FenderSystem*	Fender System	STRUCTURES	FENDERS	B1-##,B2-##	***
119	B#FenderDet*	Fender System Details	STRUCTURES	FENDERS	B1-##,B2-##	***
120	B#ApproachSlab*	Approach Slab	STRUCTURES	SUPERSTRUCTURE	B1-##,B2-##	***

Structures Plans Naming Convention and Numbering Convention

* - Design Format ** - Lead or Component Key Sheet *** - Optional ## - Sheet Sequence Number

Sheet Order	File Name	File Title / Description	Control File	File Group	Sheet Prefix	Drawing Prefix
121	B#TempDetourPlanElev*	Temporary Detour Bridge Plan and Elevation	STRUCTURES	TEMPORARY DETOUR	B1-##,B2-##	***
122	B#TempDetourFoundLay*	Temporary Detour Bridge Foundation Layout	STRUCTURES	TEMPORARY DETOUR	B1-##,B2-##	***
123	B#TempDetourPileData*	Temporary Detour Bridge Pile Data Table	STRUCTURES	TEMPORARY DETOUR	B1-##,B2-##	***
124	B#TempDetourPileDet*	Temporary Detour Bridge Pile Details	STRUCTURES	TEMPORARY DETOUR	B1-##,B2-##	***
125	B#TempDetourEndBent*	Temporary Detour Bridge End Bent	STRUCTURES	TEMPORARY DETOUR	B1-##,B2-##	***
126	B#TempDetourEndBentDet*	Temporary Detour Bridge End Bent Details	STRUCTURES	TEMPORARY DETOUR	B1-##,B2-##	***
127	B#TempDetourIntBent*	Temporary Detour Bridge Intermediate Bent	STRUCTURES	TEMPORARY DETOUR	B1-##,B2-##	***
128	B#TempDetourIntBentDet*	Temporary Detour Bridge Intermediate Bent Details	STRUCTURES	TEMPORARY DETOUR	B1-##,B2-##	***
129	B#TempDetourDet*	Temporary Detour Bridge Details	STRUCTURES	TEMPORARY DETOUR	B1-##,B2-##	***
130	B#LTPileProgSum*	Pile Load Test Program Summary	STRUCTURES	LOAD TESTING	B1-##,B2-##	LT-##
131	B#LTDrillShaftSum*	Drilled Shaft Load Test Program Summary	STRUCTURES	LOAD TESTING	B1-##,B2-##	LT-##
132	B#LTLateralProgSum*	Lateral Load Test Program Summary	STRUCTURES	LOAD TESTING	B1-##,B2-##	LT-##
133	B#LTPileDet*	Pile Load Test Details	STRUCTURES	LOAD TESTING	B1-##,B2-##	LT-##
134	B#LTDrillShaftDet*	Drilled Shaft Load Test Details	STRUCTURES	LOAD TESTING	B1-##,B2-##	LT-##
135	B#LTOsterbergCellDet*	Osterberg Cell Load Test Details	STRUCTURES	LOAD TESTING	B1-##,B2-##	LT-##
136	B#LTLateralDet*	Lateral Load Test Details	STRUCTURES	LOAD TESTING	B1-##,B2-##	LT-##
137	B#LTDet*	Load Test Details	STRUCTURES	LOAD TESTING	B1-##,B2-##	LT-##
138	B#InstruDet*	Instrumentation Details	STRUCTURES	LOAD TESTING	B1-##,B2-##	***
139	B#CompTestSetup*	Compression Test Setup	STRUCTURES	LOAD TESTING	B1-##,B2-##	***
140	B#TensionTestSetup*	Tension Test Setup	STRUCTURES	LOAD TESTING	B1-##,B2-##	LT-##
141	B#LTFrame*	Load Test Frame Configuration	STRUCTURES	LOAD TESTING	B1-##,B2-##	LT-##
142	B#LTGirderBraceDet*	Load Test Reaction Girder Bracing Details	STRUCTURES	LOAD TESTING	B1-##,B2-##	LT-##
143	B#LTGirderDet*	Load Test Reaction Girder Details	STRUCTURES	LOAD TESTING	B1-##,B2-##	LT-##
144	B#PlatformDet*	Service Platform Deck and Frame Details	STRUCTURES	LOAD TESTING	B1-##,B2-##	***
145	B#LTStatnamicDet*	Statnamic Load Test Details	STRUCTURES	LOAD TESTING	B1-##,B2-##	LT-##
146	B#BP-Notes*	Bascule Pier Notes	MECHELEC	MOVABLE BRIDGE – STRUCTURAL – Bascular Pier	B1-##,B2-##	BP-##
147	B#BL-Elevation*	Bascule Span Elevation	MECHELEC	MOVABLE BRIDGE – STRUCTURAL – Bascular Span	B1-##,B2-##	BP-##
148	B#BP-PlanViewsX*	Bascule Pier X - AA (X = Pier Number) (*AA = Footing Level Plan, Pit Level Plan, Machinery Level Plan, Trunnion Level Plan, Roadway Level Plan)*	MECHELEC	MOVABLE BRIDGE – STRUCTURAL – Bascular Pier	B1-##,B2-##	BP-##

Structures Plans Naming Convention and Numbering Convention

* - Design Format ** - Lead or Component Key Sheet *** - Optional ## - Sheet Sequence Number

Sheet Order	File Name	File Title / Description	Control File	File Group	Sheet Prefix	Drawing Prefix
149	B#BP-ElevationsX*	Bascule Pier X - BB *(X = Pier Number)(BB = East Elevation, West Elevation, North Elevation, South Elevation)*	MECHELEC	MOVABLE BRIDGE – STRUCTURAL – Bascular Pier	B1-##,B2-##	BP-##
150	B#BP-FinishGradeX*	Bascule Pier X Finish Grade Elevations (X = Pier Number)	MECHELEC	MOVABLE BRIDGE – STRUCTURAL – Bascular Pier	B1-##,B2-##	BP-##
151	B#BP-TransSectX*	Bascule Pier X Transverse Sections *(X = Pier Number)*	MECHELEC	MOVABLE BRIDGE – STRUCTURAL – Bascular Pier	B1-##,B2-##	BP-##
152	B#BP-LongSectX*	Bascule Pier X Longitudinal Sections *(X = Pier Number)*	MECHELEC	MOVABLE BRIDGE – STRUCTURAL – Bascular Pier	B1-##,B2-##	BP-##
153	B#BP-ClearDiagramX*	Bascule Pier X Clearance Diagram (X = Pier Number)	MECHELEC	MOVABLE BRIDGE – STRUCTURAL – Bascular Pier	B1-##,B2-##	BP-##
154	B#BP-RailDetX*	Bascule Pier X Railing Details (X = Pier Number)	MECHELEC	MOVABLE BRIDGE – STRUCTURAL – Bascular Pier	B1-##,B2-##	BP-##
155	B#BP-StairDetX*	Bascule Pier X Stair Details (X = Pier Number)	MECHELEC	MOVABLE BRIDGE – STRUCTURAL – Bascular Pier	B1-##,B2-##	BP-##
156	B#BP-PierDetX*	Bascule Pier X Details (X = Pier Number)	MECHELEC	MOVABLE BRIDGE – STRUCTURAL – Bascular Pier	B1-##,B2-##	BP-##
157	B#BP-ReinfPlansX*	Bascule Pier X Reinforcing - AA (X = Pier Number)(AA = Footing Level Plan, Pit Level Plan, Machinery Level Plan, Trunnion Level Plan, Roadway Level Plan)	MECHELEC	MOVABLE BRIDGE – STRUCTURAL – Bascular Pier	B1-##,B2-##	BP-##
158	B#BP-ReinfElevationsX*	Bascule Pier X Reinforcing - BB (X = Pier Number)*(BB = East Elevation, West Elevation, North Elevation, South Elevation)*	MECHELEC	MOVABLE BRIDGE – STRUCTURAL – Bascular Pier	B1-##,B2-##	BP-##
159	B#BP-ReinfTransSectX*	Bascule Pier X Reinforcing Transverse Sections (X = Pier Number)	MECHELEC	MOVABLE BRIDGE – STRUCTURAL – Bascular Pier	B1-##,B2-##	BP-##
160	B#BP-ReinfLongSectX*	Bascule Pier X Reinforcing Longitudinal Sections (X = Pier Number)	MECHELEC	MOVABLE BRIDGE – STRUCTURAL – Bascular Pier	B1-##,B2-##	BP-##
161	B#BP-ReinfDetX*	Bascule Pier X Reinforcing Details (X = Pier Number)	MECHELEC	MOVABLE BRIDGE – STRUCTURAL – Bascular Pier	B1-##,B2-##	BP-##
162	B#BP-RebarListX*	Bascule Pier X Reinforcing Bar List (X = Pier Number)	MECHELEC	MOVABLE BRIDGE – STRUCTURAL – Bascular Pier	B1-##,B2-##	BP-##
163	B#BT-Notes*	Control House Notes	MECHELEC	MOVABLE BRIDGE - ARCHITECTURAL	B1-##,B2-##	BT-##
164	B#BT-PlanViews*	Control House - AA *(AA = Foundation Level Plan and Reinforcement ,Trunnion Level Plan and Reinforcement, Entry Level Plan and Reinforcement, Tender Level Plan and Reinforcement, Roof Level and Framing Plan)*	MECHELEC	MOVABLE BRIDGE - ARCHITECTURAL	B1-##,B2-##	BT-##
165	B#BT-Elevations*	Control House - BB *(BB = East Elevation and Reinforcement, West Elevation and Reinforcement, North Elevation and Reinforcement, South Elevation and Reinforcement)*	MECHELEC	MOVABLE BRIDGE - ARCHITECTURAL	B1-##,B2-##	BT-##
166	B#BT-Sections*	Control House Sections and Reinforcement	MECHELEC	MOVABLE BRIDGE - ARCHITECTURAL	B1-##,B2-##	BT-##

Structures Plans Naming Convention and Numbering Convention

* - Design Format ** - Lead or Component Key Sheet *** - Optional ## - Sheet Sequence Number

Sheet Order	File Name	File Title / Description	Control File	File Group	Sheet Prefix	Drawing Prefix
167	B#BT-Details*	Control House Details	MECHELEC	MOVABLE BRIDGE - ARCHITECTURAL	B1-##,B2-##	BT-##
168	B#BT-StairDet*	Control House Stair Details	MECHELEC	MOVABLE BRIDGE - ARCHITECTURAL	B1-##,B2-##	BT-##
169	B#BT-HVACPlumb*	Control House Heating, Ventilation & Air Conditioning (HVAC) and Plumbing Floor Plans	MECHELEC	MOVABLE BRIDGE - ARCHITECTURAL	B1-##,B2-##	BT-##
170	B#BT-PlumbSchem*	Control House Plumbing Schematic	MECHELEC	MOVABLE BRIDGE - ARCHITECTURAL	B1-##,B2-##	BT-##
171	B#BT-HVACSchem*	Control House Heating, Ventilation & Air Conditioning (HVAC) Schematic	MECHELEC	MOVABLE BRIDGE - ARCHITECTURAL	B1-##,B2-##	BT-##
172	B#BT-HVACPlumbDet*	Control House Heating, Ventilation & Air Conditioning (HVAC) and Plumbing Details	MECHELEC	MOVABLE BRIDGE - ARCHITECTURAL	B1-##,B2-##	BT-##
173	B#BT-RebarList*	Control House Reinforcing Bar List	MECHELEC	MOVABLE BRIDGE - ARCHITECTURAL	B1-##,B2-##	BT-##
174	B#BL-Notes*	Bascule Span Notes	MECHELEC	MOVABLE BRIDGE – STRUCTURAL – Bascular Span	B1-##,B2-##	BL-##
175	B#BL-FramingPlan*	Bascule Span Framing Plan	MECHELEC	MOVABLE BRIDGE – STRUCTURAL – Bascular Span	B1-##,B2-##	BL-##
176	B#BL-TransSect*	Bascule Span Transverse Sections	MECHELEC	MOVABLE BRIDGE – STRUCTURAL – Bascular Span	B1-##,B2-##	BL-##
177	B#BL-GirderElev*	Bascule Span Main Girder Elevation	MECHELEC	MOVABLE BRIDGE – STRUCTURAL – Bascular Span	B1-##,B2-##	BL-##
178	B#BL-GirderSectDet*	Bascule Span Main Girder Sections and Details	MECHELEC	MOVABLE BRIDGE – STRUCTURAL – Bascular Span	B1-##,B2-##	BL-##
179	B#BL-WebGeoCamberDet*	Bascule Span Web Geometry and Camber Details	MECHELEC	MOVABLE BRIDGE – STRUCTURAL – Bascular Span	B1-##,B2-##	BL-##
180	B#BL-ForceDiag*	Bascule Span Force Diagrams	MECHELEC	MOVABLE BRIDGE – STRUCTURAL – Bascular Span	B1-##,B2-##	BL-##
181	B#BL-FloorBeamDet*	Bascule Span Floor Beam Details	MECHELEC	MOVABLE BRIDGE – STRUCTURAL – Bascular Span	B1-##,B2-##	BL-##
182	B#BL-CountBoxDet*	Bascule Span Counterweight Box Details	MECHELEC	MOVABLE BRIDGE – STRUCTURAL – Bascular Span	B1-##,B2-##	BL-##
183	B#BL-CountPlan*	Bascule Span Counterweight Plan	MECHELEC	MOVABLE BRIDGE – STRUCTURAL – Bascular Span	B1-##,B2-##	BL-##
184	B#BL-CountSections*	Bascule Span Counterweight Sections	MECHELEC	MOVABLE BRIDGE – STRUCTURAL – Bascular Span	B1-##,B2-##	BL-##
185	B#BL-LatBracPlan*	Bascule Span Lateral Bracing Plan	MECHELEC	MOVABLE BRIDGE – STRUCTURAL – Bascular Span	B1-##,B2-##	BL-##
186	B#BL-LatBracDet*	Bascule Span Lateral Bracing Details	MECHELEC	MOVABLE BRIDGE – STRUCTURAL – Bascular Span	B1-##,B2-##	BL-##
187	B#BL-DeckPanelLay*	Bascule Span Deck Panel Layout	MECHELEC	MOVABLE BRIDGE – STRUCTURAL – Bascular Span	B1-##,B2-##	BL-##
188	B#BL-DeckPanelDet*	Bascule Span Deck Panel Details	MECHELEC	MOVABLE BRIDGE – STRUCTURAL – Bascular Span	B1-##,B2-##	BL-##
189	B#BL-DeckPlan*	Bascule Span Deck Plan	MECHELEC	MOVABLE BRIDGE – STRUCTURAL – Bascular Span	B1-##,B2-##	BL-##
190	B#BL-DeckSectDet*	Bascule Span Deck Sections and Details	MECHELEC	MOVABLE BRIDGE – STRUCTURAL – Bascular Span	B1-##,B2-##	BL-##

Structures Plans Naming Convention and Numbering Convention

* - Design Format ** - Lead or Component Key Sheet *** - Optional ## - Sheet Sequence Number

Sheet Order	File Name	File Title / Description	Control File	File Group	Sheet Prefix	Drawing Prefix
191	B#BL-ArmJointLay*	Bascule Span Armored Joint Plan Layout	MECHELEC	MOVABLE BRIDGE – STRUCTURAL – Bascular Span	B1-##,B2-##	BL-##
192	B#BL-ArmJointDet*	Bascule Span Armored Joint Details	MECHELEC	MOVABLE BRIDGE – STRUCTURAL – Bascular Span	B1-##,B2-##	BL-##
193	B#BL-LLShoeAssem*	Bascule Span Live Load (LL) Shoe Assembly	MECHELEC	MOVABLE BRIDGE – STRUCTURAL – Bascular Span	B1-##,B2-##	BL-##
194	B#BL-CentDev*	Bascule Span Centering Device	MECHELEC	MOVABLE BRIDGE – STRUCTURAL – Bascular Span	B1-##,B2-##	BL-##
195	B#BL-LockBarHseDet*	Bascule Span Lock Bar Housing Details	MECHELEC	MOVABLE BRIDGE – STRUCTURAL – Bascular Span	B1-##,B2-##	BL-##
196	B#BL-BalPlan*	Bascule Span Balance Plan	MECHELEC	MOVABLE BRIDGE – STRUCTURAL – Bascular Span	B1-##,B2-##	BL-##
197	B#Mech-Notes*	Machinery Notes	MECHELEC	MOVABLE BRIDGE - MECHANICAL	B1-##,B2-##	BM-##
198	B#Mech-BLMachSys*	Bascule Span Machinery Systems	MECHELEC	MOVABLE BRIDGE - MECHANICAL	B1-##,B2-##	BM-##
199	B#Mech-SDMachPlan*	Span Drive Machinery Plan	MECHELEC	MOVABLE BRIDGE - MECHANICAL	B1-##,B2-##	BM-##
200	B#Mech-SDMachElev*	Span Drive Machinery Elevation	MECHELEC	MOVABLE BRIDGE - MECHANICAL	B1-##,B2-##	BM-##
201	B#Mech-SDMachElevDet*	Span Drive Machinery Elevation Details	MECHELEC	MOVABLE BRIDGE - MECHANICAL	B1-##,B2-##	BM-##
202	B#Mech-SDMachTable*	Span Drive Machinery Tables	MECHELEC	MOVABLE BRIDGE - MECHANICAL	B1-##,B2-##	BM-##
203	B#Mech-DiffLock*	Differential Lock Out Mechanism Assembly and Floating Shaft	MECHELEC	MOVABLE BRIDGE - MECHANICAL	B1-##,B2-##	BM-##
204	B#Mech-DiffLockDet*	Differential Lock Out Mechanism Details	MECHELEC	MOVABLE BRIDGE - MECHANICAL	B1-##,B2-##	BM-##
205	B#Mech-SDMachSuppDet*	Span Drive Machinery Support Details	MECHELEC	MOVABLE BRIDGE - MECHANICAL	B1-##,B2-##	BM-##
206	B#Mech-RackPinion*	Rack/Pinion and Trunnion Assembly	MECHELEC	MOVABLE BRIDGE - MECHANICAL	B1-##,B2-##	BM-##
207	B#Mech-RackDet*	Rack Assembly Details	MECHELEC	MOVABLE BRIDGE - MECHANICAL	B1-##,B2-##	BM-##
208	B#Mech-PinionDet*	Pinion Assembly Details	MECHELEC	MOVABLE BRIDGE - MECHANICAL	B1-##,B2-##	BM-##
209	B#Mech-TrunAssemDet*	Trunnion Assembly Details	MECHELEC	MOVABLE BRIDGE - MECHANICAL	B1-##,B2-##	BM-##
210	B#Mech-SLimSwitchDet*	Span Limit Switch Details	MECHELEC	MOVABLE BRIDGE - MECHANICAL	B1-##,B2-##	BM-##
211	B#Mech-SLockAssemb*	Span Lock Assembly	MECHELEC	MOVABLE BRIDGE - MECHANICAL	B1-##,B2-##	BM-##
212	B#Mech-SLockDet*	Span Lock Details	MECHELEC	MOVABLE BRIDGE - MECHANICAL	B1-##,B2-##	BM-##
213	B#Elec-Notes*	Electrical Notes	MECHELEC	MOVABLE BRIDGE - ELECTRICAL	B1-##,B2-##	BE-##
214	B#Elec-PlanElev*	Electrical Plan and Elevation	MECHELEC	MOVABLE BRIDGE - ELECTRICAL	B1-##,B2-##	BE-##
215	B#Elec-Abbrev*	Electrical Abbreviations	MECHELEC	MOVABLE BRIDGE - ELECTRICAL	B1-##,B2-##	BE-##
216	B#Elec-Legend*	Electrical Legend	MECHELEC	MOVABLE BRIDGE - ELECTRICAL	B1-##,B2-##	BE-##
217	B#Elec-OneLineDia*	One Line Diagram	MECHELEC	MOVABLE BRIDGE - ELECTRICAL	B1-##,B2-##	BE-##
218	B#Elec-LightPanSched*	Lighting Panel Schedule	MECHELEC	MOVABLE BRIDGE - ELECTRICAL	B1-##,B2-##	BE-##
219	B#Elec-LightPanCirc*	Lighting Panel Circuits	MECHELEC	MOVABLE BRIDGE - ELECTRICAL	B1-##,B2-##	BE-##

Structures Plans Naming Convention and Numbering Convention

* - Design Format ** - Lead or Component Key Sheet *** - Optional ## - Sheet Sequence Number

Sheet Order	File Name	File Title / Description	Control File	File Group	Sheet Prefix	Drawing Prefix
220	B#Elec-BTFloorPlan*	Control House Floor Plans	MECHELEC	MOVABLE BRIDGE - ELECTRICAL	B1-##,B2-##	BE-##
221	B#Elec-BPElectLay*	Bascule Pier Electrical Layout	MECHELEC	MOVABLE BRIDGE - ELECTRICAL	B1-##,B2-##	BE-##
222	B#Elec-BPRefCeilPlan*	Bascule Pier Reflected Ceiling Plans	MECHELEC	MOVABLE BRIDGE - ELECTRICAL	B1-##,B2-##	BE-##
223	B#Elec-MCCLay*	Motor Control Center (MCC) Layout	MECHELEC	MOVABLE BRIDGE - ELECTRICAL	B1-##,B2-##	BE-##
224	B#Elec-DriveCabDet*	Drive Cabinet Details	MECHELEC	MOVABLE BRIDGE - ELECTRICAL	B1-##,B2-##	BE-##
225	B#Elec-CtlDeskLay*	Control Desk Layout	MECHELEC	MOVABLE BRIDGE - ELECTRICAL	B1-##,B2-##	BE-##
226	B#Elec-CtlDeskDet*	Control Desk Details	MECHELEC	MOVABLE BRIDGE - ELECTRICAL	B1-##,B2-##	BE-##
227	B#Elec-CtlCabDet*	Control Cabinet Details	MECHELEC	MOVABLE BRIDGE - ELECTRICAL	B1-##,B2-##	BE-##
228	B#Elec-CtlSysArchDi*	Control System Architectural Diagram	MECHELEC	MOVABLE BRIDGE - ELECTRICAL	B1-##,B2-##	BE-##
229	B#Elec-OperSeqFlow*	Operating Sequence Flowchart	MECHELEC	MOVABLE BRIDGE - ELECTRICAL	B1-##,B2-##	BE-##
230	B#Elec-CtlSchem*	Control Schematics	MECHELEC	MOVABLE BRIDGE - ELECTRICAL	B1-##,B2-##	BE-##
231	B#Elec-NavLight*	Navigational Lighting	MECHELEC	MOVABLE BRIDGE - ELECTRICAL	B1-##,B2-##	BE-##
232	B#Elec-TrafficConDet*	Traffic Control Details	MECHELEC	MOVABLE BRIDGE - ELECTRICAL	B1-##,B2-##	BE-##
233	B#Elec-FireAlarm*	Fire Alarm System	MECHELEC	MOVABLE BRIDGE - ELECTRICAL	B1-##,B2-##	BE-##
234	B#Elec-CCTVSys*	Closed Circuit Television (CCTV) System	MECHELEC	MOVABLE BRIDGE - ELECTRICAL	B1-##,B2-##	BE-##
235	B#Elec-CommSys*	Communication System	MECHELEC	MOVABLE BRIDGE - ELECTRICAL	B1-##,B2-##	BE-##
236	B#Elec-LighProtSyst*	Lightning Protection System	MECHELEC	MOVABLE BRIDGE - ELECTRICAL	B1-##,B2-##	BE-##
237	B#Elec-GeneratorDet*	Generator Details	MECHELEC	MOVABLE BRIDGE - ELECTRICAL	B1-##,B2-##	BE-##
238	B#Elec-SubCondDet*	Submarine Conduit Details	MECHELEC	MOVABLE BRIDGE - ELECTRICAL	B1-##,B2-##	BE-##
239	B#Elec-FlexCableDet*	Flexible Cable Details	MECHELEC	MOVABLE BRIDGE - ELECTRICAL	B1-##,B2-##	BE-##
240	B#Elec-CondSchem*	Conduit Schematic	MECHELEC	MOVABLE BRIDGE - ELECTRICAL	B1-##,B2-##	BE-##
241	B#Elec-CondConductSched*	Conduit and Conductor Schedule	MECHELEC	MOVABLE BRIDGE - ELECTRICAL	B1-##,B2-##	BE-##
242	B#Elec-BTReflCeil*	Control House Reflected Ceiling Plans	MECHELEC	MOVABLE BRIDGE - ELECTRICAL	B1-##,B2-##	BE-##
243	B#PedBridgeDataTable*	Pedestrian Bridge Data	STRUCTURES	TABLES	BP-1, BP-##	***
244	B#RebarList*	Reinforcing Bar List	STRUCTURES	CONSTRUCTION	B1-##,B2-##	***
245	B#DataTableLoadRating*	Load Rating Summary Table	STRUCTURES	TABLES	B1-##,B2-##	***
246	B#WallControl*	Wall Control Drawing	STRUCTURES	WALLS	BW-##	W1-##,W2-##
247	B#Bulkhead*	Bulkhead	STRUCTURES	WALLS	BW-##	W1-##,W2-##
248	B#BulkheadDet*	Bulkhead Details	STRUCTURES	WALLS	BW-##	W1-##,W2-##
249	B#SheetPileWallAnchSteel*	Anchored Steel Sheet Pile Wall	STRUCTURES	WALLS	BW-##	W1-##,W2-##
250	B#SheetPileWallAnchConc*	Anchored Concrete Sheet Pile Wall	STRUCTURES	WALLS	BW-##	W1-##,W2-##

Structures Plans Naming Convention and Numbering Convention						
* - Design Format ** - Lead or Component Key Sheet *** - Optional ## - Sheet Sequence Number						
Sheet Order	**File Name**	**File Title / Description**	**Control File**	**File Group**	**Sheet Prefix**	**Drawing Prefix**
251	B#SheetPileWallCantSteel*	Cantilever Steel Sheet Pile Wall	STRUCTURES	WALLS	BW-##	W1-##,W2-##
252	B#SheetPileWallCantConc*	Cantilever Concrete Sheet Pile Wall	STRUCTURES	WALLS	BW-##	W1-##,W2-##
253	B#SheetPileWall*	Sheet Pile Wall	STRUCTURES	WALLS	BW-##	W1-##,W2-##
254	B#MSEwall*	Mechanically Stabilized Earth (MSE) Wall	STRUCTURES	WALLS	BW-##	W1-##,W2-##
255	B#RetainingWall*	Retaining Wall	STRUCTURES	WALLS	BW-##	W1-##,W2-##
256	B#MSEWallGEO*	Mechanically Stabilized Earth (MSE) Wall Standard Penetration Test (SPT) Borings	GEOTECH	GEOTECHNICAL FOR STRUCTURES (DGN)	BW-##	W1-##,W2-##
257	B#RetainingWallGEO*	Retaining Wall Standard Penetration Test (SPT) Borings	GEOTECH	GEOTECHNICAL FOR STRUCTURES (DGN)	BW-##	W1-##,W2-##
258	B#SheetPileWallGEO*	Sheet Pile Wall Standard Penetration Test (SPT) Borings	GEOTECH	GEOTECHNICAL FOR STRUCTURES (DGN)	BW-##	W1-##,W2-##
259	B#NoiseWall*	Noise Wall	STRUCTURES	WALLS	BW#-##	SB1-##, SB2-##
260	B#NoiseWallGEO*	Noise Wall Standard Penetration Test (SPT) Borings	GEOTECH	GEOTECHNICAL FOR STRUCTURES (DGN)	BW#-##	SB1-##, SB2-##
261	B#CrashWall*	Crash Wall	STRUCTURES	WALLS	BW-##	W1-##,W2-##
262	B#RebarListWall*	Reinforcing Bar List *(Wall/bulkhead related)*	STRUCTURES	WALLS	BW-##	W1-##,W2-##
263	B#MiscStr*	Miscellaneous Structure	STRUCTURES	MISCELLANEOUS	B#-##	***
264	B#MiscStrClvt*	Box Culvert	STRUCTURES	MISCELLANEOUS	B#-##	***
	StrBorder*	Referencing Structures Borders	STRUCTURES	PLAN SHEETS		

Non-Bridge Related Filenames:

Create the following non-bridge related files in the Structures workspace using Structures seed files. Include mast arm and overhead sign structure sheets in the Roadway Plans. Include the sheets for all other listed items in the Roadway plans when no Structures plans are present.

Sheet Order	File Name	File Title / Description	Control File	File Group	Sheet Prefix	Drawing Prefix
a1	WallControl*	Wall Control Drawing *(Non-Bridge Related)*	STRUCTURES	WALLS *(Non-Bridge Related)*	None	W1-##,W2-##
a2	Bulkhead*	Bulkhead *(Non-Bridge Related)*	STRUCTURES	WALLS *(Non-Bridge Related)*	None	W1-##,W2-##
a3	BulkheadDet*	Bulkhead Details *(Non-Bridge Related)*	STRUCTURES	WALLS *(Non-Bridge Related)*	None	W1-##,W2-##
a4	SheetPileWallAnchSteel*	Anchored Steel Sheet Pile Wall *(Non-Bridge Related)*	STRUCTURES	WALLS *(Non-Bridge Related)*	None	W1-##,W2-##
a5	SheetPileWallAnchConc*	Anchored Concrete Sheet Pile Wall *(Non-Bridge Related)*	STRUCTURES	WALLS *(Non-Bridge Related)*	None	W1-##,W2-##
a6	SheetPileWallCantSteel*	Cantilever Steel Sheet Pile Wall *(Non-Bridge Related)*	STRUCTURES	WALLS *(Non-Bridge Related)*	None	W1-##,W2-##
a7	SheetPileWallCantConc*	Cantilever Concrete Sheet Pile Wall *(Non-Bridge Related)*	STRUCTURES	WALLS *(Non-Bridge Related)*	None	W1-##,W2-##

Sheet Order	File Name	File Title / Description	Control File	File Group	Sheet Prefix	Drawing Prefix
a8	SheetPileWall*	Sheet Pile Wall *(Non-Bridge Related)*	STRUCTURES	WALLS *(Non-Bridge Related)*	None	W1-##,W2-##
a9	MSEwall*	Mechanically Stabilized Earth (MSE) Wall *(Non-Bridge Related)*	STRUCTURES	WALLS *(Non-Bridge Related)*	None	W1-##,W2-##
a10	RetainingWall*	Retaining Wall *(Non-Bridge Related)*	STRUCTURES	WALLS *(Non-Bridge Related)*	None	W1-##,W2-##
a11	MSEWallGEO*	Mechanically Stabilized Earth (MSE) Wall Standard Penetration Test (SPT) Borings *(Non-Bridge Related)*	GEOTECH	GEOTECHNICAL *(Non-Bridge Related)*	None	W1-##,W2-##
a12	RetainingWallGEO*	Retaining Wall Standard Penetration Test (SPT) Borings *(Non-Bridge Related)*	GEOTECH	GEOTECHNICAL *(Non-Bridge Related)*	None	W1-##,W2-##
a13	SheetPileWallGEO*	Sheet Pile Wall Standard Penetration Test (SPT) Borings *(Non-Bridge Related)*	GEOTECH	GEOTECHNICAL *(Non-Bridge Related)*	None	W1-##,W2-##
a14	NoiseWall*	Noise Wall *(Non-Bridge Related)*	STRUCTURES	WALLS *(Non-Bridge Related)*	None	SB1-##, SB2-##
a15	NoiseWallGEO*	Noise Wall Standard Penetration Test (SPT) Borings *(Non-Bridge Related)*	GEOTECH	GEOTECHNICAL *(Non-Bridge Related)*	None	SB1-##, SB2-##
A16	ConePTGEO*	Cone Penetration Test (CPT) Soundings (Non-Bridge Related)	GEOTECH	GEOTECHNICAL *(Non-Bridge Related)*	None	SB1-##, SB2-##
a17	CrashWall*	Crash Wall *(Non-Bridge Related)*	STRUCTURES	WALLS *(Non-Bridge Related)*	None	W1-##,W2-##
a18	RebarList*	Reinforcing Bar List *(Non-Bridge Related)*	STRUCTURES	CONSTRUCTION *(Non-Bridge Related)*	None	W1-##,W2-##
a19	MiscStr*	Miscellaneous Structure *(Non-Bridge Related)*	STRUCTURES	MISCELLANEOUS *(Non-Bridge Related)*		
a20	MiscStrClvt*	Culvert *(Non-Bridge Related)*	STRUCTURES	MISCELLANEOUS *(Non-Bridge Related)*		
a21	StandardMastArmDataTable*	Standard Mast Arm Assemblies Data Table *(Non-Bridge Related)*	STRUCTURES	MISCELLANEOUS *(Non-Bridge Related)*		
a22	SpecialMastArmDataTable*	Special Mast Arm Assemblies Data Table *(Non-Bridge Related)*	STRUCTURES	MISCELLANEOUS *(Non-Bridge Related)*		
a23	MastArmTab*	Mast Arm Tabulation *(Non-Bridge Related)*	STRUCTURES	MISCELLANEOUS *(Non-Bridge Related)*		
a24	MiscStrMastArm*	Mast Arm Assemblies *(Non-standard)*	STRUCTURES	MISCELLANEOUS *(Non-Bridge Related)*		
a25	MiscStrHighMast*	High Mast Light Poles *(Non-Bridge Related)*	STRUCTURES	MISCELLANEOUS *(Non-Bridge Related)*		
a26	SignStructCant*	Cantilever Sign Structures Data Table *(Non-Bridge Related)*	STRUCTURES	MISCELLANEOUS *(Non-Bridge Related)*		
a27	SignStructSpan*	Span Sign Structures Data Table *(Non-Bridge Related)*	STRUCTURES	MISCELLANEOUS *(Non-Bridge Related)*		
a28	MiscStrOHSign*	Overhead Sign Structures *(Non-standard)*	STRUCTURES	MISCELLANEOUS *(Non-Bridge Related)*		

3.3 SHEET REFERENCES FOR MULTIPLE BRIDGES AND/OR STRUCTURES

The drawings for a specific bridge or culvert may refer to other drawings with sheet numbers beginning with the same prefix letter and number or with the letter "B". For example, sheets in the B1-XX series may refer to any other sheet within the B1-XX series or the B-XX series but shall not refer to sheets in the B2-XX series or B3-XX series, etc.

3.4 SHEET NUMBERS ON PROJECTS WITH ALTERNATE STRUCTURE TYPES

On projects with alternate structure types, designate each alternate for each bridge with a unique number following the "B" prefix (e.g. "B1" and "B2" for bridge 1 alternates; "B3" and "B4" for bridge 2 alternates, etc.). Since the sheet number will no longer correspond to the bridge number, cross reference each alternate with the bridge number in the List of Drawings.

Modification for Non-Conventional Projects:

Delete ***SDM*** 3.4.

3.5 REFERENCE DRAWING NUMBER BOX

When developing complex bridges or multiple wall systems, use the Reference Drawing Number box in the lower right hand corner on the plans to separate components and help in the development of cross references. Drawing letter/number combinations are assigned at the discretion of the designer and shall include prefix combinations that correspond to the details on the drawing. The information in the Reference Drawing Number box is only used for cross referencing and plan preparation; no data from the box will be used in the Electronic Delivery process. Optional Reference Drawing Number box is required on all bascule bridges or bridges with multiple wall types. For projects with alternate designs, follow the Reference Drawing Number with the alternate designation (e.g. Drawing No. 45, Alt. B).

Modification for Non-Conventional Projects:

Delete ***SDM*** 3.5 and insert the following:

When developing complex bridges or multiple wall systems, use the Reference Drawing Number box in the lower right hand corner on the plans to separate components and help in the development of cross references. Drawing letter/number combinations are assigned at the discretion of the designer and shall include prefix combinations that correspond to the details on the drawing. The information in the Reference Drawing Number box is only used for cross referencing and plan preparation; no data from the box will be used in the Electronic Delivery process. Optional Reference Drawing Number box is required on all bascule bridges or bridges with multiple wall types.

3.6 PHASE SUBMITTAL REQUIREMENTS

For a summary of phase submittals, see ***FDM*** 121.

Modification for Non-Conventional Projects:
Delete ***SDM*** 3.6 and see the RFP for requirements.

3.7 USE OF FDOT STANDARD PLANS

A. The current FDOT ***Standard Plans*** comprise the best practices of the FDOT in design code compliance, pay item consistency, and Specification coordination. See the ***Standard Plans Instructions (SPI)*** for additional information.

Modification for Non-Conventional Projects:
Delete ***SDM*** 3.7.A and insert the following: A. The current FDOT ***Standard Plans*** comprise the best practices of the FDOT in design code compliance and Specification coordination. See the ***Standard Plans Instructions (SPI)*** for additional information.

B. In structures and wall plans, reference the applicable FDOT ***Standard Plans*** by general description and index number. Place the reference on the primary drawings depicting the component. In many instances, several plan references are appropriate (e.g. beam index number references on framing plan and cross section sheets). Provide at least one index number for each of the ***Standard Plans*** used. Note the governing ***Standard Plans*** and revised Index drawings on the lead project Key Sheet (see ***FDM*** 910). Do not include a list of ***Standard Plans for Road Construction*** on the “Index of Structure Plans”. Include a list of relevant ***Standard Plans for Bridge Construction*** on the “Index of Structure Plans” behind the bridge and/or culvert sheets (B#-##), but before the existing bridge sheets (BX#-##). Attach the associated PDF files in the Structure Component Plans for each bridge number or culvert following the sequence of the “Index of Structure Plans”.

C. Some ***Standard Plans*** for structural components, e.g. prestressed beams, approach slabs, bearing pads, etc., require supplemental tables, notes and or graphics to be completed and included in the plans by the designer. Select the appropriate tables, notes and or graphics using the FDOT CADD software. For the latest version of the FDOT CADD software, go to: http://www.fdot.gov/cadd/. For the latest version of the Structures ***Standard Plans*** Data Table cell library (TTF_StdDataTables.cel) go to: http://www.fdot.gov/structures/CADD/standards/CurrentStandards/MicrostationDrawings.shtm

D. For the ***Standard Plans***, see the Office of Design's web site at: http://www.fdot.gov/design/standardplans/.

*Commentary: Specific references to the appropriate **Standard Plans** are necessary to clarify the Designer's intent to the Contractor. Only bridge or culvert related **Standard Plans** (**for Bridge Construction**) are required to be included in the Structure Plans Component set. Any modified indexes are required to be included in the discipline specific Plans Component set.*

3.8 EXISTING PLANS

Incorporate pertinent and related existing structures plans into new Contract Plans. For widening and bridge replacements, include the entire existing plan set in the Contract Plans. For other types of work, incorporate only those sections of the existing structure plans that may need to be referenced during work activities associated with the Contract Plans. When available, existing plans may be obtained from the District. Existing plans should be legible and reproducible for inclusion in the Contract Plans. See the ***CADD Manual*** for Existing Plans file naming and formats required for Electronic Delivery. Add plan note indicating that existing plans are not available when applicable.

Modification for Non-Conventional Projects:
Delete ***SDM*** 3.8 and insert the following: For bridge widenings include the existing bridge plans in the contract plan set.

4 CONCRETE COMPONENTS

4.1 GENERAL

A. Concrete components for bridges are custom constructed either in place at the bridge site or at a precast facility and require clear, complete and fully detailed plans.

B. The concrete outlines, reinforcing steel, prestressing strands and/or post-tensioning tendons must be easily distinguishable. This can be accomplished by using the appropriate preset levels or feature definitions in the seed file provided by the CADD Office with the FDOT software package and/or following the symbology guidelines provided in the ***CADD Manual***.

C. When detailing concrete components, show plan and elevation views along with sections and any details necessary for construction.

4.2 ITEMS EMBEDDED IN CONCRETE COMPONENTS

Show the vertical and horizontal locations of reinforcing steel, prestressing strands and/or post-tensioning tendons. Normally, the spacing, location and limits of reinforcing steel can be adequately shown with a few representative bars which are clearly labeled and/or dimensioned. It is important to ensure that all reinforcing steel is clearly identified without over complicating the drawing.

4.3 REINFORCING STEEL

A. Detail reinforcing bars in plan, elevation, and sections to clearly indicate the size, location and spacing of individual bars. Show the number of reinforcing bars in plan or elevation views.

B. Usually, in plan or elevation views, only the first bar and the last bar of a series of bars need be drawn, and the number and spacing indicated between. Show all bars in section views.

C. Show the number of bars, followed by a tilde, the bar mark and the spacing. For example, 12 ~ 8 A1 @ 6" means 12 bars, Size #8, Designation A1 (8A1 is the ‘Mark’) at 6 inch spacing. The symbol "@" is optional for the word "at".

D. Each bar designation is to be unique within a single concrete component. A bar designation may be a single letter or a combination of a letter and a number, e.g. "D", "A1". Designate bars that have a unique size, shape, length or application using only a letter, and designate the individual bars within a group that have similar shapes, applications or locations within a component using a combination of a common letter and a unique number. If a combination of a letter and a number is used, start each combination using the number "1" and do not skip numbers. Exceptions to this numbering practice are acceptable, and sometimes preferable, for the bar lists for multiple similar components in which some, but not all, of the exact same bars are used, e.g. pier segments, expansion joint segments and typical segments in segmental box girder bridges. The desired result of skipping numbers in

these cases is increased consistency and clarity between the individual bar lists for the individual components. Where bars are shown in multiple views, bill bars in the view in which they are first encountered and only reference for clarity in other views. See Figure 4.3-1.

E. Do not use the letters “I”, “O”, or “Q” in bar mark designations.

Figure 4.3-1 Reinforcing Bar Callout Detail

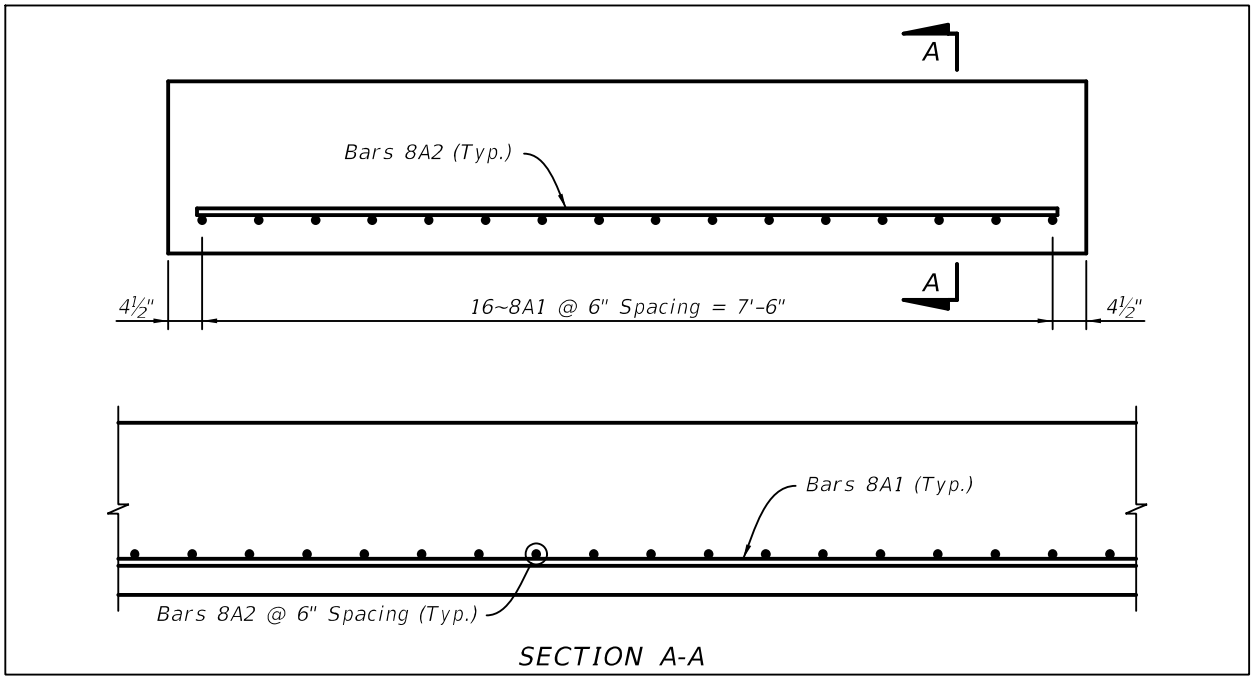

4.3.1 Maximum Bar Spacing

A. For maximum bar spacing for shrinkage and temperature, see ***LRFD*** 5.10.6.

B. For horizontal reinforcing steel in walls, the distance from the top of footing to the first bar in the stem is a maximum of one half the spacing of the bars immediately above it.

C. Bar spaces, plus cover to centerline of bars must equal the concrete dimension of the member. Use the following procedure to detail multiple bars equally spaced where the number of spaces times the nominal spacing does not exactly equal the overall concrete.

14 Bars @ 5½"± = 6'-0" or 13 sp @ 5½"± = 6'-0"

This means 13 equal spaces. The symbol “@” means “at”, and the symbol “±” means “approximately.”

4.3.2 Minimum Bar Spacing

A. For minimum bar spacing, see ***LRFD*** Section 5.

B. When multiple bars are lapped at the same location, the required minimum spacing measured between laps must be equal that for parallel bars.

C. Avoid using bundled bars. If bundled bars are required, they must meet ***LRFD*** requirements and the limitations of ***SDM*** 4.3.11.

4.3.3 Minimum Concrete Cover

See ***SDG*** for minimum concrete cover requirements.

4.3.4 Fit and Clearance

A. Check reinforcing fit and clearance by calculations and with large scale drawings or with model-centric design tools. Skews tend to aggravate problems of reinforcing fit. Consider tolerances normally allowed for cutting, bending, and locating reinforcing. Refer to ***CRSI Manual of Standard Practice*** for industry fabrication tolerances.

B. Some common areas of interference are:

1. Between deck reinforcing and supporting element reinforcing, such as girder stirrups and monolithic end bent or intermediate bent.
2. Vertical column bars projecting through pier cap reinforcing.
3. Areas near expansion devices.
4. Anchor bolt or rod blockouts for girders.
5. At anchorages for post-tensioning systems.
6. Between prestressing (pretensioned or post-tensioned) steel and reinforcing steel stirrups, ties, etc.
7. Between column bars to be lapped with footing dowels.
8. Drilled shaft steel projecting through footing steel.
9. Bars with large radii spaced close together or where fabrication tolerances exceed placement tolerances.
10. Bars greater than size #11 where fabrication tolerances are increased.

4.3.5 Bar Splicing

A. Detail splices for main reinforcement bars of different sizes. Other bars may be shown as "continuous" without showing splice locations because splices are detailed on the Reinforcing Bar List. Indicate splice locations as required (i.e., phase construction, construction joints, etc.). Detail locations and splice lengths for main reinforcing. Use mechanical splices or other positive connections for bars larger than #11.

B. For tension splices, the smaller bar governs the length of a lap splice between bars of different sizes.

C. For compression splices, the larger of the splice length of the smaller bar or the development length of the larger bar, governs.

D. Wherever practical, stagger main reinforcing bars so that only one-third are spliced at the same location. Exceptions include:

   1. Phased construction.
   2. Flat slab construction.
   3. Compression zones.
   4. Bases of stems of cantilevered retaining walls.

4.3.6 Dowels

Show minimum embedment length on the plans. Use standard hook bends when bent bars are used and depth of embedment permits. Show bent bars used for footing dowels resting on the bottom reinforcing steel mat in the footing. Verify that the minimum embedded length does not violate minimum cover requirements.

4.3.7 Bars in Section

A. Draw sections at a scale adequate to clearly show reinforcing details.

B. For stirrups and other bars not shown end-on, represent bars with single, unbroken lines at scales less than 1/2"=1'-0" and double, unbroken lines at 1/2" scale or larger.

C. Draw tie and stirrup hooks to scale. Dimensions are not necessary, unless it is a non-standard bar bend.

D. Use small circles to represent bars shown end-on. Circles may be left open or shown solid (filled). Use the chosen symbol consistently throughout the drawings. Show bars as filled circles when holes are also shown.

E. Identify bars shown end-on by leaders with circles or arrowheads pointing to the bar.

F. For complex reinforcing patterns, cut sections at specific locations along a member rather than showing a typical section.

G. Show corner bars enclosed by stirrups or ties at the corner of the bend.

4.3.8 Hook Bars

When the required concrete cover cannot be maintained with normal orientation of the hook, add the following note to the plans: "Rotate bar as necessary to maintain required cover."

4.3.9 Maximum Reinforcing Bar Lengths

#4 Bars and larger: 60 feet.

4.3.10 Reinforcing Bar Lists

A. Refer to ***Standard Plans*** Index 415-001, Standard Bar Bending Details and the ***Standard Plans Instructions (SPI)***.

B. Generate a reinforcing bar list for each structure using the “Rebar Program” provided with the FDOT CADD Resources or by using model-centric design tools. Provide a labeled tabulation for every reinforced component (i.e., bents, piers, deck, approach slabs, etc.) Each bar designation must be unique for a given component but may be repeated for separate components. Designate bars "A1", "A2", "B1" etc. Show a separate section in the reinforcing bar list for each component and construction phase on a project. Prestressed beams, piles, concrete sheet piles and traffic railings that are shown in the Standard Plans do not need to be included on the reinforcing bar list.

C. Dimension all bars "out-to-out". Round the overall length of each individual bar to the nearest inch.

D. Separate reinforcing for sub-components into a logical sequence similar to the order in which they will be constructed. Identical components should be grouped together. The following list should be used as a guide of the minimum breakdown of subcomponents.

Substructure
- End Bent
- Footing
- Column/Pier
- Bent Cap

Superstructure
- End Diaphragms (if required)
- Intermediate Diaphragms (if required)
- Deck

Approach Slabs

Walls
- Footing
- Wall/Cap
- Deadman Anchor

4.3.11 Reinforcing Bar Limitations

A. Comply with the limitations shown in Table 4.3.11-1 for design and detailing of reinforcing bars. The smallest reinforcing steel size for cast-in-place bridge components is #4.

B. Use the smallest practical bar size in order to minimize stress concentrations, increase bonding strength, decrease corrosion potential, and comply with crack control criteria.

Table 4.3.11-1 Reinforcing Bar Limitations

Bridge Component	Maximum Bar Size	Bundles and Bends
Drilled Shafts	#18	For #14 and #18 bars, no bundling or bar bends
Footings	#11	
Pier Columns	#11 Main reinforcing #6 Ties	Maximum two bars per bundle
Pier/Bent Caps	#11 Main reinforcing #6 Stirrups	Maximum two bars per bundle
Webs of Segmental Boxes	#7	

4.4 CONCRETE SURFACE FINISHES

A. If the use of coatings, tints or stains is necessary to meet project specific requirements in accordance with the limitations specified in ***SDG*** 1.4.5, show the limits of the areas to be treated in the plans. See examples of how to depict the limits of treatments in Figure 4.4-1, Figure 4.4-2, Figure 4.4-3 and Figure 4.4-4. For bridges and retaining walls with Class 5 coatings, show appropriate "Class 5 Applied Finish Coating" notes in the General Notes and the corresponding Surface Finish Details on the General Notes drawing. For noise walls, see the ***Standard Plans Instructions (SPI)*** Index 534-200. For perimeter walls, see the ***Standard Plans*** Index 534-250. If the finish color is other than Federal Color Standard No. 595, Color No. 36622 (standard concrete gray) (or Color No. 36642 for uncoated weathering steel bridges), specify the appropriate number(s) for the desired color(s). Do not use generic or brand names for colors, e.g. Pearl Grey. Provide similar notes and details for the use of tints and stains.

B. If the use of an anti-graffiti coating is necessary to meet project specific requirements, show the limits of the areas to be coated in the plans. See examples of how to depict the limits of anti-graffiti coatings and recommended areas to be coated in Figure 4.41, Figure 4.4-2, Figure 4.4-3 and Figure 4.4-4. Specify the type of anti-graffiti coating to be used in the plans, e.g. sacrificial or non-sacrificial.

Modification for Non-Conventional Projects:
Delete ***SDM*** 4.4 and Figures 4.4-1, 4.4-2, 4.4-3 and 4.4-4 and see the RFP for requirements.

Figure 4.4-1 Example Surface Finish Depictions on Grade Separation Structures

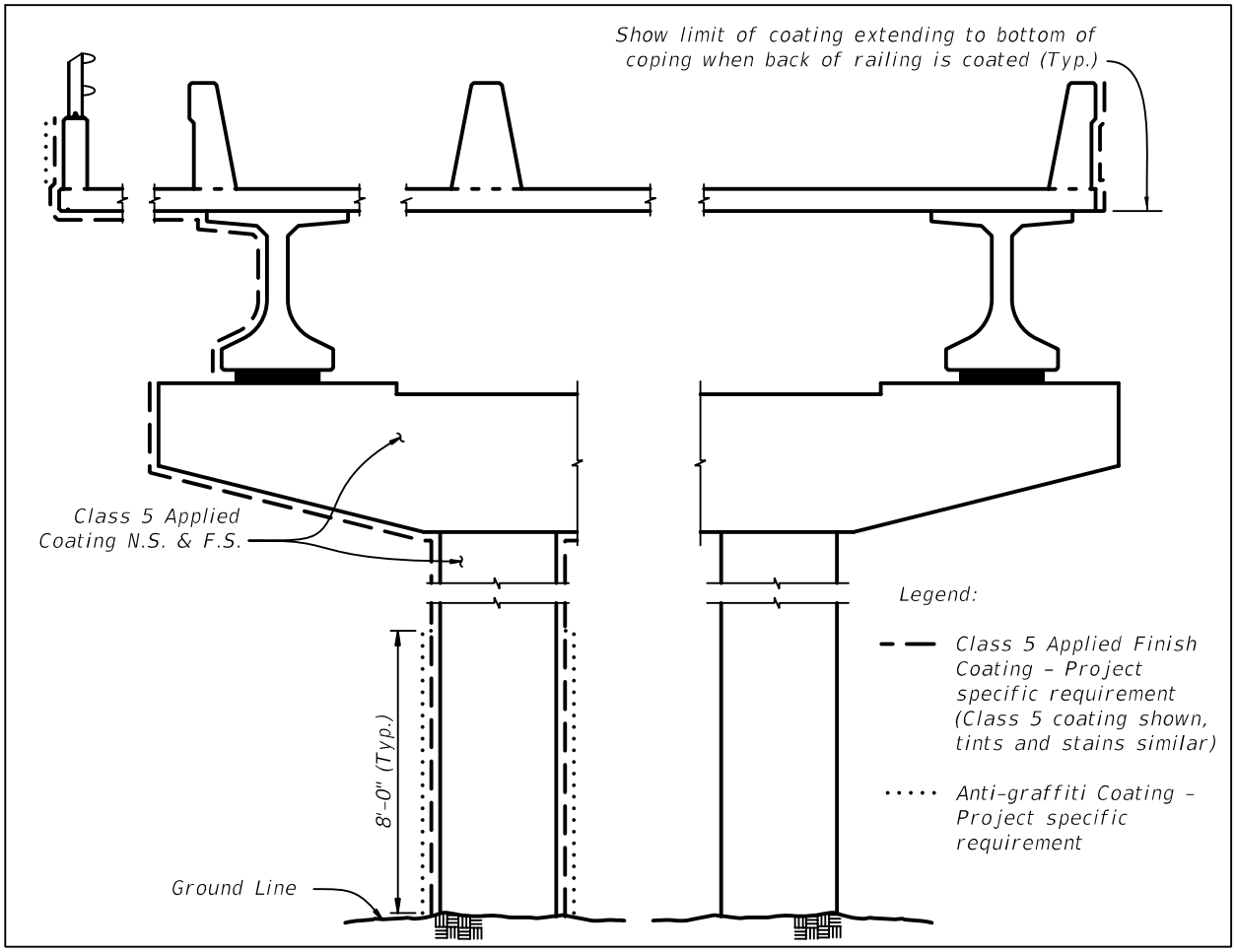

Figure 4.4-2 Example Surface Finish Depictions on Waterway Crossings and Railroad Separation Structures

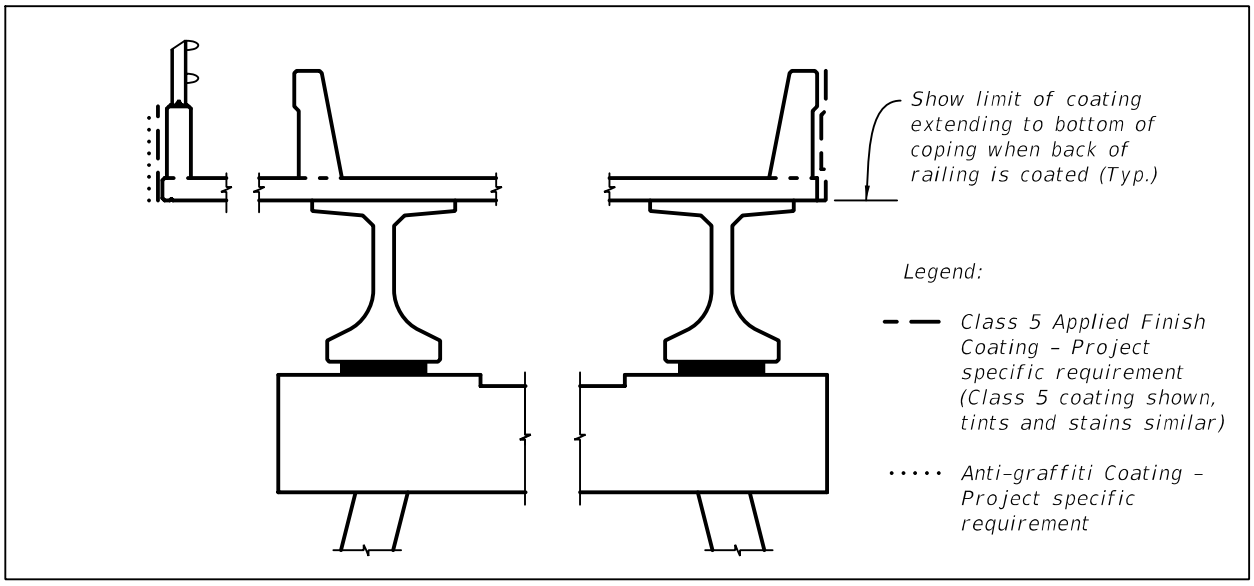

Figure 4.4-3 Example Surface Finish Depictions on Concrete Noise and Perimeter Walls and Retaining Walls Without Traffic Railings or Parapets

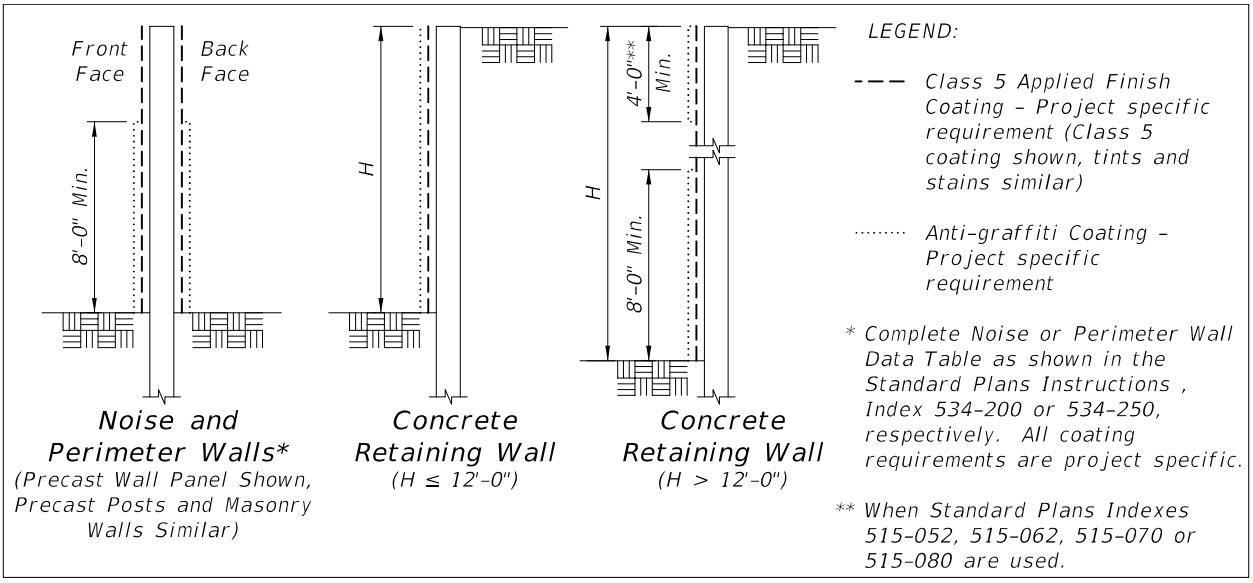

Noise and Perimeter Walls* (Precast Wall Panel Shown, Precast Posts and Masonry Walls Similar)

Concrete Retaining Wall (H ≤ 12'-0")

Concrete Retaining Wall (H > 12'-0")

Figure 4.4-4 Example Surface Finish Depictions on Retaining Walls with Traffic Railings or Parapets

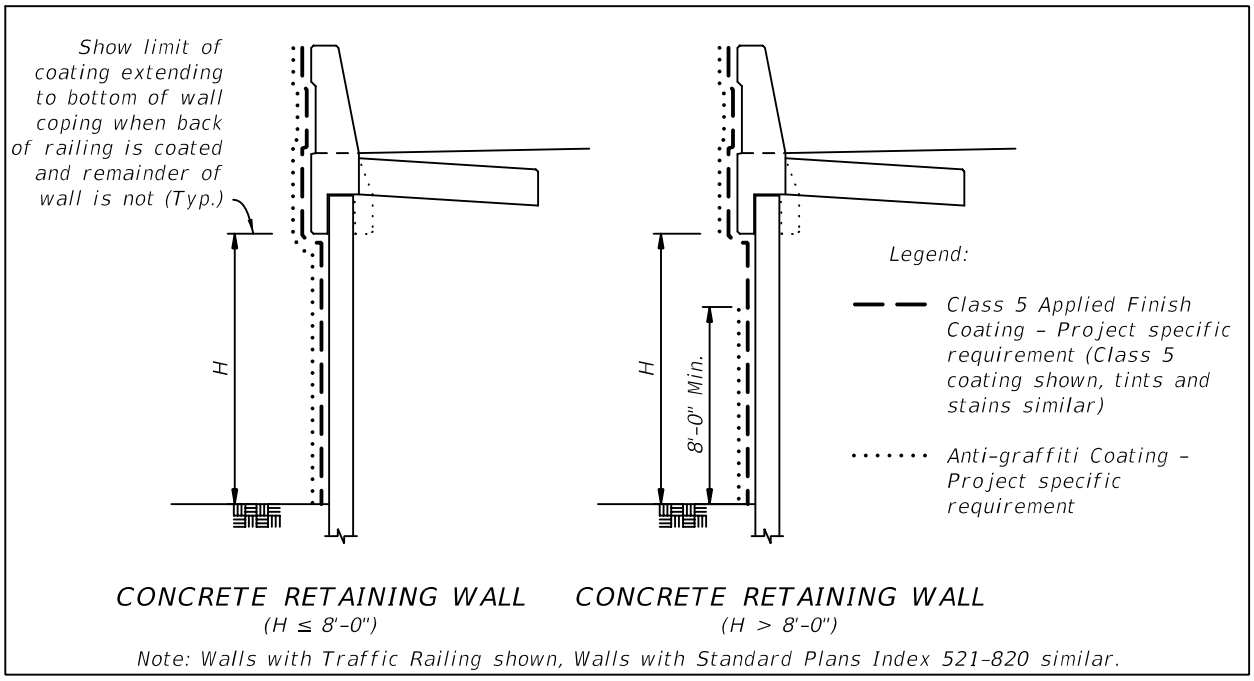

Note: Walls with Traffic Railing shown, Walls with Standard Plans Index 521-820 similar.

5 GENERAL NOTES AND PAY ITEM NOTES

Modification for Non-Conventional Projects:

Delete the title of ***SDM*** Chapter 5 and insert the following:

5 GENERAL NOTES

5.1 GENERAL NOTES

A. Prepare a complete set of General Notes for each project.

B. As the first item under General Notes, list the version of the ***Structures Manual*** and any subsequent Structures Design Bulletins used as the basis for the design of the plans.

C. On projects that require different construction methods or beam/girder types (e.g., prestressed concrete beams and steel girders), provide separate General Notes for each method of construction or beam/girder type and identify the method or type to which they apply. Provide separate General Notes for pedestrian bridges.

D. Organize notes under headings for Concrete Notes, Steel Notes, etc.

E. Include all General Notes and Pay Item Notes on the General Notes sheet. Notes for a specific element may be shown on the first sheet showing that element. The Index of Sheets is generally a separate sheet but may be included on the General Notes sheet if space permits.

Modification for Non-Conventional Projects:

Delete ***SDM*** 5.1.E and insert the following:

E. Include all General Notes on the General Notes sheet. Notes for a specific element may be shown on the first sheet showing that element. The Index of Sheets is generally a separate sheet but may be included on the General Notes sheet if space permits.

F. Do not repeat notes or details shown in the ***Standard Plans***. Do not use General Notes or any other plan notes to repeat or modify requirements stated in the Specifications. If project specific modifications to the Specifications are required, prepare either a Modified Special Provision or a Technical Special Provision. Contact the District Specifications Office for guidance.

G. Use performance criteria. Provide justification if a patented or proprietary product or process is required. Refer to ***FDM*** 110.4.1 or contact the District Specifications Office for further guidance. Do not require a patented or proprietary product or process with the term "or equal".

Modification for Non-Conventional Projects:

Delete ***SDM*** 5.1.G.

5.2 TYPICAL GENERAL NOTES

The following is a sample of typical notes to be included on the General Notes sheet. Place these notes on the General Notes sheet and modify for project-specific requirements:

A. Design Specifications

1. FDOT Structures Manual dated January 20XX and subsequent Structures Design Bulletins [XX-XX], [XX-XX] and [XX-XX].
2. American Association of State Highway and Transportation Officials (AASHTO) Load and Resistance Factor (LRFD) Bridge Design Specifications, [Xth] Edition with [XXXX] and [XXXX] interims.
3. FDOT Design Manual dated January, 20XX and subsequent Roadway Design Bulletins [XX-XX], [XX-XX] and [XX-XX].

B. Governing Standards and Construction Specifications

Florida Department of Transportation, FY 20XX-XX Standard Plans and revised Index Drawings as appended herein, and FY 20XX-XXX Standard Specifications for Road and Bridge Construction, as amended by Contract Documents.

Commentary: The information shown in items A and B above must be retained in the Structures Plans General Notes. Standard practice by District Maintenance is to separate the bridge plans from the rest of the project plans after construction is complete.

C. Vertical Datum

[Indicate which vertical datum is used on the project - NAVD 88 or NGVD 29].

D. Environment

Bridge Number	Superstructure	Substructure	
		Concrete	Steel
700XXX	Slightly	*	*
407XXX	Moderately	*	*
121XXX	Extremely	*	*

* List the environmental classification [Slightly, Mod., Extrem.] and controlling criteria (pH, Cl, SO_4, Resistivity).

E. Bridge Level of Importance for Wave Loading: [Critical, Repairable, Ordinary]

F. Design Methodology

1. Load and Resistance Factor Design (LRFD) method using strength, service, extreme event [if applicable] and fatigue limit states.
2. Redundancy Factors [state applicable components as follows]
   a. Concrete C-Piers η_R = x.x
   b. Steel Integral Cap η_R = x.x

c. Steel Box Girders η_R = x.x

3. Operational Importance Factor

a. All Bridges [or specified which ones) η_I = x.x

G. Structural Analysis Program [used for the superstructure design] name, version, and version release date. [state whether the live load distribution factor(s) were determined by ***LRFD*** 4.6.2, RMA, or RMA 3D-FEA]

H. Design Loadings

1. Live Loads: HL-93 with Dynamic Load Allowance
2. Dead Loads:

36” Single Slope Traffic Railing	430 plf
36” Single Slope Median Traffic Railing	645 plf
Stay-In-Place Forms	20 psf
Reinforced Concrete	150 pcf
Future Wearing Surface	15 psf

[OR Design does not include an allowance of 15 psf for Future Wearing Surface.]

The __-inch deck thickness includes a one-half inch sacrificial thickness included in the dead load of the deck but omitted from the section properties used for design. [Include note when profilograph requirements of ***SDG*** Chapter 4 apply].

3. Construction Loads:

Finishing Machine Load: XX.X kips

Finishing Machine Wheel Location beyond the edge of deck overhang: 2 ½ inches Construction Live Load: 20 psf extended over the entire bridge width and 50-feet in longitudinal length centered on the finishing machine.

Removable Deck Cantilever Timber Forms with Overhang Brackets: 15 psf

Live load at or near the outside edge of deck during deck casting: 75 plf applied as a moving load over a length of 20 feet.

Construction Inactive Design Wind Speed: 90 MPH

Velocity Pressure Exposure Coefficient (k_z): X.XX

Construction Active Design Wind Speed: 30 MPH

4. Vehicle Collision Force: New Pier Columns have been designed to withstand the 600-kip vehicular collision force per LRFD.
5. Utilities: No allowance for utility loads has been included in the design. [If allowance for utility loads has been included, indicate the magnitude and location of the loads used in the design.]

I. Materials

1. Reinforcing Steel: Grade 60 carbon steel per Specifications Section 931.
2. Concrete:

Concrete Class	Min. 28-day Compressive Strength (psi)	Location of Concrete in Structure
II	3400	Traffic Railing
Concrete Class	**Min. 28-day Compressive Strength (psi)**	**Location of Concrete in Structure**
II (Bridge Deck)	4500	Bridge Deck
IV	5500	C.I.P. Substructure (UNO)
IV with highly reactive pozzolans	5500	C.I.P Columns and Caps whose portion is below El. 12.3
V	6500	Prestressed Concrete Piles
VI	8500	Prestressed Concrete Beams

3. Concrete Cover: [Depends on Environmental Classification]

Cast-In-Place Superstructure (Top of Deck)	2½"
Cast-In-Place Superstructure (Except Top of Deck)	2"
Precast Prestressed Beams (Except Top Surface)	2"
Top Surface of Beam Top Flange	¾"
Cast-In-Place Substructure (Cast Against Earth)	4"
Cast-In-Place Substructure (Formed Surfaces)	3"
Cast-In-Place Substructure (Top of Beam Pedestals and Cheekwalls)	2"

Concrete cover dimensions shown in the plans do not include placement and fabrication tolerances unless shown as "minimum cover". See Specifications Section 415 for allowable tolerances. All dimensions pertaining to the location of reinforcing steel are to centerline of bar except where clear dimension is noted to face of concrete.

J. Concrete Surface Finish

A Class 5 Finish Coating shall be applied to the portions of the structures shown on the Surface Finish Detail sheet(s).

K. Plan Dimensions

All dimensions in these plans are measured in feet either horizontally or vertically unless otherwise noted.

L. Utilities

For plan locations of existing utilities, see Plan and Elevation and Foundation Layout sheet(s). Locations of utilities, including under deck lighting, shown in the plans are approximate. For disposition of utilities, see the Utility Adjustment sheet(s) in the Roadway plans.

Include an alternate note for projects delivered using model-centric plans.

M. Bridge Name and Number

Place the following bridge name and number on the traffic railings in accordance with the Traffic Railing Standard Plans:

Use the name of the bridge or non-roadway facility being crossed or include the name of both facilities for roadway crossings. e.g.:

Name	Number
THOMASVILLE ROAD FLYOVER	550123
TOMOKA RIVER	750987
CSX RAILROAD	721234
US 19 OVER EAST BAY DR	100001

N. Screeding Decks

Screed the riding surface of the Bridge Deck and Approach slabs to achieve the Finish Grade Elevations shown in the plans. Account for theoretical deflections due to self weight, deck casting sequence, deck forming systems, construction loads, overlays, and temporary shoring, etc. as required.

O. Stay-In-Place Deck Forms

Design includes allowance for 20 psf over the projected plan area of the metal forms for the unit weight of the metal forms and the concrete required to fill the form flutes. Stay-in-place forms are not allowed at deck cantilevers. Detail stay-in-place forms to clear top lateral bracing of box girders.

OR: Stay in place deck forms will not be permitted on this project.

P. Joints In Concrete

Construction joints will be permitted only at the locations indicated in the plans. Additional construction joints or alterations to those shown shall require approval of the Engineer.

Q. Existing Bridge Construction Considerations

1. Dimension Verification: Unless otherwise noted, the dimensions, elevations and intersecting angles shown are based on the information as detailed in the Original Construction Plans of the existing bridges and may not represent as-built conditions. It is the Contractor's responsibility to verify this data before beginning construction and notify the Engineer of any discrepancies.

Modification for Non-Conventional Projects:

Delete ***SDM*** 5.2.P.1.

2. Existing Reinforcing Steel [Widenings]: All superstructure deck transverse reinforcing steel, both top and bottom layers, and end bent reinforcing steel, shall be protected, salvaged, and utilized in the new structure. Cutting of this

reinforcing steel and substitution of epoxy bonded dowels is not permitted as a construction option.

R. Traffic Control Plans

[Insert traffic control notes for the project and/or references to the Traffic Control Plans. Refer to Standard Plans Index 102-600 for specific requirements related to overhead bridge construction.]

S. Phasing Of Work

Work phasing and progression of the work shall conform to the Traffic Control Plans located in the Roadway Plans and the notes on the Construction Sequence Drawings.

5.3 TYPICAL STEEL GENERAL NOTES

The following additional general notes are typically used for structural steel. Modify, add, or delete notes as needed for project-specific requirements. Place these notes on or after the General Notes sheet.

A. Structural Steel

All structural steel shall be in accordance with ASTM A709, Grade [XX] unless otherwise noted [Stiffeners, internal and external cross-frames, lateral bracing and other ancillary items may be Grade [XX] unless otherwise noted].

B. Primary Members

1. Primary members are identified within these Plans or as specified in Specifications Section 460.
2. Test primary members subjected to tensile stresses in accordance with Specifications Section 962.
3. Cross-frames, including gusset plates and connection plates, do not need to meet the impact testing requirements of Specifications Section 962. [Use note as applicable.]

C. Steel Fabrication

1. Shop assemblies are required in accordance with Specifications Section 460. [Specify shop assembly type based on Specifications Section 460. Contact the SDO and or DSDO as appropriate for recommendations and guidance.]
2. All ends of girders, bearing stiffeners, end diaphragms and pier diaphragms shall be vertical after dead load is applied [or normal to the bottom flange, see ***SDG*** 5.9]. All intermediate stiffeners, intermediate cross-frames and field splices shall be normal to the top flange.
3. Detail steel I-girder cross-frames for the Steel Dead Load Fit. [See ***SDG*** 5.1 for other fit conditions.]

D. Welding

1. Perform all welding and non-destructive testing in accordance with the 20XX edition of the AASHTO/AWS D1.5 Bridge Welding Code.
2. For Grade [XX] base metal. The weld filler metal strength for fillet welds shall be F_{exx} = [XX] ksi.
3. Field welding to any structural steel for the purpose of attaching erection hardware or for anchoring conduits/boxes for box lighting shall be formally submitted to the Engineer for approval.
4. Field welding shall be per requirements of AASHTO/AWS D1.5 for non-ancillary items. Avoid damage to bearings when field welding sole plates to girder flanges. Replace bearings damaged by field welding at the Contractor's expense.
5. The following members are classified as ancillary members in accordance with the current edition of the AASHTO/AWS D1.5 Bridge Welding Code:
   a. Expansion Dams
   b. Drainage Components
   c. Sheet Piling
   d. Bearings

E. Bolted Connections

Use the following notes and modify as needed for project requirements:

1. Use [X]" diameter high-strength bolts in accordance with ASTM F3125 Grade A325, Type [X] for all bolted connections. [State other sizes as applicable. See ***SDG*** 5.4.]
2. All bolt holes must have a diameter of [X]". [State other sizes as applicable]
3. For cross-frame connections identified as bearing, install high-strength bolts in accordance with Section 460-5 of the Specifications. Prepare faying surfaces to SSPC SP-10. Threads are excluded from the shear plane. The washer and direct-tension-indicator (DTI), if used, must be placed under the nut. Do not place a washer or DTI under the bolt head. [Use as applicable. See ***SDG*** 5.4, ***SDG*** 5.11.1, ***SDG*** 5.13, ***SDM*** 16.7, and ***SDM*** 16.8.]
4. Position bolt heads on the exterior/exposed face of the girders.
5. For cross-frames designated as primary members, do not fully punch bolt holes. [Use as applicable. See ***SDG*** 5.3.2.]
6. Bolted connections identified as slip-critical are designed with a Class B surface condition. See Sections 460 and 560 of the Specifications for preparation of faying surfaces. [Surface condition note for unpainted weathering steel. See ***SDG*** 5.4, ***SDG*** 5.11.1, ***SDG*** 5.13, ***SDM*** 16.7, and ***SDM*** 16.8.]
7. Bolted connections identified as slip-critical are designed with a Class A surface condition. See Sections 460 and 560 of the Specifications for preparation of faying surfaces. [Surface condition note for weathering steel painted on one side

of the connection. See ***SDG*** 5.4, ***SDG*** 5.11.1, ***SDG*** 5.13, ***SDM*** 16.7, and ***SDM*** 16.8.]

8. Bolted connections identified as slip-critical are designed with a Class A surface condition. See Sections 460 and 560 of the Specifications for preparation of faying surfaces. [Surface condition note for painted steel (including weathering steel painted on both sides of the connection). See ***SDG*** 5.4, ***SDG*** 5.11.1, ***SDG*** 5.13, ***SDM*** 16.7, and ***SDM*** 16.8.]

F. Painting

Specify one of the following notes as applicable:

1. Weathering steel is to remain uncoated, except as required by the ***Specifications***. (Steel Box-Girders)
2. Paint the outside face and bottom of Exterior Girders (and all exposed surfaces of Steel Straddle/Integral Pier Caps) with an Inorganic Zinc Coating System. Interior Girders and diaphragms/cross-frames are to remain unpainted.
3. Paint the outside face and bottom of Exterior Girders (and all exposed surfaces of Steel Straddle/Integral Pier Caps) with a High Performance Coating System. The color of the finish coat shall conform to SAE AMS-STD-595, Color No. XXXXX. Interior Girders and diaphragms/cross-frames are to remain unpainted.
4. Paint all steel with an Inorganic Zinc Coating System.
5. Paint the outside face and bottom of Exterior Girders (and all exposed surfaces of Steel Straddle/Integral Pier Caps) with a High Performance Coating System. The color of the finish coat shall conform to SAE AMS-STD-595, Color No. XXXXX. Paint Interior Girders and diaphragms/cross-frames with an Inorganic Zinc Coating System.
6. Paint all steel with a High Performance Coating System. The color of the finish coat shall conform to SAE AMS-STD-595, Color No. XXXXX.

G. Ladders and Platforms

Structural steel ladders and platforms shall conform to ASTM A36 and shall be hot-dipped galvanized in accordance with Specifications Section 962. Welding shall conform to AWS D1.1.

5.4 TYPICAL POST-TENSIONED CONCRETE GENERAL NOTES

Include the following additional general notes when post-tensioned concrete is to be used in the project. Place these notes on or after the General Notes sheet and modify for project-specific requirements:

A. **Strand**: All strands shall be X” Ø and conform to the requirements of ASTM A416, Grade 270 for low relaxation strands.

Prestressing parameters:

Apparent modulus of elasticity	28,500 ksi
Maximum jacking stress at anchorage	0.8 Fp_u
Maximum strand stress at anchorage immediately after anchorage	0.70 Fpu
Maximum strand stress at internal location immediately after anchorage	0.74 Fpu
Anchor set	X”
Friction coefficient (μ):	
Internal tendons	X.XX
Deviators for external tendons	X.XX
Wobble coefficient (k):	
Internal tendons	X.XXXX/ft.

B. **Bars**: All bars shall conform to ASTM A722, Grade 150.

Prestressing parameters:	
Modulus of elasticity	30,000 ksi
Maximum jacking stress	0.9 Fp_y
Maximum anchorage stress	0.70 Fp_u
Anchor set	X”
Friction coefficient (μ):	X.XX
Wobble coefficient (k):	X.XXXX/ft.

C. Local zone anchorage reinforcement is required at the ends of all post-tensioning tendons, unless noted otherwise. The contractor shall adjust reinforcing as necessary to clear the local zone reinforcement.

D. Post-tensioning anchorage details, protection, flexible filler, and grouting requirements shall be in accordance with Standard Plans Indices 462-001, 462-002 and 462-003.

E. All duct or pipe diameter sizes given in these plans are inside diameter.

5.5 TYPICAL PAY ITEM NOTES

Include in the Pay Item Notes information required to define, show limits of quantities or otherwise offer explanation to the list of Bridge Pay Items. See the ***Basis of Estimates*** Chapter 7 for additional guidance.

Modification for Non-Conventional Projects:
Delete ***SDM*** 5.5.

6 SLOPE PROTECTION

6.1 GENERAL

A. This chapter provides the bridge designer with the necessary information to develop plan details for appropriate slope protection. In most cases the standard details depicted for slope protection, with minor modifications will be suitable. In some cases, typically in tidal areas or when severe scour conditions exist, special designs and details may be required.

B. Design aids are available for slope protection details. Click the link to download the files in .dgn format, or click the link to view as a .pdf file. The details as presented are applicable only to end bents with rectangular wingwalls as shown. It is the designer's responsibility to make the appropriate project-specific modifications to these design aids before incorporating them into the plan set. Once the appropriate modifications have been made, the designer assumes the responsibility of Engineer of Record.

6.2 GRADE SEPARATIONS

A. For grade separation bridges, design slope pavement on 1:2 front slopes with provisions to extend erosion protection to a minimum of four feet outside the superstructure coping.

B. To protect railroad track embankments, use sand-cement riprap instead of slope pavement.

6.3 WATER CROSSINGS

A. The Drainage (Hydraulic) Engineer will determine the design and extent of the slope protection in accordance with the FDOT ***Drainage Manual*** and other applicable guidelines such as ***HEC-23***. The slope protection for spill-through abutments (End Bents) adjacent to water will be rubble riprap, articulated concrete block (cabled and anchored) or grout-filled mattress (articulating with cabling throughout the mattress). A 1:2 slope is the steepest allowable slope rate.

B. Bulkhead abutments can be protected by sheet piling or precast panels with toe protection provided by rubble riprap. Rubble riprap might also be recommended above the bulkhead or at its ends. Design the protection to extend at least four feet outside the superstructure coping.

C. See the ***Drainage Manual*** for slope protection requirements at locations subject to waves.

6.4 DUAL BRIDGES

Extend the slope protection in the median between dual bridges to include:

A. The entire median width for rural area bridges with a separated median width of 40-feet or less.

B. The entire median width for urban area bridges with a separated median width of 50-feet or less.

C. The entire width for urban area bridges inaccessible due to physical barriers or when access is severely limited due to design features or vehicular movement that will impede the ability to maintain the facility.

7 PLAN AND ELEVATION

7.1 GENERAL

A. This drawing is the general layout of the bridge in plan and elevation views.

B. Draw Plan and Elevation views to the same vertical and horizontal scale if possible. In some cases a vertical scale larger than horizontal is required. More than one sheet may be required. If multiple sheets are used, show overlap between sheets for clarity.

C. It is preferred to have the plan and elevation shown on the same sheet.

D. For projects with multiple bridges, include a key map on the plan and elevation sheet showing the location of the subject bridge within the project. If multiple plan and elevation sheets are needed for a single bridge, the key map needs only to be on the first sheet.

E. Show the bridge and portions of adjacent roadways and walls in their completed configurations. Do not show temporary conditions including but not limited to temporary barrier or guardrail installations, temporary supports, partially constructed or removed sections of bridges or walls associated with phased construction, or traffic locations associated with Temporary Traffic Control Plans.

F. For examples illustrating the content and format of completed Plan and Elevation sheets, see the ***Structures Detailing Manual Examples***.

7.2 PLAN AND ELEVATION DRAWING - GENERAL

In general, include the following information on the Plan and Elevation sheet(s):

A. The bridge in both plan and elevation views, using an appropriate scale. Label views "PLAN" and "ELEVATION". This is mandatory for Bridge Development Reports and subsequent submittals.

B. All vertical and horizontal geometry including:

1. Horizontal alignment. (Horizontal curve data or Bearing of tangents.)
    a. Show PC and PT stations on plan view.
    b. Use horizontal curve data table cell from the Structures Cell Library for horizontal curve information.
    c. Show bearings of tangents on Station Line.
    d. Vertical and horizontal geometries for intersecting facilities.
2. Vertical alignment along PGL.
    a. When the bridge is on a tangent grade, show the grade and station and elevation of the nearest points of tangency.
    b. When the bridge is on a vertical curve, use the vertical curve data cell from the Structures Cell Library. Include a reference to the horizontal control line to which it applies. See ***SDG*** Chapter 2.

3. Superelevation Transition Diagram (when applicable)
    a. Show the PGL as a horizontal line.
    b. Show left and right copings and cross slope break lines, e.g., crowns and edges of sidewalks, as horizontal or sloping lines spaced proportionately above or below the PGL.
    c. Show copings and cross slope break lines as horizontal lines where the cross slope and transverse offset from the subject line to the PGL are constant along the length of the bridge.
    d. Show copings and cross slope break lines as sloping lines within the superelevation transition, or where the cross slope is constant but the transverse offset from the subject line to the PGL varies, e.g. flared bridge decks.
    e. Label all lines, cross slopes, limiting stations and vertical dimensions from the PGL to each line or line segment. Use different line styles as necessary for emphasis and clarity.
    f. Show a separate superelevation transition diagram for each individual bridge.

Commentary: The horizontal alignment, vertical alignment and superelevation transition diagram, when superimposed upon each other, establish the three dimensional geometry of the bridge deck. A similar diagram, with or without the presence of superelevation, can also be used to establish the three dimensional geometry of flared bridge decks.

When there is not enough space on the Plan and Elevation sheet(s) to show this information, include supplemental Profile Grade and Superelevation Transition Diagram sheet(s) as required.

C. North Arrow. Place in upper right corner of sheet when possible.

D. Traffic data (for each facility, if grade separation). Include as a minimum:

- design speed
- present and design year (+20) AADT
- percentage of trucks

E. Adjacent roadway Guardrail, Concrete Barrier Wall and Pier Protection Barriers in Plan and Elevation views. Reference the appropriate ***Standard Plans*** Index number.

F. Bridge-mounted lighting, signs and signals and related station/offset information.

G. Distance to nearest milepost from intersection of railroads.

H. All walls (permanent, MSE, etc.). Show graphic depiction and indicate wall type, number, and designation.

I. Show shoreline in plan and elevation views using zero contour line or at location of MHW/NHW.

J. All applicable bridge numbers. For dual bridges, show bridge number inside the bridge in the plan view of the corresponding bridge.

K. Roadway lighting, if scale permits.

7.3 PLAN AND ELEVATION DRAWING - PLAN VIEW

At a minimum, include the following in the Plan View of the Plan and Elevation sheets:

A. Baseline, Centerline of Construction and Profile Grade Line(s) (PGL). Label whole stations and include 20-foot tick marks. Indicate direction of stationing and station equations as required. Include centerline of lower roadways, canals, railroads, etc.

B. Stations at the following locations:

1. Begin and end of bridge and approach slabs.
2. Centerlines of bents or piers.
3. Intersections of centerlines of lower roadways.
4. Lower roadway, stream, railroad milepost or other physical feature at the location on the structure plan along the Station Line for the structure. Indicate bearing of tangents if applicable.

C. Complementary skew angles. See ***SDM*** 2.14 for details.

D. Direction of traffic. Show one arrow per lane.

E. Roadway width, traffic and pedestrian railing widths, inside and outside shoulder widths, lane widths, median width, sidewalk width, out-to-out width, gore area dimensions, width of widening and width of removal (including removal of slope protection).

F. Critical locations and dimensions of horizontal and vertical clearances. Identify location of low member.

G. Expansion joints. Use a solid line to indicate expansion joints in plan view.

H. Boring locations and labels.

I. All utilities, existing and proposed, buried and overhead. Also indicate status of utilities, e.g. placed out of service, to be relocated, etc.

J. Right-of-way lines (roadway, railroad, etc.)

K. Limits of slope pavements, sand cement riprap or rubble riprap. Indicate slope in the following format: V:H. Also indicate type of slope protection and toe of slope location.

L. Edge of shoulder.

M. Berm width.

N. Locations of deck drains that are large enough to be legible. Do not show small bridge scuppers.

O. Fender systems and navigation lights. Indicate clear channel width, centerline of channel and bearing of channel in plan view.

P. Direction of flow of waterway. Indicate if waterway is tidal.

Q. Waterline at MHW/NHW elevation.

R. Limits of environmentally sensitive areas such as wetland lines, seagrass delineations, etc. Ensure that lines shown in the plan view coincide with lines shown in permit applications.

S. Limits of existing bridge. Indicate existing bridge number. Consider hatching area to be removed, if any.

T. Locations of permitted work bridges or platforms. Ensure that the locations of work platforms are consistent with locations shown in any required permits. Alternatively, this information may be shown on Construction Access drawings.

U. Consider showing ship impact zones in plan view.

V. Portions of other existing or proposed bridges, retaining walls or other structures that are adjacent to, beneath or over the subject bridge. Coordinate wall depictions with the wall control drawings.

W. Limits of construction phases.

7.4 PLAN AND ELEVATION DRAWING - ELEVATION VIEW

Show the elevation view of the bridge as viewed along the right coping. Curved bridges may be better represented by a line cut along the centerline of roadway. At a minimum, include the following in the Elevation View on the Plan and Elevation sheets:

A. The elevation (vertical) scale on both sides of the elevation view.

B. Span lengths, approach slab lengths and overall length of bridge. Label and dimension continuous units/decks. Label simple span prestressed concrete beam superstructures with decks that are continuous over multiple spans as “x'-x" Continuous Deck with Simple Span Beams”. Label continuous concrete beam and steel girder superstructures as “x'-x" Continuous Unit”.

C. Location of expansion and fixed bearings and integral piers. Label as E, F and I, respectively. Also indicate expansion joints as EJ in elevation view.

D. Traffic railings, parapets and attachments such as bullet rails, fencing, etc. See also ***SDM*** 15.3 and ***SDM*** 15.4.

E. Existing ground and finished ground profiles, including sections of any intersecting road, railroad, waterway or other physical feature such as buildings or drainage structures, existing or proposed.

F. Low, mean and high water elevations as appropriate.

G. Embankment and canal slopes. Indicate the slope in the following format: V:H.

H. Location and value of minimum vertical clearance.

I. Location of where ground line is taken, i.e. ground line at centerline of construction or groundline at right edge of coping.

J. Roadway widths and clear distances to piers, space permitting.

K. Fenders. Also show clear channel width.

L. Foundation types. Indicate pile or shaft size as applicable.

M. Existing bridge, or portions of existing bridge, e.g. piles that are to remain, may be shown as required if they can be shown clearly. Consider hatching area to be removed, if any. If the existing bridge is not shown, include a note below the view title indicating that the existing bridge is not shown for clarity.

N. Portions or sections of other existing or proposed bridges, retaining walls or other structures that are adjacent to, beneath or over the subject bridge. Coordinate wall depictions with the wall control drawings.

8 BRIDGE HYDRAULICS RECOMMENDATION SHEET

8.1 PURPOSE

A. This drawing shows all pertinent hydraulic information necessary for the layout of a bridge at the location of a given water crossing.

B. This drawing is prepared by the Drainage Engineer of Record and should be included in the PD&E documents and/or must be in the 30% Plans submittal. This drawing must be included in the final bridge plans.

Modification for Non-Conventional Projects:
Delete ***SDM*** 8.1.B and insert the following: B. This drawing is prepared by the Drainage Engineer of Record and shall be included in the earliest foundation component submittal and the final bridge plans.

C. For a typical drawing, see ***FDM Exhibit 906-1***.

8.2 GENERAL REQUIREMENTS AND DESIGN PROCEDURES

For General Requirements and Design Procedures involving the Bridge Hydraulics Recommendation Sheet, permits and other hydraulic considerations and requirements, see ***FDM*** 250 and the FDOT ***Drainage Manual***.

9 CONSTRUCTION SEQUENCE FOR BRIDGE WIDENING AND PHASED CONSTRUCTION

9.1 GENERAL

A. The purpose of the Construction Sequence sheets is to show the proposed sequence of bridge construction as well as the maintenance of traffic during bridge widening and/or phased bridge construction.

B. Construction Sequence sheets are a supplement to the Traffic Control Plan (TCP). Ensure that dimensions and phasing, including phase naming conventions, are consistent between the two sets.

C. Provide separate Construction Sequence details for each unique combination of proposed and existing cross sections and superstructure types. Include representative substructure types as required to fully depict individual phases. Show all phases of construction beginning with the existing condition and finishing with the completed proposed section. Show all cross sections looking up station.

D. Check for dimensional consistency between the Construction Sequence sheets and all related construction phasing shown elsewhere in the structures plans.

E. For examples illustrating the content and format of completed Construction Sequence sheets, see the ***Structures Detailing Manual Examples***.

9.2 CONSTRUCTION SEQUENCE DRAWINGS

At a minimum, include the following in the Construction Sequence sheets:

A. Existing bridge deck cross section(s), superstructure(s) and substructure(s). The first phase in the sequence is the existing bridge deck cross section. Show all existing elements as dashed.

B. Completed proposed bridge typical section(s), superstructures(s) and substructure(s). The final phase in the sequence is the completed proposed bridge typical section. Show all proposed elements as solid.

C. Direction of traffic for all lanes. Indicate traffic traveling up station with an upward pointing arrow and down station with a downward pointing arrow.

D. Dimensions for permanent traffic and pedestrian railings, temporary barriers including minimum clear distances to above ground hazards or drop-offs, shoulders, traffic lanes, bike lanes, median width, sidewalks, and construction and demolition limits at each phase. Reference dimensions to Station Line. Use the same Station Line as used in the Plan and Elevation sheet unless other considerations make this impractical.

E. Indicate required Type K Temporary Concrete Barrier connection to deck, e.g., freestanding or bolted down. See ***Standard Plans*** Index 102-110 for more information and anchoring requirements.

F. Location and disposition of all bridge-mounted utilities during construction and at the final condition. Indicate the type of utility, e.g., FOC, SS, OE, etc. For a complete list of common abbreviations and acronyms, see ***Standard Plans***. Wherever possible, indicate nominal dimensions of conduit or pipe.

G. Locations of the deck and substructure cut lines and construction joints. Include location in dimension scheme such that the locations are tied to the Station Line. Use hatching or shading to indicate portion of structure to be demolished in each phase.

H. Phase construction labels. Label each phase of construction as "Phase I Demolition", "Phase II Construction", etc. with the relevant dimension for the limit of construction and/or demolition. Coordinate with and use same naming conventions as the TCP.

I. Cross slope of bridge deck. Indicate whether or not the proposed cross slope matches the existing cross slope. If not, indicate both existing and proposed cross slopes.

J. Right-of-way (ROW) lines. Include Temporary Construction Easements (TCE). Show dimensions from these limits to the limits of construction and to temporary work bridges or platforms.

K. Temporary and permanent walls required for phased construction.

9.3 CONSTRUCTION SEQUENCING CONSIDERATIONS

Coordinate and balance constructability, safety, economy, and traffic control when developing the construction sequence for a phase-constructed bridge. Observe the following guidelines when developing the construction sequence:

A. Be familiar with the space required for each construction activity and ensure that there is enough room between the limits of construction and adjacent ROW lines, TCE lines and live traffic.

B. Be aware of the traffic control devices that may be required in the TCP. Account for widths of temporary barriers, traffic drums, barricades, etc. where their dimensions could affect the limits of construction.

C. Maximize the work area where possible and place as much distance as practicable between construction personnel and traffic. Where construction activities will be directly behind a temporary barrier, traffic drum or barricade, try to limit the duration of the phase through practical methods applied in the plans.

D. Consider bolting or staking-down Type K Temporary Concrete Barriers to minimize the required clear distance behind the barrier and maximize lane and shoulder width. See ***Standard Plans*** Index 102-110 for more information and anchoring requirements.

E. Coordinate pile driving operations and other foundation activities such that driving leads do not interfere with traffic on the bridge. Be aware of undesirable effects associated with pile driving such as diesel overspray from the hammer or debris from the pile cushion finding its way into live traffic.

F. Consider hammer location when battered piles are required. Avoid phasing where battered piles will be driven from above live traffic or near occupied structures or overhead utilities.

G. Properly address drainage and runoff conditions during construction. Coordinate with roadway and drainage engineers at the earliest stages of the design phase to properly incorporate safe drainage design into the construction sequence.

H. When phasing requires the use of temporary walls, in general use temporary MSE walls for fill conditions and sheet pile walls for cut conditions. If the plans call for a temporary critical sheet pile wall, include a table in the plans showing all design parameters.

I. When existing bridge decks are being removed from existing beams or girders in phases, address the sequence of removal to accommodate differential deflections and to reduce distortions within and between adjacent beams and girders. Consider selectively removing or cutting cross frames on steel I-girder superstructures, and intermediate diaphragms on concrete beam superstructures, prior to deck removal to accomplish this.

J. See also other ***SDM*** chapters for specific phase construction requirements and considerations associated with pile driving, steel erection and deck casting.

K. The Construction Sequence sheets shall provide sufficient information to confirm that the proposed bridge is constructible as designed. Include dimensions to R/W lines, TCE lines, existing structures, proposed structures and any other object that will aid the contractor in constructing the project. Show all potential conflicts graphically if applicable. See Figure 9.3-1 for typical dimensions.

Figure 9.3-1 Typical Dimensions Required for Construction Sequence Drawings

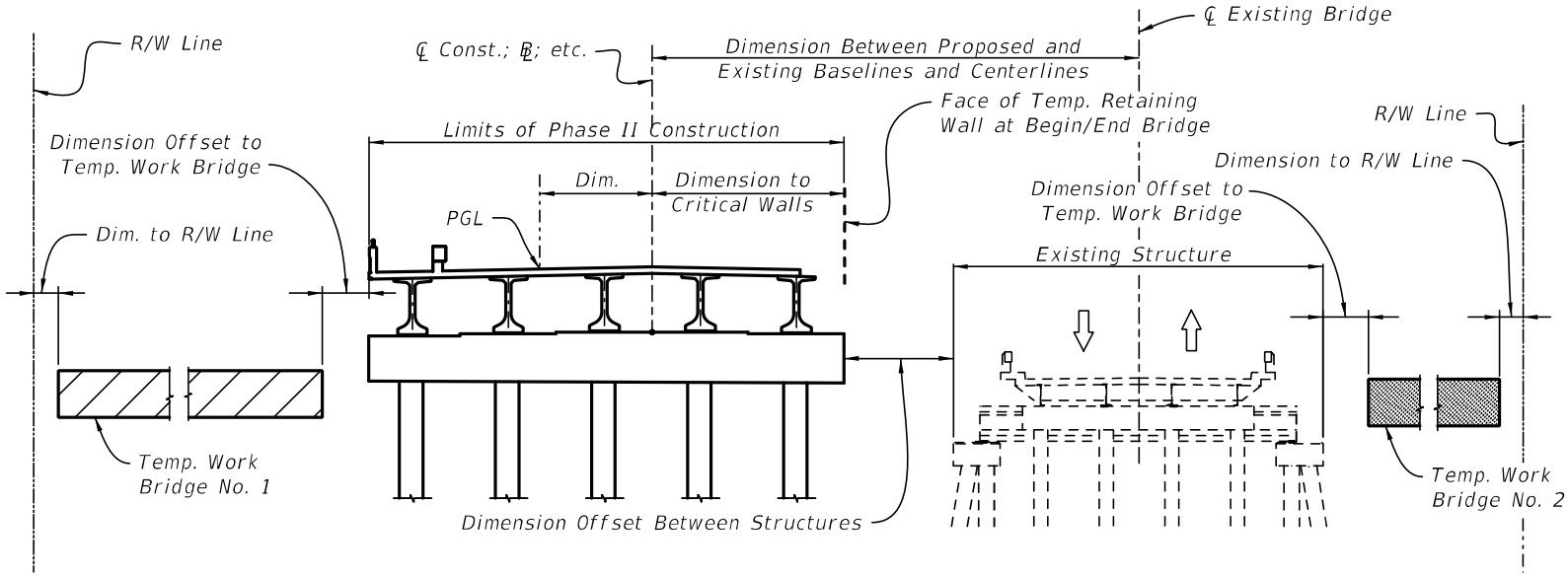

10 REPORT OF CORE BORINGS

10.1 GENERAL

A. This drawing, prepared by the District Geotechnical Engineer or a Consultant Geotechnical Firm, is a graphic portrayal of the subsurface conditions at the project site.

Modification for Non-Conventional Projects:

Delete ***SDM*** 10.1.A and insert the following:

A. This drawing, prepared by the Geotechnical Foundation Design Engineer of Record, is a graphic portrayal of the subsurface conditions at the project site.

B. The information presented on this drawing and in the Geotechnical Report is used to arrive at a proper foundation design.

C. These drawings shall be placed on the correct border found in the Structures Cell Library.

10.2 SCALES

A. Draw the boring layout plan and boring logs in elevation to a scale large enough to legibly show the data and permit reasonable determination and interpretation of soil strata variations.

B. The vertical scale of the boring logs must be large enough to permit inclusion of all relevant boring data and need not be the same scale as the boring layout.

C. Selected scales must provide uncompromised legibility when reproduced to 11-inch x 17-inch prints.

10.3 DRAWING CONTENT

Include the following data on the Report of Core Boring sheet(s):

A. Plan View (Boring Layout):

1. Station Line (show station values at 100-foot increments)
2. Station Line label (Base Line Survey, Center Line Construction, etc.)
3. North Arrow
4. Begin and end bridge stations and labels
5. Boring locations referenced to station line by station and offset
6. Boring labels

B. Elevation View (Boring Logs):

1. Elevation reference (vertical scale) on both left and right side of sheet (borings must be plotted in reference to elevation, not depth below ground surface)
2. Boring plots, labels, stations, offsets. (Use the soil-type symbols specified in the current ***Geotechnical Design Manual***)
3. Ground surface elevation
4. Ground/surface water level and date recorded (note elevation of artesian head if encountered)
5. Strata description including Unified Classification Symbols
6. Standard Penetration Test (SPT) N-values
7. Rock Core Locations,% recoveries, RQD
8. Undisturbed soil sampling locations
9. Lab test results
10. In situ test locations (vane shear test, dilatometer test, pressure meter test, etc.) and corresponding test results
11. Note unusual circumstances such as: sudden drop of split spoon, loss of circulation, etc.

C. Other:

1. Soil Legend
2. Rig Type
3. SPT Hammer Type (Safety Hammer or Automatic Hammer)
4. Environmental Classification (superstructure, substructure)
5. Financial Project ID
6. Completed Title Block

10.4 TITLE BLOCK

A. The title of this drawing is "REPORT OF CORE BORINGS".

B. Show the names of the drillers who performed the borings, and the responsible Geotechnical Engineer.

11 FOUNDATIONS

11.1 GENERAL

A. This chapter covers foundation layouts, foundation data tables, foundation-to-footing connection details and pile tip details.

11.2 FOUNDATION LAYOUT DRAWING

The Foundation Layout shows a plan view of all spread footings, piling or drilled shafts and provides all information necessary for locating their positions in the field. Use the same orientation for the Foundation Layout sheets as is shown on the Plan and Elevation sheets. For examples illustrating the content and format of completed Foundation Layout sheets, see the ***Structures Detailing Manual Examples***.

At a minimum, include the following on the Foundation Layout sheets:

A. Station Line at the scale required for clarity. Use the same Station Line referenced in the Plan and Elevation sheet.

B. Direction of stationing adjacent to the Station Line preferably at the extreme ahead or back station.

C. A plan of the substructure foundations such as a dashed outline of footings, bent caps, etc. Show substructure outline when considered critical for construction.

D. All horizontal curve data (or reference if shown elsewhere) including bearings of tangents.

E. Substructure stations on the Station Line. The substructure station is the intersection of the Station Line and the intermediate substructure centerline or begin/end of bridge at the front face of backwall (FFBW). For end bents, dimension the distance between FFBW and the centerline of piles.

F. On the Station Line, show the complimentary skew angles. See ***SDM*** 2.14 for details. In addition, bridges with multiple horizontal curves, combination of horizontal curve(s) and tangent(s), spiral curve(s), multiple consecutive tangents without horizontal curves or other complex alignments use coordinates to locate working (control) points for the substructure along the centerline of intermediate supports (piers or bents) or FFBW. Tie coordinates to the Florida State Plane Coordinate System.

G. The distance between the working (control) point or intersection point and adjacent pile or drilled shaft clusters, the center of footings, drilled shafts, or individual piles. In addition:

   1. Other foundation units may be dimensioned from adjacent foundations.
   2. Dimension pile or drilled shaft spacing within a cluster.
   3. Show proposed footing outlines as dashed where required for clarity.

H. All overhead and buried utilities and existing foundations in the vicinity and offset dimensions if applicable. Also indicate status of utilities, e.g. proposed, placed out of service, to be relocated, etc.

I. Boring locations and labels.

J. Show test, production, existing and tension piles or drilled shafts using a unique symbol for each. Use a legend to define these symbols. Exaggerate pile or drilled shaft sizes when necessary for clarity.

K. Show pile or drilled shaft sizes.

L. Indicate the amount and direction of battered piling. Indicate the control point for battered piles as the intersection of the center of pile and the bottom of footer or bottom of bent cap. All related dimensions shall reference this point.

M. Pile or shaft numbers. Number piles or shafts in each substructure unit sequentially, beginning with "1" from left to right when facing the Direction of Stationing, then from extreme back station to extreme ahead station. Restart numbering at each substructure unit. This numbering scheme is not to be confused with the pile driving or shaft construction sequence. See ***Specifications*** Section 455 for more information.

N. Indicate piles or drilled shafts that are to be wrapped with polyethylene sheeting per ***Specifications*** Section 459.

O. Location of temporary critical walls in the immediate vicinity of foundation construction and/or phased construction. Indicate wall type. Reference the appropriate sheets for wall control drawings and details.

P. Sequence of construction limits. Indicate which portions of the foundation are to be constructed in each Phase of the construction sequence, if applicable.

Q. Location and detail of existing and proposed foundations in the vicinity. This includes sign structure supports, retaining walls, tie backs or any other feature that may pose a potential conflict. To the extent possible, dimension existing foundations (including relic foundations of previously removed bridges) and indicate their distance from known reference points such as proposed foundations, station lines, etc. Clearly indicate existing piles that may conflict with proposed foundation elements (accounting for placement and batter tolerances) that need to be removed. Be aware of mud seal slabs which are typically larger than footing dimensions. Coordinate with the appropriate permitting agencies for direction on the removal of foundation elements, disposal of spoil, etc. In general, it is preferable to be conservative when estimating potential conflicts.

R. North arrow, in upper right corner of sheet.

S. Right-of-way lines (roadway, railroad, etc.) and temporary and permanent easements.

T. Fender system piles.

U. Shoreline at MHW/NHW elevation.

V. Cofferdam locations. Show sheeting required to build cofferdams.

W. Existing buried sheet pile wall anchors.

11.3 FOUNDATION LAYOUT DESIGN CONSIDERATIONS

To ensure a constructible, economical foundation design, incorporate the following guidelines when developing the foundation layout sheets:

A. Be aware of potential conflicts and/or vibration impacts on existing buildings due to foundation installation operations. For example, ophthalmologists (eye doctors), hospitals, schools, research facilities may all be negatively affected by even slight vibrations caused by foundation installation operations.

B. Test piles shall be driven in Phase I for phased-constructed bridges where possible.

Modification for Non-Conventional Projects:
Delete ***SDM*** 11.3.B.

C. Ensure that there is sufficient overhead clearance to drive piles. Possible conflicts include overhead utilities, existing bridges, and flight glide paths for bridges near airports.

D. It is strongly advised that all critical utilities be identified using Vvh (verified vertical elevation and horizontal location) methods during the design phase. Coordinate with the District Utility Engineer for determining which utilities are considered critical.

Modification for Non-Conventional Projects:
Delete ***SDM*** 11.3.D and see the RFP for identification of critical utilities.

E. Additional requirements may be placed on the removal of existing foundations, excavation, transportation, and disposal of contaminated materials by permitting agencies. Foundation layout plans, including removal of existing structures, disposal of spoil, disturbing environmentally sensitive areas, etc., must adhere to all permit requirements. This is especially important in the case of existing bascule piers with mud-line foundations that may need to be completely removed to facilitate the placement of a fender system, future dredging, or channel pier foundation construction.

F. Investigate adjacent structures, including buildings, for possible deep foundation conflicts. Consider the possibility of existing battered piles obstructing the proposed bridge foundation. Retaining walls, tie backs and dead man anchors pose potential conflicts and should be considered during the design phase.

G. Also see the ***Geotechnical Design Manual*** for additional information.

11.4 PILE DATA TABLE

The pile data table cells are located in the Structures Cell Library in CADD and are shown in ***Standard Plans Instructions (SPI)*** 455 Series and Index 102-200. Complete the appropriate table and include it in the plans when using standard concrete piles as shown in the ***Standard Plans*** and when using steel pipe or H piles. Do not add or delete columns within the Installation Criteria or Design Criteria sections of the table; if information in the column is not pertinent to the project, populate the data cell with "N/A". Modify, add, or delete pile installation notes based on project-specific conditions. What follows is a column-by-column description of the information to be used when filling out

the data table. For additional information, see ***SDG*** 3.5.1 and the applicable ***Standard Plans Instructions*** when using standard prestressed concrete piles.

A. Pier or Bent Number: Indicate in which pier or bent the piles are located. For pile groups within a single substructure unit that have different criteria, designate different pile groups in this column.

B. Pile Size: Indicate the pile size and type that is being used, e.g. 24" Sq. Prestr. Conc., HP 14x73, 48" Ø Pipe. Show all dimensions in inches. See ***Standard Plans*** for standard Prestressed Concrete Pile sizes.

C. Nominal Bearing Resistance: See Eq. 3.1 in ***SDG*** 3.5.13.

D. Tension Resistance: Indicate the required capacity of the pile to resist uplift in tons.

E. Minimum Tip Elevation: Indicate the minimum tip elevation required for lateral stability or to resist uplift. Round elevations down to the nearest foot. Do not use tenths.

F. Test Pile Length/Pile Order Length: Include the test pile length as provided by the Geotechnical Engineer on projects with test piles. Change “Test Pile Length (ft.)” to “Pile Order Length (ft.)” on the table heading for projects without test piles and include the pile order length as provided by the Geotechnical Engineer.

G. Required Jet Elevation: Indicate the required elevation that the piles shall be jetted to as provided by the Geotechnical Engineer.

H. Required Preform Elevation: Indicate the elevation to which holes will be preformed to as provided by the Geotechnical Engineer.

I. Factored Design Load: Indicate the factored loads calculated during design.

J. Drag Load: Indicate the anticipated drag load as provided by the Geotechnical Engineer.

K. Total Scour Resistance: An estimate of the ultimate static side friction resistance provided by the scourable soil, as provided by the Geotechnical Engineer.

L. Net Scour Resistance: An estimate of the ultimate static side friction resistance provided by the soil from required preformed or jetting elevation to the scour elevation, as provided by the Geotechnical Engineer.

M. 100-Year Scour Elevation: Estimated scour elevation due to the 100-year storm event, found on the Bridge Hydraulic Recommendations sheet. Round elevation down to the nearest foot.

N. Design Scour (Temporary Bridges): Estimated scour elevation as provided by the Drainage Engineer. Round elevation down to the nearest foot.

O. Long-Term Scour Elevation: Estimated scour elevation used in design for extreme event loading, found on the Bridge Hydraulic Recommendations sheet. Round elevation down to the nearest foot.

P. Resistance Factor: As provided by the Geotechnical Engineer.

Q. Pile Cut-Off Elevations: Indicate the pile cut-off elevation to the nearest tenth of a foot for permanent bridges or the nearest hundredth of a foot for temporary bridges.

Edit Pile Cut-Off Elevation table columns or make a separate table for pile cut-off elevations if necessary.

11.5 DRILLED SHAFT DATA TABLE

The Drilled Shaft Data Table is available on the Structures Office website's Standard Plans Webpage, in the Data Table Cell Libraries. The drilled shaft data table shall be used on all projects with drilled shafts. Do not add or delete columns unless permanent casing is required, in which case a column for Permanent Casing Tip Elevation must be added. If information in a column is not pertinent to the project, populate data table with "N/A". What follows is a column by column description of the information to be used when filling out the data table. See ***SDG*** 3.6.7 for additional information.

A. Pier or Bent Number: Indicate in which pier or bent the shafts are located. For shaft groups within a single substructure unit that have different criteria, designate different shaft groups in this column.

B. Shaft Size: Indicate the shaft diameter in inches. See ***Basis of Estimates Manual*** for commonly available auger sizes.

C. Tip Elevation: The highest elevation the tip of the shaft can be constructed without authorization from the Engineer. As provided by the Geotechnical Engineer, round elevations down to the nearest foot.

D. Minimum Tip Elevation: The highest elevation allowed due to lateral stability. As provided by the Geotechnical Engineer, round elevations down to the nearest foot. Edit note #2 in the cell as required.

E. Minimum Rock Socket Length: Indicate the minimum rock socket length as recommended by the Geotechnical Engineer.

F. Minimum Top of Rock Socket Elevation: As provided by the Geotechnical Engineer, indicate the anticipated elevation of layer in which top of the shaft socket will begin.

G. Factored Design Load: Indicate the factored loads calculated during design. Round loads up to the nearest ton.

H. Factored Design Uplift Load: Indicate the Factored Uplift Loads calculated during design. Round loads up to the nearest ton.

I. Drag Load: Indicate the anticipated drag load. As provided by the Geotechnical Engineer, round up to the nearest ton.

J. Long Term Scour Elevation: Estimated scour elevation used in design for extreme event loading, found on the Bridge Hydraulic Recommendations sheet. Round elevation down to the nearest foot.

K. 100-year Scour Elevation: Estimated scour elevation due to the 100 year storm event, found on the Bridge Hydraulic Recommendations sheet. Round elevation down to the nearest foot.

L. Resistance Factor (phi) for Compression: As provided by the Geotechnical Engineer.

M. Resistance Factor (phi) for Uplift: As provided by the Geotechnical Engineer.

N. Consider Nonredundant: See ***SDG*** 3.6.7.

O. Top of Drilled Shaft Elevation: Indicate the top of shaft elevation to the nearest tenth of a foot. Edit Top of Drilled Shaft Elevation table column or make a separate table for top of drilled shaft elevations if necessary.

Figure 11.5-1 Drilled Shaft Data Table

DRILLED SHAFT DATA TABLE														Table Date 11/01/17
INSTALLATION CRITERIA						DESIGN CRITERIA							TESTING	TOP OF DRILLED SHAFT ELEVATION (Ft.)
PIER OR BENT NO.	SHAFT SIZE (In.)	(1) TIP ELEV. (Ft.)	(2) MIN. TIP ELEV. (Ft.)	MIN. ROCK SOCKET LENGTH (Ft.)	(3) MIN. TOP OF ROCK SOCKET ELEVATION (Ft.)	FACTORED DESIGN LOAD (tons)	FACTORED DESIGN UPLIFT LOAD (tons)	DRAG LOAD (tons)	LONG TERM SCOUR ELEV. (Ft.)	100-YEAR SCOUR ELEV. (Ft.)	Ø COMPRESSION	Ø UPLIFT	(4) CONSIDER NONREDUNDANT	

(1) The Tip Elevation is the highest elevation the shaft tip shall be constructed unless load test data, rock core tests, or other geotechnical test data obtained during pilot holes allows the Engineer to authorize a different Tip Elevation.

(2) The Min. Tip Elevation is the tip elevation required for_____(reason must be completed by designer, for example: "for lateral stability", "to minimize post-construction settlements", or "for required tension capacity")

(3) Rock encountered above the Min. Top of Rock Elevation is considered unsuitable for inclusion in the rock socket length. The Engineer may revise this elevation based on pilot holes, if performed.

(4) Inspect all shafts considered nonredundant using the SID or an approved alternate down-hole camera to verify shaft bottom cleanliness at the time of concreting. Test all nonredundant drilled shafts using non-destructive integrity testing.

Figure 11.5-2 Drilled Shaft Data Table Example

DRILLED SHAFT DATA TABLE														Table Date 11/01/17
INSTALLATION CRITERIA						DESIGN CRITERIA							TESTING	TOP OF DRILLED SHAFT ELEVATION (Ft.)
PIER OR BENT NO.	SHAFT SIZE (In.)	(1) TIP ELEV. (Ft.)	(2) MIN. TIP ELEV. (Ft.)	MIN. ROCK SOCKET LENGTH (Ft.)	(3) MIN. TOP OF ROCK SOCKET ELEVATION (Ft.)	FACTORED DESIGN LOAD (tons)	FACTORED DESIGN UPLIFT LOAD (tons)	DRAG LOAD (tons)	LONG TERM SCOUR ELEV. (Ft.)	100-YEAR SCOUR ELEV. (Ft.)	Ø COMPRESSION	Ø UPLIFT	(4) CONSIDER NONREDUNDANT	
1	48	-80	-80	25	-55	446	N/A	100	-13	-20	0.55	N/A	NO	5.0
2	48	-80	-80	25	-55	446	282	N/A	-13	-20	0.45	0.40	YES	5.0
3	60	-100	-100	N/A	N/A	310	N/A	N/A	-13	-20	0.50	N/A	YES	5.0
4	60	-100	-100	N/A	N/A	514	N/A	N/A	-13	-20	0.60	N/A	NO	5.0

(1) The Tip Elevation is the highest elevation the shaft tip shall be constructed unless load test data, rock core tests, or other geotechnical test data obtained during pilot holes allows the Engineer to authorize a different Tip Elevation.

(2) The Min. Tip Elevation is the tip elevation required for lateral stability.

(3) Rock encountered above the Min. Top of Rock Elevation is considered unsuitable for inclusion in the rock socket length. The Engineer may revise this elevation based on pilot holes, if performed.

(4) Inspect all shafts considered nonredundant using the SID or an approved alternate down-hole camera to verify shaft bottom cleanliness at the time of concreting. Test all nonredundant drilled shafts using non-destructive integrity testing.

11.6 PILE DETAILS

11.6.1 Pile Cut-Off Elevations

Set pile cut-off elevations based on the design pile embedment. Dimension the design pile embedment on the bent or footing section.

11.6.2 Tension Pile Details

Provide details for connections of tension piles to footings as follows:

A. Concrete piles: Use the details shown in Figure 11.6.2-1 to provide a mechanical connection to the footing. Include the tension pile connection bars in the reinforcing bar list for the footing. See ***SDG*** 3.1 for design criteria.

B. Steel H-piles and hollow steel pipe piles: Use shear studs to provide a mechanical connection to the footing.

C. Steel pipe piles filled with concrete: Use hooked bars anchored into the cast-in-place concrete core to provide a mechanical connection to the footing.

Figure 11.6.2-1 Concrete Tension Pile Details

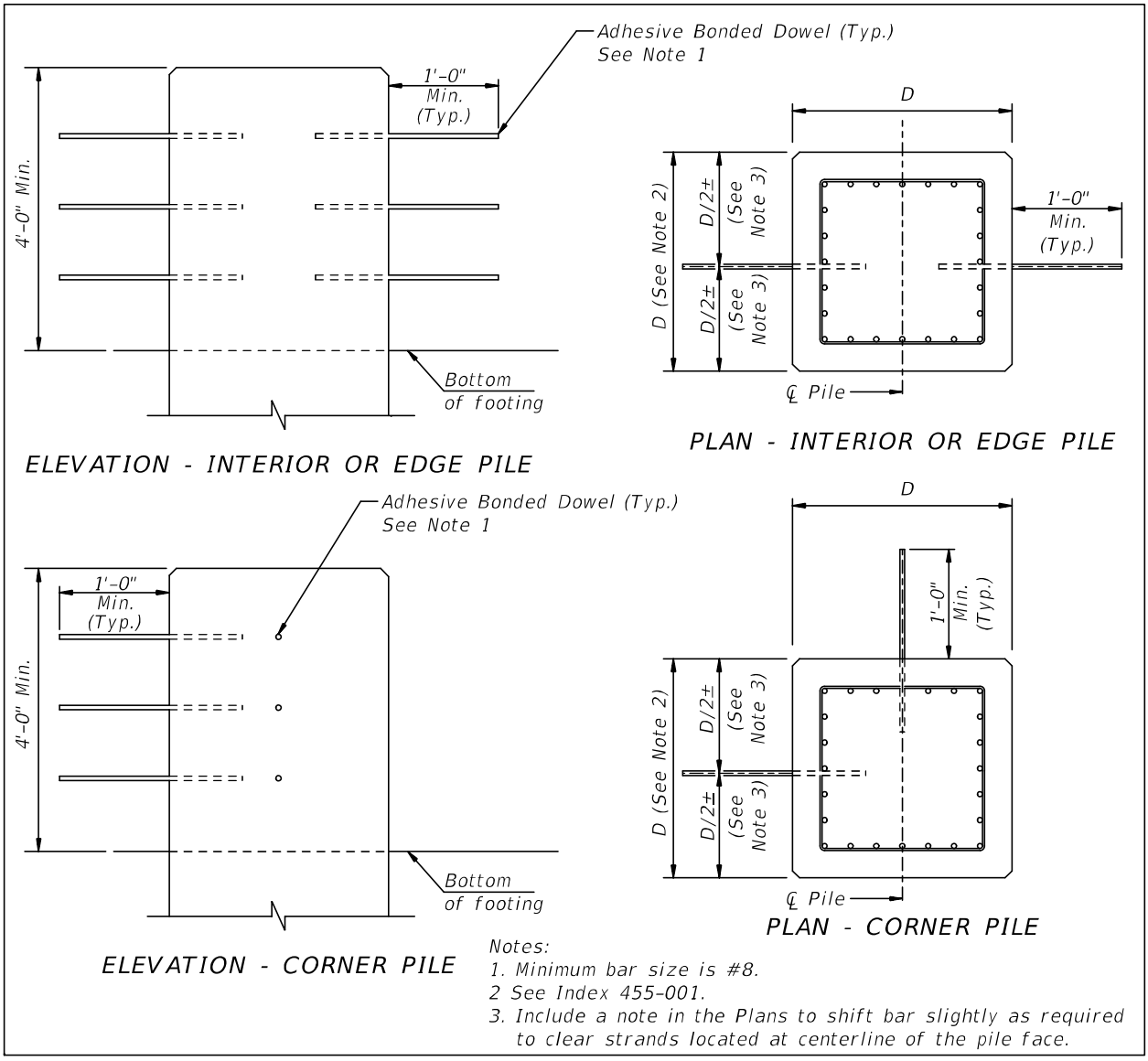

11.6.3 Steel Pipe Pile Tip Details

See ***SDG*** 3.1 for design criteria.

Figure 11.6.3-1 Steel Pipe Pile Details

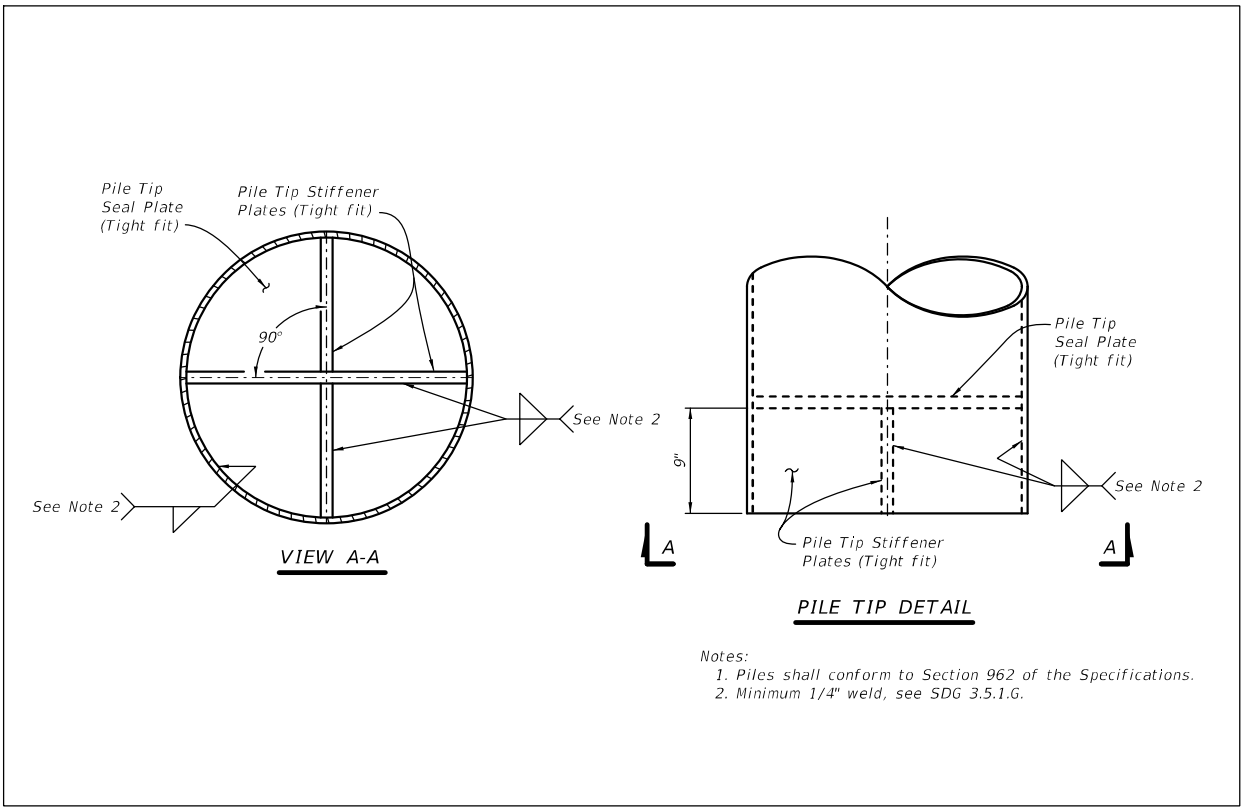

11.7 DRILLED SHAFT DETAILS

Detail drilled shaft reinforcement to ensure that it can be fully developed taking reinforcement cage placement tolerances into account. Whether a cap or a single column is placed on top of the shaft(s), design for the worst-case placement of the shaft reinforcement. Increase top of shaft elevations by the vertical placement tolerance per ***Specifications*** Section 455 to ensure there is no gap between the footing, bent or pier cap and top of shaft if constructed within tolerance.

Figure 11.7-1 Drilled Shaft Reinforcing Details

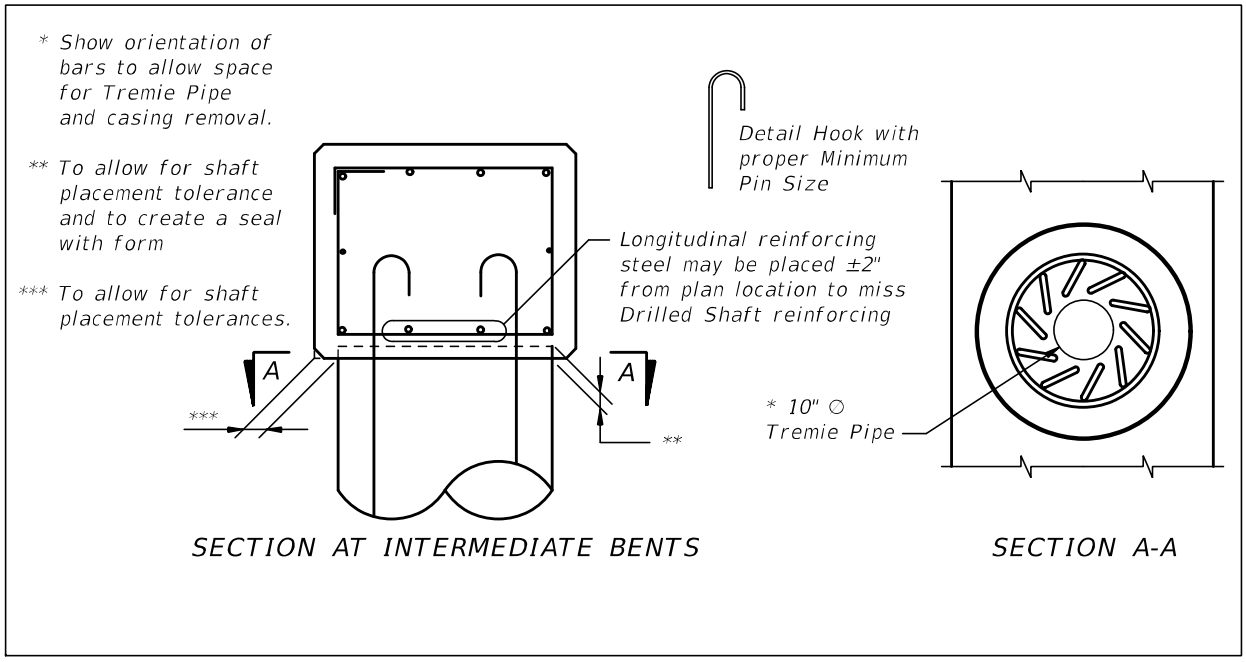

12 SUBSTRUCTURE - BENTS

12.1 GENERAL

A. This Chapter covers end bents as well as intermediate bents.

B. Bent sheets will include all details necessary for the layout of the bent and bar placement.

C. Show all views of the bent and sections required to construct the bent. For some structures, this may require more details than others.

D. See ***SDM*** Chapter 4 for details related to Concrete Components.

E. For examples illustrating the content and format of completed End Bent sheets, see the ***Structures Detailing Manual Examples***.

12.2 DRAWINGS AND DETAILS - GENERAL

Include the following details on the End Bent or Intermediate Bent sheets, as applicable:

A. Plan and elevation views.

B. With the exception of End Bent 1, elevation views are typically shown looking ahead station. If it is necessary to show the view looking back station, then the view must be labeled accordingly.

C. Dimensions along front face of backwall (FFBW) or centerline cap to Station Line. Dimensions shall be comprehensive to allow for complete layout of the bent. Some duplicate dimensions should be included to assist the contractor in verifying field measurements. Tie all dimensions to the horizontal control line.

D. Direction of Stationing in Plan View.

E. Complementary skew angles. See ***SDM*** 2.14 for details.

F. Phase construction limits. Indicate the length along the FFBW or centerline cap to be constructed in each phase. Use separate details and sketches where necessary.

G. Existing structure removal limits. Indicate the length along the FFBW or centerline cap to be removed. Hatch existing sections showing removal limits. Use separate details and sketches where necessary or if existing plans are not available. Location of piling is critical in partial removals; therefore, it is essential to locate during the design process.

H. Elevations at all locations critical to layout including:

   1. Pedestal/beam seat elevations.
   2. Top of backwall at ends, slope break point and phased construction limits.
   3. Top and bottom of bent cap at ends, slope break point and phased construction limits.
   4. Top of cheekwall.
   5. Coping elevation at FFBW.

6. Wing wall elevations at similar locations.

When a single drawing, view or detail showing elevations is used for more than one bent, elevations may be tabulated if necessary for clarity.

I. Beam/girder centerlines. Indicate beam/girder number on each centerline. Indicate the acute angle between the beam centerline and the centerline of bearing for each beam or show as "Typical". For bridges with horizontally curved geometry, indicate the beam angle with respect to a line tangent to the curve at the intersection of centerline of bearing. Dimension beam spacing with respect to the bent cap and label as "Beam Spacing".

J. Pile or drilled shaft locations. Dimension pile or drilled shaft spacing with respect to the bent cap and label as "Pile/Drilled Shaft Spacing". Indicate pile batter. For battered piles, indicate where the cutoff elevation is given to, e.g., centerline of pile.

K. Pedestal / stepped cap spacing and dimensions. Dimension pedestal / stepped cap spacing with respect to the bent cap.

L. Centerline(s) of bearing and centerline of piles / drilled shafts. Dimension offset from centerline cap or FFBW and the centerlines if not coincident.

M. Pedestal details including reinforcement, concrete cover, preformed anchor bolt or rod blockout locations & reinforcement embedment. Ensure that pedestal steel and preformed anchor bolt or rod blockouts do not conflict with top reinforcement in bent cap.

N. Plan view of drilled shaft reinforcement. Detail how drilled shaft reinforcement will tie into bent cap reinforcement.

O. Utility and drainage details. If a utility or drain pipe passes through end bent backwall, show reinforcement scheme and include bars in reinforcing schedule.

P. Connection details for widenings. Indicate whether existing steel is to be lapped with new steel or if threaded couplers or drilling and doweling are required. Include detail for drill and dowel to replace damaged existing rebar that is to be incorporated into the completed bridge.

Q. Keyways and construction joints. Show keyways and construction joints between backwall and bent cap, at ends of cap for phased construction and anywhere else required.

R. Preformed anchor bolt or rod blockout locations. Preformed anchor bolt or rod blockouts shall be 4-inch diameter minimum. Completely detail blockouts and verify there are no conflicts with reinforcement.

12.3 DRAWINGS AND DETAILS - END BENT

In addition to the applicable detailing recommendations above, show the following when detailing End Bent sheets:

A. End bent plan and elevation views. It is generally preferred to show plan and elevation views for each end bent on a separate sheet, even if there is a great deal of similarity.

B. Begin and End bridge stations at intersection of FFBW and Station Line. Tie all dimensions back to the PGL and the Station Line when it is within the limits of the bent. Show a dimension to the Station Line when it is not within the limits of the bent.

C. Outline of approach slab in elevation view.

D. Section of end bent. Include the backwall, where applicable, and include enough information for layout and bar placement. More than one section may be needed. Indicate location where all sections are taken on the end bent plan and elevation sheets.

E. Cheekwall detail showing reinforcing details. Up to four views may be required for skewed bridges and bridges with other conditions due to varying dimensions.

F. Location(s) of soil reinforcement (if present) attached to or placed against the backwall. See ***SDG*** 3.13.2.N. Indicate the required service and factored loads (kips per foot along the length of the backwall) for the soil reinforcement. If soil reinforcement attached to or placed against the backwall is used, include the following plan note on the end bent sheet(s):

   The soil reinforcement [attached to / placed against] the backwall shall be designed by a Specialty Engineer for the service and factored loads as shown using the design criteria for permanent MSE walls. Cost of furnishing and installing the soil reinforcement is considered incidental to the cost of the end bent.

Modification for Non-Conventional Projects:

Delete ***SDM*** 12.3.F and replace with the following:

F. Location(s) of soil reinforcement (if present) attached to or placed against the backwall. See ***SDG*** 3.13.2.N. Indicate the required service and factored loads (kips per foot along the length of the backwall) for the soil reinforcement. If soil reinforcement attached to or placed against the backwall is used, include the following plan note on the end of the bent sheet(s):

The soil reinforcement [attached to / placed against] the backwall shall be designed by a Specialty Engineer for the service and factored loads as shown using the design criteria for permanent MSE walls.

G. Show adjacent MSE walls in the plan and end bent section views. Ensure there are no conflicts between battered piles and MSE wall straps or MSE wall panels. Place ½inch premolded expansion material between MSE wall panels and end bent as shown in Figure 12.3-1. Provide welded wire fabric reinforcing in the end bent interface lug that wraps around the MSE wall as shown in Figure 12.3-2.

Figure 12.3-1 Expansion Material Detail

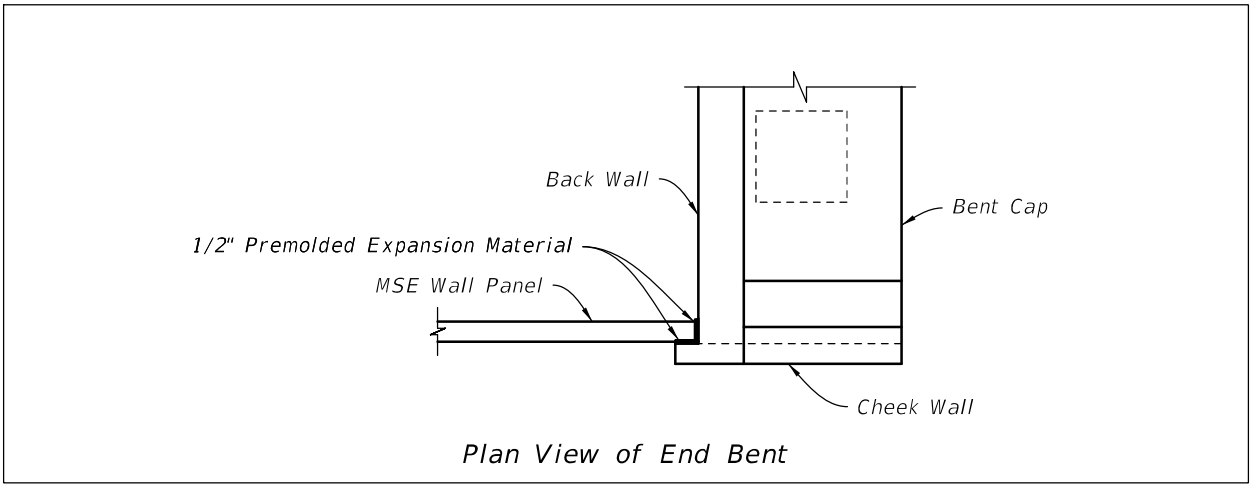

Figure 12.3-2 Reinforcing Details for End Bent/MSE Wall Interface Lug

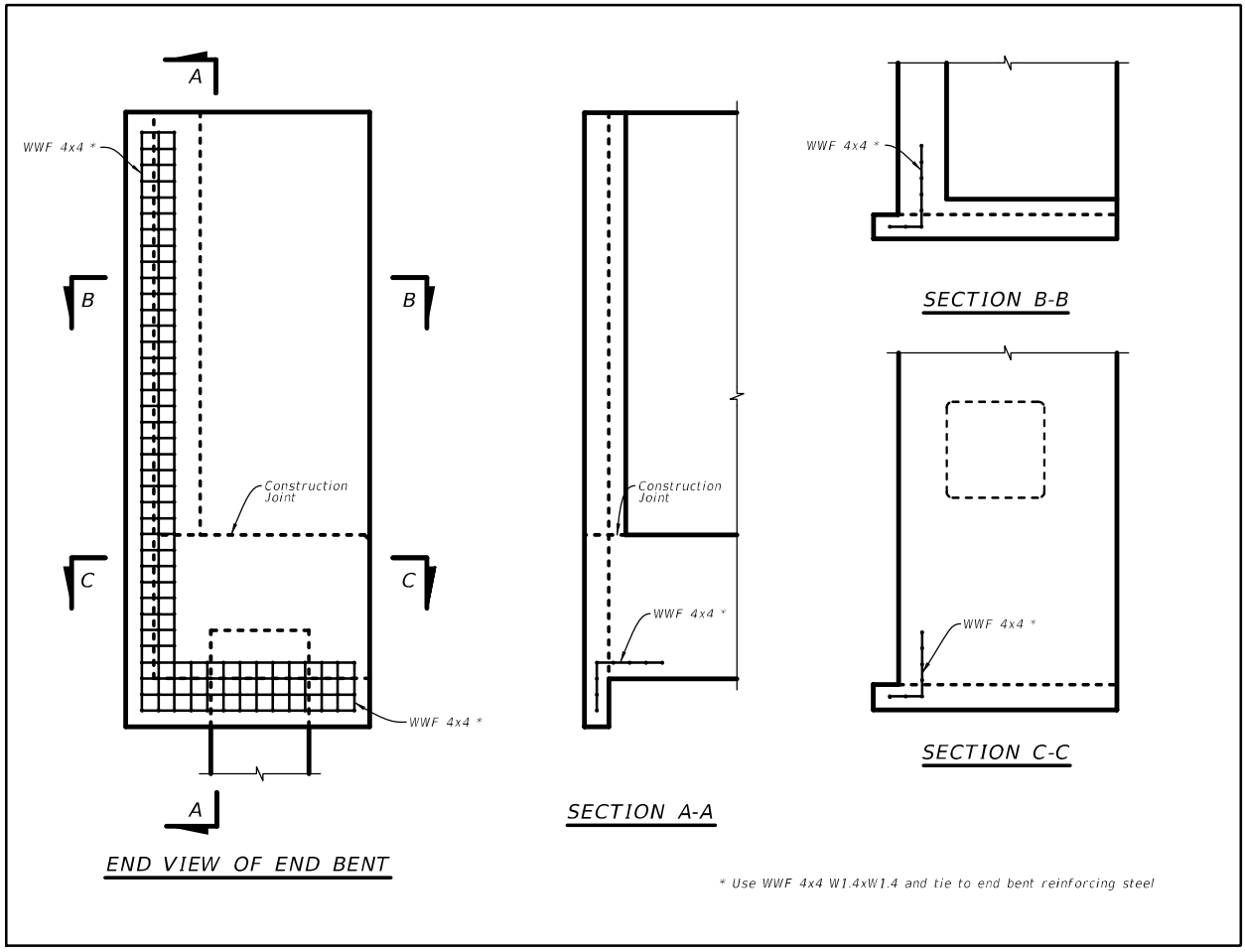

H. Wing wall details. Wing wall plan, side view and section should be shown. Detail wing wall cap level.

I. Corner chamfers if a chamfer larger than ¾-inch is necessary. On bents with skews greater than 30 degrees, chamfer acute corners a minimum of 4-inches.

J. For the dowels that extend from the top of the backwall or cap and into the approach slab, use hairpin shaped bars as shown in Figure 12.3-3 in lieu of straight dowels.

Figure 12.3-3 End Bent Dowel Bar Detail

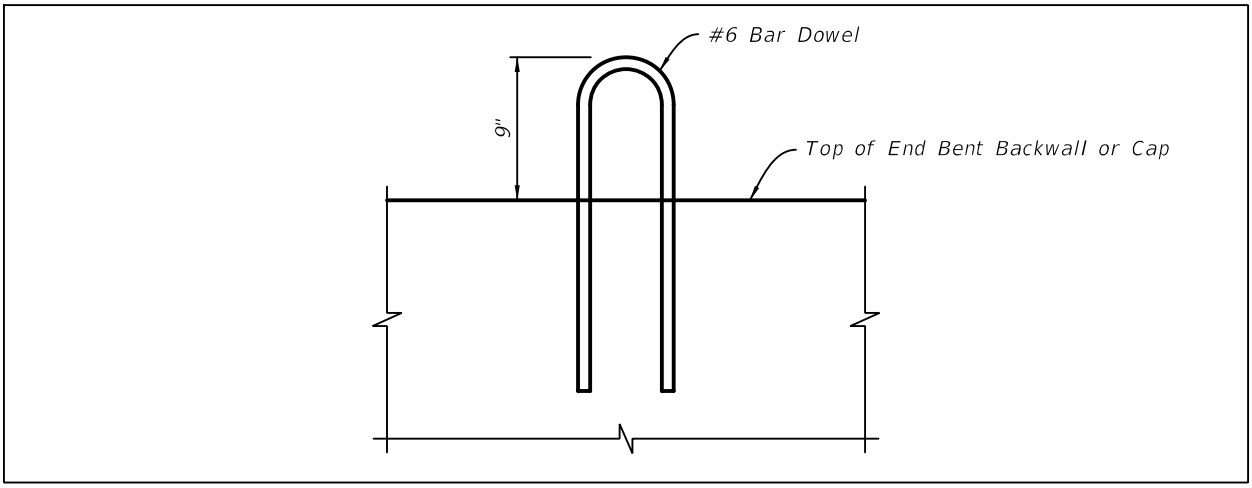

12.4 DRAWINGS AND DETAILS - INTERMEDIATE BENT

In addition to the applicable detailing recommendations in ***SDM*** 12.2 above, address the following issues when detailing Intermediate Bent sheets:

A. Plan and elevation views. It is generally allowed to show a single intermediate bent sheet provided there is adequate similarity from bent to bent and enough room on the sheet for legibility.

B. Pedestal details. Pedestals may be staggered to accommodate beams having skewed ends. For staggered pedestals, center the pedestal about the intersection of the centerline of beam and centerline bearing.

12.5 DESIGN CONSIDERATIONS - GENERAL

Constructability, site concerns, economy and durability must be taken into account when developing bent plans and details. The following considerations provide guidelines for the designer and detailer:

A. Make sure the dimensions of the bent are compatible with the bearing pad selection and skew. Place bearing pads orthogonal to the centerline of the beam wherever possible except where specifically shown to be skewed on the ***Standard Plans***.

B. If loads and soil conditions permit, place beams directly over piles. Minimize the offset distance between the centerline of piles and centerline(s) of bearing.

C. Avoid double stirrups whenever possible by using a larger stirrup size and/or tighter stirrup spacing. Due to restrictions on bending during fabrication, #6 bars are generally the largest practical stirrup size. Keep stirrup spacing constant between piles. If triple stirrups are required, increase bent cap size.

D. See ***SDG*** 3.11.4 for pedestal requirements.

E. Where beams with squared ends are on a skew and the bearing seat is stepped, detail bearing pedestals in-line with the beams as shown in Figure 12.5-5. Maintain a clear distance from the bent edge to the bearing as indicated in Figure 12.5-2 and Figure 12.5-5.

F. Size and detail bent caps taking into consideration pile driving and drilled shaft placement tolerances per ***Specifications*** Section 455, bearing pad requirements, superstructure expansion joints or any other consideration that affects bent cap width. Generally, on bents with double bearings the bearing dimension requirements will control. For bents with large piles or drilled shafts, the shaft or pile dimension plus tolerances will control. See Figure 12.5-1 and Figure 12.5-3.

G. Where bents are supported by drilled shafts without footings, place drilled shafts as follows:

1. Land Bents - set top of drilled shafts 1-foot below ground line.
2. Water Bents - set top of drilled shafts a minimum of 1-foot above normal or mean high water except for bridges over flood plains.
3. Floodplain Bents - set top of drilled shafts a minimum of 1 foot above the 100-year flood elevation and include an optional construction joint 1 foot below ground line.

Cap and/or column dimensions shall accommodate shaft placement tolerances.

Commentary: The water elevation that will actually be present when the bridge is built cannot be determined during the design phase. By setting the top of drilled shaft elevation 1-foot above the 100-year flood elevation, the drilled shaft can be constructed with the water at any elevation below the 100-year flood elevation. Conversely, if the top of drilled shaft elevation is set below the 100-year flood elevation and the water happens to be high during construction, a claim situation is potentially created.

If the actual water elevation that is present during construction is below the 100-year flood elevation, the Contractor can potentially use the construction joint at the lower elevation to construct the drilled shaft without creating a claim situation or having to develop and get an alternate design approved.

H. For multi-span bridges, only bents adjacent to a lower roadway or railroad may need to be skewed to meet horizontal clearance requirements. Similarly, only bents adjacent to a navigation channel may need to be skewed to meet minimum navigation channel width requirements. Consider making remaining bents normal to the bridge. For water crossings continue to use skews where minimum navigational requirements or scour governs the design.

I. When pedestals are used and the bent cap width is controlled by bearing size and/or placement as shown in Figure 12.5-1, Figure 12.5-2 or Figure 12.5-5, extend the pedestals the full width of the cap.

Figure 12.5-1 Minimum Cap Width for Caps with Double Bearings 1 of 2

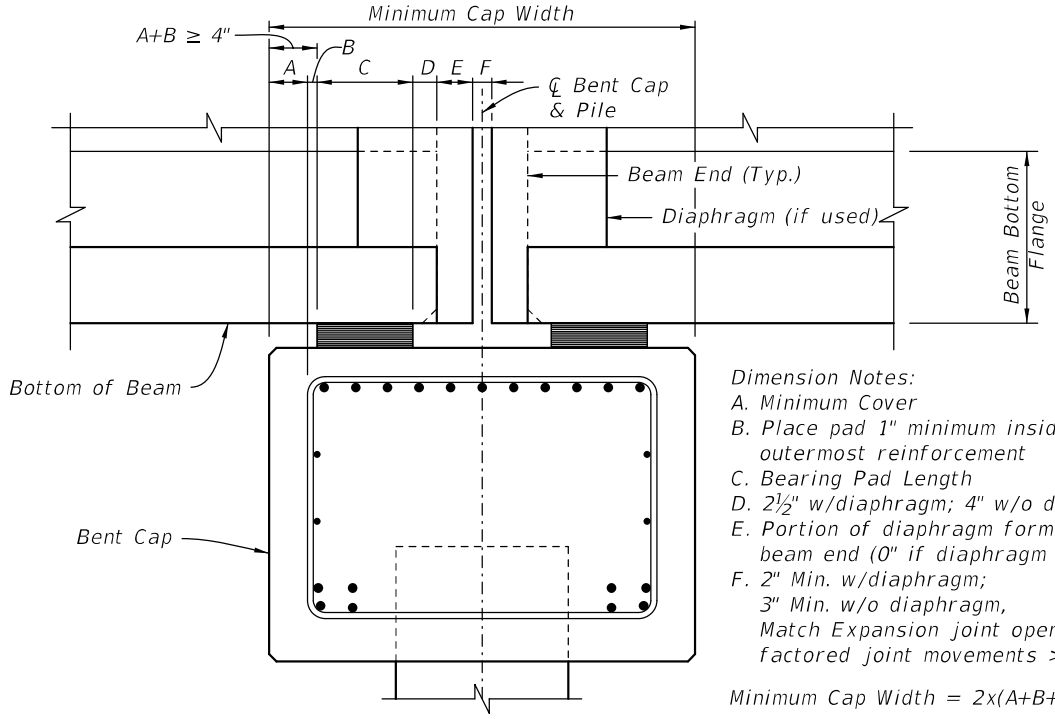

DETERMINING MINIMUM CAP WIDTH FOR CAPS WITH DOUBLE BEARINGS PLACED PARALLEL TO EDGE OF CAP
(Florida-I or AASHTO Type II Beams shown, Florida Slab Beams Similar)

Figure 12.5-2 Minimum Cap Width for Caps with Double Bearings 2 of 2

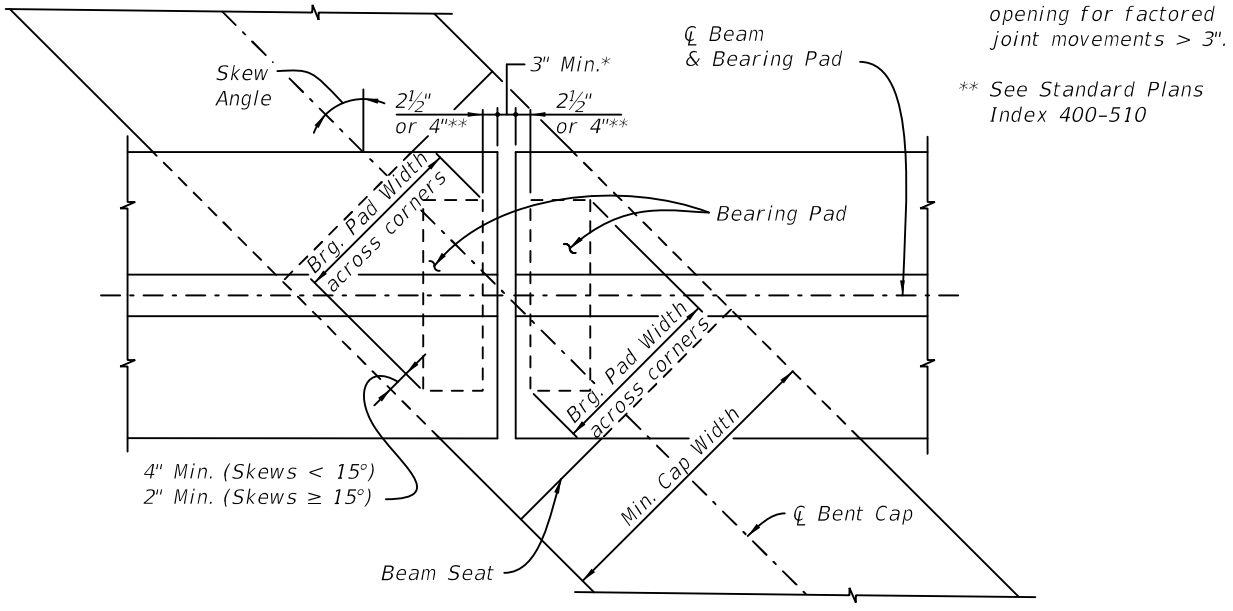

MINIMUM CAP WIDTH FOR CAPS WITH DOUBLE BEARINGS ON A SKEW

Figure 12.5-3 Minimum Cap Width When Pile Size Controls

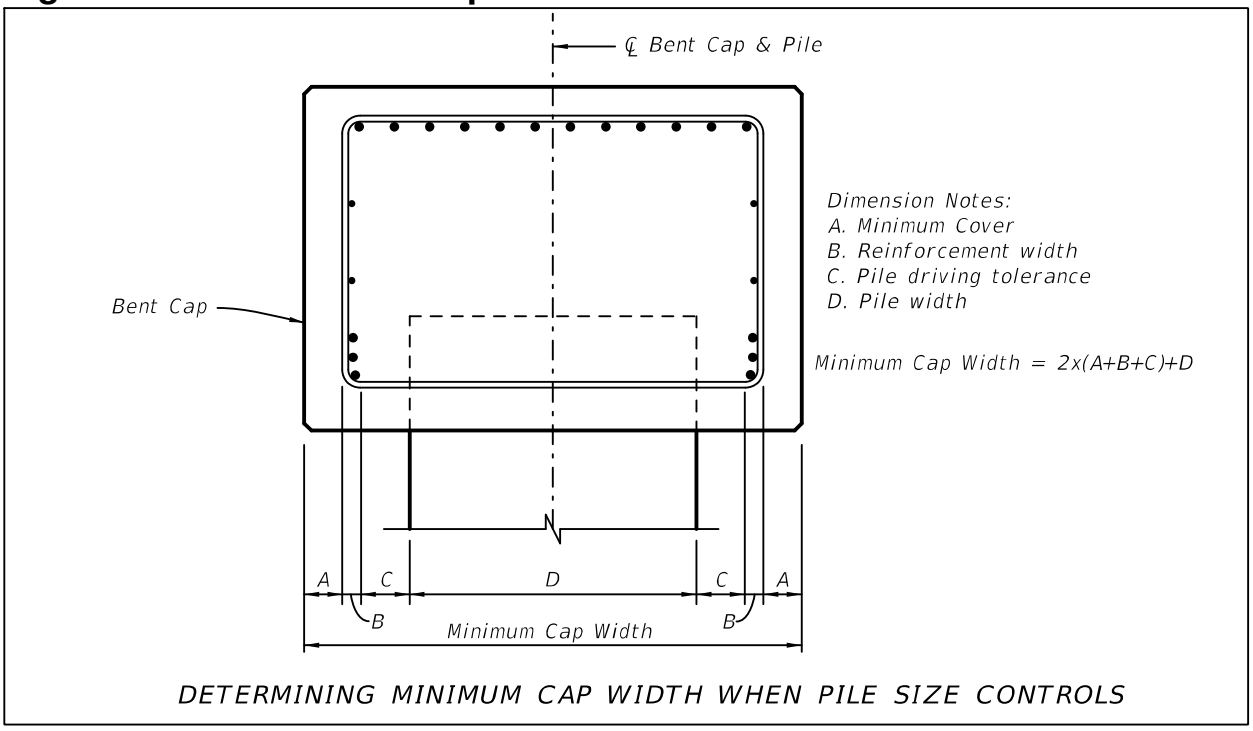

DETERMINING MINIMUM CAP WIDTH WHEN PILE SIZE CONTROLS

Figure 12.5-4 Minimum Cap Width When Shaft Size Controls

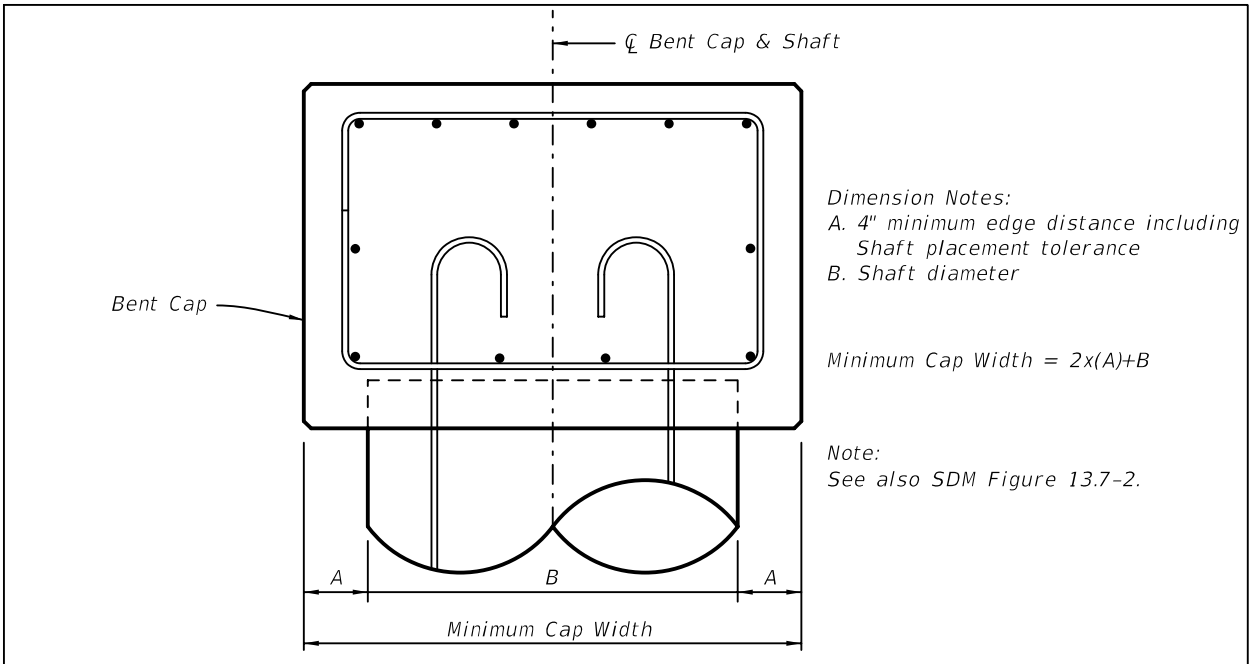

DETERMINING MINIMUM CAP WIDTH WHEN SHAFT SIZE CONTROLS

Figure 12.5-5 Stepped Pedestal Detail for Squared End Beams on a Skewed Bridge

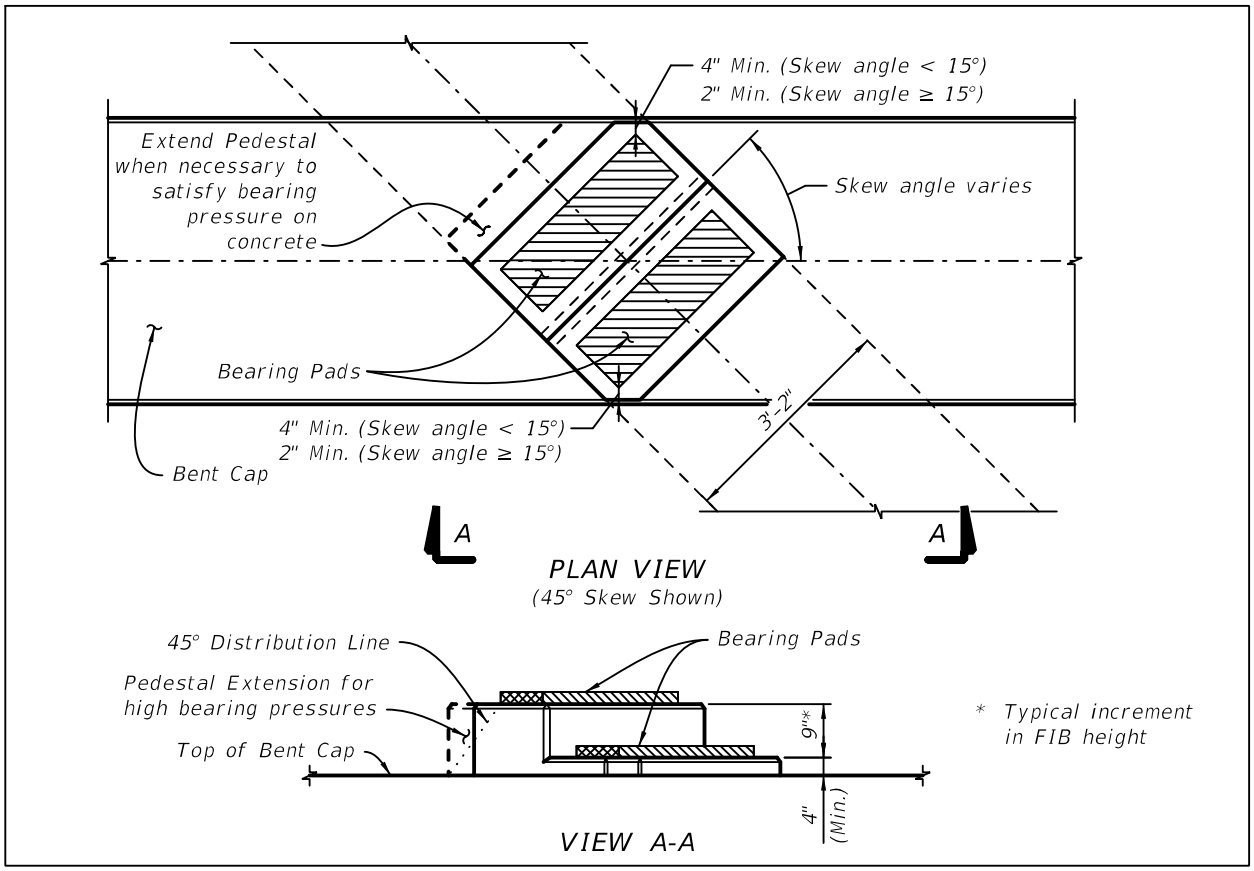

12.6 DESIGN CONSIDERATIONS - END BENT

In addition to the applicable design considerations above, address the following issues when designing end bents:

A. When calculating elevations, allow for a minimum of 2-inches and a maximum of 4-inches of clearance between the top of cheekwall and bottom of deck.

B. Minimum thickness for cheekwalls is generally 8-inches. Backwalls and wingwalls are generally no less than 12-inches thick and may be thicker as required by design. When wingwalls are present on an end bent, make cheekwalls flush with wingwalls so that the outside surface is one continuous plane.

C. For end bents with backwalls greater than 50-feet in length, require vertical ¾-inch V-grooves in both faces of backwall at a maximum of every 25-feet. Require Type D-5 geotextile fabric behind backwall at all V-groove locations. See Figure 12.6-1.

Commentary: This requirement addresses the vertical cracks that occur in backwalls due to restrained shrinkage between the newly placed backwall concrete and the previously placed end bent concrete. The 25-foot dimension is consistent with the wall joint spacing shown in ***Standard Plans*** Index 400-010*.*

Figure 12.6-1 End Bent Backwall V-Groove Detail

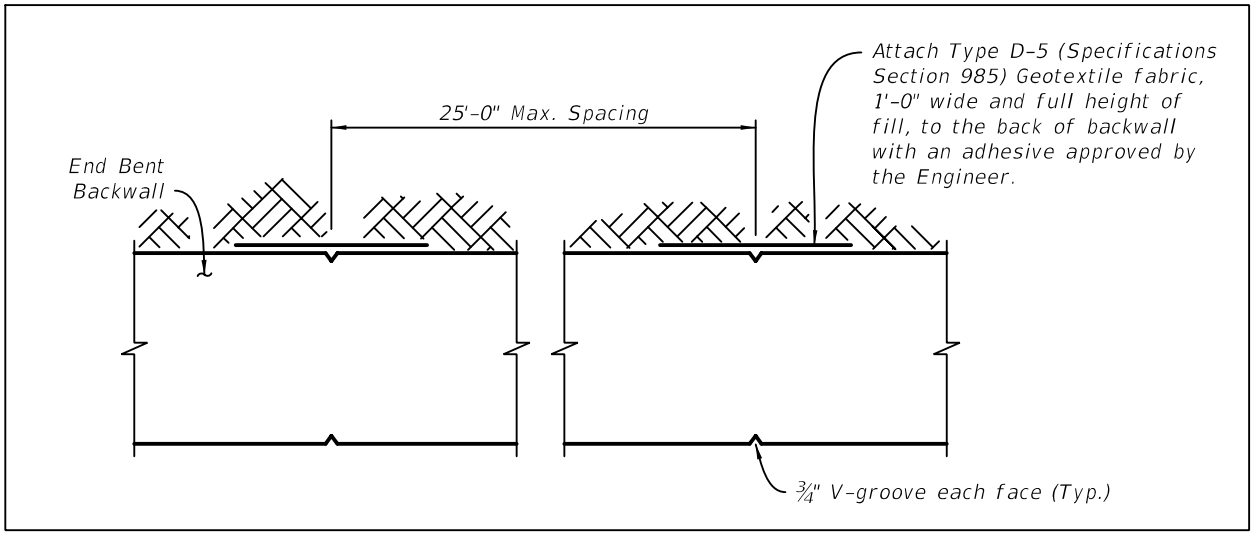

D. Consideration should be given to the possible need for future utilities to pass through end bent backwalls. In some instances, it may be beneficial to construct the backwall with openings intended for future use. In these cases, casting threaded inserts in the underside of the deck for future utility hangers would also be required. Design loads shall include these future utilities.

Modification for Non-Conventional Projects:
Delete ***SDM*** 12.6.D and see the RFP for requirements.

E. For end bents built in conjunction with MSE walls, detail the bottom of the MSE wall coping to be flush with the bottom of the end bent cheekwall and bent cap. Place a ½-inch thick minimum bond breaker between the retaining wall, e.g. MSE wall panels, sheet piles, C.I.P. wall facing, etc., and the adjacent C.I.P. end bent cap, backwall and cheekwalls so as to accommodate differential settlement between the wall and end bent. See Figure 12.6-2.

Figure 12.6-2 End Bent Cheekwall Detail at MSE Wall

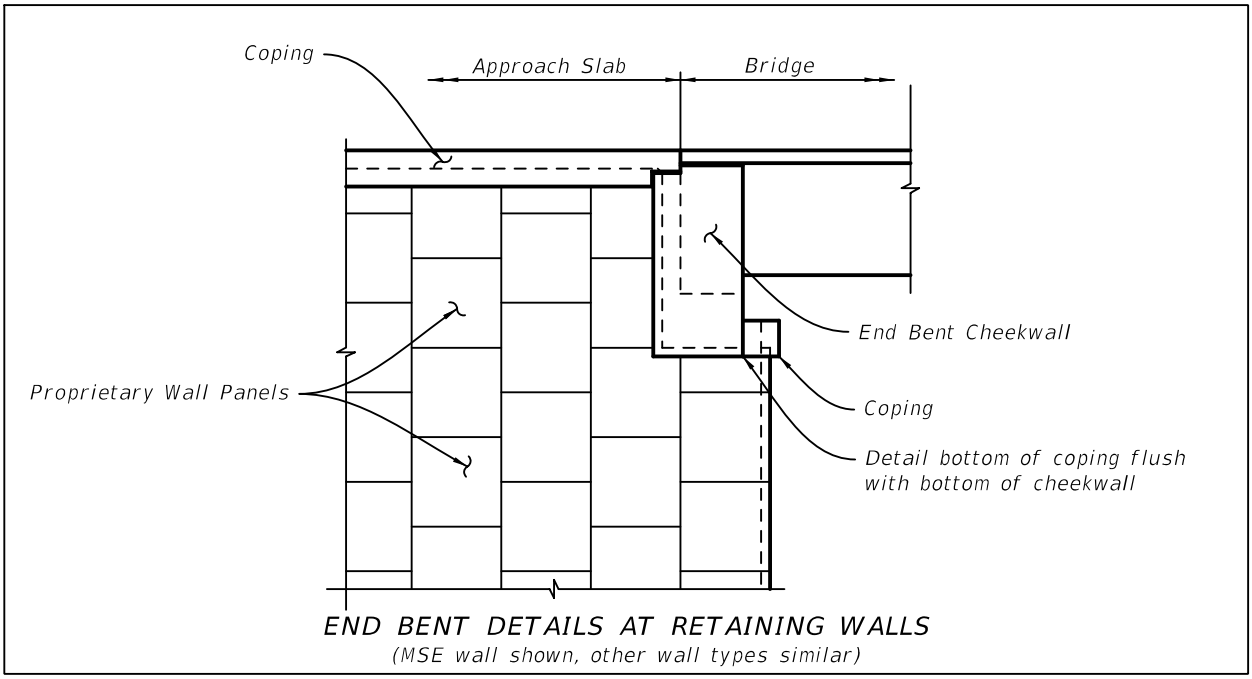

F. Due to the differential settlement that will occur between the approach embankment and the end bent, do not use spread footings to support wingwalls that are attached to pile or drilled shaft supported end bents. Generally, wingwalls longer than 10-feet must be supported by piles or drilled shafts. Design shorter wingwalls as cantilevers that are entirely supported by the end bent.

Commentary: The 10-foot wingwall length limit is based on successful historical past practice.

G. Calculate wingwall lengths for non-skewed End Bents as shown in Figure 12.6-3. Calculate wingwall lengths for skewed bridges in a similar manner accounting for the End Bent geometry and the skewed relationship between the front slope and the wingwalls.

H. When both intermediate and end bents are used on a given bridge, or on separate bridges in a given project, where possible use the same cross sectional dimensions for the bent caps and other applicable details for both bent types.

I. Provide a 3-inch minimum gap between the front face of backwall and the ends of concrete beams and steel girders.

Figure 12.6-3 Wingwall Calculation Detail

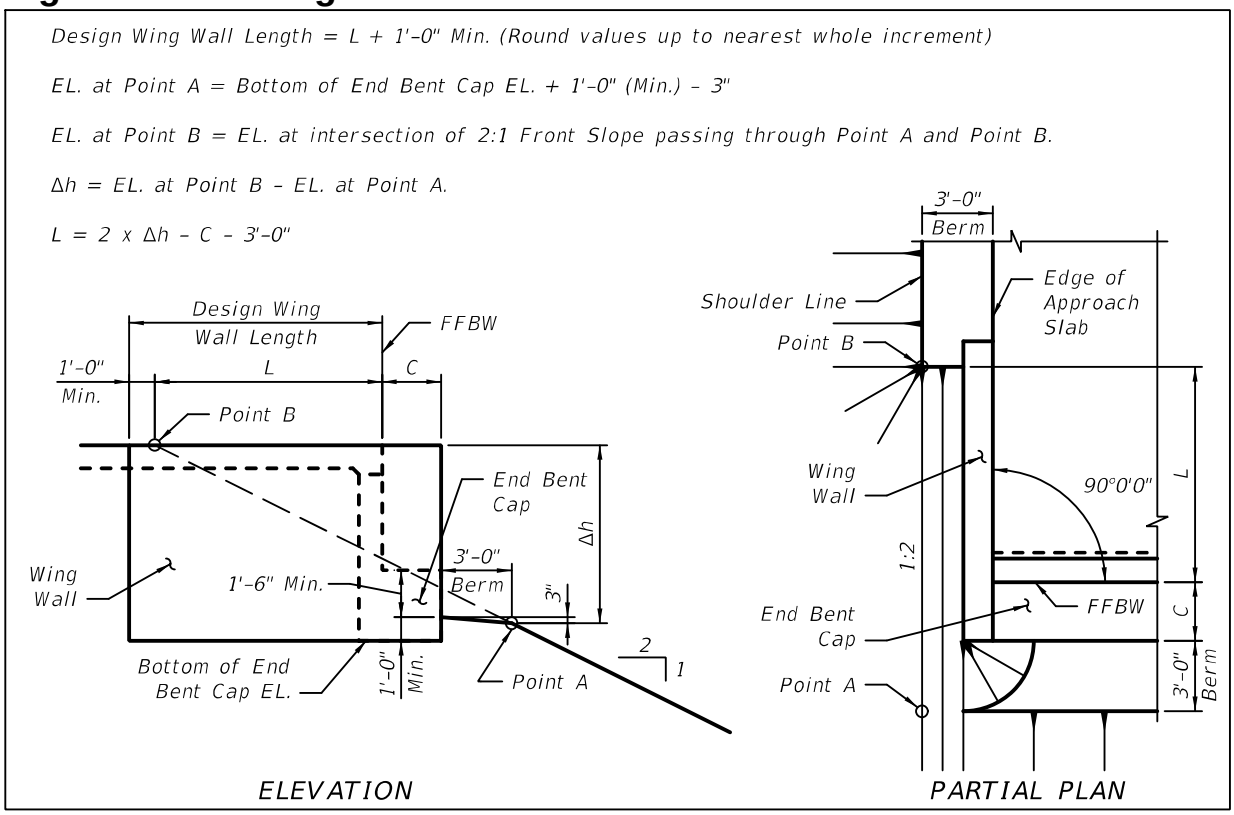

12.7 DESIGN CONSIDERATIONS - INTERMEDIATE BENT

In addition to the applicable design considerations in ***SDM*** 12.5 above, address the following issues when designing intermediate bents:

A. During the preliminary design phase of water crossings, avoid placing intermediate bents in the center of the channel. This may help avoid scour issues and reduce pile lengths. Coordinate with the drainage engineer to achieve a good balance between span lengths and minimizing hydraulic issues.

Modification for Non-Conventional Projects:
Delete ***SDM*** 12.7.A and see the RFP for requirements.

B. To help reduce costs and constructability issues, minimize the use of battered piles. Address conflicts battered piles may have with utilities, existing foundations or other underground obstructions.

Modification for Non-Conventional Projects:
Delete ***SDM*** 12.7.B and insert the following: B. Address conflicts battered piles may have with utilities, existing foundations, or other underground obstructions.

13 SUBSTRUCTURE - PIERS

13.1 GENERAL

A. This Chapter covers multiple column, hammerhead, integral, straddle and C-piers, footings and aesthetic requirements.

B. Pier sheets will include all details necessary for the layout, reinforcement placement and quantity estimation of the pier column, cap, and footing.

Modification for Non-Conventional Projects:

Delete ***SDM*** 13.1.B and insert the following:

B. Pier sheets will include all details necessary for the layout and reinforcement placement of the pier column, cap, and footing.

C. Show all views of pier and sections required to construct the pier. For some structures, this may require more details than others.

D. See ***SDM*** 4 for details related to Concrete Components.

E. To allow detailing piers at a more legible scale, detail pier caps, columns and footings for larger piers on separate sheets. Number the sheets in the order the components will be constructed, footings first, followed by columns and finally pier caps.

F. For examples illustrating the content and format of completed Pier sheets, see the ***Structures Detailing Manual Examples***.

13.2 PIER DRAWINGS AND DETAILS - GENERAL

Sections 13.2 through 13.6 cover multi-column piers as well as other specialty types of piers such as Hammerheads, C-piers, straddle piers, integral piers, etc. Design considerations unique to these types of piers are addressed in subsequent sections. At a minimum, include the following on all Pier sheets:

A. Plan and elevation views (front and side).

B. If there is a great deal of similarity, a typical pier sheet may be used. Show all differing information such as dimensions, elevations, etc. in tabular format. If a pier is wider than can be shown clearly on one sheet, split the view into multiple sheets, while still maintaining the stacked plan and elevation format. Show matchlines on each sheet.

C. Phase construction limits. Indicate the length along the centerline pier to be constructed in each phase. Use separate details and sketches where necessary.

D. Existing structure removal limits. Indicate the length along the centerline cap to be removed. Hatch sections to be removed. Use separate details and sketches where necessary.

E. Pedestal spacing and dimensions. Dimension pedestal spacing with respect to the pier cap.

F. Centerline(s) of bearing. Dimension offset from face of pier to one or both centerlines of bearing.

G. Section of pier cap and pier column. Multiple sections may be required for non-prismatic members. Indicate locations where all sections are taken on the pier plan and elevation sheets.

H. Detail showing architectural treatments such as ribbing, striations or rustication. Measure concrete cover from the deepest part of relief. See Figure 13.2-1.

Figure 13.2-1 Hammerhead Pier Rustication

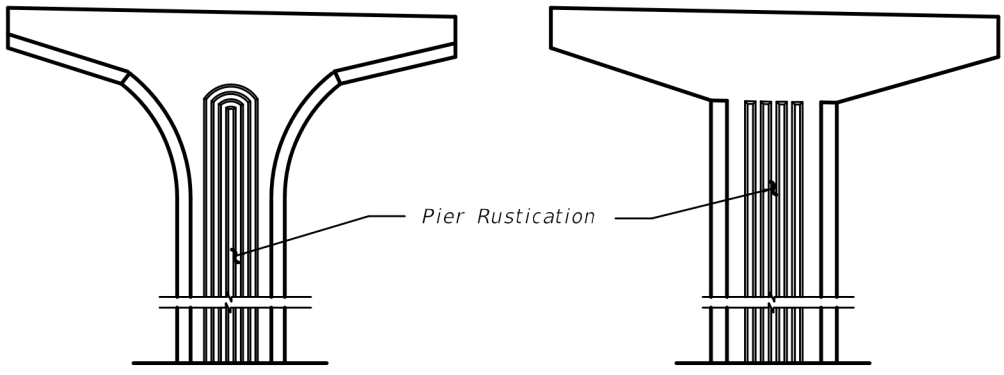

ELEVATION VIEW - HAMMERHEAD PIERS
(Flush Pier Face w/ Rustication Shown)

I. Pedestal details including reinforcement, concrete cover, preformed anchor bolt or rod blockout locations & reinforcement embedment.

J. Drain pipes. Show connections, cleanouts, elbows and all other necessary parts. A minimum of one cleanout in each vertical and one cleanout in the lateral is required. Check for conflicts with rebar, post-tensioning ducts, anchor bolts or rods, etc. See ***SDM*** 22 for Drainage Requirements on Bridges.

K. Locations for anchor bolt or rod blockouts. Indicate depth and diameter of blockouts as well as plan location.

L. All construction joints including each lift of column pours. See ***SDG*** Chapter 3 for details.

M. Include mass concrete, admixture requirements, etc. consistent with the requirements stated in the General Notes. This information may be included on the pier plan and elevation sheet or detail sheet.

13.3 PIER DRAWINGS AND DETAILS - PLAN VIEW

In addition to the items in ***SDM*** 13.2, include the following in the plan view of Pier sheets:

A. Dimensions along centerline of pier tied to the Station Line. Dimensions shall be comprehensive to allow for complete layout of the pier.

B. Beam/girder centerlines. Indicate beam/girder number on each centerline. Indicate the acute angle between the beam/girder centerline and the centerline of bearing for each beam/girder or show as "Typical". Dimension beam/girder spacing with respect to the centerline pier. Tabulate if necessary.

C. Complementary skew angles. See ***SDM*** 2.14 for details.

D. Direction of Stationing.

13.4 PIER DRAWINGS AND DETAILS - ELEVATION

In addition to the items in ***SDM*** 13.2, include the following in the elevation view of Pier sheets:

A. Elevations at all locations critical to layout including:

1. Pedestal/beam seat elevations.
2. Top and bottom of pier cap at corners, ends and slope break point.
3. Top and bottom of pier column.
4. Finished ground.
5. Top of footing

When a single drawing showing elevations is used for more than one pier, elevations may be tabulated if necessary for clarity.

B. Dashed outline of existing piers or other adjacent structures and approximate dimensions. For widenings, provide approximate dimensions and/or tie-ins between proposed and existing footings and pier caps. If the proposed bridge is built near an existing-to-remain structure, show the dashed outline of the structure and determine if dimensions are pertinent.

C. Identify a working point when required (i.e. superelevation conditions).

13.5 PIER DRAWINGS AND DETAILS - FOOTINGS

Include a separate detail for pier footings. For examples illustrating the content and format of completed Pier Footing Details sheets, see the ***Structures Detailing Manual Examples***. Generally this is a separate sheet but can be included on the pier details sheet if space permits. At a minimum, include the following footing details as applicable:

A. Footing dimensions.

B. Centerline of footing in both directions.

C. Footing reinforcement.

D. Pile or shaft locations in the footing. Dimension pile or shaft spacing with respect to the centerline of the footing. Distinguish between centerline of column and centerline of pier.

E. Outline of column(s). Show as dashed.

F. Footing depths below the finish grade.

G. Seal slab dimensions. Show the maximum water elevation assumed for the seal slab design.

13.6 PIER DRAWINGS AND DETAILS - REINFORCING DETAILS

Consider the following preferred reinforcing details when detailing piers:

A. Avoid column cross-ties with 180-degree hooks at each end. The preferred method is to provide a 90-degree hook at one end to allow the tie to be rotated into position. Do not use this detail when plastic hinging due to ship impact is anticipated. See Figure 13.6-1.

Figure 13.6-1 Preferred Column Tie Detail

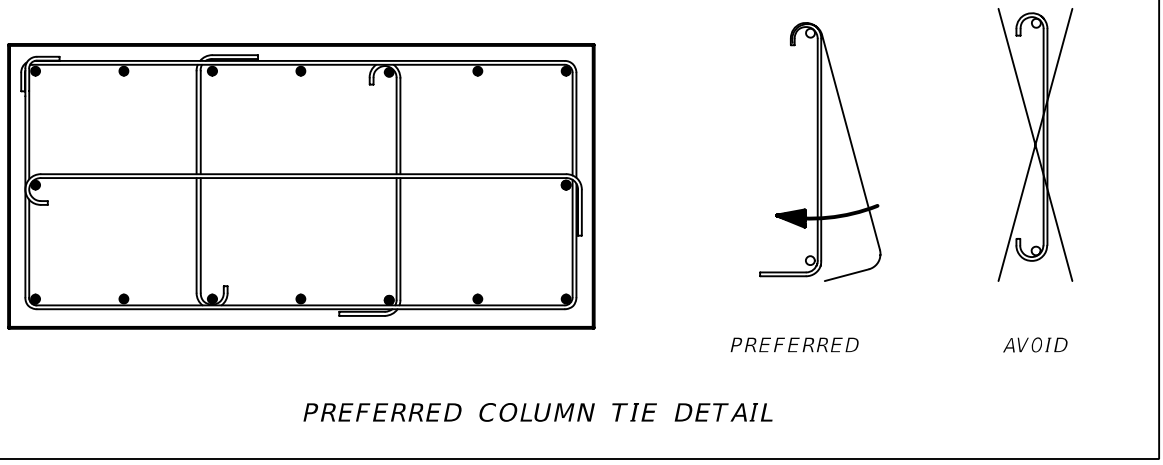

B. When detailing variable-width pier columns, consider extending the typical pier column cage through the flared section, detailing the flare with "U" bars. Horizontal "U" bars may be detailed with a constant mark by varying lap dimensions. See Figure 13.6-2.

C. Unless plastic hinging is anticipated, standard hoops may be used on circular columns provided that the ties are rotated so the lap splice location varies throughout the length of the column. See Figure 13.6-3.

Figure 13.6-2 Variable-Width Pier Reinforcing Details

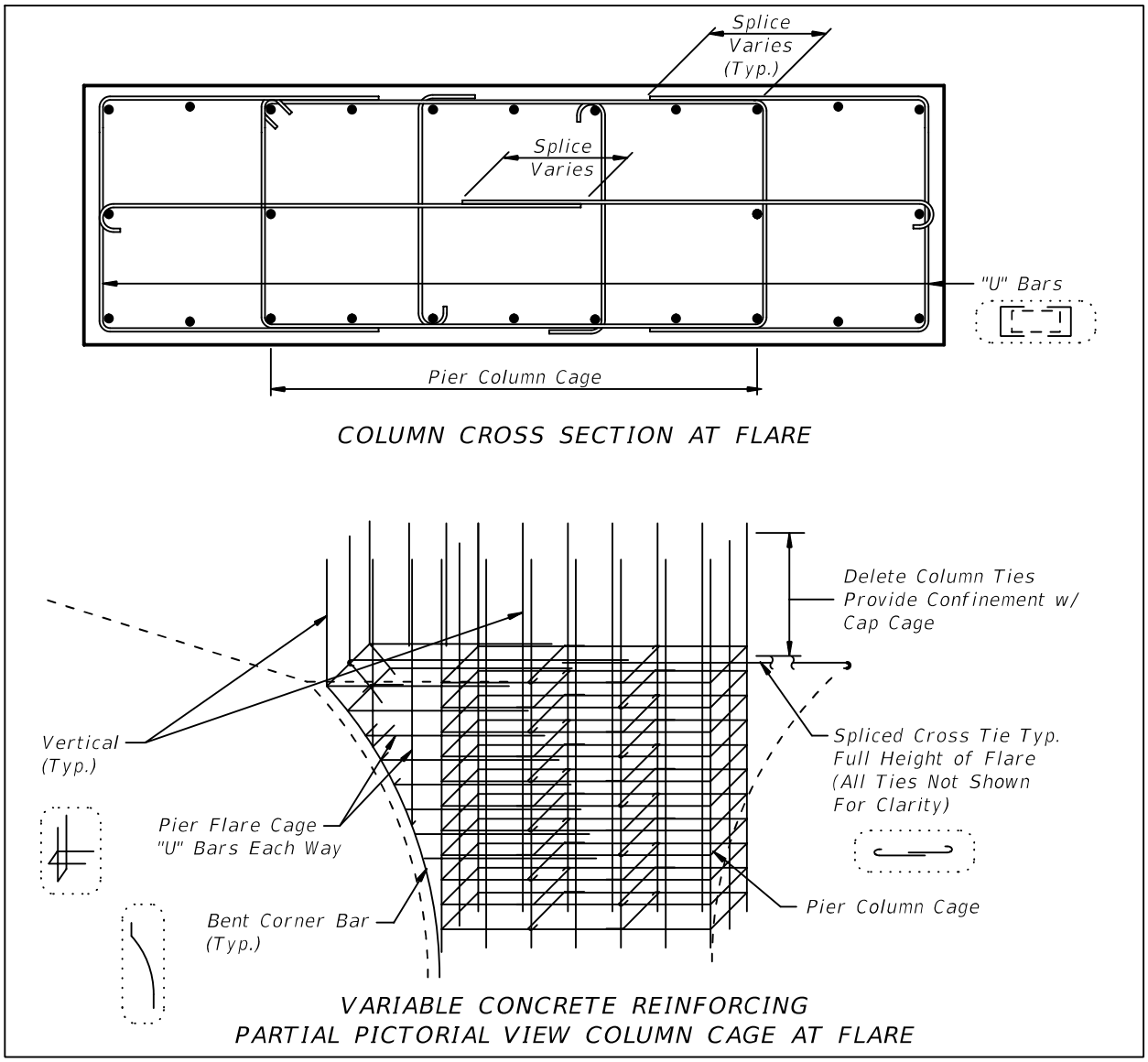

Figure 13.6-3 Circular Column Cross Section

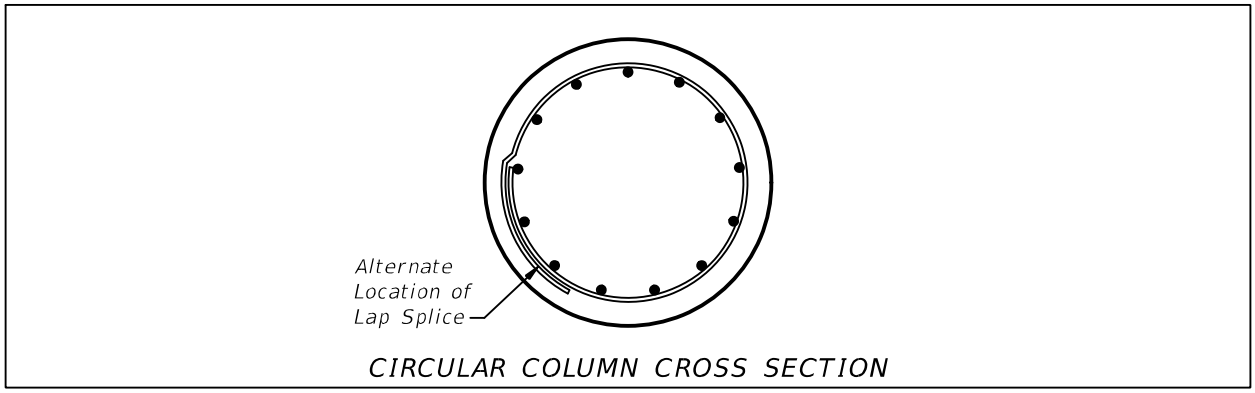

13.7 PIER DESIGN CONSIDERATIONS - GENERAL

Design piers with the following considerations being taken into account:

A. Detail steel to avoid conflicts between reinforcement in the cap and the column, the footing and the column, and the footing, shafts and piles. Ensure that pedestal steel does not conflict with top reinforcement in pier cap.

B. For concrete pours such as pier caps and footings that will be greater than 5-feet tall, provide a minimum 10-inch space in the main reinforcement to allow the concrete discharge chute to fit through. See Figure 13.7-1. See ***Specifications*** Section 400 for concrete discharge height limitations.

C. Fully develop main cap steel at cap ends in regions with large negative moments. Use "L" bars in lieu of "J" hooks in the top layer of reinforcing steel. If necessary, increase the pedestal setback dimension from edge of cap. See Figure 13.7-1.

Figure 13.7-1 Cap Steel Details

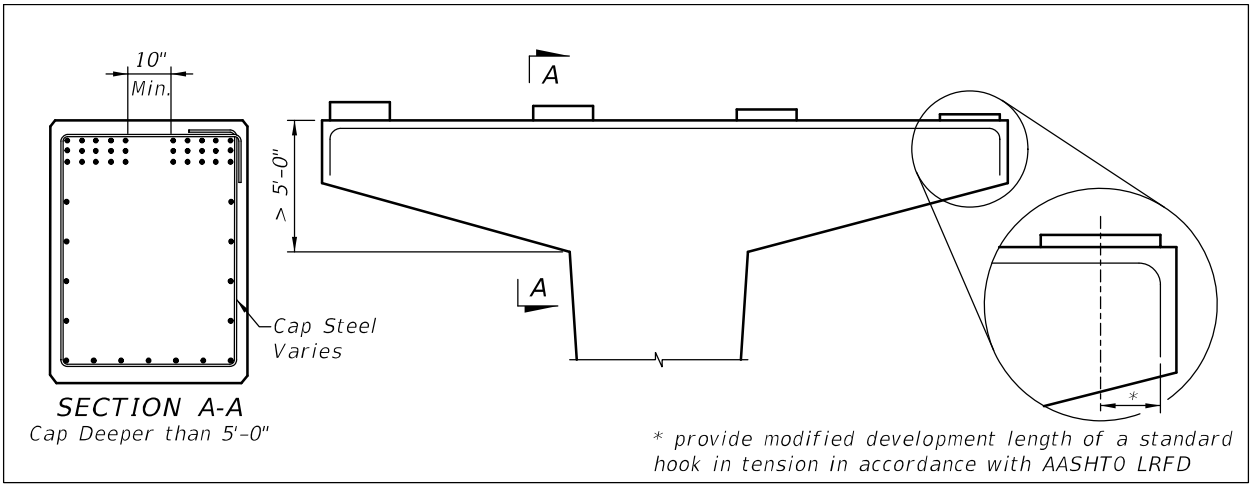

D. Fully develop column steel into pier cap and into footing. Do not include steel used in architectural details such as fillets in strength calculations.

E. Size and detail footings taking into consideration pile driving and drilled shaft placement tolerances per ***Specifications*** Section 455. See ***SDM*** 11.6 and ***SDM*** 11.7.

F. Add details for location of main steel mats in footings giving consideration to pile driving tolerances and drilled shaft placement tolerances. Avoid conflicts between footing reinforcement and shaft reinforcement.

G. Detail pier column to be stepped-in from face of pier cap by 4-inches on each face. This will allow column reinforcement to be inside of the pier cap reinforcement cage and will facilitate tying cap steel on the ground and lifting into the form. See Figure 13.7-2.

Figure 13.7-2 Pier Cap Reinforcing Details

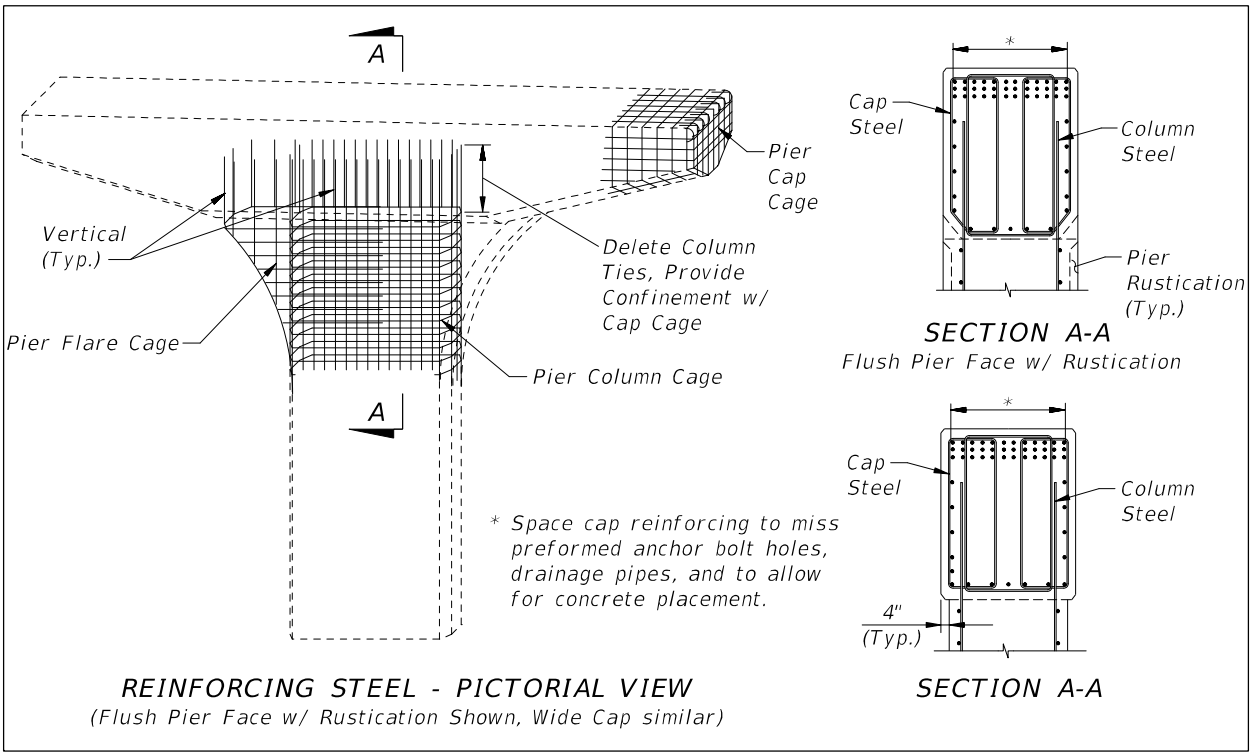

H. Consider reducing column reinforcement in tall columns where allowed by the design.

I. For multi-span bridges, only piers adjacent to a lower roadway or railroad may need to be skewed to meet horizontal clearance requirements. Similarly, only piers adjacent to a navigation channel may need to be skewed to meet minimum navigation channel width requirements. Consider making remaining piers normal to the bridge. For water crossings continue to use skews where minimum navigational requirements or scour governs the design.

J. Verify that the dimensions of the pedestals are compatible with the bearing pad selection and skew. Place bearing pads orthogonal to the centerline of the beam wherever possible except where specifically shown to be skewed on the ***Standard Plans***.

K. For caps with multiple layers of steel, place reinforcement with minimal distance between layers in accordance with ***LRFD*** 5.10 so as to maximize distance from neutral axis.

L. Standardize sizes and pile grid/shaft layout on pier footings throughout as much of the project as possible.

Modification for Non-Conventional Projects:
Delete ***SDM*** 13.7.L.

M. Design pier and column reinforcement so that it can be tied prior to erection, and not required to be tied in the air.

Modification for Non-Conventional Projects:
Delete ***SDM*** 13.7.M.

N. Preformed anchor rod blockouts shall be 4-inch diameter minimum. A larger size may be required to provide sufficient clearance for larger anchor rods, threaded couplers, or grout/vent tubes. Completely detail blockouts and verify that there are no conflicts with reinforcement. Use either a corrugated galvanized metal form that is to be left in place or a smooth removable form. See Figure 13.7-3 and Figure 13.7-4 for anchor rod blockout details for composite neoprene and multirotational (MR) bearings, respectively.

*Commentary: These details ensure consistency with the requirements of **Specifications** Section 460-7.4.*

Figure 13.7-3 Anchor Rod Blockout for Composite Neoprene Bearings

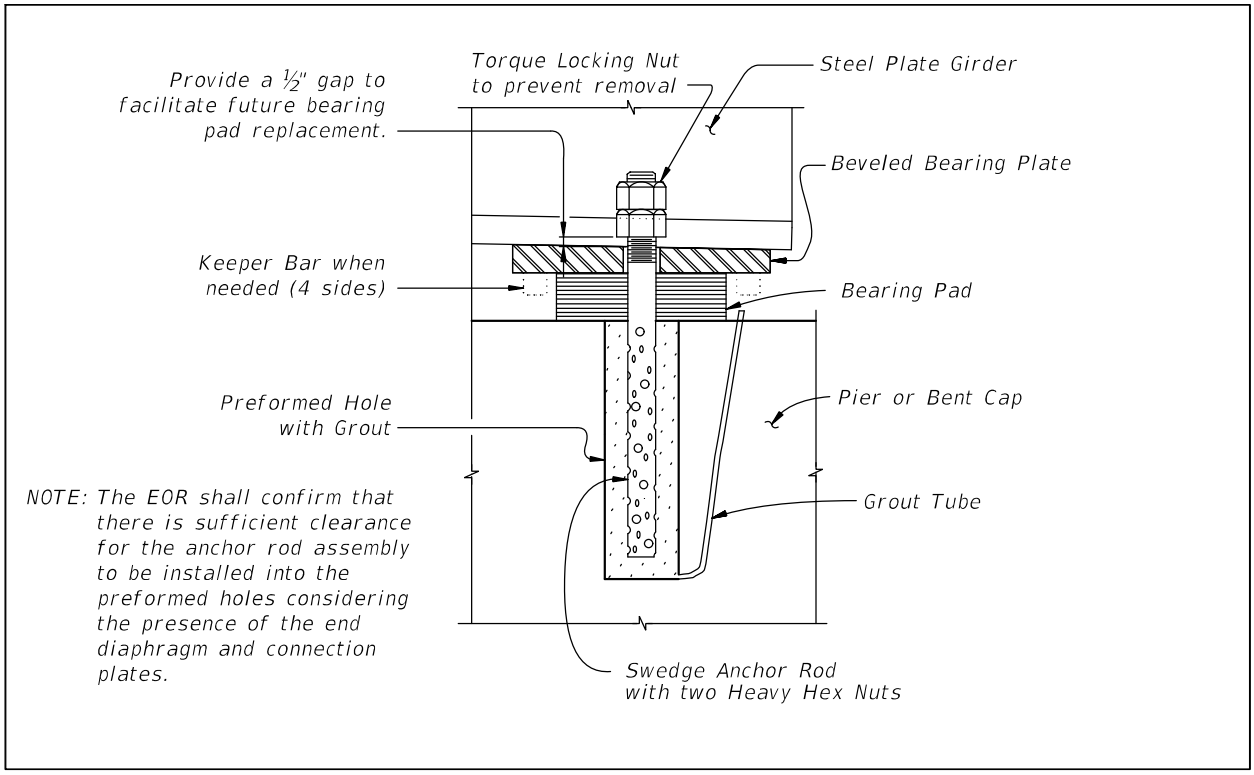

Figure 13.7-4 Anchor Rod Blockout for MR Bearings

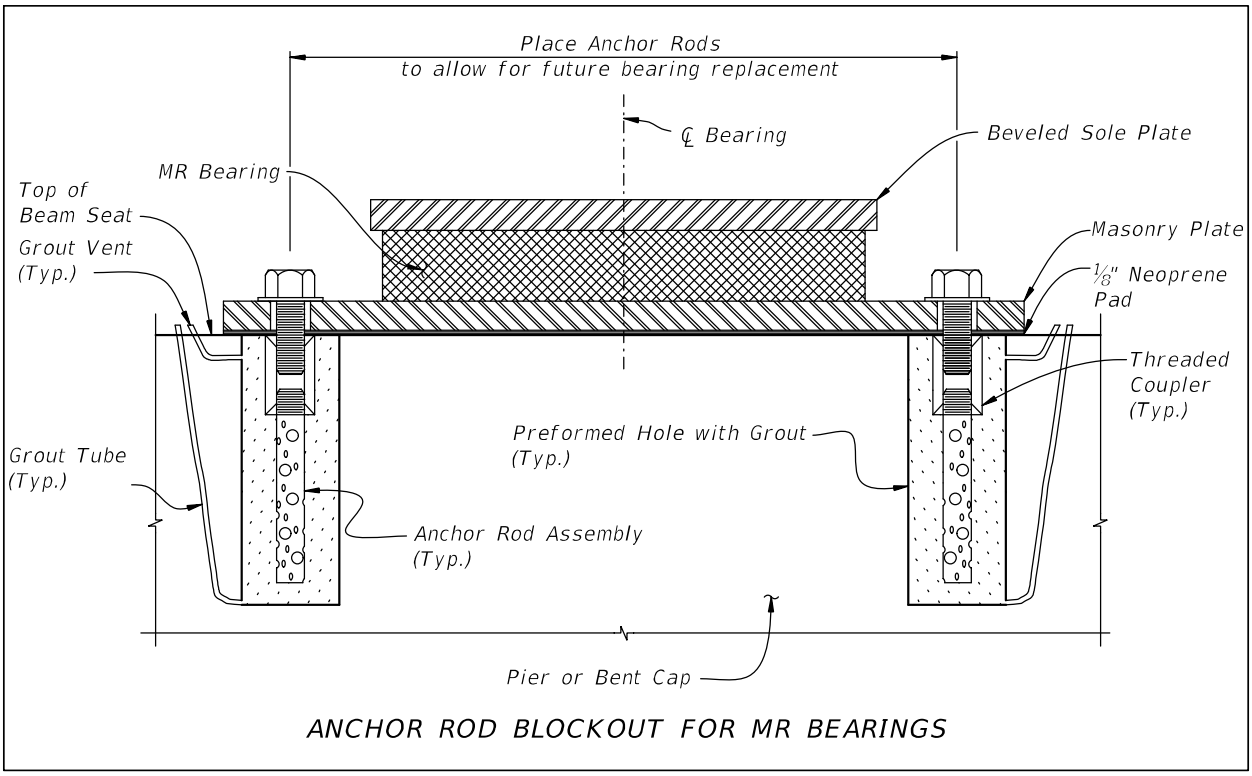

13.8 PIER DESIGN CONSIDERATIONS - PIER AESTHETICS

Aesthetics should balance efficiency, economy and elegance. For an in depth discussion of bridge aesthetics, refer to the ***AASHTO Bridge Aesthetics Sourcebook, November 2010***. The following issues and suggestions can be incorporated into any project's aesthetic plans to help achieve these goals:

A. When determining pier shape and proportions, look at the tallest and shortest structures as well as minimum and maximum cross slopes. Use uniform dimensions that will result in acceptable aesthetics at all locations. This applies to multi-pier bridges as well as multi-bridge projects.

B. The use of cheekwalls on pier caps is required at locations where two beam or girder types of different shapes, heights or dissimilar materials are to be used on adjacent spans. A curved bridge supported by straight beams is another location where pier cap cheekwalls can economically enhance a bridge's aesthetics. Cheekwalls on skewed bridges should be parallel to the skew, not normal to the pier cap. The inside face of pier cap cheek walls should be poured close to the exterior beam to prevent shadowing. Provide sufficient clearance between the cheekwall and the exterior beam to allow for jacking of the span and bearing replacement. Figure 13.8-1.

Figure 13.8-1 Pier Cap Cheekwall Details

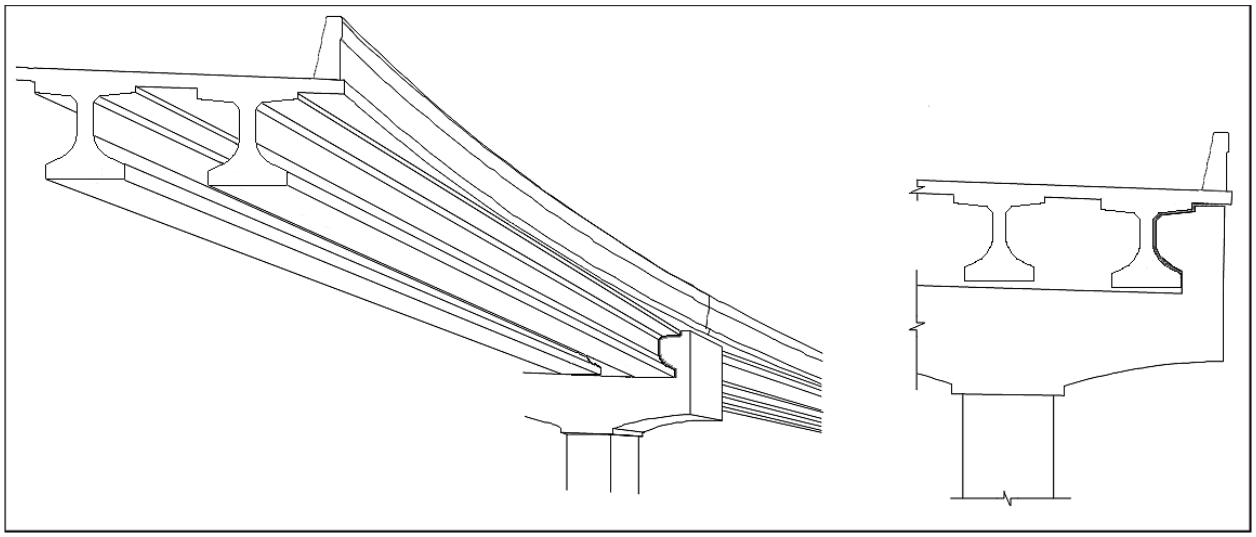

C. For multi-bridge projects, develop a family of pier shapes at the earliest stages of the project. Choose pier shapes that both meet the structural requirements of the bridges within a project while also providing pleasing shapes at all locations. Consider multicolumn piers, hammerheads, straddle piers, C-piers or any other special pier type as the project requires. See Figure 13.8-2 and Figure 13.8-3.

Figure 13.8-2 Example Pier Shapes

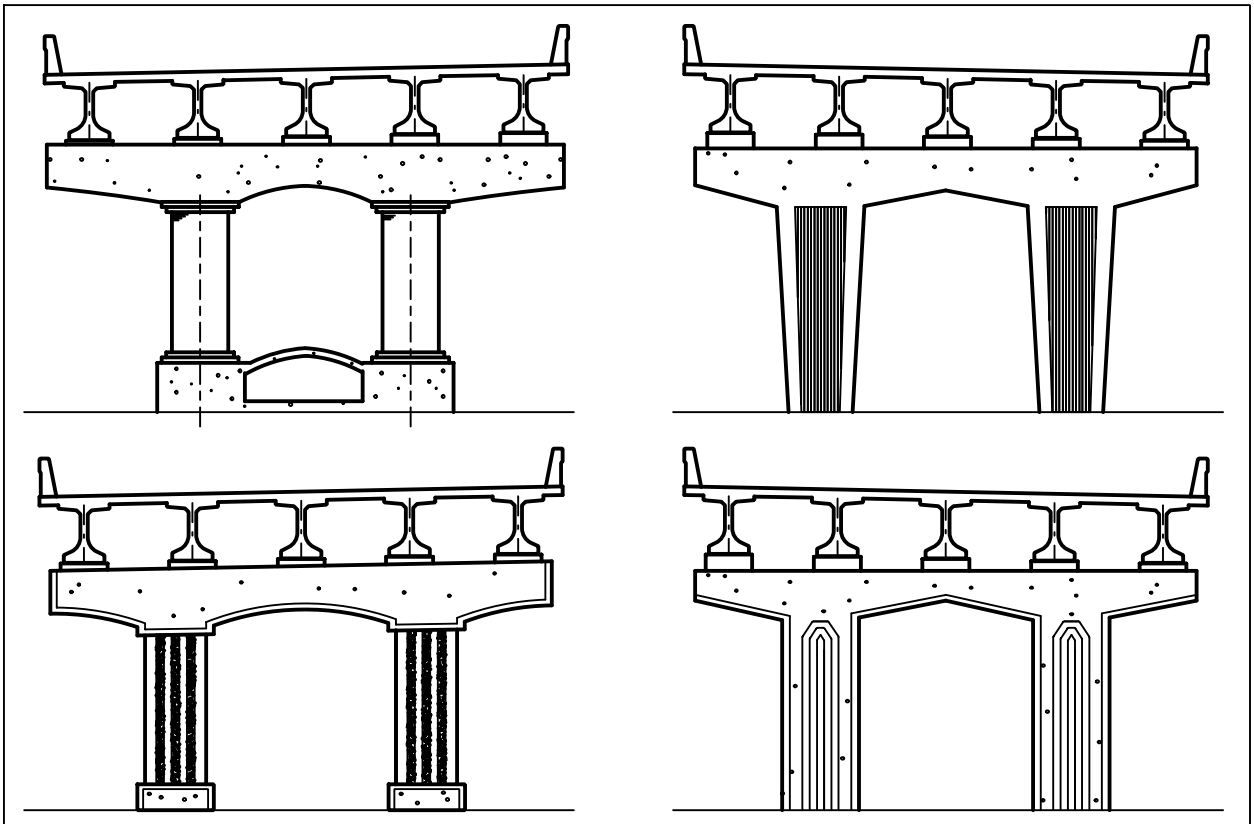

Figure 13.8-3 Pier Families

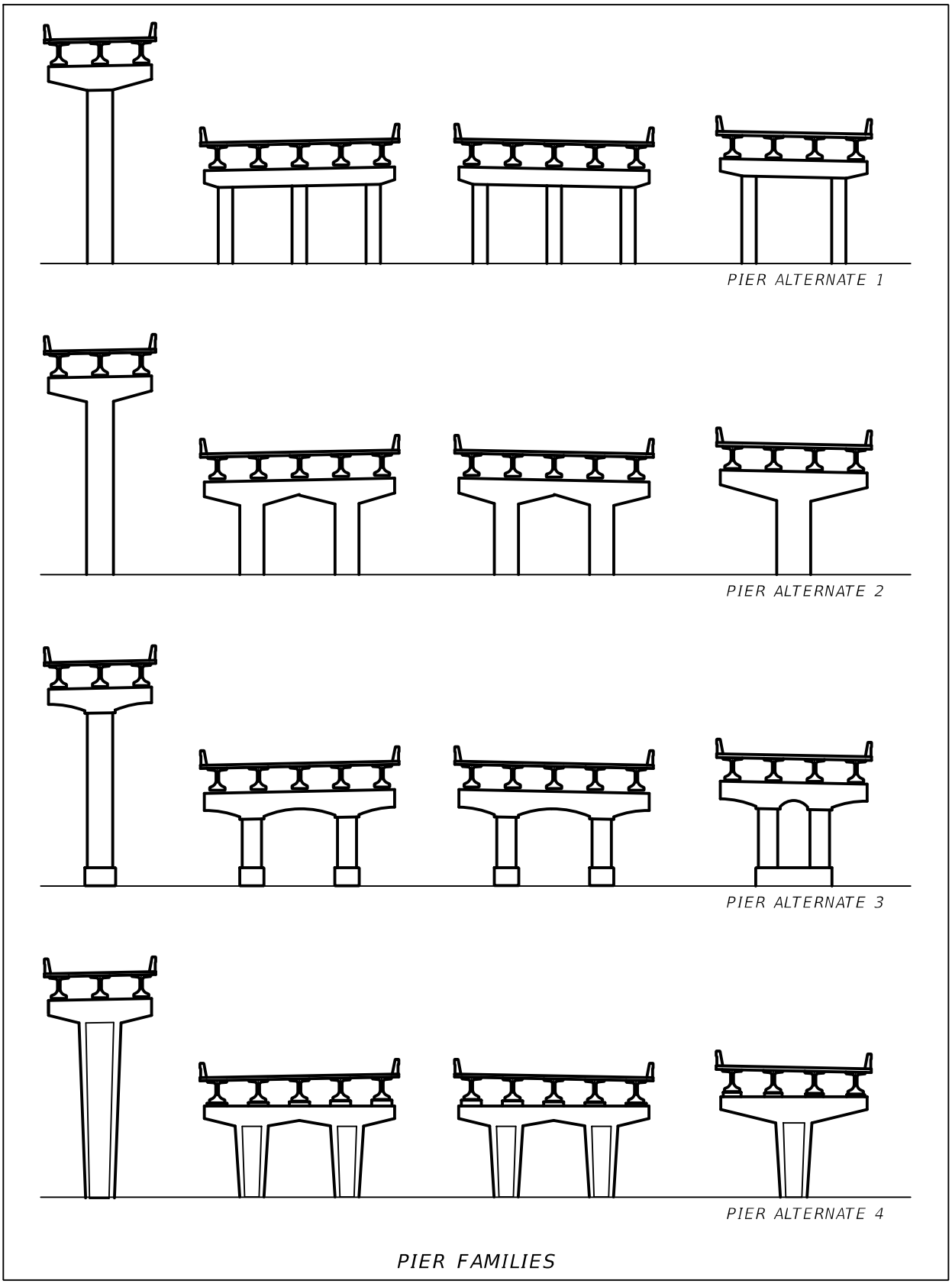

D. For piers that utilize a cap form that will be rotated to accommodate variable cross slopes, pier rustication or striation details should stop short of the pier cap in the column. This will avoid misalignment of the form liner as the pier cap rotates about the working point to make up the superelevation. See Figures 13.8-4 and Figure 13.9-1. This will also allow column steel to extend inside cap cage while maintaining concrete cover per 13.7.G above.

Figure 13.8-4 Rustication Detail At Working Point Of Rotated Pier Cap

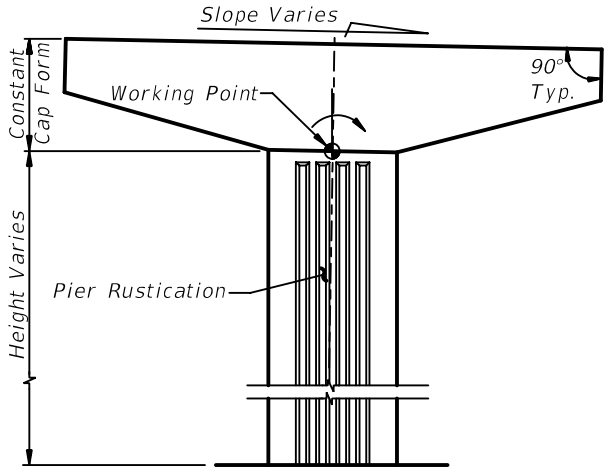

ELEVATION VIEW - HAMMERHEAD PIER
Rustication Stops Below Working Point

E. For piers with constant cross slope sections, piers that utilize flush columns and caps, or piers that utilize split cap forms flush with the column, the rustication detail may extend into the cap. Detail the pier cap so that the same form can be re-used for maximum efficiency. See Figure 13.8-5, Figure 13.9-2, Figure 13.9-3 and Figure 13.9-4.

F. Larger chamfers can help reduce the apparent size of large, bulky concrete elements. See Figure 13.8-5.

Figure 13.8-5 Example Pier Shapes for Straight Bridges or Constant Cross Slopes

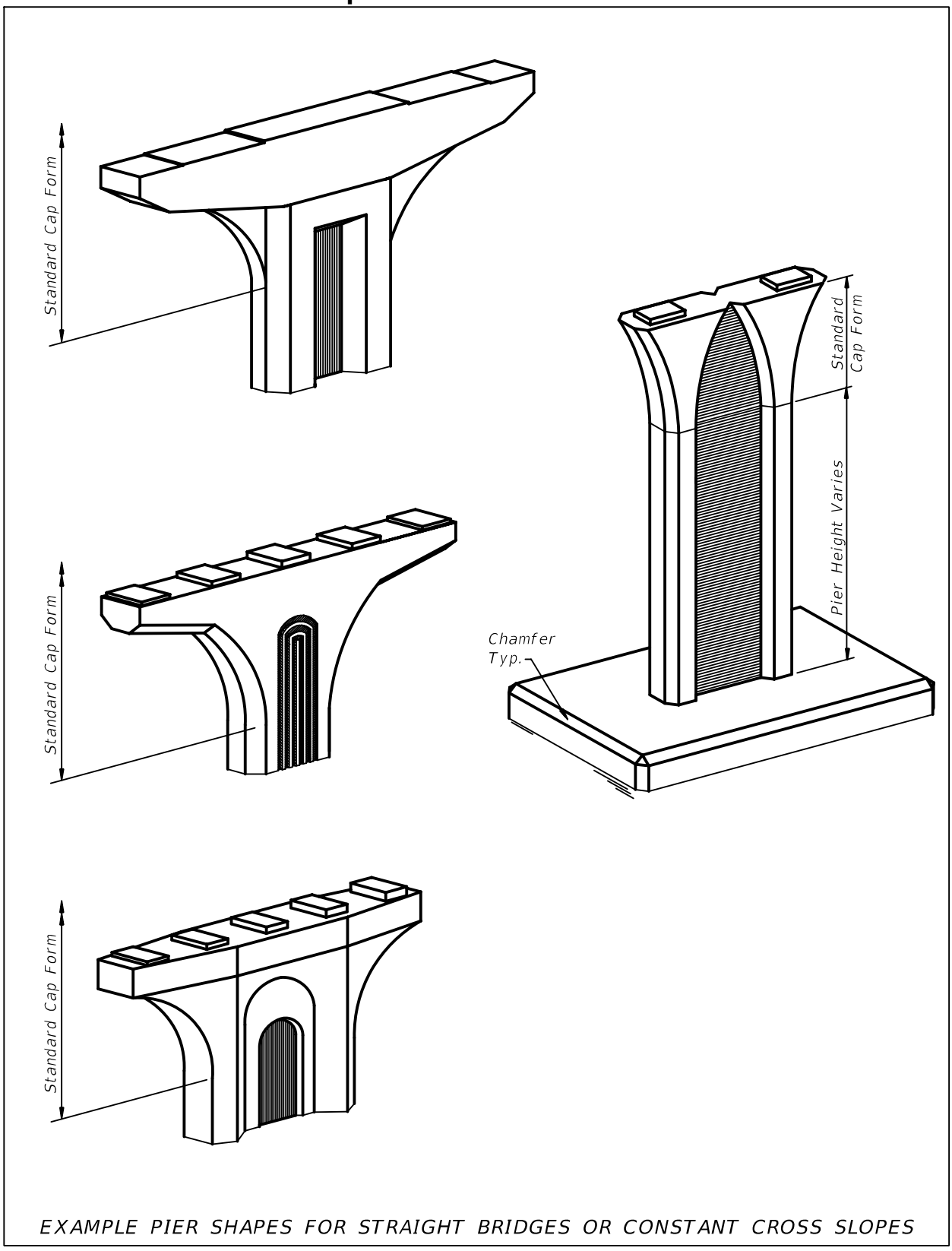

EXAMPLE PIER SHAPES FOR STRAIGHT BRIDGES OR CONSTANT CROSS SLOPES

13.9 PIER DESIGN CONSIDERATIONS - HAMMERHEAD PIERS

In addition to the applicable sections above, address the following issues when designing and detailing hammerhead piers:

A. It is preferable to rotate pier cap about a working point or utilize split forms to facilitate varying cross slopes. Acceptable methods are shown in Figure 13.9-1 through Figure 13.9-4. Utilize standard form shapes where practical to minimize formwork and standardize the reinforcement cage.

Figure 13.9-1 Pier Cap Details (1 of 4)

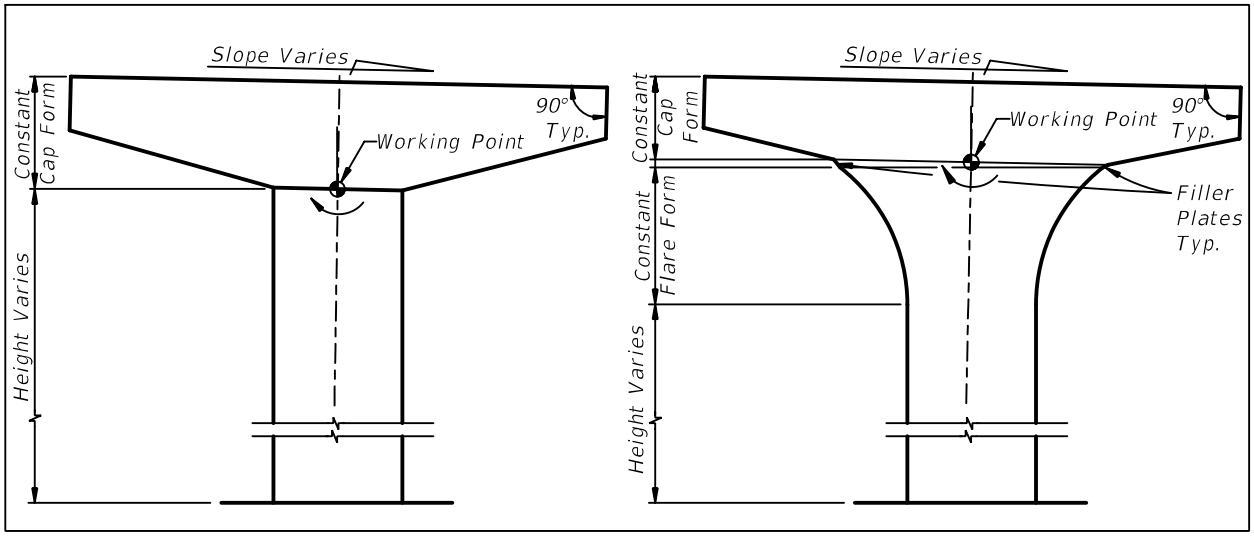

Figure 13.9-2 Pier Cap Details (2 of 4)

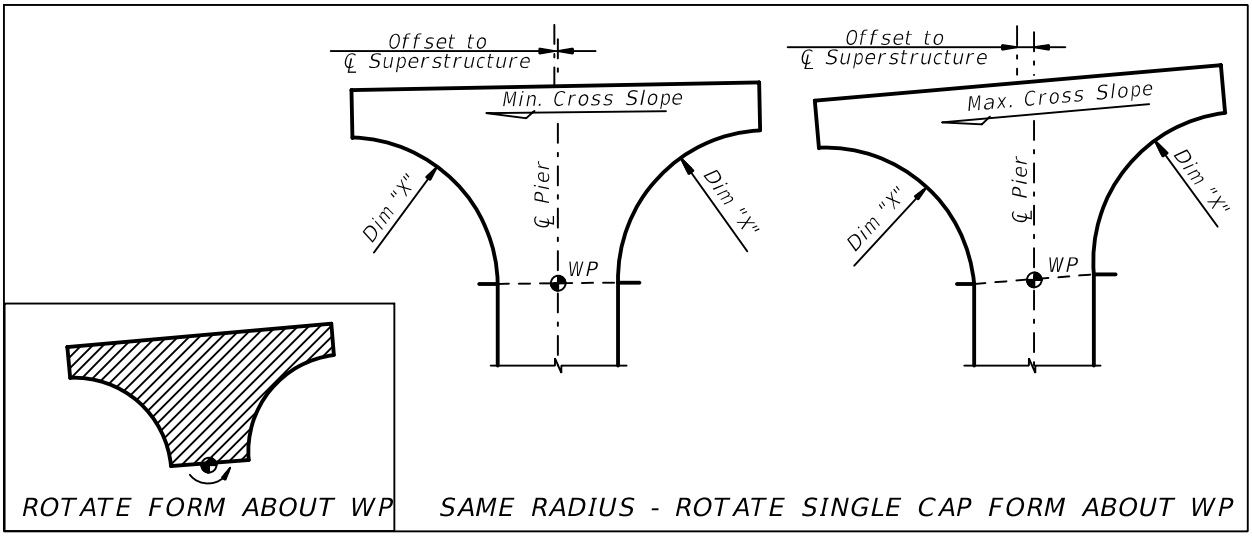

Figure 13.9-3 Pier Cap Details (3 of 4)

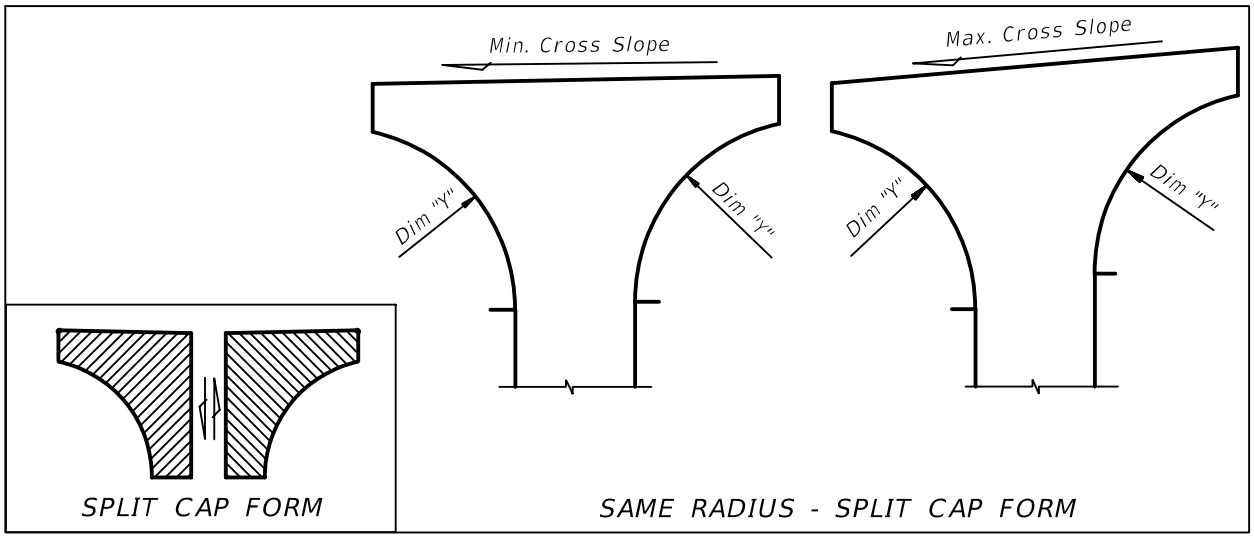

Figure 13.9-4 Pier Cap Details (4 of 4)

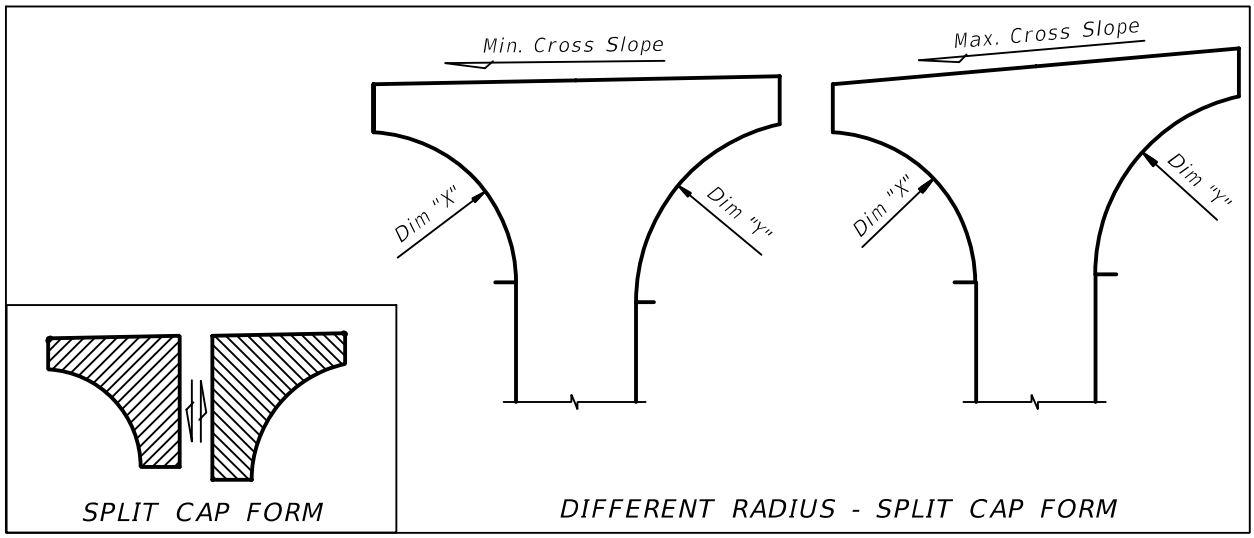

13.10 PIER DESIGN CONSIDERATIONS - INTEGRAL PIERS

Integral piers present significant design and detailing challenges. Figure 13.10-1 through Figure 13.10-3 show general details that are commonly found in integral piers. In addition to the applicable sections above, address the following issues when designing and detailing integral piers with structural steel girders:

A. Be aware of additional considerations required for continuous beam designs due to integral pier cap deflections.

B. Show temporary supports.

C. Completely detail openings required for drain pipes and utilities which are intended to pass through the integral cap.

D. In addition to the applicable sections above, address the following issues when designing and detailing integral piers with concrete caps (see Figure 13.10-1 and Figure 13.10-3):

1. Generally, design concrete integral pier caps utilizing post tensioning to maximize the efficiency of the design.
2. Include materials and details for concrete consolidation, including admixtures, to avoid honeycombing. Consider bleed holes and vent tubes to allow air to escape and concrete to consolidate.
3. Show shear stud spacing and size.
4. See ***SDM*** 13.13 for Post-Tensioning requirements.

Figure 13.10-1 Integral Concrete Pier Cap Details

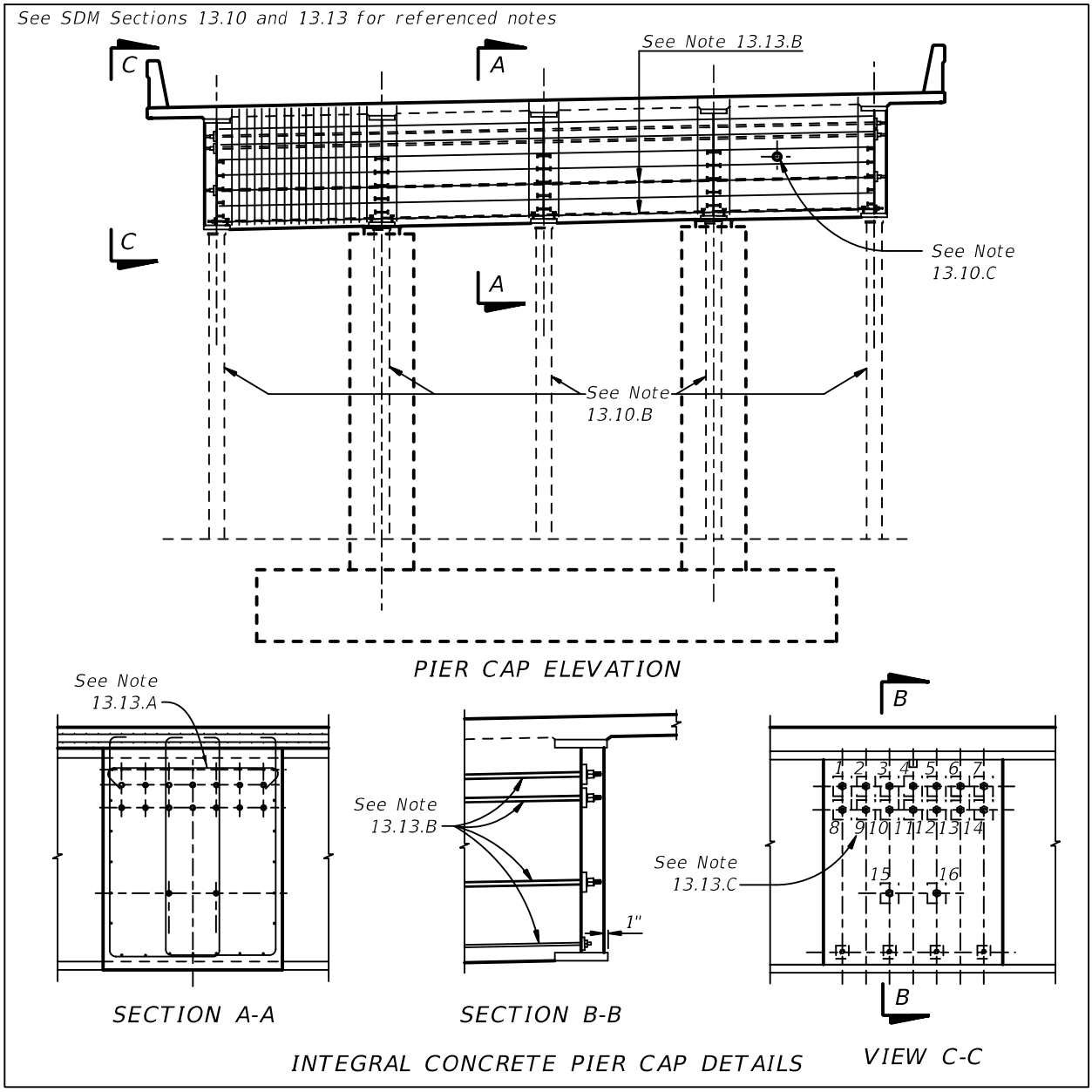

E. Concrete is the preferred material for integral piers. However, if a steel pier cap is used, follow these guidelines (see Figure 13.10-2):

1. Specify structural steel in accordance with the requirements of ***SDG*** 5.3.1.
2. Show splice plates and bolt spacing and layout. Indicate bolt size and type.
3. Indicate weld type and size using AWS standard welding symbols.
4. Identify all Primary and NSTM in the Plans
5. Include a plan note requiring full shop fit-up.

6. Specify all bolted connections as slip-critical. Include a note, if applicable, stating threads are excluded from the shear plane.
7. Provide information on the steel integral pier cap elevation sheet in accordance with ***SDM*** 16.5.

Figure 13.10-2 Integral Steel I-Girder Pier Cap Details

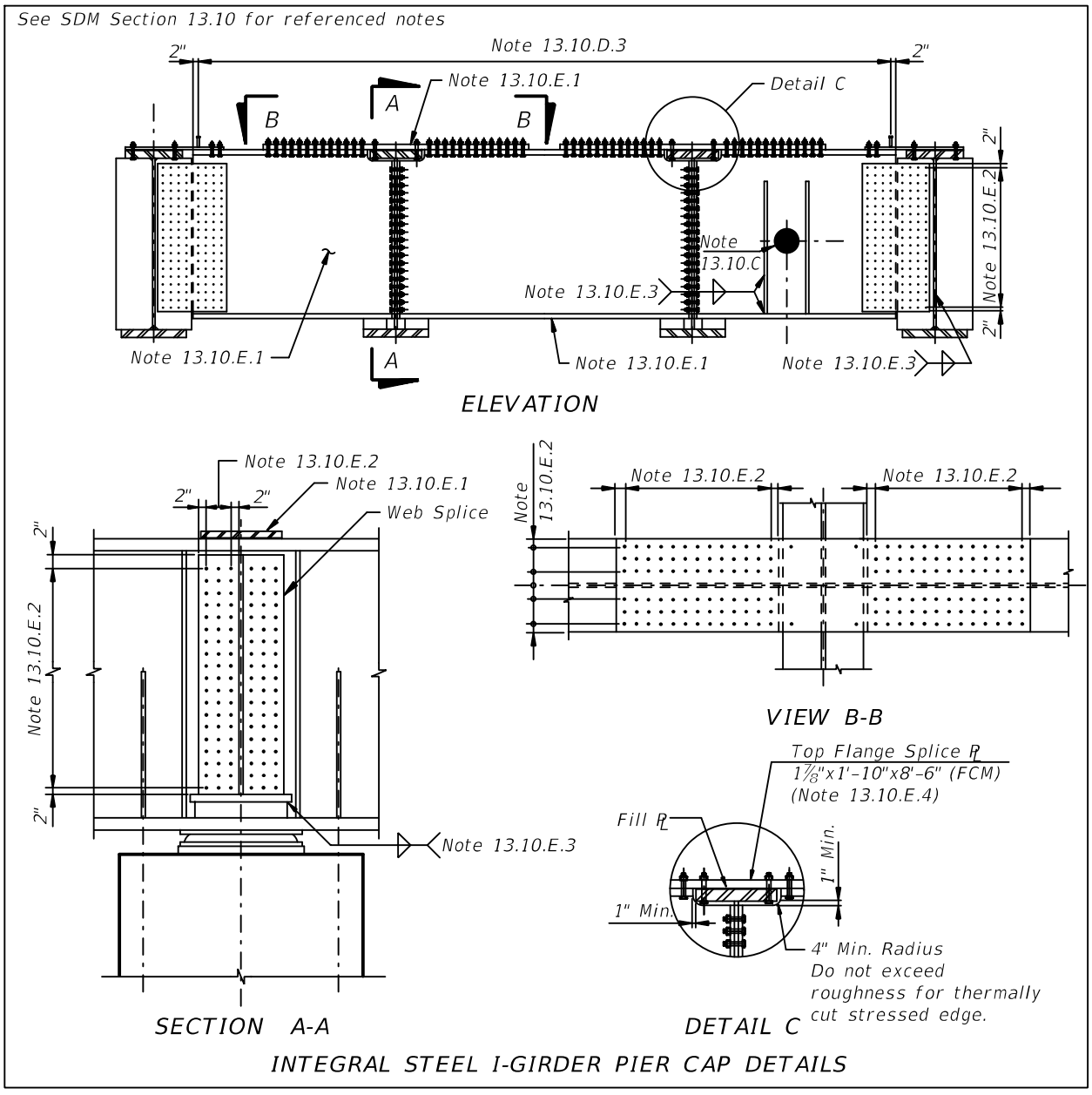

Figure 13.10-3 Integral Concrete/Steel Pier Cap Details

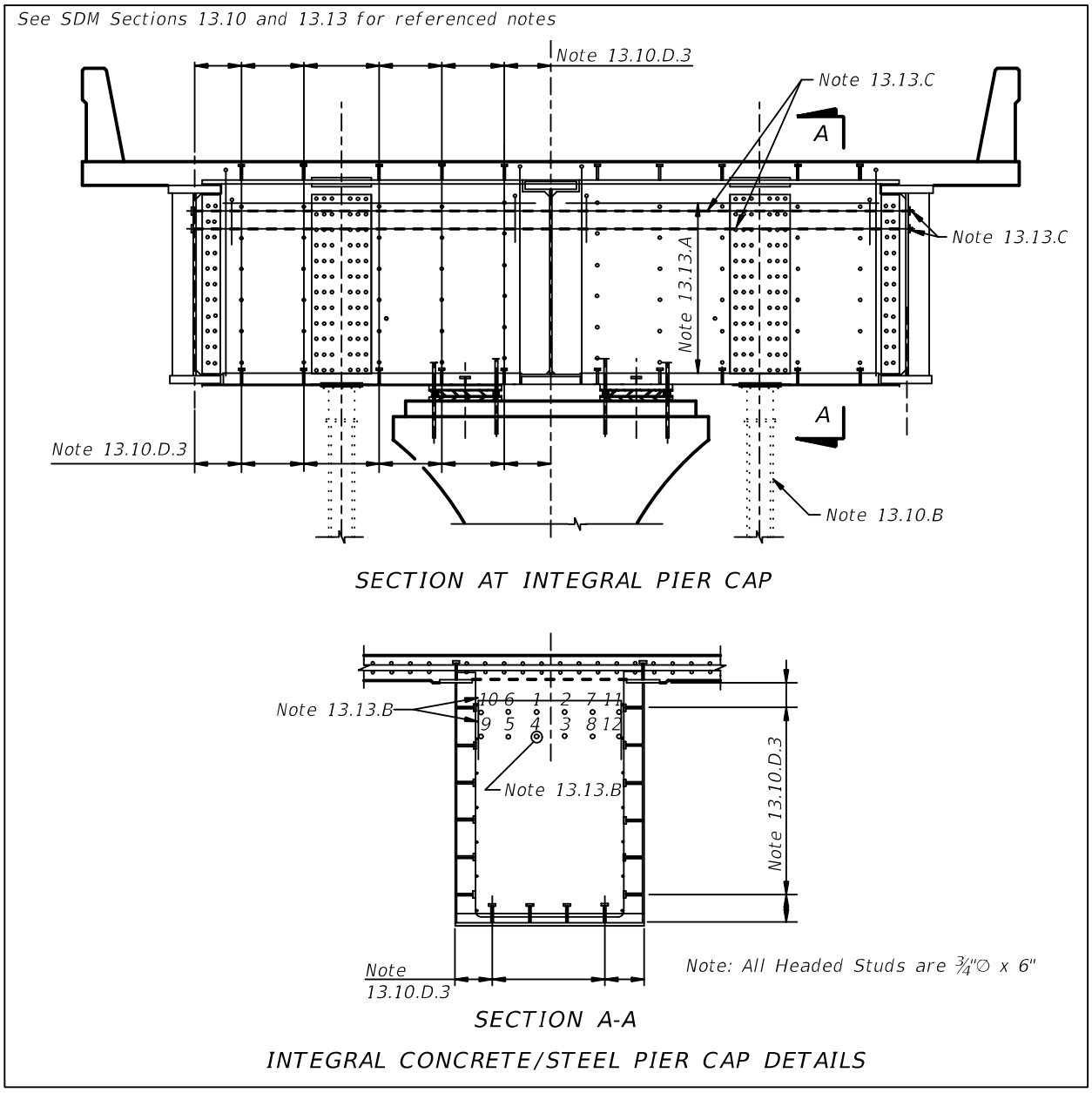

13.11 PIER DESIGN CONSIDERATIONS - STRADDLE PIERS

In addition to the applicable sections above, address the following issues when designing and detailing straddle piers:

A. When sizing a straddle pier, take into consideration the likelihood that the bridge or roadway underneath will be widened in the future. Depending on this possibility, size the straddle pier to accommodate the ultimate condition.

B. Be aware of additional considerations required for continuous beam designs due to straddle pier cap deflections.

C. Concrete is the preferred material for straddle piers. However, if a steel pier cap is to be used, follow these guidelines (see Figure 13.11-1 and Figure 13.11-2):

1. Do not place stiffeners on outside of cap.
2. Provide an access opening for internal inspection of the bent with a minimum opening of 32-inches wide by 42-inches tall. The opening must be properly 'weather-proofed' to prevent infiltration of water and elements that may increase the potential for corrosion or other degradation.
    a. The hatch must be sealed with a closed cell neoprene sponge material.
    b. The hatch must be positively secured with a latch that is accessible from both inside and outside the straddle-bent.
    c. The hatch must be lockable from the outside with a weather-proof lock.
3. Provide information on the steel straddle pier cap elevation sheet in accordance with ***SDM*** 16.5.

D. See also ***SDG*** 3.11.5.

Figure 13.11-1 Integral Steel Box Girder Straddle Pier Cap

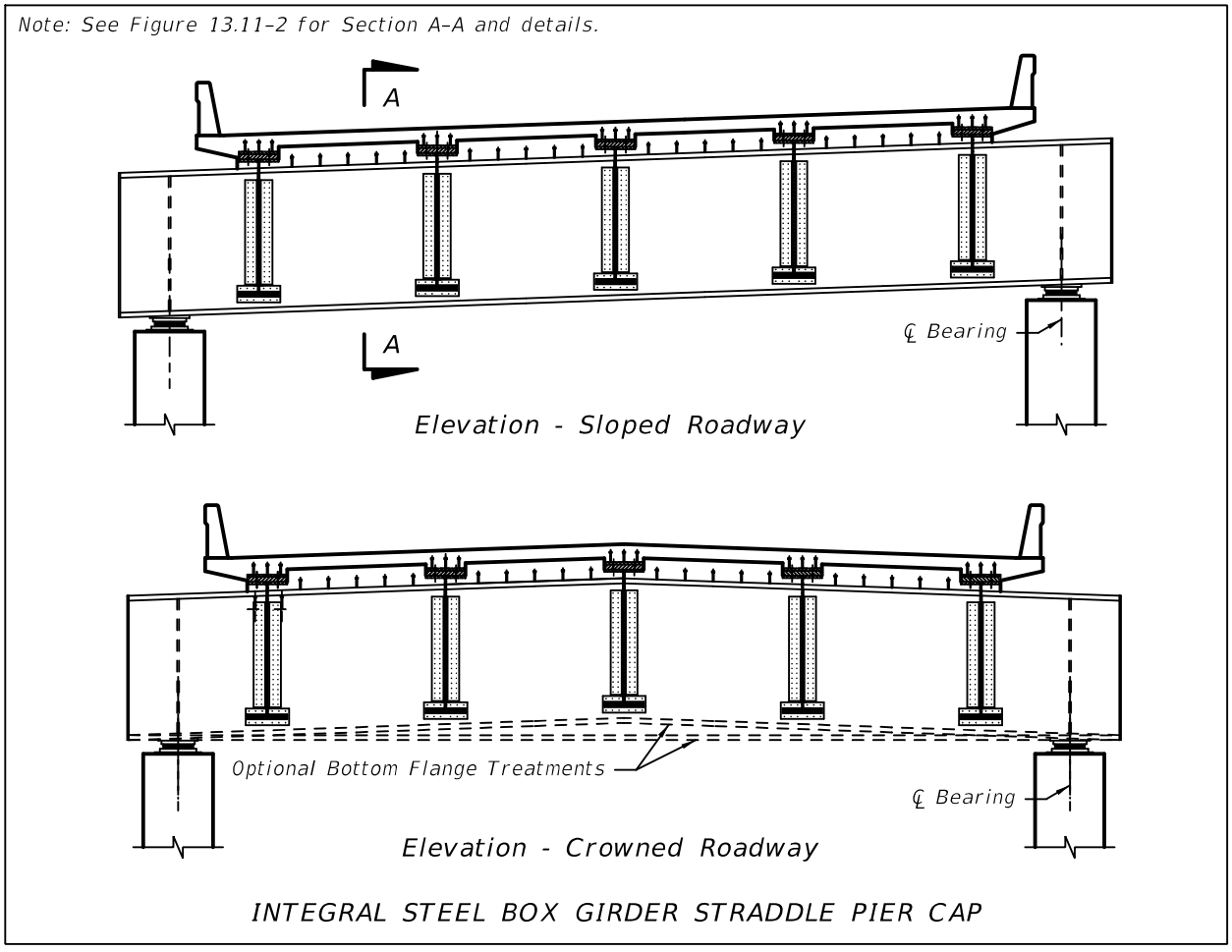

Figure 13.11-2 Integral Steel Box Girder Straddle Pier Cap Details

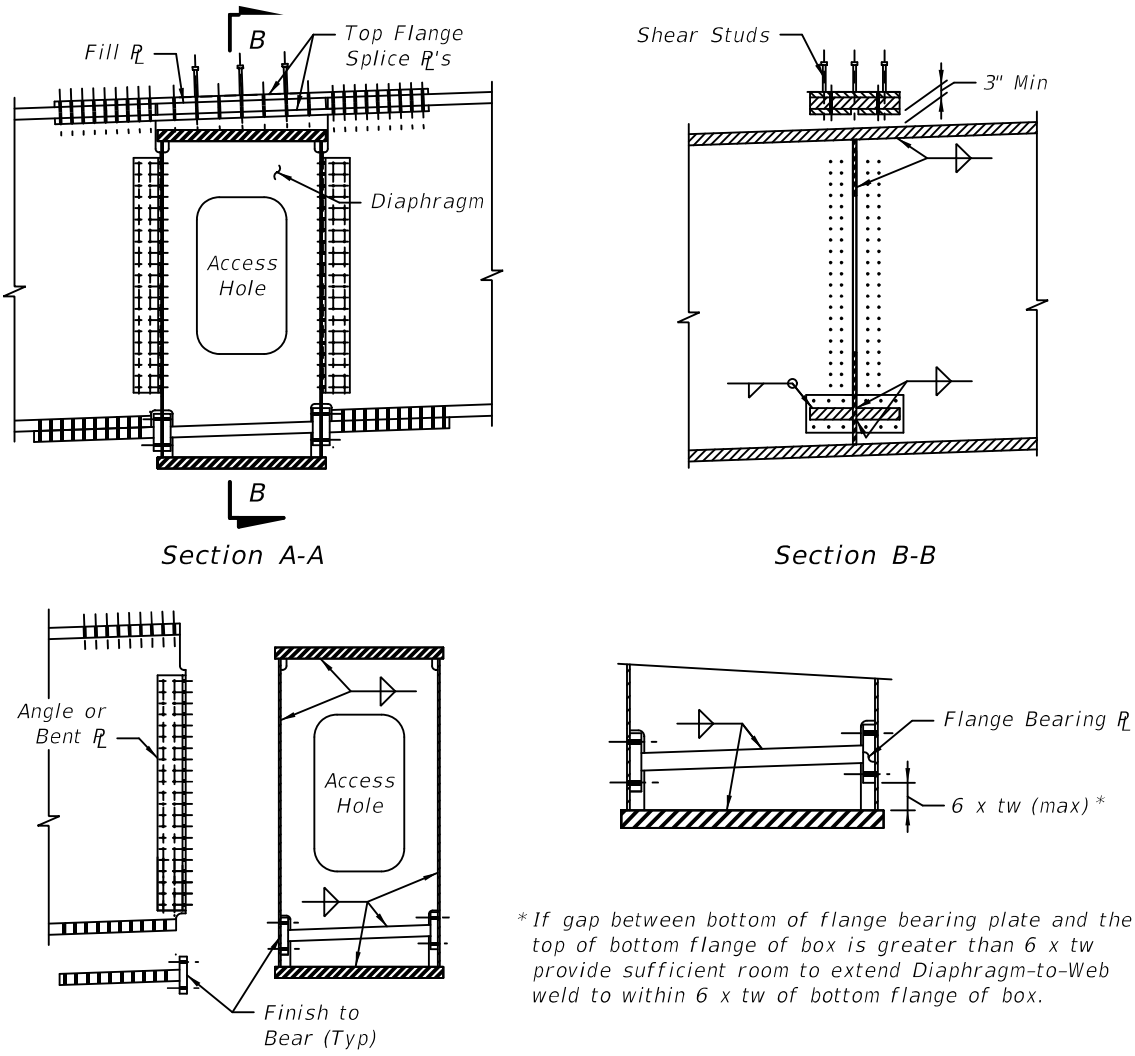

13.12 PIER DESIGN CONSIDERATIONS - C-PIERS

In addition to the applicable sections above, address the following issues when designing and detailing C-piers:

A. Reasonable effort should be made to avoid sustained tension in piles.

B. It is desirable to center the footing on the centroid of the dead load of the pier plus superstructure. This will help avoid piles in tension.

C. Account for soil stiffness when analyzing the C-Pier framed structure and effects on superstructure torsion.

D. Develop the longitudinal cap steel to the longitudinal column steel at the intersection of the C-Pier frame (column/cap interface).

13.13 PIER DESIGN CONSIDERATIONS - POST-TENSIONING

When designing and detailing post-tensioning in piers, be aware of the following design considerations:

A. Ensure adequate room is provided in post-tensioned members for post-tensioning hardware, reinforcement, minimum cover requirements, etc.

B. Detail reinforcement to ensure there are no conflicts with post-tensioning ducts and anchorages. Also check for conflicts with anchor bolt or rod blockouts.

C. Clearly number post-tensioning ducts/bars for post tension stressing sequence.

D. Label PT bar size, PT nut and jacking (bearing) plate.

E. Include a detailed stressing sequence for PT tendons. Indicate what stage of construction each tendon will be stressed and to what level. Indicate minimum concrete strengths for concrete cap and deck before stressing operations can begin.

F. Address the placement of PT bars through the pier column. Ensure that there are no conflicts between anchorages or ducts with the reinforcement cage in the pier cap, footing or the column.

G. Create a simple PT duct layout using x,y coordinates. Give vertical dimensions to the center of the duct. See Figure 13.13-1.

Figure 13.13-1 PT Duct Layout Using X,Y Coordinates

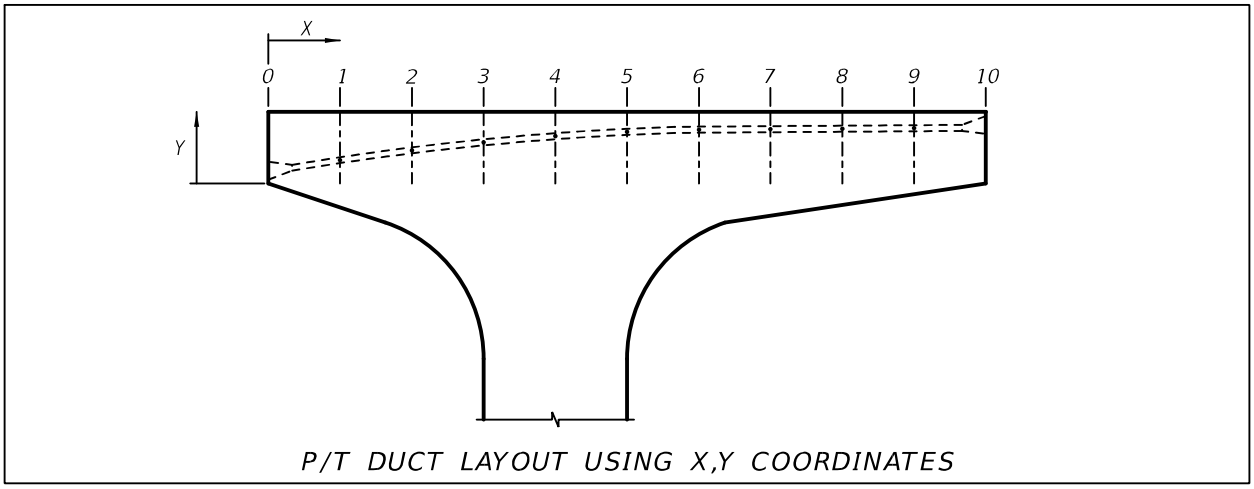

H. Reference appropriate ***Standard Plans*** for additional requirements regarding post tensioning layouts and details.

I. Address duct spacing and anchorage edge distances. Fully work out fit up issues during the design phase.

J. Consider PT fit up issues, potential out-of-tolerance excessive beam lengths and higher concrete strength requirements when sizing inverted-T caps. Reducing the size of the cap for the purpose of reducing material costs could actually result in a more expensive design based on these issues.

14 FINISH GRADE ELEVATIONS

14.1 GENERAL

A. This drawing is a typical section and schematic plan view of the superstructure that shows finish grade elevations.

B. For spans of equal length, width, number of beam/girder lines and similar skew, only one schematic plan view need be shown.

C. Create equally-spaced transverse lines (T-lines) to show elevations. Turn skewed T-lines perpendicular to bridge coping at the gutterline. Maintain cross slope of bridge deck under traffic railings, raised medians and pedestrian parapets.

D. For examples illustrating the content and format of completed Finish Grade Elevations sheets, see the ***Structures Detailing Manual Examples***.

14.2 ACCURACY

Finish grade elevations are riding surface elevations (top of deck) on the bridge. To ensure accuracy, adhere to the following guidelines:

A. Space T-lines based on which of the following conditions governs:

1. Such that a linear interpolation midway between elevations does not deviate from the theoretical elevation by more than 0.005-feet.
2. No less than three equal spaces within any given span.
3. Not more than 10-feet between T-lines within any given span.
4. Special case for bridges on flat (0.0%) grades: Provide a single T-line at centerline span. Additional T-lines are not required or warranted.

B. For skewed straight bridges, T-lines may be either parallel to the skew or perpendicular to the bridge coping. For curved bridges, make T-lines radial. For curved bridges with a skew, use a combination of skewed T-lines and radial lines as appropriate.

C. Show these elevations to three decimal places.

Commentary: This precision is consistent with that used for all other elevations shown in the Plans (other than pile cut-offs). Showing deck elevations to fewer than three decimal places provides insufficient precision needed in actual practice.

14.3 FINISH GRADE ELEVATIONS

Tabulate finish grade elevations in a span-by-span or unit-by-unit fashion. These tables may be included on the Schematic sheet, Typical Section sheet or on a separate sheet. Show finish grade elevations at the intersections of the following locations listed in section A and section B:

A. Along the length of the bridge:

1. Begin/end of approach slabs.
2. Half way point or third points of approach slabs.
3. Front Face of Backwall at begin/end bridge stations.
4. Centerlines of Bearings for steel girders or if multirotational bearings are used.
5. All T-Line locations.
6. Centerlines of piers or intermediate bents.
7. Along deck cut lines and/or construction joints.
8. For steel girder superstructures, at field splice locations and additional intermediate locations that correspond with the girder camber diagram.

B. Transversely:

1. Bridge coping.
2. Gutter line at traffic railings and traffic separators.
3. Back face of traffic railings for inboard mounted railings.
4. Inside of parapet or pedestrian railing.
5. The Station Line.
6. The PGL (if different from the Station Line). If there is more than one PGL, show elevations along each one.
7. Centerline of all beams or girders. For box beams or girders, show elevations at the centerline of each web.
8. Along deck cut lines.

14.4 FINISH GRADE ELEVATIONS-SCHEMATIC PLAN VIEW

At a minimum, show and label the following on the finish grade elevation plan view:

A. Begin/end approach slab.

B. Front Face of Backwall at begin/end bridge stations.

C. Centerlines of piers or intermediate bents.

D. All T-line locations. Label T-lines numerically.

E. Deck cut lines, construction joints and/or longitudinal joints.

F. Bridge copings.

G. All gutter lines, including traffic separators and pedestrian parapets.

H. The Station Line and Direction of Stationing arrow.

I. The PGL (if different from the Station Line). If there is more than one PGL, show elevations along each one.

14.5 FINISH GRADE ELEVATIONS - TYPICAL SECTION VIEW

The typical section views consist of sections through the bridge and approach slabs at locations showing all of the features which elevations will be given to. Clearly label all locations where elevations will be shown, cross slopes and working points for box girders. Use the exact labeling used in the Schematic Plan View.

15 SUPERSTRUCTURE

15.1 GENERAL

A. Superstructure plans will include all the details necessary to construct beams/girders, decks, diaphragms, stay-in-place forms and all other related superstructure components.

B. For structures with prestressed concrete beams, include the Table of Beam Variables in the superstructure plans. The Table of Beam Variables can be found in the Structures Cell Library.

C. Details on how prestressed beam standards are to be incorporated into bridge plans can be found in the ***Standard Plans Instructions (SPI)***.

D. For structures with steel girders, see Chapter 16 for framing plan and girder detail requirements.

15.2 SUPERSTRUCTURE DRAWINGS - FRAMING PLAN

The Framing Plan, used in conjunction with the ***Standard Plans*** and the Table of Beam Variables included in the Plans, shows a single, concise graphical representation of the geometry necessary for location and detailing of the beam framing. Include a Framing Plan for bridges with concrete beam superstructures when there are any differences between the individual beams resulting from, but not limited to, any of the following conditions:

1. Horizontally curved alignment or combinations of tangent and horizontally curved alignments, i.e. Dimension "L" varies from beam to beam across the width of the bridge and/or Angle Ø varies between spans along the length of the bridge
2. Skewed substructure or splayed beams, i.e. Dimension "L" and/or Angle Ø varies from beam to beam across the width of the bridge or between spans along the length of the bridge.
3. Intermediate diaphragms are used, or miscellaneous items will be attached to the beams, i.e. locations of inserts or formed holes must be shown. See also ***SDG*** 1.9.
4. Significant superelevation transition within a single span or along the length of the bridge, or change in vertical alignment along the length of the bridge, either of which is large enough such that Dimension "P" varies from beam to beam across the width of the bridge or between beams in adjacent spans.
5. Variable beam designs, i.e. beam length, type, strand pattern and/or Dimension "R" varies from beam to beam across the width of the bridge or between spans along the length of the bridge.
6. Variable bearing types or locations, i.e. Dimensions "J", "K1" and/or "K2" vary from beam to beam across the width of the bridge or between spans along the length of the bridge.

Provide a framing plan showing at a minimum the following information:

A. The distances between intermediate diaphragms measured along the centerline of beams.

B. The distances between beams (centerlines or extensions) measured along the centerline of intermediate bents/piers or FFBW.

C. For straight beams supporting curved bridge decks, the chord lengths between the centerline of intermediate bents/piers or FFBW.

D. The distances from the Station Line to adjacent beams measured along the centerline of intermediate bents/piers or FFBW.

E. Angles between centerline of beams and the centerline of intermediate substructure or begin/end bridge line.

F. Dimension along both faces of beams measured from casting beam end to centerlines of intermediate diaphragm inserts.

G. Beam numbering including span and/or unit number consistent with detail sheets. Number girders left to right looking stations ahead.

H. Stationing and span lengths along the Station Line. Dimension spans to centerline of intermediate substructure or begin/end bridge line.

I. Complementary skew angles. See ***SDM*** 2.14 for details.

J. All dimensions to the nearest 1/8-inch and all angles to the nearest second.

K. Direction of stationing adjacent to the Station Line.

L. Stationing along the station line. Show stationing from left to right.

M. Stationing for Begin/End bridge and centerline of intermediate substructures. Indicate expansion or fixed bearings.

N. Span numbers. Number from left to right in the direction of stationing.

O. All centerlines of bearing.

P. Angle between diaphragms and beams if not normal to the girder.

Q. PC and PT locations and cross reference to horizontal curve data.

R. Include the following note on I-Beam framing plans: Temporary bracing locations are not shown. For locations of temporary bracing see the 'TABLE OF PRESTRESSED I-BEAM TEMPORARY BRACING MINIMUM REQUIREMENTS AND LOADS'.

15.3 SUPERSTRUCTURE DRAWINGS - PLAN

The Superstructure Plan sheet shows deck reinforcement detailing information and should be worked with a detail sheet of the superstructure section. At a minimum, include the following in the Superstructure Plan sheet:

A. Plan view of the superstructure deck. Use a scale suitable for viewing the details shown on the sheet when printed. If more than one sheet is required, use appropriate matchlines.

B. Show bar callout and spacing. This can be indicated with the first and last bar in a group shown with a callout between the two.

C. Beam type and spacing. Show beam centerlines. Show flange edges and ends as dashed. Identify beam number.

D. Gutterline and coping.

E. Traffic railing joints as per the ***Standard Plans***. Indicate type of joint and spacing. Reference the applicable ***Standard Plans***. For simple-span concrete beams with decks continuous over inverted-T pier caps, include a detail in the Plans modifying the ***Standard Plans*** requirement for traffic railing joints as follows: Provide a 1/2-inch V-groove aligned with one face of the inverted-T pier cap and provide a 3/4-inch Intermediate Open Joint aligned with the other face. Detail the traffic railing V-grooves and Intermediate Open Joints to coincide with the deck V-grooves required by ***SDG*** 4.2.6.C for the length of the traffic railing over the inverted-T pier cap.

F. Dimension of overall width, roadway width, median location, length of spans, and overall length of bridge.

G. Phase construction limits. Show dimensions and indicate which phase each portion of the superstructure is to be constructed.

H. Outlines of diaphragms with dimensions.

I. Underdeck lighting.

J. Light pole pedestal. Reference the applicable ***Standard Plans***.

K. Scuppers and deck drains.

L. Expansion joint blockouts.

M. Traffic railing longitudinal steel. Reference applicable traffic railing ***Standard Plans***.

N. Include mass concrete, admixture requirements, etc. consistent with the requirements stated in the General Notes. This information may be included on the superstructure plan sheet or detail sheet.

O. Pouring sequence. Indicate direction of pour. This can be shown on a separate sheet if necessary.

P. Longitudinal length along Station Line and copings. Show location and dimensionsto PT/PC's. Show radii at copings of curved superstructures.

Q. Show limits of items attached to traffic railings and parapets such as bullet rails, fencing, etc.

15.4 SUPERSTRUCTURE DRAWINGS - SECTION

At a minimum, include the following in the Superstructure Section sheet:

A. Section view of the superstructure. Detail all reinforcement visible in this view. Partial sections are discouraged. Include section at midspan and at bent/pier to show intermediate diaphragm and end diaphragm details respectively.

B. Deck thickness and cross slope. Deck thickness and reinforcement clearances are measured normal to the deck.

C. Connection between existing and proposed decks for bridge widenings. Indicate which phase of construction the superstructure will be constructed.

D. Vertical traffic/pedestrian railing reinforcement to be cast into deck. Detail longitudinal deck steel to tie in with vertical traffic railing reinforcement. Reference applicable traffic/pedestrian railing ***Standard Plans*** for longitudinal reinforcement requirements.

E. Raised sidewalk width, thickness, and cross slope.

F. Traffic separator. Show the separator and reference the appropriate ***Standard Plans*** for connection details and options.

G. Show V-groove drip edge at deck coping.

H. Beam/girder spacing. Dimension deck overhang.

I. Longitudinal closure pour locations. Include dimension(s) to a known point of reference such as a beam line, gutter line, etc.

J. Depth of girder haunch for steel girders. Do not show a dimension for prestressed beam build-up.

K. Label the Profile Grade Point. Reference dimensions to Station Line. Use the same Station Line as used in the Plan and Elevation sheet unless other considerations make this impractical.

15.5 SUPERSTRUCTURE DRAWINGS - DETAILS

The Superstructure Details sheets show detailing information required to construct the superstructure. This will include reinforcement details, form placement details, deck casting sequences, expansion joint information and other ancillary details such as utility hangers and traffic signal and sign support attachment details. For an example illustrating the content and format of a completed Superstructure Detail sheet, see the ***Structures Detailing Manual Examples***. At a minimum, include the following in the Superstructure Details sheets as applicable:

A. Section views of the superstructure as required. Detail all reinforcement visible in this view.

B. Utility hanger details. Include details showing utility passing through diaphragms. Show expansion sleeve details where required.

C. Expansion joint details.

D. Stay-in-place form details. See Figure 15.8-3, Figure 15.9-3, Figure 15.9-4, Figure 15.9-5, and Figure 15.9-6.

E. Thickened deck end detail. Show section and plan view. Use the standard dimension and reinforcement details shown in Figure 15.5-1and Figure 15.5-2. Show top mat of reinforcement above top layer of thickened deck end reinforcement.

F. Raised sidewalk detail. Provide two options in the Plans for connecting the deck and sidewalk as shown in Figure 15.5-6. See ***SDG*** Table 4.2.5-1 for sidewalk reinforcing requirements.

Commentary: Using sidewalk connection bars doweled into the deck (Option II) allows passage of the finishing machine without interference from bars protruding from the deck.

Figure 15.5-1 Thickened Deck End Details

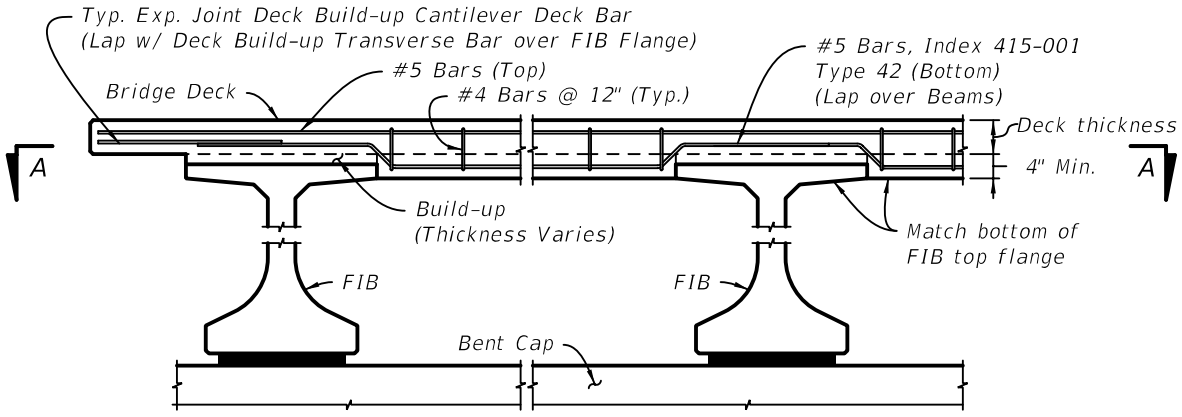

PARTIAL SECTION AT THICKENED DECK END
Deck Reinforcement not shown for clarity.

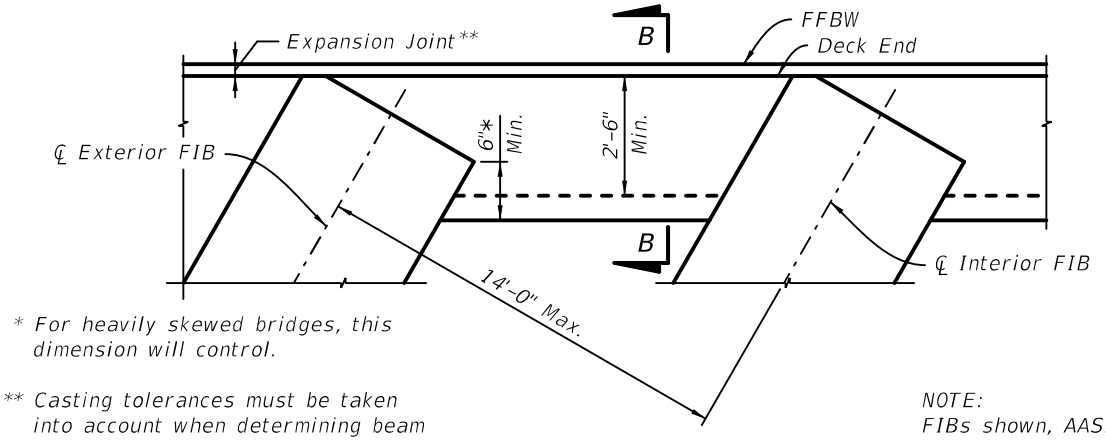

* For heavily skewed bridges, this dimension will control.

** Casting tolerances must be taken into account when determining beam length and expansion joint opening.

SECTION A-A
Reinforcement not shown for clarity.

NOTE:
FIBs shown, AASHTO Type IIs similar.

‡ Placed parallel to skew. Combine with Deck Reinforcement to provide a total longitudinal top mat Area of Steel ≥ 2.48 in² within the bounds of the Thickened Deck End.

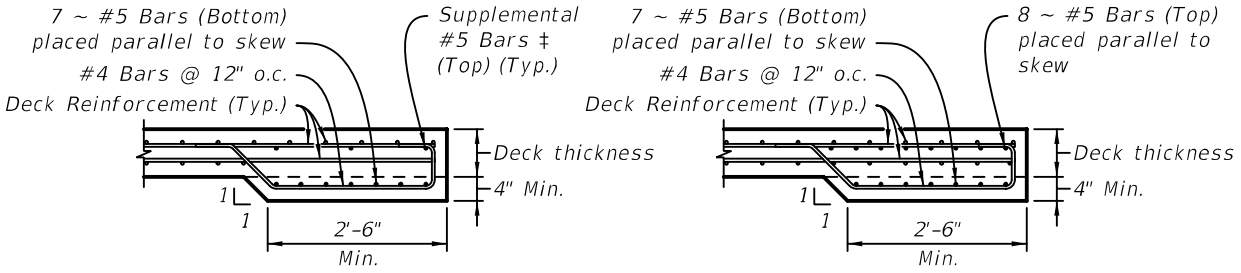

CASE 1 – BRIDGE SKEW ≤ 15 DEGREES

CASE 2 – BRIDGE SKEW > 15 DEGREES

SECTION B-B

Design Assumptions: Detail is applicable for a 2'-6" wide thickened end deck with a maximum bridge skew angle of 35°. For Thickened End Decks wider than 2'-6" use additional reinforcing bars at similar spacing. All designs are project specific and must be confirmed by the EOR.

Figure 15.5-2 Thickened Deck End at Interior Support

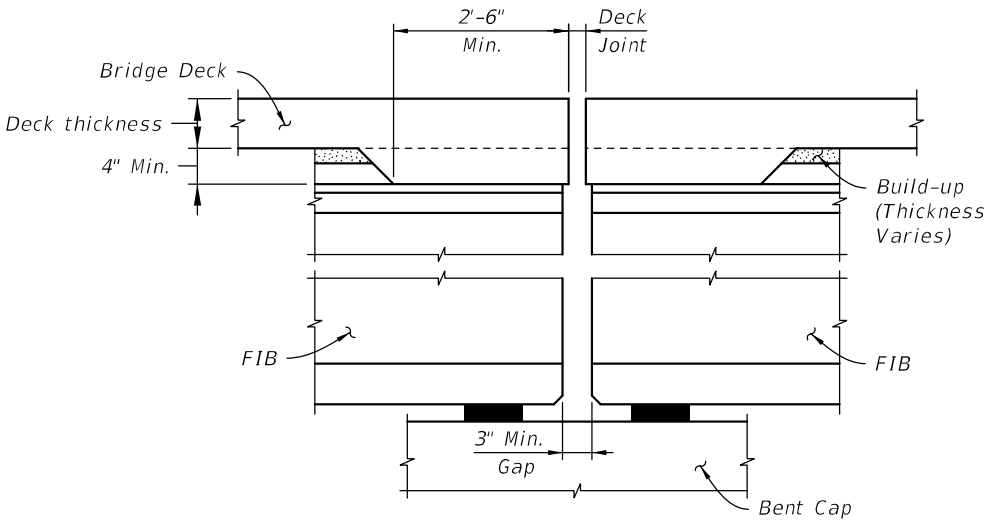

G. Sections through diaphragms at piers and end bents. Detail reinforcement, expansion joints, construction joints and control joints. Include compressible material if cast back-to-back (such as two or more layers of 30lb felt paper) between adjacent diaphragms at interior supports. Show dimension between adjacent diaphragms at expansion joints. Coordinate with expansion joint details.

H. Section through intermediate diaphragms. Detail reinforcement to avoid conflicts with deck steel.

I. Jacking locations (where applicable). Show jacking service loads in tabular format.

J. Thickened deck details at deck drains. See ***SDM*** 22.2.

K. Drain, scupper and downspout details. See ***SDM*** 22.2.

L. Complete the 'TABLE OF PRESTRESSED I-BEAM TEMPORARY BRACING MINIMUM REQUIREMENTS AND LOADS' as follows and include it in the plans.

Span No.: Indicate the span number.

Beam No.: Indicate the individual beam number or for simplicity use “All” when appropriate.

Stage 1:

Brace Ends Prior to Crane Release: Indicate yes or no.

Stage 2:

Total Lines of Bracing: Indicate the total number of lines of uniformly spaced bracing required per beam, including end bracing.

Minimum Number of Adjacent Beams Erected within 24 hours: Indicate the minimum number of beams that must be erected to be consistent with the bracing design assumptions, see ***SDG*** 4.3.4.B.

Horizontal Load at Each Brace: Indicate the ***LRFD*** Strength III horizontal load at each brace (kips).

Stage 3:

Total Lines of Bracing: Indicate the total number of lines of uniformly spaced bracing required per beam, including end bracing, not less than Stage 2 requirements.

Overturning Moment at Each Brace: Indicate the ***LRFD*** Strength I overturning moment at each brace (kip-ft).

Figure 15.5-3 Table of Prestressed I-Beam Temporary Bracing Minimum Requirements and Loads

PRESTRESSED BEAM STABILITY AND TEMPORARY BRACING NOTES:
1. Ensure beam stability and design temporary beam bracing, including connections, in accordance with the Specifications and the FDOT Structures Manual.
2. Construction:
   a. Evaluate the beam stability and bracing requirements against the design assumptions including:
      i. Loadings given in the plans.
      ii. Beam Camber (less than 6 inches) and Beam Sweep (in compliance with Specification 450 requirements).
      iii. Bearings given in the plans.
   b. Securely connect bracing to each beam. Do not allow the bracing to exert any vertical force on the outer edge of the top flange.

TABLE OF PRESTRESSED I-BEAM TEMPORARY BRACING MINIMUM REQUIREMENTS AND LOADS — Table Date 8-05-15

SPAN NO.	BEAM NO.	STAGE 1	STAGE 2			STAGE 3	
		BRACE ENDS PRIOR TO CRANE RELEASE?[1] (YES/NO)	TOTAL LINES OF BRACING[2,3,7]	MINIMUM NUMBER OF ADJACENT BEAMS ERECTED	HORIZONTAL LOAD AT EACH BRACE[4] (KIP)	TOTAL LINES OF BRACING[3,5,7]	OVERTURNING MOMENT AT EACH BRACE[6] (KIP-FT)

1. Anchor Bracing loads to be determined by the Contractor.
2. Total lines of Stage 2 bracing, including end bracing, are required to be installed within 24 hours after initial beam placement.
3. Equally space bracing along the length of the beams allowing for variations due connection conflicts and skew.
4. LRFD Strength III loads applied to beam at brace point (see SDG 11.6).
5. Total lines of Stage 3 bracing, including end bracing, are required to be installed prior to deck placement.
6. LRFD Strength I overturning moment applied to beam at brace point (see SDG 11.6).
7. Submit shop drawings for temporary bracing plan including locations of preformed beam holes/inserts.

M. Deck casting sequences. See Figure 15.5-4, Figure 15.5-5 and ***SDG*** 4.2.

Figure 15.5-4 Deck Casting Sequence – Simple Span Prestressed Concrete Beams

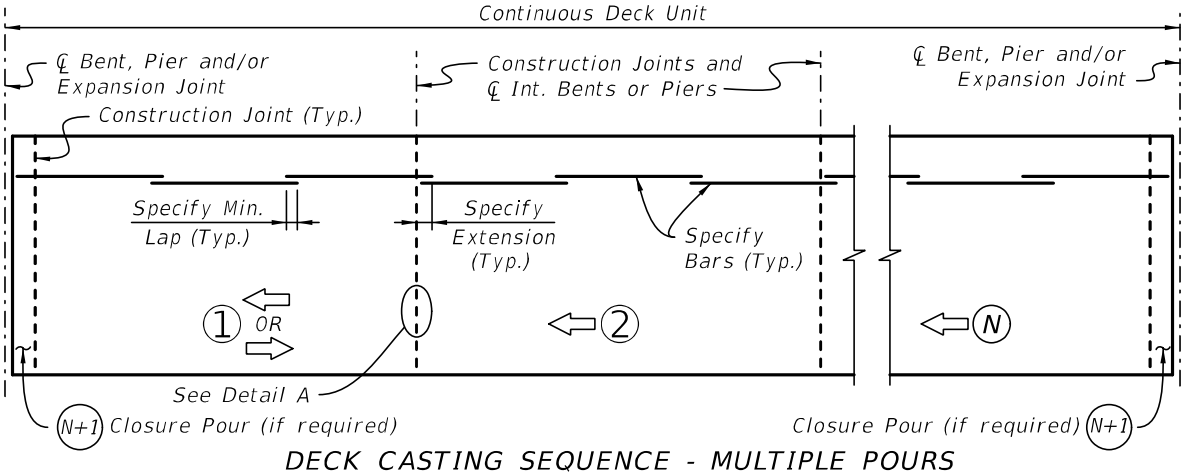

DECK CASTING SEQUENCE - MULTIPLE POURS

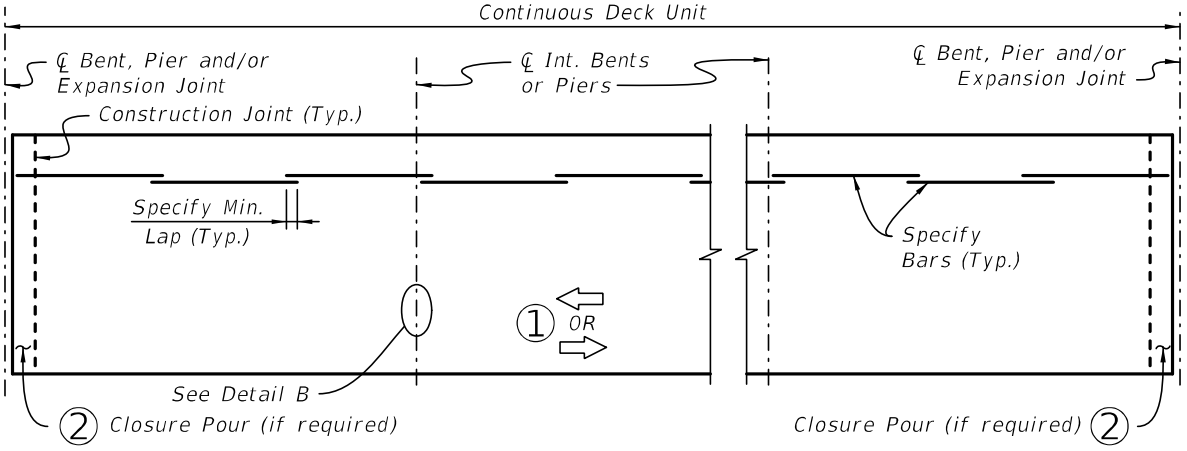

DECK CASTING SEQUENCE - SINGLE POUR

NOTES:
1. At the Contractor's option, either Deck Casting Sequence may be used.
2. A minimum of 72-hours is required between adjacent deck pours in a given continuous deck unit. Alternatively, the next successive deck pour in a given continuous deck unit may be placed after the previous deck pour has attained a compressive strength of 0.6f'c based on cylinder testing in accordance with Section 400 of the Specifications.
3. Fill Tooled V-groove with Type D sealant per Specifications Section 932. Groove shall be clean and free of grease and debris before filling.

LEGEND:

(N) = Pour Number

⇦ = Direction of Pour

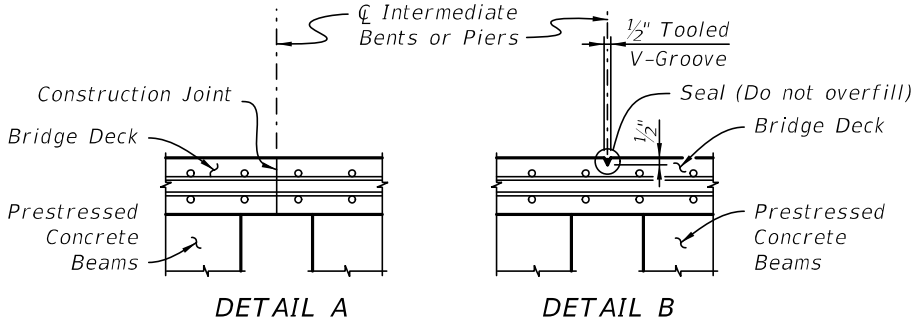

DETAIL A DETAIL B

(BEAMS WITHOUT END DIAPHRAGMS SHOWN; WITH END DIAPHRAGMS SIMILAR)

Commentary: To reduce cracking in the deck over the support, the direction of pour is oriented towards the previously placed span so that the beams are loaded prior to pouring the section of the deck next to the previously placed span where the longitudinal reinforcing steel is continuous over the supports.

It is important that the concrete design mix remains plastic throughout the concrete placement especially in the case where a single pour is placed in one direction to allow for beam deflection after the concrete is initially placed and screeded.

Figure 15.5-5 Deck Casting Sequence - Continuous Beams and Girders

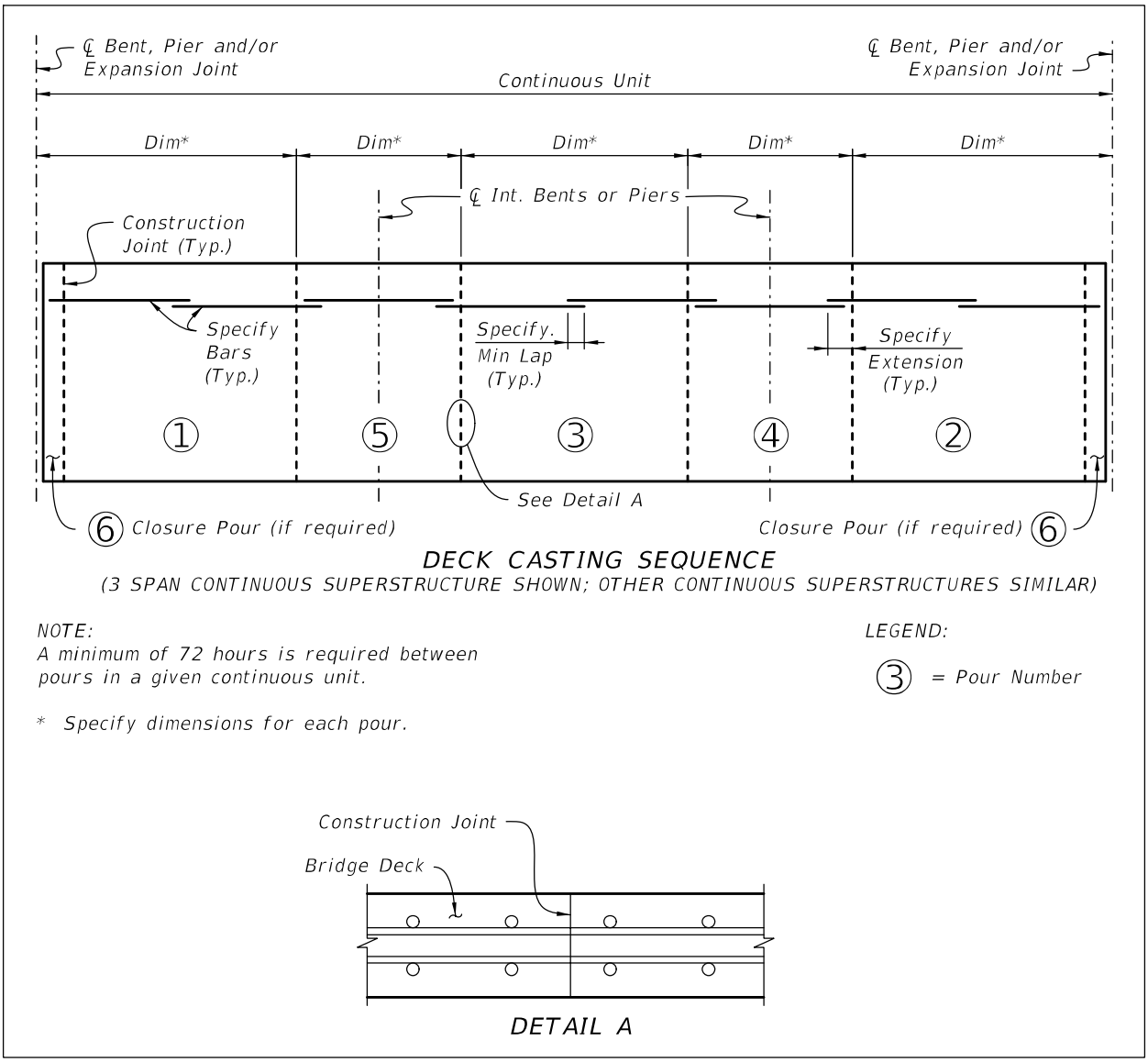

Figure 15.5-6 Raised Sidewalk Connection to Deck

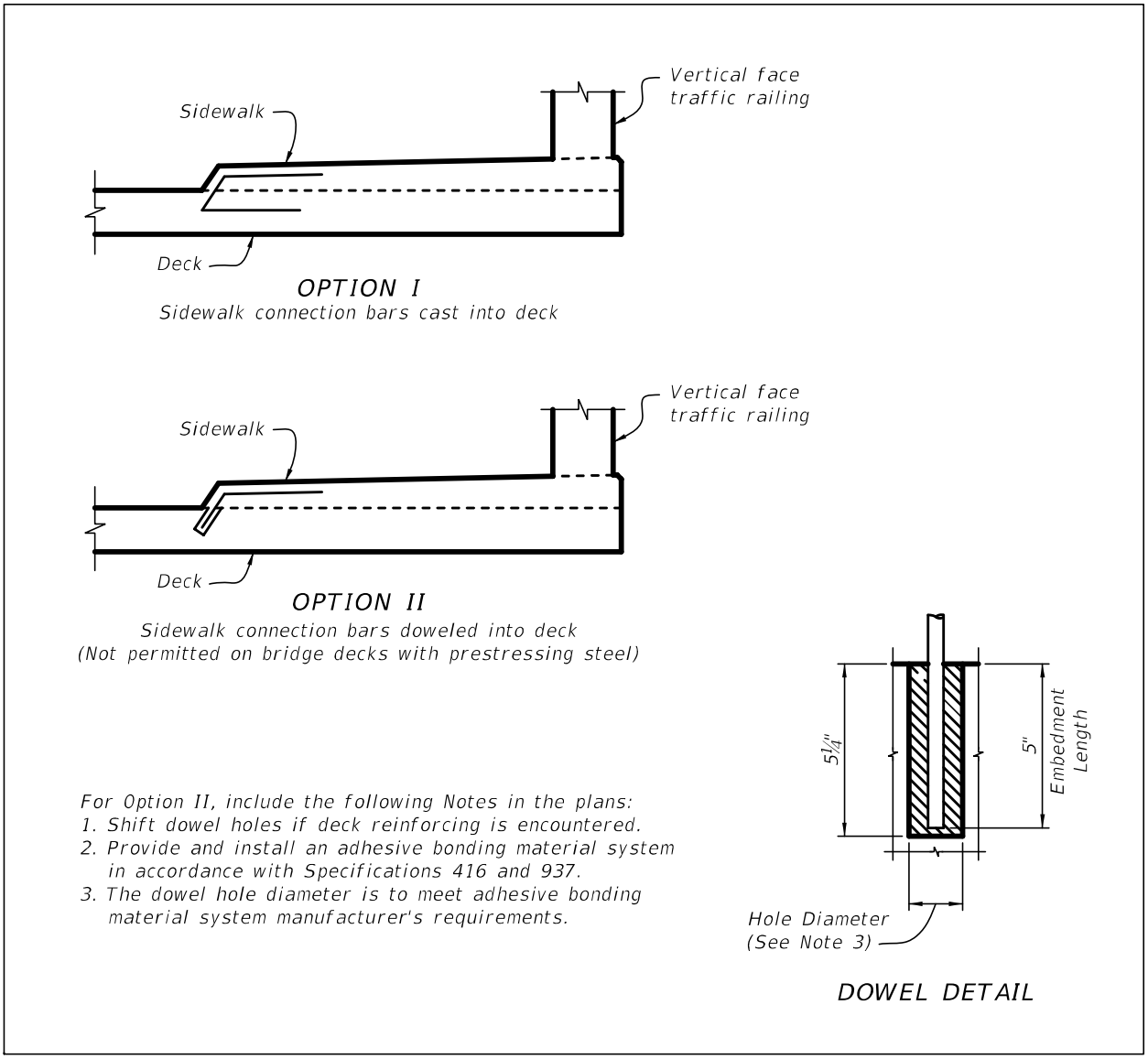

15.6 DECK DRAINS

Avoid the use of deck drains on bridges wherever possible. In situations where the use of deck drains is required, fully detail all aspects of the storm drain system including inlets, scuppers, conveyance pipes and attachments to the bridge. On bridges that require storm drain systems, develop details early in the design phase to avoid conflicts once member sizes and reinforcing schemes have been developed. See ***FDM*** 121 for phase submittal requirements. See ***SDM*** 22 for additional drainage requirements on bridges.

15.7 SUPERSTRUCTURE DESIGN CONSIDERATIONS - GENERAL

The bridge superstructure requires a considerable amount of design and detailing to be easily constructed. Incorporate the following design considerations to produce a more constructible, economical design:

A. Maximize the clear distance between mats of steel by using No. 5 rebar and tightening spacing, if possible. This must be balanced with reinforcement spacing minimum requirements.

B. For cross sections with a slope break point, do not specify a straight bar in the bar list with an indication to field bend as necessary. Instead, calculate the angle and call for the appropriate bar type in the bar list.

C. Design bridge deck reinforcement so that transverse main steel is on the exterior of each mat. Distribution steel should be on the interior of each mat.

D. Detail closure pours where required considering differential deflection between phases/adjacent beams. Closure pours should be a minimum of 2-feet wide.

15.8 SUPERSTRUCTURE DESIGN CONSIDERATIONS - PRESTRESSED BEAMS

In addition to the applicable sections above, address the following issues when designing and detailing prestressed concrete beam superstructures:

A. When diaphragms are required, detail these areas in the plans to ensure that there are no conflicts between diaphragm reinforcement and deck reinforcement. Include diaphragm reinforcement in the bar list.

B. Partial depth diaphragms may be utilized with a Florida-I beam superstructure, except where full-depth diaphragms are required per ***SDG*** Table 2.10-1, ***SDG*** 4.3, and ***SDG*** 4.7. In each diaphragm, at a minimum, show one vertical column of #5 bars threaded into inserts cast into the beam(s). Show insert layout in the framing plan. See applicable beam Standard Plan for vertical spacing of inserts. See Figure 15.8-1 and Figure 15.8-2 for details. Details shown are minimum dimensions and reinforcing. Diaphragm dimensions and reinforcing layout can be modified when required by analysis.

Commentary: If the purpose of the diaphragm is to transfer lateral loads, diaphragms must be designed to resist these forces and to transfer these forces to the bearings and to the substructure.

C. Add a plan note to alert the beam fabricator to see Framing Plan sheet(s) for insert spacing and layout when intermediate diaphragms are required in the span.

D. See ***SDG*** 4.2 for deck pouring sequence requirements.

E. Show stay-in-place (S.I.P) form details. See Figure 15.8-3 for S.I.P. details related to prestressed-beam superstructures.

F. See ***SDG*** 4.3.1 for the treatment of beam ends. See Figure 15.8-4, Figure 15.8-5 and Figure 15.8-6 for details related to the squaring of beam ends at skewed supports. See Figure 15.8-7 for additional details required for use with non-cellular SIP Metal Deck Forms.

Figure 15.8-1 Concrete End Diaphragm Details

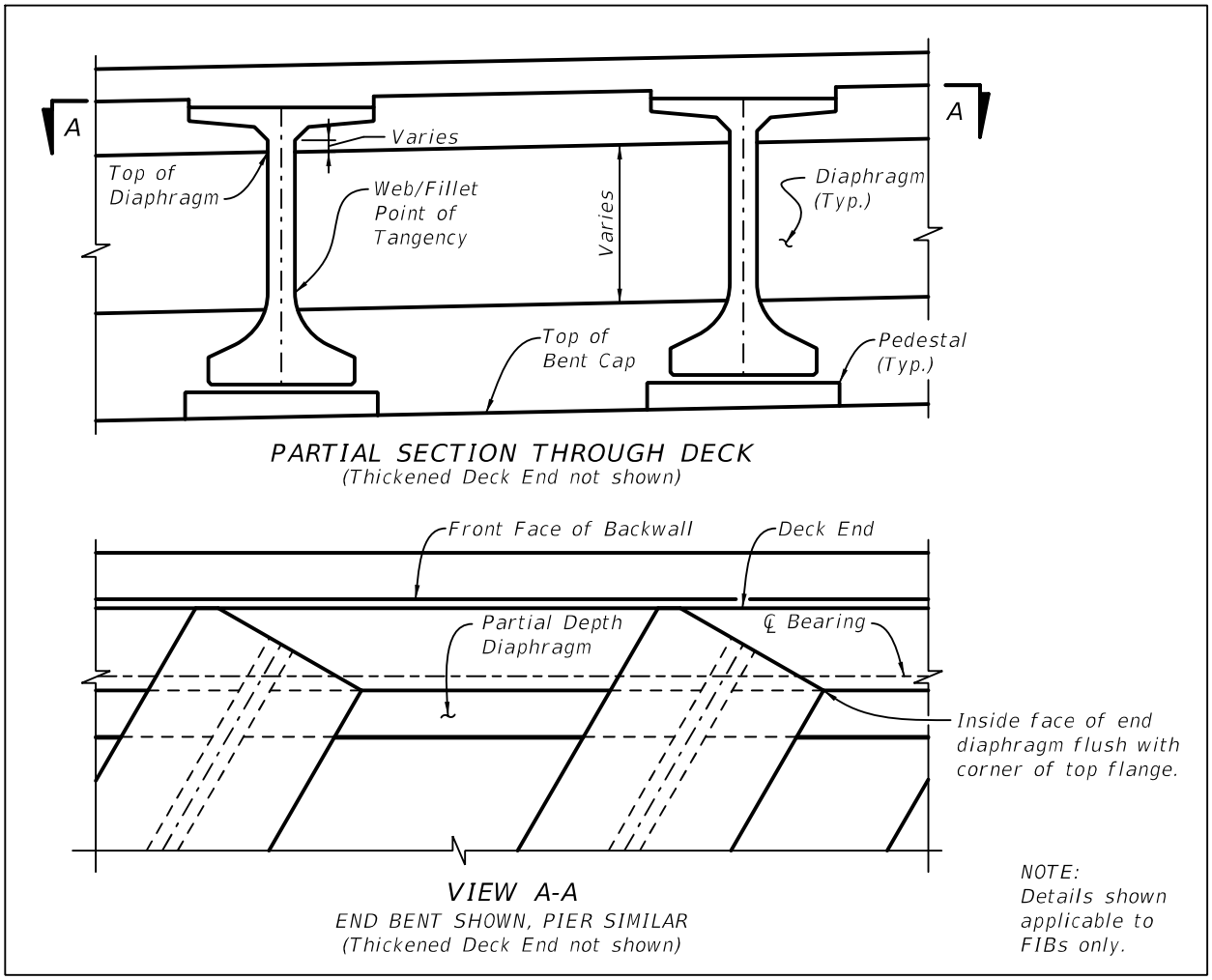

Figure 15.8-2 Concrete End Diaphragm Reinforcement Details

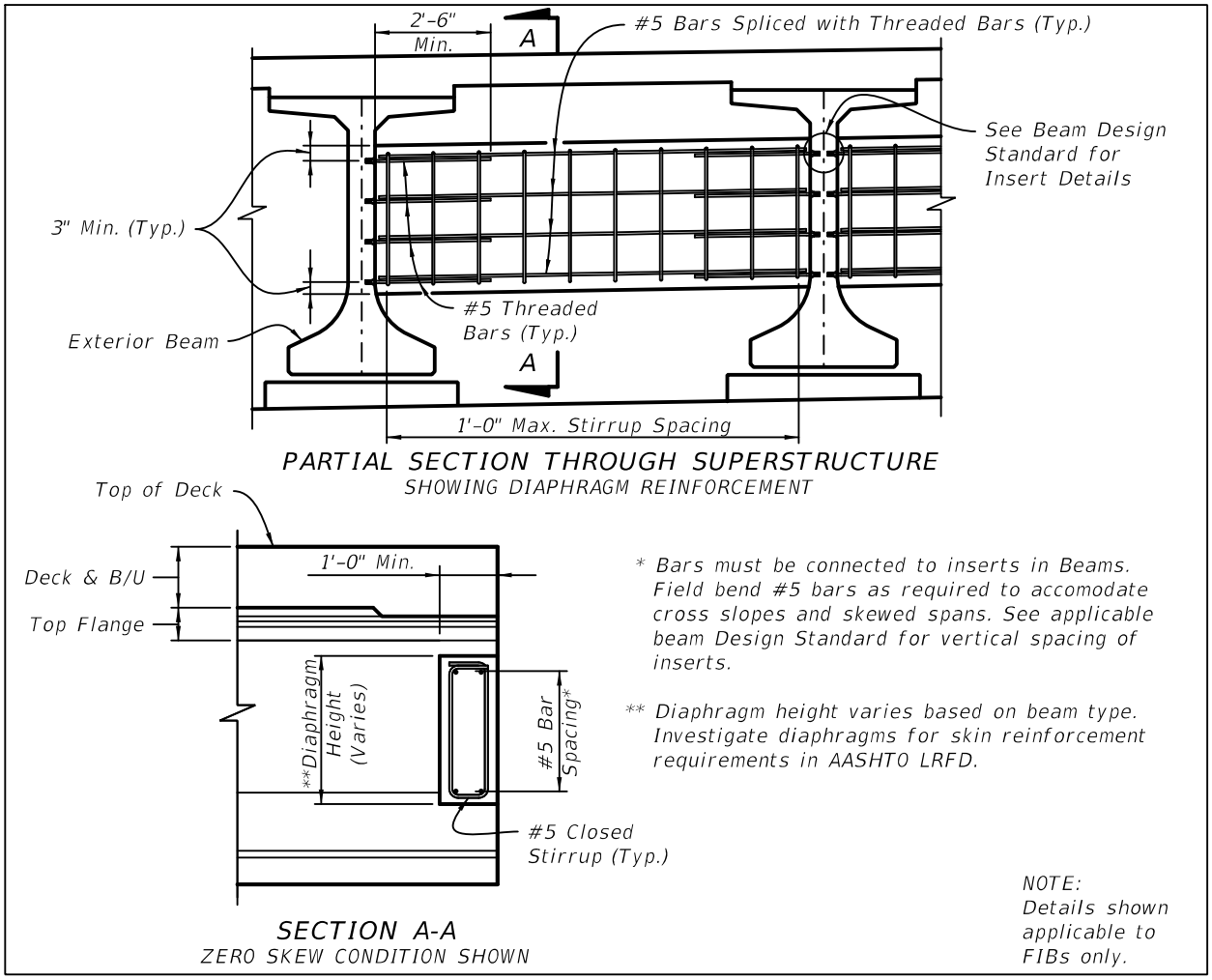

Figure 15.8-3 S.I.P. Form Details for Prestressed Concrete Beams

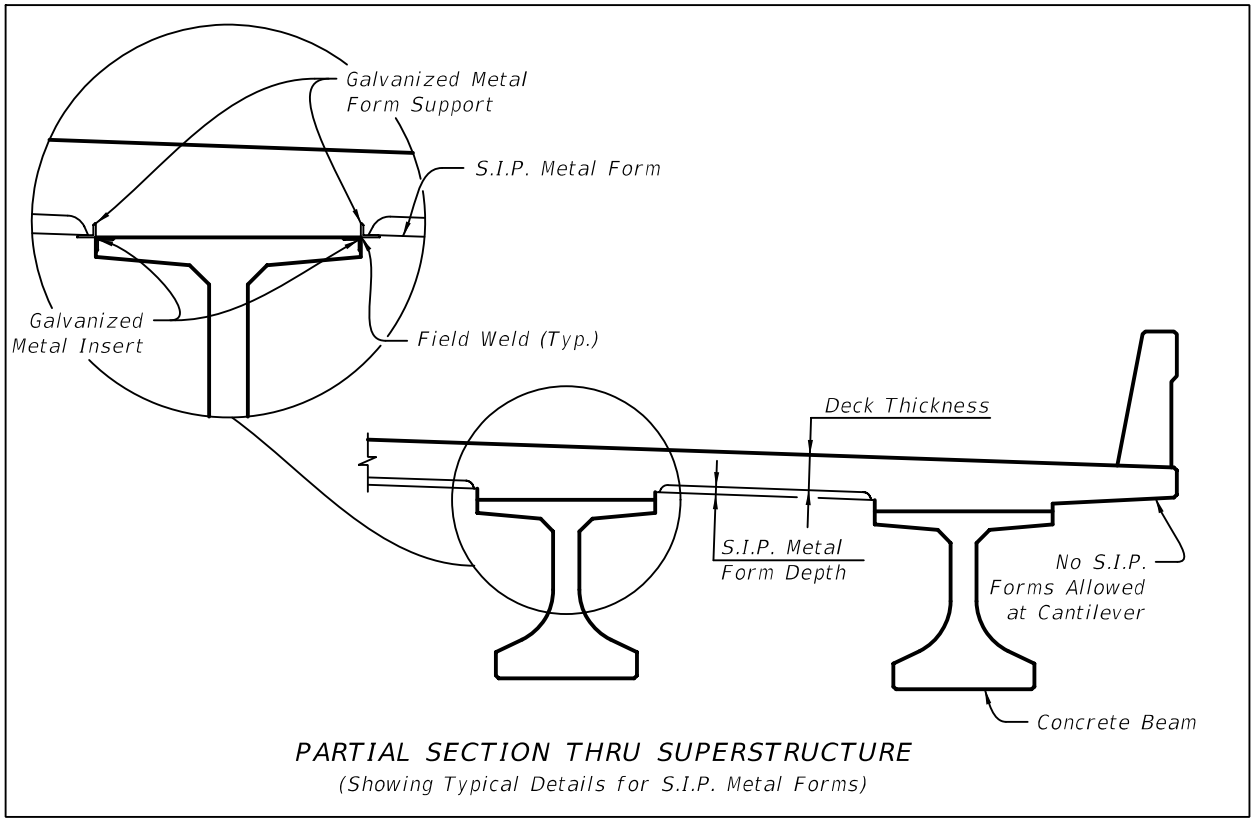

Figure 15.8-4 Squared Beam End Details – Exp. Joint at Int. Support

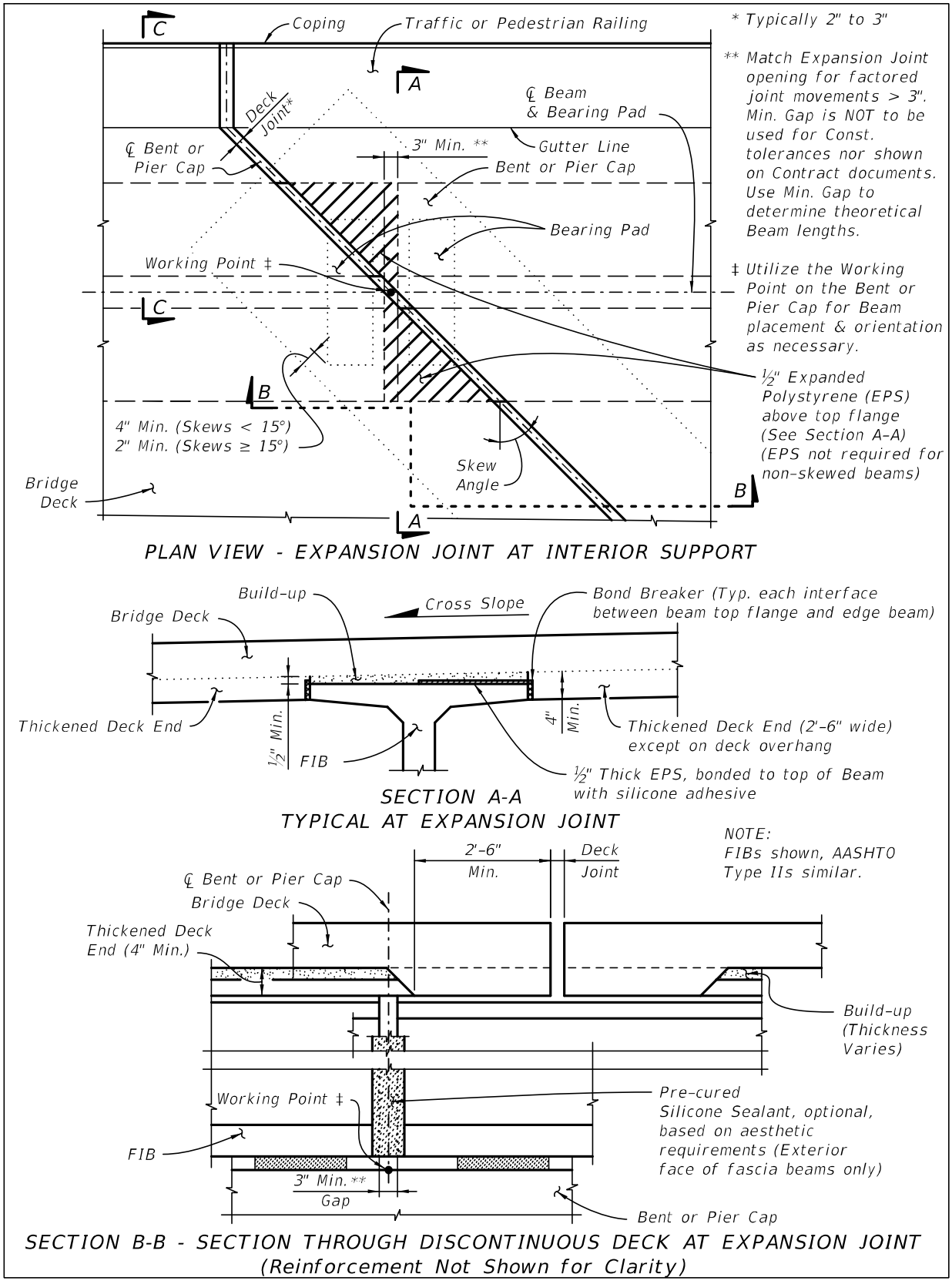

Figure 15.8-5 Squared Beam End Details - Cont. Deck at Int. Support

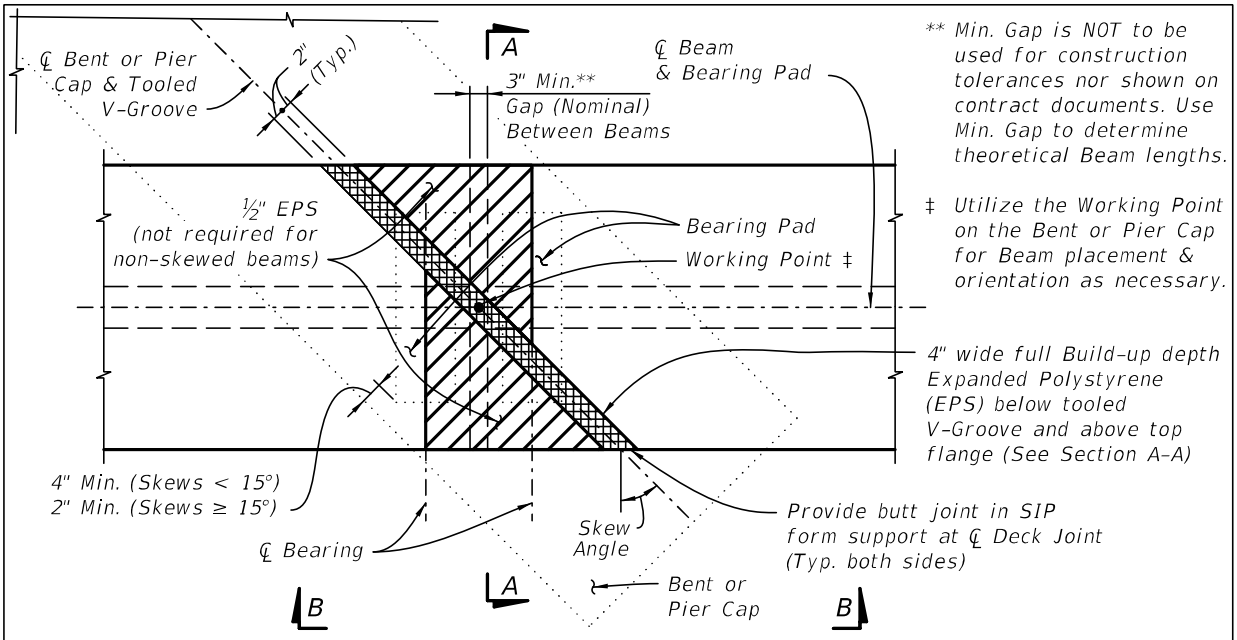

PLAN VIEW - CONTINUOUS DECK AT INTERIOR SUPPORT
(Bridge Deck Not Shown For Clarity; Skewed Condition shown, Non-Skewed similar)

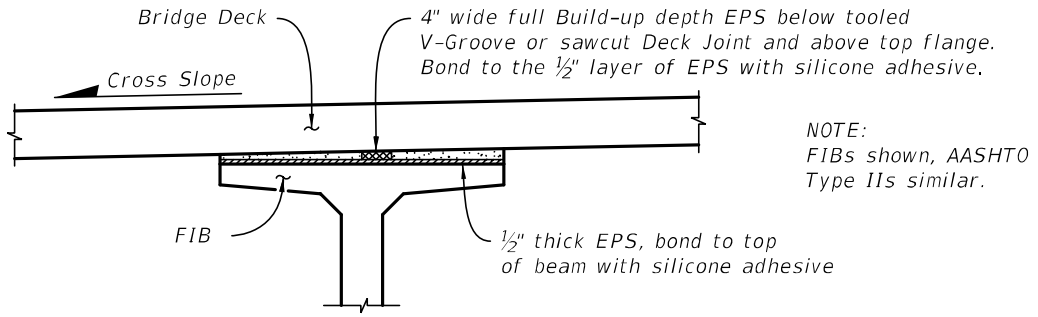

SECTION A-A - TYPICAL SECTION AT CONTINUOUS DECK TOOLED OR SAWCUT JOINT

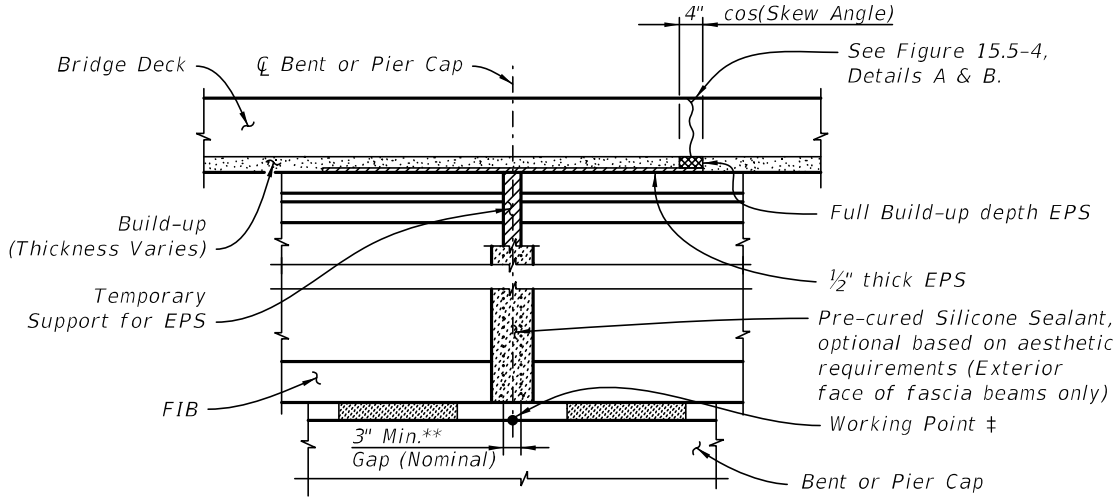

VIEW B-B - ELEVATION OF CONTINUOUS DECK AT INTERIOR SUPPORT

Figure 15.8-6 Squared Beam End Details - Expansion Joint at End Bent

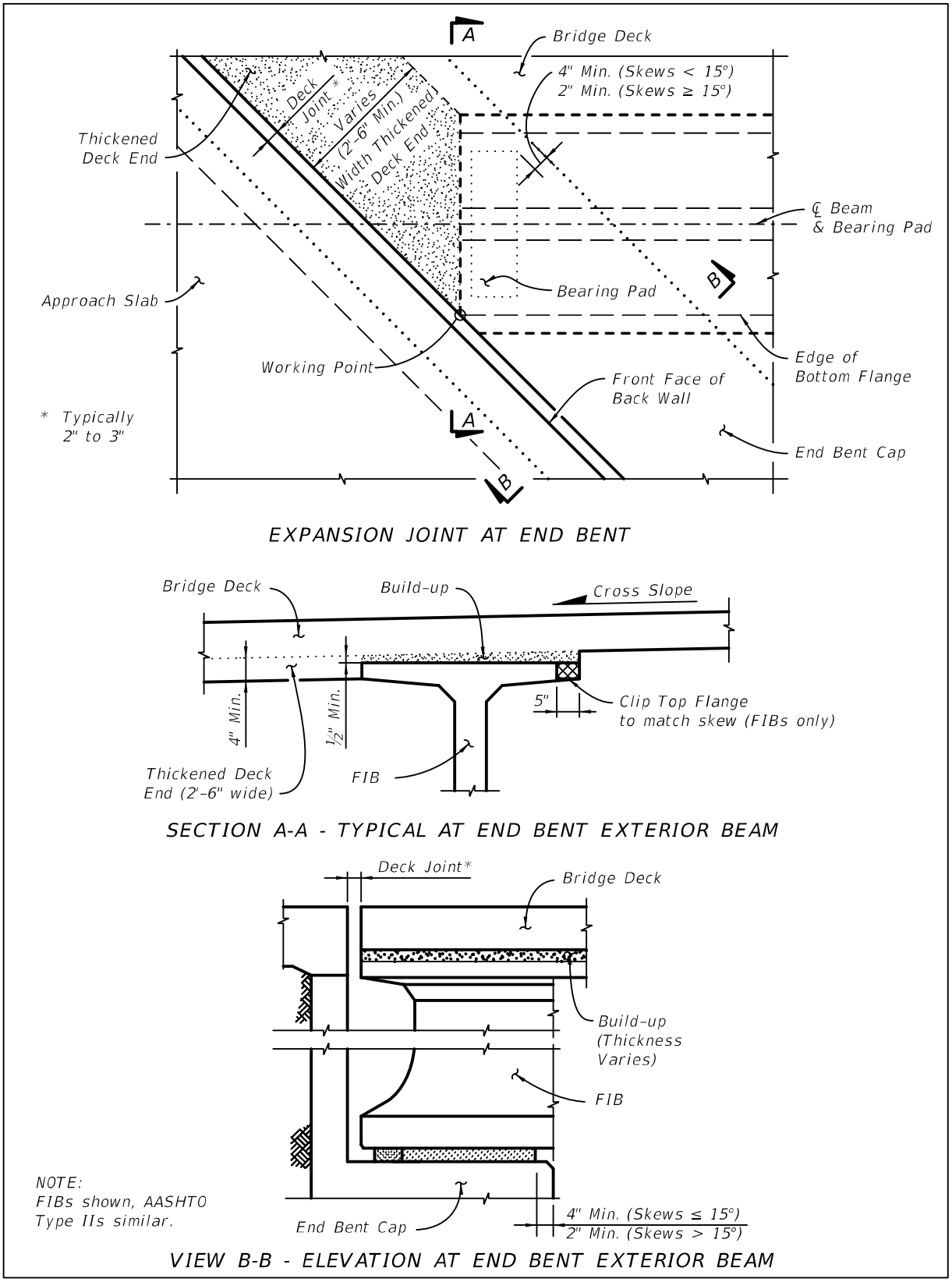

Figure 15.8-7 SIP Form Details - Continuous Deck at Int. Support

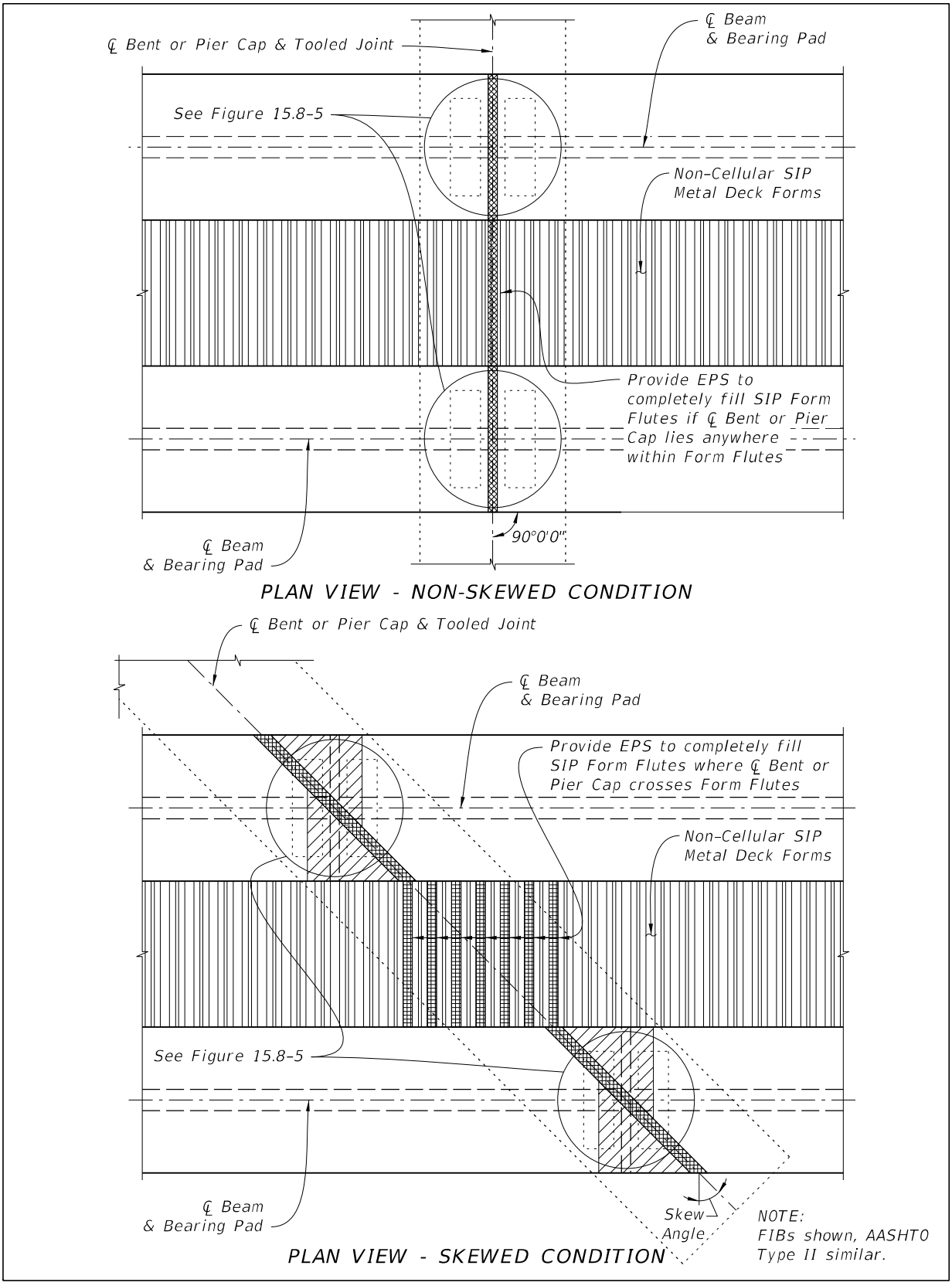

15.9 SUPERSTRUCTURE DESIGN CONSIDERATIONS - STEEL GIRDERS

In addition to the applicable sections above, address the following issues when designing and detailing steel girder superstructures:

A. Design edge beam at ends of spans or continuous units to transmit wheel loads into end crossframe. See Figure 15.9-1.

Figure 15.9-1 Edge Beam Detail - Steel Girders

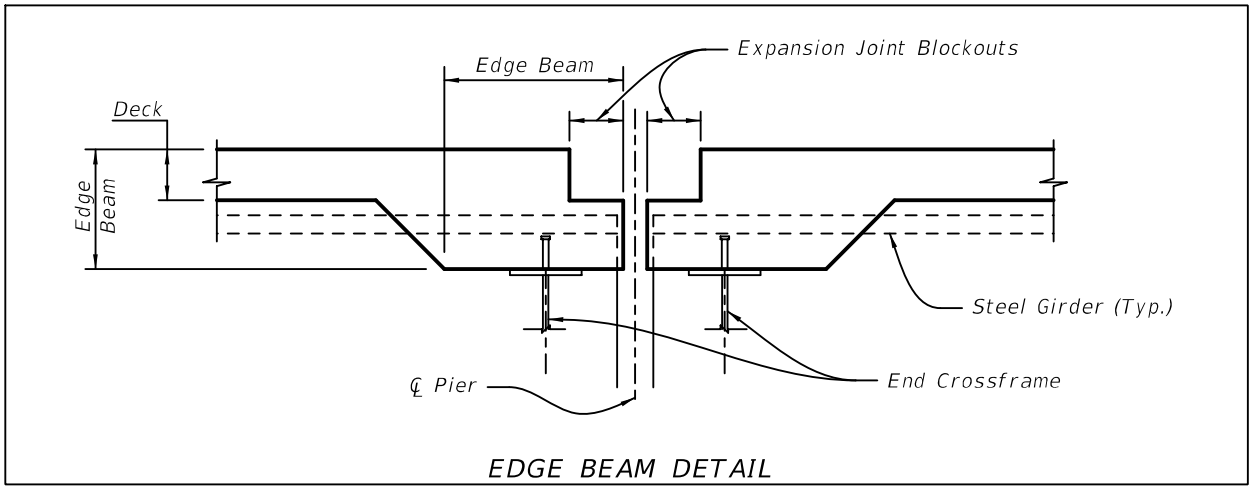

B. Detail deck with a constant-depth haunch within a given continuous unit. Haunch shall be as shown in Figure 15.9-2, measured from the top of the thickest top flange to the bottom of the deck. This depth, in conjunction with the cross slope, must be taken into account when designing shear stud height. Show the dimension from the top of web to the top of deck in the Superstructure Details.

Figure 15.9-2 Haunch Details - Steel Girders

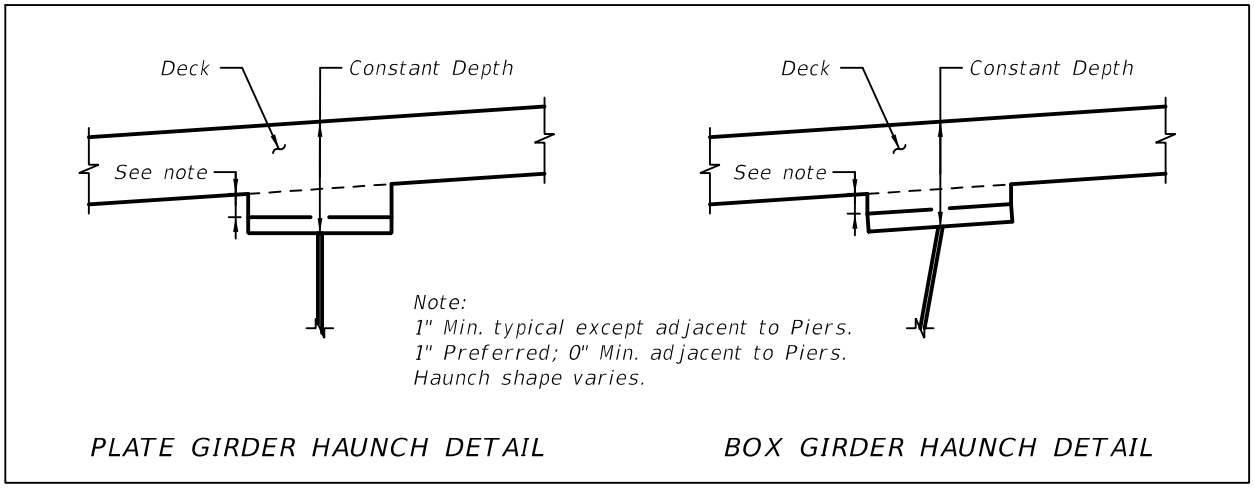

C. Show S.I.P form details. See Figure 15.9-3 and Figure 15.9-4 for I-girder S.I.P. form details and Figure 15.9-5 and Figure 15.9-6 for box girder S.I.P. form details. Stay-in-place forms are required for the interior portion of box girders.

Figure 15.9-3 S.I.P. Form Details for Steel I-Girders (Section)

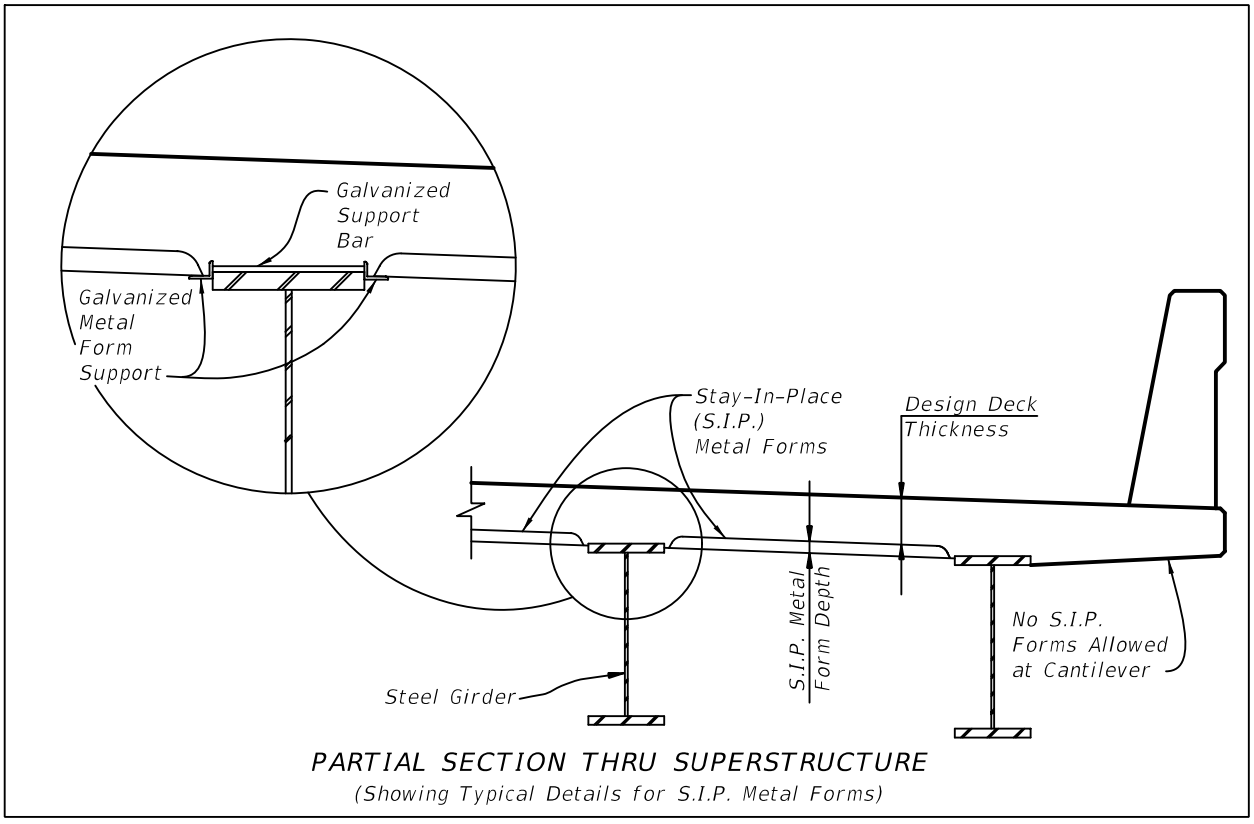

Figure 15.9-4 S.I.P. Form Details for Steel I-Girders (End Detail)

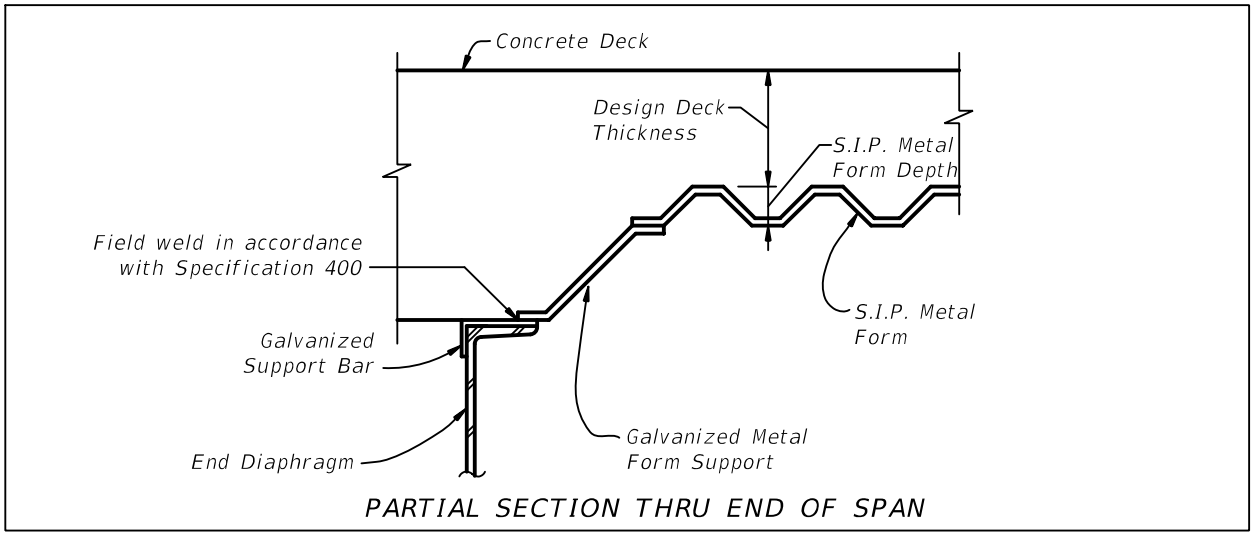

Figure 15.9-5 S.I.P. Form Details for Steel Box Girders (Section)

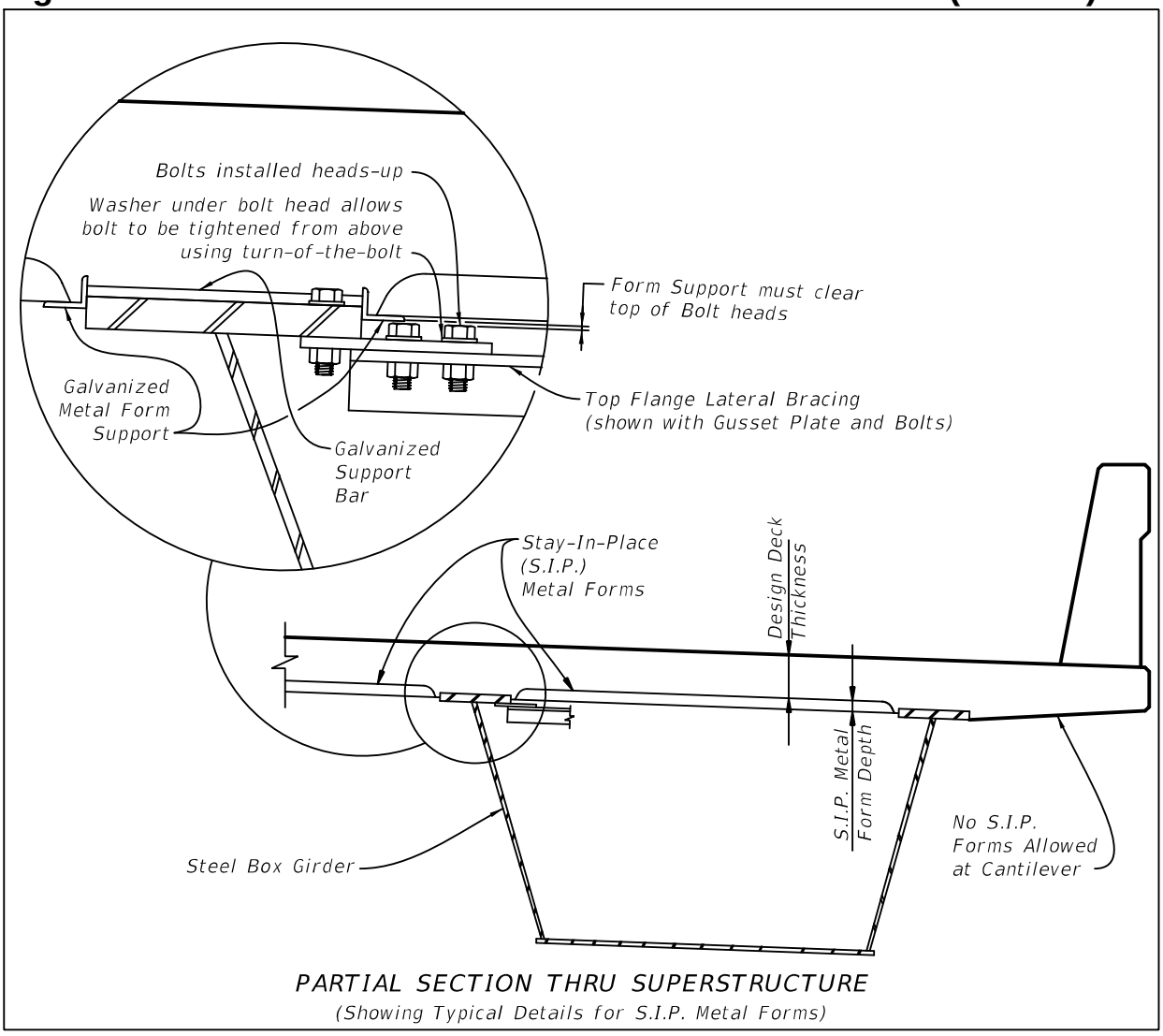

Figure 15.9-6 S.I.P. Form Details for Steel Box Girders (End Detail)

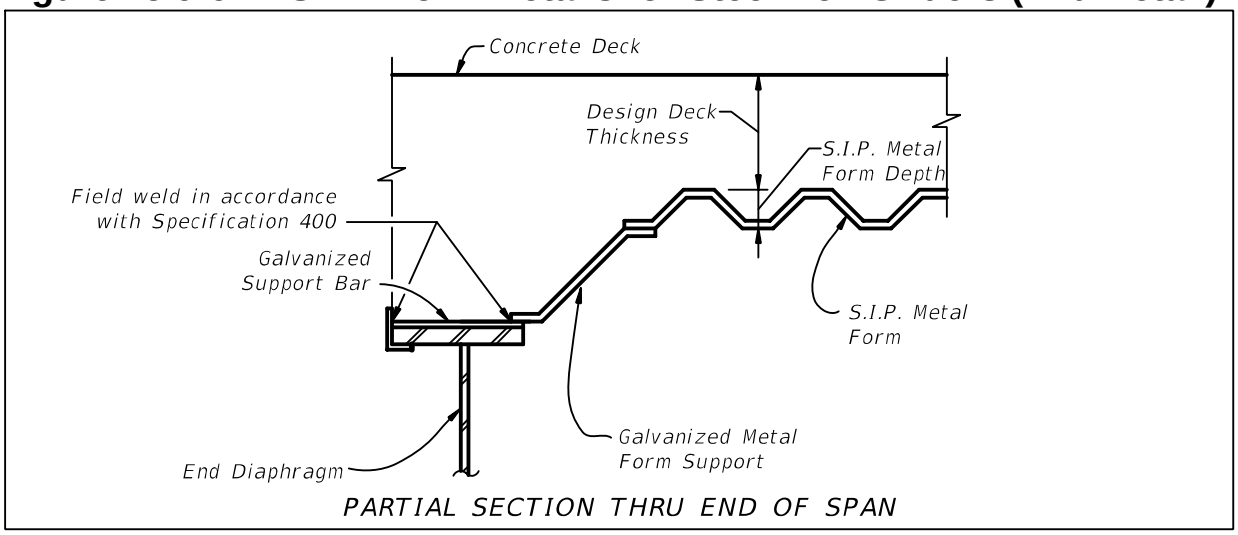

15.10 BEARINGS

A. Include any applicable plan notes for MR bearings. The notes below are examples that are applicable to steel girders and concrete beams. Revisions, deletions and/or additional notes will be required based on project requirements. Do not repeat criteria that are already stated in the ***Standard Specifications***, the ***AASHTO LRFD Bridge Design Specifications*** and the ***AASHTO LRFD Bridge Construction Specifications***.

1. The MR bearings (pot or disc) shall be designed by the Contractor for the loads and movements shown in the MR Bearing Data table.
2. Pot and disc bearings shall not be mixed at the same substructure.
3. Dimension "D" is the assumed height of the MR bearing and was used to determine the beam seat elevations and pedestal heights. Any deviations from Dimension "D" due to the actual MR bearing height shall be accounted for by the Contractor at no further expense to the Department. The profile grade of the superstructure shall remain unchanged. If the height correction is one-inch or less, adjust the pedestal reinforcement to maintain the required cover and the minimum required embedment shown in the Plans. If vertical adjustment greater than one-inch is required, the Contractor shall submit revisions to the Engineer for approval.
4. The sole plate, masonry plate, anchor rod assembly, high strength bolt assembly, pedestal and beam seat elevation were established based on the assumed MR bearing size as shown in the Plans. Any deviation from these dimensions due to the actual size of the MR bearing shall be accounted for by the Contractor at no further expense to the Department. Revisions shall be submitted to the Engineer for approval and include signed and sealed calculations for the redesign of affected components including, but not limited to, the following: sole plate, masonry plate, anchor rod assembly, high-strength bolt assembly, pedestal and beam seat elevation.
5. The masonry plate shall be ASTM A709 Grade [XX], metalized, galvanized and/or painted.
6. The sole plate shall be ASTM A709 Grade [XX], metalized, galvanized and/or painted.
7. Swedged anchor rods shall be ASTM F1554 Grade [XX].
8. Removable hex head bolts shall be ASTM 354 Grade [XX] and shall be galvanized.
9. Threaded couplers shall be ASTM A563 and shall develop [XX] ksi stress in tension and shall be galvanized.
10. High strength bolt assembly for the connection between the bottom flange and sole plate shall according to ASTM F3125 Grade A325 and shall be galvanized and/or painted.

11. For expansion bearings, the maximum coefficient of friction is [XX].

12. The color of the finish coat shall conform to AMS-STD-595, Color No. [XXXXX].

B. Provide a Plan view showing the MR bearing type and orientation. See Figure 15.10.B-1.

Figure 15.10.B-1 MR Bearing Type and Orientation Plan

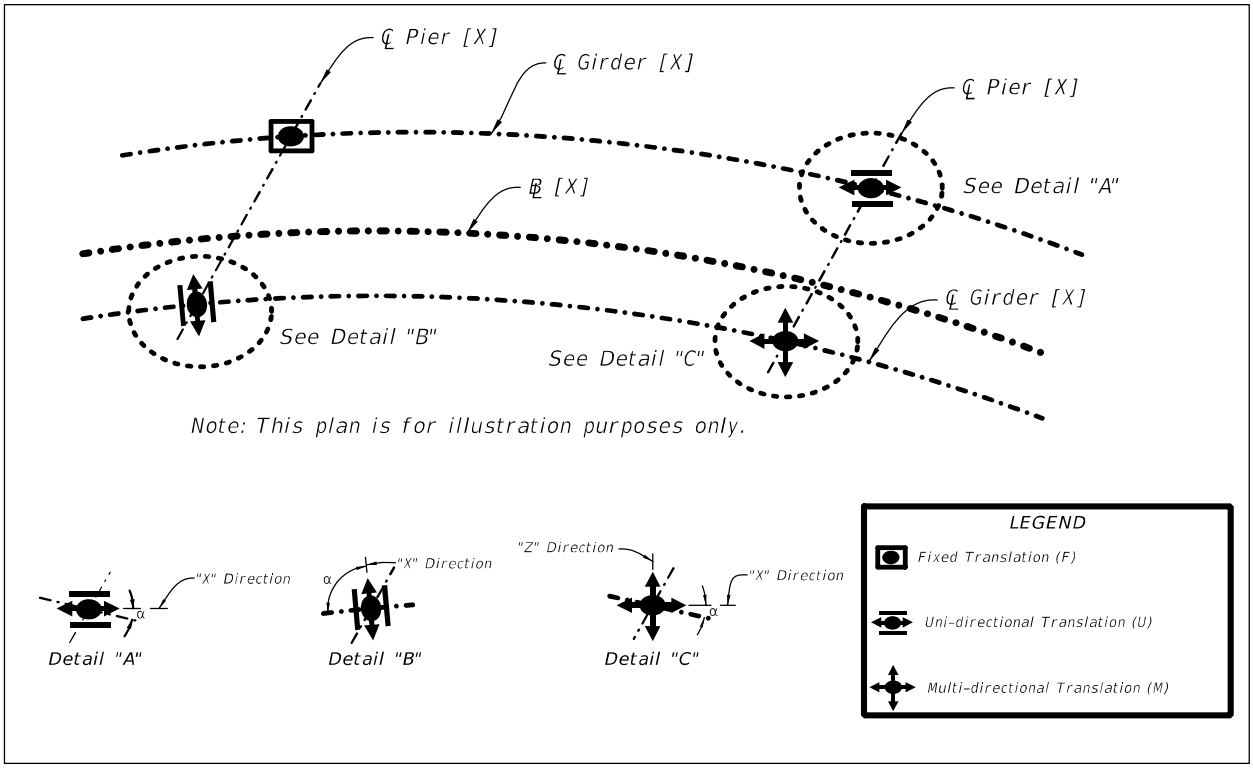

C. Provide an MR Bearing Data table with all information necessary for the Contractor to design the bearings. An example is shown in Figure 15.10.C-1. Modify the table for project requirements. Provide temperature adjustments for expansions bearings.

Figure 15.10.C-1 MR Bearing Data Table

LOCATION	GIRDER	TYPE (F,U,or M)	NO. REQ'D	SERVICE VERTICAL LOADS			FACTORED HORIZ. LOAD (KIPS)	FACTORED MOVEMENT		FACTORED ROTATION		DIM "D" (IN)	ANGLE α (DEG)
				DL (KIPS)	$LL_{MIN.}$ (KIPS)	$LL_{MAX.}$ (KIPS)		X (IN)	Z (IN)	DL (RAD)	TOTAL (RAD)		

NOTES:
1. DL IS DEFINED AS DEAD LOAD.
   LL IS DEFINED AS LIVE LOAD INCLUDING THE DYNAMIC LOAD ALLOWANCE AS APPLICABLE.
2. THE TOTAL FACTORED ROTATION DOES NOT INCLUDE TOLERANCES OR ALLOWANCES FOR UNCERTAINTIES PER LRFD 14.4.2.2. THESE SHALL BE INCLUDED IN THE DESIGN OF THE MR BEARING.
3. THE FACTORED MOVEMENT IS THE MAXIMUM ONE WAY MOVEMENT (EXPANSION OR CONTRACTION) OF THE SUPERSTRUCTURE WHEN BEARINGS ARE SET AT 70 DEGREES. ADJUST BEARINGS ACCORDINGLY FOR INSTALLATION TEMPERATURE OTHER THAN 70 DEGREES.

D. Provide a plan and elevation for each type of bearing assembly including the sole plate, masonry plate, connections to the MR bearing and anchor rod assembly. The

MR bearing itself shall be shown only as an outline with hatching. See Figures 15.10.D-1 through Figure 15.10.D-3.

Figure 15.10.D-1 MR Bearing with Steel I-Girder

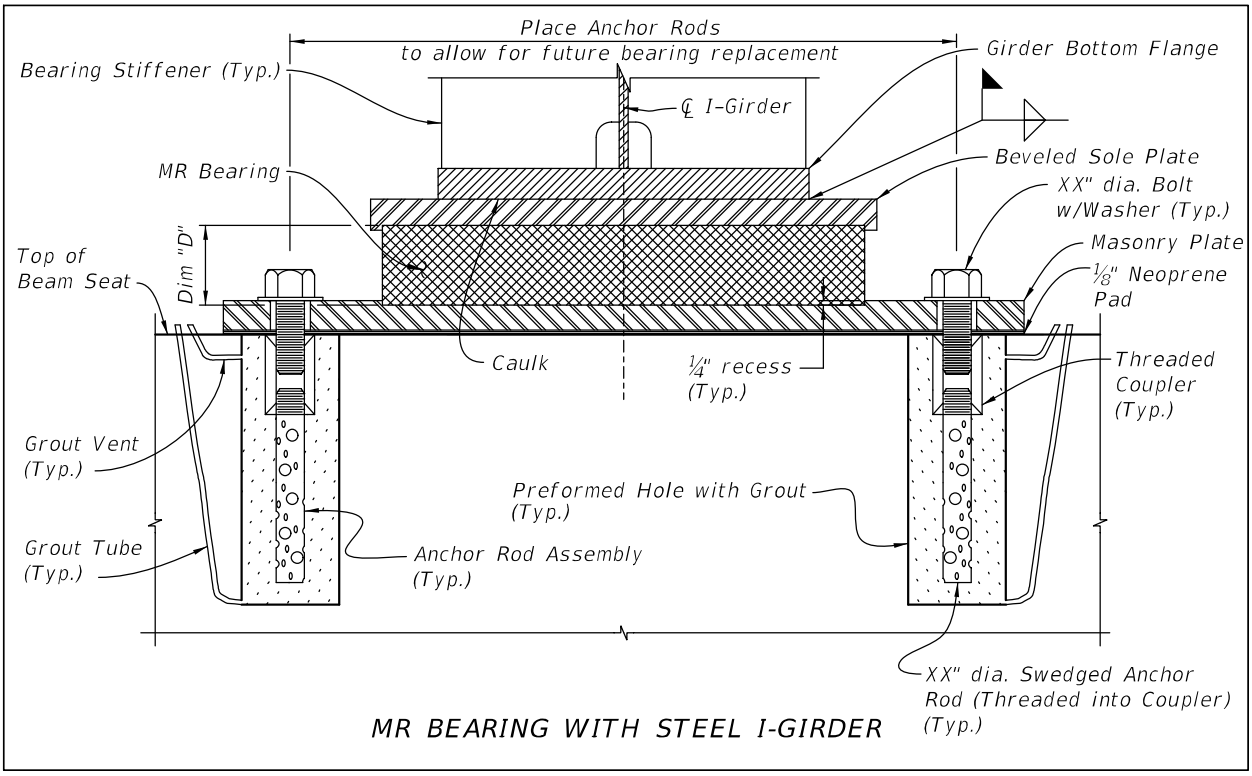

Figure 15.10.D-2 MR Bearing with Steel Box Girder

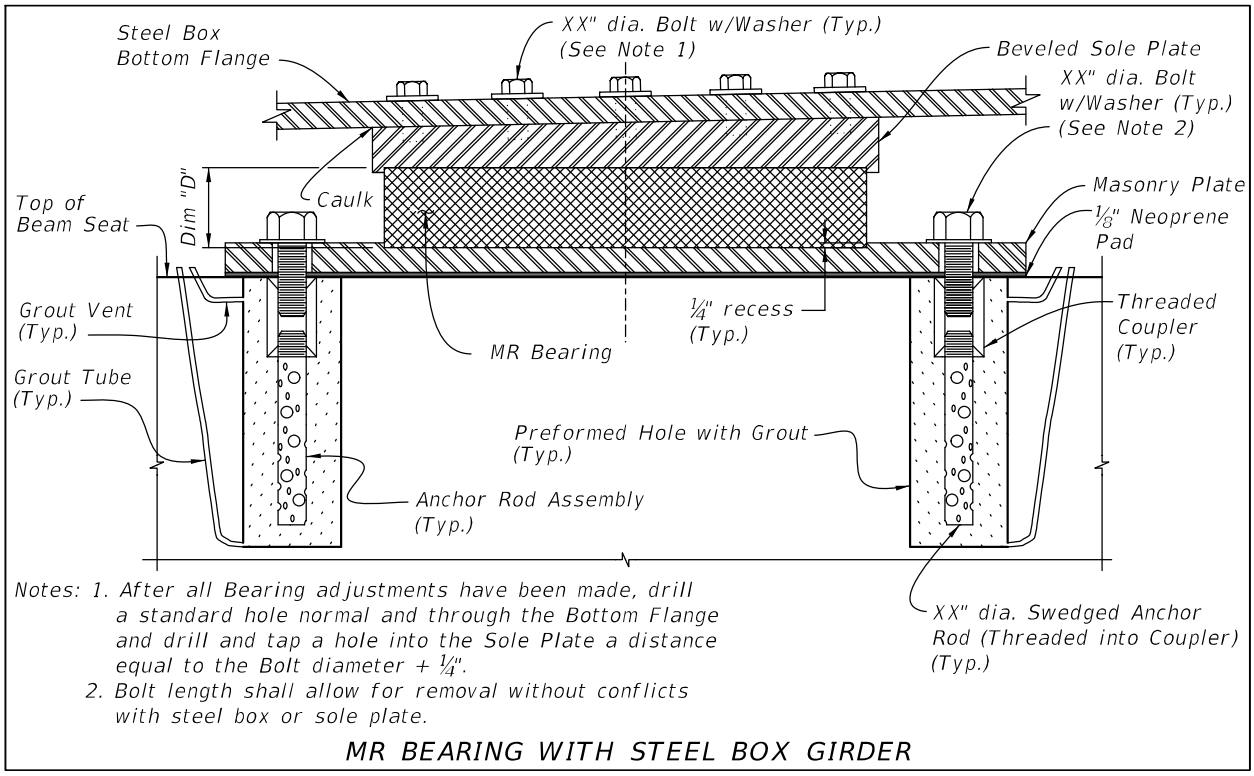

Figure 15.10.D-3 MR Bearing with Concrete Beam

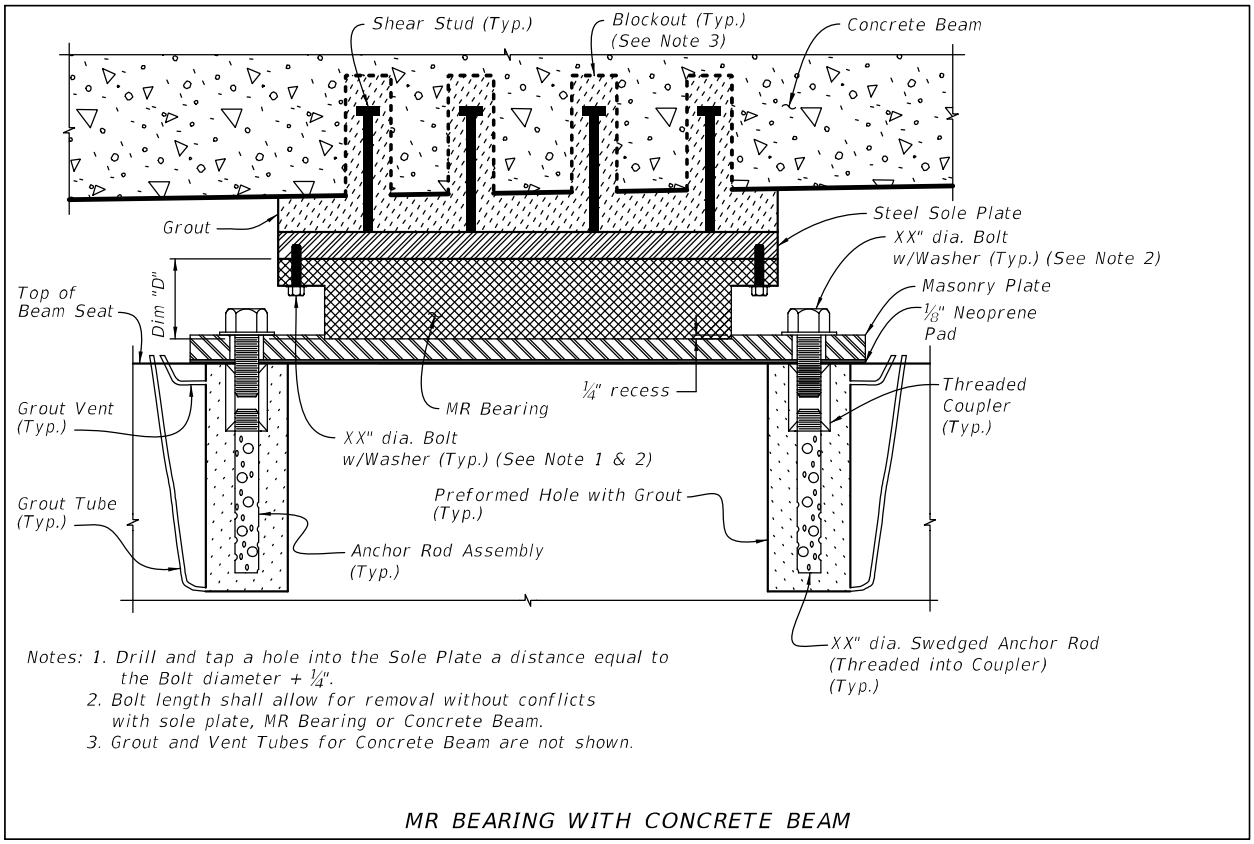

Notes: 1. Drill and tap a hole into the Sole Plate a distance equal to the Bolt diameter + 1/4".
2. Bolt length shall allow for removal without conflicts with sole plate, MR Bearing or Concrete Beam.
3. Grout and Vent Tubes for Concrete Beam are not shown.

MR BEARING WITH CONCRETE BEAM

16 STRUCTURAL STEEL GIRDERS

16.1 GENERAL

A. Structural steel drawings and details will be used by fabricators and contractors for the production and erection of structural steel members. This chapter does not cover movable bridges.

B. Refer to the following ***AASHTO/NSBA*** Steel Collaboration Standards (available at https://www.aisc.org/nsba/nsba-publications/aashto-nsba-collaboration) with exceptions as detailed in this chapter:

1. G 1.2 - 2003 ***Design Drawing Presentation Guidelines***
2. G 1.4 - 2006 ***Guidelines for Design Details***
3. G 12.1 - 2016 ***Guidelines to Design for Constructability***

C. Check AISC on-line database of available structural steel shapes before specifying a particular steel shape and size. Preference should be given to shapes and sizes with multiple producers due to increased availability and lower cost.

Modification for Non-Conventional Projects:
Delete ***SDM*** 16.1.C.

16.2 SHOP DRAWINGS

Refer to the following ***AASHTO/NSBA*** Steel Bridge Collaboration Standards for guidance on review and approval of steel shop drawings (available at https://www.aisc.org/nsba/design-and-estimation-resources/aashto-nsba-collaboration):

1. G 1.1 - 2000 ***Shop Detail Drawing Review/Approval Guidelines***
2. G 1.3 - 2002 ***Shop Detail Drawing Presentation Guidelines***
3. ***FDOT Design Manual (FDM)*** - Chapter 260
4. ***FDOT Standard Specifications for Road and Bridge Construction***- Section 5

16.3 FRAMING PLAN DRAWINGS AND DETAILS - STEEL I-GIRDERS

Framing plans are required for all bridges with a steel superstructure. For examples illustrating the content and format of completed Framing Plan sheets, see the ***Structures Detailing Manual Examples***. Provide a framing plan for steel I-girder superstructures showing the following information (see Figure 16.3-1, Figure 16.3-2, Figure 16.3-3, and Figure 16.3-4):

A. Transverse stiffener spacing. Show transverse stiffeners on one side of girder only. Show on inside of exterior girders.

B. Lateral bracing spacing.

C. The distances between girders (centerlines or extensions) measured along the centerline of bearing.

D. The distances from the Station Line to adjacent girders measured along the centerline of bearing.

E. Dimension to field splices along centerline girder from centerlines of bearing. Number field splices from left to right. Clearly label optional field splices.

F. Girder radius of curvature for each girder, tabulate if necessary for clarity.

G. Crossframe location. Indicate type of crossframe.

H. Temporary bracing required for construction.

I. Distance from centerline bearing to the FFBW.

J. Girder numbering. Number girders left to right looking stations ahead.

K. Distance between centerlines of bearing.

L. Location of PC/PT along centerline of girders.

M. Direction of stationing.

Figure 16.3-1 I-Girder Framing Plan

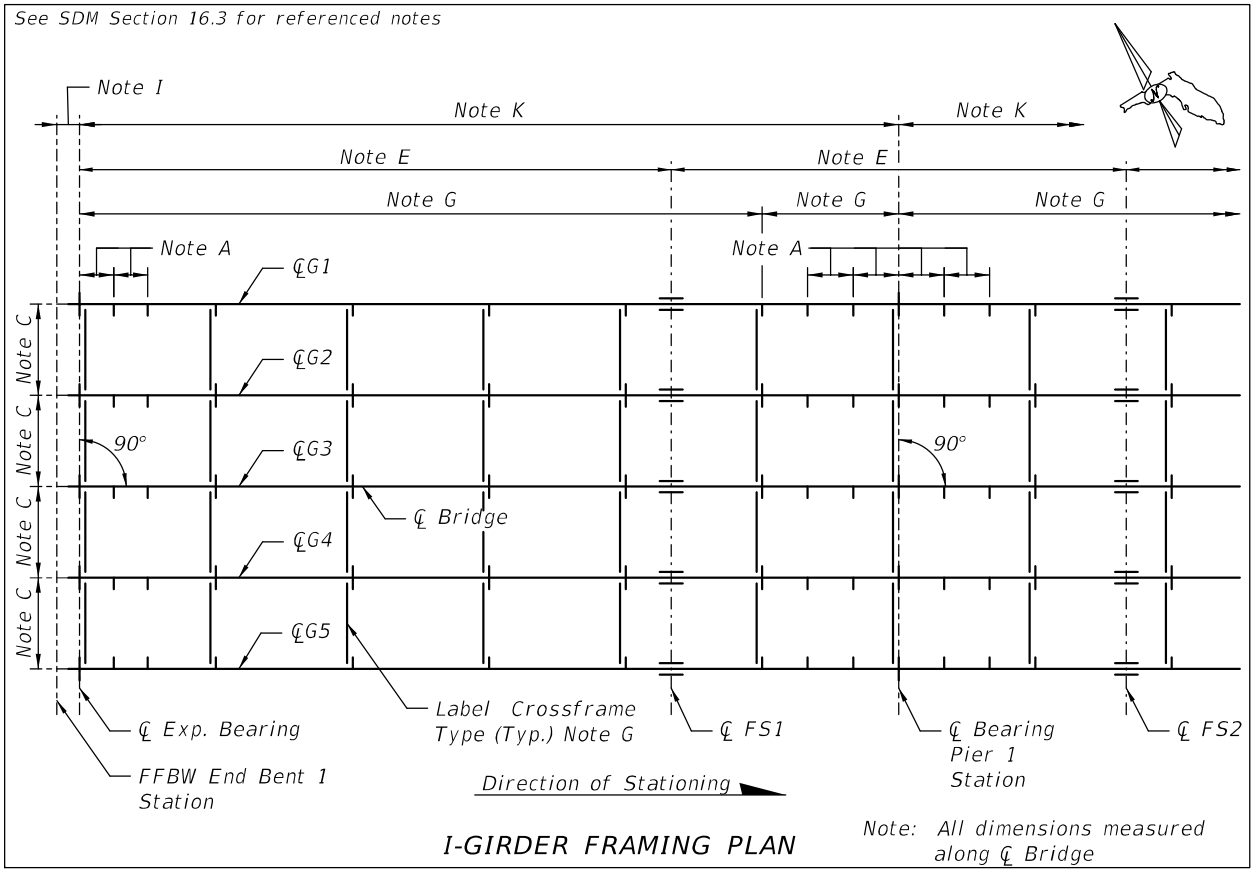

Figure 16.3-2 Framing Plan Details - Large Skews

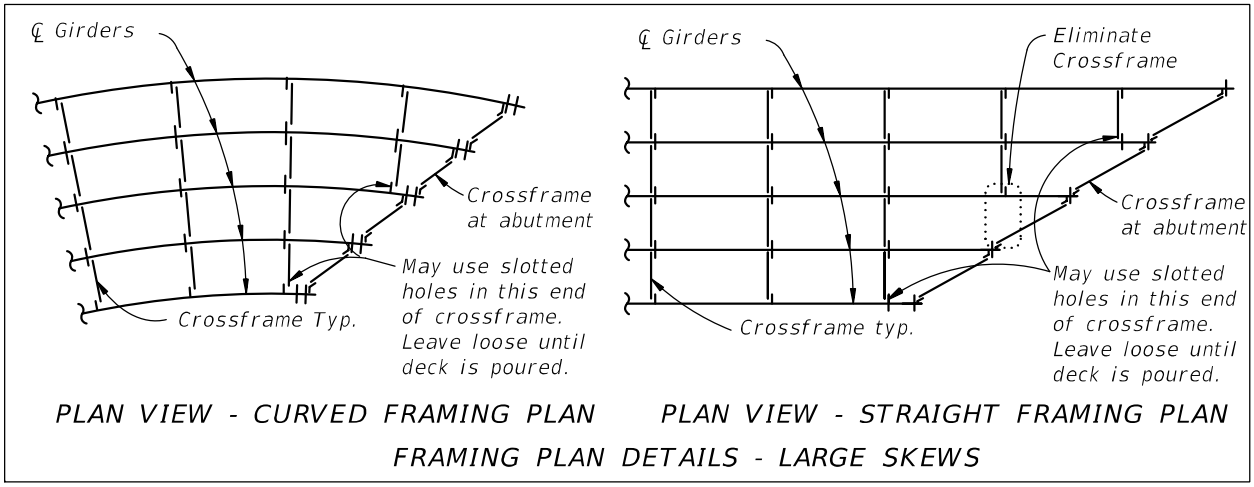

Figure 16.3-3 Framing Plan at Gore Area

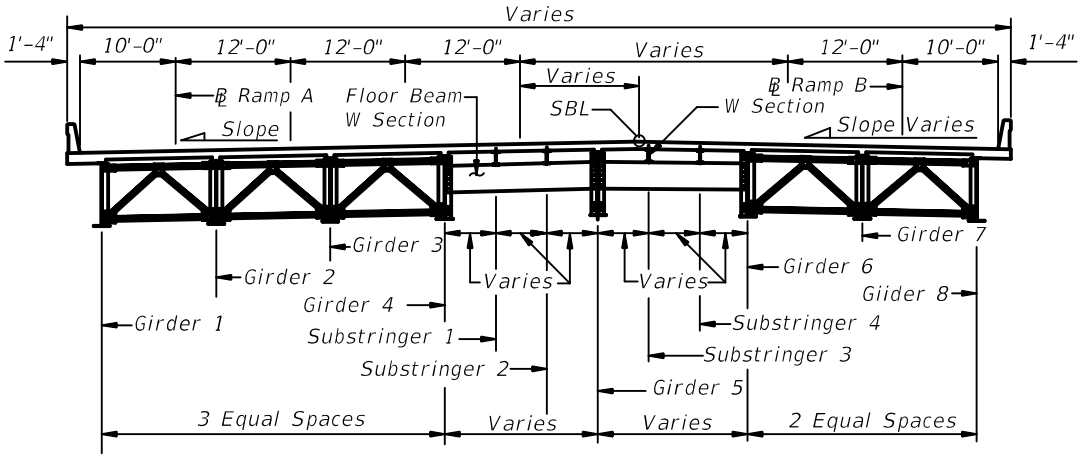

CROSS SECTION THRU GORE AREA

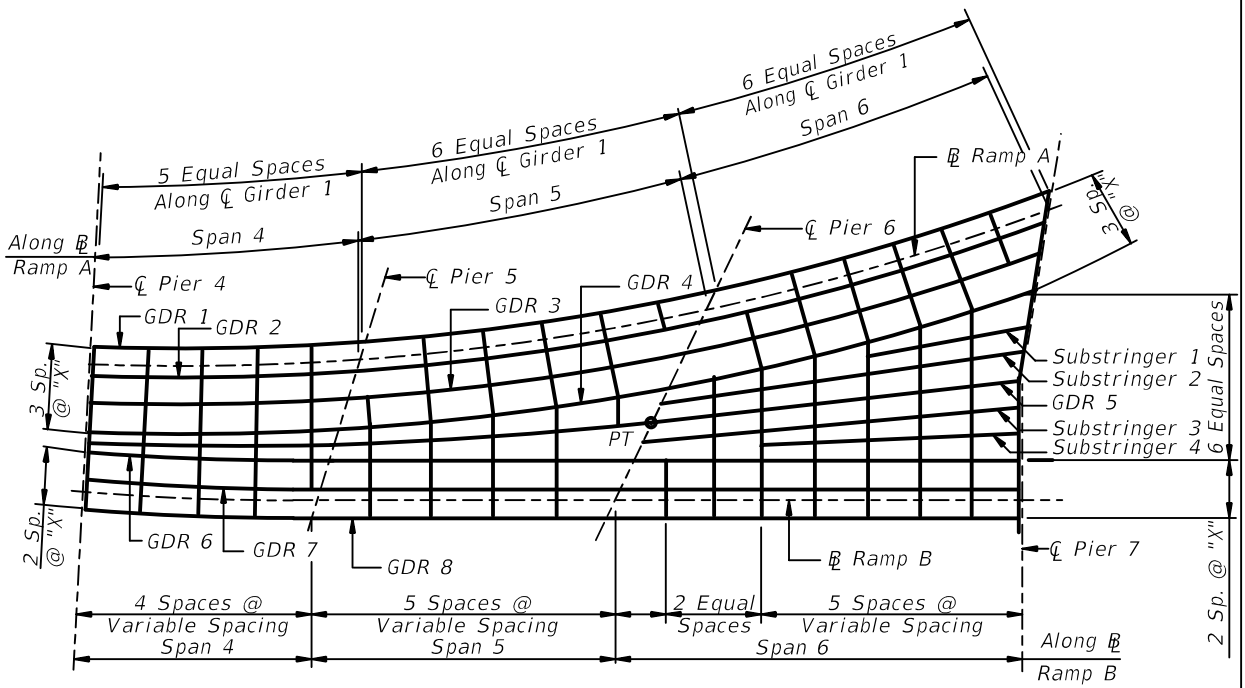

FRAMING PLAN GORE AREA

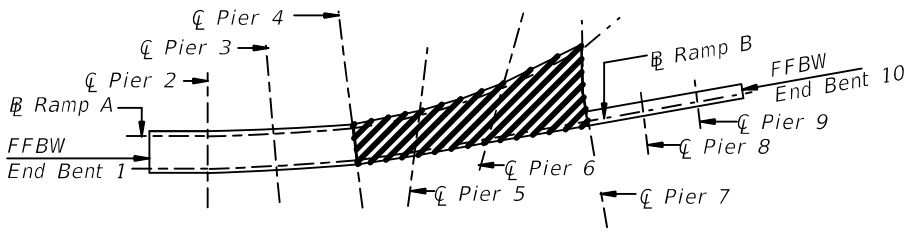

KEY PLAN

Figure 16.3-4 Framing Plan at Tapered Ramp

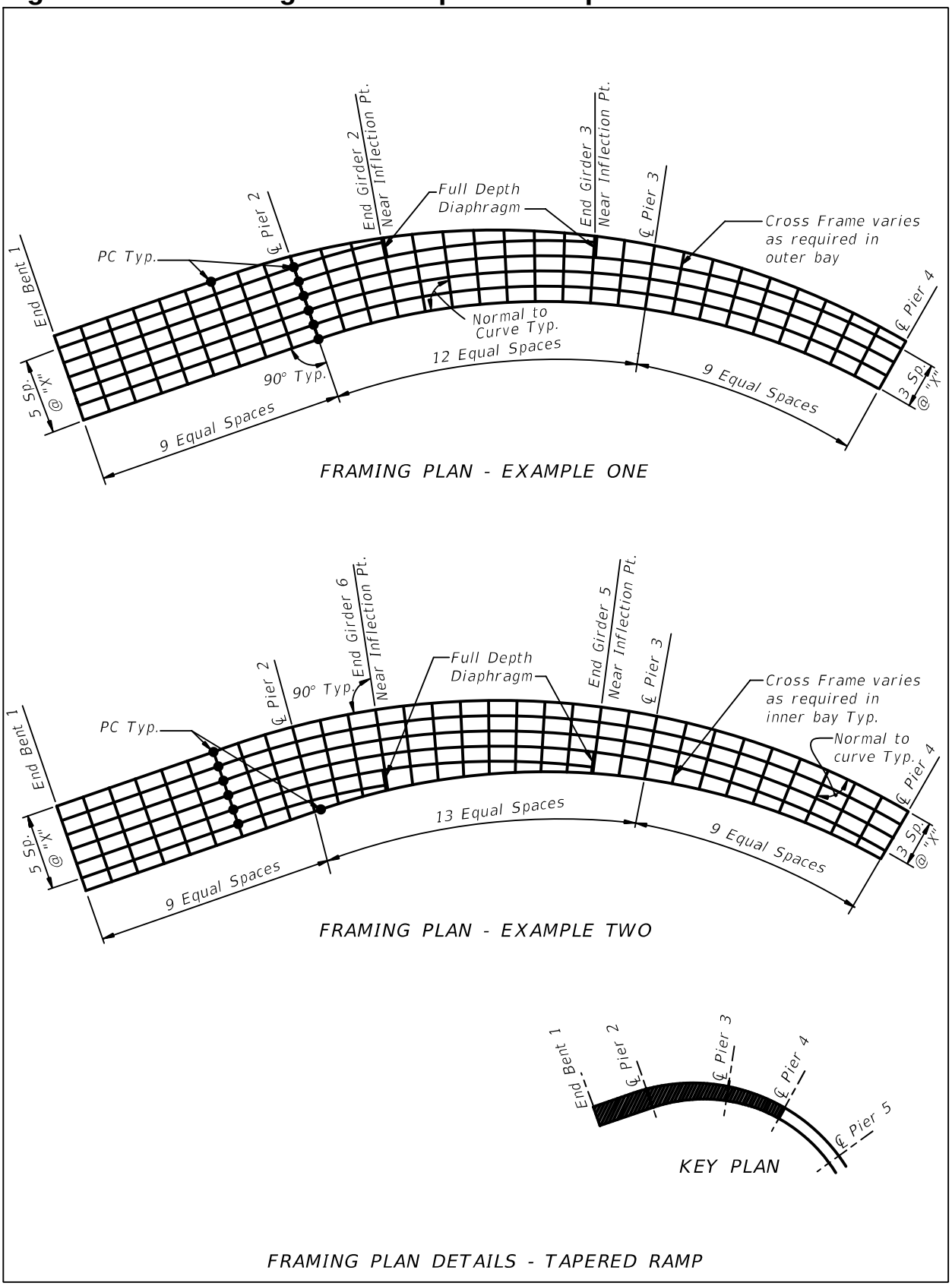

16.4 FRAMING PLAN DRAWINGS AND DETAILS - STEEL BOX GIRDERS

Provide a framing plan for steel box superstructures showing the following information (see Figure 16.4-1):

A. All applicable information shown in ***SDM*** 16.3.

B. Access opening location and spacing.

C. Drain hole location and spacing.

D. Limits of longitudinal stiffeners.

E. Centerline of top of web in plan view. (Do not show width of top flange.)

F. Permanent/temporary external diaphragm/crossframe locations.

G. Top flange lateral bracing system. See ***SDG*** 5.6.4.

Figure 16.4-1 Curved Box Girder Framing Plan

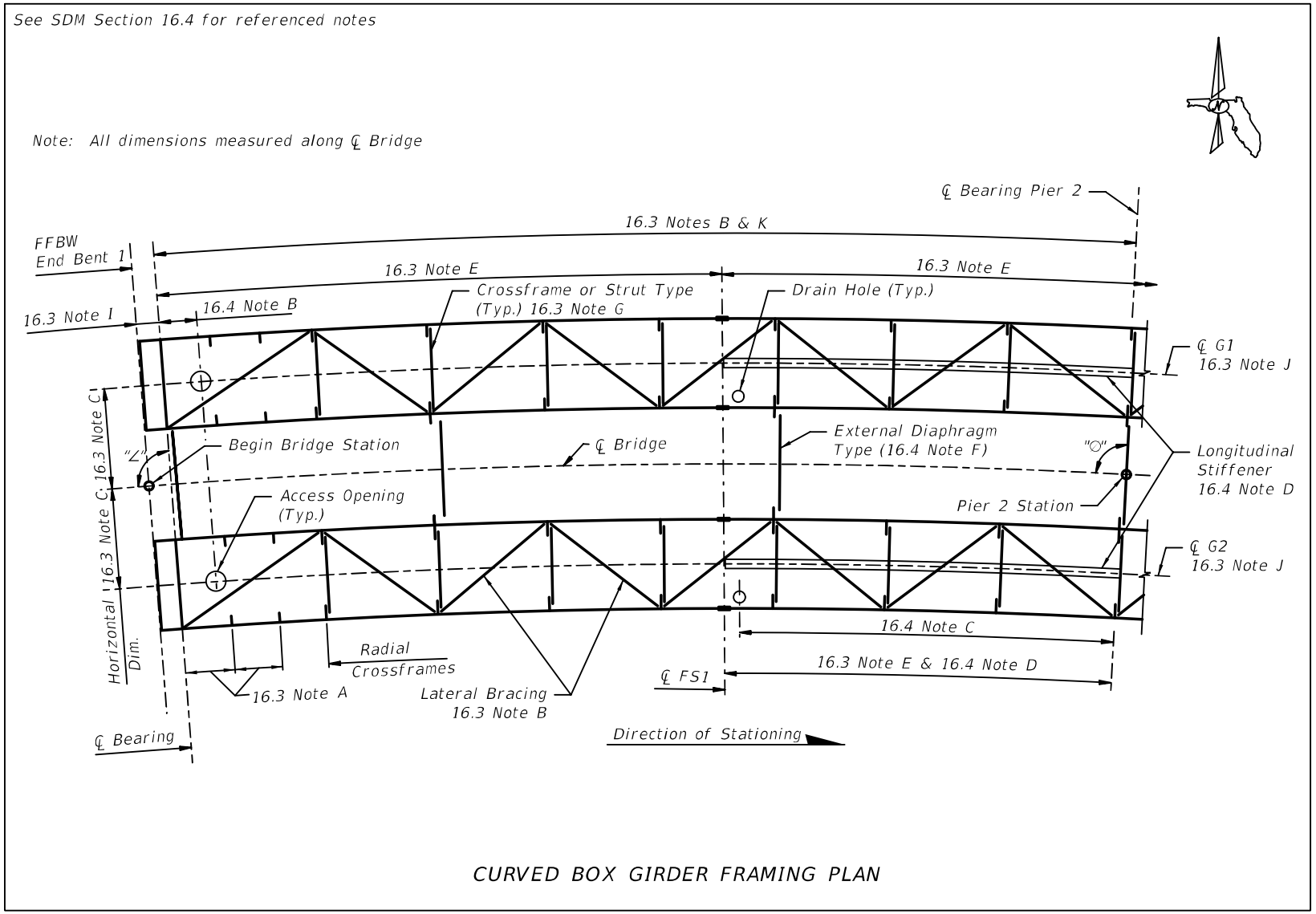

CURVED BOX GIRDER FRAMING PLAN

16.5 GIRDER ELEVATION

Girder Elevation sheets are required on all bridges with a steel superstructure. The girder elevation may be shown on the Framing Plan, or this may be a separate sheet. Much of the information presented here can be shown in tabular format, as required. Detail girder elevation upstation left to right. At a minimum, include the following on the Girder Elevation sheet:

A. Elevation view of girder. Vertical scale may be exaggerated for clarity. Provide suitable matchlines for girders that require more than one sheet.

B. Shear connector spacing along centerline of girder (centerline of box for box girders).

C. Flange plate sizes.

D. Web plate size.

E. Weld sizes and types. Reference welding symbols at www.aws.org.

F. Field splices. Number splices sequentially left to right. Designate optional splices as required.

G. Identification of Primary Members:

   1. Show where the member is in tension or stress reversal. For flanges, use dimension lines along the flange length. Webs may be designated with a note or arrow. Provide a note for Charpy V-Notch (CVN) testing requirements (***LRFD*** 6.6.2.1).
   2. Identify girder field splice plates requiring CVN testing.
   3. Identify NSTM by notation.

H. Dimensions for length along centerline girder as follows:

   1. From girder end to centerline of bearing at the end of the unit.
   2. Between centerline piers and/or centerline of bearing at the end of the unit.
   3. Between centerline(s) of bearing and field splice(s).
   4. Girder section changes. Show this dimension for top flange, bottom flange or web section changes.
   5. Limits of flange tension and stress reversal zones.

I. Bearing stiffener and jacking stiffener spacing from girder end and/or centerline bearing at intermediate supports. Space bearing and jacking stiffeners no less than 8-inches apart.

J. Show and dimension any penetrations in the web for vent holes, drainage pipes, post tensioning, sign/signal attachments, etc.

K. Material designation requirements for hybrid designs.

Figure 16.5-1 Typical Girder Elevation

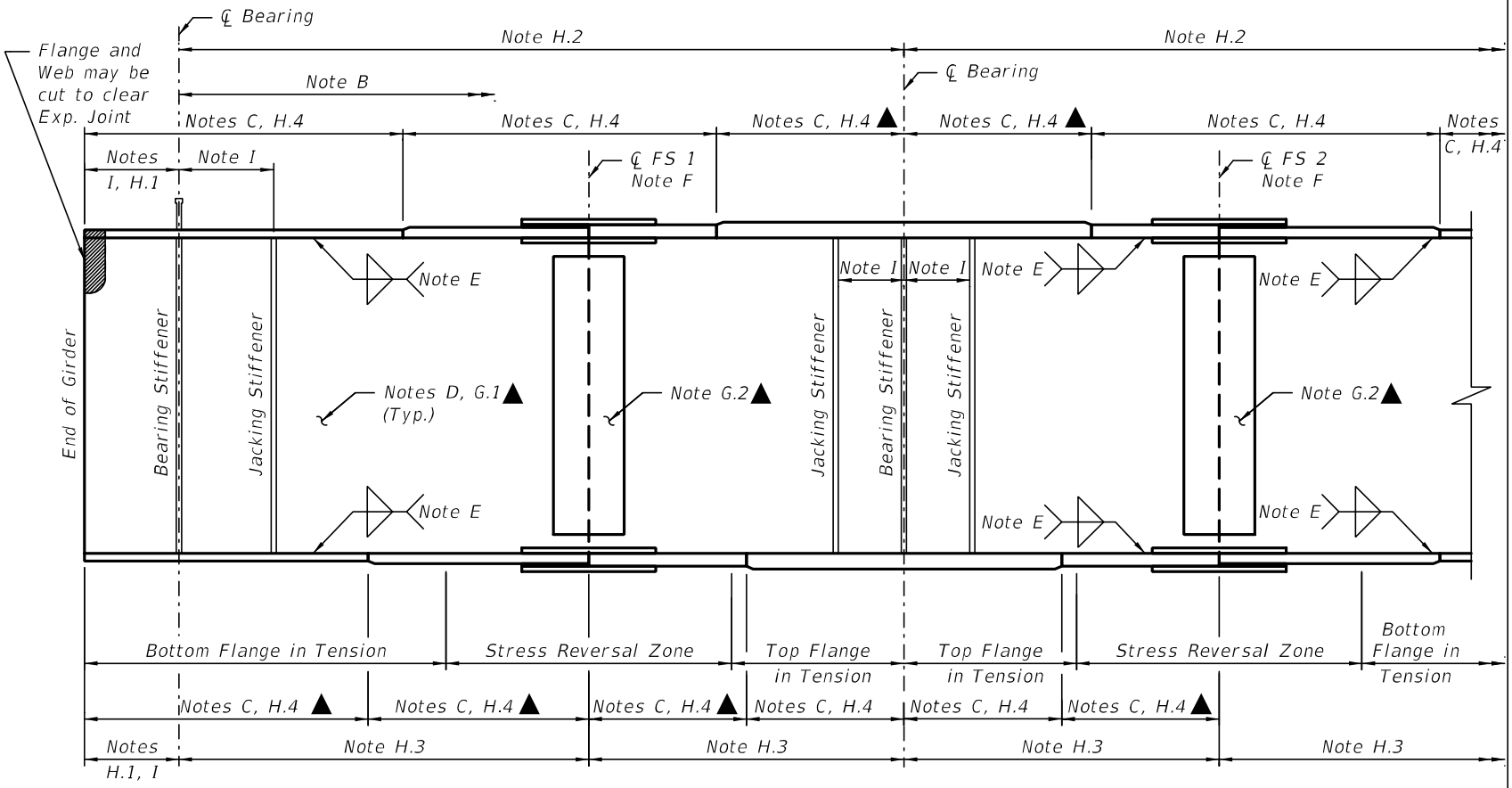

Notes:

1. *The girder flanges and webs are primary members (Note G).*
2. ▲ *= CVN testing required (Note G).*

TYPICAL GIRDER ELEVATION

16.6 I-GIRDER STIFFENER DETAILS

Include details on the Stiffener Detail sheets for fabrication and placement of bearing/ jacking stiffeners, intermediate stiffeners and crossframe connection plates. At a minimum, include the following on the Stiffener Details sheet (see Figure 16.6-1, Figure 16.6-2, Figure 16.6-3, Figure 16.6-4, Figure 16.6-5 and Figure 16.6-6):

A. Section of girder or diaphragm showing stiffener plate dimensions. Show enough sections to adequately address all stiffener scenarios. Do not double label a single section.

B. Plate sizes and dimensions for all stiffeners and connection plates. Size plate stiffeners taking into account bolt patterns and associated tolerances. Detail plate stiffeners in whole inch widths.

C. Weld type and dimension. Use appropriate welding symbols.

D. End conditions for stiffeners. Use "Finish to Bear" at the bottom of jacking and bearing stiffeners only.

E. Cut short or corner clip dimensions. Generally, a 1½-inch by 3-inch clip is preferred. Maintain the same clip dimensions throughout. For transverse intermediate stiffeners on straight girders not used as cross-frame connection plates, show both tight-fit and cut-back options in the plans at the tension flanges when top flange is in compression. See Figure 16.6-5.

F. Tab plate and cut back details. Tab Plates should be used only when the cost can be shown to be justified.

G. Weld termination detail.

H. Show transverse, jacking and bearing stiffeners orientation as required by ***SDG*** 5.8 and ***SDG*** 5.9.

I. Intermediate stiffeners on one side only and inside only for exterior girders.

Figure 16.6-1 Weld Termination Detail

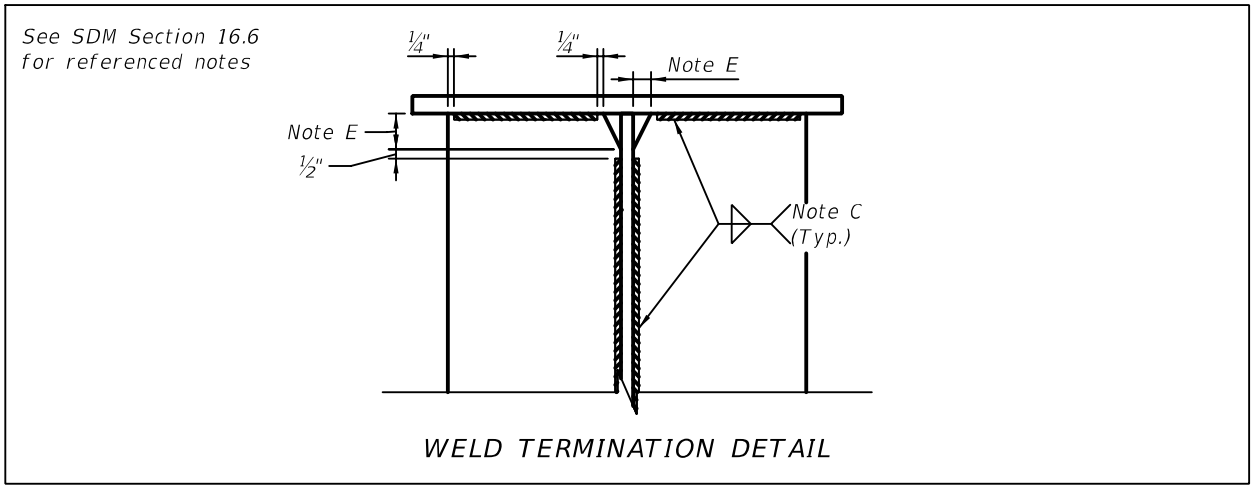

Figure 16.6-2 Tab Plate Detail

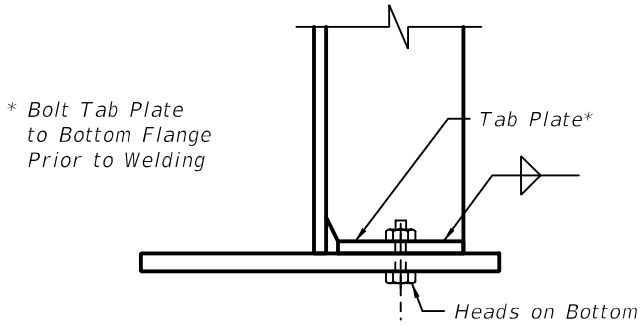

TAB PLATE DETAIL

Figure 16.6-3 Standard Clip Options

See SDM Section 16.6
for referenced notes

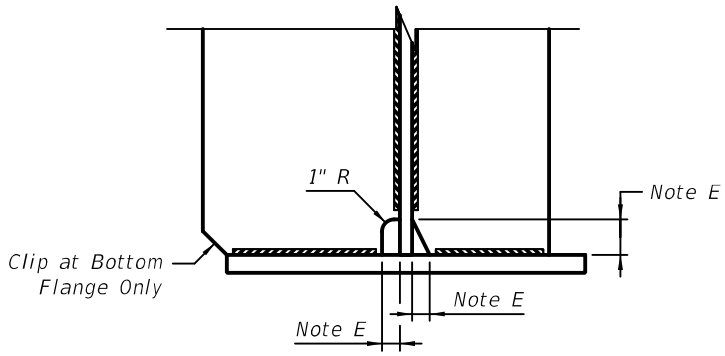

STANDARD CLIP OPTIONS

Figure 16.6-4 Details of Bearing/Jacking and Crossframe Connection Stiffeners

See SDM Section 16.6
for referenced notes

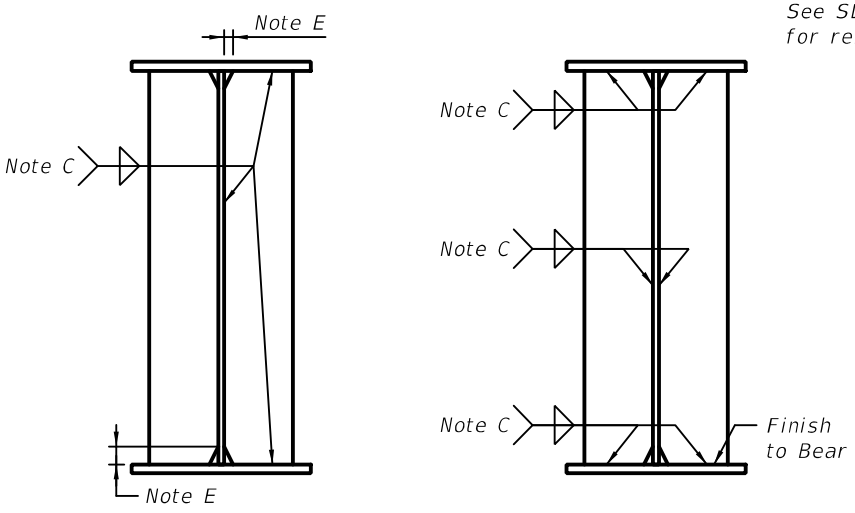

CROSSFRAME CONNECTION STIFFENER*

BEARING/JACKING STIFFENER

* Plate can be welded or bolted to tension flange. See Figure 16.6-2 & SDG 5.8.

Figure 16.6-5 Details of Intermediate Stiffeners w/o Crossframe Connections

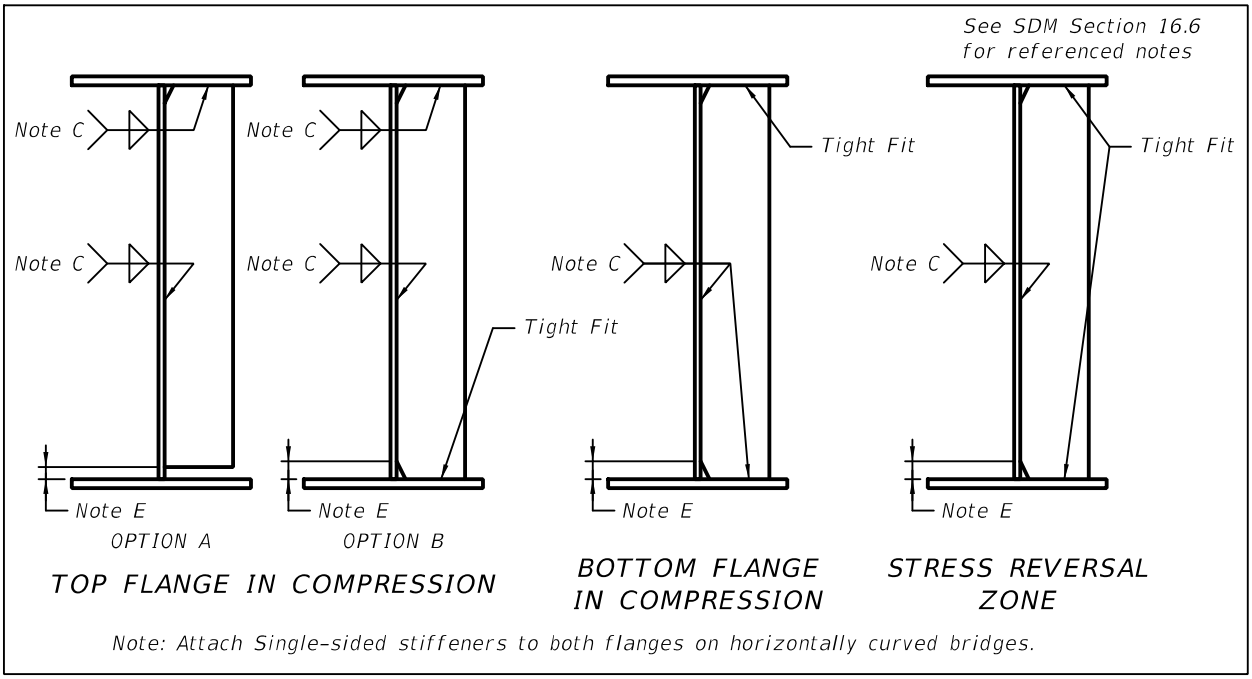

Figure 16.6-6 Details of Half-Round Bearing Stiffener (HRBS) Connections

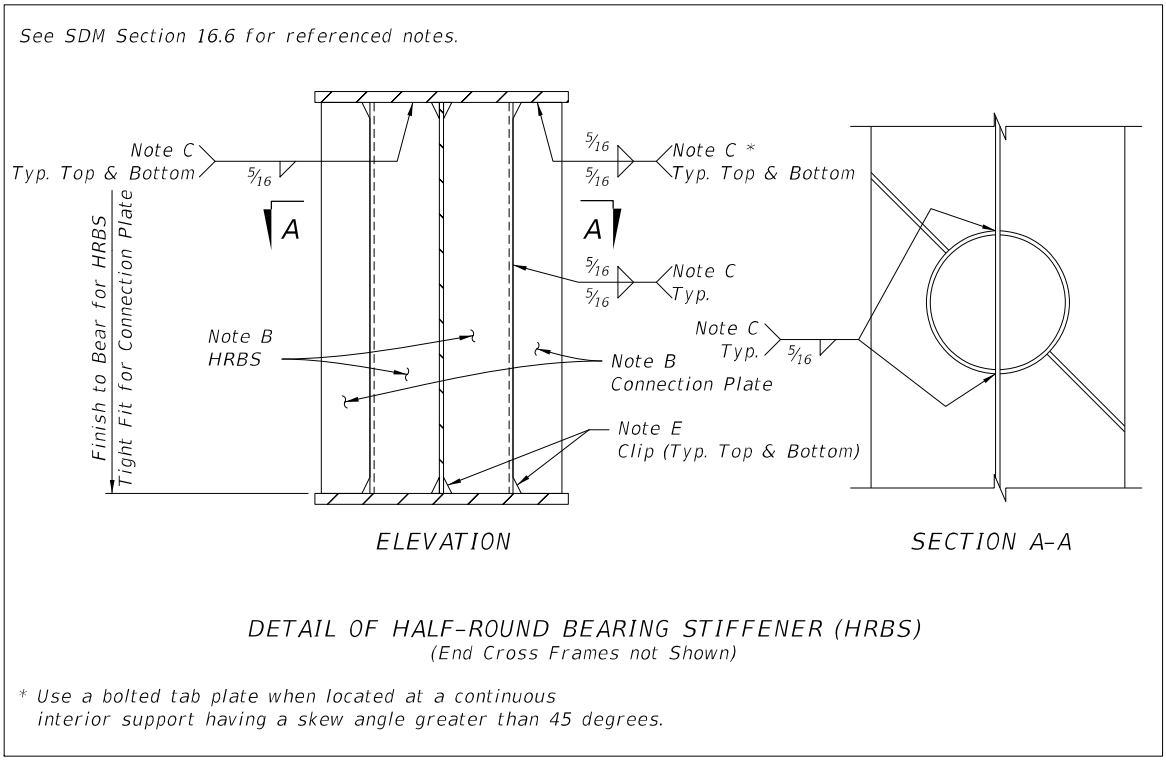

16.7 CROSSFRAME DETAILS - I-GIRDERS

Include details on Crossframe Detail sheets for fabrication and placement of intermediate and end crossframes. At a minimum, include the following on the Crossframe Details sheet (see Figure 16.7-1 and Figure 16.7-2):

A. Partial section of superstructure showing typical bay. Show at least one section for each type of end crossframe and intermediate crossframes.

B. Bolt layout and spacing, and bolt diameter and associated hole diameter/size (round/slotted) if they are different than those listed in the General Notes. Maintain minimum edge distances taking tolerances into account. Detail bolt patterns normal to girders. Field-drilled connections are preferred at closure pour bays.

C. Plate thickness for gusset plates.

D. Member sizes (angles, C-channels, WT-sections, etc.). Use standard shapes for all members. Show angles with horizontal leg on the upper side of member.

E. Shear connector spacing for end crossframes. Be aware of spaces required to bolt-up end crossframes.

F. Weld detail with dimensions. Weld termination details at all gusset and connection plates. Generally, ¼-inch fillet welds are preferable. Terminate welds ½-inch from edge.

G. Partial plan view of crossframe showing bent plates at skewed supports.

H. Details for temporary crossframes.

I. Deck drainage piping conflict details.

J. Dimension between top of web and top of top chord of crossframe (channel for end crossframes).

K. Connection type. Specify as slip-critical or bearing. Include a note, if applicable, stating threads are excluded from the shear plane and the washer and direct-tension-indicator (DTI), if used, is to be placed under the nut.

L. Member type. Specify as primary or secondary.

Figure 16.7-1 Typical I-Girder Cross-Frame Details

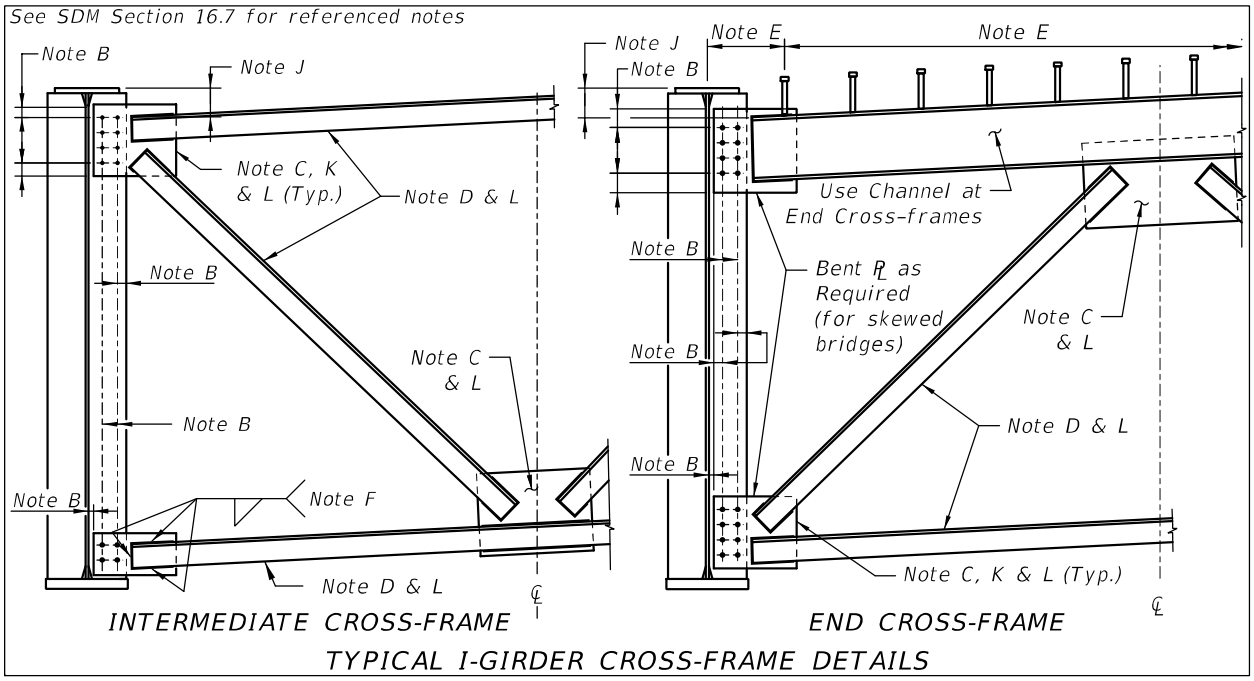

Figure 16.7-2 End Cross-Frame / Diaphragm Connection Details

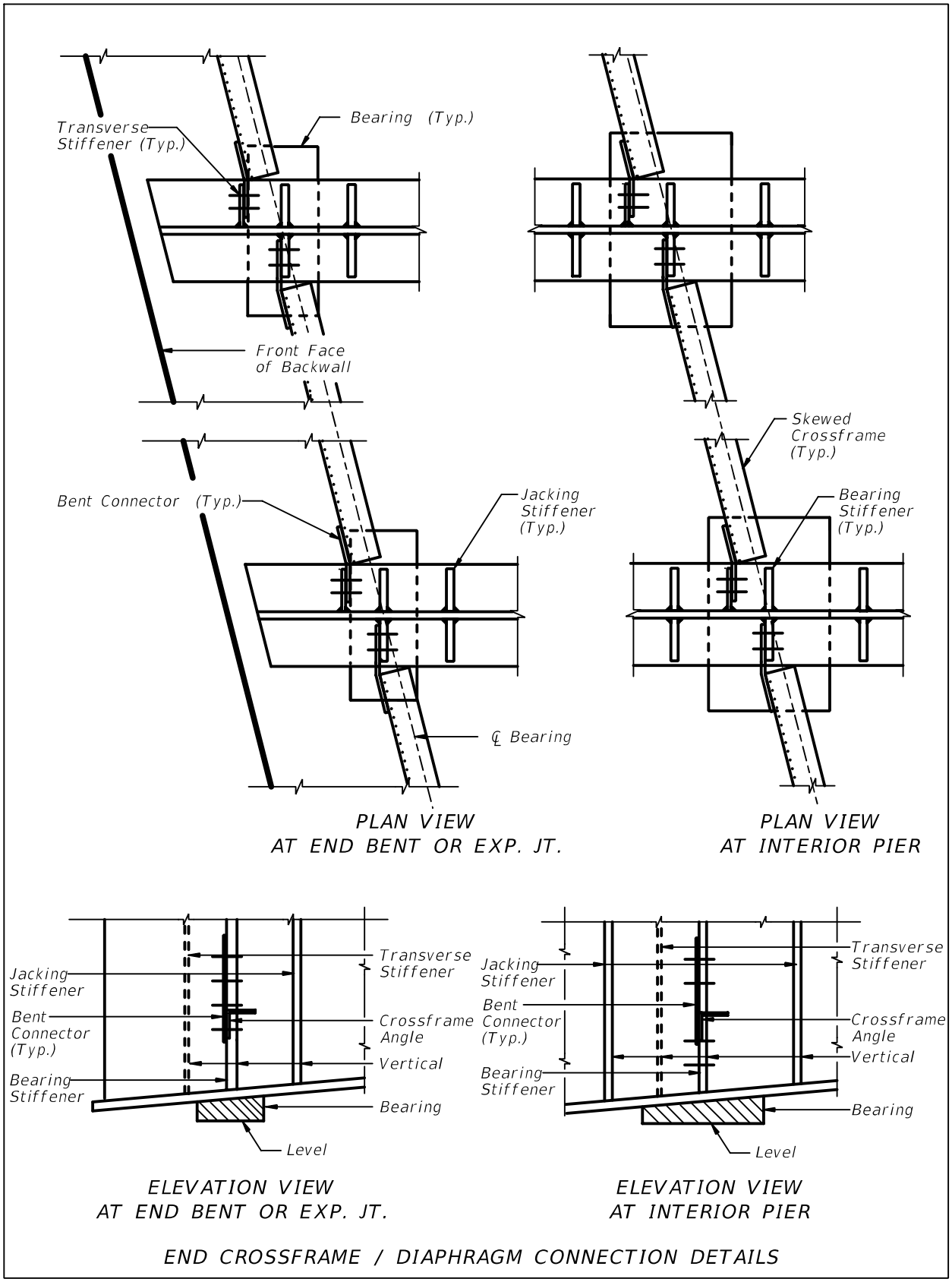

16.8 CROSS-FRAME & DIAPHRAGM DETAILS - BOX GIRDERS

Include details on Crossframe and Diaphragm Detail sheets for fabrication and placement of internal crossframes and diaphragms in box girders. This includes details for internal crossframes, internal lateral bracing, end diaphragms, external diaphragms and external crossframes. At a minimum, include the following on these detail sheets (see examples in Figures 16.8-1, 16.8-2, 16.8-3, 16.8-4, and 16.8-5):

A. Partial section of superstructure showing typical bay. Show at least one section each for all crossframes and diaphragms, internal and external.

B. Bolt layout and spacing, and bolt diameter and associated hole diameter/size (round/slotted) if they are different than those listed in the General Notes. Maintain minimum edge distances taking tolerances into account. Detail bolt patterns normal to girder web.

C. Plate thickness for gusset plates.

D. Member sizes (angles, C-channels, WT-sections, etc.). Use standard shapes for all members. Show angles with horizontal leg on the upper side of member.

E. Shear connector spacing for end diaphragms. Be aware of spaces required to bolt-up external end crossframes.

F. Weld detail with dimensions. Weld termination details at all gusset and connection plates. Generally, 1/4-inch fillet welds are preferable. Terminate welds 1/2-inch from the edge.

G. Top flange lateral bracing for box girders. The use of lateral gusset plates is permitted to aide bracing fit-up. Use fill plates where required to avoid conflict with formwork or diaphragm top flange. Include a plan view of lateral bracing connection details.

H. Tab plate details. Include weld sizes and termination details.

I. Details for temporary diaphragms.

J. Diaphragm details.

    1. Plate sizes.
    2. Location and sizes of stiffeners. Detail stiffeners normal to box bottom flange and vertical.
    3. Locations of access holes and utility holes.
    4. Cut out dimensions and connection details for longitudinal stiffeners.
    5. All applicable details listed above.

K. Connection type. Specify as slip-critical or bearing. Include a note, if applicable, stating threads are excluded from the shear plane and the washer and direct-tension-indicator (DTI), if used, is to be placed under the nut.

L. Member type. Specify as primary or secondary.

Figure 16.8-1 Steel Box Girder Cross Section Basic Geometry

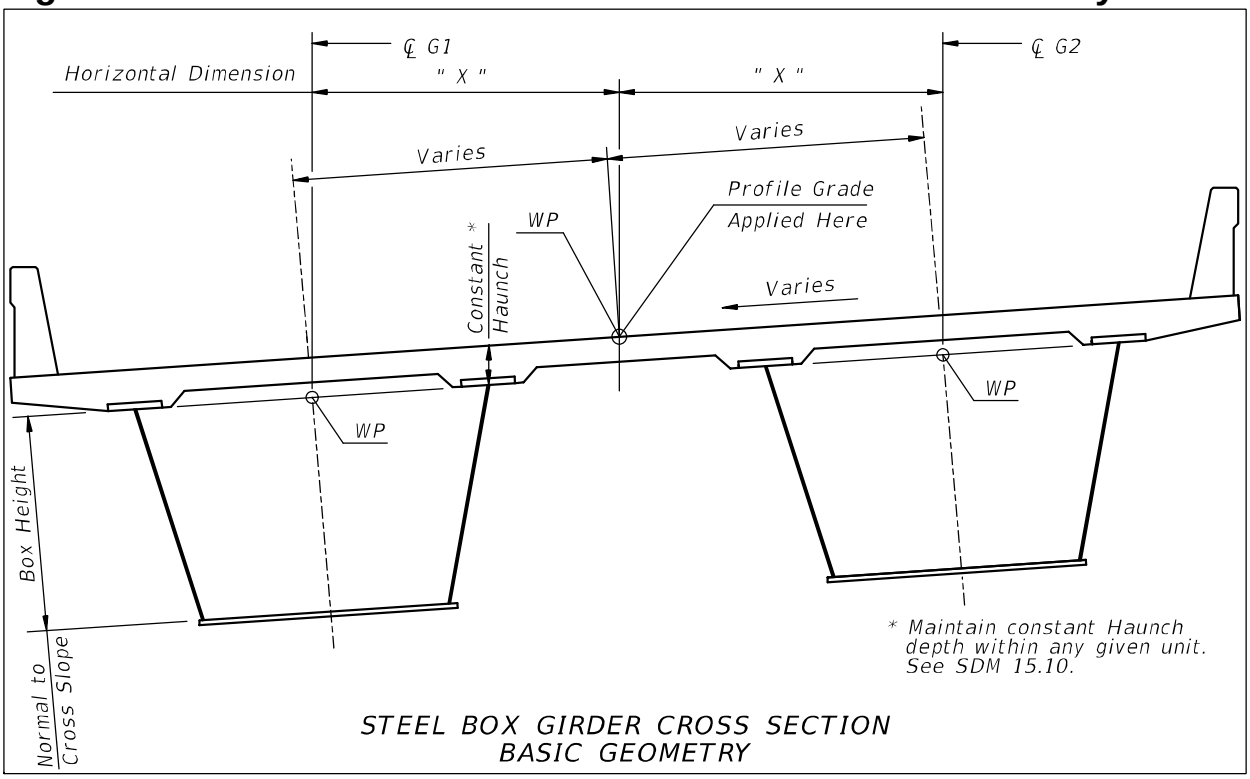

Figure 16.8-2 Steel Box Girder Pier Diaphragms

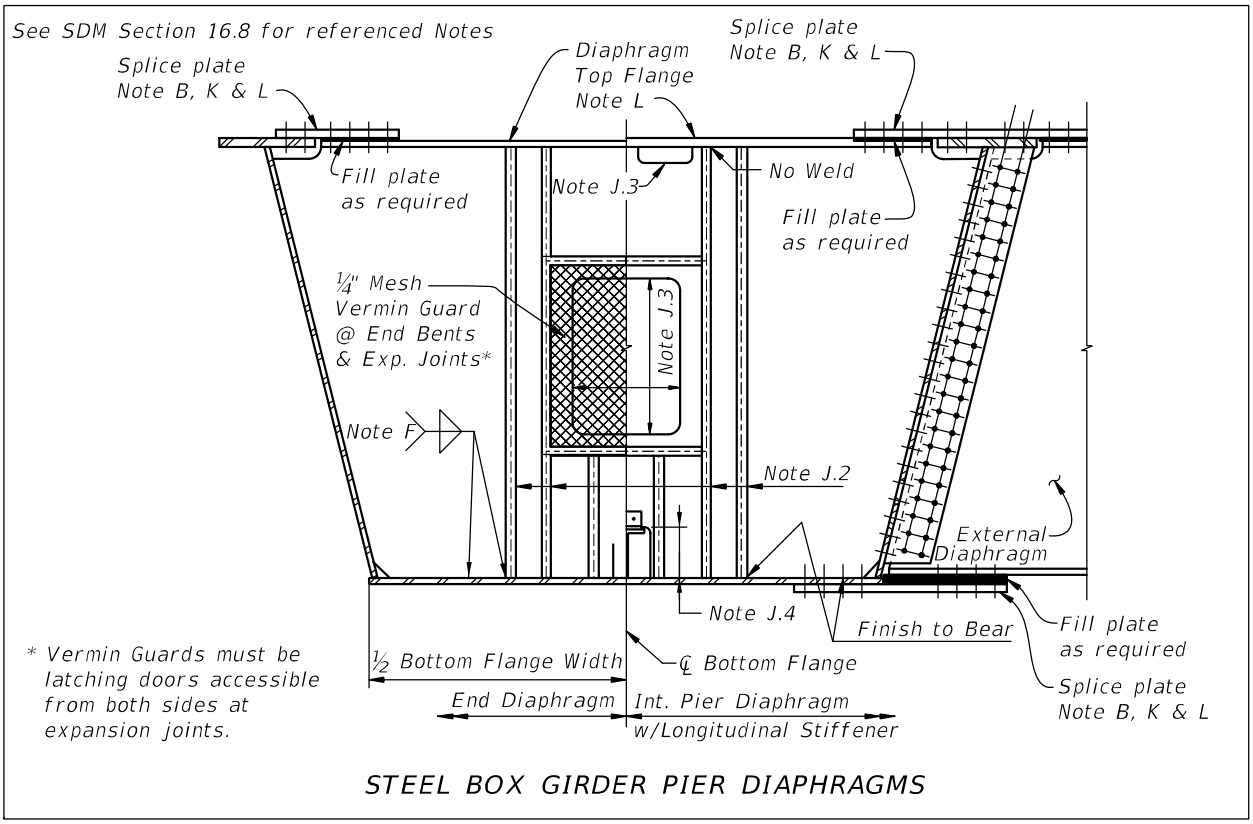

Figure 16.8-3 Steel Box Girder Internal Cross-Frame

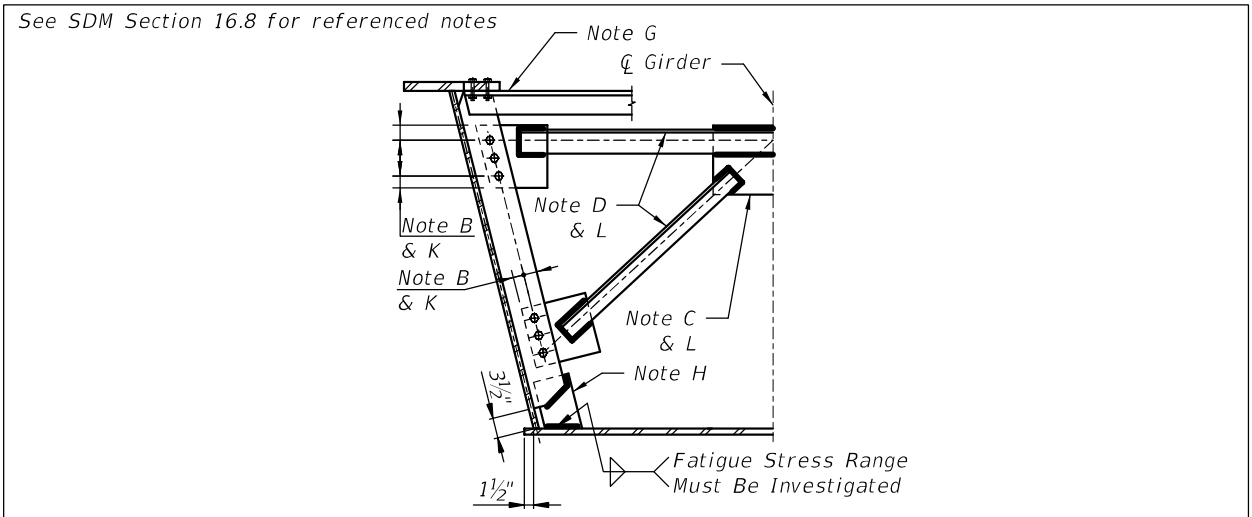

Figure 16.8-4 Steel Box Girder Cross-Frame with Longitudinal Stiffener

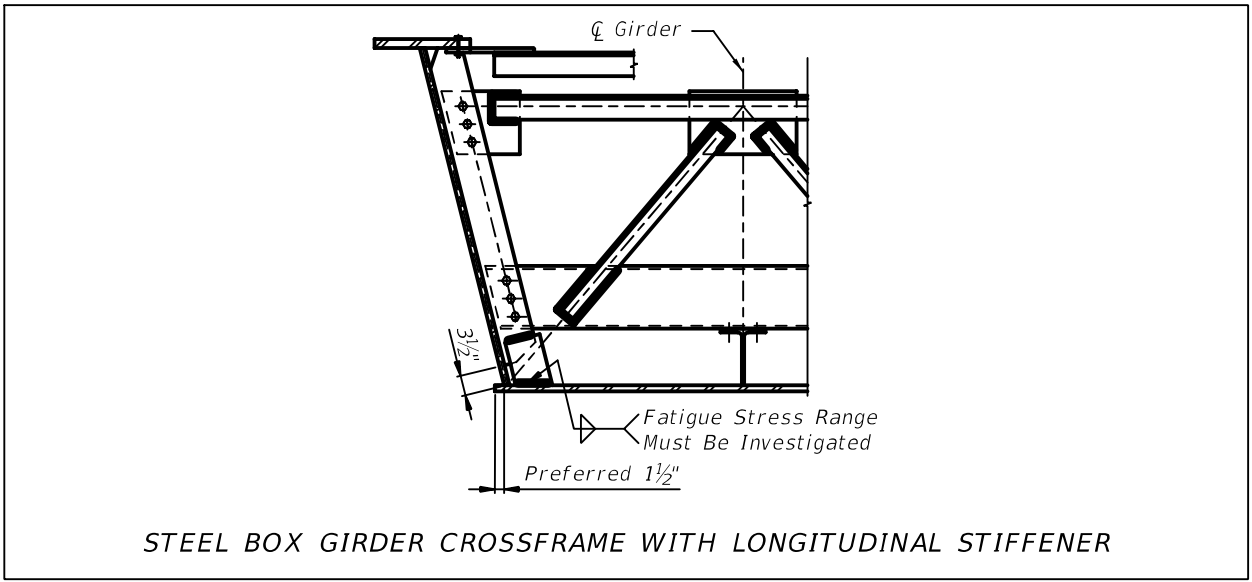

Figure 16.8-5 Steel Box Girder Intermediate Diaphragm Connection

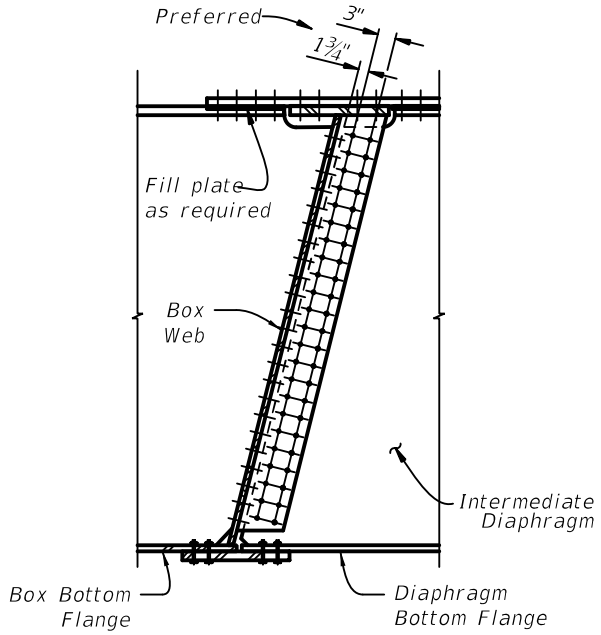

INTERMEDIATE PERMANENT EXTERNAL DIAPHRAGM CONNECTION TO BOTTOM FLANGE

Commentary: The bottom flanges of permanent external diaphragms must be connected to the box girder. Otherwise, the forces from the external diaphragm will induce out-of-plane distortions which may cause a fatigue crack. See Figure 16.8-5 as one example.

16.9 GIRDER CAMBER DIAGRAMS

Girder Camber sheets are required for all steel superstructures. Provide sufficient geometric reference for girder fabrication and deck placement on these sheets. Provide camber ordinates at the same intervals for which finished grade elevations are provided in accordance with ***SDM*** Chapter 14. For examples illustrating the content and format of completed Camber Diagram sheets, see the ***Structures Detailing Manual Examples***. Typically, camber ordinates are shown in tabular format. Show dead load camber along the centerline of the box for box girders, and camber along the centerline of the girder for I-girders. At a minimum, include the following on the Girder Camber sheet (see Figure 16.9-1 and Figure 16.9-2):

A. Line diagram showing a graphical representation of the following:
   1. Total camber including vertical curve camber*.
   2. Span number and length.
   3. Horizontal increment ordinate locations.
   4. Label centerline bearing.

B. Tabulated camber ordinates for the following:

1. Steel dead load camber.
2. Non-Composite dead load camber (deck, SIP forms, build-up, haunch).
3. Composite dead load camber (railings, utilities, noise walls, wearing surface, traffic separators).
4. Total dead load camber.
5. Vertical curve*. If not applicable, omit this row from the table.
6. Total required camber including vertical curve camber*.

* vertical curve ordinate not included for box girders.

C. Miscellaneous camber notes:

1. Indicate upward camber as positive.
2. Base deck dead load camber on deck casting sequence. Include a note in the plans that changes in casting sequence will require re-calculation of deck dead load camber.

Figure 16.9-1 I-Girder Camber Diagram

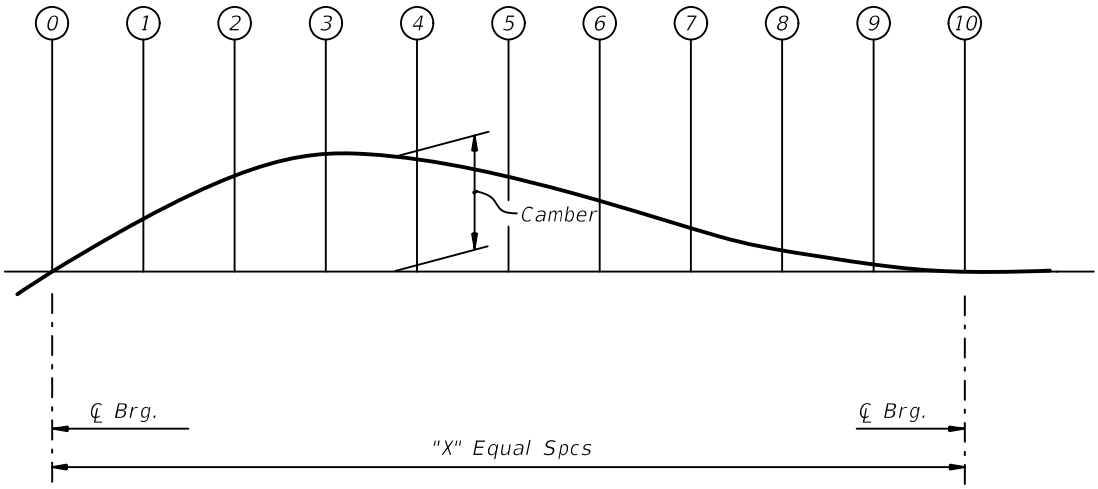

LINE		0	1	2	3	4	5	6	7	8	9	10
G1	STEEL DL	0										0
	CONCRETE DL	0										0
	COMPOSITE DL	0										0
	TOTAL DL	0										0
VERTICAL CURVE	VC	0										0
	REQUIRED CAMBER	0										0

Cambers can be given in fractions, decimal of a foot or decimal inches.
Upward camber is positive.

I-GIRDER CAMBER DIAGRAM

Figure 16.9-2 Box Girder DL Camber Diagram

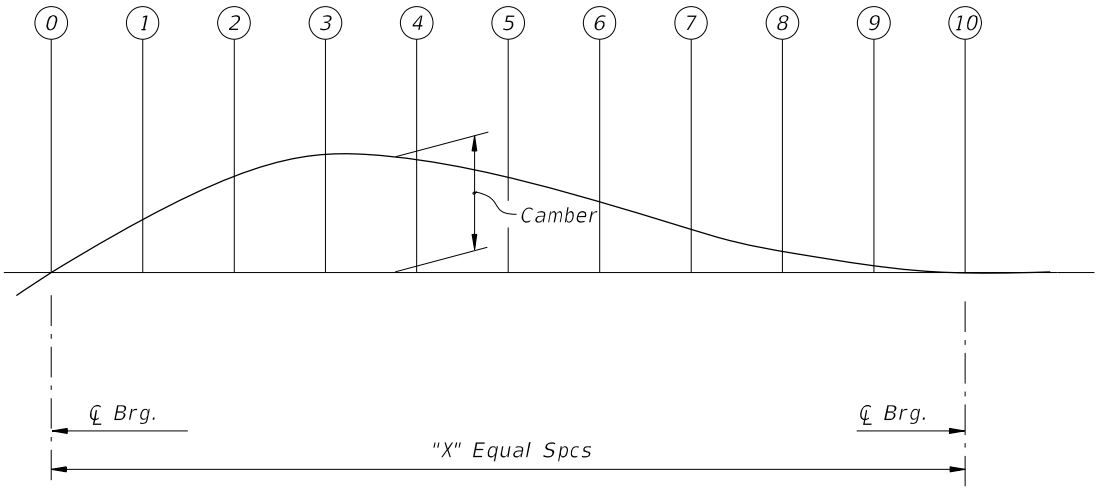

LINE		0	1	2	3	4	5	6	7	8	9	10
G1	STEEL DL	0										0
	CONCRETE DL	0										0
	COMPOSITE DL	0										0
	TOTAL DL	0										0

Cambers can be given in fractions, decimal of a foot or decimal inches.
Upward camber is positive.

BOX GIRDER DL CAMBER DIAGRAM

16.10 WELDS

A. Avoid using details that cause stress concentrations in the weld and a decrease in the basic allowable stress range.

B. It is the designer's responsibility to design the connections; however the detailer should be familiar with Table 6.6.1.2.3-1 in ***LRFD***. This table indicates that welds cause reductions in allowable fatigue strength and the reductions are governed by the magnitude of discontinuities in the welds.

C. Longitudinal weld terminations:

1. Terminate plates on cover-plated beams at the end of beams. Welds shall be continuous.
2. When attachments require longitudinal welds on beams or girders, refer to ***LRFD*** and ***SDG*** 5.11.2.

D. The simplest detail consistent with the stress requirements will generally be the most desirable from the standpoint of design, fabrication, and economics.

16.11 MISCELLANEOUS DETAILS

Steel girder details shall provide sufficient information for fabrication and erection of the girders. These miscellaneous details can be shown on a separate sheet or incorporated in any of the previous sheets, as space permits. The following details are typical for most steel girder applications:

A. Transverse shear connector spacing detail (weld symbol not required in this detail as it is covered by ***Specifications*** Section 502). See Figure 16.11-3.

B. Anchor bolt or rod details.

C. Field splice detail. Include the following (see Figure 16.11-2):

1. Plan view of both top and bottom flange. Include thickness and/or width transition detail. It is not necessary to transition top flange widths at field splices where the section changes since the top flange will not be visible.
2. Section view.
3. Elevation view.
4. Plate sizes and thicknesses, including filler plates.
5. Bolt layout and spacing, and bolt diameter and associated hole diameter/size (round/slotted) if they are different than those listed in the General Notes. Provide dimension from top of web to uppermost row of bolts in the web splice. Maintain minimum edge distance requirements.
6. Specify the field splice as slip-critical connection. Include a note, if applicable, stating threads are excluded from the shear plane.
7. Identify all splice plates as primary members.

8. Identify splice plates that require CVN testing.

D. Stay-in-place form details. Detail forms inside box girders to avoid conflicts with the top flange lateral bracing system. See ***SDM*** Chapter 15 for typical SIP form details.

E. Box girder details including the following:

1. Access opening details.
2. Vermin guards.
3. Diaphragm access opening details.
4. Drain holes and vent holes with screen covers. See Figure 16.11-4.
5. Electrical access holes.
6. Longitudinal stiffener details. Detail longitudinal stiffener termination as shown. See Figure 16.11-1.

F. Details for shop splices. Show minimum distances to field splice, section change locations, nearest stiffeners, etc. Detail welds as complete joint penetration welds. See ***SDG*** 5.11.3 and Figure 16.11-5.

G. Details for deck closure pours when phased construction is required or when widening an existing bridge. Show a section through the closure pour bay detailing the Phase I bolt holes in the connector plates as slotted and Phase II bolt holes in the connector plates to be field drilled. Include a note in the Plans requiring the crossframes in the closure pour bay to be installed and bolts fully tightened prior to placing the deck closure pour concrete. Closure pours should be kept as close as possible to the two foot minimum. Center closure pours between adjacent girders. Avoid phasing where closure pours are over girders. See Figure 16.11-6.

H. Field welding of sole plates to steel I-girders shall be in accordance with AASHTO/AWS D1.5. Provide details showing size and limits of welds along sides of flanges. See Figure 16.11-7.

Figure 16.11-1 Box Girder Bottom Flange Stiffener Transition and Termination Details

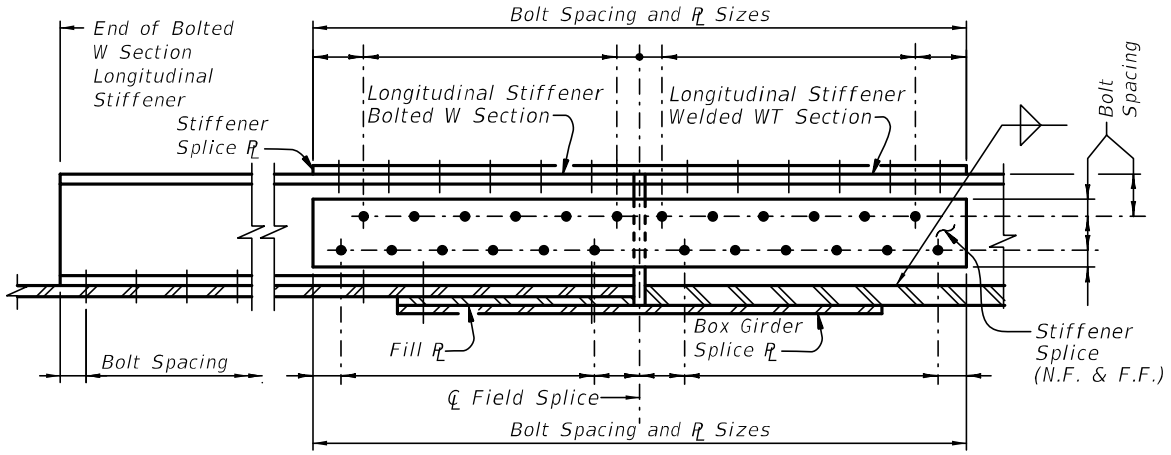

BOLTED LONGITUDINAL STIFFENER TERMINATION
(BEYOND FIELD SPLICE)

LONGITUDINAL STIFFENER TRANSITION AT FIELD SPLICE

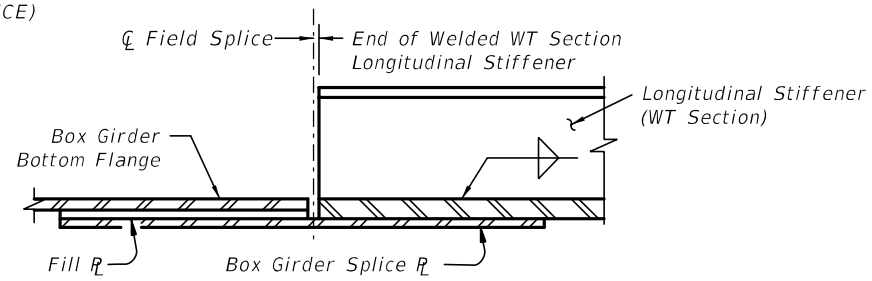

WELDED LONGITUDINAL STIFFENER TERMINATION
(AT FIELD SPLICE)

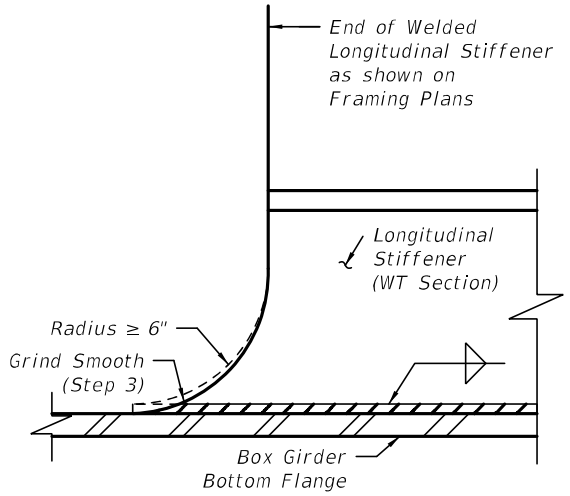

WELDED LONGITUDINAL STIFFENER TERMINATION
(BEYOND FIELD SPLICE)

BOTTOM FLANGE LONGITUDINAL STIFFENER TERMINATION WELDING SEQUENCE NOTES:

1. Cut Radius, Leaving enough material to permit a satisfactory Weld where the Cut Edge becomes tangent to the Bottom Flange.
2. Place Fillet Welds on both sides of the Stiffener.
3. Grind the Weld and the Stiffener material to a smooth contour.

BOX GIRDER BOTTOM FLANGE STIFFENER TRANSITION & TERMINATION DETAILS

Figure 16.11-2 Field Splice Detail

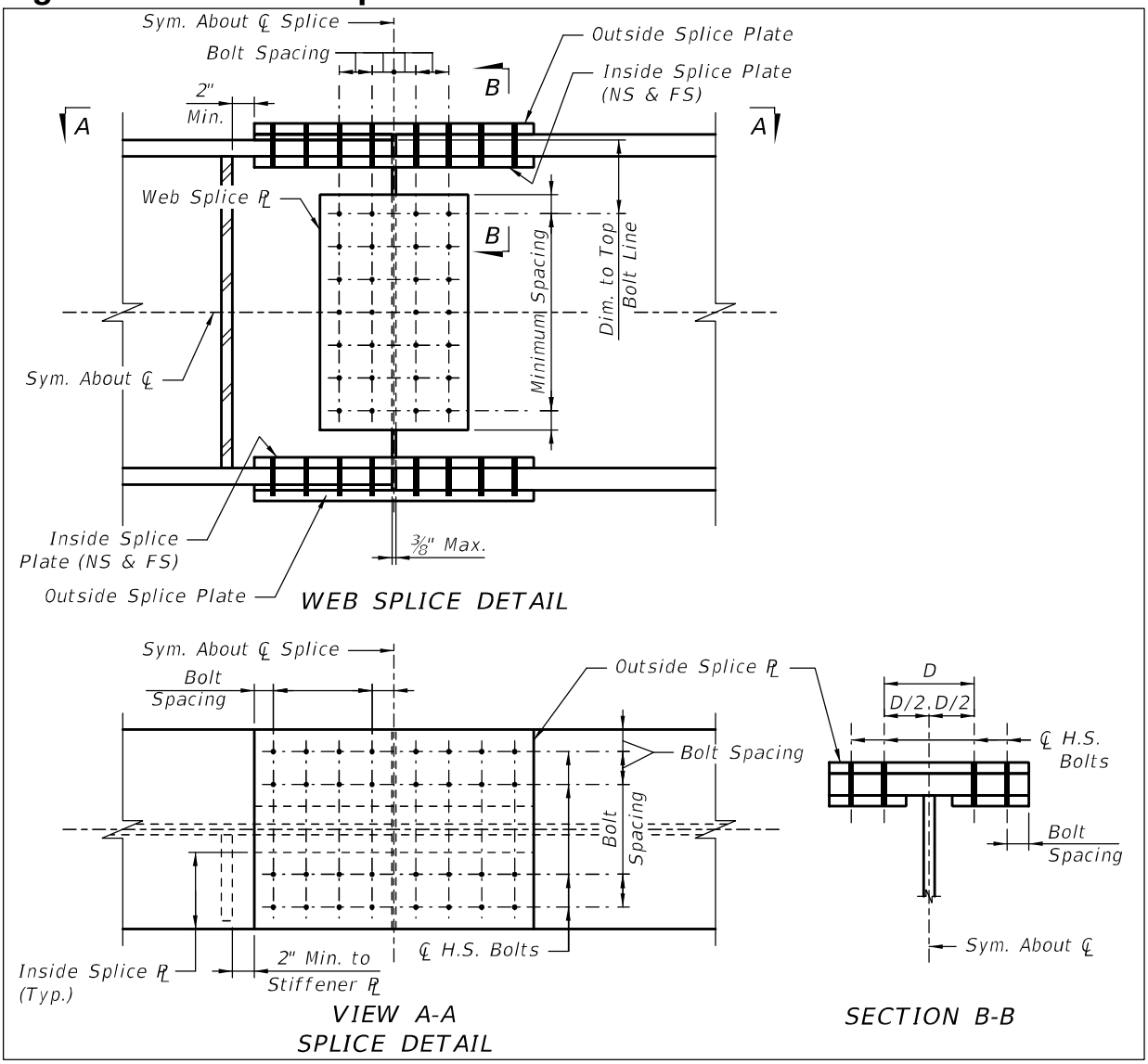

Figure 16.11-3 Top Flange Shear Connector Detail

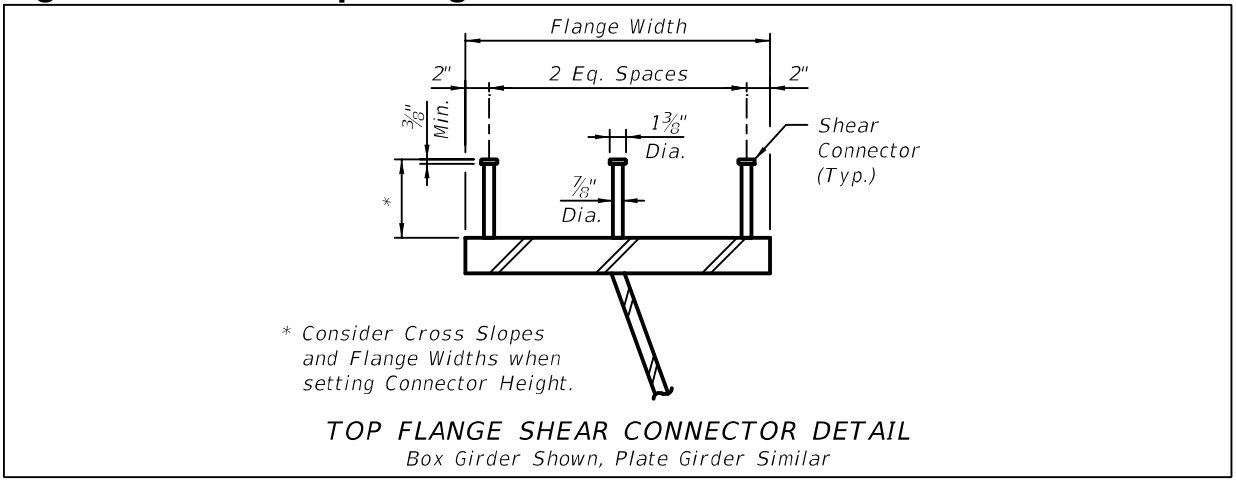

Figure 16.11-4 Box Girder Section with Drain and Vent Holes Detail

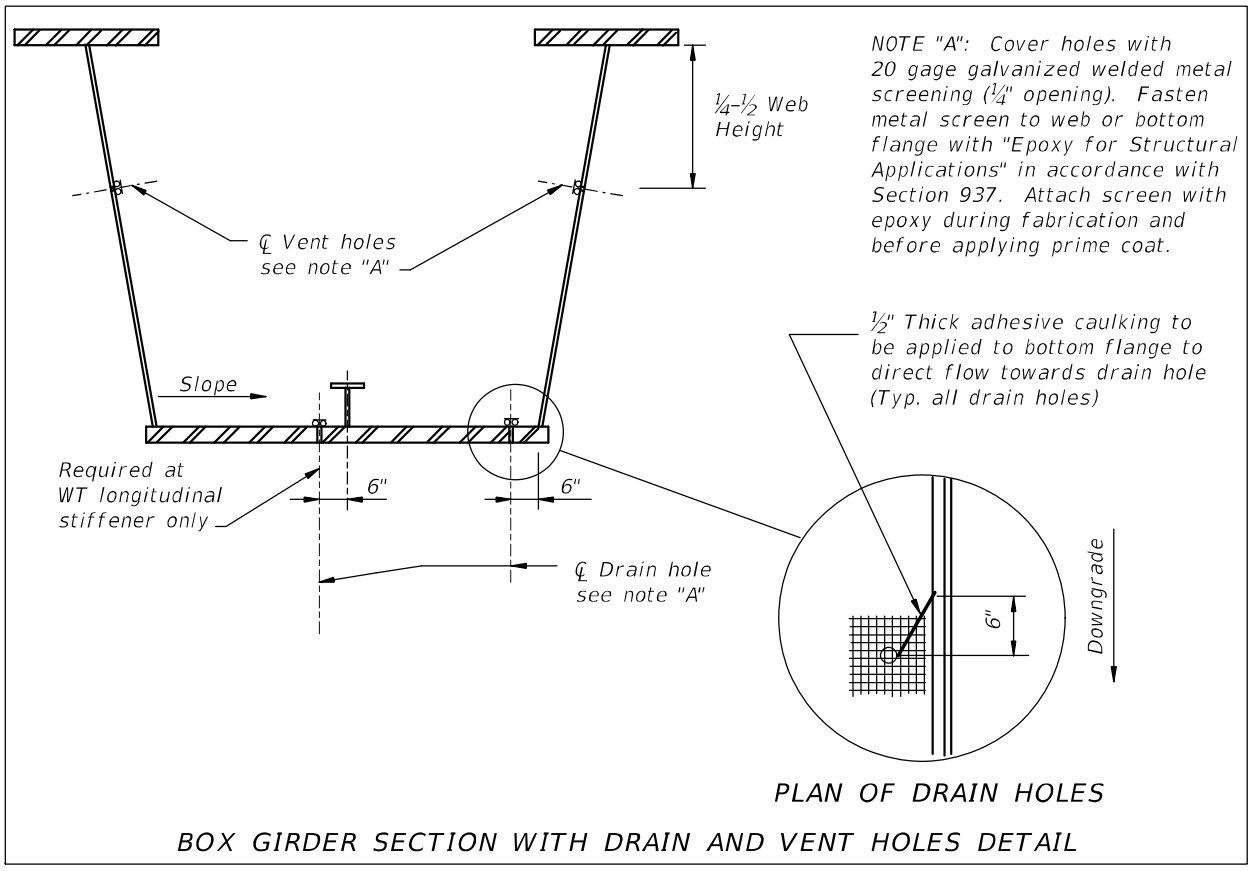

Figure 16.11-5 Shop Splice Details

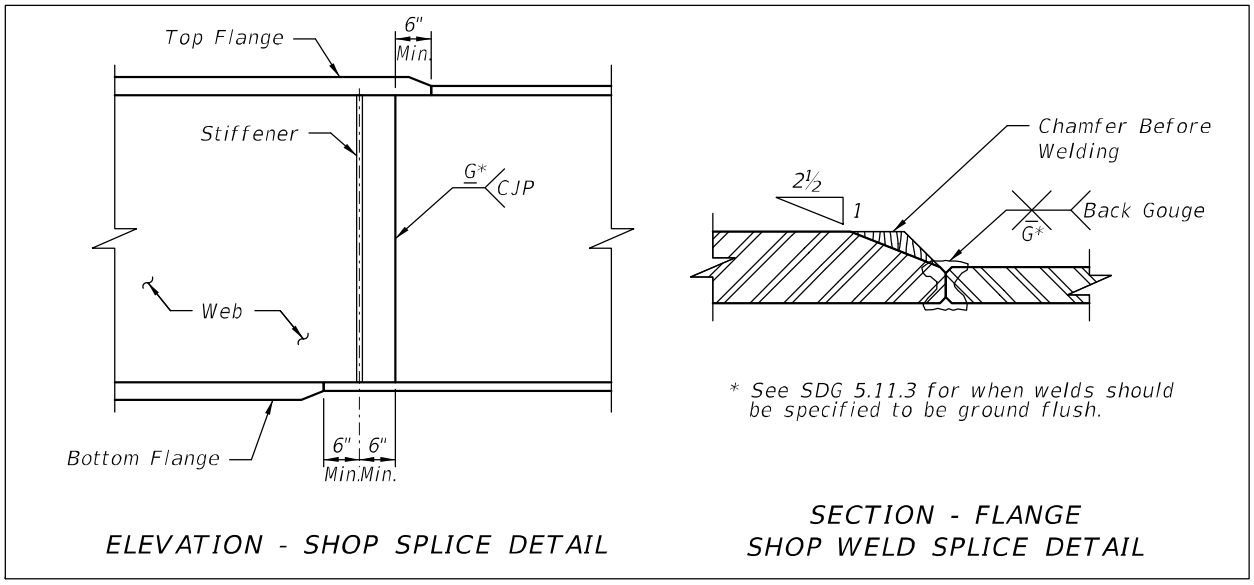

Figure 16.11-6 Phased Construction Steel Detail at Closure Pour

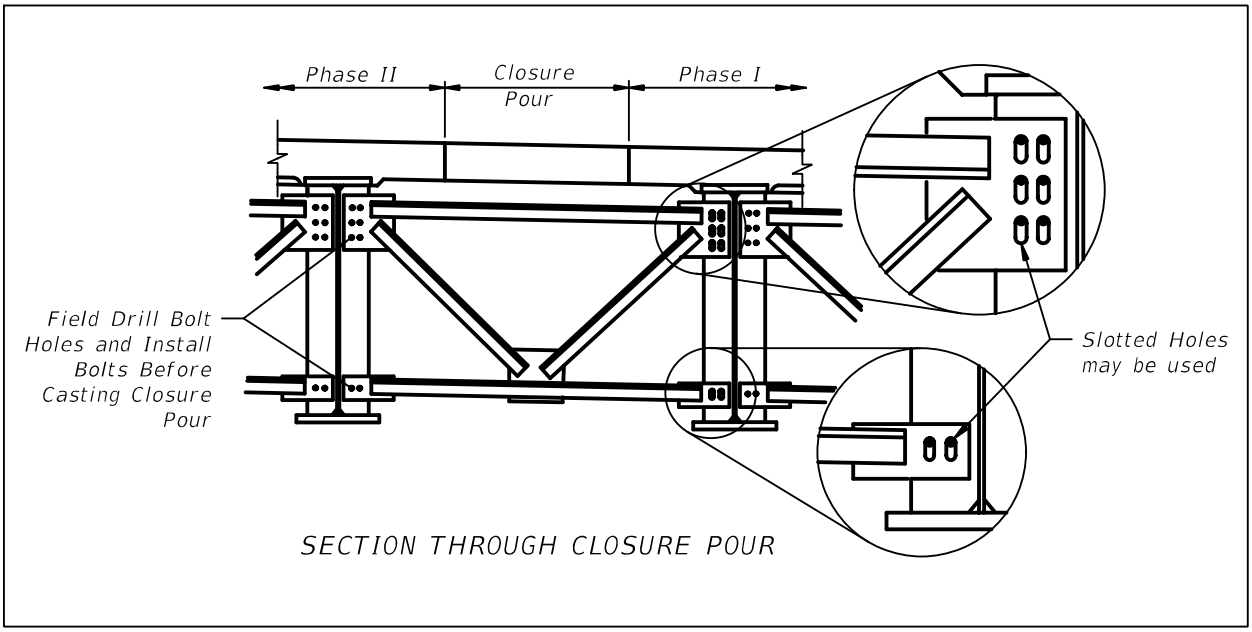

Figure 16.11-7 Sole Plate Details

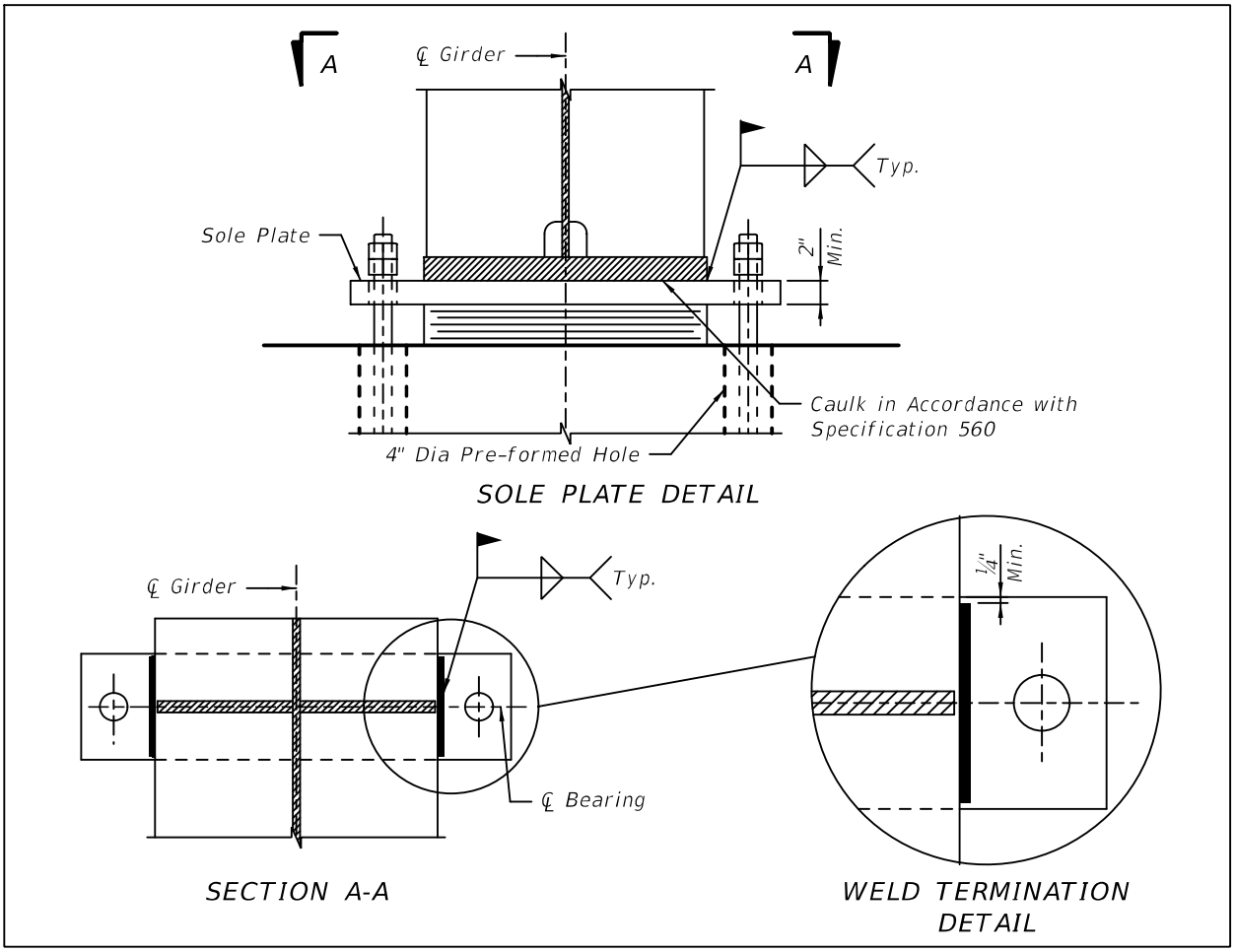

16.12 SPECIAL DETAILS FOR UNCOATED WEATHERING STEEL BRIDGES

The following details are required for uncoated weathering steel bridges to prevent corrosion of the girders and staining of the substructure elements due to runoff. See Figure 16.12-1, Figure 16.12-2 and Figure 16.12-3.

A. Provide Drip Tabs on the bottom flange of all box-girders and I-Girders up grade from each pier/bent to divert runoff water.

B. Provide Drip Strips along the outside edge of exterior I-girders to channel runoff water past pier/bents or to pier/bent troughs adjacent to girder ends.

C. Slope the caps at all end bents and at piers located at intermediate deck joints. Provide troughs or other means to drain water from the cap to a drain pipe embedded in the end bent or pier. At end bents, extend the pipe drain through the embankment and out of the adjacent retaining wall or slope pavement.

D. Provide a ½-inch thick sacrificial end plate at the ends of all I-girders to protect girders from leaky joints.

E. Use sealed expansion joints. Avoid any type of open joint that allows runoff to reach the steel.

F. Provide details that take advantage of natural drainage. Eliminate details that retain water, dirt, and other debris.

G. Provide a stainless steel drip pan at the top of each column supporting steel straddle pier caps. Show the drip pan connected to a drain pipe embedded in the column. Size the drip pan sufficiently so that it will capture water dripping from the straddle pier cap and prevent it from staining the sides of the column. Coordinate the design of the drip pan with the bearing.

Figure 16.12-1 Weathering Steel I-Girder Details (1 of 2)

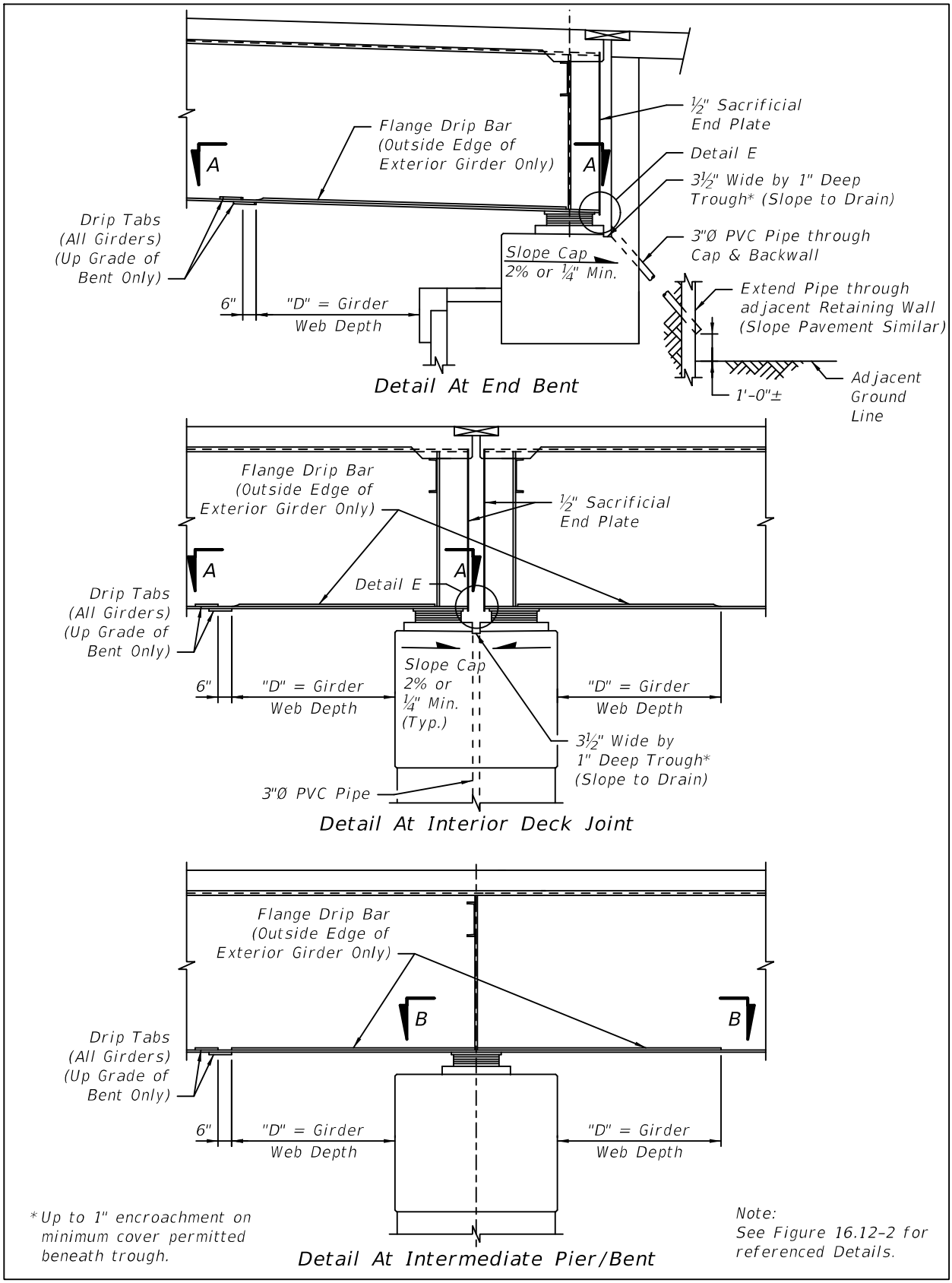

Figure 16.12-2 Weathering Steel I-Girder Details (2 of 2)

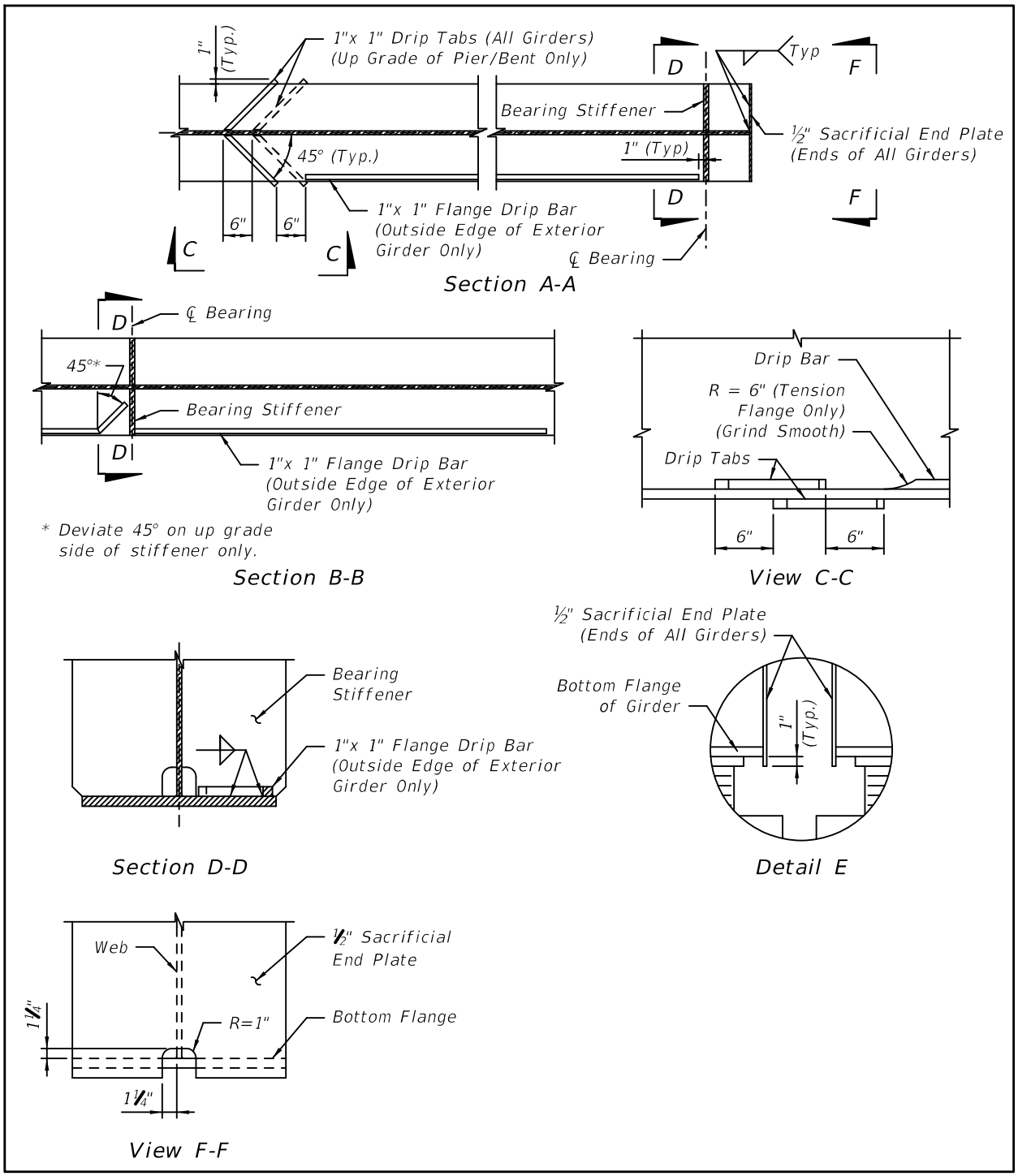

Figure 16.12-3 Weathering Steel Box Girder Details

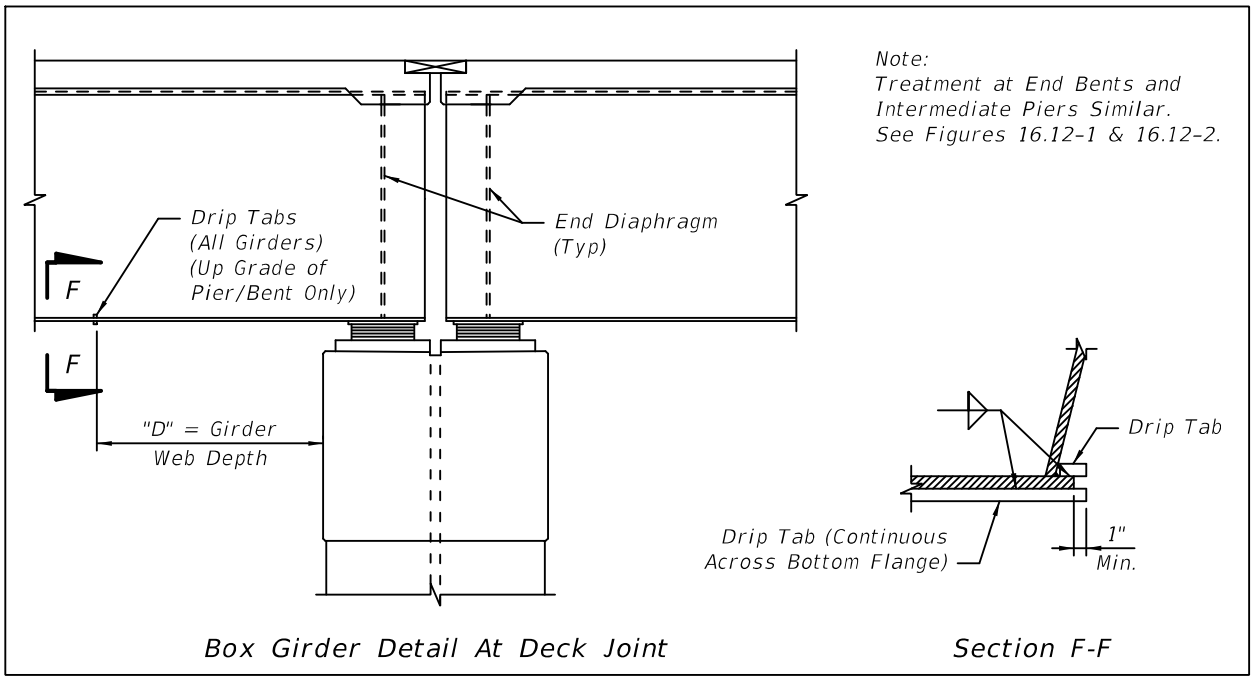

17 TYPICAL SECTION

17.1 GENERAL

A. The purpose of the Typical Section sheet is to show the dimensions for the bridge deck, beam spacing and roadway configuration. Reinforcement details belong on the Superstructure Section sheet(s).

B. The Typical Section sheet can be combined with the Pier Elevation sheet. This sheet should be titled Bridge Section sheet.

C. For an example illustrating the content and format of a completed Typical Section sheet, see the ***Structures Detailing Manual Examples***.

17.2 TYPICAL SECTION - DRAWING AND DETAILS

At a minimum, include the following in the Typical Section sheets:

A. Section of the bridge deck. Use a suitable scale for the drawing. If there are two bridges, show both sections. Break lines are allowed in the dimension and the drawing.

B. Right-of-way lines when bridge is being built on a new or shifted alignment. Show Temporary Construction Easement lines if applicable.

C. Station Line. Label PGL.

D. Dimensions for traffic railing widths, shoulder widths, lane widths, bike lane widths, sidewalks, median width and overall width. Include dimensioning of future lanes.

E. Existing bridge structure for widenings. Draw existing superstructure as dashed. Hatch or shade portions that are to be demolished.

F. Beam type, size and spacing. If spacing varies, indicate minimum and maximum dimensions. Reference appropriate ***Standard Plans***.

G. Overhang distance. If overhang varies, indicate minimum and maximum dimensions.

H. Traffic Railing type. Reference the applicable ***Standard Plans***. If more than one traffic railing is used (median, pedestrian, etc.) indicate each applicable ***Standard Plans***.

I. Traffic Separator. Reference appropriate option in the ***Standard Plans***.

J. Deck casting thickness.

K. Construction joints. Label construction phases consistently with the TCP and other sheets in the plan set.

L. Cross slope. If cross slope is in transition, show as "Varies".

M. Pier elevation. If pier elevation is combined with superstructure sheet, label sheet as Bridge Section.

18 ADA REQUIREMENTS

18.1 GENERAL

A. This chapter provides graphical representations of the preferred methods for compliance with the Americans with Disabilities Act (ADA) and Florida Accessibility Code. In general, special attention should be paid to sidewalks on bridges when:

1. Bridge or bridge approach grades are greater than 5%.
2. Drainage grates or scuppers are placed within the limits of the sidewalk.
3. Expansion joints are placed within the limits of the sidewalk.
4. Bridge cross slopes exceed 2%.

B. When required, include all details in the plans necessary to build the ramps and handrails based on accessibility code compliance.

C. See ***ADA Standards for Transportation Facilities*** for other facilities not covered in this chapter.

D. These guidelines are meant to apply to a broad range of situations. For situations where these guidelines will be difficult to implement, consult the DSDE for guidance.

18.2 RAMPS AND HANDRAILS - GRADES GREATER THAN 5%

Sidewalks on bridges must comply with ADA and Florida Accessibility Code. The following details are intended to address sidewalks with grades steeper than 5% and/or cross slopes greater than 2%. The following guidelines apply to sidewalks on bridges that meet these criteria:

A. For grades greater than 5%, ramps will be required. Provide landings and maximum grades as outlined in the ***ADA Standards for Transportation Facilities*** and the details shown in Figure 18.2-1.

B. Where ramps are required, handrails are required on both sides of the sidewalk. Place handrails at a constant distance from the landing/ramp surface. For aesthetic purposes, the pedestrian/traffic railing shall be constant throughout the bridge. Modify the height of the pedestrian/traffic railing to hide the ADA handrail. See Figure 18.2-2 and Figure 18.2-3.

C. Design handrails in accordance with ***SDG*** 6.8.

D. Show rails continuous over a minimum of three wall brackets. Space splices at 40'-0" centers maximum. Locate the center of a splice near the edge of a wall bracket.

E. Indicate with plan notes that the Contractor is required to submit the following to the Engineer for approval prior to fabrication:

1. Shop drawings with complete details including rail bracket and expansion joint locations. Indicate component details, materials, finishes, connections, and joining methods and the relationship to the adjoining work.

2. Summary of the materials for the proposed rail system, including mill analysis with certification by the producer that the parts are the alloys specified and meet the specifications called for. See ***Specifications*** Section 965.
3. The manufacturer's engineering design and data for the rail system and components signed and sealed by a Professional Engineer registered in the state of Florida.
4. The manufacturer's installation instructions and product data.

F. Materials and Finishes: Indicate the following materials and finishes requirements on the plans:

1. Rails and splice assemblies are to be fabricated from extruded aluminum pipe, Alloy 6061-T6 or 6063-T52 ASTM B 221. Provide Schedule 40 rails with nominal size of 1½-inches, 0.145 minimum wall thickness with a mill finish.
2. Provide wall brackets of extruded aluminum alloy 6061-T6 or 6063-T52 ASTM B 221 with a mill finish.
3. When directed by the DSDE, galvanized steel may be substituted for aluminum pipe and wall brackets.

Modification for Non-Conventional Projects:
Delete ***SDM*** 18.2.F.3 and see the RFP for requirements.

4. Provide mechanical fasteners of the type and size required by the manufacturer's specification and design calculations.
    a. Provide anchor bolts for the brackets in accordance with ASTM F1554, Grade 36. Anchor bolts, nuts and washers must be hot-dipped in accordance with ***Specifications*** Section 962.
    b. Use stainless steel, ASTM F-593, Alloy Group 2 (316) for all fasteners and washers used at the splice assemblies and to mount the rails to the brackets.

G. Erect rails parallel to and 2'-10" above the top of pedestrian ramp as shown in Figure 18.2-3.

Figure 18.2-1 Maximum Slopes and Landing Spacing and Dimensions for Ramps

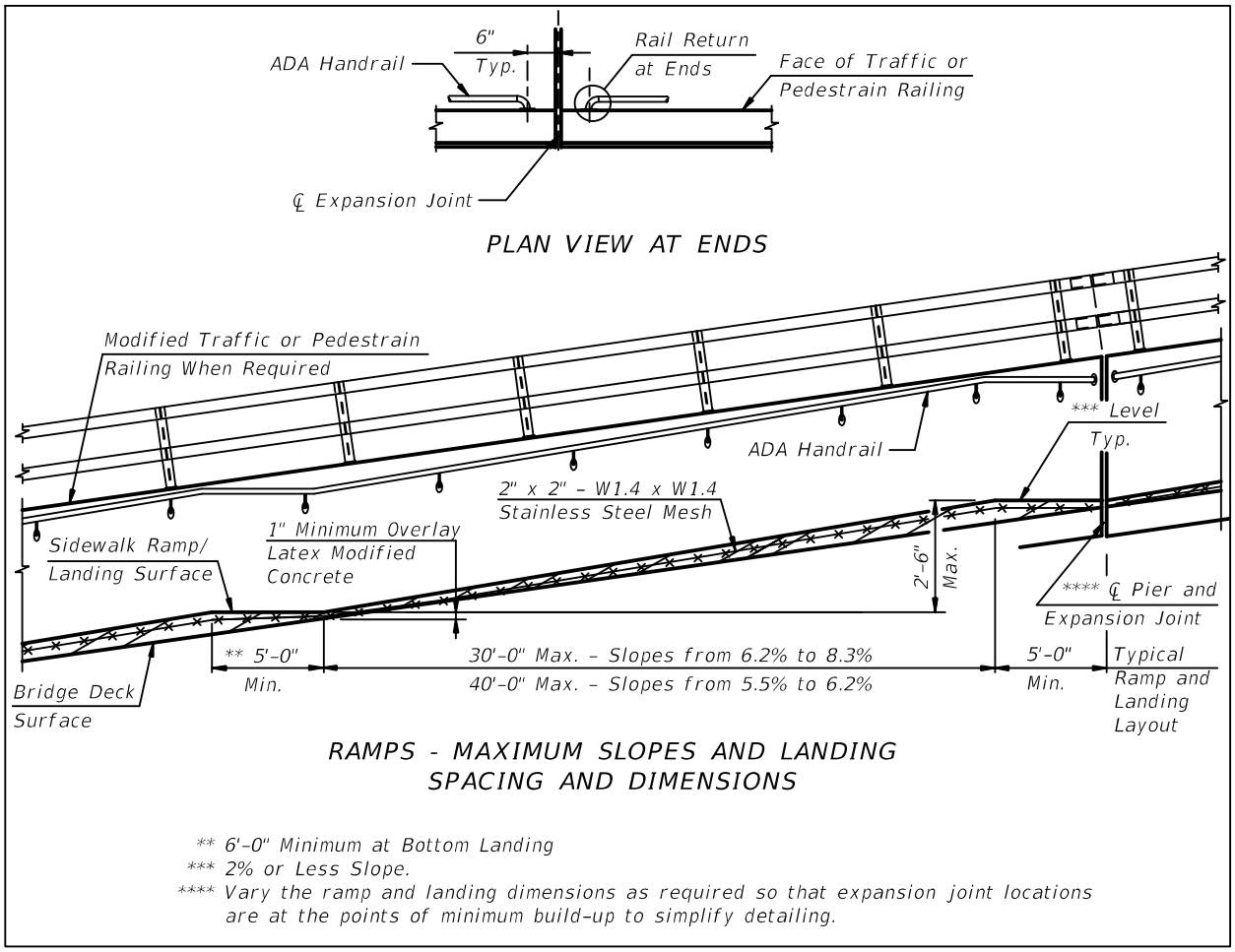

Figure 18.2-2 ADA Handrail Detail

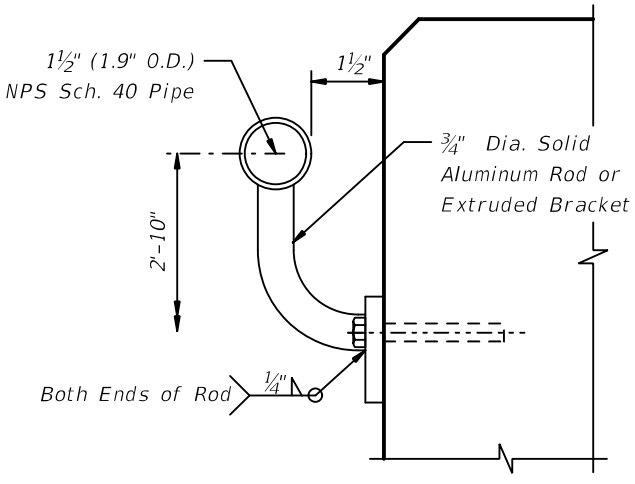

Figure 18.2-3 Bridge Section At Sidewalk With 42" Single-Slope Traffic Railing

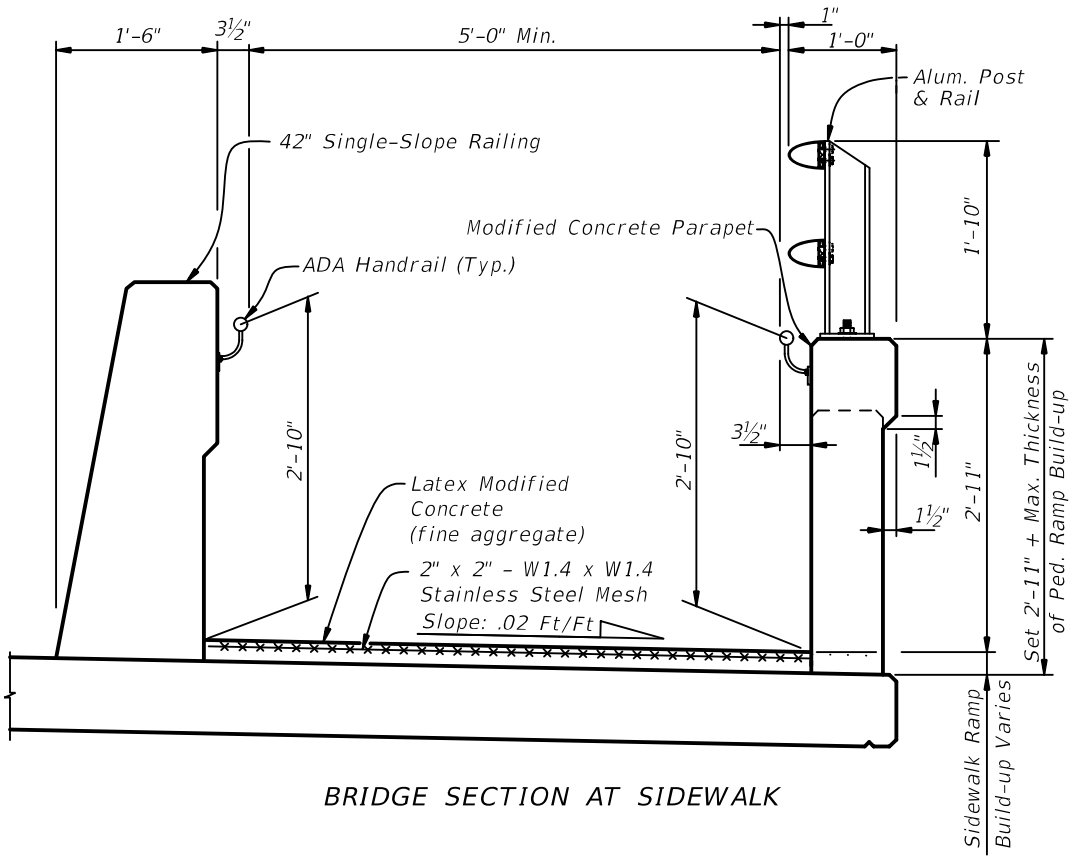

BRIDGE SECTION AT SIDEWALK

SIDEWALK RAMP BUILD-UP NOTES

1. Sand-blast or water-blast deck surface within limits of the sidewalk.
2. Remove all loose concrete and laitance in accordance with the manufacturer's recommendations.
3. Apply an approved epoxy bonding agent to the exposed concrete surface.
4. Overlay with latex modified concrete to the dimensions indicated for the special pedestrian ramp and landings.
5. Finish deck surface in accordance with Section 522.

18.3 DRAINAGE GRATES OR SCUPPERS

Drainage grates or scuppers that lie within the limits of the sidewalk are required to conform to ***ADA Standards for Transportation Facilities***. At a minimum, openings in gratings are to be no more than ½-inch wide in one direction. For surface requirements, see Figure 18.3-1.

Figure 18.3-1 ADA Surface Requirements

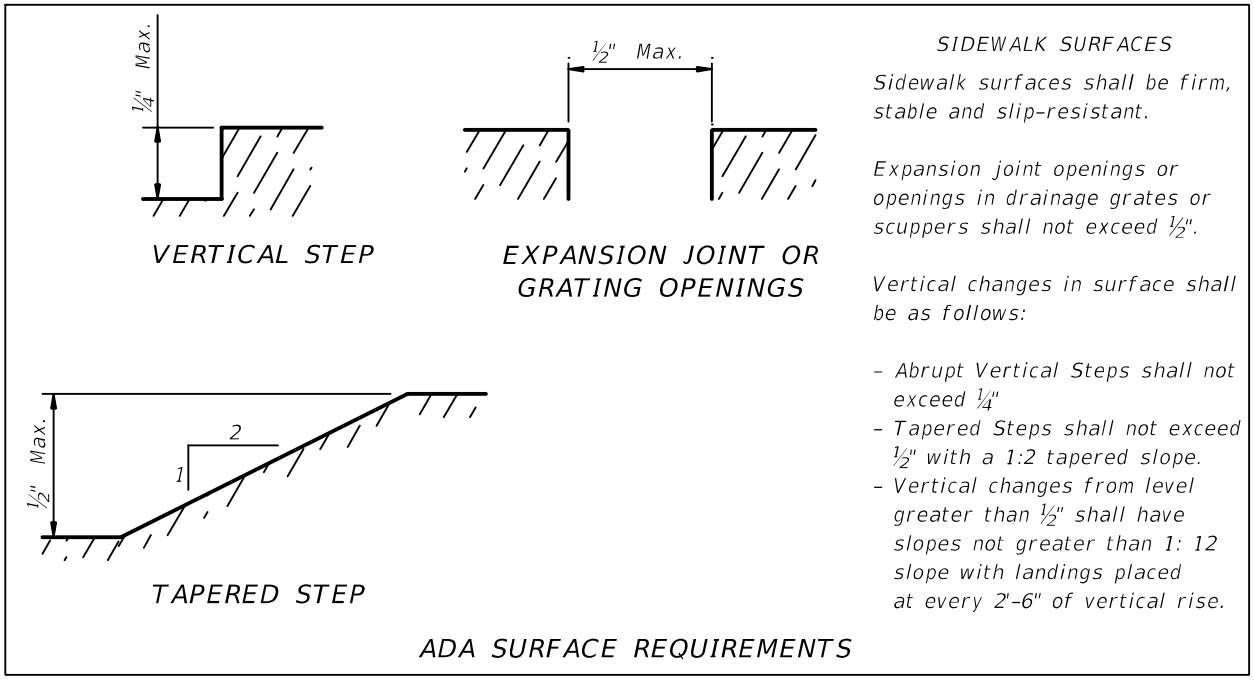

18.4 EXPANSION JOINTS ON BRIDGES

Expansion joints on bridges with sidewalks are addressed in ***Standard Plans*** Index 458-100 (Strip Seal Joints) and 458-110 (Poured Joint with Backer Rod). Similar methods are required for bridges with large joints such as modular joints or finger joints. See Figure 18.3-1 for additional surface requirements.

18.5 CROSS SLOPES GREATER THAN 2%

The maximum cross slope for sidewalks on bridges is 2%. For bridges with a cross slope greater than 2%, the sidewalk must be modified to be in compliance. This can be achieved either by using a tapered build-up in the sidewalk portion of the bridge or by providing a change in cross slope at the gutterline. See Figure 18.5-1.

Figure 18.5-1 Sections at Sidewalk With Bridge Cross Slope Greater Than 2%

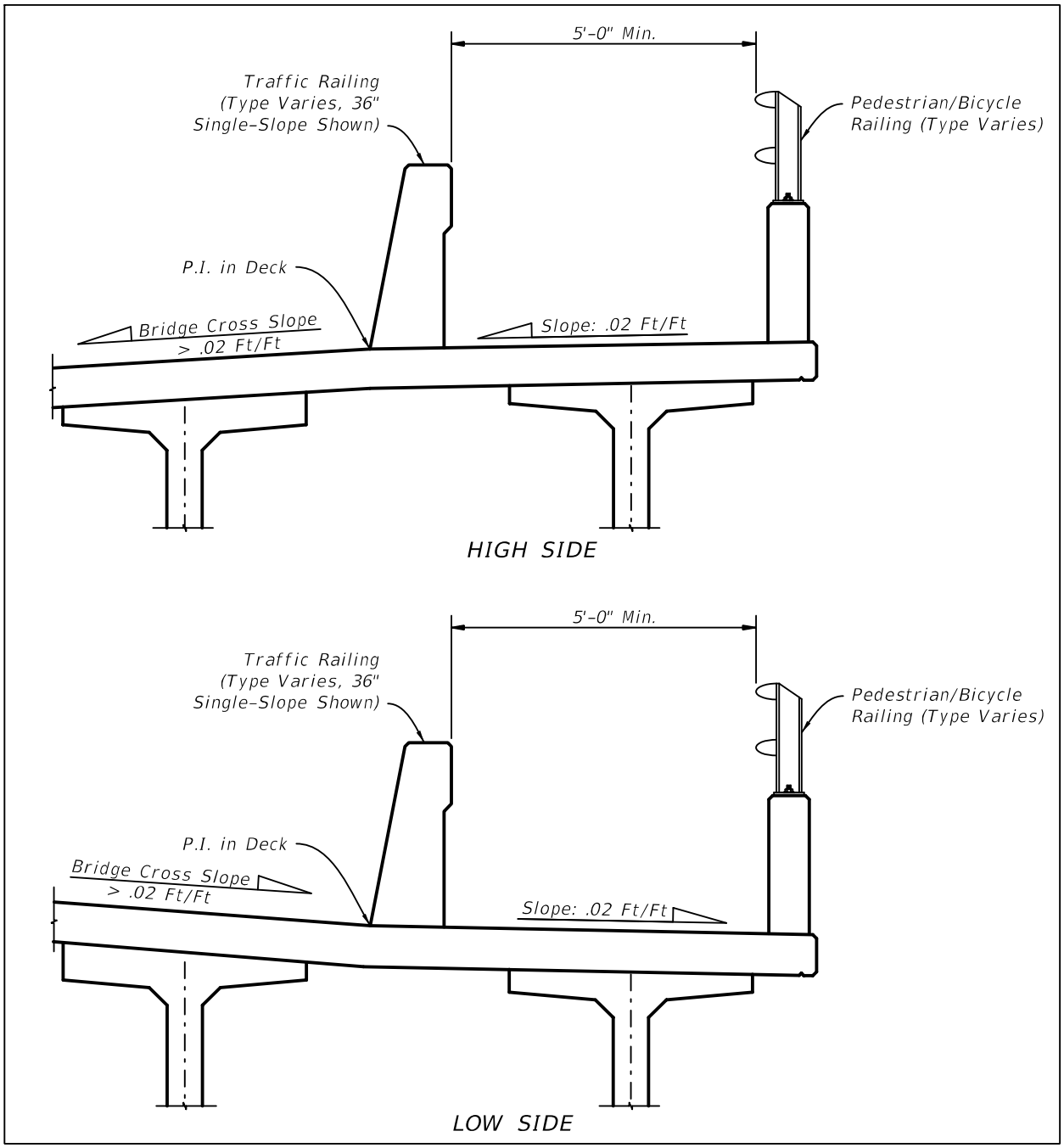

19 RETAINING WALLS

19.1 GENERAL

A. Wall drawings will include wall control drawings, wall details, data tables and other pertinent information required to layout and construct the retaining walls. These guidelines are applicable to permanent and temporary, cast in place and precast retaining walls. Wingwalls and cofferdams are not covered in this chapter.

B. Determine wall type during the BDR phase for accurate cost estimates. Wall type selection is based on wall height, wall settlement, durability factors and environmental conditions. To determine which FDOT wall types are applicable for a specific location, see the Permanent Retaining Wall Selection Guidance in ***SDG*** 3.12.

Modification for Non-Conventional Projects:
Delete ***SDM*** 19.1.B and insert the following: B. Wall type selection is based on wall height, wall settlement, durability factors and environmental conditions. To determine which FDOT wall types are applicable for a specific location, see the Permanent Retaining Wall Selection Flowchart in ***SDG*** 3.12.

C. See ***FDM*** 121 for phase submittal requirements.

Modification for Non-Conventional Projects:
Delete ***SDM*** 19.1.C.

D. For examples illustrating the content and format of completed Wall sheets, see the ***Structures Detailing Manual Examples***.

E. For requirements related to the design of walls, see ***SDG*** Chapter 3.

F. See ***FDM*** 262 for plan content requirements when full design details **are** required to be shown in the plans, e.g. for non-proprietary walls and select proprietary walls.

G. See ***FDM*** 262 for plan content requirements when full design details **are not** required to be shown in the plans, e.g. for most proprietary walls.

H. For projects with multiple walls or complex wall geometry, include a comprehensive plan view layout. Use a scale appropriate to encompass the entire project or enough to convey relative wall locations, including all temporary and permanent MSE and non-MSE wall systems labeled within a single sheet.

I. Provide slope pavement and joints sealed with low modulus silicone sealant adjacent to end bents as shown in Figure 19.1-1. Show similar details for similar joints between walls and end bents with or without slope pavement.

J. Provide joints sealed with low modulus silicone sealant between spread footing abutments and adjacent retaining wall copings as shown in Figure 19.1-2. Show complete details of troughs, gutters and/or pipes required per ***SDG*** 3.13.2.

Commentary: Providing an easy-to-maintain joint seal between retaining walls and adjacent end bents or spread footings is critical to the long term performance and preservation of the wall and bridge foundation.

Figure 19.1-1 Slope Pavement Details at End Bents

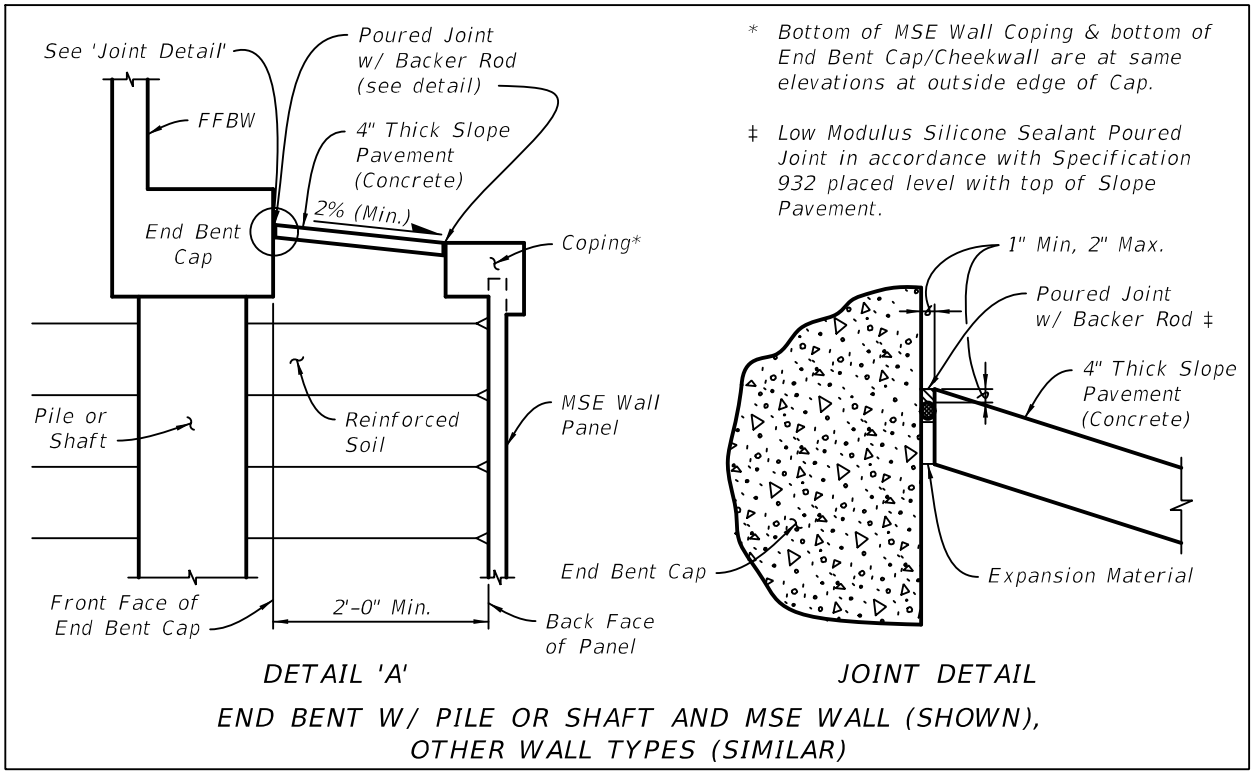

Figure 19.1-2 Spread Footing Abutment Details

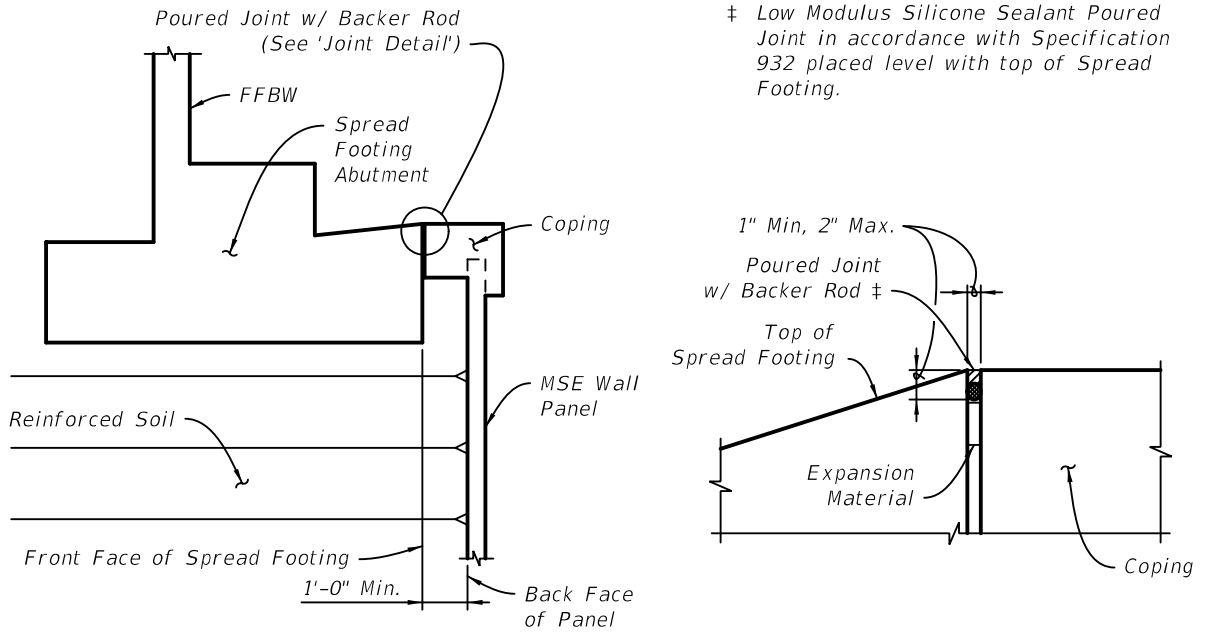

DETAIL 'A' JOINT DETAIL

SPREAD FOOTING AND MSE WALL (SHOWN)
OTHER WALL TYPES (SIMILAR)

19.2 WALL CONTROL DRAWINGS

Wall control drawings are required to depict the location and geometrics of the wall layout. For walls listed on the ***Approved Products List*** (***APL***), project specific wall shop drawings will be required and created based on information shown in the wall control drawings. Wall control drawings will consist, at a minimum, of general notes, plan views, elevation views and details. Wall control drawings are required for all retaining wall types. Discuss and determine wall type in the Bridge Development Report. Include preliminary limits for permanent and temporary walls in the Bridge Development Report. See ***FDM*** 121 for submittal requirements for wall control drawings.

Modification for Non-Conventional Projects:

Delete ***SDM*** 19.2 and insert the following:

Wall control drawings are required to depict the location and geometrics of the wall layout. For walls listed on the ***Approved Products List*** (APL), project specific wall shop drawings will be required and created based on information shown in the wall control drawings. Wall control drawings will consist, at a minimum, of general notes, plan views, elevation views and details. Wall control drawings are required for all retaining wall types with the exception of non-critical temporary walls. See ***SDG*** 3.13.3 for critical temporary wall definition.

19.2.1 Wall Control Drawings - Plan Views

Wall plan views contain many callouts for stations and offsets. Provide station and offsets relative to the front face of the retaining wall. At a minimum, include the following on the wall control drawing plan views:

A. Existing features such as roads, drainage, utilities, fences.

B. Proposed drainage structures, piping and utilities. Be aware of the Department's policy on placing utilities within retained embankment. See the Utilities Accommodation Manual. Also see the ***Drainage Design Guide*** and ***SDM*** Chapter 22 for policy regarding drainage structures within retaining wall embankment.

C. Sloped embankments. Indicate direction of slope and toe of slope. Indicate the slope in the following format: V:H.

D. Station Line with horizontal curve data. Label station line and indicate direction of stationing.

E. All begin and end wall locations. Begin wall locations should be at left side of the developed elevations and end wall stations should be shown on the right side of developed elevations. See Figure 19.2.1-1.

Figure 19.2.1-1 Typical Wall Naming Convention

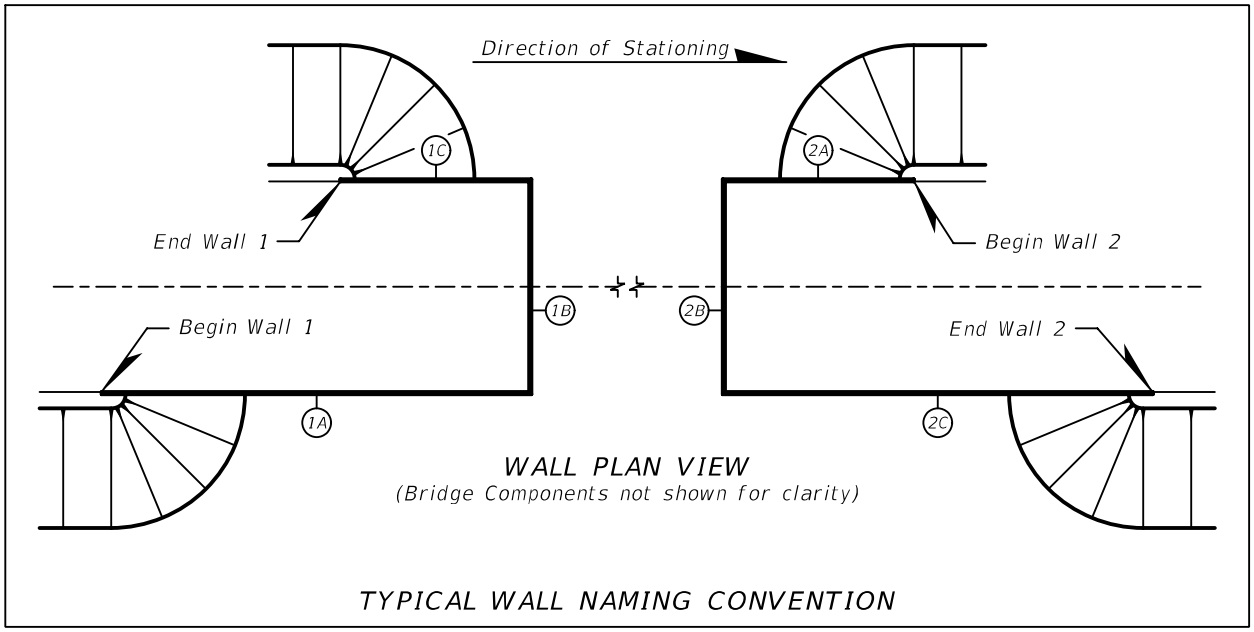

F. Station and offsets for all wall corners, PC and PT stations and any other changes in wall alignment.

G. All PC and PT stations for wall geometry. Indicate radius of curvature. This data may be different from the horizontal curve data of the Station Line.

H. Front face of retaining wall.

I. Stations for adjacent bridge features (FFBW, Begin/End Approach, etc.).

J. Wall names. Establish a wall naming convention for projects with multiple walls. Designate wrap-around walls with a single name using suffixes for wall segments (e.g., W-1a, Wall 1a, etc.).

K. Right-of-way lines. Include temporary construction easements.

L. Riprap, slope pavement or toe of slope limits.

M. North arrow. Show in upper right corner.

N. Matchlines. Clearly label matchlines with appropriate stationing.

O. Boring locations.

P. Berm dimensions. Figure 19.6-4 for minimum berm dimensions.

Q. Light pole pedestal, sign and signal supports station and offset.

R. Architectural feature foundations (e.g., towers, etc.).

S. Location of section views.

T. Location of sign structures and lights. Indicate applicable ***Standard Plans*** for wall pedestal.

U. Phase construction limits. Develop details where necessary. Specify the appropriate joint type for adjacent phases, i.e. slip joint for permanent MSE walls, construction or expansion joint for C.I.P. walls, etc.

V. For additional wall control drawing requirements based on wall type, see ***SDM*** 19.5 through ***SDM*** 19.8.

19.2.2 Wall Control Drawings - Elevation Views

Develop elevation views for wall control drawings showing contiguous faces of the wall in a single plane, regardless of curvature or corners. Orient elevation views so that they show the front face of the retaining wall. At a minimum, include the following on elevation views for wall control drawings:

A. Stationing with elevations shown at the spacings below and at begin/end wall stations and at all wall corners, PC and PT stations and any other changes in wall alignment. More frequent elevations may be required. Tabulate if necessary. Include the elevations at the following locations:

   1. Proposed ground line at 50-foot maximum spacings.
   2. Existing ground line at 100-foot maximum spacings.
   3. Top of footing or leveling pad elevation at each step.
   4. Top of coping or wall at 50-foot maximum spacings.
   5. At slope breaks in top of wall or coping.

B. Show the following:

   1. Proposed ground line (shown as solid).

2. Existing ground line (shown as dashed).
3. Top of footing or leveling pad elevation.
4. Top and bottom of coping.
5. Top of traffic railing/noise wall and transitions. Indicate the applicable traffic railing ***Standard Plans***.
6. Wall penetrations (station, offset, invert elevation).
7. Light pole pedestal locations.
8. Sign and signal locations.
9. Vertical scale (on both sides).
10. Design scour depth.
11. Existing utilities and proposed drainage structures and piping. Indicate disposition of adjacent utilities (e.g., placed out of service, relocate, to remain, etc.).
12. Water table.
13. 100-year and 500-year flood elevations, or other controlling water elevations.
14. Limits of compacted select backfill and coarse aggregate backfill. See ***SDG*** 3.13.2.

C. For additional wall control drawing requirements based on wall type, see ***SDM*** 19.5 through ***SDM*** 19.8.

19.2.3 Wall Control Drawings - General Notes and Details

Develop project specific wall details and show on the sheets ahead of the wall plan and elevation sheets. The details that are required to be shown in the contract plans vary by wall type. Details for walls listed on the ***APL*** will be fully developed in shop drawings. Include the following in the retaining wall General Notes sheets:

A. Section through end bent showing tie-in dimensions between end bent and retaining wall.

B. Section through wall showing gutters, ditches, copings, limits of wall volume (reinforced zone for MSE walls), leveling pad, footing and other features necessary to construct the wall or generate wall shop drawings.

C. Elevation view showing elevations of the cheekwall/coping/top of wall at the end bent. Include details showing the tie-in between end bent and retaining wall.

D. Isolation details from architectural features, nearby footings, culverts and other potential hardpoints to account for different settlements between the structure(s) and the wall.

E. With the exception of gravity walls, walls associated with Standard Plans will have data tables in the General Notes and Details sheet(s). Data table cells can be found in the Structures Cell Library. See the ***Standard Plans Instructions (SPI)*** for instructions on filling these data tables.

F. A note stating that the locations of utilities shown on the wall plans are approximate. Refer to the Utility Adjustment sheets for details.

G. Material requirements.

19.3 CAST IN PLACE CANTILEVER WALLS

When cast in place cantilever walls are specified in the plans, use the Department's ***LRFD Retaining Wall Program*** for analysis and design of cantilever retaining walls. Output from this program is used to fill-out the wall data table. Design cast in place retaining walls in accordance with ***SDG*** 3.13 and ***Standard Plans*** Index 400-010. Include the Retaining Wall Data Table in the plans. See the ***Standard Plans Instructions (SPI)*** for instructions on filling these data tables and other plan content requirements in addition to ***SDM*** 19.2.

Modification for Non-Conventional Projects:
Delete ***SDM*** 19.3 and insert the following: Use of ***Standard Plans*** Index 400-010 is optional. Follow the applicable minimum plan content requirements outlined in ***SDM*** 19.2.

19.4 GRAVITY WALLS

When cast in place gravity walls are specified in the plans, use ***Standard Plans*** Index 400-011. Follow the applicable minimum plan content requirements outlined in ***SDM*** 19.2 above and the ***Standard Plans Instructions (SPI)***.

Modification for Non-Conventional Projects:
Delete ***SDM*** 19.4 and insert the following: Use of ***Standard Plans*** Index 400-011 is optional. Follow the applicable minimum plan content requirements outlined in ***SDM*** 19.2.

19.5 PERMENENT SHEET PILE WALLS

Permanent sheet pile walls can be either steel or concrete, tied back or cantilever. Use the appropriate sheet pile wall data table cell found in the Structures Cell Library.

19.5.1 Concrete Sheet Pile Walls

When concrete sheet pile walls are specified in the plans, develop wall control drawings and details for a concrete wall cap. Concrete sheet pile walls in excess of 15 feet high are typically anchored to a dead man, anchor pile or soil anchor. Work concrete sheet pile wall control drawings with ***Standard Plans*** Index 455-400 series. In addition to the plans content requirements shown in the ***Standard Plans Instructions (SPI)*** and in ***SDM*** 19.2 above, include the following:

Modification for Non-Conventional Projects:

Delete first paragraph of ***SDM*** 19.5.1 and insert the following:

When concrete sheet pile walls are specified in the plans, develop wall control drawings and details for a concrete wall cap. Concrete sheet pile walls in excess of 15 feet high are typically anchored to a dead man, anchor pile or soil anchor. Use of ***Standard plans*** Index 455-400 series is optional. In addition to the plans content requirements shown in ***SDM*** 19.2 above, include the following:

A. Project specific concrete wall cap. Figure 19.5.1-1. If a wall-mounted traffic or pedestrian railing is specified, indicate the applicable Standard Plan.

B. Indicate starter pile and pile type and orientation. Refer to ***Standard Plans*** Index 455-400 for applicable pile types.

C. Tie-back locations if wall is tied back. Include anchor rod, deadman, anchor pile or soil nail details as necessary. In cases where the anchor rods may be deformed by settlement of the overlaying embankment, or where anchor rods are buried more than a third of the wall height, isolate the anchor rod its entire length. Figure 19.5.1-2.

Figure 19.5.1-1 Section Through Sheet Pile Wall Cap

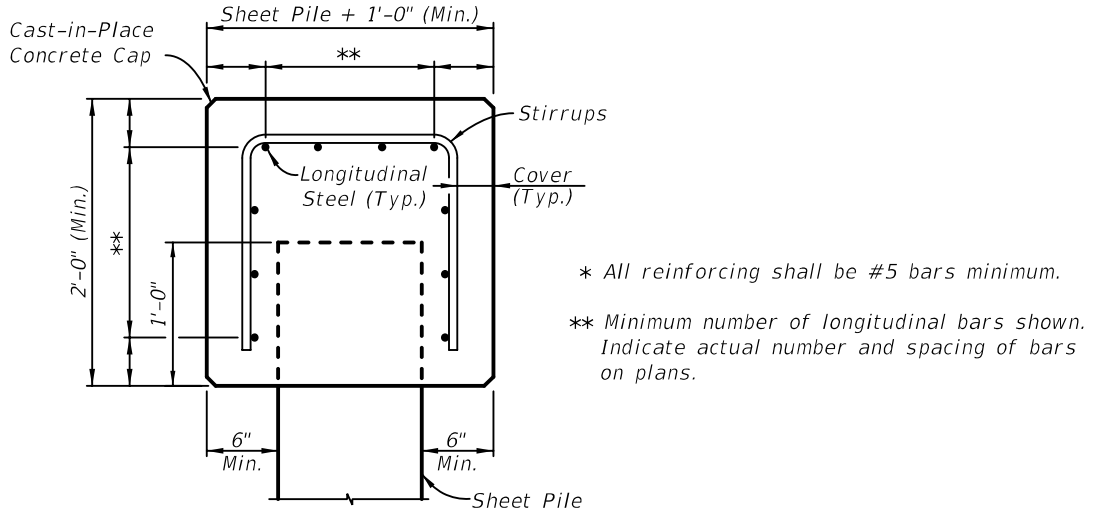

SECTION THROUGH SHEET PILE WALL CAP (STEEL OR CONCRETE)

Figure 19.5.1-2 Anchor Rod Detail

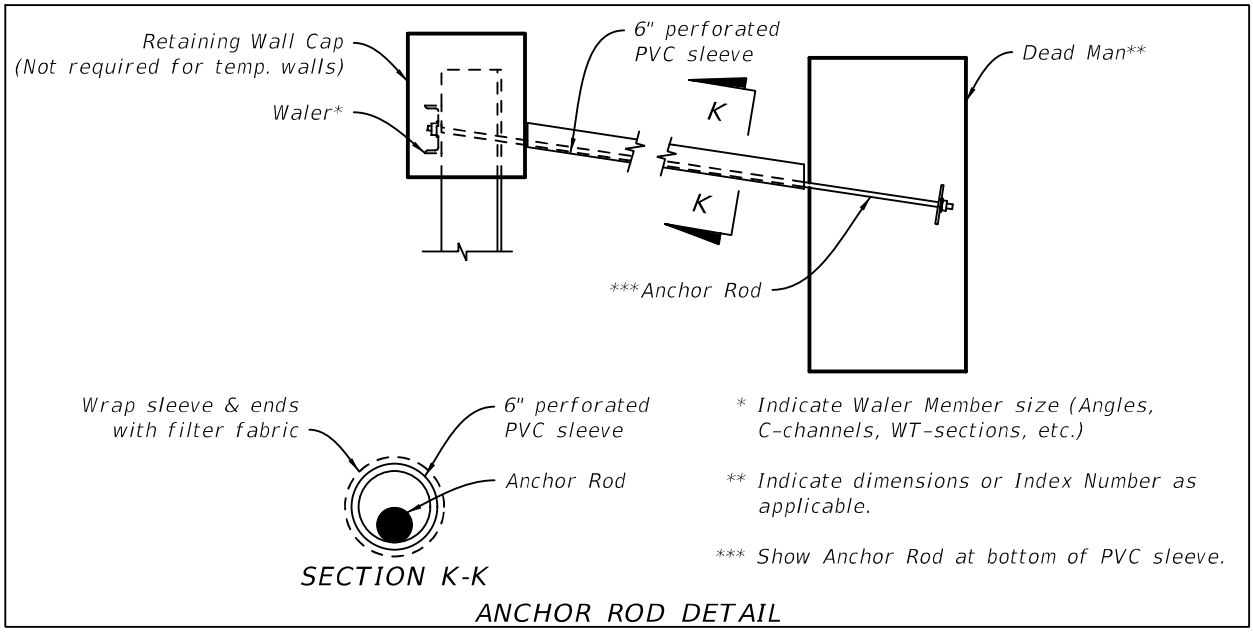

D. Dead man or anchor pile locations. Reference the same Station Line used for wall layout. Include details for anchor rods. If a standard concrete pile is used for dead man, reference applicable ***Standard Plans*** and include pile data table. Alternatively, anchor piles may consist of a starter pile with a cast-in-place cap.

E. Where concrete sheet pile walls are anchored to the end bent cap, provide sufficient details on the end bent sheets for blockouts, swedged rods, etc. to show method of attachment of sheet pile wall anchor rod.

F. Provide notes alerting the contractor when installation by jetting alone will not be practical.

G. In the control drawing elevation view, show top of cap, top of pile, and the pile tip elevations along the length of the wall.

H. In the control drawing plan view, show wall cap expansion/control joint spacing.

I. When wall anchors are required:

   1. Coordinate anchor locations to miss proposed foundation elements of adjacent structures such as bridges.
   2. Coordinate soil anchor locations to miss existing adjacent buried structures.
   3. Provide a construction sequence including when to place/proof test anchor and when to place backfill similar to Figure 19.7.2-1.

19.5.2 Permanent Steel Sheet Pile Walls

Permanent steel sheet pile walls can be either cantilever or tied back, depending on site conditions, wall height and loading. When permanent steel sheet pile walls are specified

in the plans, fully developed wall control drawings and concrete cap details are required. In addition to the minimum plan content requirements outlined in ***SDM*** 19.2 above, include the following:

A. Project specific concrete wall cap. Figure 19.5.1-1. If a wall-mounted traffic or pedestrian railing is specified, indicate the applicable ***Standard Plans***.

B. Tie-back locations if wall is tied back. Include anchor rod, deadman, anchor pile or soil nail details as necessary. In cases where the anchor rods may be deformed by settlement of the overlaying embankment, or where anchor rods are buried more than a third of the wall height, isolate the anchor rod its entire length. Figure 19.5.1-2.

C. Deadman or anchor pile locations. Reference the same Station Line used for wall layout. Include details for anchor rods. Anchor piles typically consist of a single steel sheet pile with a cast-in-place cap.

D. Steel sheet pile wall data table for either anchored or cantilever steel sheet pile walls. This table can be found in the Structures Cell Library.

E. Location of waler(s).

F. Drainage details.

G. Coating requirements if coatings and/or overall treatment are different than what are required by ***Specifications*** Section 560. See ***SDG*** 3.1 and ***Specifications*** Section 560 for standard coating requirements.

H. Depict the sheet pile rolled section. See ***SDG*** 3.1 for sacrificial thickness requirements. In order to comply with Buy America provisions, a specific wall shape that meets the minimum section requirements must be indicated in the plans. If domestically-made shapes are not available, fully detail built-up sections such as king posts or cover plates to satisfy section requirements. See ***SDG*** 1.1.5 for additional information on Buy America requirements.

*Commentary: The actual sheet pile section used for the wall design must be shown in the Plans, as opposed to just the moment of inertia and section modulus as is shown for temporary sheet pile walls, for the following reasons: the overall depth of the sheet pile section affects the relative locations of the sheet pile wall and other adjacent items (e.g. drainage structures, footings, end bent caps, etc.); the concrete cap dimensions and reinforcement are both based on the depth of the sheet pile; when a cast in place fascia is used, the estimated concrete quantity is dependent on the depth of the sheet piles; the wall thickness, which must include sacrificial thickness per **SDG** Table 3.1-1, varies between different sheet pile sizes and types.*

I. In the control drawing elevation view, show top of cap, top of pile, and the pile tip elevations along the length of the wall.

J. In the control drawing plan view, show wall cap expansion/control joint spacing.

K. When wall anchors are required:

1. Coordinate anchor locations to avoid conflicts with proposed foundations elements of adjacent structures such as bridges.
2. Coordinate soil anchor locations to miss existing adjacent buried structures.
3. Include a construction sequence including when to place/proof test anchor and when to place backfill similar to Figure 19.7.2-1.

L. Indicate on the plans:

1. minimum tip elevations (ft).
2. minimum section modulus (in^3/ft).
3. minimum moment of inertia (in^4/ft).

19.6 PERMANENT MSE WALLS

Mechanically stabilized earth walls (MSE) are often the most economical wall type for heights over 8 feet. Typically, MSE wall proprietors must be listed on the ***APL*** to supply MSE wall products on FDOT projects. MSE wall shop drawings will be produced by the wall vendor selected for the project and reviewed by the EOR. Project specific wall shop drawings will be created based on details shown in the wall control drawings. Shop drawing requirements can be found in ***Specifications*** Section 548. When developing wall control drawings for MSE walls, the following considerations must be addressed in addition to the requirements outlined in ***SDM*** 19.2:

A. Include Permanent Retaining Wall System Data Table cells in the plans. The cells can be found in the Structures Cell Library. See the ***Standard Plans instructions (SPI)*** for instructions on filling these data tables.

B. Leveling pad locations. Step leveling pad when depth below finish grade exceeds five feet while maintaining two feet below grade minimum. At locations where MSE wall wraps back along the roadway at the end bent, do not step leveling pad within a distance 2.4 times H measured from the front face of the wall (H equals the wrap around wall height measured at the end bent backwall). Instead, show leveling pad at a constant elevation. See Figure 19.6-1.

Commentary: The distance of 2.4H allows for the fill along the side slope to be excavated for the construction of a new section of MSE wall (along the front face) as part of a future bridge widening. This eliminates the need to install a temporary wall beside the approach slab for the widening.

C. Provide wall offsets to the front face of MSE wall panel. Provide top of wall elevations to the gutterline (if present) or top of coping. Clearly indicate the locations where wall offsets and elevations are provided.

D. Take into account shoulder cross slope transition and sidewalk cross slope transition as roadway approaches the bridge when detailing top of coping/gutterline elevations. Figure 19.6-2 and Figure 19.6-3. Use spot elevations in the Plan View to ensure shoulder transitions are accurately detailed in the plans.

E. Avoid acute corners with interior angles less than 70°. Walls with interior angles less than 70° must be designed as bin walls, resulting in greater costs and time. These should be avoided if possible.

F. Where MSE wall does not wrap around the end bent, raise the wall coping to the top of end bent cheekwalls at either side of the end bent. This will avoid the need for wingwalls. See ***SDM*** 19.6.1 for detailing MSE walls to facilitate future bridge widenings in the median.

G. Where MSE wall terminates into fill slope, extend traffic railing and wall a minimum of 5 feet beyond fill slope limits. This will reduce the potential for drainage-related issues at the wall termination point. See Figure 19.6-1 for details.

H. When settlement issues require two-phased walls, provide details in the plans showing surcharge loading schedule, surcharge volumes, drainage details, instrumentation requirements such as piezometer, settlement plate, or inclinometer as required by the geotechnical engineer. See ***SDG*** 3.12 for details on the construction of two-phased walls.

I. Flowable fill is not allowed to be used in any MSE wall application without SSDE approval.

J. Slip joints are required at the following locations:

   1. Phased construction limits where the MSE wall is constructed in separate phases; these locations should be consistent with phasing dimensions found in the construction sequencing sheets.
   2. Limits between acute corners designed as bin walls and the adjacent walls.
   3. At hardpoints which pass through MSE wall such as storm drainage, adjacent footing of separate structure or other feature with settlement characteristics different from the MSE wall settlement characteristics.
   4. For widenings, specify a slip joint between the existing MSE wall and proposed MSE wall, where the two walls are to interface.

K. For widening when placing MSE walls adjacent to existing fill slopes, include details in the plans to install MSE wall straps. Assume strap length approximately 0.80 of wall height to determine limits of excavation and to evaluate the need for temporary sheet pile walls. See ***SDM*** 19.7.2.

L. For widening when placing MSE walls adjacent to existing MSE walls where distance between walls is less than the required strap length (approximately 0.70-0.80 of wall height), a bin wall system to attach the existing wall system may be required. Include bin wall details in the shop drawings. See ***SDG*** 7.3.5.

M. Isolation details - Isolate MSE wall systems from adjacent structures to accommodate differential settlements.

Figure 19.6-1 Wrap-Around MSE Wall Details

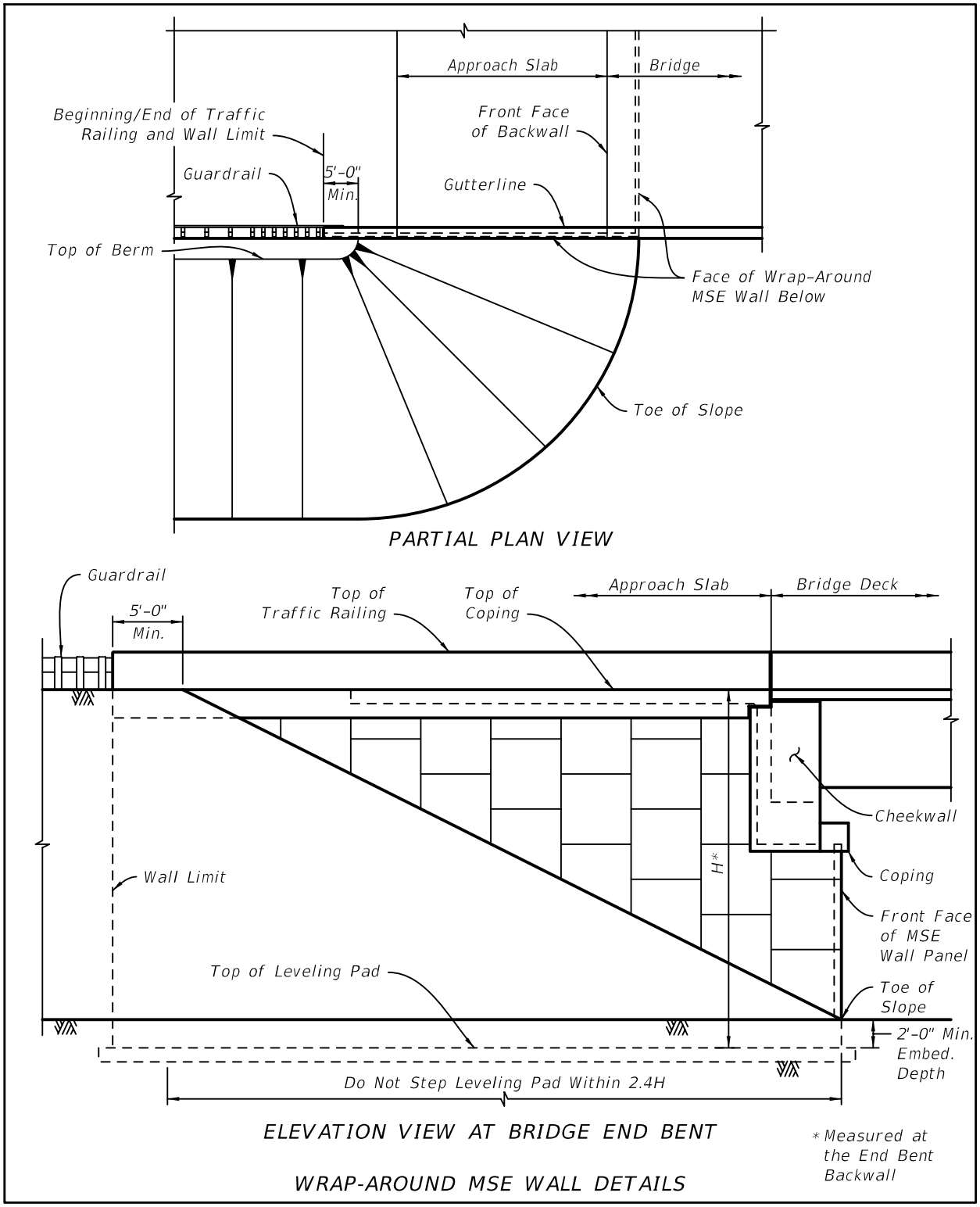

Figure 19.6-2 Cross Sections at Bridge Approaches

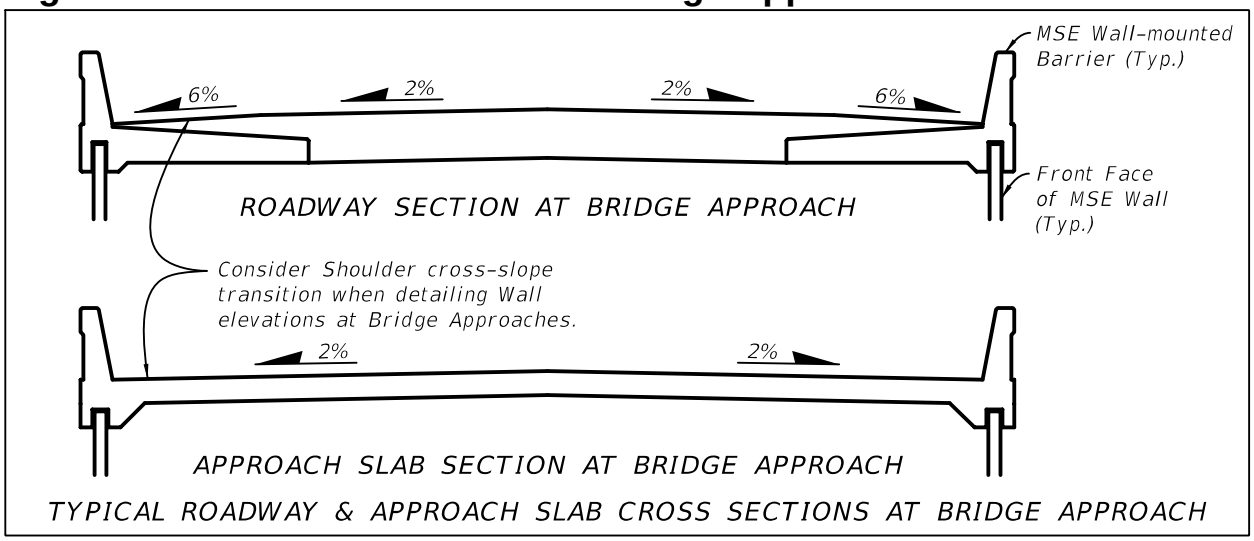

Figure 19.6-3 Cross Sections at Bridge Approaches with Sidewalks

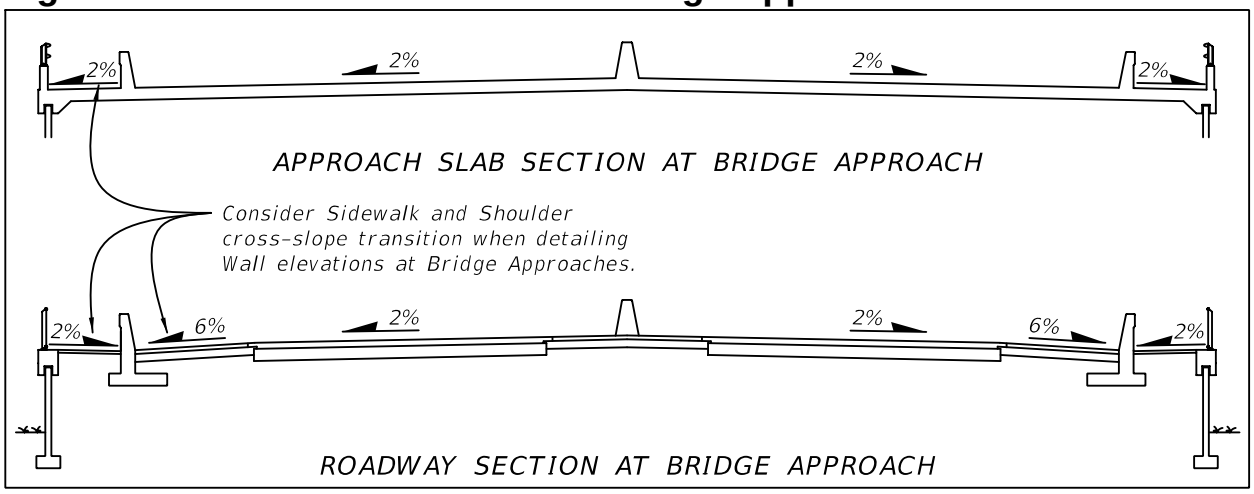

Figure 19.6-4 MSE Wall Details

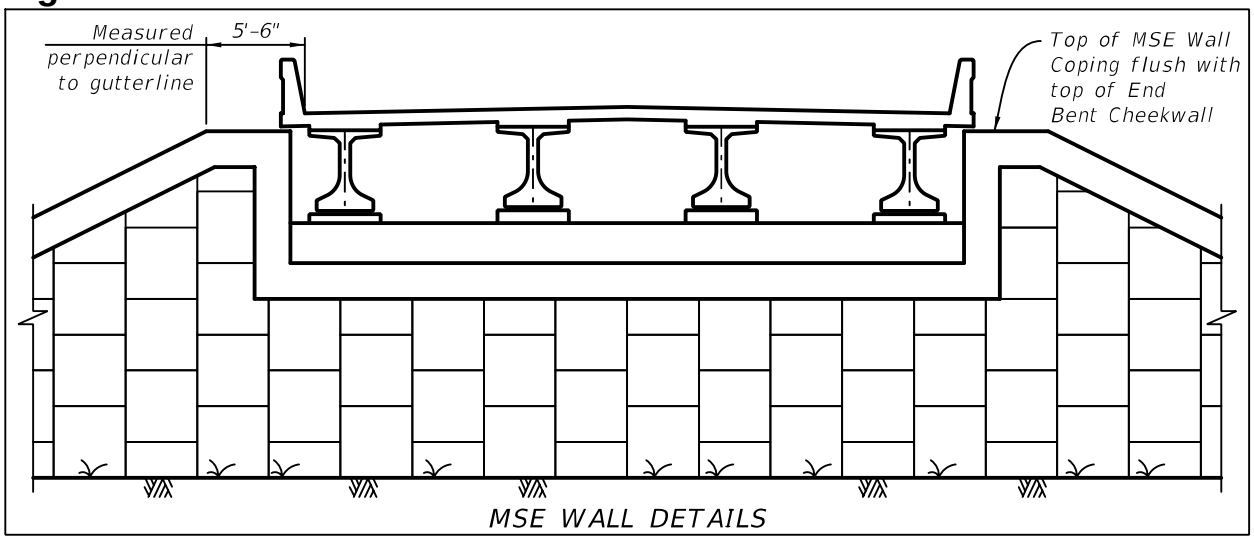

19.6.1 Future Widenings

Include wall details which facilitate bridge widening in the future. What follows are some of the more common approaches to meeting this requirement.

A. For single bridges, incorporate a wrap-around MSE wall as shown in Figure 19.6.1-1. This will facilitate future widening by allowing future excavation to place the MSE wall straps for the widened section, minimizing the need for temporary sheet pile walls. Do not step leveling pad of the portion of the wall parallel to the roadway.

Figure 19.6.1-1 Single Bridge with Future Widening

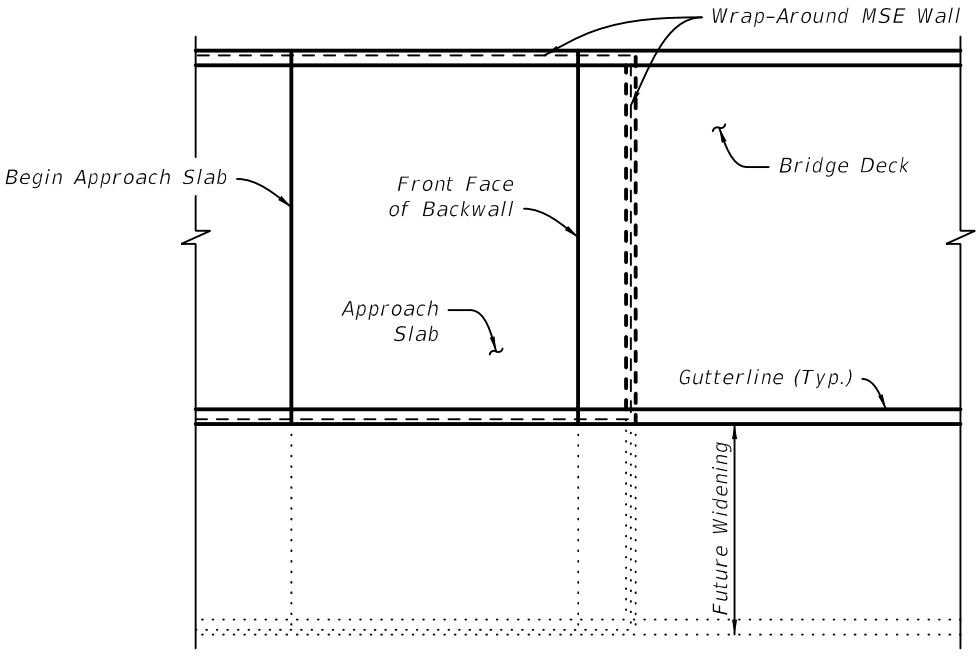

PARTIAL PLAN
SINGLE BRIDGE WITH FUTURE WIDENING
(USE WRAP-AROUND MSE WALL TO AVOID FUTURE PILE DRIVING CONFLICTS)

B. For twin bridges where MSE walls are used in the median between the bridges, assume the bridges will be widened in the future and provide the following minimum provisions to accommodate the future widening in the median:

1. Construct MSE walls partial-height (preferred) or full-height between bridges. See Figure 19.6.1-2 and Figure 19.6.1-3. Design wall soil reinforcement in the median to match the worst-case loading condition, typically the future condition. Show the ultimate build-out for the wall design in the Wall Control Drawings and clearly indicate those portions that are to be constructed "by others" in the future.
2. Place 0.5-inch wall thickness pipe piles meeting the requirements of 962-8.8 within the reinforced soil volume to facilitate future pile installation. This will avoid conflicts with soil reinforcement during construction of the future widenings. Minimum diameter of the pipe piles shall be 6-inches greater than the largest dimension of the pile cross section (the diagonal for square piles) used in the

twin bridges. Match the spacing of the piles used in the twin bridges. Indicate in the plans that pipe piles are to be capped and unfilled.

Figure 19.6.1-2 Full Height MSE Wall Details with Allowance for Future Inside Widening

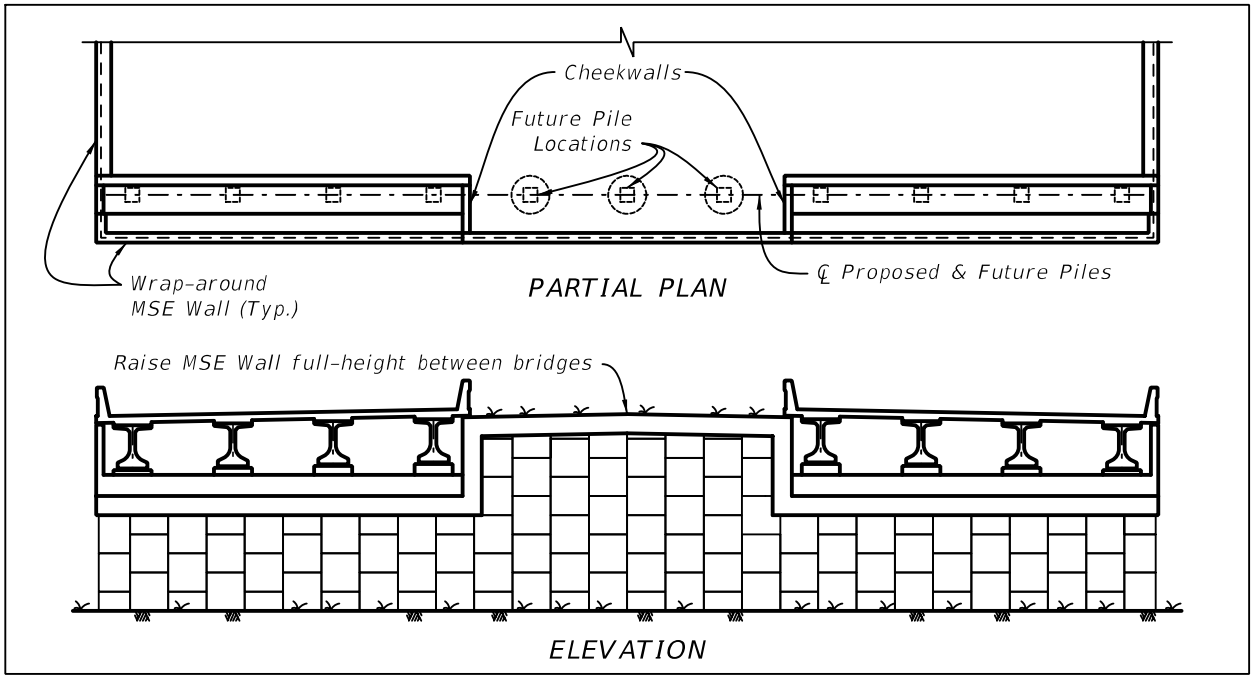

Figure 19.6.1-3 Partial Height MSE Wall Details with Allowance for Future Inside Widening

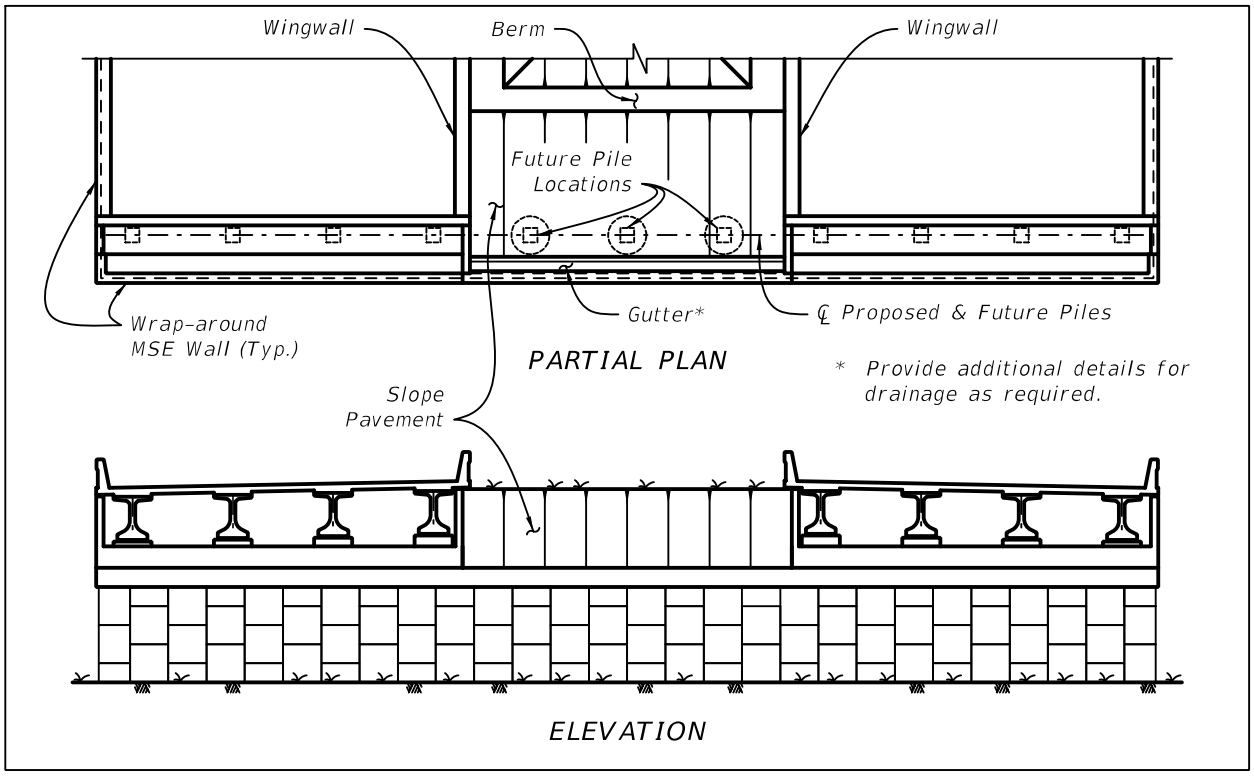

C. For roadways that are supported by MSE walls, consider placing the vertical and horizontal limits of the wall in locations that can accommodate future widening of the supported road. See Figure 19.6.1-4. Design soil reinforcement for the future loading condition.

Modification for Non-Conventional Projects:
Delete ***SDM*** 19.6.1.C and see the RFP for requirements.

Figure 19.6.1-4 Section Through Roadway Supported by MSE Wall

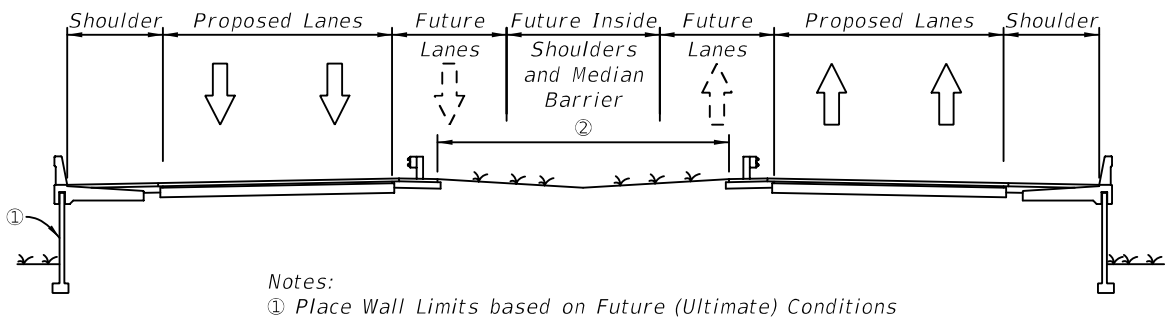

SECTION THROUGH ROADWAY SUPPORTED BY MSE WALL
(Inside Widening Shown; Outside Widening similar)

Modification for Non-Conventional Projects:

Delete Note 1 from ***SDM*** Figure 19.6.1-4 and see the RFP for requirements.

19.7 TEMPORARY WALLS

Base temporary wall type selection on wall height, cut/fill condition and designation as critical or non-critical. See ***SDG*** Figure 3.13.3-1 for the definition of Critical Temporary Walls. See also ***FDM*** 262. The traveled way is defined in ***FDM*** 102. See ***FDM*** 211 and ***FDM*** 240 for Emergency Shoulder Use (ESU) Corridors. Coordinate with the project's utility coordinator when determining if an existing utility is to be relocated or protected by a Critical Temporary Wall and establish if special wall deflection limits are required. Finalize this determination early in the design phase to ensure the proper wall type is selected. Identify preliminary critical and non-critical walls that should be in the BDR. Identify and develop critical and non-critical wall control drawings in coordination with the temporary traffic control plans. Submit wall control drawings for critical and non-critical walls in accordance with ***FDM*** 121. See Construction Sequence Example 3 of the ***Structures Detailing Manual Examples*** for an example of Critical Temporary MSE and tied-back sheet pile walls used in phased construction.

Modification for Non-Conventional Projects:

Delete ***SDM*** 19.7 and insert the following:

Base temporary wall type selection on wall height, cut/fill condition and designation as critical. See ***SDG*** Figure 3.13.3-1 for the definition of Critical Temporary Walls. The traveled way is defined in ***FDM*** 102. See ***FDM*** 211 and ***FDM*** 240 for Emergency Shoulder Use (ESU) Corridors. Coordinate with the project's utility coordinator when determining if an existing utility is to be relocated or protected by a Critical Temporary Wall and establish if special wall deflection limits are required. Finalize this determination early in the design phase. See Construction Sequence Example 3 of the ***Structures Detailing Manual Examples*** for an example of Critical Temporary MSE and tied-back sheet pile walls used in phased construction. Identify and develop critical wall control drawings in accordance with the temporary traffic control plans.

19.7.1 Temporary MSE Walls

Temporary MSE walls are designated as Type 3 walls in the ***APL***. Temporary MSE walls are typically used in fill conditions and abandoned in place. When temporary MSE walls are specified in the plans, include the appropriate data table cell. Critical and non-critical temporary MSE walls must comply with ***Standard Plans*** Index 548-030. Refer to the plans content requirements shown in the ***Standard Plans Instructions (SPI)*** for temporary MSE walls and in ***SDM*** 19.2 above for wall control drawings.

Modification for Non-Conventional Projects:

Delete ***SDM*** 19.7.1 and insert the following:

Temporary MSE walls are typically used in fill conditions and abandoned in place. When temporary MSE walls are specified in the plans, include the appropriate data table cell. Use of ***Standard Plans*** Index 548-030 is optional. Follow the applicable minimum plan content requirements outlined in ***SDM*** 19.2.

19.7.2 Temporary Sheet Pile Walls

Temporary sheet pile walls can be used in either fill or cut conditions. Due to their relative ease of installation, sheet pile walls are common in projects that are phase-constructed. Sheet pile walls in excess of approximately 15-feet in height are tied back using a combination of soil anchors and walers for tiebacks. If tiebacks are used, provide a construction sequence. Figure 19.7.2-1 for a typical phased construction sequence using critical temporary tied-back steel sheet pile walls. Figure 19.7.2-1 is an alternative to Construction Sequence Example 3 of the ***Structures Detailing Manual Examples***.

Critical temporary sheet pile walls and anchored non-critical sheet pile walls require complete design details in the contract plans, including walers, tiebacks, wall cap, etc.

When critical temporary sheet pile walls and anchored non-critical sheet pile walls are specified in the plans, include the appropriate sheet pile wall data table cell.

1. Indicate on the plans:
   a. minimum tip elevations (ft).
   b. minimum section modulus (in^3/ft) for both hot-rolled and cold-rolled sections.
   c. minimum moment of inertia (in^4/ft) for both hot-rolled and cold-rolled sections.

Modification for Non-Conventional Projects:

Delete ***SDM*** 19.7.2.1 and insert the following:

1. Indicate on the plans:
   a. minimum tip elevations (ft).
   b. minimum section modulus (in^3/ft).
   c. minimum moment of inertia (in^4/ft).

For cantilever non-critical temporary sheet pile walls, provide a plan and elevation drawing only. See ***Standard Plans*** 455-500 for supplemental details for this wall type. Details or signed and sealed designs are not needed when non-critical temporary sheet pile walls are specified in the plans. Show and label the expected location of the non-critical temporary sheet pile wall(s) on the appropriate sheet, typically the Foundation Layout sheet or permanent wall plan views.

Figure 19.7.2-1 Alternate Wall Construction Sequence

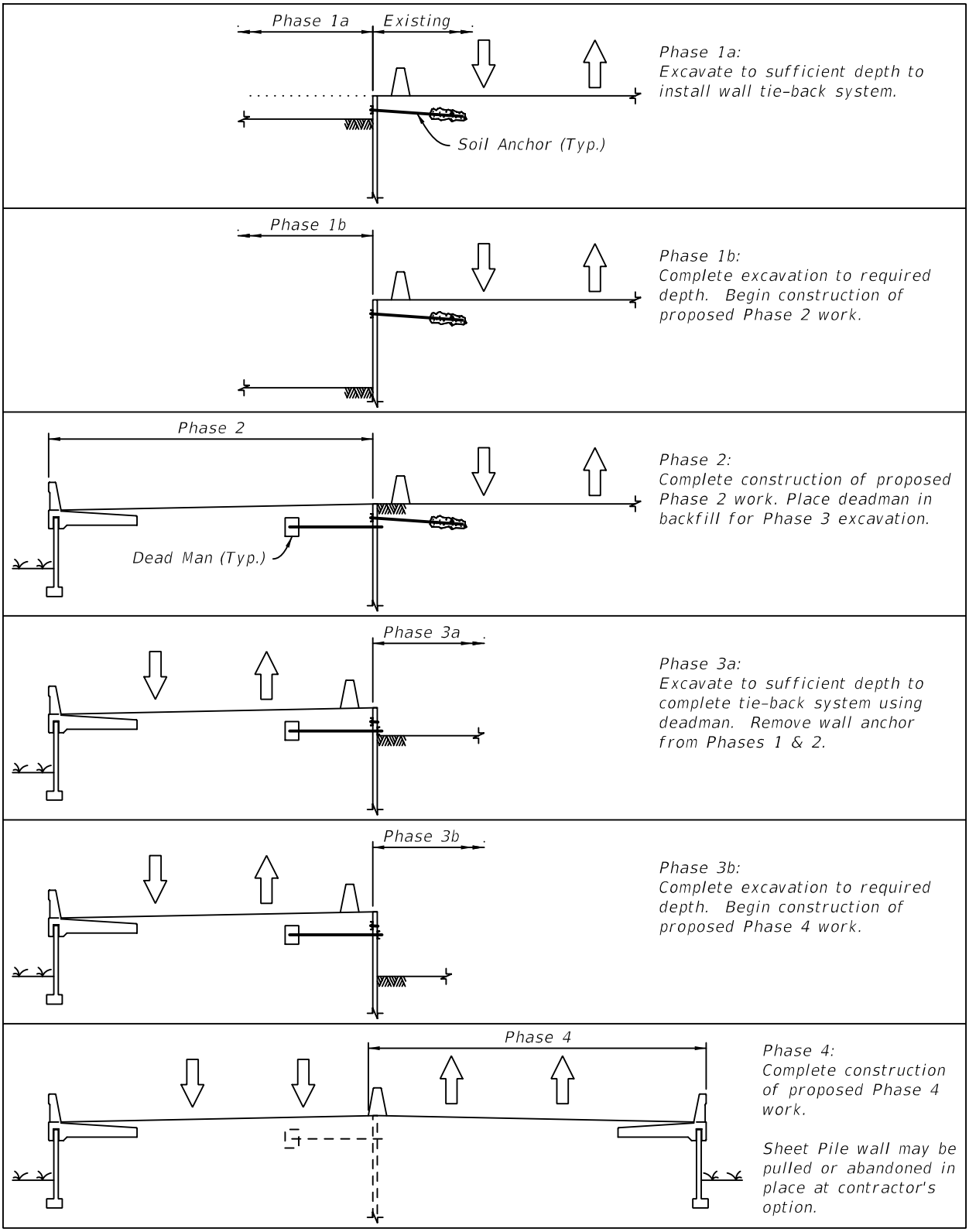

19.8 SOLDIER PILE WALLS

Soldier pile walls offer a suitable alternative when a rock layer is near the ground surface, such as the Fort Thompson Layer, presenting a challenge to constructing other more traditional wall types. Timber lagging is only permitted for use in temporary soldier pile walls. When timber lagging is utilized, include a note alerting the contractor to the possibility of dewatering if high ground water is anticipated during construction. Indicate tie-back requirements if any, including layout of tiebacks or soil nails.

For soldier pile walls consisting of steel or prestressed concrete piles and precast concrete panels:

A. Show top-of cap, top of pile, top of panel, and tip of pile elevations in the wall control drawing elevation view.

B. Show pile spacing and panel layout in the wall control drawing plan view.

    1. Allow a gap between adjacent panels to facilitate the jetting of the panels into place and jetting tolerances.

    2. Address soldier pile placement and batter tolerances to ensure proper fit-up.

    3. Address method of installing piles. Since precast soldier pile wall systems are selected due to the presence of hard rock layers located below the bottom of the precast panels, preforming is typically called for in the plans.

20 SEGMENTAL BRIDGES

20.1 GENERAL

A. Segmental bridges are inherently complex to design and build. They require a coordinated effort between designers and detailers in order to develop integrated plans that address all design, detailing and constructability issues. The information contained herein is only part of the requirements necessary to successfully accomplish this task. For additional requirements see ***SDG*** Chapter 4.

B. Structural segmental drawings and details will be used by fabricators and contractors for the production and erection of segmental bridges erected by span-by-span or balanced cantilever methods. This chapter does not cover spliced or drop-in-girders or incrementally launched bridges.

C. The sheets outlined in this chapter are only a partial list and do not constitute the total sheets required for a complete submittal.

D. General Considerations

1. In general, provide a uniform segmental design that maximizes the reuse of formwork, reinforcing jigs, and casting cells. This approach will minimize cost, provide uniform aesthetics, and maximize production rates through the use of assembly line fabrication processes. Examples include:
   a. Core Form: For small projects with minimal project variability, a single core form may be all that is necessary. For large projects with large project variability, a second core form size may be required.
   b. Post-tensioning Bulkhead and Shear Key Layout. For small projects with small project variability a single P.T. bulkhead form and single shear key layout may be all that is necessary. For large projects with large project variability, a second P.T. bulkhead form may be required.

Modification for Non-Conventional Projects:

Delete ***SDM*** 20.1.D.1.

2. Designing for Project Variability: During the Bridge Development Report Phase, select and dimension the segmental box shape to accommodate all the structural and geometric demands of the project. Provide a design that accommodates all load demands, roadway section widths, geometry constraints, span lengths, etc.

Modification for Non-Conventional Projects:

Delete ***SDM*** 20.1.D.2 and insert the following:

2. Designing for Project Variability: Select and dimension the segmental box shape to accommodate all of the structural and geometric demands of the project. Provide a design that accommodates all load demands, roadway section widths, geometry constraints, span lengths, etc.

Figure 20.1-1 Reinforcing Jig for Variable Depth Segment



3. Precast Segment Weights: When proportioning precast segments, consider the effect of segment weight on hauling and erection equipment costs. The Contractor's equipment overhead costs are based on the heaviest precast segment on the project. For instance, typically split pier segments are utilized such that the weight of the pier segment half is closer to the weight of the typical or expansion joint segment located within the span. For especially large bridge components, cast-in place pier segments with closure pours may be more cost effective than precast segments especially when erection equipment costs are considered.
4. Bridge Drainage System. Ensure that the segments can accommodate the bridge deck drainage systems. Design bridge drainage system as an integral part of the segmental design. Whenever possible, locate drainage deck inlets near the pier. Common problems to avoid when laying out the drainage system are:
    a. Conflicts between the drainage inlets and the negative moment tendons on balanced cantilever bridges.
    b. Conflicts between the drainage piping and the pier segment diaphragm post-tensioning and reinforcing steel.
    c. Conflicts between the drainage inlets and transverse post-tensioning.

    If required, provide local thickening of the underside of the box wing and widening of the pier column flare width to accommodate the drainage inlet and piping. Refer to ***SDM*** Chapter 22 for more details.

5. Construction access: Verify construction access for transportation, handling, and the erection of all segments. Verify capacity of existing structures along likely haul routes.
6. Segment Length and height: When segments are to be transported by truck, limit segment lengths so that segments are able to travel within a roadway lane. Limit segment height including the traffic and pedestrian railing reinforcement so that segments can be delivered under overpasses.

20.2 SEGMENT DESIGNATION / SEGMENT LAYOUT SHEET

The Segment Designation Sheet is required for all segmental bridges regardless of the construction type. At a minimum, include the following on the Segment Designation Sheet:

A. Elevation View of the Bridge. The Elevation View shall include the following:
   1. Abutment and Pier locations.
   2. Dimensions showing the following: overall span lengths, number of a particular type of segment with overall lengths (e.g. 13 Segments @ 10'-0" = 130'-0"), closure joint, pier segment (pier segment halves), overall bridge length and segments with anchor blocks, horizontal deviations and vertical deviations.
   3. Segment joint number.
   4. Segment label and type with a corresponding legend(s) (e.g., "P" - Pier Segment, "E" - Expansion Joint Segment, "T"- Typical Segment, "C. J." - Closure Joint Segment, "D" -Deviation Segment, "HD" - Horizontal Deviation Segment, etc.). Some examples are listed below:
      a. Example of segment label for span by span: 2N-T3 where "2" is the Span Number, "N" is the Girder Designation (Northbound or Southbound), "T" is the Segment Type (T for typical), "3" is for the segment number.
      b. Example of segment label for balanced cantilever: 5-12U where "5" is the pier number, "12" is the segment number, "U" is Up Station or Down Station.
      c. Provide legend for segment identification and designate segment types.

B. Provide legend and designate which segments are cast with access openings, bridge drainage inlets, light pole pedestals, temporary top slab construction access holes, etc.

C. Provide the following note or similar: "Span lengths given are horizontal projections along the centerline of girder. Segment lengths given are chord lengths along centerline of girder."

20.3 SUPERSTRUCTURE DRAWINGS - SEGMENT DIMENSION SHEETS

The Segment Dimensions Sheets include the following sheets: Typical Segment Dimensions, Deviation Segment Dimensions, Expansion Joint Segment Dimensions, and Pier Segment Dimensions. Provide the following information for each of the segment types:

A. Typical Segment Dimension Sheet

1. Cross section with traffic and pedestrian railings.
2. Dimension for overall width of the top slab and horizontal string of top slab dimensions. Include dimensions for railings, dimension to PI of web and top slab, dimensions to angle breaks in the soffit, dimension to centerline of the box, haunch thickness, drip groove, etc.
3. Dimension overall width of bottom slab and horizontal string of bottom slab dimensions. Provide dimensions to drain holes, angle breaks in the bottom slab soffit, dimensions to centerline of the box, etc.
4. Dimension overall height of box and dimension top slab thickness, bottom slab thickness, haunch thickness, web thickness, etc.
5. Slope of web. If web thickness varies with height, provide slope for inside and outside face.
6. Dimension for all fillet radii.
7. Variables may be used to dimension variable depth and variable height segments. In these cases, provide a table of variable dimensions.
8. Erection blisters or temporary stressing blisters.
9. Half plan of top slab and half plan of bottom slab fully dimensioned.
10. Section View with dimensions.
11. Dimension any openings for electrical, trunk lines, drainage pipe in the bottom slab, vent holes, etc.

B. Deviation Segment Dimension Sheet

In addition to providing the information for the Typical Segment Dimension Sheet described above, provide the following additional information:

1. Deviation segment dimensions.
2. Locate temporary P.T. bar stressing holes.
3. Locate and label tendons.
4. Show external P.T. steel ducts.
5. Locate electrical maintenance lighting pass-thru holes.

C. Expansion Joint Segment Dimension Sheet

In addition to providing the information for the Typical Segment Dimension Sheet described above, provide the following additional information:

1. Dimension expansion joint box thickening and block-out.
2. Dimension diaphragm and diaphragm opening.
3. Anchor protection drip groove.
4. Locate external longitudinal tendon anchors and steel ducts.
5. Locate electrical maintenance lighting pass-thru holes.
6. Locate plinth details and locate centerline of bearing locations.
7. Show transverse tendon geometry and anchors.

D. Pier Segment Dimension Sheet

In addition to providing the information for the Typical Segment Dimension Sheet described above, provide the following additional information:

1. Dimension diaphragm and diaphragm opening.
2. If pier segment is formed using two segment halves, show P.T. bar ducts
3. Locate external longitudinal tendon anchors and steel ducts.
4. Locate electrical maintenance lighting pass-thru holes.
5. Locate plinth details and locate centerline of bearing locations.
6. Show transverse tendon geometry and anchors.

20.4 SUPERSTRUCTURE DRAWINGS - SEGMENT REINFORCING SHEETS

The Segment Reinforcing Sheets include the following sheets: Typical Segment Reinforcing, Deviation Segment Reinforcing, Expansion Joint Segment Reinforcing, and Pier Segment Reinforcing. Provide the following for the segment reinforcing sheets:

Show reinforcing steel, post tensioning anchors and ducts for all longitudinal and transverse tendons, and P.T. Bars. Verify post tensioning spirals do not conflict with reinforcing, other spirals, drainage, or other PT ducts. Show ducts, PT bar locations and bridge drainage schematically (Top and Bottom Slab). Do not provide dimensions or spacing to ducts. Dimension to ducts to be provided on the bulkhead sheet. Show reinforcing for segmental box, diaphragms, blisters, and/or deviation saddles as required. Provide special bar bends where required. At a minimum, show cross section, plan, and elevation view.

Pier Segment and Expansion Joint Segments are highly congested with reinforcing (longitudinal, shear, transverse, and torsion bars), transverse top slab tendons, longitudinal tendons, spirals, PT bars, and looped or transverse diaphragm tendons. Therefore, these

segments require integrated drawings. Integrated drawings should be 3D; however, for less congested segments, multiple sections using 2D integrated drawings are acceptable.

Figure 20.4-1 Reinforcing in Deviation Segment



20.5 SUPERSTRUCTURE DRAWINGS - TRANSVERSE POST-TENSIONING DETAILS

The Transverse Post-Tensioning Details show the typical transverse post-tensioning for the typical, pier, and expansion/abutment segment. At a minimum, show the following:

A. The cross section of the segment. If special details are required for either the pier segment or abutment segment, show a half elevation of the typical (and other segments) and a half elevation of the segment requiring other post-tensioning.

B. Define the transverse tendon trajectory using distance and offsets to tendon P.I. Also show longitudinal tendon and P.T. Bar ducts.

C. Provide End View of blockout and transverse post-tensioning anchorage.

D. Provide Plan view of anchorage. Show plan view of tendon and local bursting reinforcing.

E. Provide notes including whether the tendon is single or double end stressed and whether the stressing is staggered or partially stressed prior to form release with minimum concrete strengths.

F. Tendon spacing for each type of segment.

20.6 SUPERSTRUCTURE DRAWINGS - BULKHEAD AND SHEAR KEY DETAILS

The Bulkhead and Shear Key Details Sheet(s) outlines the shear keys for the typical segment. These sheets may also apply to the expansion joint and the pier segment. At a minimum, show the following:

A. The cross section of the segment with the location and size of the shear keys. Provide web shear keys and alignment keys in top slab and bottom slab. Typically, one sheet is used for each of the segments required.

B. Locations and labeling of all longitudinal ducts (top slab and bottom slab).

C. Locations of all the post-tensioning anchorages (top slab and bottom slab).

D. Dash-in blister locations for permanent and temporary post-tensioning.

E. Section cuts at each shear key. Provide dimensions of each type of shear key for each of the section cuts.

F. If pier segment is formed using two segment halves, show shear keys at segment diaphragm interface, epoxy bleed drain holes, and P.T. bar ducts used to assemble full pier segment.

G. Blockout details of permanent and temporary PT.

H. Notes on duct dimensions.

20.7 SUPERSTRUCTURE DRAWINGS - LONGITUDINAL POST-TENSIONING LAYOUT

The Longitudinal Post-Tensioning Layout Sheet(s) show the overall longitudinal post-tensioning layout for each span. The Longitudinal Post Tensioning Layout includes all sheets for the permanent post-tensioning and all sheets for the temporary post-tensioning. At a minimum, show the following:

A. For span-by-span and balanced cantilever construction:

1. Plan View and Elevation View of the post-tensioning. The plan view usually consists of a half plan top slab and a half plan bottom slab. Tendon locations shall match locations on the bulkhead sheet.
2. Show all cantilever and continuity tendons in Plan View with the horizontal deviation. Show all post-tensioning vertical deviations in the Elevation View.
3. For internal cantilever and continuity tendons, show a partial cross section of the top and bottom slab on the Plan View.
4. Label segments, closure joints, and pier locations. Show split pier segments if applicable.
5. Label all post-tensioning tendons. Call out PT bars on the plans as either temporary or permanent.

6. Show all blisters and deviation saddles for bottom slab and top slab tendons and PT bars.

B. Provide a Legend for the sheet. Show "Stressing End", "Dead End", "Internal Tendon", "External Tendon", "PT Bar", etc. on the Legend.

C. For external tendons including future tendons used with horizontally curved bridges, verify that tendons do not conflict with box webs.

20.8 SUPERSTRUCTURE DRAWINGS - POST-TENSIONING DETAILS

A. The Post-Tensioning Details Sheet(s) incorporate all of the post-tensioning details to describe the overall geometry of the tendons not otherwise shown on other sheets. The Post-Tensioning Details Sheet(s) show the detailed PC and PT of the tendons, tendon radius/parabolic profile (plan and elevation), and anchorage location for all permanent and temporary strand and bar tendons.

B. Provide clearances at Stressing End Anchorage locations as shown in Figure 20.8-1 and Figure 20.8-2. Provide clearances at Non-stressing End Anchorage locations as shown in Figure 20.8-3 and Figure 20.8-4.

C. Design and detail external tendons at diaphragms, deviators and blisters as shown in Figures 20.8-5, 20.8-6, 20.8-7, 20.8-8, 20.8-9 and 20.8-10. See ***SDG*** 1.11.4 for additional requirements.

Figure 20.8-1 Stressing End Anchorage Clearance of Bottom Internal Tendon Near Deviator

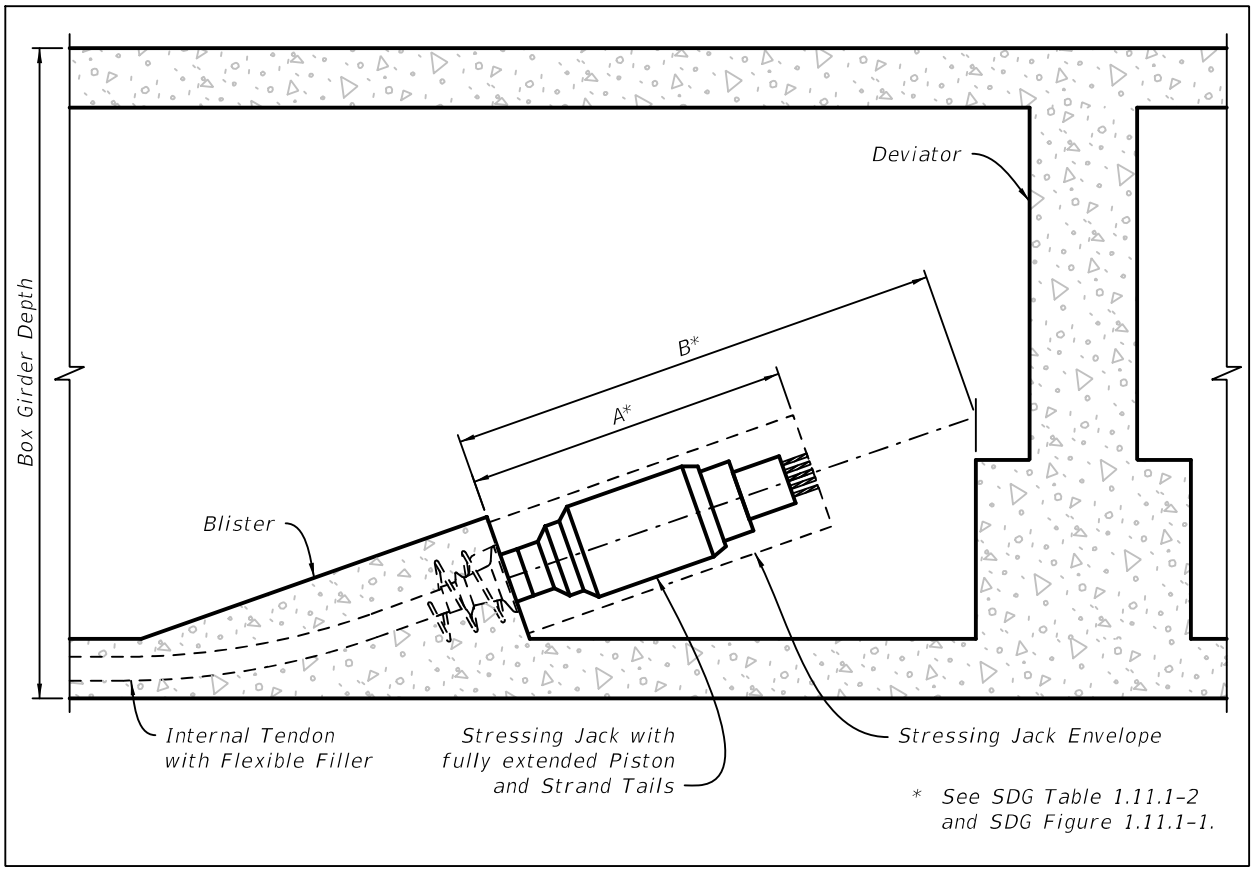

Figure 20.8-2 Stressing End Anchorage Clearance of External Tendon at Diaphragm Near Anchor Block

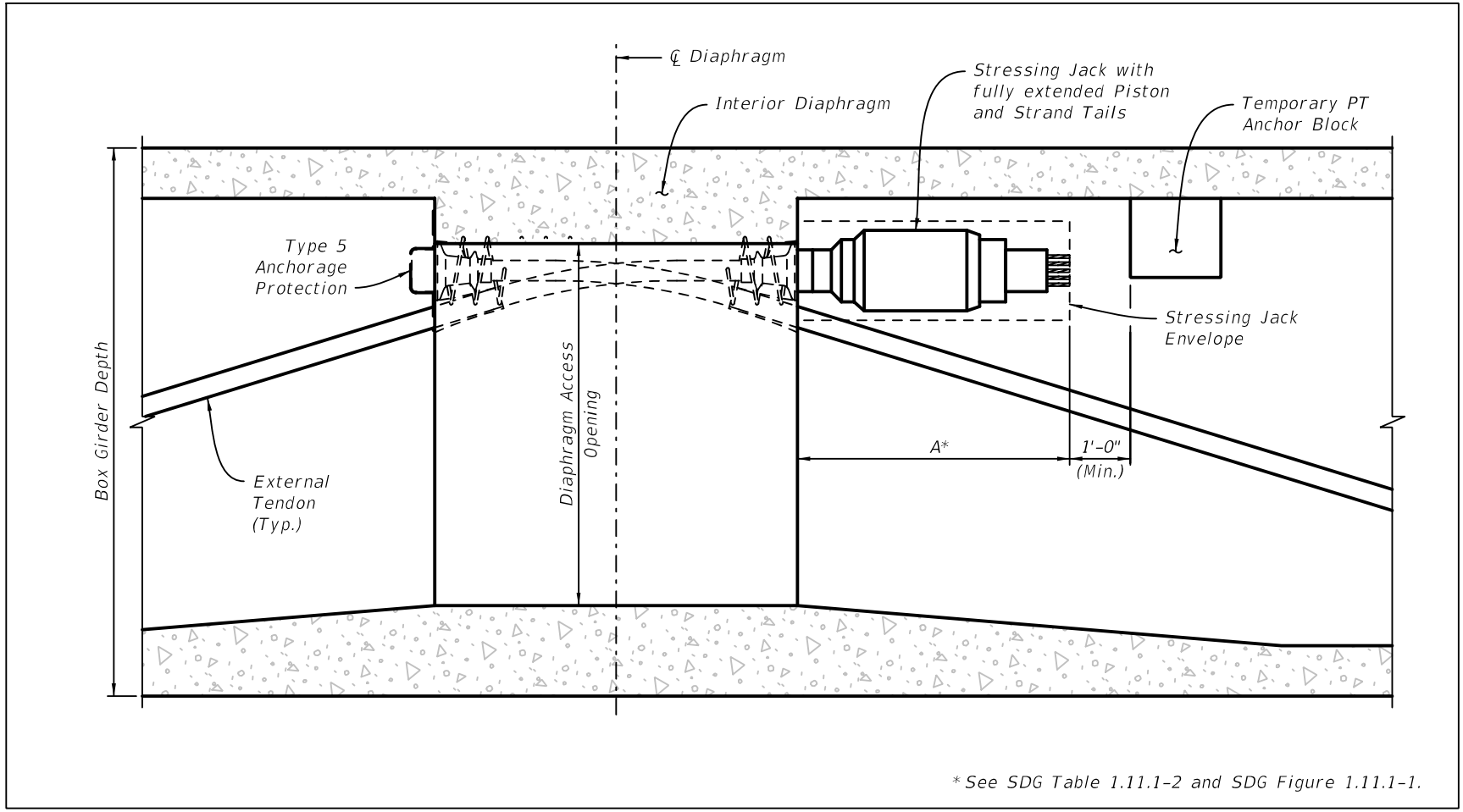

Figure 20.8-3 Non-Stressing End Anchorage Clearance at End Diaphragm Near Abutment Backwall

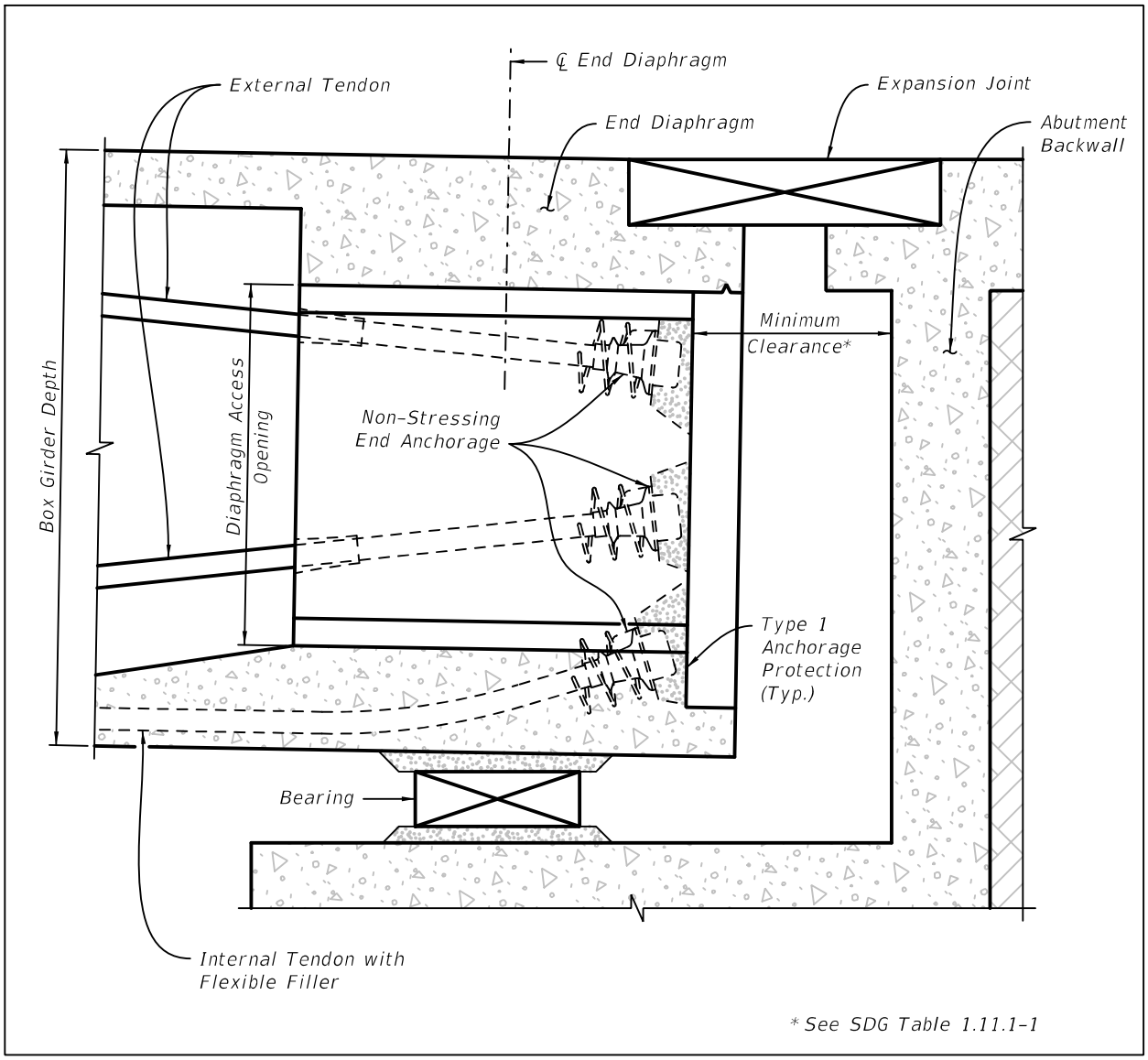

Figure 20.8-4 Non-Stressing End Anchorage Clearance at End Diaphragm Near Other Structure

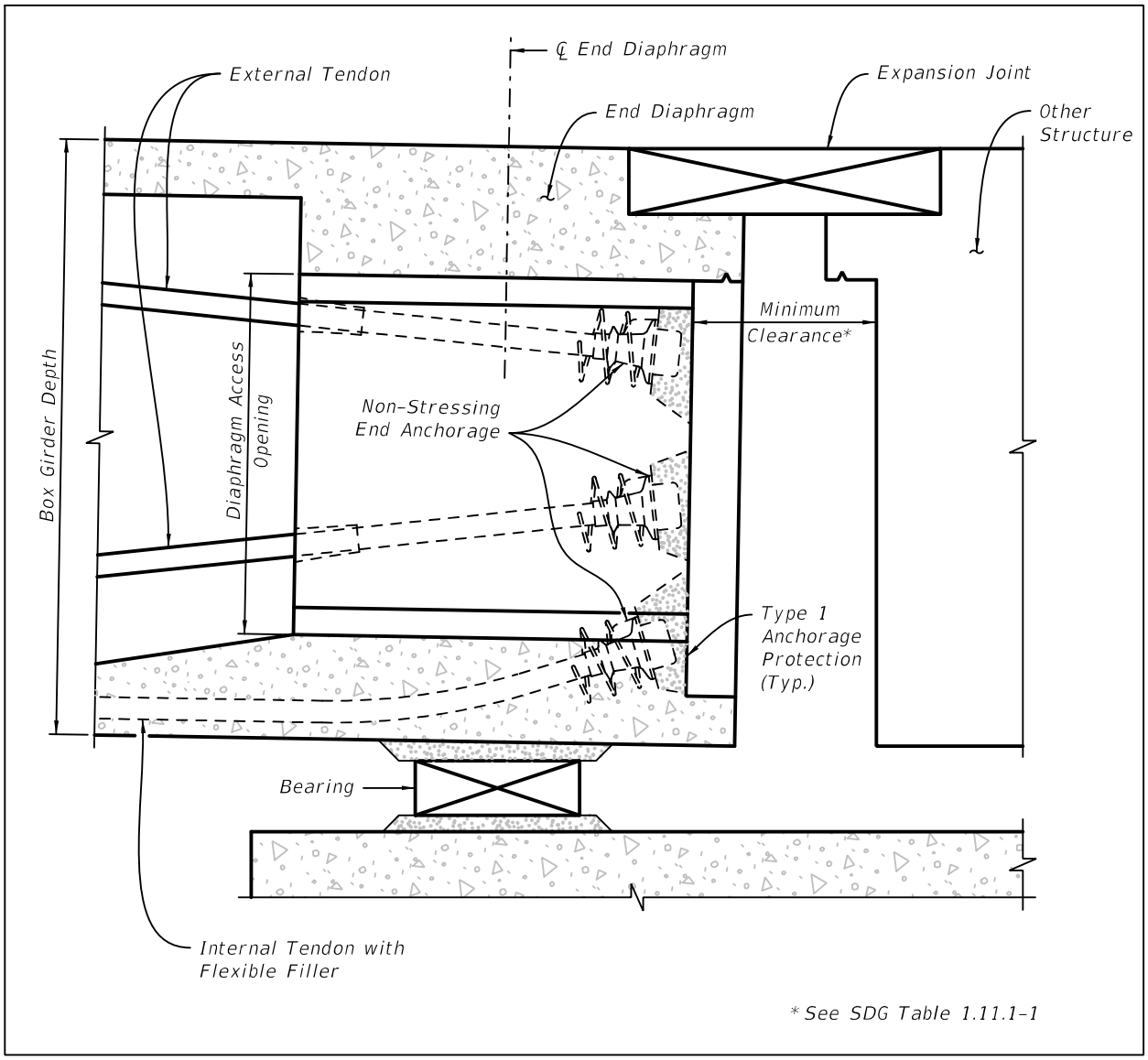

Figure 20.8-5 Detail at Pier Segment with Tendon Anchorage

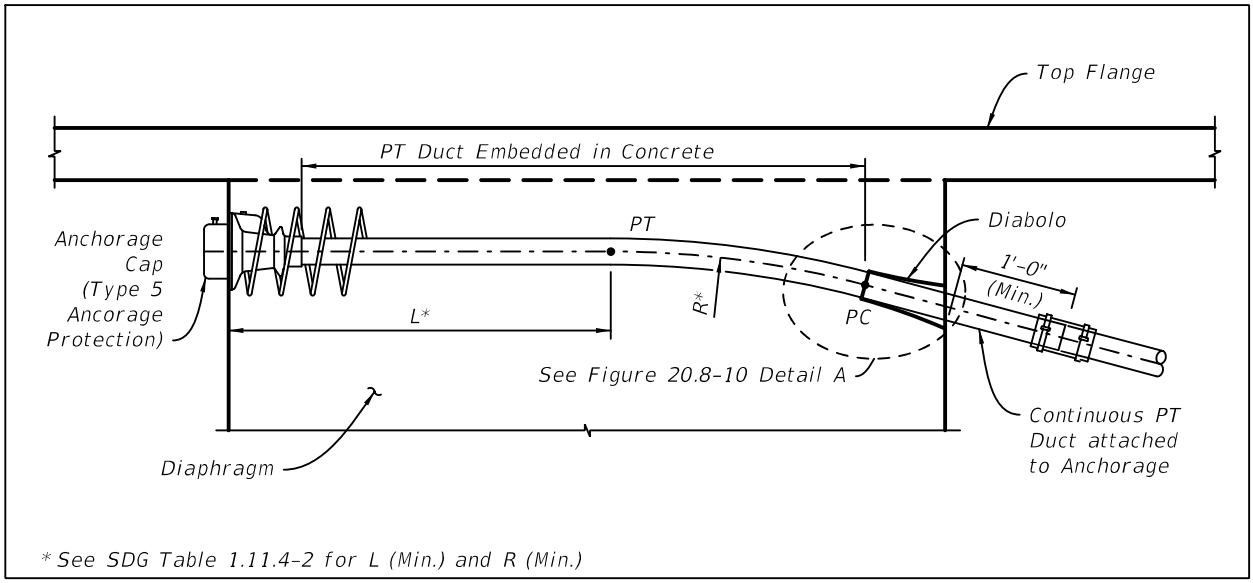

Figure 20.8-6 Detail at Expansion Joint Segment with Tendon Anchorage

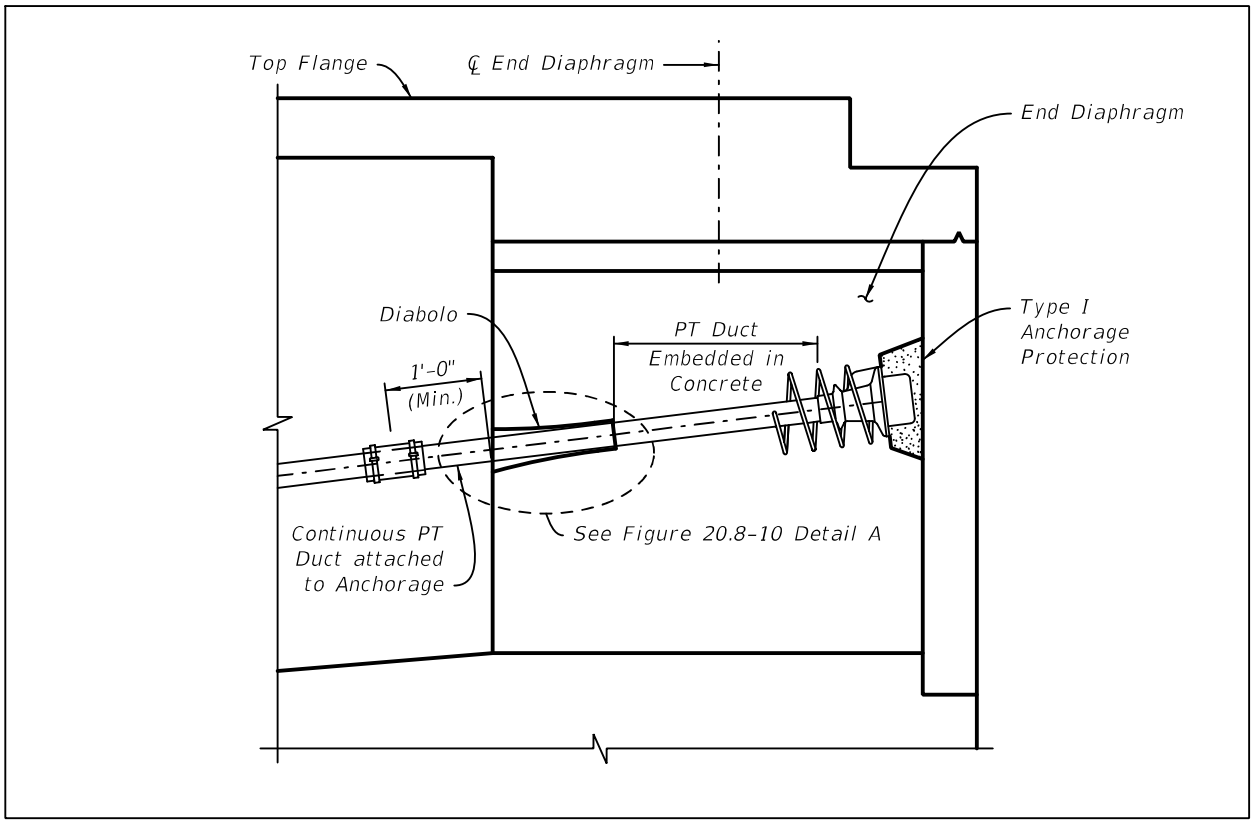

Figure 20.8-7 Detail at Blister without Anchorage

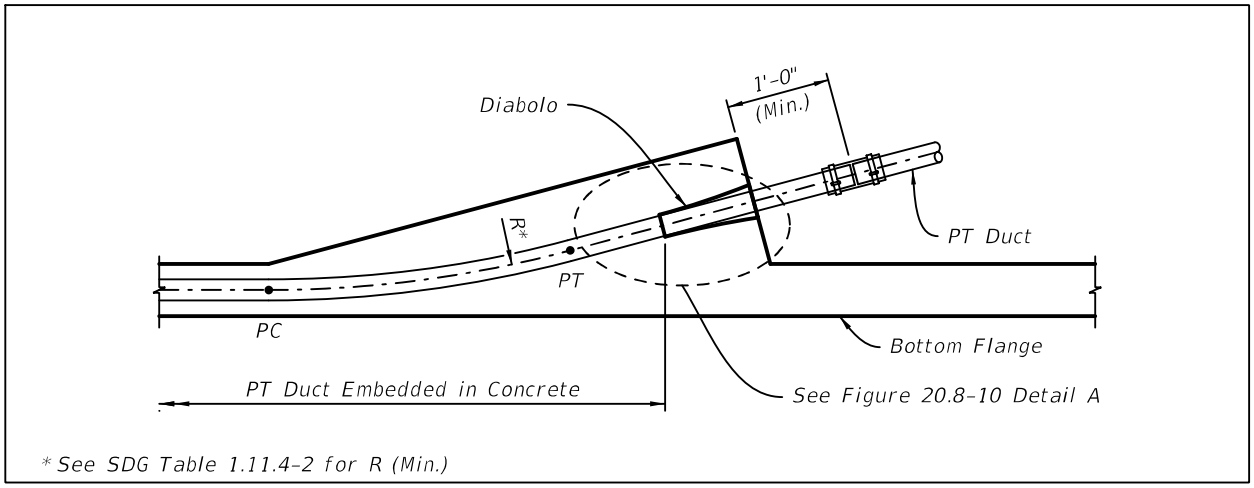

Figure 20.8-8 Detail at Pier Segment with Tendon Saddle

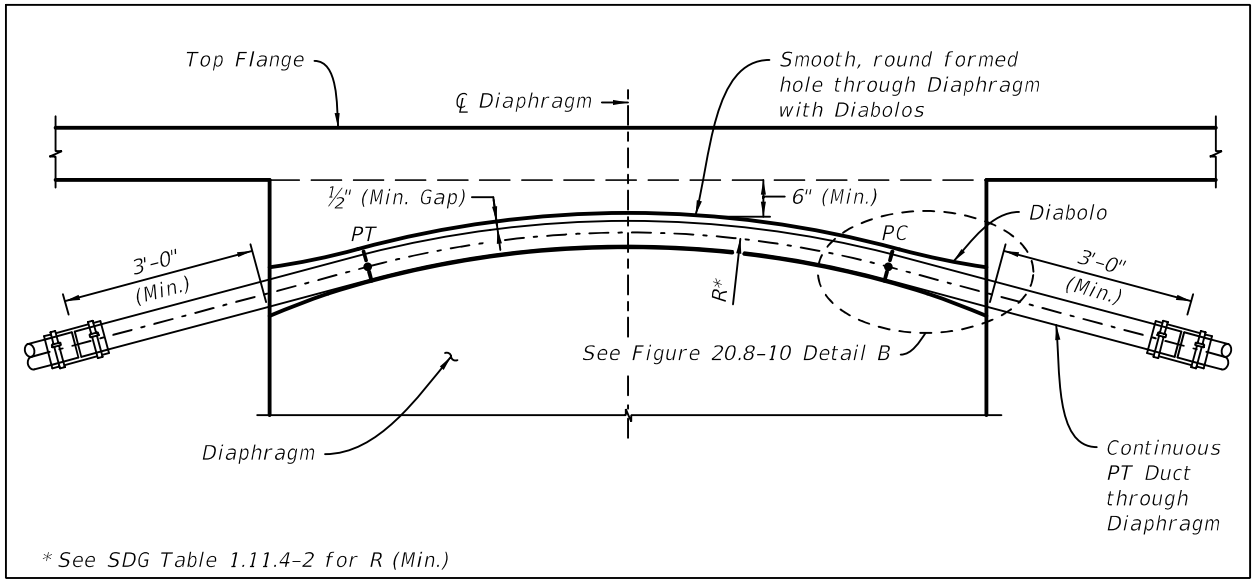

Figure 20.8-9 Detail at Deviator

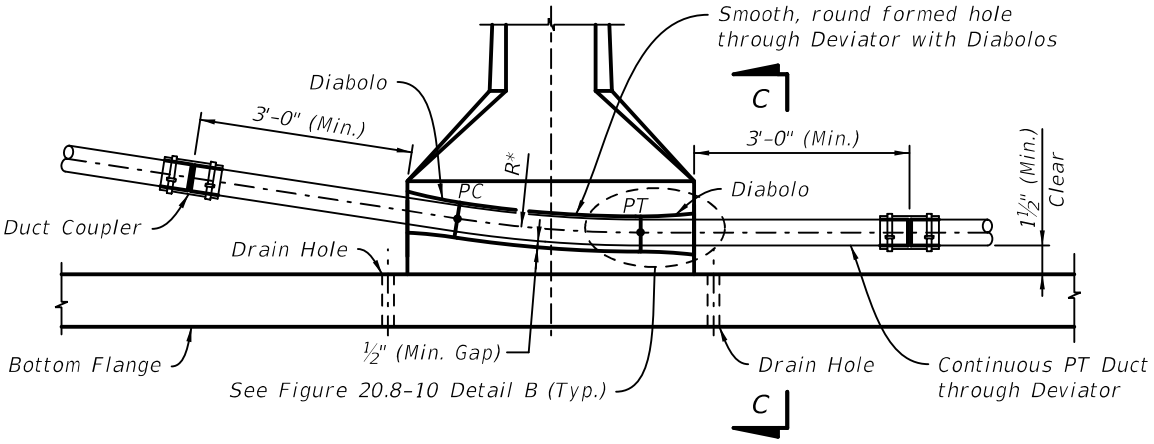

TYPICAL DEVIATOR DETAIL
(WITH SEPARATED DIABOLOS)

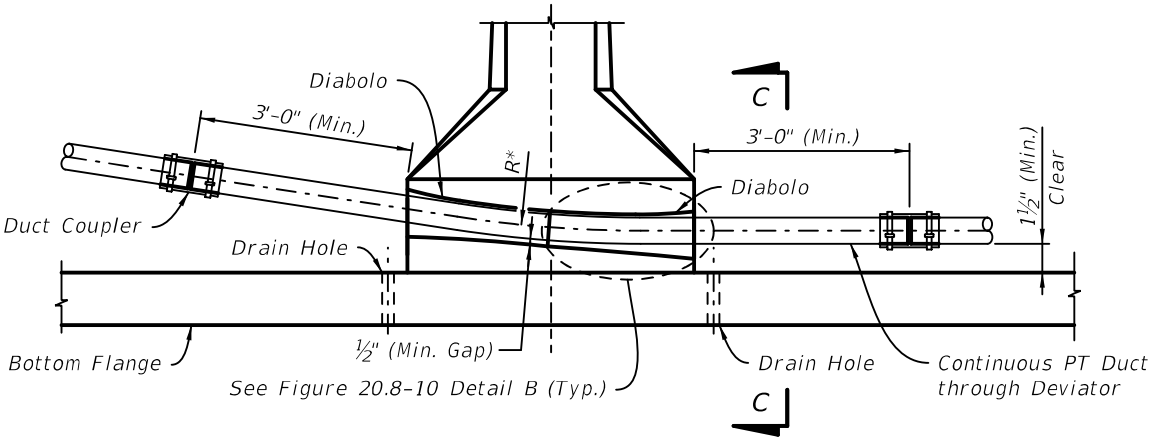

TYPICAL DEVIATOR DETAIL
(WITH BACK-TO-BACK DIABOLOS)

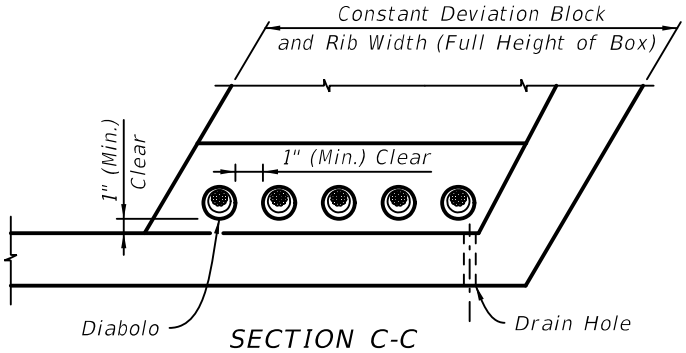

SECTION C-C

* See SDG Table 1.11.4-2 for R (Min.)

Figure 20.8-10 Diabolo Details

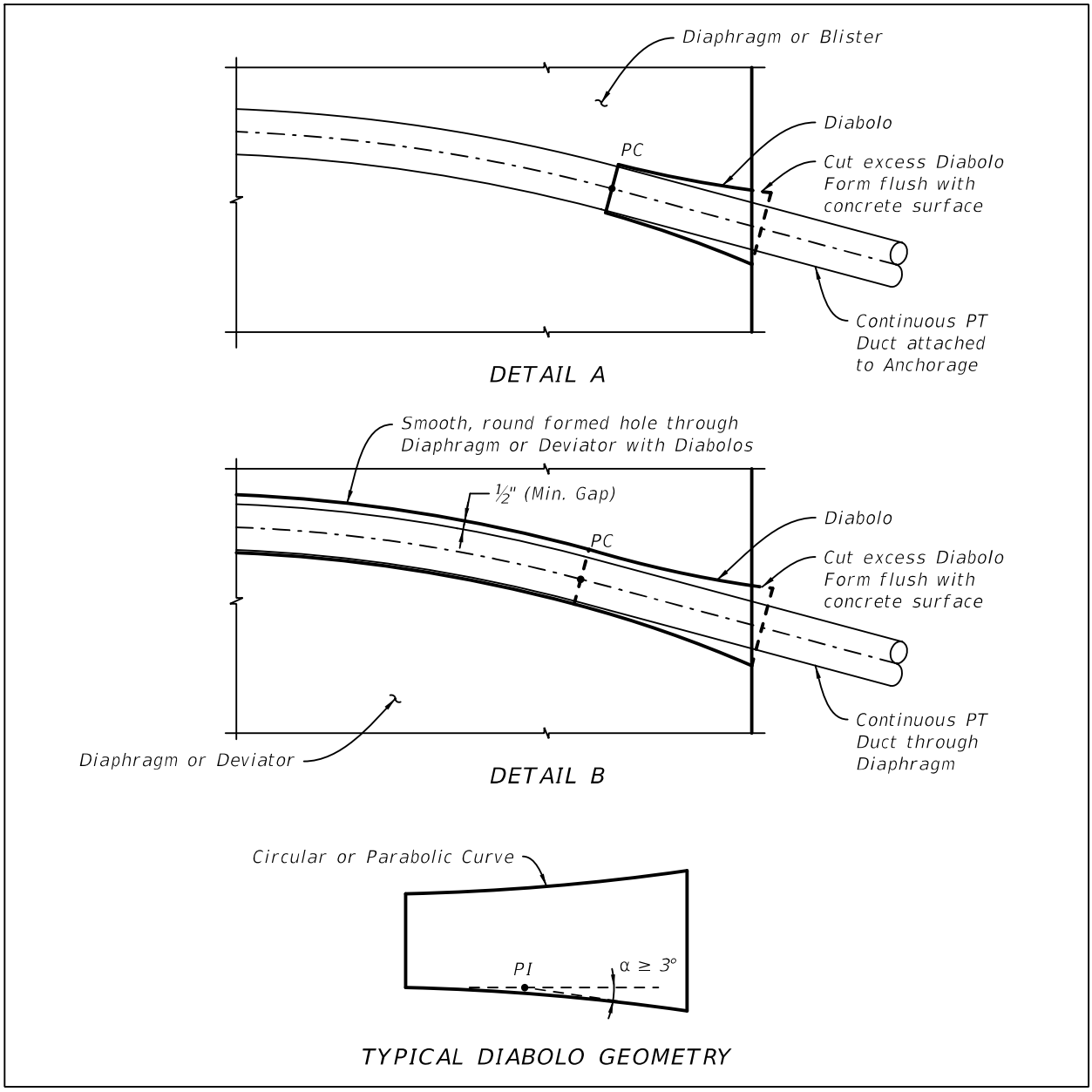

20.9 SUPERSTRUCTURE DRAWINGS - ERECTION SCHEME AND CONSTRUCTION NOTES

The Erection Scheme and Construction Notes Sheet(s) show one detailed method for the construction of the bridge, giving consideration to site constraints, construction equipment reach and mobility, MOT, etc. The sheet(s) typically shows an elevation view of the step-by-step construction using trusses, cranes, segment lifter, temporary supports, etc. and construction notes for each phase. General erection schemes and sheet requirements are shown below for balanced cantilever and span-by-span erection.

20.9.1 Balanced Cantilever

A. General Balanced Cantilever Erection Procedure for Precast Segments

1. Set pier segment or pier segment halves onto pier top and stabilize with shim packs, jacks, vertical P.T. bars or other means. Stress segment halves together. Ensure there is adequate room to place jacks, etc. on the top of the pier.
2. Install temporary towers.
3. Erect and stress one segment on either side of pier. Segments can either be erected on each side of the pier simultaneously or on one side of the pier and then the other side. Support erected segments vertically on top of temporary towers.
4. Set the geometry after the first two segments have been erected (pier segment plus the one segment on each side of pier segment) by jacking vertically and horizontally as necessary. Provide temporary horizontal jacking brackets to facilitate the alignment work. Provide temporary longitudinal fixity of permanent bearings.
5. After the geometry has been set, grout permanent bearings.
6. When grout has reached strength, transfer vertical pier segment reaction on to permanent bearings by removing the shim packs.
7. Continue the erection of cantilever segments. Install segments first with PT Bars that are continuously coupled, then stress permanent post tensioning strands. The PT bars are used to hang the segments from the cantilever tip and to squeeze epoxy at the joint. Permanent internal PT Bars for balanced cantilever construction may be stressed up to 70% of the ultimate tensile strength. Alternate sides of the cantilever in order to keep out-off-balance forces in the cantilever to a minimum.

Figure 20.9.1-1 Means of Stabilizing Cantilever

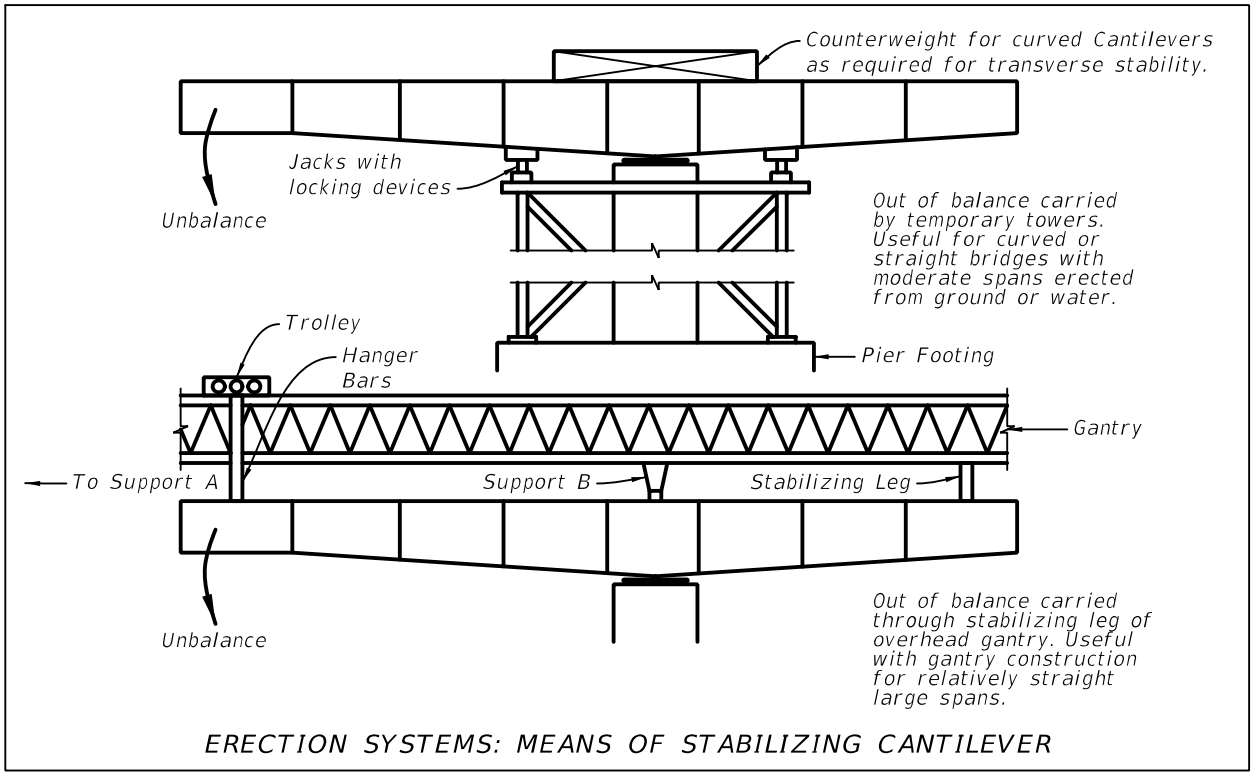

Figure 20.9.1-2 Stabilization of Balanced Cantilever



8. Cast closure and stress continuity tendons after either:
    a. Two adjacent cantilevers have been constructed or
    b. One cantilever has been constructed and the back-span on falsework has been constructed.
9. Release the temporary towers. Release the temporary longitudinal bearing restraints for each cantilever as continuity is made to adjacent spans provided that a longitudinal restraint is maintained somewhere along the unfinished unit as well as each cantilever prior to closure.
10. In general, construct balanced cantilever bridges in the following two directions:
    a. From abutment to abutment while making spans continuous as construction progresses or
    b. From each end abutment towards the center with final closure in the center span as construction progresses.
11. For balanced cantilever bridges with cast-in-place pier segments, closure pours are required between the pier segment and the first segment. Set the geometry of the pier segment, hang the first segment on either side of the pier segment with strongbacks and PT bars, and set the geometry of the segment before the first closure pour is made between the segment and pier segment. Stress PT and continue erection as described above.

Figure 20.9.1-3 Setting Geometry with Strongbacks



B. Cantilever Stability During Construction

1. Stability of the cantilever can be accomplished by three different methods.
   a. Temporary towers. Temporary towers are used to provide stability and can either be provided on one side of the cantilever or wrapped around the column. When towers are provided on one side only, provide the out of balance weight of the cantilever on the tower side.
   b. Overhead gantry. An overhead gantry spanning from the cantilever pier segment to the previously placed cantilever with leg connection along the cantilever such that it provides stability to the cantilever during construction.
   c. Integral pier table and column. The pier column itself can provide stability when the pier segments are cast-in-place as part of the column. Due to the rigidity of the frame action, strong backs are used at the mid-span closure pours to control geometry. See ***SDG*** for design requirements associated with designing the superstructure and column for the worst case cantilever erection tolerances.
2. Temporary towers are typically founded on the top of the permanent pile/shaft footing. The temporary out-of-balance loads can control the design of the piles/ shafts and footing, therefore it is important for the assumed equipment loads and construction loads to be shown in the plans as part of the erection notes.
3. Temporary towers are intended to transmit the out-of-balance moments from the cantilever to the pier footing. The temporary towers are not intended to carry the vertical weight of the cantilever; the weight of the cantilever is to be taken by the pier column through bearings or shims.
4. Show required counterweights and tie downs in the plans necessary to maintain stability of curved cantilevers. Show locations of counterweights and tie downs and provide assumed weights and forces and sequence of placement and removal.
5. Verify the temporary bearings/shims can be placed on the top of pier to stabilize the pier segment. Verify adequate space for grouting the bearings. Show external brackets where necessary.
6. Depict the assumed method for stabilizing the cantilevers during balanced cantilever construction on the plans.

C. Assumed Construction Methods. The methods below can be used for the construction of balanced cantilever structures. Clearly depict the assumed methods for cantilever construction on the plans. In some cases, more than one construction method may be necessary for a given project due to crane access limitations or traffic control restrictions. Show the magnitude and location of the assumed reactions for erection equipment onto the structure.

1. Overhead Gantry
2. Segment lifter
3. Beam and winch
4. Crane
5. Form traveler

Figure 20.9.1-4 Gantry and Stabilization Towers



Figure 20.9.1-5 Gantry with Leg on Pier Segment



D. Erection Drawings - Show the following in the erection drawings:

1. Assumed method of erection (e.g., crane, overhead gantry, etc.)
2. If erection is by overhead gantry
   a. Show overhead gantry on plans.
   b. Provide assumed length and weight (unloaded). Verify weight of gantry is compatible with required strength and lifting capacity of gantry. See Figure 20.9.1-6
   c. Provide assumed vertical and longitudinal thrust loads during segment erection and during launching. Provide critical loading from gantry to the substructure. Account for bridge grade and add an additional 1% grade when computing thrust loads to account for gantry flexibility and friction forces.
   d. Provide special construction notes for gantry.
      i. If gantry leg requires touchdown within a span during launching, show assumed steps and distances of the gantry moves. Verify capacity of superstructure for this temporary gantry loading. Show assumed reaction magnitudes and locations in the plans.
      ii. Specify whether design assumes gantry loading is over the pier segments during segment erection.
      iii. Include notes associated with stabilizing pier segment to the top of the pier. Ensure that the plan dimensions of the pier cap for temporary shims or vertical PT are sufficient to stabilize the pier segment. Show external brackets where necessary.

Figure 20.9.1-6 Gantry Loads During Launching

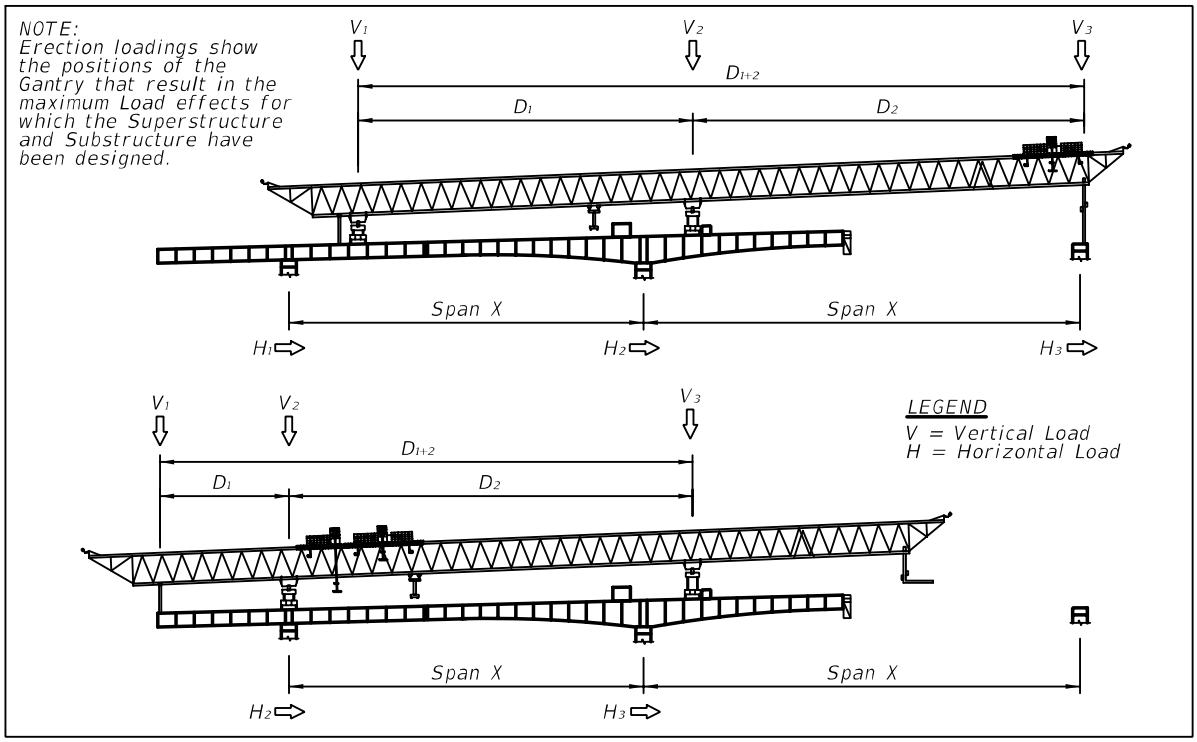

3. If erection is by segment lifter or by beam and winch:
    a. Show sketch of segment lifter/beam and winch. Provide magnitude and location of assumed reactions on the superstructure.
    b. Show assumed PT bar tie-down location. Verify capacity of top slab at tie down location.

Figure 20.9.1-7 Beam and Winch Details

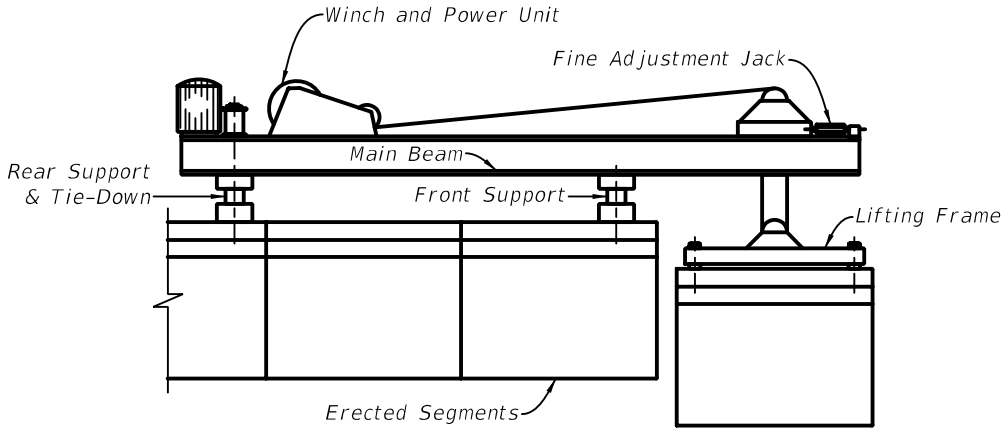

BEAM AND WINCH DETAILS

4. If erection is by crane: Show a sketch in the plans depicting land/barge based cranes. Perform a crane access assessment during design. Include crane placement for all segment lifts for the project in the assessment. Assessment shall include:

    a. Assumed crane size (tonnage), assumed boom length, etc.

    b. Working radius of the crane and ensure that all segments can be erected by assumed crane size. Verify clearances between wings and boom.
        i. Ensure that crane placements, durations of lifts, and resulting traffic impacts are acceptable.
        ii. Account for railroad 1.5 factor lifting restrictions as required.

    c. In general, do not place cranes on top of or immediately next to MSE walls. Coordinate any required temporary construction easements during design. Submit a copy of the crane access assessment to the Department for review.

    d. Depict in the plans when:
        i. Cranes have to be placed onto existing bridges where strengthening is required. In this case assumed crane size and strengthening measure need to be clear for bid purposes.
        ii. Special access platforms required due to unusually weak subsurface conditions, or sloping ground surfaces.

iii. Instances where unusually large cranes are required. In this case show:

- Assumed crane size (tonnage), assumed boom length, etc.
- Working radius of the crane and ensure that all segments can be erected by assumed crane size. Verify clearances between wings and boom.

iv. Ensure that Traffic Control Plans restrictions are consistent with assumed placement and duration made during design.

5. If erection is by form travelers: Approximate form travelers weight for the cast-in-place cantilever construction. Form traveler weight will vary depending on the size of the segment and span. Assume a minimum form traveler weight of 160-180 kips for single cell box and 280-300 kips for twin cell box. Show assumed traveler reaction magnitudes and locations in the plans.
6. Erection notes: Examples of erection notes include the following:
   a. At all non-fixed bearing cantilever locations provide temporary longitudinal restraints. Temporary longitudinal restraint shall remain in place until cantilever is closed with adjacent cantilevers which are longitudinally restrained.
   b. All temporary towers adjacent to vehicular traffic must be protected by traffic barriers.
   c. All temporary towers supporting free cantilevers over traveling public shall be designed by the Contractor with signed and sealed calculations including field certification by a professional engineer registered in State of Florida prior to allowing traffic to proceed underneath.
   d. The erection sequence considered in the design and shown herein anticipates cantilever erection using ground level cranes and does not load the superstructure cantilevers.

20.9.2 Span by Span Erection

A. General Span by Span erection for precast segments.

1. Secure and align the truss.
2. Place pier segments and stabilize with shim packs, jacks, PT bars or other means.
3. Erect segments in a span.
4. Apply epoxy between typical segments and stress together using temporary external PT bars. Internal bars may also be used. Limit the force in the external PT Bar to 50% of the Guaranteed Ultimate Tensile Strength (GUTS) for re-used bars.
5. Repeat the process until all of typical segments in the span are erected and stressed.
6. Place concrete blocks in the gap between pier segments and the typical segments. Partial stress tendons to approximately 10% GUTS.
7. Provide cast-in-place closure joints between the pier segments and the typical segments.
8. Place and stress tendons.

9. Check alignment and grout bearings.
10. Remove shim packs.

Figure 20.9.2-1 Span by Span Construction



B. Stability of Pier Segments During Construction. Set pier segment onto pier top and stabilize with shim packs, jacks, vertical PT bars or other means. Show locations of temporary bearings/shims. Verify space for the temporary bearings/shims on top of pier. Show external brackets where necessary.

C. Assumed Construction Methods. The methods below can be used for span by span construction. Assumed methods for cantilever construction shall be clearly depicted on the plans.

1. Under slung truss
2. Overhead Gantry
3. Top-down Construction using crane.

D. Erection Drawings - Show the following in the erection drawings:

1. Assumed method of erection (e.g., underslung truss, overhead gantry, etc.)
2. If erection is by overhead gantry:
    a. Show overhead gantry on plans.
    b. Provide assumed weight (unloaded). Verify weight of gantry is compatible with required strength, lifting capacity and deflection characteristics of gantry.

c. Show assumed longitudinal thrust loads during segment placement and launching. Provide critical loading from gantry to the substructure. Account for bridge grade and add an additional 1% grade when computing thrust loads to account for gantry flexibility and friction forces.

d. Show longitudinal thrust loads during segment erection. This assumes all segments are hung from the gantry which will be supported by the Pier segments. Design piers for gantry thrust loads during erection

e. Provide special construction notes for gantry.

   i. If gantry leg requires touchdown within a span, show assumed steps and distances of the gantry moves. Verify capacity of superstructure for this temporary gantry loading. Show assumed reaction magnitudes and locations in the plans.

   ii. Whether design assumes gantry loading is over the pier segments only.

   iii. Include notes associated with stabilizing pier segment to the top of the pier. Ensure that the plan size of the pier cap is sufficient to stabilize the pier segment with temporary shims or vertical PT. Show external brackets where necessary.

3. If erection utilizes underslung truss, provide the following:

   a. Show assumed underslung truss vertical and longitudinal loading on the structure on the Erection Drawings.

   b. Provide assumed weight (unloaded). Verify weight of truss is compatible with required strength, lifting capacity and deflection characteristics of truss.

   c. Design piers, foundations, bearings, etc. for all vertical and longitudinal loading during launching of the gantry or underslung truss.

   d. Provide sketch of temporary assumed bracing for underslung truss and attachment to either the pier or to the footing. Ensure footing is sized adequately to support temporary works or provide notes in drawings that additional temporary foundations are required for construction loading and provide assumed load.

   e. Verify temporary clearance envelopes between truss system and lower roadway.

Figure 20.9.2-2 Underslung Truss Details

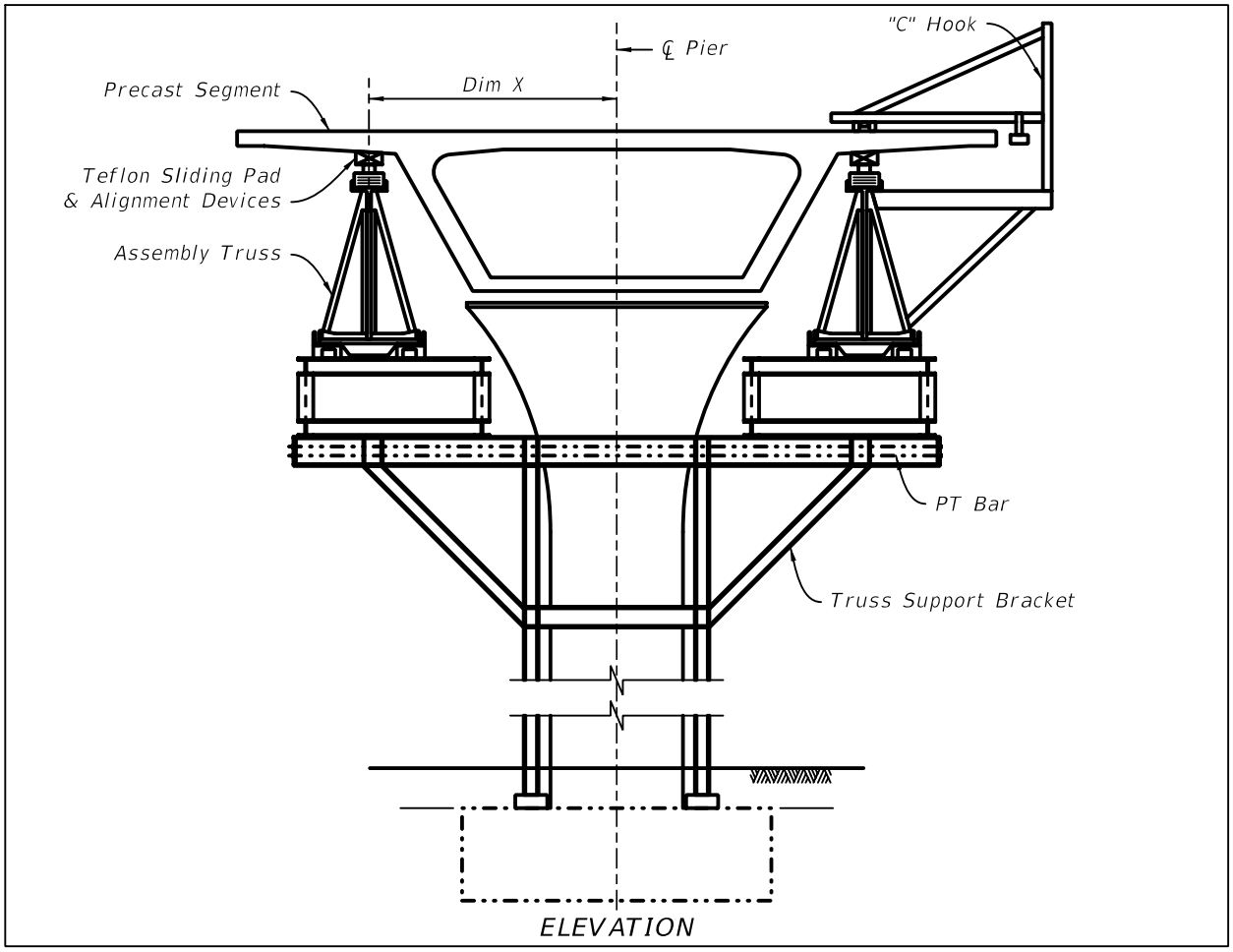

4. If erection utilizes top-down construction, where the segments are to be delivered by truck over previously erected spans to a crane, provide sketches showing the following:

    a. Sketch of the assumed erection crane in elevation view. Show width of outriggers extended and retracted. Show the magnitude and location of the assumed maximum crane reactions. Verify capacity of superstructure for this temporary load case.

    b. Sketch of the crane with the segment hauler in partial plan view. Show location of crane placing segments, location of the segment hauler, working radius of the boom, centroid of the outriggers, and any required longitudinal beams to support crane reactions.

Figure 20.9.2-3 Span by Span Top-Down Erection Details

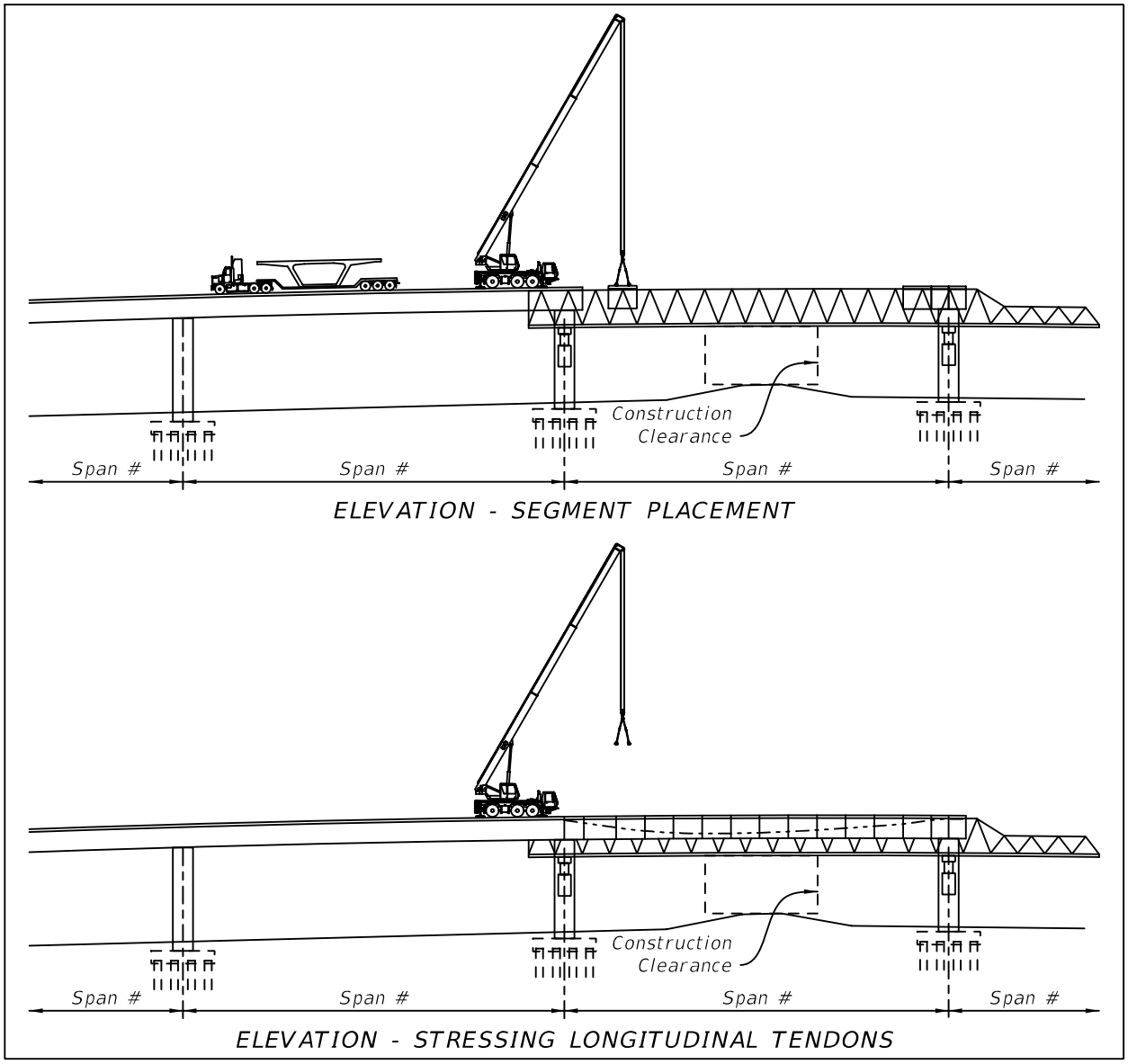

c. Verify punching shear in the deck from crane outriggers and provide/show longitudinal beams/crane mats as required.

d. Sketch of the assumed segment hauler. Include axle loads and axle spacing for empty weight of the hauler, weight of segment, and total assumed weight. Verify capacity of superstructure for this temporary load case.

Figure 20.9.2-4 Project Specific Truck and Axle Weight for Segment Transport

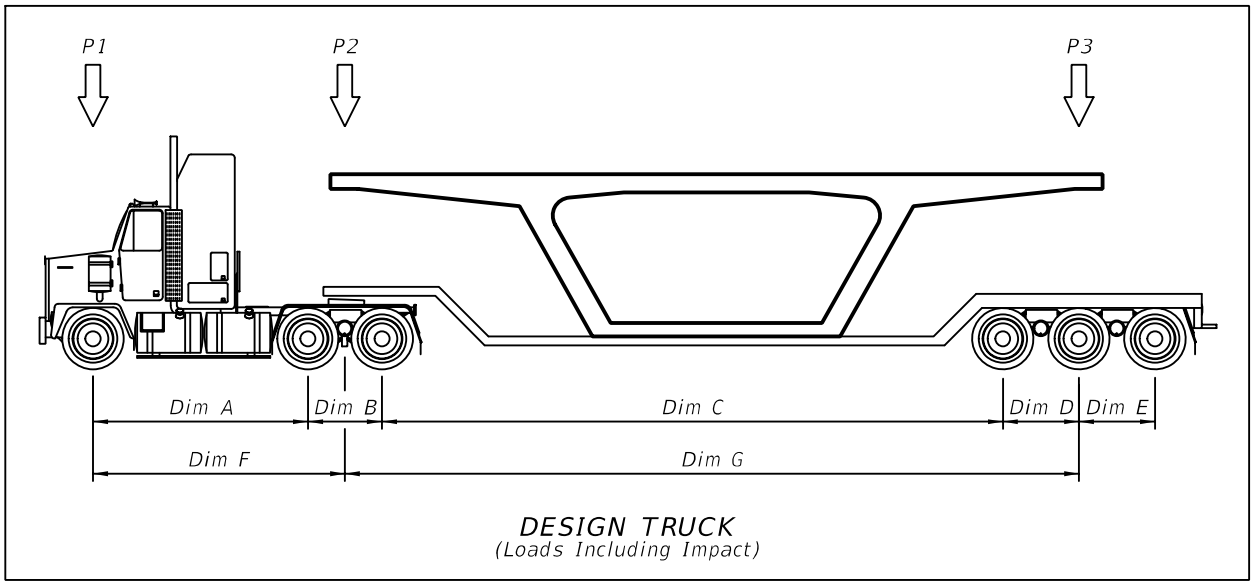

Figure 20.9.2-5 Truck Loaded with Segment



21 MOVABLE BRIDGES

21.1 BASCULE LEAF NOTES

21.1.1 General

A. As the first item under General, list the version of the ***AASHTO Specification***, any interim(s), version of ***Structures Manual*** and subsequent Structures Design Bulletins used as the basis for the design of the plans.

B. Organize notes under headings for Design, Materials, Construction, etc.

C. Include all General Notes and Pay Item Notes specific to Bascule Leaf on the Bascule Leaf General Notes sheet.

Modification for Non-Conventional Projects:
Delete ***SDM*** 21.1.1.C and insert the following: C. Include all General Notes specific to Bascule Leaf on the Bascule Leaf General Notes sheet.

D. Do not use General Notes or any other plan notes to repeat or modify requirements stated in the Specifications. If project specific modifications to the Specifications are required, prepare either a Modified Special Provision or a Technical Special Provision. Contact the District Specifications Office for guidance.

E. Never include proprietary or sole source information in a General Note or any other plan notes unless system compatibility is an issue; refer to ***FDM*** 110.4 for more information. Do not use the term "or equal". Use performance criteria. Contact the District Specifications Office for further guidance.

Modification for Non-Conventional Projects:
Delete ***SDM*** 21.1.1.E.

21.1.2 Bascule Leaf Notes

The following is a sample of Bascule Leaf notes to be included on the Bascule Leaf Notes sheet. Place these notes on the Bascule Leaf Notes sheet and modify for project specific requirements. Text in Italics is notes to the designer. At a minimum, show the following information:

Design:

A. General:

1. Design of the Bascule Leaf Structure is in accordance with the American Association of State Highway and Transportation Officials (AASHTO) LRFD Bridge Design (YEAR) and interims through XXXX, FDOT Structures Design Guidelines (***SDG***) LRFD (YEAR) and the AASHTO LRFD Movable Highway

Bridge Design Specifications (AASHTO Movable), XXX, and interims through XXX.

2. Dead Load Force Diagrams and Shear and Bending Moment Influence Lines for the Main Girders are provided in these Plans for use in future Load Rating and Overload Permitting. These diagrams are based on the assumptions stated herein.
3. See General Notes for additional information and requirements.

B. Design Loadings:

1. DEAD LOADS (For Structural Design and Balance Calculations):

Unit Weights (* = Use Actual Design values)	
Concrete (Lightweight for Exodermic Deck, Haunches, Edge Beams, Curbs and Bridge Railing)	XXX pcf *
Concrete (Counterweight)	XXX pcf *
Steel	490 pcf
Aluminum	175 pcf
Deck Panels	XX.X psf *
Traffic Railing (Including Concrete and Steel)	XXX plf *
Pedestrian Railing (Excluding Concrete Curb)	XXX plf *
Future Wearing Surface	No allowance provided
Equipment	(Actual Estimated Weights)
Roadway Lighting Fixtures	(Actual Estimated Weights)

2. LIVE LOADS:
   a. HL93 (Designed for up to X concurrent Lanes)
   b. Sidewalk Live Load per AASHTO
   c. Impact per AASHTO and AASHTO Movable
   d. Distribution of Live Loads to the Main Girder is conservatively taken as follows:

      D.F. = X.X Lanes (From Center Lock to Forward Joint)

      D.F. = X.XX Lanes (From forward Joint to Rear Joint)

3. WIND LOADS:
   a. Per AASHTO and AASHTO Movable modified in accordance with the FDOT Structures Design Guidelines. (Verify with the US Coast Guard the wind speed at which the bridge is locked down.)
   b. For Roadway Lighting Fixtures the following Loads shall be assumed to be applied to the Bascule Leaf at the Base of the Fixture:

Longitudinal Moment	X.X kip*ft
Transverse Moment	X.X kip*ft
Longitudinal Shear	X.X kips
Transverse Shear	X.X kips
Torsion	X.X kip*ft

4. TEMPERATURE EFFECTS:

Seasonal Variation: Mean Temperature	70° F
Temperature Rise	40° F
Temperature Fall	40° F
Thermal Coefficient Steel	0.0000065/°F
Thermal Coefficient Concrete	0.000006/°F

5. LOADING COMBINATIONS:

   Per AASHTO, AASHTO Movable and ***SDG***

6. PERMIT LOADING:

   Evaluated for X lanes of traffic for design inventory and FL120 permit loading assuming span locks are engaged (driven) to transmit Live Load to opposite leaf. In addition, evaluate for strength I design operating rating assuming the span locks are not engaged to transmit Live Load to the opposite Leaf.

7. FATIGUE:

   The number of cycles of maximum stress range to be used for Design was determined using X Lane Uni/Bidirectional Traffic on Each Bridge.

   AADT (Year) = XX,XXX (Unidirectional, X Lanes)

   T (Percentage of Trucks) = X.X

   Annual Traffic Growth Rate (Assumed) = X.X%

   Live Load D.F. = X.X Truck

   Single Lane Factor = X.XX C.

C. Design Assumptions:

1. CACULATION OF SECTION PROPERTIES:

   a. Indicate if the deck was considered composite in the design and under what loads (Dead Load, Superimposed D.L. & L.L., etc.).

   b. Indicate if composite section properties were used for estimating deflections/camber and strength/service limit state capacities.

2. DEFLECTION LIMITS:

   a. Per AASHTO with the following clarifications:

i. Live Load deflection of the Bascule Leaf Main girders shall be limited to L/375 where:

L = Distance from CL Span to CL Live Load Shoe

ii. Live Loads shall be considered equally distributed to both Main Girders

iii. Both Center Locks were not engaged.

iv. Only X Traffic Lanes Loaded on the Leaf for Live Load Deflection Calculations.

3. MEMBER CONNECTIONS:

The connection of the Floor Beams and the counterweight box to the Main Girders was considered moment resisting connection.

4. MATERIALS:

a. CONCRETE:

i. Concrete for the Bascule Leaves shall be in accordance with Section 346 of the Specifications. The following concrete shall be used: (Use actual design Strength and Concrete properties)

Location	Class	f'c	Ec	Unit Weight[1]
Exodermic Bridge Deck (Sand Lightweight Structural Concrete)[2]	IV	5.5 ksi	3020 ksi	115 pcf ± 3 pcf
Counterweight (Main box Girders and Counterweight Tubs)	II	3.4 ksi	3020 ksi	145 pcf ± 1.5 pcf

1 Strict control on the unit weight is required for Span balance considerations. See Section 465 of the Specifications for unit weight testing requirements.

2 Concrete Unit Weight shall be achieved utilizing a lightweight aggregate. The unit weight of sand lightweight structural concrete is critical to the balancing of the movable span. Deviations beyond the tolerances shown will not be permitted and may require removal/replacement at no additional cost to the Department.

f'_c Denotes minimum 28-day compression strength

E_c Denotes Modulus of Elasticity at 28 days with specified unit weight.

ii. See the General Notes and Specifications for other detailed material requirements.

D. Construction:

1. SPAN BALANCE:

a. Balance of the Bascule Leaves in the close position shall be the following parameters: (Use actual design values)

i. WL COS α = 340k*ft + 51 k*ft, -0 k*ft (Towards the leaf tip)

ii. Alpha = 20 Degrees to 50 Degrees

iii. Where WL COS α Denotes span unbalance moment (i.e., W*L COS α)

iv. W Denotes the total leaf weight

v. L Denotes the distance from CL Trunnion to C. G. of Leaf.

vi. Alpha Denotes the angle of inclination of the center of gravity above a horizontal line through the trunnion when the lead is closed. (in Degrees).

b. Contractor is responsible for determining the final adjustments to the counterweight to achieve the proper balance of the leaves. See Technical Special Provisions for detailed span balance requirements, submittals and permissible methods for adjusting the counterweight center of gravity location.

c. Bascule Leaf Fabrication, Erection and Alignment: See the Technical special provisions for detailed requirements. Design and Construction of Temporary restraints required during field erection of the Bascule Leaf shall be in accordance with Article 7-11 (Preservation of Property), Division I, General Requirements and Covenants, of the Specifications. The restraints shall be designed to resist loads per AASHTO Movable Specifications, treating the span as "Normally left in the closed position".

2. EXODERMIC BRIDGE DECK:

See the Technical Special Provisions for detailed requirements (Use actual design values)

Live Load Shoe Reaction Summary (kip)	
Loads	Span Closed (0°)
Dead[1]	10
Live[2]	1212
Impact	265
Note: Reactions are maximum and per Main Girder	

1 Based on required unbalanced reaction after span balancing.

2 Based on HL93 Live Loading with three Lanes Loaded at 85% Multilane - Presence Factor

3. TRUNNION REACTION SUMMARY (Use actual design values)

Trunnion Reaction Summary (kip)				
Loads	**Span Closed (0°)**		**Span Full Open (67°)**	
	Horiz.	**Vert.**	**Horiz.**	**Vert.**
Dead	-	1323 (A)	-	1323 (A)[1]
	-	1301 (O)	-	1301 (O)
Min. Live[2]	-	-950	-	-
Impact	-	-217	-	-
Max. Live[3]	-	75	-	-
Impact	-	23	-	-
Wind[4]	-	-	398	122
Note: Reactions are maximum and per Main Girder				

1 Includes 20% Dynamic Load Allowance. Both center locks engaged.

2 Based on HL93 Live Loading with three Lanes Loaded at 85% Multilane - Presence Factor without both center locks engaged.

3 Based on HL93 Truck Load w/Two Lanes Loaded.

4 Longitudinal Direction: 24 psf of base wind pressure acting on the projected area. The base pressure corresponds to elevation 30.0, and was adjusted to design elevation per ***LRFD*** Section 3.8. The adjusted average wind pressure is 34.2 psf acting at 53.2-feet above Trunnion.

4. JACKING NOTE:

   Jacking reactions shown are for locations shown and are per Main Girder. Jacking columns (Not in Contract) will be required under each web of Main Girder at CTC Diaphragm. Future Jacking shall be performed without traffic on Bascule Span. Traffic may be returned to the span after Jacks are safely locked and the Leaves are secured.

21.2 BASCULE STEEL GIRDERS

21.2.1 General

A. Structural steel drawings will be used by used by fabricators and contractors for the production and erection of structural steel members.

B. Check AISC on-line database of available structural steel shapes before specifying a particular steel shape and size. Preference should be given to shapes and sizes with multiple producers due to increased availability and lower cost.

21.2.2 Framing Plan Drawings

Framing plans are required for all bascule spans. At a minimum, show the following information:

A. Lateral bracing.

B. The distance between girders (centerlines).

C. The distance from the baseline/ centerline of construction to adjacent girder.

D. The distance between floorbeams (centerlines).

E. Dimension to center line of field splice from the centerline of trunnion.

F. Diaphragms, trunnion girders, stringers and overhang bracket locations.

G. Temporary bracing required for construction.

H. Girder/floorbeam numbering (Number in ascending order from the tip to the tail)

I. Direction of stationing.

J. Locate centerline of trunnion and live load shoe along baseline.

K. North arrow.

L. Direction of stationing adjacent to the baseline.

M. Counterweight girders/ tubs and counterweight concrete/adjustment pockets along span.

N. Longitudinal, transverse, forward, and rear joints.

O. Fender system and centerline of channel.

P. Centerline of bascule span.

Q. Limits of decking.

R. Centerline of top of web. (Do not show width of top flange) (Box Shapes)

Figure 21.2.2-1 Framing Plan

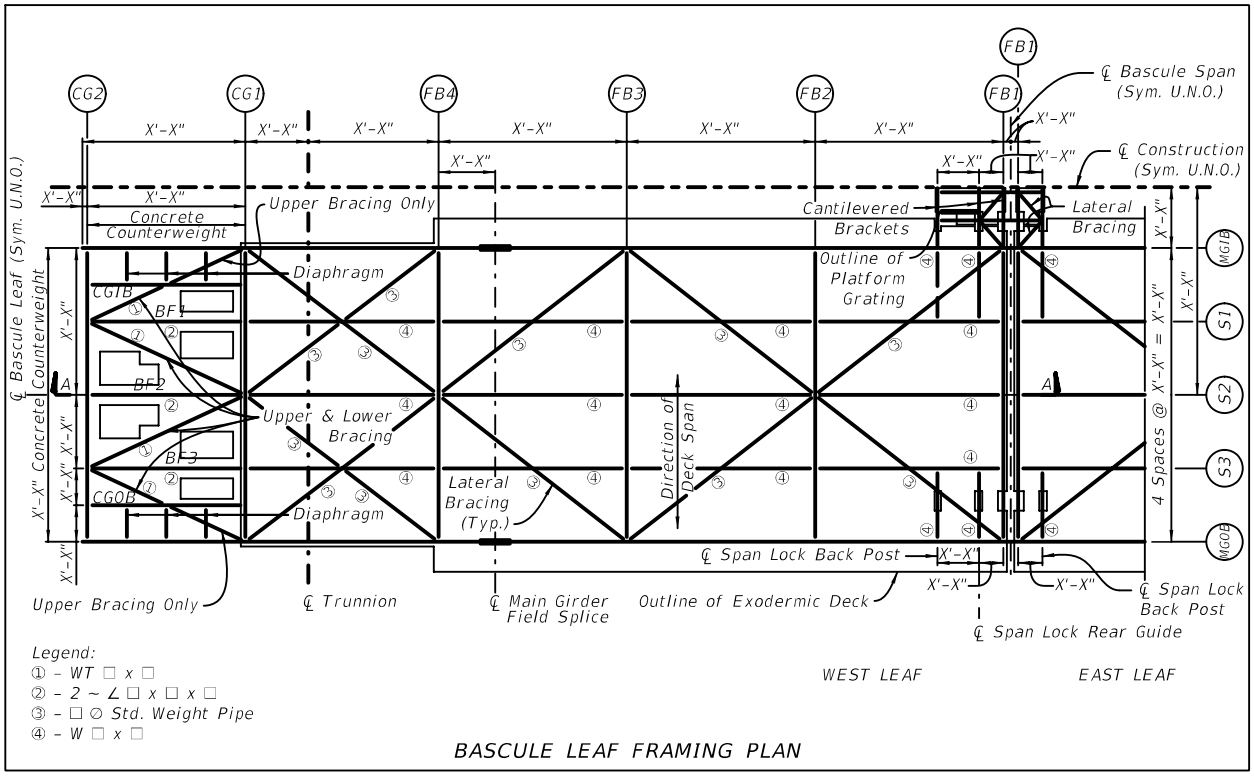

21.2.3 Longitudinal Section Drawings

At a minimum, show the following information for each section:

A. Elevation view of girder.

B. The centerline of trunnion and live load shoe along the Station Line.

C. Trunnion elevation.

D. Floor beams (centerlines) along bascule leaf.

E. Access openings.

F. Bracing locations.

G. Dimension field splices to centerline of trunnion.

H. Angle from centerline of trunnion (horizontal) to centerline of pinion shaft at closed position. Provide angle between the pinion in the open and closed position in relation to centerline trunnion.

I. Counterweight girders/ tubs and adjustment pockets.

Figure 21.2.3-1 Longitudinal Section

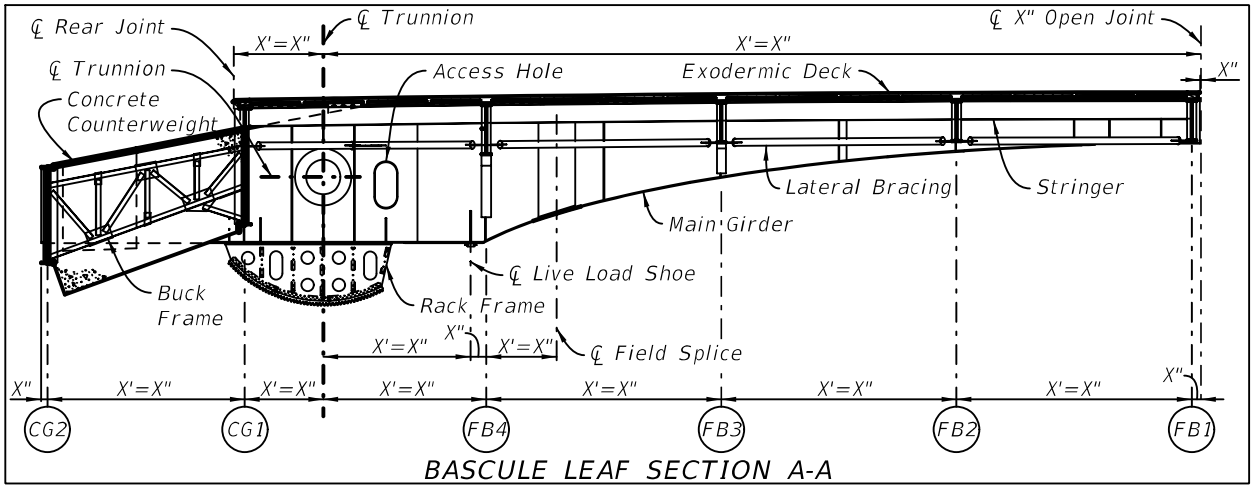

21.2.4 Transverse Section Drawings

Show transverse section of the leaf at each unique floorbeam. At a minimum, show the following information for each section:

A. Dimensions for traffic railing widths, shoulder widths, lane widths, bike lane widths, sidewalks, median width, and overall width.

B. Dimension girder to girder spacing and inside girder to centerline of bascule leaf

C. Overhang distance to the centerline of girder.

D. Traffic Railing type. If more than one traffic railing is used (median, railing, etc.) indicate each applicable type.

E. Deck thickness.

F. Centerline of bascule leaf.

G. Centerline of centering device and span locks at FB1.

H. The identification of girders/floorbeams on the Framing Plan consistent with detail sheets.

I. Station Line, PGL, workpoints, cross slope.

J. For box main girders, dimension centerline of web to centerline of girder.

K. Controlling web heights across floor beam.

L. Provide thickness of floorbeam web, flanges, stiffeners and size of connection plate and bottom flange stiffeners.

M. Access openings, access hatches, span lock assemblies, centering devices, rack assembly etc as applicable.

N. Longitudinal joints.

O. Conduit locations.

P. Bracing.

Q. For box main girders, show diaphragms, internal cross frames, diaphragm openings, and longitudinal stiffeners etc as applicable.

Figure 21.2.4-1 Transverse Section Drawings

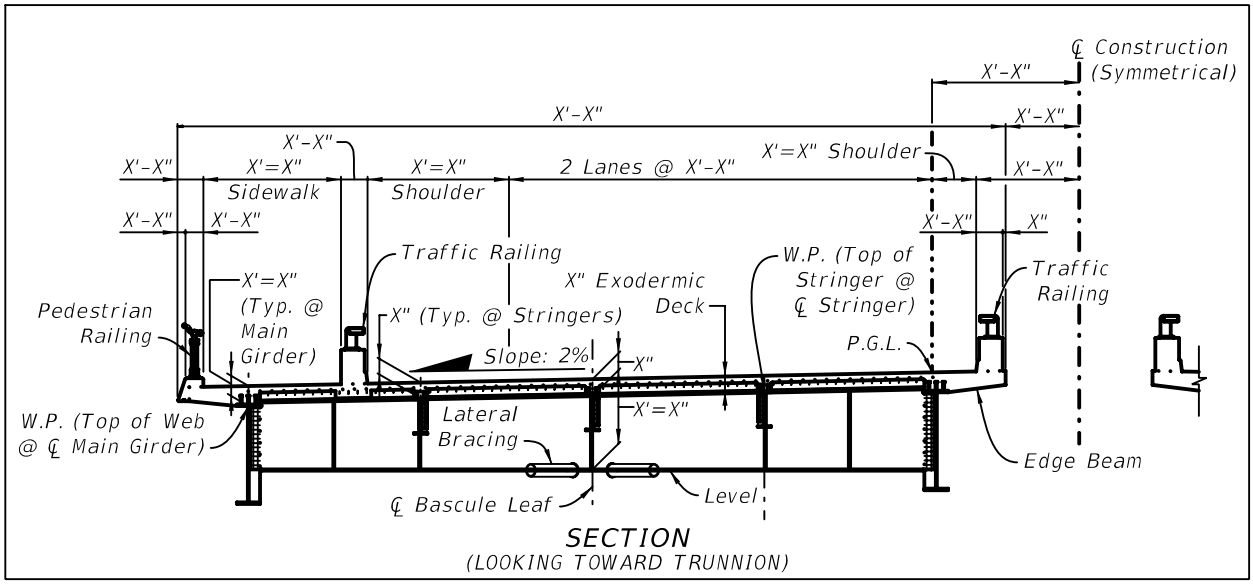

21.2.5 Main Girder Elevation Drawings

Main Girder Elevation sheets are required for bascule spans. Detail main girder elevation from tail to tip, going left to right. At a minimum, include the following on the Main Girder Elevation sheet:

A. Elevation view of girder. Provide matchlines for girders that require more than 1 sheet.

B. Top/Bottom view of girder (As required). For box main girders, show lateral bracing in top view and show longitudinal stiffeners in bottom view.

C. Shear connector spacing along centerline of girder (centerline of box for box girders).

D. Flange plate sizes.

E. Web plate size.

F. Weld sizes and types. Reference welding symbols at ***www.aws.org***.

G. Field splices.

H. Shop splices. Designate optional splices as required.

I. Plates to be Charpy V-Notch (CVN) tested shall be identified. Indicate NSTM by notation.

J. Dimensions for length along centerline girder as follows:

   1. From girder end to centerline of bascule span.
   2. From girder end to centerline of trunnion and from centerline trunnion to centerline of live load shoe.
   3. Distance between centerline of bascule span and tip of girder.

4. Between centerline(s) of floorbeam(s) and field splice(s).
5. Girder section changes. Show this dimension for top flange, bottom flange or web section changes.
6. Limits of flange tension and stress reversal zones.

K. Show and dimension any penetrations in the web for conduits, external attachments, etc.

L. Transverse stiffener spacing.

M. Lateral bracing spacing.

N. The distances between floorbeams (centerlines or extensions) measured along the centerline of trunnion.

O. Dimension limits of machining or add separate details.

P. Access opening/hatch locations and spacing.

Q. Location and spacing for fill holes, vent holes and drain holes.

R. Show limits of longitudinal stiffeners.

S. In plan view, show centerline of top of web.

T. Show welded shear stud spacing as applicable.

Figure 21.2.5-1 Main Girder Partial Elevation Drawing

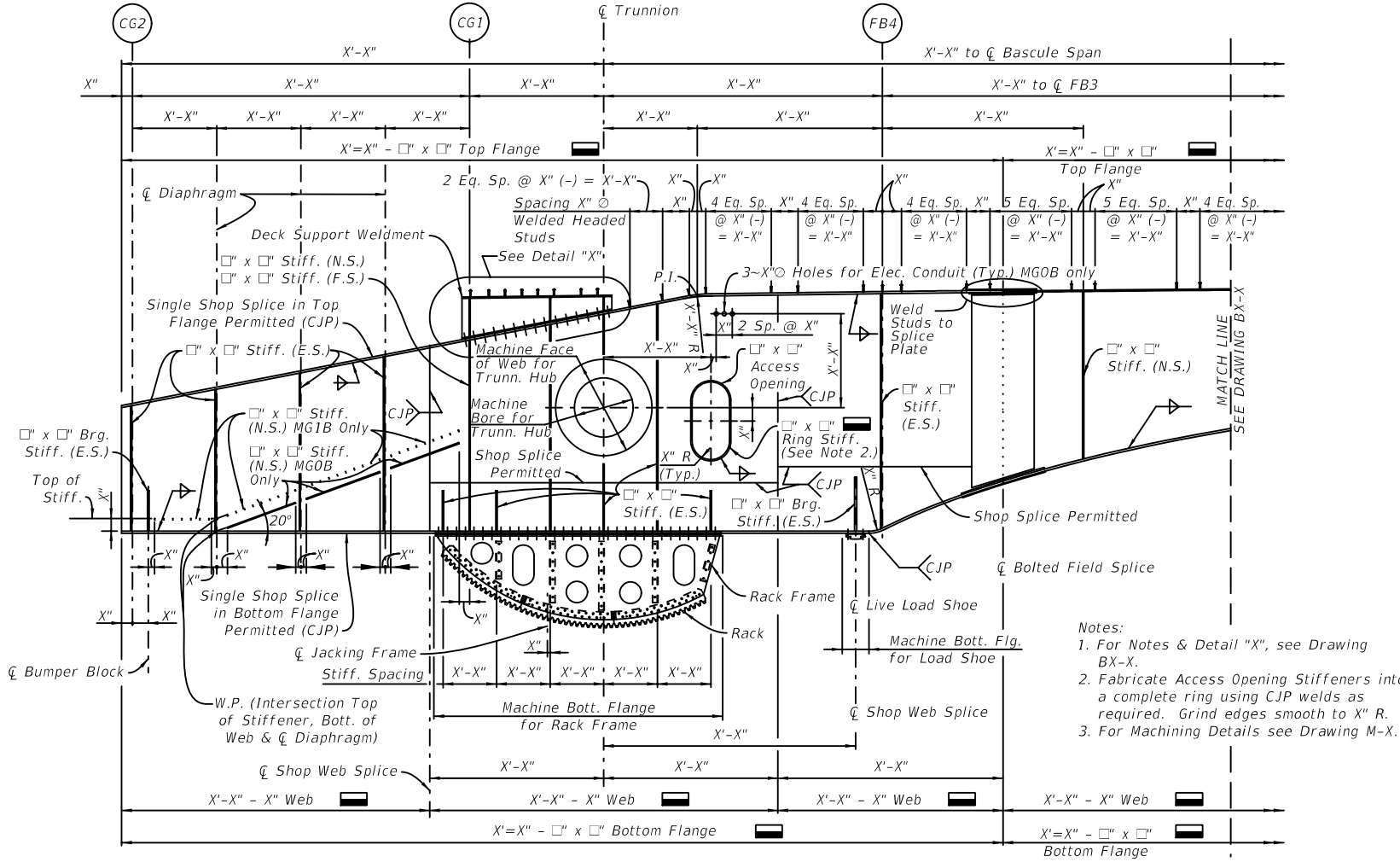

PARTIAL BASCULE GIRDER ELEVATION

21.3 RACK ASSEMBLY AND DETAILS

21.3.1 General

A. This chapter covers the design plan details required to construct and install curved racks for bascule bridges.

B. Rack assembly and detail sheets will include all the details necessary to fabricate, assemble, and mount the racks.

21.3.2 Rack Details

At a minimum, include the following on the rack detail:

A. Tooth form and number of teeth

B. Pressure angle and diametral or circular pitch

C. Addendum, dedendum, and face width

D. Pitch radius or diameter

E. Outside radius or diameter and root radius or diameter

F. Tooth thinning for backlash

G. Any required tip relief

H. Define the shape of the gear teeth in the axial direction noting any required lead curve or tooth crowning

I. Chordal addendum and chordal tooth thickness

J. AGMA gear quality number

K. Surface finishes

L. Material designation and hardness

M. Pitch line scribe on both sides of teeth

N. Angular length of rack segment(s)

O. Type, size, and location of stiffeners

Figure 21.3.2-1 Rack Details

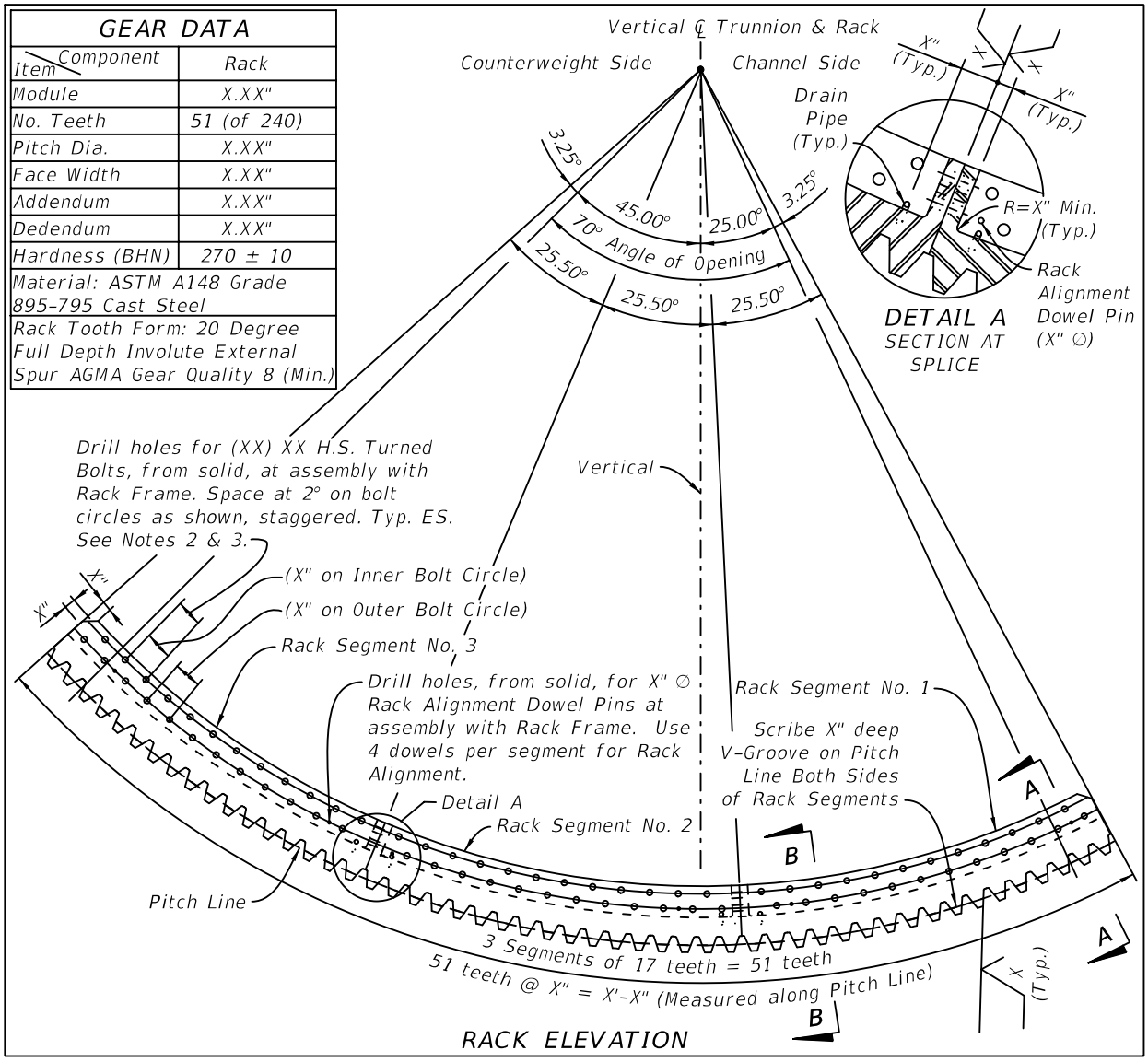

21.3.3 Rack Assembly

At a minimum, include the following in the rack assembly information:

A. Type, size, locations, and quantity of all fasteners and welds required to assemble the rack and mount it to the girder
B. Add a note to caution against tolerance stacking in case of bolt holes
C. Bascule girder machining details
D. Relative position of rack to trunnion
E. Relative position of pinion to rack with the bascule leaf open and closed
F. Shim pack details
G. Size, location, and quantity of access holes

Figure 21.3.3-1 Rack Assembly

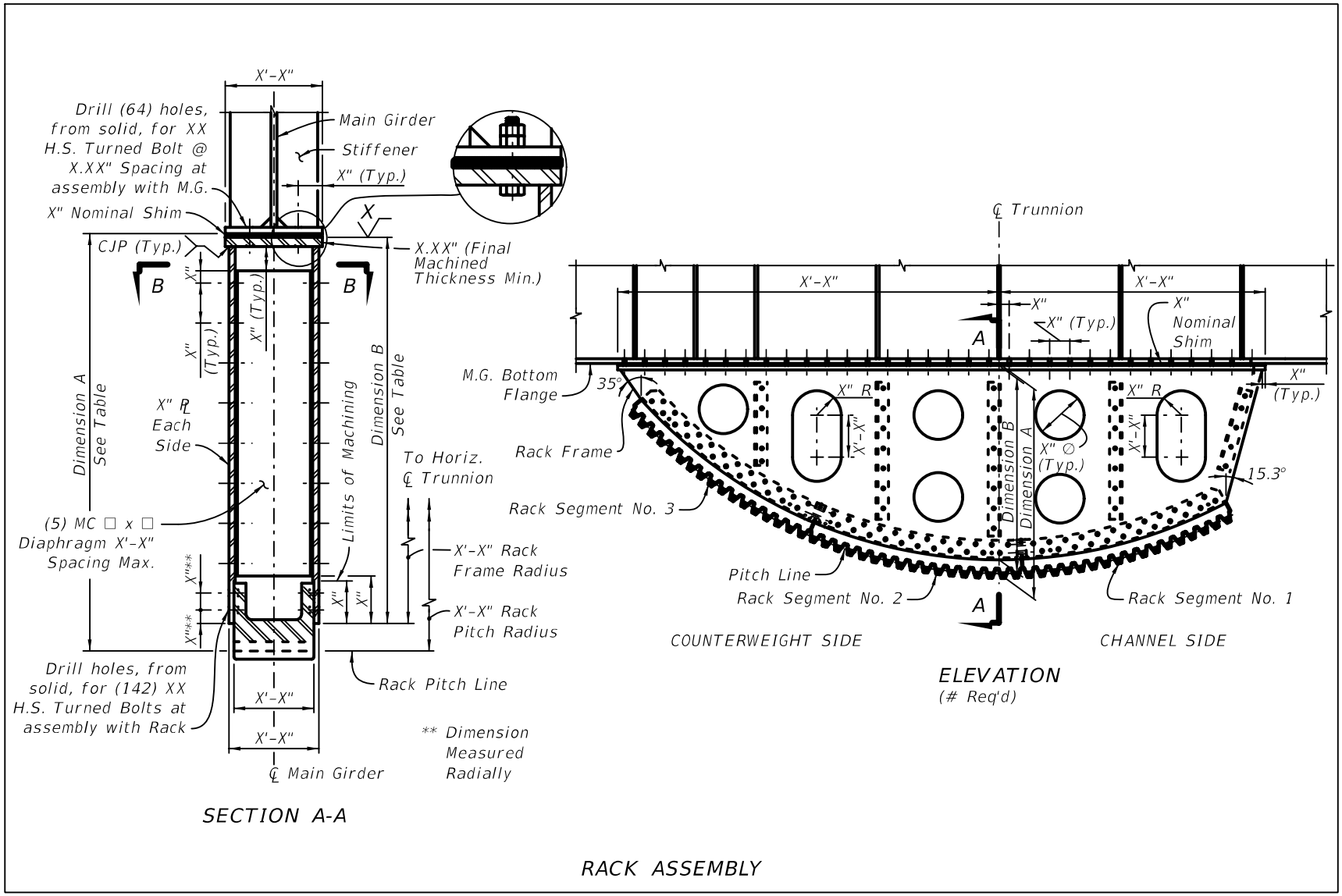

21.3.4 Rack Assembly Design Considerations

Address the following issues when detailing the rack assemblies:

A. Bolt the rack to the bottom flange of the bascule girder.

B. The rack shall rotate concentrically about the trunnion shaft.

C. The bottom flange of the bascule girder may not provide a flat perpendicular surface for mounting the rack.

D. The rack frame shall deflect minimally under load throughout its range of motion.

E. Ease of fabrication and adjustability of the rack.

F. Accessibility of fasteners.

G. Debris accumulation and drainage of the rack frame.

H. Ease of installation and maintenance with consideration given to rack frame accessibility for inspection, cleaning, and painting.

I. Effects of out-of-plane distortion of main girders and rack assemblies during counterweight concrete placement. Include a plan note requiring the counterweight box to be shored during counterweight concrete placement.

21.4 RACK PINION, BEARING SUPPORTS AND BEARING DETAILS

21.4.1 General

A. This section covers the design plan details required to construct and install rack pinions, pinion bearings, and bearing supports for bascule bridges.

B. Rack pinion, pinion bearing, and bearing support detail sheets will include all the details necessary to fabricate, assemble, and mount the rack pinions and bearings.

21.4.2 Rack Pinion Details

At a minimum, include the following in the rack pinion details:

A. Tooth form and number of teeth

B. Pressure angle and diametral or circular pitch

C. Addendum, dedendum, and face width

D. Pitch radius or diameter

E. Outside radius or diameter and root radius or diameter

F. Tooth thinning for backlash

G. Any required tip relief

H. Define the shape of the gear teeth in the axial direction noting any required lead curve or tooth crowning

I. Chordal addendum and chordal tooth thickness

J. AGMA gear quality number

K. Surface finishes

L. Material designation and hardness

M. Pitch line scribe on both sides of teeth

N. Pinion shaft length, inside and outside diameter

O. Pinion shaft fits and finishes

P. Number and location of keyways

Q. Keyway fits and finishes

R. Keyway length, width, depth, and radiuses

Figure 21.4.2-1 Pinion Details

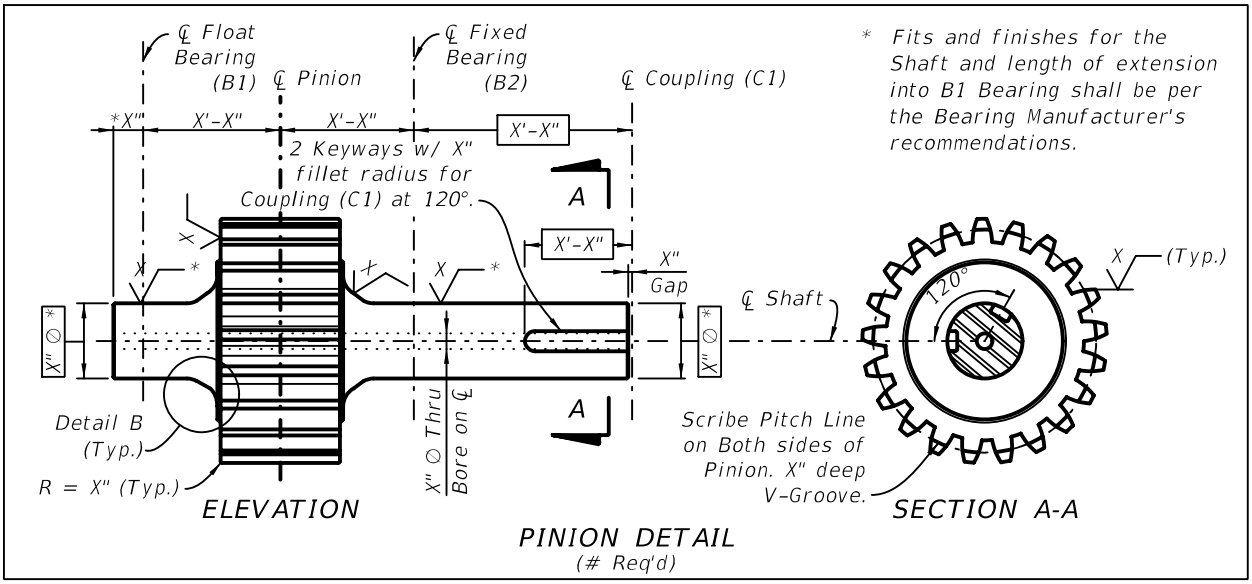

21.4.3 Pinion Bearing Details

A. For sleeve type pinion bearings, at a minimum, include the following in the pinion bearing details:

1. Material designations for bronze sleeves and bearing housing
2. Inside and outside diameter of bushings
3. Bushing and housing fits and finishes
4. Bushing length and flange details
5. Grease groove details
6. Bearing liner details

7. Size, location, and quantity of fasteners
8. Bearing cap lifting eye details

Figure 21.4.3-1 Pinion Bearing

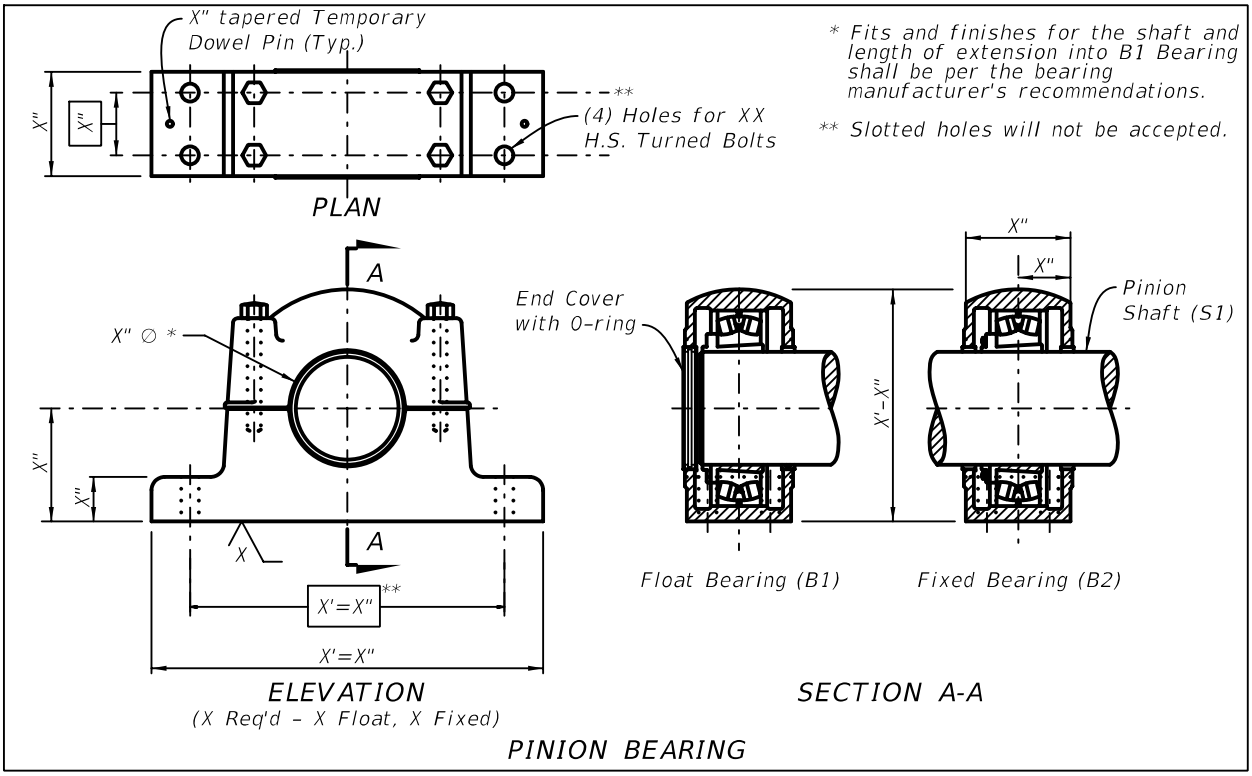

B. For anti-friction roller type pinion bearings, at a minimum, include the following in the pinion bearing details:
   1. Bearing type and size
   2. Bearing housing envelope dimensions
   3. Designation of expansion or non-expansion bearings
   4. While bearing will be supplied without mounting holes, the size and location of the mounting fasteners and dowels will be shown
   5. Surface finish for mounting surface
   6. Bearing load diagram

21.4.4 Pinion Bearing Support Details

At a minimum, include the following in the pinion bearing support detail:

A. Nominal dimensions, tolerances, flatness, perpendicularity, parallelism, and finishes

B. Indicate clips of proper size at corners of stiffeners and edge clearance for stiffeners

C. Designate welds

D. Size and locate fastener holes for machinery and anchors

E. Anchor details

F. Indicate base preparation for grouting including vent holes and jacking screws

G. Indicate drain holes

H. Material designation and member thicknesses

I. Shim details

21.4.5 Rack Pinion Assembly Design Considerations

Address the following issues when designing and detailing the rack pinion assembly:

A. Ease of fabrication

B. Accessibility of fasteners and anchors

C. Debris accumulation and drainage

D. Weldability, strength of welds, and stiffness of assembly

E. Room for hydraulic anchor tensioning equipment

F. Bearing lubrication

G. Place bearing close to the points of loading and located so the applied bearing pressure will be as uniform as possible

21.5 TRUNNION ASSEMBLY, BEARING SUPPORTS AND DETAILS

21.5.1 General

A. This chapter covers the design plan details required to construct and install trunnion shafts, trunnion hubs, trunnion bearings, and trunnion bearing supports for bascule bridges.

B. Trunnion assembly, bearing supports, and detail sheets will include all the details necessary to fabricate, assemble, and mount the trunnion assemblies.

21.5.2 Trunnion Assembly Details

Trunnion assemblies shall be designed to transfer span loads to the bascule pier. At a minimum, include the following in the trunnion assembly details:

A. Trunnion shaft details

B. Hub details

C. Backing ring details

D. Dowel details

E. Fastener details

F. Alignment plug details

G. Material designations and hardness

H. Trunnion shaft, hub, and girder fits and finishes

I. Girder machining details

J. Trunnion deflection diagram

Figure 21.5.2-1 Trunnion Assembly

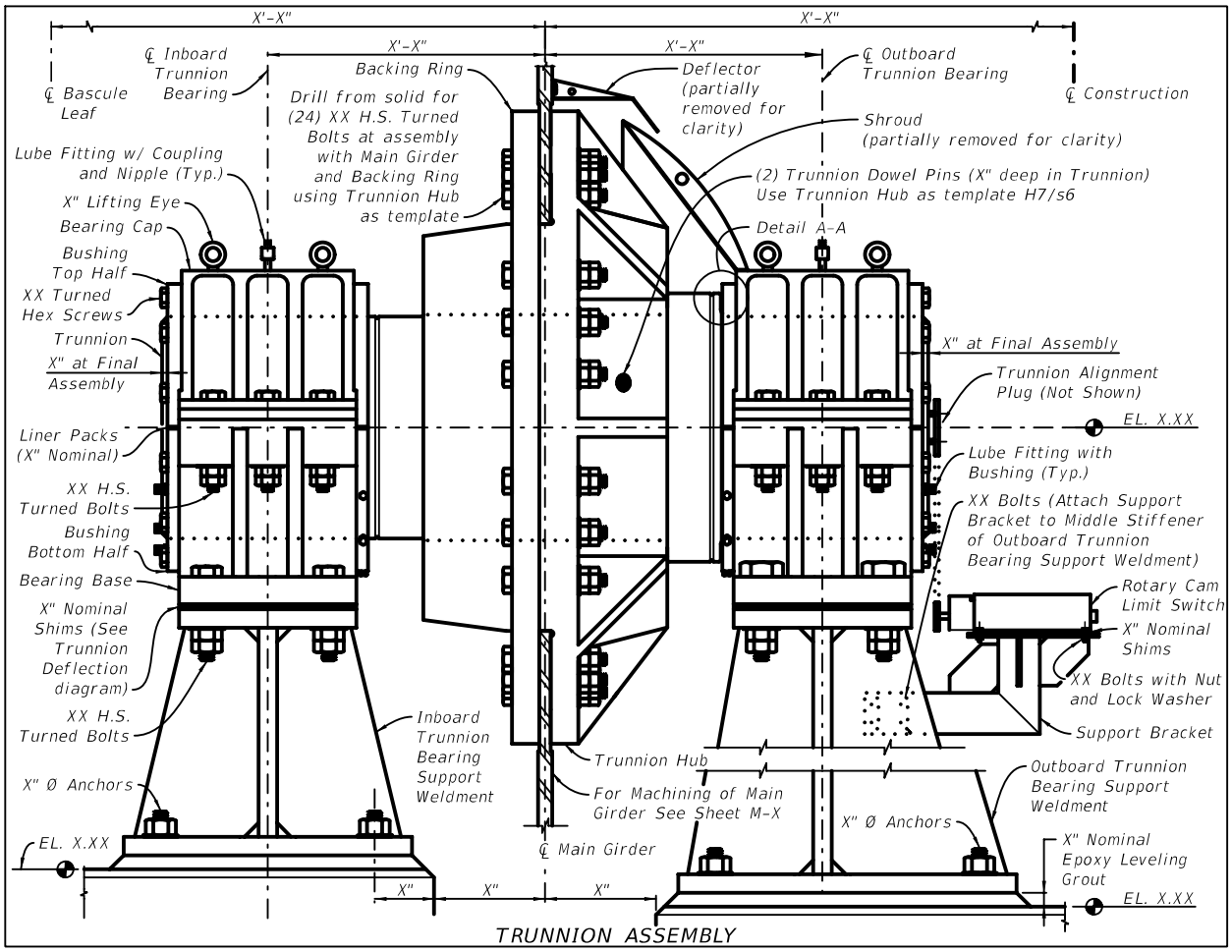

21.5.3 Trunnion Bearing Details

A. For sleeve type trunnion bearings, include, at minimum, the following in the trunnion bearing details:

1. Material designations for bronze sleeves and bearing housing
2. Inside and outside diameter of bushings
3. Bushing and housing fits and finishes
4. Bushing length and flange details
5. Grease groove details

6. Bearing liner details
7. Size, location, and quantity of fasteners
8. Bearing cap lifting eye details
9. Thrust gap dimension

B. For anti-friction roller type trunnion bearings, include, at a minimum, the following in the trunnion bearing details:
   1. Bearing type and size
   2. Bearing housing envelope dimensions
   3. Designation of expansion or non-expansion bearings
   4. While bearing will be supplied without mounting holes, the size and location of the mounting fasteners and dowels will be shown.
   5. Surface finish for mounting surface
   6. Thrust gap dimension

21.5.4 Trunnion Bearing Support Details

At a minimum, include the following in the trunnion bearing support detail:

A. Nominal dimensions, tolerances, flatness, perpendicularity, parallelism, and finishes
B. Indicate clips of proper size at corners of stiffeners and edge clearance for stiffeners
C. Designate welds
D. Size and locate fastener holes for machinery and anchors
E. Anchor details
F. Indicate base preparation for grouting including vent holes and jacking screws
G. Indicate drain holes
H. Material designation and member thicknesses
I. Shim details

21.5.5 Trunnion Assembly Design Considerations

Address the following issues when detailing the trunnion assemblies:

A. Ease of fabrication and order of assembly
B. Accessibility of fasteners and anchors
C. Debris accumulation and drainage
D. Weldability, strength of welds, and stiffness of assembly
E. Room for hydraulic anchor tensioning equipment

F. For sleeve bearings, the trunnion shaft shall have a thrust surface for the bearing bushing.

G. For sleeve bearings, extend the trunnion shaft ½-inch beyond the face of the bearing bushing.

H. Do not use keys between the trunnion shaft and hub.

I. Provide shoulders with fillets of appropriate radius and provide clearance for thermal expansion between shoulders and bearings.

J. Provide a 2-inch long counter bore concentric with the trunnion journals at each of the hollow trunnion ends.

K. In addition to the shrink fit, drill and fit dowels of appropriate size through the hub into the trunnion after the trunnion is in place.

L. Provide Hubs and Rings with a mechanical shrink fit.

M. Bearing lubrication

N. Place bearing close to the points of loading and located so the applied bearing pressure will be as uniform as possible.

21.6 MACHINERY LAYOUT AND ELEVATION

21.6.1 General

A. This chapter covers the design plan details required to show the machinery layout and elevations for bascule bridges.

B. Machinery layout and elevation sheets will include all the details necessary to illustrate the position and orientation of equipment.

21.6.2 Machinery Layout and Elevation Details

Show the span drive machinery and trunnion assemblies on the bascule pier in the machinery layout and elevation sheets. Show all permanent structures relative to the machinery. Show the outline of the bascule pier and access platforms in both plan and elevation views. Show and label all machinery components. Indicate elevations for machinery platforms, pinion shafts, trunnion platforms, and trunnion shafts. Show relative locational dimensions for major pieces of equipment. Verify 30-inches service clearance around drive system components.

Figure 21.6.2-1 Machinery Partial Elevation

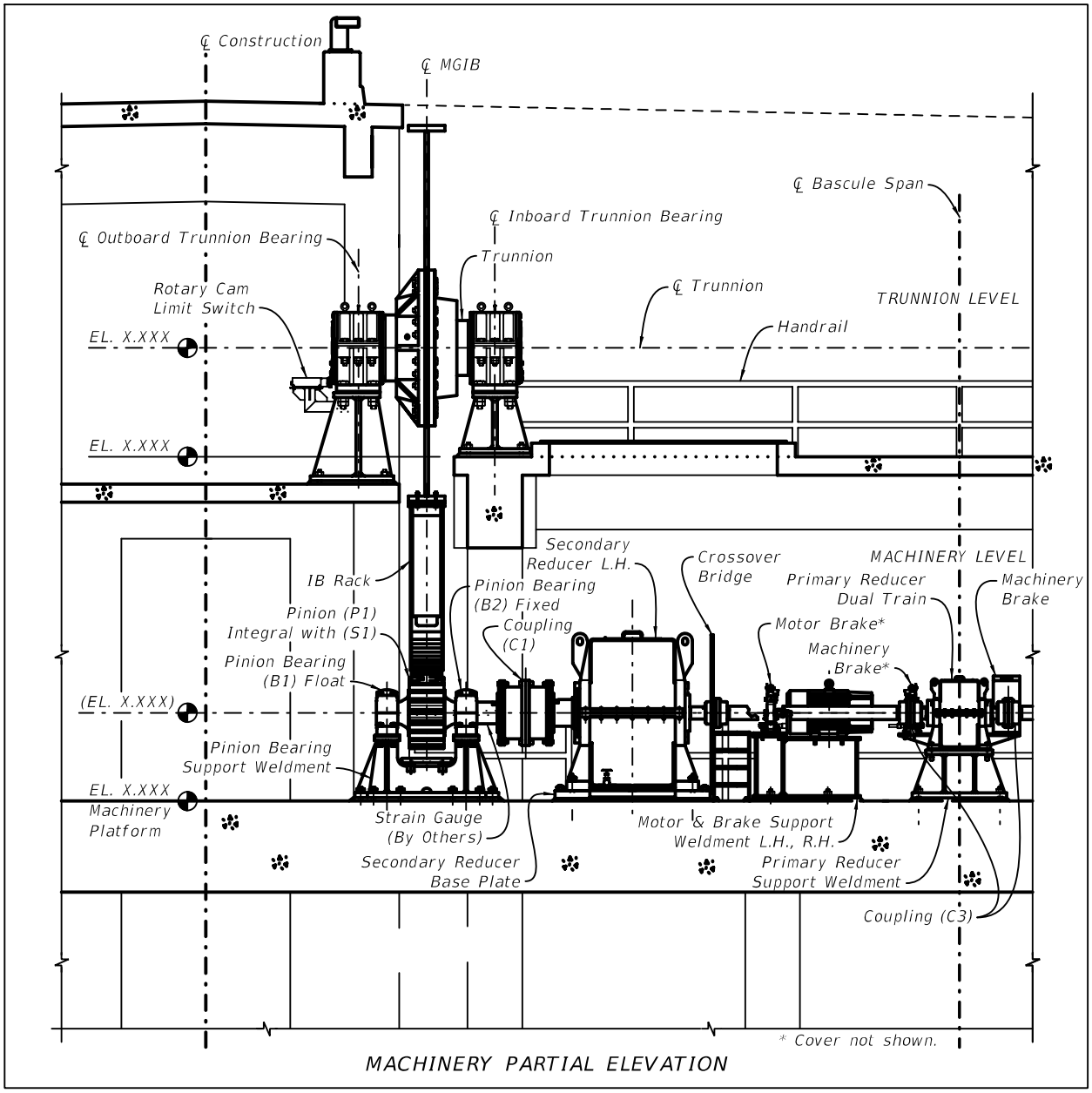

21.7 SUBMARINE CABLE

21.7.1 Submarine Cable Detail Drawings

The following is a sample of Submarine Cable notes to be included on the Submarine Cable Details sheet. Place these notes on the Submarine Cable Details sheet and modify for project-specific requirements. At a minimum, show the following information:

A. Dimensions shown are for reference only. Size components per project requirements.

B. Provide all Stainless Steel (ANSI 316) hardware.

C. Permanently seal all submarine cable penetrations from water intrusion.

D. Provide sub-cable supports per manufacturer recommendation for each submarine cable.

Figure 21.7.1-1 Typical Submarine Cable Terminal Cabinet

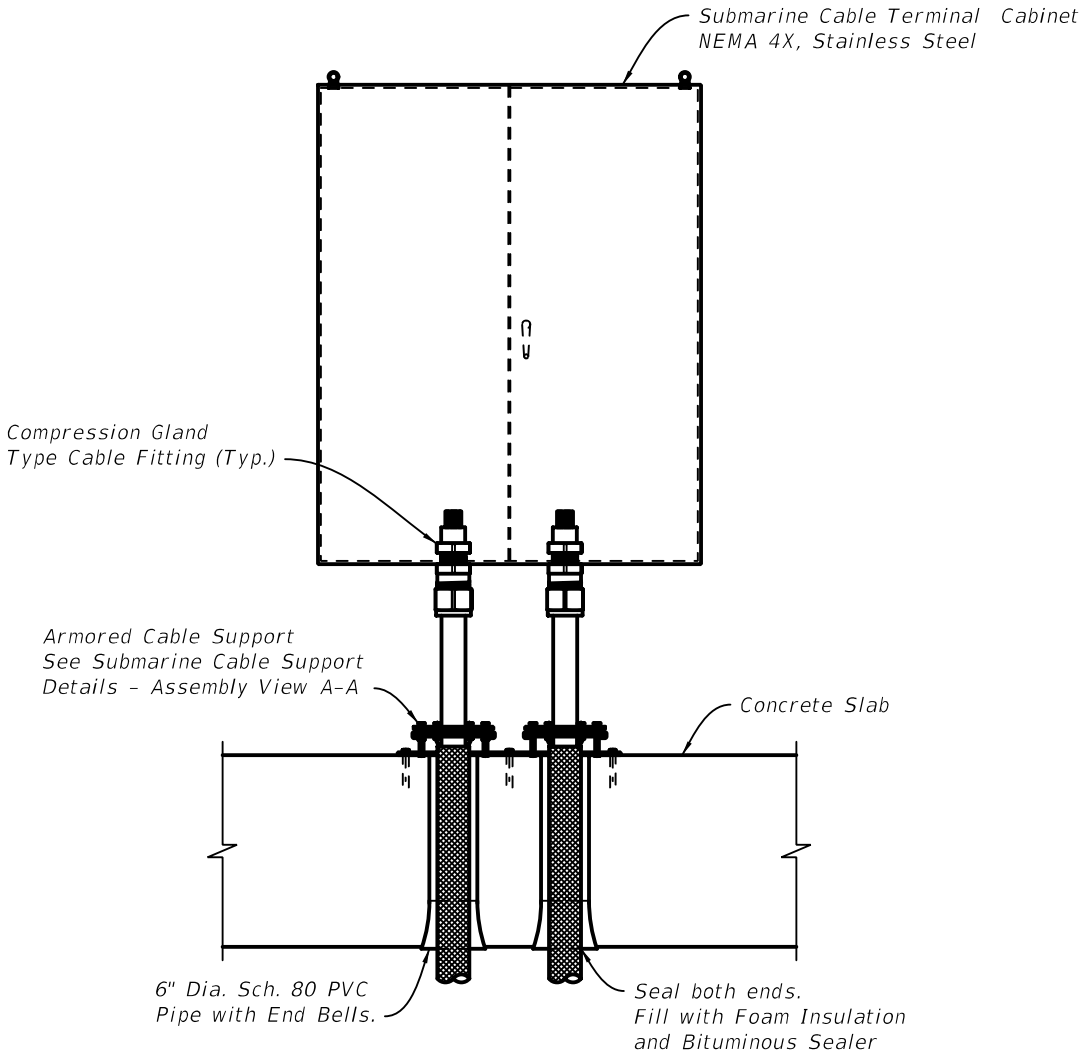

TYPICAL SUBMARINE CABLE TERMINAL CABINET

Figure 21.7.1-2 Submarine Cable Support Details

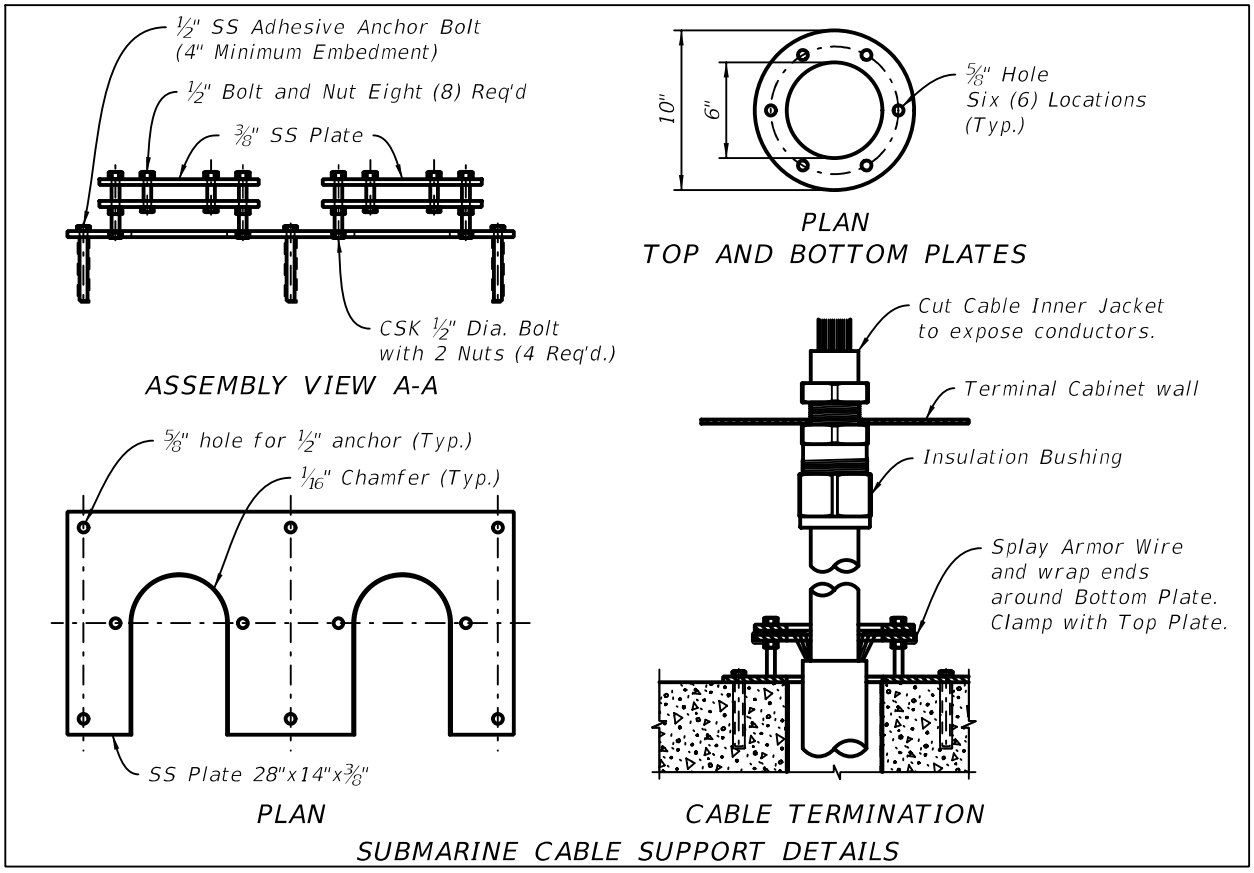

Figure 21.7.1-3 Submarine Cable Trench

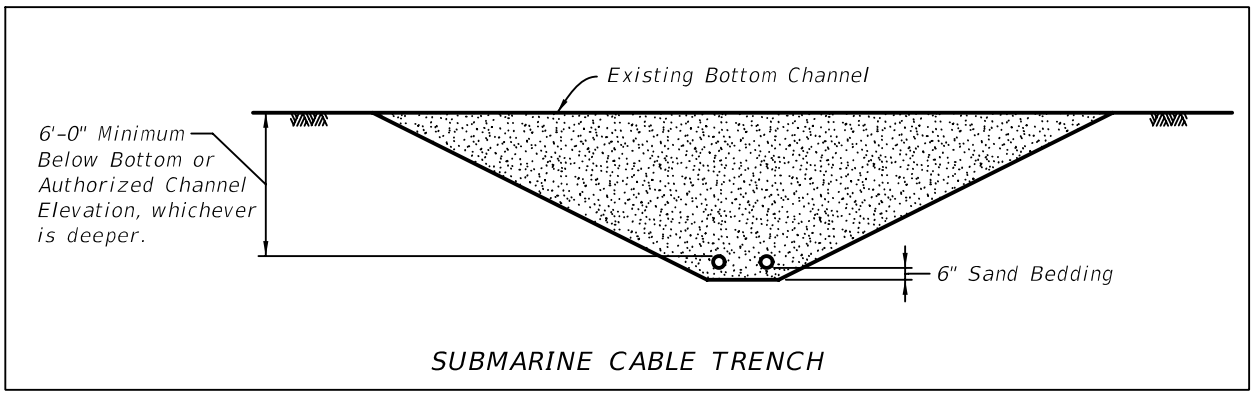

21.8 CENTERING DEVICES

21.8.1 Centering Device Detail Drawings

The following is a sample of Centering Device notes to be included on the Centering Device Detail sheet. Place these notes on the Centering Device Detail sheet and modify for project-specific requirements. At a minimum, show the following information:

A. Dimensions shown are for reference only. Size components per project requirements.

B. Fabricate Guide and Receiver from ASTM A27 Grade 70-36 Carbon Steel Casting.

C. Set Guide and Receiver after bascule leaves have been set and aligned.

D. Show position of centering devices on main girders in the Bascule Leaf drawings.

E. Adjust shims to provide 3½-inches overlap at field assembly for a mean structure temperature of 70° F.

Figure 21.8.1-1 Centering Device Details

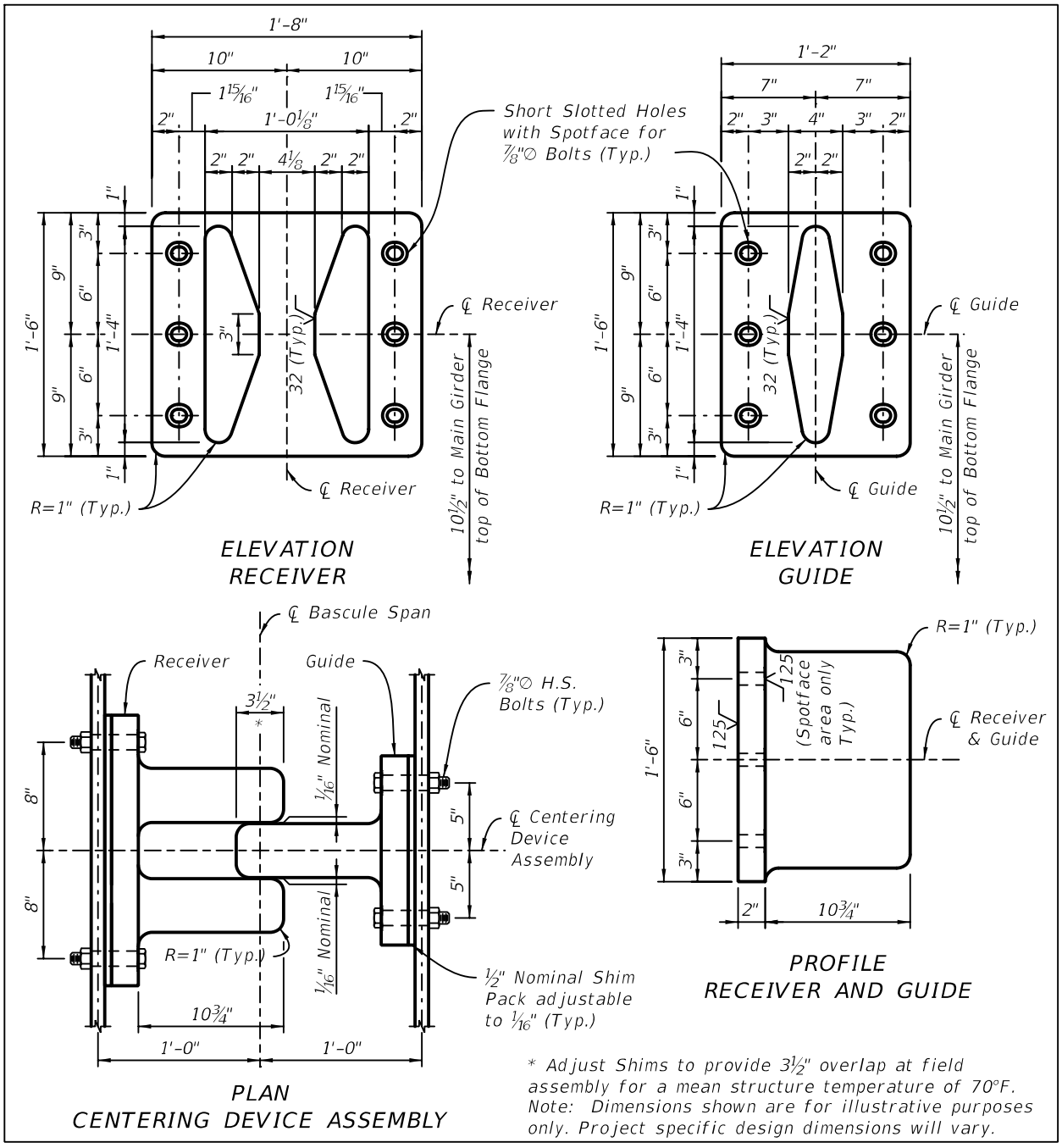

21.9 COUNTERWEIGHT ADJUSTMENT BLOCKS

21.9.1 Counterweight Adjustment Blocks Detail Drawings

Include the following notes and details as required for project specific conditions:

Note: Provide concrete or cast-iron counterweight blocks as required.

Figure 21.9.1-1 Concrete Counterweight Adjustment Block Details

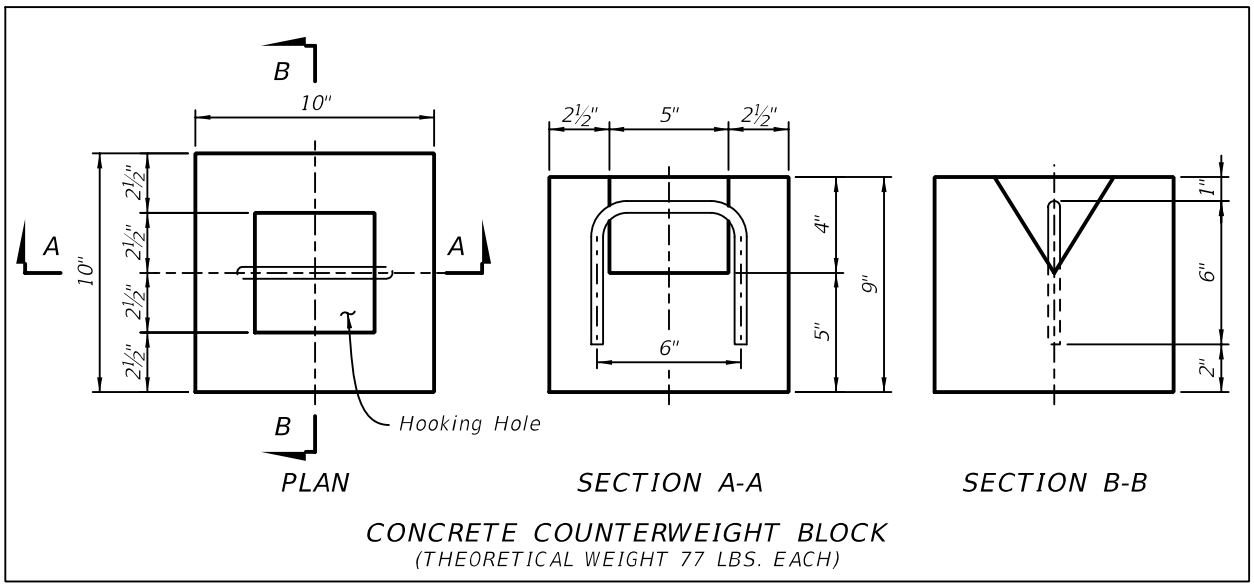

Figure 21.9.1-2 Cast Iron Counterweight Adjustment Block Details

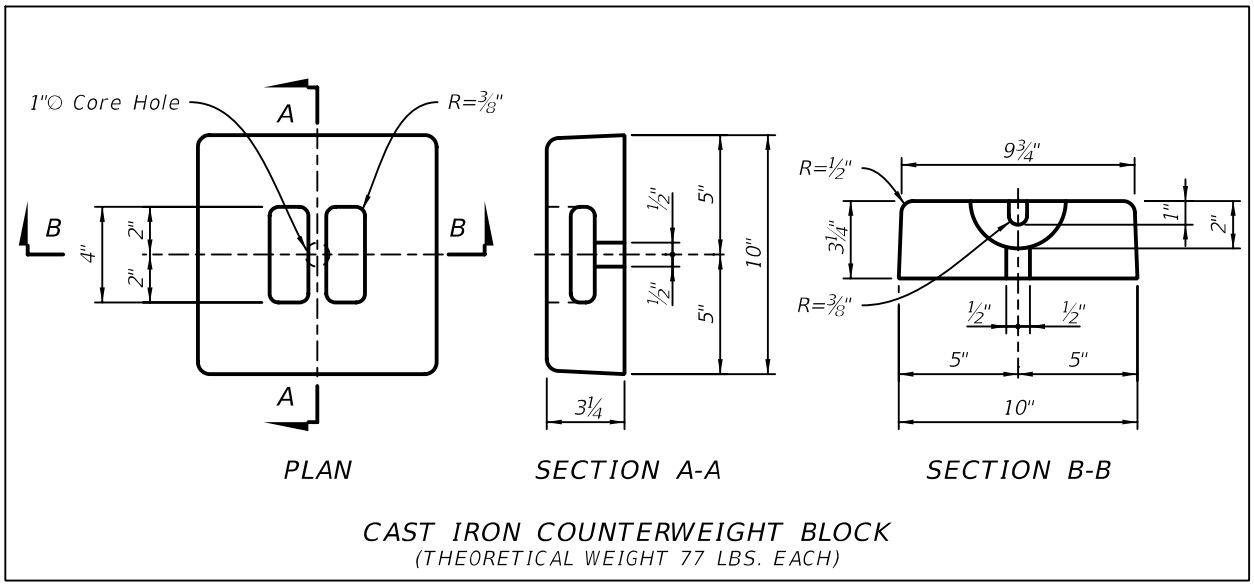

Figure 21.9.1-3 Counterweight Block Handle Details

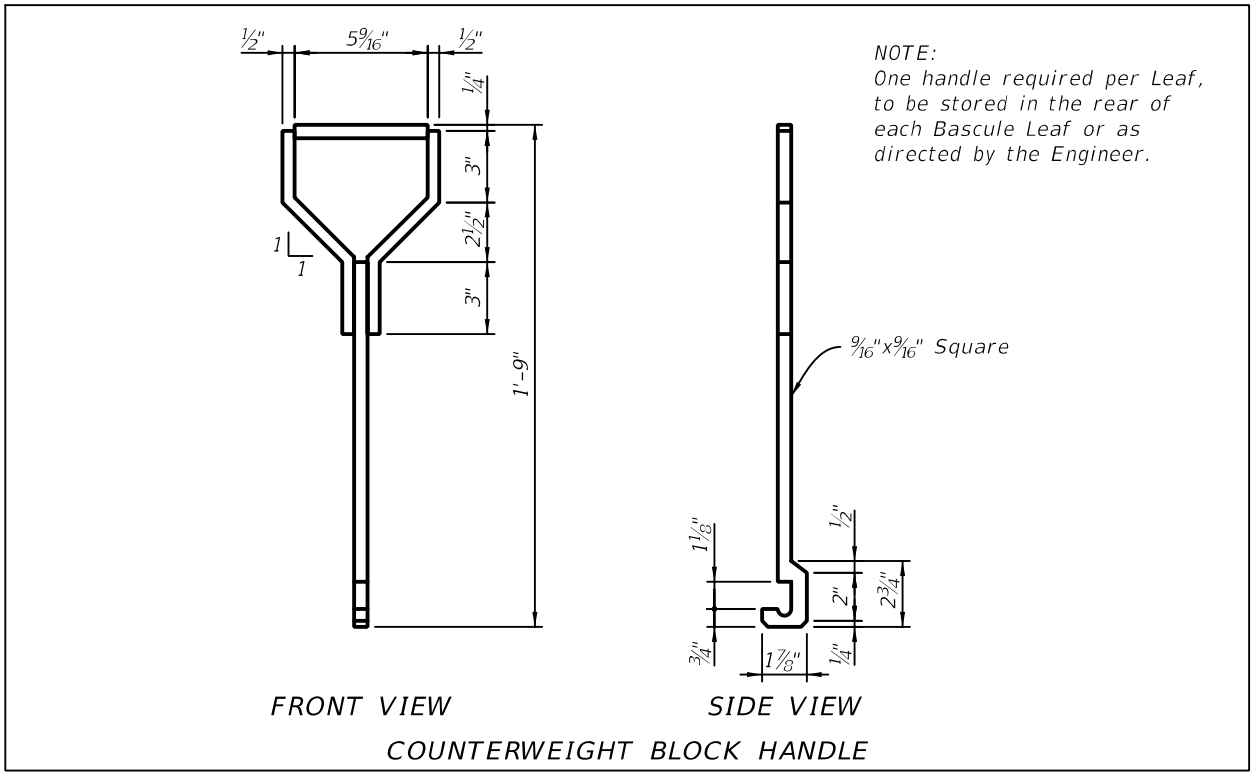

21.10 LIVE LOAD SHOES

21.10.1 Live Load Shoe Detail Drawings

The following is a sample of Live Load Shoe notes to be included on the Live Load Shoe Detail sheet. Place these notes on the Live Load Shoe Detail sheet and modify for project-specific requirements. At a minimum, show the following information:

A. Dimensions shown are for reference only. Size components per project requirements.

B. Reference ***Standard Specifications*** Section 460 (Structural Steel and Miscellaneous Metals) and ***Movable Bridge Technical Special Provisions*** Article 468-9 (Live Load Shoes).

C. All material shall be ASTM A709, grade 50, except shims which shall be stainless steel, Type 304, ASTM A167.

D. Adjust shims so that there is at least 70% line contact between each rocker plate and bearing plate at final assembly with the bridge lowered and the span locks engaged.

E. Anchor bolts to be either cast in place ("J" bolts) or inserted into formed holes and grouted with an approved epoxy grout.

F. Grind exposed corners of the bearing plate and the rocker plate to 1/8-inch minimum radius and break all sharp edges.

Figure 21.10.1-1 Live Load Shoe Details

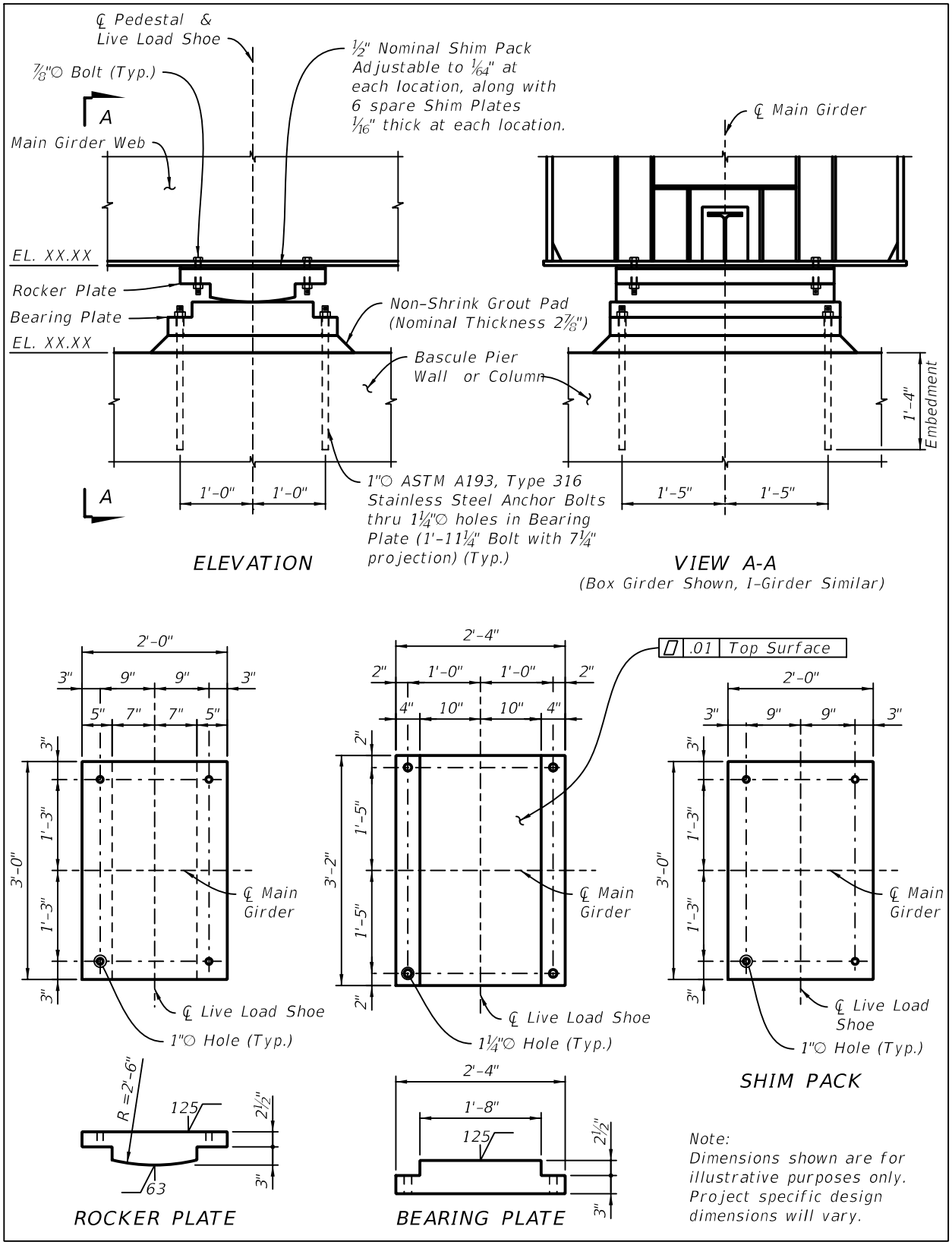

21.11 SPAN LOCKS

21.11.1 Span Lock Detail Drawings

Span Lock Detail Drawings are required for all bascule spans. At a minimum, show the following information (See Figure 21.11.1-1 and Figure 21.11.1-2):

A. Plan and Elevation of the Span Lock assembly.

B. Span Lock Material List (Including required material type and grade).

C. Hydraulic Parts List.

D. Span Lock Hydraulic Schematic.

E. Provide Operational pump specifications for normal operation.

F. Enlarged details:

   1. Lock Bar
   2. Clevis Pin/lock bar
   3. Font Guide and Receiver Assembly
   4. Rear Guide Assembly

G. Provide access locations/hatches if in traffic railings (Girder Bridges only).

H. Provide access locations/hatches for lubrication manifolds in traffic railings (Box Girder Bridges only).

I. Provide readily accessible local disconnect switches at street level.

Figure 21.11.1-1 Span Lock Plan and Section

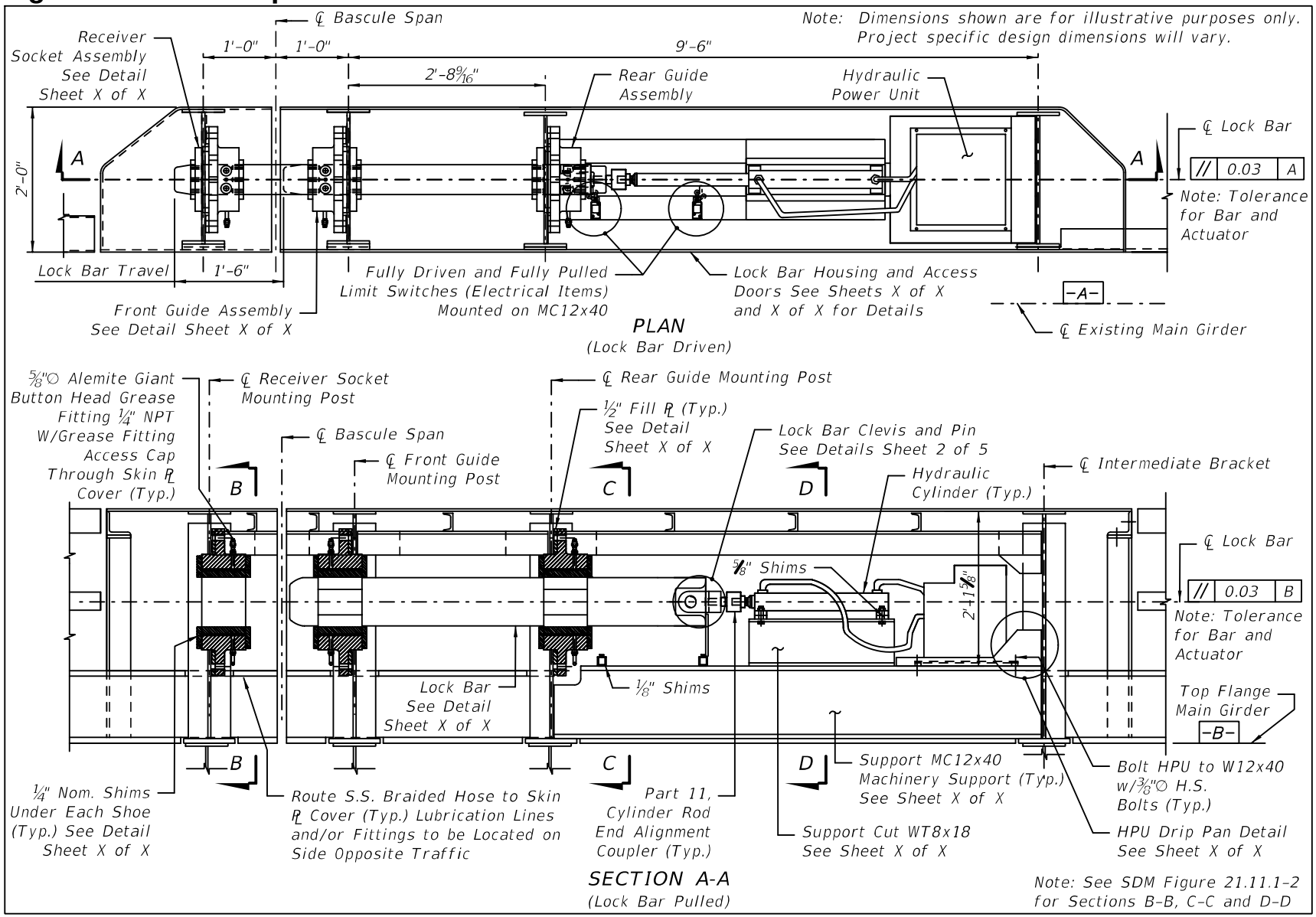

Figure 21.11.1-2 Span Lock Details

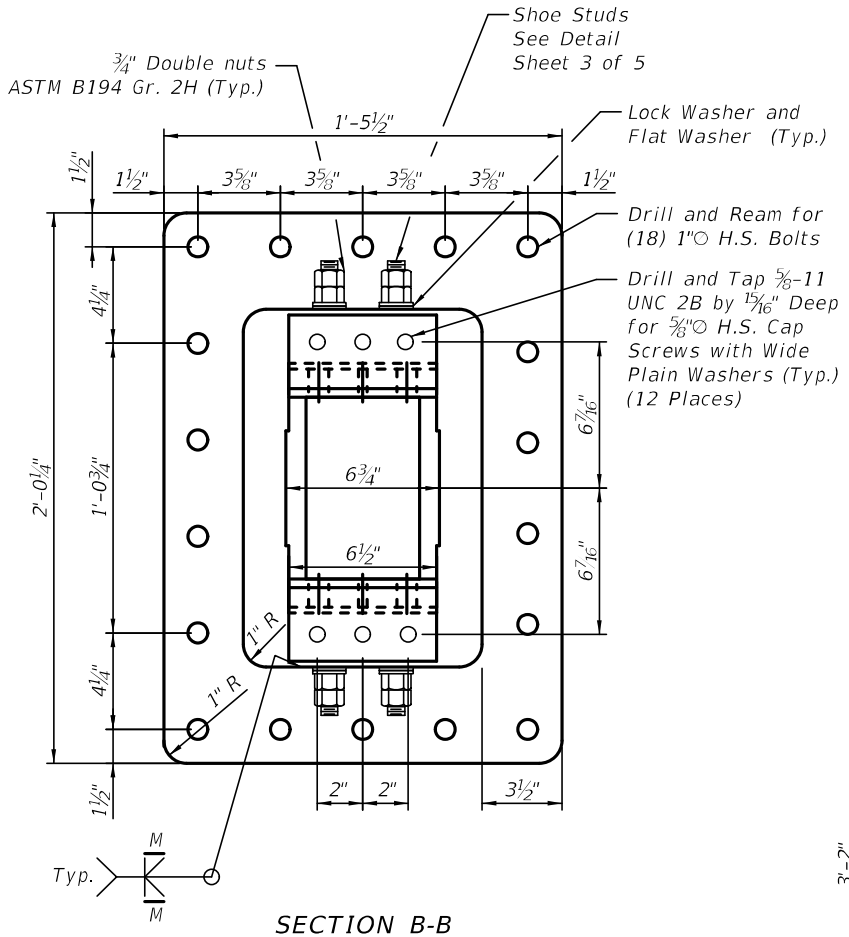

SECTION B-B

Guide Material: ASTM A709 Gr. 50 & A36
(Front and Rear Guide Similiar Except for Bushing)
NOTE: Grease Fittings Not Shown For Clarity.

NOTE: The leading and trailing edges of span lock guide and receiver shoes shall have a minimum radius of ½" to relieve edge loading on the contact surfaces between the lock bar and shoe.

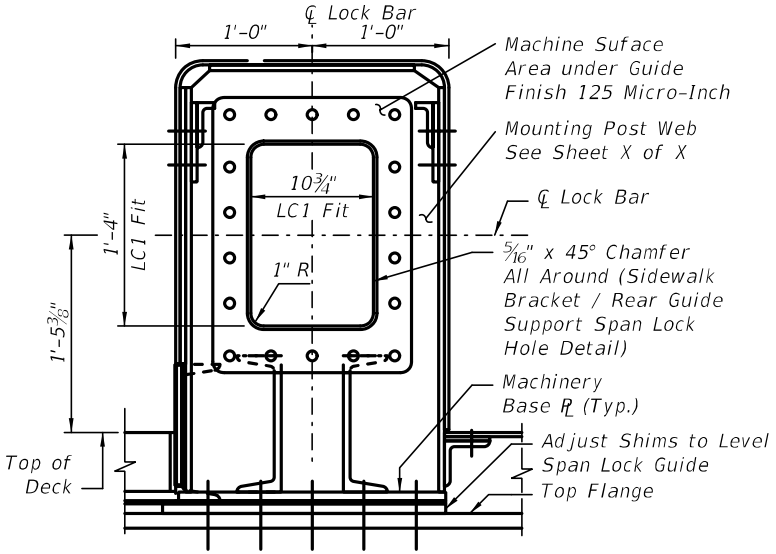

SECTION C-C

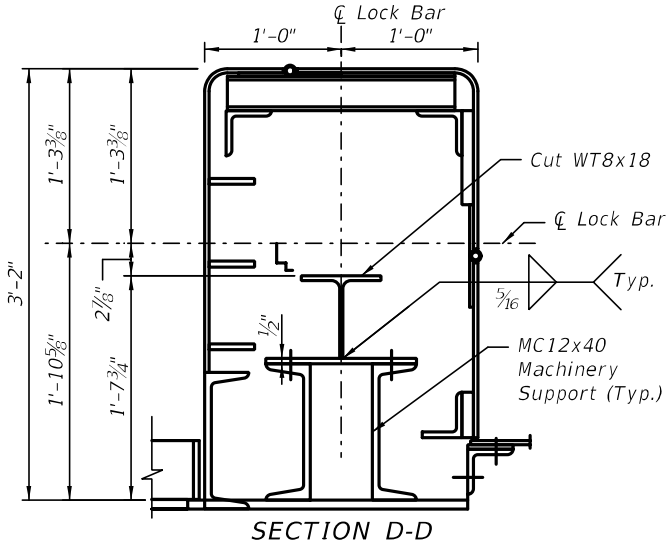

SECTION D-D

21.12 BASCULE LEAF RAILINGS

A light-weight open railing configuration is preferred on bascule bridges to reduce weight and improve safety by providing bridge operator visibility of the roadway and sidewalk areas behind the railing. An open metal traffic railing configuration also provides enhanced views of the surrounding area which may be an important feature to community stakeholders. Light-weight open traffic railings that have been successfully crash tested to ***Manual for Assessing Safety Hardware (MASH)*** standards or determined to meet ***MASH*** standards through equivalency as determined in NCHRP Report 20-07(395) "***MASH*** Equivalency of NCHRP 350 Report 350-Approved Bridge Railings" include:

A. ***MASH*** Test Level 3:

1. Alaska Multi-State 2-Tube Steel Bridge Railing
2. Colorado Bridge Rail Type 10M
3. Oregon 2-Tube Curb Mount Rail (Standard BR206)
4. Pennsylvania Type 10M Bridge Barrier
5. Texas Type T1F and T1P Traffic Rails

B. ***MASH*** Test Level 4:

1. Oregon 3-Tube Curb Mount Rail (Standard BR208)
2. Texas Type T2P and C2P Traffic Rails

21.13 BASCULE LEAF DECK JOINTS

21.13.1 Bascule Leaf Deck Joint Detail Drawings

Transverse and Longitudinal Joint Detail Drawings are required for all bascule spans. At a minimum, show the following information (See Figure 21.13.1-1 and Figure 21.13.1-2): Dimensions shown are for reference only. Size components per project requirements.

A. Plan view for each joint assembly

B. Enlarged details at joint intersections (As required).

C. Plates and angles shall be fabricated from ASTM A709 Grade 36 or 50 Steel, based on project requirements and availability.

D. Anchor studs shall be in accordance with ASTM A108.

E. Assemblies shall be galvanized after fabrication.

F. Traffic plates shall be removable.

G. Joint material shall be 3/16-inch Thick continuous neoprene reinforced with a double layer woven polyester fabric.

H. Joints shall be recessed from traffic plate to provide sufficient flexibility in narrower joints.

I. Vent hole locations

J. List of required drawings:

Figure 21.13.1-1 Bascule Leaf Rear Joint

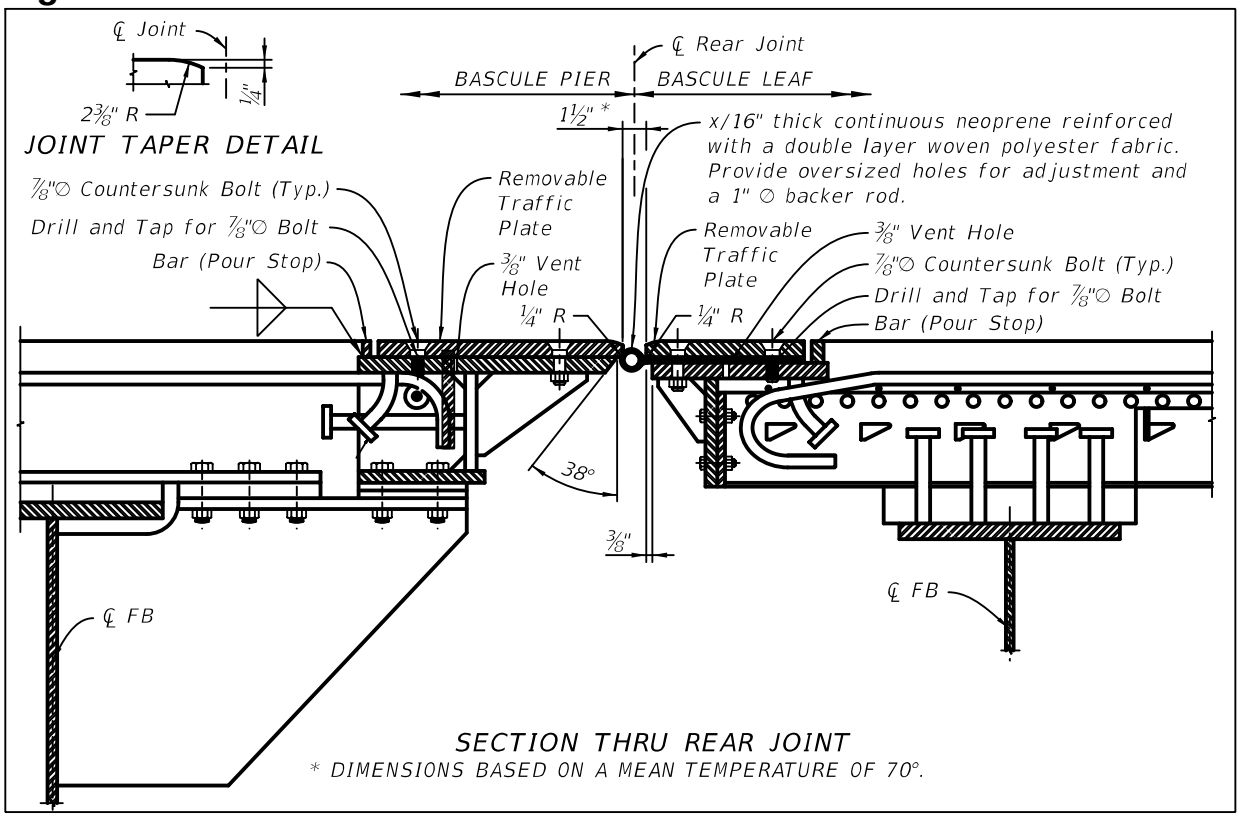

Figure 21.13.1-2 Bascule Leaf Forward Joint and Longitudinal Joint

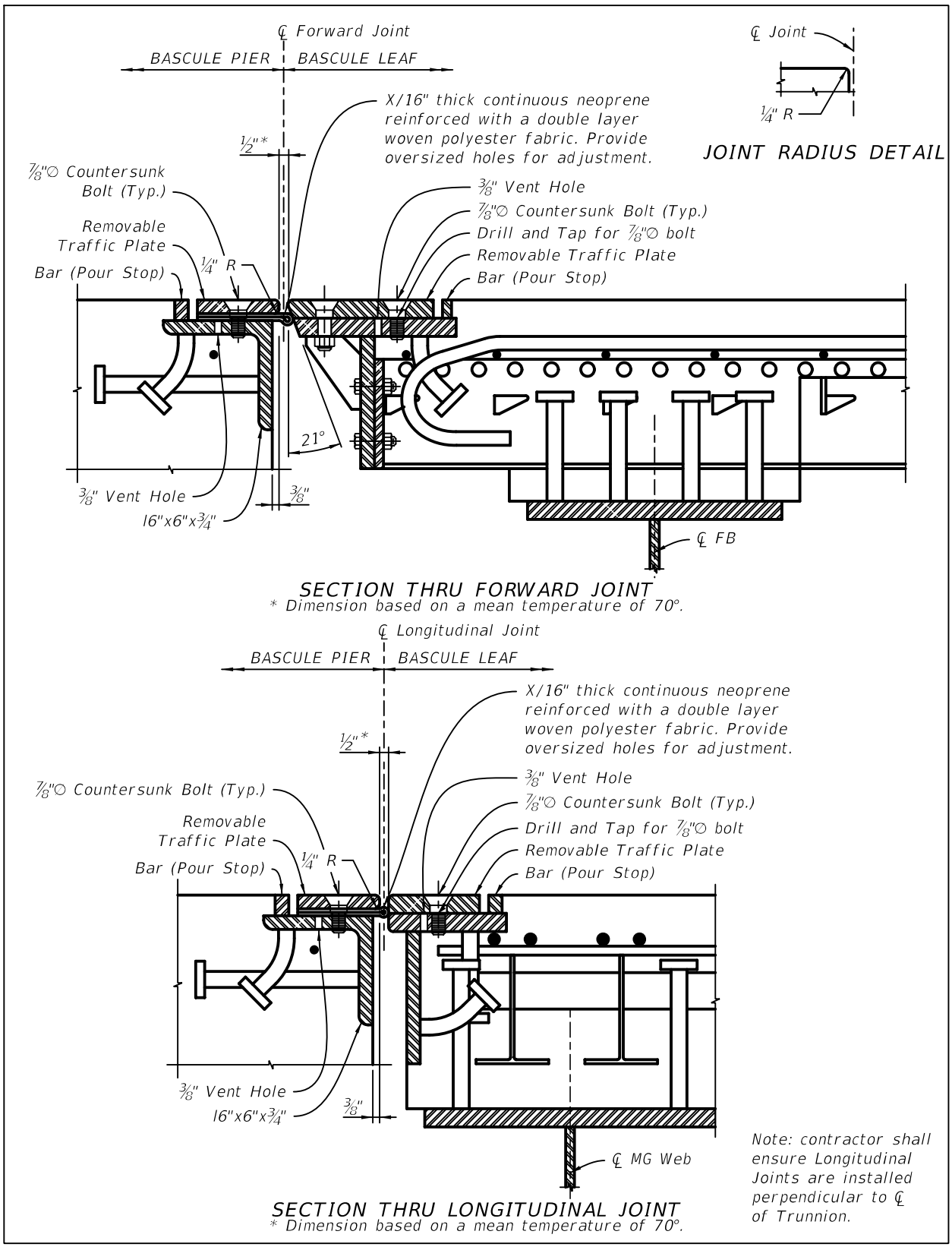

21.14 BASCULE BRIDGE PLAN SUBMITTAL REQUIREMENTS

21.14.1 List of Required Drawings

A. Mechanical:

1. General Notes applicable to Mechanical Plans.
2. Equipment Schedule.
    a. Span Drive Machinery
    b. Trunnion Assembly
    c. Span Lock Machinery
    d. Span Lock Hydraulic Machinery
    e. Hydraulic Drive Equipment
    f. Hydraulic Line Schedule - Drive Hydraulics
    g. Hydraulic Line Schedule - Span Lock Hydraulics
3. Leaf Balance: Indicate Bascule Leaf Balance requirements as WLcos(alpha) and angle alpha, with a tolerance range. (show in Structural Drawings)
4. Span Jacking Provisions (show in Structural Drawings): Include future jacking arrangements, locations, supports and estimated loads for bascule leafs.
5. Drive Machinery: Show Drive Machinery layout in Plan, Elevation and Section views to fully detail, position, orient, and align the machinery in reference to trunnion centerlines. Show extent of concrete both in elevation and plan. Do not show machinery guards, but indicate the requirement in Notes. Verify 30-inch service clearance around drive system components.
6. Machinery Supports: Show nominal dimensions, tolerances, flatness, perpendicularity, parallelism and finishes. Provide holes for proper air circulation, drains for trapped water, clips of proper size at corners of stiffeners, and edge clearances for stiffeners. Designate all welds, and call out testing requirements for welds. Locate all bolt holes based on footprint of machinery. Verify edge distances for all bolts. Add Notes to require vent holes for grout, leveling screws. Design and locate anchor bolts to allow space, especially headroom for hydraulic tensioning.
7. Trunnion Assembly: Detail assembly including girder, hubs, rings, dowels, bearings, shims, bearing supports, grout and concrete support columns. Design a thrust surface for bushing on the trunnion shoulder, and provide thermal allowances at thrust interfaces. Size the length of trunnion to extend 1/2-inch beyond the face of bushing.
8. Open Gearing: Specify and detail, if profile modifications are employed. State the AGMA accuracy grade, if different from Specs.

9. Racks: Show in assembly view with trunnion and girder section. Detail rack (with rim and support) as a weldment bolted to the bottom of the girder. Designate all welds and specify extent of weld testing required. Detail shims, and add notes if needed. Add note to caution against tolerance stacking in case of bolt holes. Tabulate gear parameters to correspond with pinion.
10. Pinions: Fully specify pinion (tabulate requirements) in correspondence with the rack. Fully specify keys and keyways.
11. Speed Reducers: Detail technical requirements in tabular form with exact ratios. Specify exact ratios to two significant digits. Show footprint based on actual dimensions obtained from selected models. Size and locate mounting bolts and show edge distances. Provide clearances for bolt tensioning. Coordinate with support bases.
12. Brakes: Indicate recommended and maximum brake setting torques values for motor/machinery brakes. Call out factory setting of brakes. Design for AISE/ NEMA dimensions, to facilitate equal replacements.
13. Bearings: Detail bushing grooves, locations and fittings. Indicate dowel pins, or recess base into cap for pillow block. Detail and specify anti-friction bearings; list technical requirements.
14. Drive Hydraulic Cylinders: Show mounting arrangements in reference to trunnion and bearing centerlines along x, y, z axes. Show clevises and all parts with section of girder. Show anchor bolt assemblies to anchor the clevis bases to the machinery platform. Show alignment requirements. Profile the locus of clevis pin centerline. Show mounting position of manifolds. List or show all technical specifications for cylinders, including cushioning.
15. Hydraulic System Layout/Piping: Show the Hydraulic Power Units and all accessories including piping layout and control panels. Add Notes on reservoir specifics, not covered by Specifications. Indicate maximum flow required for full speed operation; the pressure compensator setting to fully compensate the pump at the specified working setting. Indicate initial settings for adjustable counterbalance valves. Show and specify secondary containment for hydraulic fluid.
16. Cylinder Support Assemblies: Detail clevis assembly and its components individually, including spherical bearings and shims. Show and specify fits, finishes and tolerances. Specify material, detail welding and testing requirements.
17. Hydraulic System: Include technical specifications for each component of the hydraulic system starting with the pump following along the pressure line through the cylinder, returning to the pump. Indicate the settings for various components as applicable.
18. Live Load Shoes: Show live load shoe assemblies with leaf in closed position, including all structural interfaces for proper alignment and orientation. Show and specify shims and non-shrink epoxy grout. Indicate material, installation notes and anchor bolt details. When Rear Live Load Shoe Assemblies are provided, indicate the gap between live load shoe and strike plate to which the shoes are to be aligned and shimmed.

19. Centering Devices: For accurate positioning and orientation of centering devices, show on Structural drawings as an assembly. Show and detail supports for all components, mounting arrangement, and interfaces. Specify material, and show finishes, clearances and length of engagement at mean structure temperature of 70°F.
20. Span Lock Assemblies: Show and specify materials and products, including hydraulic system components. For weldments, designate all welds and specify extent of weld testing required. Indicate mounting arrangement of cylinders, and specify cylinders in detail. Specify adjustable pressure relief valves and settings, configured for the mounting arrangement. Indicate clearances for the lock bar within the guides and receivers, and the bar and cylinder alignment criteria. Specify Hand pump (relief valve, 4-way vales, hoses and disconnects) in Plans to show one male and one female disconnects at the hose ends, with corresponding interfaces at the connections to the cylinders. Add notes to indicate alignment tolerances for bars and cylinders. Show hydraulic schematic with component reference numbers. Show location and mounting arrangement for span lock limit switch assemblies, specified in detail, and paid for under Section 508.

B. Electrical:

1. Control Tower - Control Console and Operator's Visualization Geometry Analysis Including CCTV Locations.
2. General notes applicable to Electrical Plans.
3. Electrical site plan showing traffic lights, traffic gates, traffic railings, incoming service, service connection point, phone number of local electric utility and phone companies.
4. Conduit riser diagram complete with conduit and cable schedule.
5. Single line diagram.
6. Symbol legend.
7. Lighting and equipment plan. Including, lighting panel schedule, fire detection system, and control tower lighting.
8. Lightning protection, bonding, and grounding plan.
9. Navigation lighting plan.
10. Communication equipment plan.
11. Control panel details.
12. Control console details.
13. Block diagram of operating sequence.
14. Schematic diagrams for traffic lights, traffic gates, span locks, safety interlocks, leaf drives, navigation lights, etc.
15. Control system I/O points.
16. Ladder logic for PLC.
17. Submarine cable/submarine cable termination cabinet details.

18. Fire and security panel schematic diagram.
19. CCTV system plan and elevation.
20. Limit switch development.
21. Electrical equipment layout - Including but not limited to generators, motors, control console, control panels, motor control center.

C. Architectural:

1. Building: Include a floor plan of each floor, egress plan, exterior and interior elevations, representative building sections, wall sections and details, schedules for finishes and equipment, type and class of construction, large scale drawings of special conditions, reflected ceiling plans, door and window schedules, safety equipment, description of materials, color schemes and schedules, and other information necessary to explain the design.
2. Structural: Include floor plans showing framing plan, column sizes, structural walls, stairs, and special conditions; structural building sections showing size and relationships between columns, beams, and other structural components; structural details and schedules; limiting load capacities; design loads for wind, seismic, live and dead loading; reinforcing bar schedule (where applicable), and other data required to fully explain the structural system.
3. Heating, Ventilation, Air Conditioning (HVAC): Provide plans showing equipment and duct work horizontal layout; building sections showing vertical location and relationship of equipment and duct work with building structure; provide design criteria for all systems; indicate type of control system; delineate control zones; describe all aspects of the various components of all systems; design calculations.
4. Plumbing: Provide plans showing drinking water distribution and waste water collection systems; provide preliminary layout of systems including elevations and line sizes; plans showing horizontal and vertical services with sizes; fixtures and equipment; water pressure and volume requirements; additional details and information necessary to fully describe the complete systems.
5. Electrical: Indicate schematics showing lighting, power, equipment, special equipment; location of all switches, lighting fixtures, and receptacles; show all circuits with number, size, and type of conductors; provide for protective devices, and emergency systems; provide for low voltage communication system, and other electrical system requirements. These schematics are part of the Electrical plans.
6. Communications, Electronics, Instrumentation: Provide systems schematics and information for proposed intercom, telephone, public address, radio communications, CCTV, computers, electronic communications, protective alarm. Indicate equipment and instrumentation arrangement and space requirements including racks, consoles, and mountings; wiring and cable requirements; power and lighting requirements including emergency and standby requirements; fire detection system; and air conditioning. These schematics are part of the Electrical plans.
7. Special Equipment: Show location and type of special equipment, if any, on plans.

21.14.2 Progress Submittals Schedule and Content

A. Mechanical:

1. 30%:
    a. Preliminary Plans and Calculations.
    b. Submit updated Cost Estimates & Scope of Work Minutes and Comments based on the Bridge Development Report (BDR). If no BDR, include the initial cost and scope data.
    c. A preliminary Key Sheet including the project title and a location map in the center of this sheet and an index of drawings date with a key as to status. Include proper job numbers, bridge numbers, and WPI numbers. If a piece of information is not available include the title and show N/A.
    d. General Notes Sheets: Outline of Plan Development Criteria. The basic decision to include information on the drawings in lieu of in the technical specifications is based on applicability. In the Technical Special Provisions, include information that does not change much from bridge to bridge. In the drawings, include information that is particular to the specific bridge.
    e. Plan and Elevation Sheet: A machinery layout and arrangement drawing must be shown both in plan and elevation. Sections may be necessary to clearly show the design. The 30% submittal may include only preliminary sketches, but the intent of the design will be shown.
    f. Substructure and Superstructure and Roadway Approach Interface Details. To ensure adequate control, develop these details sufficiently to define the design. Include all critical criteria in the 30% submittal.
    g. Design Submittal Checklist: At the first submittal, in order to keep proper control of the approval process, develop and submit a checklist of what packages will be submitted and when they are scheduled to be forwarded for review. Update the checklist as necessary. Include the revision of the submittal sheets on this list to ensure the latest documents are used. Once a drawing or technical specification section has been issued as a submittal, identify all later changes with a revision statement, designation, and date. These statements are not part of the final design package but are essential during the initial submittals to identify what is happening and establish a design history.
2. 60%:
    a. The design and calculations at this phase must be 90% complete and the drawings 70% complete. Identify all known problems and corrective action initiated and well underway. Include resolution, to the maximum extent possible, to all comments from the 30% design phase submittal.
    b. Submit a listing of all anticipated Technical Special Provisions Sections that will be used.
    c. Develop the Designer Interface/AASHTOWare Project sheet information and resolve any problems.

3. 90%:
    a. All Drawings, Calculations and Technical Special Provisions Sections must be completed. Any action on the 90% plans and special provisions should be minor corrections only. If the changes are significant, resubmit as a 90% package.
    b. All comments from the 60% plans phase and any previous comments, not completed, must be resolved.
    c. Input all project information into Designer Interface/AASHTOWare.
4. 100%:

    This submittal is to be complete and ready for bids. Verification that the required changes have been incorporated and review of the final signing and sealing are the only actions that need to be taken by the Department. This is not the time to be cleaning up the last 20% of the design.

B. Electrical:

1. 30%:
    a. List of specifications to use.
    b. Single line diagram including service voltage.
    c. Plan view showing major electrical equipment layout and location of service.
    d. Plan view showing submarine cable routing.
    e. List of all proposed electrical drawings.
2. 60%:
    a. List of changes from last submittal. All comments from the 30% plans phase and any previous comments, not completed, must resolved.
    b. Draft of specifications.
    c. Electrical calculations, i.e., generator size, service voltage drop, short circuit, service size, Automatic Transfer Switch, major electrical equipment voltage drop calculations, etc.
    d. Single line diagram showing equipment sizes and utility company.
    e. Conduit and wire sizes for major electrical equipment.
    f. Panelboard schedules.
    g. Light fixture legends.
    h. All drawings with sufficient detail to show intent of design.
    i. Preliminary Designer Interface/AASHTOWare Project
    j. Utility coordination letter.
    k. Major electrical equipment layout indicating clearances around the equipment, and location of the disconnect switches.
3. 90%:

a. List of changes from last submittal.
b. All comments from the 60% plans phase and any previous comments, not completed, must be resolved. Any action on the 90% plans and special provisions should be minor corrections only. If the changes are significant, resubmit as a 90% package.
c. Final version of specifications.
d. All final calculations.
e. All completed drawings, including Designer Interface/AASHTOWare Project

4. 100%:

All documents with all corrections incorporated and ready for bid.

C. Architectural:

1. 30%:
   a. List of specifications to use.
   b. Preliminary floor plans.
2. 60%:
   a. List of changes from last submittal.
   b. Draft of specifications.
   c. All drawings with sufficient detail to show intent of design.
3. 90%:
   a. List of changes from last submittal.
   b. All comments from the 60% plans phase and any previous comments, not completed, must be resolved. Any action on the 90% plans and special provisions should be minor corrections only. If the changes are significant, resubmit as a 90% package.
   c. Final version of specifications.
   d. All final calculations, including HVAC calculations.
   e. All completed drawings, including Designer Interface/AASHTOWare Project
4. 100%:

   All documents with all corrections incorporated and ready for bid.

D. See also ***FDM***, 121, Table 121.14.2.

Modification for Non-Conventional Projects:
Delete ***SDM*** 21.14.2 and see the RFP and ***FDM*** 121 for submittal requirements.

22 DRAINAGE

22.1 GENERAL

A. This chapter addresses methods for conveyance of collected storm water within retained embankment and along bridge structures.

B. Drainage design within retained embankments and along bridge structures is the primary responsibility of the Drainage EOR. A coordinated effort between the Structures EOR and the Drainage EOR is required to properly incorporate the drainage design into the Plans set and the completed structure.

C. For drainage hydraulic design, including pipe sizing, inlet spacing and sizing, see the ***Drainage Manual***.

D. This chapter does not address the disposition of utilities attached to structures or within retained embankment. See the ***Utilities Accommodation Manual*** and ***SDG*** for additional guidance regarding utilities located on, and adjacent to, transportation structures.

E. Develop drainage details at the earliest stages of the design phase. See ***FDM*** 121 for Phase Submittal requirements.

Modification for Non-Conventional Projects:
Delete ***SDM*** 22.1.E and insert the following: E. Develop drainage details at the earliest stages of the design phase.

22.2 DECK DRAINS

A. Deck drainage can be accomplished by using deck drains cast into the bridge deck, by using scuppers (open deck drains) to discharge the storm water off of the bridge or a combination of both. It is preferable to avoid the use of deck drains of either type on a bridge structure via carrying stormwater off the structure in the gutterline. In situations where the use of deck drainage cannot be avoided design drainage systems as follows.

B. Determine the bridge drainage system based on considerations that include system maintenance, underlying area (e.g. traffic, infrastructure), and bridge surroundings (e.g. rural versus urbanized settings, adjacent properties). Coordinate with the District on the proposed drainage system.

Modification for Non-Conventional Projects:
Delete ***SDM*** 22.2.A and B and see the RFP for requirements.

C. Minimize the need for conveying storm water through piping on the bridge. Due to the inherent complexities and maintenance issues associated with bridge drainage piping, where permitted, design scuppers to convey drainage off the bridge directly or

use extended downspouts as required. Ensure that run-off will be carried away from substructure as well as underlying infrastructure. When 4-inch diameter scuppers are impractical, consider using large deck drains and ditch bottom inlets as shown in Figure 22.2-1 to avoid conveying storm water in piping attached to the bridge.

Figure 22.2-1 Large Deck Drain Detail

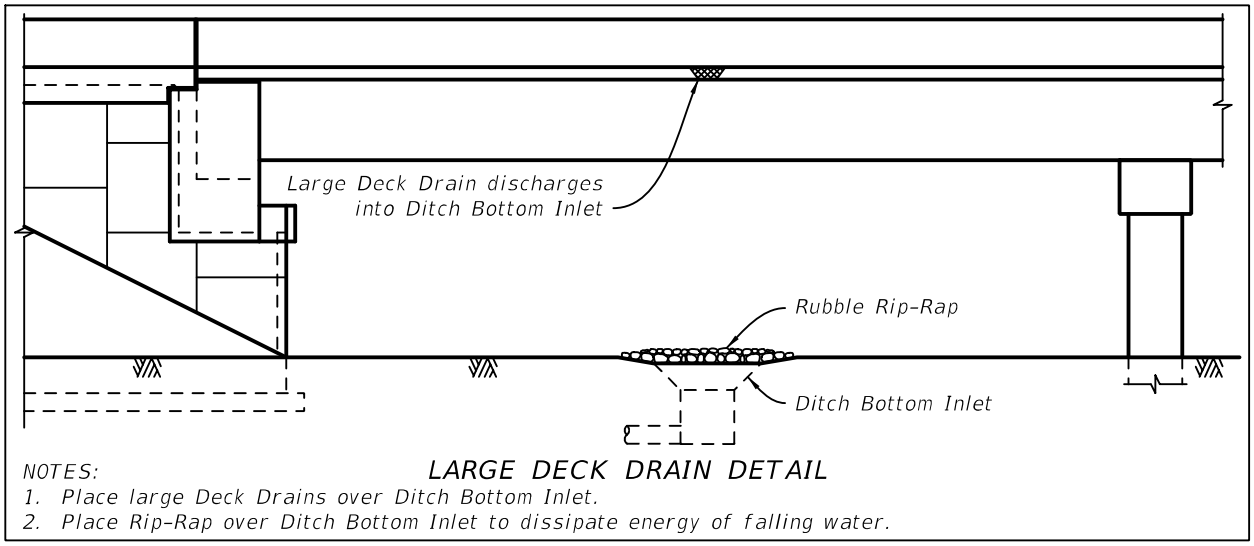

D. Detail simple open deck drain forms (e.g. 4-inch diameter scuppers) as shown in Figure 22.2-2. These details are available in the scupper details cell in the Structures Cell Library.

Figure 22.2-2 Scupper Details

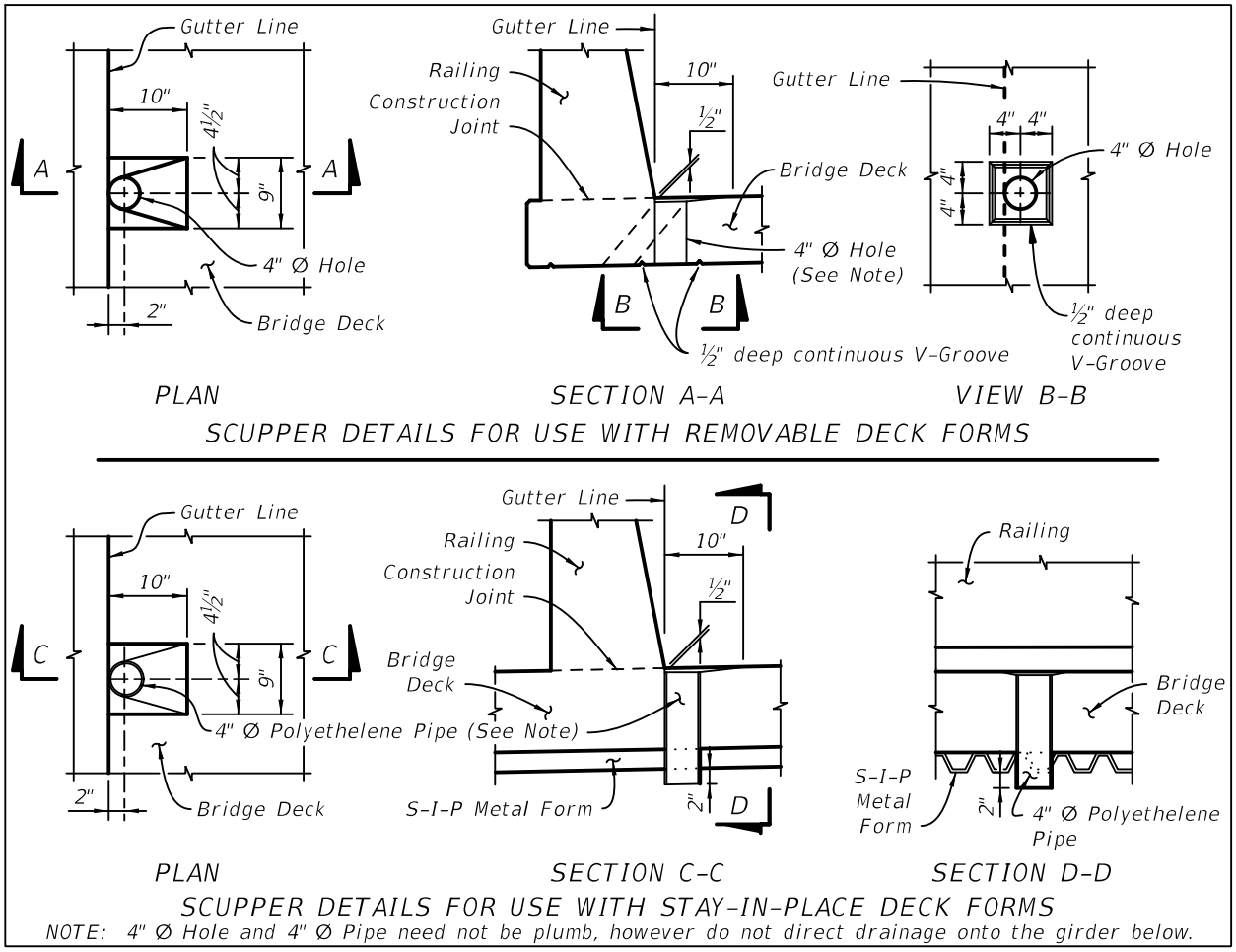

E. Scuppers must not discharge directly on the supporting beams or girders, unprotected substructure embankments at end bents, substructure embankments at end bents protected by slope pavement or sand cement riprap, lower roadways, sidewalks, railroads, or other areas (water or land) where not permitted. For steel girders, provide a closed conveyance system or scuppers with a downspout that extends below the bottom flange of the girder by 4-inches. See Figure 22.2-3. Downspouts shall conform to ***SDM*** 22.3.1. Use ADA compliant covers over scuppers located within sidewalks. Consult with Drainage EOR for recommended locations.

Figure 22.2-3 Downspout Details

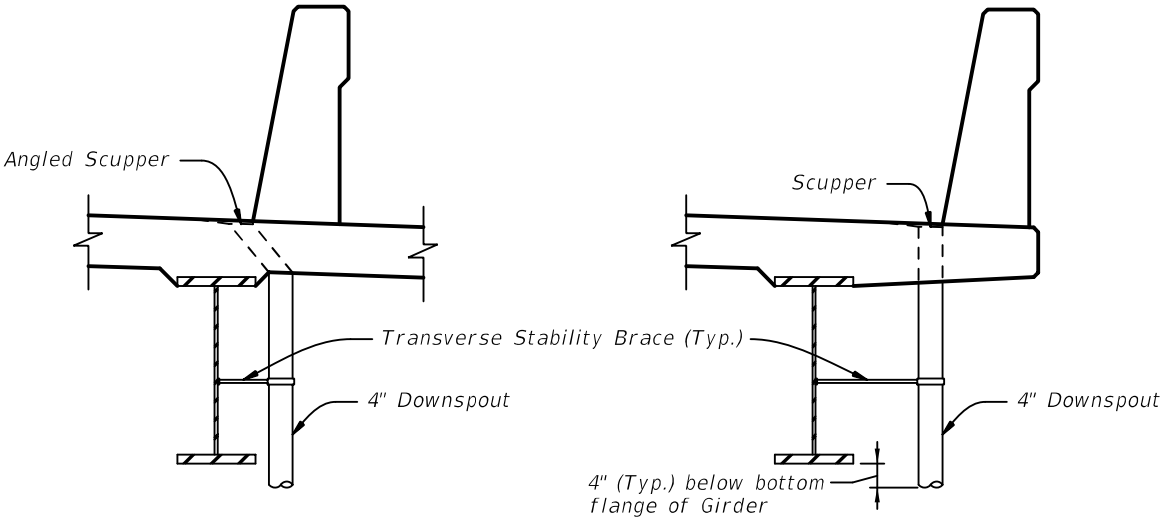

DOWNSPOUT DETAILS
(STEEL I-GIRDER SHOWN, BOX GIRDER SIMILAR)

F. Locate required deck drains near piers and, when practical, use a single drain sized to drain the entire design area. Thickened deck and additional reinforcement is required in the bridge deck at closed deck drain locations. Detail additional reinforcing around drains as required. The reinforcing requirement is dependent on the drain size and beam spacing. See Figure 22.2-4.

G. Provide a flexible or semi-rigid connection with the drain that accommodates differential movement between the superstructure and substructure. See Figure 22.3-1.

Figure 22.2-4 Large Deck Drain Detail

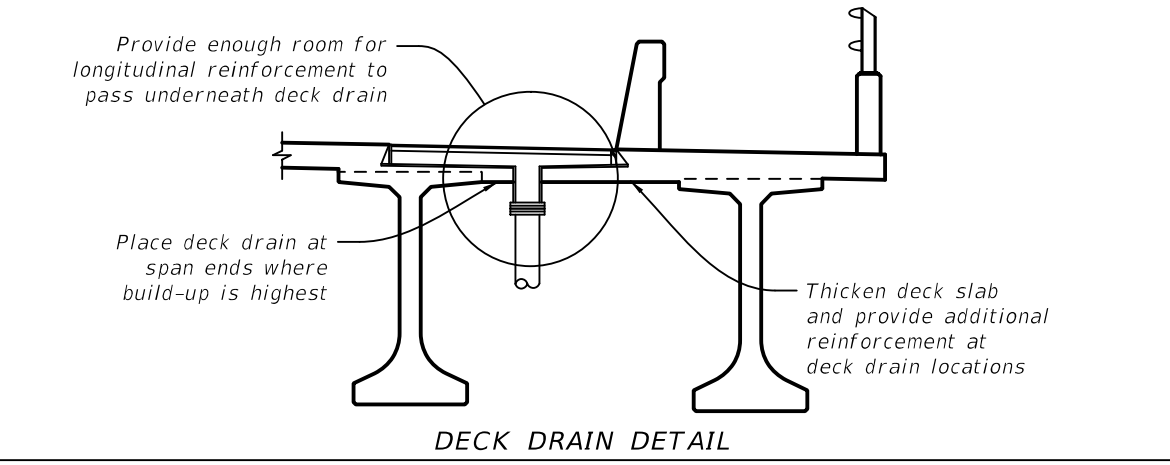

DECK DRAIN DETAIL

H. Detail the closed drain systems utilizing deck drains that are prefabricated steel drain boxes with anchor studs, hot dip galvanized after fabrication with removable grates, welded steel plates and bars with anchors. Design closed drains for wheel loads or pedestrians (ADA compliant) based on their locations on the bridge deck.

I. For other smaller deck drains without anchor studs and encased in concrete (not 4-inch diameter scuppers), specify gray cast iron, ductile cast iron or galvanized steel. Do not specify gray cast iron or ductile cast iron for use in Extremely Aggressive environments.

J. A note allowing specific alternate ferrous castings in lieu of prefabricated steel drain boxes may be included. Do not list proprietary names of items or vendor names.

Commentary: The allowable material requirements listed in items H, I and J are based on decades of successful practice and confirmation from the State Materials Office.

22.3 DRAIN CONVEYANCE

Deck drainage must be conveyed in a manner that takes into consideration function, maintenance, and aesthetics. The expected movements of the structure (thermal, deflection, etc.) must be taken into account when designing drainage conveyance and attachments to the bridge and substructure. What follows are additional design considerations and plans content when designing storm drain conveyance:

A. Fully detail pipe hanger or other attachments to the structure in accordance with ***SDG*** 1.9. Use roller-type hangers for attaching pipes to bridges with non-conductive type rollers. Specify hot dip galvanized hangers for all attachments to the bridge structure where the superstructure environment has been classified as slightly or moderately aggressive. Specify 316 stainless steel hangers for all attachments to the bridge structure where the superstructure environment has been classified as extremely aggressive and other locations as directed by the District.

Modification for Non-Conventional Projects:

Delete ***SDM*** 22.3.A and insert the following:

A. Fully detail pipe hanger or other attachments to the structure in accordance with ***SDG*** 1.9. Use roller-type hangers for attaching pipes to bridges with non-conductive type rollers. Unless otherwise shown in the RFP, specify hot dip galvanized hangers for all attachments to the bridge structure where the superstructure environment has been classified as slightly or moderately aggressive. Specify 316 stainless steel hangers for all attachments to the bridge structure where the superstructure environment has been classified as extremely aggressive.

B. Ensure that pipes encased in concrete do not conflict with reinforcing steel, post-tensioning ducts, anchor bolts or rods, etc. Maintain the same concrete cover for pipe as for reinforcing steel. For piping cast in pier columns and caps, show piping on pier reinforcing detail sheets and integrated drawings for post-tensioning. Use pier segment bump-outs to avoid post tensioning and highly congested pier diaphragms as required. See Figure 22.3-1 for typical conveyance details in piers.

C. For primarily vertical conveyances, the use of 8-inch diameter pipe is preferred and 6-inch diameter pipe is the minimum. Use 12-inch minimum diameter pipe for

longitudinal conveyances and trunk lines. Do not specify bends greater than 45 degrees.

D. Show connections, cleanouts, elbows and all necessary components for a complete system. Show a minimum of one cleanout in each vertical conveyance or pier. Show a minimum of one cleanout every 100-feet in longitudinal conveyances and trunk lines. Show additional cleanouts as necessary for complex pipe configurations.

Figure 22.3-1 Pier Drainage Details

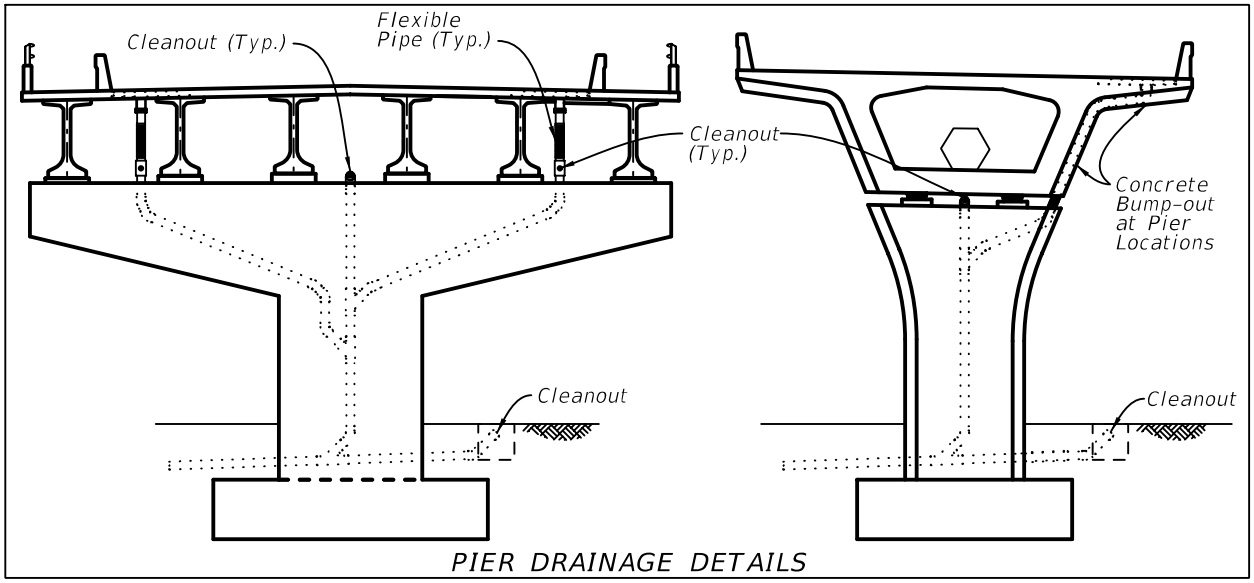

E. Underground laterals must be buried a minimum of 12-inches. Place required cleanout as close as practical to the base of the structure.

F. Due to differential settlement issues between approach roadway embankment and End Bent, avoid running drain pipe through blockout in backwall. If running the pipe through the backwall is required, provide details that can accommodate settlement, bridge movements and construction tolerances.

G. Show pipes penetrating through diaphragms. For steel bridges ensure that pipes do not conflict with cross frames. For box girder bridges, locate pipes along the inside webs of the box, as practical, so as to maintain clear access along the center of box.

H. Longitudinal or vertical conveyance piping is not permitted inside post-tensioned U-Girders nor inside enclosed spaces, e.g. box beams, standard Florida-U beams, pretensioned U-Girders, hollow piers, etc., that cannot be directly inspected. Where possible, avoid placing longitudinal conveyance piping inside box-type superstructures regardless of inspectability, or in highly visible areas such as under deck cantilevers. When longitudinal conveyance piping must be placed inside box-type superstructures, locate deck drain inlets as close to pier locations as possible to minimize the length of piping inside the superstructure.

22.3.1 Drain Conveyance - Optional Materials

A. For drain conveyances encased in concrete, specify UV-resistant, Schedule 80, Polyvinyl Chloride (PVC) pipe, Fiberglass Reinforced Polymer pipe or ductile cast iron pipe in accordance with the Specifications. See Figure 22.3.1-1.

B. For drain conveyances not encased in concrete specify UV-resistant, Schedule 80

PVC pipe or Fiberglass Reinforced Polymer pipe in accordance with Specifications. See Figure 22.3.1-1. Do not specify ductile cast iron pipe in external applications.

C. Specify flexible pipe or transition couplings in accordance with the Specifications across expansion joints or between Superstructure and Substructure. See Figure-22.3.1-1.

D. Where pipes, transition couplings, hangers and/or miscellaneous hardware must be covered to meet project specific aesthetic requirements, design such covers and include complete details and material requirements in the plans.

E. Where pipes, transition couplings, hangers, covers, shrouds and/or miscellaneous hardware must be painted to meet project specific aesthetic requirements, prepare a Technical Special Provision to specify the appropriate material and construction requirements. Contact the State Materials Office for guidance and recommendations. Use the following finish colors for painting these items:

1. When adjacent to concrete, specify the finish color to be Federal Color Standard No. 595c, Color No. 36622 or other appropriate project specific color number to match or complement the color of the concrete.
2. When adjacent to painted structural steel, specify the appropriate Federal Color Standard No. 595c color number to match or complement the color of the steel.
3. When adjacent to unpainted weathering steel, specify the finish color to be Federal Color Standard No. 595c, Color No. 30059.

Do not use generic or brand names for colors, e.g. Pearl Grey.

F. For scuppers, any of the materials listed in Figure 22.3.1-1 are allowed if the pipe is removed after casting operations are complete. The allowable materials designated as acceptable for use in scuppers are suitable for permanent applications.

G. Refer to pipe manufacturer's specifications for maximum pipe hanger spacing. Refer to ***SDG*** 1.9 for attachment of the drainage conveyance system to the bridge.

Figure 22.3.1-1 Optional Materials Details

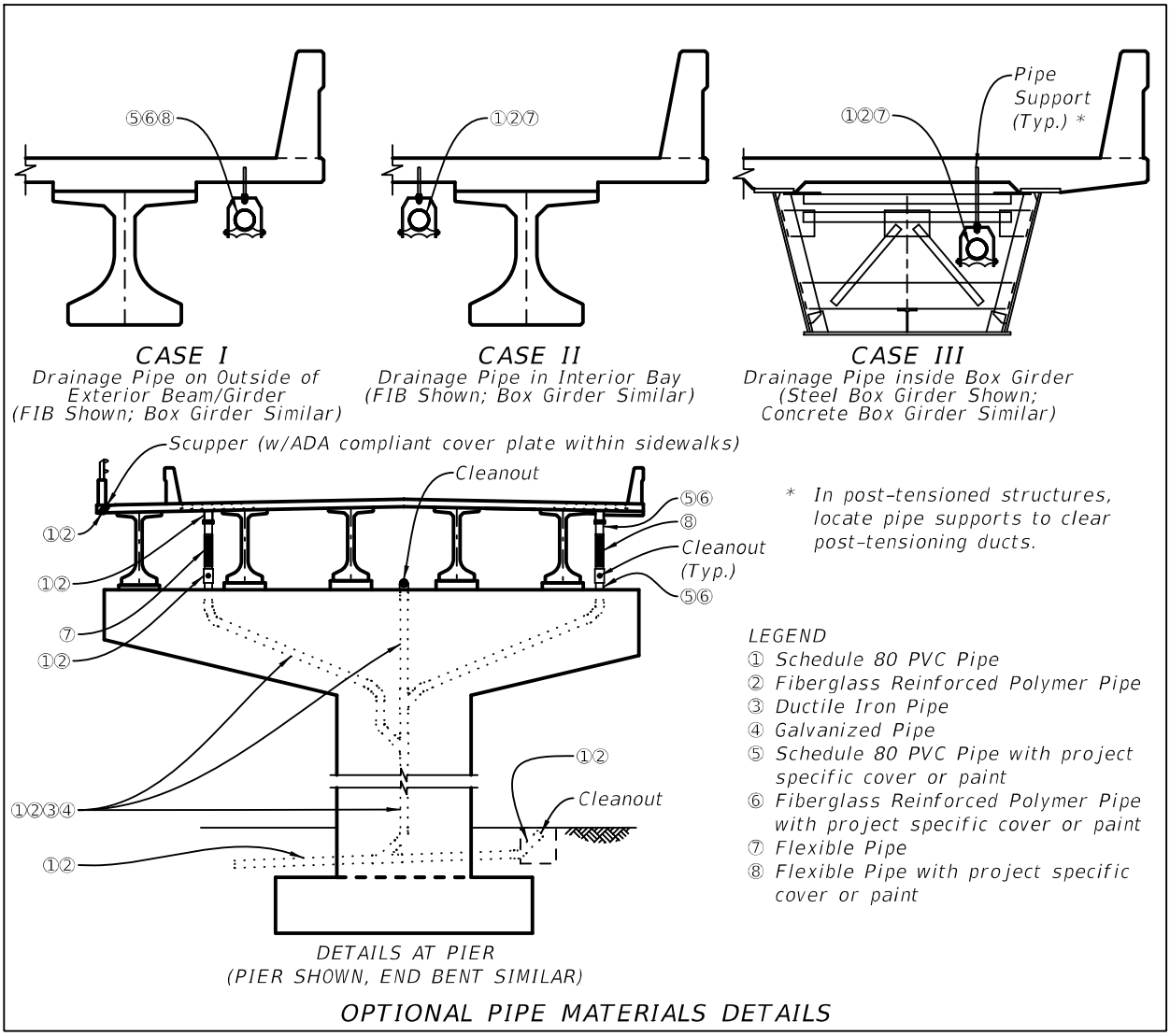

22.4 DRAINAGE WITHIN AND ADJACENT TO RETAINING WALLS

Conveying collected storm water through and immediately adjacent to retaining walls should be avoided whenever possible. Reasonable efforts should be made to allow water to flow off of the retained portion of the road and into inlets beyond wall or bridge limits. When collected storm water must be conveyed through and immediately adjacent to retaining walls, include full details in the Roadway and/or Structures Plans as appropriate in accordance with the design requirements of ***SDG*** 3.13. Also, see the ***Storm Drain Handbook.***

22.5 DRAINAGE STRUCTURES ON APPROACH SLABS

Do not place inlets in bridge approach slabs. See the ***Drainage Manual*** for the policy regarding drainage structures located in approach slabs.

23 SPLICED GIRDER BRIDGES

23.1 GENERAL

A. Spliced Girder bridges are more complex to design and build than standard concrete girder bridges. They require a coordinated effort between designers and detailers in order to develop integrated plans that address all design, detailing and constructability issues. The information contained herein is only part of the requirements necessary to successfully accomplish this task. For additional requirements see ***SDG*** Chapter 4.

B. The sheets outlined in this chapter are only a partial list and do not constitute the total sheets required for a complete submittal. See also ***SDM*** Chapter 15 for additional required superstructure sheets. For examples illustrating the content and format of completed Spliced Girder sheets, see the ***Structures Detailing Manual Examples***.

23.2 APPLICATIONS

A. Spliced girder bridges are bridges constructed from precast elements spliced together at the site into single girder lines to obtain the final structure. Girders are delivered pretensioned from the fabricator to the site and post-tensioned together.

B. Spliced girder bridges can be used for both simple span structures and continuous structures. These bridges should be used when additional span length is required and when full span concrete girders become too large to fabricate, transport, and/or erect.

C. Spliced Girders can be used for the following types of bridges:

1. Single Simple Spans - This bridge type is used where full length concrete girders cannot reach the site due to transportation or erection limitations. Multiple prestressed girder segments are supported by the abutments and temporary towers and are spliced together with closure pours and post-tensioning to form a single span.

2. Simple Spans made continuous for the deck dead load, live load, and superimposed dead loads - Full span simple span prestressed girders are spliced together at interior supports with closure pours and post-tensioned together to create a multi-span continuous unit. The construction of these bridges typically does not require the use of temporary towers.

3. Continuous Drop-In Spans - This is the most common type of spliced girder. Used for multiple span bridges and involves erecting Pier Girder Segments, End Girder Segments, and Drop-In Girder Segments on temporary towers and/or with strong backs. After casting closure pours, the prestressed girder segments are post-tensioned together to create a multi-span continuous unit. Pier Girder Segments may be haunched or constant depth depending on the span length. Three Span Units are typical for this type of construction but the construction can accommodate up to a Five Span Unit.

23.3 GENERAL CONSIDERATIONS

A. Minimize the number of different size and/or shape of precast elements to accommodate all structural and geometric demands of the project. Provide a design that accommodates all load demands, roadway section widths, span lengths, etc.

B. Size closure pours to accommodate post-tensioning duct couplers and diaphragm reinforcing.

C. Where possible, locate closure pours on continuous structures near the points of dead load contraflexure to minimize stresses at the closure pour. Coordinate locations of required temporary supports with the Traffic Control Plans.

D. Cast end diaphragms when intermediate diaphragms are cast or during deck casting operations. Check for crack control of diaphragms due to effects of elastic shortening during post-tensioning stressing operations.

E. Size blockouts in End Girder Segments to accommodate the stressing nose for tendon stressing. Detail end anchor reinforcing to avoid conflicts with stressing jacks.

F. If anchors are located at the face of the End Girder Segment, provide a construction sequence so all post-tensioning tendons are stressed prior to adjacent upstation and downstation span erection to accommodate tendon placement, jacks, and jacking operations. If anchors are located along the top of the End Girder Segment, adjacent upstation and downstation girder units may be placed before all tendons are stressed. Clearly indicate all restrictions in the plans.

G. Precast component weights: Consider the effect of precast component weight on hauling and erection equipment costs.

Commentary: The Contractor's equipment costs may be based on placing the heaviest precast component on the project.

23.4 GIRDER SEGMENT SHEETS

Include the following information as applicable:

A. Elevation View:

1. Elevation view of girder. Vertical scale may be exaggerated for clarity. Provide suitable matchlines for girders that require more than one sheet.
2. Overall casting length including additional length for elastic shortening, creep and shrinkage prior to application of post-tensioning and placement of girder on grade (as applicable).
3. Post tensioning ducts, duct profiles, duct sizes and corresponding tendon numbers. Duct profiles may be listed here or on a separate Duct Profile Sheet.
4. Reinforcing steel sizes, locations and spacings.
5. Sizes and locations of pre-formed holes in girder for diaphragm reinforcing steel and/or temporary bracing as required.

6. Locations of embedded reinforcing steel couplers/connections for diaphragm reinforcing steel.
7. End Block and anchorage blockouts for End Girder Segment only.
8. End Elevation Condition (Show Dimension "P" as shown on ***Standard Plans*** Index 450-010).

B. Cross Sections and End Views:

1. Cross sections or end views of girder segments showing typical section and variable sections including thickened web and/or thickened bottom flange as appropriate.
2. Overall dimensions and dimension strings.
3. Reinforcing steel sizes, locations and spacings.
4. Post tensioning ducts and sizes.
5. Strand pattern(s), debonding length(s), and stressing force of the prestressing strands. Prestressing strands shall be straight with no deviations.
6. Embedded Safety Sleeve or devices (see ***Standard Plans*** Index 450-010 Note 8 for details).
7. Sizes and locations of pre-formed holes in girder for diaphragm reinforcing steel and/or temporary bracing as required.
8. Sizes and locations of embedded reinforcing steel couplers/connections for diaphragm reinforcing steel.

C. End Block Detail (Generally End Girder Segment only):

1. Enlarged elevation and plan views.
2. Overall dimensions and dimension strings.
3. Reinforcing steel sizes, locations and spacings.
4. Post tensioning ducts and generic depictions of anchorages.
5. Blockout details.
6. Sections and views as required.

D. Lifting and Handling points and details.

E. Embedded Bearing Plates and locations with cross references to Bearing Detail sheets.

F. Reinforcing Bar Lists including Bar Mark, Number of Bars Required, Bar Bending Diagram and Bar Length for all bars. Provide a separate Reinforcing Bar List for each individual girder segment.

G. Other details as required.

23.5 DUCT PROFILE SHEET(S) (IF USED)

Include the following information:

A. Duct profiles and corresponding tendon numbers on Elevation Views of each girder segment.

B. Dimensions from centerline of ducts to top or bottom of girder segment at 5'-0" (max) centers along length of girder. This information may be presented in tabular form or shown on the Elevation View of each girder segment.

23.6 CAMBER DIAGRAM (DEFLECTION AND BUILD-UP)

Include the following information:

A. Girder Segment Placement Data. Show diagram of the placement of girder segments placed on temporary supports. Provide elevations at the bottom of the girder segment at temporary supports and bearings for each girder segment along each girder line.

Commentary: The relative elevations between field sections prior to the placement of the closure pours is critical in achieving the final geometry of the completed structure.

B. Elevation View of each unit with calculated deflections at major phases of construction. At a minimum, show anticipated cambers and deflections in tabular form for the following:

1. Prior to deck pour.
2. Immediately after deck pour.
3. Due to each stage of post-tensioning.
4. Due to removal of temporary supports.
5. Due to composite dead load.
6. Due to long term creep and shrinkage.

C. Cross sections for deck build up over girders as appropriate.

23.7 MISCELLANEOUS DETAILS

Include the following information as applicable:

A. Detail project specific temporary bracing based on the applicable portions of ***SDG*** 4.3.4 and include additional bracing types and/or details as required.

B. Show details of reinforcing for closure pours and diaphragms on the Superstructure sheets. Include closure pour and diaphragm reinforcing with the Superstructure Reinforcing Steel List.

C. Detail Anchorage locations as shown in Figures 23.7-1, 23.7-2, 23.7-3 and 23.7-4. Provide clearances at Non-stressing End Anchorage locations as shown in Figures 23.7-3 and 23.7-4.

D. As an alternative to unbonded tendons placed within the web of the beam, unbonded tendons contained in a concrete rib attached to the web may be used. The concrete rib may be either a secondary cast-in-place pour or formed and cast with the precast girder. See the details in Figures 23.7-5 and 23.7-6

Figure 23.7-1 Post-Tensioned Spliced Girder Details - Tendons Internal to the Web (1 of 4)

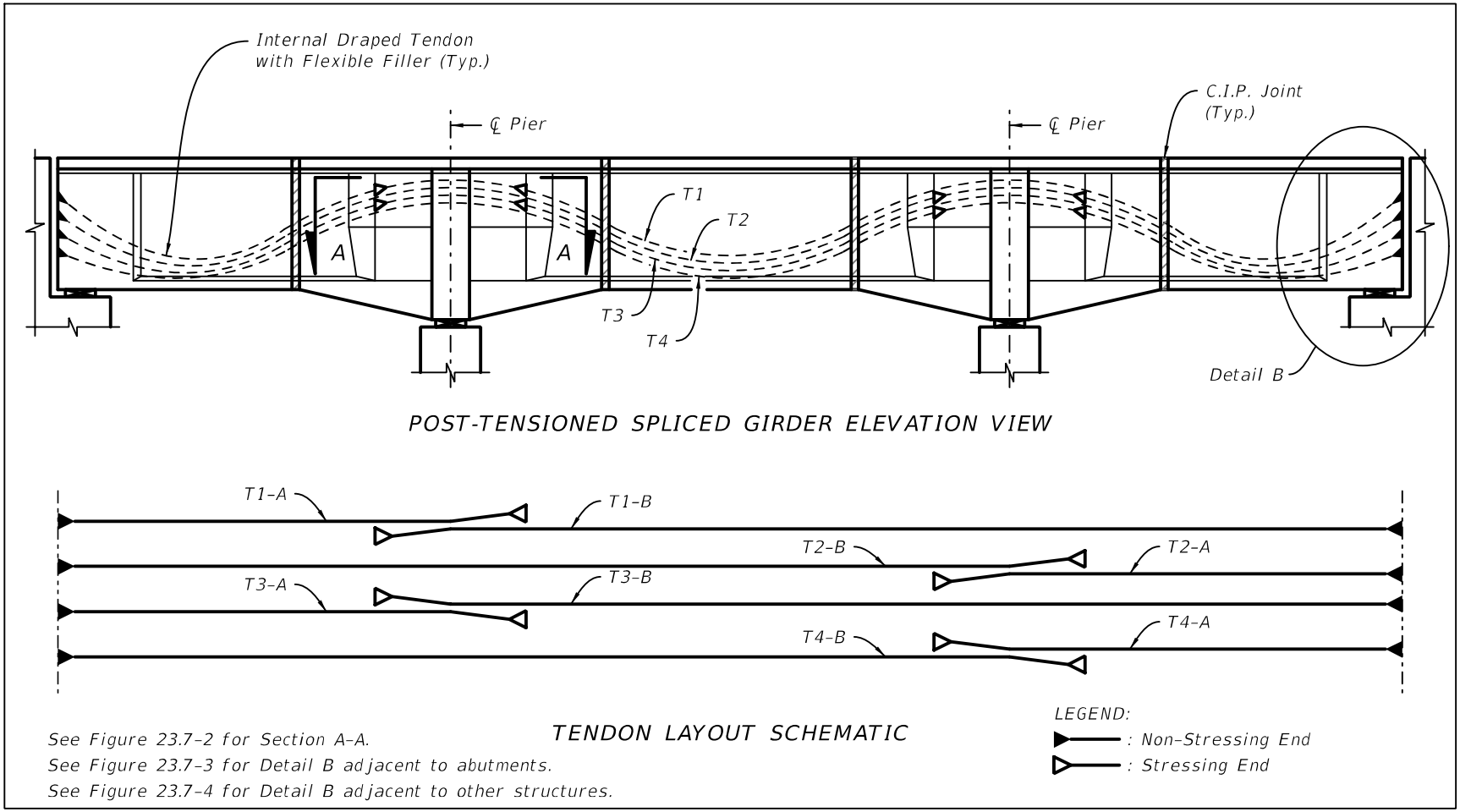

Figure 23.7-2 Post-Tensioned Spliced Girder Details - Tendons Internal to the Web (2 of 4)

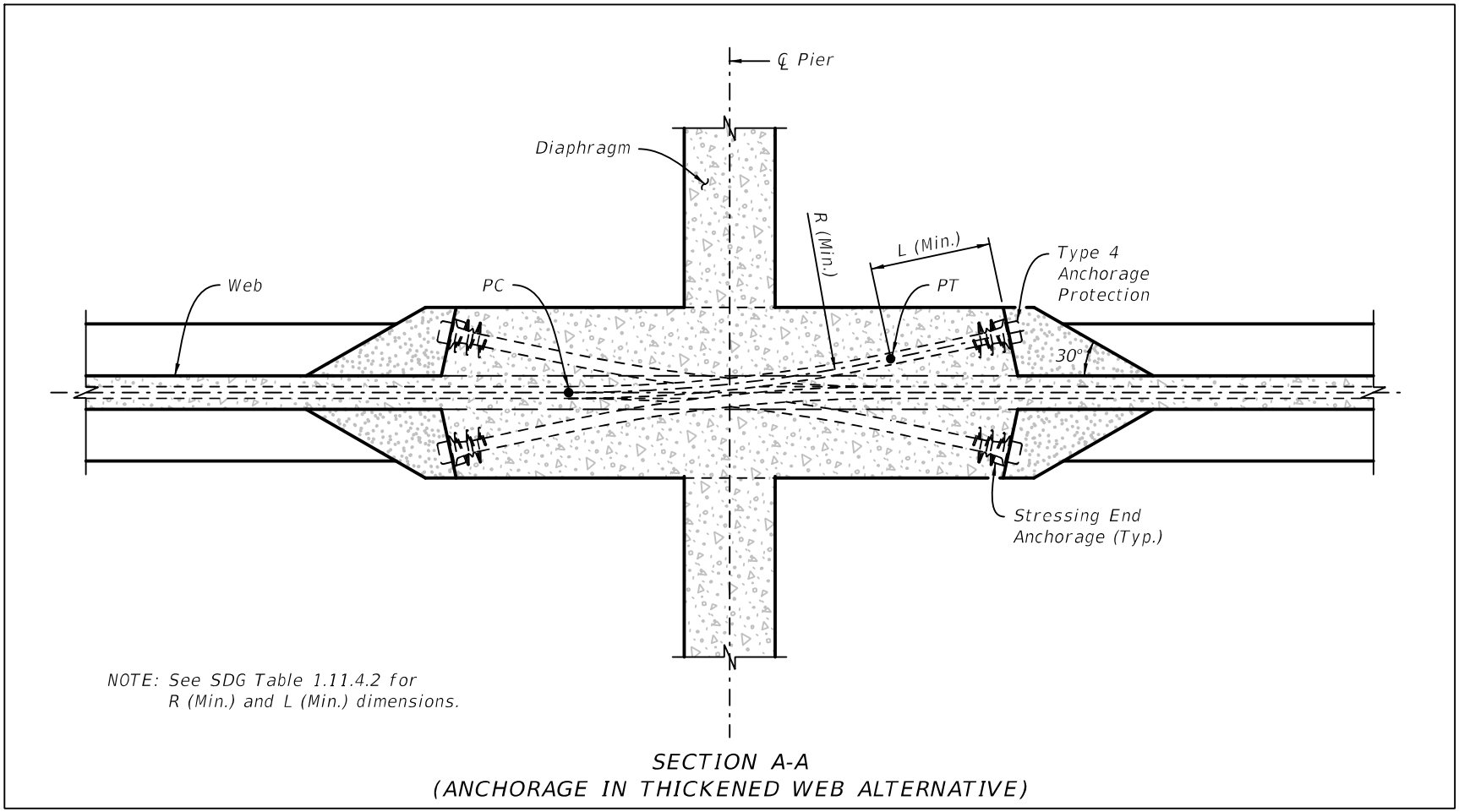

SECTION A-A
(ANCHORAGE IN THICKENED WEB ALTERNATIVE)

Figure 23.7-3 Post-Tensioned Spliced Girder Details - Tendons Internal to the Web (3 of 4)

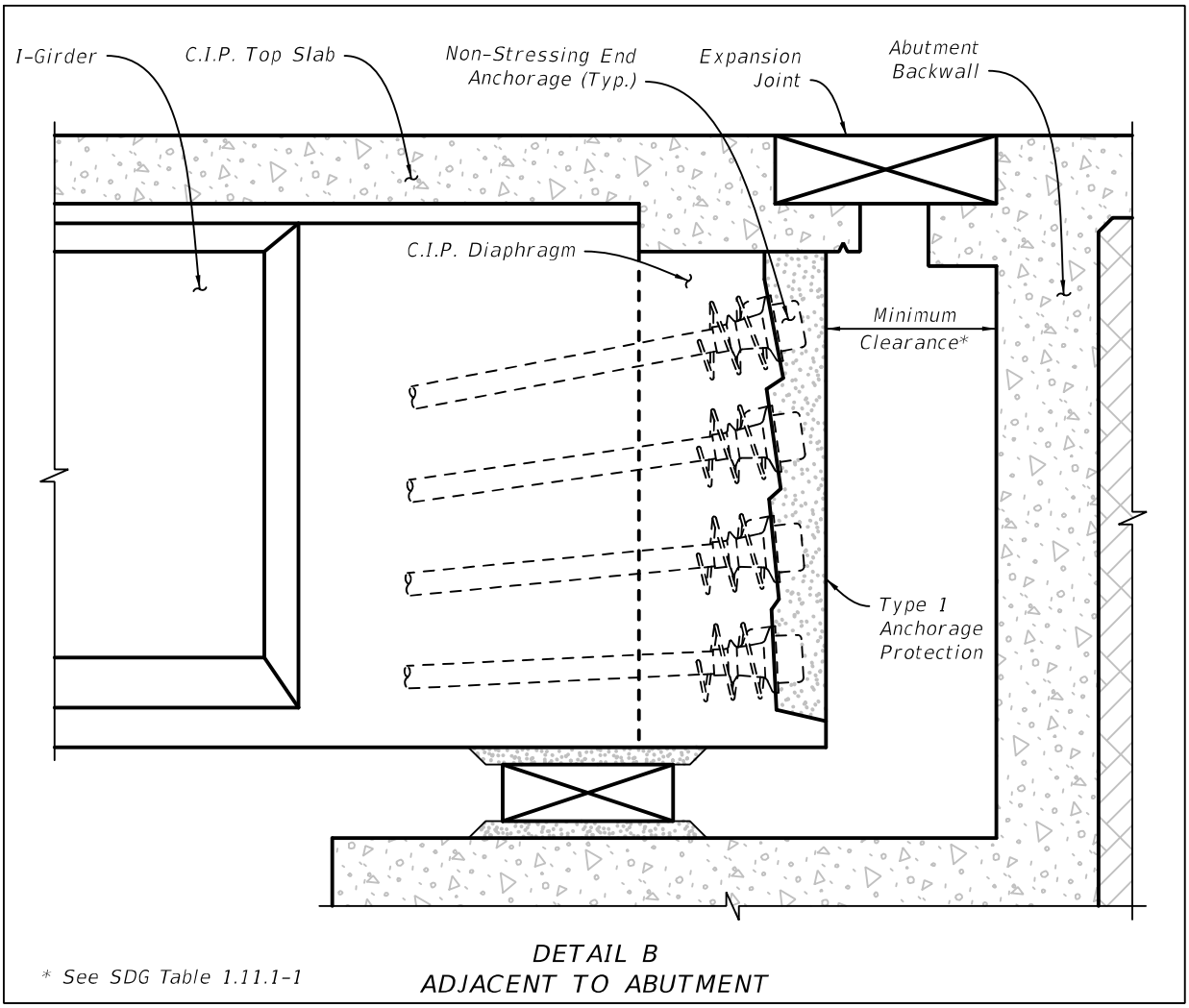

Figure 23.7-4 Post-Tensioned Spliced Girder Details - Tendons Internal to the Web (4 of 4)

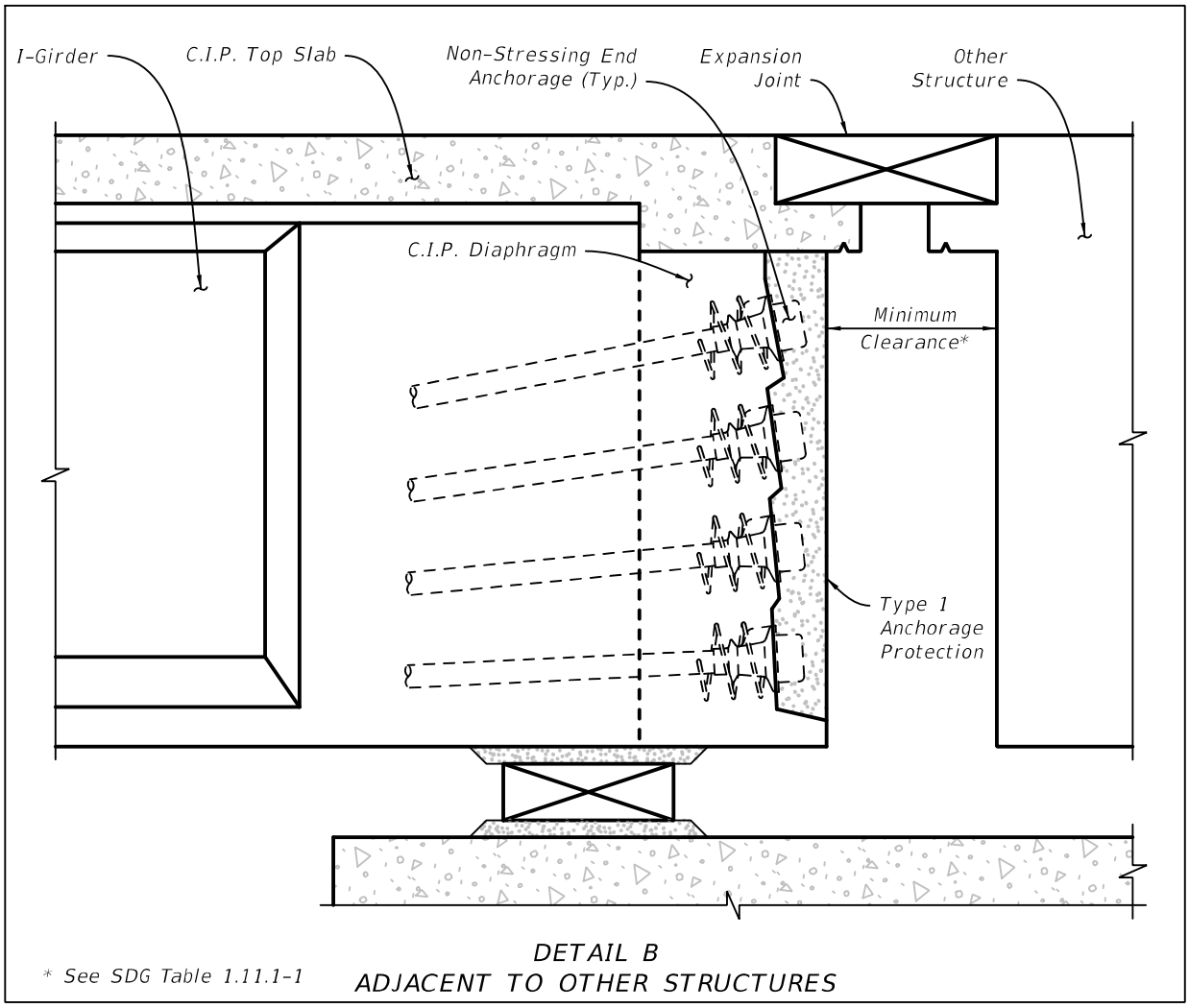

Figure 23.7-5 Post-Tensioned Spliced Girder Details - Tendons External to the Web (1 of 2)

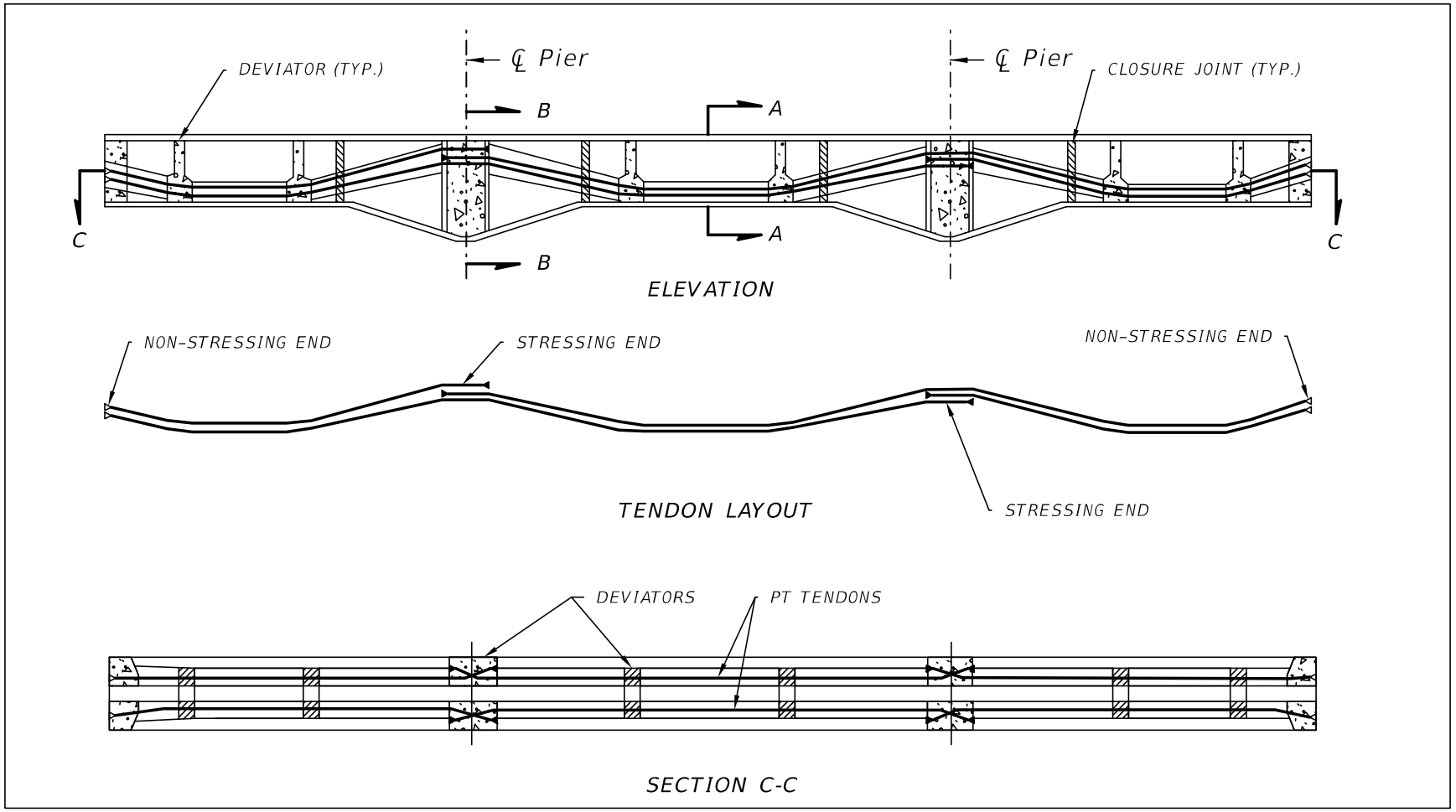

Figure 23.7-6 Post-Tensioned Spliced Girder Details - Tendons External to the Web (2 of 2)

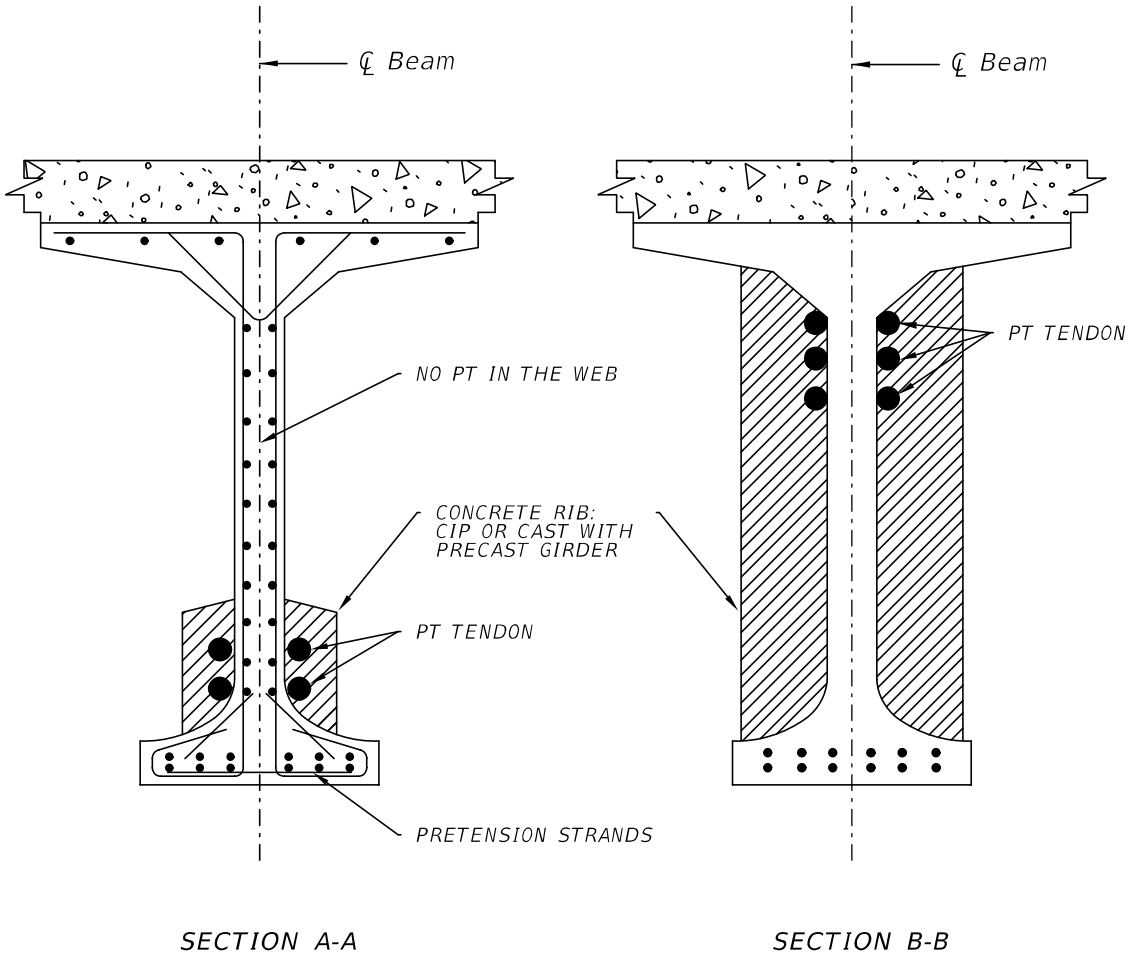

23.8 CONSTRUCTION SEQUENCE

Provide a step by step construction sequence that includes the following:

A. Substructure construction.

B. Temporary support and strongback installation and removal (if applicable).

C. Girder segment placement sequence.

D. Reactions at each permanent and temporary support and strongback location for each construction phase and tendon stressing operation.

E. Tie down requirements and release sequence as required.

F. Placement and removal of longitudinal bearing locking devices at required locations (if applicable).

G. Closure pour and diaphragm construction sequence.

H. Post-tensioning tendon stressing sequence per beam.

I. Completed Post-Tensioning Tendon and Bar Data Tables (Per ***Standard Plans*** Index 462-003).

J. Post-tensioning tendon filler injection sequence.

K. Placement and removal of deck forms (if applicable).

L. Deck casting sequence including direction of casting.

M. Erection of adjacent approach spans (if present and if clearances for tendon installation and stressing are affected by presence of adjacent approach spans).

N. Construction of adjacent end bent back walls (if applicable and if clearances for tendon installation and stressing are affected by presence of back wall).

O. Notes to supplement the Specification requirements for providing girder stability during erection, e.g., installation of web clamps between adjacent girder segments, erection of cross frames as girders are placed, strongback positioning, etc.

24 FENDER SYSTEMS

24.1 GENERAL

A. Fender Systems are complex to design. They require a coordinated effort between the SDO, USCG, Contractors, EORs, and FRP Manufacturers in order to develop integrated plans that address all design, detailing and constructability issues. The information contained herein is only part of the requirements necessary to successfully accomplish this task. For additional requirements see ***SDG*** 3.14.

B. The details and notes presented in this chapter work with ***Specifications*** Sections 471, 510, 700, 932 and 973.

24.2 GENERAL NOTES

A. At a minimum, include the following General Notes for all Fender Systems:

1. Provide fender systems in accordance with Specifications Section 471.
2. Do not use the following materials for pile or wale members in the design of the fender system:

   Timber

   Concrete containing ferrous metal strands and reinforcing

   [List other material restrictions as determined by the District]
3. Use the following information to complete the fender system design meeting the Specifications and the requirements stated herein:

   Maximum Allowable Fender System Deflection (ft) = _____

   Required EAC (k-ft) = _____

   ½ of 100-yr Scour Elevation (ft) = _____

   [½ of 100-yr Scour Elevation = Existing ground elevation - (0.5 x predicted 100 year scour)]

   Channel Depth (ft) = _____

   MHW/NHW Elevation (ft) = _____

   MLW/NLW Elevation (ft) = _____
4. U.S. COAST GUARD NOTIFICATION: Notify the local office of the U.S. Coast Guard at least 30 days prior to beginning of construction of the Fender System.
5. [Coordinate pile type with the District. Include the following note or a project specific note as appropriate for another pile type and/or if pile splices will be permitted or required such as in an area directly under a bridge where limited headroom is available:]

   PILES: Provide Reinforced Thermoplastic Structural Shapes for piles in accordance with Specifications Section 973. Install all piles plumb and in accordance with manufacturer's recommendations. Pile splices are not allowed.

6. WALES: Provide Reinforced Thermoplastic Structural Shapes for wales in accordance with Specifications Section 973. Provide continuous wales with splices only at locations shown on the plans.

7. [Coordinate use of Catwalks and catwalk decking type with the District. If a catwalk is used, include one of the following sets of notes for the catwalk decking type as appropriate:]

   FRP DECKING FOR CATWALKS: Provide 2" x 12" (nominal) Thermoplastic

   Structural Shapes for decking for catwalks in accordance with Specifications Section 973. Install decking according to manufacturer's recommendations using stainless steel #10 x 3" (minimum) deck screws.

   [or]

   FRP OPEN GRATING FOR CATWALKS: Provide FRP Open Grating for catwalks. Provide a gray or black, heavy duty FRP Open Grating suitable for exterior installations. Provide grating with a maximum gap opening on the walkway surface of 1½". Design grating for the following two load conditions:

   - a 50 psf uniformly distributed live load, and a maximum deflection of ⅜" or L/120 at the center of a simple span.
   - a concentrated load of 250 pounds with a maximum deflection of ¼" at the center of a simple span.

   Install FRP Open Grating according to manufacturer's recommendations using stainless steel hardware, screws, bolts, nuts and washers. Attach FRP Open Grating to Wales and Deck Supports at a 2'-0" maximum spacing so as to resist pedestrian live loads and uplift forces from wind, buoyancy and wave action.

8. [Coordinate handrail type with the District. Include one of the following sets of notes or another project specific note for the handrail as appropriate:]

   FRP HANDRAILS: Provide Thermoplastic Structural Shapes for handrails in accordance with Specifications Section 973.

   [or]

   WIRE ROPE FOR HANDRAILS: Provide wire rope meeting one of the following requirements:

   - ½" diameter 6x19, 6x25 or 6x37 class IWRC Type 316 stainless steel wire rope with a minimum breaking strength of 18,000 lbs.
   - ½" diameter 6x19 galvanized wire rope with ultraviolet ray resistant polypropylene impregnation having an outside diameter of 5/8" with a minimum breaking strength of 22,000 lbs. Protect all ends with heat shrinkable end caps compatible with the rope's polypropylene that provide an effective water-tight seal.

9. CLEARANCE GAUGES AND LIGHTS Provide Clearance Gauges and Minimum Clearance Signs in accordance with Specifications Section 700 and that are a

minimum of 0.08 inches thick. Include complete details of the Clearance Gauges, Minimum Clearance Signs and their associated support/attachment systems in the Shop Drawings. Provide and install Clearance Gauge Lights in accordance with Specifications Section 510 and Standard Plans Index No. 510-001.

10. NAVIGATION LIGHTS: Provide and install Navigation Lights in accordance with Specifications Section 510, Standard Plans Index No. 510-001, and/or if appropriate, project specific details.

    [Include the following note if appropriate:]

    Provide and maintain Temporary Navigation Lights during construction until permanent Navigation Lights are operational.

11. BOLTS, THREADED BARS, NUTS, SCREWS AND WASHERS: Furnish stainless steel bolts in accordance with ASTM F593 Type 316. Furnish stainless steel Threaded Bars in accordance with ASTM A193 Grade B8M. Furnish stainless steel Nuts in accordance with ASTM F594 Type 316. Furnish stainless steel Screws in accordance with ASTM F593 Type 305. Furnish stainless steel Washers compatible with Bolts, Threaded Rods and Nuts under heads and nuts. Torque Nuts on 1" diameter Bolts and Threaded Bars to 150 lb-ft. Keep the threads on Bolts, Threaded Bars and Nuts free from dirt, coarse grime and sand to prevent galling and seizing during tightening. Recess hardware a minimum of ½" from front face of wales.

12. WALE SPLICE PLATES: Provide FRP or stainless steel wale splice plates. Stainless steel wale splice plates shall be in accordance with ASTM A240 Type 316. FRP wale splice plates shall be in accordance with Specifications Section 973.

B. For examples illustrating the content and format of a completed General Notes Sheet, see the ***Structures Detailing Manual Examples***.

24.3 SCHEMATIC PLAN VIEW SHEET

A. Provide a Schematic Plan View of the Fender System showing the treatment of the bridge with the channel as shown in Figures 24.3-1 and 24.3-2. Include the following:

1. Overall Fender System layout
2. Stations and offsets (left or right) to Bridge Station Line for each Begin Flare Control Point in tabular format
3. Centerline of Channel
4. Channel Width and dimensions from centerline of channel to the front face of each fender
5. Angle between Centerline of Channel and Bridge Station Line, i.e., the Base Line, Centerline Construction, etc. (Note: This angle is not necessarily the same as the bridge skew angle.)
6. Station along Bridge Station Line at its intersection with the Centerline of Channel

7. Direction of Stationing along Bridge Station Line
8. Coping lines of new bridge(s), and if applicable, of existing bridge(s)
9. Outline of adjacent piers, footings or bents
10. Navigation Light type, color and locations per ***Standard Plans*** Index 510-001
11. Lighted Clearance Gauge locations
12. North arrow
13. Existing fender system to remain or be removed (if applicable)

Figure 24.3-1 Schematic of Fender System Showing Treatment of Single or Dual Fixed Bridge with Non-Skewed Channel

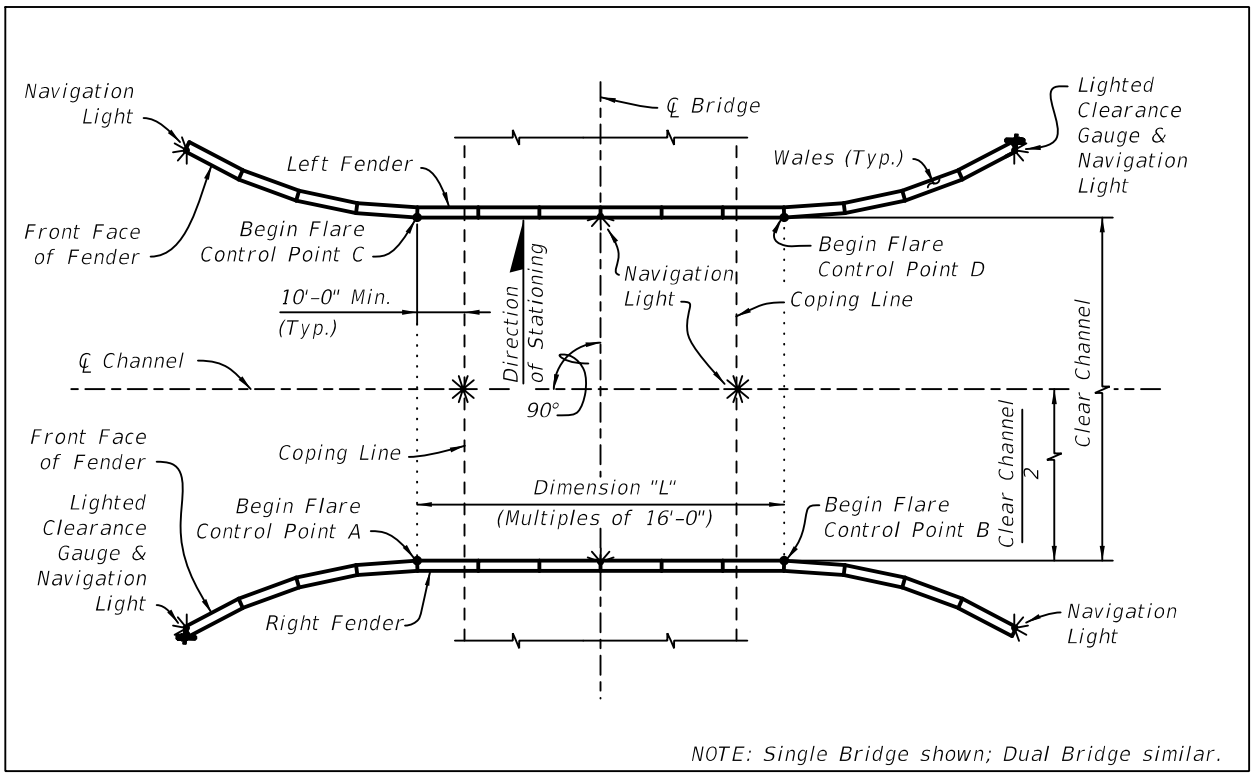

Figure 24.3-2 Schematic of Fender System Showing Treatment of Single or Dual Fixed Bridge with Skewed Channel

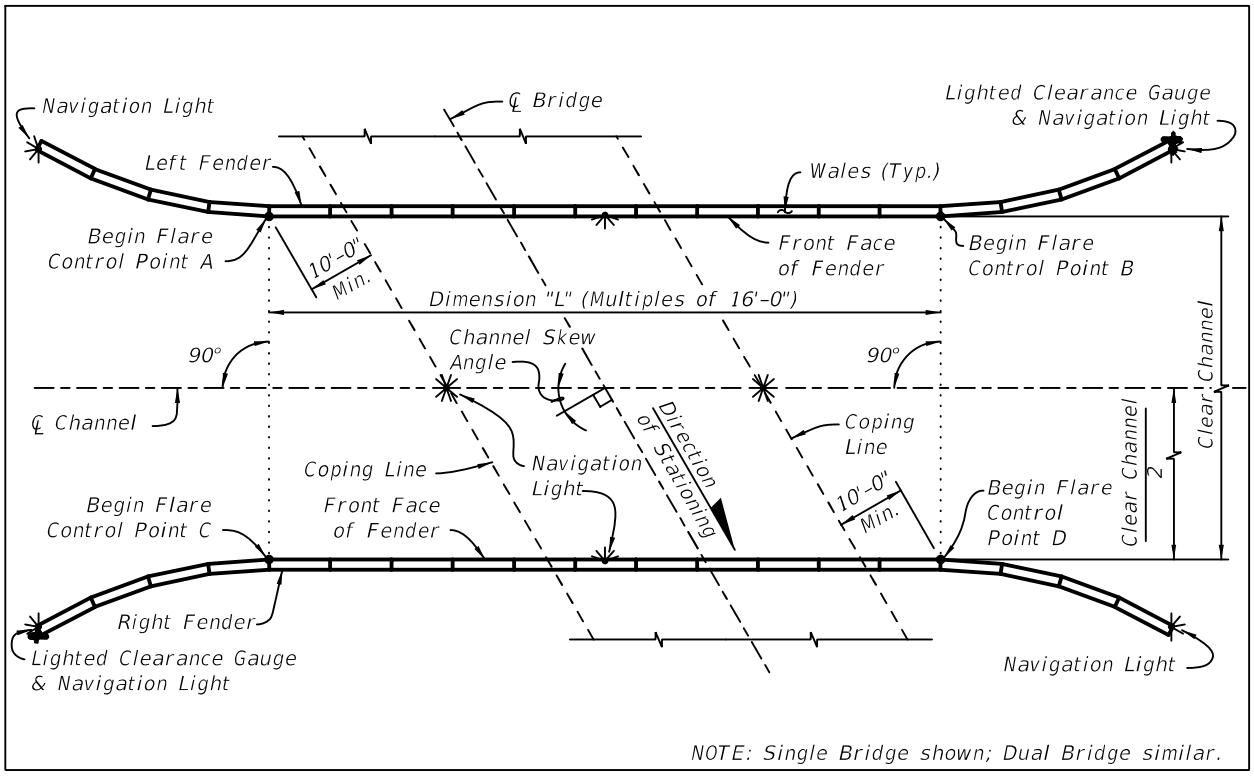

B. For examples illustrating the content and format of a Schematic Plan, see the ***Structures Detailing Manual Examples***

24.4 PARTIAL SCHEMATIC PLAN VIEW SHEET

Provide a Partial Schematic Plan View of the Fender System showing the detailed dimensions and angle breaks along the front faces of the fenders within the flared sections as shown in Figure 24.4-1. This information may be included on the Schematic Plan View as appropriate if space permits. For an example illustrating the content and format of the Partial Schematic Plan Sheet, see the ***Structures Detailing Manual Examples***.

Figure 24.4-1 Partial Schematic Plan View of Fender System Flared Section

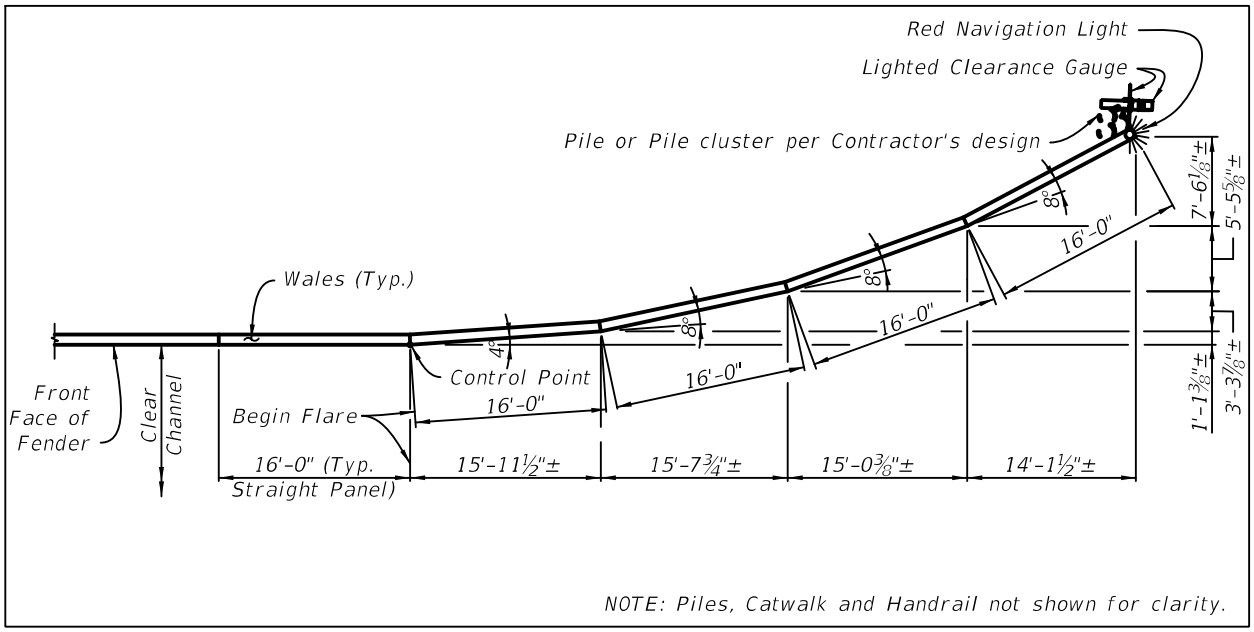

24.5 FENDER SYSTEM DETAIL SHEETS

Include the following supplemental designs, details and information in the Plans:

A. Details of, and electrical service for, Navigation Lights and Clearance Gauge Lights including conduit path from bridge to fender system and identification of service point. Coordinate design with ***Standard Plans*** Index 510-001 and ***Specifications*** Section 510.

B. Schematic details of Catwalk along top of Fender System (if required by the District)

C. Schematic details of Handrail along back of Catwalk (if required by the District)

D. Schematic details of Access Ladders and Catwalks from bridge to Fender System (if required by the District)

24.6 CLEARANCE GAUGE DETAIL SHEET(S)

Provide details for Clearance Gauges and other associated details in the Plans as follows:

A. Contact the appropriate U.S. Coast Guard District Commander to obtain the "nominal day visibility distance" for a given bridge. Using this distance, determine the required vertical clearance gauge numeral height from the table in ***Title 33 CFR Part 118.160***. Include the following complete details and information for Clearance Gauges in the Plans:

   1. Sign Panel Details - Fully detailed in compliance with the ***USCG Bridge Lighting and Other Signals Manual*** and ***FHWA Standard Highway Signs***.

      a. Clearance Gauge Sign panel showing overall sign dimensions, numerals, numeral height, foot mark dimensions, and if used, intermediate foot mark dimensions

      b. Minimum Clearance Sign panel showing overall sign dimensions and letter height

   2. Schematic details of Clearance Gauge support members and hardware

   3. MLW or NLW, and MHW or NHW elevations

   4. Elevation at which to set the Clearance Gauge, e.g., Elev. 8.97 = 58 on Clearance Gauge

   5. Show front face of Clearance Gauge to be aligned perpendicular to Centerline of Channel

B. For examples illustrating the content and format of completed Clearance Gauge Detail Sheets, see the ***Structures Detailing Manual Examples***.

Commentary: Transoft Solutions' GuidSIGN application may be used to develop the necessary sign details and worksheets to be included in the fender system plans. The CADD Office has developed a procedure and resources available through the FDOT CADD Support Forum for detailing these signs with the GuidSIGN application. If another application is used or the details are created manually, the detail sheets shall conform to the requirements of this section.

24.7 REPORT OF CORE BORINGS SHEET(S)

Develop and include Report of Core Borings Sheets for the fender system if the boring sheets that are being provided for the bridge are not sufficient for, or applicable to, the design of the fender system. Otherwise, include a cross reference to the Report of Core Borings Sheets for the bridge in the Fender System General Notes. See ***SDM*** Chapter 10 for Report of Core Borings Sheet content requirements.

25 PREFABRICATED BRIDGE ELEMENTS AND SYSTEMS (PBES)

25.1 DESIGN CONSIDERATIONS - GENERAL

Prefabricated Bridge Elements and Systems (PBES) are structural components of a bridge fabricated offsite or in a near-site casting yard for the purpose of reducing onsite construction time as compared to conventional construction methods. For FDOT designs, PBES are project specific and therefore use customizable component sizes and shapes of components and connections, various fabrication and construction methods, and viable means of transportation and project access. A coordinated effort between the designer and CADD technician is required to develop contract documents that address all design, detailing, and constructability issues of PBES. The information contained herein is for general design considerations and only part of the requirements necessary to develop a quality set of PBES plans.

A. This Chapter contains PBES design considerations as they relate to the following:

   1. Applicability
   2. Connections
   3. Components
   4. Construction Specifications

B. The designer and detailer shall comply with other sections of the ***SDM*** to supplement drafting and dimensioning requirements for preparation of PBES plans.

C. The ***FDOT Design Manual (FDM)*** 121.9.1 provides PBES evaluation criteria for preparation of the Bridge Development Report (BDR). The referenced section of ***FDM*** formalizes the process for evaluating whether prefabricated options should be considered based on feasibility questions, then, when warranted, how to compare options through an assessment matrix.

25.2 PBES APPLICABILITY

A. PBES is primarily suited for projects with significant "economies of scale," projects with uniform bridge elements, and projects containing long waterway crossings or viaducts for the following reasons:

   1. Large projects are able to amortize precast yard costs for project-specific precast components, special equipment, and overhead costs associated with large cranes into the cost of an overall project. In addition, longer duration projects balance the learning curve with increased productivity as the project progresses.
   2. High project variability makes component precasting more difficult and costly because the ability for standardization of precast components is limited. Nonstandard component fit-up is difficult due to the number of different connection sizes, types, and construction steps leading to loss in production rates. Non-uniformity of components hinders formwork reuse.

3. Reducing construction time over water can reduce overall project costs due to lower associated insurance rates, labor rates, and overhead costs. Bridge components on long waterway projects tend to be more uniform than on over-land projects.

B. PBES may be appropriate on projects with high traffic volumes where it is critical to minimize traffic impacts or where construction of the structure is time critical. Suitability of PBES on a specific project can be evaluated using the Precast Feasibility Assessment in ***FDM*** 121.

25.3 PBES CONNECTIONS

Fit-up during construction is a major consideration when designing and detailing component connections. Component connections should be detailed for the worst case combination of tolerances that include fabrication and erection tolerances.

Commentary: An allowable amount of variation or misalignment from a specified dimension is termed "tolerance." Designers and detailers of prefabricated bridge projects must account for the combination of fabrication and erection tolerances in every connection. For instance, one element may be low by its tolerance amount and the adjoining element may be high by its tolerance amount.

A. Make the tolerance measurement from a common working point or line for critical elements, see Figure 25.3-1. Show dimensions to pockets and interfacing elements from a common working point to avoid error accumulation during construction.

B. Verify spacing as well as orientation of the interfacing connections within the element.

   See Figure 25.3-2 for an example of alignment orientation.

Figure 25.3-1 Tolerance Measurement

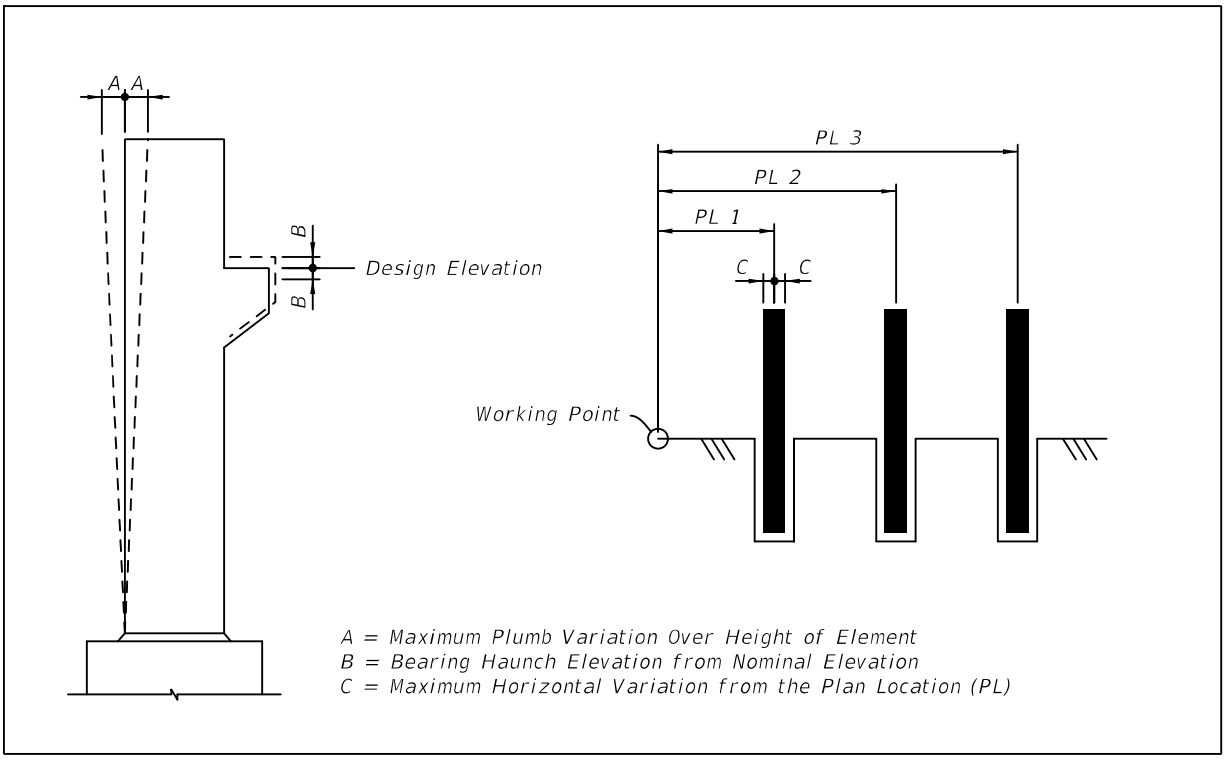

Figure 25.3-2 Alignment Orientation

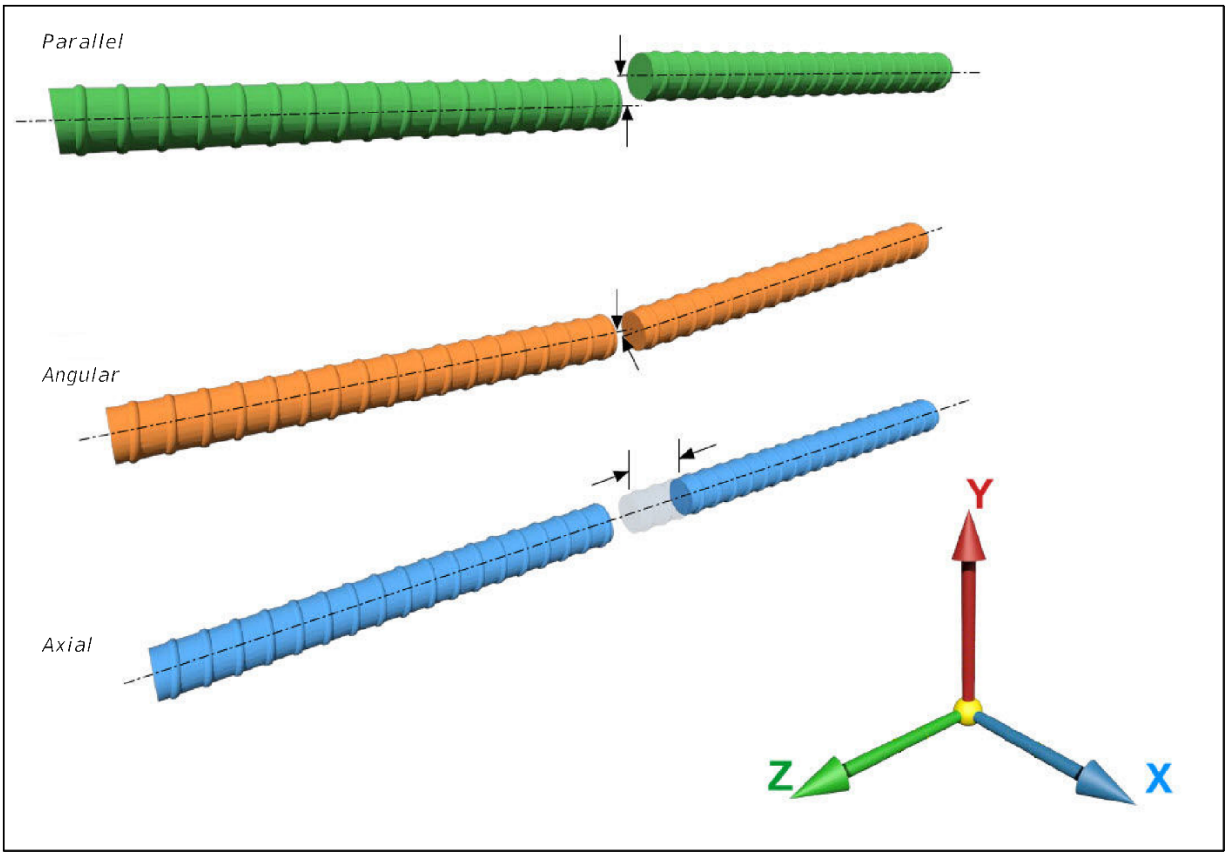

C. Fabrication tolerances that have to be accounted for include beam cambers, beam sweep, warping and bowing, and overall dimensions of all precast elements. The locations of holes, threaded inserts, and block-outs are critical. The general order of magnitude of typical fabrication tolerance is as follows:

Location of holes, threaded inserts, and block-outs	±⅛-inch
Dimensions of precast components	±⅛-inch
Flat Surfaces (deviation from a plane at any location)	0.025 inch/foot, not to exceed a total of ¼-inch

Specify casting tolerances as necessary based on project characteristics and required fit-up.

Commentary: PBES connections and components can vary significantly from project to project depending on the PBES system utilized; as a result, PBES systems generally require Technical Special Provisions for PBES components, Modified Special Provisions and/or Developmental Specifications that add to or revise the Specifications. For example, more restrictive tolerances than what is shown in the Specifications may be required. Tighter tolerances may significantly increase costs and should not be specified unless necessary.

D. Interfacing pretensioned components must include consideration for large differences in camber. Camber variability of prestressed components is affected by a number of items such as: aggregates, curing conditions, strand patterns, casting/detensioning temperatures, design strength versus actual strength of concrete, weekday versus weekend and holiday casting cycles, support conditions during storage, hauling and handling, and component age at time of loading.

Commentary: Camber variability is common. Requiring steam curing or creep testing of the actual concrete mixes used may improve camber predictions; however, fairly large variations in camber may still exist due to other factors such as those listed.

E. Compensate for member tolerances at joints or allow for minor overall variation in the structure dimensions. Consider dimensional growth when specifying the locations of holes, threaded inserts and blockouts. The joint widths should accommodate all fabrication and construction tolerances. The actual width of elements should be equal to the element spacing minus the specified joint width.

Commentary: If ten panels that are each 10-feet wide are placed side by side, the overall length of the system will typically be greater than 100-feet. This is termed "dimensional growth" and is due to a combination of form, width, and eccentricity tolerances of adjoining panels.

F. Detail precast bent caps and pier footing connections to accommodate ±3-inch horizontal pile/shaft placement tolerance. Accommodate a pile/shaft axial alignment tolerance of ±¼-inch. per foot from the vertical or batter line. Flatness and elevation tolerances of a component are specific to the component detail.

G. Require mock-up testing prior to full-scale fabrication for each unique PBES connection on the project. List in the contract documents any full scale mock-up testing to be successfully completed by the Contractor for all unique connections. Require that the mock-up test be performed by the same personnel using the same equipment and procedures as will be utilized on the project. Define mock-up test acceptance standards in the contract documents. Clearly identify responsibilities for disassembly and inspection of mock-up testing.

H. For connections between precast components in which reinforcing bar extensions from two or more components overlap, require component-to-component fit-up in the casting yard prior to shipping to the project site. In lieu of a component-to-component fit-up, the Contractor may demonstrate that interfacing components do not conflict through the use of a transfer template. This requirement may be relaxed on a project by-project basis based on the number of form set-ups being utilized, quality of the templates used to locate the reinforcing steel, and repeatability of the finished product.

I. Avoid details with blind blockouts and pockets wherever possible. Develop details that facilitate worker access and inspection access from above.

Commentary: Concrete or grout that is placed in blind blockouts and pockets is typically difficult to consolidate without honeycombing because air can be trapped under solid overlying surfaces. In cases where in-fill material is required to be placed under solid overlying surfaces, slope the surface and vent at high points to reduce air entrapment. Pumping or using a sealed standpipe is typically needed to ensure intimate contact between the in-fill material and the overhead surface.

J. Avoid connections designed with confined space, narrow access and sharp corners. Include vents, overhead pour holes, and chamfers where necessary.

K. Specify the maximum allowable shim height in the contract documents. Shim height limits should be consistent with fabrication and erection tolerances.

Commentary: Joints consisting of non-match-cast grouted connections should be detailed to allow flexibility to make minor adjustments in grade. This is commonly done by means of small shim packs that are placed between connecting elements.

L. Steel shims which are left in place are prohibited.

Commentary: Shims are often left in place in the finished structure. Steel shims are prohibited because they tend to create hard points which concentrate stresses as the structure is loaded, which could lead to spalling of the precast elements. Polymer sheets or circular composite discs constructed from fiber-reinforced polymer (FRP) confinement piping with concrete/grout in-fill, cut to length, may be utilized.

M. Components that are directly impacted by live load and are supported by more than three bearings (e.g. double tee beams) must include details and directions to the Contractor regarding how to ensure uniform bearing between bearing points.

Commentary: Precast elements with more than three bearing points are prone to rocking under live load which may induce larger loads in the connections and elements than were assumed in the design.

25.3.1 PBES Joint Selection

A. In general, the type and width of joints between PBES elements are based on the worst case combination of fabrication and erection tolerances. See Table 25.3.1-1 for general guidance by PBES joint type. See ***SDG*** 1.11 and ***SDG*** Chapter 4 for post-tensioned closure pour requirements. Practical PBES joint types include the following:

   1. Match-Cast Joints
   2. Pseudo Match-Cast Joints (see ***SDM*** 25.4.3.5 for Pseudo Match-Cast Epoxy example)
   3. Non-Match-Cast Grouted Joints (excluding beam build-ups between beam and precast deck panels)
   4. Closure Pours Adjoining Members Post-Tensioned Together
   5. Closure Pours Adjoining Members Not Post-Tensioned Together

   For a more complete description of these joint types, refer to the descriptions herein.

B. Selection of joint type and joint width will also depend on whether adjoining members are to be post-tensioned. If post-tensioning is required, then the joint must be large enough to couple ducts and accommodate smooth transitions in geometry to avoid stress risers due to abrupt changes in duct alignments. Where post-tensioning anchors are located on the face of the joint, consult post-tensioning suppliers to determine the minimum joint width to accommodate jack access.

Commentary: For example, on a spliced pretensioned I-beam project, match-casting between field sections would be problematic because the camber tolerances are too large. In this case, a closure pour is required to couple the ducts, accommodate beam camber differences and to provide a smooth duct transition at the splice location.

C. The joint material typically depends on the size of the joint. In general, utilize concrete where the width of the joint exceeds 6-inches, and non-shrink grout where the joint width is less than or equal to 6-inches. Utilize two-face epoxy for match cast joints.

   Examples of joint material include concrete mixes with shrinkage reducing admixtures and non-shrink grout. Special curing methods may also be appropriate.

Commentary: Material selection should accommodate the worst case fabrication and erection tolerances, e.g. for a pile/shaft-to-cap pocket connection, select a material and material placement procedure which can accommodate a ±3-inch pile/shaft placement tolerance for both the minimum and maximum gaps between adjoining elements.

D. Surface preparation of concrete surfaces prior to casting the joint maximizes bond at component interfaces and minimizes shrinkage. Two options for surface preparation of concrete surfaces include (1) application of epoxy bonding agents, and (2) presoaking surfaces to "saturated surface dry" (SSD) condition. Prepare interfacing concrete surfaces according to one of the two options listed and in accordance with

joint material manufacturer's recommendations. For either option, also provide an exposed aggregate finish surface for all interfacing surfaces.

Commentary: Dry concrete substrate has the tendency to draw water out of a grout or concrete mixture causing a weak bond to develop at the interfacing surfaces. The concrete substrate should be wetted to a SSD condition prior to grout or concrete infill application, usually requiring continuous presoaking the area for four to five hours. Consult grout manufacturer's printed recommendations to obtain SSD at the interface surfaces. Provide presoaking times for SSD condition for concrete in-fills.

Epoxy bonding agents have a tack-free time of between 4 and 8 hours which may not be appropriate for certain applications depending on precast component(s) placement, leveling and form sealing time frames. Epoxy bonding agents which have cured prior to casting grout or concrete will have significant adverse influence on the bond of the interfacing surfaces.

Research has demonstrated that an exposed aggregate surface finish provides enhanced bond

E. Non-Match-Cast Grouted Joints generally consist of a ½-inch joint thickness in which a stiff trowel grade bed of non-shrink grout is placed on the bottom component surface and the mating precast component is then lowered onto the grout bed, using shims or a friction collar to level and control elevation. Excess grout is displaced and the joint is tooled to achieve a smooth grout line. See Figure 25.3.1-1.

Figure 25.3.1-1 Grout Bedding Process

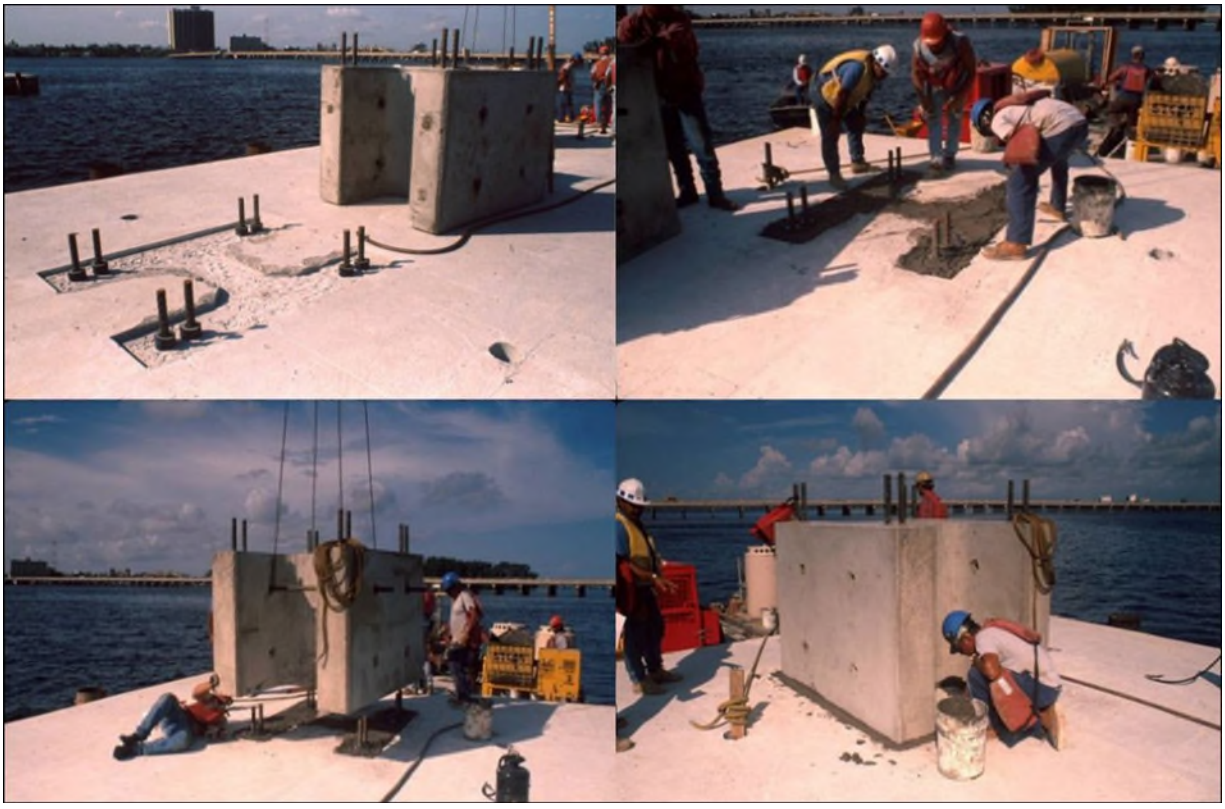

Table 25.3.1-1 Joint Type

Joint Type [material used]	Applications	Width of Joint
Match-Cast Joints [two-face epoxy]	Adjoining members are post-tensioned together	zero
	Adjoining substructure members are connected with grouted reinforcing sleeve couplers at a horizontal joint[1]	
Pseudo Match-Cast Joints[2] [two-face epoxy]	Adjoining members are post-tensioned together	zero
	One of the elements is precast and the other is cast-in-place	
	Adjoining substructure members are connected with grouted reinforcing sleeve couplers at a horizontal joint[1]	
Non-Match-Cast Grouted Joints (excluding beam build-ups between beam and precast deck panels) [non-shrink grout]	Adjoining members are not post-tensioned together	Varies depending on element tolerances ½-inch minimum
	Members are joined with grouted reinforcing sleeve couplers	
	Element to element tolerances within ±¼-inch	
Closure Pours Adjoining members are post-tensioned together [Concrete]	Where dimensional variability of adjoining ducts is high or where jack access is required	2'-0" minimum
	Where duct coupling is required and dimensional variability of adjoining ducts is relatively low and jack access is not required	1'-6" minimum
Closure Pours Adjoining members are not post-tensioned together [Concrete][3]	Members are joined with reinforcing bar extensions (Lap Splices)	As required to develop reinforcing 2'-0" minimum
Closure Pours Adjoining members are not post-tensioned together [Ultra High Performance Concrete (UHPC)[4]]	Members are joined with reinforcing bar extensions	As required to develop reinforcing 6-inches minimum[5]

1. ***LRFD*** 5.12.5.4.2 requirements for minimum stress across epoxy joints are intended to control geometry for segmental applications and may be waived for this application.
2. See Section 25.4.3.5 for Pseudo Match-Cast Epoxy example.
3. Concrete mixes with shrinkage reducing admixtures.
4. Prepare specification requirements to prevent sole-sourcing a proprietary product.
5. ***LRFD*** 5.12.2.3.3e requirement for a minimum pour width is waived for UHPC.

25.3.2 Grouted Reinforcing Sleeve Couplers

A. The typical coupler can accommodate minor variation in bar locations. In general, the coupler can be oversized by two bar sizes to provide a ±½-inch. tolerance for component placement. Maximum bar size may be limited by bar coupler size. Consider congestion of reinforcement and concrete cover requirements where couplers are used.

B. If a design requires the connection of a precast element to a field cast portion of the bridge, require the contractor to utilize a transfer template to ensure proper reinforcing steel placement for fit-up.

Commentary: Quality control on bar and splice locations is critical. Custom transfer templates are required for each situation. For example, a transfer template provides relative connection reinforcement locations in a C.I.P. footing for a precast column. In the case of a multi-column pier, the transfer template also includes spacing between columns and the relative orientation of each column to ensure critical fit-up.

25.3.3 Reinforcing Bar Connections

A. Detail connections to avoid reinforcing bar conflicts during placement. See Figure 25.3.3-1 through Figure 25.3.3-5 illustrating connection concepts to avoid conflicts with adjacent precast units.

B. In general, detail PBES connections so that all components and reinforcing can be installed by lowering the element vertically into position. Allow for a small gap between bars. See figure 25.3.3-5.

C. Reinforcing bar connections require a closure pour large enough to allow for development length of reinforcing and reinforcement placement and alignment within specified fabrication and erection tolerances.

Figure 25.3.3-1 Precast Slab Beam Connection

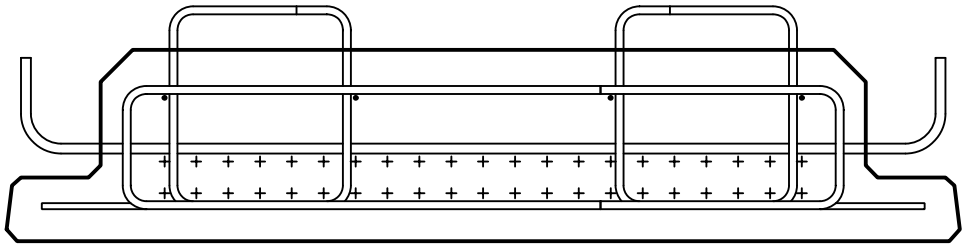

TYPICAL BEAM SECTION
(FSB SHOWN, OTHERS SIMILAR)

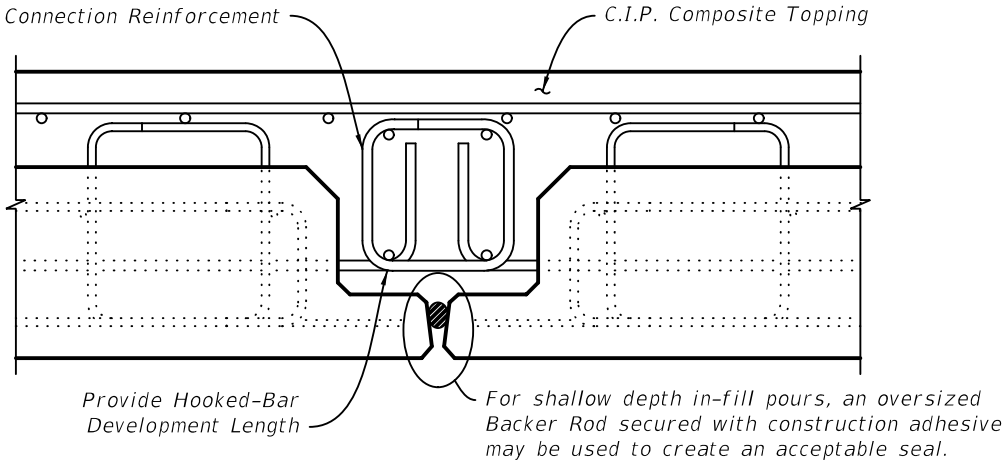

POCKET DETAIL

Figure 25.3.3-2 Precast Unit Connection

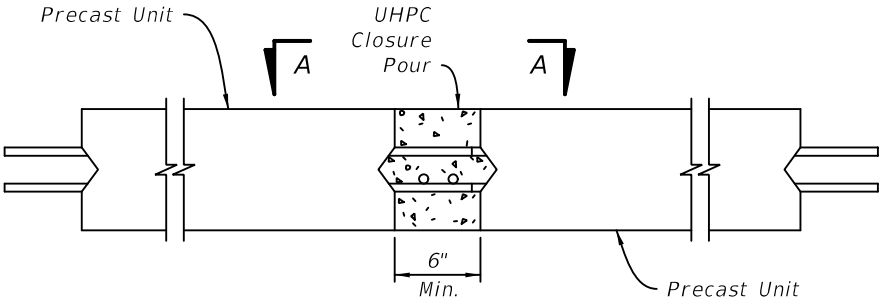

CONNECTION DETAIL

Include consideration of sweep with fabrication and erection tolerances in joint reinforcement placement.

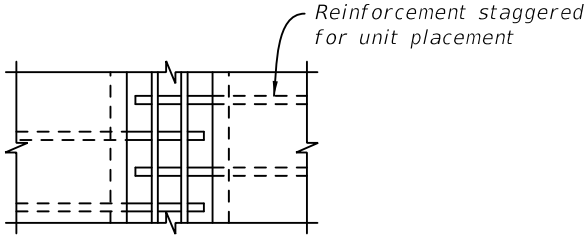

VIEW A-A

D. A combination of hook bars and headed reinforcement may be utilized to reduce the width of closure pours which simplify forming requirements and reduce the cost. See Figure 25.3.3-3 and Figure 25.3.3-4.

Figure 25.3.3-3 Splice Overlap Closure Pour

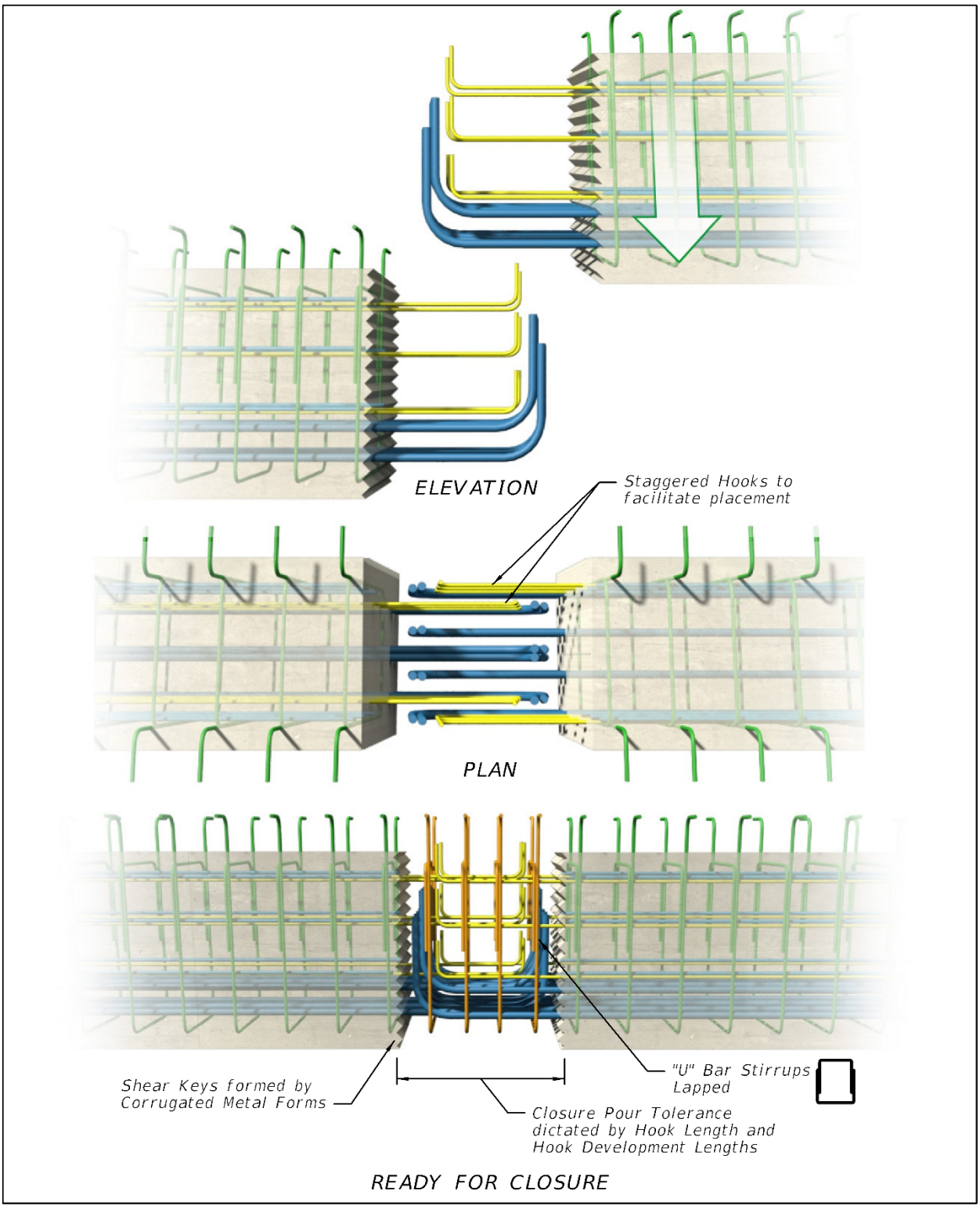

E. Headed reinforcement or reinforcement with mechanically attached anchors are used to reduce anchorage length and serve as an alternative to standard bar hooks. See Figure 25.3.3-4.

F. Stagger overlapping reinforcement extensions to eliminate conflicts during fit-up. Provide necessary confinement required for non-contact lap splices. Detail confinement steel as lapped "U" bar pairs that can be inserted from the top and bottom of the connection.

Figure 25.3.3-4 Headed Bars and Hooks Closure Pour

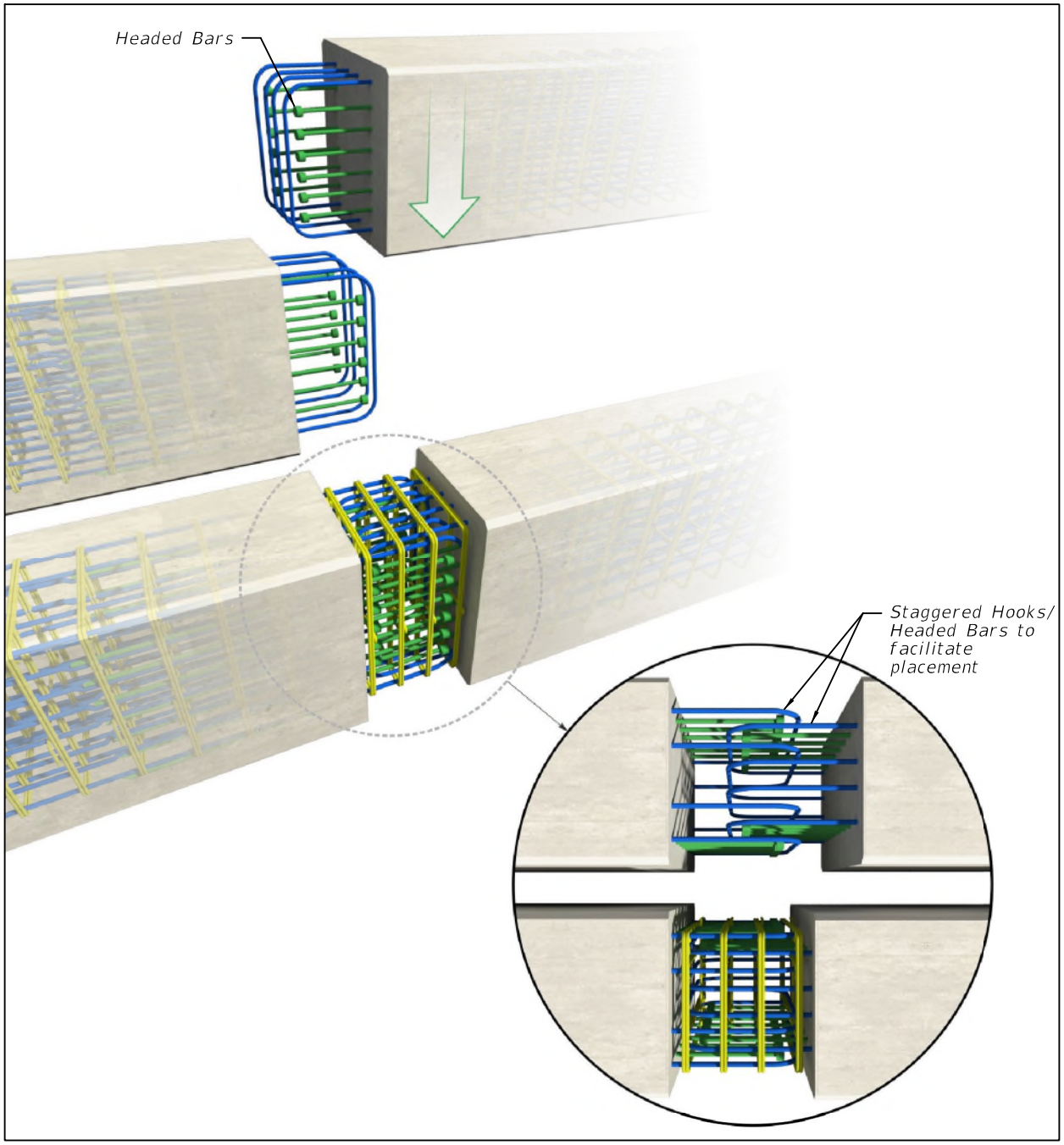

Figure 25.3.3-5 Precast Element Lap Bar Orientation

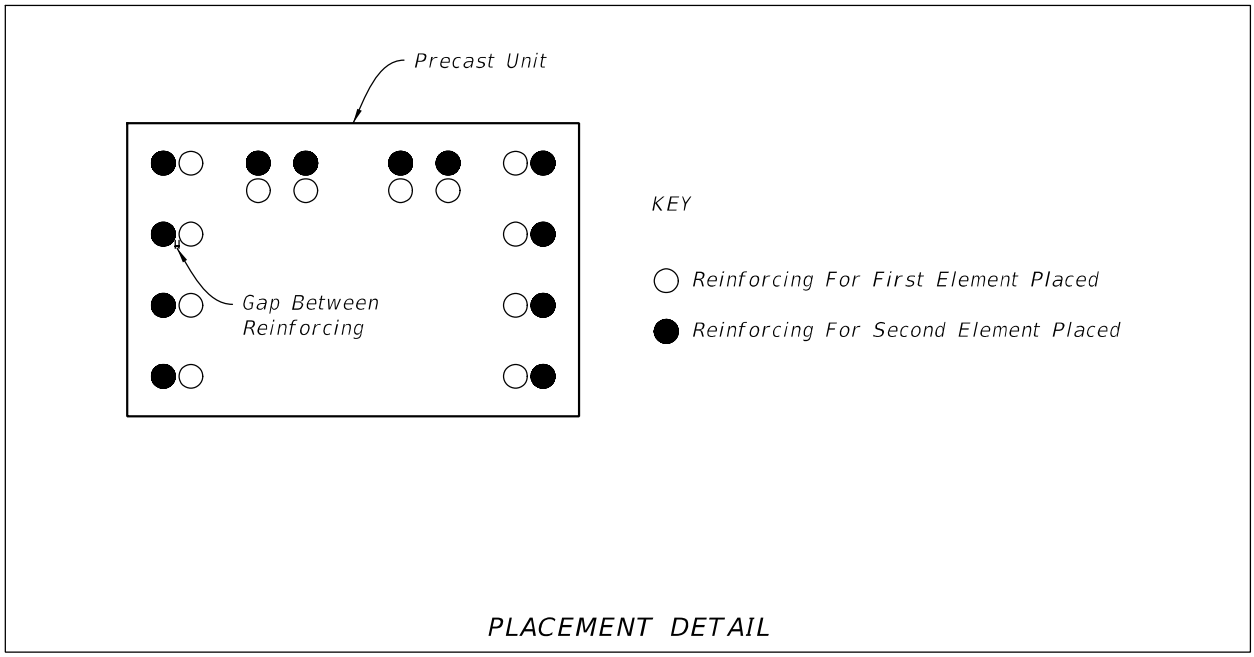

25.4 PBES COMPONENTS

Prefabricated bridge component sizing will vary based on project specific factors such as haul routes, erection and hauling equipment, and site specific construction access.

25.4.1 Sizing

General rules for sizing components are as follows:

A. Size components such that the total hauling width including projecting reinforcing does not exceed 16-feet.

B. Maximum weight should be 60 tons for elements to be lifted using one crane and 120 tons for horizontally oriented elements long enough to be lifted using two cranes. This assumes crane access allows for reasonable short boom reaches to place components.

C. Components longer than 130-feet or weighing more than 80 tons require coordination through the Department's Permit Office during the design phase of the project. Maximum component height, including projecting reinforcing, should be 9-feet or less for shipping on roadways. Some components (e.g. noise wall panels) with heights up to 12-feet may be shipped on an incline or on lowbed trailers.

D. Shorter and/or lighter components may be required if access to the bridge site is limited by roadway(s) with sharp horizontal curvature or weight restrictions. Strategies for reducing substructure component weights include using U-shaped precast pier caps and H-shaped or hollow box pier columns. Flowable or self-consolidating concrete with embedded polystyrene blocks or hollow void formers may be utilized to lighten precast elements. Address quality control aspects of securing

void formers during concreting to ensure concrete cover is maintained. Quality control of size, placement, and shape of the blocks is critical to ensure element weights and section properties are accurate. Detail void former shape to minimize potential for trapped air and honeycombing and provide vents as required. Provide drains at the low point of voids if embedded polystyrene blocks are not utilized. For vertical elements with embedded polystyrene blocks, investigate pour limits based on hydrostatic pressures.

E. When permitted, lightweight concrete may be used to reduce component weight.

F. Consider designing optional splices for large element sizes where practical.

Size components on a given project to be similar in weight to optimize shipping and crane usage. Some components of large elements may be impractical to precast due to size and weight.

25.4.2 Handling

PBES components shall accommodate temporary load conditions during production, transportation and erection.

A. For PBES components placed by cranes from barges, barge listing may limit component size depending on the weights and boom reaches involved. As a rule of thumb, limit heavy component weights in the range of 60 to 80 tons, depending on crane reach.

B. Component handling during construction may introduce stresses in components that must be mitigated in the design. The designer is responsible for checking handling stresses in components for lifting locations shown in the plans. Consider the following general criteria for pick point design:

1. Use two-point picks for columns and pier caps.
2. Use two-point picks for wall panels which are cast vertically or panels which are cast on tilt beds.
3. Specify maximum sling angle or use spreader beam.

Commentary: For small sling angles, significant moments may result due to P-delta effects. For more information see "Rigging Configurations" in the ***PCI Design Handbook: Precast and Prestressed Concrete****, Sixth Edition, MNL-120-04, Precast/Prestressed Concrete Institute, Chicago, IL, 2004.*

4. For components requiring more than two-point picks located in a flat plane, design for a maximum deviation from the plane. For example, all pick points in a 3D space shall remain coplanar ±¼-inch.
5. Provide criteria in the contract documents that require rigging to be designed and submitted as shop drawings by a Specialty Engineer. All various picks from stripping in the precast yard to placement at the bridge site shall be addressed.

Commentary: Handling stresses and forces are influenced by the type of rigging used. Temporary stresses shall be held below design limits by designing the rigging to utilize a combination of tilt tables, rolling blocks, stiff spreader beams, etc.

6. Use a dynamic load allowance of 25%.
7. Use form stripping load multipliers of 1.5 and 1.7 for exposed aggregate and smooth surface forms, respectively.

Commentary: To account for the forces on the member caused by form suction and impact, it is common practice to apply a multiplier to the member weight and treat the resulting force as an equivalent static service load.

8. Do not show lifting hardware in contract documents. The designer is required to verify at least one lifting hardware manufacturer can provide a device that can resist anticipated loads.
9. Lifting devices will be removable below the top surface of the component after placement. Fill divots and voids with non-shrink grout after placement. Specify lifting hardware to be left in place must meet cover requirements at all external surfaces.

25.4.3 PBES Component Examples

The following conceptual details are based on designs previously used in the State of

Florida. Although PBES components vary significantly from one project to the next, the Designer should evaluate the effectiveness of these details for use on any specific project.

25.4.3.1 Precast Pier

A. Require Shop Drawings and an Erection Plan in the contract documents. See ***SDM*** 25.5 for items to be included.

B. Require one full-scale mock-up of each unique grouted connection prior to fabrication of components. Mock-up fabrication and acceptance standards shall be identified in the contract documents.

C. Require component-to-component fit-up in the casting yard of all components prior to shipping. In lieu of a component-to-component fit-up, the contractor may demonstrate interfacing precast components do not conflict through the use of a transfer template.

D. All C.I.P.-to-precast connection interfaces require transfer templates.

Commentary: The transfer template is a three dimensional frame or jig that provides orientation of bar placement and other interfacing hardware within a C.I.P. component to ensure fit-up with the precast element. On precast multi-column piers, the template provides orientation of bar placement in the C.I.P. footing and orientation of columns relative to each other. A closure pour in the cap of a multi-column pier allows a simpler template to be used for bar placement in the C.I.P. section. Therefore, an optional closure pour allows C.I.P. footings to be cast prior to precasting the pier cap.

E. Grouted joints accommodate fabrication and construction tolerances. A grouted joint is required at cap-to-column and column-to-footing interfaces. Precast column components may be connected using match-cast two-faced epoxy joints.

F. See Figure 25.4.3.1-1 and Figure 25.4.3.1-2 for an example of a precast pier fit-up.

Figure 25.4.3.1-1 Precast Pier Assembly

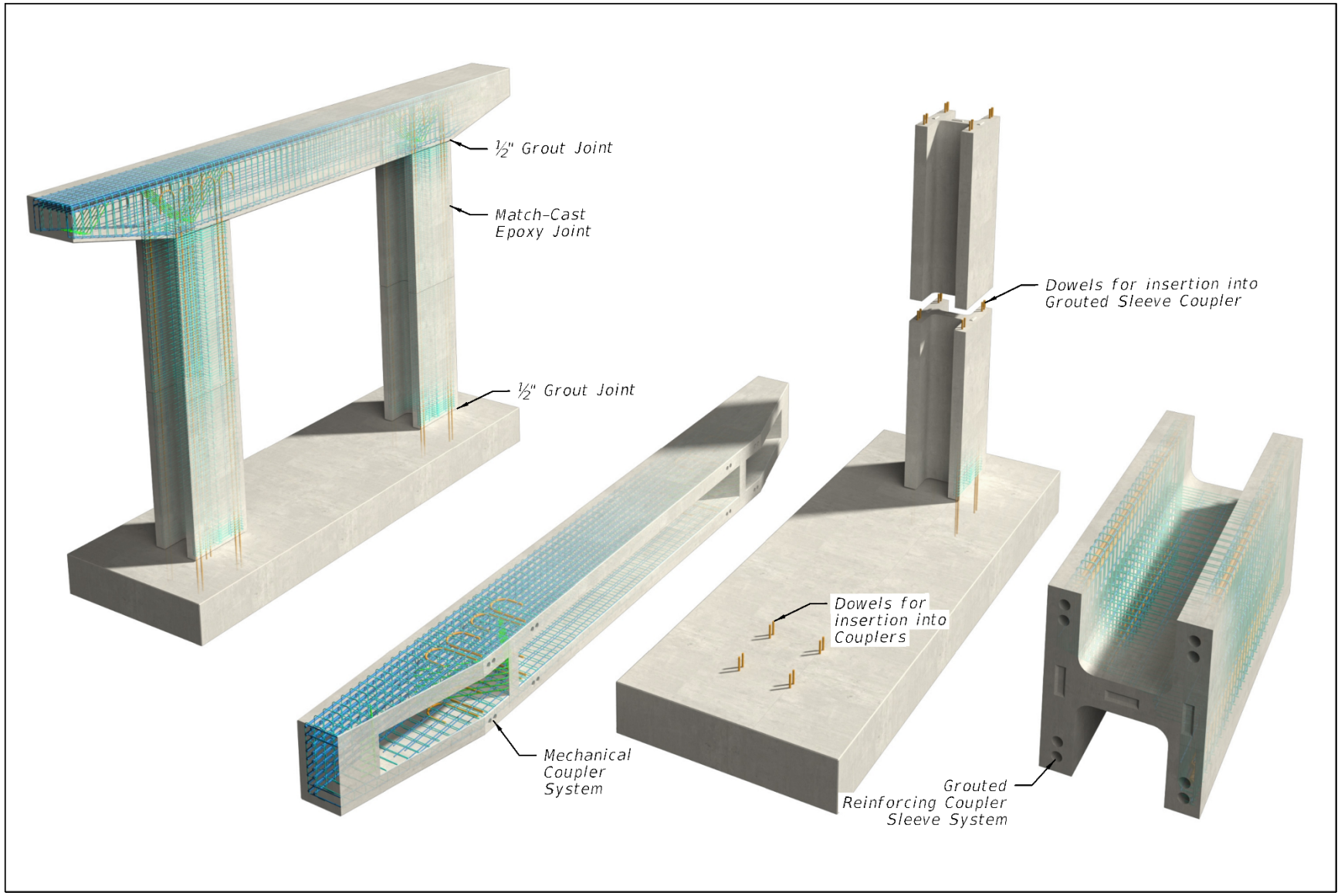

Figure 25.4.3.1-2 Precast Pier

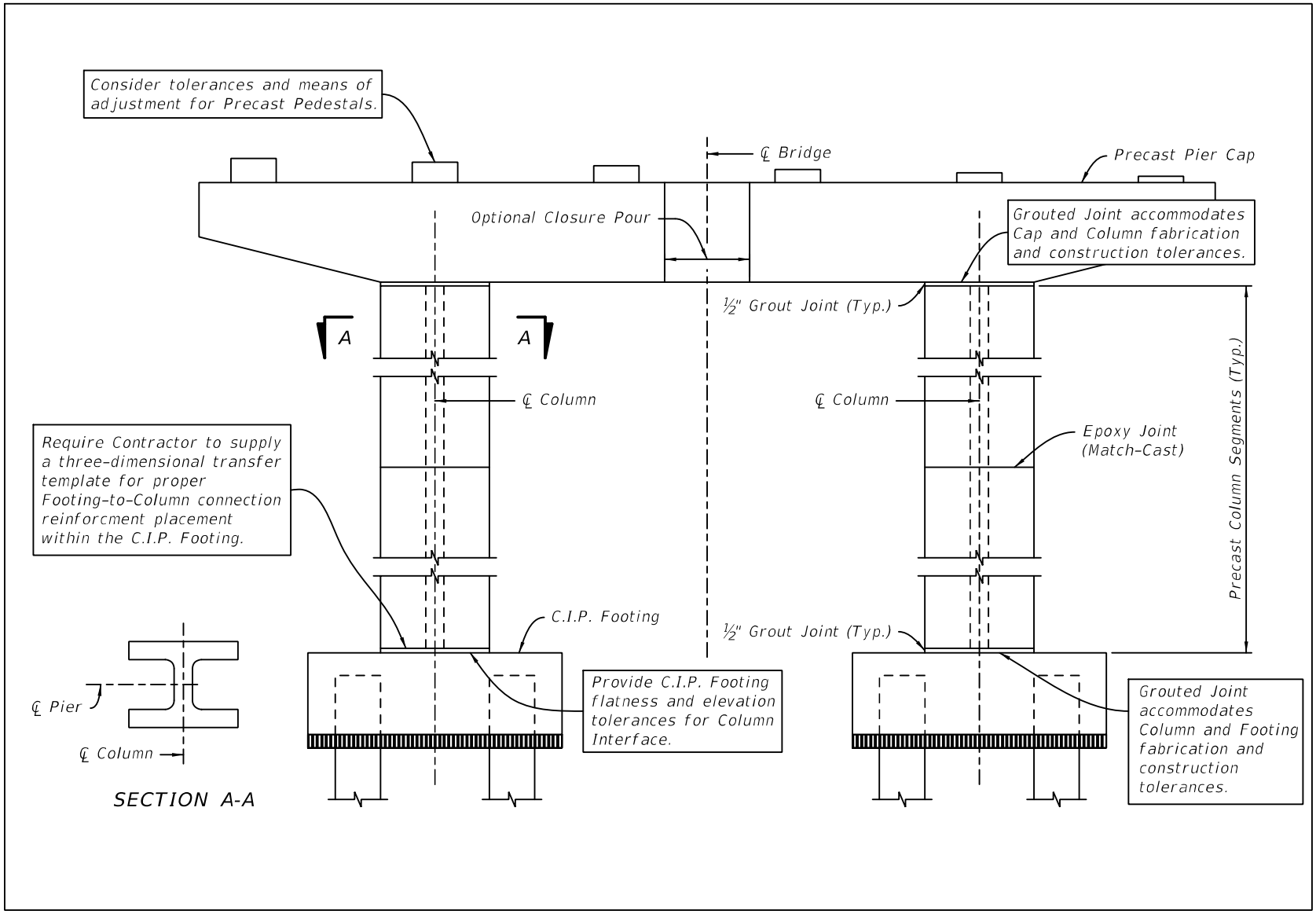

25.4.3.2 Precast Column

A. Lifting weights often control the size of components. It is general practice to design components to have similar weight to be consistent with crane and erection equipment requirements. Geometric configurations, such as H-sections for columns, reduce lifting weights of components. See Figure 25.4.3.2-1 for column details, Figure 25.4.3.2-2 for fabrication technique, and Figure 25.4.3.2-3 for foundation preparation.

B. Mechanical couplers provide connections between components. It is typically acceptable to oversize couplers two bar sizes to accommodate bar location tolerances. Couplers must meet cover requirements. See Figure 25.4.3.2-4 for example of coupler at match-cast section.

C. For piers subject to vessel impact, check shear friction capacity at all column sections and reduce ship impact distribution to the superstructure accordingly.

Figure 25.4.3.2-1 Precast Column Details

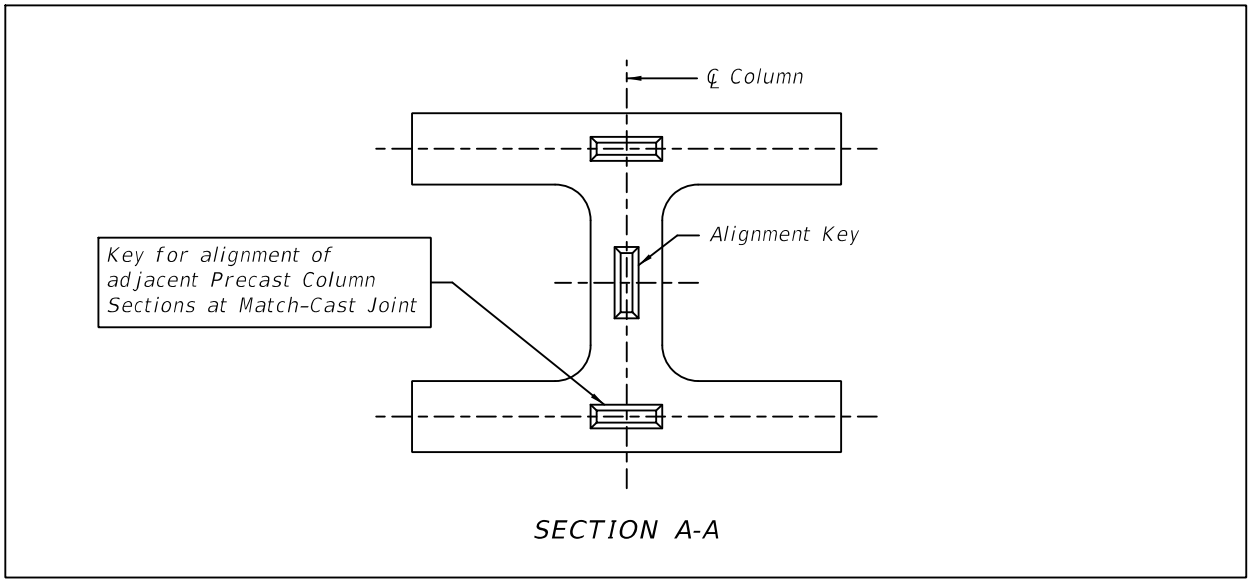

Figure 25.4.3.2-2 Fabrication of H-Section Pier Column



Figure 25.4.3.2-3 C.I.P. Foundation and Precast H-Section Pier Column



Figure 25.4.3.2-4 Mechanical Coupler at Match-Cast Joint

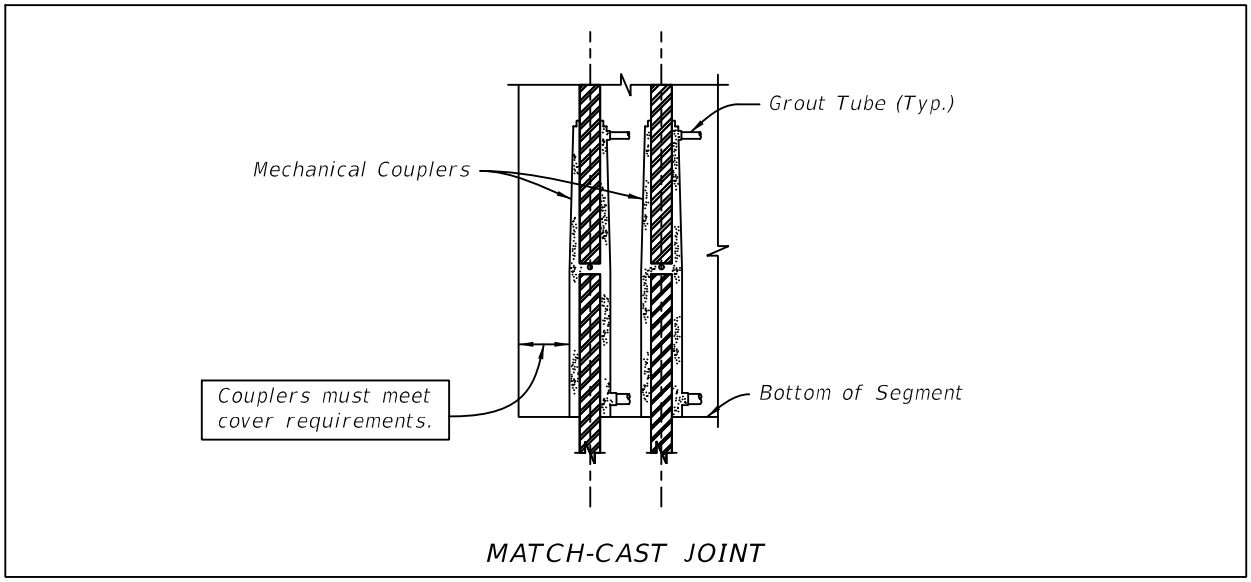

25.4.3.3 Precast Pier Cap

A. Require Shop Drawings and an Erection Plan in the contract documents. See ***SDM*** 25.5 for items to be included.

B. Size cap elements for construction equipment and boom reach using site specific construction access assessment (see Figure 25.4.3.3-1). For over-land projects, include haul route assessment in the component sizing effort.

C. Lifting weights often control the size of components. It is general practice to design components to have similar weight to be consistent with crane and erection equipment requirements. Geometric configurations, such as U-shape and T-shape sections for caps, reduce lifting weights of components and can provide an aesthetic distinctiveness to a project.

D. Thin layers of grout beds usually require tooling. Skilled workers are needed to place and tool grout properly. See Figure 25.4.3.3-2.

E. Specify non-metallic shims to be left in place. Specify maximum shim heights consistent with construction tolerances. Specify that a Specialty Engineer needs to provide shim placement and loads as part of the Erection Plan requirements.

Figure 25.4.3.3-1 Precast Pier Cap Installation



F. Specify non-shrink grout from the Approved Product List (APL). Require saturated surface dry (SSD) condition and exposed aggregate finish on interfacing surfaces. Require curing to be in accordance with manufacturer's recommendations.

G. Require one full scale mock-up of each connection types prior to installation. Mock-up fabrication and acceptance standards shall be identified in the contract documents.

H. Require transfer templates for all C.I.P.-to-precast connection interfaces.

I. A three dimensional transfer template taken from a precast pier cap provides orientation of bar placement in the C.I.P. footings and orientation of columns relative to each other in multi-column piers. A closure pour in a cap allows use of a simpler template for bar placement in the C.I.P. footings. Therefore, a closure pour allows C.I.P. footings to be cast prior to precasting the pier cap.

J. When permitted, lightweight concrete may be used to reduce component weights.

Figure 25.4.3.3-2 Precast Pier Cap Details

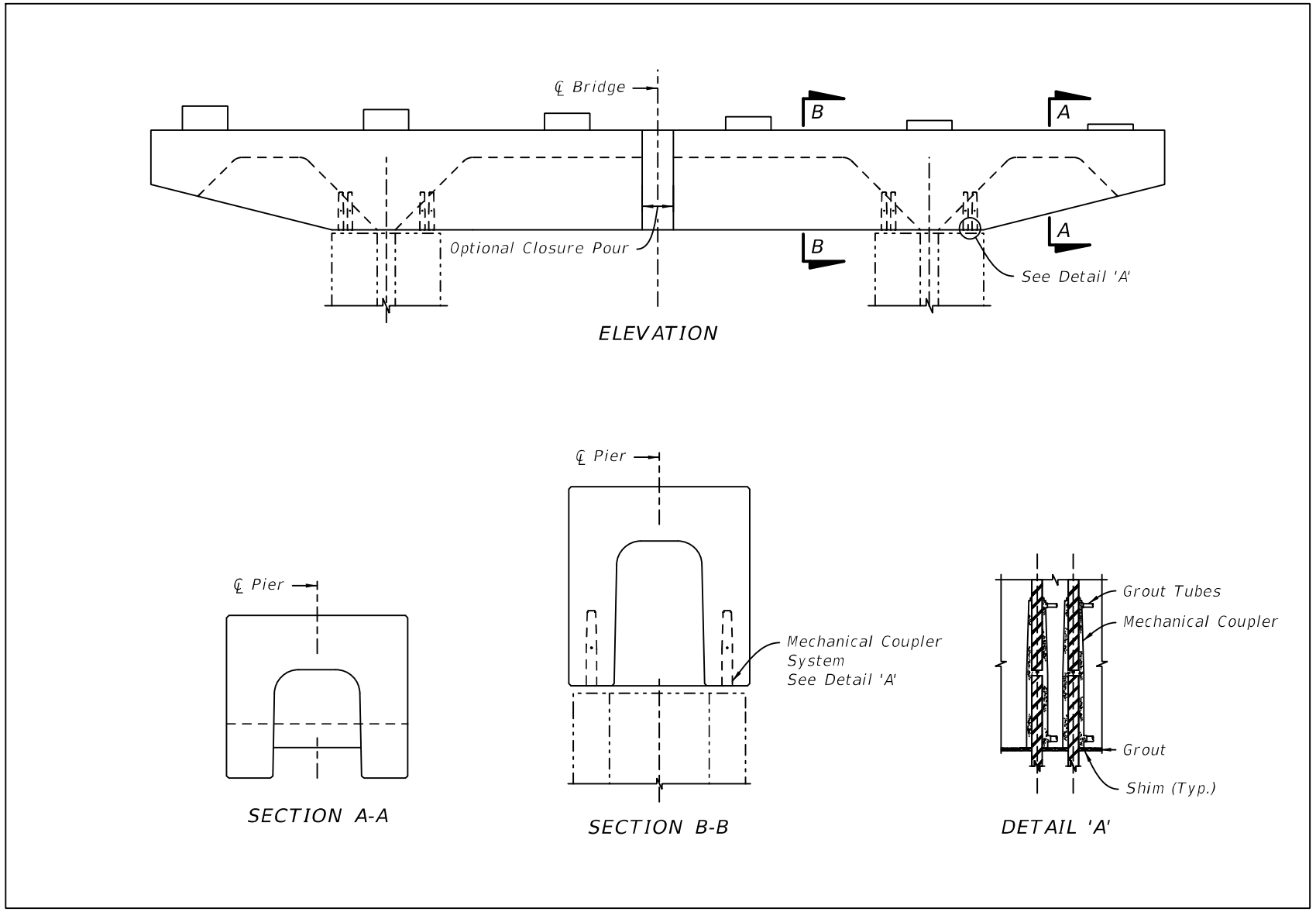

Figure 25.4.3.3-3 Precast Pier Details

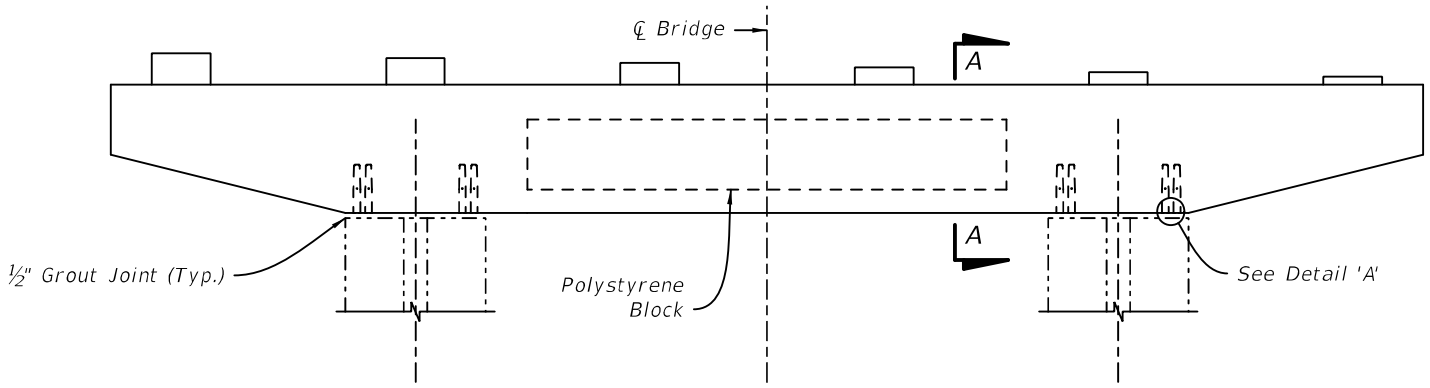

ELEVATION

Use Void Former (e.g. Polystyrene Block) to reduce the weight of the Cap. Utilize flowing concrete with Void Formers. Specify size, placement and securing requirements for Void Formers during concrete placement. Detail Void Former shape and require flowable or self-consolidating concrete to minimize potential for trapped air and honeycombing. Provide drains for voids unless polystyrene Void Formers are used.

Require component-to-component fit-up in the casting yard prior to shipping to the project site. In lieu of a component-to-component fit-up, the Contractor may demonstrate that all interfacing elements do not conflict through the use of a transfer template.

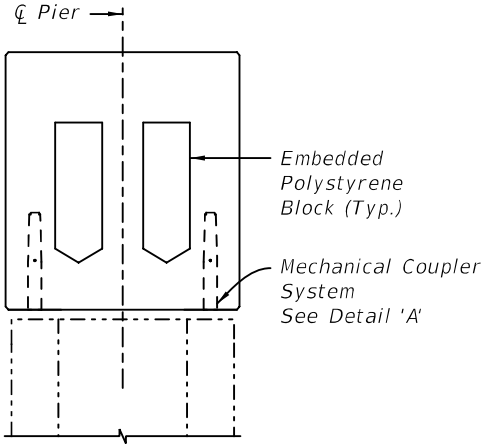

SECTION A-A

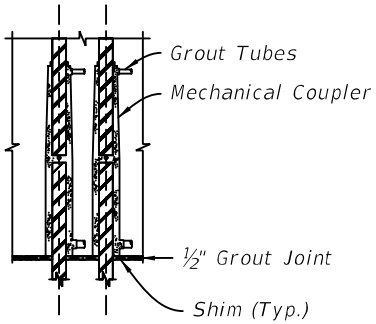

DETAIL 'A'

25.4.3.4 Precast Connection to Drilled Shaft

A. Provide flatness and elevation tolerances in contract documents for top of drilled shafts.

Commentary: A Modified Special Provision is required for tighter top of shaft elevation tolerances and shaft reinforcement placement tolerances than what is required in the Specifications.

B. Place column inner cage within drilled shaft cage at the plan location ±½-inch.

Commentary: The ±½-inch. tolerance assumes spliced sleeves are oversized two bar diameters.

C. Include consideration of column reinforcement allowing for ±3-inch shaft placement tolerance when sizing drilled shaft diameter.

D. Require transfer templates for all C.I.P.-to-precast connection interfaces.

Figure 25.4.3.4-1 Drilled Shaft Detail

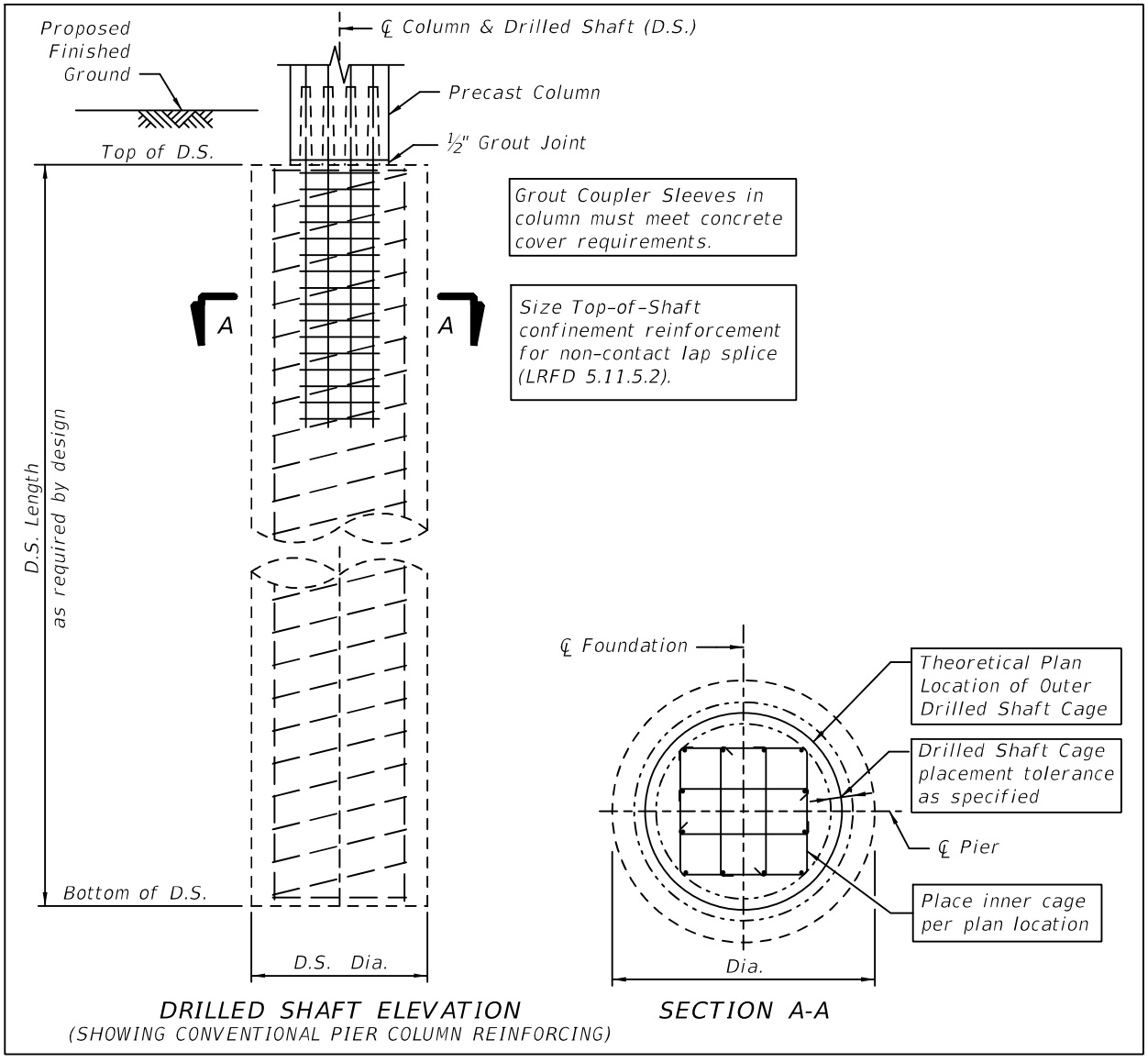

Figure 25.4.3.4-2 Shaft-Column Connection

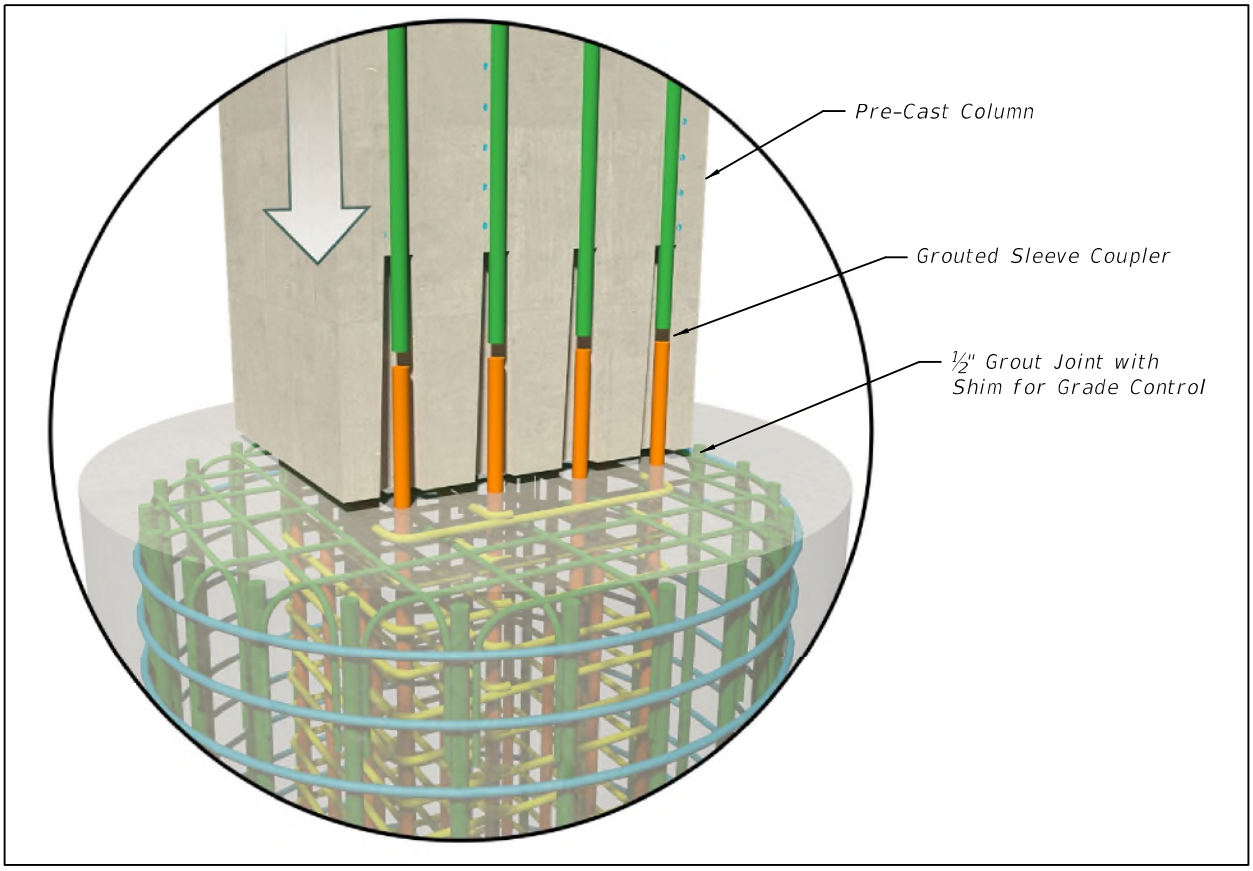

25.4.3.5 Hammerhead Pier Construction

One of the biggest challenges for bridge construction is managing traffic through a construction zone. Figure 25.4.3.5-1 highlights the challenge of phasing traffic with construction of a hammerhead pier in the median of an existing roadway. Two options using non-standard prefabricated elements to construct the pier wings segmentally are (1) using a 2-foot closure pour and (2) using a hybrid pseudo match-cast process. Both methods are accomplished by using post-tensioning steel embedded in the cast-in-place column cap and precast wings.

Using a 2-foot closure pour process, temporary post-tensioning bars are partially stressed across blocking prior to casting a 2-foot closure pour between the C.I.P. pier column and a precast wing segment. After the closure pour is completed, precast wings that were match-cast are installed and permanent post-tensioning tendons or bars are stressed to finish the process. See Figure 25.4.3.5-2.

The hybrid pseudo match-cast process utilizes steel bulkheads for casting pseudo match-cast surfaces on the C.I.P. pier column and precast wings. See Figure 25.4.3.5-3.

A. Incorporate a transfer template into the C.I.P. pier head form for proper reinforcement connection placement.

B. Temporary framing (strong-back or similar) provides alignment of pier wings during placement and minimizes damage to reinforcing bar extensions. C. Utilize two-face epoxy at pseudo match-cast joint interfaces.

D. Oversize reinforcement couplers two bar sizes to allow ± ½-inch construction tolerance.

E. Size precast pier wings for construction equipment and boom reach using site specific construction access assessment.

F. Coordinate work operations with temporary traffic control plans.

G. Incorporate segmental specifications for hybrid C.I.P./precast construction. Modify for pseudo match-cast process.

Figure 25.4.3.5-1 Hammerhead Pier Traffic Phasing Concept

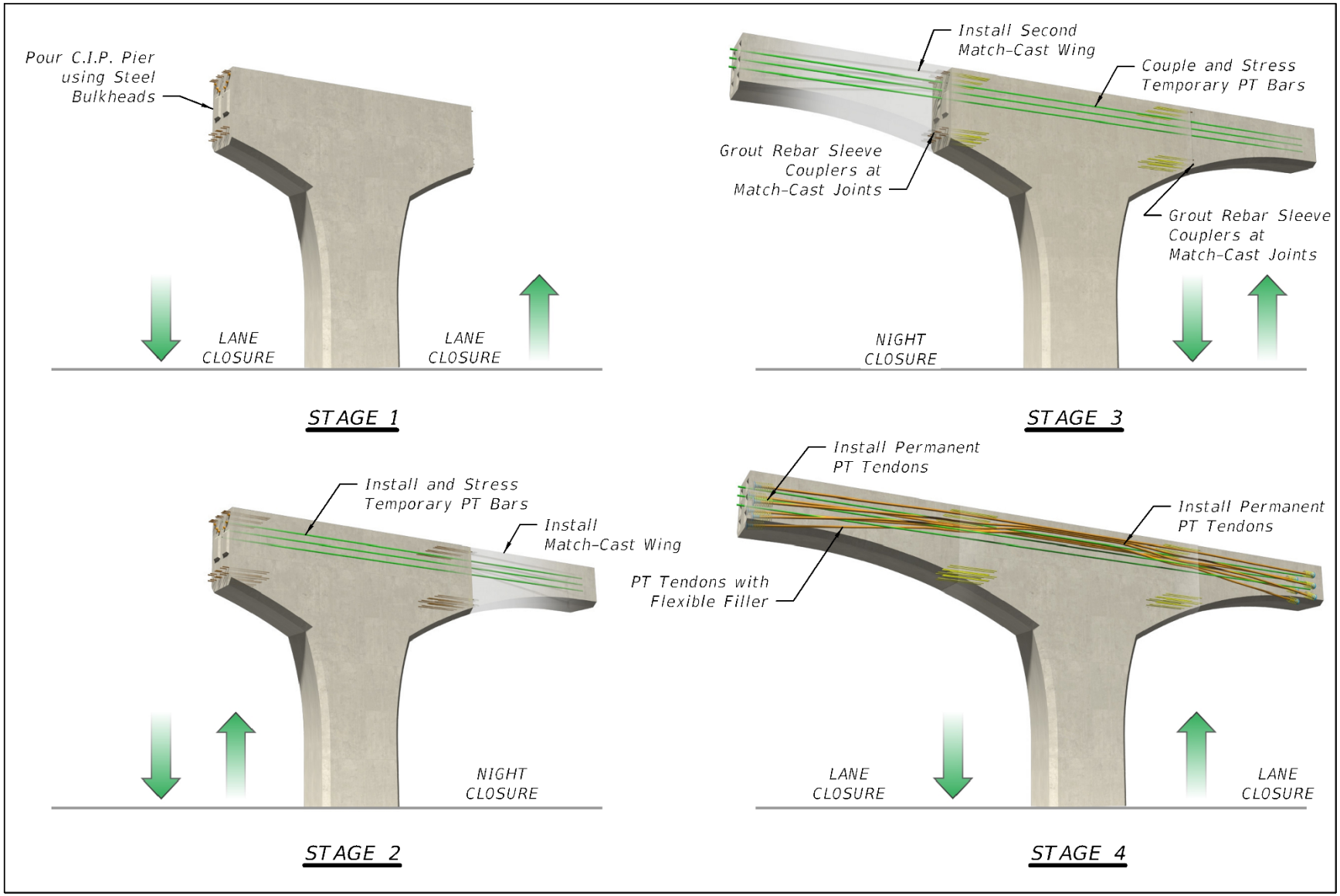

Figure 25.4.3.5-2 Hammerhead Wing Closure Pour

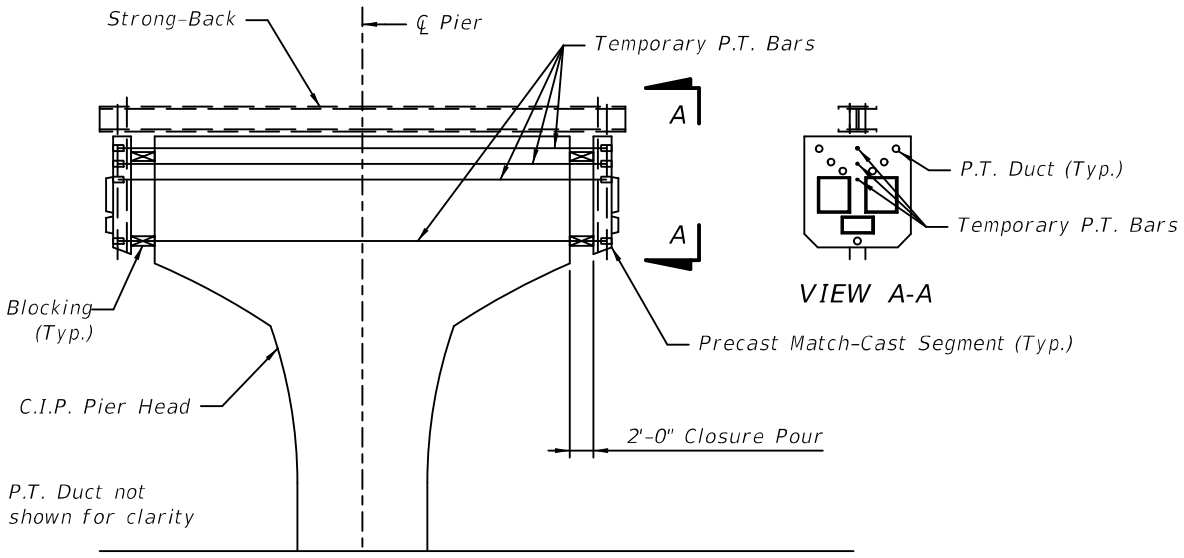

CLOSURE POUR

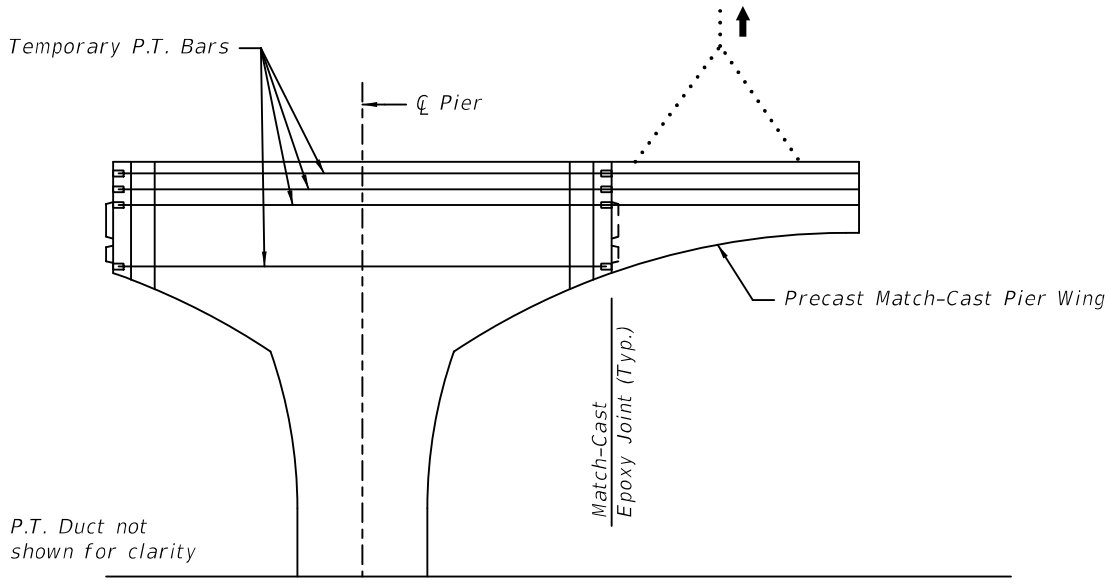

PRECAST CAP WING INSTALLATION

Figure 25.4.3.5-3 Hammerhead Pseudo Match-Cast Epoxy Joint

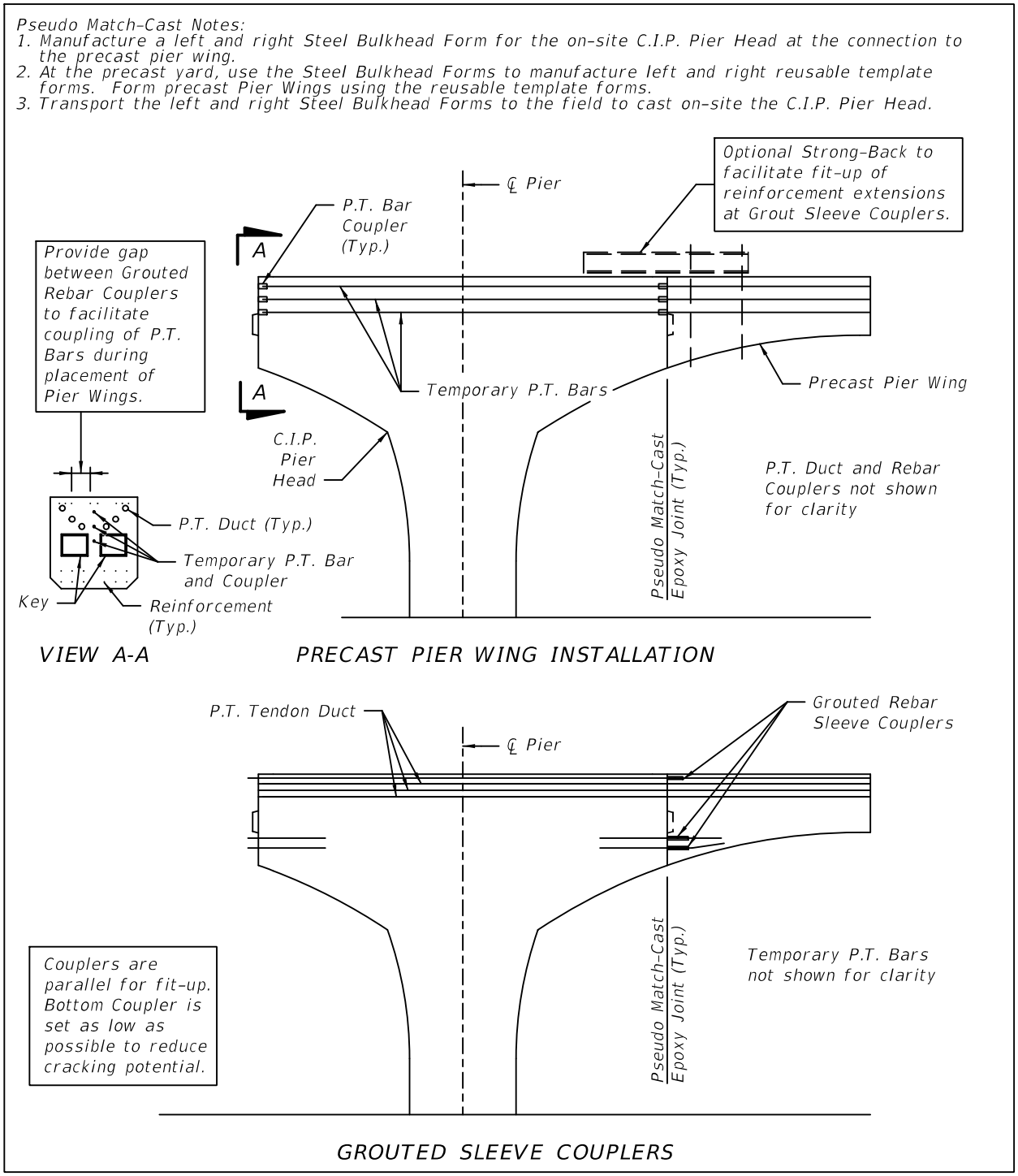

25.4.3.6 Precast Footing

Size foundation components for construction equipment and boom reach using site specific access assessment. Element sizing includes haul route assessment for overland projects. See Figure 25.4.3.6-1, Figure 25.4.3.6-2 and Figure 25.4.3.6-3.

Figure 25.4.3.6-1 Precast Footing

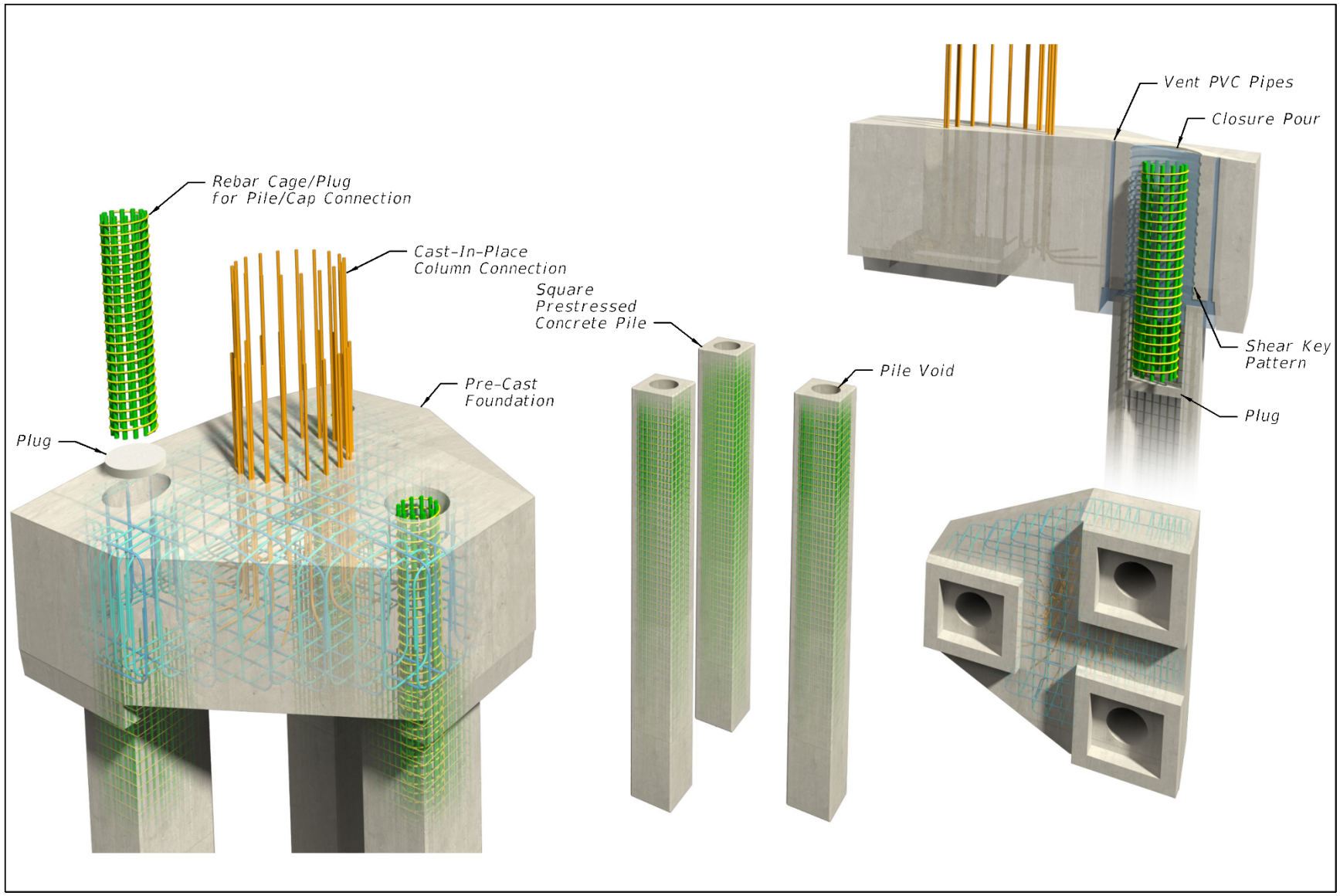

Figure 25.4.3.6-2 Precast Footing Delivery



Figure 25.4.3.6-3 Precast Footing Installation



25.4.3.7 Precast Footing Details

The following notes refer to Figure 25.4.3.7-1.

A. Use non-metallic shims that are left in place. Provide shim loads and maximum shim height in the contract documents. Specify a Specialty Engineer to provide shim placement as part of the Erection Plan requirements.

Commentary: Due to difficulties with concrete consolidation, friction collars are recommended in lieu of non-metallic shims that are left in place when the bearing area is small.

B. Form a shear key with removable corrugated pipe for transfer of shear without need for reinforcement through the plug-cap interface. Size ribs for interface shear transfer. Minimize shrinkage cracks by specifying a compressible form such as a hard pocket former with a rubber liner.

C. A square pile with a circular void provides a larger bearing area for the cap and shims than a square pile with a square void.

D. Oversize the circular void diameter in the cap to accommodate the construction tolerance for pile placement.

E. Specify shrinkage reducing admixture and a seven day moist cure of plug concrete.

F. Provide details to minimize potential for trapped air and honeycombing. Vent pipes and inclined surfaces are common techniques.

G. Prepare all surfaces for in-fill concrete:

Sand or water blast all interfacing surfaces to expose the aggregate. After sealing void with first-phase grouting, fill void with water for 4 to 5 hours. Remove water to a saturated surface dry (SSD) condition prior to making the concrete pour.

Commentary: Due to access limitations and tack-free time limits, an epoxy bonding agent is not suitable for this application.

H. Specify a minimum gap between the top of pile and cap surface to ensure in-fill concrete fills voids

Figure 25.4.3.7-1 Precast Footing Details

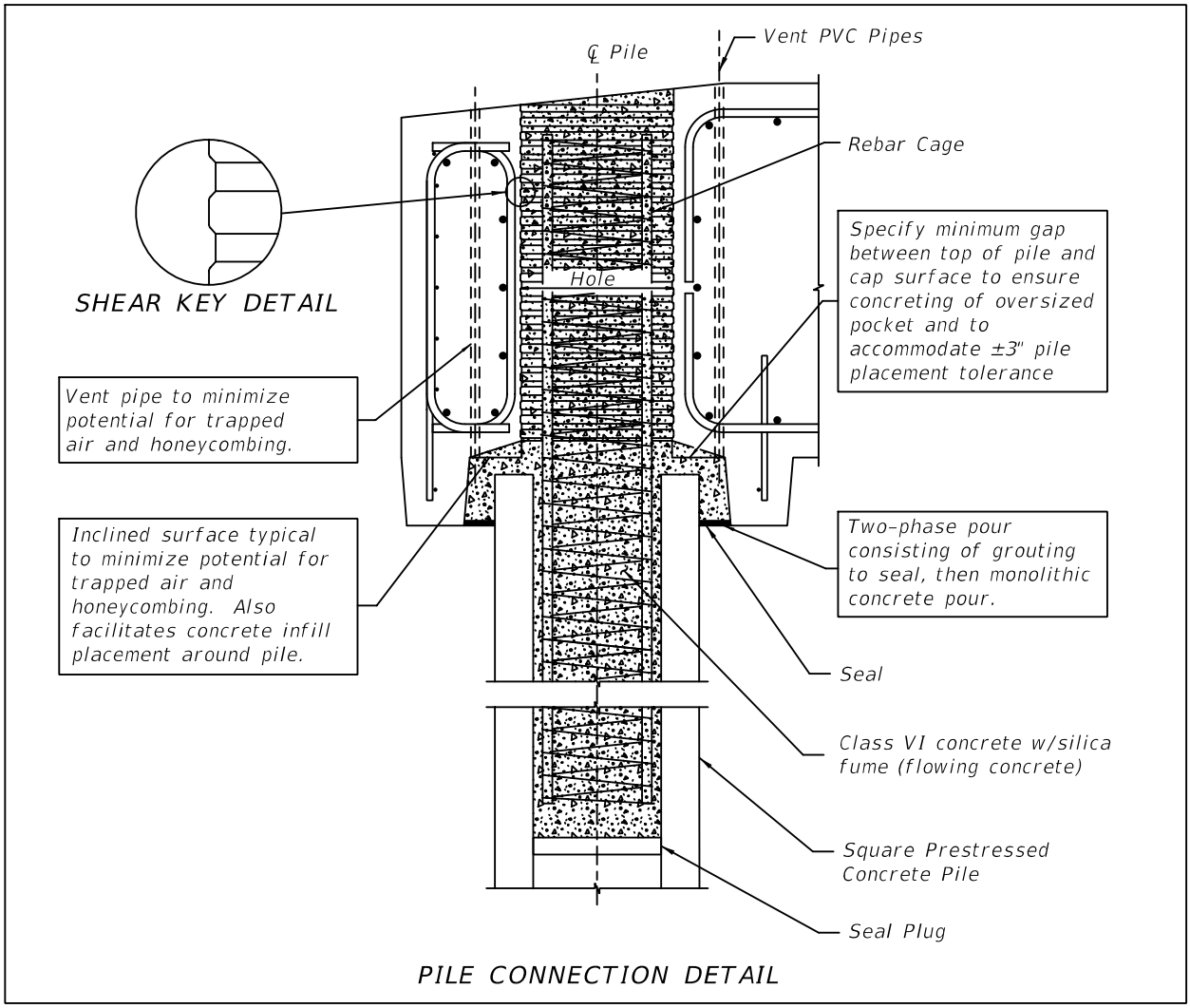

25.4.3.8 Precast Pile Cap

The following notes refer to Figure 25.4.3.8-1.

A. Require Shop Drawings and an Erection Plan in the contract documents. See ***SDM*** 25.5 for items to be included.

B. Require one full-scale mock-up of a single pile-to-cap connection prior to fabrication of components. Mock-up fabrication and acceptance standards shall be identified in the contract documents.

C. Aligning beams over piles allows pedestals to be cast monolithically with in-fill concrete.

Commentary: Pedestals placed over the beams also provide additional protection for the cap-pile interface.

D. Size the precast cap for equipment and boom reach using a site specific construction access assessment. For over-land projects, include a haul route assessment when sizing the cap.

E. A two-phase process for filling the pocket void includes placement of a grout bed using an APL approved non-shrink grout to seal the cap-pile interface followed by a monolithic concrete pour.

Commentary: To create the bearing surface for the precast cap, a bed of non-shrink grout is placed on the top of the piles. The precast cap is lowered onto the piles and set on a friction collar at the desired elevation, displacing excess grout. The joint is then tooled.

F. Specify in-fill concrete to include shrinkage reducing admixture and provide a seven day moist cure.

G. Prepare all surfaces for in-fill concrete.

Sand or water blast all interfacing surfaces to expose the aggregate. After sealing void with first-phase grouting, fill void with water for 4 to 5 hours. Remove water to a saturated surface dry (SSD) condition prior to making the concrete pour.

Commentary: Due to access limitations and tack-free time limits, an epoxy bonding agent is not suitable for this application.

H. Require friction collars on piles to support cap prior to grouting. Do not use shims to support cap due to the small bearing area they provide and because they tend to block the flow of grout resulting in an insufficiently grouted interface.

Figure 25.4.3.8-1 Pile Cap Details

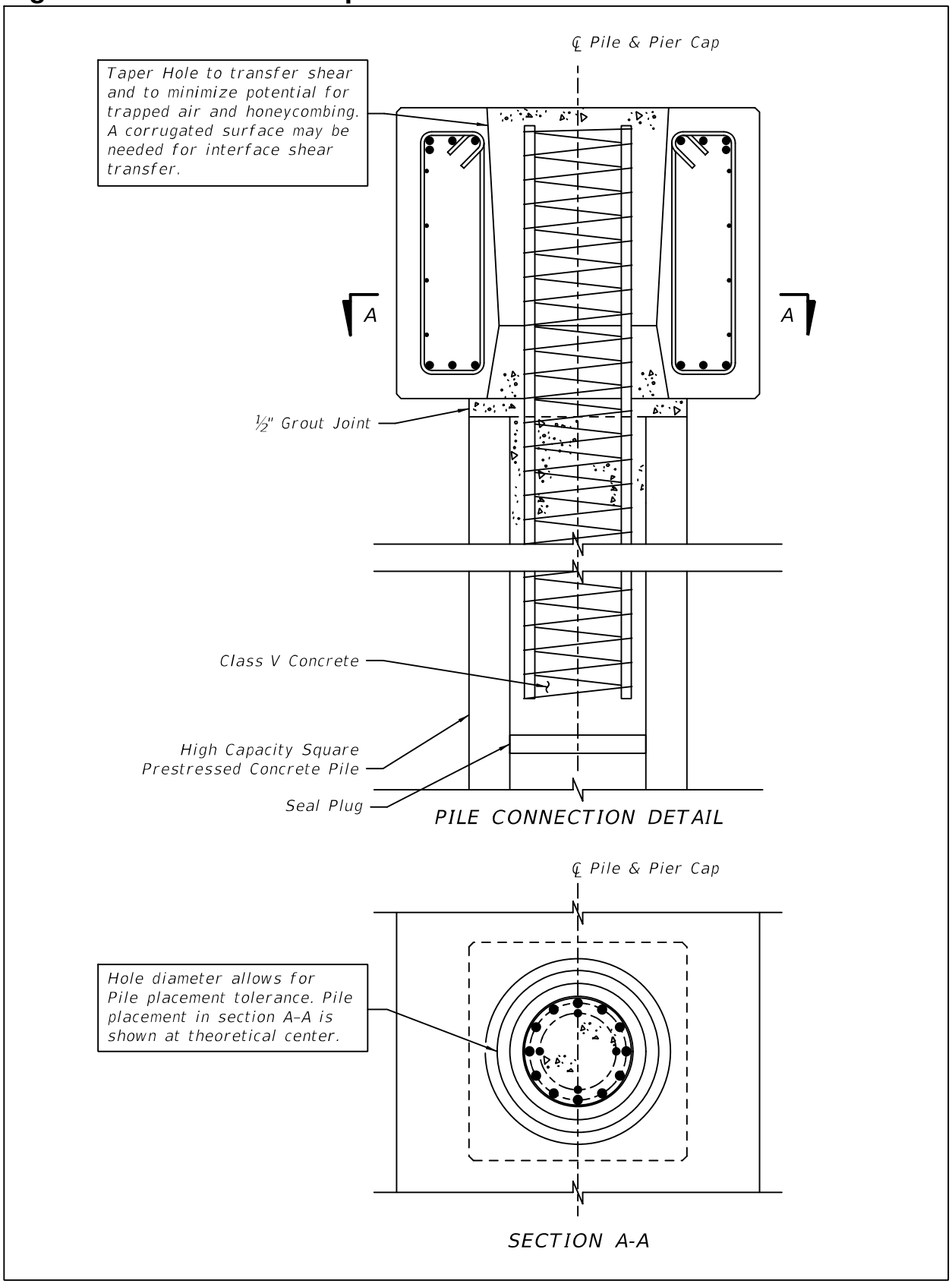

Figure 25.4.3.8-2 Pile Cap Erection Process

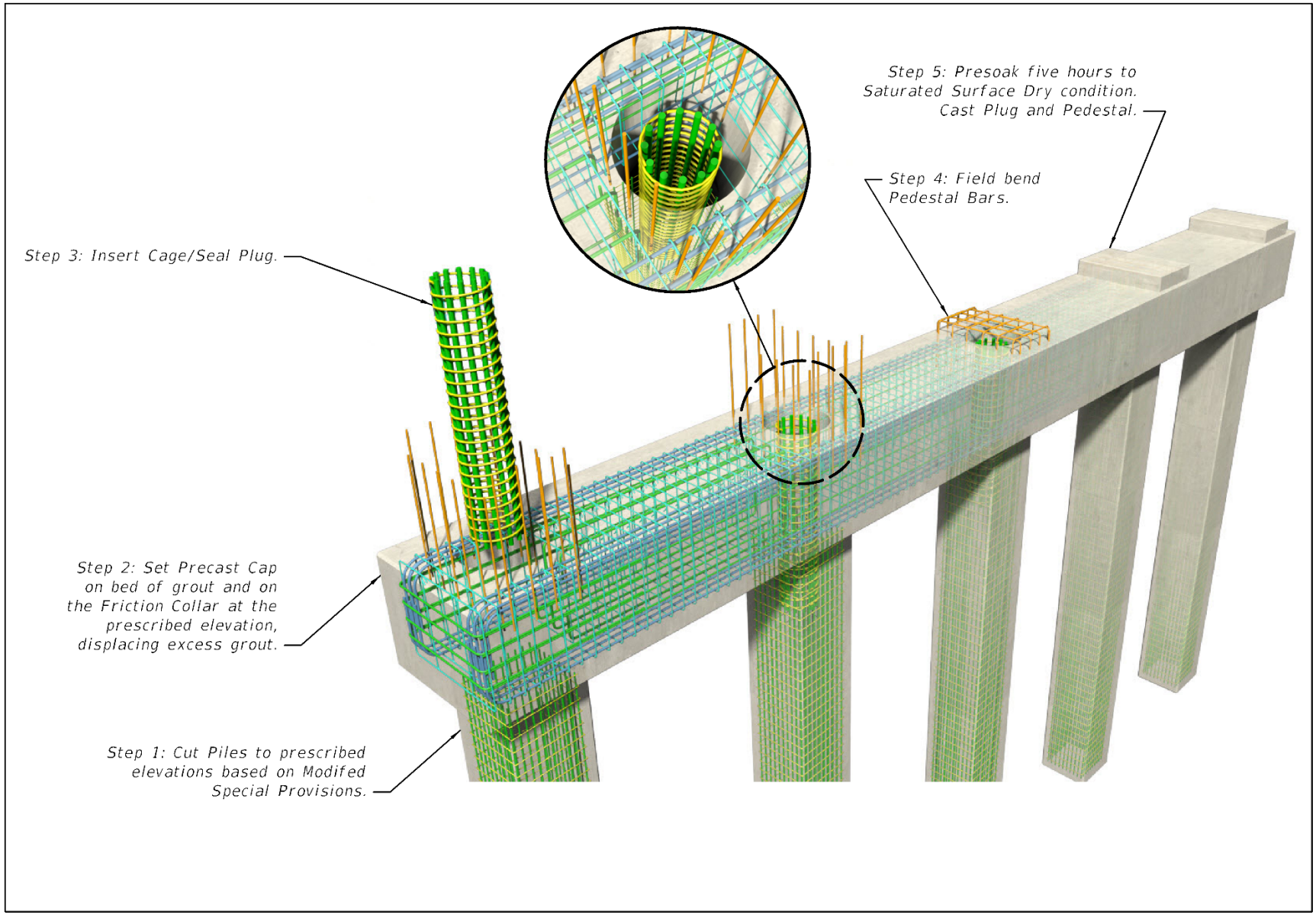

25.4.3.9 Bent Cap

A. Require Shop Drawings and an Erection Plan in the contract documents. See ***SDM*** 25.5 for items to be included.

B. Require one full-scale mock-up of a single pile-to-cap connection prior to fabrication of components. Mock-up fabrication and acceptance standards shall be identified in the contract documents.

C. Size the precast cap for equipment and boom reach using a site specific construction access assessment. For over-land projects, include a haul route assessment when sizing the cap.

D. The shear key can be formed with a removable corrugated pipe. Size ribs for interface shear transfer without the need for reinforcement through interface. Use a hard pocket former with a compressible liner to mitigate shrinkage cracks.

E. Require friction collars on piles to support cap prior to grouting. Do not use shims to support cap due to the small bearing area they provide and because they tend to block the flow of grout resulting in an insufficiently grouted interface.

F. Prepare all surfaces for in-fill concrete.

   Sand or water blast all interfacing surfaces to expose the aggregate. After sealing void with first-phase grouting, fill void with water for 4 to 5 hours. Remove water to a saturated surface dry (SSD) condition prior to making the concrete pour.

Figure 25.4.3.9-1 Bent Cap Details

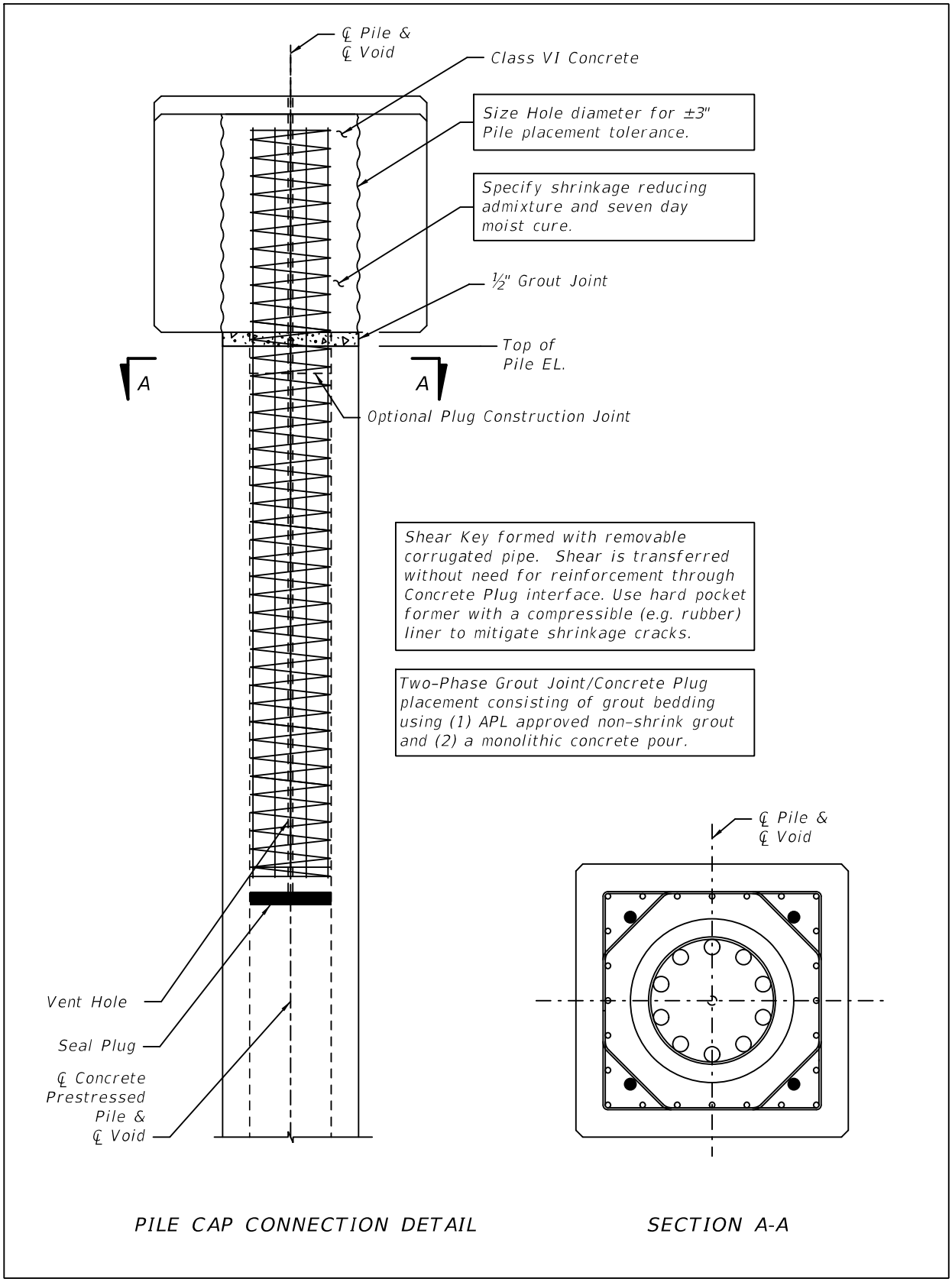

25.4.3.10 Slab Beam

A. Require Shop Drawings and an Erection Plan in the contract documents. See ***SDM*** 25.5 for items to be included.

B. At beam supports, inset bearings from the backwall and include the end pour with a C.I.P. composite topping to facilitate expansion joint fit-up.

C. Provide flexibility in bearing design for beam placement to better accommodate shrinkage of C.I.P. topping.

Figure 25.4.3.10-1 Precast Slab Beam (1 of 2)

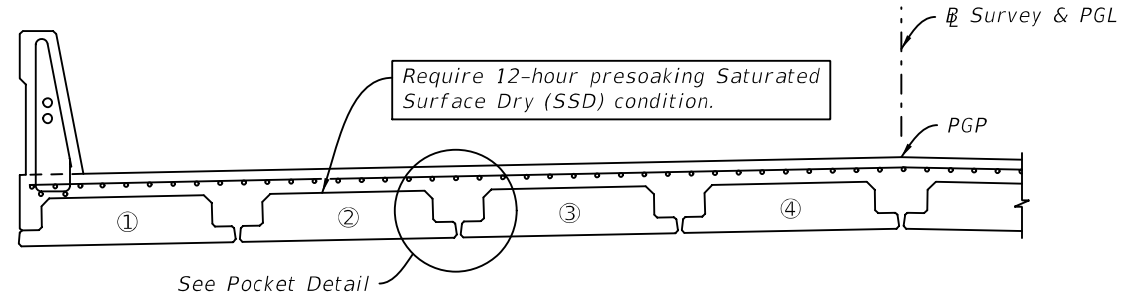

PARTIAL SUPERSTRUCTURE SECTION

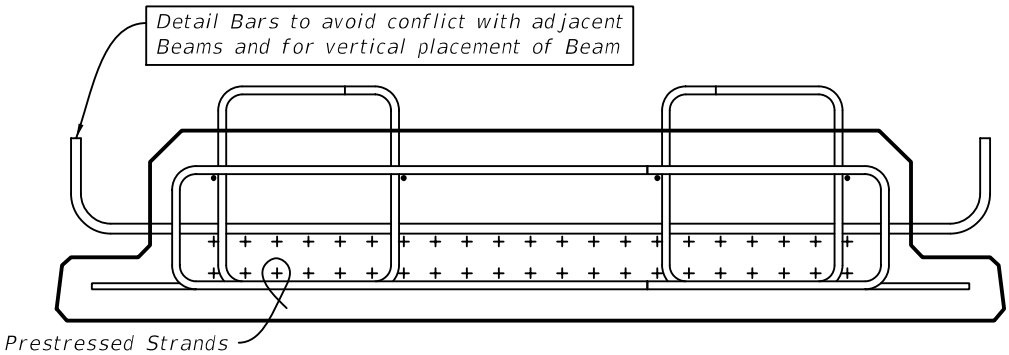

TYPICAL BEAM SECTION
(FSB SHOWN, OTHERS SIMILAR)

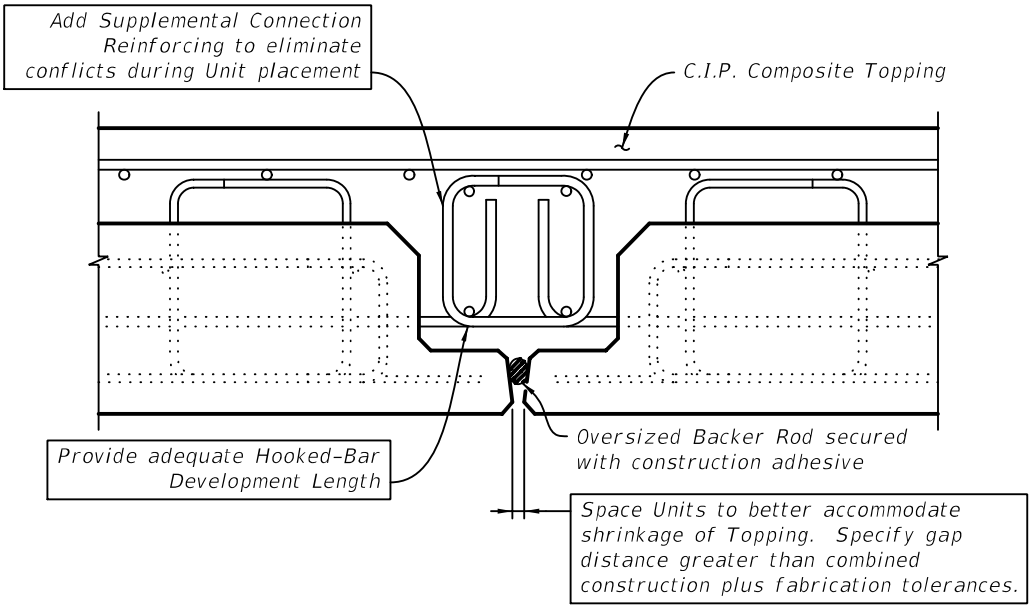

POCKET DETAIL

Figure 25.4.3.10-2 Precast Slab Beam (2 of 2)

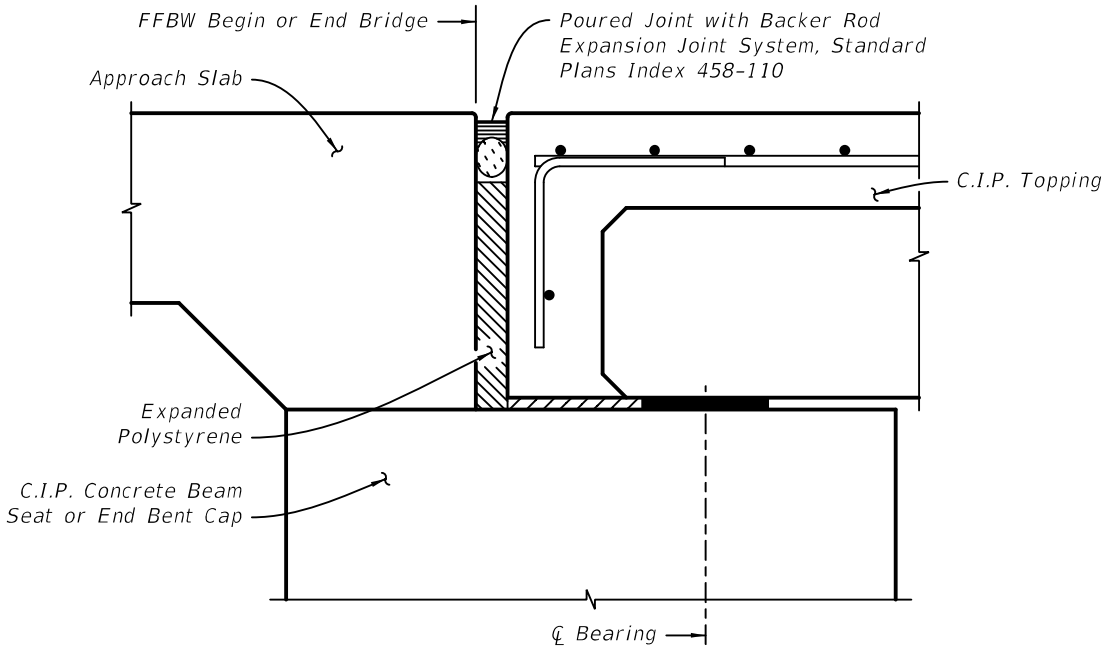

JOINT DETAIL AT BEGIN/END BRIDGE AT ℄ BEAM

25.5 PBES CONSTRUCTION SPECIFICATIONS

PBES components and connections can vary significantly from project to project depending on the PBES system utilized. Therefore, Technical Special Provisions (TSP), Modified Special Provisions (MSP) and/or Developmental Specifications are generally required. A TSP or MSP for PBES includes, but is not limited to, the following:

A. Component fabrication tolerances and construction tolerances which are consistent with joint types, joint widths, size of connection pockets, etc.

B. Shop drawing submittal requirements for the following:

1. Lifting inserts, hardware, and device locations.
2. Details of leveling inserts, or shims.
3. Requirements for curing, handling, storing, transporting, and erecting PBES components. Include surface preparation requirements.
4. Post-tensioning hardware and grouted reinforcing sleeve coupler requirements.
5. Grout or in-fill concrete material requirements.
6. Component erection marks

C. Erection Plan submittal requirements for the following:

1. A plan of the work area showing all substructure units and foundations; surface roads and railroads; all streams, creeks and rivers; and all overhead and underground utilities.
2. The erection sequence for all primary load-carrying members and all primary load-carrying member bracing. Note any and all permanent or temporary support and/or bracing locations, including crane-holding positions.

Commentary: The Engineer of Record shall check the stability of the precast components in the erected condition and calculate the bracing locations and forces based on construction wind loads and other assumed construction loads. The sequence of construction sheets should include schematic sketches of all primary bracing, bracing locations and forces in the plans indicating when bracing is to be installed and removed. The Contractor and the Specialty Engineer will work together to produce the design of the bracing system based on forces given by the Engineer of Record.

3. Details of all equipment to be used to lift precast components including cranes, excavators, lifting slings, sling hooks, jacks, etc. Include crane locations, crane pick points, crane radius of operation, lifting calculations, etc.
4. Computations to demonstrate structural adequacy of retaining walls in the vicinity of crane placement.
5. Computations to indicate the magnitude of stress in the prefabricated components during erection is within allowable limits.
6. Methods for providing temporary support of the elements. Include methods of adjusting, bracing and securing the element after placement.

Commentary: Show maximum allowable vertical displacements of the temporary supports in the plans as required for fit up, alignment, and stability, or where excessive settlements would affect stresses of the permanent structure.

When temporary supports are required, show locations and associated loads in the plans.

7. Procedures for controlling tolerance limits.
8. Methods for forming closure pours, pockets and sealing lifting holes.
9. Methods for preparing interfacing surface of PBES components prior to making connections.
10. Methods for curing grout and in-fill concrete. For proprietary products, follow manufacturer's recommended printed instructions.
11. Component erection marks indicating the component location within the final structure, orientation, and order in the erection sequence.

Commentary: Consider requiring all precast components to be stamped in the precast yard on the eastern-most end or southern-most end of each component to denote orientation in the final structure.

D. Specify in-fill or joint materials and curing requirements. For proprietary grout and concrete in-fill materials, specify curing requirements be in accordance with the manufacturer's recommendations.

E. Require surface preparation of precast component surfaces be made prior to making connections.

F. Specify the Contractor is responsible for handling and storage of components in such a manner that does not cause excessive stress in the component. Require the Contractor to submit a handling and storage plan with the Erection Plan prior to fabrication of the component. The contractor may choose alternative lifting devices and submit plan and handling stress calculations to the Designer for approval prior to fabrication of the component.

G. Include a section addressing non-complying products, repair methods and materials, and repair submittal requirements. See ***Specifications*** Sections 450-12 through 450-15 and modify as required for precast members.

H. Specify that the casting of precast segments shall not begin until the Engineer approves the relevant shop drawings, calculations, casting manuals, concrete forms, concreting operations, and post-tensioning system components and layout if different from that on the Contract Plans. Approval of any post-tensioning stressing elongations and forces for field erection operations is not required at this stage but is required prior to erection.

2027 FDOT STRUCTURES MANUAL

Volume 3: FDOT Modifications to LRFDLTS-1

1 INTRODUCTION

1.1 Scope

Add the following:
Conform to the date specific AASHTO Publications listed in ***Structures Manual Introduction*** I.6 References. For evaluation of existing support structures, including the addition of attachments, use the ***LFRD*** Specification for Structural Supports for Highway Signs, Luminaires and Traffic Signals. See ***FDOT Design Manual (FDM)*** and Section 18 of this Manual for requirements.

C 1.1

Add the following:
Structures Manual Introduction I.6 is updated annually to reflect the specific specifications editions and interims adopted by the FDOT.

2 GENERAL FEATURES OF DESIGN

2.1 Scope

Add the following:
See ***FDM*** regarding the use of FDOT ***Standard Plans*** and other design requirements.

C 2.1

Add the following:
FDM contains additional FDOT requirements for sign, signal, and lighting structures. The ***Standard Plans*** contains drawings for all typical sign, signal, and lighting structures.

2.4 Functional Requirements

2.4.2 Structural Supports for Signs and Traffic Signals

2.4.2.2 Size, Height, and Location of Signs

Add the following:

Span type overhead sign structures in urban locations shall be designed for the actual signs shown on the signing plans and a minimum sign area of 120 sq. ft. (12 ft. W x 10 ft. H) per lane. The minimum sign area applies to lanes without signs and lanes with sign sizes smaller than the minimum. A lane is considered to be without signs when 8 feet or more of the lane is not under a sign. Adjust the sign width when necessary while maintaining a minimum sign area of 120 sq. ft. (e.g., 8 ft. W x 15 ft. H). If the signing plans require signs for only one traffic direction, the minimum sign area per lane requirement applies to the traffic lanes in this direction only.

Cantilever type overhead sign structures in urban locations shall be designed either for the actual signs shown on the signing plans or for a minimum sign area of 80 sq. ft. (8 ft. W x 10 ft. H) located at the end of the cantilever, whichever provides the larger load or stress at the location under consideration.

Figures 1 and 2 show how to apply the above minimum sign areas for span type overhead sign structures in urban locations.

Overhead signs in rural locations should be designed for the actual sign shown on the signing plans.

C 2.4.2.2

Add the following:

Minimum sign areas provide additional capacity for future sign panel installations.

See ***FDM*** 102 for a link to the Urban Boundary Maps. See ***FDM*** for cantilever and span overhead sign support location criteria.

Figure 1 Example: Actual Signs

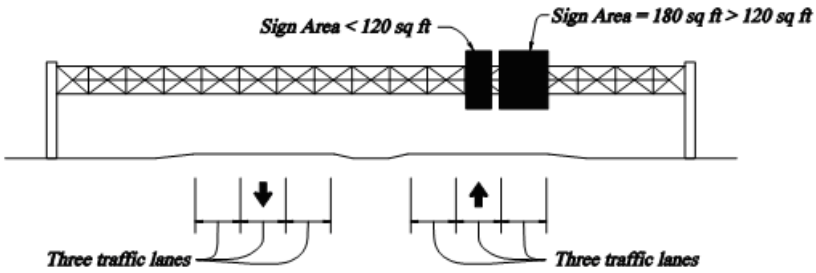

Figure 2 Example: Signs Used in Design

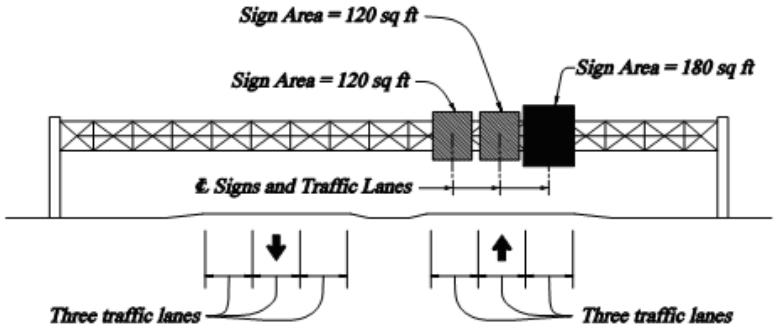

2.4.2.4 Changeable (Dynamic) Message Signs

Add the following:

For all walk-in overhead Dynamic Message Sign (DMS) structures, the horizontal member shall consist of a truss with a minimum of two chords with a minimum center-to-center distance between the chords of 3'- 0". See FDOT LTS Section 11.8 for maximum span-to-depth ratios.

FDOT vertical clearance requirements for walk-in DMS structures are found in ***FDM*** 210.

For vertical clearance and structural design of walk-in DMS support structures, use a DMS size of 8ft. H x 30ft. W x 5ft. D with a weight of 5500 lbs.

C 2.4.2.4

Add the following:

The minimum requirements given provide additional measures to limit the possibility of galloping.

Since cantilever walk-in overhead DMS structures are more susceptible to fatigue than span overhead DMS structures, span structures should be used whenever possible.

The DMS design size and weight are the maximum values of the system listed on the FDOT Approved Products List at the time of publication

2.4.2.5 Horizontal Span and Cantilever Limits

New Section, add the following:

See ***FDM*** 261.1 for sign and signal support structure limits.

2.6 Integration of Structural Supports With Roadway and Bridge Design

2.6.1 Signs

Add the following:

On Bridges, installation of all permanent signs and associated sign supports other than ***Standard Plans*** Indexes 700-012 and 700-013 must be approved by the DSDE.

For permanent signs directed towards traffic on the bridge and that are attached to bridge superstructures, limit the total sign area to 25 square feet per support.

When signs directed towards the lower roadway are approved to be attached to substructures or superstructures, limit the height of the signs and associated sign supports to between the top of the adjacent traffic/pedestrian railing and 6" above the bottom of the adjacent beam/ girder.

See ***SDG*** 1.9.D for additional requirements. See Chapter 18 for existing bridge mounted support structures and signs.

C 2.6.1

Add the following:

See ***FDM*** 215 and FDOT ***SDG*** Section 1.9 for criteria for making attachments to traffic railings.

Signs directed towards the lower roadway that are attached to bridges are not permitted to extend above a traffic railing because they are not crashworthy designs. In addition, wind forces induced on the bridge could cause unforeseen stresses, hinder future bridge widenings and create aesthetic concerns for the bridge travelers.

See ***FDM*** 210.10.3 for vertical clearance requirements.

Modification for Non-Conventional Projects:

Delete the first paragraph of ***LRFDLTS-1*** 2.6.1 and insert the following:

Installation of all permanent signs and associated sign supports other than ***Standard Plans*** Indexes 700-012 and 700-013 on bridges is not permitted unless otherwise written in the RFP.

3 LOADS

3.8 Wind Load

Delete Table 3.8.1 and replace it with the following:

Structure Support Type	Interval (years)
• Overhead sign structures • Luminaire support structures > 50' in height. • Mast Arm Signal Structures • Monotubes • High Mast Light Poles • ITS Camera Poles > 50' in height • Bridge Aesthetic Lighting Structures	700
• Luminaire supports and other structures ≤ 50' in height. • Concrete and Steel Strain Poles	300
• Roadside sign structures	10

C 3.8

FDOT continues the past practice of determining wind speeds based on structure type.
Luminaire support structures shall include all support elements including all poles, arms, connections and anchorages for all high-mast lighting, roadway lighting, sign lighting, underdeck lighting, landscape lighting, and bridge aesthetic lighting.

Based on the ASD-LTS Specifications, the design life is:
- 10 years for ground signs.
- 25 years for conventional light poles and strain poles.
- 50 years for mast arms, high mast light poles and overhead sign structures.

3.8.2 Basic Wind Speed

Delete the entire paragraph including Figures 3.8-1, 3.8-2, 3.8-3 and 3.8-4 and add the following:

For the 700-year mean recurrence interval Extreme Event Limit State, use the wind speeds (mph) shown in FDOT ***SDG*** Table 2.4.1-1

For the 300-year mean recurrence interval Extreme Event Limit State, use the wind speeds (mph) shown in FDOT ***SDG*** Table 2.4.1-1 minus 10 mph.

For the 10-year mean recurrence interval Extreme Event Limit State, use a design wind speed of 110 mph for the entire state.

For the Service Limit State, use a design wind speed of 90 mph for the entire state.

For temporary ground signs, use an Extreme Event mean recurrence interval design wind speed of 80 mph for the entire state.

For temporary luminaires and traffic signals, use an Extreme Event mean recurrence interval design wind speed of 100 mph for the entire state.

C 3.8.2

Add the following:

FDOT ***SDG*** Table 2.4.1-1 was derived from the ASCE 7-10 wind speed map.

To simplify the design process, FDOT has designated one wind speed per county for the 700 year and 300-year Extreme Event Limit States. To maintain consistency with past practice, a 110-mph design wind speed was chosen for the 10-year Extreme Event Limit State, and an 80-mph design wind speed was chosen for temporary ground sign supports. The 100 mph design wind speed was chosen for temporary lighting and temporary traffic signals since these structures are over traffic.

3.8.7 Drag Coefficient C_d

Add the following to Table 3.8.7-1:

Traffic Signals - no ability to swing		1.2
Traffic Signals - installed on 2 wire, 2 point connections	Without Backplates	0.7
	With Backplates	0.6
Solar Panels - installed with a tilt angle between 15 and 30 degrees		2.1 (positive) 1.8 (negative)

C 3.8.7

Add the following to note 2 at the bottom of Table 3.8.7-1:

On span wire systems where signals and signs are allowed to swing, varying C_d as a function of swing angle was included in the original ATLAS Program (Hoit and Cook 1997). Simplified drag coefficients for traffic signals installed with the ability to swing under controlled experimental conditions (i.e. no wind gust effects) has been suggested through research (Cook 2007). Current FDOT drag coefficients are based on parametric studies conducted in FDOT research report ***Dual Cable Supports for Wide Intersections*** (Contract C9G79, Sunna, 2015)

ATLAS is a span wire software program distributed by the University of Florida Bridge Software Institute (BSI). Do not consider uplift in the design of cable supported traffic signal systems designed using LRFD ATLAS and constructed using FDOT ***Standard Plans***. To simplify design, the drag coefficients required by the FDOT have been adjusted to account for uplift. Accordingly, ATLAS v7 no longer permits user input for uplift of cable supported traffic signal systems.

The coefficients given for solar panels are approximately the same as those given in ASCE 7-10, Figure 27.4-4 for inclined mono-sloped roofs. See simplified illustration in FDOT Figure 3.8.7-1.

FDOT Figure 3.8.7-1 Drag Coefficients for Solar Panels

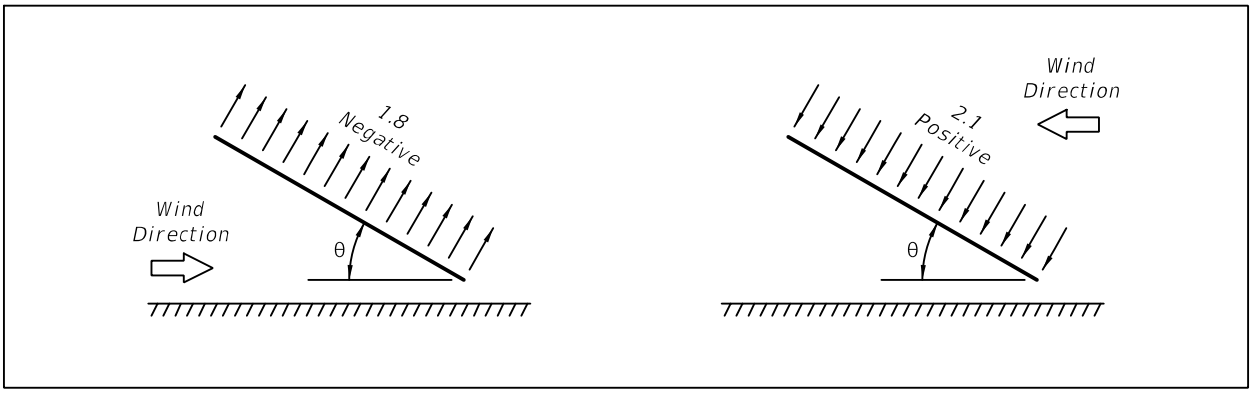

3.9 Design Wind Loads On Structures

3.9.1 Load Application

Add the following:

The area of a traffic signal on new mast arms and span wires shall include a 6-inch wide backplate, use the following areas for traffic signals:

Item	Projected Area
12" Signal Section	1.36 sf
3 Section 2.5” wide Backplate	3.05 sf
4 Section 2.5” wide Backplate	3.54 sf
5 Section 2.5” wide Backplate	4.02 sf
3 Section 6" wide Backplate	5.67 sf
4 Section 6" wide Backplate	6.83 sf
5 Section 6" wide Backplate	8.00 sf

C 3.9.1

Add the following:

Areas given are for standard signals in Florida. For example, the total area for a 3 head signal with backplate is equal to: (3 x 1.36 sf) + 5.67 sf = 9.75 sf.

2.5-inch wide backplates are only used in retrofit installations.

3.10 References

Add the following:
Cook, R.A. (2007). ***Development of Hurricane Resistant Cable Supported Traffic Signals*** (FDOT Report# BD545 RPWO #57). Gainesville, Florida: University of Florida.
Hisham Sunna and David Johnson, AYRES Associates, ***Dual Cable Supports for Wide Intersections***, FDOT Contract C9G79, October 2015.

4 ANALYSIS AND DESIGN – GENERAL CONSIDERATIONS

4.7 Analysis of Span Wire Structures

Add the following:

When designing box span wire configurations with FDOT two-point two-wire connections, and ATLAS is having difficulty converging on a solution, the following approximate methodologies may be used unless otherwise directed by the DSDE.

1) Use ATLAS results if convergence is achieved within +/- 5 mph of the design wind speed or
2) Analyze each of the four spans as an individual span using 100% of the design wind speed acting perpendicular to the span. Check the pole and foundation design using:
    a. 100% of the base moments from the individual span analysis (LRFD LTS-1 Table 3.9.3-1 Load Combinations 1 and 2) and
    b. 0.75 times the vector sum of 100% the base moments from the individual span analysis (LRFD LTS-1 Table 3.9.3-1 Load Combinations 3).

When suspended (hanging) box span systems with FDOT two-point two-wire configurations are required, the following

C 4.7

Add the following:

When using the ATLAS program for typical box span configurations, wind directions of 0, 45 and 90 degrees are usually sufficient for design.

attachments and support structure may be used without analysis if meeting the given geometry constraints.

A. Geometry:

1. Square or rectangular suspended box with corner angles 90 degrees ±15 degrees.
2. Angle of pole cables to hanging box cables 135 degrees ±15 degrees.
3. Maximum Pole-to-Pole distance at 220 feet.
4. Pole to hanging box cable length may not exceed 25 feet.

B. Attachments:

1. Signals: Maximum number of three-lens signals with back-plate per span:
   a. For counties with LRFD Design Wind Speed = 160 mph: 4.
   b. For counties with LRFD Design Wind Speed = 140 mph: 6.
   c. For counties with LRFD Design Wind Speed = 120 mph: 6.
   d. For Allowable Stress Design, subtract 10 mph.
2. Signs per box span: for each 3'x 2' sign, subtract two signals from the maximum given in item 1) above.

C. Support Structure:

1. Pole Type: PS-X as shown in FDOT ***Standard Plans*** Index 649-010
2. Cables: All cables ½" diameter meeting the requirements of FDOT Specification 634.
3. Cable Configuration: as shown in FDOT ***Standard Plans*** Index 634-001.

For intersections with geometry outside

the values given above, a finite element analysis is required to determine the number of attachments allowed.

5 STEEL DESIGN

5.4 Material

Replace 5.4 with the following:

Use the materials specified in the following documents:

- FDOT Structures Manual
- FDOT ***Standard Specifications for Road and Bridge Construction***
- FDOT ***Standard Plans***

Do not specify ASTM A588 (rustic, Corten, “self-oxidizing", or "self-weathering") steel in sign, signal, or lighting structures.

C 5.4

Add the following:

In some environmental conditions in Florida, A588 steel has deteriorated significantly.

5.6 General Dimensions and Details

5.6.3 Transverse Plate Thickness

Add the following:

The minimum base plate thickness shall be 2½ inches for mast arm signal structures, steel ITS poles, and steel strain poles, and 3 inches for high mast light poles.

For base plate connections without stiffeners on 700-year recurrence interval structures, only use full-penetration groove welds.

C 5.6.3

Add the following:

Research has proven full-penetration groove welds combined with thicker base plates increases the pole-to-base-plate connection fatigue strength.

5.12 Combined Forces

Add the following:

When designing mast arm signal structures, replace "≤ 1.0" with "≤ 0.95" in all equations under this section.

C 5.12

Add the following:

For mast arms, designing to a maximum limit of 0.95 allows for future attachments such as cameras and other ITS equipment.

5.13 Cables And Connections

Add the following:

Use the cable breaking strength values specified in FDOT ***Specifications*** Section 634.

Use $\phi_{rt} = 0.6$

When designing Strain Pole/Span Wire support structures, ensure the span wire has a Demand/Capacity Ratio ≤ 0.95.

C 5.13

Add the following:

For Strain Pole/Span Wire support structures, designing to a maximum limit of 0.95 allows for future attachments such as cameras and other ITS equipment.

5.14 Welded Connections

Add the following:

On steel sign, lighting, and signal support structures, no circumferential welds are permitted on the uprights, arms, or chords with the following exceptions:

- The upright to base plate weld
- The flange plate connection weld on tubular truss chords
- Mitered arm-to-upright angle welds on monotubes
- Uprights with lengths greater than available mill lengths

C 5.14

Add the following:

The Department's intent is to avoid any unnecessary welds on sign, signal, or lighting structures.

Typical mill lengths for pipes and tubes are typically 35 feet and greater. When upright splices are proposed by the fabricator, approved shop drawings are required (***Specifications*** 5-1.4.2) with documentation showing the required pipe is unavailable in the lengths required.

5.15 Bolted Connections

Add the following:

Design all pole to arm connections on Mast Arm structures as "through bolted" using a minimum of six bolts.

C 5.15

Add the following:

Tapped connections are not permitted. Through bolted connections allow for fully tensioned F3125 bolts.

5.16 Anchor Bolt Connections

Add the following:

All sign, signal, and lighting structures designed for a 700 year mean recurrence interval wind speed shall use a minimum of eight ASTM F1554 Grade 55 anchor bolts at the pole to foundation connection, with the exception of Mast Arm signal structures, where the minimum is six anchor bolts.

C 5.16

Add the following:

A minimum of eight anchor bolts provides redundancy and better distribution of forces through the base plate.

5.16.1 Anchor Bolt Types

Delete anchor bolts types listed in the second and third bullet and add the following:

Both Adhesive anchors and threaded post-tensioning bars are not permitted.

C 5.16.1

Add the following:

FDOT only allows straight headed anchor bolts.

Adhesive anchor and threaded post-tensioning bars have undesirable creep and non-ductile behavior respectively.

5.16.2 Anchor Bolt Materials

Add the following:

Only use ASTM F 1554 anchor bolts with 55 ksi yield strength.

C 5.16.2

Add the following:

ASTM F 1554 Grade 55 anchor bolts provide sufficient ductility after yield to engage all the anchor bolts on the tension side of the base plate.

5.16.3 Design Basis

Add the following:

Use double-nut moment joints in all mast arm signal structures, steel strain poles, high mast light poles and overhead sign structures.

Specify a maximum clear distance of one bolt diameter between the bottom leveling nut and the top of concrete. If the clear distance is equal to or less than the nominal anchor bolt diameter, bending of the anchor bolt from shear and torsion may be ignored. If the clear distance exceeds one bolt diameter, bending in the anchor bolt shall be considered.

On mast arm signal structures and cantilever overhead sign structures, a structural grout pad is required under the base plates in double-nut moment joints.

Grout pads are not required under the base plates in double-nut moment joints of span overhead sign structures, high mast light poles, and steel strain poles.

C 5.16.3

Add the following:

A structural grout pad significantly contributes to the design load carrying capacity of anchor bolts in cantilever structures.

When significant torsion is transmitted from the base plate to the anchor bolt group, a structural grout pad permits the anchors to develop their full shear strength, Cook et al. (2013).

Inspections have shown that a poorly functioning grout pad is worse than no grout pad at all. For poles without a grout pad beneath the base plate, the double-nut moment joint requires adequate tensioning of the anchor bolts. It is critical that the nuts beneath the base plate, typically referred to as leveling nuts, are firmly tightened to prevent loosening. This tightening mechanism is accomplished through the turn of the nut method specified in FDOT ***Specifications*** Section 649 or a properly placed grout pad.

5.19 References

Add the following:

Cook, R. A., Prevatt, D. O., and McBride, K. E. 2013. *Steel Shear Strength of Anchors with Stand-Off Base Plates*. Florida Department of Transportation Research Report BDK75-49, Tallahassee, FL

6 ALUMINUM DESIGN

6.1 Scope

Add the following:

Do not specify aluminum overhead sign structure supports with the exception of the vertical sign panel hangers, which may be aluminum or steel.

C 6.1

Add the following:

Aluminum overhead sign structures have been prone to unacceptable levels of vibration and fatigue cracking.

6.4 Material and Material Properties

Add the following:

Use the materials specified in the following documents:

- FDOT Structures Manual
- FDOT Standard Specifications for Road and Bridge Construction
- FDOT Standard Plans

7 PRESTRESSED CONCRETE DESIGN

7.4 Materials

7.4.2 Normal and Lightweight Concrete

7.4.2.1 General

Replace 7.4.2.1 with the following:

Use the materials specified in the following documents:

- FDOT Structures Manual
- FDOT Standard ***Specifications*** for Road and Bridge Construction
- FDOT ***Standard Plans***

For Standard Prestressed Concrete Pole Design, use Class V concrete.

C 7.4.2.1

Add the following:

FDOT uses Class V or Class VI concrete in accordance with ***Specifications*** Section 346.

7.4.3 Reinforcing Steel

7.4.3.1 General

Replace 7.4.3.1 with the following:

Use the materials specified in the following documents:

- FDOT Structures Manual
- FDOT Standard Specifications for Road and Bridge Construction
- FDOT Standard Plans

7.4.4 Prestressing Steel

7.4.4.1 General

Replace 7.4.4.1 with the following:
Use the materials specified in the following documents:

- FDOT Structures Manual
- FDOT Standard Specifications for Road and Bridge Construction
- FDOT Standard Plans

7.6 Design

Add the following:

The minimum clear concrete cover for all prestressed and non-prestressed poles is 1-inch.

C 7.6

Add the following:

FDOT requires a minimum 1-inch cover on all concrete poles in all environments.

7.6.1 General

Add the following:

For Standard Prestressed Concrete Pole Design, see ***Standard Plans Instructions*** Index 641-010, for the Moment Capacities for the Extreme Event Limit State.

C 7.6.1

Add the following:

FDOT uses Standard Prestressed Concrete Poles in accordance with Index 641-010 and ***Specifications*** Section 641. After analysis of the proposed Strain Pole/Span Wire support structure, the Designer selects the appropriate pole using the design moment values given in the ***Standard Plans Instructions*** for Index 641-010.

10 SERVICEABILITY REQUIREMENTS

10.4.2.1 Vertical Supports

Add the following:

Under Service I load combination, limit the horizontal deflection of concrete poles supporting Closed Circuit Television (CCTV) cameras to one-inch in a 40-mph wind speed (3-second gust).

C 10.4.2.1

Add the following:

The deflection check for CCTV poles is a FDOT requirement to prevent excessive shaking of the camera under typical operating conditions.

10.5 Camber

Replace this section with the following:

Provide a design camber equal to 2.5 times the dead load deflection for overhead sign structures. For span overhead sign structures, arch the horizontal member upwards and for cantilever overhead sign structures rake the vertical support backwards. For mast arm signal structures, provide a two-degree upward angle at the arm/upright connection.

C 10.5

Add the following:

Design camber = Permanent camber + dead load deflection. Permanent camber equal to 1.5 times the dead load deflection provides for a better appearance than the relatively small L/1000 given in AASHTO. For mast arms, a two-degree upward angle at the arm/upright connection is standard industry practice.

11 FATIGUE DESIGN

11.6 Fatigue Importance Factors

Add the following:

Use Fatigue Category I for all sign, traffic signal, and lighting support structures (including all DMS support structures) with the following exceptions:

A. For Galloping, use Fatigue Category II for all FDOT Standard flat panel sign, traffic signal, and lighting support structures meeting the limits in FDOT 2.4.2.5.

B. For Natural Wind Gusts, use Fatigue Category II for all FDOT Standard traffic signal and lighting support structures meeting the limits in FDOT 2.4.2.5.

C 11.6

Add the following:

Sign, signal, and lighting structures built using FDOT ***Standard Plans*** have historically performed well.

11.7 Fatigue Design Loads

11.7.1 Sign and Traffic Signal Structures

11.7.1.1 Galloping

Replace the 2nd, 3rd, and 4th paragraphs with the following:

Vibration Mitigation devices are not allowed in lieu of designing for galloping.

Mast arm designed only for flat panel signs and/or DMS panels require the installation of FDOT ***Developmental Standard Plans*** D659-049 for Damping Device for Miscellaneous Structures.

Exclude galloping loads for the fatigue design of overhead cantilevered sign and DMS support structures with three or four chord horizontal trusses with bolted web to chord connections.

C 11.7.1.1

Add the following:

Vibration mitigation devices are seldom necessary and installed only after excessive vibration has been observed and the device is approved by the Department.

Mast arms with signs only have a higher tendency to vibrate.

Cantilevered sign support structures with horizontal three or four chord trusses have never been reported to vibrate from vortex shedding or galloping. (ref. FHWA Guidelines for the Installation, Inspection, Maintenance and Repair of Structural Supports for Highway Signs, Luminaries, and Traffic Signals).

11.8 Deflection

Add the following:

In addition, walk-in DMS structures shall also meet the following maximum span-to-depth ratios:

Walk-In DMS Structure Type	Max. Span-to-Depth Ratio
Overhead Span Structure	25
Overhead Cantilever Structure	9

C 11.8

Add the following:

The minimum requirements given provide additional measures to limit the possibility of galloping.

13 FOUNDATION DESIGN

13.6 Drilled Shafts

Add the following:

Drilled shafts are the standard foundation type on high mast light poles, overhead signs, mast arms and steel strain poles.

See ***SDG*** 1.4.4 for designating drilled shafts as mass concrete in the Plans.

C 13.6

Add the following:

For standard drilled shaft details, see ***Standard Plans*** Indexes 700-040, 700-041, 715-010, 649-010 and 649-031 for overhead sign structures, high mast light poles, steel strain poles, and mast arms.

13.6.1 Geotechnical Design

13.6.1.1 Embedment

Add the following:

For overturning resistance, use the following ϕ factors:

MRI Winds (yrs)	ϕ
700	0.6
300	0.6
10	0.8

For torsion resistance of cylindrical foundations in cohesionless soils supporting Mast Arm signal cantilever overhead sign structures and cantilever ground sign structures, use the following equations:

$$T_u \leq \phi_{tor} \bullet T_n$$

Where

$$T_n = \pi D L F_s (D/2)$$

$$F_s = \sigma_v \omega_{fdot}$$

$$\sigma_v = \gamma_{soil}(L/2)$$

T_u = Torsion force on the drilled shaft

T_n = Nominal torsion resistance of the drilled shaft

ϕ_{tor} = Resistance Factor for torsion
= 1.0 for Mast Arm signal structures
= 0.9 for overhead cantilever sign structures
= 1.3 for cantilever ground sign structures

C 13.6.1.1

Add the following:

Since sign, lighting and signal foundations have performed well in Florida, *LRFD* ϕ factors have been fitted to allowable stress design.

The torsion resistance equation is based on the theory for the Beta Method (O'Neill and Reese, 1999). The torsional resistance from the bottom face of the shaft is omitted to increase the conservatism in this approximate calculation. A single factor ω_{fdot} of 1.5 is used to adjust for the concurrent overturning and torsional forces and to compare with past FDOT practice. Since the consequence of a torsion soil-structure failure is usually small, some rotation may occur from the design wind.

Since cantilever overhead sign structures can have significantly more torsion than a Mast Arm, a lower resistance ϕ factor = 0.90 is appropriate. Cantilevered Ground Signs have a higher resistance factor greater than 1 due to a lower consequence of failure.

For soils with SPT N-values less than 5, consult the Geotechnical Engineer for additional recommendations.

D = diameter of the drilled shaft
L = length of the drilled shaft
F_s = unit skin friction
σ_v = effective vertical stress at mid layer
γ_{soil} = unit weight of soil
N_{60} = the equivalent safety hammer SPT blow count uncorrected for overburden
ω_{fdot} = load transfer ratio where the allowable shaft rotation may exceed 10 degrees
= 1.5 for granular soils where SPT N_{60}-values are 15 or greater
= **$1.5(N_{60}/15)$** for N_{60}-values greater than or equal to 5 and less than 15.

13.6.2 Structural Design

Add the following:

Longitudinally reinforce drilled shaft foundations with a minimum of 1% steel. At a minimum, place #5 stirrups at 4 inch spacing in the top two feet of shaft. In cantilever structures, design for shear resulting from the torsion loading on the anchor bolt group.

13.6.2.1 Details

Replace the second sentence with the following:

A minimum concrete cover of six inches over steel reinforcement is required.

Add the following:

The minimum design diameter for drilled shafts is 3 feet and the maximum design diameter is 6 feet. A minimum main reinforcement clear spacing of six inches is required for proper concrete consolidation. The top five feet of stirrups in drilled shafts for sign, signal and lighting structures are exempt from this spacing requirement.

C 13.6.2

Add the following:

Using 1% steel is conservative for flexural design in most cases. Additional stirrups in the top of the shaft provides resistance against shear failure in the top of the shaft. Due to torsion, additional stirrups may be required in cantilever structures.

C 13.6.2.1

Add the following:

FDOT requires six inches of cover to ensure durability in drilled shafts.

Drilled shafts with design diameters greater than 6 feet should be avoided. Concrete consolidation below the anchor bolts becomes more difficult with reinforcement clear spacing less than six inches. Larger shaft diameters should be considered to increase reinforcement spacing.

Modification for Non-Conventional Projects:

Delete FDOT 13.6.2.1 and insert the following:

Replace the second sentence with the following:

A minimum concrete cover of six inches over steel reinforcement is required.

Add the following:

A minimum reinforcement clear spacing of six inches is required for proper concrete consolidation. The top five feet of stirrups in drilled shafts for sign, signal and lighting structures are exempt from this spacing requirement.

13.7 Spread Footings

13.7.1 Geotechnical Design

Replace 13.7.1 with the following:

The bearing capacity and settlement of spread footings in various types of soils may be estimated according to methods prescribed in ***LRFD***. Eccentric load limitations shall be as given in ***LRFD*** 10.6.3.3.

C 13.7.1

Replace C13.7.1 with the following:

FDOT is using the ***LRFD*** Bridge Design Specifications for Geotechnical Design.

13.8 Piles

Add the following:

The minimum sizes of cased micropiles used to support miscellaneous structures are:

- For structures with a 300-year wind recurrence interval design
  5 inches OD
- For structures with a 700-year wind recurrence interval design
  7 inches OD

Miscellaneous Structures may be founded on Auger Cast Piles (ACP).

13.10 References

Add the following:

Cook, R.A. (2007). ***Anchor Embedment Requirements for Signal/Sign Structures*** (FDOT Report# BD545 RPWO #54). Gainesville, Florida: University of Florida.

14 FABRICATION, MATERIALS, AND DETAILING

Replace this section with the following:

- See the FDOT Standard ***Specifications*** for Road and Bridge Construction and FDOT Materials Manual.

15 CONSTRUCTION

Replace this section with the following:

- See the FDOT Standard ***Specifications*** for Road and Bridge Construction and FDOT ***Materials Manual***.

18 EVALUATION OF EXISTING STRUCTURAL SUPPORTS FOR HIGHWAY SIGNS, LUMINAIRES, TRAFFIC SIGNALS, ITS AND TOLLING

Add new Section 18 as titled above and include the following:

18.1 General

See ***FDM*** 261.8 for requirements for evaluating existing highway signs, luminaires, traffic signals, ITS, and tolling structures.

The minimum sign areas for overhead sign structures per FDOT 2.4.2.2 are not required when analyzing an existing structure.

C 18

This section is added to provide guidance for the evaluation of existing support structures.

C 18.1

Field verified K_z and wind speeds derived from the wind speed map are consistent with the LTS Specification.

The details listed have been constructed in Florida and have performed well.

Foundation failures in Florida on LTS support structures are rare.

The following values may be used in the analysis of existing support structures:

- A height and exposure factor K_z confirmed by field evaluation.
- A wind speed for the specific location using the 700-year MRI Florida wind speed map (See ***Figure*** 18.1-1). Linear interpolation between contours is permitted. For the 300-year MRI wind speed, use the wind speed given by the 700-year MRI map minus 10 mph. For ground signs, use 110 mph for the entire state.

A design variation is not required for any of the following existing details or conditions:

- mast arm to upright connections with 4 bolts (FDOT 5.15)
- tapped mast arm connections (FDOT 5.15)
- fillet welded tube-to-transverse plate connections (FDOT 5.14)
- mast arm upright anchorages with 4 bolts (FDOT 5.16)
- transverse plate thickness (FDOT 5.6.3)
  - mast arm horizontal and upright base plate 1.25 inches and greater
  - high mast light pole and steel strain pole base plates 2.0 inches and greater
- mast arm foundations with stirrups spaced at ≥ 1'-0" centers.
- a CSR,CFI or Demand/Capacity Ratio ≤ 1.10.
- Fatigue evaluation (***LRFD***-LTS Section 11 is not required).
- Foundation evaluation per ***LRFD***-LTS Section 13, structural and geotechnical, is not required. With the exception of structural capacity of cantilever overhead sign

Due to some failures of cantilever overhead sign supports during Hurricane Charley (2004), drilled shaft reinforcement should be checked. See ***FDM*** 261 for guidance when a detailed structural evaluation is required for reused or rehabilitated foundations.

supports and foundation reuse/rehabilitation as required by ***FDM*** 261 and FDOT ***LTSM*** 18.2.

All items listed above should be checked when there is evidence of distress or instability, or when the Engineer has reason to believe the structural capacity is in doubt.

When retrofitting with “flexible” backplates to an existing mast arm or span wire, see the ***Traffic Engineering Manual, TEM,*** Section 3.9.

Figure 18.1-1 - 700-year MRI Florida Wind Speed Map

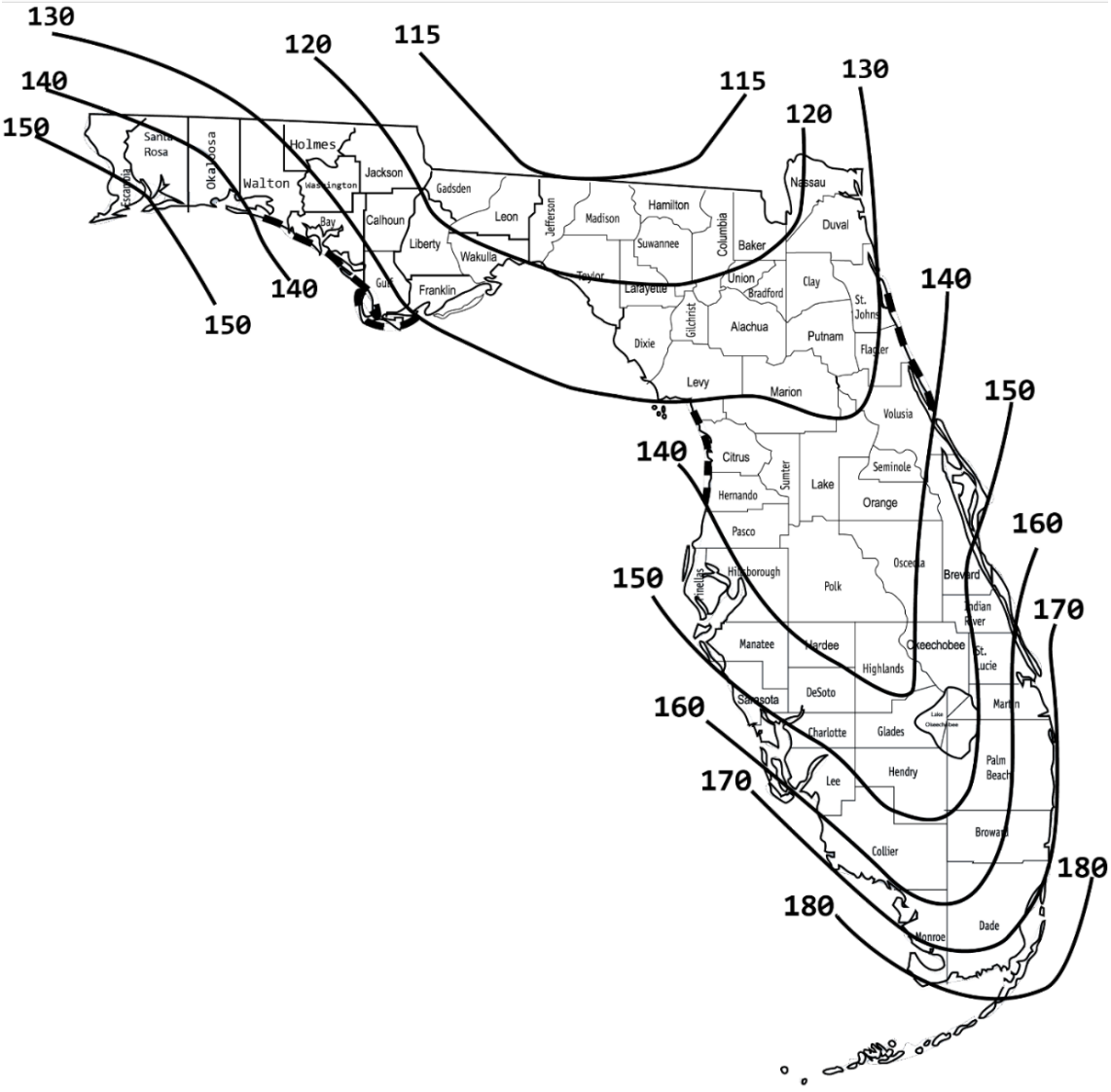

18.2 Mast Arm Foundation Reuse

Evaluate mast arm foundations for reuse when none of the following are present per the condition evaluation per ***FDM*** 261.8.1.

- Damaged, cracked or bent anchor bolts
- Exposed anchor bolt length which does not provide the required length for clear distance or accommodation of the anchor nut and retainer nut per 5.16.3
- Corrosion in any anchor bolt in which the area section loss is estimated to exceed 10%
- Cracking in foundation in which the disposition of cracked concrete per ***Standard Specifications*** Table 400-3 is anything other than “NT” (no treatment required)

If any of the previously stated conditions exist, evaluate a foundation rehabilitation. For either foundation reused as-is or a rehabilitation, design a new mast arm which is compatible with the existing anchor bolt pattern and satisfies design criteria of this Volume and ***FDM*** 261 with the exception of the following geotechnical criteria:

- Demand/capacity ratio for torsion ≤ 1.2
- Demand/capacity ratio for overturning ≤ 1.15

If it is not feasible to either reuse or rehabilitate an existing foundation, proceed with traditional methods for the mast arm replacement.

C 18.2

Use the Special Mast Arm Assemblies Data Table as necessary to specify custom mast arm structures to fit on either a foundation reused as-is foundations or a rehabilitated foundation.

18.3 Existing Bridge Mounted Support Structures and Signs

Evaluate existing bridge mounted support structures and signs per ***FDM*** 261.8. Existing bridge mounted signs that extend above the bridge traffic railing are allowed to remain provided that the sign panel dimensions do not increase. In all cases, remove existing bridge mounted signs that extend above the bridge traffic railing when the sign does not meet the setback distance for discontinuous elements per ***FDM*** Figure 215.4.7. For a bridge widened on one side, these requirements also apply to the non-widened side of the bridge.

19 TOLL GANTRY STRUCTURES

19.1 General Structural Requirements

A. Gantries must be treated as sign structures when applying the requirements of the current ***Standard Plans***.

B. Gantries must be designed as per ***Structures Manual***, ***LTSM***, for the 700-year Extreme Event Limit State wind speed based on location.

C. Gantries must be designed for fatigue requirements as per ***Structures Manual***, ***LTSM***.

D. See exhibits from ***FDM*** 284.1.1 for the toll equipment type, position, and wind areas for all Tolling Equipment Manufacturer systems. See ***FDM*** 284.11 for additional requirements.

E. Toll equipment Dead Load:

Gantries must be designed to carry all attached items (toll equipment, toll equipment structure mounting hardware, retraction assemblies, raceways, strut channel supports, etc.):

1. The design dead load of the tolling equipment mounted on each toll equipment arm must be at least 55 pounds or the actual weight of the equipment, whichever is greater. The 55-pound allowance does not include the weight of the toll equipment support arm, J-arm, and latch mechanism or retraction assemblies.
2. Gantries must support a minimum uniform superimposed dead load of 200 pounds per linear foot across the entire structure, divided as appropriate among the superstructure chords, to account for the self-weight of the raceways, and other associated electrical items.

F. The horizontal truss element for each span of a two-span gantry must be designed as simply supported independent spans.

G. Gantry foundations must use steel reinforcing.

H. Signs of any type must not be attached to the gantry.

I. All gantries must be hot-dipped galvanized. No other coatings (paint, etc.) can be applied unless approved by the District Materials Office. Written documentation (email or meeting notes documentation) of concurrence from the District Materials Office is acceptable.

J. Toll gantries must be designed to meet the following fabrication restrictions:

1. If field welding is permitted by the CEI in accordance with the ***Standard Specifications***, the welding procedures must be reviewed and approved by District Materials Office.

2. Shop welded splices of main chords are not permitted.
3. Shop welded splices of uprights are not permitted except as allowed in ***Standard Plans*** Index 700-041. If splices are required, they must be detailed in the structural plans for the gantry subcomponent.

19.1.1 Gantry Superstructure

A. Gantries must have a multi-chord truss superstructure system for the horizontal element.

B. The gantry truss must be horizontal and level (not parallel to the cross slope of the roadway).

C. The natural frequency of any element that supports the equipment must be less than 500 Hz. Equipment is defined as any electronic device that is mounted to the gantry.

D. Movements due to wind loads must meet the following criteria for the averaged effect on the top and bottom truss chords:

1. Span gantries subject to wind speed of 30 mph:
   a. Movement of any point along the chords must not exceed 1.25 inches relative to the position of any other point along the chords.
   b. Rotational orientation of any point along the chords must not exceed 8 milliradians (0.47 degrees) relative to the rotational orientation of that point at rest, for all three rotational axes.
2. Cantilever gantries subject to wind speeds between 25 and 45 mph:
   a. Movement of any point along the chords must not exceed 2.2 inches relative to the position of any other point along the chords.
   b. Rotational orientation of any point along the chords must not exceed 14 milliradians (0.80 degrees) relative to the rotational orientation of that point at rest, for all three rotational axes.

E. All structural elements supporting gantry-mounted electronic devices must:

1. Meet all rigidity/frequency requirements indicated above for the gantry.
2. Attach to the gantry with a redundant connection system.

19.1.2 Minimum Material Requirements

Include protection against galvanic corrosion when dissimilar materials are used. Dissimilar metals must be separated by inert dielectric material.

19.1.2.1 Steel

A. Upright and Truss Chords (Steel Pipe): API 5L X42 PSL2, 42 ksi yield or ASTM A500, Grade B (Min.).

B. Steel Angles, Structural Plates and Bars: ASTM A709 grade 36 or 50 (as required by design).

C. Bolts, Nuts and Washers:

1. High Strength Bolts: ASTM F3125, Grade A325 Type 1
2. Nuts: ASTM A563 Grade DH Heavy-Hex Nuts
3. Washers: ASTM F436 Type 1, one under turned element.

D. Anchor Bolts, Nuts and Washers:

1. Anchor Bolts: ASTM F1554, Grade 55
2. Nuts: ASTM A563 Grade DH Heavy-Hex, 5 per bolt
3. Plate Washers: ASTM F436, Type 1, 2 per bolt.

E. U-Bolt Assemblies:

1. U-Bolts: ASTM A193
2. Nuts: ASTM A194, 4 per bolt
3. Washers: ASTM F436, Type 1, 2 per bolt

F. Galvanization: Components must meet the requirements of ***Standard Specifications*** Section 962-11.

19.1.2.2 Aluminum

A. Components must meet the requirements of ***Standard Specifications*** Section 965.

B. Bars, Plates, Stiffeners, Backing Ring, Shims, and Shapes must be Alloy 6061-T6.

19.1.2.3 Stainless Steel

A. Plates: Type 304L per ASTM A240.

B. Structural Shapes and U-bolt Assemblies: Type 316L per ASTM A276.

C. Stainless Steel Screws, Bolts, Washers and Nuts: Grade 18-8, unless otherwise noted.

19.1.3 Non-Accessible Gantries

A. Non-accessible gantries must be a tri-chord truss as shown in ***FDM*** Exhibit 284-12.

B. A channel assembly must be used to support the vertical conduit routing along the upright for gantry power, data, and AVI cables. See ***FDM*** Exhibit 284-13 and ***FDM*** Exhibit 284-14.

C. Bent plates must be used to connect the vertical and horizontal W-Section members as shown in ***FDM*** Exhibit 284-16.

19.1.3.1 Non-Accessible Cantilever Gantry Structural Requirements

A. Structural configuration of cantilever gantries must be based on the ***Standard Plans*** Index 700-040, Cantilever Sign Structure, except for the offsets between the centerline of upright and centerline of truss chords and the location of the back chord gusset plates closest to the upright as shown in ***FDM*** Exhibit 284-12 and ***FDM*** Exhibit 284-13. These modifications provide space for longitudinal cable trays as described in ***FDM*** 284.2.5.2. and ensure there is no conflict between the upright and web members.

B. Cantilever gantries must have three (3) truss chords with a single upright in a cantilever configuration.

C. Cantilever truss span lengths must be 30, 36, 42, or 48 feet.

D. Toll equipment layout and horizontal support pipe requirements may control the cantilever span length by increasing to the next allowable span length. See ***FDM*** 284.1.1 and ***FDM*** 284.4 and item (C) above.

E. When a chord splice is required and permitted by the ***Standard Plans***, an alternate splice connection detail (bolted flange connection), similar to the connection shown ***Standard Plans*** Index 700-041, Span Sign Structure must be provided. No other type of splice connections for the truss chords is permitted.

F. The gantry must be designed for one future sign panel, 12 feet wide by 10 feet high, centered over the combined travel lanes. Other future signs (as defined in ***LTSM*** of the ***Structures Manual***) need not be considered. The gantry design must always account for the toll equipment simultaneously with load cases with and without the future sign panel to produce the worst-case loading effect.

G. Toll equipment support elements including but not limited to horizontal support pipe, J-arms and mounting hardware must not extend beyond the end of the longest truss chord.

H. The upright must be filled with concrete for the full height. Upright handholes are not required.

I. Use ***FDM*** Exhibit 284-15 to confirm compliance with strength and fatigue requirements for the site-specific cantilever gantry conditions. If compliance cannot be demonstrated, then a non-accessible span gantry is required.

J. The structural element requirements noted below provide compliance with vibration, rotation, natural frequency and other dynamic effects. Use ***FDM*** Exhibit 284-15 and ***FDM*** Exhibit 284-13 for the structural element requirements as follows:

    1. The upright height (A) is a site-specific dimension, not to exceed 24 feet.
    2. The remaining element sizes and dimensions must not be changed and must be as shown in the Table of Variables in ***FDM*** Exhibit 284-15 and ***FDM*** Exhibit 284-13.

3. Calculate the back rake (G) for the site-specific conditions.

19.1.3.2 Non-Accessible Span Gantry Structural Requirements

A. Structural configuration of non-accessible span gantries must be based on the ***Standard Plans***, Index 700-041, Span Sign Structure.

B. When a chord splice is required, and permitted by the ***Standard Plans***, an alternate splice connection detail (bolted flange connection), as shown in ***Standard Plans***, Index 700-041, must be provided. No other type of splice connections for the truss chords is permitted.

C. Truss depth must meet the span-to-depth requirements for DMS structures as specified in the ***Structures Manual***, ***LTSM***.

D. Maximum span length and truss depth must be as specified for sign structures in the ***FDM*** 261.1.

E. The gantry must be designed for one future sign, 12 feet wide by 10 feet high, centered over the combined travel lanes in each direction of travel. Other future signs (as defined in the ***Structures Manual***, ***LTSM***) need not be considered. The gantry design must always account for the toll equipment simultaneously with load cases with and without the future sign panel to produce the worst-case loading effect.

F. Gantry panel layout must be adjusted to accommodate W-section member spacing as described in ***FDM*** 284.1.1.3.

19.1.4 Accessible Span Gantry Structural Requirement

A. The accessible gantry is a trapezoidal quad-chord truss supported on two (2) uprights as a span configuration. See ***FDM*** Exhibit 284-18.

B. The site-specific structural items that can be changed include: foundation size, length and reinforcement, upright height, and thickness (not diameter) of structural elements.

C. The accessible gantry design must allow the J-arm retraction assembly system elements to be located anywhere along the horizontal support members.

D. Configuration of truss chord splice must be in accordance with ***FDM*** Exhibit 284-39.

E. Gantry must be designed for future signs, 12 feet wide by 10 feet high, one on each upright at the height of the truss. Other future signs (as defined in the ***Structures Manual***, ***LTSM***) need not be considered. The gantry design must always account for the toll equipment simultaneously with load cases with and without the future sign panel to produce the worst-case loading effect.

F. Access Elements

Gantry design must include a deck (upper platform) to maintain equipment over live traffic. This allows for secured access to the deck via a lower platform and connecting stairway accessible by maintenance vehicles such as a scissor lift or bucket truck. See ***FDM*** Exhibit 284-19 for additional requirements.

G. See ***FDM*** below for required accessible gantry elements:

1. Truss Connections – ***FDM*** Exhibit 284-20, ***FDM*** Exhibit 284-21.
2. Lower Chord Connection – ***FDM*** Exhibit 284-22.
3. Upper Chord Connection – ***FDM*** Exhibit 284-23.
4. Upright Structural Details for Wireway Support – ***FDM*** Exhibit 284-24.
5. Lower Grating – ***FDM*** Exhibit 284-25.
6. Upper Grating – ***FDM*** Exhibit 284-26.
7. Stairs and Platforms – ***FDM*** Exhibit 284-27, ***FDM*** Exhibit 284-28, ***FDM*** Exhibit 284-29, ***FDM*** Exhibit 284-30.
8. Swing Gates and Latches – ***FDM*** Exhibit 284-31, ***FDM*** Exhibit 284-32, ***FDM*** Exhibit 284-33, ***FDM*** Exhibit 284-34.
9. Platform Panels – ***FDM*** Exhibit 284-35, ***FDM*** Exhibit 284-36.
10. Fall Restraint System – ***FDM*** Exhibit 284-37.
11. Reinforced Opening in Channels for Cable Tray Pass Thru - ***FDM*** Exhibit 284-38.
12. Camber and Splice Details - ***FDM*** Exhibit 284-39.

19.1.5 Foundation Systems

A. Gantries must be supported by a deep foundation system. Shallow foundation systems are not permitted.

B. Geotechnical investigations for gantry foundations must be in accordance with ***Geotechnical Design Manual***.

C. Design drilled shafts and driven piles per the requirements of ***Geotechnical Design Manual***.

D. Driven Piles

1. At least one test pile per gantry must be dynamically monitored with a Pile Driving Analyzer (PDA) or Embedded Data Collector (EDC) and following ***Standard Specifications***, Section 455.
2. All preformed pile holes installed in rock must be grouted following ***Standard Specifications*** Section 455, to restore lateral stability of the foundation,

unless the rock is modeled as non-cohesive soil in design and sand backfill is used following the Specification requirements.

E. Drilled Shafts

Thermal integrity (TITDS) tests are required at every drilled shaft. The TITDS tests will be performed by FDOT.

Modification for Non-Conventional Projects:
Replace the above paragraph with the following: Thermal integrity (TITDS) tests are required at every drilled shaft. The TITDS tests will be performed by the Design-Build Team. The signed and sealed report must be included in the Foundation Certification Package.

F. Do not use micropiles or auger cast piles.

19.1.5.1 Foundation Length

A. After foundation length is determined based on design analyses add:

1. 4 feet to the required foundation length when subsurface soil or rock is modeled as non-cohesive material.
2. 6 feet to the required foundation length when any soil or rock is modeled as cohesive material in design.

B. Design of the drilled shaft must include reduction of skin friction in limestone associated with the use of temporary casing.

19.2 Toll Equipment J-Arms

19.2.1 General Requirements

J-arms must be in accordance with ***FDM*** Exhibit 284-40.

19.2.2 J-Arm Attachment Hardware

The J-arms must be mounted to the horizontal support pipes (non-accessible gantries) or to the support arms (accessible gantries) as follows:

A. Non-accessible gantry J-arm attachment hardware must be in accordance with ***FDM*** Exhibit 284-41, ***FDM*** Exhibit 284-44, ***FDM*** Exhibit 284-45, and ***FDM*** Exhibit 284-46.

B. Accessible gantry J-arm attachment hardware must be in accordance with ***FDM*** Exhibit 284-41, ***FDM*** Exhibit 284-51, ***FDM*** Exhibit 284-52, ***FDM*** Exhibit 284-53, and ***FDM*** Exhibit 284-54.

C. Telescoping brackets or supports are not allowed.

D. All hardware connections must be designed to prohibit loosening over time.

E. See ***Structures Manual***, ***LTSM*** Chapter 19 for rigidity and vibration requirements.

19.2.3 J-Arm Point of Attachment

A. The point of attachment of the J-arm must be in the longest straight section of the J-arm. See ***FDM*** Exhibit 284-12, ***FDM*** Exhibit 284-40, and ***FDM*** Exhibit 284-51.

B. All J-arms must accommodate 26 inches of vertical adjustability (13 inches up/down) from the reference point (neutral position of the J-arm). See ***FDM*** Exhibit 284-40 for the reference point on the J-arm.

C. Horizontal adjustability limits with respect to the J-arms must be within the limits identified in ***FDM*** Exhibit 284-42 and ***FDM*** Exhibit 284-43. For all other toll equipment, the centerline of J-arm coincides with the centerline of the toll equipment.

19.3 Horizontal Support Pipes for Non-Accessible Gantries

19.3.1 General Requirements

A. Horizontal support pipes must be provided for attaching J-arms to the structural W-section of the gantry. See ***FDM*** Exhibit 284-41, ***FDM*** Exhibit 284-44, ***FDM*** Exhibit 284-45, and ***FDM*** Exhibit 284-46 for assembly details.

B. The horizontal support pipes must be staggered to allow the J-arms to be on the same centerline offset, as required in ***FDM*** 284.1.1.1.

C. The W-section members' location must not conflict with the J-arms' position required for toll equipment installation. There must be a minimum of 7 1/2 inches between the centerline of the W-section and the centerline of the J-arm, resulting in a minimum of 1 inch of lateral clearance between any J-arm attachment hardware and the W-section supporting the horizontal support pipes as shown in ***FDM*** Exhibit 284-46.

19.3.2 Horizontal Support Pipes

A. Horizontal support pipes must span between each set of adjacent W-section members over equipped lanes and shoulders.

B. Horizontal support pipes must be provided to hold all J-arms. There must be horizontal pipes on both the approach and departure sides of the gantry above equipped lanes and shoulders.

C. All horizontal support pipes will be 6'-6" long except when cantilevered as described in (8) below. Horizontal support pipes must be identical in diameter, wall thickness and material for each gantry.

D. Each horizontal support pipe must hold a maximum of three (3) J-arms.

E. Horizontal support pipes must have an outside diameter of 4.5 inches and must be attached to the structural members (W-section) by pipe saddles and U-bolts. See ***FDM*** Exhibit 284-12.

F. Horizontal support pipes must extend a minimum of 3 inches beyond the pipe saddle U-bolt assembly that secures the horizontal pipes to the W-section members. The extension must not conflict with J-arm mounting installation.

G. All horizontal support pipes must be level.

H. Only on 42-foot and 48-foot cantilever gantry spans, horizontal support pipes can be cantilevered beyond the last W-section member for supporting equipment on the cantilevered portion. These cantilevered horizontal support pipes must not extend beyond the end of the longest chord.

I. For horizontal support pipes cantilevered from the gantry, J-arm mounting hardware must be a minimum of 3 inches inside the unsupported edge of the horizontal support pipe.

19.4 Equipment Retraction Assembly for Accessible Gantries

The equipment retraction assembly includes the gear box, support arm, J-arm and associated hardware. The retraction assembly system allows the toll equipment to be retracted to the deck (walkway) where it can be serviced over live traffic by trained technicians.

19.4.1 General

A. One equipment retraction assembly must be provided for each J-arm as shown in the exhibits included in this subsection.

B. The number and positioning of gear boxes and support arms must be determined from the equipment layout.

C. The equipment retraction assembly must fully retract each equipped J-arm individually without requiring other equipped J-arms to be retracted.

19.4.2 Support Arm Assembly

A. The support arm assemblies must retract the J-arm mounted tolling equipment devices to the gantry walkway, as shown in ***FDM*** Exhibit 284-47, ***FDM*** Exhibit 284-48, ***FDM*** Exhibit 284-49, and ***FDM*** Exhibit 284-50.

B. The support arms (“support arm”) must be as shown in ***FDM*** Exhibit 284-51, ***FDM*** Exhibit 284-52, ***FDM*** Exhibit 284-53, and ***FDM*** Exhibit 284-54. Each support arm must be attached to a single gear box.

C. Where toll equipment layout results in the latch plate conflicting with the latch bar brace:

1. Offset the support arm assembly per the adjustability as shown in ***FDM*** Exhibit 284-42, and ***FDM*** Exhibit 284-43.
2. Where toll equipment is not adjustable, an alternate latch plate must be designed to avoid the conflict with the latch bar brace.

D. Stop plates must be used to restrict the movement of the support arms as they swing into the maintenance position over the walkway. Type and mounting position of stop plates will vary for each piece of toll equipment. See ***FDM*** Exhibit 284-47, ***FDM*** Exhibit 284-48, ***FDM*** Exhibit 284-49, ***FDM*** Exhibit 284-50, and ***FDM*** Exhibit 284-56 for stop plate types and mounting.

19.4.3 Gear Box

The gear boxes must be provided in accordance with the ***FDM*** Exhibit 284-57, and ***FDM*** Exhibit 284-58.

A. Swing gate posts must be removable so that they can be repositioned along the kick plate to adjust the position of swing gates for interim to ultimate configurations to accommodate gear box attachment system flexibility. See ***FDM*** Exhibit 284-59.

B. Gear boxes must be oriented such that fixed gantry elements (gantry top chord field splices, swing gate support posts, other gear boxes, latch bar brace supports, etc.) do not prevent or impair retraction of the toll equipment.

C. For each interim and ultimate layout:

   a. Each TEC equipment layout must have the same quantity of left gearboxes.

   b. Each TEC equipment layout must have the same quantity of right gearboxes.

19.4.3.1 Gear Box Attachment System

A. The gear box attachment system to the gantry must allow a minimum 6-inch lateral clearance between the centerline of the gear box input shaft and the centerline of the nearest swing gate post.

B. The horizontal support member for the support of gear boxes that spans between swing gate posts must be as long as possible, up to 12 feet in length. The angles that connect these horizontal supports must only attach at swing gate posts and on each side of upper chord field splices. See ***FDM*** Exhibit 284-59 for additional details.

2027 FDOT STRUCTURES MANUAL

Volume 4: Fiber Reinforced Polymer Guidelines

1 GENERAL REQUIREMENTS

1.1 GENERAL

A. This volume implements basic design guidelines for Fiber Reinforced Polymer (FRP) Composites used for the specific applications listed herein. As is the case with all other structural materials, the engineer must practice the appropriate standard of care when designing components using FRP Composites.

B. The FRP Composites industry is growing rapidly and utilizes a wide and expanding range of material combinations and fabrication methods. The industry is becoming more aware of the need for standardization of fabrication methods and specifications for materials, design and construction. Some segments of the industry have developed nationally recognized industry standards for specific components using FRP Composites. If they are available, these standards are referenced within this volume.

C. FRP structural components and systems are sensitive to the effects of moisture, temperature, ultraviolet light, chemical attack and other environmental effects that may lead to deterioration in structural strength and stiffness during the service life of the structure. Ultraviolet light embrittles the matrix and may cause loss of tensile strength in glass fibers. Ultraviolet light is best dealt with by using surface coatings (veils) with UV inhibitors which reduce the long-term effects of ultraviolet light and can enhance the aesthetics of the system. Acids and alkalis may have a deleterious effect on the matrix. The effects of alkalinity on FRP composites depend on the chemical characteristics of the exposure and the material system.

D. The EOR must give these issues careful attention during the structural design and determine the appropriate measures of protection such as the use of protective coatings in order to ensure the required service life is obtained. Protective coatings are a design decision and are highly dependent upon the usage application. Any requirements for protective coatings must be specified in the plans and any associated Technical Special Provisions must be developed and included in the Specifications Package.

1.2 DESIGN REVIEW

See ***FDM*** 121 for design review responsibilities.

Modification for Non-Conventional Projects:
Delete the above sentence and insert the following: The use of FRP Composites must be submitted for approval through the Alternative Technical Concept process unless their use is specifically addressed in the RFP.

1.3 APPROVAL OF USE

A. Components subject to vehicular impact, e.g. single and multiple column sign supports, light poles, traffic railing/noise wall combinations, etc., may be considered only if applicable crashworthiness evaluations have been completed and proof of FHWA acceptance is provided. Additional information and requirements can be seen at the FHWA website Roadside Hardware Policy and Guidance.

B. The Florida DOT ***Materials Manual*** Chapter 12 contains the requirements for the Quality Control Program and Quality Assurance for FRP products that are to be used for Department contracts. The FRP Production Facility Listing is available on the State Materials Office website at:

   https://www.fdot.gov/materials/quality/programs/qualitycontrol/materialslistings/postjuly2002.shtm

2 BASALT AND GLASS FIBER REINFORCED POLYMER (BFRP, GFRP) AND CARBON FIBER REINFORCED POLYMER (CFRP) REINFORCING BARS

2.1 PERMITTED USE

A. BFRP, GFRP and/or CFRP reinforcing bars may be used in the following concrete components:

- Approach Slabs
- Bridge Decks and Bridge Deck overlays
- Cast-in-Place Flat Slab Superstructures
- Pile Bent Caps (Only specify GFRP and/or CFRP for submerged locations)
- Pile Jackets
- Pier Columns and Caps (Only specify GFRP and/or CFRP for submerged locations)
- Retaining Walls, Noise Walls, Perimeter Walls
- Pedestrian/Bicycle Railings
- Bulkheads and Bulkhead Copings with or without Traffic or Pedestrian/Bicycle Railings
- MSE Wall Panels and Copings
- Drainage Structures
- Dowel bars for expansion joints in junction slabs when paired with a keyed joint.

B. Other components that may be considered but require SSDE approval before use, include:

- Traffic Railings
- Combined Traffic Railing / Noise Walls
- Bulkhead Copings with Traffic Railings

C. The use of BFRP, GFRP and/or CFRP reinforcing bars in other locations will be considered on a case-by-case basis.

D. Do not use BFRP reinforcing bars in concrete components permanently submerged in water, unless the bars meet ASTM D8505 and the producer is in compliance with the ***AASHTO Product Evaluation and Audit Solutions'*** CCR technical services program.

2.2 DESIGN CRITERIA

A. Design all concrete members containing GFRP reinforcing bars in accordance with the ***AASHTO LRFD Bridge Design Guide Specifications for GFRP Reinforced Concrete***. For BFRP use the same design criteria as GFRP.

B. Design all concrete members containing CFRP prestressing bars, strands and tendons in accordance with the **AASHTO Guide Specification for the Design of Concrete Bridge Beams Prestressed with CFRP Systems.**

C. Refer to the ***AASHTO LRFD Bridge Design Specifications*** and ***ACI CODE-318*** for requirements and criteria that are not specifically addressed in the above listed publications.

D. Where factored loads are referenced in the above listed ***ACI*** publications, use load factors prescribed by ***AASHTO LRFD Bridge Design Specifications***.

2.3 ADDITIONAL GUIDANCE

A. Do not use CFRP reinforcing bars in contact with carbon steel reinforcing, metal lifting devices or other embedded metal items.

B. Use the nominal diameters, nominal cross-sectional areas, and the mechanical properties of FRP reinforcing bars in accordance with ***Specifications*** Section 932-3 for the design of structural concrete.

C. Calculate the development length of CFRP bars (l_e) per ***ACI PRC-440.1***.

D. Show all Permissible locations, types, and dimensions of splices, including staggers, for CFRP reinforcing bars in the Plans. Calculate the lengths of tension lap splices per ***ACI PRC-440.1***. Splicing of FRP reinforcement by mechanical connections is not permitted.

E. Increase the maximum design strain limit for GFRP and BFRP shear stirrups from 0.004 to 0.006. The CFRP shear stirrup reinforcement strain limit is 0.004 inch/inch.

Commentary: The FRP design tensile strain limits for shear stirrup are based on research supported under NCHRP Project 12-121 and ***FDOT BDV30-977-22(A)****.*

F. Use the following minimum concrete covers:

FRP Reinforced Component (Precast and Cast-in-Place)	Environment		
	S[1]	M[1]	E[1]
	Concrete Cover (inches)		
Superstructure Components			
Cast-in-Place Beams	2		
Top deck surfaces of Short Bridges[2]	1.5		
Top deck surfaces of Long Bridges[2]	2[3]		
Front and back surfaces of Pedestrian/Bicycle Railings constructed using the slip form method	2.5		
Wall copings and all other bridge superstructure surfaces and components not listed above	1.5		
Noise Wall Posts	2		
Precast Concrete Perimeter Wall Posts	1.75		
Precast Noise and Perimeter Wall Panels	1.5		
Substructure Components			
External surfaces cast against earth	3		
Exterior formed surfaces, columns, and tops of footings	2		
Exterior formed surfaces of Approach Slabs other than the bottom surface	2		
Beam/Girder Pedestals No. 5 bars and smaller	1.5		
Beam/Girder Pedestals No 6 bar thru no. 10 bars	2		
Prestressed Piles	3[4]		
Drilled Shafts	4		
Drilled Shafts with Casing	3		
Cast-in-Place Cantilever Retaining Walls and Gravity Walls	2		
MSE Walls No. 5 bars and smaller	1.5		
MSE Walls No 6 bar thru. no. 10 bars	2		
Box and Three-sided Culverts	2		
Bulkheads and Sheet Pile Wall Caps	2		
Sheet Piles	Front and Back Faces - 3[5] Sides - 2		

1. S = Slightly Aggressive; M = Moderately Aggressive; E = Extremely Aggressive
2. See Short & Long Bridge Definitions and exempted bridge types in ***SDG*** Chapter 4.
3. Cover dimension includes a 0.5-inch allowance for planing; See ***SDG*** 4.2.2.
4. The 3" cover facilitates the use of existing formwork and strand configurations as shown on the ***Standard Plans*** for concrete piles pretensioned with steel strands. A 2" cover is permitted for non-standard pile designs which utilize CFRP strands for pretensioning.
5. The 3" cover facilitates the use of existing formwork and strand configurations as shown on the ***Standard Plans*** for concrete sheet piles pretensioned with steel strands. A 2" cover is permitted for non-standard sheet pile designs which utilize CFRP strands for pretensioning.

G. In the plans, specify the concrete class in accordance with ***SDG*** 1.4.3 except do not specify the use of highly reactive pozzolans or calcium nitrite for corrosion protection.

Commentary: Until the Department completes further research on the requirements for minimum cover and concrete admixtures for use with FRP reinforcing bars, the use of existing requirements for a given concrete class without the listed admixtures for corrosion protection is a conservative approach which will enable FRP reinforcing bars to be used where it benefits the Department.

H. Use ***Standard Plans*** 415-010 FRP Bar Bending Details. Include this standard in the plans using the Developmental Standard Plans Usage Process in ***FDM*** 115.

2.4 PREPARATION OF SPECIFICATIONS PACKAGE

Specifications Sections 400, 410, 415, 932 and 933 are available and include minimum material requirements for FRP reinforcing bars and their use in concrete components. The use of additional specifications and/or Modified Special Provisions for materials, fabrication and construction techniques may be necessary based on project specific requirements. It is the responsibility of the EOR to ensure all specifications required for the Contractor to successfully complete the project are included in the project Specification Package.

3 CARBON FIBER REINFORCED POLYMER (CFRP) STRANDS

3.1 PERMITTED USE

Standard Plans for sheet piles, and square and round bearing piles with CFRP strands are available. See ***SDG*** Table 3.5.1-1 for additional requirements. CFRP strands may be used with the pretensioned beam shapes shown in the ***Standard Plans*** without prior approval of the SSDE. Contact the SDO for guidance when using CFRP strands with pretensioned beams.

3.2 DESIGN CRITERIA

A. Design concrete members using CFRP strands in accordance with the ***AASHTO Guide Specification for the Design of Concrete Bridge Beams Prestressed with CFRP Systems***.

B. Refer to ***ACI PRC-440.4 Prestressing Concrete Structures with FRP Tendons*** for requirements and criteria that are not specifically addressed in the above listed publication.

3.3 ADDITIONAL GUIDANCE

A. In the plan notes, specify the values assumed in the design for the following mechanical properties:

- Minimum Ultimate tensile strength of CFRP strand, f_{pu} (ksi) per ***Specifications*** Section 933
- Ultimate strain in CFRP strand, ε_{pu} as defined in ***ACI PRC-440.1*** and ***ACI PRC440.4***
- Minimum Modulus of Elasticity of CFRP strand, E_f (ksi) per ***Specifications*** Section 933, but assuming 22,400 ksi for CFRP cable-strand and 18,000ksi for single bar-strand.
- CFRP stressing force. Limit the stressing force to that allowed for the same size of 270 ksi carbon steel strand.

Commentary: The CFRP strands cannot be jacked directly and must be coupled to carbon steel strand tails. To keep stresses at safe levels, the maximum jacking force must consider the carbon steel strand tails. For example, the maximum jacking force is 44 kips for 0.6-inch diameter CFRP strand.

- Maximum concrete tensile stress in prestressed components with bonded prestressing for the Service Limit State is $0.19\sqrt{f'c}$ (ksi)

B. Place a note in the plans directing the Contractor to either obtain products using strands meeting these criteria, or submit shop drawings and calculations for a revised reinforcement scheme using the properties obtained from the manufacturer.

C. In the plans, specify the concrete class in accordance with ***SDG*** 1.4.3 except do not specify the use of highly reactive pozzolans or calcium nitrite for corrosion protection.

Commentary: Until the Department completes further research on the requirements for minimum cover and concrete admixtures for use with CFRP strands, the use of existing requirements for a given concrete class without the listed admixtures for corrosion protection is a conservative approach which will enable CFRP strands to be used where it benefits the Department.

D. Do not use CFRP strands in combination with or in contact with steel reinforcing, proprietary pile splices or other embedded steel items. For confinement reinforcing, use only BFRP or GFRP or CFRP spiral ties.

E. The use of preplanned proprietary pile splices is not permitted.

3.4 PREPARATION OF SPECIFICATIONS PACKAGE

Specifications Sections 400, 415, 450, 932 and 933 include construction requirements for concrete piles and minimum material requirements for FRP reinforcing bars and CFRP prestressing strands. The use of additional specifications and/or Modified Special Provisions for materials, fabrication and construction techniques may be necessary based on project specific requirements. It is the responsibility of the EOR to ensure all specifications required for the Contractor to successfully complete the project are included in the project Specification Package.

4 CARBON FIBER REINFORCED POLYMER (CFRP) STRUCTURAL STRENGTHENING

4.1 PERMITTED USE

Externally bonded CFRP composite systems may be used for strengthening and repairs as part of a design project when approved by the SSDE, and as part of a maintenance project when approved by the State and/or District Structures Maintenance Engineer(s).The use of externally bonded systems for piers subjected to vehicular impact loads is prohibited.

4.2 DESIGN CRITERIA

A. FRP composite systems used in repair or strengthening shall have CFRP as the primary reinforcement. If either a pre-cured laminate or wet layup system is used, the resin and adhesive must be a thermoset epoxy formulation specifically designed to be compatible with the fibers or pre-cured shapes. In wet layup systems, shear and flexural reinforcement shall have no more than three layers except as required for anchorages.

B. Design all FRP repair systems for concrete members in accordance with ***ACI PRC-440.2-17 Guide for the Design and Construction of Externally Bonded FRP Systems for Strengthening Concrete Structures*** except as noted herein. Obtain loads using the ***AASHTO LRFD Bridge Design Specifications (LRFD)***.

C. Modify Section 9.2 as follows:

When strengthening a single girder in a span containing at least four similar girders, the following limit shall control:

$$(\Phi R_n)_{Existing} \geq (1.1S_{DL} + 0.75S_{LL})$$

Where:

$(\Phi R_n)_{Existing}$ = the capacity of the existing member prior to strengthening

S_{DL} and S_{LL} = the unfactored dead load and live load effects, respectively, that occur after the member has been strengthened.

When multiple girders in a single span are strengthened then the following limit shall control:

$$(\Phi R_n)_{Existing} \geq (1.1S_{DL} + 1.0S_{LL})$$

If the capacity is insufficient to satisfy this equation, then implement alternative means of strengthening or replacement of the structure. Use resistance factors from ***LRFD*** for this check.

D. Modify Section 9.4 as follows:

For environmental considerations, use an environment reduction factor C_E = 0.85 for all bridge applications.

E. Modify Section 10.2.8 and 10.3.1.4 as follows:

Check stresses in existing reinforcement (using Equations 10.2.8a or 10.3.1.4a/b) using Service I Load Combination from ***LRFD***.

F. Modify Section 10.2.9 and 10.3.1.5 as follows:

Use the standard fatigue truck from ***LRFD*** to check fatigue stresses in CFRP composites. Check allowable fatigue stresses in prestressing or mild steel using Chapter 5 of the ***LRFD***.

G. Modify Chapter 11 as follows:.

Shear strengthening using FRP is restricted to complete wrapping or 3-sided U-wrapping as illustrated in Figure 11.2 from ***ACI*** 440.2R-17. If U-wrapping is used, the termination of the wrap must be anchored to prevent debonding. Design U-wrap systems using an anchorage that has been previously tested to ensure the system will behave in a similar manner to a completely wrapped system.

H. Modify Chapter 14 as follows:

In addition to the requirements in Section 14.1.2, place transverse CFRP reinforcement at the termination points of each ply of CFRP flexural reinforcement, and along the length of the member from end to end of the CFRP reinforcement at a maximum spacing of **d**. Alternatively, place 0-90 degree fabric, which when wrapped the full depth of the web can provide simultaneous transverse and longitudinal strengthening. The width of the transverse reinforcement at the termination shall measure at least **¾d** along the member axis and shall have at least 30% of the capacity of the flexural reinforcement. Intermediate transverse reinforcement shall have a minimum length of **d/4**.

4.3 PREPARATION OF SPECIFICATIONS PACKAGE

The Engineer of Record shall develop Technical Special Provisions for construction and quality control that conform to the specifications given in Attachment A of ***National Cooperative Highway Research Program (NCHRP) Report 609*** "Recommended Construction Specifications and Process Control Manual for Repair and Retrofit of Concrete Structures Using Bonded FRP Composites", except as noted herein.

Technical Special Provisions should be non-proprietary, multi-vendor solutions (2 minimum), reviewed and approved by the State Specifications and Estimates Office and the State Structures Design Office, or District Structures Maintenance Office as applicable per ***FRPG*** Section 4.1.

5 THERMOSET PULTRUDED STRUCTURAL SHAPES

5.1 USAGE CONSIDERATIONS

A. The use of thermoset pultruded structural shapes is permitted for the following applications without prior approval by the SSDE:

1. Bridge fender systems per ***SDG*** 3.14
2. Stay-in-place formwork for bridge decks per ***SDG*** 4.2 and where permitted by ***Specifications*** Section 400

B. The Department will consider the use of thermoset pultruded structural shapes in the following applications for structural members:

1. Pedestrian bridges (structural members and bridge decking)
2. Structural shapes for miscellaneous structures (e.g. access/inspection platforms)
3. Single sign support posts (see also ***FRPG*** 1.3)
4. Light poles (see also ***FRPG*** 1.3)
5. Sheet Piles
6. Tubes used as arch beams for bridge culverts (concrete-filled only)
7. Tubes used for concrete filled bearing piles.

5.2 DESIGN CRITERIA

A. Design bridges using concrete-filled thermoset pultruded tubes in accordance with the ***AASHTO LRFD Guide Specifications for Design of Concrete-Filled FRP Tubes for Flexural and Axial Members***.

B. Design all other thermoset pultruded structural shapes in accordance with ***ASCE 74-23 Load and Resistance Factor Design (LRFD) for Pultruded Fiber Reinforced Polymer (FRP) Structures***.

C. In addition to the requirements of Paragraph B, design pedestrian bridges using thermoset pultruded structural shapes in accordance with the ***AASHTO Guide Specifications for Design of FRP Pedestrian Bridges***.

5.3 ADDITIONAL GUIDANCE

A. In the plan notes, specify the design criteria and the values assumed in the design.

B. Place a note in the plans directing the Contractor to either obtain products meeting these criteria, or submit shop drawings and calculations for revised structural shapes using the properties obtained from a producer shown on the list of ***Producers with Accepted Quality Control (QC) Programs***.

C. The thermoset pultruded structural shape must meet the requirements of ***Specifications*** Section 973.

5.4 PREPARATION OF SPECIFICATIONS PACKAGE

For applications other than bridge fender systems, create and include a Technical Special Provision for construction requirements in the project Specifications Package based on the ***ANSI Code of Standard Practice, Industry Guidelines for Fabrication and Installation of Pultruded FRP Structures***.

6 VACUUM INFUSION PROCESS (VIP) STRUCTURAL SHAPES

6.1 USAGE CONSIDERATIONS

A. The use of Vacuum Infusion Process (VIP) structural shapes is permitted for bridge fender systems per ***SDG*** 3.14 without prior approval by the SSDE.

B. The Department will consider the use of VIP structural shapes in the following applications for structural members:

1. Decks for pedestrian bridges
2. Single sign support posts (see also ***FRPG*** 1.3)
3. Light poles (see also ***FRPG*** 1.3)
4. Sheet Piles
5. Stay-in-place formwork where permitted by ***Specifications*** Section 400
6. Tubes used as arch beams for bridge culverts (concrete-filled only)

6.2 DESIGN CRITERIA

A. Design bridges using concrete-filled VIP tubes in accordance with the ***AASHTO LRFD Guide Specifications for Design of Concrete-Filled FRP Tubes for Flexural and Axial Members***.

B. For all other usages of VIP structural shapes, use environmental reduction factors in accordance with ***ASCE 74-23 Load and Resistance Factor Design (LRFD) for Pultruded Fiber Reinforced Polymer (FRP) Structures*** to account for material degradation and loss of ductility over the design service life of the structure or component.

C. In addition to the requirements of Paragraph B, design pedestrian bridge decks manufactured from VIP structural shapes in accordance with the ***AASHTO Guide Specifications for Design of FRP Pedestrian Bridges***.

6.3 ADDITIONAL GUIDANCE

A. In the plan notes, specify the design criteria and the values assumed in the design.

B. There are currently no established industry-wide design, fabrication, and construction specifications for VIP; therefore, full scale testing may be required at the discretion of the SSDE. Provide a report from an independent laboratory certifying any required testing.

C. The VIP structural shape must meet the requirements of ***Specifications*** Section 973.

6.4 PREPARATION OF SPECIFICATIONS PACKAGE

For applications other than bridge fender systems, create and include a Technical Special Provision for construction requirements in the project Specifications Package based on the use of VIP structural shapes that are obtained from a producer shown on the list of ***Producers with Accepted Quality Control (QC) Programs***.

7 THERMOPLASTIC STRUCTURAL SHAPES

7.1 USAGE CONSIDERATIONS

A. The use of thermoplastic structural shapes for bridge fender systems per ***SDG*** 3.14 is permitted without prior approval by the SSDE.

B. The Department will consider the use of thermoplastic structural shapes in the following applications for structural members:

   1. Landscaping retaining walls
   2. Sheet pile walls
   3. Boardwalk structures

7.2 DESIGN CRITERIA

Design thermoplastic structural shapes containing FRP reinforcing bars meeting the requirements of ***Specifications*** Section 932 and using the applicable criteria from ***ACI PRC-440.1, Guide for the Design and Construction of Structural Concrete Reinforced with FRP Bars***.

7.3 ADDITIONAL GUIDANCE

A. In the plan notes, specify the design criteria and the values assumed in the design.

B. The design of thermoplastic structural shapes containing FRP reinforcing must only consider the structural properties of the FRP reinforcing contained within its thermoplastic matrix, except fender system wales may substitute macro-fiber reinforcing for FRP reinforcing bar.

C. The thermoplastic matrix must meet the requirements of ***Specifications*** Section 973.

D. In the plans, provide details of each member's cross section and the location, size and grade of any FRP reinforcing bars.

E. There are currently no established industry-wide design, fabrication and construction specifications for thermoplastic structural shapes; therefore, full scale testing may be required at the discretion of the SSDE. Provide a report from an independent laboratory certifying any required testing.

7.4 PREPARATION OF SPECIFICATIONS PACKAGE

For applications other than bridge fender systems, create and include a Technical Special Provision for construction requirements in the project Specifications Package based on the use of thermoplastic structural shapes that are obtained from a producer shown on the list of ***Producers with Accepted Quality Control (QC) Programs***.

Locations of revisions to the Structures Manual are indicated by vertical bars in the left margin. Descriptions of the revisions are provided below. Vertical bars will indicate locations of minor editorial changes; however, minor editorial changes are not included in this summary.

INTRODUCTION – REVISION HISTORY

VOLUME 1 – REVISION HISTORY

1.3.2.B	Added corrosion inspection database.
2.6.2 & 2.6.3	Consideration for pier protection barrier or strengthening.
Fig. 2.11.9-1	Clarify position of longitudinal load to produce extreme force effects.
Table 3.1-1	Table updated. Two-sided attack, double values of the sacrificial thickness.
3.1 & 3.5.1	Implementation of FDOT Report BDV29-977-51 Evaluation of Concrete Pile to Footing or Cap Connections. Criteria added for estimating the bending capacity of a prestressed concrete pile embedded into a reinforced concrete component.
3.2.A & B	Clarification and new bullet for input and output of data and GDM replaced SFH throughout.
3.2.E	Clarification.
3.5.3	Moved to 3.13.3.1 (new section). Sections 3.5.4 through 3.5.20 subsequently renumbered to 3.5.3 through 3.5.19.
3.5.5	Clarification on Drag Load consideration. New sub-sections added.
3.5.8	Geotechnical critical embedment depth required to achieve structural fixity and updated figure.
3.5.9.A	Software updated and pile quantity estimation method for Non-Conventional projects clarification.
3.5.11.B	Required confirmation of the unit skin friction and end bearing values in order to use the associated resistance factor.
3.12.2	New Steel Sheet pile Wall ***Standard Plans*** Index 455-500 added.
3.5.13.B	Note added to refer to the Geotechnical Design Manual.

3.5.14.F	Additional Resistance note added to piles.
3.6.3	Clarification on Downdrag and associate drag load.
3.6.7.G	Additional Resistance note added to drilled shafts.
Table 3.6.4-2	Updated resistance factors for Geotechnical resistance of micropiles.
3.12.2.D	New note for temporary steel sheet pile wall applications.
3.13.3	Clarification on permanent and temporary walls.
Fig. 3.13.3-1	***SDM*** Figure 19.7-1 (Location of Critical Temporary Walls) moved to ***SDG*** Section 3.13.3 as Figure 3.13.3-1.
3.13.3.1	New section. Previously 3.5.3. Clarification between critical and non-critical temporary sheet piles and 3.13.1.B.4 added restricting use of hollow bars as tie-back.
3.17.10	Revise reference for FRC design to latest fib Model Code 2020 ed.
4.1.A	Clarified structurally non-redundant.
5.9	Section 5.9.1 and 5.9.2 (HRBS) added.
7.1.4	Clarification on major widening.
7.5.2.D	Clarified SSDE involvement.
7.5.3	Modified and moved the modification for non-conventional projects to 7.5.2.
7.5.4.A	Modified language for the evaluation of the remaining Fatigue life for steel bridges.
9.3	Updates to historic bridge costs office and website.
10.2.K	Added new language for fatigue resistance of structural tubing connections.
10.3.E	Added new language for truck induced gust pressure.
10.4.C	Added new language for primary members, CVN testing, and NSTM requirements.

VOLUME 2 – REVISION HISTORY

3.2	Standard files names table added.
5.2.B	Standard Specifications ebook frequency update.
5.2.H.3	Finish machine wheel location updated.
5.3.D.1	Clarification on welding procedures.
11.4 & 11.5	Updates to address Downdrag and Drag Load.
Fig. 16.6-6	Half-round bearing stiffener figure added.
19.2	Permanent and temporary wall control limits.
19.5.2	Critical term deleted from temporary sheet pile walls in the commentary.
19.6	Critical term deleted from temporary walls in the commentary.
19.6.1.A	Critical term deleted from temporary sheet pile walls in the commentary.
19.7	Clarification on limits for critical and non-critical temporary walls.
19.7.1	Non-critical term added.
Fig. 19.7-1	This figure was moved to SDG 3.13.3.
19.7.2	Clarification on critical and non-critical temporary sheet pile walls.

VOLUME 3 – REVISION HISTORY

C5.13	Clarification on support structures.
18.1	Clarification on the reuse or rehabilitation of foundations.
18.2	New section added: Mast Arm Foundation Reuse.
19	New section added: Toll Gantry Structures.

VOLUME 4 – REVISION HISTORY

2.1.B	Inclusion of Noise Wall / Traffic Railing combo
2.1.D	Clarification on the use of Basalt, Glass Fiber Reinforced Polymer, and Carbon Fiber Reinforced Polymer reinforcing bars.
2.3.E	Added section 2.3.E to address the maximum design tensile stress for GFRP, BFRP, and CFRP shear stirrups.