AASHTO GFRP-Reinforced Concrete Design Training Course



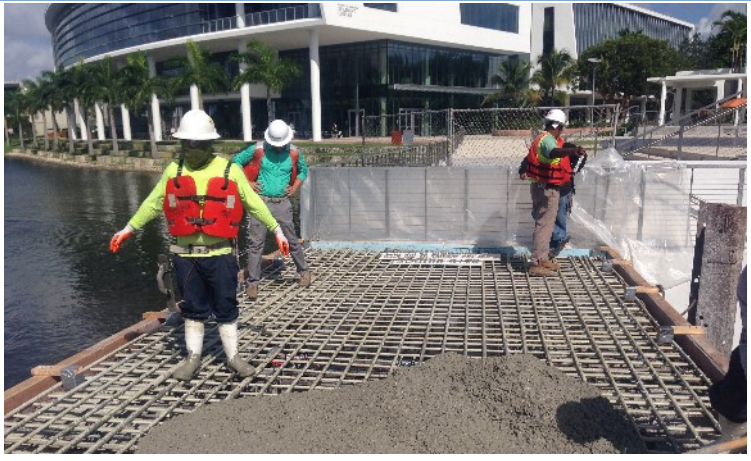



FDOT

UNIVERSITY OF MIAMI

Center for Integration of Composites into Infrastructure

Course Outline

1. Introduction & Materials
2. Flexure Response
3. Shear Response
4. Axial Response
5. **Case Studies & Field Operations**

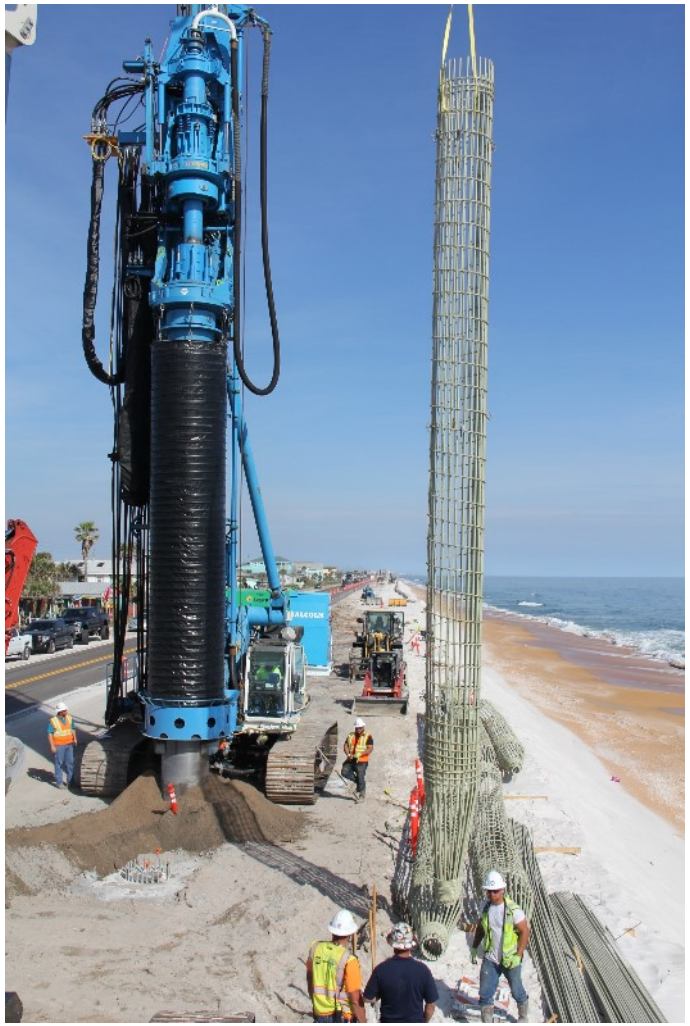

5. CASE STUDIES
&
FIELD OPERATIONS

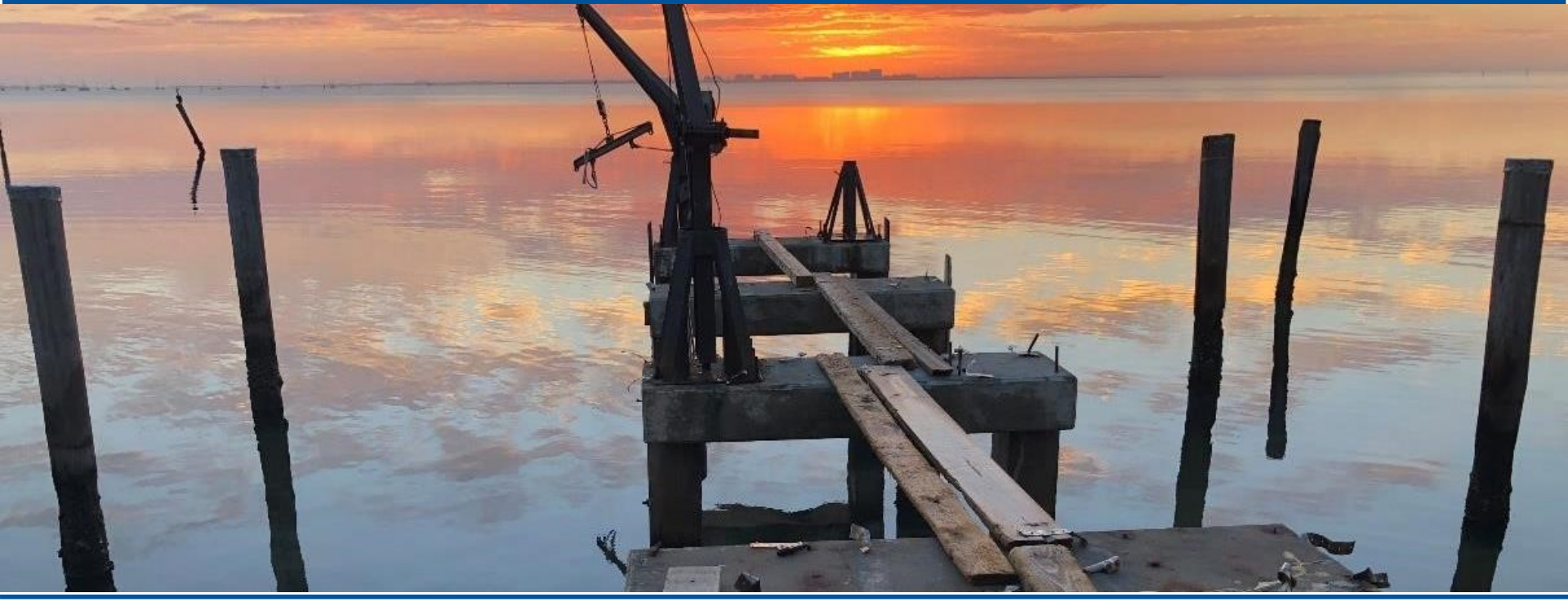

FDOT

UNIVERSITY OF MIAMI

Center for Integration of Composites into Infrastructure

Table of Contents – Case Studies

- **iDock (Marine Dock)**
- NE 23rd Avenue Bridge over Ibis Waterway (FPN 434359-1-52-01)
- Halls River Bridge (HRB) (FPN 430021-1-52-01)
- SR-A1A Flagler Beach (Segment 3), (FPN 440557-7-52-01)
- FDOT Fast Facts

iDock Construction Intent - Miami, Florida

- Replacement of hurricane Irma- damaged dock with GFRP-RC precast concrete components, CIP BFRP-RC continuity pour and GFRP gratings
- Provide a demo prototype for precast-concrete dock modular-system, that exhibits extended durability and resilience to extreme events



Traditional vs. Innovative Approach



- **Traditional:** precast steel-PC piles and cast in-place RC caps with timber decking
- **Innovative:** precast modular-units with rapid assembly time with GFRP & BFRP reinforcement to eliminate corrosion-related maintenance and provide higher resistance

iDock Design

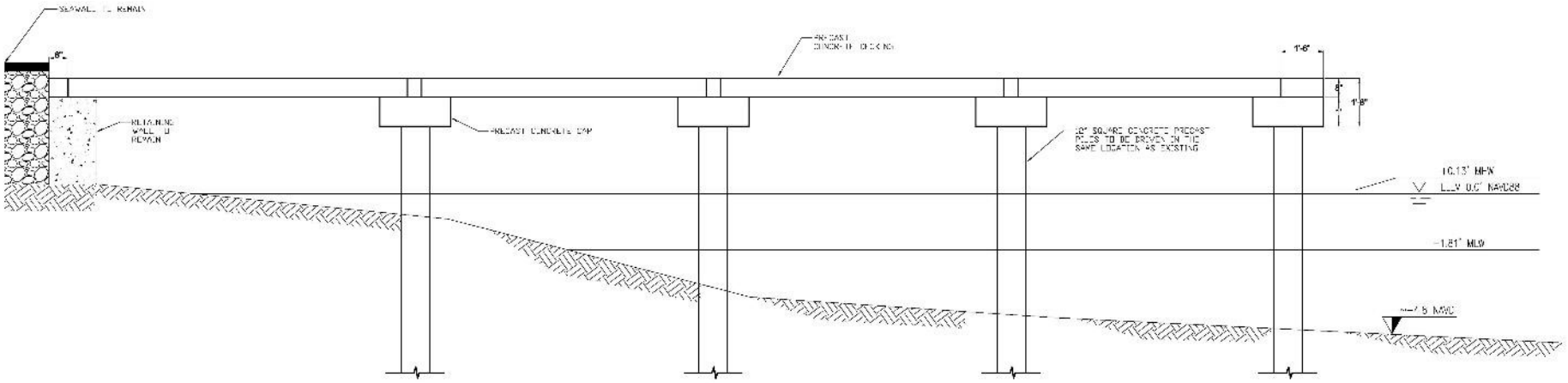

Four-span bridge-type dock with precast GFRP-RC driven piles, GFRP-RC pile-bent caps and slab-beams. Continuity CIP pour with BFRP bars and mesh

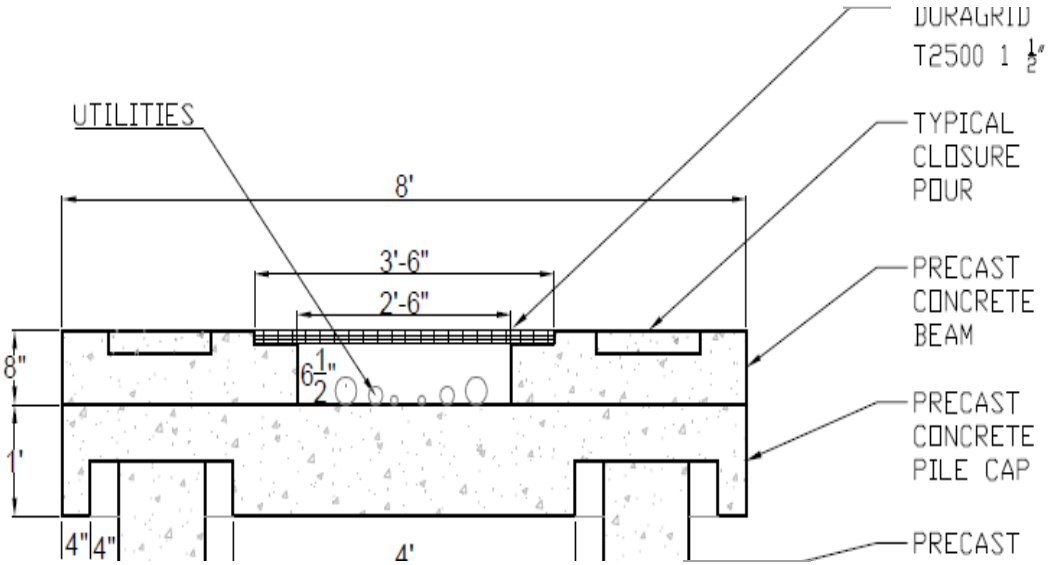

Precast Construction









Precast Construction

Slab

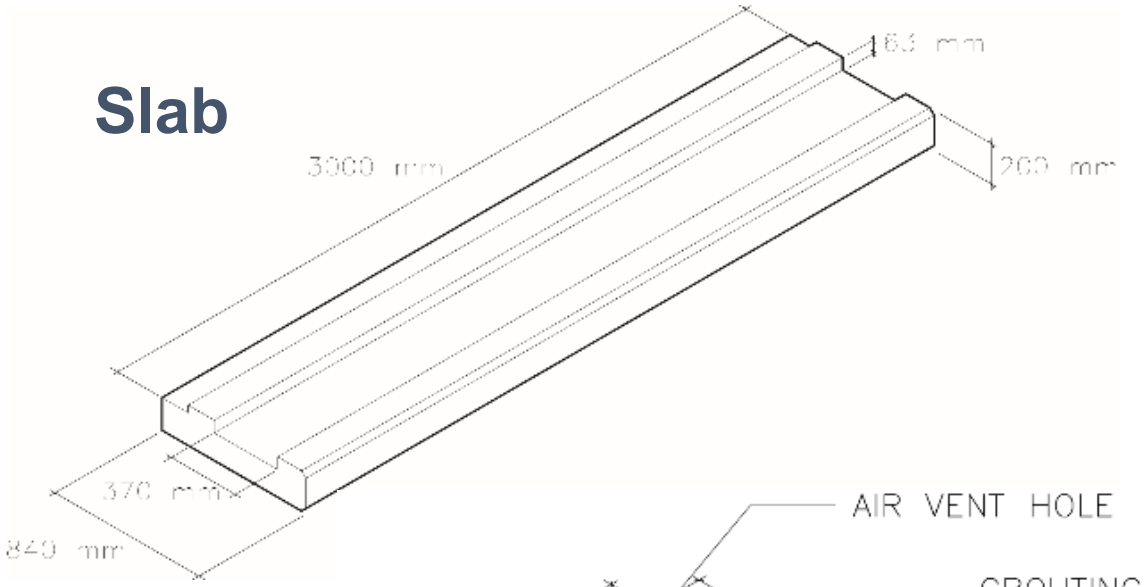

Pile Cap

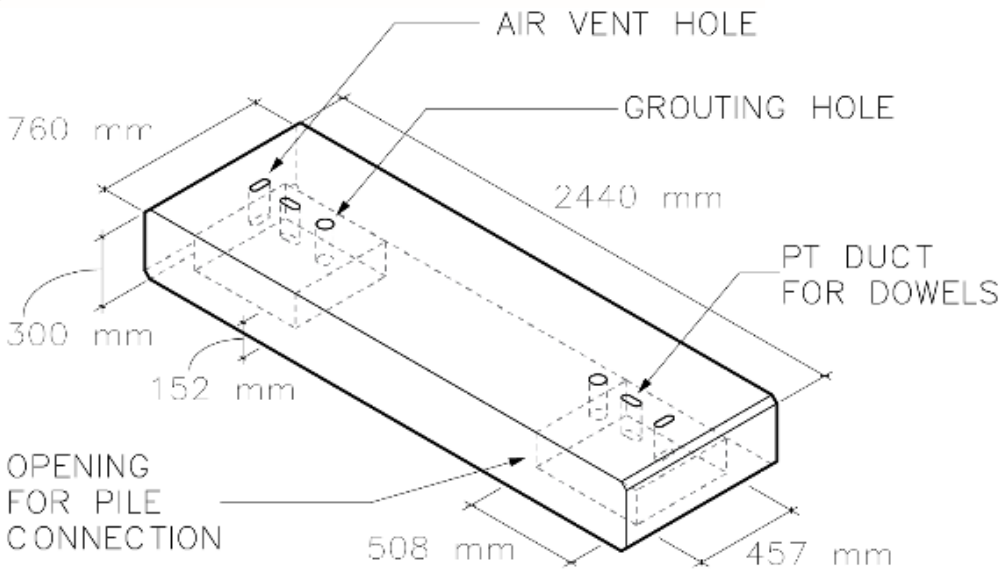

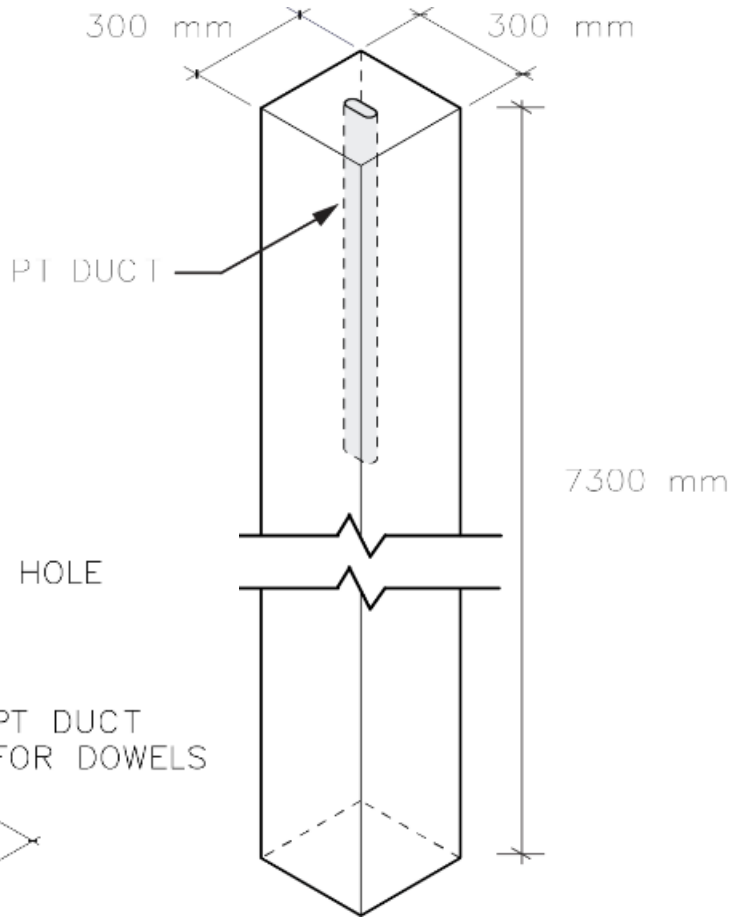

Pile

Precast Construction







Pile-Driving and Slab Installation



Pile-Driving at iDock

Piles installed in original steel-PC pile locations





Precast Slab-Beam installed in sections after cap placement

iDock Precast Element Installation







iDock Connections (Cap-Slab)

- GFRP dowel bars (greenish) connecting horizontal to vertical components
- BFRP (darker color) bars for flexural continuity
- Connection cast in place to interlock precast components and create continuity over the four spans

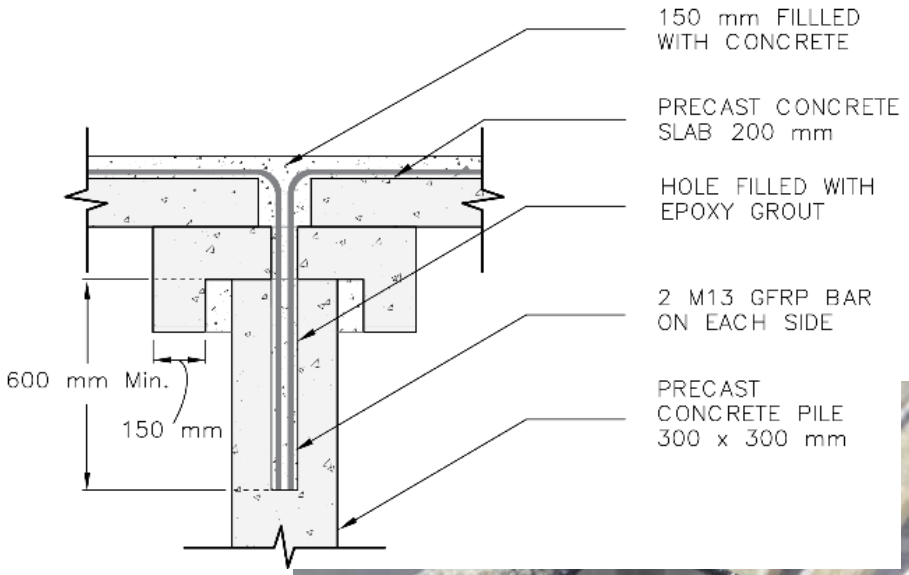

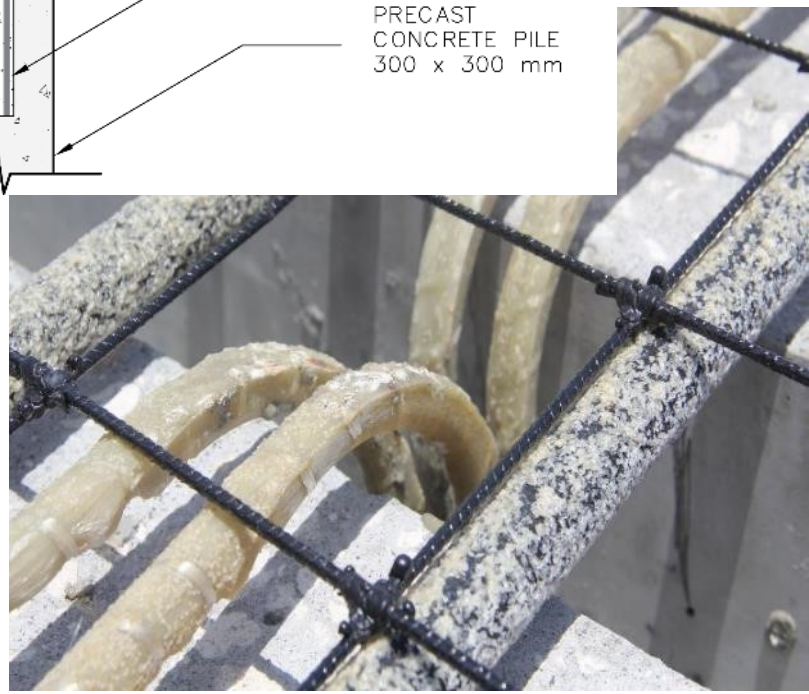

Dowels, Placement and Testing

GFRP Dowels

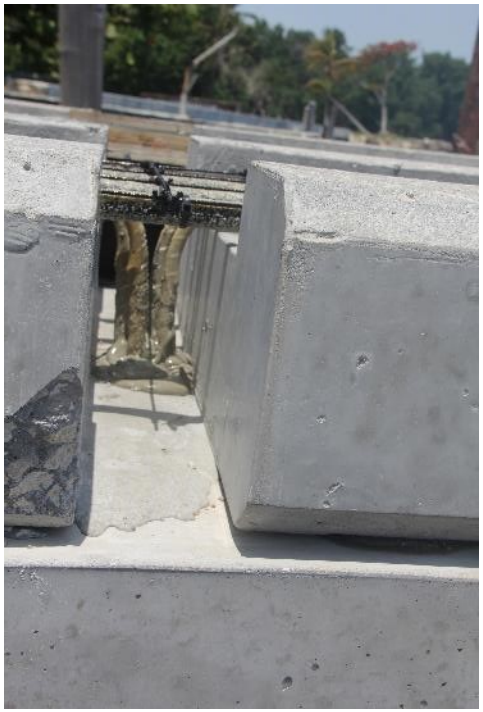

Slab-Beam with Grating



Cylinder Testing



Placement of Components and Material Testing for Q/A

Conclusions and Remarks

Components employed for the iDock project:

8 precast GFRP-RC Driven Piles [12x12 in. x 24 ft.]

4 precast GFRP-RC Pile-Bent Caps [12x30 in. x 8 ft.]

8 precast GFRP-RC Slab-Beams [8x33 in. x 10 to 12 ft.]





Conclusions and Remarks

Primary Benefits Realized/Expected:

- FRP reinforcement eliminates the need for deep concrete cover, concrete mixture additives, and waterproofing sealants needed for reinforcement corrosion protection
- Lightweight reinforcement allows for significantly lower labor and equipment costs due to ease of handling and transportation savings
- Additional owner benefits include an extended service life and significantly reduced maintenance costs

Table of Contents – Case Studies

- iDock (Marine Dock)
- **NE 23rd Avenue Bridge over Ibis Waterway (FPN 434359-1-52-01)** *Under construction*
- Halls River Bridge (HRB) (FPN 430021-1-52-01)
- SR-A1A Flagler Beach (Segment 3), (FPN 440557-7-52-01)
- FDOT Fast Facts

Ibis Waterway – A No-steel Bridge

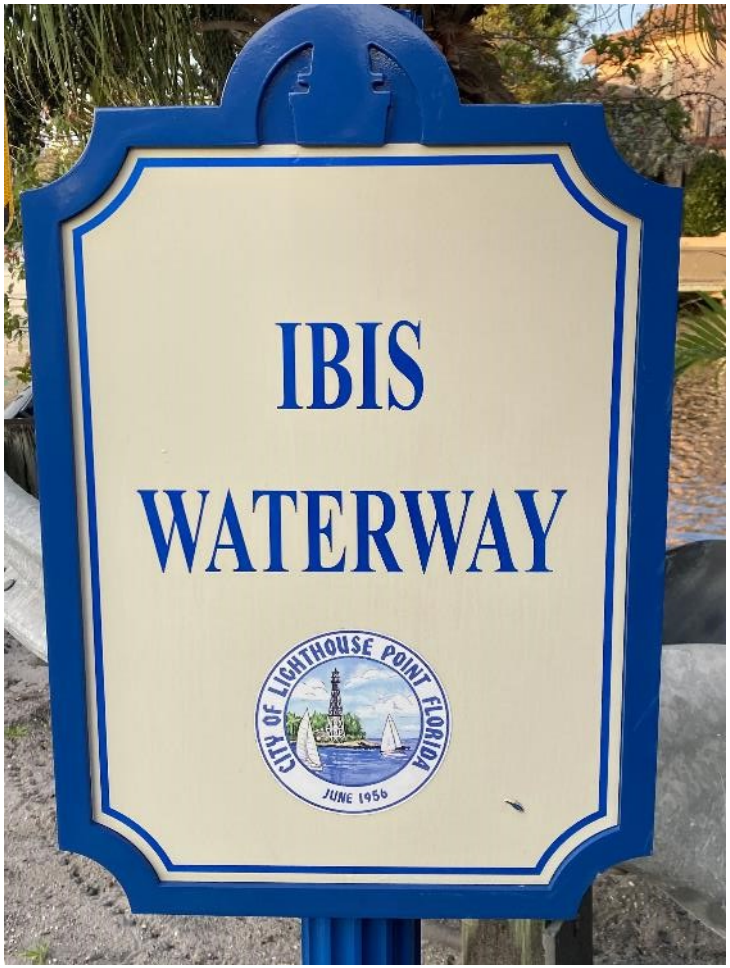

- IBIS-Waterway located at Lighthouse Point, Broward County, Florida
- Project consists of replacing existing bridge sub- and superstructure, while adding intermediate-bents
- Total CFRP-PC and GFRP-RC construction.
- First GFRP-RC 3-span continuous flat-slab bridge in Florida
- First time use of two experimental partially-prestressed GFRP piles

IBIS Waterway Bridge Layout

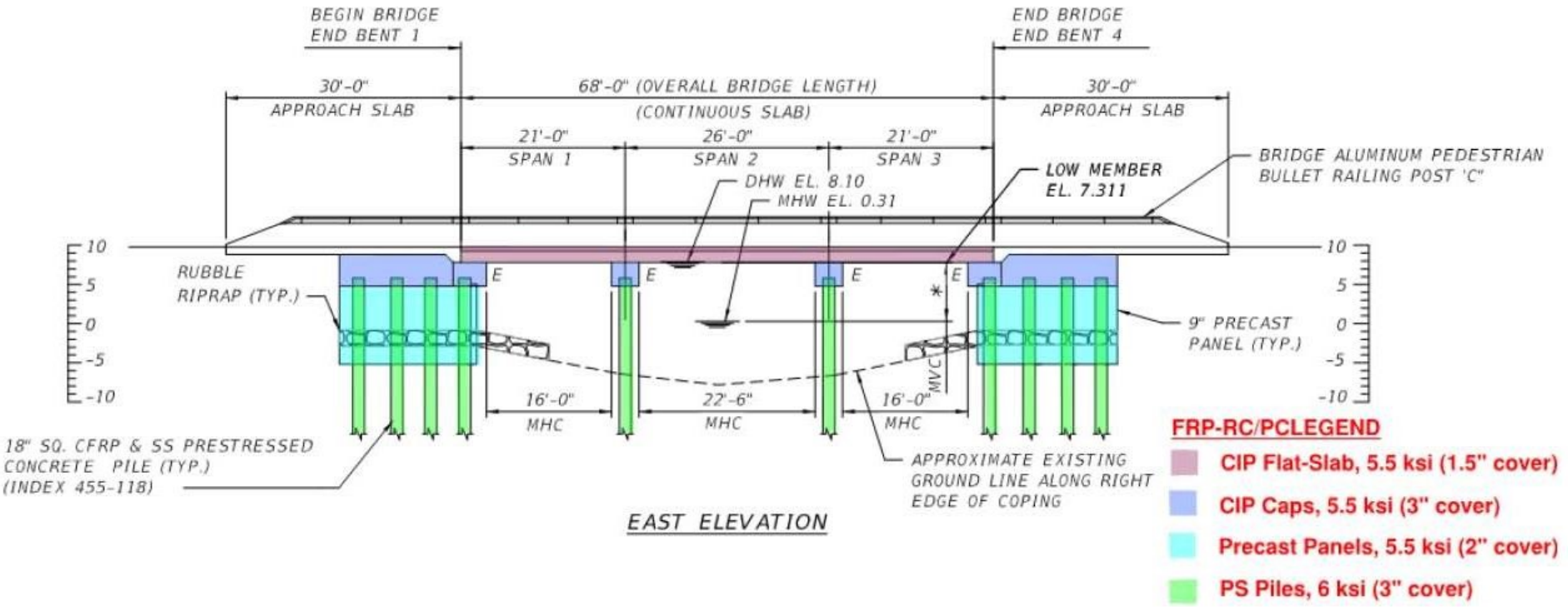

Three-span IBIS-Waterway bridge with CIP flat-slab, CIP caps, precast PC panels and piles

Production of Experimental GFRP Piles

Partially-prestressed GFRP piles

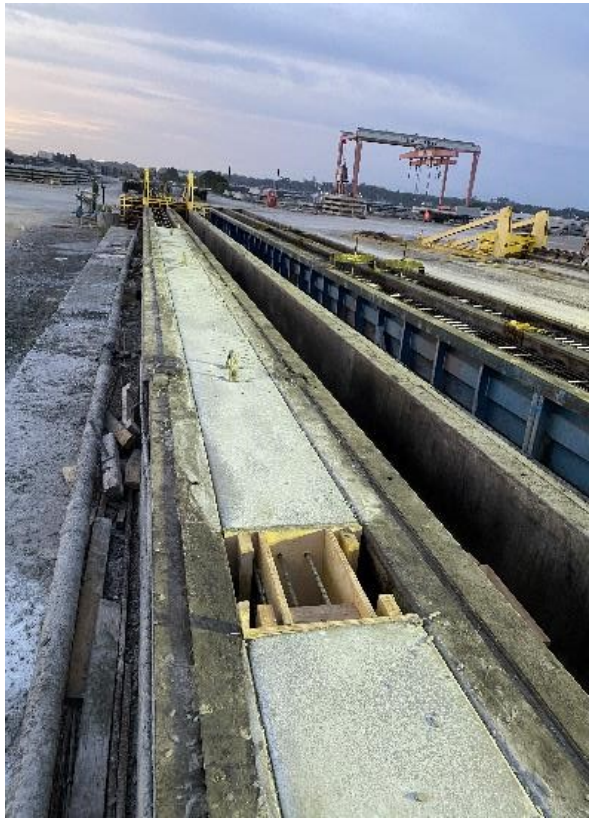

Cutting of GFRP tendons



- 18x18 in. cross-section
- 53 ft. long
- 12 prestressed #4 GFRP bars
- 12 unstressed #8 GFRP bars

Casting of piles at **Gate Precast Company** in Jacksonville, FL

Production of Experimental GFRP Piles





#4 GFRP bars (220 ft. long) uncoiled & coupled to 7-wire steel strands to reach length of the prestressing bed (about 430 ft.)

Pile-Driving in “very dense” Soil Conditions



Pile alignment via template construction to allow for FDOT specified tolerances

Initiation of **pile driving** with needed soil predrilling





Pile installation challenging due to power lines and tight site conditions

GFRP-RC Intermediate Bent Cap Beams





GFRP cage assemblies with spliced-bars at intermediate pile locations. GFRP bars inspected and lab-tested for Q/A

GFRP-RC Intermediate Bent Cap Beams

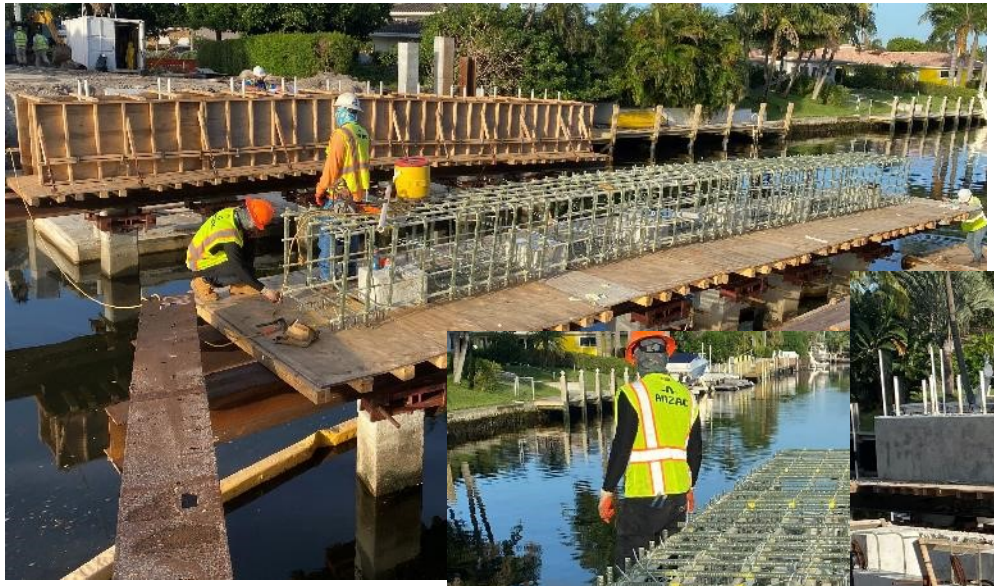

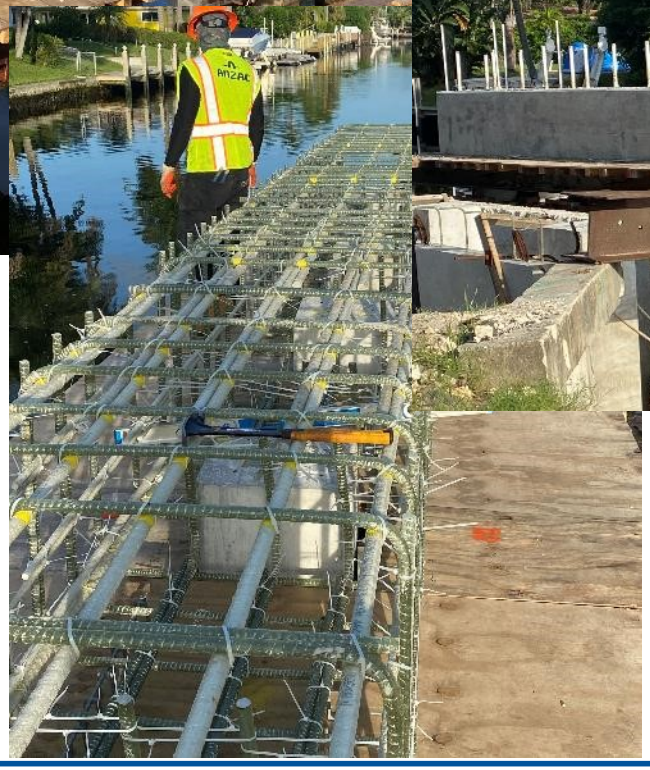



Completing assembly and forming

Casting completed and forms stripped

Learning Outcomes from IBIS Waterway

- Geotechnical challenges at site
- Experimental GFRP partially-prestressed piles successfully fabricated and driven
- Construction progressing as planned



Table of Contents – Case Studies

- iDock (Marine Dock)
- NE 23rd Avenue Bridge over Ibis Waterway (FPN 434359-1-52-01)
- **Halls River Bridge (HRB) (FPN 430021-1-52-01)**
- SR-A1A Flagler Beach (Segment 3) (FPN 440557-7-52-01)
- FDOT Fast Facts

First of a Kind 5-span Bridge

FRP PC/RC Structure

- FDOT replacement project / County Owner
- Five 37-ft. spans
- CFRP-PC piles and sheet piles
- GFRP-RC bulkheads, deck and railings
- Proprietary girders







Halls River Bridge

Prototype for Future FRP Bridge-Projects



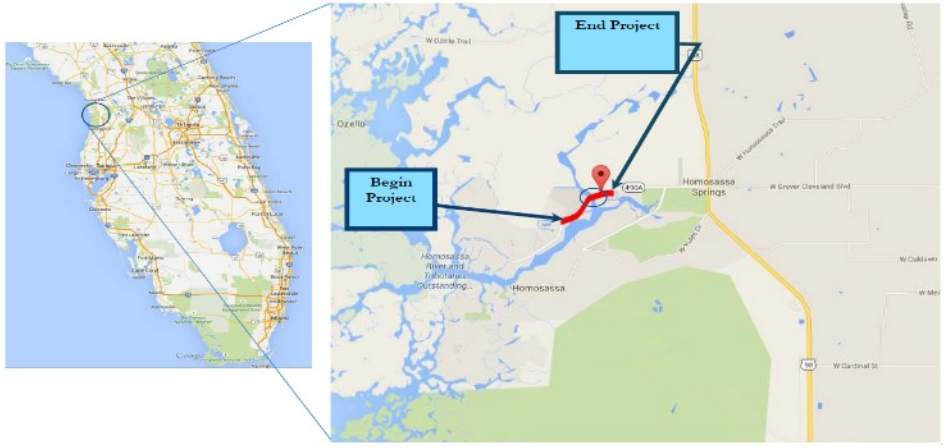

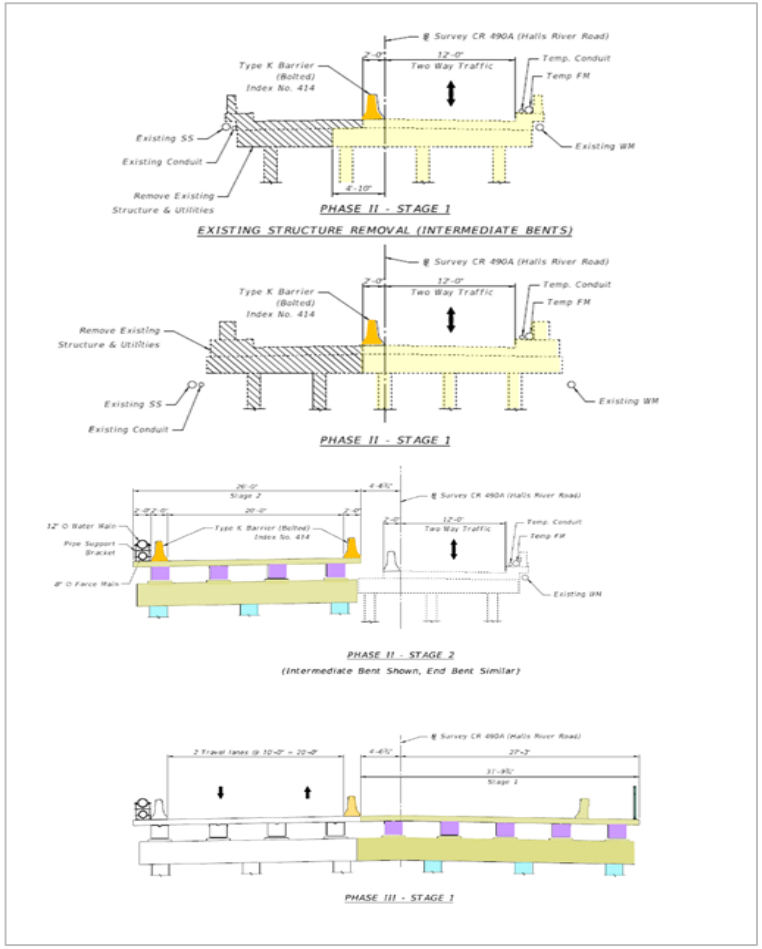

Sheet Piles: CFRP-PC/GFRP-RC (FDOT Index D22440)

- CFRP Strands (8 ø 0.6 in.)
- GFRP Ties (#4 @ 4 in.
- C40/45 (12 x 30 in.)
- 13 to 26 ft. depth
- Cantilever or tied-back

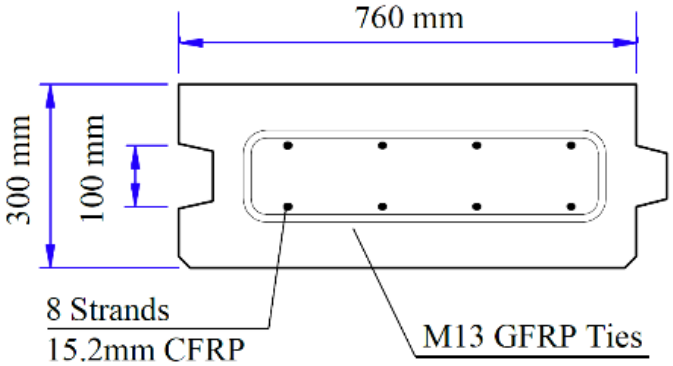

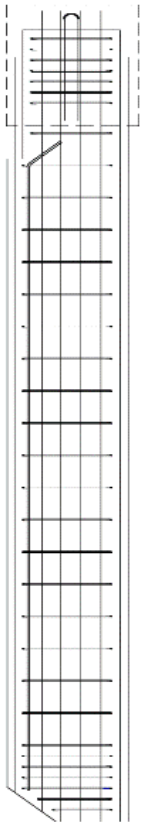





Bent Caps: GFRP-RC (FDOT Software Bent Cap v1.0)

- GFRP Bars (12 #8 T&B)
- GFRP Ties (#5 @ 5 in.)
- C38 (48 x 36 in.)
- 10 ft. long
- Cast-in-place



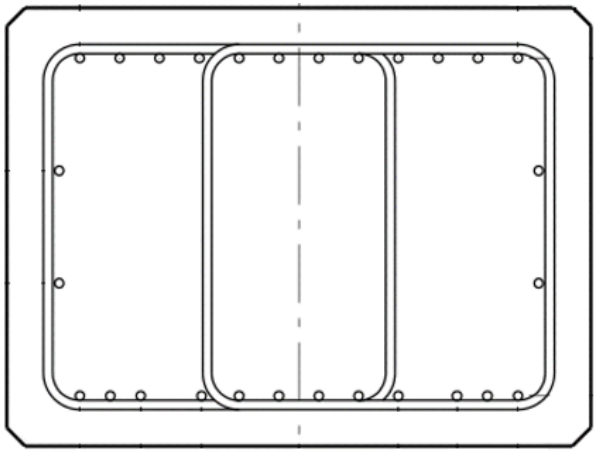

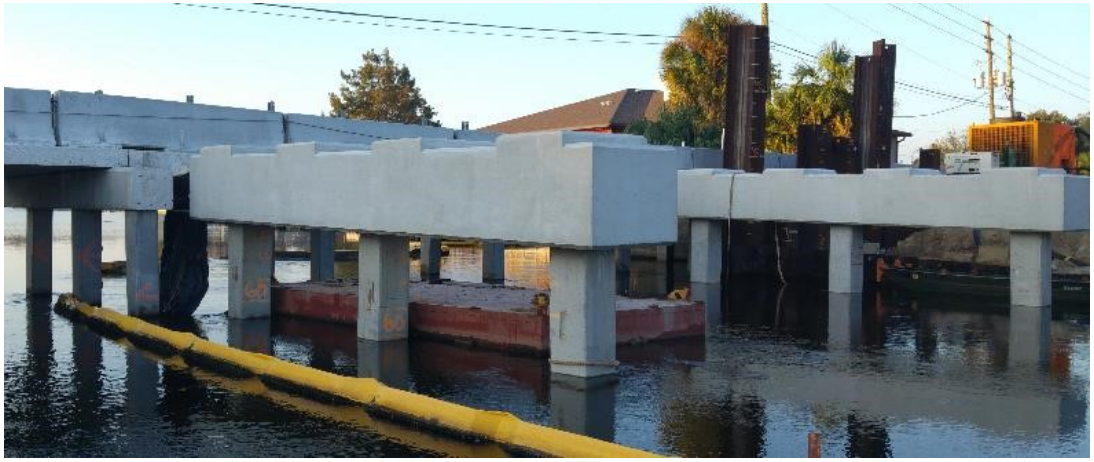

Deck: GFRP-RC (AASHTO GFRP 2nd Edition)

- GFRP Bars (Top & Bottom)
- Primary: #6 @ 4.5 in.
- Secondary: #6 @ 6 in.
- C30/37 (8.5 in. depth)
- 6.5 ft. girder spacing
- Cast-in-place

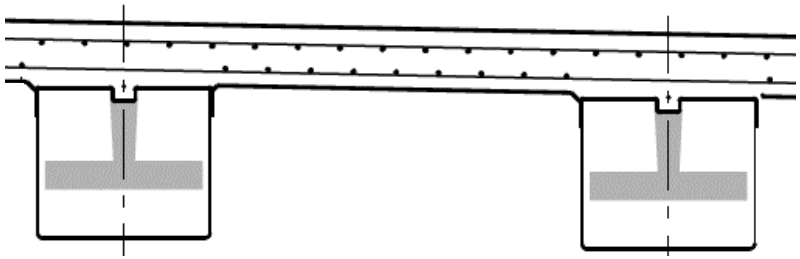





Learning Outcomes from Halls River Bridge

- FRP Sub/Superstructure (1st Project)
- 100+ Year Service Life
- Prototype for future FDOT Bridges
- HSCS/GFRP Hybrid (1st Project)
- Performance monitoring



FDOT

UNIVERSITY OF MIAMI

Center for Integration of Composites into Infrastructure

Table of Contents – Case Studies

- iDock (Marine Dock)
- NE 23rd Avenue Bridge over Ibis Waterway (FPN 434359-1-52-01)
- Halls River Bridge (FPN 430021-1-52-01)
- **SR-A1A Flagler Beach (Segment 3) (FPN 440557-7-52-01)**
- FDOT Fast Facts

Flagler Beach, FL (SR-A1A) Damage & Recovery







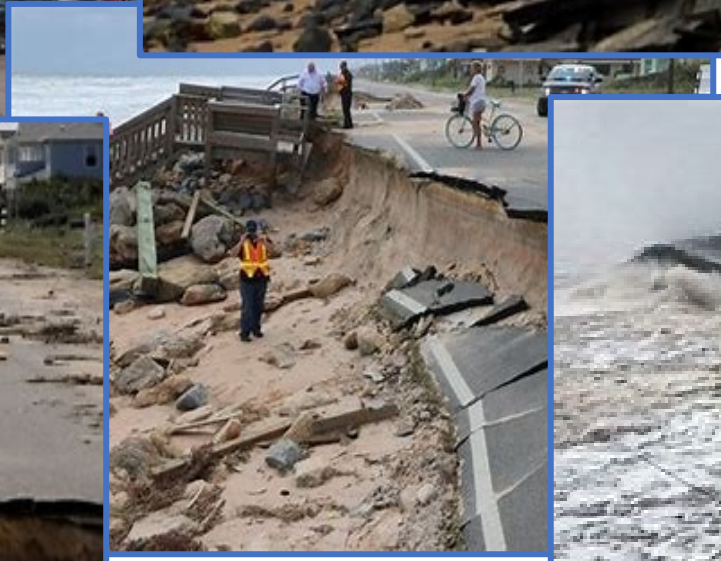





GFRP Design for Secant-Pile Seawall

- 4920-ft. long secant pile seawall
- First FDOT project with about 1.5 million linear feet of GFRP bars
- Secant piles in high chloride content sand, high water table and periodically exposed to salt spray

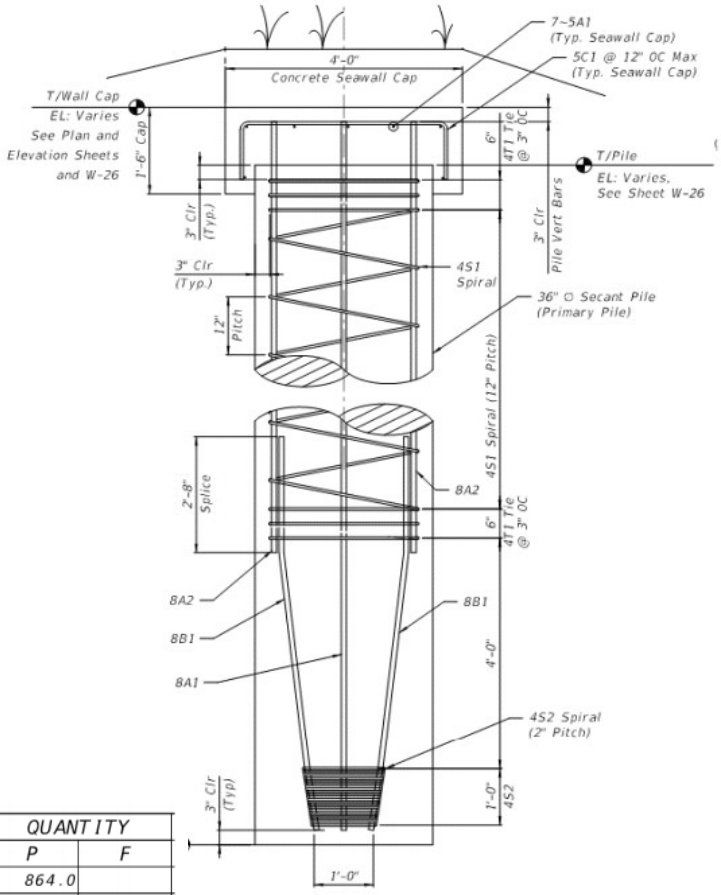

ARY PILE & CAP SECTION (SHOWN)
ATE PILE SIMILAR WITH SINGLE CENTER BAR ONLY)

WALL NO.	PAY ITEM NO.	PAY ITEM DESCRIPTION	LOCATION STA. TO STA.	SIDE	UNIT	QUANTITY P	QUANTITY F
W1 Thru W11	0400-4-11	Class IV Concrete (Retaining Wall Cap)		Rt	CY	864.0	
	415-10-5	Fiber Reinforced Polymor Bars, #5			LF	61892.0	
	455-112-6	Pile Auger Grouted, 36" Diameter			LF	51724.0	
		#5 GFRP Reinforcing Bars	approx.		FT	300,000	
		#8 GFRP Reinforcing Bars	approx.		FT	960,000	

FDOT

UNIVERSITY OF MIAMI

Center for Integration of Composites into Infrastructure

GFRP bar site delivery and storage

- Straight bars, bent bars, hoops and toe bent bars
- Site storage and protective measures from elements







GFRP Bars - Cage Assembly









GFRP Bars - Cage Assembly







- Cages constructed with 25 #8 GFRP bars, spiral ties and “toe-end”
- GFRP cages were 38-ft. in length

Guide Wall for GFRP Secant-Piles

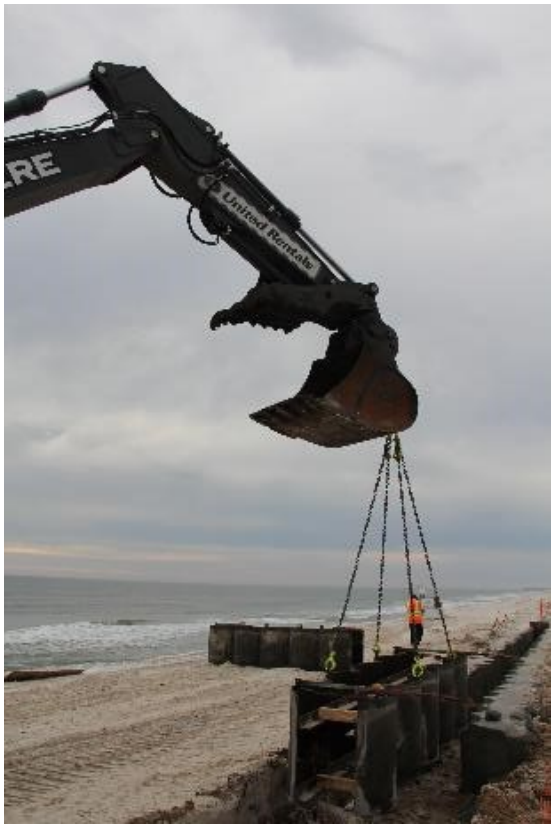

Guide wall trench boxes installed to assure pile alignment

Secant-piles installed via guide wall form





Removal of steel formwork prior to drilling secant-piles

Concrete Grouting of GFRP Secant-Piles

Concrete grouting of Secant-piles





Secant-pile cages delivered to pile-drilling area and ready for installation



1,847 Secant-piles installed. 5,000 linear feet of pile-cap

Flagler Beach - GFRP pile cage installation





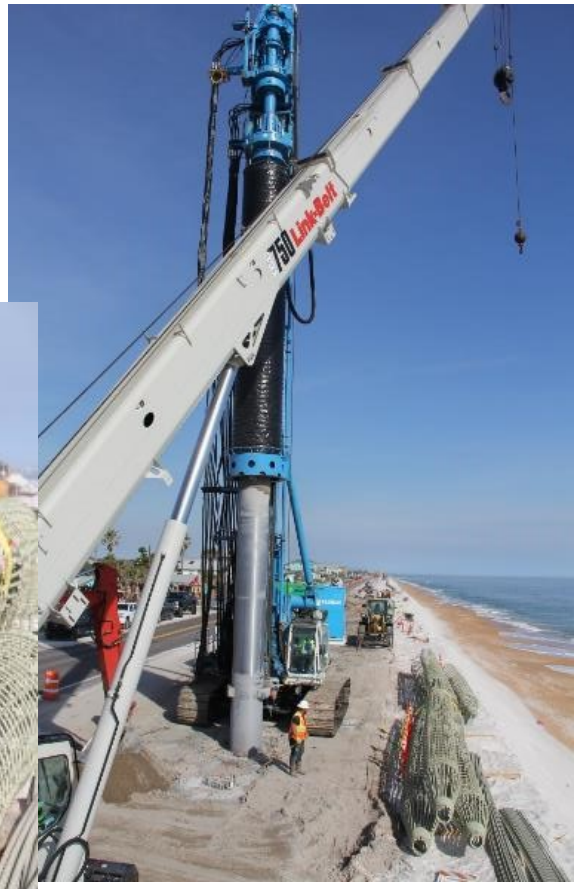

GFRP cage installation

Auger-cast primary piles 36 in. in diameter and 36 ft. long
Secondary piles18 ft. long

Continuous pile-cap and dune restoration







Pile-cap placement and dune restoration/re-establishment

Project completed in 4½ months



Aspects of GFRP Use

PROs

- Quick installation
- Light weight
- Assembly time savings
- “Toe” or “No-Toe” option
- GFRP cages remain in-place, i.e., “no flotation”

CONs

- Bent-shapes need to be pre-fabricated by pultruder
- No on-site bending of GFRP
- “Skin-itching” (protective clothes should be worn)
- More GFRP than black steel bars are needed

Learning Outcomes from SR-A1A

- No Secant-Pile cage alterations needed. Installed all 1,847 piles as per design-phase
- Quick and reliable installation in soft to medium dense sands
- GFRP cage assemblies resulted, in up to 52% time savings over “black steel”
- Toe assemblies may be removed in future projects
- Less noise pollution through Secant-Pile installation vs. Sheet-Pile installation



Table of Contents – Case Studies

- iDock (Marine Dock)
- NE 23rd Avenue Bridge over Ibis Waterway (FPN 434359-1-52-01)
- Halls River Bridge (FPN 430021-1-52-01)
- SR-A1A Flagler Beach (Segment 3), (FPN 440557-7-52-01)
- **FDOT Fast Facts**

www.fdot.gov/structures/innovation

Florida Department of TRANSPORTATION

Safety, Innovation, Mobility, Attract, Retain & Train

E-Updates | FL511 | Site Map | Translate

Search FDOT...

Home | About FDOT | Careers | Contact Us | Maps & Data | Offices | Performance

Structures Design

Structures Design / Design Innovation

Fiber Reinforced Polymer Reinforcing



Structures Design - Transportation Innovation

Fiber Reinforced Polymer (FRP)
Reinforcing Bars and Strands

FDOT

UNIVERSITY OF MIAMI

Center for Integration of Composites into Infrastructure

www.fdot.gov/structures/innovation

Multiple online resources available

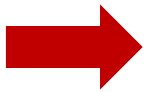

- Overview
- Usage Restrictions / Parameters
- Design Criteria
- Specifications
- Standards
- Producer Quality Control Program
- Projects
- Technology Transfer (T^2)
- FDOT Research
- Contact

www.fdot.gov/structures/innovation

Fast-Fact sheets for selected FDOT and affiliated projects in Florida (completed and under construction)

- 40th Ave NE over Placido Bayou
- Arthur Drive over Lynn Haven Bayou
- Bakers Haulover Cut Bulkhead Replacement
- Cedar Key Bulkhead Rehab
- Halls River Bridge
- Key West Bight Ferry Terminal Extension
- NE 23rd Ave over Ibis Waterway
- PortMiami Tunnel Retaining Walls
- South Maydell Dr over Palm River
- SR-A1A Flagler Beach Seawall (Segment 3)
- SR-A1A over Myrtle Creek and Simpson Creek
- SR-5 (US-17) over Trout River
- SR-5 (US 41) over Morning Star and Sunset Waterways
- SR-5 (US 41) over North Creek
- SR-30 over St Joe Inlet
- SR-312 over Matanzas River
- SR-520 over Indian River Bulkhead Rehab
- Sunshine Skyway Seawall Rehabilitation
- UM Innovation Bridge
- UM Fate Bridge
- UM I-Dock
- US-1 over Cow Key Channel

FDOT

UNIVERSITY OF MIAMI

Center for Integration of Composites into Infrastructure





Fast Facts:

Glass Fiber Reinforced Polymer

Project Location:	FDOT District Two Duval County Jacksonville, Florida
Agency:	Florida Department of Transportation
URL:	http://www.fdot.gov/structures/innovation/FRP.shtm
Project Name:	US-17 (SR-5) Over Trout River Bridge No. 720011 FPID: 426169-1
Project Description:	Bridge Substructure Rehabilitation
Project Purpose & Need:	Bridge Inspection Reports identified concrete deterioration in the substructure. Work activities included removal of existing Pile Jackets and installation of new Pile Jackets and Pier Footing Jackets with Impressed Current Cathodic Protection (ICCP). Glass Fiber Reinforced Polymer (GFRP) dowels and reinforcement were used in select locations.







Fast Facts:

Glass Fiber Reinforced Polymer

Project Location:	FDOT District Two Levy County Cedar Key, Florida
Agency:	Florida Department of Transportation
URL:	http://www.fdot.gov/structures/innovation/FRP.shtm
Project Name:	SR 24 over Number Three Channel Bridge No. 340003 FPID: 426169-1
Project Description:	Rehabilitation of three bridges in Cedar Key
Project Purpose & Need:	Bridge Inspection Reports identified deterioration, including evidence of corroded steel reinforcement in the bulkhead cap on bridge 340003. Work activities included removal of the existing bulkhead cap and installation of a new bulkhead cap with GFRP reinforcement.





Fast Facts:

Glass Fiber Reinforced Polymer

UNIVERSITY OF MIAMI

Project Location:	Coral Gables, Florida
Agency:	University of Miami
URL:	http://www.fdot.gov/structures/innovation/FRP.shtm
Project Name:	Innovation Pedestrian Bridge
Project Description:	Although this pedestrian bridge is a simple, single-span, 70 ft.-long construction, it offers a number of features intended to ensure a 75-year service life to its owner, the University of Miami. The bridge consists of the following concrete elements reinforced with FRP: auger-cast piles; cast-in-place pile caps and back walls; precast prestressed girders; and, cast-in-place deck topping and curbs. Stainless steel is used for the bearing plates of the girders, the anchor bolts for the lampposts, and the railings.
Project Purpose & Need:	The University of Miami deliberately chose this type of structure to demonstrate its commitment to innovation and sustainability for a pedestrian bridge used by students to access the sports and intermural fields on campus.



Fast Facts:

Glass Fiber Reinforced Polymer

UNIVERSITY OF MIAMI

Project Location:	Coral Gables, Florida
Agency:	University of Miami
URL:	http://www.fdot.gov/structures/innovation/FRP.shtm
Project Name:	Fate Pedestrian Bridge
Project Description:	This three-span pedestrian bridge with a short cantilever end allows for the crossing of the Lake Osceola at the University of Miami, Coral Gables Campus.
Project Purpose & Need:	Designed by renowned Arquitectonica, the Fate Bridge not only connects two sides of the campus, but also intends to become itself a place for gathering and reflection. The silhouette of the bridge with its variable cross-section is like an extension of the water surface. The bridge with an embedded monitoring system is a living laboratory to educate engineering and architecture students.



Questions?

Thank U

FDOT

UNIVERSITY OF MIAMI

Center for Integration of Composites into Infrastructure

AASHTO GFRP-Reinforced Concrete Design Training Course



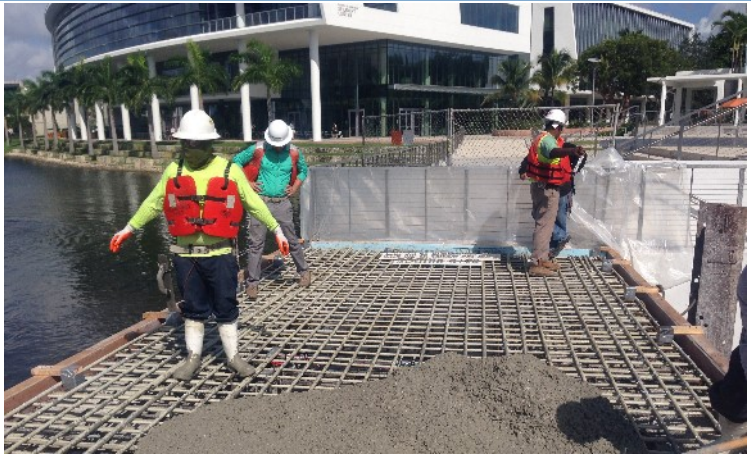



FDOT

UNIVERSITY OF MIAMI

Center for Integration of Composites into Infrastructure