FED. ROAD DIV. NO.	STATE	PROJECT NO.	FISCAL YEAR	SHEET NO.
3	FLA.			

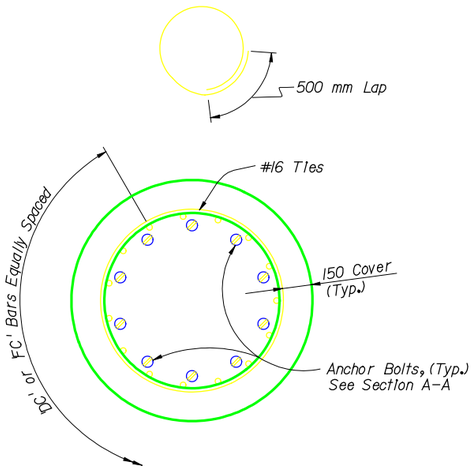

PLAN VIEW

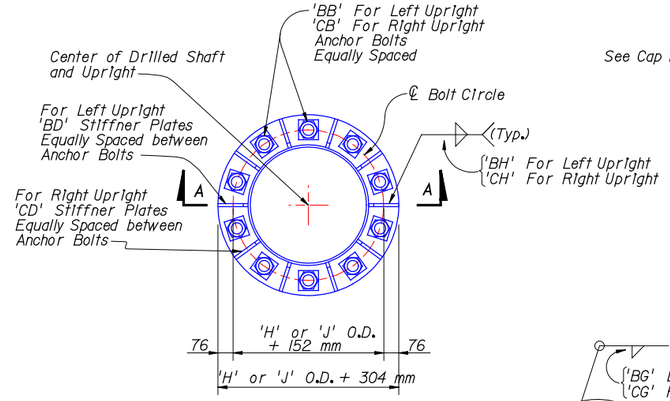

PLAN VIEW
(Base Plate)

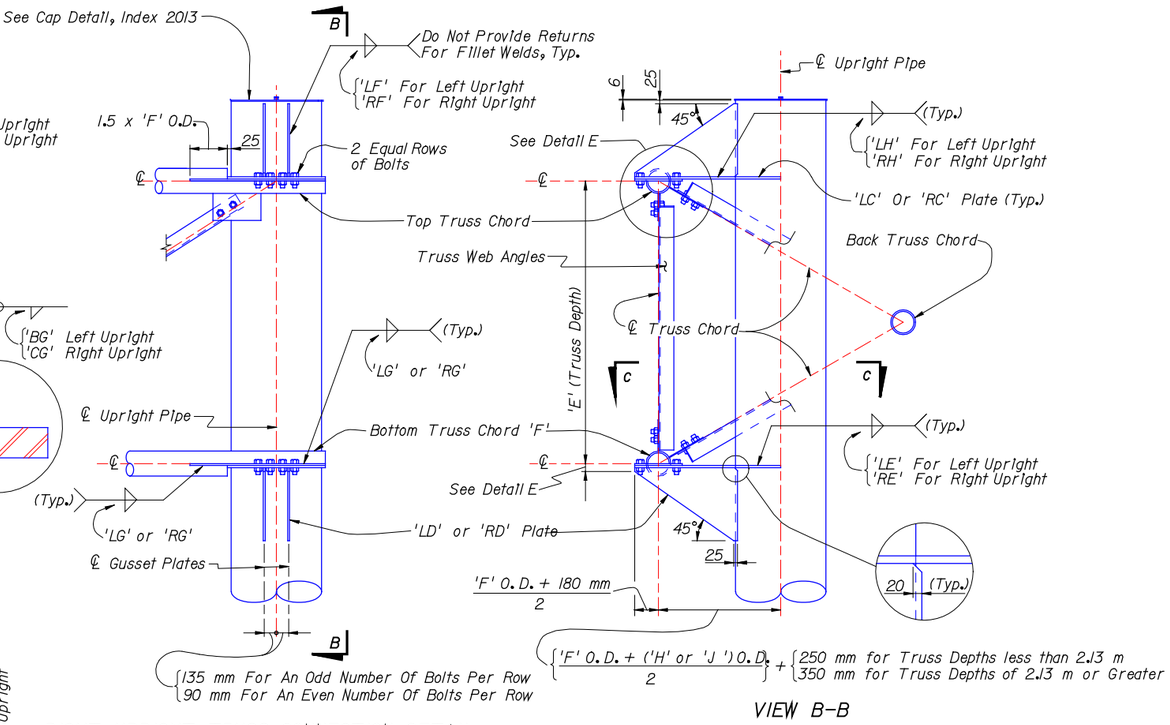

VIEW B-B

RIGHT UPRIGHT-TRUSS CONNECTION DETAIL
(LEFT UPRIGHT -TRUSS CONNECTION SIMILAR)
{Web Members From Back Truss Chord Omitted For Clarity}

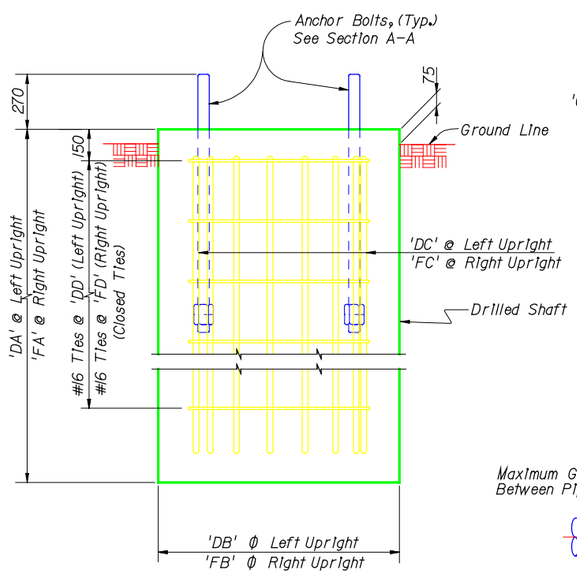

ELEVATION

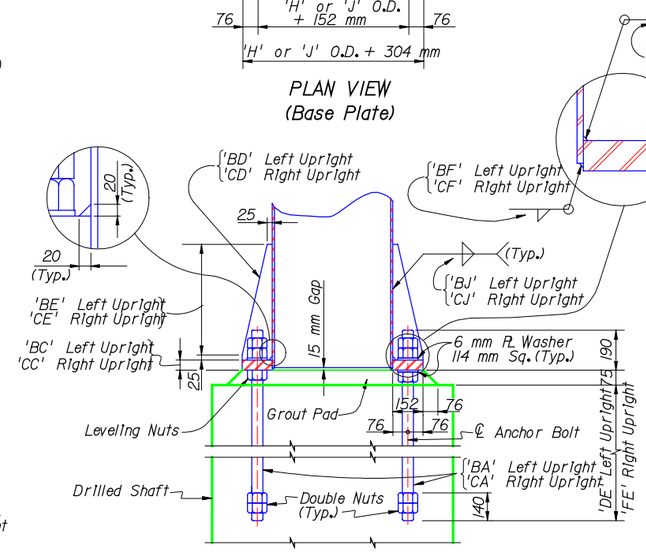

SECTION A-A

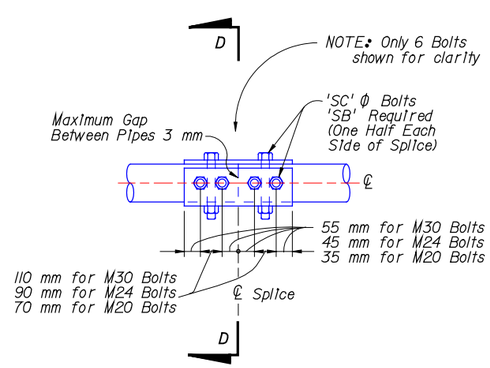

SPLICE CONNECTION DETAIL

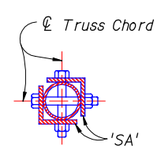

SECTION D-D

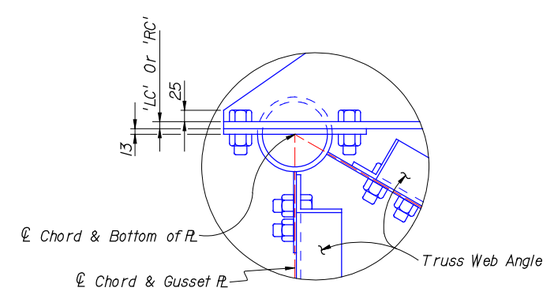

DETAIL E

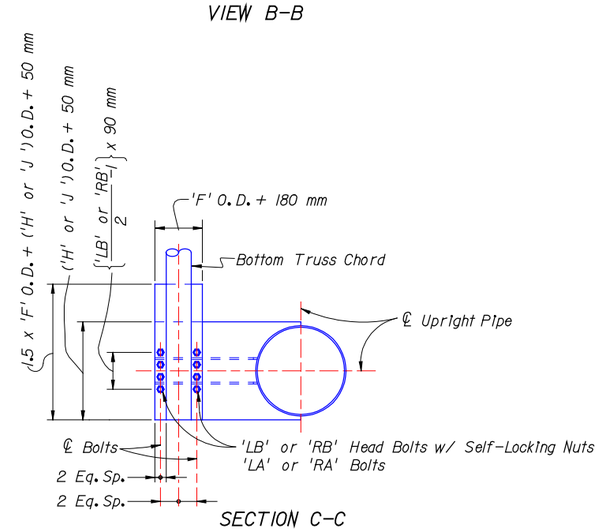

SECTION C-C
(With Gusset Plate and Angles omitted for clarity)

NOTE: Work this Standard with Standard Index Nos. 2011, 2013 and S-2014.

NOTE: See 'Tables Of Sign Structure Variables' for referenced dimensions, sizes and quantities.

NOTE: All dimensions are in millimeters (mm), except as noted.

REVISIONS					
DATE	BY	DESCRIPTION	DATE	BY	DESCRIPTION
			97R		

	NAMES	DATES
DRAWN BY	REB	6-89
CHECKED BY	MHA	6-89
DESIGNED BY	MHA	6-89
CHECKED BY	REN	6-89
APPROVED BY	REN	

ENGINEER OF RECORD.
STRUCTURES DESIGN OFFICE
CENTRAL OFFICE
605 Suwannee Street, MS 33
Tallahassee, Florida 32399-0450

LOGO.

SEAL.

FLORIDA DEPARTMENT OF TRANSPORTATION
STRUCTURES DESIGN OFFICE

ROAD NO.	COUNTY	PROJECT NO.

SHEET TITLE: SPAN SIGN STRUCTURE CONNECTION DETAILS

PROJECT NAME.

DRAWING NO. 1 of 1

INDEX NO. 2012

DATE "" TIME

s:\structuressoftware\odot\structures\odot\standards\97d\cadd\2012.dgn