FED. ROAD DIV. NO.	STATE	PROJECT NO.	FISCAL YEAR	SHEET NO.
3	FLA.			

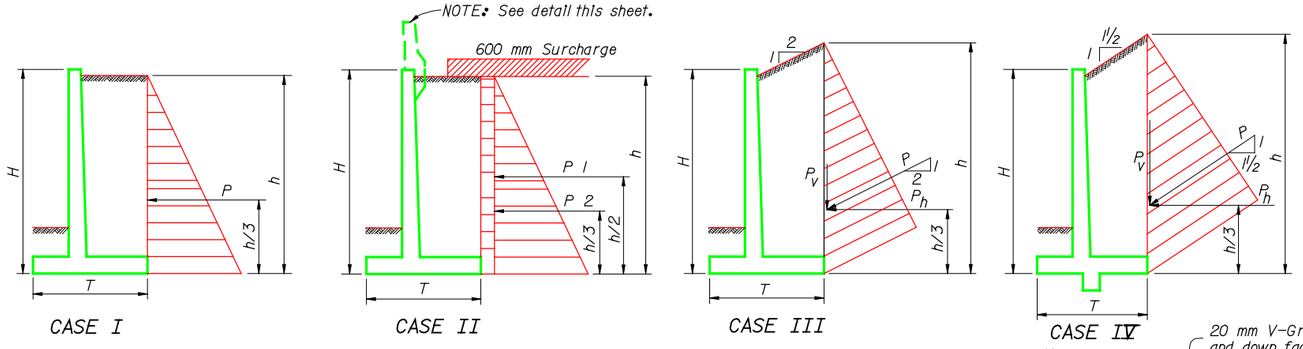

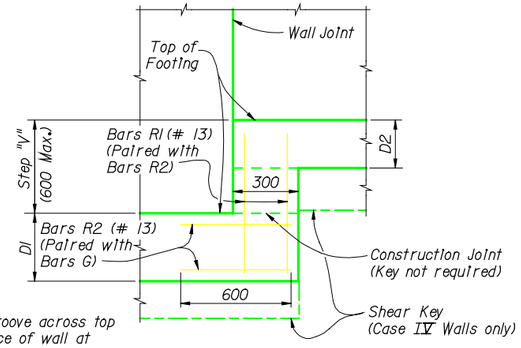

DETAIL "B"
(Showing Bars R only)

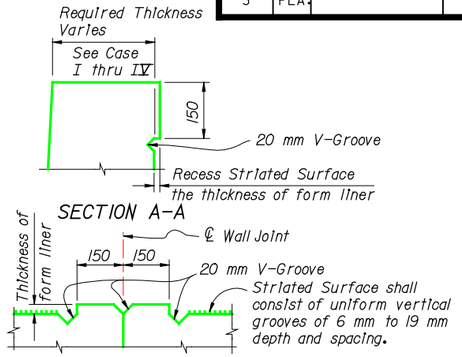

NOTES

GENERAL SPECIFICATIONS: Florida Department of Transportation Standard Specifications for Road and Bridge Construction, Current Edition with Approved Supplements thereto.

DESIGN SPECIFICATIONS: American Association of State Highway and Transportation Officials (AASHTO) Standard Specifications for Highway Bridges, Current Edition with approved Revisions thereto.

MATERIAL STRESSES: All allowable stresses are in accordance with current AASHTO Standard Specifications for all the materials shown in the plans.

CONCRETE: Concrete shall be Class II (f'c = 23 MPa) if environment is classified as slightly aggressive, or Class IV (f'c = 38 MPa) if environment is classified as moderately or extremely aggressive.

REINFORCING STEEL: All reinforcing steel shall conform to ASTM A615M-96, Grade 420.

SURFACE FINISH: A Class 5 Applied Finish Coating shall be applied to the top of the wall and the exposed face above the ground line.

RUSTICATION: Alternate Architectural Treatments may be substituted for the Striated Pattern shown when Approved by the Engineer. Concrete required by Architectural Treatment is not included in the quantities.

TRAFFIC RAILING BARRIER: For details of Barrier, see Structures Standard Index No. 700.

QUANTITIES: Concrete and Reinforcing Steel Quantities shall be based on the average height (H) and actual length of each unit. The quantities shall be calculated by interpolating, if necessary, between values given for the length of the "PER 8 m Unit" and "PER LIN. METER". Quantities for a unit less than 8 m long shall be based on the actual unit length, i.e.: actual unit length x "PER LIN. METER" quantity. Additional quantities for footings as required by Details "A" and "B", Traffic Railing Barrier, and Lug at top of Wall to accept Barrier shall be added to the Wall Quantities.

PAYMENT: Retaining walls in a slightly aggressive environment shall be paid for at the contract unit price for Class II Concrete (Retaining Walls) (Cu. Meter) and Reinforcing Steel (Retaining Wall) (kg).

Retaining walls in moderately or extremely aggressive environment shall be paid for at the contract unit price for Class IV Concrete (Retaining Walls) (Cu. Meter) and Reinforcing Steel (Retaining Wall) (kg).

N.S. Indicates Near Side.
F.S. Indicates Far Side.

NOTE: All dimensions are in millimeters unless otherwise noted.

The design based on the following assumptions for backfill material:
1. Density = 16.5 kN/m³
2. Angle of internal friction = 30°
Engineer of Record shall check the design & stability of the wall.

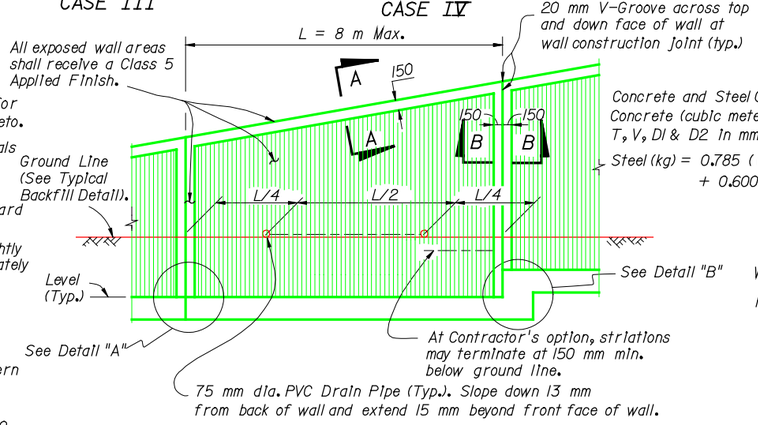

FRONT ELEVATION

Concrete and Steel Quantities per Step:
Concrete (cubic meter) = T (V+ D1 − D2)(0.3)/1,000,000
T, V, D1 & D2 in mm.

Steel (kg) = 0.785 ((No. of Bars R1)(Bar Length in meters) + 0.600 (No. of Bars R2))

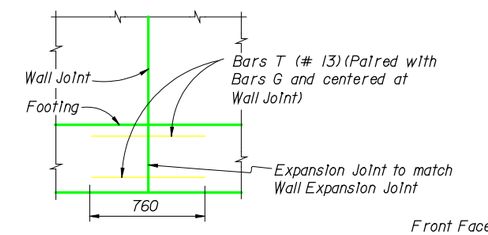

DETAIL "A"
(Showing Bars T only)
Steel Quantity per Joint (kg) :
0.6 (No. Bars T)

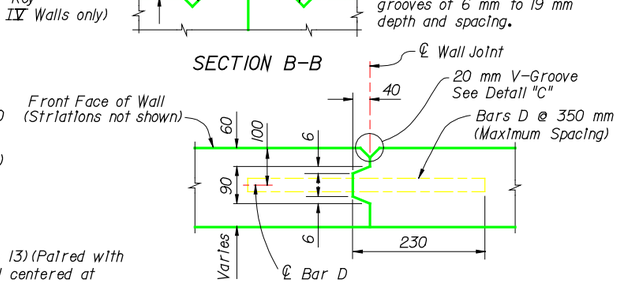

CONSTRUCTION JOINT DETAIL
(Spaced at 8 m Maximum)

NOTE: Key to stop 150 mm from top of wall. Joint across top of wall to be a straight line. Extend V-Groove down back of wall to 150 mm min. below ground.

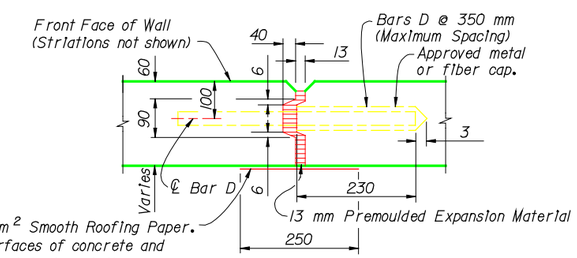

EXPANSION JOINT DETAIL
(Every Fourth Wall Joint Extend thru Footing)

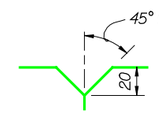

DETAIL "C"

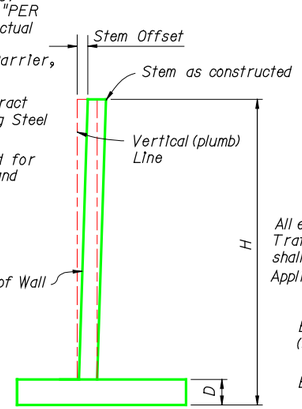

STEM OFFSET VALUES

STEM OFFSET

(H−D) ≤ 3.700 m (Offset = (H−D)/200)
(H−D) > 3.700 m (Offset = (H−D−1850)/100)

Note: Offset, H & D in mm.
Maximum Offset = 65 mm.

BENDING DIAGRAM

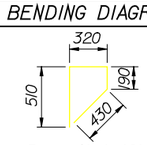

Bars N (#16)
NOTE: All bar dimensions are out-to-out.

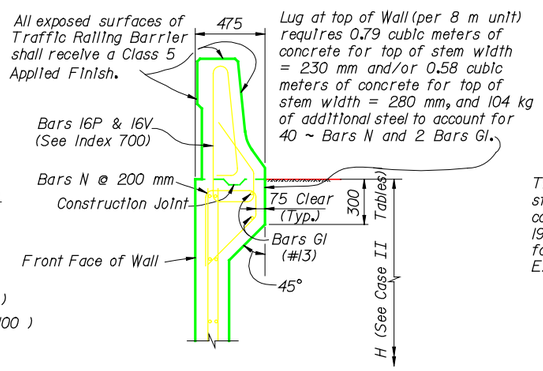

BARRIER ON CASE II WALL

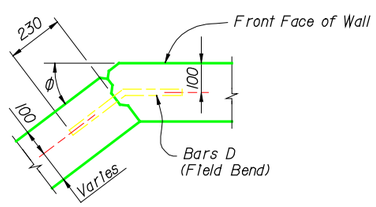

TYPICAL JOINT DETAIL AT CORNER
NOTE : See "Construction Joint Detail" For Notes and Details not shown

Backfill layers to be sloped to drain during backfilling. Backfill to be placed around footing, sloped away and compacted per FDOT Specifications as the forms are stripped.

The slope of open excavation shall be stable and suit local conditions and shall comply with the OSHA Regulations Part 1926 on Safety and Health Regulations for Construction Subpart P on Excavations.

Continuous 500 mm x 500 mm, clean, broken stone or gravel graded and placed so as to allow free drainage, but at the same time prevent the fill from washing out by using filter fabric around the perimeter.

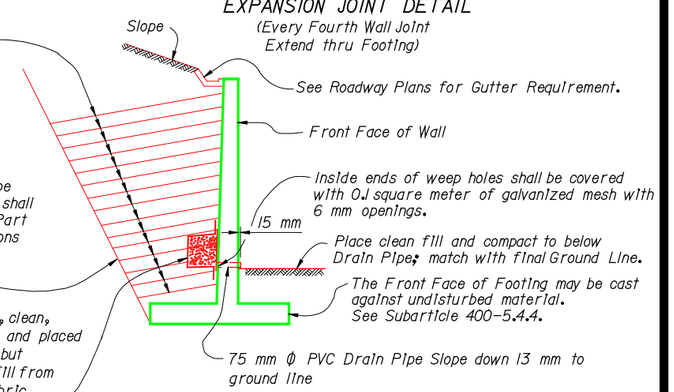

TYPICAL BACKFILL DETAIL

REVISIONS					
DATE	BY	DESCRIPTION	DATE	BY	DESCRIPTION
			97R		

	NAMES	DATES
DRAWN BY	SHM	12/93
CHECKED BY	JMD/NRK	12/93
DESIGNED BY	JMD/NRK	12/93
CHECKED BY	JMD/NRK	12/93
APPROVED BY	AJG	

ENGINEER OF RECORD:
STRUCTURES DESIGN OFFICE
CENTRAL OFFICE
605 Suwannee Street, MS 33
Tallahassee, Florida 32399-0450

LOGO:

SEAL:

FLORIDA DEPARTMENT OF TRANSPORTATION
STRUCTURES DESIGN OFFICE

ROAD NO.	COUNTY	PROJECT NO.

SHEET TITLE: CANTILEVER RETAINING WALLS GENERAL NOTES AND DETAILS

PROJECT NAME:

DRAWING NO. 1 of 1

INDEX NO. 800

DATE "" TIME

s:\structuressoftware\structures\cad\standards\97d\drawings\800.dgn