FED. ROAD DIV. NO.	STATE	PROJECT NO.	FISCAL YEAR	SHEET NO.
3	FLA.			

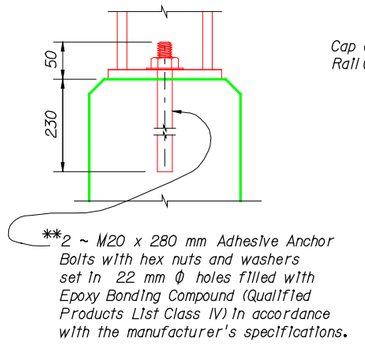

DETAIL 'A'

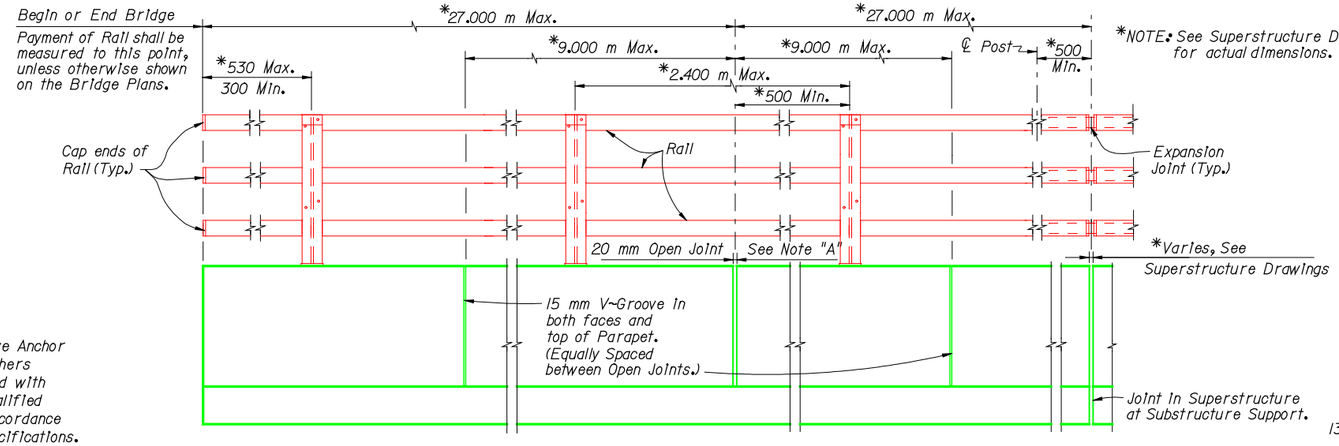

*NOTE: See Superstructure Drawings for actual dimensions.

ELEVATION

Note "A": 20 mm Open Joints shall be provided at:

1. Substructure Supports where Superstructure Slab is continuous.
2. Mid-Span where Span length exceeds 27.000 meters.
3. Intermediate locations (equally spaced) between Mid-Span and Superstructure Support where Span length exceeds 54.000 meters.
4. Locations Coinciding with Joints for the Traffic Railing Barrier.

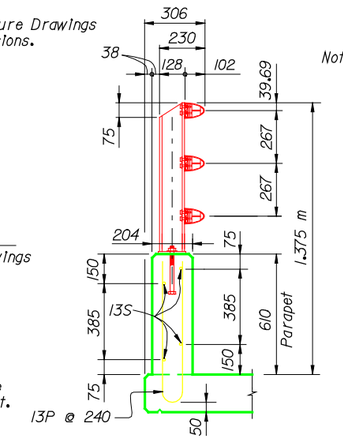

TYPICAL SECTION THRU PARAPET AND RAIL

Note: Bars 13P and 13S are #13 Bars.

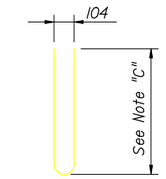

BAR 13P

Note "C": Designer shall fully detail reinforcement in Parapet in the Superstructure Drawings and include concrete and reinforcing steel in the Superstructure quantities.

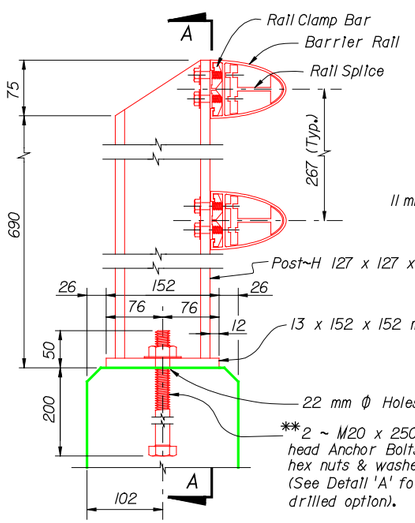

SECTION THRU RAIL
(Bottom rail element not shown)

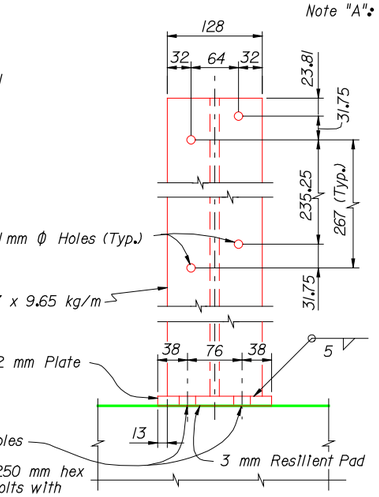

SECTION A-A

**NOTE: After nuts have been tightened the threads shall be nicked to prevent removal of nuts.

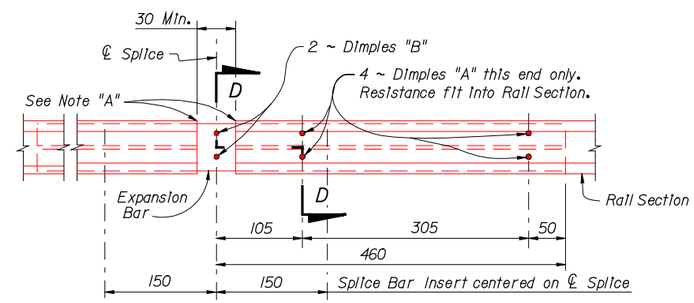

RAIL SPLICE

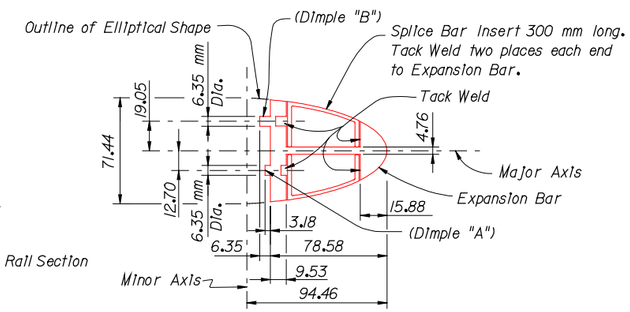

SECTION D-D

RAIL COMPONENTS

NOTE: Rail shall be continuous over a minimum of three posts before splicing. Splices shall be spaced at 12 m maximum.

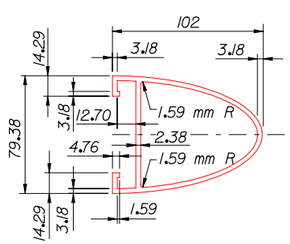

RAIL

NOTE "A" ~ Rough cut ends and edges of aluminum rails shall be ground or filed smooth to remove all sharp edges, nicks or burrs that would be injurious to the human touch.

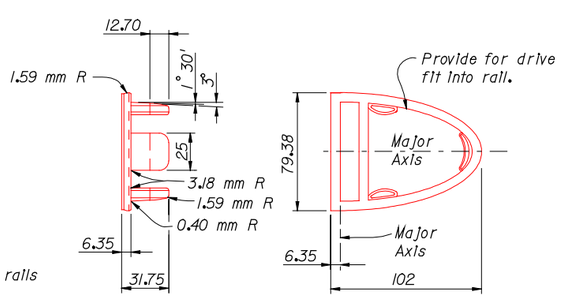

RAIL END CAP

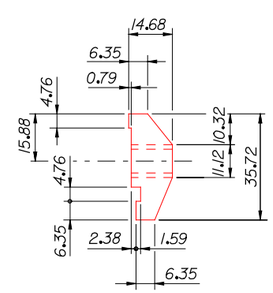

VIEW C-C

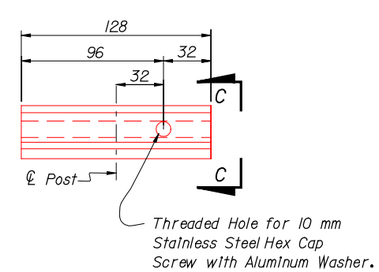

RAIL CLAMP BAR

NOTES

NOTE: The Railing shown on this drawing conforms with the requirements of the American with Disabilities Act (ADA), provided that the gradient does not exceed 5%.

PAYMENT: The cost of all materials in Parapet shall be included in Concrete (Superstructure) and Reinforcing Steel (Superstructure). Aluminum Rail shall be paid for per linear meter. Payment includes Anchor Bolts, Nuts, Resilient Pads, and all incidental materials and labor required to complete the installation. Payment for the rail shall be made under Item No. 2400-5-3.

SPECIFICATIONS FOR METAL RAIL

POST: Fabricated wrought aluminum; ASTM B221, alloy 6061-T6 or alloy 6351-T5 with welding using filler wire 4043.

RAIL AND RAIL SPLICE: Aluminum; ASTM B221, alloy 6061-T6 or alloy 6351-T5.

RAIL CLAMP BAR: Aluminum; ASTM B221, alloy 6061-T6 or alloy 6351-T5.

ANCHOR BOLTS: Anchor bolts shall be in accordance with ASTM A36M or ASTM F568, Class 4.6. Anchor bolts, Nuts and washers shall be hot-dip galvanized in accordance with ASTM designation A153.

RAIL END CAP: ASTM B26 sand cast aluminum alloy, SG 70A-F(Aluminum Association alloy designation A-356-F).

RAIL INSTALLATION: Rail Post shall be normal to Profile Grade. Post shall be seated on 3 mm thick resilient pads in accordance with Subarticle 932-2.1. The dimension shall be the same as the post base. Rail expansion joint shall occur in the panel between posts on either side of Bridge expansion joint. Rail expansion joint shall be similar to rail splice with provision for movement equal to 1.5 times the bridge joint opening.

SHOP DRAWINGS: Complete details and description of materials of the proposed metal rail shall be submitted by the contractor for the Engineer's approval prior to fabrication for railing that do not conform to the plans.

NOTE : All dimensions are in millimeters (mm), except as noted.

REVISIONS

DATE	BY	DESCRIPTION	DATE	BY	DESCRIPTION
2-97	JSP	Deleted mid part of PAYMENT note	97R		
3-97	SHM	Added Fillet Weld size			
4-97	SHM	Deleted Section B on Elev. View			

	NAMES	DATES
DRAWN BY	LFC	12-85
CHECKED BY	RDS	1-86
DESIGNED BY	—	—
CHECKED BY	—	—
APPROVED BY	AJG	

ENGINEER OF RECORD.
STRUCTURES DESIGN OFFICE
CENTRAL OFFICE
605 Suwannee Street, MS 33
Tallahassee, Florida 32399-0450

LOGO.

SEAL.

FLORIDA DEPARTMENT OF TRANSPORTATION
STRUCTURES DESIGN OFFICE

ROAD NO.	COUNTY	PROJECT NO.

SHEET TITLE.
PEDESTRIAN/BICYCLE RAILING

DRAWING NO.
1 of 1

PROJECT NAME.

INDEX NO.
720

s:\structuressoftware\bridd\standards\97drawings\0720.dgn

DATE "" TIME