FED. ROAD DIV. NO.	STATE	PROJECT NO.	FISCAL YEAR	SHEET NO.
3	FLA.			

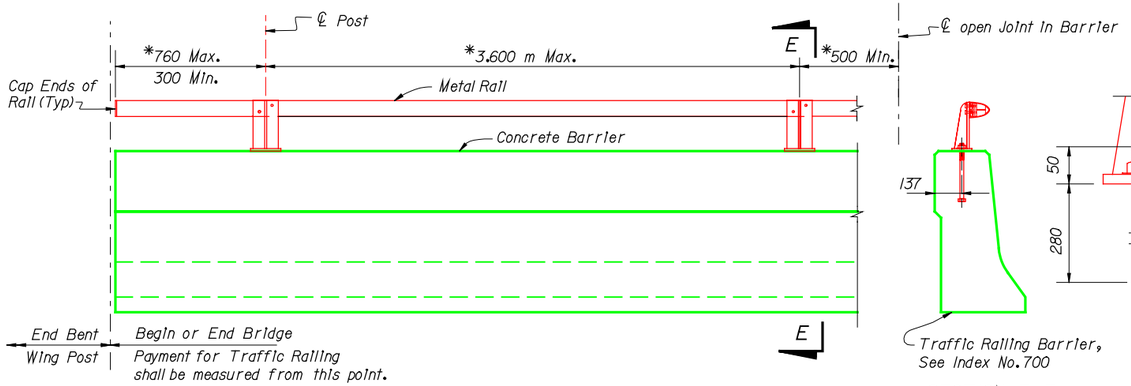

ELEVATION ~ SIDEWALK BARRIER RAIL

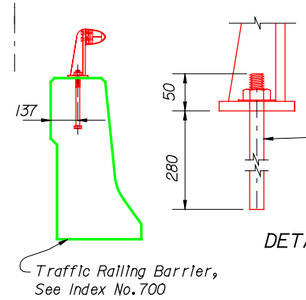

SECTION E-E

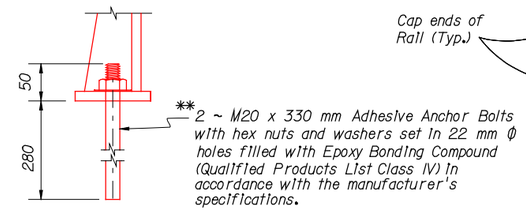

DETAIL 'A'

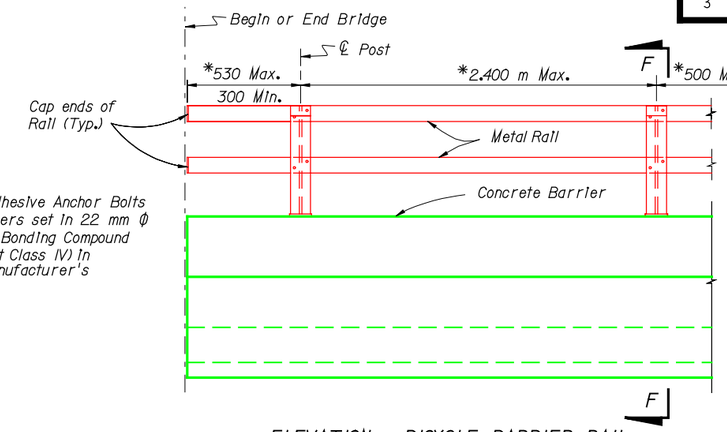

ELEVATION ~ BICYCLE BARRIER RAIL

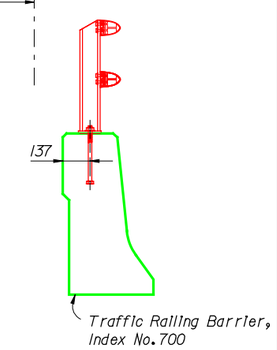

SECTION F-F

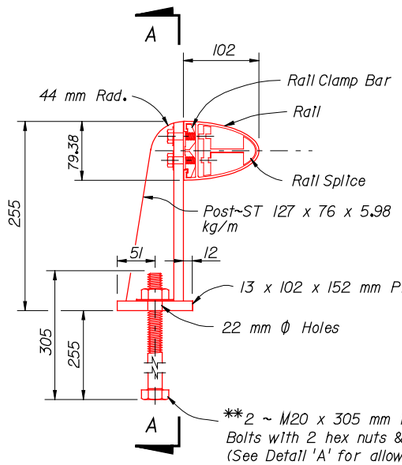

SECTION THRU RAIL

SIDEWALK BARRIER RAIL

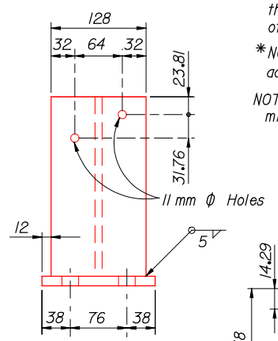

SECTION A-A

**NOTE: After nuts have been tightened the threads shall be nicked to prevent removal of nuts.

*NOTE: See Superstructure Drawing for actual dimensions.

NOTE: Rail shall be continuous over a minimum of three posts before splicing.

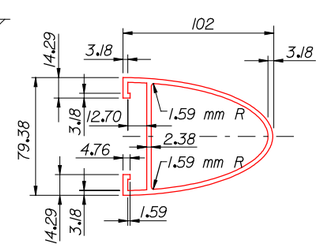

RAIL

NOTE "A" ~ Rough cut ends and edges of aluminum rails shall be ground or filed smooth to remove all sharp edges, nicks or burrs that would be injurious to the human touch.

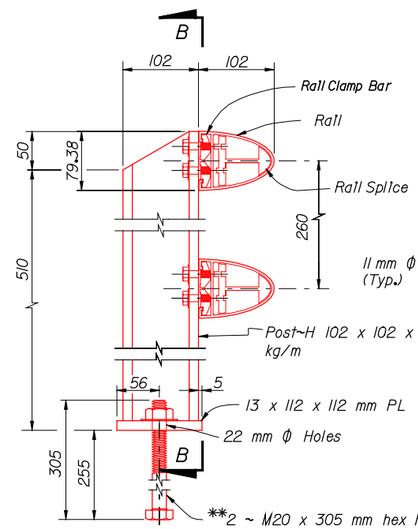

SECTION THRU RAIL

BICYCLE BARRIER RAIL

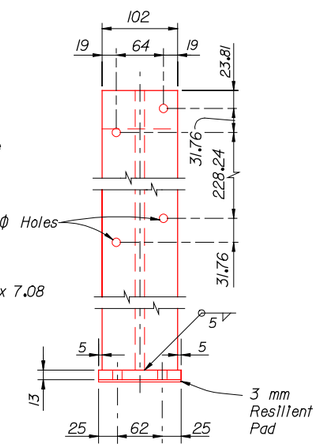

SECTION B-B

NOTES

NOTE: The Railing shown on this drawing conforms with the requirements of the American with Disabilities Act (ADA), provided that the gradient does not exceed 5%.

TRAFFIC RAILING BARRIER: For details of Traffic Railing Barrier, See Index 700 .

PAYMENT: Traffic Railing (Sidewalk Barrier Type) shall be paid for per linear meter Item No. 2400-148-2 and Traffic Railing (Bicycle Barrier Type) shall be paid for per linear meter Item No. 2400-148-3. These Items shall include all Metal Rail, Concrete and Reinforcing Steel.

SPECIFICATIONS FOR METAL RAIL

POST: Fabricated wrought aluminum; ASTM B221, alloy 6061-T6 or alloy 6351-T5 with welding using filler wire 4043.

RAIL AND RAIL SPLICE: Aluminum; ASTM B221, alloy 6061-T6 or alloy 6351-T5.

RAIL CLAMP BAR: Aluminum; ASTM B221, alloy 6061-T6 or alloy 6351-T5.

ANCHOR BOLTS: Anchor bolts shall be in accordance with ASTM A36M or ASTM F568, Class 4.6. Anchor bolts, Nuts and washers shall be hot-dip galvanized in accordance with ASTM designation A153.

RAIL END CAP: ASTM B26 sand cast aluminum alloy, SG 70A-F(Aluminum Association alloy designation A-356-F).

RAIL INSTALLATION: Rail Post shall be normal to Profile Grade. Post shall be seated on 3 mm thick resilient pads in accordance with Subarticle 932-2.1. The dimension shall be the same as the post base. Rail expansion joint shall occur in the panel between posts on either side of Bridge expansion joint. Rail expansion joint shall be similar to rail splice with provision for movement equal to 1.5 times the bridge joint opening.

SHOP DRAWINGS: Complete details and description of materials of the proposed metal rail shall be submitted by the contractor for the Engineer's approval prior to fabrication for railing that do not conform to the plans.

SPLICES: Splices shall be spaced at 12 m maximum.

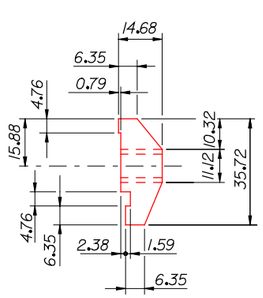

VIEW C-C

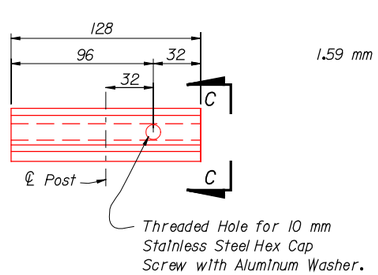

RAIL CLAMP BAR

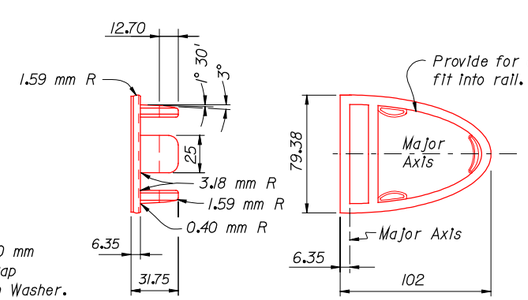

RAIL END CAP

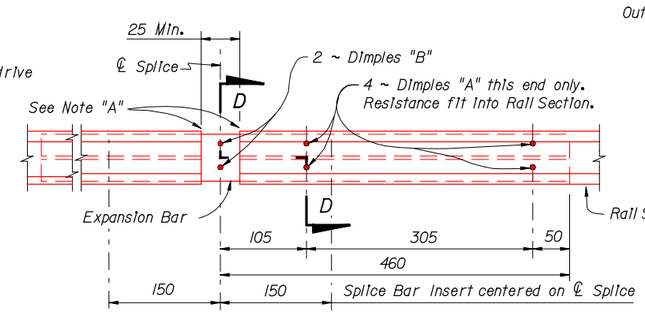

RAIL SPLICE

RAIL COMPONENTS

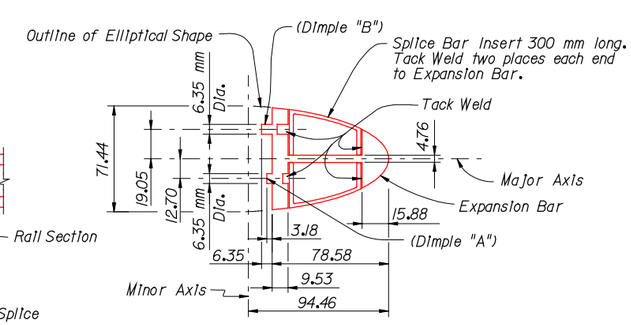

SECTION D-D

NOTE: All dimensions are in millimeters (mm), except as noted.

REVISIONS

DATE	BY	DESCRIPTION	DATE	BY	DESCRIPTION
2-97	JSP	Deleted last part of PAYMENT note	97R		
3-97	SHM	Added Fillet Weld size			

	NAMES	DATES
DRAWN BY	WEH	2-89
CHECKED BY	AJG	2-89
DESIGNED BY	—	—
CHECKED BY	—	—
APPROVED BY	AJG	

ENGINEER OF RECORD:
STRUCTURES DESIGN OFFICE
CENTRAL OFFICE
605 Suwannee Street, MS 33
Tallahassee, Florida 32399-0450

LOGO:

SEAL:

FLORIDA DEPARTMENT OF TRANSPORTATION
STRUCTURES DESIGN OFFICE

ROAD NO.	COUNTY	PROJECT NO.

SHEET TITLE: TRAFFIC RAILING (SIDEWALK TYPE AND BICYCLE TYPE)

PROJECT NAME:

DRAWING NO. 1 of 1

INDEX NO. 710

DATE "" TIME

s:\structuressoftware\structures\cadd\standards\97d\drawings\710.dgn