FED. ROAD DIV. NO.	STATE	PROJECT NO.	FISCAL YEAR	SHEET NO.
3	FLA.			

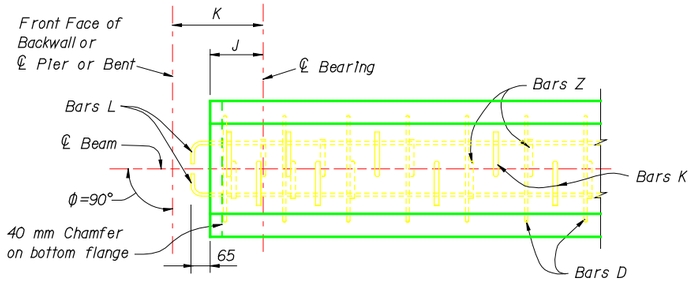

CASE 1

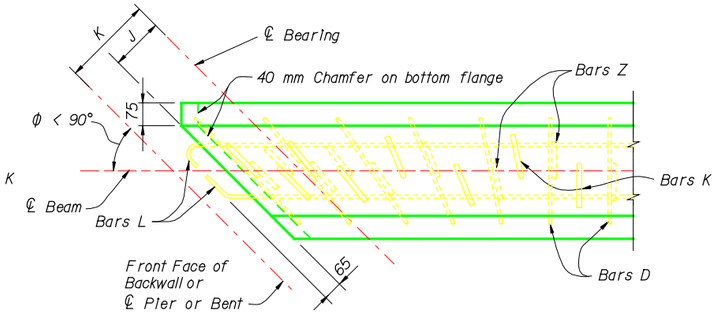

CASE 2
(See Note)
PLAN ENDS OF BEAMS

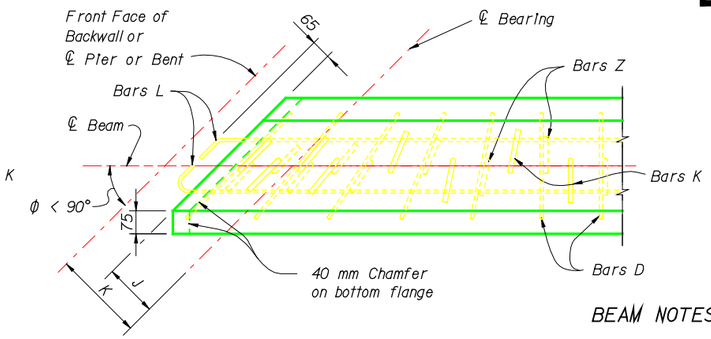

CASE 3
(See Note)

NOTE: For both Plan Views Case 2 and Case 3, the first two Bars Z and K shall be placed parallel to the skewed end of the Beam. The remainder of the Bars Z & K shall be placed so as to transition from the skewed end to an axis perpendicular to the centerline of the beam. Bars D in the bottom flange shall be rotated along with Bars Z & K. Bar spacing may not agree with Beam Sheets.

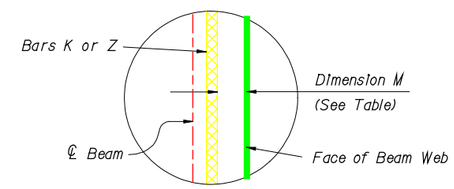

SECTION THRU BEAM WEB
(Showing Concrete Cover)

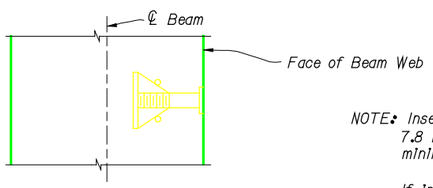

SECTION THRU BEAM WEB AT INSERT FOR DIAPHRAGM REINFORCING
(When Intermediate Diaphragms are Required)

NOTE: Insert shall be 25.4 mm Φ, zinc-electroplated, ferrule wing nut, UNC threads, 7.8 mm Φ min. wire, not more than 100 mm in depth and shall have a minimum ultimate tensile strength of 50.7 kN in 28 MPa concrete.

If Inserts are needed on both sides of web an assembly as long as the thickness of the web, consisting of two (2) Ferrule Inserts attached by two (2) or more struts may be utilized. The connecting struts shall have a minimum ultimate tensile strength of 50.7 kN.

TABLE OF DIMENSIONS M	
BEAM TYPE	DIMENSION M
II	50 mm
III	65 mm
IV	75 mm

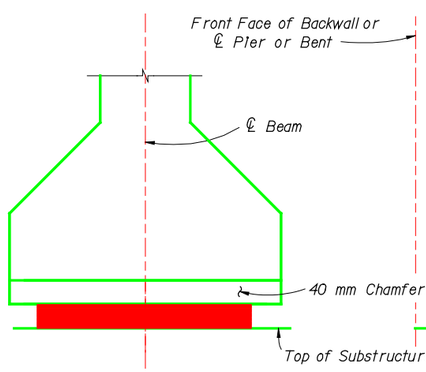

END ELEVATION
(Perpendicular to ℄ Beam)

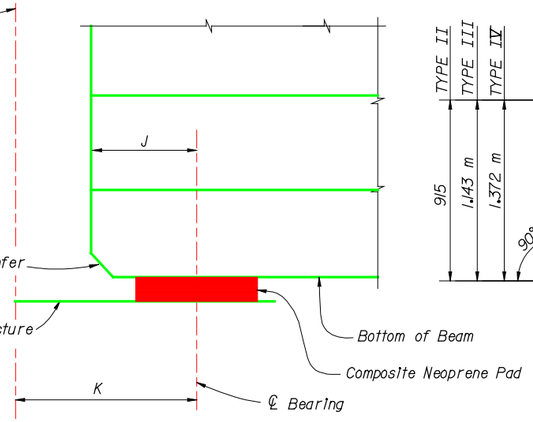

SIDE ELEVATION
(Perpendicular to ℄ Bearing)

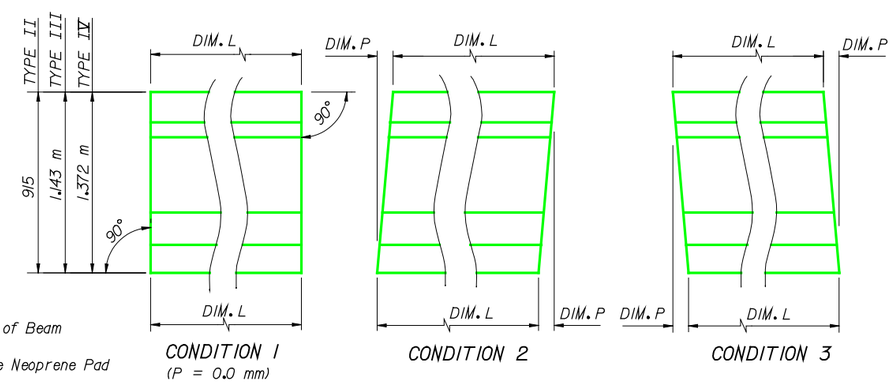

END ELEVATIONS OF BEAMS
(Showing Vertical Bevel of Beam End)

BEAM NOTES

MORTAR LEAKAGE: Any mortar leakage that occurs and stains resulting from leakage shall be removed so that beams have a uniform appearance.

STRANDS: At the option of the Contractor, other types, sizes and/or configurations of strands may be used in lieu of the stranding shown on these sheets. Calculations shall be submitted showing the substitution meets the following requirements:
1. The strands meet all the requirements of ASTM A416/A416M for the grade of strands proposed.
2. The net compressive stress in the concrete due to prestressing acting alone, after all losses, is not less than that provided by the stranding shown on these sheets.
3. The ultimate strength of the structure with the proposed stranding is not less than the ultimate strength of the original design.
4. The proposed stranding complies in all respects with the Department's Structures Design Guidelines.

FINISH: The top surface of the beam shall be rough floated and then scrubbed transversely with a coarse wire brush to remove all laitance and to produce a roughened surface for bonding. All beams shall receive a Class 3 surface finish.

SUBMITTALS: The Specifications stipulate the conditions for which Shop Drawings are not required. If each and every condition cannot be met, then a formal Shop Drawing submittal is required. Supplemental reinforcing provided by the Contractor to facilitate fabrication of prestressed beams do not require Shop Drawings.

STRAND DETENSIONING: Strand detensioning shall be based upon the following priority, from first to last:
1. Top dormant strands (Bars N)
2. Fully bonded strands
3. Partially debonded (shielded) strands

FORMS AND PALLETS: All beams shall be cast on concrete based pallets and in metal forms.

HANDLING: In the handling of beams, they must be maintained in an upright position at all times and must be picked up from points located a maximum distance of 1.000 m from the ends of the beam.

STORAGE AND TRANSPORTATION: Beams shall be stored on adequate dunnage and supported during transit within 500 mm from ends of beam.

STRAND EXTENSION: All strands shall extend 65 mm beyond ends of beams.

CONCRETE: Refer to Table of Beam Variables on the individual beam sheets for the class of concrete, 28-day strength (f'c) and cylinder strength at transfer of the tensioning load (f'ci).

REINFORCING STEEL: All reinforcing steel shall be ASTM A615M-96, Grade 420.

BEARING PADS: The cost of installing bearing pads shall be included in the contract unit price of prestressed beams. The composite neoprene pads may or may not be furnished to the contractor by FDOT. See the General Notes for the bridge, or the Bid Item Notes, for additional information regarding who the pads provider will be.

MISCELLANEOUS: The cost of inserts for diaphragm tie bars shall be included in the contract unit prices for prestressed beams.

NOTES: Work this sheet with individual beam sheets, Type II, III and IV only.

See "TABLE OF BEAM VARIABLES" on individual beam sheets for angle "Φ"s and dimensions "J", "K", "L" and "P".

For beams with vertically bevelled ends, such as conditions 2 & 3, the first Bar K shall be placed parallel to the end bevel. Adjacent Bars Z and K shall be placed so as to transition from the end bevel to a vertical axis. The spacing of Bars K and Z shown shall apply along the top flange of the beam and the spacing along the bottom of the beam shall be adjusted by not more than 15 mm (±) until the vertical position is attained.

All dimensions are in millimeters (mm), except as noted.

REVISIONS

DATE	BY	DESCRIPTION	DATE	BY	DESCRIPTION
9-97	SHM	Modified Note 1. for Strands	97R		

	NAMES	DATES
DRAWN BY	WEH	1-89
CHECKED BY	DCP	1-89
DESIGNED BY	DCP	1-89
CHECKED BY	WEH	1-89
APPROVED BY	REN	

ENGINEER OF RECORD:
STRUCTURES DESIGN OFFICE
CENTRAL OFFICE
605 Suwannee Street, MS 33
Tallahassee, Florida 32399-0450

LOGO:

SEAL:

FLORIDA DEPARTMENT OF TRANSPORTATION
STRUCTURES DESIGN OFFICE

ROAD NO. | COUNTY | PROJECT NO.

SHEET TITLE: TYPICAL NOTES AND DETAILS FOR AASHTO TYPE II, III AND IV PRESTRESSED BEAMS

PROJECT NAME:

DRAWING NO. 1 of 1

INDEX NO. 100

DATE "" TIME

s:\structuressoftware\structures\cadd\standards\97drawings\100.dgn