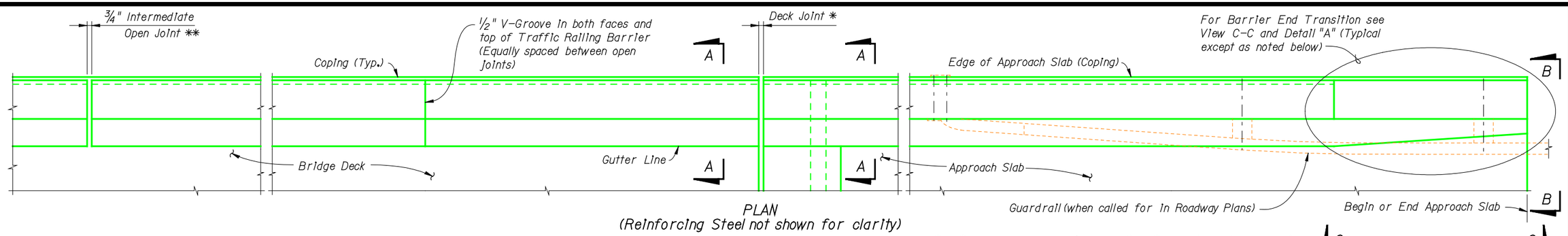

PLAN
(Reinforcing Steel not shown for clarity)

* See Superstructure and Approach Slab Sheets for actual dimensions and joint orientation. Open Barrier Joints at Deck Expansion Joint locations shall match the dimensions of the Deck Joint. For treatment of Barriers on skewed bridges see Index No. 1000. Deck Joint at Begin or End Bridge Shown. Deck Joint at ℄ Pier or Intermediate Bent Similar.

** 3/4" Intermediate Open Joints shall be provided at :
(1) - Substructure supports where superstructure slab is continuous.
(2) - Midspan where span length exceeds 90 ft.
(3) - Intermediate locations (equally spaced) between midspan and substructure supports where span length exceeds 180 ft.

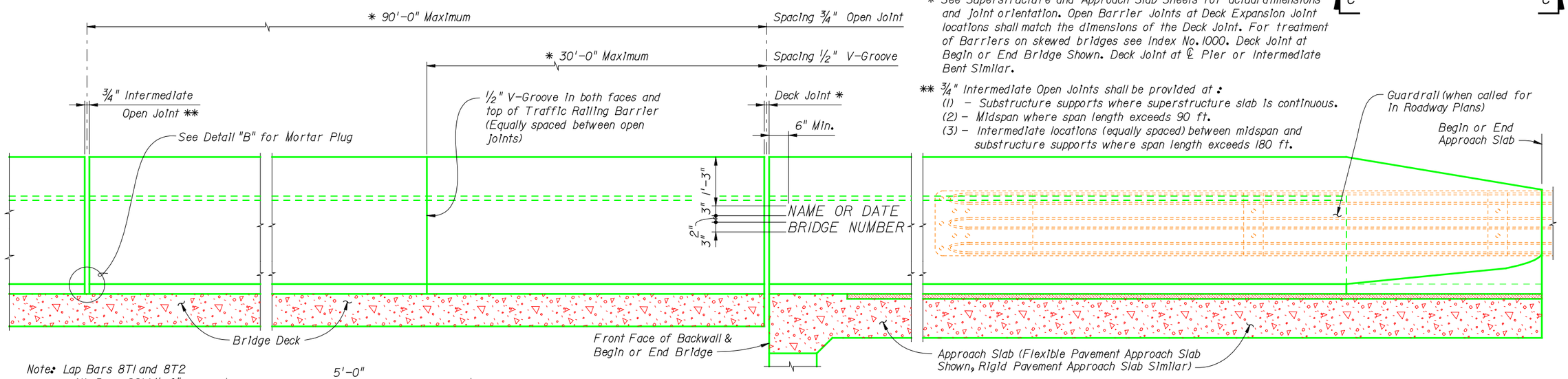

ELEVATION OF INSIDE FACE OF BARRIER
(Reinforcing Steel not shown for clarity)

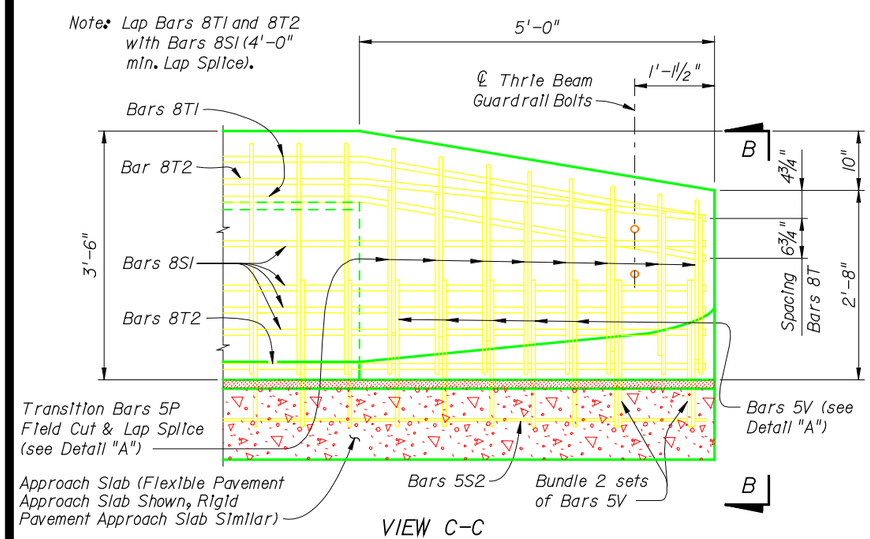

VIEW C-C
ELEVATION - BARRIER END TRANSITION
(Guardrail and back leg of Stirrups not shown for clarity)

NOTE:
Begin placing Barrier Bars 5P and 5V on Approach Slab at the barrier end and proceed toward Begin or End Bridge to ensure placement of guardrail bolt holes. If required, adjustments to the bar spacing for Bars 5P and 5V shall be made immediately adjacent to Begin or End Bridge. Shift and rotate Bars 5P and 5V (see Detail "A") as required to maintain cover in Barrier End Transition.

NOTE:
Omit Barrier End Transition and Guardrail if Concrete Barrier Wall is used beyond the Approach Slab. See the Plan and Elevation Sheet and Roadway Plans. If Barrier End Transition is omitted, extend Typical Section to end of the Approach Slab and Space Bars 5P and 5V at 8" (Typ.).

TRAFFIC RAILING BARRIER NOTES

This railing has been structurally evaluated to be equivalent or greater in strength to other safety shape railings which have been crash tested to NCHRP Report 350 TL-5 Criteria.

CONCRETE AND REINFORCING STEEL : See General Notes.

MARKERS : Elevation Markers shall be placed on top of the Traffic Railing Barrier at the end bents. On bridges longer than 100 ft. one marker shall be placed at each end of the bridge. On bridges 100 ft. or less one marker shall be placed at one end of the bridge only. Markers are to be furnished by the Florida Department of Transportation and installed by the Contractor. The cost of installing the markers shall be included in the Contract Unit Price for the Traffic Railing Barrier.

GUARDRAIL : For Guardrail connection details, see Roadway and Traffic Design Standards Index No. 400.

SUPERELEVATED BRIDGES : At the option of the Contractor the Traffic Railing Barrier on superelevated bridges may be constructed perpendicular to the roadway surface. The cost of all modifications will be at the Contractor's expense.

BARRIERS ON RETAINING WALLS : If the Traffic Railing Barrier is to be provided on a retaining wall, the barrier section will be the same as shown on Index No. 750, Drawing 2 of 2. All other details such as the guardrail transition attachment, the maximum spacing of the 3/4" open joints and 1/2" V-groove shall apply.

NAME, DATE, AND BRIDGE NUMBER : The Name and Bridge Number shall be placed on the Traffic Railing Barrier so as to be seen on the driver's right side when approaching the bridge. The Date shall be placed on the driver's left side when approaching the bridge. The Date shall be the year the bridge is constructed. For a major widening the date shall be the year of the widening. Black plastic letters and figures 3" in height may be used, as approved by the Engineer, in lieu of the letters and figures formed by 3/8" V-Grooves. V-Grooves shall be formed by preformed letters and figures.

CROSS REFERENCE:
For Section A-A and End View B-B see Index No. 750, Drawing 2 of 2.
For Detail "A" and Detail "B" see Index No. 750, Drawing 2 of 2.

BRIDGE NO. XXXXXX

REVISIONS

DATE	BY	DESCRIPTION	DATE	BY	DESCRIPTION
2-14-01	SDO	Standard Drawing Issue Date			

	NAMES	DATES
DRAWN BY	LSM	6-00
CHECKED BY	MDM	1-01
DESIGNED BY	LSM	6-00
CHECKED BY	MDM	1-01
APPROVED BY	REN	

ENGINEER OF RECORD:
STRUCTURES DESIGN OFFICE
CENTRAL OFFICE
605 Suwannee Street, MS 33
Tallahassee, Florida 32399-0450

FLORIDA DEPARTMENT OF TRANSPORTATION

ROAD NO.	COUNTY	FINANCIAL PROJECT ID

SHEET TITLE:
TRAFFIC RAILING BARRIER - (42" F SHAPE)
INDEX NO. 750 (DRAWING 1 OF 2)

PROJECT NAME:

SHEET NO.

$$$$$$$$SYTIME$$$$$$$$ $$$$$$$$DGNSPECIFICATION$$$$$$$$

CONVENTIONAL REINFORCING STEEL BENDING DIAGRAMS

BILL OF REINFORCING STEEL

MARK	SIZE	LENGTH
P	5	7'-5"
S1	8	AS REQ'D
S2	5	AS REQ'D
T1 & T2	8	11'-3"
V	5	6'-2"

ROADWAY CROSS-SLOPE	LOW GUTTER		HIGH GUTTER	
	ØA	ØB	ØA	ØB
0% to 2%	90°	90°	90°	90°
2% to 6%	93°	87°	87°	93°
6% to 10%	96°	84°	84°	96°

ØA and ØB shall be 90° if Contractor elects to place Barrier Perpendicular to the Deck.

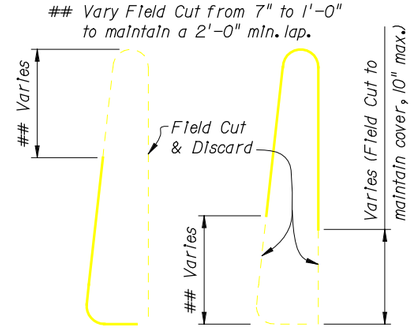

TRANSITION STIRRUP BARS 5P
To Be Field Cut (8 of each required per Barrier End Transition)

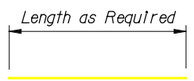

BARS 8S1 & 5S2

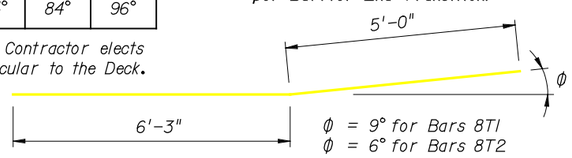

TRANSITION BARS 8T1 & 8T2
(2 of each required per Barrier End Transition)

REINFORCING STEEL NOTES:
1. All bar dimensions in the bending diagrams are out to out.
2. The reinforcement for the barrier on a retaining wall shall be the same as detailed above for a 10" deck with ØA = ØB = 90°.
3. All reinforcing steel at the open joints shall have a 2" minimum cover.
4. Bars 8S1 may be continuous or spliced at the construction joints. Lap splices for Bars 8S1 and 5S2 shall be a minimum of 4'-0" and 2'-0", respectively.
5. The Contractor may utilize Welded Wire Fabric when approved by the Engineer. Welded Wire Fabric shall conform to ASTM A497.

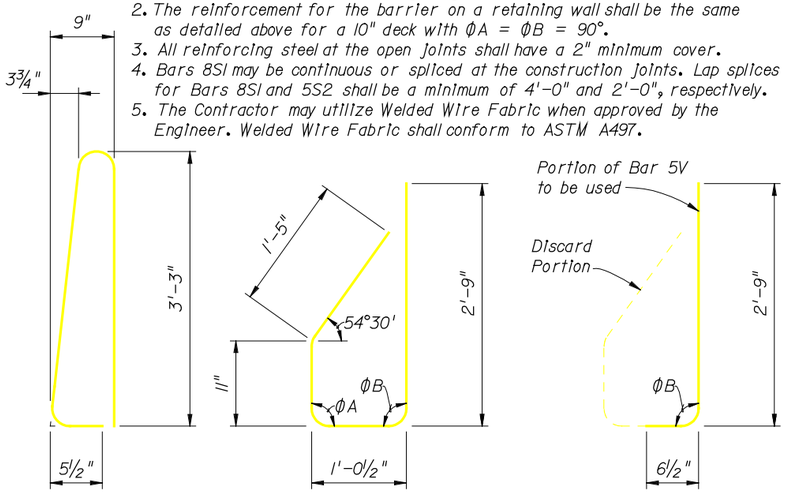

STIRRUP BAR 5P

STIRRUP BAR 5V

END STIRRUP BAR 5V
To Be Field Cut
(One required per Barrier End Transition)

CROSS REFERENCE:
For location of Section A-A, End View B-B and Elevation View of Barrier End Transition see Index No.750, Drawing 1 of 2.

Note:
The estimated barrier quantities are based 2% deck cross slope; barrier on low side of deck.

ESTIMATED TRAFFIC RAILING BARRIER QUANTITIES

ITEM	UNIT	QUANTITY
Concrete	C.Y./FT.	0.154
Reinforcing Steel	LB./FT.	44.71

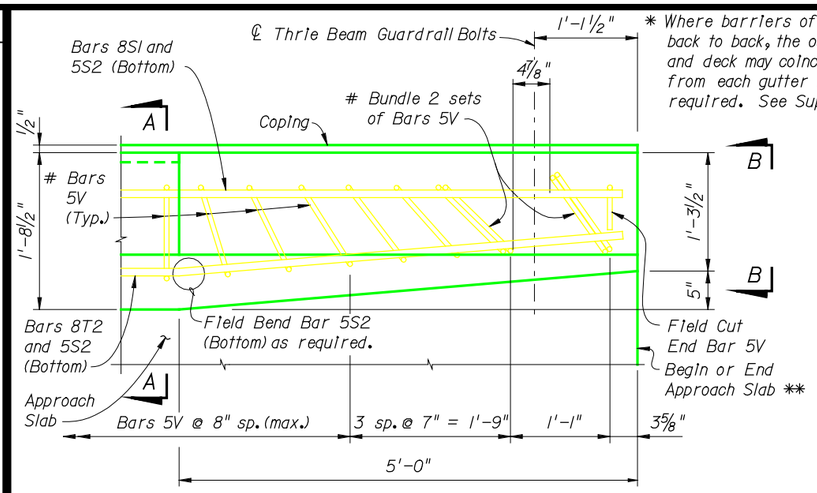

PLAN - Barrier End Transition
(Showing Bars 5V, 8S1, 5S2 and 8T2)

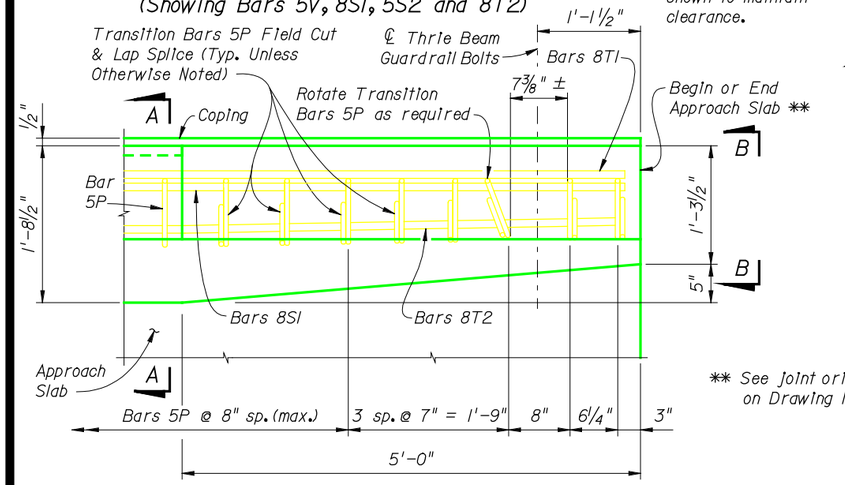

PLAN - Barrier End Transition
(Showing Transition Bars 5P and Bars 8S1, 8T1 & 8T2)

Rotate Bars 5V as shown to maintain clearance.

** See Joint orientation note on Drawing 1 of 2.

DETAIL "A"

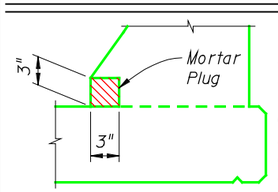

DETAIL "B" - SECTION AT INTERMEDIATE OPEN JOINT

NOTE:
At intermediate open joints, the lower 3" portion of the open joint shall be plugged by filling it with mortar in accordance with Section 400 of the Specifications.

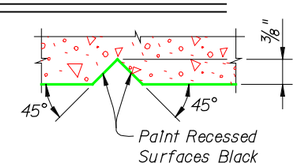

SECTION THRU RECESSED "V" GROOVE TO FORM INSCRIBED LETTERS AND FIGURES

INSTRUCTIONS TO DESIGNER:
For Bridge Decks up to a maximum thickness of 11", the two Bars 5S2 placed in the Bridge Deck may substitute for the longitudinal deck steel located within the limits of Bars 5V, provided that the total area of longitudinal deck steel beneath the barrier, as required by calculation, is not reduced. Show these bars on the Superstructure Sheets with the deck steel.

* Where barriers of adjacent bridges are to be built back to back, the outside vertical plane of the barrier and deck may coincide along a plane centered 1'-8½" from each gutter line. A bond breaker will be required. See Superstructure Sheets for Details.

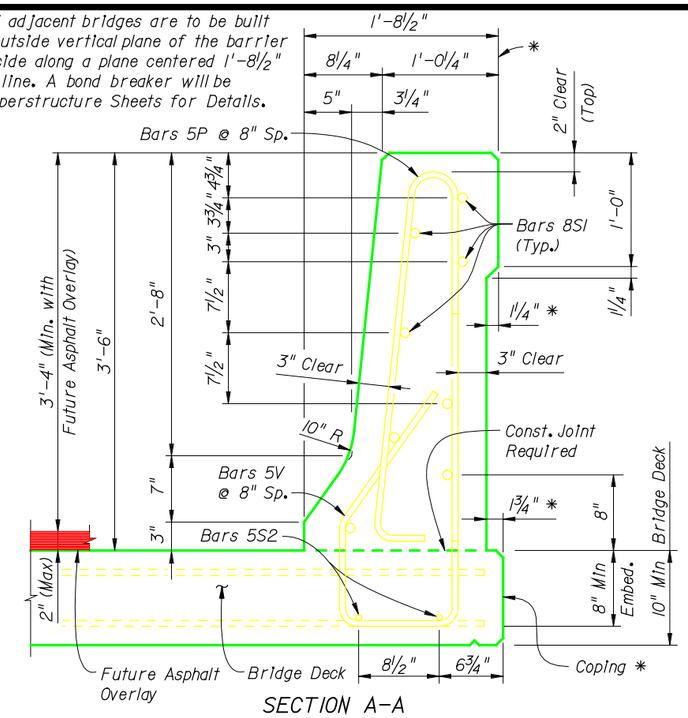

SECTION A-A
TYPICAL SECTION THRU TRAFFIC RAILING BARRIER
(SECTION THRU BRIDGE DECK SHOWN - SECTION THRU APPROACH SLAB SIMILAR)

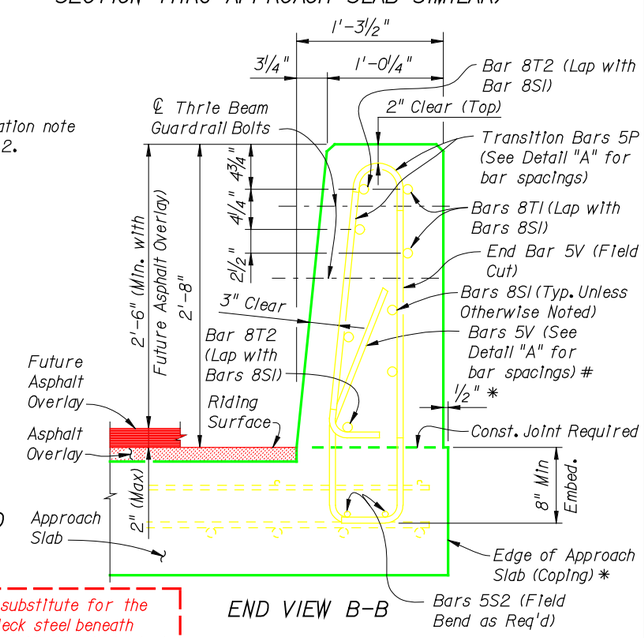

END VIEW B-B

BRIDGE NO. XXXXXX

REVISIONS

DATE	BY	DESCRIPTION	DATE	BY	DESCRIPTION
2-14-01	SDO	Standard Drawing Issue Date			

	NAMES	DATES
DRAWN BY	LSM	6-00
CHECKED BY	MDM	1-01
DESIGNED BY	LSM	6-00
CHECKED BY	MDM	1-01
APPROVED BY	REN	

ENGINEER OF RECORD:
STRUCTURES DESIGN OFFICE
CENTRAL OFFICE
605 Suwannee Street, MS 33
Tallahassee, Florida 32399-0450

FLORIDA DEPARTMENT OF TRANSPORTATION

ROAD NO.	COUNTY	FINANCIAL PROJECT ID

SHEET TITLE:
TRAFFIC RAILING BARRIER - (42" F SHAPE)
INDEX NO.750 (DRAWING 2 OF 2)

PROJECT NAME:

SHEET NO.

$$$$$$$$DGNSPECIFICATION$$$$$$$$
$$$$$$$$SYTIME$$$$$$$$