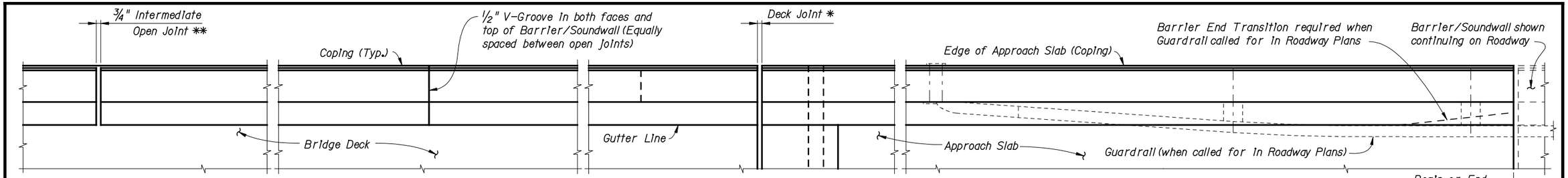

PLAN (Reinforcing Steel not shown for clarity)

* See Superstructure and Approach Slab Sheets for actual dimensions and joint orientation. Open Barrier/Soundwall Joints at Deck Expansion Joint locations shall match the dimensions of the Deck Joint. For treatment of Barriers/Soundwalls on skewed bridges see Index No. 1000. Deck Joint at Begin Bridge or End Bridge shown, Deck Joint at ℄ Pier or Intermediate Bent similar.

** 3/4" Intermediate Open Joints shall be constructed plumb and provided at :
(1) – Substructure supports where superstructure slab is continuous.
(2) – Midspan where span length exceeds 90 ft.
(3) – Intermediate locations (equally spaced) between midspan and substructure supports where span length exceeds 180 ft.

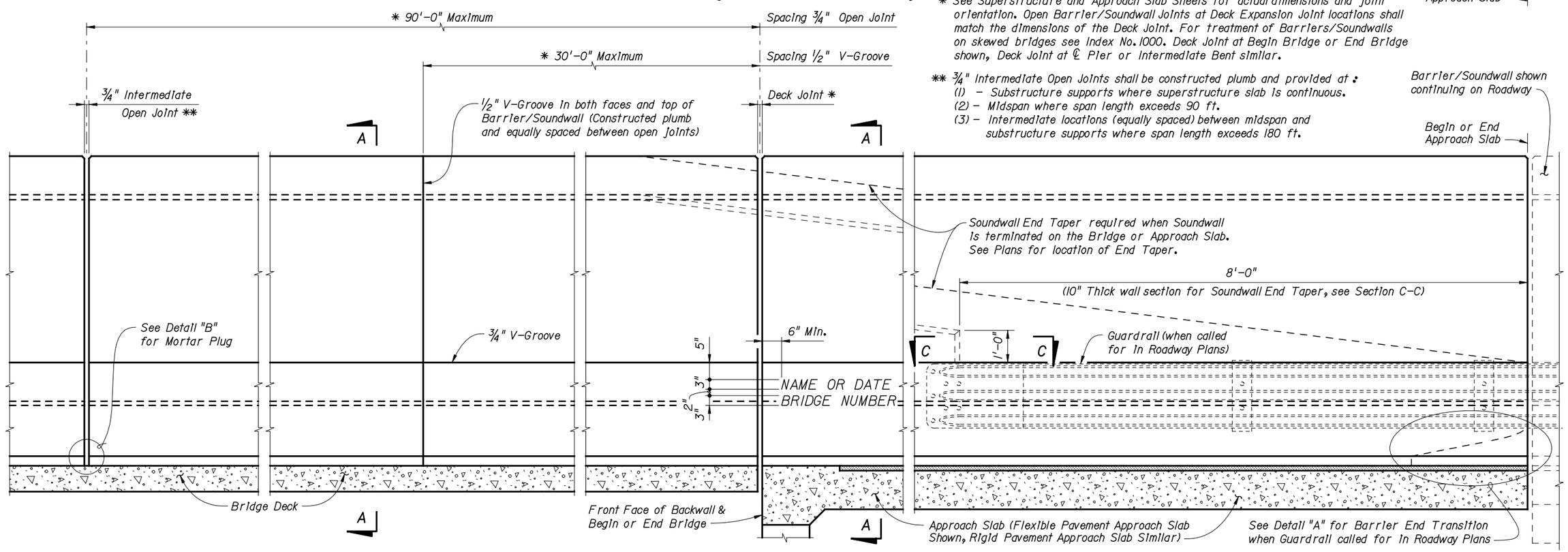

ELEVATION OF INSIDE FACE OF BARRIER/SOUNDWALL
(Reinforcing Steel not shown for clarity)

CROSS REFERENCE:
For Section A-A and Detail "B", see Index No. 1550, Drawing 3 of 3.
For Section C-C, Detail "A" and V-Groove Lettering Detail, see Index No. 1550, Drawing 2 of 3.

TRAFFIC RAILING BARRIER/SOUNDWALL NOTES

This railing has been structurally evaluated to be equivalent or greater in strength to a safety shape/soundwall combination railing which has been crash tested to NCHRP Report 350 TL-4 Criteria. The Transverse Design Force for the design of bridge deck overhang shall be 54 kips applied horizontally at 3'-6" height above the deck.

CONSTRUCTION REQUIREMENTS : The Traffic Railing Barrier/Soundwall and joints shall be constructed plumb, they shall not be constructed perpendicular to the roadway surface. Slip forming is not permitted.

CONCRETE AND REINFORCING STEEL : See General Notes.

NAME, DATE AND BRIDGE NUMBER : The Name and Bridge Number shall be placed on the Traffic Railing Barrier so as to be seen on the driver's right side when approaching the bridge. The Date shall be placed on the driver's left side when approaching the bridge. The Date shall be the year the bridge is constructed. For a major widening the date shall be the year of the widening. Black plastic letters and figures 3" in height may be used, as approved by the Engineer, in lieu of the letters and figures formed by 3/8" V-Grooves. V-Grooves shall be formed by preformed letters and figures.

MARKERS : Elevation Markers shall be placed on top of the Traffic Railing Barrier/Soundwall or Bridge Deck at the end bents as directed by the Engineer. Markers are to be furnished by the Florida Department of Transportation and installed by the Contractor. The cost of installing the markers shall be included in the Contract Unit Price for the Barrier/Soundwall.

INSTRUCTIONS TO DESIGNER:
FORM LINERS : Form liners providing a textured finish are permitted on the outside face of the Traffic Railing Barrier/Soundwall with the following provisions: (1) The maximum amplitude of the form liner on the lower 2'-8" section shall be limited to 1" depth; (2) Any form liner used above 2'-8", must provide a thickened concrete section to maintain 2" cover. Full details of this thickened section and the form liner shall be provided in the plans. Form liners on the inside face of the Traffic Railing Barrier/Soundwall are not recommended.
END TAPER LOCATION : When the Soundwall terminates on the bridge, the End Taper shall be located at an open joint. When the Soundwall terminates on the Approach Slab, the End Taper shall terminate at Begin or End Approach Slab as shown above.

BRIDGE NO. XXXXXX

REVISIONS

DATE	BY	DESCRIPTION	DATE	BY	DESCRIPTION
10-01-01	SDO	Standard Drawing Issue Date			

	NAMES	DATES
DRAWN BY	MDM	12-00
CHECKED BY	SJN	7-01
DESIGNED BY	SJN	12-00
CHECKED BY	CEB	7-01
APPROVED BY	REN	

ENGINEER OF RECORD:
STRUCTURES DESIGN OFFICE
CENTRAL OFFICE
605 Suwannee Street, MS 33
Tallahassee, Florida 32399-0450

FLORIDA DEPARTMENT OF TRANSPORTATION

ROAD NO.	COUNTY	FINANCIAL PROJECT ID.
.	.	.

SHEET TITLE: TRAFFIC RAILING BARRIER/SOUNDWALL (BRIDGE)
INDEX NO. 1550 (DRAWING 1 OF 3)

PROJECT NAME:

SHEET NO. .

10/02/2001 02:47:46 PM C:\temp\standards\eng\550-1of3.dgn

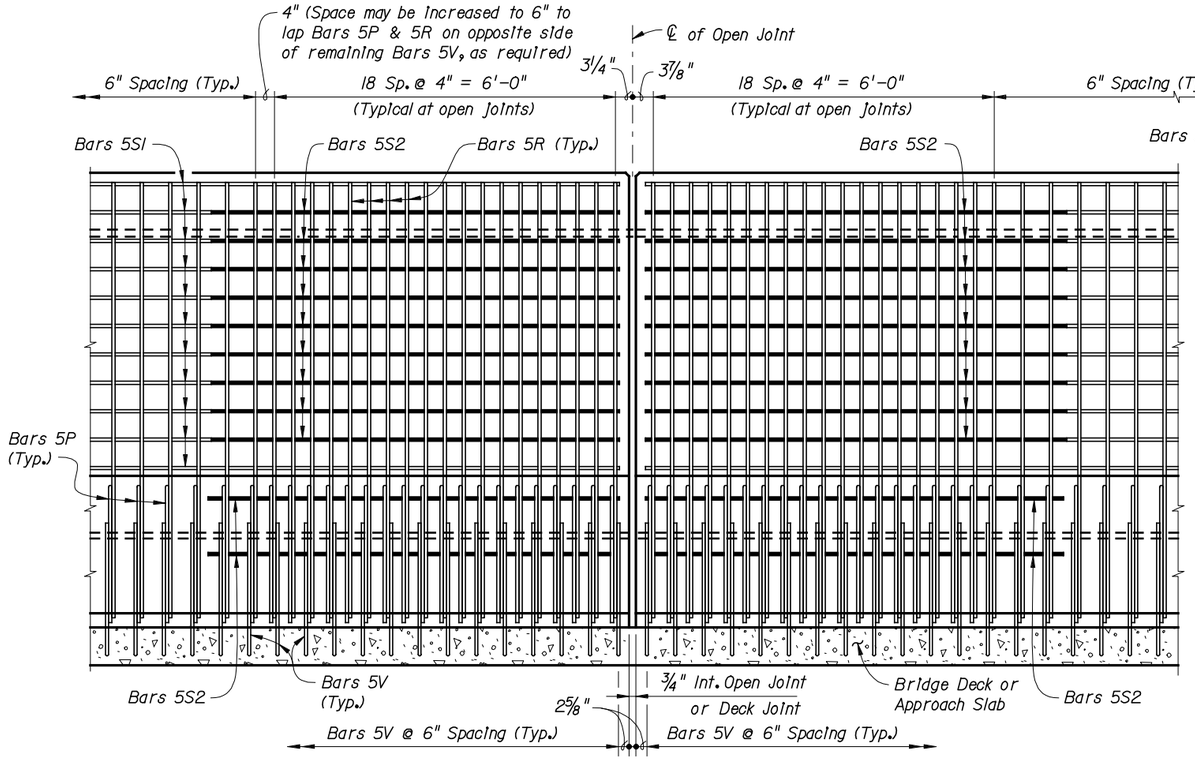

ELEVATION OF BARRIER/SOUNDWALL REINFORCING STEEL
(INTERMEDIATE OPEN JOINT SHOWN, DECK JOINT SIMILAR)
(Bars 5S1 in Barrier not shown for clarity)

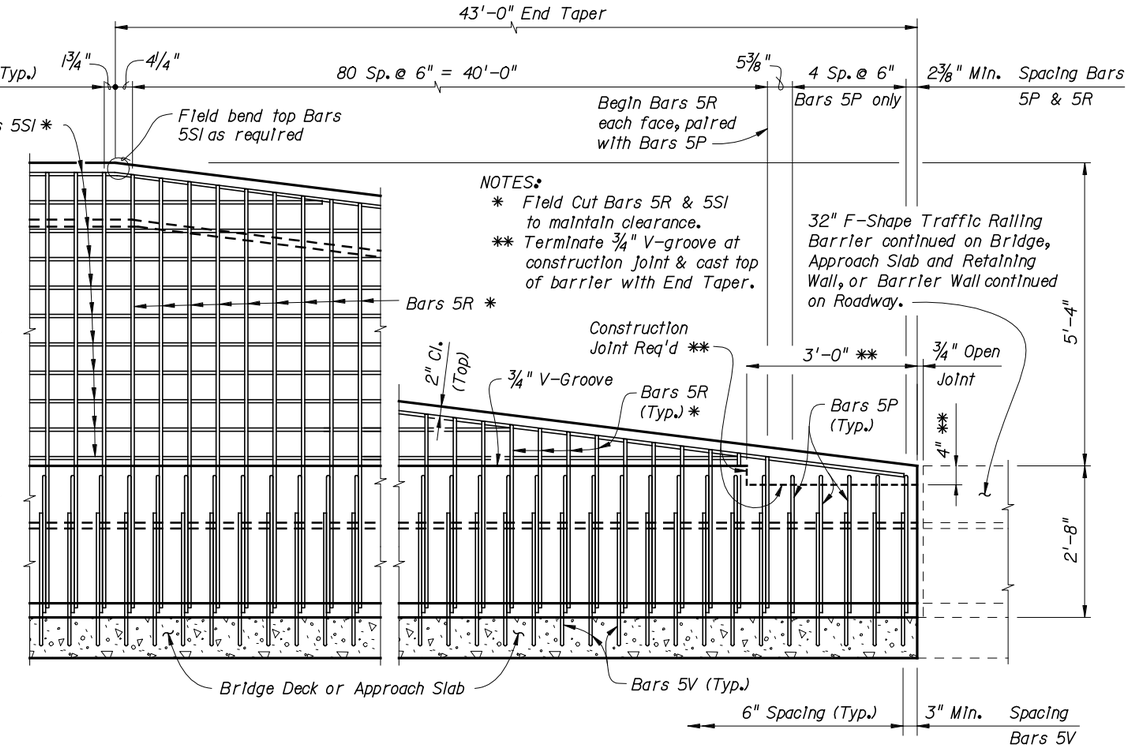

ELEVATION OF BARRIER/SOUNDWALL END TAPER (ADJACENT TO TRAFFIC RAILING BARRIER SHOWN, GUARDRAIL ATTACHMENT SIMILAR SEE DETAIL "A" BELOW)
(Bars 5S1 in Barrier not shown for clarity)

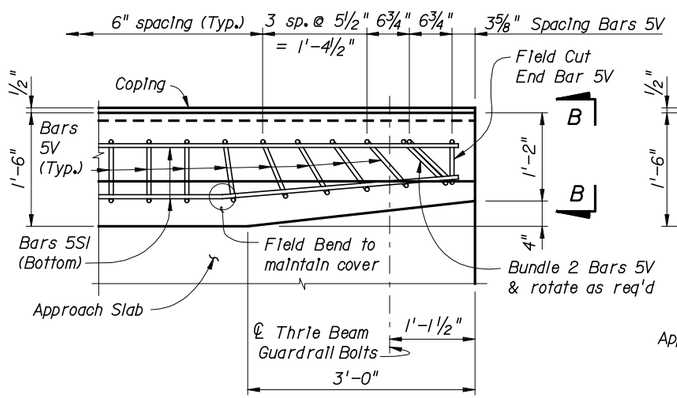

PLAN - BARRIER END TRANSITION
(Showing Bars 5V and Bars 5S1) (Bars 5P, 5R, Soundwall & Reinforcement not shown for Clarity)

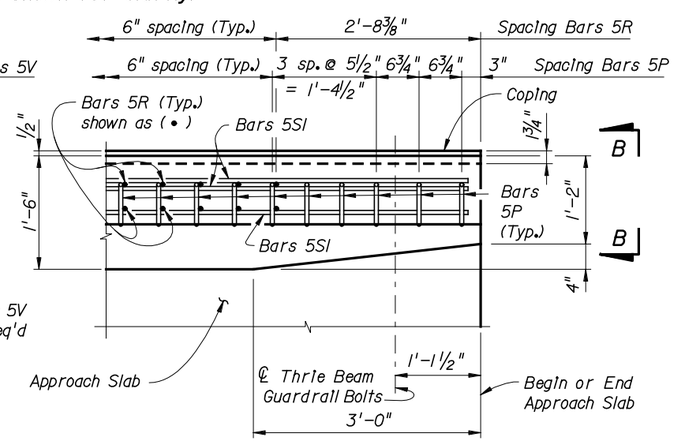

PLAN - BARRIER END TRANSITION
(Showing Bars 5P, 5R, and Bars 5S1) (Bars 5V, Soundwall & Reinforcement not shown for Clarity)

DETAIL "A"

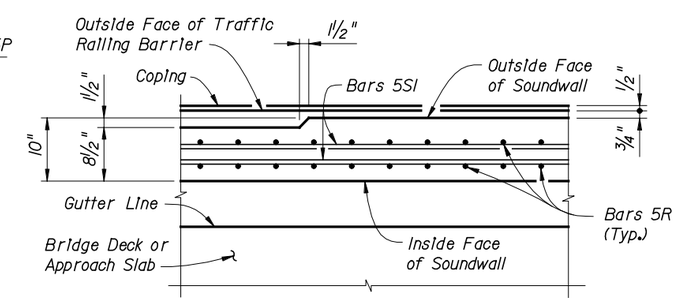

SECTION C-C
THRU SOUNDWALL END TAPER

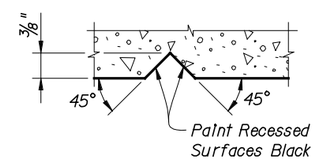

SECTION THRU RECESSED "V" GROOVE TO FORM INSCRIBED LETTERS AND FIGURES

DETAIL "A" NOTES:

1. Rotate Bars 5P & 5V in Barrier End Transition to maintain cover. Begin placing Barrier Bars 5P and 5V at the barrier end and proceed toward the guardrail (thrie beam) terminal connector to ensure placement of guardrail bolt holes. Pair Bars 5R with Bars 5P as shown. Clearance of Bars 5P, 5R & 5V to guardrail bolt holes shall be checked to prevent cutting of bars if holes are to be drilled. Shift bars locally where conflicts occur.
2. For Guardrail connection details see Roadway and Traffic Design Standards Index No. 400.
3. Omit Barrier End Transition if Traffic Railing Barrier/Soundwall or Traffic Railing Barrier is used beyond the Approach Slab. See the Plan Sheets. If Barrier End Transition is omitted, space Bars 5P, 5R & 5V at 6" as shown above (Typ.).

CROSS REFERENCE:
For View B-B, see Index No. 1550, Drawing 3 of 3.
For location of Section C-C, see Index No. 1550, Drawing 1 of 3.

BRIDGE NO. XXXXXX

REVISIONS

DATE	BY	DESCRIPTION	DATE	BY	DESCRIPTION
10-01-01	SDO	Standard Drawing Issue Date			

	NAMES	DATES
DRAWN BY	SJN	07-01
CHECKED BY	JLF	09-01
DESIGNED BY	SJN	07-01
CHECKED BY	CEB	09-01
APPROVED BY	REN	

ENGINEER OF RECORD:
STRUCTURES DESIGN OFFICE
CENTRAL OFFICE
605 Suwannee Street, MS 33
Tallahassee, Florida 32399-0450

FLORIDA DEPARTMENT OF TRANSPORTATION

ROAD NO.	COUNTY	FINANCIAL PROJECT ID
.	.	.

SHEET TITLE: TRAFFIC RAILING BARRIER/SOUNDWALL (BRIDGE)
INDEX NO. 1550 (DRAWING 2 OF 3)

PROJECT NAME: .

SHEET NO. .

10/02/2001 02:47:59 PM $$JUSTIN_MACHINE$$ ...standards\eng\1550-2of3.dgn

INSTRUCTIONS TO DESIGNER:

* For Bridge Decks up to a maximum thickness of 9", the two Bars 5S1 placed in the Bridge Deck may substitute for the longitudinal deck steel located within the limits of Bars 5V, provided that the total area of longitudinal deck steel beneath the barrier, as required by calculation, is not reduced. Show these bars on the Superstructure Sheets with the deck steel.

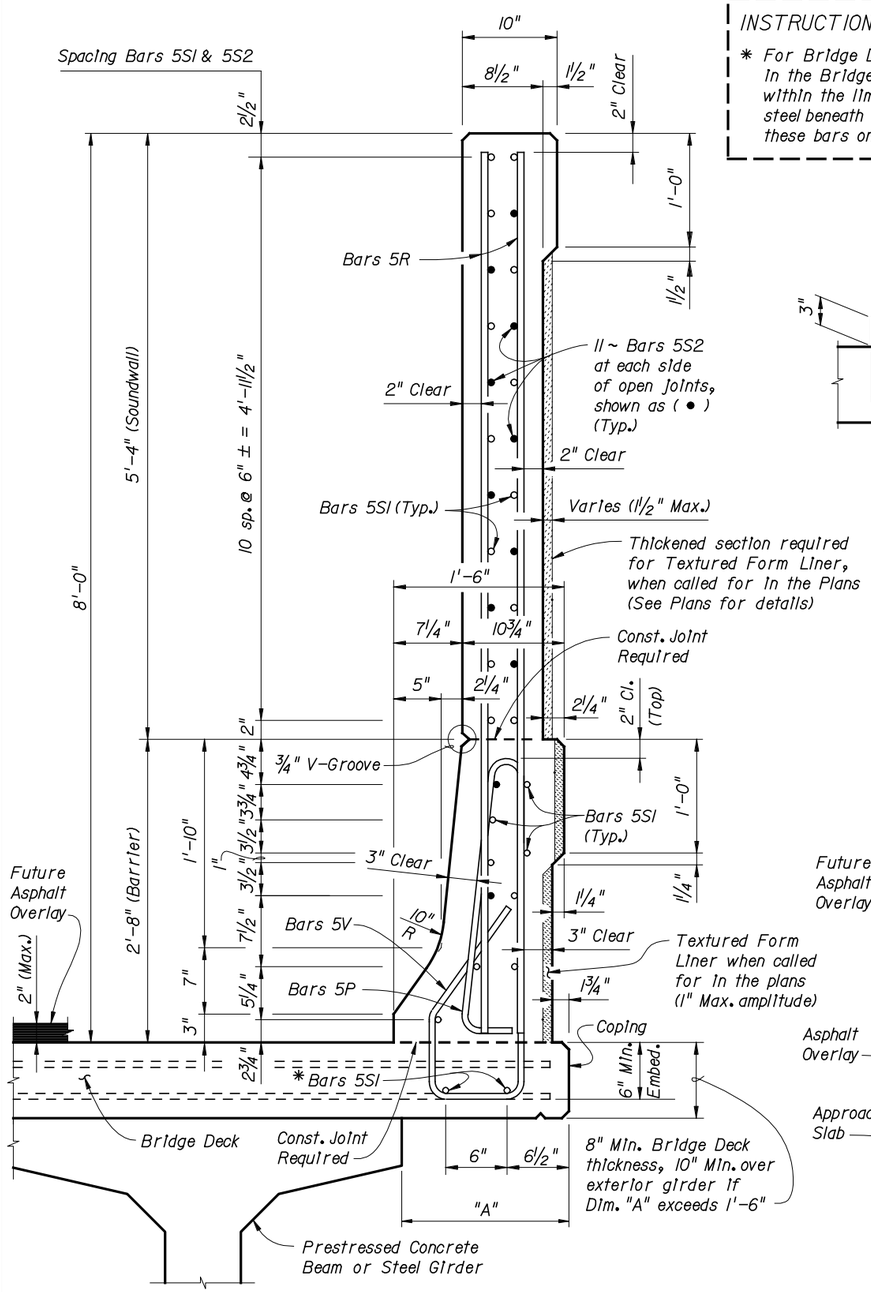

SECTION A-A
TYPICAL SECTION THRU TRAFFIC RAILING BARRIER/SOUNDWALL
(Section Thru Bridge Deck Shown -
Section Thru Approach Slab Similar)

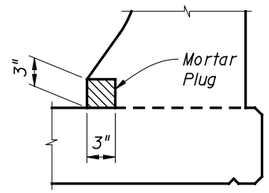

NOTE:
At Intermediate Open Joints, the lower 3" portion of the open joint shall be plugged by filling it with mortar in accordance with Section 400 of the Specifications.

DETAIL "B" - SECTION
AT INTERMEDIATE OPEN JOINT

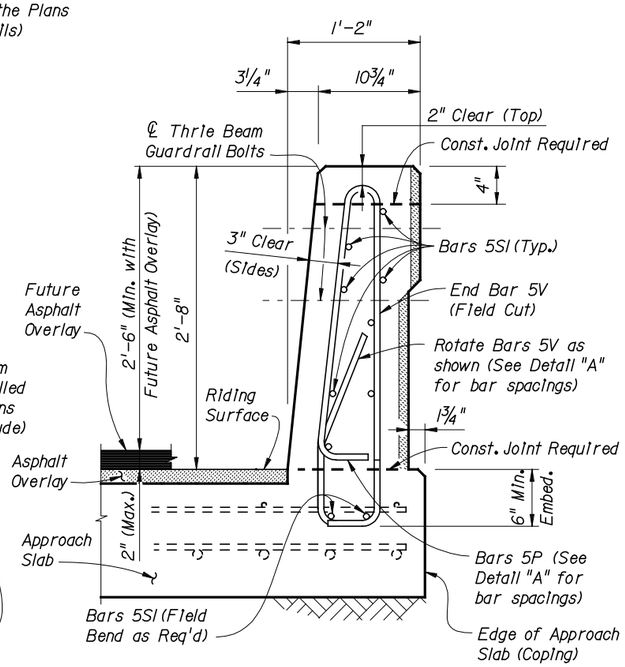

VIEW B-B
END VIEW OF BARRIER END TRANSITION FOR
GUARDRAIL ATTACHMENT AT END OF APPROACH SLAB
(Flexible Pavement Approach Slab Shown,
Rigid Pavement Approach Slab Similar)

CONVENTIONAL REINFORCING STEEL BENDING DIAGRAMS

BILL OF REINFORCING STEEL

MARK	SIZE	LENGTH
P	5	5'-7"
R	5	7'-9"
S1	5	AS REQ'D
S2	5	7'-3"
V	5	5'-1"

ROADWAY CROSS-SLOPE	LOW GUTTER		HIGH GUTTER	
	ØA	ØB	ØA	ØB
0% to 2%	90°	90°	90°	90°
2% to 6%	93°	87°	87°	93°
6% to 10%	96°	84°	84°	96°

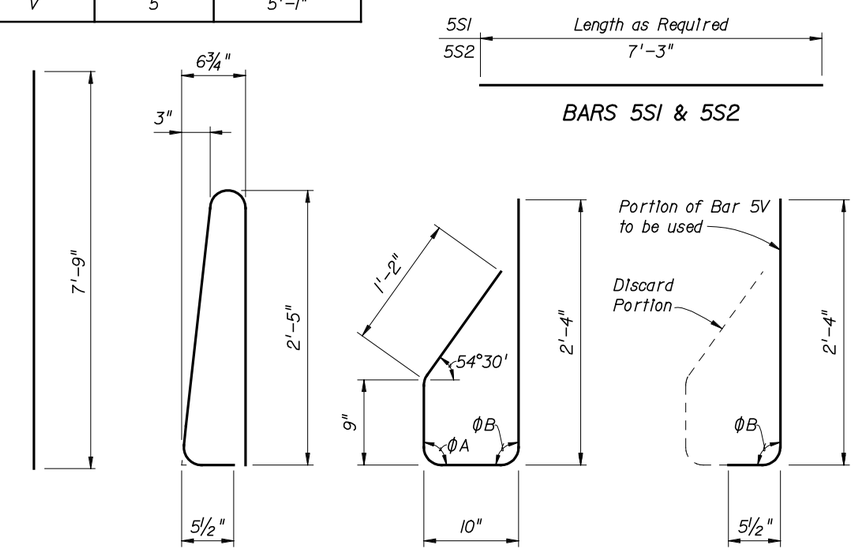

BAR 5R
(Field Cut for End Taper)

STIRRUP BAR 5P

STIRRUP BAR 5V

END STIRRUP BAR 5V
To Be Field Cut
(One Required per Barrier End Transition)

REINFORCING STEEL NOTES:

1. All bar dimensions in the bending diagrams are out to out.
2. All reinforcing steel at the open joints shall have a 2" minimum cover.
3. Bars 5S1 may be continuous or spliced at the construction joints. Lap splices for Bars 5S1 shall be a minimum of 2'-2".
4. The Contractor may use Welded Wire Fabric when approved by the Engineer. Welded Wire Fabric shall conform to ASTM A497.
5. Bars 5R shall be one continuous bar. No mechanical couplers or lap splices are permitted.

ESTIMATED TRAFFIC RAILING BARRIER/SOUNDWALL QUANTITIES

ITEM	UNIT	QUANTITY
Concrete (Barrier)	C.Y./FT.	0.104
Concrete (Soundwall)	C.Y./FT.	0.145
Reinforcing Steel (Typical)	LB./FT.	78.57
Additional Reinf. @ Open Joint	LB.	430.24

(The above quantities are based on the typical section, 2% deck cross slope and barrier on low side of deck.)

CROSS REFERENCE:
For locations of Section A-A and Detail "B", see Index No. 1550, Drawing 1 of 3.
For location of View B-B, see Index No. 1550, Drawing 2 of 3.

BRIDGE NO. XXXXXX

REVISIONS

DATE	BY	DESCRIPTION	DATE	BY	DESCRIPTION
10-01-01	SDO	Standard Drawing Issue Date			

	NAMES	DATES
DRAWN BY	SJN	07-01
CHECKED BY	JLF	09-01
DESIGNED BY	SJN	07-01
CHECKED BY	CEB	09-01
APPROVED BY	REN	

ENGINEER OF RECORD:
STRUCTURES DESIGN OFFICE
CENTRAL OFFICE
605 Suwannee Street, MS 33
Tallahassee, Florida 32399-0450

FLORIDA DEPARTMENT OF TRANSPORTATION

ROAD NO.	COUNTY	FINANCIAL PROJECT ID
.	.	.

SHEET TITLE: TRAFFIC RAILING BARRIER/SOUNDWALL (BRIDGE)
INDEX NO. 1550 (DRAWING 3 OF 3)

PROJECT NAME: .

SHEET NO. .

$I_USTN_MACHINE\Temp\standards\eng\1550-3of3.dgn 02:48:03 PM 10/02/2001