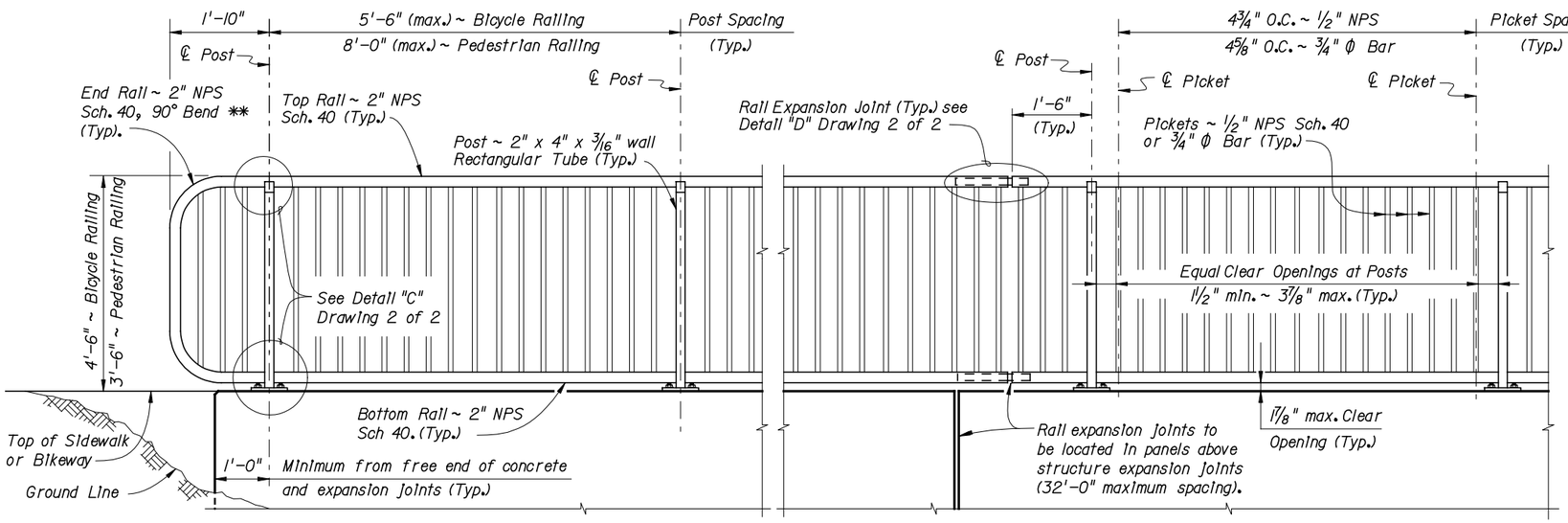

NOTES:

* Picket Spacing based on the optional picket members shown. If an alternate design is used maintain a maximum clear opening of 3⅞".

** End Rail bend varies for Railings on grades steeper than 2.4%.

NPS = Nominal Pipe Size

CROSS REFERENCE:
For Details "A", "B", "C" and "D", see Drawing 2 of 2

ELEVATION
(Showing Outside Face of Railing)

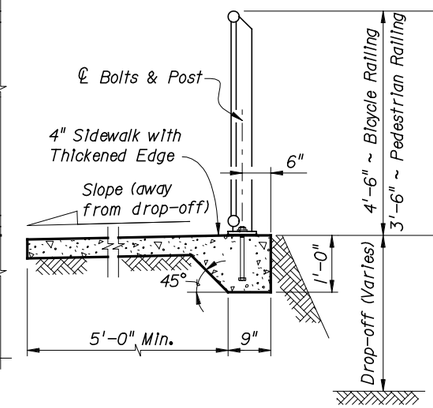

TYPICAL SECTION ON
CONCRETE SIDEWALK
(CASE I)

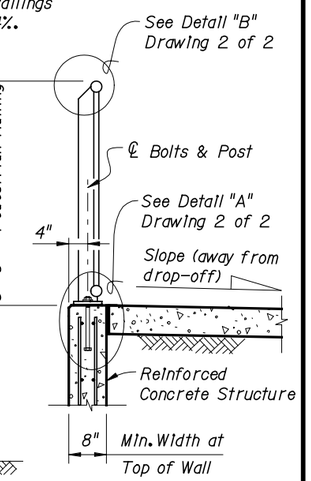

TYPICAL SECTION ON
RETAINING WALL
(CASE II)

NOTES

GENERAL SPECIFICATIONS:
The Florida Department of Transportation "Standard Specifications for Road and Bridge Construction".

DESIGN SPECIFICATIONS:
American Association of State Highway and Transportation Officials (AASHTO) "LRFD Bridge Design Specifications", Second Edition, 1998, Including 75 year Design Life
Florida Department of Transportation (FDOT) "Structures Design Guidelines for Load and Resistance Factor Design", 1999 and approved revisions.
Southern Building Code Congress International Inc. (SBCCI) "Standard Building Code", 1997 Edition.
Florida Department of Community Affairs and Florida Board of Building Codes & Standards "Florida Accessibility Code for Building Construction", October 1997 Edition.
National Fire Protection Association (NFPA) 101, "Life Safety Code", 1997 Edition.

DESIGN LIVE LOADS:
Post and Base Plate: Equivalent point load = 200 lb. load + (50 lb/ft x Post Spacing (ft)) applied transversely at top rail connection.
Top and Bottom Rails: 50 lb/ft uniform load applied simultaneously vertically and transversely + 200 lb. concentrated point load applied at midspan in the directions for both maximum stress and deflection.
Pickets: Concentrated 200 lb load applied transversely over an area of 1.0 square foot.

GEOMETRY:
Clear Opening between Pickets: Shall reject the passage of a 4" diameter sphere below 42" height, and a 8" diameter sphere above 42" height.
Clear Opening under Bottom Rail: Shall reject the passage of a 2" diameter sphere.
Pedestrian Railing Height: 42" minimum.
Bicycle Railing Height: 54" minimum.

DEFLECTION:
Total combined deflection of the railing system including the resilient pads, due to the top rail design live loads, shall not exceed 1½" when measured at midspan of the top rail.

APPLICABILITY NOTE TO DESIGNER:
This railing is applicable for all cases where a drop-off hazard exceeds 2'-6" or when a drop-off hazard is less than 2'-6" and is required by design. Adequate foundation support shall be provided for anchorage and stability against overturning. For unusual site conditions a site specific railing is to be designed by the responsible engineer. The railing shown on this drawing requires a handrail for ramps steeper than a 5% grade to conform with the requirements of the Americans with Disabilities Act (ADA). This railing is not approved for use on bridges. Refer to FDOT Plans Preparation Manual (Volume I) Chapter 8, for the definition of a "drop-off hazard".

ALTERNATE DESIGN:
Alternate Proprietary Railing Systems will be considered for approval when designed to meet the design life, live loads, geometry and deflection requirements specified above and listed on the Department's Qualified Products List. All fixed joints are to be either welded or commercially designed fixed joint systems (soldered, brazed, fused, bonded or shrink fitted). Mechanical joints other than expansion joints are not permitted unless approved by the Engineer.

RAILS, PICKETS & POSTS:
Pipe Rails and Pickets shall be in accordance with ASTM A53 Grade B for standard weight pipe (Schedule 40) or ASTM A36 for bars. Structural Tube Posts shall be in accordance with ASTM A500 Grade A,B,C or D, or ASTM A501. Posts and End Rails shall be fabricated and installed plumb, ± 1" tolerance when measured at 3'-6" above the foundation. Pickets shall be fabricated parallel to the posts. Corners and changes in tangential longitudinal alignment, shall be made continuous with a 9" bend radius. For changes in tangential longitudinal alignment greater than 45°, posts shall be positioned at a maximum distance of 2'-0" each side of the corner and shall not be located at the corner apex. For curved longitudinal alignments the top and bottom rails shall be shop bent to match the alignment radius.

BASE PLATES & POST CAPS:
Base Plates and Post Cap plates shall be in accordance with ASTM A36 or ASTM A709 Grade 36.

COATINGS:
The railing shall be hot-dip galvanized after fabrication in accordance with Section 962-7 of the Specifications.
All nuts bolts and washers shall be hot dip galvanized in accordance with Section 962-7 of the Specifications.

ANCHOR BOLTS:
Anchor bolts shall be in accordance with ASTM F1554 Grade 36. Headless anchor bolts for Adhesive Anchors shall be threaded full length. All anchor bolts shall have Single Self-Locking Hex Nuts. All nuts shall be in accordance with ASTM A563 or ASTM A194. Flat Washers shall be in accordance with ASTM F436 and Plate Washers (for long slotted holes only), shall be in accordance with ASTM A36 or ASTM A709 Grade 36. After the nuts have been snug tightened, the anchor bolt threads shall be distorted to prevent removal of the nuts. Distorted threads shall be coated with a galvanizing compound in accordance with the Specifications.

JOINTS:
All fixed joints are to be welded all around and ground smooth. Mechanical joints other than expansion joints are not permitted unless approved by the Engineer. Expansion joints shall be spaced at a maximum 32'-0". Field splices similar to the expansion joint detail may be approved by the Engineer to facilitate hot-dip galvanizing and handling, but spaced not closer than every second panel.

WELDING:
All welding shall be in accordance with the American Welding Society Structural Welding Code (Steel) ANSI/AWS D1.1 (current edition). Weld metal shall be E60XX or E70XX. Nondestructive testing of welds shall not be required.

WEEP HOLES:
Weep holes shall be ¼" ϕ and located at the low point between adjacent posts for both top and bottom rails. Holes shall be drilled through the underside of the rails prior to hot-dip galvanizing. Weep holes shall not be required if the only low points are at the ends of the railing.

SHOP DRAWINGS:
Complete details including venting holes for galvanizing, post, picket and expansion joint locations shall be submitted by the Contractor for the Engineer's approval prior to fabrication of the railing. Shop drawings shall be in accordance with the Specifications.

PAYMENT:
Railing shall be paid for per linear foot (Item No. 515-2-abb). Payment for the rail includes rails, posts, pickets, rail splice assembly, base plates, anchor bolts, nuts, washers, resilient pads and all incidental materials and labor required to complete installation of the railing.

REVISIONS

DATE	BY	DESCRIPTION	DATE	BY	DESCRIPTION
10-01-01	SDO	Standard Drawing Issue Date			

	NAMES	DATES
DRAWN BY	SJN	12-00
CHECKED BY	JLF	09-01
DESIGNED BY	SJN	12-00
CHECKED BY	CEB	09-01
APPROVED BY	REN	

ENGINEER OF RECORD:
STRUCTURES DESIGN OFFICE
CENTRAL OFFICE
605 Suwannee Street, MS 33
Tallahassee, Florida 32399-0450

FLORIDA DEPARTMENT OF TRANSPORTATION

ROAD NO.	COUNTY	FINANCIAL PROJECT ID
.	.	.

SHEET TITLE: STEEL PEDESTRIAN/BICYCLE PICKET RAILING INDEX NO. 850 (DRAWING 1 OF 2)

PROJECT NAME: .

SHEET NO. .

10/02/2001 02:48:06 PM c:\Temp\standards\eng\850-1of2.dgn

ANCHOR BOLT TABLE							
CASE	STRUCTURE TYPE	DIMENSIONS			ANCHOR LENGTH		ANCHOR SIZE
		"A" Edge Dist.	"B" Edge Dist.	"C" Embedment	C.I.P Hex Head Bolt	Adhesive Anchor	
I	Unreinforced Concrete	6"	1'-2"	9"	10½"	11"	¾" Φ
IIa	Reinforced Concrete	4"	4"	9"	10½"	11"	¾" Φ
IIb	Roadway Index No. 520 Gravity Wall	4½"	3½" @ top	1'-0"	1'-1½"	1'-2"	¾" Φ

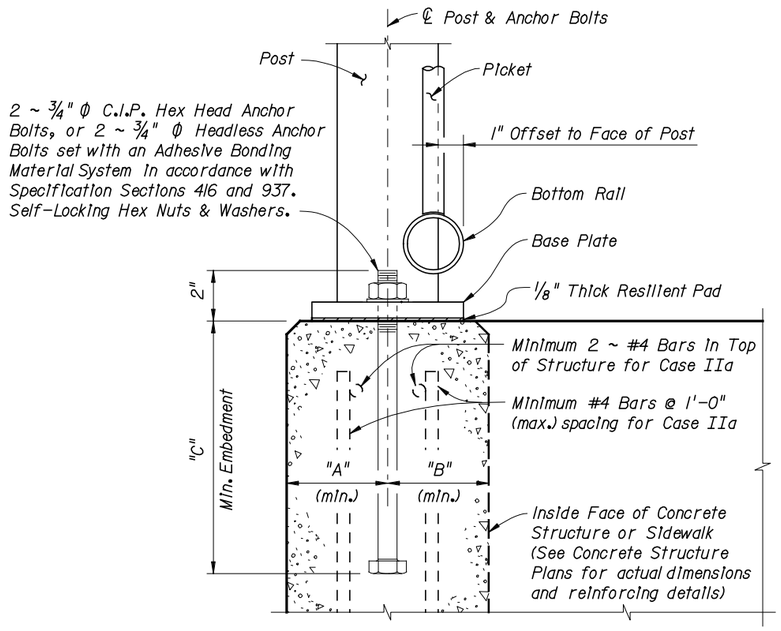

DETAIL "A"
(Cast-In-Place Anchor Bolts Shown, Adhesive Anchors Similar)

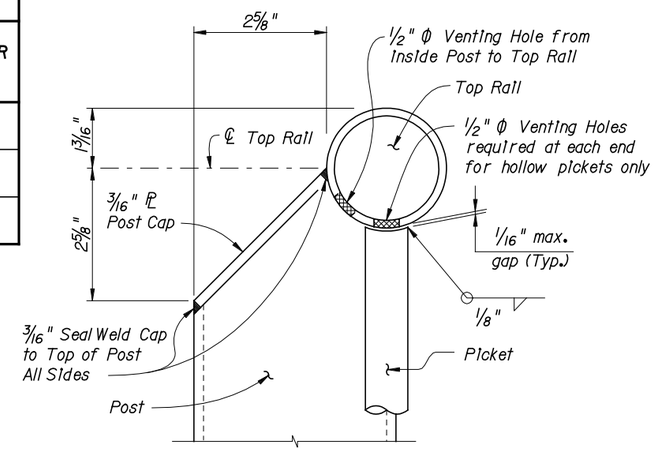

DETAIL "B"
(Top of Picket Connection Shown, Bottom Connection Similar)

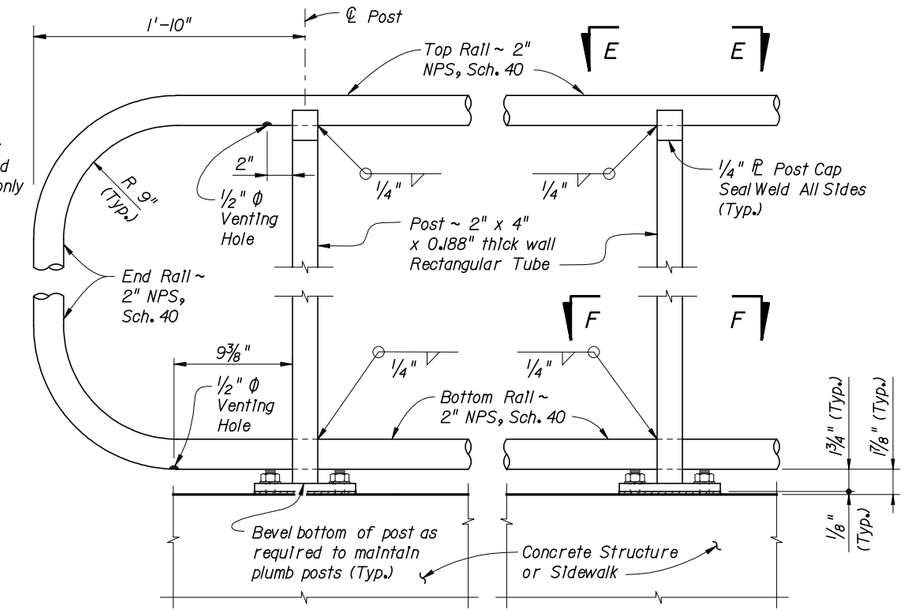

DETAIL "C" - RAIL CONNECTIONS
(Showing Outside Face of Railing and Structure, Pickets Not Shown for Clarity)

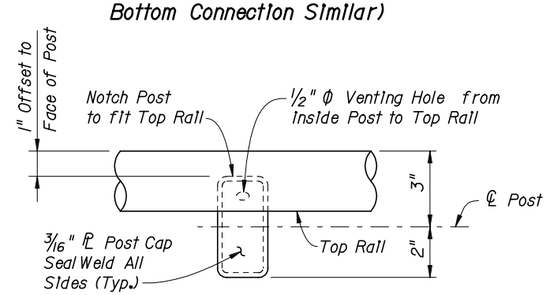

VIEW E-E
TOP RAIL CONNECTION
(Base Plate Not Shown for Clarity)

RAILING MEMBER DIMENSIONS			
MEMBER	DESIGNATION	OUTSIDE DIMENSION	WALL THICKNESS
Posts	2" x 4" Rectangular Tube	2.00" x 4.00"	0.188"
Rails	2" NPS (Sch. 40)	2.375"	0.154"
Joint/Splice Sleeves	1½" NPS (Sch. 40)	1.900"	0.145"
Pickets	½" NPS (Sch. 40)	0.840"	0.109"
	¾" Φ Round Bar	0.750"	N/A

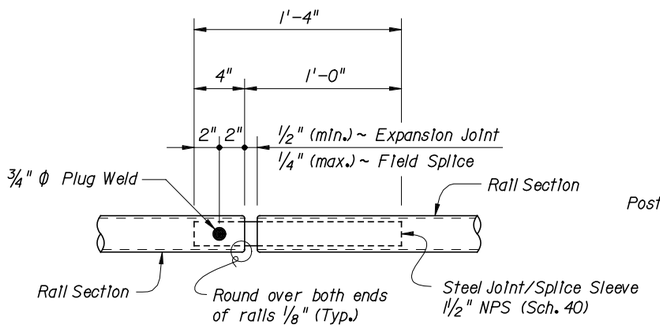

DETAIL "D" - EXPANSION JOINT
(FIELD SPLICE SIMILAR)

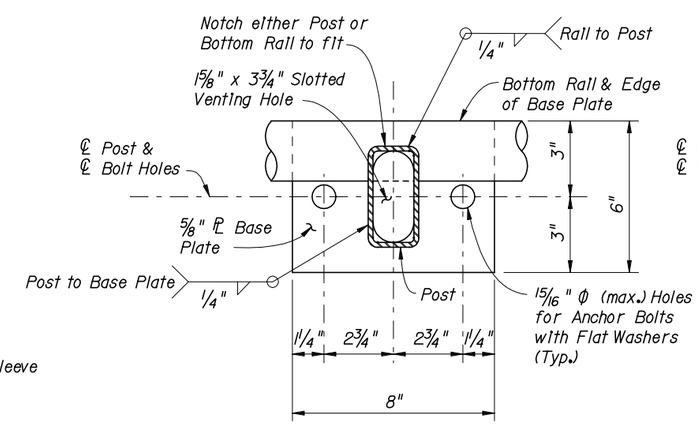

SECTION F-F
BASE PLATE AND BOTTOM RAIL CONNECTION

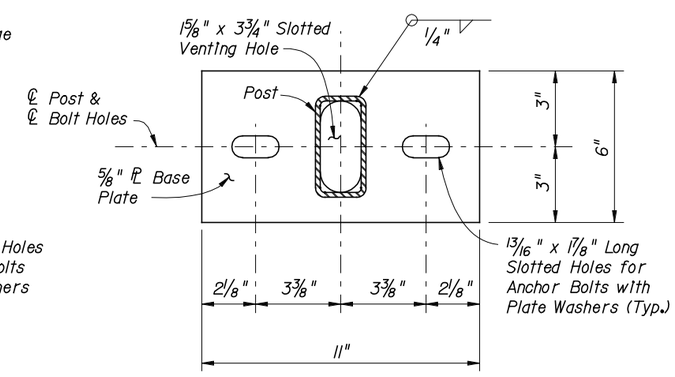

ALTERNATE SLOTTED BASE
PLATE DETAIL

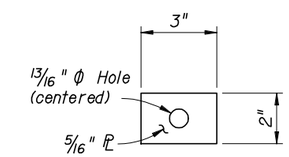

PLATE WASHER DETAIL

CROSS REFERENCE:
For locations of Details "A", "B", "C" and "D", see Drawing No. 1 of 2

REVISIONS					
DATE	BY	DESCRIPTION	DATE	BY	DESCRIPTION
10-01-01	SDO	Standard Drawing Issue Date			

	NAMES	DATES
DRAWN BY	SJN	12-00
CHECKED BY	JLF	09-01
DESIGNED BY	SJN	12-00
CHECKED BY	CEB	09-01
APPROVED BY	REN	

ENGINEER OF RECORD:
STRUCTURES DESIGN OFFICE
CENTRAL OFFICE
605 Suwannee Street, MS 33
Tallahassee, Florida 32399-0450

FLORIDA DEPARTMENT OF TRANSPORTATION

ROAD NO.	COUNTY	FINANCIAL PROJECT ID
.	.	.

SHEET TITLE: STEEL PEDESTRIAN/BICYCLE PICKET RAILING INDEX NO. 850 (DRAWING 2 OF 2)

PROJECT NAME: :

SHEET NO. .

10/02/2001 02:48:10 PM $:_USTN_MACHINE\Temp\standards\eng\850-2of2.dgn