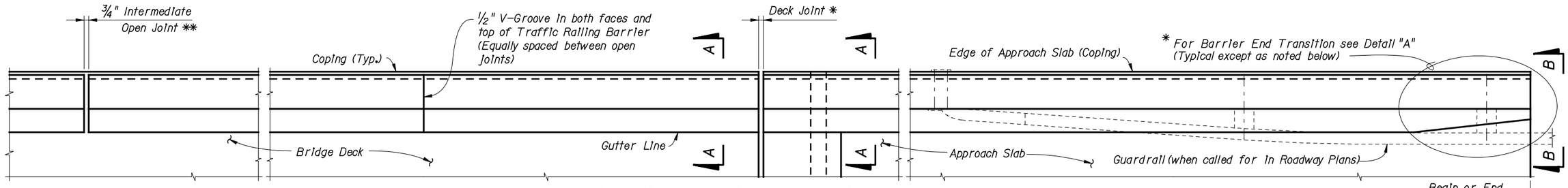

PLAN (Reinforcing Steel not shown for clarity)

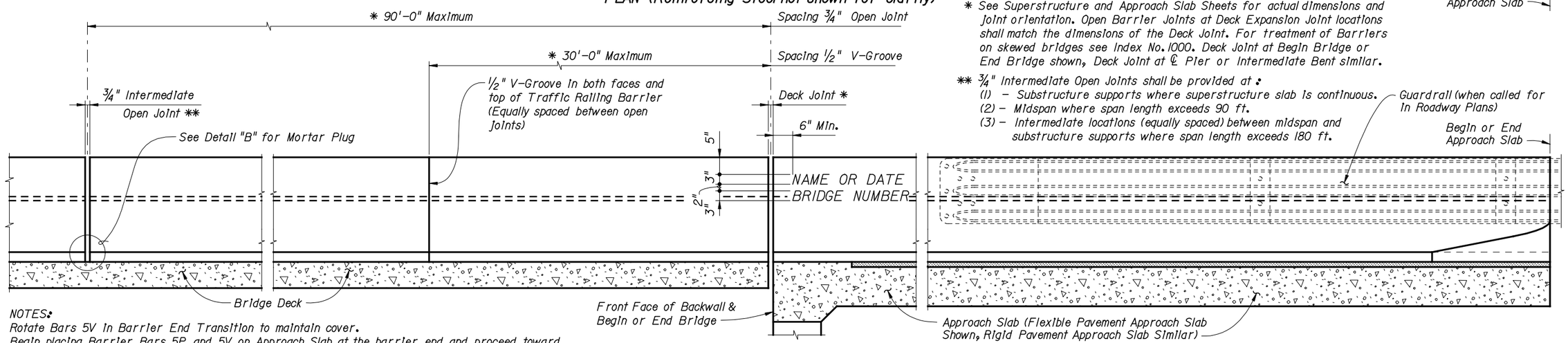

* See Superstructure and Approach Slab Sheets for actual dimensions and joint orientation. Open Barrier Joints at Deck Expansion Joint locations shall match the dimensions of the Deck Joint. For treatment of Barriers on skewed bridges see Index No. 1000. Deck Joint at Begin Bridge or End Bridge shown, Deck Joint at ℄ Pier or Intermediate Bent similar.

** 3/4" Intermediate Open Joints shall be provided at :
(1) – Substructure supports where superstructure slab is continuous.
(2) – Midspan where span length exceeds 90 ft.
(3) – Intermediate locations (equally spaced) between midspan and substructure supports where span length exceeds 180 ft.

NOTES:
Rotate Bars 5V in Barrier End Transition to maintain cover.
Begin placing Barrier Bars 5P and 5V on Approach Slab at the barrier end and proceed toward Begin or End Bridge to ensure placement of guardrail bolt holes. If required, adjustments to the bar spacing for Bars 5P and 5V shall be made immediately adjacent to Begin or End Bridge.

ELEVATION OF INSIDE FACE OF BARRIER
(Reinforcing Steel not shown for clarity)

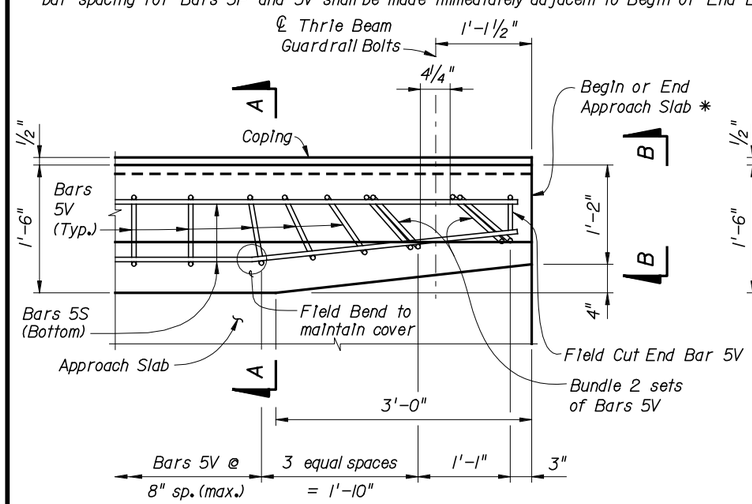

PLAN – Barrier End Transition
(Showing Bars 5V and 5S)

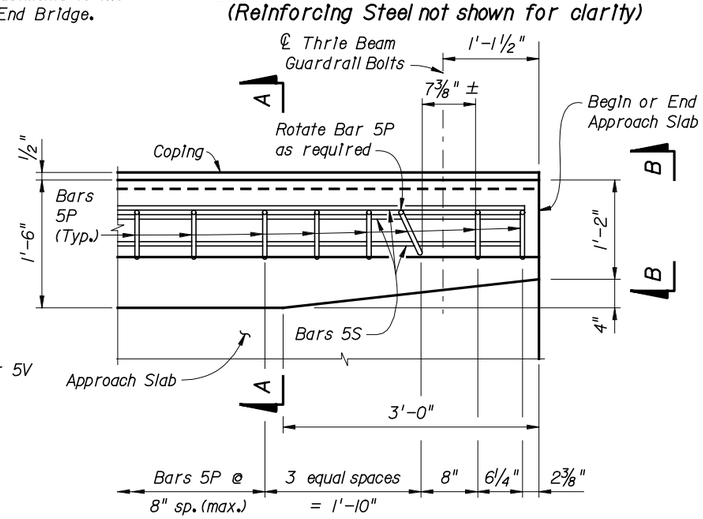

PLAN – Barrier End Transition
(Showing Bars 5P and 5S)

DETAIL "A"

NOTE: Omit Barrier End Transition and Guardrail if Concrete Barrier Wall is used beyond the Approach Slab. See the Plan and Elevation Sheet and Roadway Plans. If Barrier End Transition is omitted, extend Typical Section to end of the Approach Slab and Space Bars 5P and 5V at 8" (Typ.)

TRAFFIC RAILING BARRIER NOTES

This railing has been structurally evaluated to be equivalent or greater in strength to other safety shape railings which have been crash tested to NCHRP Report 350 TL-4 Criteria.

CONCRETE AND REINFORCING STEEL : See General Notes.

MARKERS : Elevation Markers shall be placed on top of the Traffic Railing Barrier at the end bents. On bridges longer than 100 ft. one marker shall be placed at each end of the bridge. On bridges 100 ft. or less one marker shall be placed at one end of the bridge only. Markers are to be furnished by the Florida Department of Transportation and installed by the Contractor. The cost of installing the markers shall be included in the Contract Unit Price for the Traffic Railing Barrier.

GUARDRAIL : For Guardrail connection details see Roadway and Traffic Design Standards Index No. 400.

SUPERELEVATED BRIDGES : At the option of the Contractor the Traffic Railing Barrier on super-elevated bridges may be constructed perpendicular to the roadway surface. If an adjoining barrier is constructed plumb, transition the end of the Traffic Railing Barrier from perpendicular to plumb over a minimum distance of 20'-0". The cost of all modifications will be at the Contractor's expense.

BARRIERS ON RETAINING WALLS : If the Traffic Railing Barrier is to be provided on a retaining wall, the barrier section will be the same as shown on Index No. 700, Drawing 2 of 2. All other details such as the guardrail transition attachment, the maximum spacing of the 3/4" open joints and 1/2" V-groove shall apply.

NAME, DATE AND BRIDGE NUMBER : The Name and Bridge Number shall be placed on the Traffic Railing Barrier so as to be seen on the driver's right side when approaching the bridge. The Date shall be placed on the driver's left side when approaching the bridge. The Date shall be the year the bridge is constructed. For a major widening the date shall be the year of the widening. Black plastic letters and figures 3" in height may be used, as approved by the Engineer, in lieu of the letters and figures formed by 3/8" V-Grooves. V-Grooves shall be formed by preformed letters and figures.

PEDESTRIAN AND BICYCLE RAILING : See Index Nos. 810 and 820 for Notes, Details and post spacings for Traffic Railing Barriers with Aluminum Pedestrian /Bicycle Bullet Railings.

CROSS REFERENCE:
For Section A-A, View B-B and Detail "B", see Index No. 700, Drawing 2 of 2.

BRIDGE NO. XXXXXX

REVISIONS

DATE	BY	DESCRIPTION	DATE	BY	DESCRIPTION
10-01-01	SDO	Standard Drawing Issue Date			

	NAMES	DATES
DRAWN BY	MDM	5-00
CHECKED BY	CEB	5-00
DESIGNED BY	CEB	5-00
CHECKED BY	MDM	5-00
APPROVED BY	REN	

ENGINEER OF RECORD:
STRUCTURES DESIGN OFFICE
CENTRAL OFFICE
605 Suwannee Street, MS 33
Tallahassee, Florida 32399-0450

FLORIDA DEPARTMENT OF TRANSPORTATION

ROAD NO.	COUNTY	FINANCIAL PROJECT ID.
.	.	.

SHEET TITLE: TRAFFIC RAILING BARRIER – (32" F SHAPE)
INDEX NO. 700 (DRAWING 1 OF 2)

PROJECT NAME: .

SHEET NO. .

$$$$$$$$DGNSPECIFICATION$$$$$$$$
$$$$$$$$SYTIME$$$$$$$$

ALTERNATE REINFORCING STEEL (WELDED WIRE FABRIC) DETAILS

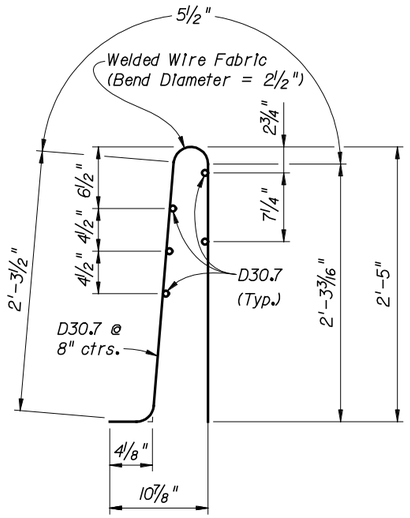

Welded Wire Fabric (WWF)
Piece No. 2

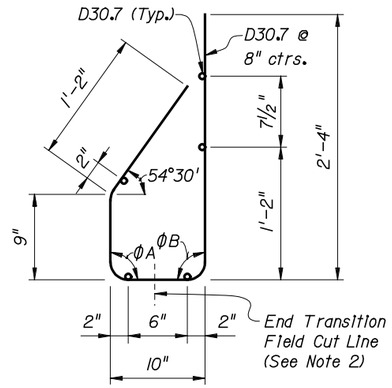

Welded Wire Fabric (WWF)
Piece No. 1

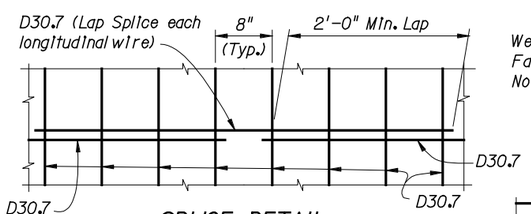

SPLICE DETAIL
(Between WWF Sections)

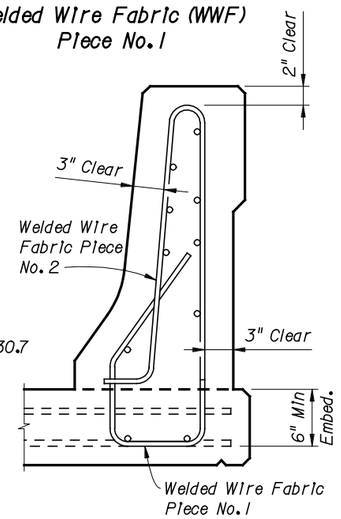

WELDED WIRE FABRIC NOTES:

1. At the option of the Contractor Welded Wire Fabric (WWF) may be utilized in lieu of all Bars 5P, 5S and 5V. Welded Wire Fabric shall conform to ASTM A497.
2. Welded Wire Fabric at Barrier End Transition shall be field bent inward as required (Pieces 1 & 2) to maintain cover. The vertical wires (D30.7) in Piece 1 shall be cut as shown and the gutter side portion bent inward as required to allow placement.

CONVENTIONAL REINFORCING STEEL BENDING DIAGRAMS

BILL OF REINFORCING STEEL

MARK	SIZE	LENGTH
P	5	5'-7"
S	5	AS REQ'D
V	5	5'-1"

ROADWAY CROSS-SLOPE	LOW GUTTER		HIGH GUTTER	
	ΦA	ΦB	ΦA	ΦB
0% to 2%	90°	90°	90°	90°
2% to 6%	93°	87°	87°	93°
6% to 10%	96°	84°	84°	96°

ΦA and ΦB shall be 90° if Contractor elects to place Barrier Perpendicular to the Deck.

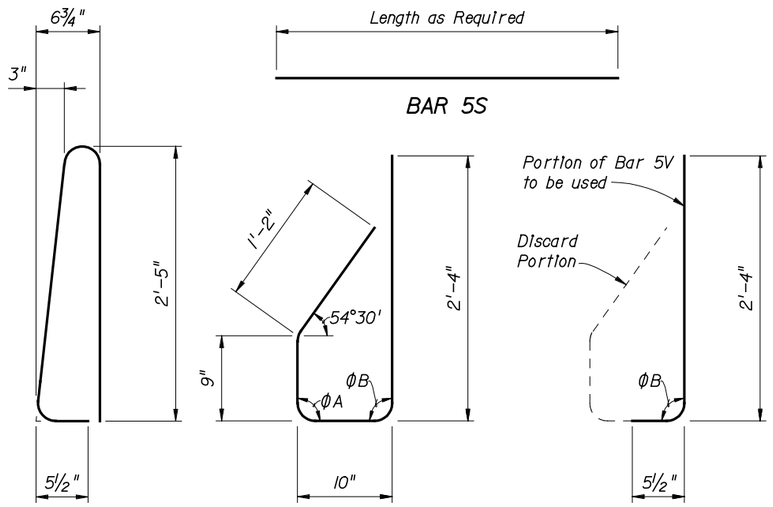

STIRRUP BAR 5P STIRRUP BAR 5V END STIRRUP BAR 5V

To Be Field Cut
(One Required per
Barrier End Transition)

REINFORCING STEEL NOTES:

1. All bar dimensions in the bending diagrams are out to out.
2. The 9" and the 2'-4" vertical dimensions shown for Bar 5V are based on a bridge deck without a raised sidewalk. If a raised sidewalk is to be provided, increase these dimensions to achieve a 6" minimum embedment into the bridge deck. See the Superstructure and Approach Slab Sheets.
3. The reinforcement for the barrier on a retaining wall shall be the same as detailed above for a 8" deck with ΦA = ΦB = 90°
4. All reinforcing steel at the open joints shall have a 2" minimum cover.
5. Bars 5S may be continuous or spliced at the construction joints. Bar splices for Bars 5S shall be a minimum of 2'-0".

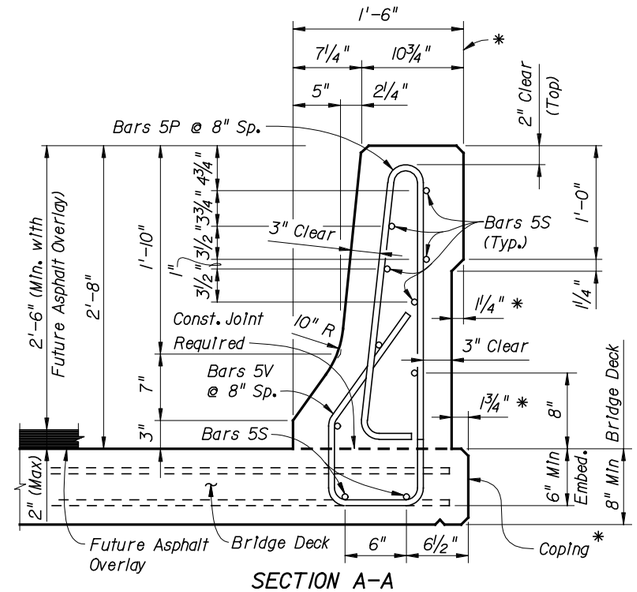

SECTION A-A
TYPICAL SECTION THRU TRAFFIC RAILING BARRIER
(SECTION THRU BRIDGE DECK SHOWN -
SECTION THRU APPROACH SLAB SIMILAR)

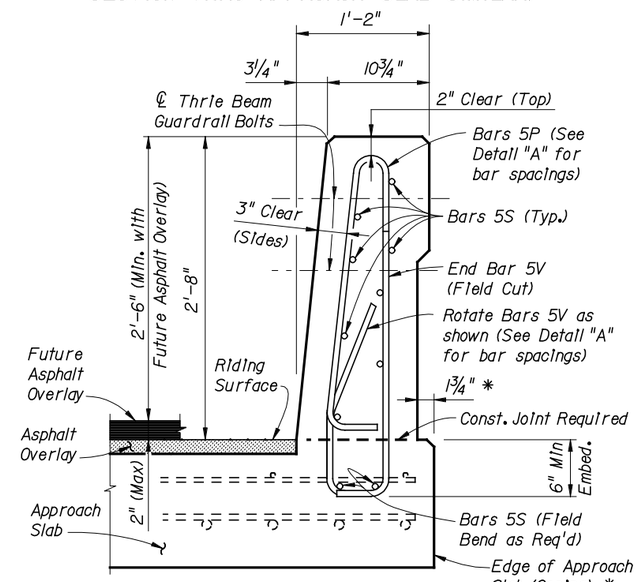

VIEW B-B

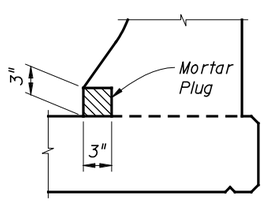

DETAIL "B" - SECTION
AT INTERMEDIATE OPEN JOINT

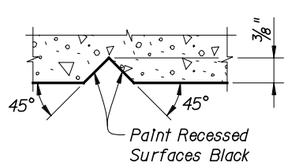

SECTION THRU RECESSED
"V" GROOVE TO FORM INSCRIBED
LETTERS AND FIGURES

NOTE:
At intermediate open joints, the lower 3" portion of the open joint shall be plugged by filling it with mortar in accordance with Section 400 of the Specifications

* Where barriers of adjacent bridges are to be built back to back, the outside vertical plane of the barrier and deck may coincide along a plane centered 1'-6" from each gutter line. A bond breaker will be required. See Superstructure Sheets for Details.

ESTIMATED TRAFFIC RAILING BARRIER QUANTITIES

ITEM	UNIT	QUANTITY
Concrete	C.Y./FT.	0.104
Reinforcing Steel	LB./FT.	27.12

(The above quantities are based 2% deck cross slope; barrier on low side of deck.)

CROSS REFERENCE:
For Detail "A" and locations of Section A-A, View B-B and Detail "B", see Index No. 700, Drawing 1 of 2.

INSTRUCTIONS TO DESIGNER:

For Bridge Decks up to a maximum thickness of 9", the two Bars 5S placed in the Bridge Deck may substitute for the longitudinal deck steel located within the limits of Bars 5V, provided that the total area of longitudinal deck steel beneath the barrier, as required by calculation, is not reduced. Show these bars on the Superstructure Sheets with the deck steel.

BRIDGE NO. XXXXXX

REVISIONS

DATE	BY	DESCRIPTION	DATE	BY	DESCRIPTION
10-01-01	SDO	Standard Drawing Issue Date			

	NAMES	DATES
DRAWN BY	MDM	5-00
CHECKED BY	CEB	5-00
DESIGNED BY	CEB	5-00
CHECKED BY	MDM	5-00
APPROVED BY	REN	

ENGINEER OF RECORD:
STRUCTURES DESIGN OFFICE
CENTRAL OFFICE
605 Suwannee Street, MS 33
Tallahassee, Florida 32399-0450

FLORIDA DEPARTMENT OF TRANSPORTATION

ROAD NO.	COUNTY	FINANCIAL PROJECT ID.
.	.	.

SHEET TITLE: TRAFFIC RAILING BARRIER - (32" F SHAPE)
INDEX NO. 700 (DRAWING 2 OF 2)

PROJECT NAME:

SHEET NO.

$$$$$$$$SYTIME$$$$$$$$ $$$$$$$$DGNSPECIFICATION$$$$$$$$