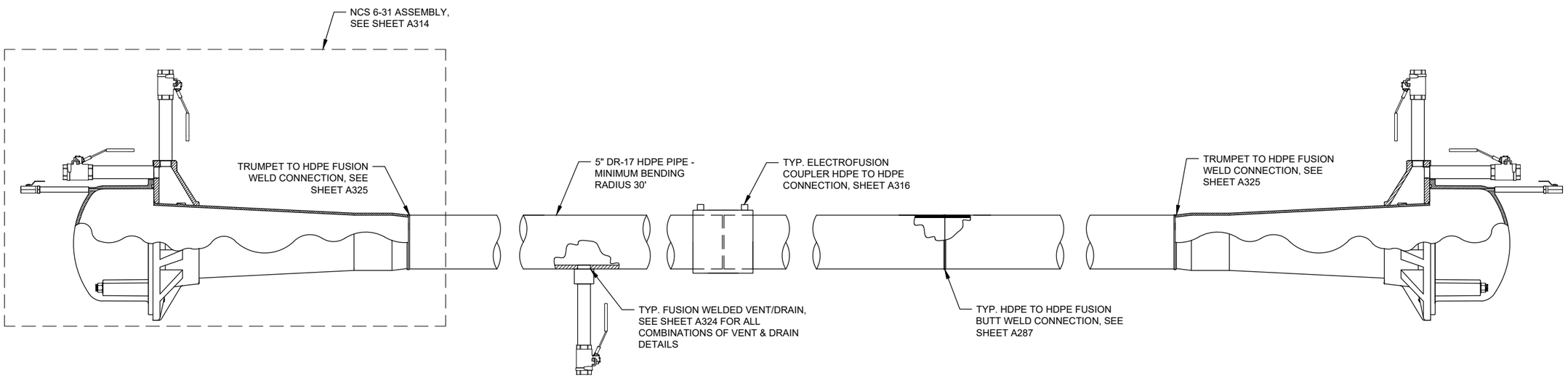

OVERALL ASSEMBLY

THESE SHOP DRAWINGS ILLUSTRATE THE DETAILS OF THE STRUCTURAL TECHNOLOGIES / VSL POST-TENSIONING SYSTEM. THEY WERE PREPARED IN CONFORMANCE WITH THE STRUCTURAL DESIGN PROVIDED TO STRUCTURAL TECHNOLOGIES / VSL BY PROJECT OWNER OR IT'S REPRESENTATIVE. STRUCTURAL TECHNOLOGIES / VSL TOOK NO PART IN THE PREPARATION OR REVIEW OF SAID STRUCTURAL DESIGN AND STRUCTURAL TECHNOLOGIES / VSL DISCLAIMS ANY LIABILITY FOR IT. THE STAMP OR SEAL OF A STRUCTURAL TECHNOLOGIES / VSL EMPLOYEE ON THESE SHOP DRAWINGS PERTAINS ONLY TO THE TRANSFER OF THE FORCES REQUIRED BY THE ENGINEER OF RECORD ON THE STRUCTURAL DRAWINGS, AND NOT TO THE ADEQUACY OF THE STRUCTURAL DESIGN. NO WARRANTY, EXPRESSED OR IMPLIED, AS TO THE ADEQUACY OF THE STRUCTURAL DESIGN IS MADE BY VIRTUE OF ANY SUCH STAMP OR SEAL.

NO	DESCRIPTION	BY	CHK	DATE
0	FIRST ISSUE	CDL	ZX	26FEB2018

THIS DOCUMENT, INCLUDING ANY DRAWINGS, SPECIFICATIONS, AND CALCULATIONS HEREIN, CONTAINS INFORMATION THAT IS PROPRIETARY TO STRUCTURAL TECHNOLOGIES LLC ("VSL"). THIS DOCUMENT AND THE INFORMATION CONTAINED HEREIN IS CONFIDENTIAL AND MAY NOT BE REPRODUCED OR DISCLOSED WITHOUT THE PRIOR WRITTEN CONSENT OF STRUCTURAL TECHNOLOGIES LLC ("VSL"). FURTHER, THE USE OF THIS DOCUMENT OR ANY INFORMATION PRESENTED HEREIN IS RESTRICTED TO THE SPECIFIC PROJECT AND PURPOSE FOR WHICH IT WAS PREPARED. ANY OTHER USE IS STRICTLY PROHIBITED. STRUCTURAL TECHNOLOGIES LLC ("VSL") DISCLAIMS ANY LIABILITY FOR ANY UNAUTHORIZED, UNINTENDED OR OTHER UNFORESEEABLE USE OF THIS DOCUMENT OR ANY INFORMATION IT CONTAINS.

structural TECHNOLOGIES
A Structural Group Company
Dallas, TX / Washington, DC / Denver, CO / Pompano Beach, FL
STRUCTURAL TECHNOLOGIES, LLC
DALLAS OFFICE
15600 TRINITY BLVD, SUITE 118
FORT WORTH, TX 76155
PHONE: (817) 545-4807
FAX: (817) 545-4827
WWW.VSL.NET

PROJECT INFORMATION: SYSTEM DRAWING

TITLE: NCS 6-31 OVERALL ASSEMBLY WITH FLEXIBLE FILLER

PROJECT NO: ---

SCALE: NTS

SHEET NO: A315

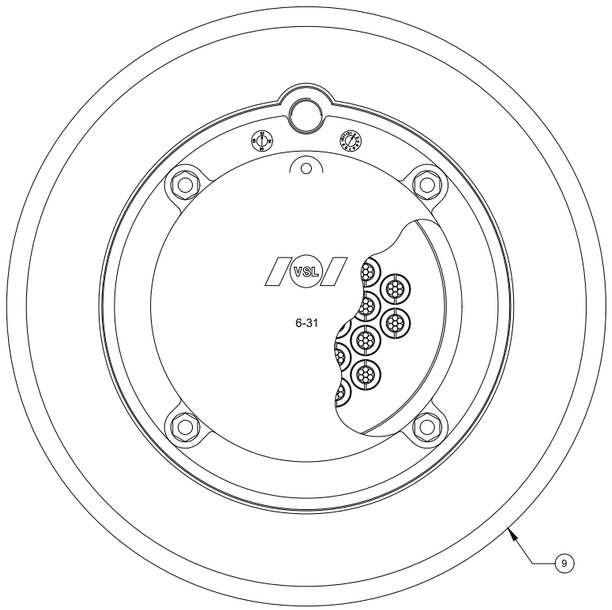

END VIEW

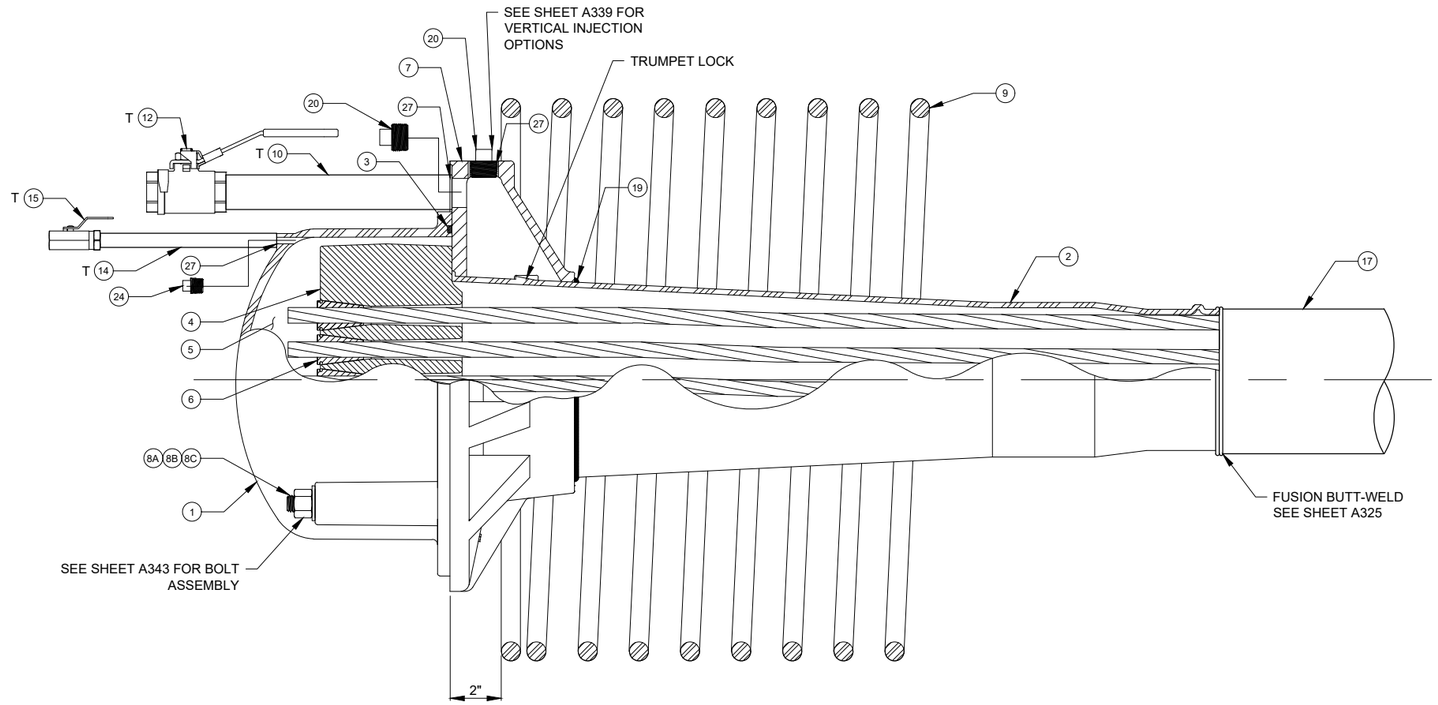

ELEVATION VIEW

NOTE: ITEMS MARKED WITH A "T" ARE TEMPORARY AND ARE NOT A PERMANENT PART OF THE SYSTEM.

ITEM	QTY	DESCRIPTION	MATERIAL	INVENTORY #
1	1	6-31 ANCHORAGE CAP W/ 1/4" FRONT PORT	ABS	02GC63102
2	1	NCS 6-31 TRUMPET	POLYETHELYNE	02BP4436
3	1	6-31 ANCHORAGE CAP O-RING	HNBR	02WX5042
4	1	NCS 6-31 ANCHOR HEAD CAST	A536 GR80-55-06	02AH6031
5	-	FLEXIBLE FILLER	FDOT APL	-
6	19	1.6G WEDGE .6 1.77 W/GROOVE	AISI 11-L-17/12-L-14	02WG0008
7	1	NCS 6-31 BEARING PLATE W/ 1" NPT PORT (GALVANIZED)	A536 GR80-55-06	02BP6031V
8A	1 SET	5/8"-11 THREADED ROD X 7"	(316L) STAINLESS	02WX6023D
8B	1 SET	5/8"-11 NUT	(316L) STAINLESS	02WX6023D
8C	1 SET	5/8" WASHER	(316L) STAINLESS	02WX6023D
9	1	SPIRAL NCS 6-31 (#6, DIA. 22", 2" PITCH, 9 TURNS)	A615, GR 60	02BP0098
10	1	1" NPT STEEL NIPPLE	SCH 40 STEEL	-
12	1	1" NPT STEEL 1/4 TURN BALL VALVE	SCH 40 STEEL	02DT01926
14	1	1/4" NPT STEEL NIPPLE	SCH 40 STEEL	-
15	1	1/4" NPT STEEL 1/4 TURN BALL VALVE	SCH 40 STEEL	02DT01924
17	-	5" DR-17 PIPE	HDPE	-
19	-	BONDUIT - SEAL AID 1/4" ALL AROUND	-	-
20	1	1" NPT STEEL PLUG	316 STAINLESS STEEL	02DT01958
24	1	1/4" NPT STEEL PLUG	316 STAINLESS STEEL	02DT01956
27	-	SILICONE GREASE	-	-

INSTALLATION PROCEDURES

1. ASSEMBLE TRUMPET INTO THE BEARING PLATE. APPLY 1/4" BONDUIT ALL AROUND LIP OF BEARING PLATE PRIOR TO INSTALLING TRUMPET. USE SLOT TO ALIGN PLATE AND TRUMPET. INSERT TRUMPET UNTIL LOCKING TABS ENGAGE.
2. LIGHTLY GREASE ANCHORAGE CAP BOLTS. USE MOUNTING HOLES IN BEARING PLATE TO MOUNT BEARING PLATE ASSEMBLY TO FORM. SECURE BEARING PLATE ASSEMBLY WITH ANCHORAGE CAP BOLTS. USE CARE NOT TO DAMAGE THREADS.
3. INSTALL AND SECURE SPIRAL.
4. INSTALL FILLER PORT CONNECTIONS. SEAL ALL TEMPORARY CONNECTIONS WITH PIPE DOPE/SILICONE GREASE (BY OTHERS), AND SEAL ALL PERMANENT CONNECTIONS WITH BONDUIT OR SIMILAR (BY OTHERS).
5. SECURE DUCT SUPPORTS @ 2' MAX. INSERT MANDRELS INTO TRUMPETS.
6. SYSTEM IS NOW READY TO AIR TEST.
7. AFTER CONCRETE PLACEMENT, INSTALL STRAND. LEAVE SUFFICIENT STRAND FOR STRESSING EQUIPMENT.
8. INSTALL ANCHOR HEADS. MAKE SURE WEDGE CAVITIES ARE CLEAN AND RUST FREE. USE WIRE BRUSH TO CLEAN IF NECESSARY.
9. ONLY STRESS STRANDS IF CONCRETE HAS REACHED REQUIRED STRENGTH SPECIFIED ON DRAWINGS.
10. ELONGATION SHOULD BE WITHIN ±7%.
11. AFTER ENGINEERS APPROVAL, STRAND TAILS MAY BE CUT.
12. AFTER FORM WORK IS REMOVED, USE MOUNTING BOLTS TO INSTALL ANCHORAGE CAP. REINSTALL O-RING INTO ANCHORAGE CAP.
13. WAX TENDON PER WAX SPEC.

THESE SHOP DRAWINGS ILLUSTRATE THE DETAILS OF THE STRUCTURAL TECHNOLOGIES / VSL POST-TENSIONING SYSTEM. THEY WERE PREPARED IN CONFORMANCE WITH THE STRUCTURAL DESIGN PROVIDED TO STRUCTURAL TECHNOLOGIES / VSL BY PROJECT OWNER OR IT'S REPRESENTATIVE. STRUCTURAL TECHNOLOGIES / VSL TOOK NO PART IN THE PREPARATION OR REVIEW OF SAID STRUCTURAL DESIGN AND STRUCTURAL TECHNOLOGIES / VSL DISCLAIMS ANY LIABILITY FOR IT. THE STAMP OR SEAL OF A STRUCTURAL TECHNOLOGIES / VSL EMPLOYEE ON THESE SHOP DRAWINGS PERTAINS ONLY TO THE TRANSFER OF THE FORCES REQUIRED BY THE ENGINEER OF RECORD ON THE STRUCTURAL DRAWINGS, AND NOT TO THE ADEQUACY OF THE STRUCTURAL DESIGN. NO WARRANTY, EXPRESSED OR IMPLIED, AS TO THE ADEQUACY OF THE STRUCTURAL DESIGN IS MADE BY VIRTUE OF ANY SUCH STAMP OR SEAL. ___

NO	DESCRIPTION	BY	CHK	DATE
0	FIRST ISSUE	CDL	ZX	26FEB2018

THIS DOCUMENT, INCLUDING ANY DRAWINGS, SPECIFICATIONS, AND CALCULATIONS HEREIN, CONTAINS INFORMATION WHICH IS PROPRIETARY TO STRUCTURAL TECHNOLOGIES LLC ("VSL"). THIS DOCUMENT AND THE INFORMATION CONTAINED HEREIN IS CONFIDENTIAL, AND MAY NOT BE REPRODUCED OR DISCLOSED TO ANYONE WITHOUT THE PRIOR WRITTEN CONSENT OF STRUCTURAL TECHNOLOGIES LLC ("VSL"). FURTHER, THE USE OF THIS DOCUMENT OR ANY INFORMATION CONTAINED OR PRESENTED HEREIN IS RESTRICTED TO THE SPECIFIC PROJECT AND PURPOSE FOR WHICH IT WAS PREPARED. ANY OTHER USE IS STRICTLY PROHIBITED. STRUCTURAL TECHNOLOGIES LLC ("VSL") DISCLAIMS ANY LIABILITY FOR ANY UNAUTHORIZED, UNINTENDED OR OTHER IMPROPER USE OF THIS DOCUMENT OR ANY INFORMATION IT CONTAINS.

structural TECHNOLOGIES
A Structural Group Company
Dallas, TX / Washington, DC / Denver, CO / Pompano Beach, FL
STRUCTURAL TECHNOLOGIES, LLC
DALLAS OFFICE
15600 TRINITY BLVD, SUITE 118
FORT WORTH, TX 76155
PHONE: (817) 545-4807
FAX: (817) 545-4827
WWW.VSL.NET

PROJECT INFORMATION: SYSTEM DRAWING

TITLE: NCS 6-31 ASSEMBLY WITH FLEXIBLE FILLER

PROJECT NO: ---

SCALE: NTS

SHEET NO: A314

ELECTRONIC FILE LOCATION: I:\VSL System Drawings\Work In Progress Drawings\Work In Progress Drawings\Florida DOT Test 2017\NCS 6-31 Flexible Filler Submittal

PLOT DATE/TIME: 06Mar2018 2:59 PM FILE NAME: A314 NCS 6-31 Flexible Filler System.dwg

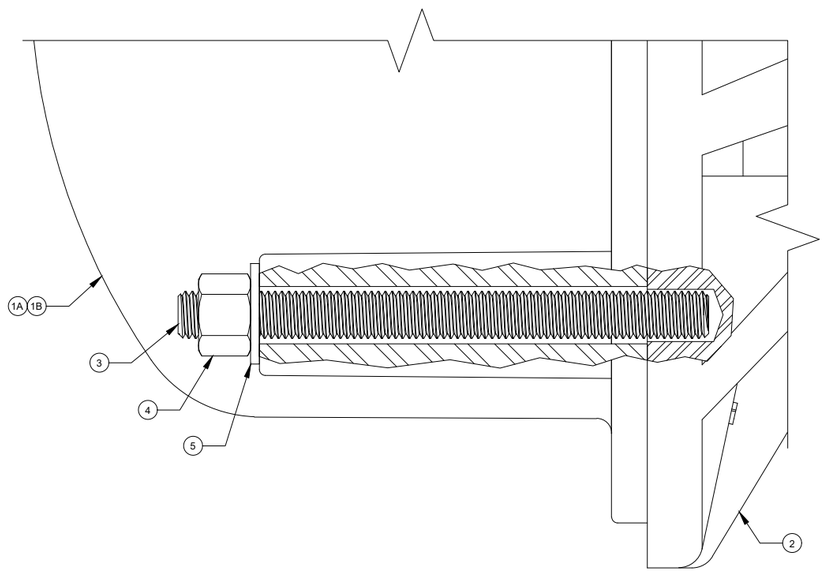

CAP TO BEARING PLATE BOLTED ASSEMBLY

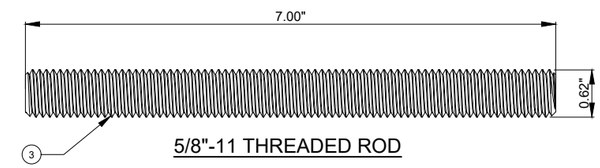

5/8"-11 THREADED ROD

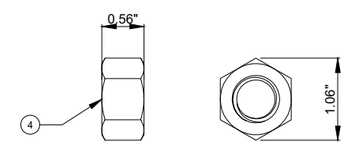

5/8"-11 NUT

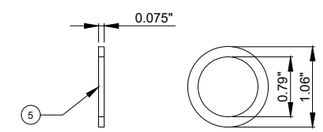

5/8" WASHER

ITEM	QTY	DESCRIPTION	MATERIAL	INVENTORY #
1A	1	6-31 ANCHORAGE CAP W/ 1/4" FRONT PORT	ABS	02GC63102
1B	1	6-31 ANCHORAGE CAP W/ 1/4" TOP PORT	ABS	02GC63103
2	1	NCS 6-31 BEARING PLATE W/ 1" NPT PORT (GALVANIZED)	A536 GR80-55-06	02BP6031V
3	1 SET	5/8"-11 THREADED ROD X 7"	(316L) STAINLESS	02WX6023D
4	1 SET	5/8"-11 NUT	(316L) STAINLESS	02WX6023D
5	1 SET	5/8" WASHER	(316L) STAINLESS	02WX6023D

THESE SHOP DRAWINGS ILLUSTRATE THE DETAILS OF THE STRUCTURAL TECHNOLOGIES / VSL POST-TENSIONING SYSTEM. THEY WERE PREPARED IN CONFORMANCE WITH THE STRUCTURAL DESIGN PROVIDED TO STRUCTURAL TECHNOLOGIES / VSL BY PROJECT OWNER OR IT'S REPRESENTATIVE. STRUCTURAL TECHNOLOGIES / VSL TOOK NO PART IN THE PREPARATION OR REVIEW OF SAID STRUCTURAL DESIGN AND STRUCTURAL TECHNOLOGIES / VSL DISCLAIMS ANY LIABILITY FOR IT. THE STAMP OR SEAL OF A STRUCTURAL TECHNOLOGIES / VSL EMPLOYEE ON THESE SHOP DRAWINGS PERTAINS ONLY TO THE TRANSFER OF THE FORCES REQUIRED BY THE ENGINEER OF RECORD ON THE STRUCTURAL DRAWINGS, AND NOT TO THE ADEQUACY OF THE STRUCTURAL DESIGN. NO WARRANTY, EXPRESSED OR IMPLIED, AS TO THE ADEQUACY OF THE STRUCTURAL DESIGN IS MADE BY VIRTUE OF ANY SUCH STAMP OR SEAL. ---

NO	DESCRIPTION	BY	CHK	DATE
0	FIRST ISSUE	CDL	ZX	26FEB2018

THIS DOCUMENT, INCLUDING ANY DRAWINGS, SPECIFICATIONS, AND CALCULATIONS HEREIN, CONTAINS INFORMATION WHICH IS PROPRIETARY TO STRUCTURAL TECHNOLOGIES LLC ("VSL"). THIS DOCUMENT AND THE INFORMATION CONTAINED HEREIN IS CONFIDENTIAL, AND MAY NOT BE REPRODUCED OR DISCLOSED WITHOUT THE PRIOR WRITTEN CONSENT OF STRUCTURAL TECHNOLOGIES LLC ("VSL"). FURTHER, THE USE OF THIS DOCUMENT OR ANY INFORMATION PRESENTED HEREIN IS RESTRICTED TO THE SPECIFIC PROJECT AND PURPOSE FOR WHICH IT WAS PREPARED. ANY OTHER USE IS STRICTLY PROHIBITED. STRUCTURAL TECHNOLOGIES LLC ("VSL") DISCLAIMS ANY LIABILITY FOR ANY UNAUTHORIZED, UNINTENDED OR OTHER IMPROPER USE OF THIS DOCUMENT OR ANY INFORMATION IT CONTAINS.

structural TECHNOLOGIES
A Structural Group Company
Dallas, TX / Washington, DC / Denver, CO / Pompano Beach, FL

STRUCTURAL TECHNOLOGIES, LLC
DALLAS OFFICE
15600 TRINITY BLVD, SUITE 118
FORT WORTH, TX 76155

PHONE: (817) 545-4807
FAX: (817) 545-4827
WWW.VSL.NET

PROJECT INFORMATION: SYSTEM DRAWING

TITLE: NCS 6-31 BOLT ASSEMBLY

PROJECT NO: ---

SCALE: NTS

SHEET NO: A343

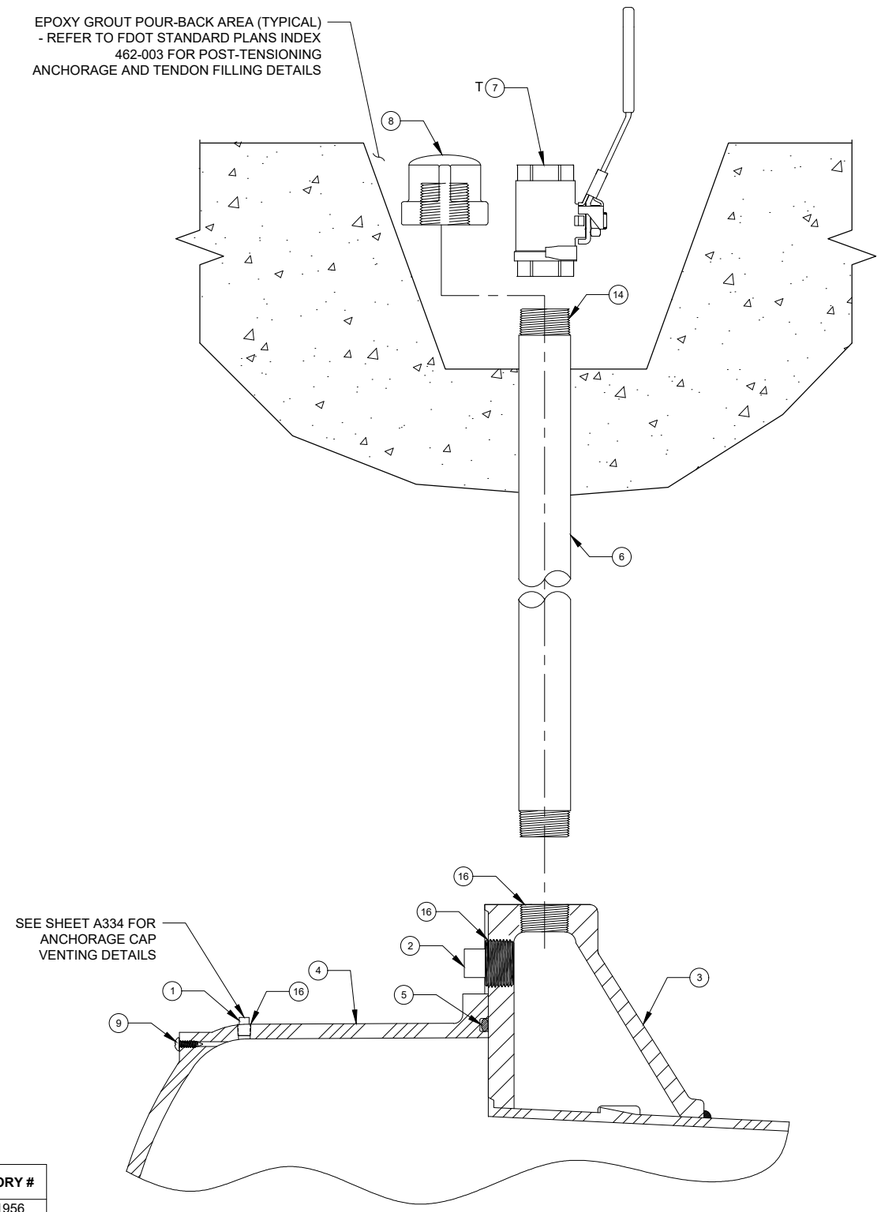

ITEM	QTY	DESCRIPTION	MATERIAL	INVENTORY #
1	1	1/4" NPT STEEL PLUG	316 STAINLESS STEEL	02DT01956
2	1	1" NPT STEEL PLUG	316 STAINLESS STEEL	02DT01958
3	1	NCS 6-31 BEARING PLATE W/ 1" NPT PORT (GALVANIZED)	A536 GR80-55-06	02BP6031V
4	1	6-31 ANCHORAGE CAP W/ 1/4" TOP PORT	ABS	02GC63103
5	1	6-31 ANCHORAGE CAP O-RING	HNBR	02WX5042
6	1	1" NPT NIPPLE	SCH 40 STEEL	-
7	1	1" NPT STEEL 1/4 TURN BALL VALVE	SCH 40 STEEL	02DT01926
8	1	1" NPT STEEL CAP	SCH 40 STEEL	02DT01951
9	1	3/16" PAN HEAD SCREW	316 STAINLESS STEEL	02WX1070
14	-	SILICONE GREASE	-	-
16	-	BONDUIT	-	-

NOTES:
1. ITEMS MARKED WITH A "T" ARE TEMPORARY AND ARE NOT A PERMANENT PART OF THE SYSTEM.
2. ALL COMPONENTS MUST BE PRESSURE RATED FOR 150 PSI
3. CONCRETE COVER MUST MEET FDOT STRUCTURES DESIGN GUIDELINES SECTION 1.4.2

THESE SHOP DRAWINGS ILLUSTRATE THE DETAILS OF THE STRUCTURAL TECHNOLOGIES / VSL POST-TENSIONING SYSTEM. THEY WERE PREPARED IN CONFORMANCE WITH THE STRUCTURAL DESIGN PROVIDED TO STRUCTURAL TECHNOLOGIES / VSL BY PROJECT OWNER OR IT'S REPRESENTATIVE. STRUCTURAL TECHNOLOGIES / VSL TOOK NO PART IN THE PREPARATION OR REVIEW OF SAID STRUCTURAL DESIGN AND STRUCTURAL TECHNOLOGIES / VSL DISCLAIMS ANY LIABILITY FOR IT. THE STAMP OR SEAL OF A STRUCTURAL TECHNOLOGIES / VSL EMPLOYEE ON THESE SHOP DRAWINGS PERTAINS ONLY TO THE TRANSFER OF THE FORCES REQUIRED BY THE ENGINEER OF RECORD ON THE STRUCTURAL DRAWINGS, AND NOT TO THE ADEQUACY OF THE STRUCTURAL DESIGN. NO WARRANTY, EXPRESSED OR IMPLIED, AS TO THE ADEQUACY OF THE STRUCTURAL DESIGN IS MADE BY VIRTUE OF ANY SUCH STAMP OR SEAL.

NO	DESCRIPTION	BY	CHK	DATE
0	FIRST ISSUE	CDL	ZX	26FEB2018

STRUCTURAL TECHNOLOGIES, LLC CLAIMS A STRICT PROPRIETARY RIGHT IN ALL DRAWINGS, SPECIFICATIONS AND CALCULATIONS (INFORMATION") SET FORTH ON THIS SHEET. THE USE OF SUCH INFORMATION IN WHOLE OR IN PART, OR ANY REPRODUCTION THEREOF, IS RESTRICTED TO THE SITE FOR WHICH IT WAS PREPARED AND TO THE MATERIAL AND/OR SERVICE PROVIDED BY STRUCTURAL TECHNOLOGIES / VSL. ANY OTHER USE, STRICTLY PROHIBITED, AND STRUCTURAL TECHNOLOGIES / VSL DISCLAIMS ANY LIABILITY THEREFORE.

structural TECHNOLOGIES
A Structural Group Company
Dallas, TX / Washington, DC / Denver, CO / Pompano Beach, FL
STRUCTURAL TECHNOLOGIES, LLC
DALLAS OFFICE
15600 TRINITY BLVD, SUITE 118
FORT WORTH, TX 76155
PHONE: (817) 545-4807
FAX: (817) 545-4827
WWW.VSL.NET

PROJECT INFORMATION: SYSTEM DRAWING

TITLE: **NCS 6-31 VERTICAL INJECTION OPTIONS**

PROJECT NO: ---

SCALE: NTS

SHEET NO: **A339**

ELECTRONIC FILE LOCATION: I:\VSL System Drawings\Work In Progress Drawings\Work In Progress Drawings\Florida DOT Test 2017\NCS 6-31 Flexible Filler Submittal

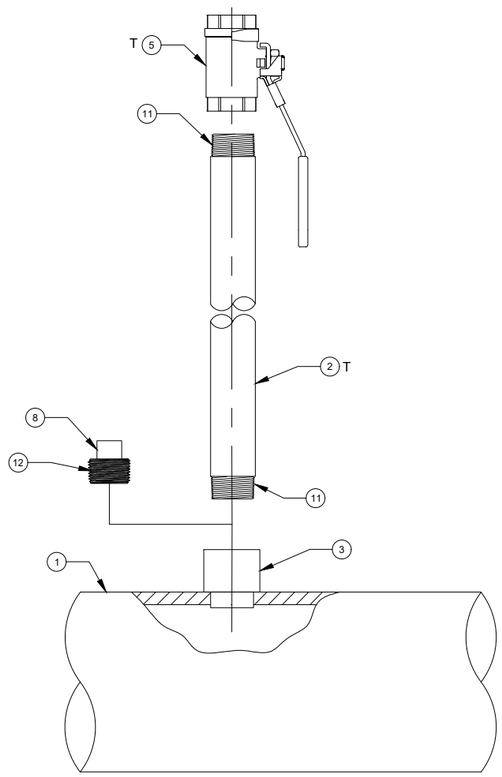

EXTERNAL OPTION

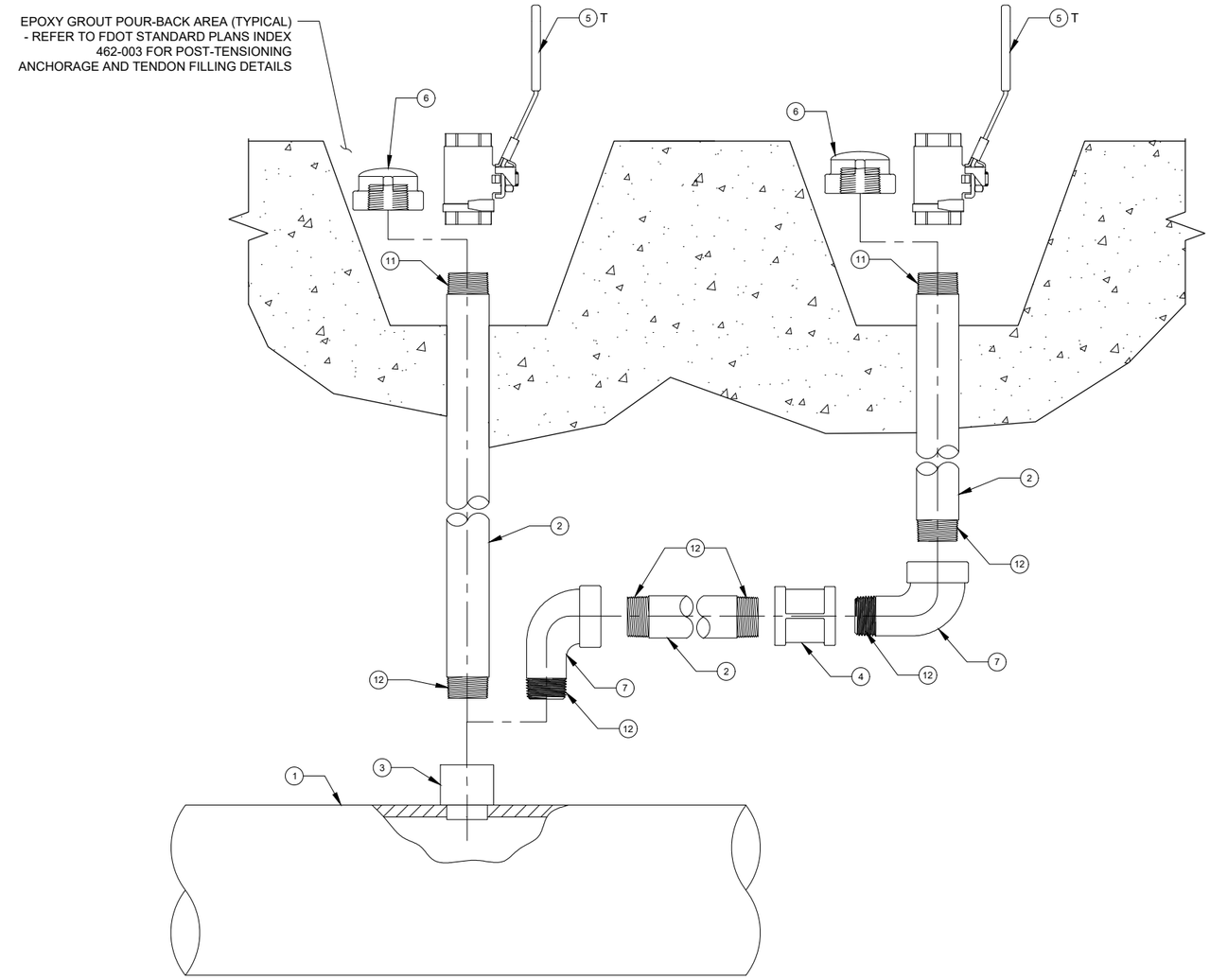

INTERNAL OPTION

ITEM	QTY	DESCRIPTION	MATERIAL	INVENTORY #
1	-	5" DR-17 PIPE	HDPE	-
2	1	3/4" NPT STEEL NIPPLE	SCH 40 STEEL	-
3	1	3/4" FNPT SMOOTH GROUT PORT	POLYETHELYNE	02DT0253
4	1	3/4" NPT F/F COUPLER	SCH 40 STEEL	02DT01952
5	1	3/4" NPT STEEL 1/4 TURN BALL VALVE	SCH 40 STEEL	02DT01925
6	1	3/4" NPT STEEL CAP	SCH 40 STEEL	02DT01950
7	2	3/4" FNPT X MNPT STEEL ELBOW	SCH 40 STEEL	02DT01954
8	1	3/4" NPT STEEL PLUG	316 STAINLESS STEEL	02DT01957
11	-	SILICONE GREASE	-	-
12	-	BONDUIT	-	-

3/4" FNPT SMOOTH GROUT PORT INSTALLATION

1. CLEAN PIPE PRIOR TO GROUT PORT INSTALLATION.
2. DRILL Ø7/8" HOLE INTO PIPE.
3. CONNECT THE SOCKET WELDING DEVICE TO THE POWER SOURCE.
4. ALLOW THE SOCKET WELDING DEVICE TO REACH ITS WORKING TEMPERATURE.
5. SIMULTANEOUSLY, INSERT MALE ADAPTER OF SOCKET WELDING DEVICE FROM DRILLED HOLE AND GROUT PORT FROM FEMALE ADAPTER.
6. APPLY LIGHT PRESSURE FOR 20-25 SECONDS BY PUSHING THE GROUT PORT WITH THE PALM OF HAND.
7. SIMULTANEOUSLY, REMOVE SOCKET WELDING DEVICE FROM DRILLED HOLE AND GROUT PORT FROM FEMALE ADAPTER.
8. INSERT GROUT PORT INTO HOLE UNTIL THE SHOULDER IS REACHED.
9. THIS OPERATION SHOULD BE CARRIED OUT AS QUICKLY AND CAREFULLY AS POSSIBLE, WITHIN 5 SECONDS. FIRMLY HOLD THE PIECES TOGETHER FOR A MINIMUM OF 10 SECONDS.

NOTES

1. ITEMS MARKED WITH A "T" ARE TEMPORARY AND ARE NOT A PERMANENT PART OF THE SYSTEM.
2. THIS ASSEMBLY CAN BE APPLIED IN ANY REQUIRED ORIENTATION TO CREATE EITHER A VENT OR A DRAIN.
3. ALL COMPONENTS MUST BE PRESSURE RATED FOR 150 PSI.
4. CONCRETE COVER MUST MEET FDOT STRUCTURES DESIGN GUIDELINES SECTION 1.4.2

THESE SHOP DRAWINGS ILLUSTRATE THE DETAILS OF THE STRUCTURAL TECHNOLOGIES / VSL POST-TENSIONING SYSTEM. THEY WERE PREPARED IN CONFORMANCE WITH THE STRUCTURAL DESIGN PROVIDED TO STRUCTURAL TECHNOLOGIES / VSL BY PROJECT OWNER OR IT'S REPRESENTATIVE. STRUCTURAL TECHNOLOGIES / VSL TOOK NO PART IN THE PREPARATION OR REVIEW OF SAID STRUCTURAL DESIGN AND STRUCTURAL TECHNOLOGIES / VSL DISCLAIMS ANY LIABILITY FOR IT. THE STAMP OR SEAL OF A STRUCTURAL TECHNOLOGIES / VSL EMPLOYEE ON THESE SHOP DRAWINGS PERTAINS ONLY TO THE TRANSFER OF THE FORCES REQUIRED BY THE ENGINEER OF RECORD ON THE STRUCTURAL DRAWINGS, AND NOT TO THE ADEQUACY OF THE STRUCTURAL DESIGN. NO WARRANTY, EXPRESSED OR IMPLIED, AS TO THE ADEQUACY OF THE STRUCTURAL DESIGN IS MADE BY VIRTUE OF ANY SUCH STAMP OR SEAL.

NO	DESCRIPTION	BY	CHK	DATE
0	FIRST ISSUE	CDL	ZX	26FEB2018

STRUCTURAL TECHNOLOGIES, LLC CLAIMS A STRICT PROPRIETARY RIGHT IN ALL DRAWINGS, SPECIFICATIONS AND CALCULATIONS (INFORMATION") SET FORTH ON THIS SHEET. THE USE OF SUCH INFORMATION IN WHOLE OR IN PART, OR ANY REPRODUCTION THEREOF, IS RESTRICTED TO THE SITE FOR WHICH IT WAS PREPARED AND TO THE MATERIAL AND/OR SERVICE PROVIDED BY STRUCTURAL TECHNOLOGIES / VSL. ANY OTHER USE IS STRICTLY PROHIBITED, AND STRUCTURAL TECHNOLOGIES / VSL DISCLAIMS ANY LIABILITY THEREFORE.

structural TECHNOLOGIES
A Structural Group Company
Dallas, TX / Washington, DC / Denver, CO / Pompano Beach, FL
VSL
STRUCTURAL TECHNOLOGIES, LLC
DALLAS OFFICE
15600 TRINITY BLVD, SUITE 118
FORT WORTH, TX 76155
PHONE: (817) 545-4807
FAX: (817) 545-4827
WWW.VSL.NET

PROJECT INFORMATION: SYSTEM DRAWING

TITLE: **5" HDPE PIPE VENT ASSEMBLY**

PROJECT NO: ---

SCALE: NTS

SHEET NO: **A324**

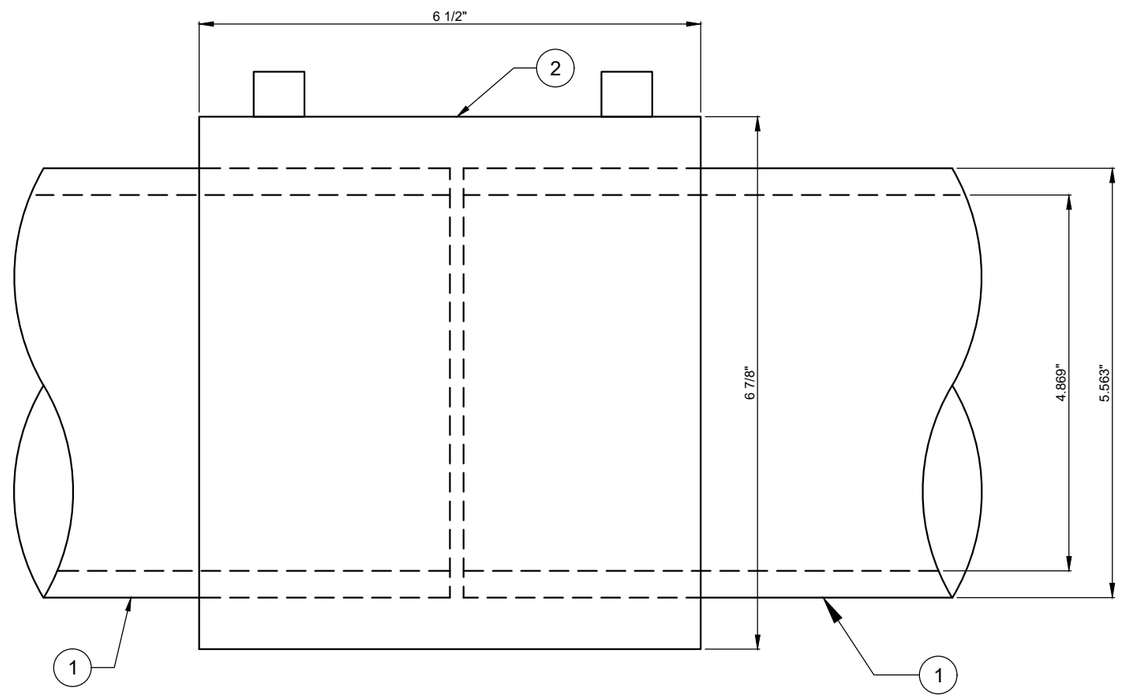

ELEVATION VIEW

ITEM	QTY	DESCRIPTION	MATERIAL
1	-	5" HDPE PIPE DR-17	ASTM D3035
2	1	5" ELECTROFUSION COUPLER	COMPOSITE

NOTE:
FOLLOW COUPLER MANUFACTURER'S
INSTALLATION INSTRUCTIONS

INSTALLATION PROCEDURE (SEE MANUFACTURER INSTRUCTION MANUAL FOR DETAILED INSTALLATION INSTRUCTIONS):

1. CUT SQUARE ENDS ON PIPE TO BE FUSED
2. CLEAN BOTH PIPE ENDS
3. SCRAPE BOTH PIPES MINIMUM 0.07" WITH PROVIDED SCRAPING TOOL
4. CLEAN BOTH PIPE ENDS USING 90% OR GREATER ISOPROPYL ALCOHOL
5. USE REROUNDING TOOLS PROVIDED TO CORRECT OVAL PIPE IF NECESSARY
6. USE ALIGNMENT CLAMPS PROVIDED TO ENSURE PIPE IS ALIGNED WITH COUPLER
7. SUPPORT PIPE AND COUPLER AND RESTRAIN PIPE TO PREVENT MOVEMENT
8. CHECK FOR GAPS AND ELIMINATE AS NECESSARY
9. ATTACH LEADS OF THE PROVIDED FUSION PROCESSOR TO THE COUPLER
10. SCAN THE BARCODE ON THE COUPLER
11. START FUSION PROCESS
12. WHEN FUSION PROCESS IS COMPLETE, UNPLUG THE LEADS
13. DO NOT MOVE OR PRESSURIZE THE JOINT COMPONENTS BEFORE COOLING TIME HAS COMPLETED

THESE SHOP DRAWINGS ILLUSTRATE THE DETAILS OF THE STRUCTURAL TECHNOLOGIES / VSL POST-TENSIONING SYSTEM. THEY WERE PREPARED IN CONFORMANCE WITH THE STRUCTURAL DESIGN PROVIDED TO STRUCTURAL TECHNOLOGIES / VSL BY PROJECT OWNER OR IT'S REPRESENTATIVE. STRUCTURAL TECHNOLOGIES / VSL TOOK NO PART IN THE PREPARATION OR REVIEW OF SAID STRUCTURAL DESIGN AND STRUCTURAL TECHNOLOGIES / VSL DISCLAIMS ANY LIABILITY FOR IT. THE STAMP OR SEAL OF A STRUCTURAL TECHNOLOGIES / VSL EMPLOYEE ON THESE SHOP DRAWINGS PERTAINS ONLY TO THE TRANSFER OF THE FORCES REQUIRED BY THE ENGINEER OF RECORD ON THE STRUCTURAL DRAWINGS, AND NOT TO THE ADEQUACY OF THE STRUCTURAL DESIGN. NO WARRANTY, EXPRESSED OR IMPLIED, AS TO THE ADEQUACY OF THE STRUCTURAL DESIGN IS MADE BY VIRTUE OF ANY SUCH STAMP OR SEAL.

NO	DESCRIPTION	BY	CHK	DATE
0	FIRST ISSUE	CDL	ZX	26FEB2018

THIS DOCUMENT, INCLUDING ANY DRAWINGS, SPECIFICATIONS, AND CALCULATIONS HEREIN, CONTAINS INFORMATION THAT IS PROPRIETARY TO STRUCTURAL TECHNOLOGIES LLC ("VSL"). THIS DOCUMENT AND THE INFORMATION CONTAINED HEREIN IS CONFIDENTIAL, AND MAY NOT BE REPRODUCED OR DISCLOSED WITHOUT THE PRIOR WRITTEN CONSENT OF STRUCTURAL TECHNOLOGIES LLC ("VSL"). FURTHER, THE USE OF THIS DOCUMENT OR ANY INFORMATION PRESENTED HEREIN IS RESTRICTED TO THE SPECIFIC PROJECT AND PURPOSE FOR WHICH IT WAS PREPARED. ANY OTHER USE IS STRICTLY PROHIBITED. STRUCTURAL TECHNOLOGIES LLC ("VSL") DISCLAIMS ANY LIABILITY FOR ANY UNAUTHORIZED, UNINTENDED OR OTHER UNFORESEEABLE USE OF THIS DOCUMENT OR ANY INFORMATION CONTAINED.

structural TECHNOLOGIES
A Structural Group Company
Dallas, TX / Washington, DC / Denver, CO / Pompano Beach, FL
VSL
STRUCTURAL TECHNOLOGIES, LLC
DALLAS OFFICE
15600 TRINITY BLVD, SUITE 118
FORT WORTH, TX 76155
PHONE: (817) 545-4807
FAX: (817) 545-4827
WWW.VSL.NET

PROJECT INFORMATION: SYSTEM DRAWING

TITLE: 5" HDPE PIPE TO 5" HDPE PIPE ELECTROFUSION COUPLER CONNECTION

PROJECT NO: SYSTEM

SCALE: NTS

SHEET NO: A316

ELECTRONIC FILE LOCATION: I:\VSL System Drawings\Work In Progress Drawings\Work In Progress Drawings\Florida DOT Test 2017\NCS 6-31 Flexible Filler Submittal

PLOT DATE/TIME: 26Feb2018 8:46 AM FILE NAME: A316 5in HDPE Electrofusion Connection Rev0.dwg

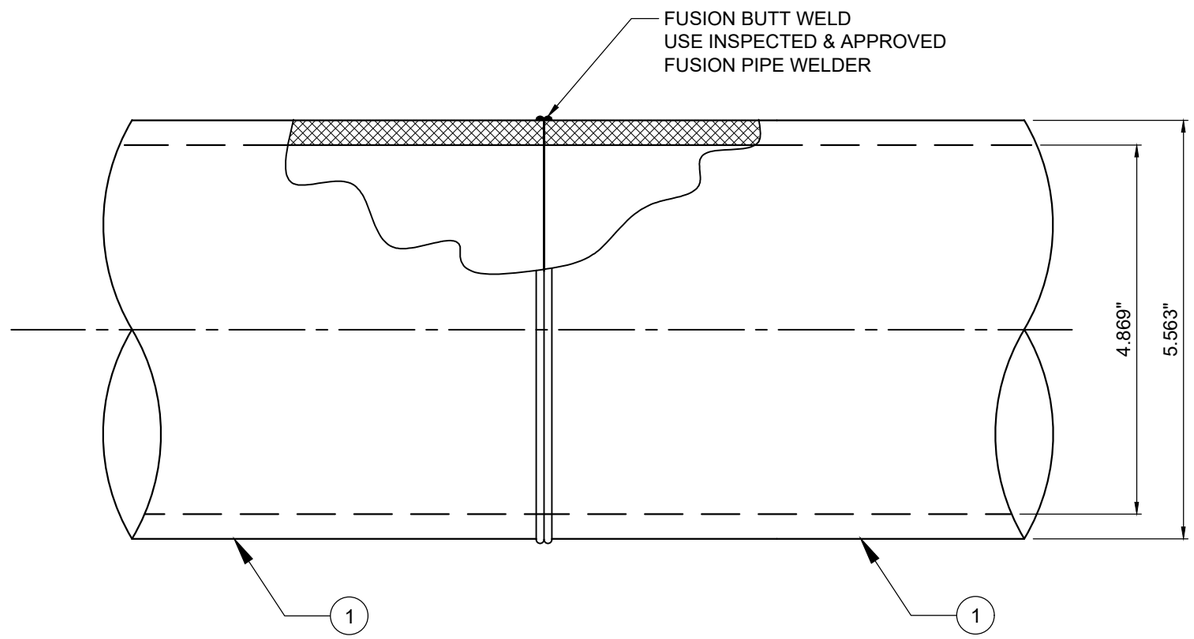

ELEVATION VIEW

ITEM	QTY	DESCRIPTION	MATERIAL
1	2	5" HDPE PIPE DR-17	ASTM D3035

NOTES:
1. HDPE 5" IPS/DR-17 MEETS FDOT 960 SPEC.
2. SEE VSL BUTT-WELDING PROCEDURE IN APPENDIX

THESE SHOP DRAWINGS ILLUSTRATE THE DETAILS OF THE STRUCTURAL TECHNOLOGIES / VSL POST-TENSIONING SYSTEM. THEY WERE PREPARED IN CONFORMANCE WITH THE STRUCTURAL DESIGN PROVIDED TO STRUCTURAL TECHNOLOGIES / VSL BY PROJECT OWNER OR IT'S REPRESENTATIVE. STRUCTURAL TECHNOLOGIES / VSL TOOK NO PART IN THE PREPARATION OR REVIEW OF SAID STRUCTURAL DESIGN AND STRUCTURAL TECHNOLOGIES / VSL DISCLAIMS ANY LIABILITY FOR IT. THE STAMP OR SEAL OF A STRUCTURAL TECHNOLOGIES / VSL EMPLOYEE ON THESE SHOP DRAWINGS PERTAINS ONLY TO THE TRANSFER OF THE FORCES REQUIRED BY THE ENGINEER OF RECORD ON THE STRUCTURAL DRAWINGS, AND NOT TO THE ADEQUACY OF THE STRUCTURAL DESIGN. NO WARRANTY, EXPRESSED OR IMPLIED, AS TO THE ADEQUACY OF THE STRUCTURAL DESIGN IS MADE BY VIRTUE OF ANY SUCH STAMP OR SEAL.

NO	DESCRIPTION	BY	CHK	DATE
1	TITLE BLOCK UPDATED	CDL	ZX	26FEB2018
0	APPROVED FOR CONSTRUCTION	GB	MM	04APR2011

THIS DOCUMENT, INCLUDING ANY DRAWINGS, SPECIFICATIONS, AND CALCULATIONS HEREIN, CONTAINS INFORMATION THAT IS PROPRIETARY TO STRUCTURAL TECHNOLOGIES LLC ("VSL"). THIS DOCUMENT AND THE INFORMATION CONTAINED HEREIN IS CONFIDENTIAL, AND MAY NOT BE REPRODUCED OR DISCLOSED WITHOUT THE PRIOR WRITTEN CONSENT OF STRUCTURAL TECHNOLOGIES LLC ("VSL"). FURTHER, THE USE OF THIS DOCUMENT OR ANY INFORMATION PRESENTED HEREIN IS RESTRICTED TO THE SPECIFIC PROJECT AND PURPOSE FOR WHICH IT WAS PREPARED. ANY OTHER USE IS STRICTLY PROHIBITED. STRUCTURAL TECHNOLOGIES LLC ("VSL") DISCLAIMS ANY LIABILITY FOR ANY UNAUTHORIZED, UNINTENDED OR OTHER UNFORESEEN USE OF THIS DOCUMENT OR ANY INFORMATION IT CONTAINS.

structural TECHNOLOGIES
A Structural Group Company
Dallas, TX / Washington, DC / Denver, CO / Pompano Beach, FL
STRUCTURAL TECHNOLOGIES, LLC
DALLAS OFFICE
15600 TRINITY BLVD, SUITE 118
FORT WORTH, TX 76155
PHONE: (817) 545-4807
FAX: (817) 545-4827
WWW.VSL.NET

PROJECT INFORMATION: SYSTEM DRAWING

TITLE: TYPICAL 5" HDPE PIPE TO 5" HDPE PIPE FUSION WELDED CONNECTION

PROJECT NO: SYSTEM

SCALE: NTS

SHEET NO: A287

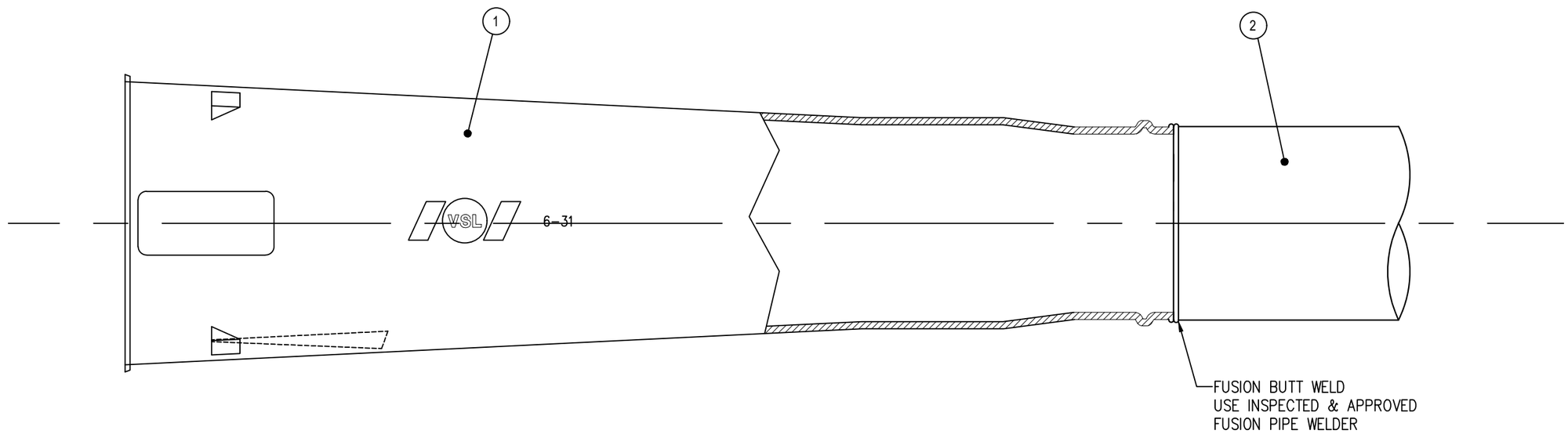

TRUMPET TO HDPE PIPE ASSEMBLY

ITEM	QTY	DESCRIPTION	MATERIAL	INVENTORY#
2	–	5" HDPE PIPE	HDPE	–
1	1	NCS 6-31 TRUMPET	HDPE	02BP4436

NOTES:
1. HDPE 5" IPS/DR-17 MEETS FDOT 960 SPEC.
2. SEE VSL BUTT-WELDING PROCEDURE IN APPENDIX

THESE SHOP DRAWINGS ILLUSTRATE THE DETAILS OF THE STRUCTURAL TECHNOLOGIES / VSL POST-TENSIONING SYSTEM. THEY WERE PREPARED IN CONFORMANCE WITH THE STRUCTURAL DESIGN PROVIDED TO STRUCTURAL TECHNOLOGIES / VSL BY PROJECT OWNER OR IT'S REPRESENTATIVE. STRUCTURAL TECHNOLOGIES / VSL TOOK NO PART IN THE PREPARATION OR REVIEW OF SAID STRUCTURAL DESIGN AND STRUCTURAL TECHNOLOGIES / VSL DISCLAIMS ANY LIABILITY FOR IT. THE STAMP OR SEAL OF A STRUCTURAL TECHNOLOGIES / VSL EMPLOYEE ON THESE SHOP DRAWINGS PERTAINS ONLY TO THE TRANSFER OF THE FORCES REQUIRED BY THE ENGINEER OF RECORD ON THE STRUCTURAL DRAWINGS, AND NOT TO THE ADEQUACY OF THE STRUCTURAL DESIGN. NO WARRANTY, EXPRESSED OR IMPLIED, AS TO THE ADEQUACY OF THE STRUCTURAL DESIGN IS MADE BY VIRTUE OF ANY SUCH STAMP OR SEAL.

NO	DESCRIPTION	BY	CHK	DATE
0	FIRST ISSUE	CDL	ZX	26FEB2018

STRUCTURAL TECHNOLOGIES, LLC CLAIMS A STRICT PROPRIETARY RIGHT IN ALL DRAWINGS, SPECIFICATIONS AND CALCULATIONS (INFORMATION") SET FORTH ON THIS SHEET. THE USE OF SUCH INFORMATION WHICH CONSTITUTES WORK, OR ANY REPRODUCTION THEREOF, IS RESTRICTED TO THE SITE FOR WHICH IT WAS PREPARED AND TO THE MATERIAL AND/OR SERVICE PROVIDED BY STRUCTURAL TECHNOLOGIES / VSL. ANY OTHER USE, STRICTLY PROHIBITED, AND STRUCTURAL TECHNOLOGIES / VSL DISCLAIMS ANY LIABILITY THEREFORE.

structural TECHNOLOGIES
A Structural Group Company
Dallas, TX / Washington, DC / Denver, CO / Pompano Beach, FL
STRUCTURAL TECHNOLOGIES, LLC
DALLAS OFFICE
15600 TRINITY BLVD, SUITE 118
FORT WORTH, TX 76155
PHONE: (817) 545-4807
FAX: (817) 545-4827
WWW.VSL.NET

PROJECT INFORMATION: SYSTEM DRAWING

TITLE: **TYPICAL NCS 6-31 TRUMPET TO HDPE PIPE BUTT FUSION CONNECTION**

PROJECT NO: SYSTEM

SCALE: NTS

SHEET NO: **A325**

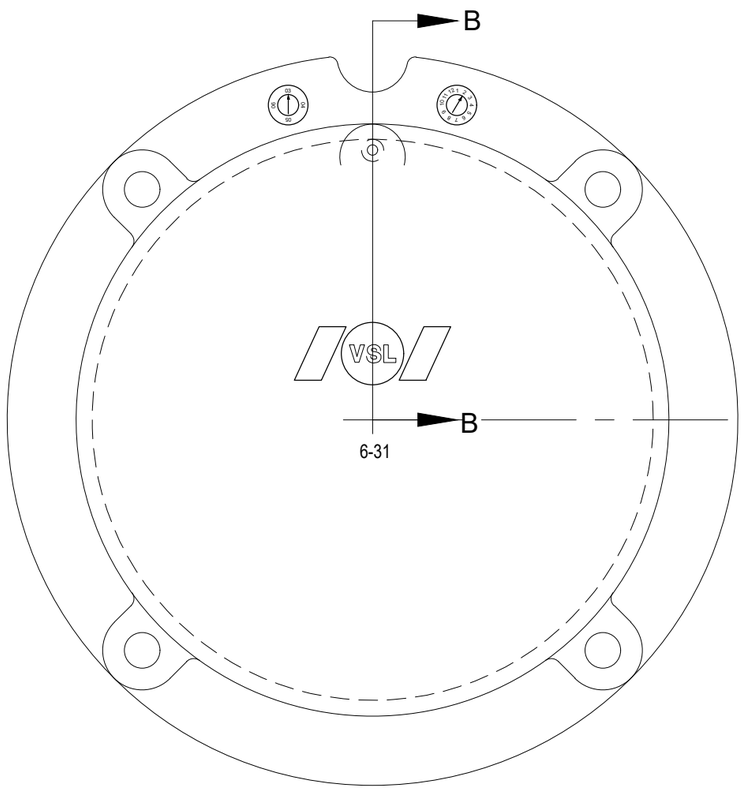

6-31 ANCHORAGE CAP

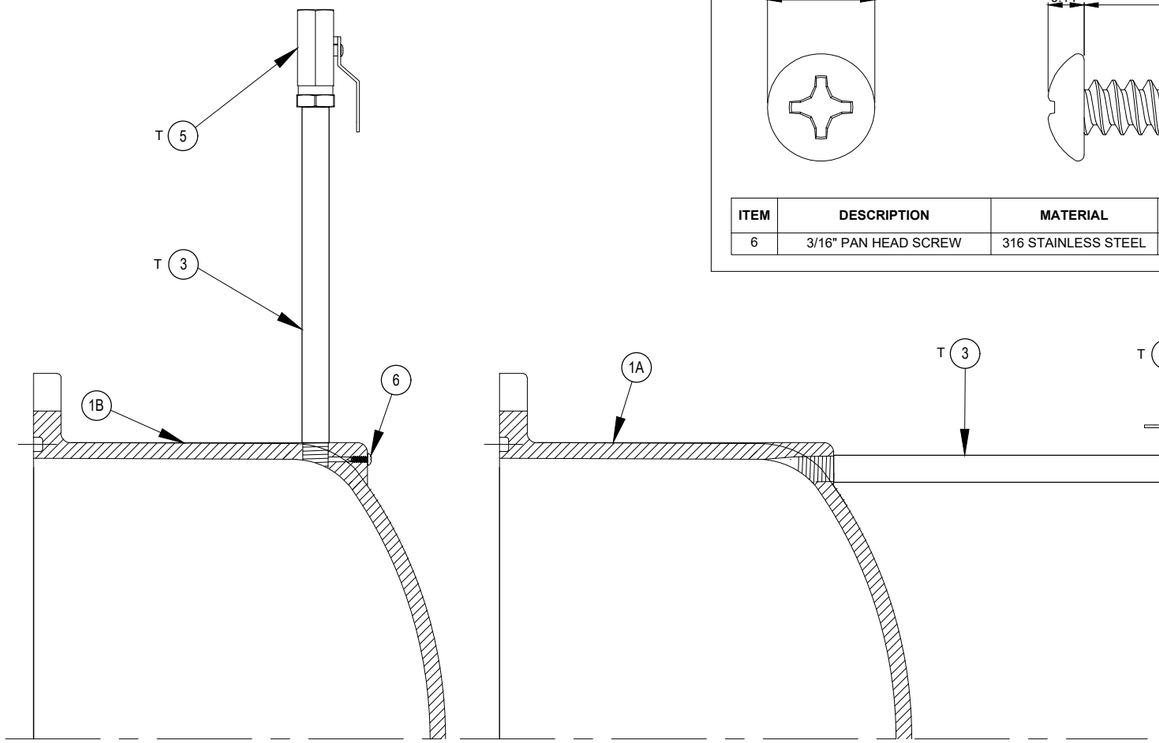

SECTION B-B

NOTE: ITEMS MARKED WITH A "T" ARE TEMPORARY AND ARE NOT A PERMANENT PART OF THE SYSTEM.

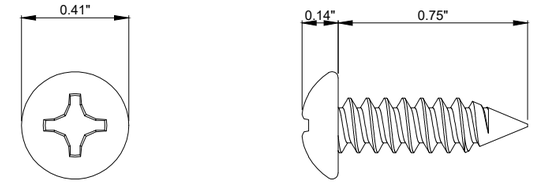

ITEM	DESCRIPTION	MATERIAL	INVENTORY #
6	3/16" PAN HEAD SCREW	316 STAINLESS STEEL	02WX1070

TOP PORT

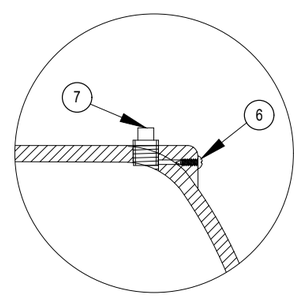

AFTER WAX

FRONT PORT

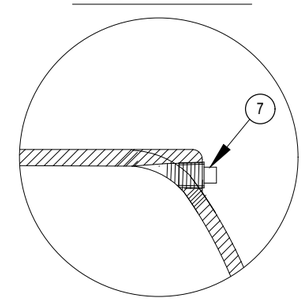

AFTER WAX

ITEM	QTY	DESCRIPTION	MATERIAL	INVENTORY No.
7	1	1/4"Ø NPT STEEL PLUG	316 STAINLESS STEEL	02DT01956
6	1	3/16" PAN HEAD SCREW	316 STAINLESS STEEL	02WX1070
5	1	1/4" NPT STEEL 1/4 TURN BALL VALVE	SCH 40 STEEL	02DT01924
3	1	1/4" NPT STEEL NIPPLE	SCH 40 STEEL	-
1B	1	6-31 ANCHORAGE CAP W/ 1/4" TOP PORT	ABS	02GC63103
1A	1	6-31 ANCHORAGE CAP W/ 1/4" FRONT PORT	ABS	02GC63102

THESE SHOP DRAWINGS ILLUSTRATE THE DETAILS OF THE STRUCTURAL TECHNOLOGIES / VSL POST-TENSIONING SYSTEM. THEY WERE PREPARED IN CONFORMANCE WITH THE STRUCTURAL DESIGN PROVIDED TO STRUCTURAL TECHNOLOGIES / VSL BY PROJECT OWNER OR IT'S REPRESENTATIVE. STRUCTURAL TECHNOLOGIES / VSL TOOK NO PART IN THE PREPARATION OR REVIEW OF SAID STRUCTURAL DESIGN AND STRUCTURAL TECHNOLOGIES / VSL DISCLAIMS ANY LIABILITY FOR IT. THE STAMP OR SEAL OF A STRUCTURAL TECHNOLOGIES / VSL EMPLOYEE ON THESE SHOP DRAWINGS PERTAINS ONLY TO THE TRANSFER OF THE FORCES REQUIRED BY THE ENGINEER OF RECORD ON THE STRUCTURAL DRAWINGS, AND NOT TO THE ADEQUACY OF THE STRUCTURAL DESIGN. NO WARRANTY, EXPRESSED OR IMPLIED, AS TO THE ADEQUACY OF THE STRUCTURAL DESIGN IS MADE BY VIRTUE OF ANY SUCH STAMP OR SEAL.

NO	DESCRIPTION	BY	CHK	DATE
2	TITLE BLOCK UPDATED	CDL	ZX	26FEB2018
1	VENT DETAILS	DTS	DD	03JUL2012
0	3/4" GROUT PORTS	DTS	DD	18MAY2012

THIS DOCUMENT, INCLUDING ANY DRAWINGS, SPECIFICATIONS, AND CALCULATIONS HEREIN, CONTAINS INFORMATION THAT IS PROPRIETARY TO STRUCTURAL TECHNOLOGIES LLC ("VSL"). THIS DOCUMENT AND THE INFORMATION CONTAINED HEREIN IS CONFIDENTIAL AND MAY NOT BE REPRODUCED OR DISCLOSED WITHOUT THE PRIOR WRITTEN CONSENT OF STRUCTURAL TECHNOLOGIES LLC ("VSL"). FURTHER, THE USE OF THIS DOCUMENT OR ANY INFORMATION PRESENTED HEREIN IS RESTRICTED TO THE SPECIFIC PROJECT AND PURPOSE FOR WHICH IT WAS PREPARED. ANY OTHER USE IS STRICTLY PROHIBITED. STRUCTURAL TECHNOLOGIES LLC ("VSL") DISCLAIMS ANY LIABILITY FOR ANY UNAUTHORIZED, UNINTENDED OR OTHER UNFORESEEABLE USE OF THIS DOCUMENT OR ANY INFORMATION IT CONTAINS.

structural TECHNOLOGIES
A Structural Group Company
Dallas, TX / Washington, DC / Denver, CO / Pompano Beach, FL
STRUCTURAL TECHNOLOGIES, LLC
DALLAS OFFICE
15600 TRINITY BLVD, SUITE 118
FORT WORTH, TX 76155
PHONE: (817) 545-4807
FAX: (817) 545-4827
WWW.VSL.NET

PROJECT INFORMATION: SYSTEM DRAWING

TITLE: NCS 6-31 ANCHORAGE CAP VENT DETAIL

PROJECT NO: SYSTEM

SCALE: NTS

SHEET NO: A334

ELECTRONIC FILE LOCATION: I:\VSL System Drawings\Work In Progress Drawings\Work In Progress Drawings\Florida DOT Test 2017\NCS 6-31 Flexible Filler Submittal

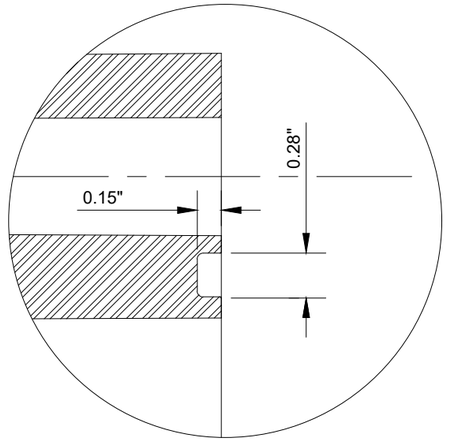

DETAIL 1

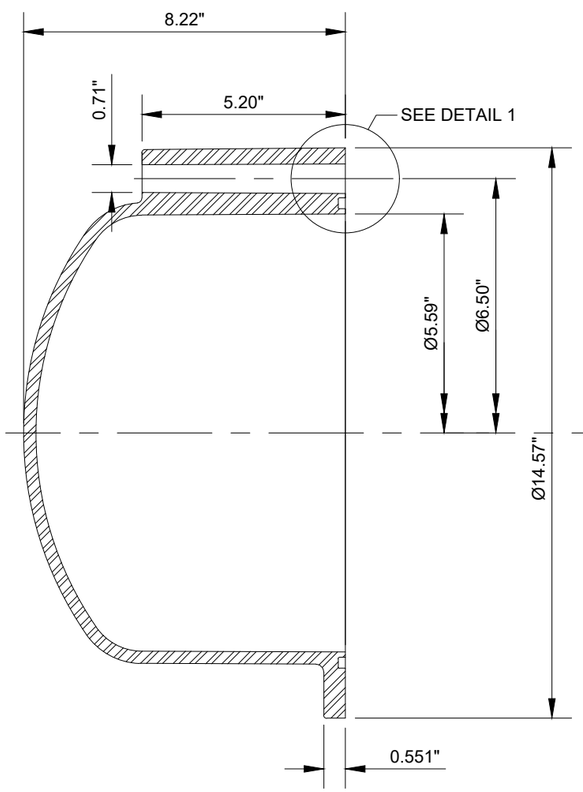

SECTION A-A

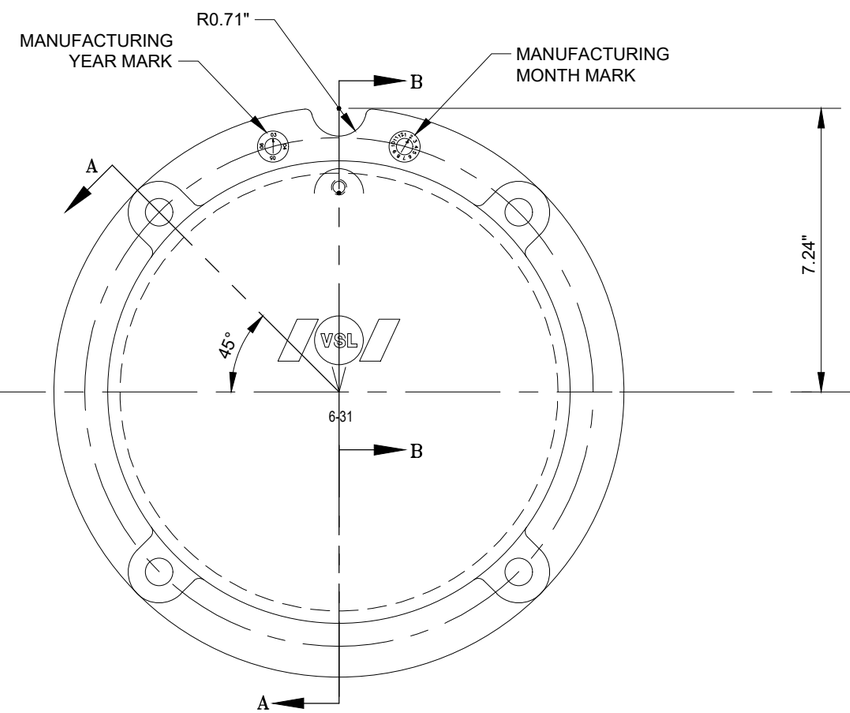

6-31 ANCHROAGE CAP

LETTERING SHALL BE 0.06" PROUD

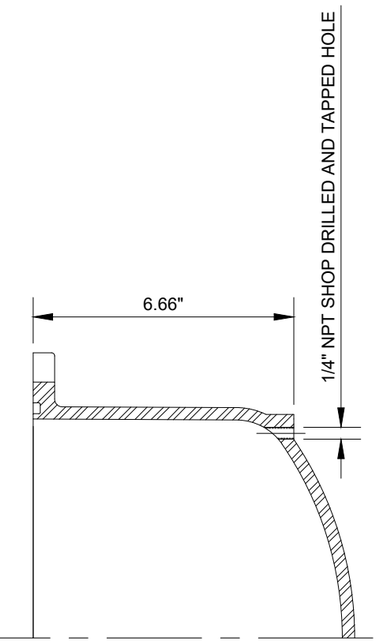

SECTION B-B

TOLERANCES

UNLESS OTHERWISE SPECIFIED

FRACTIONAL _____ ± 1/32

DECIMAL _____.X ± .030

_____.XX ± .010

_____.XXX ± .005

ANGULAR _____ ± 1/2"

NOTES:

1) DIMENSIONS ARE IN INCHES
2) MATERIAL: ABS LUSTRAN 633
3) INVERTORY #: 02GC63102

THESE SHOP DRAWINGS ILLUSTRATE THE DETAILS OF THE STRUCTURAL TECHNOLOGIES / VSL POST-TENSIONING SYSTEM. THEY WERE PREPARED IN CONFORMANCE WITH THE STRUCTURAL DESIGN PROVIDED TO STRUCTURAL TECHNOLOGIES / VSL BY PROJECT OWNER OR IT'S REPRESENTATIVE. STRUCTURAL TECHNOLOGIES / VSL TOOK NO PART IN THE PREPARATION OR REVIEW OF SAID STRUCTURAL DESIGN AND STRUCTURAL TECHNOLOGIES / VSL DISCLAIMS ANY LIABILITY FOR IT. THE STAMP OR SEAL OF A STRUCTURAL TECHNOLOGIES / VSL EMPLOYEE ON THESE SHOP DRAWINGS PERTAINS ONLY TO THE TRANSFER OF THE FORCES REQUIRED BY THE ENGINEER OF RECORD ON THE STRUCTURAL DRAWINGS, AND NOT TO THE ADEQUACY OF THE STRUCTURAL DESIGN. NO WARRANTY, EXPRESSED OR IMPLIED, AS TO THE ADEQUACY OF THE STRUCTURAL DESIGN IS MADE BY VIRTUE OF ANY SUCH STAMP OR SEAL.

NO	DESCRIPTION	BY	CHK	DATE
3	REVISED TITLE BLOCK	CDL	ZX	26FEB2018
2	REVISED PORT HOLES	CDL	ZX	01MAR2017
1	ADD MANUFACTURING DATE MARKS	LS		19JAN2004

THIS DOCUMENT, INCLUDING ANY DRAWINGS, SPECIFICATIONS, AND CALCULATIONS HEREIN, CONTAINS INFORMATION THAT IS PROPRIETARY TO STRUCTURAL TECHNOLOGIES LLC ("VSL"). THIS DOCUMENT AND THE INFORMATION CONTAINED HEREIN IS CONFIDENTIAL AND MAY NOT BE REPRODUCED OR DISCLOSED WITHOUT THE PRIOR WRITTEN CONSENT OF STRUCTURAL TECHNOLOGIES LLC ("VSL"). FURTHER, THE USE OF THIS DOCUMENT OR INFORMATION ON PRESENTED HEREIN IS RESTRICTED TO THE SPECIFIC PROJECT AND PURPOSE FOR WHICH IT WAS PREPARED. ANY OTHER USE IS STRICTLY PROHIBITED. STRUCTURAL TECHNOLOGIES LLC ("VSL") DISCLAIMS ANY LIABILITY FOR ANY UNAUTHORIZED, UNINTENDED OR OTHER UNFORESEEABLE USE OF THIS DOCUMENT OR ANY INFORMATION CONTAINED.

structural TECHNOLOGIES
A Structural Group Company
Dallas, TX / Washington, DC / Denver, CO / Pompano Beach, FL

STRUCTURAL TECHNOLOGIES, LLC
DALLAS OFFICE
15600 TRINITY BLVD, SUITE 118
FORT WORTH, TX 76155

PHONE: (817) 545-4807
FAX: (817) 545-4827
WWW.VSL.NET

PROJECT INFORMATION: SYSTEM DRAWINGS

TITLE: 6-31 ANCHORAGE CAP W/ 1/4" NPT FRONT PORT

PROJECT NO:

SCALE: NTS

SHEET NO: C551

ELECTRONIC FILE LOCATION: I:\VSL System Drawings\Work In Progress Drawings\Work In Progress Drawings\Florida DOT Test 2017\NCS 6-31 Flexible Filler Submittal

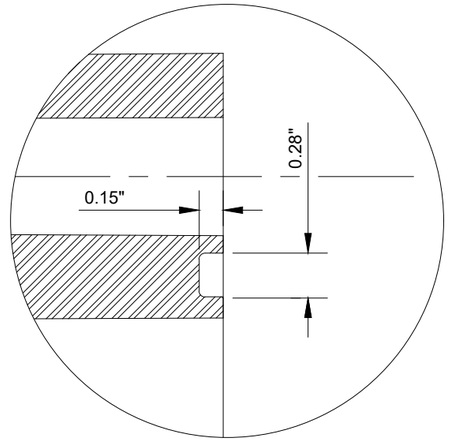

DETAIL 1

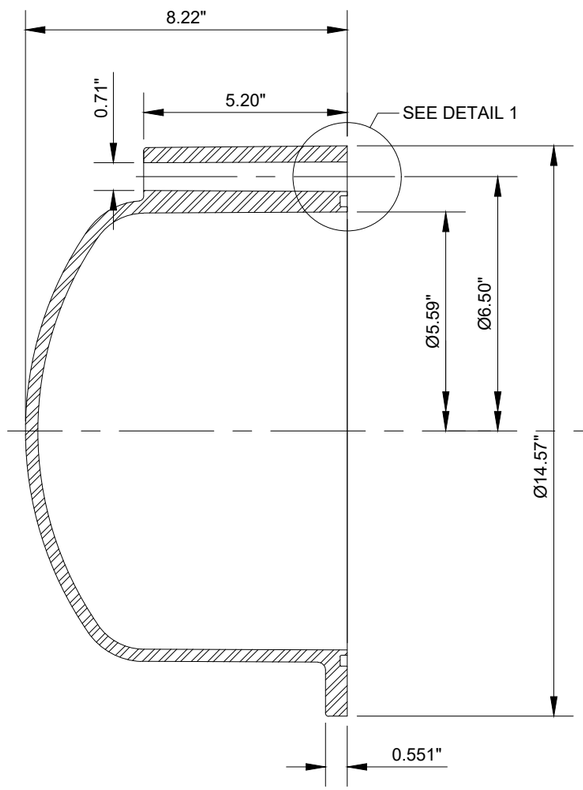

SECTION A-A

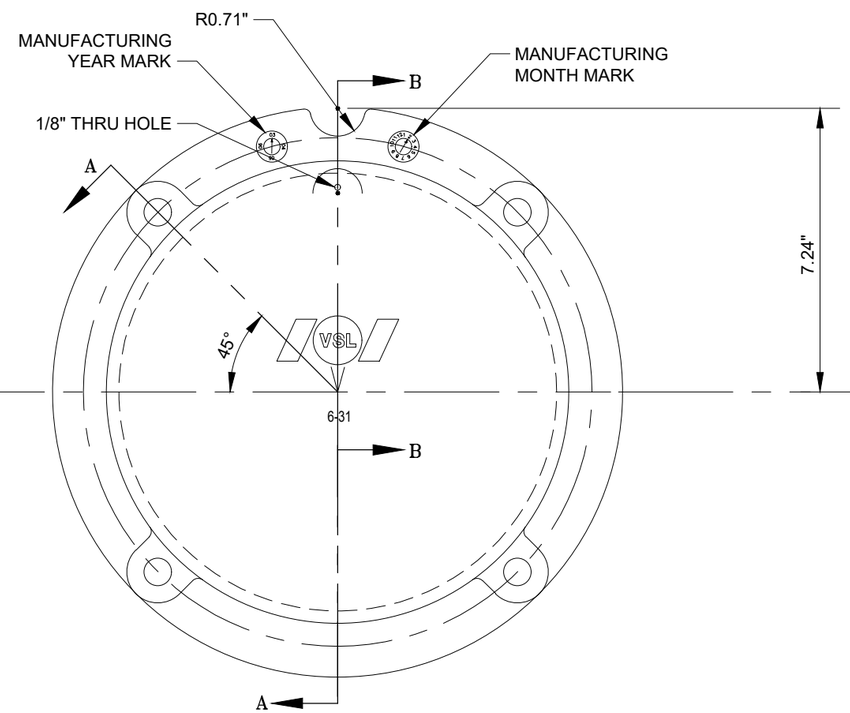

6-31 ANCHROAGE CAP

LETTERING SHALL BE 0.06" PROUD

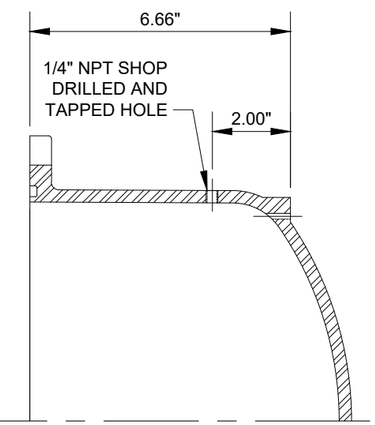

SECTION B-B

TOLERANCES

UNLESS OTHERWISE SPECIFIED

FRACTIONAL _____ ± 1/32

DECIMAL _____.X ± .030

_____.XX ± .010

_____.XXX ± .005

ANGULAR _____ ± 1/2°

NOTES:

1) DIMENSIONS ARE IN INCHES
2) MATERIAL: ABS LUSTRAN 633
3) INVERTORY #: 02GC63103

THESE SHOP DRAWINGS ILLUSTRATE THE DETAILS OF THE STRUCTURAL TECHNOLOGIES / VSL POST-TENSIONING SYSTEM. THEY WERE PREPARED IN CONFORMANCE WITH THE STRUCTURAL DESIGN PROVIDED TO STRUCTURAL TECHNOLOGIES / VSL BY PROJECT OWNER OR IT'S REPRESENTATIVE. STRUCTURAL TECHNOLOGIES / VSL TOOK NO PART IN THE PREPARATION OR REVIEW OF SAID STRUCTURAL DESIGN AND STRUCTURAL TECHNOLOGIES / VSL DISCLAIMS ANY LIABILITY FOR IT. THE STAMP OR SEAL OF A STRUCTURAL TECHNOLOGIES / VSL EMPLOYEE ON THESE SHOP DRAWINGS PERTAINS ONLY TO THE TRANSFER OF THE FORCES REQUIRED BY THE ENGINEER OF RECORD ON THE STRUCTURAL DRAWINGS, AND NOT TO THE ADEQUACY OF THE STRUCTURAL DESIGN. NO WARRANTY, EXPRESSED OR IMPLIED, AS TO THE ADEQUACY OF THE STRUCTURAL DESIGN IS MADE BY VIRTUE OF ANY SUCH STAMP OR SEAL.

NO	DESCRIPTION	BY	CHK	DATE
1	FIRST ISSUE	CDL	ZX	26FEB2018

THIS DOCUMENT, INCLUDING ANY DRAWINGS, SPECIFICATIONS, AND CALCULATIONS HEREIN, CONTAINS INFORMATION THAT IS PROPRIETARY TO STRUCTURAL TECHNOLOGIES LLC ("VSL"). THIS DOCUMENT AND THE INFORMATION CONTAINED HEREIN IS CONFIDENTIAL AND MAY NOT BE REPRODUCED OR DISCLOSED WITHOUT THE PRIOR WRITTEN CONSENT OF STRUCTURAL TECHNOLOGIES LLC ("VSL"). FURTHER, THE USE OF THIS DOCUMENT OR ANY INFORMATION ON OR PRESENTED HEREIN IS RESTRICTED TO THE SPECIFIC PROJECT AND PURPOSE FOR WHICH IT WAS PREPARED. ANY OTHER USE IS STRICTLY PROHIBITED. STRUCTURAL TECHNOLOGIES LLC ("VSL") DISCLAIMS ANY LIABILITY FOR ANY UNAUTHORIZED, UNINTENDED OR OTHER UNFORGIVABLE USE OF THIS DOCUMENT OR ANY INFORMATION IT CONTAINS.

structural TECHNOLOGIES
A Structural Group Company
Dallas, TX / Washington, DC / Denver, CO / Pompano Beach, FL

STRUCTURAL TECHNOLOGIES, LLC
DALLAS OFFICE
15600 TRINITY BLVD, SUITE 118
FORT WORTH, TX 76155

PHONE: (817) 545-4807
FAX: (817) 545-4827
WWW.VSL.NET

PROJECT INFORMATION: SYSTEM DRAWINGS

TITLE: 6-31 ANCHORAGE CAP W/ 1/4" NPT TOP PORT

PROJECT NO:

SCALE: NTS

SHEET NO: C733

ELECTRONIC FILE LOCATION: I:\VSL System Drawings\Work In Progress Drawings\Work In Progress Drawings\Florida DOT Test 2017\NCS 6-31 Flexible Filler Submittal

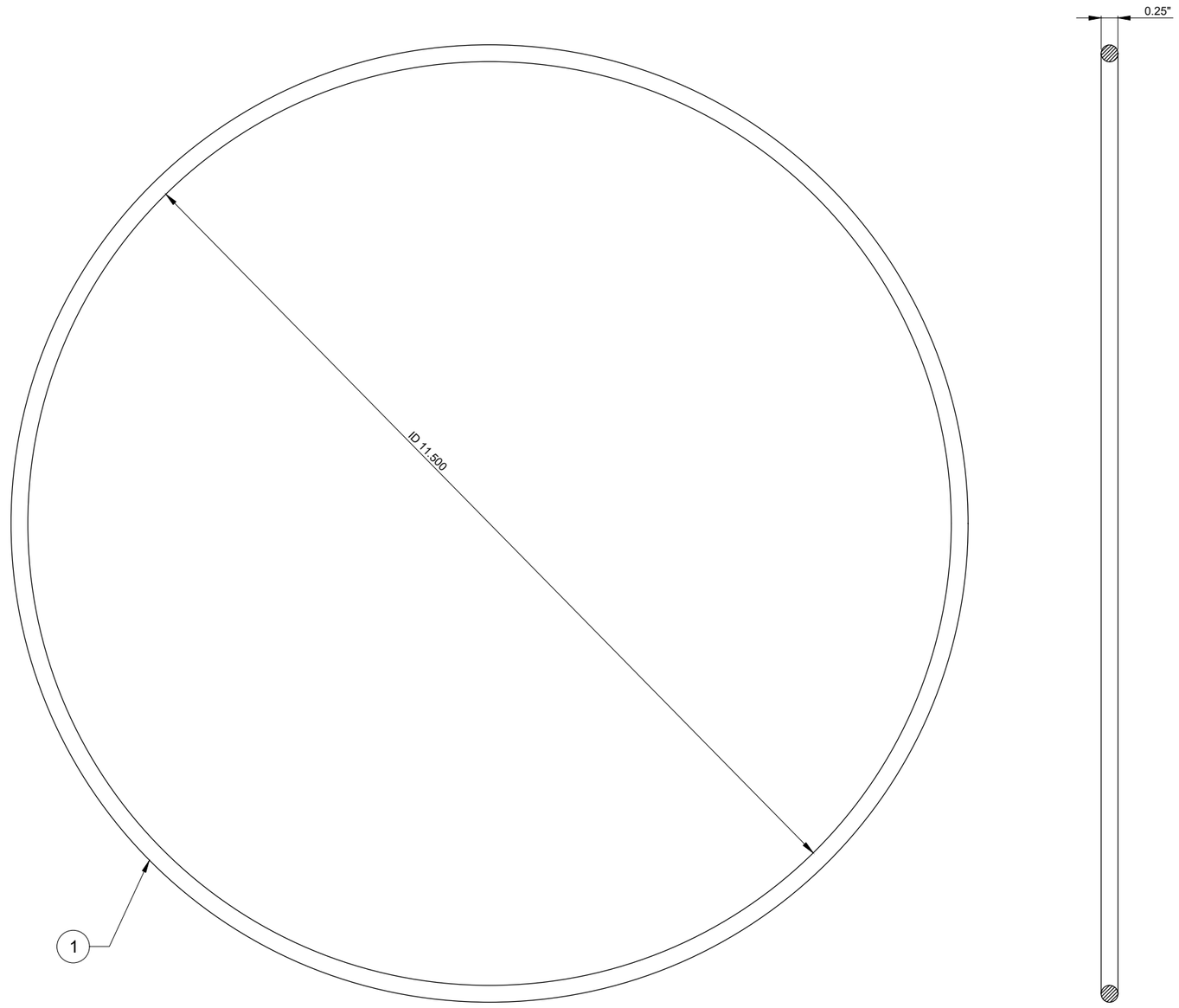

ITEM	QTY	DESCRIPTION	MATERIAL	SIZE	INVENTORY#
1	-	6-31 ANCHORAGE CAP O-RING	HNBR	11.5"x12"x0.25"	02WX5042

THESE SHOP DRAWINGS ILLUSTRATE THE DETAILS OF THE STRUCTURAL TECHNOLOGIES / VSL POST-TENSIONING SYSTEM. THEY WERE PREPARED IN CONFORMANCE WITH THE STRUCTURAL DESIGN PROVIDED TO STRUCTURAL TECHNOLOGIES / VSL BY PROJECT OWNER OR IT'S REPRESENTATIVE. STRUCTURAL TECHNOLOGIES / VSL TOOK NO PART IN THE PREPARATION OR REVIEW OF SAID STRUCTURAL DESIGN AND STRUCTURAL TECHNOLOGIES / VSL DISCLAIMS ANY LIABILITY FOR IT. THE STAMP OR SEAL OF A STRUCTURAL TECHNOLOGIES / VSL EMPLOYEE ON THESE SHOP DRAWINGS PERTAINS ONLY TO THE TRANSFER OF THE FORCES REQUIRED BY THE ENGINEER OF RECORD ON THE STRUCTURAL DRAWINGS, AND NOT TO THE ADEQUACY OF THE STRUCTURAL DESIGN. NO WARRANTY, EXPRESSED OR IMPLIED, AS TO THE ADEQUACY OF THE STRUCTURAL DESIGN IS MADE BY VIRTUE OF ANY SUCH STAMP OR SEAL.

NO	DESCRIPTION	BY	CHK	DATE
0	FIRST ISSUE	CDL	ZX	26FEB2018

THIS DOCUMENT, INCLUDING ANY DRAWINGS, SPECIFICATIONS, AND CALCULATIONS HEREIN, CONTAINS INFORMATION THAT IS PROPRIETARY TO STRUCTURAL TECHNOLOGIES LLC ("VSL"). THIS DOCUMENT AND THE INFORMATION CONTAINED HEREIN IS CONFIDENTIAL, AND MAY NOT BE REPRODUCED OR DISCLOSED WITHOUT THE PRIOR WRITTEN CONSENT OF STRUCTURAL TECHNOLOGIES LLC ("VSL"). FURTHER, THE USE OF THIS DOCUMENT OR ANY INFORMATION PRESENTED HEREIN IS RESTRICTED TO THE SPECIFIC PROJECT AND PURPOSE FOR WHICH IT WAS PREPARED. ANY OTHER USE IS STRICTLY PROHIBITED. STRUCTURAL TECHNOLOGIES LLC ("VSL") DISCLAIMS ANY LIABILITY FOR ANY UNAUTHORIZED, UNINTENDED OR OTHER UNFORESEEABLE USE OF THIS DOCUMENT OR ANY INFORMATION IT CONTAINS.

structural TECHNOLOGIES
A Structural Group Company
Dallas, TX / Washington, DC / Denver, CO / Pompano Beach, FL

STRUCTURAL TECHNOLOGIES, LLC
DALLAS OFFICE
15600 TRINITY BLVD, SUITE 118
FORT WORTH, TX 76155

PHONE: (817) 545-4807
FAX: (817) 545-4827
WWW.VSL.NET

PROJECT INFORMATION: SYSTEM DRAWING

TITLE: 6-31 ANCHORAGE CAP O-RING

PROJECT NO: SYSTEM

SCALE: NTS

SHEET NO: C719

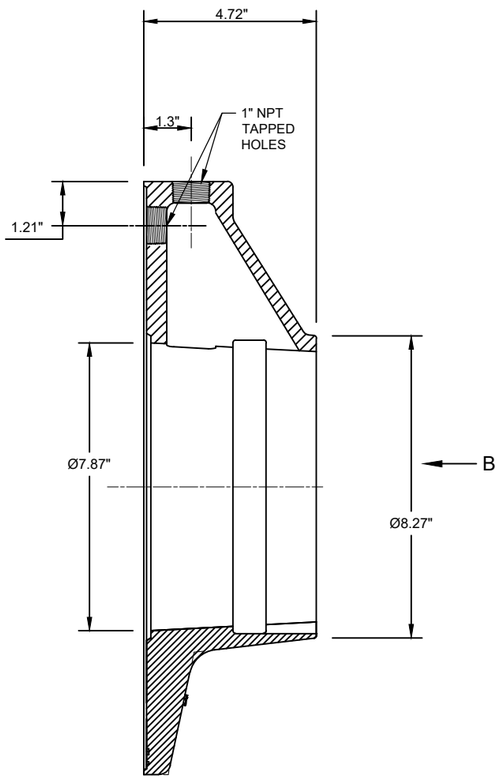

SECTION A-A

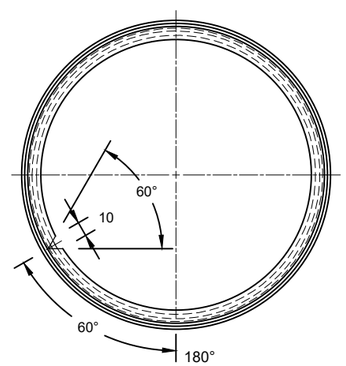

VIEW B

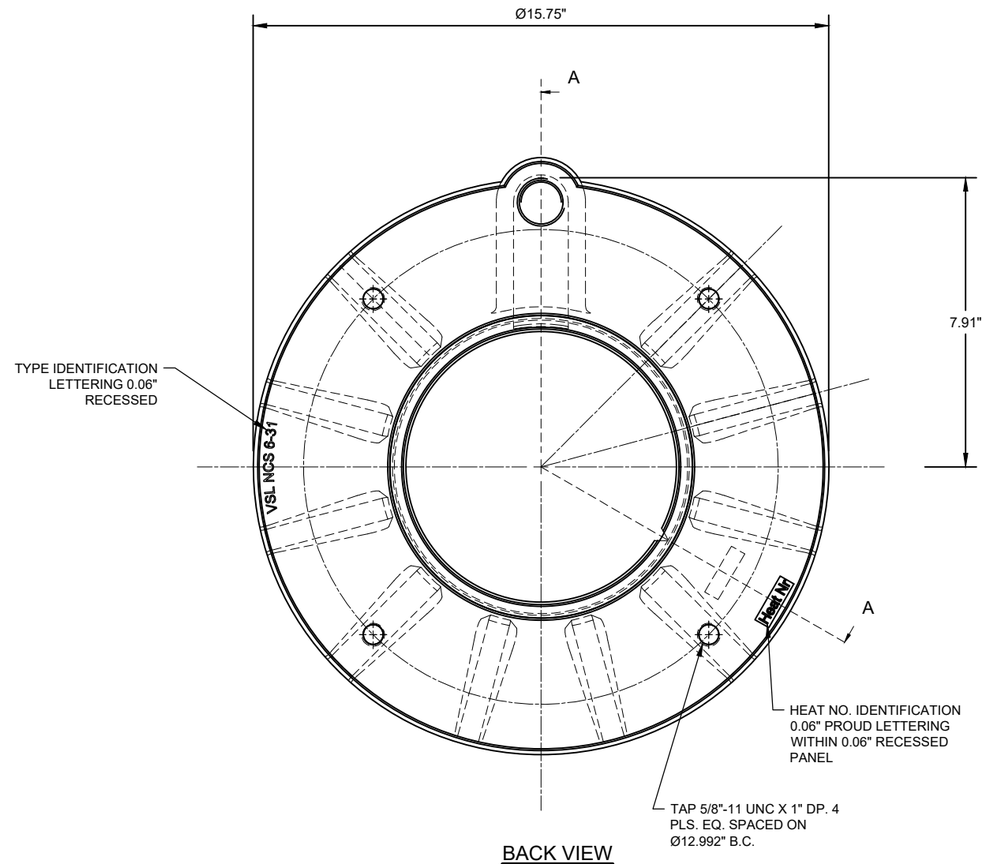

BACK VIEW

GENERAL NOTES

1. ALL HOLES TO BE FREE FROM BURRS
2. MATERIAL: A536 GR80-55-06 GALVANIZED
3. INVENTORY# 02BP6031V

THESE SHOP DRAWINGS ILLUSTRATE THE DETAILS OF THE STRUCTURAL TECHNOLOGIES / VSL POST-TENSIONING SYSTEM. THEY WERE PREPARED IN CONFORMANCE WITH THE STRUCTURAL DESIGN PROVIDED TO STRUCTURAL TECHNOLOGIES / VSL BY PROJECT OWNER OR IT'S REPRESENTATIVE. STRUCTURAL TECHNOLOGIES / VSL TOOK NO PART IN THE PREPARATION OR REVIEW OF SAID STRUCTURAL DESIGN AND STRUCTURAL TECHNOLOGIES / VSL DISCLAIMS ANY LIABILITY FOR IT. THE STAMP OR SEAL OF A STRUCTURAL TECHNOLOGIES / VSL EMPLOYEE ON THESE SHOP DRAWINGS PERTAINS ONLY TO THE TRANSFER OF THE FORCES REQUIRED BY THE ENGINEER OF RECORD ON THE STRUCTURAL DRAWINGS, AND NOT TO THE ADEQUACY OF THE STRUCTURAL DESIGN. NO WARRANTY, EXPRESSED OR IMPLIED, AS TO THE ADEQUACY OF THE STRUCTURAL DESIGN IS MADE BY VIRTUE OF ANY SUCH STAMP OR SEAL.

NO	DESCRIPTION	BY	CHK	DATE
1	PRELIMINARY NOT FOR PRODUCTION	CDL	ZX	26FEB2018

STRUCTURAL TECHNOLOGIES, LLC CLAIMS A STRICT PROPRIETARY RIGHT IN ALL DRAWINGS, SPECIFICATIONS AND CALCULATIONS (INFORMATION") SET FORTH ON THIS SHEET. THE USE OF SUCH INFORMATION WHICH DOES NOT INVOLVE, OR WAS NOT, OR ANY REPRODUCTION THEREOF, IS RESTRICTED TO THE SITE FOR WHICH IT WAS PREPARED AND TO THE MATERIAL AND/OR SERVICE PROVIDED BY STRUCTURAL TECHNOLOGIES / VSL. ANY OTHER USE, STRICTLY PROHIBITED, AND STRUCTURAL TECHNOLOGIES / VSL DISCLAIMS ANY LIABILITY THEREFORE.

structural TECHNOLOGIES
A Structural Group Company
Dallas, TX / Washington, DC / Denver, CO / Pompano Beach, FL
VSL
STRUCTURAL TECHNOLOGIES, LLC
DALLAS OFFICE
15600 TRINITY BLVD, SUITE 118
FORT WORTH, TX 76155
PHONE: (817) 545-4807
FAX: (817) 545-4827
WWW.VSL.NET

PROJECT INFORMATION: SYSTEM DRAWING

TITLE: **NCS 6-31 BEARING PLATE W/ 1" NPT PORT**

PROJECT NO: SYSTEM

SCALE: NTS

SHEET NO: **C735**

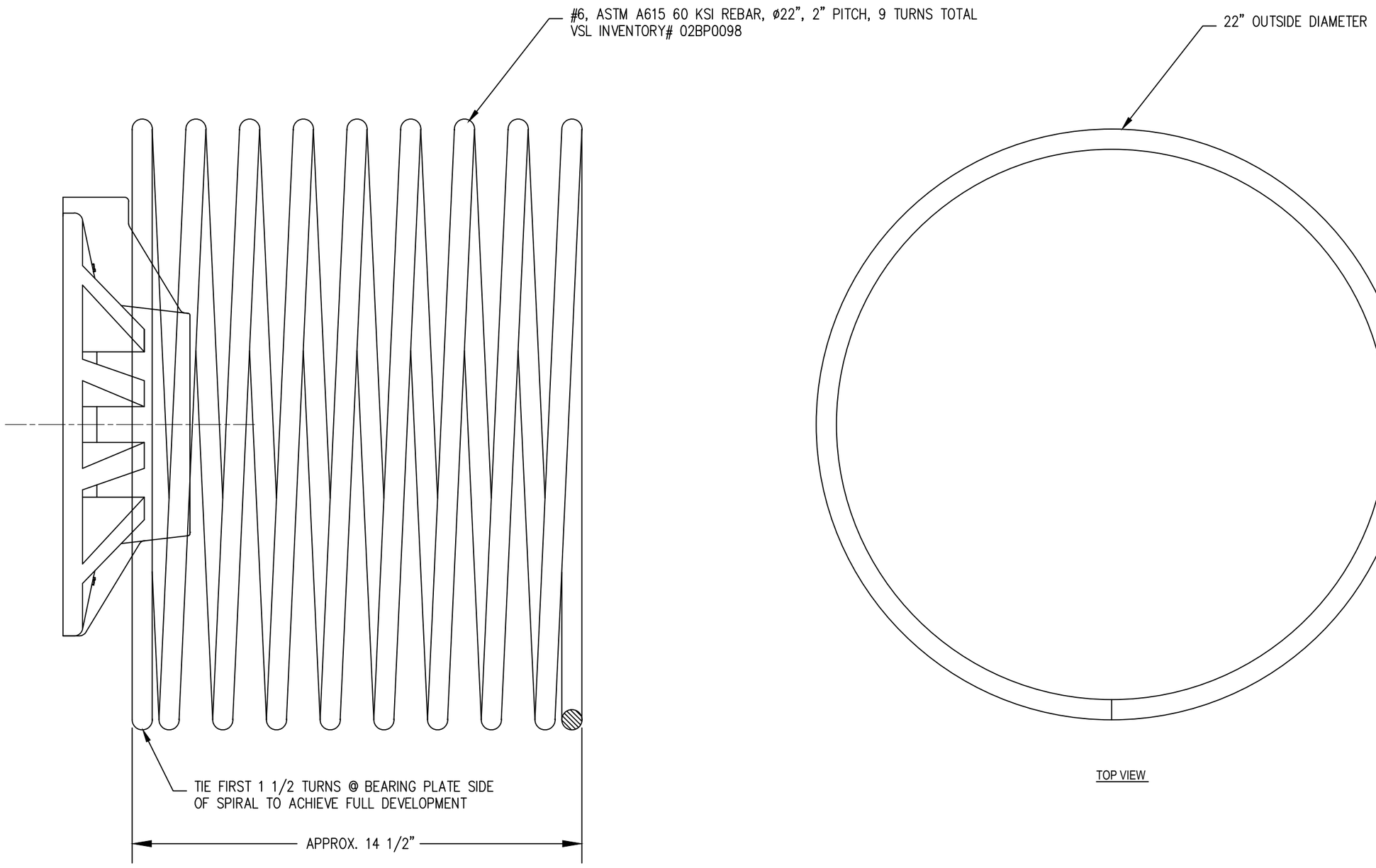

THESE SHOP DRAWINGS ILLUSTRATE THE DETAILS OF THE STRUCTURAL TECHNOLOGIES / VSL POST-TENSIONING SYSTEM. THEY WERE PREPARED IN CONFORMANCE WITH THE STRUCTURAL DESIGN PROVIDED TO STRUCTURAL TECHNOLOGIES / VSL BY PROJECT OWNER OR IT'S REPRESENTATIVE. STRUCTURAL TECHNOLOGIES / VSL TOOK NO PART IN THE PREPARATION OR REVIEW OF SAID STRUCTURAL DESIGN AND STRUCTURAL TECHNOLOGIES / VSL DISCLAIMS ANY LIABILITY FOR IT. THE STAMP OR SEAL OF A STRUCTURAL TECHNOLOGIES / VSL EMPLOYEE ON THESE SHOP DRAWINGS PERTAINS ONLY TO THE TRANSFER OF THE FORCES REQUIRED BY THE ENGINEER OF RECORD ON THE STRUCTURAL DRAWINGS, AND NOT TO THE ADEQUACY OF THE STRUCTURAL DESIGN. NO WARRANTY, EXPRESSED OR IMPLIED, AS TO THE ADEQUACY OF THE STRUCTURAL DESIGN IS MADE BY VIRTUE OF ANY SUCH STAMP OR SEAL.

NO	DESCRIPTION	BY	CHK	DATE
3	TITLE BLOCK UPDATED	CDL	ZX	26FEB2018
2	REVISED AS NOTED FOR CONSTRUCTION	TB	MM	06JUL2011
1	RELEASED FOR CONSTRUCTION	GDH	GY	24SEP2009

STRUCTURAL TECHNOLOGIES, LLC CLAIMS A STRICT PROPRIETARY RIGHT IN ALL DRAWINGS, SPECIFICATIONS AND CALCULATIONS (INFORMATION") SET FORTH ON THIS SHEET. THE USE OF SUCH INFORMATION WHICH COPYING, REPORT, OR ANY REPRODUCTION THEREOF, IS RESTRICTED TO THE SITE FOR WHICH IT WAS PREPARED AND TO THE MATERIAL AND/OR SERVICE PROVIDED BY STRUCTURAL TECHNOLOGIES / VSL. ANY OTHER USE IS STRICTLY PROHIBITED, AND STRUCTURAL TECHNOLOGIES / VSL DISCLAIMS ANY LIABILITY THEREFORE.

structural TECHNOLOGIES
A Structural Group Company
Dallas, TX / Washington, DC / Denver, CO / Pompano Beach, FL
VSL
STRUCTURAL TECHNOLOGIES, LLC
DALLAS OFFICE
15600 TRINITY BLVD, SUITE 118
FORT WORTH, TX 76155
PHONE: (817) 545-4807
FAX: (817) 545-4827
WWW.VSL.NET

PROJECT INFORMATION: SYSTEM DRAWING

TITLE: **NCS 6-31 SPIRAL**

PROJECT NO: SYSTEM

SCALE: NTS

SHEET NO: **C644**

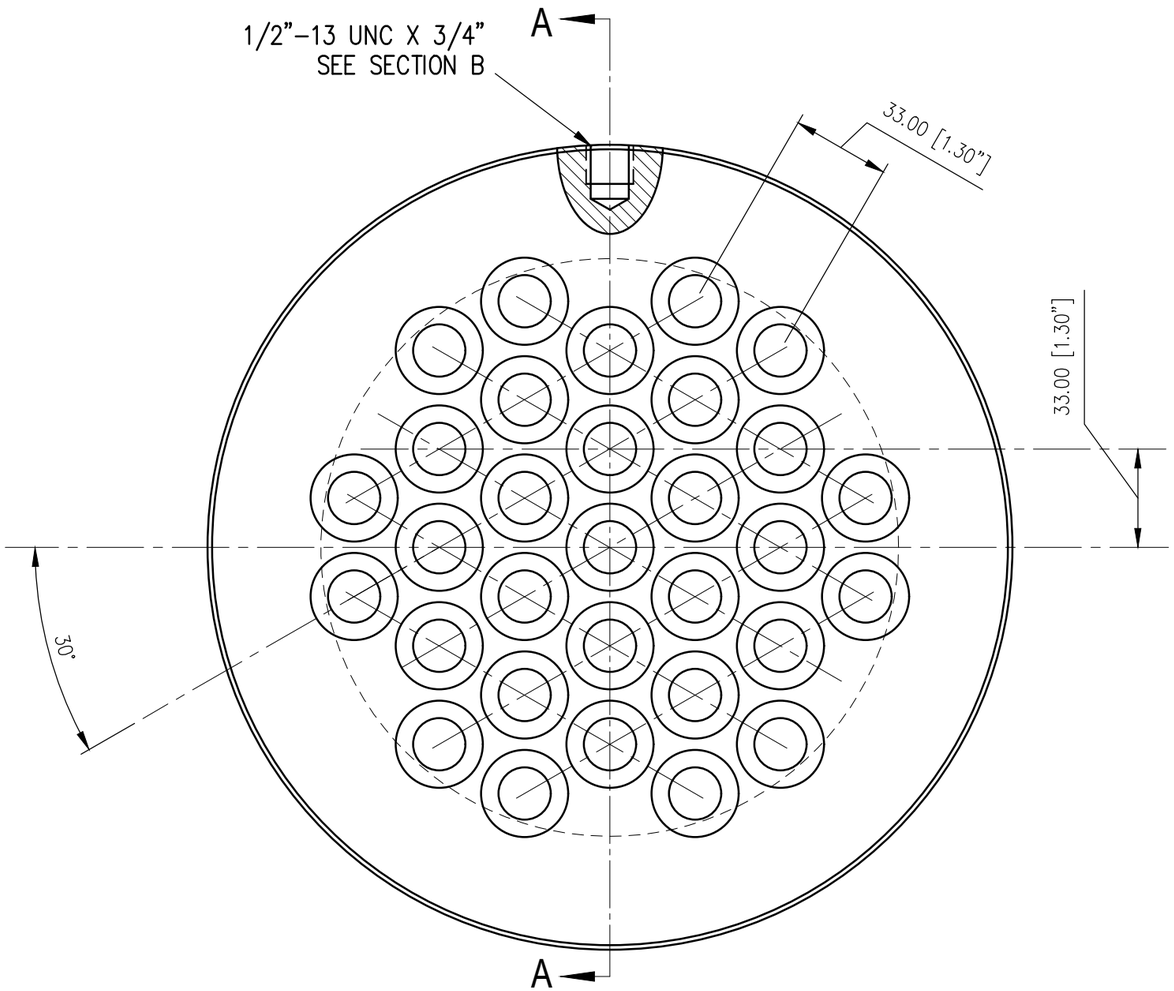

PLAN VIEW

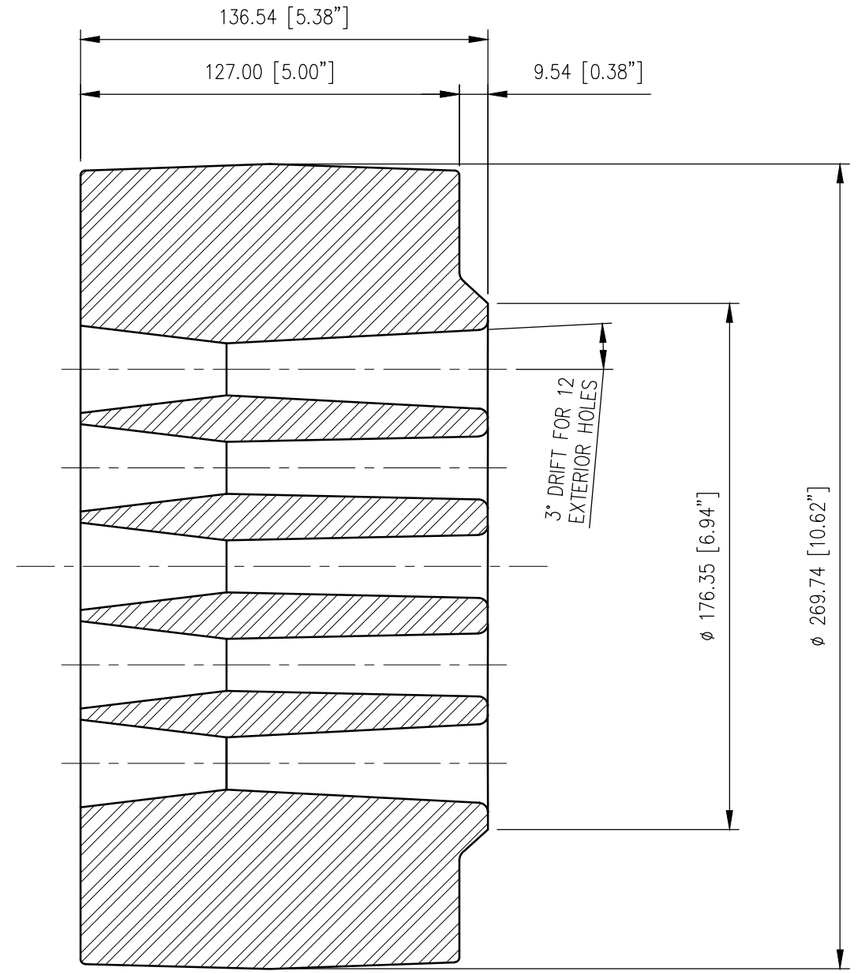

SECTION A-A

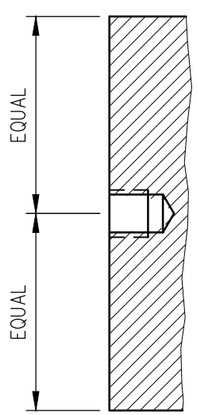

SECTION B

ANCHORHEAD NCS 6-31

GENERAL CASTING NOTES

1) ALL HOLES TO BE FREE FROM BURRS
2) ALL RADII 1mm UNO
3) MATERIAL: ASTM A536 GR 80–55–06
   VSL Q.A. DOC MS 1.1.005
4) MANUFACTURERS IDENTIFICATION AND BATCH No.
   MUST BE CLEARLY VISIBLE ON CASTING
5) SCALE: DRAWING NOT TO SCALE
6) WEIGHT: 106 LBS. est.

INVENTORY No. 02AH6031

TOLERANCES

UNLESS OTHERWISE SPECIFIED
DIMENSIONS IN MILLIMETERS.

0 THROUGH 50mm	±0.5
51mm THROUGH 100mm	±1.0
MORE THAN 100mm	±1.5
ANGULAR	±1/2°
SURFACE QUALITY	√

NOTES:
1) BREAK SHARP EDGES
2) REMOVE ALL BURRS.
3) DO NOT SCALE DRAWING.
4) ALL DRAFT ANGLES 2° UNO

THESE SHOP DRAWINGS ILLUSTRATE THE DETAILS OF THE STRUCTURAL TECHNOLOGIES / VSL POST-TENSIONING SYSTEM. THEY WERE PREPARED IN CONFORMANCE WITH THE STRUCTURAL DESIGN PROVIDED TO STRUCTURAL TECHNOLOGIES / VSL BY PROJECT OWNER OR IT'S REPRESENTATIVE. STRUCTURAL TECHNOLOGIES / VSL TOOK NO PART IN THE PREPARATION OR REVIEW OF SAID STRUCTURAL DESIGN AND STRUCTURAL TECHNOLOGIES / VSL DISCLAIMS ANY LIABILITY FOR IT. THE STAMP OR SEAL OF A STRUCTURAL TECHNOLOGIES / VSL EMPLOYEE ON THESE SHOP DRAWINGS PERTAINS ONLY TO THE TRANSFER OF THE FORCES REQUIRED BY THE ENGINEER OF RECORD ON THE STRUCTURAL DRAWINGS, AND NOT TO THE ADEQUACY OF THE STRUCTURAL DESIGN. NO WARRANTY, EXPRESSED OR IMPLIED, AS TO THE ADEQUACY OF THE STRUCTURAL DESIGN IS MADE BY VIRTUE OF ANY SUCH STAMP OR SEAL.

NO	DESCRIPTION	BY	CHK	DATE
5	TITLE BLOCK UPDATED	CDL	ZX	26FEB2018
4	ADDED 1/2-13 LIFTING EYE THREAD	GDH	ZX	09JAN2018
3	(UPDATED MATERIAL INFO.) FOR PRODUCTION	JOB	GAH	09JAN2018
2	(UPDATED MATERIAL INFO.) FOR PRODUCTION	GDH	GAH	04APR2011

THIS DOCUMENT, INCLUDING ANY DRAWINGS, SPECIFICATIONS, AND CALCULATIONS HEREIN, CONTAINS INFORMATION THAT IS PROPRIETARY TO STRUCTURAL TECHNOLOGIES LLC / VSL®. THIS DOCUMENT AND ITS INFORMATION CONTAINED HEREIN IS CONFIDENTIAL, AND MAY NOT BE REPRODUCED OR DISCLOSED WITHOUT THE PRIOR WRITTEN CONSENT OF STRUCTURAL TECHNOLOGIES LLC / VSL®. THE USE OF THIS DOCUMENT OR ANY INFORMATION PRESENTED HEREIN IS RESTRICTED TO THE SPECIFIC PROJECT AND PURPOSE FOR WHICH IT WAS PREPARED. ANY OTHER USE IS STRICTLY PROHIBITED. STRUCTURAL TECHNOLOGIES LLC / VSL® DISCLAIMS ANY LIABILITY FOR UNAUTHORIZED, UNINTENDED, OR OTHER IMPERMISSIBLE USE OF THIS DOCUMENT OR ANY INFORMATION IT CONTAINS.

structural TECHNOLOGIES
A Structural Group Company
Dallas, TX / Washington, DC / Denver, CO / Pompano Beach, FL
STRUCTURAL TECHNOLOGIES, LLC
DALLAS OFFICE
15600 TRINITY BLVD, SUITE 118
FORT WORTH, TX 76155
PHONE: (817) 545-4807
FAX: (817) 545-4827
WWW.VSL.NET

PROJECT INFORMATION: SYSTEM DRAWING

TITLE: NCS 6-31 ANCHOR HEAD

PROJECT NO: SYSTEM

SCALE: NTS

SHEET NO: C614

ELECTRONIC FILE LOCATION: I:\VSL System Drawings\Work In Progress Drawings\Work In Progress Drawings\Florida DOT Test 2017\NCS 6-31 Flexible Filler Submittal

PLOT DATE/TIME: 02Mar2018 2:53 PM FILE NAME: C614 NCS- 6-31 AH Rev 5 EXTERNAL.dwg

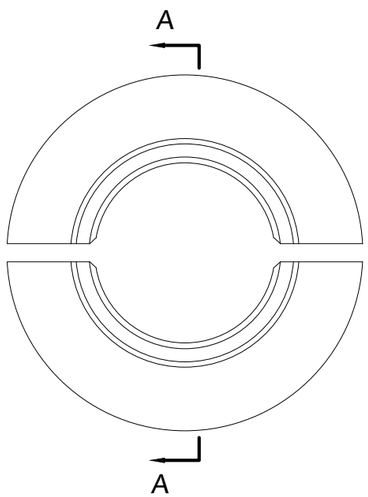

0.6" DIA. MULTIWEDGES
TYPE 1.6G

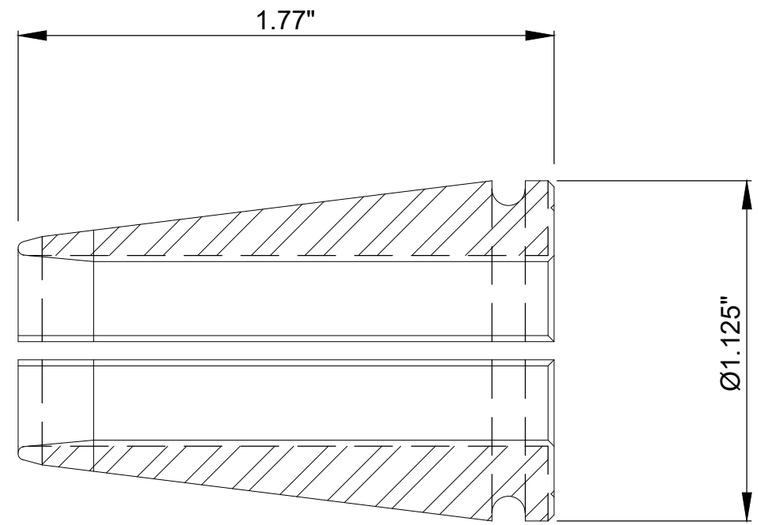

SECTION A-A

NOTES:
1. MATERIAL: AISI 11L17/12L14, PRODUCED IN STRICT ACCORDANCE WITH VSL MS 3.1.006
2. WEIGHT: 0.197 LBS. (APPROX.)
3. HEAT TREATMENT: CASEHARDENED
4. INVENTORY NO. 02WG0008

THESE SHOP DRAWINGS ILLUSTRATE THE DETAILS OF THE STRUCTURAL TECHNOLOGIES / VSL POST-TENSIONING SYSTEM. THEY WERE PREPARED IN CONFORMANCE WITH THE STRUCTURAL DESIGN PROVIDED TO STRUCTURAL TECHNOLOGIES / VSL BY PROJECT OWNER OR IT'S REPRESENTATIVE. STRUCTURAL TECHNOLOGIES / VSL TOOK NO PART IN THE PREPARATION OR REVIEW OF SAID STRUCTURAL DESIGN AND STRUCTURAL TECHNOLOGIES / VSL DISCLAIMS ANY LIABILITY FOR IT. THE STAMP OR SEAL OF A STRUCTURAL TECHNOLOGIES / VSL EMPLOYEE ON THESE SHOP DRAWINGS PERTAINS ONLY TO THE TRANSFER OF THE FORCES REQUIRED BY THE ENGINEER OF RECORD ON THE STRUCTURAL DRAWINGS, AND NOT TO THE ADEQUACY OF THE STRUCTURAL DESIGN. NO WARRANTY, EXPRESSED OR IMPLIED, AS TO THE ADEQUACY OF THE STRUCTURAL DESIGN IS MADE BY VIRTUE OF ANY SUCH STAMP OR SEAL.

NO	DESCRIPTION	BY	CHK	DATE
5	TITLE BLOCK UPDATED	CDL	ZX	26FEB2018
4	UPDATED TITLE BLOCK	SK	ZX	09JAN2015
3	UPDATED BORDER	GDH		29APR2004
2	ADDED INVENTORY NUMBER	TKW		01JAN1989

THIS DOCUMENT, INCLUDING ANY DRAWINGS, SPECIFICATIONS, AND CALCULATIONS HEREIN, CONTAINS INFORMATION THAT IS PROPRIETARY TO STRUCTURAL TECHNOLOGIES LLC ("STL"). THIS DOCUMENT AND THE INFORMATION CONTAINED HEREIN IS CONFIDENTIAL AND MAY NOT BE REPRODUCED OR DISCLOSED WITHOUT THE PRIOR WRITTEN CONSENT OF STRUCTURAL TECHNOLOGIES LLC ("VSL"). FURTHER, THE USE OF THIS DOCUMENT OR ANY INFORMATION ON PERSISTED HEREIN IS RESTRICTED TO THE SPECIFIC PROJECT AND PURPOSE FOR WHICH IT WAS PREPARED. ANY OTHER USE IS STRICTLY PROHIBITED. STRUCTURAL TECHNOLOGIES LLC ("VSL") DISCLAIMS ANY LIABILITY FOR ANY UNAUTHORIZED, UNINTENDED OR OTHER INAPPROPRIATE USE OF THIS DOCUMENT OR ANY INFORMATION THAT CONTAINS.

structural TECHNOLOGIES
A Structural Group Company
Dallas, TX / Washington, DC / Denver, CO / Pompano Beach, FL
VSL
STRUCTURAL TECHNOLOGIES, LLC
DALLAS OFFICE
15600 TRINITY BLVD, SUITE 118
FORT WORTH, TX 76155
PHONE: (817) 545-4807
FAX: (817) 545-4827
WWW.VSL.NET

PROJECT INFORMATION: SYSTEM DRAWING

TITLE: 0.6" MULTIWEDGE TYPE 1.6G

PROJECT NO: SYSTEM

SCALE: NTS

SHEET NO: C218

ELECTRONIC FILE LOCATION: I:\VSL System Drawings\Work In Progress Drawings\Work In Progress Drawings\Florida DOT Test 2017\NCS 6-31 Flexible Filler Submittal

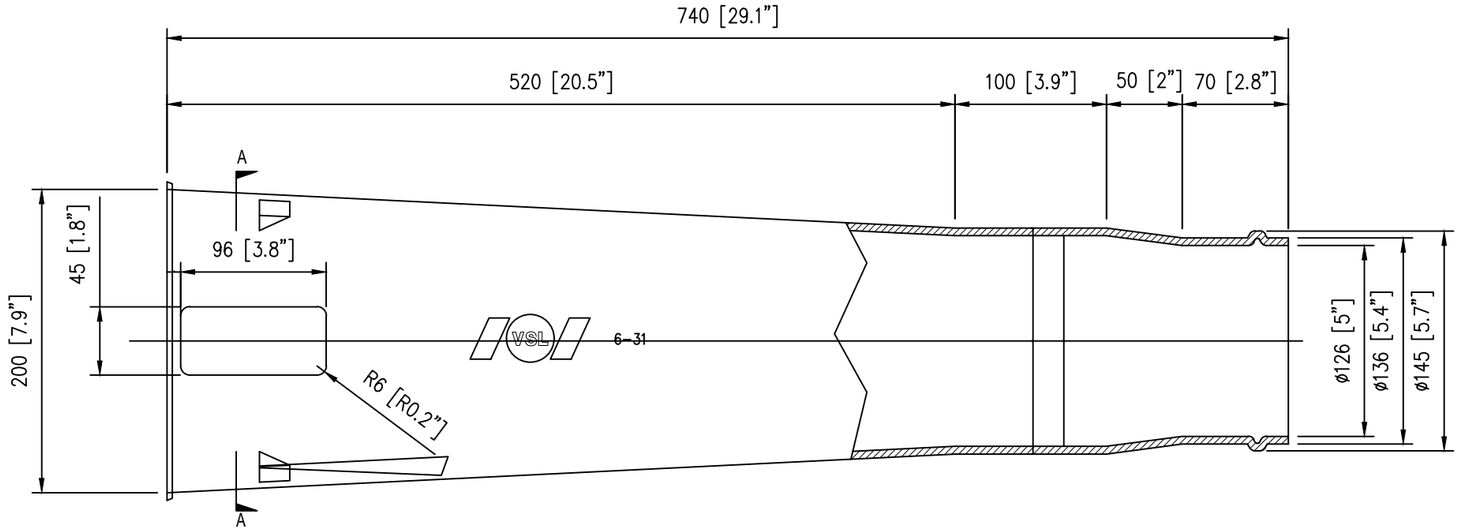

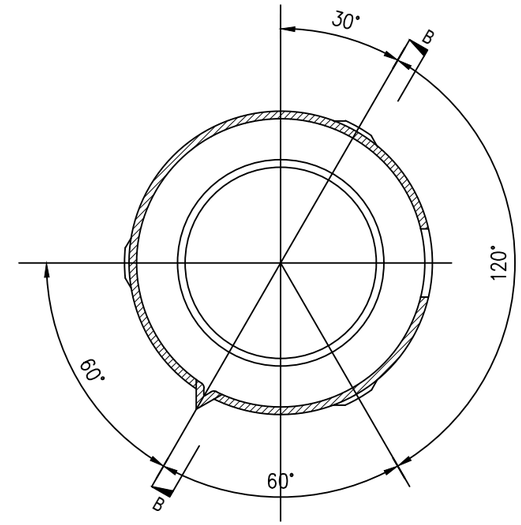

SECTION A-A

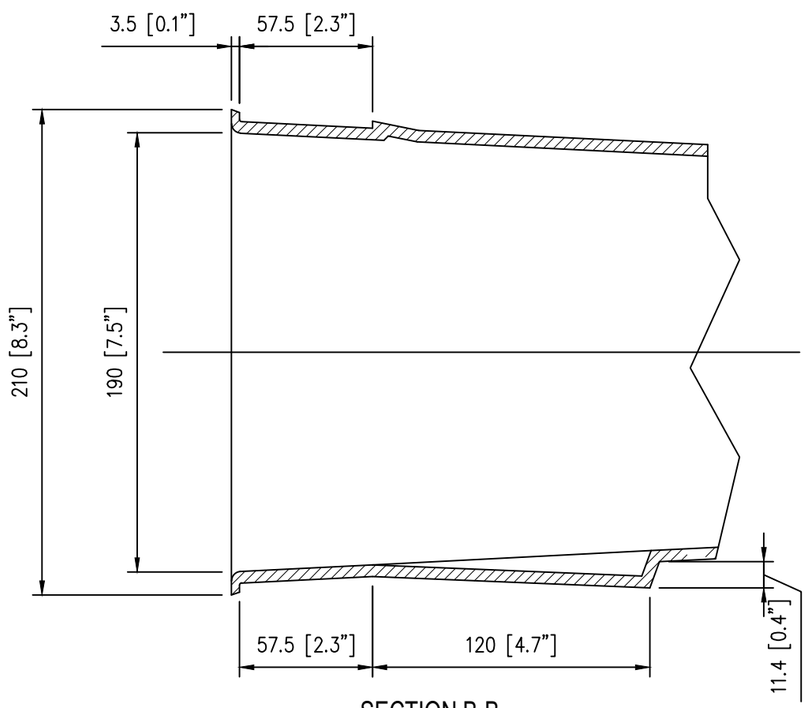

SECTION B-B

TOLERANCES

UNLESS OTHERWISE SPECIFIED
DIMENSIONS IN MILLIMETERS.

0 THROUGH 50mm	
51mm THROUGH 100mm	
MORE THAN 100mm	±0.5
ANGULAR	±1.0
SURFACE QUALITY	±1.5
NOTES:	±1/2°

1) BREAK SHARP EDGES
2) REMOVE ALL BURRS. √
3) DO NOT SCALE DRAWING.
4) ALL RADII 1mm UNO
5) MATERIAL: HDPE

INVENTORY No. 02BP4436

THESE SHOP DRAWINGS ILLUSTRATE THE DETAILS OF THE STRUCTURAL TECHNOLOGIES / VSL POST-TENSIONING SYSTEM. THEY WERE PREPARED IN CONFORMANCE WITH THE STRUCTURAL DESIGN PROVIDED TO STRUCTURAL TECHNOLOGIES / VSL BY PROJECT OWNER OR IT'S REPRESENTATIVE. STRUCTURAL TECHNOLOGIES / VSL TOOK NO PART IN THE PREPARATION OR REVIEW OF SAID STRUCTURAL DESIGN AND STRUCTURAL TECHNOLOGIES / VSL DISCLAIMS ANY LIABILITY FOR IT. THE STAMP OR SEAL OF A STRUCTURAL TECHNOLOGIES / VSL EMPLOYEE ON THESE SHOP DRAWINGS PERTAINS ONLY TO THE TRANSFER OF THE FORCES REQUIRED BY THE ENGINEER OF RECORD ON THE STRUCTURAL DRAWINGS, AND NOT TO THE ADEQUACY OF THE STRUCTURAL DESIGN. NO WARRANTY, EXPRESSED OR IMPLIED, AS TO THE ADEQUACY OF THE STRUCTURAL DESIGN IS MADE BY VIRTUE OF ANY SUCH STAMP OR SEAL.

NO	DESCRIPTION	BY	CHK	DATE
2	TITLE BLOCK UPDATED	CDL	ZX	26FEB2018
1	ISSUED FOR CONSTRUCTION	JE		27OCT2009

STRUCTURAL TECHNOLOGIES, LLC CLAIMS A STRICT PROPRIETARY RIGHT IN ALL DRAWINGS, SPECIFICATIONS AND CALCULATIONS (INFORMATION") SET FORTH ON THIS SHEET. THE USE OF SUCH INFORMATION WHICH IS NOT WRITTEN, OR ANY REPRODUCTION THEREOF, IS RESTRICTED TO THE SITE FOR WHICH IT WAS PREPARED AND TO THE MATERIAL AND/OR SERVICE PROVIDED BY STRUCTURAL TECHNOLOGIES / VSL. ANY OTHER USE IS STRICTLY PROHIBITED, AND STRUCTURAL TECHNOLOGIES / VSL DISCLAIMS ANY LIABILITY THEREFORE.

structural TECHNOLOGIES
A Structural Group Company
Dallas, TX / Washington, DC / Denver, CO / Pompano Beach, FL
STRUCTURAL TECHNOLOGIES, LLC
DALLAS OFFICE
15600 TRINITY BLVD, SUITE 118
FORT WORTH, TX 76155
PHONE: (817) 545-4807
FAX: (817) 545-4827
WWW.VSL.NET

PROJECT INFORMATION: SYSTEM DRAWING

TITLE: **NCS 6-31 TRUMPET**

PROJECT NO: SYSTEM

SCALE: NTS

SHEET NO: **C645**

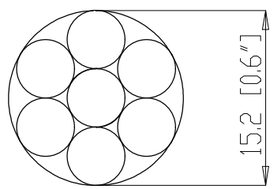

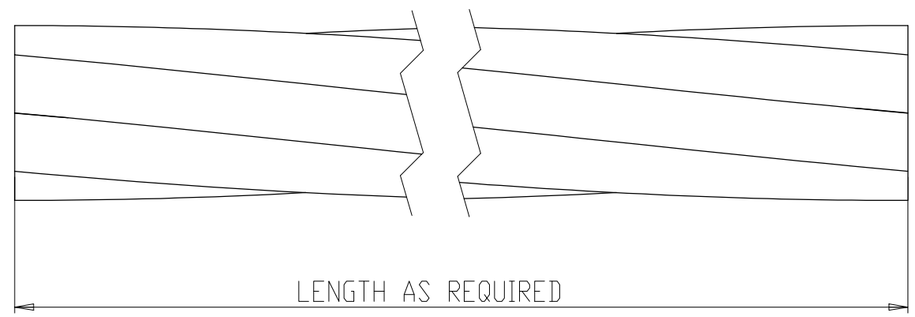

THESE SHOP DRAWINGS ILLUSTRATE THE DETAILS OF THE STRUCTURAL TECHNOLOGIES / VSL POST-TENSIONING SYSTEM. THEY WERE PREPARED IN CONFORMANCE WITH THE STRUCTURAL DESIGN PROVIDED TO STRUCTURAL TECHNOLOGIES / VSL BY PROJECT OWNER OR IT'S REPRESENTATIVE. STRUCTURAL TECHNOLOGIES / VSL TOOK NO PART IN THE PREPARATION OR REVIEW OF SAID STRUCTURAL DESIGN AND STRUCTURAL TECHNOLOGIES / VSL DISCLAIMS ANY LIABILITY FOR IT. THE STAMP OR SEAL OF A STRUCTURAL TECHNOLOGIES / VSL EMPLOYEE ON THESE SHOP DRAWINGS PERTAINS ONLY TO THE TRANSFER OF THE FORCES REQUIRED BY THE ENGINEER OF RECORD ON THE STRUCTURAL DRAWINGS, AND NOT TO THE ADEQUACY OF THE STRUCTURAL DESIGN. NO WARRANTY, EXPRESSED OR IMPLIED, AS TO THE ADEQUACY OF THE STRUCTURAL DESIGN IS MADE BY VIRTUE OF ANY SUCH STAMP OR SEAL.

NO	DESCRIPTION	BY	CHK	DATE
1	TITLE BLOCK UPDATED	CDL	ZX	26FEB2018
0	FOR FDOT	MM		04FEB2010

THIS DOCUMENT, INCLUDING ANY DRAWINGS, SPECIFICATIONS, AND CALCULATIONS HEREIN, CONTAINS INFORMATION WHICH IS PROPRIETARY TO STRUCTURAL TECHNOLOGIES LLC ("VSL"). THIS DOCUMENT AND THE INFORMATION CONTAINED HEREIN IS CONFIDENTIAL, AND MAY NOT BE REPRODUCED OR DISCLOSED WITHOUT THE PRIOR WRITTEN CONSENT OF STRUCTURAL TECHNOLOGIES LLC ("VSL"). FURTHER, THE USE OF THIS DOCUMENT OR ANY INFORMATION PRESENTED HEREIN IS RESTRICTED TO THE SPECIFIC PROJECT AND PURPOSE FOR WHICH IT WAS PREPARED. ANY OTHER USE IS STRICTLY PROHIBITED. STRUCTURAL TECHNOLOGIES LLC ("VSL") DISCLAIMS ANY LIABILITY FOR ANY UNAUTHORIZED, UNINTENDED OR OTHER UNFORESEEN USE OF THIS DOCUMENT OR ANY INFORMATION IT CONTAINS.

structural TECHNOLOGIES
A Structural Group Company
Dallas, TX / Washington, DC / Denver, CO / Pompano Beach, FL

STRUCTURAL TECHNOLOGIES, LLC
DALLAS OFFICE
15600 TRINITY BLVD, SUITE 118
FORT WORTH, TX 76155

PHONE: (817) 545-4807
FAX: (817) 545-4827
WWW.VSL.NET

PROJECT INFORMATION: **SYSTEM DRAWING**

TITLE: **VSL POST TENSIONING 0.6" BARE STRAND ASTM A416, 270KSI**

PROJECT NO: SYSTEM

SCALE: NTS

SHEET NO: **C674**

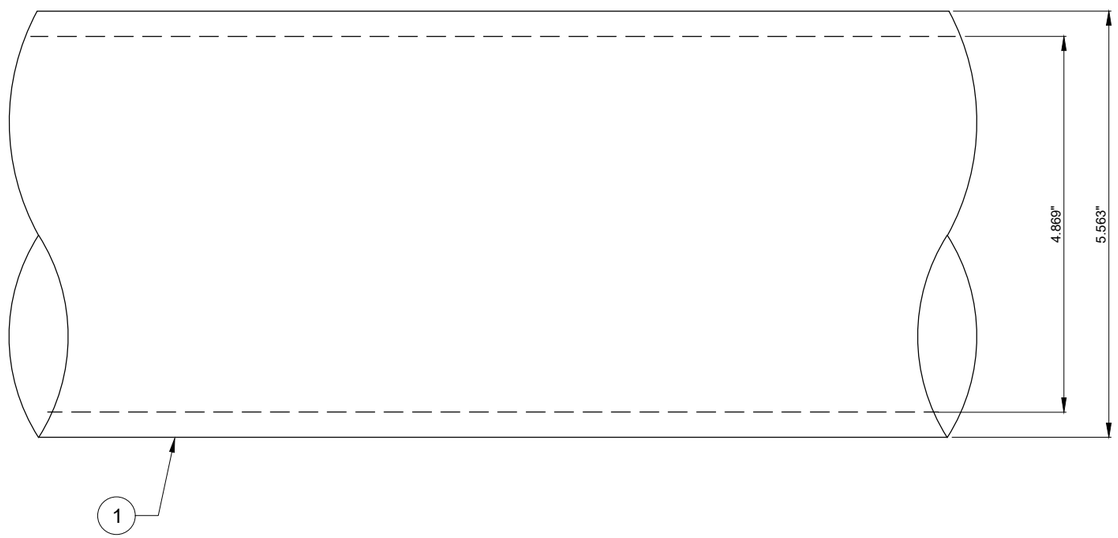

ITEM	QTY	DESCRIPTION	MATERIAL
1	-	5" HDPE PIPE DR-17	ASTM D3035

NOTE: MINIMUM BEND RADIUS = 30'-0"

THESE SHOP DRAWINGS ILLUSTRATE THE DETAILS OF THE STRUCTURAL TECHNOLOGIES / VSL POST-TENSIONING SYSTEM. THEY WERE PREPARED IN CONFORMANCE WITH THE STRUCTURAL DESIGN PROVIDED TO STRUCTURAL TECHNOLOGIES / VSL BY PROJECT OWNER OR IT'S REPRESENTATIVE. STRUCTURAL TECHNOLOGIES / VSL TOOK NO PART IN THE PREPARATION OR REVIEW OF SAID STRUCTURAL DESIGN AND STRUCTURAL TECHNOLOGIES / VSL DISCLAIMS ANY LIABILITY FOR IT. THE STAMP OR SEAL OF A STRUCTURAL TECHNOLOGIES / VSL EMPLOYEE ON THESE SHOP DRAWINGS PERTAINS ONLY TO THE TRANSFER OF THE FORCES REQUIRED BY THE ENGINEER OF RECORD ON THE STRUCTURAL DRAWINGS, AND NOT TO THE ADEQUACY OF THE STRUCTURAL DESIGN. NO WARRANTY, EXPRESSED OR IMPLIED, AS TO THE ADEQUACY OF THE STRUCTURAL DESIGN IS MADE BY VIRTUE OF ANY SUCH STAMP OR SEAL.

NO	DESCRIPTION	BY	CHK	DATE
0	FIRST ISSUE	CDL	ZX	26FEB2018

THIS DOCUMENT, INCLUDING ANY DRAWINGS, SPECIFICATIONS, AND CALCULATIONS HEREIN, CONTAINS INFORMATION THAT IS PROPRIETARY TO STRUCTURAL TECHNOLOGIES LLC ("VSL"). THIS DOCUMENT AND THE INFORMATION CONTAINED HEREIN IS CONFIDENTIAL AND MAY NOT BE REPRODUCED OR DISCLOSED WITHOUT THE PRIOR WRITTEN CONSENT OF STRUCTURAL TECHNOLOGIES LLC ("VSL"). FURTHER, THE USE OF THIS DOCUMENT OR ANY INFORMATION PRESENTED HEREIN IS RESTRICTED TO THE SPECIFIC PROJECT AND PURPOSE FOR WHICH IT WAS PREPARED. ANY OTHER USE IS STRICTLY PROHIBITED. STRUCTURAL TECHNOLOGIES LLC ("VSL") DISCLAIMS ANY LIABILITY FOR ANY UNAUTHORIZED, UNINTENDED OR OTHER UNFORTUNATE USE OF THIS DOCUMENT OR ANY INFORMATION IT CONTAINS.

structural TECHNOLOGIES
A Structural Group Company
Dallas, TX / Washington, DC / Denver, CO / Pompano Beach, FL
STRUCTURAL TECHNOLOGIES, LLC
DALLAS OFFICE
15600 TRINITY BLVD, SUITE 118
FORT WORTH, TX 76155
PHONE: (817) 545-4807
FAX: (817) 545-4827
WWW.VSL.NET

PROJECT INFORMATION: SYSTEM DRAWING

TITLE: 5" HDPE PIPE

PROJECT NO: SYSTEM

SCALE: NTS

SHEET NO: C718

ELECTRONIC FILE LOCATION: I:\VSL System Drawings\Work In Progress Drawings\Work In Progress Drawings\Florida DOT Test 2017\NCS 8-31 Flexible Filler Submittal

PLOT DATE/TIME: 27Feb2018 11:46 AM FILE NAME: C718 5in HDPE Rev0.dwg

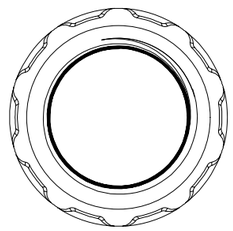

END VIEW

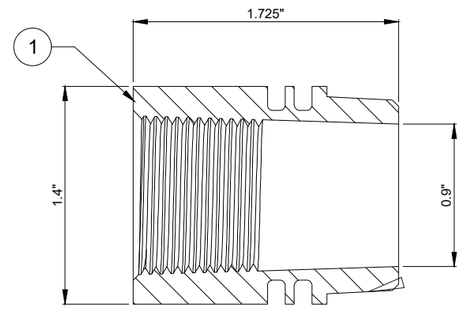

SIDE VIEW

ITEM	QTY	DESCRIPTION	MATERIAL	INVENTORY#
1	-	3/4" FNPT SMOOTH GROUT PORT	POLYETHYLENE	02DT0253

THESE SHOP DRAWINGS ILLUSTRATE THE DETAILS OF THE STRUCTURAL TECHNOLOGIES / VSL POST-TENSIONING SYSTEM. THEY WERE PREPARED IN CONFORMANCE WITH THE STRUCTURAL DESIGN PROVIDED TO STRUCTURAL TECHNOLOGIES / VSL BY PROJECT OWNER OR IT'S REPRESENTATIVE. STRUCTURAL TECHNOLOGIES / VSL TOOK NO PART IN THE PREPARATION OR REVIEW OF SAID STRUCTURAL DESIGN AND STRUCTURAL TECHNOLOGIES / VSL DISCLAIMS ANY LIABILITY FOR IT. THE STAMP OR SEAL OF A STRUCTURAL TECHNOLOGIES / VSL EMPLOYEE ON THESE SHOP DRAWINGS PERTAINS ONLY TO THE TRANSFER OF THE FORCES REQUIRED BY THE ENGINEER OF RECORD ON THE STRUCTURAL DRAWINGS, AND NOT TO THE ADEQUACY OF THE STRUCTURAL DESIGN. NO WARRANTY, EXPRESSED OR IMPLIED, AS TO THE ADEQUACY OF THE STRUCTURAL DESIGN IS MADE BY VIRTUE OF ANY SUCH STAMP OR SEAL.

NO	DESCRIPTION	BY	CHK	DATE
0	FIRST ISSUE	CDL	ZX	26FEB2018

STRUCTURAL TECHNOLOGIES, LLC CLAIMS A STRICT PROPRIETARY RIGHT IN ALL DRAWINGS, SPECIFICATIONS AND CALCULATIONS (INFORMATION") SET FORTH ON THIS SHEET. THE USE OF SUCH INFORMATION IN WHOLE OR IN PART, OR ANY REPRODUCTION THEREOF, IS RESTRICTED TO THE SITE FOR WHICH IT WAS PREPARED AND TO THE MATERIAL AND/OR SERVICE PROVIDED BY STRUCTURAL TECHNOLOGIES / VSL. ANY OTHER USE IS STRICTLY PROHIBITED, AND STRUCTURAL TECHNOLOGIES / VSL DISCLAIMS ANY LIABILITY THEREFORE.

structural TECHNOLOGIES
A Structural Group Company
Dallas, TX / Washington, DC / Denver, CO / Pompano Beach, FL

STRUCTURAL TECHNOLOGIES, LLC
DALLAS OFFICE
15600 TRINITY BLVD, SUITE 118
FORT WORTH, TX 76155

PHONE: (817) 545-4807
FAX: (817) 545-4827
WWW.VSL.NET

PROJECT INFORMATION: SYSTEM DRAWING

TITLE: **3/4" FNPT SMOOTH GROUT PORT**

PROJECT NO: ---

SCALE: NTS

SHEET NO: **C743**

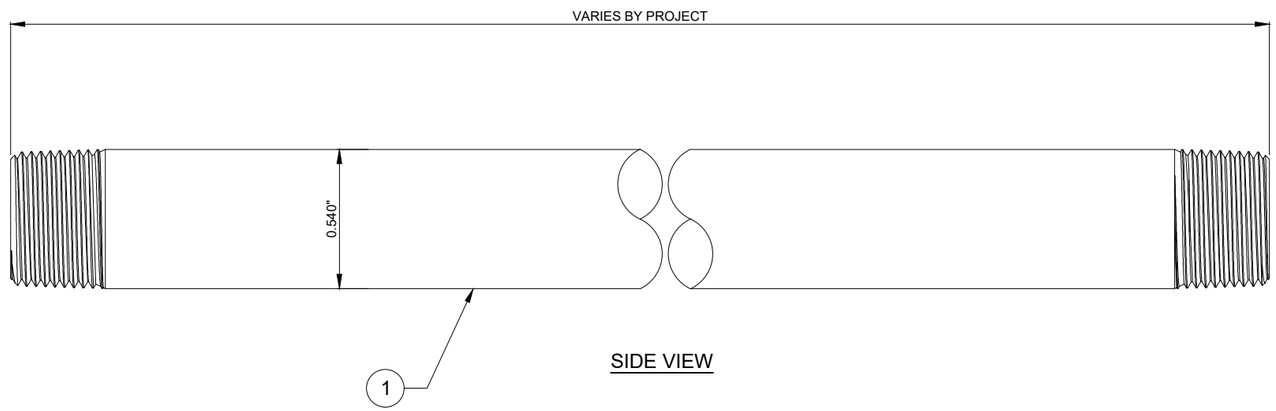

SIDE VIEW

ITEM	QTY	DESCRIPTION	MATERIAL
1	-	1/4" NPT STEEL NIPPLE	SCH 40 STEEL

THESE SHOP DRAWINGS ILLUSTRATE THE DETAILS OF THE STRUCTURAL TECHNOLOGIES / VSL POST-TENSIONING SYSTEM. THEY WERE PREPARED IN CONFORMANCE WITH THE STRUCTURAL DESIGN PROVIDED TO STRUCTURAL TECHNOLOGIES / VSL BY PROJECT OWNER OR IT'S REPRESENTATIVE. STRUCTURAL TECHNOLOGIES / VSL TOOK NO PART IN THE PREPARATION OR REVIEW OF SAID STRUCTURAL DESIGN AND STRUCTURAL TECHNOLOGIES / VSL DISCLAIMS ANY LIABILITY FOR IT. THE STAMP OR SEAL OF A STRUCTURAL TECHNOLOGIES / VSL EMPLOYEE ON THESE SHOP DRAWINGS PERTAINS ONLY TO THE TRANSFER OF THE FORCES REQUIRED BY THE ENGINEER OF RECORD ON THE STRUCTURAL DRAWINGS, AND NOT TO THE ADEQUACY OF THE STRUCTURAL DESIGN. NO WARRANTY, EXPRESSED OR IMPLIED, AS TO THE ADEQUACY OF THE STRUCTURAL DESIGN IS MADE BY VIRTUE OF ANY SUCH STAMP OR SEAL.

NO	DESCRIPTION	BY	CHK	DATE
0	FIRST ISSUE	CDL	ZX	26FEB2018

STRUCTURAL TECHNOLOGIES, LLC CLAIMS A STRICT PROPRIETARY RIGHT IN ALL DRAWINGS, SPECIFICATIONS AND CALCULATIONS (INFORMATION") SET FORTH ON THIS SHEET. THE USE OF SUCH INFORMATION IN WHOLE OR IN PART, OR ANY REPRODUCTION THEREOF, IS RESTRICTED TO THE SITE FOR WHICH IT WAS PREPARED AND TO THE MATERIAL AND/OR SERVICE PROVIDED BY STRUCTURAL TECHNOLOGIES / VSL. ANY OTHER USE IS STRICTLY PROHIBITED, AND STRUCTURAL TECHNOLOGIES / VSL DISCLAIMS ANY LIABILITY THEREFORE.

structural TECHNOLOGIES
A Structural Group Company
Dallas, TX / Washington, DC / Denver, CO / Pompano Beach, FL
STRUCTURAL TECHNOLOGIES, LLC
DALLAS OFFICE
15600 TRINITY BLVD, SUITE 118
FORT WORTH, TX 76155
PHONE: (817) 545-4807
FAX: (817) 545-4827
WWW.VSL.NET

PROJECT INFORMATION: SYSTEM DRAWING

TITLE: **1/4" NPT STEEL NIPPLE**

PROJECT NO: ---

SCALE: NTS

SHEET NO: **C749**

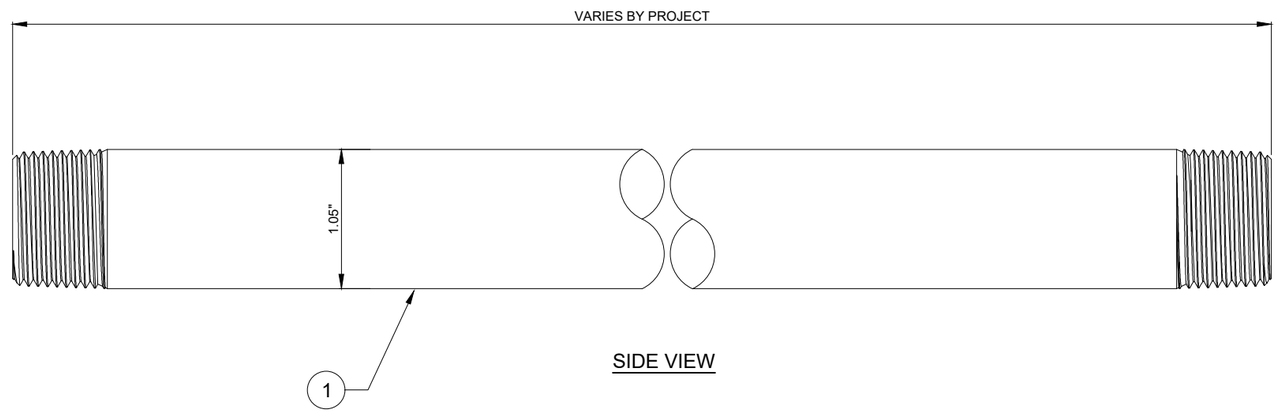

SIDE VIEW

ITEM	QTY	DESCRIPTION	MATERIAL
1	-	3/4" NPT NIPPLE	SCH 40 STEEL

THESE SHOP DRAWINGS ILLUSTRATE THE DETAILS OF THE STRUCTURAL TECHNOLOGIES / VSL POST-TENSIONING SYSTEM. THEY WERE PREPARED IN CONFORMANCE WITH THE STRUCTURAL DESIGN PROVIDED TO STRUCTURAL TECHNOLOGIES / VSL BY PROJECT OWNER OR IT'S REPRESENTATIVE. STRUCTURAL TECHNOLOGIES / VSL TOOK NO PART IN THE PREPARATION OR REVIEW OF SAID STRUCTURAL DESIGN AND STRUCTURAL TECHNOLOGIES / VSL DISCLAIMS ANY LIABILITY FOR IT. THE STAMP OR SEAL OF A STRUCTURAL TECHNOLOGIES / VSL EMPLOYEE ON THESE SHOP DRAWINGS PERTAINS ONLY TO THE TRANSFER OF THE FORCES REQUIRED BY THE ENGINEER OF RECORD ON THE STRUCTURAL DRAWINGS, AND NOT TO THE ADEQUACY OF THE STRUCTURAL DESIGN. NO WARRANTY, EXPRESSED OR IMPLIED, AS TO THE ADEQUACY OF THE STRUCTURAL DESIGN IS MADE BY VIRTUE OF ANY SUCH STAMP OR SEAL.

STRUCTURAL TECHNOLOGIES, LLC CLAIMS A STRICT PROPRIETARY RIGHT IN ALL DRAWINGS, SPECIFICATIONS AND CALCULATIONS (INFORMATION") SET FORTH ON THIS SHEET. THE USE OF SUCH INFORMATION IN WHOLE OR IN PART, OR ANY REPRODUCTION THEREOF, IS RESTRICTED TO THE SITE FOR WHICH IT WAS PREPARED AND TO THE MATERIAL AND/OR SERVICE PROVIDED BY STRUCTURAL TECHNOLOGIES / VSL. ANY OTHER USE, STRICTLY PROHIBITED, AND STRUCTURAL TECHNOLOGIES / VSL DISCLAIMS ANY LIABILITY THEREFORE.

NO	DESCRIPTION	BY	CHK	DATE
0	FIRST ISSUE	CDL	ZX	26FEB2018

structural TECHNOLOGIES
A Structural Group Company
Dallas, TX / Washington, DC / Denver, CO / Pompano Beach, FL
STRUCTURAL TECHNOLOGIES, LLC
DALLAS OFFICE
15600 TRINITY BLVD, SUITE 118
FORT WORTH, TX 76155
PHONE: (817) 545-4807
FAX: (817) 545-4827
WWW.VSL.NET

PROJECT INFORMATION: SYSTEM DRAWING

TITLE: **3/4" NPT STEEL NIPPLE**

PROJECT NO: ---

SCALE: NTS

SHEET NO: **C722**

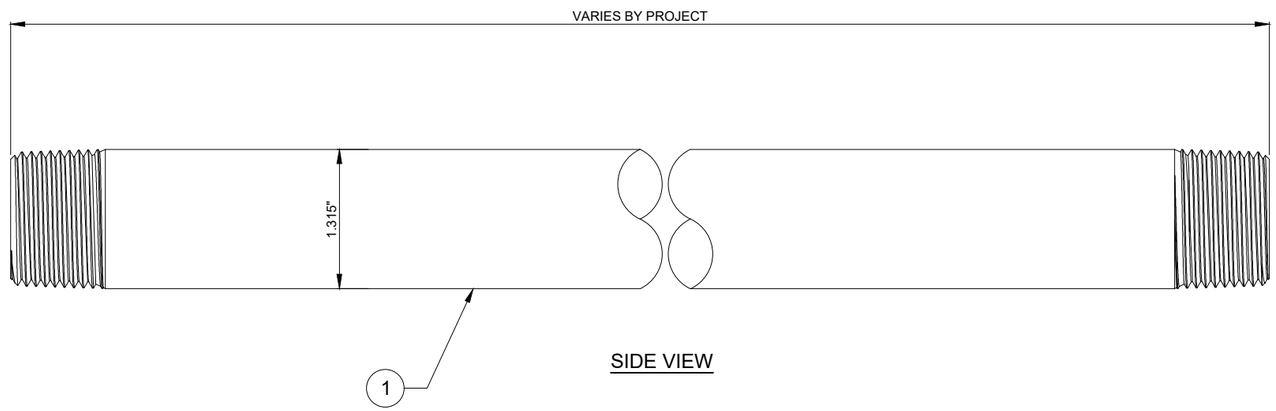

SIDE VIEW

ITEM	QTY	DESCRIPTION	MATERIAL
1	-	1" NPT STEEL NIPPLE	SCH 40 STEEL

THESE SHOP DRAWINGS ILLUSTRATE THE DETAILS OF THE STRUCTURAL TECHNOLOGIES / VSL POST-TENSIONING SYSTEM. THEY WERE PREPARED IN CONFORMANCE WITH THE STRUCTURAL DESIGN PROVIDED TO STRUCTURAL TECHNOLOGIES / VSL BY PROJECT OWNER OR IT'S REPRESENTATIVE. STRUCTURAL TECHNOLOGIES / VSL TOOK NO PART IN THE PREPARATION OR REVIEW OF SAID STRUCTURAL DESIGN AND STRUCTURAL TECHNOLOGIES / VSL DISCLAIMS ANY LIABILITY FOR IT. THE STAMP OR SEAL OF A STRUCTURAL TECHNOLOGIES / VSL EMPLOYEE ON THESE SHOP DRAWINGS PERTAINS ONLY TO THE TRANSFER OF THE FORCES REQUIRED BY THE ENGINEER OF RECORD ON THE STRUCTURAL DRAWINGS, AND NOT TO THE ADEQUACY OF THE STRUCTURAL DESIGN. NO WARRANTY, EXPRESSED OR IMPLIED, AS TO THE ADEQUACY OF THE STRUCTURAL DESIGN IS MADE BY VIRTUE OF ANY SUCH STAMP OR SEAL.

STRUCTURAL TECHNOLOGIES, LLC CLAIMS A STRICT PROPRIETARY RIGHT IN ALL DRAWINGS, SPECIFICATIONS AND CALCULATIONS (INFORMATION") SET FORTH ON THIS SHEET. THE USE OF SUCH INFORMATION IN WHOLE OR IN PART, OR ANY REPRODUCTION THEREOF, IS RESTRICTED TO THE SITE FOR WHICH IT WAS PREPARED AND TO THE MATERIAL AND/OR SERVICE PROVIDED BY STRUCTURAL TECHNOLOGIES / VSL. ANY OTHER USE, STRICTLY PROHIBITED, AND STRUCTURAL TECHNOLOGIES / VSL DISCLAIMS ANY LIABILITY THEREFORE.

NO	DESCRIPTION	BY	CHK	DATE
0	FIRST ISSUE	CDL	ZX	26FEB2018

structural TECHNOLOGIES
A Structural Group Company
Dallas, TX / Washington, DC / Denver, CO / Pompano Beach, FL
STRUCTURAL TECHNOLOGIES, LLC
DALLAS OFFICE
15600 TRINITY BLVD, SUITE 118
FORT WORTH, TX 76155
PHONE: (817) 545-4807
FAX: (817) 545-4827
WWW.VSL.NET

PROJECT INFORMATION: SYSTEM DRAWING

TITLE: **1" NPT STEEL NIPPLE**

PROJECT NO: ---

SCALE: NTS

SHEET NO: **C725**

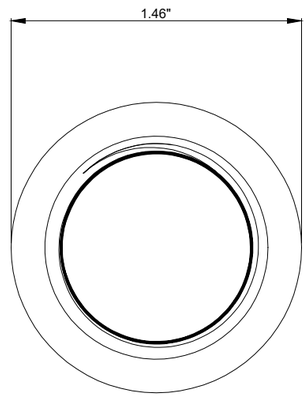

END VIEW

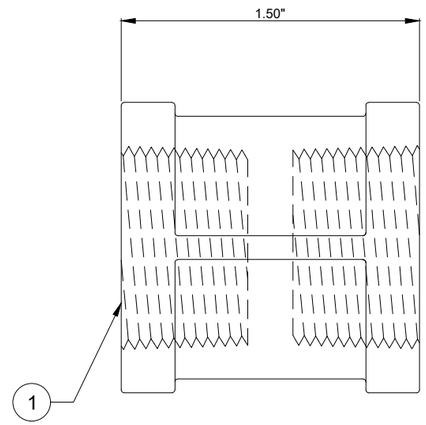

SIDE VIEW

ITEM	QTY	DESCRIPTION	MATERIAL	INVENTORY#
1	-	3/4" NPT F/F COUPLER	SCH 40 STEEL	02DT01952

THESE SHOP DRAWINGS ILLUSTRATE THE DETAILS OF THE STRUCTURAL TECHNOLOGIES / VSL POST-TENSIONING SYSTEM. THEY WERE PREPARED IN CONFORMANCE WITH THE STRUCTURAL DESIGN PROVIDED TO STRUCTURAL TECHNOLOGIES / VSL BY PROJECT OWNER OR IT'S REPRESENTATIVE. STRUCTURAL TECHNOLOGIES / VSL TOOK NO PART IN THE PREPARATION OR REVIEW OF SAID STRUCTURAL DESIGN AND STRUCTURAL TECHNOLOGIES / VSL DISCLAIMS ANY LIABILITY FOR IT. THE STAMP OR SEAL OF A STRUCTURAL TECHNOLOGIES / VSL EMPLOYEE ON THESE SHOP DRAWINGS PERTAINS ONLY TO THE TRANSFER OF THE FORCES REQUIRED BY THE ENGINEER OF RECORD ON THE STRUCTURAL DRAWINGS, AND NOT TO THE ADEQUACY OF THE STRUCTURAL DESIGN. NO WARRANTY, EXPRESSED OR IMPLIED, AS TO THE ADEQUACY OF THE STRUCTURAL DESIGN IS MADE BY VIRTUE OF ANY SUCH STAMP OR SEAL.

STRUCTURAL TECHNOLOGIES, LLC CLAIMS A STRICT PROPRIETARY RIGHT IN ALL DRAWINGS, SPECIFICATIONS AND CALCULATIONS (INFORMATION") SET FORTH ON THIS SHEET. THE USE OF SUCH INFORMATION IN WHOLE OR IN PART, OR ANY REPRODUCTION THEREOF IS RESTRICTED TO THE SITE FOR WHICH IT WAS PREPARED AND TO THE MATERIAL AND/OR SERVICE PROVIDED BY STRUCTURAL TECHNOLOGIES / VSL. ANY OTHER USE IS STRICTLY PROHIBITED, AND STRUCTURAL TECHNOLOGIES / VSL DISCLAIMS ANY LIABILITY THEREFORE.

NO	DESCRIPTION	BY	CHK	DATE
0	FIRST ISSUE	CDL	ZX	26FEB2018

structural TECHNOLOGIES
A Structural Group Company
Dallas, TX / Washington, DC / Denver, CO / Pompano Beach, FL
STRUCTURAL TECHNOLOGIES, LLC
DALLAS OFFICE
15600 TRINITY BLVD, SUITE 118
FORT WORTH, TX 76155
PHONE: (817) 545-4907
FAX: (817) 545-4927
WWW.VSL.NET

PROJECT INFORMATION: SYSTEM DRAWING

TITLE: **3/4" NPT F/F COUPLER**

PROJECT NO: ---

SCALE: NTS

SHEET NO: **C728**

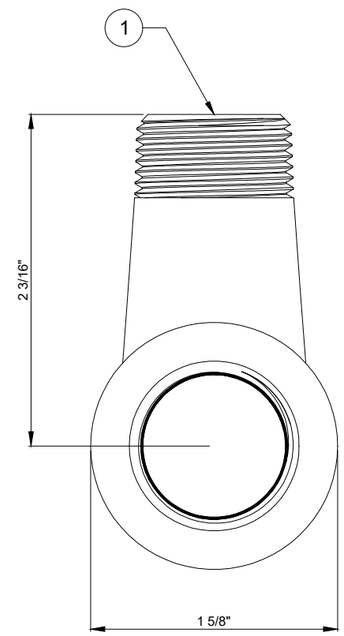

END VIEW

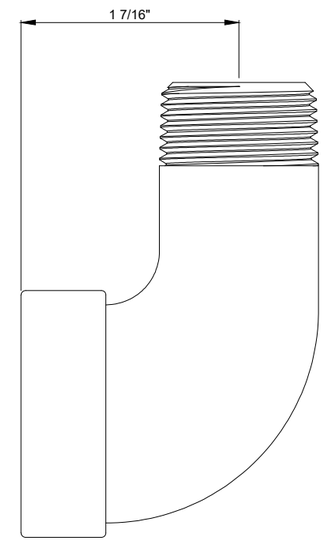

SIDE VIEW

ITEM	QTY	DESCRIPTION	MATERIAL	INVENTORY#
1	-	3/4" FNPT X MNPT STEEL ELBOW	SCH 40 STEEL	02DT01954

THESE SHOP DRAWINGS ILLUSTRATE THE DETAILS OF THE STRUCTURAL TECHNOLOGIES / VSL POST-TENSIONING SYSTEM. THEY WERE PREPARED IN CONFORMANCE WITH THE STRUCTURAL DESIGN PROVIDED TO STRUCTURAL TECHNOLOGIES / VSL BY PROJECT OWNER OR IT'S REPRESENTATIVE. STRUCTURAL TECHNOLOGIES / VSL TOOK NO PART IN THE PREPARATION OR REVIEW OF SAID STRUCTURAL DESIGN AND STRUCTURAL TECHNOLOGIES / VSL DISCLAIMS ANY LIABILITY FOR IT. THE STAMP OR SEAL OF A STRUCTURAL TECHNOLOGIES / VSL EMPLOYEE ON THESE SHOP DRAWINGS PERTAINS ONLY TO THE TRANSFER OF THE FORCES REQUIRED BY THE ENGINEER OF RECORD ON THE STRUCTURAL DRAWINGS, AND NOT TO THE ADEQUACY OF THE STRUCTURAL DESIGN. NO WARRANTY, EXPRESSED OR IMPLIED, AS TO THE ADEQUACY OF THE STRUCTURAL DESIGN IS MADE BY VIRTUE OF ANY SUCH STAMP OR SEAL.

NO	DESCRIPTION	BY	CHK	DATE
0	FIRST ISSUE	CDL	ZX	26FEB2018

STRUCTURAL TECHNOLOGIES, LLC CLAIMS A STRICT PROPRIETARY RIGHT IN ALL DRAWINGS, SPECIFICATIONS AND CALCULATIONS ("INFORMATION") SET FORTH ON THIS SHEET. THE USE OF SUCH INFORMATION IN WHOLE OR IN PART, OR ANY REPRODUCTION THEREOF, IS RESTRICTED TO THE SITE FOR WHICH IT WAS PREPARED AND TO THE MATERIAL AND/OR SERVICE PROVIDED BY STRUCTURAL TECHNOLOGIES / VSL. ANY OTHER USE IS STRICTLY PROHIBITED, AND STRUCTURAL TECHNOLOGIES / VSL DISCLAIMS ANY LIABILITY THEREFORE.

structural TECHNOLOGIES
A Structural Group Company
Dallas, TX / Washington, DC / Denver, CO / Pompano Beach, FL

STRUCTURAL TECHNOLOGIES, LLC
DALLAS OFFICE
15600 TRINITY BLVD, SUITE 118
FORT WORTH, TX 76155

PHONE: (817) 545-4807
FAX: (817) 545-4827
WWW.VSL.NET

PROJECT INFORMATION: SYSTEM DRAWING

TITLE: **3/4" FNPT X MNPT STEEL ELBOW**

PROJECT NO: ---

SCALE: NTS

SHEET NO: **C750**

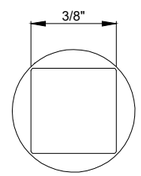

END VIEW

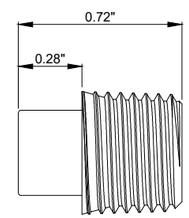

SIDE VIEW

ITEM	QTY	DESCRIPTION	MATERIAL	INVENTORY#
1	-	1/4" NPT STEEL PLUG	316 STAINLESS STEEL	02DT01956

THESE SHOP DRAWINGS ILLUSTRATE THE DETAILS OF THE STRUCTURAL TECHNOLOGIES / VSL POST-TENSIONING SYSTEM. THEY WERE PREPARED IN CONFORMANCE WITH THE STRUCTURAL DESIGN PROVIDED TO STRUCTURAL TECHNOLOGIES / VSL BY PROJECT OWNER OR IT'S REPRESENTATIVE. STRUCTURAL TECHNOLOGIES / VSL TOOK NO PART IN THE PREPARATION OR REVIEW OF SAID STRUCTURAL DESIGN AND STRUCTURAL TECHNOLOGIES / VSL DISCLAIMS ANY LIABILITY FOR IT. THE STAMP OR SEAL OF A STRUCTURAL TECHNOLOGIES / VSL EMPLOYEE ON THESE SHOP DRAWINGS PERTAINS ONLY TO THE TRANSFER OF THE FORCES REQUIRED BY THE ENGINEER OF RECORD ON THE STRUCTURAL DRAWINGS, AND NOT TO THE ADEQUACY OF THE STRUCTURAL DESIGN. NO WARRANTY, EXPRESSED OR IMPLIED, AS TO THE ADEQUACY OF THE STRUCTURAL DESIGN IS MADE BY VIRTUE OF ANY SUCH STAMP OR SEAL.

STRUCTURAL TECHNOLOGIES, LLC CLAIMS A STRICT PROPRIETARY RIGHT IN ALL DRAWINGS, SPECIFICATIONS AND CALCULATIONS (INFORMATION") SET FORTH ON THIS SHEET. THE USE OF SUCH INFORMATION IN WHOLE OR IN PART, OR ANY REPRODUCTION THEREOF, IS RESTRICTED TO THE SITE FOR WHICH IT WAS PREPARED AND TO THE MATERIAL AND/OR SERVICE PROVIDED BY STRUCTURAL TECHNOLOGIES / VSL. ANY OTHER USE IS STRICTLY PROHIBITED, AND STRUCTURAL TECHNOLOGIES / VSL DISCLAIMS ANY LIABILITY THEREFORE.

NO	DESCRIPTION	BY	CHK	DATE
0	FIRST ISSUE	CDL	ZX	26FEB2018

structural TECHNOLOGIES
A Structural Group Company
Dallas, TX / Washington, DC / Denver, CO / Pompano Beach, FL
STRUCTURAL TECHNOLOGIES, LLC
DALLAS OFFICE
15600 TRINITY BLVD, SUITE 118
FORT WORTH, TX 76155
PHONE: (817) 545-4807
FAX: (817) 545-4827
WWW.VSL.NET

PROJECT INFORMATION: SYSTEM DRAWING

TITLE: **1/4" NPT STEEL PLUG**

PROJECT NO: ---

SCALE: NTS

SHEET NO: **C747**

ELECTRONIC FILE LOCATION: I:\VSL System Drawings\Work In Progress Drawings\Work In Progress Drawings\Florida DOT Test 2017\NCS 6-31 Flexible Filler Submittal

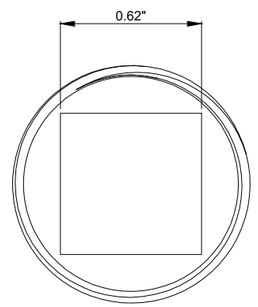

END VIEW

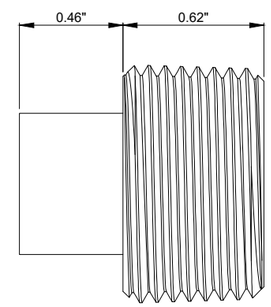

SIDE VIEW

ITEM	QTY	DESCRIPTION	MATERIAL	INVENTORY#
1	-	3/4" NPT STEEL PLUG	316 STAINLESS STEEL	02DT01957

THESE SHOP DRAWINGS ILLUSTRATE THE DETAILS OF THE STRUCTURAL TECHNOLOGIES / VSL POST-TENSIONING SYSTEM. THEY WERE PREPARED IN CONFORMANCE WITH THE STRUCTURAL DESIGN PROVIDED TO STRUCTURAL TECHNOLOGIES / VSL BY PROJECT OWNER OR IT'S REPRESENTATIVE. STRUCTURAL TECHNOLOGIES / VSL TOOK NO PART IN THE PREPARATION OR REVIEW OF SAID STRUCTURAL DESIGN AND STRUCTURAL TECHNOLOGIES / VSL DISCLAIMS ANY LIABILITY FOR IT. THE STAMP OR SEAL OF A STRUCTURAL TECHNOLOGIES / VSL EMPLOYEE ON THESE SHOP DRAWINGS PERTAINS ONLY TO THE TRANSFER OF THE FORCES REQUIRED BY THE ENGINEER OF RECORD ON THE STRUCTURAL DRAWINGS, AND NOT TO THE ADEQUACY OF THE STRUCTURAL DESIGN. NO WARRANTY, EXPRESSED OR IMPLIED, AS TO THE ADEQUACY OF THE STRUCTURAL DESIGN IS MADE BY VIRTUE OF ANY SUCH STAMP OR SEAL.

NO	DESCRIPTION	BY	CHK	DATE
0	FIRST ISSUE	CDL	ZX	26FEB2018

STRUCTURAL TECHNOLOGIES, LLC CLAIMS A STRICT PROPRIETARY RIGHT IN ALL DRAWINGS, SPECIFICATIONS AND CALCULATIONS (INFORMATION") SET FORTH ON THIS SHEET. THE USE OF SUCH INFORMATION IN WHOLE OR IN PART, OR ANY REPRODUCTION THEREOF, IS RESTRICTED TO THE SITE FOR WHICH IT WAS PREPARED AND TO THE MATERIAL AND/OR SERVICE PROVIDED BY STRUCTURAL TECHNOLOGIES / VSL. ANY OTHER USE IS STRICTLY PROHIBITED, AND STRUCTURAL TECHNOLOGIES / VSL DISCLAIMS ANY LIABILITY THEREFORE.

structural TECHNOLOGIES
A Structural Group Company
Dallas, TX / Washington, DC / Denver, CO / Pompano Beach, FL
STRUCTURAL TECHNOLOGIES, LLC
DALLAS OFFICE
15600 TRINITY BLVD, SUITE 118
FORT WORTH, TX 76155
PHONE: (817) 545-4807
FAX: (817) 545-4827
WWW.VSL.NET

PROJECT INFORMATION: SYSTEM DRAWING

TITLE: **3/4" NPT STEEL PLUG**

PROJECT NO: ---

SCALE: NTS

SHEET NO: **C748**

ELECTRONIC FILE LOCATION: I:\VSL System Drawings\Work In Progress Drawings\Work In Progress Drawings\Florida DOT Test 2017\NCS 6-31 Flexible Filler Submittal

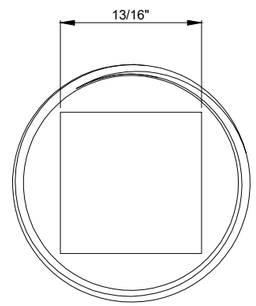

END VIEW

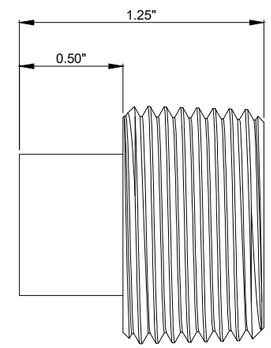

SIDE VIEW

ITEM	QTY	DESCRIPTION	MATERIAL	INVENTORY#
1	-	1" NPT STEEL PLUG	316 STAINLESS STEEL	02DT01958

THESE SHOP DRAWINGS ILLUSTRATE THE DETAILS OF THE STRUCTURAL TECHNOLOGIES / VSL POST-TENSIONING SYSTEM. THEY WERE PREPARED IN CONFORMANCE WITH THE STRUCTURAL DESIGN PROVIDED TO STRUCTURAL TECHNOLOGIES / VSL BY PROJECT OWNER OR IT'S REPRESENTATIVE. STRUCTURAL TECHNOLOGIES / VSL TOOK NO PART IN THE PREPARATION OR REVIEW OF SAID STRUCTURAL DESIGN AND STRUCTURAL TECHNOLOGIES / VSL DISCLAIMS ANY LIABILITY FOR IT. THE STAMP OR SEAL OF A STRUCTURAL TECHNOLOGIES / VSL EMPLOYEE ON THESE SHOP DRAWINGS PERTAINS ONLY TO THE TRANSFER OF THE FORCES REQUIRED BY THE ENGINEER OF RECORD ON THE STRUCTURAL DRAWINGS, AND NOT TO THE ADEQUACY OF THE STRUCTURAL DESIGN. NO WARRANTY, EXPRESSED OR IMPLIED, AS TO THE ADEQUACY OF THE STRUCTURAL DESIGN IS MADE BY VIRTUE OF ANY SUCH STAMP OR SEAL.

STRUCTURAL TECHNOLOGIES, LLC CLAIMS A STRICT PROPRIETARY RIGHT IN ALL DRAWINGS, SPECIFICATIONS AND CALCULATIONS (INFORMATION") SET FORTH ON THIS SHEET. THE USE OF SUCH INFORMATION IN WHOLE OR IN PART, OR ANY REPRODUCTION THEREOF, IS RESTRICTED TO THE SITE FOR WHICH IT WAS PREPARED AND TO THE MATERIAL AND/OR SERVICE PROVIDED BY STRUCTURAL TECHNOLOGIES / VSL. ANY OTHER USE IS STRICTLY PROHIBITED, AND STRUCTURAL TECHNOLOGIES / VSL DISCLAIMS ANY LIABILITY THEREFORE.

NO	DESCRIPTION	BY	CHK	DATE
0	FIRST ISSUE	CDL	ZX	26FEB2018

structural TECHNOLOGIES
A Structural Group Company
Dallas, TX / Washington, DC / Denver, CO / Pompano Beach, FL
STRUCTURAL TECHNOLOGIES, LLC
DALLAS OFFICE
15600 TRINITY BLVD, SUITE 118
FORT WORTH, TX 76155
PHONE: (817) 545-4807
FAX: (817) 545-4827
WWW.VSL.NET

PROJECT INFORMATION: SYSTEM DRAWING

TITLE: **1" NPT STEEL PLUG**

PROJECT NO: ---

SCALE: NTS

SHEET NO: **C754**

ELECTRONIC FILE LOCATION: I:\VSL System Drawings\Work In Progress Drawings\Work In Progress Drawings\Florida DOT Test 2017\NCS 6-31 Flexible Filler Submittal

PLOT DATE/TIME: 26Feb2018 8:15 AM FILE NAME: C754 1in NPT Steel Plug.dwg

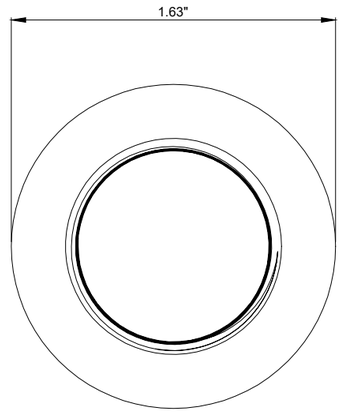

END VIEW

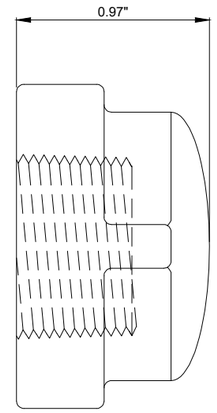

SIDE VIEW

ITEM	QTY	DESCRIPTION	MATERIAL	INVENTORY#
1	-	3/4" NPT STEEL CAP	SCH 40 STEEL	02DT01950

THESE SHOP DRAWINGS ILLUSTRATE THE DETAILS OF THE STRUCTURAL TECHNOLOGIES / VSL POST-TENSIONING SYSTEM. THEY WERE PREPARED IN CONFORMANCE WITH THE STRUCTURAL DESIGN PROVIDED TO STRUCTURAL TECHNOLOGIES / VSL BY PROJECT OWNER OR IT'S REPRESENTATIVE. STRUCTURAL TECHNOLOGIES / VSL TOOK NO PART IN THE PREPARATION OR REVIEW OF SAID STRUCTURAL DESIGN AND STRUCTURAL TECHNOLOGIES / VSL DISCLAIMS ANY LIABILITY FOR IT. THE STAMP OR SEAL OF A STRUCTURAL TECHNOLOGIES / VSL EMPLOYEE ON THESE SHOP DRAWINGS PERTAINS ONLY TO THE TRANSFER OF THE FORCES REQUIRED BY THE ENGINEER OF RECORD ON THE STRUCTURAL DRAWINGS, AND NOT TO THE ADEQUACY OF THE STRUCTURAL DESIGN. NO WARRANTY, EXPRESSED OR IMPLIED, AS TO THE ADEQUACY OF THE STRUCTURAL DESIGN IS MADE BY VIRTUE OF ANY SUCH STAMP OR SEAL.

NO	DESCRIPTION	BY	CHK	DATE
0	FIRST ISSUE	CDL	ZX	26FEB2018

STRUCTURAL TECHNOLOGIES, LLC CLAIMS A STRICT PROPRIETARY RIGHT IN ALL DRAWINGS, SPECIFICATIONS AND CALCULATIONS (INFORMATION") SET FORTH ON THIS SHEET. THE USE OF SUCH INFORMATION IN WHOLE OR IN PART, OR ANY REPRODUCTION THEREOF, IS RESTRICTED TO THE SITE FOR WHICH IT WAS PREPARED AND TO THE MATERIAL AND/OR SERVICE PROVIDED BY STRUCTURAL TECHNOLOGIES / VSL. ANY OTHER USE IS STRICTLY PROHIBITED, AND STRUCTURAL TECHNOLOGIES / VSL DISCLAIMS ANY LIABILITY THEREFORE.

structural TECHNOLOGIES
A Structural Group Company
Dallas, TX / Washington, DC / Denver, CO / Pompano Beach, FL
VSL

STRUCTURAL TECHNOLOGIES, LLC
DALLAS OFFICE
15600 TRINITY BLVD, SUITE 118
FORT WORTH, TX 76155

PHONE: (817) 545-4807
FAX: (817) 545-4827
WWW.VSL.NET

PROJECT INFORMATION: SYSTEM DRAWING

TITLE: **3/4" NPT STEEL CAP**

PROJECT NO: ---

SCALE: NTS

SHEET NO: **C724**

ELECTRONIC FILE LOCATION: I:\VSL System Drawings\Work in Progress Drawings\Work in Progress Drawings\Florida DOT Test 2017NCS 6-31 Flexible Filler Submittal

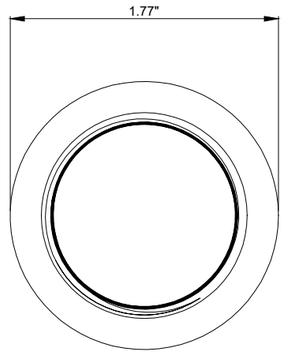

END VIEW

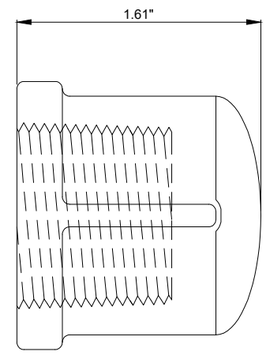

SIDE VIEW

ITEM	QTY	DESCRIPTION	MATERIAL	INVENTORY#
1	-	1" NPT STEEL CAP	SCH 40 STEEL	02DT01951

THESE SHOP DRAWINGS ILLUSTRATE THE DETAILS OF THE STRUCTURAL TECHNOLOGIES / VSL POST-TENSIONING SYSTEM. THEY WERE PREPARED IN CONFORMANCE WITH THE STRUCTURAL DESIGN PROVIDED TO STRUCTURAL TECHNOLOGIES / VSL BY PROJECT OWNER OR IT'S REPRESENTATIVE. STRUCTURAL TECHNOLOGIES / VSL TOOK NO PART IN THE PREPARATION OR REVIEW OF SAID STRUCTURAL DESIGN AND STRUCTURAL TECHNOLOGIES / VSL DISCLAIMS ANY LIABILITY FOR IT. THE STAMP OR SEAL OF A STRUCTURAL TECHNOLOGIES / VSL EMPLOYEE ON THESE SHOP DRAWINGS PERTAINS ONLY TO THE TRANSFER OF THE FORCES REQUIRED BY THE ENGINEER OF RECORD ON THE STRUCTURAL DRAWINGS, AND NOT TO THE ADEQUACY OF THE STRUCTURAL DESIGN. NO WARRANTY, EXPRESSED OR IMPLIED, AS TO THE ADEQUACY OF THE STRUCTURAL DESIGN IS MADE BY VIRTUE OF ANY SUCH STAMP OR SEAL.

NO	DESCRIPTION	BY	CHK	DATE
0	FIRST ISSUE	CDL	ZX	26FEB2018

STRUCTURAL TECHNOLOGIES, LLC CLAIMS A STRICT PROPRIETARY RIGHT IN ALL DRAWINGS, SPECIFICATIONS AND CALCULATIONS (INFORMATION") SET FORTH ON THIS SHEET. THE USE OF SUCH INFORMATION IN WHOLE OR IN PART, OR ANY REPRODUCTION THEREOF, IS RESTRICTED TO THE SITE FOR WHICH IT WAS PREPARED AND TO THE MATERIAL AND/OR SERVICE PROVIDED BY STRUCTURAL TECHNOLOGIES / VSL. ANY OTHER USE IS STRICTLY PROHIBITED, AND STRUCTURAL TECHNOLOGIES / VSL DISCLAIMS ANY LIABILITY THEREFORE.

structural TECHNOLOGIES
A Structural Group Company
Dallas, TX / Washington, DC / Denver, CO / Pompano Beach, FL

STRUCTURAL TECHNOLOGIES, LLC
DALLAS OFFICE
15600 TRINITY BLVD, SUITE 118
FORT WORTH, TX 76155

PHONE: (817) 545-4807
FAX: (817) 545-4827
WWW.VSL.NET

PROJECT INFORMATION: SYSTEM DRAWING

TITLE: **1" NPT STEEL CAP**

PROJECT NO: ---

SCALE: NTS

SHEET NO: **C727**

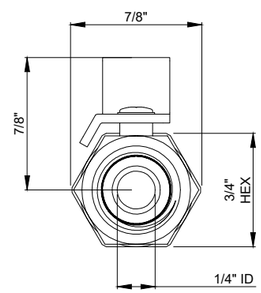

END VIEW

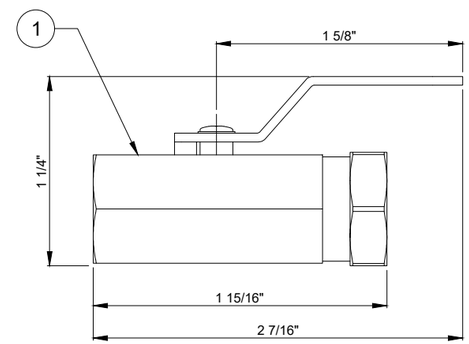

SIDE VIEW

ITEM	QTY	DESCRIPTION	MATERIAL	INVENTORY#
1	-	1/4" F/F NPT 1/4 TURN BALL VALVE	SCH 40 STEEL	02DT01924

THESE SHOP DRAWINGS ILLUSTRATE THE DETAILS OF THE STRUCTURAL TECHNOLOGIES / VSL POST-TENSIONING SYSTEM. THEY WERE PREPARED IN CONFORMANCE WITH THE STRUCTURAL DESIGN PROVIDED TO STRUCTURAL TECHNOLOGIES / VSL BY PROJECT OWNER OR IT'S REPRESENTATIVE. STRUCTURAL TECHNOLOGIES / VSL TOOK NO PART IN THE PREPARATION OR REVIEW OF SAID STRUCTURAL DESIGN AND STRUCTURAL TECHNOLOGIES / VSL DISCLAIMS ANY LIABILITY FOR IT. THE STAMP OR SEAL OF A STRUCTURAL TECHNOLOGIES / VSL EMPLOYEE ON THESE SHOP DRAWINGS PERTAINS ONLY TO THE TRANSFER OF THE FORCES REQUIRED BY THE ENGINEER OF RECORD ON THE STRUCTURAL DRAWINGS, AND NOT TO THE ADEQUACY OF THE STRUCTURAL DESIGN. NO WARRANTY, EXPRESSED OR IMPLIED, AS TO THE ADEQUACY OF THE STRUCTURAL DESIGN IS MADE BY VIRTUE OF ANY SUCH STAMP OR SEAL.

STRUCTURAL TECHNOLOGIES, LLC CLAIMS A STRICT PROPRIETARY RIGHT IN ALL DRAWINGS, SPECIFICATIONS AND CALCULATIONS (INFORMATION") SET FORTH ON THIS SHEET. THE USE OF SUCH INFORMATION IN WHOLE OR IN PART, OR ANY REPRODUCTION THEREOF, IS RESTRICTED TO THE SITE FOR WHICH IT WAS PREPARED AND TO THE MATERIAL AND/OR SERVICE PROVIDED BY STRUCTURAL TECHNOLOGIES / VSL. ANY OTHER USE IS STRICTLY PROHIBITED, AND STRUCTURAL TECHNOLOGIES / VSL DISCLAIMS ANY LIABILITY THEREFORE.

NO	DESCRIPTION	BY	CHK	DATE
0	FIRST ISSUE	CDL	ZX	26FEB2018

structural TECHNOLOGIES
A Structural Group Company
Dallas, TX / Washington, DC / Denver, CO / Pompano Beach, FL
STRUCTURAL TECHNOLOGIES, LLC
DALLAS OFFICE
15600 TRINITY BLVD, SUITE 118
FORT WORTH, TX 76155
PHONE: (817) 545-4807
FAX: (817) 545-4827
WWW.VSL.NET

PROJECT INFORMATION: SYSTEM DRAWING

TITLE: **1/4" F/F NPT 1/4 TURN BALL VALVE**

PROJECT NO: ---

SCALE: NTS

SHEET NO: **C744**

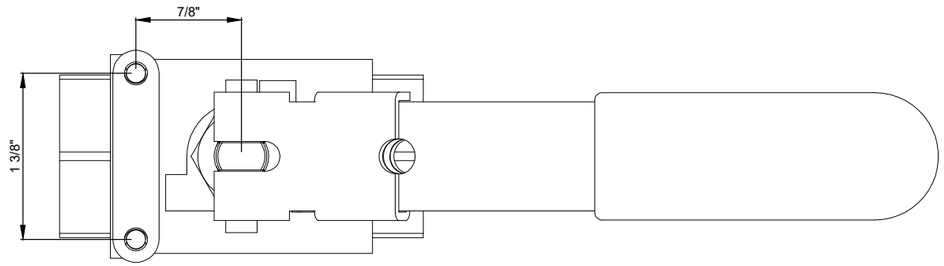

TOP VIEW

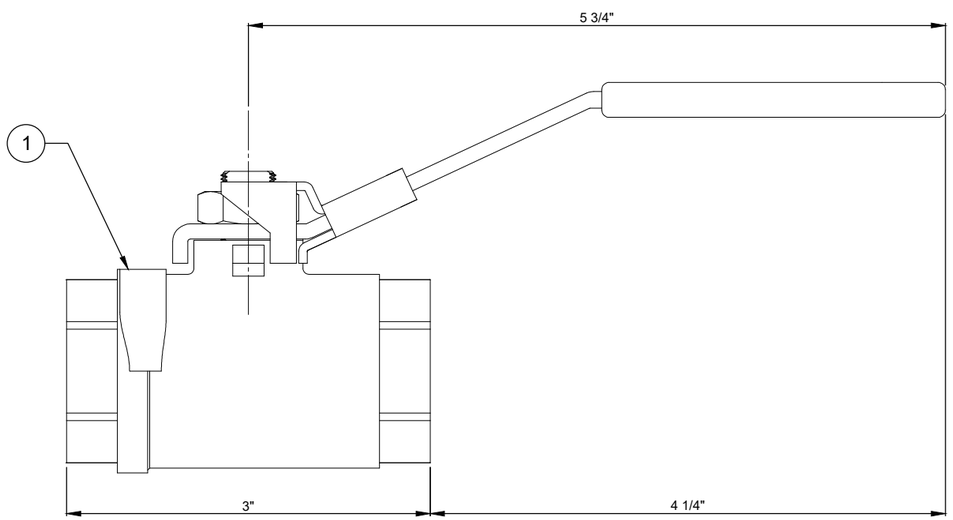

SIDE VIEW

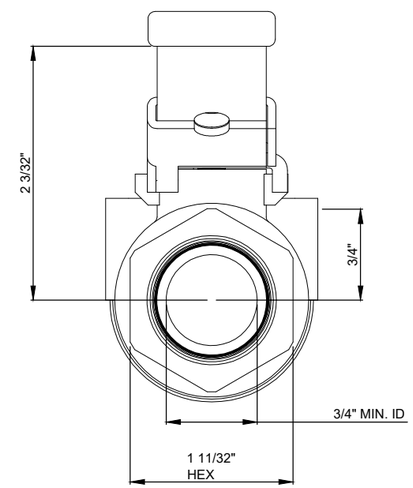

END VIEW

ITEM	QTY	DESCRIPTION	MATERIAL	INVENTORY#
1	-	3/4" NPT STEEL 1/4 TURN BALL VALVE	SCH 40 STEEL	02DT01925

THESE SHOP DRAWINGS ILLUSTRATE THE DETAILS OF THE STRUCTURAL TECHNOLOGIES / VSL POST-TENSIONING SYSTEM. THEY WERE PREPARED IN CONFORMANCE WITH THE STRUCTURAL DESIGN PROVIDED TO STRUCTURAL TECHNOLOGIES / VSL BY PROJECT OWNER OR IT'S REPRESENTATIVE. STRUCTURAL TECHNOLOGIES / VSL TOOK NO PART IN THE PREPARATION OR REVIEW OF SAID STRUCTURAL DESIGN AND STRUCTURAL TECHNOLOGIES / VSL DISCLAIMS ANY LIABILITY FOR IT. THE STAMP OR SEAL OF A STRUCTURAL TECHNOLOGIES / VSL EMPLOYEE ON THESE SHOP DRAWINGS PERTAINS ONLY TO THE TRANSFER OF THE FORCES REQUIRED BY THE ENGINEER OF RECORD ON THE STRUCTURAL DRAWINGS, AND NOT TO THE ADEQUACY OF THE STRUCTURAL DESIGN. NO WARRANTY, EXPRESSED OR IMPLIED, AS TO THE ADEQUACY OF THE STRUCTURAL DESIGN IS MADE BY VIRTUE OF ANY SUCH STAMP OR SEAL.

NO	DESCRIPTION	BY	CHK	DATE
0	FIRST ISSUE	CDL	ZX	26FEB2018

STRUCTURAL TECHNOLOGIES, LLC CLAIMS A STRICT PROPRIETARY RIGHT IN ALL DRAWINGS, SPECIFICATIONS AND CALCULATIONS (INFORMATION") SET FORTH ON THIS SHEET. THE USE OF SUCH INFORMATION IN WHOLE OR IN PART, OR ANY REPRODUCTION THEREOF, IS RESTRICTED TO THE SITE FOR WHICH IT WAS PREPARED AND TO THE MATERIAL AND/OR SERVICE PROVIDED BY STRUCTURAL TECHNOLOGIES / VSL. ANY OTHER USE IS STRICTLY PROHIBITED, AND STRUCTURAL TECHNOLOGIES / VSL DISCLAIMS ANY LIABILITY THEREFORE.

structural TECHNOLOGIES
A Structural Group Company
Dallas, TX / Washington, DC / Denver, CO / Pompano Beach, FL
STRUCTURAL TECHNOLOGIES, LLC
DALLAS OFFICE
15600 TRINITY BLVD, SUITE 118
FORT WORTH, TX 76155
PHONE: (817) 545-4807
FAX: (817) 545-4827
WWW.VSL.NET

PROJECT INFORMATION: SYSTEM DRAWING

TITLE: **3/4" NPT STEEL 1/4 TURN BALL VALVE**

PROJECT NO: ---

SCALE: NTS

SHEET NO: **C745**

ELECTRONIC FILE LOCATION: I:\VSL System Drawings\Work In Progress Drawings\Work In Progress Drawings\Florida DOT Test 2017\NCS 5-31 Flexible Filler Submittal

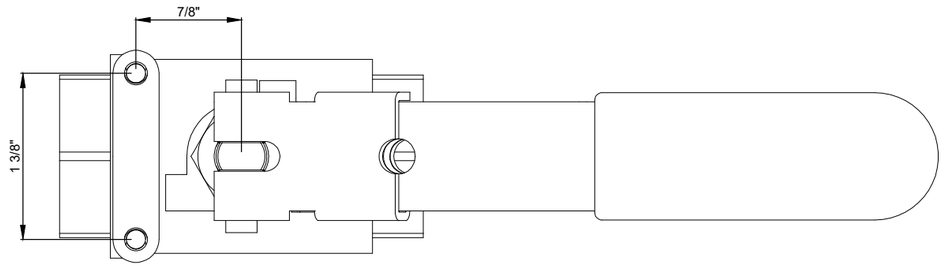

TOP VIEW

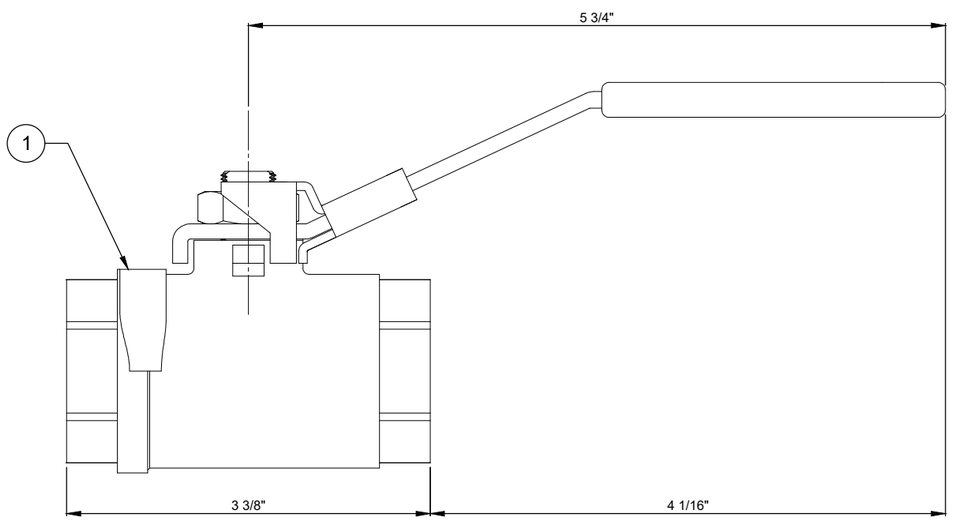

SIDE VIEW

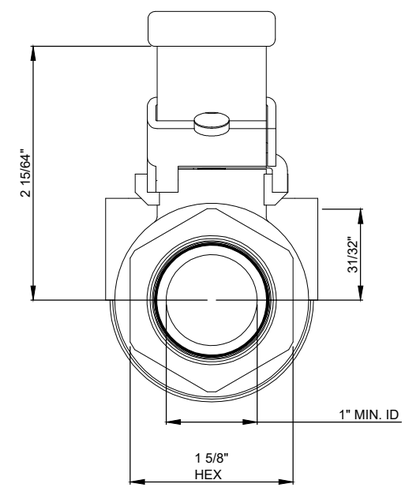

END VIEW

ITEM	QTY	DESCRIPTION	MATERIAL	INVENTORY#
1	-	1" NPT STEEL 1/4 TURN BALL VALVE	SCH 40 STEEL	02DT01926

THESE SHOP DRAWINGS ILLUSTRATE THE DETAILS OF THE STRUCTURAL TECHNOLOGIES / VSL POST-TENSIONING SYSTEM. THEY WERE PREPARED IN CONFORMANCE WITH THE STRUCTURAL DESIGN PROVIDED TO STRUCTURAL TECHNOLOGIES / VSL BY PROJECT OWNER OR IT'S REPRESENTATIVE. STRUCTURAL TECHNOLOGIES / VSL TOOK NO PART IN THE PREPARATION OR REVIEW OF SAID STRUCTURAL DESIGN AND STRUCTURAL TECHNOLOGIES / VSL DISCLAIMS ANY LIABILITY FOR IT. THE STAMP OR SEAL OF A STRUCTURAL TECHNOLOGIES / VSL EMPLOYEE ON THESE SHOP DRAWINGS PERTAINS ONLY TO THE TRANSFER OF THE FORCES REQUIRED BY THE ENGINEER OF RECORD ON THE STRUCTURAL DRAWINGS, AND NOT TO THE ADEQUACY OF THE STRUCTURAL DESIGN. NO WARRANTY, EXPRESSED OR IMPLIED, AS TO THE ADEQUACY OF THE STRUCTURAL DESIGN IS MADE BY VIRTUE OF ANY SUCH STAMP OR SEAL.

NO	DESCRIPTION	BY	CHK	DATE
0	FIRST ISSUE	CDL	ZX	26FEB2018

STRUCTURAL TECHNOLOGIES, LLC CLAIMS A STRICT PROPRIETARY RIGHT IN ALL DRAWINGS, SPECIFICATIONS AND CALCULATIONS (INFORMATION") SET FORTH ON THIS SHEET. THE USE OF SUCH INFORMATION IN WHOLE OR IN PART, OR ANY REPRODUCTION THEREOF, IS RESTRICTED TO THE SITE FOR WHICH IT WAS PREPARED AND TO THE MATERIAL AND/OR SERVICE PROVIDED BY STRUCTURAL TECHNOLOGIES / VSL. ANY OTHER USE IS STRICTLY PROHIBITED, AND STRUCTURAL TECHNOLOGIES / VSL DISCLAIMS ANY LIABILITY THEREFORE.

structural TECHNOLOGIES
A Structural Group Company
Dallas, TX / Washington, DC / Denver, CO / Pompano Beach, FL

STRUCTURAL TECHNOLOGIES, LLC
DALLAS OFFICE
15600 TRINITY BLVD, SUITE 118
FORT WORTH, TX 76155

PHONE: (817) 545-4807
FAX: (817) 545-4827
WWW.VSL.NET

PROJECT INFORMATION: SYSTEM DRAWING

TITLE: **1" NPT STEEL 1/4 TURN BALL VALVE**

PROJECT NO: ---

SCALE: NTS

SHEET NO: **C746**