2025 FDOT Design Manual

900 Series: NexGen Plans Production

900 Production of NexGen Plans

900.1 General

The requirements provided in the ***FDM 900 Series*** and the ***FDOT CADD Manual*** form the basis for format and assembly of the Contract Plans Set.

The ***FDM 900 Series*** reflects adopted practices, processes, and procedures for plans production and delivery using Bentley's OpenRoads Designer (ORD) Edition or Autodesk Civil3D.

The ***FDM 900 Series*** also provides instructions for when Building Information Model (BIM) files are provided. BIM files are required for:

- All related surfaces for earthwork operations and used to determine earthwork quantities.
- All related surfaces for automated machine guidance (AMG) milling and pavement operations are anticipated.
- When appropriate, other files where the Level of Development (LOD) is considered construction-ready (LOD 300 and higher).

The ***FDM 900 Series*** is divided into three sections:

(1) Plans Production – This section provides general plans production information and requirements for documents that are not delivered within a Contract Plans Set.

(2) Roadway Plans Set – This section provides specific information concerning the content of each required sheet delivered within the Roadway Plans Set.

(3) Component Plans Set – This section provides supplemental information concerning the content of Component Plans Sets.

Placing the consultant's business logo on any plan sheet contained in the Contract Plans Set is prohibited.

900.1.1 Exhibits

Many chapters contain "generic" exhibits that provide examples of the plan sheets covered by that chapter. These exhibits were developed using criteria and standards in force at the time of their creation. These exhibits are not to be used as a source for criteria unless specified as such within the ***FDM*** chapter.

900.1.2 Symbols and Abbreviations

Standard symbols for roadway design are shown in the CADD Symbol Cell Library.

Abbreviations may be used to save space. A list of standard abbreviations is contained in the ***Standard Plans***. Minor deviations from these standard abbreviations are allowed, provided that the abbreviation used is clear and easily understood.

900.1.3 Photography

Plan sheets may use photography (aerial or other) when appropriate (e.g., for Drainage Maps, supplemental site maps, bridge repair plans).

900.2 Labeling and Dimensioning Requirements

Orient horizontal and diagonal text to read left to right. Orient vertical text to read bottom to top.

Display information and data in accordance with the following:

- **Typical Section Elements** (e.g., lane widths, shoulder widths) - in feet, typically as a whole number.
- **Cross Slopes** (e.g., pavement, shoulder surfaces, sidewalks, bridge decks) - as a decimal part of a foot vertical per foot horizontal. These cross slopes are typically rounded to two decimal places (i.e., 0.02, 0.06) but may be shown to three decimal places when required.
- **Horizontal Control Points** (e.g., survey centerline, baseline, intersections, and alignment) - in feet to 2 decimal places.
- **Vertical Control Points** (e.g., PVC, PVI, PVT) - in feet to 2 decimal places.
- **Profile Grade Elevations** - in feet to 2 decimal places.
- **Profile Grade Slopes** - in percent to 3 decimal places.
- **Flow Line Elevations** - in feet to 2 decimal places.
- **Drainage Structure Elevations** (e.g., manhole tops, grate elevations) - in feet to 2 decimal places.
- **Ditch Elevations** - in feet to 1 decimal place (to nearest 0.05 when controlled by percent of grade).

- **Box or Three-sided Culvert Spans and Heights** - Show inside dimensions using "span by height" format (10 x 6 means the span is 10 feet and the height is 6 feet). In feet as a whole number for new construction; in feet to 2 decimal places for extensions of existing box culverts.
- **Alignment Bearings, Degree of Curve and Delta Angles** - in degrees, minutes, and seconds, rounded to the nearest second.
- **Slope Ratios** - in vertical to horizontal (V:H) format; e.g., 1:6, 1:4.

900.3 Sheet Borders

Plan sheet borders are contained in the FDOT CADD Software. The standard FDOT plan sheet size is 11"x17". All plan sheet PDF's must be to scale at 11"x17".

Sheet borders include an information block and revision block.

900.3.1 Project Information Block

The information block is in the lower right corner of the border. Enter the following information into the information block:

(1) Sheet Number (far right corner) – Number plan sheets in sequential order as shown in the Index of Plans Sheets that is placed on the Key Sheet.

(2) Sheet Title (immediately left of the sheet number) – This should be the same title that is shown in the Index of Plans Sheets that is placed on the Key Sheet.

(3) Project Information (immediately left of the sheet title) - This should be the same information that is shown on the Key Sheet.

(a) State Road Number – Place the prefix "SR" before the number for clarification. When a county road is shown in the block, use the prefix "CR". The block should remain blank when the facility is neither a state nor county road. If a project Key Sheet lists multiple state roads:

- o Place all state road numbers in the block when there is adequate space (without reducing the required font size)
- o Place "Districtwide" when there are more roadways than available space allows

(b) County

(c) Financial Project ID - On projects which have multiple Financial Project IDs, show only the lead Financial Project ID

(4) Designer Information (immediately left of the project information) – provide information for the Professional of Record who signs and seals the sheet, as discussed in ***FDM 130***.

900.3.2 Revision Block

Revision blocks are located along the bottoms of the standard sheet borders.

The Key Sheet requires the placement of a revision block cell at the bottom center of the Key Sheet when a revision to that sheet is necessary.

See ***FDM 132*** for required information to be placed in the revision block.

901 Sequence of Plans Preparation

901.1 General

The set of plans depicting the proposed construction work is known as the "Contract Plans Set" and is comprised of component plans that are associated with primary work types. The Contract Plans Set should be prepared systematically, undergoing phases of review and updates to ensure technically correct and clear plans. Additional information can be found in ***FDM 110, 111, 112,*** and ***120***. These chapters contain a comprehensive discussion of design processes and activities from initial to final engineering.

Component plans are included in the Contract Plans Set in the following order:

(1) Roadway
(2) Signing and Pavement Marking
(3) Signalization
(4) Intelligent Transportation Systems (ITS)
(5) Lighting
(6) Landscape
(7) Architectural
(8) Structures
(9) Toll Facilities
(10) Utility Work by Highway Contractor

Prepare Toll Facility Plans in accordance with the Florida's Turnpike Enterprise ***General Tolling Requirements (GTR)***. Contact the Florida's Turnpike Enterprise Project Manager to request a copy of the GTR.

901.2 Optional Line and Grade Submittal

At the discretion of the district, submit preliminary horizontal and vertical geometry depicting the proposed design at approximately the mid-point between Notice to Proceed (NTP) and Phase I Plans. Include horizontal geometry for mainline roadways, ramps, cross streets, and side roads. Provide vertical geometry for mainline roadways and cross streets, and when critical to the project, for ramps and side roads as well.

These sheets are typically produced using a scale of 1" = 50' horizontal and 1" = 5' vertical.

Show base clearance water elevations, seasonal high groundwater elevations, and floodplain elevations in the profile view.

Identify potential impacts or constraints (e.g., R/W, utilities, wetlands, existing bridge structures) in the plan view.

901.2.1 Requirements

The Line and Grade sheets should address the following objectives:

(1) Check consistency with the intent and scope of the Project Concept Report.

(2) Evaluate the impacts of changes to the project concept resulting from the normal design development process as well as those resulting from changes in scope and the identification of adverse site conditions.

(3) Verify the geometric viability of the project for the desired design speed and traffic volumes.

(4) Provide a basis for early coordination with other disciplines.

(5) Provide a basis for early identification of design constraints or problems.

(6) Document off-site and pavement drainage constraints such as base clearance water elevations, seasonal high groundwater elevations, and floodplain elevations.

(7) Establish design criteria specific to horizontal and vertical geometry.

(8) Identify Design Variations and Design Exceptions associated with the horizontal and vertical alignments.

Include supporting calculations and documentation with the Line and Grade submittal that address the following:

- Design speed
- Lane widths
- Shoulder widths
- Bridge widths
- Base clearances
- Access management
- Aesthetics
- Landscape opportunities
- Stopping sight distances
- Intersection sight distances
- Horizontal and vertical clearances
- Existing bridge approach slab evaluations
- Auto-turn exhibits for vehicle movements

901.3 Conventional (Design-Bid-Build) Projects

See ***FDM 120*** for design submittal requirements and guidance in preparing submittals for review by the Department. For bridge submittal requirements, see ***FDM 121***.

The standard phase submittals are: Phase I, Phase II, Phase III, Phase IV, and Plans, Specifications, and Estimates (PS&E) Phase. RRR, operational improvement, and safety improvement projects often omit some of these phase submittals.

The sheets typically required for each phase submittal and their required level of completion are noted in ***Table 901.3.1***. Levels of completion are described as follows:

(1) Preliminary (P): Basic shapes, geometry, and information to convey the concept.

(2) Complete but Subject to Change (C): The design, drawings and details are complete. Only reviewer-initiated changes should be expected at this level.

(3) Final (F): All drawings and designs are complete. No changes are expected at this level. The plans are ready to be signed and sealed by the EOR.

Roadway Plan sheets that support permit applications (e.g., Plan-Profile, Stormwater Facility Plan, Drainage Sheets, Mitigation Plan) should be at a permit-ready level of completion for the Phase II submittal.

Table 901.3.1 Phase Submittals for Conventional Projects

ITEM	PHASE I	PHASE II*	PHASE III	PHASE IV
Roadway Plans Set				
Key Sheet	P	P	C	F
Signature Sheet		P	C	F
Drainage Map	P	P	C	F
Typical Sections	P	C	C	F
Model Management	C	C	C	F
Project Control	P	C	C	F
Roadway Plan-Profile	P	P	C	F
Traffic Monitoring Site		P	C	F
Drainage Sheets		P	C	F
Stormwater Facility Plan		P	C	F
Soil Survey	P	C	F	
Roadway Cross Sections	P	P	C	F
Temporary Traffic Control Plan	P	P	C	F
Utility Adjustments		P	C	F
Selective Clearing and Grubbing		P	C	F
Mitigation Plan	P	P	C	F
Miscellaneous Structures		P	C	F
Component Plans Sets				
Signing and Pavement Marking Plans		P	C	F
Signalization Plans		P	C	F
Intelligent Transportation System (ITS) Plans		P	C	F
Lighting Plans		P	C	F
Landscape Plans	P	P	C	F
Landscape Maintenance Guide			C	F
Utility Work by Highway Contractor Plans			C	F
Toll Facility Plans				
Site/Civil, Architectural, and Structural	P	P	C	F
Electrical, Mechanical, and Plumbing		P	C	F
Communications and Systems		P	C	F

Status Key: P - Preliminary C - Complete but subject to change F - Final

** Projects with a Structures Plans component must submit the latest set with the Phase II roadway submittal.*

901.3.1 Phase I Submittal

Develop Phase I plan sheets to include the following:

KEY SHEET

- All applicable Financial Project IDs
- (Federal Funds) notation, if applicable
- County Name and State Road Number
- Fiscal Year and sheet number
- Consultants name, address, and contract number, if applicable
- Department's Project Manager's Name
- List of Component Plan Sets
- Project Location URL and Work Limits
- Governing Standards and Specifications

DRAINAGE MAP

- Photographic (aerial) base map
- Centerline of construction or baseline of survey and stationing
- North arrow and scale
- Street names and R/W lines
- Begin & end of project stations
- Begin & end of bridges stations
- Drainage areas and flow direction
- Drainage divides and ground elevations
- Highwater information
- Existing structures and pipes with relevant information
- State, Federal, and County highway numbers
- Label existing water bodies (e.g., lakes, rivers)

TYPICAL SECTIONS

- Proposed typical section(s)
- R/W lines
- Special details and notes
- Traffic data

MODEL MANAGEMENT

- Complete

PROJECT CONTROL

- Benchmarks
- Reference points
- Control points

ROADWAY PLAN-PROFILE

Plan View

- Existing topography
- Existing utilities, and V_{vh} data when available
- North arrow and scale
- Centerline of construction or baseline of survey
- Equations and exceptions
- Curve data
- Preliminary horizontal geometrics
- Existing R/W lines
- Begin & end stations for the project
- Begin & end bridge stations

Profile View

- Scale
- Appropriate existing utilities
- Preliminary profile grade line
- Equations
- Existing ground line
- Begin & end stations for the project
- Begin & end bridge stations
- Preliminary highwater elevation

ROADWAY CROSS SECTIONS

(may require accompanying Cross Section Pattern sheet)

- Scale
- Existing ground line
- Station numbers
- Baseline/centerline labeled
- Existing utilities
- Proposed template with profile grade elevations along the mainline and cross streets

TEMPORARY TRAFFIC CONTROL PLAN

- Typical section for each phase.
- Description of the phasing sequence and work involved.
- Other worksheets as necessary to convey concept and scope.

MITIGATION PLANS

- Project specific

LANDSCAPE PLANS

- Conceptual landscape plan

TOLL FACILITY PLANS

- Site/Civil, Architectural, and Structural

901.3.2 Phase II Submittal

Typically, the work to be done during this phase is the following:

(1) Address Phase I comments.

(2) Load pay item numbers into Designer Interface for AASHTOWare Project™ Preconstruction and print a PDF of the Summary of Pay Items Report. Notify the Department Project Manager when this is completed via email with the PDF report attached.

(3) Develop Phase II plans to include the following:

KEY SHEET

- Index of sheets including Developmental Standard Plans (if appropriate)
- Contract plans and component plans list (lead component only)

SIGNATURE SHEET

- Sections for each Professional of Record with Index of Sheets
- Image of the seals (if appropriate)

DRAINAGE MAP

- Proposed drainage structures with structure numbers
- Proposed cross drains with pipe sizes and structure numbers
- Flow arrows along proposed ditches
- Retention and detention ponds, pond numbers and area sizes
- Bridges and bridge culverts with begin & end stations
- Flood Data Summary (if applicable)

TYPICAL SECTIONS

- Complete

MODEL MANAGEMENT

- Complete

PROJECT CONTROL

- Complete

ROADWAY PLAN-PROFILE

Plan View

- Begin & end stations for construction
- Curb return numbers, station ties, and elevations
- Proposed drainage structures with pipes
- Proposed R/W lines
- Proposed side drain pipes
- Preliminary horizontal geometrics and dimensions
- Limits of wetlands

Profile View

- Final profile grades and vertical curve data
- Mainline storm drain pipes
- Special ditch gradients with DPI stations and elevations
- Special gutter grades with DPI stations and elevations
- Nonstandard superelevation transition details
- Highwater elevations
- Existing utilities

TRAFFIC MONITORING SITE

- Complete

DRAINAGE SHEETS

Drainage Network Plan

- North arrow and scale
- Centerline of construction or baseline of construction with stationing
- All elements of the roadway template and R/W lines
- Proposed drainage system with structure and pipe labeling (tabular information)
- Underground utilities

Drainage Network Profile

- Vertical and horizontal scales
- Sectional view along pipe runs with structure and pipe labeling
- Existing and proposed surfaces
- Underground utilities
- Special sections at conflict points

STORMWATER FACILITY PLAN

- North arrow and scale
- Proposed baseline with stationing with ties to roadway centerline of construction or baseline of survey
- Existing topography, drainage structures, and utilities
- R/W lines
- Soil boring locations
- Fence and gate locations
- Drainage structures with structure and pipe labeling
- Stormwater facility delineation with side slopes, dimensions, and elevations
- Stormwater facility section views
- Outlet structure details and notes
- 100-year floodplain boundaries and elevations, contamination sites, delineated wetlands, and sinkholes and depressions

SOIL SURVEY

- Soil data

ROADWAY CROSS SECTIONS

- R/W lines
- Special ditch bottom elevations
- Equivalent stations for ramps and mainline
- Mainline equation stations
- Extent of unsuitable materials
- Proposed template with profile grade elevation
- Begin and end project, construction, earthwork, and bridge and culvert stationing
- Existing utilities affected by the template

TEMPORARY TRAFFIC CONTROL PLAN

- General and phasing notes complete
- TTCP and detour plans mostly complete
- R/W and utilities information

UTILITY ADJUSTMENTS

- All existing utilities highlighted
- Develop conflict matrix

SELECTIVE CLEARING AND GRUBBING

- Existing vegetation to be protected, relocated, or removed
- Project-specific notes and details

MITIGATION PLAN

- Project specific

MISCELLANEOUS STRUCTURES

- Retaining walls (cast in place, proprietary, or temporary) if required

SIGNING AND PAVEMENT MARKING PLANS - PLAN SHEETS

- North arrow and scale
- Basic roadway geometrics
- Begin & end stations and exceptions
- Station equations
- Conflicting utilities, lighting, and drainage
- Pavement markings
- Sign locations
- Applicable pay items

SIGNING AND PAVEMENT MARKING PLANS - SIGN DETAIL SHEETS, GUIDE SIGN WORK SHEETS

- Project specific

SIGNALIZATION PLANS

- North arrow and scale
- Basic roadway geometrics
- Begin & end stations and exceptions
- Station equations
- Conflicting utilities, lighting, and drainage
- Signal pole locations
- Type and location of loops
- Type and location of signal heads
- Pedestrian signals
- Locations of stop bars
- Locations of crosswalks
- Sheet title
- Applicable pay items

SIGNALIZATION PLANS - POLE SCHEDULE

- Pole locations, number, and type
- Pole dimensions
- Pay item numbers and quantities
- Joint-use pole details, if applicable
- Foundation designs

SIGNALIZATION PLANS - INTERCONNECT/ COMMUNICATION CABLE PLAN

- Placement of interconnect/communication cable
- Conflicting utilities, lighting, and drainage
- Other project-specific details

ITS PLANS - PLAN SHEETS

- North arrow and scale
- Basic roadway geometrics
- Begin & end stations and exceptions
- Station equations
- Conflicting utilities, lighting, and drainage
- Applicable pay items

ITS PLANS - DETAIL SHEETS

- Project specific

LIGHTING PLANS - POLE DATA AND LEGEND SHEET

- Each pole listed by number with location, arm length, mounting height, and luminaire wattage
- Design values for light intensities and uniformity ratios shown
- Legend and sheet title

LIGHTING PLANS - PLAN SHEETS

- North arrow and scale
- Baseline of construction
- Begin & end stations and equations
- Basic roadway geometrics
- Conflicting utilities, drainage, signal poles, etc.
- Sheet title
- Applicable pay items
- Pole symbols shown at correct station locations and approximate offsets

LIGHTING PLANS - HIGH MAST

- Project-specific foundation detail sheets
- Project-specific boring data sheets
- Conflicting utilities, drainage, and lighting

LANDSCAPE PLANS

- Complete

TOLL FACILITY PLANS

- Site/Civil, Architectural, and Structural
- Electrical, Mechanical, and Plumbing
- Communications and Systems

901.3.3 Phase III Submittal

Typically, the remaining work to be done is to:

(1) Address Phase II comments.

(2) Complete all remaining plan sheets.

(3) Complete the development of models to be contained in the BIM.zip file.

(4) Complete the Estimated Quantities Report (see ***FDM 902***) and input quantities into Designer Interface for AASHTOWare Project™ Preconstruction. Submit the Estimated Quantities Report with the Phase III submittal.

(5) Complete all Technical Special Provision reviews and enter them into the Electronic Review Comments (ERC) system.

Estimate the Work Zone Traffic Control items paid for on a 'per day' basis and include them in the Estimated Quantities Report. The Department's Construction Office will perform a biddability review and will establish construction duration as a part of the Phase III review after receiving the plan set. Include this information in the Phase III review comments transmitted back to the EOR.

Utility Work by Highway Contractor (UWHC) Plans consisting of a Key Sheet and mainline plan-profile showing proposed utility horizontal and vertical locations are also to be included in the Phase III submittal.

901.3.4 Phase IV Submittal

Typically, the work to be done during this phase is the following:

(1) Address Phase III review comments.

(2) Update the Work Program Administration (WPA) system (see ***FDM 111.2.1***) to reflect the begin and end project mileposts.

(3) Finalize all plan sheets, including:

(a) Place the assigned Construction Contract Number on the Key Sheet.

(b) Update the Work Zone Traffic Control pay items based on the established construction duration.

(4) Finalize the models to be contained in the BIM.zip file.

(5) Finalize the Estimate of Quantities Report and update quantities in Designer Interface for AASHTOWare Project™ Preconstruction. Submit the Estimated Quantities Report with the Phase IV submittal.

(6) Provide an EOR's construction cost estimate to the Department Project Manager (when requested).

After corrections noted during the Phase IV submittal review are completed and verified, the plans are referred to as Final Plans.

901.3.5 PS&E Submittal

There are two required submittals during the (PS&E) phase. Coordinate with the District Final Plans Office for scheduling these required submittals.

The first submittal consists of the Final Plans and BIM.zip, draft Specifications Package and Estimated Quantities Report. See the ***Specifications Handbook*** for information on preparing Specifications Packages and Supplemental Specifications Packages.

A review of the first submittal by the District Final Plans Office often requires changes (e.g., pay item numbers and quantities, notes, design details). After changes to the Final Plans, Specifications Package, and Estimated Quantities Report have been completed and verified, deliver the second submittal consisting of the following:

(1) Signed and Sealed Plans

(2) Signed and Sealed Specifications

(3) Signed and Sealed Estimated Quantities Report

(4) BIM.zip or CADD.zip file

Provide the Total Roadway Length, Total Bridge Length, and Total Project Length to the Department Project Manager (when requested).

Information on District activities during the PS&E Phase is described in ***FDM 131***.

Sign and seal As-Built Plans and BIM files in accordance with ***FDM 130***.

Information on the delivery of Project Documentation is described in ***FDM 111.7***.

901.4 Non-conventional (Design-Build) Projects

The following are required submittals for Design-Build projects:

(1) Technical Proposal

(2) 60% Plans for IDR associated with Category 2 structures

(3) 90% Component Plans

(4) Final Component Plans

(5) As-Built Plans

The required levels of completion for each phase submittal are noted in ***Table 901.4.1***. Levels of completion are Preliminary (P), Complete (C), and Final (F).

Table 901.4.1 Phase Submittals for Non-conventional Projects

Plan Sheet	Technical Proposal	90% Plans	Final Plans
Roadway Plans Set			
Key Sheet		C	F
Signature Sheet		C	F
Drainage Map	P	C	F
Typical Sections	P	C	F
Model Management		C	F
Project Control	P	C	F
Roadway Plan-Profile	P	C	F
Special Profiles		C	F
Traffic Monitoring Site	P	C	F
Drainage Sheets		C	F
Stormwater Facility Plan		C	F
Soil Survey	C	F	
Roadway Cross Sections		C	F
Temporary Traffic Control Plan	P	C	F
Utility Adjustments		C	F
Selective Clearing and Grubbing		C	F
Mitigation Plan		C	F
Miscellaneous Structures		C	F
Component Plans Sets			
Signing and Pavement Marking Plans	P	C	F
Signalization Plans		C	F
Intelligent Transportation System (ITS) Plans		C	F
Lighting Plans		C	F
Landscape Plans		C	F
Utility Work by Highway Contractor Plans		C	F
Toll Facility Plans			
Site/Civil, Architectural, and Structural	P	C	F
Electrical, Mechanical, Plumbing, Communications, and Systems		C	F

Status Key: P - Preliminary C - Complete but subject to change F - Final

901.4.1 Discipline Phase Reviewer Requirements

There are two types of comments that may be provided during the review of submittals:

- **Response Required Comment:** These comments refer to direct violations of contract requirements and must be responded to.
- **FYI Comment:** These comments are informational and do not require a response. Phase reviews should focus on compliance with contract requirements, however, "for information only" comments may also provide valuable feedback.

Enter comments in the ERC system in the boxes labeled "Response Required Comment" or "FYI Comment". The ERC system will automatically add a statement at the end of each comment indicating "A written response is required." or "This comment is for information only. A written response is NOT required."

When providing a Response Required Comment, include the specific contract reference or requirement that is being violated, such as:

- An ***AASHTO*** provision that is being violated.
- A Governing Regulation (e.g., ***FDM, Structures Design Guidelines***) requirement that is being violated.
- A Technical Proposal commitment that is not being met.
- A Request for Proposal (RFP) requirement that is being omitted or violated.
- An omission in the plans or calculations.
- An inconsistency between the plans and calculations.
- An obvious error in math or basic engineering principles.
- An environmental commitment or permit commitment that is not being met.

The Department may provide mark-ups to support a review comment. The Department may allow the EOR to include supplemental details or revised plan sheets with their written responses, in lieu of resubmitting a component plan set.

901.4.1.1 Example of Response Required Comment

Example Comment: *The vertical curve length does not meet the minimum requirements of **Table 210.10.4** in the **FDM**. A written response is required.*

In this example, a requirement from the ***FDM*** is being violated. The plans must be corrected to address this situation, and a written response from the Design-Build Firm or Concessionaire is required.

Example Comment: *Calculations are consistent with two-phased post tensioning of the pier cap, but the plans indicate post-tensioning in a single phase. Update plans to be consistent with the calculations so that the cap will not be overstressed in the unloaded condition. A written response is required.*

In this example, the intent of the comment is to alert the Design-Build Firm or Concessionaire of an inconsistency between the calculations and the plans that result in the pier cap being overstressed. The plans must be corrected to address this situation, and a written response from the Design-Build Firm is required.

901.4.1.2 Example of FYI Comment

Example Comment: *The plans as submitted depict a land pier located very close to the shoreline of a major body of water and steel sheet piling are not shown along the water face of the footing. Ensure that the footing can be constructed in the dry per the requirements of the Specifications. This comment is for information only. A written response is NOT required.*

In this example, the intent of the comment is to ensure that the footing concrete is placed in the dry per the ***Standard Specifications***. Regardless of the action the Design-Build Firm or Concessionaire takes in response to the comment, the ***Standard Specifications*** requirements must be met; the reviewer is putting the Design-Build Firm or Concessionaire on notice.

901.4.2 Technical Proposal Submittal

Plan sheets contained in the Technical Proposal submittal must adhere to the requirements of the ***FDM 900 Series***.

Do not submit CADD files with the Technical Proposal submittal.

When required by the RFP, develop Technical Proposal submittal plan sheets to include the following:

DRAINAGE MAP

- Drainage divides and flow direction arrows
- High water information as required
- Preliminary horizontal alignment with stationing
- State, federal, and county highway numbers (as appropriate)
- Proposed storm drain trunk line and outfall locations
- Proposed retention/detention pond locations

TYPICAL SECTIONS

- Mainline and crossroad typical sections
- R/W lines
- Traffic data
- Pavement design

PROJECT CONTROL

- Benchmarks
- Reference points
- Control points

ROADWAY PLAN - PROFILE PLAN VIEW

- North arrow and scale
- Baseline of survey, equations
- Curve data (including superelevation)
- Existing topography including utilities
- Preliminary horizontal geometrics and dimensions
- R/W lines (if available)
- Centerline of construction (if different from the baseline of survey)
- Begin and end stations for the project and stations of equations and exceptions
- Existing utilities
- Guide sign locations
- Limits of wetlands

ROADWAY PLAN - PROFILE PROFILE VIEW

- North arrow and scale
- Appropriate existing utilities
- Preliminary profile grade line
- Existing ground line with elevations at each end of each sheet
- Begin and end stations for the project and stations of equations and exceptions
- Final profile grades and vertical curve data
- High water elevations

TRAFFIC MONITORING SITE

- Project specific

TEMPORARY TRAFFIC CONTROL PLAN

- General and phasing notes complete
- Preliminary TTCP and detour plans
- Typical section for each phase
- R/W and utilities information

SIGNING AND PAVEMENT MARKING PLANS - SIGN DETAIL SHEETS

- Preliminary layout of multi-column and overhead guide sign worksheets

TOLL FACILITY PLANS

- Project specific
- Site/Civil
- Architectural
- Structural

901.4.3 90% Plans Component Submittal

After all comments associated with the Technical Proposal submittal have been resolved, the required plan sheets must be completed in accordance with the ***FDM 900 Series***.

Submit CADD files with the completed plans sets for the 90% Plans Component submittal.

901.4.4 Final Plans Component Submittal

After all comments associated with the 90% Plans Component submittal have been resolved, the required plan sheets and CADD files must be finalized.

Submit CADD files with the final plans sets for the Final Plans Component submittal.

901.4.5 Released for Construction Plans

After all comments associated with the Final Plans submittal have been resolved, the EOR must submit signed and sealed plan sets and BIM files for Department approval. The Department's Project Manager will initial, date, and stamp each submittal as "Released for Construction". Only signed and sealed plans and BIM files that have been stamped "Released for Construction" by the Department's Project Manager are valid.

Submit the BIM.zip file with the Released for Construction plan sets.

Sign and seal Final Plans and BIM files in accordance with ***FDM 130***.

901.4.6 As-Built Plans

As-Built requirements are specified in the Design-Build RFP. The Final As-Built Plans include all revisions and changes, both design and construction, that indicate precisely how the project was constructed.

Submit the BIM.zip or CADD.zip file with the As-Built Plans sets.

Sign and seal the As-Built Plans and BIM files in accordance with ***FDM 130***.

Provide Project Documentation in accordance with ***FDM 111.7***.

901.5 Alternative Intersection and Interchange Submittals

Alternative Intersection and Interchange reviews are generally required for the following configurations:

- Roundabout
- Median U-Turn (MUT)
- Restricted Crossing U-Turn (RCUT)
- Diverging Diamond Interchange (DDI)
- Jug Handle
- Displaced Left-Turn

- Continuous Green-T
- Quadrant Roadway

Include Alternative Intersection and Interchange Review Packages with the Phase I submittal and designate a representative of the State Roadway Design Office as a Lead Reviewer in ERC.

The following items are required for an Alternative Intersection and Interchange Review Package:

(1) Geometric Layout (PDF and CADD):

(a) North Arrow and scale, survey baseline, equations

(b) Significant topographic features including buildings, driveways, bridges, drainage structures, utilities, bicycle and pedestrian facilities, and transit facilities

(c) Preliminary horizontal geometry including pavement edges, curb and gutter, traffic separators, islands, sidewalks, and curb ramps

(d) Preliminary pavement markings including edge lines, interior lane lines, extension lines, stop bars, crosswalks, directional arrows, and gore markings

(2) Design Vehicle Turning Movements (PDF and CADD):

(a) Design vehicle swept path diagrams for all through movements, left-turn movements, and right-turn movements

(3) Traffic Forecast (PDF)

(a) Opening year and design year, a.m. and p.m., peak hour volumes for all movements through the intersection

(b) Peak hour factor

(c) Percentage of heavy vehicles

(d) Volume distribution across lanes for multi-lane entries

(4) Operational analysis input and output (PDF)

901.5.1 Roundabouts

The following additional items are required for Roundabout Review Packages:

(1) Fastest Path Speed Checks in accordance with ***NCHRP 672 Section 6.7.1*** (PDF and CADD)

(2) Sight Distance Checks in accordance with ***NCHRP 672 Section 6.7.3*** (PDF and CADD)

901.5.2 Diverging Diamond Interchanges

The following additional items are required for Diverging Diamond Interchange Review Packages:

(1) Horizontal alignment data including baseline locations, curve data, stationing, and cardinal points (PC, PT, etc.)

(2) Vertical alignments

(3) Cross slopes

(4) Conceptual drainage plan

902 Estimated Quantities Report

Modification for Non-Conventional Projects:
Delete ***FDM 902*** and replace with the following: Provide a Summary of Pavement summary table with planned asphalt quantities on a General Notes sheet within the "Released for Construction" plan set. Develop and report quantities in accordance with the ***Basis of Estimates (BOE) Manual***. Include documentation that supports the asphalt quantities shown in the summary table.

The Estimated Quantities (EQ) Report is required for all projects that begin the design phase starting in January 2021. The EQ Report is also required for projects being produced in OpenRoads Designer that began design prior to January 2021.

902.1 General

The EQ Report is a single PDF file that contains all pay item and quantity information for the project. The EQ Report consists of a signature page and a series of summary tables, and must be developed and delivered according to the guidelines and formats defined by:

- ***BOE Manual***
- ***Structures Manual***
- ***CADD Manual***, Section 8.4.3
- ***FDM 902***

The FDOT Automated Quantities Training Guides provide additional instructional information.

Beginning with the Phase III submittal, include the EQ Report with each required phase submittal. Submittals are to include the electronic shape files and other appropriate documentation (e.g., calculations, sketches, spreadsheets) that support the quantities shown in the report.

For a strung project with two or more FPID numbers, develop an EQ Report for each FPID number.

For a single project with multiple FPID number sequencing, develop a single EQ Report with separate summary tables for each sequencing.

902.2 Signature Page

The signature page is typically an 11”x17” sheet (landscape). Place this page at the front of the EQ Report and include the information shown in ***Figure 902.2.1***. Show all FPID numbers on the signature page when a project has multiple funding sources.

The final EQ Report document is digitally signed and sealed only by the Department’s lead designer or the lead consultant firm’s Engineer of Record (EOR). The page must show the Digital Signature Appearance of the EOR along with a representation of their Seal.

See ***FDM 130*** for digital signing and sealing requirements.

Figure 902.2.1 Signature Page Information

ESTIMATED QUANTITIES REPORT

Financial Project ID: 123456-1-52-01

Contract Number: T0000

Project Description: SR 22 (Wewa Highway), Bay County

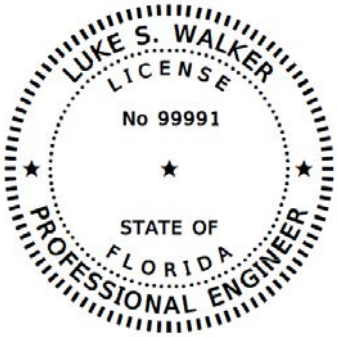

This item has been digitally signed and sealed by:

Luke S. Walker
2020.10.14 16:52:48 – 4’00’

on the date adjacent to the seal.

Signature must be verified on any electronic copies.

Roadway Engineers, Inc.
123 Main Street
Tallahassee, FL 32301
Luke S. Walker, P.E. No. 99991

The estimated quantities contained in this document:

(1) Were developed in compliance with Florida Department of Transportation procedures, processes, and requirements, and relies on each component Engineer of Record to have done the same.

(2) Contain no known errors or omissions.

(3) Match the pay item numbers and quantities in Designer Interface for AASHTOWare Project Preconstruction™.

902.3 Summary Tables

The summary tables to be used to create the EQ Report must be generated using the Quantity Takeoff Manager (QTM). The ***CADD Manual*** provides a list of summary tables that will be generated by the QTM. Do not modify the filename of the spreadsheets or the format of the summary tables. Any modification to filename or format creates errors in the generated EQ Report.

Place quantity and location information into the created summary tables for those items that are not auto-populated (extracted quantities from the design files). Once the Excel summary tables are fully populated, use the Summary Reports Builder tool to create the EQ Report. The created report is done on 11”x17” pages (landscape) and is generally in an ascending order of pay item numbers.

Each page of the report will contain only one summary table type. A continuation of a summary table onto subsequent pages may occur.

Place summary tables in the Calculations Folder within the CADD folder structure for delivery with the CADD.zip or Bim.zip file.

See ***FDM 132.5*** when a revision to the PS&E Package includes changes to the EQ Report. The EQ Report will not be regenerated during the construction phase. See ***FDM 151.2.1*** for post-let revision requirements.

902.3.1 Designer Notes and Construction Remarks

Designer notes can be added to the summary tables prior to generating the EQ Report. The Designer Notes column is used to provide clarifications on how the quantities were derived. Do not use this column to provide direction to the contractor.

Do not place any data or information in the Construction Remarks column.

902.4 EQ Report Requirements

The Department’s lead designer or the lead firm’s (EOR) is responsible for generating the EQ Report and for validating that the pay items and quantities contained in the report are the same as those loaded into Designer Interface for AASHTOWare Project™ Preconstruction.

Title the EQ Report PDF file with the FPID number followed by “-ESTIMATES-QUANTITIES.pdf” (e.g., 12345615201-ESTIMATES-QUANTITIES.pdf).

902.5 Loading Pay Item Information into Designer Interface

For the Phase II submittal, the designer is typically responsible for loading only pay item numbers into Designer Interface for AASHTOWare Project™ Preconstruction. When only loading pay item numbers, create a PDF file of the Summary of Pay Item Report generated in AASHTOWare Project™ Webgate Reporting. Notify the Department Project Manager via email when this is completed (with the report PDF file attached).

When including preliminary quantities at Phase II (at the request of the district), create the EQ Report and include it with the Phase II submittal. Creating the Summary of Pay Item Report and notifying the Department Project Manager is not required.

For the Phase III submittal and subsequent submittals, the designer is responsible for entering (or updating) pay items and quantities into Designer Interface.

902.5.1 Designer Interface Quantities Builder

When the summary tables are populated with quantities, the Designer Interface Quantities Builder tool can be used to upload pay item number and quantity information into Designer Interface for the Phase III submittal and all subsequent submittals.

Only the Department's lead designer or the lead consultant firm's EOR may use the quantity tool to upload pay items and quantities. Each time the export tool is used, the existing Designer Interface information is overwritten.

904 Landscape Opportunity Plan

904.1 General

This chapter provides the criteria and requirements for development of the Landscape Opportunity Plan. These sheets are used for coordination purposes between projects and between the various disciplines of a project. Do not place the Landscape Opportunity Plan sheets within the Contract Plans Set. Signing and sealing the Landscape Opportunity Plan is not required.

A Landscape Opportunity Plan is prepared when landscape is not part of a roadway construction project, but landscaping will be installed:

(1) Within a subsequent stand-alone landscape project.

(2) As part of a simultaneous JPA or LAP project.

(3) Within a future safety or roundabout project.

A Landscape Opportunity Plan is typically prepared during the roadway concept plan development, but when developed during the design phase, should be preliminary by the Phase II submittal, complete at Phase III, and final at Phase IV. Coordinate with other disciplines (e.g., Roadway, Utility, Drainage, Signage, ITS, R/W) when developing the Landscape Opportunity Plan.

Submit the completed Landscape Opportunity Plan to the Department Project Manager and District Landscape Architect. Place the completed Landscape Opportunity Plan in Project Suite Enterprise Edition (PSEE) within the Design Development Documentation Module (see ***FDM 111.7***).

See ***Exhibit 904-1*** for an example of a Landscape Opportunity Plan roll plot.

904.2 Landscape Opportunity Plan Development

A Landscape Opportunity Plan identifies areas within the upcoming roadway project that should be set-aside or prepared for the future landscape project. Common areas are:

- Areas requested by a municipality
- Median plantings or other safety enhancements
- High-visibility areas or embankments, or areas adjacent to barriers or sound walls

- Scenic highways or areas programmed for Highway Beautification Grants
- Areas indicated in the District's Landscape Branding Document

904.3 Landscape Opportunity Plan Sheet

The Landscape Opportunity Plan sheet provides a plan view of the project illustrating the intent of the future landscape project. This sheet may be produced as a roll plot. Use standard symbols contained in the ***CADD Manual***.

The standard horizontal scale is 1" = 100', however an alternate scale may be approved by the Project Manager.

Provide a legend, notes, and details as needed.

904.4 Required Information

Display aerial photography or available topographic surveys as gray-scaled in the background. Information from a prior construction project may also be used. Display and label elements that are relevant to the future landscape design, including:

- Proposed improvements and existing elements to remain
- Existing vegetation or areas to remain undisturbed
- Wetland jurisdictional lines
- Drainage retention areas
- Utilities
- Outdoor advertising view zones

The Landscape Opportunity Plan provides requirements for the development of the roadway design to support a future landscape design. Locations of landscape opportunity planting areas are typically illustrated in a bubble format which identifies various vegetation groupings in a hatched or colorized manner (e.g., "trees/palms/shrubs", "shrubs only", "buffer plantings").

The Landscape Opportunity Plan should also identify or designate the following:

(1) Essential elements of the landscape design intent.

(2) Anticipated locations of irrigation sleeves. See ***FDM 271.3*** for irrigation sleeve requirements.

(3) Preservation areas. Preserve existing trees and vegetation and natural vistas to the greatest extent possible.

(4) Areas requiring soil amendments. Assure landscape areas will have soils suitable for plant viability.

(5) Areas to be set aside to accommodate future plantings considering visibility, clear zone, site distance requirements, and maintenance. Provide adequate space (both above and below ground) for plant growth. Delineate areas in bubble format and indicate as high, medium, or low priority, such as:

(a) Areas with trees and shrubs for screening distracting views

(b) Trees to frame desirable views

(c) Trees and ground cover areas for stabilization of embankments

(d) Trees to shade sidewalks

(e) Shrubs for pedestrian channelization

(6) Use of Selective Clearing and Grubbing to preserve the existing and future landscape planting areas and to relocate trees.

(7) Display applicable clear zones, horizontal clearances, and setback dimensions on the plans which reflect AASHTO and Department guidelines for landscape installation and maintenance operations.

(8) Indicate potential areas for wildflower plantings.

(9) Objectionable and desired views.

(10) Locations of Outdoor Advertising sign faces and view zones within the project limits; see ***FDM 276***.

904.5 Optional Summary of Analysis

At the District's discretion, provide a Summary of Analysis in a graphic and written format.

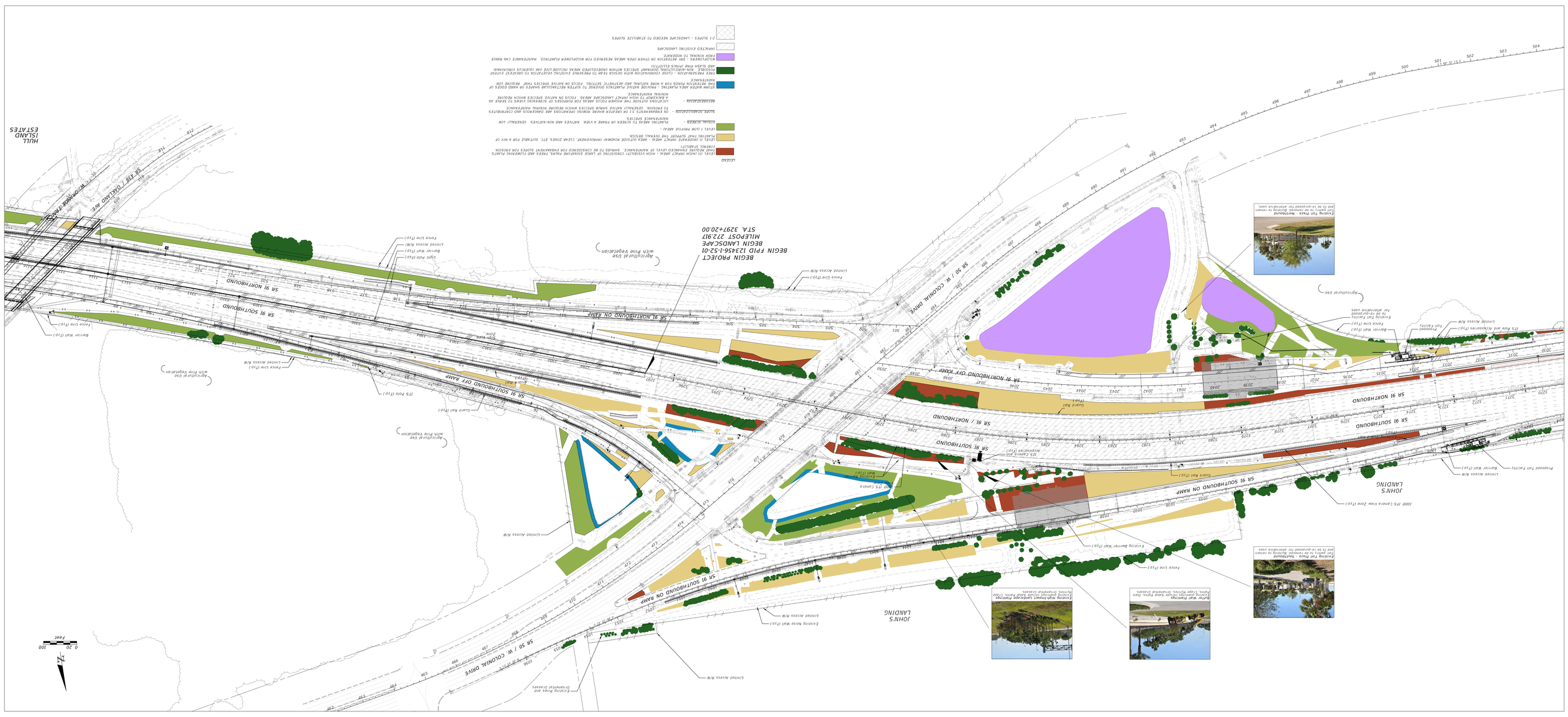

Existing Pines and Ornamental Grasses
Limited Access R/W
Existing Noise Wall (Typ.)
Limited Access R/W
JOHN'S LANDING
SR 50 / W. COLONIAL DRIVE
SR 91 SOUTHBOUND ON RAMP
Buffer Wall Plantings
Existing plantings include Sabal Palms, Date Palms, Crape Myrtles, Ornamental Grasses.
Existing High-Impact Landscape Plantings
Existing plantings include Sabal Palms, Crape Myrtles, Ornamental Grasses.
Existing Toll Plaza - Southbound
Toll gantry to be removed. Building to remain and to be re-purposed for alternative uses.
Fence Line (Typ.)
Existing Barrier Wall (Typ.)
1000' ITS Camera View Zone (Typ.)
JOHN'S LANDING
Limited Access R/W
Proposed Toll Facility
Barrier Wall (Typ.)
Existing Guard Rail (Typ.)
Guard Rail (Typ.)
SR 91 SOUTHBOUND ON RAMP
SR 91 SOUTHBOUND
SR 91 NORTHBOUND
1000' ITS Camera View Zone
Existing Barrier Wall (Typ.)
ITS Camera and Accessories (Typ.)
SR 91 SOUTHBOUND
SR 91 / NORTHBOUND
Guard Rail (Typ.)
SR 91 NORTHBOUND OFF RAMP
ITS Pole and Accessories (Typ.)
Limited Access R/W
Proposed Toll Facility
Barrier Wall (Typ.)
Fence Line (Typ.)
Existing Toll Facility to be re-purposed for alternative uses
Agricultural Use
Existing Toll Plaza - Northbound
Toll gantry to be removed. Building to remain and to be re-purposed for alternative uses.
SR 50 / W. COLONIAL DRIVE
Fence Line (Typ.)
Limited Access R/W
SR 91 NORTHBOUND ON RAMP
BEGIN PROJECT
BEGIN FPID 123456-1-52-01
BEGIN LANDSCAPE
MILEPOST 272.917
STA. 3297+20.00
Agricultural Use with Pine Vegetation
Limited Access R/W
Agricultural Use with Pine Vegetation
Guard Rail (Typ.)
ITS Pole (Typ.)
SR 91 SOUTHBOUND OFF RAMP
Guard Rail (Typ.)
Sign View Zone
Fence Line (Typ.)
Limited Access R/W
Agricultural Use with Pine Vegetation
SR 91 SOUTHBOUND
SR 91 NORTHBOUND
Light Pole (Typ.)
Barrier Wall (Typ.)
Limited Access R/W/
Fence Line (Typ.)
Barrier Wall (Typ.)
Fence Line (Typ.)
SR 438 / OAKLAND AVE.
W. ORANGE TRAIL
HULL ISLAND ESTATES
N
0 20 100
Feet

LEGEND

🟥 LEVEL III (HIGH IMPACT AREA) – HIGH VISIBILITY CONSISTING OF LARGE SIGNATURE PALMS, TREES AND FLOWERING PLANTS THAT REQUIRE ENHANCED LEVEL OF MAINTENANCE. SHRUBS TO BE CONSIDERED FOR EMBANKMENT SLOPES FOR EROSION CONTROL STABILITY.

🟨 LEVEL II (MODERATE IMPACT AREA) – AREA OUTSIDE ROADWAY IMPROVEMENT, CLEAR ZONES, ETC. SUITABLE FOR A MIX OF PLANTING THAT SUPPORT THE OVERALL DESIGN.

🟩 LEVEL I (LOW PROFILE AREA) –

VISUAL SCREEN –	PLANTING AREAS TO SCREEN OR FRAME A VIEW. NATIVES AND NON-NATIVES. GENERALLY LOW MAINTENANCE SPECIES.
SLOPE STABILIZATION –	ON EMBANKMENTS 3:1 OR GREATER WHERE MOWING OPERATIONS ARE DANGEROUS AND CONTRIBUTES TO EROSION. GENERALLY NATIVE SHRUB SPECIES WHICH REQUIRE MINIMAL MAINTENANCE.
REFORESTATION –	LOCATIONS OUTSIDE THE HIGHER FOCUS AREAS FOR PURPOSES OF SCREENING VIEWS TO SERVE AS A BACKDROP TO HIGH IMPACT LANDSCAPE AREAS. FOCUS ON NATIVE SPECIES WHICH REQUIRE MINIMAL MAINTENANCE.

🟦 STORM WATER AREA PLANTING – PROVIDE NATIVE PLANTINGS DIVERSE TO SOFTEN RECTANGULAR SHAPES OR HARD EDGES OF THE RETENTION PONDS FOR A MORE NATURAL AND AESTHETIC SETTING. FOCUS ON NATIVE SPECIES THAT REQUIRE LOW MAINTENANCE.

🟩 TREE PRESERVATION – CLOSE COORDINATION WITH DESIGN TEAM TO PRESERVE EXISTING VEGETATION TO GREATEST EXTENT POSSIBLE. NON-AGRICULTURAL DOMINANT SPECIES WITHIN UNDEVELOPED AREAS INCLUDE:LIVE OAK (QUERCUS VIRGINIANA) AND SLASH PINE (PINUS ELLIOTTII)

🟪 WILDFLOWERS – DRY RETENTION OR OTHER OPEN AREAS RESERVED FOR WILDFLOWER PLANTINGS. MAINTENANCE CAN RANGE FROM MINIMAL TO MODERATE.

▨ IMPACTED EXISTING LANDSCAPE

▦ 2:1 SLOPES – LANDSCAPE NEEDED TO STABILIZE SLOPES

MINIMUM LANDSCAPE SETBACK

PLANT TYPE	Mainline Travel Lane (No Guardrail)	Multi-lane Ramp (No Curb and No Guardrail)	Auxiliary Lanes & Single Lane Ramp (No Curb and No Guardrail)	Side Road Travel Lane (With "F" Curb)	Back of Guardrail	M.S.E And Noise Walls (7)	R/W Fence	Drainage Structures	Dry Stormwater Facilities	Wetlands, Open Water Bodies and Wet Stormwater Facilities (From seasonal high water line)	Miscellaneous Underground Utilities	Overhead Wires (4)	Gas	Light and Signage Poles (5) (6)	ITS Poles (5)	ITS Duct, Conduit Bank and Lighting Conduit
CANOPY TREES	36'	18' (1A) 24' (1B) 30' (1C) 36' (1D)	10' (1A) 14' (1B) 18' (1C) 24' (1D)	6'	10' (2)	10'	10'	15'	0'	15'	10'	medium-20' large-30'	20'	20'	25'	7'
PALMS & NARROW TREES	36'	18' (1A) 24' (1B) 30' (1C) 36' (1D)	10' (1A) 14' (1B) 18' (1C) 24' (1D)	6'	6'	6' (3)	6' (3)	10'		15'	5'	10' or max. palm frond length + 3' 8' around transformers	15'	10'	20'	5'
SHRUBS & ORNAMENTAL GRASSES	20'	4'	4'	4'	6'	4' (3)	4' (3)	5'		15'	N/A	N/A	N/A	4'	6'	N/A

SETBACK NOTES:
(1A) LESS THAN 45 MPH SPEED LIMIT.
(1B) 45-50 MPH SPEED LIMIT.
(1C) 55 MPH SPEED LIMIT.
(1D) GREATER THAN 55 MPH SPEED LIMIT.
(2) DISTANCES MAY BE GREATER DEPENDING ON THE MAINTAINED TREE SPECIES CANOPY WIDTH AND HEIGHT. VERIFY DIMENSIONS AS APPLICABLE.
(3) DEPENDENT ON AVAILABLE LANDSCAPE AREA.
(4) COMPLY WITH UTILITY COMPANY GUIDELINES AS APPLICABLE PERTAINING TO UNDERGROUND AND OVERHEAD UTILITIES AND TRANSFORMER SETBACKS.
(5) DIMENSIONS SHOWN ARE FROM LIGHT AND SIGN STRUCTURES. NO TREES OR PALMS WILL BLOCK LINES OF SIGHT.
(6) SIGNAGE SETBACKS TO ADDRESS OUT FROM FACE(S) ONLY. ITS SETBACK TO ADDRESS VIEW TO ROADWAY ONLY.
(7) FOR MSE WALLS, NO LANDSCAPE WILL BE INSTALLED ON THE FILL SIDE OF MSE WALLS WHERE STRAPS ARE PLACED. VERIFY ALL STRAP LOCATIONS. SETBACKS SHOWN ARE TO END OF STRAPS.

GENERAL NOTES:

1. THE PD&E STUDY ENDING AT MP 273 (S.R. 91 – S.R. 50 INTERCHANGE) MAY AFFECT DESIGN CONSIDERATIONS DELINEATED ON THE LANDSCAPE OPPORTUNITY PLANS.
2. THE LANDSCAPE OPPORTUNITY PLANS PROVIDE UTILITY INFORMATION, FINAL ROADWAY ALIGNMENTS, GUARD RAILS, BARRIER WALL AND OTHER IMPROVEMENTS THAT ARE SUBJECT TO CHANGE. THE OFFSETS SHOWN ON THE PLANS MAY REQUIRE CHANGE TO REFLECT THE FINAL DESIGN.
3. MAINTAIN THE PRESERVATION AND PLANTING AREAS SHOWN IN THE LANDSCAPE OPPORTUNITY PLANS TO THE GREATEST EXTENT POSSIBLE.
4. FINAL DESIGN MUST COMPLY WITH THE FDOT DESIGN MANUAL, FDOT STANDARD PLANS, APPLICABLE STANDARD SPECIFICATIONS, AND THE SETBACK GUIDELINES.
5. PRESERVE AND PROTECT EXISTING TRESS AND VEGETATION ALONG THE PROJECT CORRIDOR THAT IS NOT IN CONFLICT WITH PROPOSED IMPROVEMENTS. COORDINATE THE LOCATIONS OF EXISTING AND PROPOSED UTILITIES THROUGHOUT THE ROADWAY DESIGN DEVELOPMENT.
6. UPDATE LANDSCAPE OPPORTUNITY PLANS DURING FINAL DESIGN AS NEEDED.
7. NO PROPOSED PLANTINGS ARE TO BE LOCATED WITHIN
    - FEDERAL OR STATE JURISDICTIONAL WETLANDS OR OTHER SURFACE WATERS
    - OPEN WATER BODIES
    - THE DESIGN OF HIGH WATER OR DITCHES
    - THE BOTTOM OF STORM WATER MANAGEMENT FACILITIES.
8. NO FACULTATIVE WET OR OBLIGATE SPECIES ARE TO BE PLANTED WITHIN 25' OF WETLAND OR OTHER SURFACE WATERS.

POTENTIAL PLANT PALETTE

BOTANICAL NAME	COMMON NAME	LEVEL I	LEVEL II	LEVEL III	GANTRY	STORM WATER	USES
CANOPY TREES							
Acer rubrum	Red Maple	X	X			X	Storm water area, visual screen
Pinus elliottii	Slash Pine	X			X		Reforestation, visual screen
Pinus taeda	Loblolly Pine	X			X		Reforestation, visual screen
Quercus virginiana	Live Oak	X	X			X	Reforestation, visual screen
Taxodium distichum	Bald Cypress					X	Storm water area, visual screen
Ulmus alata	Winged Elm	X				X	Visual screen
TREES - SMALL							
Ilex opaca	American Holly	X	X		X		Visual screen
Juniperus silicicola	Southern Red Cedar	X			X		Visual screen
Lagerstroemia indica 'Muskogee'	Lavender Crape Myrtle		X	X	X		Accent color
Lagerstroemia indica 'Natchez'	White Crape Myrtle		X	X	X		Accent color
Lagerstroemia indica 'Tuskegee'	Red Crape Myrtle		X	X	X		Accent color
Magnolia grandiflora	Southern Magnolia	X	X	X	X		Dense color and texture
Myrica cerifera	Wax Myrtle	X	X		X		Visual screen
Myrcianthes fragrans	Simpson's Stopper	X	X		X		Visual screen
Prunus umbellata / angustifolia	Chickasaw Plum	X	X	X	X		Accent color
PALMS							
x Butiagrus nabonnandii 'Beauty Agrus'	Mule Palm		X	X			High impact accent
Sabal causiarum	Puerto Rican Hat Palm			X			High impact accent
Sabal palmetto	Cabbage Palm	X	X	X	X		Continuity
Phoenix dactylifera 'Medjool'	Medjool Date Palm			X			High impact accent
Phoenix sylverstris	Sylvester Date Palm			X			High impact accent
PALMS - SMALL							
Butia capitata	Pindo Palm		X	X	X		High impact
Chamaerops humilis	European Fan Palm		X	X			Visual screen accent
Livistona chinensis	Chinese Fan Palm			X			Visual screen accent
Phoenix roebelenii	Pygmy Date Palm		X	X	X		Visual screen accent
SHRUBS							
Ilex vomitoria	Yaupon Holly	X	X		X		Visual screen
Viburnum obovatum	Walter's Viburnum	X	X		X		Reforestation, visual screen
SHRUBS - SMALL							
Muhlenbergia capillaris	Muhly Grass	X	X	X	X		Visual screen, slope stabilization, massing effect
Serenoa repens	Saw Palmetto	X	X	X	X		Visual screen, slope stabilization, massing effect
Serenoa repens 'Silver'	Silver Saw Palmetto	X	X	X	X		Visual screen, slope stabilization, massing effect
Spartina bakeri	Cord Grass	X	X	X	X		Visual screen, slope stabilization, massing effect
Zamia pumila	Coontie Palm	X	X	X	X		Visual screen, slope stabilization, massing effect

ABBREVIATION INDEX

ABBREVIATION:	DESCRIPTION:
B&B	BALLED & BURLAPPED
C.T.	CLEAR TRUNK
CAL	CALIPER
GAL	GALLON
SPR	SPREAD

CLEAR ZONE – MINIMUM SETBACKS FOR TREES & PALMS:
6FT FROM BACK OF GUARD RAIL (WITH NO CURB)
18FT SINGLE LANE RAMP (FROM EDGE OF TRAVEL LANE)
24FT DOUBLE LANE RAMP (FROM EDGE OF TRAVEL LANE)
36FT TRAVEL LANE MAINLINE (FROM EDGE OF TRAVEL LANE)

Exhibit 904-1
Landscape Opportunity
Plan
Date: 1/1/2023

ARCHITECT OF RECORD
ARTURITO T. GOMEZ, L.A.
LICENSE NUMBER: 99999
LAND DESIGN, LLC.
345 IVY LANE
ORLANDO, FL 32801

STATE OF FLORIDA
DEPARTMENT OF TRANSPORTATION

ROAD NO.	COUNTY	FINANCIAL PROJECT ID
SR 91	ORANGE	123456-1-52-01

LANDSCAPE OPPORTUNITY

SHEET NO.
LD-1

906 Bridge Hydraulic Recommendations Sheet

906.1 General

A Bridge Hydraulic Recommendations Sheet (BHRS) is required for each proposed bridge structure; not for bridge culverts. This sheet summarizes the findings and recommendations of the bridge hydraulic analysis contained within the Bridge Hydraulics Report. The BHRS consists of four sections:

(1) Plan View

(2) Profile View

(3) Location Map and Drainage Area

(4) Bridge Hydraulic Data Table

The BHRS is appended to the Bridge Hydraulics Report and included in the Structures Plans.

See ***Exhibit 906-1*** for an example of a Bridge Hydraulic Recommendations Sheet.

906.2 Plan View

The plan view is typically located in the upper left area of the sheet. A common horizontal scale for the plan view is 1” = 40’ or 1” = 50’.

The plan view on the BHRS is often created by referencing the CADD file that was used to create the bridge plan view for the Plan and Elevation sheet included in the Structures Plans. Do not display information and graphic data from the reference file that is not germane.

Include the following information in the plan view:

(1) Stationing, scale, and north arrow. Include the channel baseline if one was created.

(2) Label the bridge begin and end station, the name of the road, the waterbody (e.g., St. Johns River), and the R/W lines.

(3) Show contour lines (existing or proposed) with elevations, and arrows illustrating the direction of the flow through the channel opening.

(4) Show the limits of abutment protection.

906.3 Profile View

The profile view is typically located in the lower left area of the sheet. The profile view must include a background grid using the same horizontal scale that was used for the plan view and a vertical scale of 1” = 10’ (typical).

The profile view on the BHRS is often created by referencing the CADD file that was used to create the bridge profile view for the Plan and Elevation sheet included in the Structures Plans. Do not display information and graphic data from the reference file that is not germane, such as labeling of the grade line and vertical curve data.

Include the following information in the profile view:

(1) Show stationing along the bottom of the background grid and horizontal grid line elevations along both sides.

(2) Display the proposed bridge, low member, piers, and approaches.

(3) Label the begin and end stations for the proposed structure and indicate the Bridge Number.

(4) Dimension and label the overall bridge length and the width of each span and approach.

(5) Label the abutment locations (e.g., toe of slope).

(6) Show the limits of abutment protection and label the protection type.

(7) For non-tidal crossings, indicate the Normal High Water (NHW) and Design Flood elevations. For tidal crossings, indicate the Mean High Water (MHW) and Design Flood Stage elevations.

(8) When practical, show the profile of the expected design scour (contraction and long-term scour along the entire unprotected cross section and the local scour at the intermediate piers/bents). Display local scour holes as beginning at the foundation element edges at the design scour depth and extending up at a 1:2 slope to meet the contraction or long-term scour profile.

906.4 Location Map and Drainage Area

The location map is typically located in the upper right area of the sheet. When practicable, use a scale so that the entire drainage area for the proposed structure is shown.

Any suitable graphics file may be used to create the map. A common source is the county maps in MicroStation (*.dgn) format or in portable document format (PDF) that can be

downloaded from the ***County General Highway Maps*** webpage. Place a north arrow on the right side of the map. Orient the map so the north arrow points toward the top of the sheet.

Flag and label the proposed bridge location as "Proposed Bridge". Provide a Project Location URL of the bridge location using the Work Program GIS. Create the full URL using a set string, with the first seven digits of the FPID number appended. For example, FPID number 217932-1-52-01 would display as: ***https://owpbstandardmap.fdot.gov/?query=WorkProgram_Tbl15_Dissolved_2004,itemseg,2179321***.

Optional: Convert the full URL to a condensed URL using ***https://tinyurl.com/app/*** (or equivalent). The converted URL displays as ***https://tinyurl.com/367v2589***.

Flag and label bridge structures located immediately upstream and downstream that affect the hydraulics of the proposed structure.

Display the drainage area boundaries using a very heavy dashed line, with the area (in acres or square miles) shown within the boundary.

906.5 Bridge Hydraulic Data Table

The Bridge Hydraulic Data Table consists of five sections:

(1) Existing and Proposed Structures

(2) Hydraulic Design Data

(3) Hydraulic Recommendations

(4) Scour Predictions

(5) Remarks

906.5.1 Existing and Proposed Structures

Provide information on existing and proposed structures in the following table:

Table 906.5.1 Existing Structures

(REFERENCE)		EXISTING STRUCTURES (1)	(2)	(3)	(4)	PROPOSED STRUCTURE
FOUNDATION	(1)					
OVERALL LENGTH (ft)	(2)					
SPAN LENGTH (ft)	(3)					
TYPE CONSTRUCTION	(4)					
AREA OF OPENING @ D.F. (sf)	(5)					
ELEV. LOW MEMBER (ft)	(6)					
ELEV. LOW MEMBER (ft)	(7)					

NOTES: Existing Structures - (1) structure being replaced or modified. (2), (3), and (4) are immediate upstream and downstream structures that affect the hydraulics of the proposed structure.

(1) Foundation: Describe the type of foundation (e.g., timber piles, concrete piles).

(2) Overall Length (feet): Provide the total length of the structure. The length is measured from the top of the abutment. Use the total length shown in the final plans for the proposed structure.

(3) Span Length (feet): Provide the length of the main span of the structure.

(4) Type of Construction: Describe the construction material(s) used for the structure (e.g., steel, concrete, steel and concrete).

(5) Area of Opening (feet^2) @ D.F.: Provide the area of opening below the design flood elevation at the bridge section. Subtract the pile area when the pile area is significant.

(6) Bridge Width (feet): Provide the distance from outside rail to outside rail.

(7) Elevation of Low Member (feet): Provide the elevation of the lowest point along the low member of the structure.

906.5.2 Hydraulic Design Data

Provide hydraulic design data for the proposed structure in the following table:

Table 906.5.2 Hydraulic Design Data

HYDRAULIC DESIGN DATA

The hydraulic data shown in this table indicate the flood discharges and water surface elevations which may be anticipated in any given year.
Engineering judgement and assumptions are necessary to determine this data with no assurance of precision.
All water surface elevations are based on vertical datum of _____ (1)

WATER SURFACE ELEVATIONS: (2) N.H.W. (Non-Tidal) _____ M.H.W. (Tidal) _____
CONTROL (Non-Tidal) _____ M.L.W. (Tidal) _____

SEA LEVEL RISE: (3) _____

FLOOD DATA:		MAX EVENT OF RECORD	DESIGN FLOOD	BASE FLOOD	OVERTOPPING	GREATEST FLOOD
STAGE ELEV. NAVD (ft)	(4)					
DISCHARGE (cfs)	(5)					
AVERAGE VELOCITY (f/s)	(6)					
EXCEEDANCE PROB. (%)	(7)					
FREQUENCY (yr.)	(8)					

NOTES:
Sea level rise is that expected over the target service life of the bridge.
Max. Event of Record: Maximum event recorded based on historical information (if available).
Design Flood: Utilized to assure a desired level of hydraulic performance.
Base Flood: mHas a 1% chance of being exceeded in any given year (100 year frequency).
Overtopping/Greatest Flood: Only show data for event with lower return period.
Overtopping: Causes flow over the highway, watershed divide, or thru relief structures.
Greatest Flood: The most severe that can be predicted where overtopping is not practicable.

(1) **Vertical Datum:** Provide the vertical datum of the water surface elevations.

(2) **Water Surface Elevations (feet):** Provide the elevations of the following water surfaces at the bridge section, when applicable:

(a) N.H.W. (Non-Tidal): The Normal High Water elevation applicable only to non-tidal areas.

(b) CONTROL (Non-Tidal): The water surface elevation controlled by the operation of pump stations, dams, or other hydraulic structures. This applies only to non-tidal areas.

(c) M.H.W. (Tidal): The Mean High Water elevation applicable only to tidal areas.

(d) M.L.W. (Tidal): The Mean Low Water elevation applicable only to tidal areas.

(3) **Sea Level Rise (feet):** Provide the projected sea level rise over the target service life of the bridge that was used for design.

(4) **Stage Elevation (feet):** For freshwater flow, provide the stage elevation (NAVD 88 or NGVD 29) using data from the hydraulic model at the approach section. For tidal flow, use the maximum elevation during the flood or ebb storm surge at the bridge. Add a remark that the stage, discharge, and velocity described in the flood data do not occur at the same time.

(5) **Discharge (cfs):** For freshwater flow, provide the total discharge using data from the simulations for the design flood, base flood, overtopping flood, and/or greatest flood. For tidal flow, use the maximum discharge during the flood or ebb storm surge at the bridge. Add a remark that the stage, discharge, and velocity described in the flood data do not occur at the same time.

(6) **Average Velocity (fps):** For freshwater flow, provide the average velocity using data from the simulations for the design flood, base flood, overtopping flood, and/or greatest flood. For tidal flow, use the maximum velocity during the flood or ebb storm surge at the bridge.

(7) **Exceedance Probability (%):** Provide the probability that the conditions will be exceeded. Probability is determined as 100% times unity over the return interval (e.g., 100%*(1/100) = 1%).

(8) **Frequency (year):** Provide the return period in years.

906.5.3 Scour Predictions

Provide scour predictions for the proposed structure in the following table:

Table 906.5.3 Scour Predictions for Proposed Structure

SCOUR PREDICTIONS FOR PROPOSED STRUCTURE				
(1) PIER INFORMATION		(2) TOTAL SCOUR ELEVATION (FT)		
NUMBERS	SIZE AND TYPE	LONG TERM SCOUR ELEVATION	WORST CASE < 100 yr. FREQ. (yr.) _____	WORST CASE < 500 yr. FREQ. (yr.) _____
_____	_____	_____	_____	_____
_____	_____	_____	_____	_____
_____	_____	_____	_____	_____

(1) Pier Information: Provide the following pier information for the proposed structure:

(a) Numbers: Pier number(s) that correspond to the pier size, type, and scour elevations.

(b) Size and Type: Pier size and type that produce the greatest scour. If necessary, place a reference to the appropriate details of the bridge plans for clarity.

(2) Total Scour Elevation (feet): Provide the following scour information for the proposed structure:

(a) Long-Term Scour Elevation: Applicable only to structures required to meet extreme event vessel collision load. Place “N/A” when not applicable. Refer to Chapter 4 of the Drainage Design Guide for additional information on long-term scour.

(b) Worst-Case (<100-year) Scour Elevation: The predicted total scour elevation for the worst-case scour condition up through the scour design flood frequency. This includes aggradation or degradation, channel migration, local scour (pier and abutment), and contraction scour.

(c) Worst-Case (<500-year) Scour Elevation: The predicted total scour elevation for the worst-case scour condition up through the scour design check flood frequency. This includes aggradation or degradation, channel migration, local scour (pier and abutment), and contraction scour.

906.5.4 Hydraulic Recommendations

Provide hydraulic recommendations in the following table:

Table 906.5.4 Hydraulic Recommendations

HYDRAULIC RECOMMENDATIONS

BEGIN BRIDGE STATION _____ END BRIDGE STATION _____ SKEW ANGLE BETWEEN BRIDGE AND ROADWAY _____

CLEARANCE PROVIDED (ft): **(1)** NAV: HORIZ. _____ VERT. _____ ABOVE EL. _____ DRIFT: HORIZ. _____ VERT. _____ ABOVE EL. _____

MINIMUM CLEARANCE (ft): **(2)** NAV: HORIZ. _____ VERT. _____ ABOVE EL. _____ DRIFT: HORIZ. _____ VERT. _____ ABOVE EL. _____

ABUTMENTS : **(3)**

	BEGIN BRIDGE	END BRIDGE
RUBBLE GRADE:		
SLOPE:		
BURIED OR NON-BURIED HORIZ. TOE:		
TOE HORIZ. DISTANCE (ft):		
LIMIT OF PROTECTION (ft):		

DECK DRAINAGE: **(4)** _____

(1) Clearance Provided (feet): Provide the following navigational and drift clearance information for the proposed structure:

(a) Navigation Horizontal (feet): The actual horizontal navigation clearance provided between fenders or piers.

(b) Navigation Vertical (feet): The actual vertical navigational clearance provided between fenders or piers.

(c) Navigation Above Elevation: For freshwater flow, use the elevation at the NHW elevation or control elevation. For tidal flow, use the elevation at MHW.

(d) Drift Horizontal (feet): The actual minimum horizontal clearance provided.

(e) Drift Vertical (feet): The actual minimum vertical clearance provided above the design flood elevation.

(f) Drift Above Elevation: The design flood elevation used to determine Drift Vertical clearance. For freshwater flow, use the NHW elevation or control elevation. For tidal flow, use the maximum stage associated with an average velocity of 3.3 fps through the bridge section during the flood or ebb for the storm surge for the design flood. If the maximum velocity due to the storm surge is less than 3.3 fps, use the stage associated with the maximum velocity through the bridge section.

If either of these stages causes the profile to be higher than the profile of the bridge approaches, discuss having less drift clearance and designing the structure for debris loads with the District Structures Design Office.

(2) Minimum Clearance (feet): Vertical and horizontal clearances are subject to regulatory agency requirements (e.g., Coast Guard, Corps of Engineers, Water Management Districts) and may exceed Department requirements. Provide the following minimum navigational and drift clearance information for the proposed structure:

(a) Navigation Horizontal (feet): Provide a minimum 10-foot horizontal navigation clearance, or the minimum clearance specified by regulatory agency.

(b) Navigation Vertical (feet): See ***FDM 260.8*** for information on the minimum vertical clearance for navigational purposes.

(c) Drift Horizontal and Vertical: Consistent with debris conveyance needs and structure economy where no boat traffic is anticipated.

(3) Provide the following information for the begin and end bridge abutments:

(a) Rubble Grade: Provide the type of rubble to be constructed at the begin and end bridge abutments.

(b) Slope: Provide the slope of the abutments at the begin and end bridge.

(1) Non-buried or Buried Horizontal Toe: Indicate whether the toe of the abutment will be non-buried or buried when extended horizontally from the bridge. The horizontal and vertical extents should be determined using the design guidelines contained in FHWA's ***HEC-23***.

(c) Toe Horizontal Distance (feet): Provide the horizontal extent of the rubble protection measured from the toe of the abutment. Refer to the Drainage Design Guide for additional information.

(d) Limit of Protection (feet): Provide the limits of protection measured parallel to the stationing from the edge of the rubble protection to the begin or end bridge station. If the distance is different on each side, indicate both distances with their corresponding sides.

(4) Deck Drainage: Describe how the rainfall runoff is collected and conveyed from the proposed structure deck (e.g., scuppers, storm drain system).

906.5.5 Remarks

Provide any pertinent remarks for the proposed structure in the following table:

Table 906.5.5 Remarks

REMARKS
(1) ELEVATIONS ARE BASED ON NORTH AMERICAN VERTICAL DATUM 1988 (NAVD88)

Include information for the 100-year design wave crest elevation in feet, including the storm surge elevation and wind setup. The vertical clearance of the superstructure must be a minimum of 1 foot above the wave crest elevation.

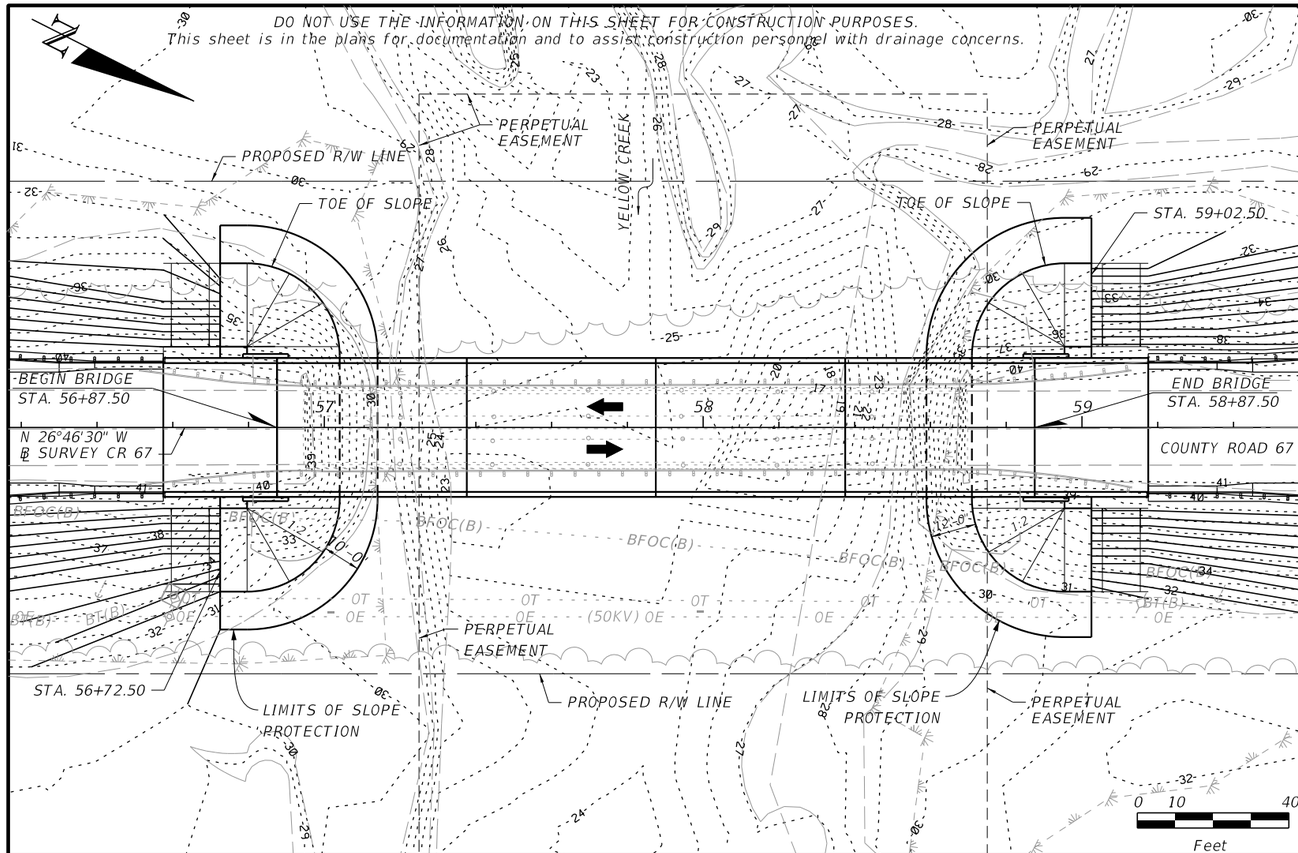

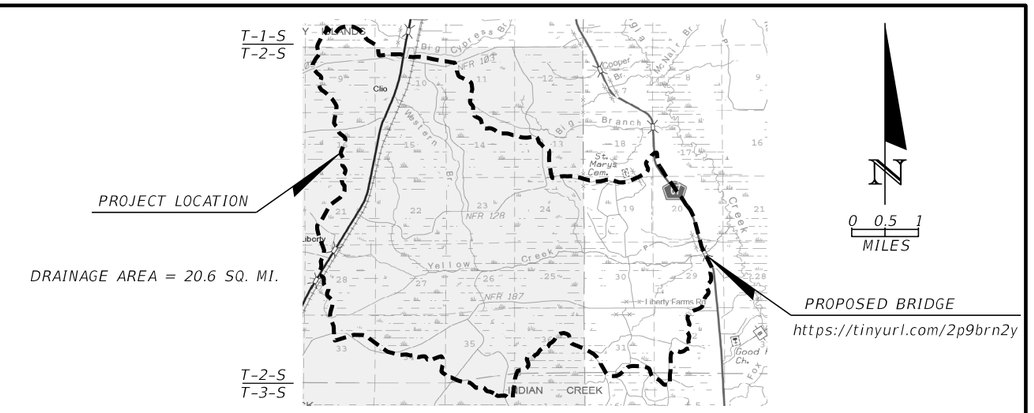

(REFERENCE)	EXISTING STRUCTURES (1)	(2)	(3)	(4)	PROPOSED STRUCTURE
FOUNDATION	TIMBER PILE				24" **
OVERALL LENGTH (ft)	175'				200'
SPAN LENGTH (ft)	25'				50'
TYPE CONSTRUCTION	STEEL				CONCRETE
AREA OF OPENING @D.F. (sf)	1207.31				1343.41
BRIDGE WIDTH	20'				36'-8"
ELEV. LOW MEMBER (ft)	39.3				37.75

NOTES: Existing Structures - (1) structure being replaced or modified. (2), (3), and (4) are immediate upstream and downstream structures that affect the hydraulics of the proposed structure.

HYDRAULIC DESIGN DATA

WATER SURFACE ELEVATIONS:				
N.H.W. (Non-Tidal)	24.6	M.H.W. (Tidal)	N/A	
CONTROL (Non-Tidal)	N/A	M.L.W. (Tidal)	N/A	

FLOOD DATA:	MAX EVENT OF RECORD	DESIGN FLOOD	BASE FLOOD	OVERTOPPING	GREATEST FLOOD
STAGE ELEV. NAVD (ft)	36.36 (REM. #2)	34.57* / 31.64	35.26* / 32.00		37.24* / 32.88
DISCHARGE (cfs)	UNKNOWN	1915	2204		2964
AVERAGE VELOCITY (f/s)	UNKNOWN	1.52* / 2.64	1.59* / 2.81		1.68* / 3.18
EXCEEDANCE PROB. (%)	UNKNOWN	2%	1%		0.2%
FREQUENCY (yr.)	UNKNOWN	50	100		500

NOTES: Max. Event of Record: Maximum event recorded based on historical information (if available).
Design Flood: Utilized to assure a desired level of hydraulic performance.
Base Flood: Has a 1% chance of being exceeded in any given year (100 year frequency).
Overtopping/Greatest Flood: Only show data for event with lower return period.
Overtopping: Causes flow over the highway, watershed divide, or thru relief structures.
Greatest flood: The most severe that can be predicted where overtopping is not practicable.

SCOUR PREDICTIONS FOR PROPOSED STRUCTURE DESCRIBED ABOVE	(1) PIER INFORMATION		(2) TOTAL SCOUR ELEVATION (FT)		
	NUMBERS	SIZE AND TYPE	LONG TERM SCOUR ELEVATION	WORST CASE<100 yr FREQ. 100 YR.	WORST CASE<500 yr. FREQ. 500 YR.
	2 - 3	24" SQ. PILES	N/A	20.10	19.90
	4	24" SQ. PILES	N/A	14.96	14.76

HYDRAULIC RECOMMENDATIONS

BEGIN BRIDGE STA. 56+87.50 END BRIDGE STA. 58+87.50 SKEW ANGLE BETWEEN BRIDGE AND ROADWAY 0°

CLEARANCE PROVIDED (ft):	NAV: HORIZ. 50	NAV. VERT. 13.2	NAV. ABOVE EL. 24.6
	DRIFT: HORIZ. 50	DRIFT: VERT. 3.2	DRIFT: ABOVE EL. 34.57
MINIMUM CLEARANCE (ft):	NAV: HORIZ. 10	NAV. VERT. 6	NAV. ABOVE EL. 24.6
	DRIFT: HORIZ. 10	DRIFT: VERT. 2	DRIFT: ABOVE EL. 34.57

ABUTMENTS :	BEGIN BRIDGE	END BRIDGE
RUBBLE GRADE:	BANK AND SHORE PROTECTION	BANK AND SHORE PROTECTION
SLOPE:	1V:2H	1V:2H
BURIED OR NON-BURIED HORIZ. TOE:	NON-BURIED	NON-BURIED
TOE HORIZ. DISTANCE (ft):	10'	12'
LIMIT OF PROTECTION (ft):	53.33 LT & RT	LT & RT

DECK DRAINAGE: SPREAD CONTAINED IN SHOULDER, DRAINED VIA 4" SCUPPERS.

REMARKS

1. VALUE INCLUDES BACKWATER EFFECTS FROM PEAK STAGES OF TELOGIA CREEK
2. AS REPORTED BY J.T. HATHAWAY, LIBERTY COUNTY ROAD SUPERINTENDENT.

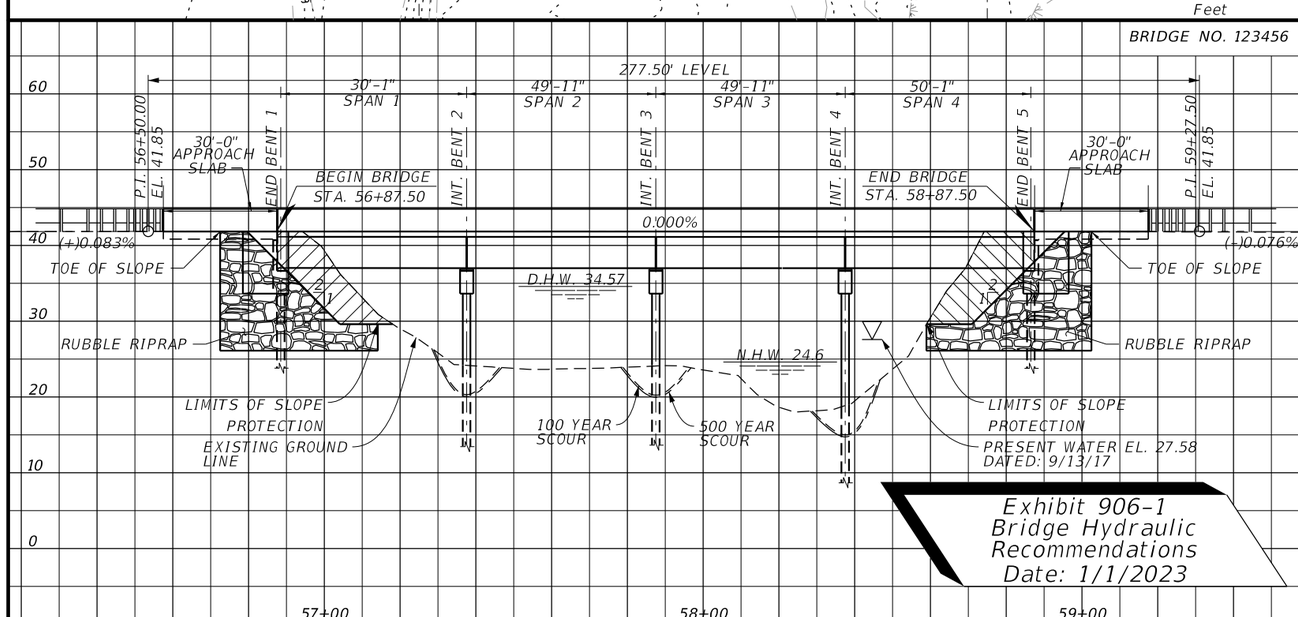

Exhibit 906-1
Bridge Hydraulic Recommendations
Date: 1/1/2023

REVISIONS					
DATE	BY	DESCRIPTION	DATE	BY	DESCRIPTION

LUKE S. WALKER, P.E.
LICENSE NUMBER: 99991
ROADWAY ENGINEERS, INC.
123 MAIN STREET
TALLAHASSEE, FL 32301

DRAWN BY: BTW 06-22
CHECKED BY: LSW 06-22
DESIGNED BY: LSW 06-22
CHECKED BY: VGD 06-22

STATE OF FLORIDA
DEPARTMENT OF TRANSPORTATION

ROAD NO.	COUNTY	FINANCIAL PROJECT ID
CR 67	LIBERTY	123456-1-52-01

SHEET TITLE: BRIDGE HYDRAULIC RECOMMENDATIONS

PROJECT NAME: BRIDGE OVER YELLOW CREEK

REF. DWG. NO.

SHEET NO.

THE OFFICIAL RECORD OF THIS SHEET IS THE ELECTRONIC FILE DIGITALLY SIGNED AND SEALED UNDER RULE 61G15-23.004, F.A.C.

10/27/2022 4:02:31 PM PS972BW
C:\Worksets\FDOT\12345615201\Structures\B1BRIDGEHYDR001.DGN

907 RFP Concept Plans

907.1 General

This chapter provides minimum requirements for the development of Request for Proposal (RFP) Concept Plans that are included as an Attachment to RFP. The requirements of this chapter must be met for Adjusted Score Design-Build Projects and Low Bid Design-Build Projects.

The requirements provided in the ***FDM 900 Series*** and the ***CADD Manual*** form the basis for format and assembly of the plans.

Additional information regarding the Design-Build contracting method can be found at: ***https://www.fdot.gov/construction/designbuild/design-build.shtm***

907.2 Index of RFP Concept Plans

Place an index of sheets on the left side of the Key Sheet. Assemble the RFP Concept Plans in the following order:

(1) Key Sheet (see ***Exhibit 907-1***)

(2) Drainage Map

(3) Typical Section Details

(4) Model Management

(5) Project Control

(6) Roadway Plan-Profile

(7) Stormwater Facilities

(8) Soil Survey

(9) Report of Core Borings

(10) Selective Clearing and Grubbing

(11) Mitigation Plan

(12) Traffic Plan (S&PM, Signalization, ITS, Lighting)

(13) Landscape Plan

(14) Architectural Plan

(15) Structures Plan

(16) Utility Work by Highway Contractor

907.3 RFP Concept Plans Development

Table 907.3.1 provides the minimum information that is to be shown on each sheet of the RFP Concept Plans. Written approval is required from the District Construction Engineer and the Chief Engineer when deviating from the minimum information set forth in ***Table 907.3.1***.

Consider exceeding the minimum level of completion for higher risk elements.

Table 907.3.1 RFP Concept Plans Development

SHEET / CONTENT
KEY SHEET
Financial Project IDs
(Federal Funds) notation, if applicable
County Name and State Road
Fiscal Year and sheet number
Consultant's name, address, and contract number, if applicable
Department Project Manager's name
List of Component Plan Sets
Project Location URL and Work Limits
Index of Sheets including Developmental Standard Plans (when required in RFP)
Contract plans and component plans list (lead component only)
DRAINAGE MAP
Photographic (aerial) base map
Centerline of construction or baseline of survey and stationing
North arrow and scale
Street names and R/W lines
Begin & end of project stations
Begin & end of bridges stations
Drainage areas and flow directions
Drainage divides and ground elevations
Highwater information
Existing structures and pipes with relevant information
State, federal, and county highway numbers
Label existing waterbodies (e.g., lakes, rivers)
Proposed drainage structures with structure numbers
Proposed cross drains with pipe sizes and structure numbers
Flow arrows along proposed ditches
Retention and detention ponds, pond number and area size
Bridges and bridge culverts with begin & end stations
Flood Data Summary (if applicable)
TYPICAL SECTION DETAILS
Project-specific details
MODEL MANAGEMENT
Proposed roadway design and R/W Lines
Baselines
Model information
PROJECT CONTROL
Benchmarks, Reference Points, Control Points

Table 907.3.1 RFP Concept Plans Development (cont.)

SHEET / CONTENT
ROADWAY PLAN-PROFILE
Plan View
Existing topography including utilities
North arrow and scale
Centerline of construction or baseline of survey
Equations and exceptions
Curve data
Existing R/W lines
Begin & end project stations
Begin & end bridge stations
Proposed drainage structures with pipes
Proposed R/W lines
Proposed side drain pipes
Proposed geometrics
Limits of wetlands
Profile View
Scale
Equations
Existing ground line
Begin & end project stations
Begin & end bridge stations
Highwater elevations
Final profile grades and vertical curve data
Nonstandard superelevation transition details
Highwater elevations

Table 907.3.1 RFP Concept Plans Development (cont.)

SHEET / CONTENT
STORMWATER FACILITIES
North arrow and scale
Centerline of construction or baseline of survey
Existing topography, drainage structures, and utilities
R/W lines
Soil boring locations
Fence and gate locations
Drainage structures with structure and pipe labeling
Stormwater facility delineation with side slopes, dimensions, and elevations
Stormwater facility section views
Outlet structure details and notes
100-year floodplain boundaries and elevations
Contamination sites, delineated wetlands, and sinkholes and depressions
SOIL SURVEY & REPORT OF CORE BORINGS
Soil data

Table 907.3.1 RFP Concept Plans Development (cont.)

SHEET / CONTENT
TEMPORARY TRAFFIC CONTROL PLAN
Typical section for each phase
Description of the phasing sequence and work involved
Other worksheets as necessary to convey concept and scope
Detour plans with off-site detour routing
UTILITY ADJUSTMENTS
All existing utilities highlighted with dispositions
Develop conflict matrix
General Notes sheet including any work restrictions stipulated by UAOs and limitations on relocations, protections, or adjustments
Verified utility locations (SUE data)
SELECTIVE CLEARING AND GRUBBING
Existing vegetation to be protected, relocated, or removed
Project-specific notes and details
MITIGATION PLANS
Project-specific
TRAFFIC PLAN
North arrow and scale
Basic roadway geometrics
Begin & end stations and exceptions
Station equations
Conflicting utilities, lighting, and drainage
Guide sign locations with panel legends depicted
Pavement markings including stop bars and crosswalks
Signal pole locations shown at correct station location and offset
Signal head locations
ITS device locations shown at correct station location and offset
Light pole symbols shown at correct station location and offset
LANDSCAPE PLAN
Contents are project-specific
ARCHITECTURAL PLAN
Contents are project-specific

Table 907.3.1 RFP Concept Plans Development (cont.)

SHEET / CONTENT
STRUCTURES PLAN
Plan and Elevation
Substructures: For end bents, piers, or intermediate bents, show substructure elements and sizes including all deviations from the typical dimensions, foundation type including element spacing and the arrangement of piles or drilled shafts
Superstructure: Include cross section showing lanes, shoulders, railings, slab thickness, beam type and spacing and web depth for steel girders. If applicable, show geometric changes in shapes of various components. Also show construction phases and maintenance of traffic data, outline of the existing structure and portions to be removed, and utilities (existing and proposed as available)
Retaining walls: 1) Submit preliminary control drawings when proprietary or standard cast-in-place walls are proposed 2) Control drawings for critical temporary walls
Bridge Hydraulics Recommendation Sheet
Report of core borings
Proposed construction sequence and methods indicate construction easements and methods of construction access
Aesthetic details
Post-tensioning layouts
Foundation layouts and pile/shaft data table
Sidewalks: If provided, show preliminary accessible elements
Special details required by the Engineer or details which are not normally used on Department projects
UTILITY WORK BY HIGHWAY CONTRACTOR
Key Sheet
Mainline plan-profile showing proposed utility horizontal and vertical locations
Summary of Quantities Sheet

907.4 RFP Concept Plans Delivery

After the RFP Concept Plans have been reviewed, District comments addressed, and plans updated, submit the following:

(1) Final RFP Concept Plans

(2) CADD.zip file

(3) Typical Section Package

(4) Toll Siting Technical Memorandum in accordance with the GTR, when applicable

INDEX OF RFP CONCEPT PLANS

SHEET NO.	SHEET DESCRIPTION
1	KEY SHEET
2	TYPICAL SECTION DETAILS
3	MODEL MANAGEMENT
4 - 5	PROJECT CONTROL
6	ROADWAY PLAN-PROFILE
7 - 9	STORMWATER FACILITIES
10	DRAINAGE MAP
11	SOIL SURVEY
12 - 14	REPORT OF CORE BORINGS
15 - 16	SELECTIVE CLEARING AND GRUBBING
17	MITIGATION PLAN
18	TRAFFIC PLAN (S&PM, SIGNALIZATION, ITS, LIGHTING)
19 - 26	LANDSCAPING PLAN
27 - 32	ARCHITECTURAL PLAN
33 - 36	STRUCTURES PLAN
37 - 40	UTILITY WORK BY HIGHWAY CONTRACTOR

STATE OF FLORIDA

DEPARTMENT OF TRANSPORTATION

RFP CONCEPT PLANS

FINANCIAL PROJECT ID 123456-1-52-01

(FEDERAL FUNDS)

BAY COUNTY (46080)

STATE ROAD NO. 22 (WEWA HWY)

ADD LANES AND RECONSTRUCT FROM CRIM BLVD. TO KURT ST.

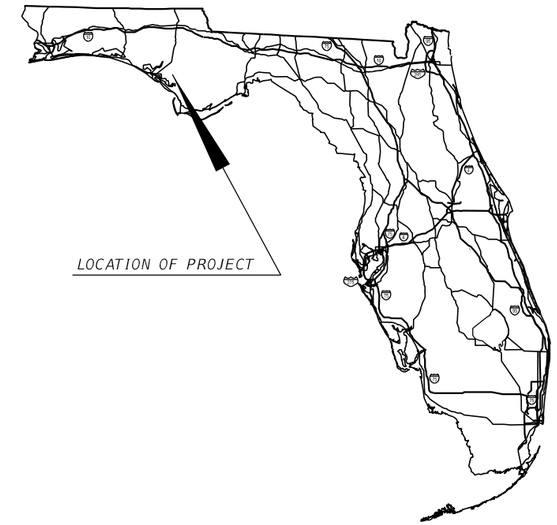

PROJECT LOCATION URL:	https://tinyurl.com/367v2589
PROJECT LIMITS:	BEGIN MP 1.560 - END MP 7.560
EXCEPTIONS:	NONE
BRIDGE LIMITS:	BR#469998 MP 3.422 - MP 3.471
RAILROAD CROSSING:	NONE

Exhibit 907-1
RFP Concept Plans
Date: 1/30/2023

RFP CONCEPT PLANS
DEVELOPED BY:

LUKE S. WALKER, P.E.
P.E. LICENSE NUMBER 99991
ROADWAY ENGINEERS, INC.
123 MAIN STREET
TALLAHASSEE, FL 32301
CONTRACT NO.: C0000
VENDOR NO.: 99-999999

FDOT PROJECT MANAGER:

BEN K. UWAIBI, P.E.

FISCAL YEAR	SHEET NO.
23	1

3/3/2023 12:04:11 PM PS972BW
C:\Worksets\FDOT\123456152O1\Roadway\KEYSRD01.dgn

908 Stormwater Runoff Control Concept Worksheet

908.1 General

The Stormwater Runoff Control Concept (SRCC) worksheet is provided to the contractor to facilitate contractor compliance with ***Standard Specifications, Section 104***. These sheets may also be used to convey supplemental information during the plans phase review process. These sheets are not to be placed within the Contract Plans Set. Signing and sealing these sheets is not required.

Enter a PDF of these sheets into the “Permits” Project CADD folder. The worksheet may be entered into the Electronic Review Comments (ERC) system with the Phase III and Phase IV plans submittals for review by District MS4 permit coordinators and District construction staff.

See ***Exhibit 908-1*** for an example of a SRCC Worksheet. This exhibit is for illustrative purposes only. It is not meant to establish criteria, to inform temporary erosion or sediment control design decisions, or to determine pay item quantities.

908.2 Sheet Set Up

Use the following horizontal scales:

	Standard	Optional
Curbed Roadways	1” = 40’	1” = 50’
Flush-shoulder Roadways	1” = 50’	1” = 100’

908.3 Required Information

As illustrated in ***Exhibit 908-1***, the worksheet must display the following:

(1) Centerline or baseline of construction

(2) R/W limits

(3) Limits of construction activities

(4) Overland flow drainage patterns

(5) Areas of soil disturbance

(6) Areas which will not be disturbed

(7) Locations of major structural and nonstructural controls

(8) Locations of areas where stabilization operations are expected to occur

(9) Locations of surface waters and wetlands

(10) Locations of project discharge (to surface waters or MS4)

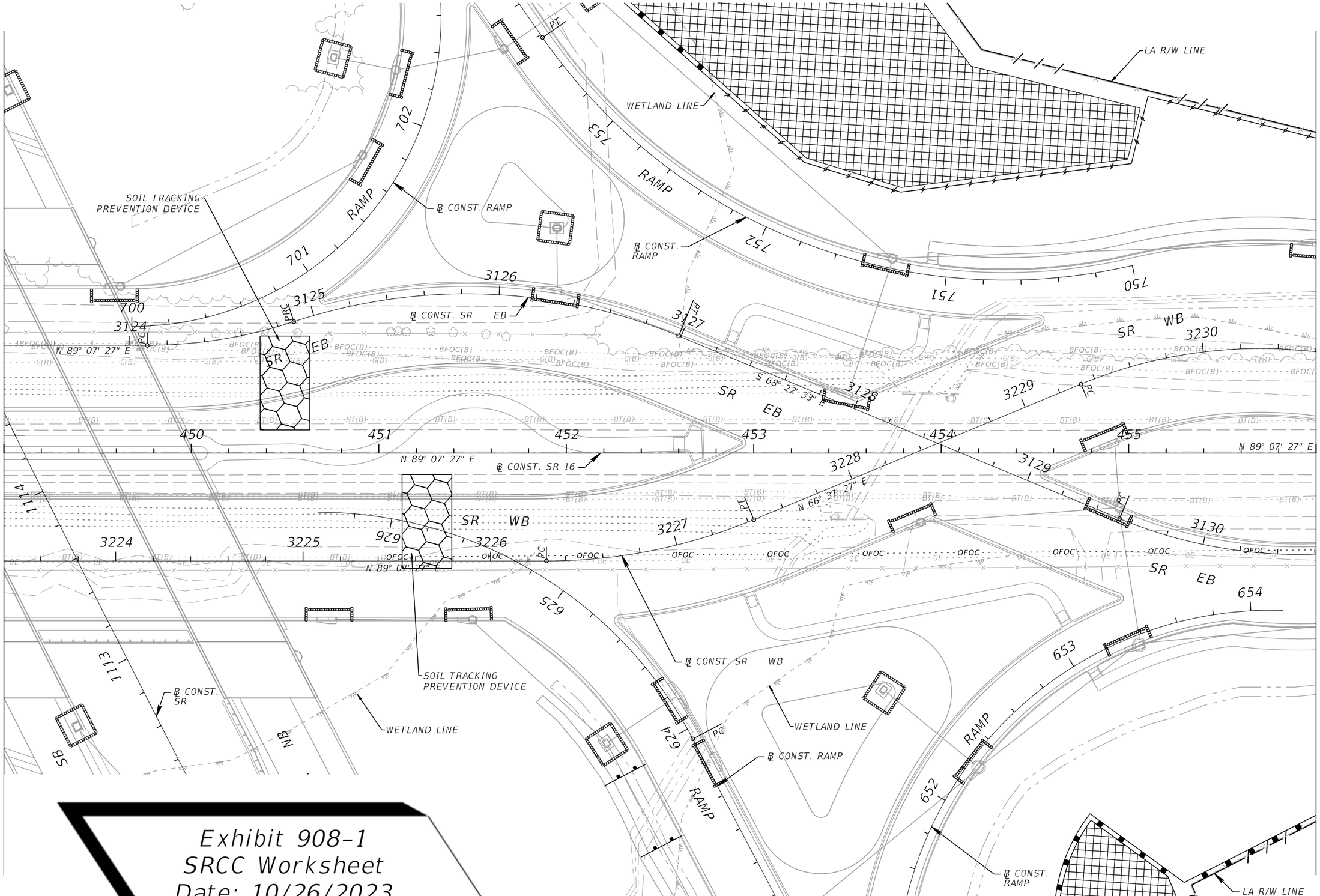

Exhibit 908-1
SRCC Worksheet
Date: 10/26/2023

910 Key Sheet and Signature Sheet

910.1 General

The Key Sheet is the first sheet of each component of the Contract Plans Set, e.g., Roadway Plans, Signing and Pavement Marking Plans, Structures Plans. The Signature Sheet, when required, is typically the second sheet. Produce these sheets using FDOT CADD Software.

Projects are to be delivered as individual signed and sealed components of the Contract Plans Set.

910.2 Key Sheet

All Key Sheets, e.g., lead and components, describe the project and the contents of the Contract Plans Set.

The top center of all Key Sheets must display “STATE OF FLORIDA, DEPARTMENT OF TRANSPORTATION” followed by the title of the component e.g., “ROADWAY PLANS”, “LIGHTING PLANS”, “LANDSCAPE PLANS”. See ***FDM 910.2.5*** for a full list of allowable component names.

See ***Exhibit 910-1*** for an example of a Lead Key Sheet (typically for the Roadway Plans).

See ***Exhibit 910-2*** for an example of a Lead Key Sheet with revisions.

See ***Exhibit 910-3*** for an example of a component Key Sheet.

910.2.1 Work Program Data

Work Program data is placed directly below the component designation, and includes the Financial Project ID, the federal funds designation, the county name and roadway section number, and the state road number with local name.

Financial Project ID

The Financial Project ID is the main number identifying each individual project within the Work Program. On projects which have one Contract Plans Set, but multiple Financial Project IDs, list all the Financial Project IDs on all Key Sheets. Show only the lead Financial Project ID in the title block on all other plan sheets.

Federal Funds

When any of the Financial Project IDs listed on the Key Sheet involve federal funds, display the words "(Federal Funds)" directly under the list of Financial Project IDs.

Do not display the words "(Federal Funds)" for projects that use only state funds, even when strung with a project that uses federal funds.

County Name and State Roadway Section Number

Place the county name and (in parentheses) the roadway section number directly under the Financial Project ID(s) or "(Federal Funds)". The roadway section number can be found with the ***Straight Line Diagrams (SLD)***. On projects which involve multiple counties, or multiple roadways, list all counties and associated roadway section numbers.

State Road Number and Project Description

Place the state road number and (in parentheses) the local road name directly under the county name and roadway section number. Under the state road number, display a general description of the work type and limits; e.g., "RRR from Crim Boulevard to Kurt Street".

910.2.2 Project Work Limits and Features

Show the project work limits and features directly below the project description. Show this data in mileposts (MP), correct to three decimals. A box is typically used as shown in ***Exhibit 910-1***, and includes the following required information:

(1) Provide a Project Location URL. The intent of the project location link is to provide a visual of the project location using the Work Program GIS. Create the full URL using a set string, with the first seven digits of the FPID number appended. For example, FPID number ***217932-1-52-01*** would display the following URL: ***https://owpbstandardmap.fdot.gov/?query=WorkProgram_Tbl15_Dissolved_2004,itemseg,2179321***.

Optional: Convert the full URL to a condensed URL using ***https://tinyurl.com/app/*** (or equivalent). The converted URL displays as ***https://tinyurl.com/367v2589***.

(2) Begin and end project MP limits for each state road included in the project. Include Turnpike mile marker (MM) limits for Turnpike projects.

(3) Begin and end MP limits of bridge structures, including the structure number(s). Do not include bridge culverts. When an existing bridge structure is being replaced, indicate the proposed structure and not the existing.

(4) Begin and end MP limits for each Project Exception (i.e., excluded roadway limits from project).

(5) Centerline MP for each railroad crossing within the limits of construction, including the name of railroad and the DOT/AAR crossing number.

The project work limits must be consistent with the milepost information entered into the Work Program Administration (WPA) system during final design. See ***FDM 111.2.1*** for information on updating the WPA system.

910.2.3 Project Location

Show a small-scale state map at the upper right portion of all Key Sheets and indicate with leader line the general location of the project within the state.

910.2.4 Construction Contract Number and Fiscal Year

Provide the Construction Contract Number, the fiscal year, and the sheet number in the block in the lower right corner of the sheet. Number the Key Sheet of each component of the Contract Plans Set as the first sheet of that component.

The Construction Contract Number is typically issued late in the design process and may remain blank until provided. Show the fiscal year for which the Letting is scheduled in the "Fiscal Year" box; i.e., enter "24" in the box for a project that has a Letting date during the July 2023 to June 2024 fiscal year.

910.2.5 Contract Plans Set Components

The Contract Plans Set is typically assembled as component plans that are associated with primary work types. List all component plans included in the Contract Plans Set in the upper left corner of the Key Sheet in the following order:

(1) Roadway
(2) Signing and Pavement Marking
(3) Signalization
(4) Intelligent Transportation Systems
(5) Lighting
(6) Landscape
(7) Architectural
(8) Structures
(9) Toll Facilities
(10) Utility Work by Highway Contractor Plans

No alterations or modifications to the component names listed above are allowed.

Roadway Plans are most often the lead component of the Contract Plans Set; however, another component may become the lead component when there are no Roadway Plans. Details and plan sheets typically found within the Roadway Plans, such as Temporary Traffic Control Plans, may be included in the lead component plans and numbered consecutively.

Utility Work by Highway Contractor Plans have a separate Financial Project ID and are typically treated as a strung project (see ***FDM 910.2.10***). When utility work is minimal, Utility Work by Highway Contractor Plans may be included as component plans within the Contract Plans Set.

See the ***Structures Manual, Volume 2 – Structures Detailing Manual*** when Structures Plans become the lead component.

910.2.6 Index of Roadway Plans

Place the Index of Roadway Plans sheets on the left side of the Key Sheet below the list of component plans. Each component Key Sheet must include an index of the sheets included in that component.

Assemble Roadway Plans in the following order:

(1) Key Sheet
(2) Signature Sheet
(3) Drainage Map
(4) Typical Sections
(5) Typical Section Details
(6) Model Management
(7) Project Control
(8) General Notes
(9) Roadway Plan-Profile
(10) Traffic Monitoring Site
(11) Special Details
(12) Drainage Network Plan
(13) Drainage Network Profile
(14) Drainage Network Cross Sections
(15) Optional Materials Tabulation
(16) Drainage Special Details
(17) Soil Survey
(18) Report of Core Borings
(19) Roadway Cross Sections
(20) Verified Utility Locate
(21) Temporary Traffic Control Plan
(22) Utility Adjustments
(23) Selective Clearing and Grubbing
(24) Miscellaneous Structures

Do not place box culvert plan sheets in the Roadway Plans. Place these sheets in a Structure Plans component, even when there are no bridge plans.

910.2.6.1 Early Works

Plan sets may require insertion of sheets that were prepared early or prior to the design process. These sheets may be identified and numbered with the following prefixes:

(1) GR-# Soil Survey and Soil Boring Cross Sections or Report of Core Borings

(2) TR-# Tree Survey

(3) UTV-# Verified Utility Locate

When submitted as early works, list these sheets below the index of plan sheets, with an asterisk and a note as shown in ***Exhibit 910-1.***

No plan sheets other than those listed above are to be separated from the component plans.

910.2.7 Engineer of Record (EOR) and Project Manager

Place the following information on the right side of all Key Sheets in the order shown:

(1) The name and license number of the EOR and the name, address, and phone number of the engineering business or agency where the EOR is employed. Include the consultant contract number and vendor number when appropriate. For non-engineering licensed professionals, change the title to “Licensed Professional of Record” and include similar information that applies to their profession.

(2) The name of the Department’s Project Manager below the EOR information. Show only the Department’s Project Manager at this location, except for:

   (a) When plans are prepared by the Department, the name of the Department’s designer may be placed immediately below the name of the Department’s Project Manager.

   (b) When appropriate, the name of the GEC Project Manager may be placed immediately below the name of the Department’s Project Manager.

910.2.8 Governing Standards

Indicate the governing ***Standard Plans*** and ***Standard Specifications*** in the lower left corner of all Key Sheets as shown on ***Exhibit 910-1***.

For requirements of the Structures General Notes and inclusion of the relevant bridge related ***Standard Plans*** in the structures component plan set, see the ***Structures Detailing Manual***. For additional information on the ***Standard Plans*** and ***Standard Specifications***, see ***FDM 115***.

When ***Standard Plans Interim Revisions*** (***IRs***) are released, the engineer must determine if any ***IRs*** apply to the project and reference those applicable ***IRs*** as shown on ***Exhibit 910-1***.

910.2.8.1 Developmental Standard Plans

List ***Developmental Standard Plans*** to be included in the component plans below either the Index of Sheets or the early works note as shown on ***Exhibit 910-1***.

Insert ***Developmental Standard Plans*** sheets at the end of each applicable component plan set as applicable. When included in the Structures Plans component, insert ***Developmental Standard Plans*** sheets before existing bridge plans.

910.2.9 Revisions

For information on the process and requirements for completing plan revisions:

- See ***FDM 132*** for revisions prior to Letting
- See ***FDM 151*** for revisions during construction

Show a complete record of all revisions made to a component plans set on the correlating component Key Sheet under a “REVISIONS” header located in the bottom center of the sheet. For each revision, record the revision number, the sheet numbers, and the date of the revision. Show the unique numbered symbol that corresponds to the revision number on the Revision Memo and revised plan sheets.

Show revisions to any Key Sheet in the Key Sheet Revisions block placed to the right of the “REVISIONS” header. List the revision date and a brief description of the revision. The Key Sheet Revisions block is only used to record changes to the Key Sheet other than recorded revisions under the “REVISIONS” header.

Do not show the “REVISIONS” header or the Key Sheet Revisions block on the Key Sheet until needed.

910.2.10 Strung Projects

Contract Plans Sets that are independently prepared but are let in the same construction contract are referred to as strung projects. Show the strung project note only on the Lead Key Sheet for each project that is being strung together. The note is shown in the top right corner above the small-scale state map as shown in ***Exhibit 910-1***. The note must contain all Financial Project IDs (lead project first) being strung together, including project numbers without contract plans.

When a federally funded project is strung with a non-federal eligible (NFE) project, the federally funded project is often the lead project.

When a federally funded project is strung with a state funded project, the entire contract becomes federalized, i.e., both the state funded project and the federally funded project must comply with all applicable federal laws, rules, and regulations related to the federalized contract. Do not put "(Federal Funds)" on the Key Sheet of a state funded project that is being strung with a federal project, even though that project has become federalized.

910.3 Signature Sheet

The Signature Sheet defines a professional's area of responsibility for those portions of the document being digitally signed. The Signature Sheet shows the Digital Signature Appearance of the Professional(s) of Record.

When plans are signed and sealed by a single licensed professional, a signature block can be placed on the Key Sheet (in lieu of adding a Signature Sheet). A Signature Sheet is often needed when the plans are signed by more than one licensed professional, and/or when a BIM file manifest is required.

See ***Exhibit 910-4*** for an example of a Signature Sheet.

910.3.1 Title Block

The Signature Sheet title block must include the information for the licensed professional who is responsible for the creation and content of the sheet. Do not place the Official Record note along the right edge of this sheet.

See ***FDM 130*** for digital signing and sealing requirements.

910.3.2 Digital Signature Placement

By placing a digital signature on the Signature Sheet of a multi-sheet plan set, the licensed professional associates their professional signature with the entire plan set. The Signature Sheet provides a Statement of Responsibility delineating the extent of the professional's responsibility and identifying the specific sheets for which the professional is accepting responsibility.

910.3.2.1 Digital Signature Appearance

A Digital Signature Appearance is the visual representation of a Digital Signature applied to a document. The Digital Signature Appearance is composed of combinations of informational fields, e.g., dates or text, and other information. The Digital Signature Appearance must include the professional's name and the date and time of signing stamp.

910.3.2.2 Seal

The professional will include a representation of their Seal next to the Digital Signature Appearance. Seal representations are provided with the FDOT CADD Software. Each respective Board of Professional Regulation has enacted the requirements for the size and representation of a seal in their section of the Florida Administrative Code.

910.3.2.3 Statement of Responsibility

The Statement of Responsibility is used to define the licensed professional's limits of responsibility and any exculpatory language. Place this statement below the seal and Digital Signature Appearance and above the Index of Sheets. The Statement of Responsibility must indicate the applicable Rule of the Florida Administrative Code (F.A.C.).

910.3.3 Index of Sheets

List the plan sheets that the licensed professional is signing and sealing below the Statement of Responsibility. Exculpatory language should be included in cases where professionals share responsibility for content on any given sheet.

910.3.4 BIM File Manifest

The BIM file manifest table is placed below the Index of Sheets.

910.3.5 Revisions

A revision Signature Sheet is created when more than one licensed professional is required to sign and seal a revision package. The revision Signature Sheet is numbered using an alphabetic suffix e.g., 2A, 2B. Only the licensed professionals required to sign and seal the revision are to be included on the revision Signature Sheet.

See ***Exhibit 910-5*** for an example of a revision Signature Sheet.

THIS PROJECT TO BE LET TO CONTRACT
WITH FINANCIAL PROJECT ID(S):
123456-1-56-01, 123457-1-52-01, 123457-1-56-01

STATE OF FLORIDA
DEPARTMENT OF TRANSPORTATION

ROADWAY PLANS

FINANCIAL PROJECT ID 123456-1-52-01

(FEDERAL FUNDS)

BAY COUNTY (46080)

STATE ROAD NO. 22 (WEWA HWY)

ADD LANES AND RECONSTRUCT FROM CRIM BLVD. TO KURT ST.

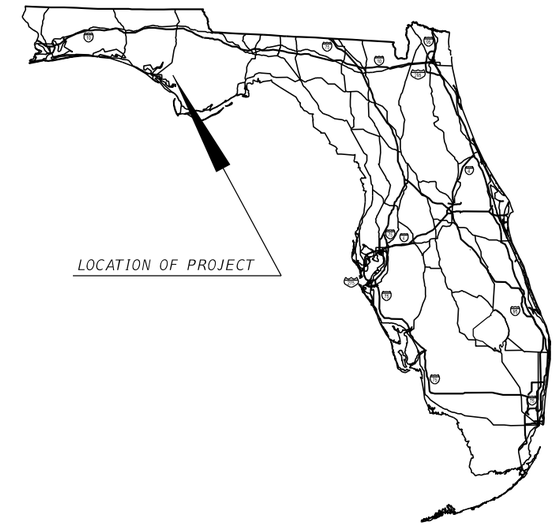

PROJECT LOCATION URL:	https://tinyurl.com/367v2589
PROJECT LIMITS:	BEGIN MP 1.560 - END MP 7.560
EXCEPTIONS:	NONE
BRIDGE LIMITS:	BR#469998 MP 3.422 - MP 3.471
RAILROAD CROSSING:	NONE

Exhibit 910-1
Lead Key Sheet
Date: 1/1/2025

CONTRACT PLANS COMPONENTS

ROADWAY
SIGNING AND PAVEMENT MARKING
SIGNALIZATION
INTELLIGENT TRANSPORTATION SYSTEMS
LIGHTING
LANDSCAPE
ARCHITECTURAL
STRUCTURES
TOLL FACILITIES
UTILITY WORK BY HIGHWAY CONTRACTOR PLANS

INDEX OF ROADWAY PLANS

SHEET NO.	SHEET DESCRIPTION
1	KEY SHEET
2	SIGNATURE SHEET
3	DRAINAGE MAP
4 - 5	TYPICAL SECTIONS
6	TYPICAL SECTION DETAILS
7 - 9	MODEL MANAGEMENT
10	PROJECT CONTROL
11	GENERAL NOTES
12 - 14	ROADWAY PLAN-PROFILE
15 - 16	TRAFFIC MONITORING SITE
17	SPECIAL DETAILS
18 - 19	DRAINAGE NETWORK PLAN
20 - 21	DRAINAGE NETWORK PROFILE
22	DRAINAGE NETWORK CROSS SECTIONS
23	OPTIONAL MATERIALS TABULATION
24	DRAINAGE SPECIAL DETAILS
25 - 34	ROADWAY CROSS SECTIONS
35 - 38	VERIFIED UTILITY LOCATE
39 - 46	TEMPORARY TRAFFIC CONTROL PLAN
47 - 52	UTILITY ADJUSTMENTS
53 - 56	SELECTIVE CLEARING AND GRUBBING
57	MISCELLANEOUS STRUCTURES
GR-1*	SOIL SURVEY
GR-2*	REPORT OF CORE BORINGS

* These sheets are included in the Index of Roadway Plans only to indicate that they are part of the Roadway Plans. These sheets are contained in a separate digitally signed and sealed document.

DEVELOPMENTAL STANDARD PLANS (DSPs):

D591-001 LANDSCAPE IRRIGATION SLEEVES

GOVERNING STANDARD PLANS:

Florida Department of Transportation, FY2023-24 Standard Plans for Road and Bridge Construction and applicable Interim Revisions (IRs).

Standard Plans for Road Construction and associated IRs are available at the following website: http://www.fdot.gov/design/standardplans

APPLICABLE IRs: IR536-001-01, IR521-001-01

Standard Plans for Bridge Construction are included in the Structures Plans Component

GOVERNING STANDARD SPECIFICATIONS:

Florida Department of Transportation, FY 2023-24 Standard Specifications for Road and Bridge Construction at the following website: http://www.fdot.gov/programmanagement/Implemented/SpecBooks

ROADWAY PLANS
ENGINEER OF RECORD:

LUKE S. WALKER, P.E.
P.E. LICENSE NUMBER 99991
ROADWAY ENGINEERS, INC.
123 MAIN STREET
TALLAHASSEE, FL 32301
(850) 671-1313
CONTRACT NO.: C0000
VENDOR NO.: 99-999999

FDOT PROJECT MANAGER:

BEN K. UWAIBI, P.E.

CONSTRUCTION CONTRACT NO.	FISCAL YEAR	SHEET NO.
T0000	22	1

THE OFFICIAL RECORD OF THIS SHEET IS THE ELECTRONIC FILE DIGITALLY SIGNED AND SEALED UNDER RULE 61G15-23.004, F.A.C.

THIS PROJECT TO BE LET TO CONTRACT
WITH FINANCIAL PROJECT ID(S):
123456-1-56-01, 123457-1-52-01, 123457-1-56-01

STATE OF FLORIDA
DEPARTMENT OF TRANSPORTATION

ROADWAY PLANS

FINANCIAL PROJECT ID 123456-1-52-01

(FEDERAL FUNDS)

BAY COUNTY (46080)

STATE ROAD NO. 22 (WEWA HWY)

ADD LANES AND RECONSTRUCT FROM CRIM BLVD. TO KURT ST.

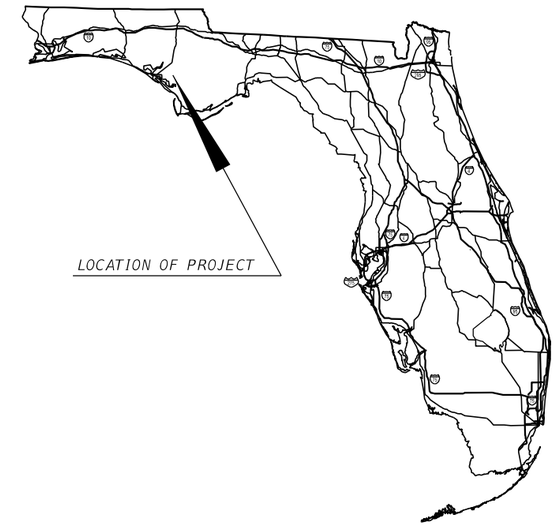

PROJECT LOCATION URL:	https://tinyurl.com/367v2589
PROJECT LIMITS:	BEGIN MP 1.560 - END MP 7.560
EXCEPTIONS:	NONE
BRIDGE LIMITS:	BR#469998 MP 3.422 - MP 3.471
RAILROAD CROSSING:	NONE

Exhibit 910-2
Revised Lead Key Sheet
Date: 1/1/2025

CONTRACT PLANS COMPONENTS

ROADWAY
SIGNING AND PAVEMENT MARKING
SIGNALIZATION
INTELLIGENT TRANSPORTATION SYSTEMS
LIGHTING
LANDSCAPE
ARCHITECTURAL
STRUCTURES
TOLL FACILITIES
UTILITY WORK BY HIGHWAY CONTRACTOR PLANS

INDEX OF ROADWAY PLANS

SHEET NO.	SHEET DESCRIPTION
1	KEY SHEET
2 - 2A	SIGNATURE SHEET
3	DRAINAGE MAP
4 - 5	TYPICAL SECTIONS
6	TYPICAL SECTION DETAILS
7 - 9	MODEL MANAGEMENT
10	PROJECT CONTROL
11	GENERAL NOTES
12 - 14	ROADWAY PLAN-PROFILE
15 - 16	TRAFFIC MONITORING SITE
17	SPECIAL DETAILS
18 - 19	DRAINAGE NETWORK PLAN
20 - 21	DRAINAGE NETWORK PROFILE
22	DRAINAGE NETWORK CROSS SECTIONS
23	OPTIONAL MATERIALS TABULATION
24	DRAINAGE SPECIAL DETAILS
25 - 34	ROADWAY CROSS SECTIONS
35 - 38	VERIFIED UTILITY LOCATE
39 - 46	TEMPORARY TRAFFIC CONTROL PLAN
47 - 52	UTILITY ADJUSTMENTS
53 - 56	SELECTIVE CLEARING AND GRUBBING
57	MISCELLANEOUS STRUCTURES
GR-1*	SOIL SURVEY
GR-2*	REPORT OF CORE BORINGS

* These sheets are included in the Index of Roadway Plans only to indicate that they are part of the Roadway Plans. These sheets are contained in a separate digitally signed and sealed document.

DEVELOPMENTAL STANDARD PLANS (DSPs):

D591-001 LANDSCAPE IRRIGATION SLEEVES

GOVERNING STANDARD PLANS:

Florida Department of Transportation, FY2023-24 Standard Plans for Road and Bridge Construction and applicable Interim Revisions (IRs).

Standard Plans for Road Construction and associated IRs are available at the following website: http://www.fdot.gov/design/standardplans

APPLICABLE IRs: IR536-001-01, IR521-001-01

Standard Plans for Bridge Construction are included in the Structures Plans Component

GOVERNING STANDARD SPECIFICATIONS:

Florida Department of Transportation, FY 2023-24 Standard Specifications for Road and Bridge Construction at the following website: http://www.fdot.gov/programmanagement/Implemented/SpecBooks

REVISIONS:

FINANCIAL PROJECT ID 123456-1-52-01
1 Roadway Sheets 1, 2A, 5, & 19 (Revised 04-20-22)

KEY SHEET REVISIONS	
DATE	DESCRIPTION
04-20-22	Added Sheet Number 2A to the Index and Revised Sheet Numbers 5 & 19.

ROADWAY PLANS ENGINEER OF RECORD:

LUKE S. WALKER, P.E.
P.E. LICENSE NUMBER 99991
ROADWAY ENGINEERS, INC.
123 MAIN STREET
TALLAHASSEE, FL 32301
(850) 671-1313
CONTRACT NO.: C0000
VENDOR NO.: 99-999999

FDOT PROJECT MANAGER:

BEN K. UWAIBI, P.E.

CONSTRUCTION CONTRACT NO.	FISCAL YEAR	SHEET NO.
T0000	22	1

THE OFFICIAL RECORD OF THIS SHEET IS THE ELECTRONIC FILE DIGITALLY SIGNED AND SEALED UNDER RULE 61G15-23.004, F.A.C.

CONTRACT PLANS COMPONENTS

ROADWAY
SIGNING AND PAVEMENT MARKING
SIGNALIZATION
INTELLIGENT TRANSPORTATION SYSTEMS
LIGHTING
LANDSCAPE
ARCHITECTURAL
STRUCTURES
TOLL FACILITIES
UTILITY WORK BY HIGHWAY CONTRACTOR PLANS

INDEX OF SIGNING AND PAVEMENT MARKING PLANS

SHEET NO.	SHEET DESCRIPTION
1	KEY SHEET
2	SIGNATURE SHEET
3	GENERAL NOTES
4 - 7	S&PM PLAN
8	GUIDE SIGN WORKSHEET
9	OVERHEAD SIGN CROSS SECTION
10	SIGN STRUCTURES DATA TABLE
11	FOUNDATION DETAILS
12	BRIDGE MOUNTED SIGN DETAILS
13	REPORT OF CORE BORINGS

STATE OF FLORIDA

DEPARTMENT OF TRANSPORTATION

SIGNING AND PAVEMENT MARKING PLANS

FINANCIAL PROJECT ID 123456-1-52-01

(FEDERAL FUNDS)

BAY COUNTY (46080)

STATE ROAD NO. 22 (WEWA HWY)

ADD LANES AND RECONSTRUCT FROM CRIM BLVD. TO KURT ST.

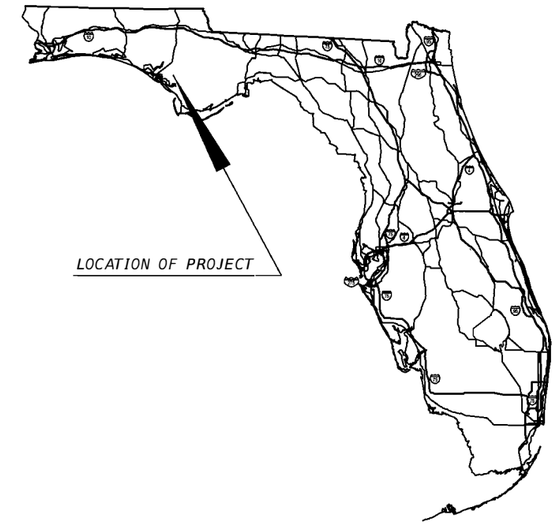

PROJECT LOCATION URL:	https://tinyurl.com/367v2589
PROJECT LIMITS:	BEGIN MP 1.560 - END MP 7.560
EXCEPTIONS:	NONE
BRIDGE LIMITS:	BR#469998 MP 3.422 - MP 3.471
RAILROAD CROSSING:	NONE

CHUY J. JAMESON
LICENSE
No 99992
STATE OF
FLORIDA
PROFESSIONAL ENGINEER

THIS ITEM HAS BEEN DIGITALLY SIGNED AND SEALED BY

Chuy J. Jameson
2022.07.13 11:02:26 - 04'00'

ON THE DATE ADJACENT TO THE SEAL

SIGNATURE MUST BE VERIFIED ON ANY ELECTRONIC COPIES.

Exhibit 910-3
Component Key Sheet
Date: 1/1/2025

SIGNING AND PAVEMENT MARKING PLANS ENGINEER OF RECORD:

CHUY J. JAMESON, P.E.
P.E. LICENSE NUMBER 99992
ROADWAY ENGINEERS, INC.
123 MAIN STREET
TALLAHASSEE, FL 32301
(850) 671-1313
CONTRACT NO.: C0001
VENDOR NO.: 99-999999

FDOT PROJECT MANAGER:

BEN K. UWAIBI, P.E.

GOVERNING STANDARD PLANS:

Florida Department of Transportation, FY2023-24 Standard Plans for Road and Bridge Construction and applicable Interim Revisions (IRs).

Standard Plans for Road Construction and associated IRs are available at the following website: http://www.fdot.gov/design/standardplans

APPLICABLE IRs: IR536-001-01, IR521-001-01

Standard Plans for Bridge Construction are included in the Structures Plans Component

GOVERNING STANDARD SPECIFICATIONS:

Florida Department of Transportation, FY 2023-24 Standard Specifications for Road and Bridge Construction at the following website: http://www.fdot.gov/programmanagement/Implemented/SpecBooks

CONSTRUCTION CONTRACT NO.	FISCAL YEAR	SHEET NO.
T0000	22	1

THE OFFICIAL RECORD OF THIS SHEET IS THE ELECTRONIC FILE DIGITALLY SIGNED AND SEALED UNDER RULE 61G15-23.004, F.A.C.

LUKE S. WALKER
LICENSE
No 99991
STATE OF
FLORIDA
PROFESSIONAL ENGINEER

THIS ITEM HAS BEEN DIGITALLY SIGNED AND SEALED BY:

Luke S. Walker
2022.07.14 16:52:48 - 4'00'

ON THE DATE ADJACENT TO THE SEAL

SIGNATURE MUST BE VERIFIED ON ANY ELECTRONIC COPIES.

ROADWAY ENGINEERS, INC.
123 MAIN STREET
TALLAHASSEE, FL 32301
LUKE S. WALKER, P.E. NO. 99991

THE ABOVE NAMED PROFESSIONAL ENGINEER SHALL BE RESPONSIBLE FOR THE FOLLOWING SHEETS IN ACCORDANCE WITH RULE 61G15-23.004, F.A.C.

SHEET NO.	SHEET DESCRIPTION
1	KEYSHEET
2	SIGNATURE SHEET
3	DRAINAGE MAP
4 - 5	TYPICAL SECTIONS
6	TYPICAL SECTION DETAILS
7 - 9	MODEL MANAGEMENT
10	PROJECT CONTROL
11	GENERAL NOTES
12 - 14	ROADWAY PLAN-PROFILE
18 - 19	DRAINAGE STRUCTURES
32 - 37	UTILITY ADJUSTMENTS

LAN B. SOLO
LICENSE
No 99994
STATE OF
FLORIDA
PROFESSIONAL ENGINEER

THIS ITEM HAS BEEN DIGITALLY SIGNED AND SEALED BY:

Lan B. Solo
2022.07.14 16:42:28 - 4'00'

ON THE DATE ADJACENT TO THE SEAL

SIGNATURE MUST BE VERIFIED ON ANY ELECTRONIC COPIES.

ROADWAY ENGINEERS, INC.
123 MAIN STREET
TALLAHASSEE, FL 32301
LAN B. SOLO, P.E. NO. 99994

THE ABOVE NAMED PROFESSIONAL ENGINEER SHALL BE RESPONSIBLE FOR THE FOLLOWING SHEETS IN ACCORDANCE WITH RULE 61G15-23.004, F.A.C.

SHEET NO.	SHEET DESCRIPTION
2	SIGNATURE SHEET
32 - 37	UTILITY ADJUSTMENTS

ARTURITO T. GOMEZ
LICENSE
No 99999
STATE OF
FLORIDA
LANDSCAPE ARCHITECT

THIS ITEM HAS BEEN DIGITALLY SIGNED AND SEALED BY:

Arturito T. Gomez
2022.07.14 15:35:15 - 8'00'

ON THE DATE ADJACENT TO THE SEAL

SIGNATURE MUST BE VERIFIED ON ANY ELECTRONIC COPIES.

LAND DESIGN, LLC.
345 IVY LANE
ORLANDO, FL 32801
ARTURITO T. GOMEZ, L.A. NO. 99999

THE ABOVE NAMED LANDSCAPE ARCHITECT SHALL BE RESPONSIBLE FOR THE FOLLOWING SHEETS IN ACCORDANCE WITH RULE 61G10-11.011, F.A.C.

SHEET NO.	SHEET DESCRIPTION
2	SIGNATURE SHEET
38 - 41	SELECTIVE CLEARING AND GRUBBING

THE ABOVE NAMED PROFESSIONAL IS RESPONSIBLE FOR THE FOLLOWING BIM FILES IN ACCORDANCE WITH RULE 61G15-23.004, F.A.C.

BIM FILES IDENTIFIED AS PLANS TO SUPPORT EARTHWORK

FILE NAME	FILE DESCRIPTION	SHA256 Encryption Code
12345615201\3DDeliverables\AMG-2DSGNRD01.dgn	AMG file for 3D-Deliverables	8300BBC34652B4CFA33508126A9CA83D4AE283AE44691047C4E73BCDD2A2AD8E
12345615201\3DDeliverables\AMG-MODLRD01.i.dgn		BC738EA02F35571B8B04F32EF04AE12D0192CDC9F2531249CC207944092A12E9
12345615201\3DDeliverables\AMG-ALGNSR61.xml		BA08AC3CFBB7489B6AC129DD064CA81DD0B8B9ABD5A33691357B0AE768D50E4D
12345615201\3DDeliverables\AMG-ALGNBL98.xml		D8A843AA08EC77069804AD774D0EBA984F1BBB4713F66474589DF70745CF6B62
12345615201\3DDeliverables\AMG-3SURFACEPR01.xml		56AECC56379686F8F0CB91C97B41739AAE76DB6B5D0C90F58486B32D0AB1B098
12345615201\3DDeliverables\AMG-3SURFACEEX01.xml		58793EFDD20A3452E7B521C101E5FFACB081B57FADE42401E3AB58AE2ABEA121
12345615201\3DDeliverables\AMG-3SURFACEEW01.xml		15D9BCA09E81EA498C070705C2FAF7E34232B25ED9F380507FADE7712C0B929A
12345615201\3DDeliverables\AMG-3DSGNRDEW01.dwg	AMG file for 3D-Deliverables	7ADF218242F4EFA85BB7AEF36425C628AA5AF0BAA1B4E9CBC7A16691704B2EC9
12345615201\3DDeliverables\AMG-3DSGNRDEW01.dgn	AMG file for 3D-Deliverables	52C6233959FFF3A8F3B96DAC21D9F8973A2112E9A8E94E03539A27A0D3044519
12345615201\3DDeliverables\AMG-3DSGNRD01.dwg	AMG file for 3D-Deliverables	7F25DF5C0D3F3799E3A457B93CD1AA97255E1B3C1C40361925A3B7294F140745
12345615201\3DDeliverables\AMG-3DSGNRD01.dgn	AMG file for 3D-Deliverables	9E41F7E20C9EA63B4FF41E9FD59085C18B79D7487E865BC2E9B00DE4663EF47B

https://emn178.github.io/online-tools/sha256_checksum.html

Exhibit 910-4
Signature Sheet
Date: 1/1/2025

REVISIONS			
DATE	DESCRIPTION	DATE	DESCRIPTION

ENGINEER OF RECORD
LUKE S. WALKER, P.E.
LICENSE NUMBER: 99991
ROADWAY ENGINEERS, INC.
123 MAIN STREET
TALLAHASSEE, FL 32301

STATE OF FLORIDA
DEPARTMENT OF TRANSPORTATION

ROAD NO.	COUNTY	FINANCIAL PROJECT ID
SR 22	BAY	123456-1-52-01

SIGNATURE SHEET

SHEET NO.
2

6/11/2025 9:13:41 AM RD960DI
C:\Projects\standards\roadway\FDM_900_Exhibit_Master.dgn

LUKE S. WALKER
LICENSE
No 99991
STATE OF
FLORIDA
PROFESSIONAL ENGINEER

THIS ITEM HAS BEEN DIGITALLY SIGNED AND SEALED BY:

Luke S. Walker
2022.07.14 17:06:51 - 4'00'

ON THE DATE ADJACENT TO THE SEAL

SIGNATURE MUST BE VERIFIED ON ANY ELECTRONIC COPIES.

ROADWAY ENGINEERS, INC.
123 MAIN STREET
TALLAHASSEE, FL 32301
LUKE S. WALKER, P.E. NO. 99991

THE ABOVE NAMED PROFESSIONAL ENGINEER SHALL BE RESPONSIBLE FOR THE FOLLOWING SHEETS IN ACCORDANCE WITH RULE 61G15-23.004, F.A.C.

SHEET NO.	SHEET DESCRIPTION
2A	SIGNATURE SHEET
5	TYPICAL SECTIONS
19	DRAINAGE STRUCTURES

THE ABOVE NAMED PROFESSIONAL IS RESPONSIBLE FOR THE FOLLOWING BIM FILES IN ACCORDANCE WITH RULE 61G15-23.004, F.A.C.

BIM FILES IDENTIFIED AS PLANS TO SUPPORT EARTHWORK			
FILE NAME	FILE DESCRIPTION	SHA256 Encryption Code	REVISION
12345615201\3DDeliverables\AMG-3DSGNRD01.dgn	AMG file for 3D-Deliverables	9E41F7E20C9EA63B4FF41E9FD59085C18B79D7487E865BC2E9B00DE4663EF47B	Updated Drainage System
		https://emn178.github.io/online-tools/sha256_checksum.html	

Exhibit 910-5
Revision Signature Sheet
Date: 1/1/2025

REVISIONS			
DATE	DESCRIPTION	DATE	DESCRIPTION

ENGINEER OF RECORD
LUKE S. WALKER, P.E.
LICENSE NUMBER: 99991
ROADWAY ENGINEERS, INC.
123 MAIN STREET
TALLAHASSEE, FL 32301

STATE OF FLORIDA
DEPARTMENT OF TRANSPORTATION

ROAD NO.	COUNTY	FINANCIAL PROJECT ID
SR 22	BAY	123456-1-52-01

SIGNATURE SHEET

SHEET NO.
2A

6/11/2025 9:13:56 AM RD9601L
C:\Projects\standards\roadway\FDM_900_Exhibit_Master.dgn

911 Model Management Sheet

911.1 General

The Model Management sheet provides information for the order and naming of the models developed for the project.

The Model Management sheet is produced as a contract document and placed within the Roadway Plans set. The sheet may use any scale provided that the required information is clearly depicted.

The required information should be shown on a single plan sheet. Development of this sheet early in the design phase establishes an effective segmentation of the project.

See ***Exhibit 911-1*** for an illustration of a Model Management sheet.

911.2 Creation of Model Management Sheet

Display and label the centerline or baseline of construction on the sheet with station numbers close to station ticks. Include a north arrow, typically in the upper right portion.

Display the proposed limits of pavement, curbs, traffic separators, sidewalks, curb ramps, and driveways. Show proposed bridges and approach slabs by simple outline. The labeling of any of these features is not required. If the topographic file is displayed, it should be gray scale. The intent is to show an outline of the proposed roadway to give context to the limits of each model segment.

Indicate the segments (portions of the centerline) that the project is broken into for the purpose of model development. Provide labeling that includes:

(1) File name of model(s) associated with a segment.

(2) Name of roadway centerline or baseline of construction.

(3) Station limits contained within the model.

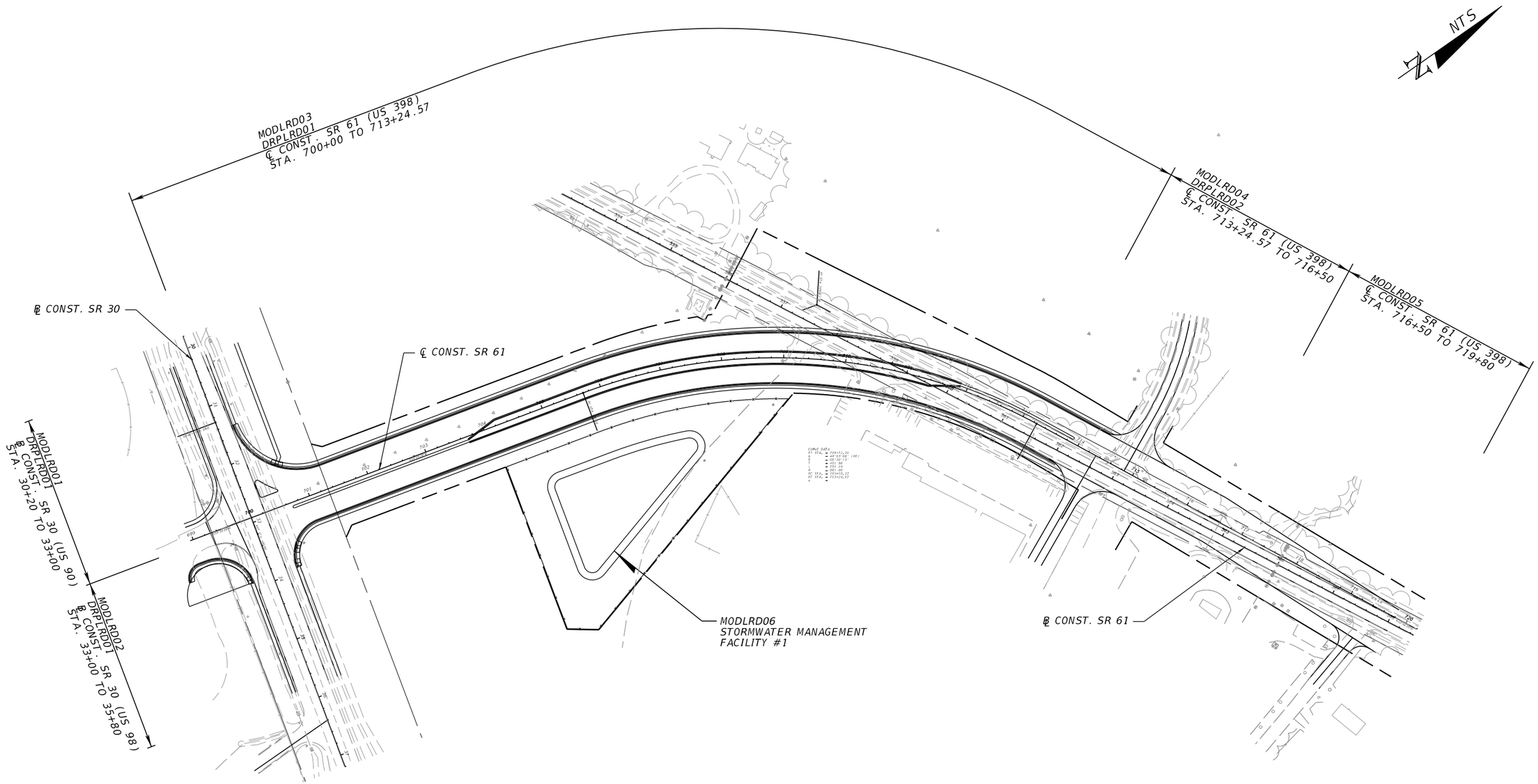

Exhibit 911-1
Model Management Plan
Date: 1/1/2023

REVISIONS			
DATE	DESCRIPTION	DATE	DESCRIPTION

PROFESSIONAL ENGINEER

GARTH REVAN, P.E.
LICENSE NUMBER: 12288
STAR FORGE ENGINEERING
603 MANDALOR WAY
KORRIBAN, FL 56789

STATE OF FLORIDA
DEPARTMENT OF TRANSPORTATION

ROAD NO.	COUNTY	FINANCIAL PROJECT ID
SR 61	WAKULLA	123456-1-52-01

MODEL MANAGEMENT

SHEET NO.

8/30/2022 1:46:56 PM PS972BW
C:\Worksets\FDOT\123456152D1\Roadway\PLAYRD01.dgn

THE OFFICIAL RECORD OF THIS SHEET IS THE ELECTRONIC FILE DIGITALLY SIGNED AND SEALED UNDER RULE 61G15-23.004, F.A.C.

912 Project Control

912.1 General

The Project Control sheet provides a summary of horizontal and vertical datums (i.e., reference points, benchmarks, and control points). The reported datums shown on this sheet must provide clear and sufficient information to establish horizontal and vertical control during the construction of the project. The data shown can be extracted from the project network control survey and historical control data or may reflect assumed datums.

The Engineer of Record will create the Project Control sheet from data extracted from the project survey and will sign and seal the Project Control sheet. These sheets are to be placed in the component plans in accordance with ***FDM 910.2***.

See ***Exhibit 912-1*** for example of a Project Control sheet.

912.2 Sheet Setup

Use standard symbols contained in the ***CADD Manual***.

Provide a note on the Project Control sheet that identifies the horizontal and vertical datums that the survey is based on.

912.3 Reference Points

Reference points are prominent, easily located points in the terrain used to define a location of another point that is located on the baseline of survey. The purpose of reference points is to provide horizontal locations to re-establish primary control points along the baseline of survey. Reference points should not be located on the baseline. Detailed descriptions of each reference point are illustrated with a sketch normally not drawn to any scale.

Place survey reference points on the Project Control sheet along the top of the sheet or where other space allows. Clearly indicate the baseline of survey and reference points, including all ties. Complete length of survey baseline between two consecutive reference points need not be shown. Clearly label each reference point, beginning at the first reference point within the limits of the project, and progressing in the direction of stationing. Reference points need not be drawn to any scale, but the distances and angles shown must be proportionate.

912.4 Benchmarks

Benchmarks provide a known elevation that is used as the basis for measuring the elevation of other topographical points. When benchmarks are not used to provide horizontal control, they may be placed on the Project Control sheet along the bottom of the sheet or where other space allows. At a minimum, benchmarks are to include:

(1) Identifying name (e.g., BM No. 9)

(2) Description (e.g., nail in tree, concrete monument)

(3) Station and offset

(4) Elevation (in feet to two decimal places)

912.5 Control Points (Horizontal and Vertical Datum)

Control points provide information for the locations and elevations of established monuments. Control points that provide vertical datum are also known as benchmarks.

Place the following information for the control points in a table titled Horizontal and Vertical Control:

(1) Point Name – Often identified on the stamped disk placed on the established monument.

(2) Northing and Easting – Show to three decimal places. Show northings and eastings to the nearest foot when a control point serves only as a benchmark.

(3) Scale Factor – Show to eight decimal places.

(4) Latitude and Longitude – Show seconds to five decimal places. If a control point serves only as a benchmark, show latitude and longitude to the nearest second.

(5) Baseline Station and Offset – Show to two decimal places.

(6) Elevation – If a control point only serves as horizontal control, show the elevation as “N/A”.

(7) Description – Indicate the size, type, whether the monument is “found” or “set”, and include the monument ID number.

When this table is the sole means to convey horizontal and vertical datums, include a project sketch on the Project Control sheet that provides a visual reference for the locations of the control points. The sketch is normally not to scale but must provide clarity and legibility. Include the following information on the sketch:

(1) Show the baseline of survey with stationing.

(2) Flag and label the beginning and ending stations for project.

(3) Show bearings for all tangent sections in the direction of stationing.

(4) Label PC and PT points and show horizontal curve data.

(5) Indicate graphically the location of intersecting roadways and railroads.

(6) Indicate Township, Range and Sections that the survey traverses. Show the locations where section lines cross the baseline of survey.

(7) Place a north arrow and scale in a conspicuous location, typically in the upper right portion of the sheet.

℄ REFERENCE POINTS
(NOT TO SCALE)

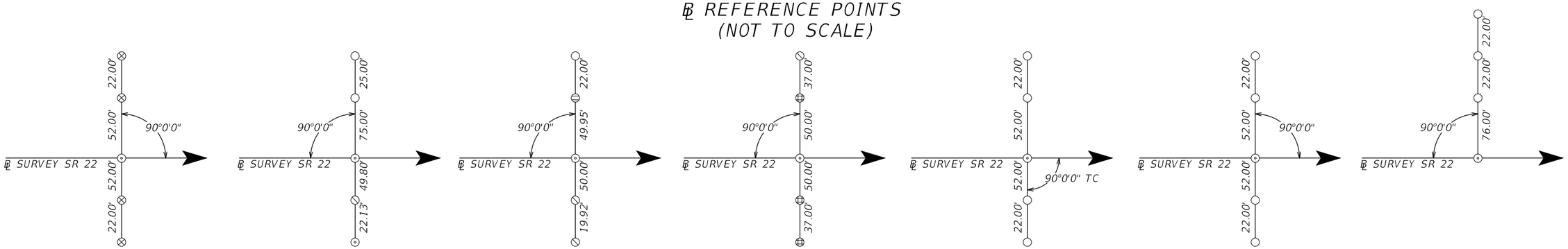

BEGIN SURVEY
STA. 8+00.00

STA. 9+00.00

STA. 25+00.00

PC STA. 45+45.51

STA. 63+00.00

PT. STA. 81+53.78

END SURVEY
STA. 84+99.67

℄ STATION	(Y) NORTHING	(X) EASTING	SCALE FACTOR
08+00.00	731006.941	1104363.972	1.00002712
09+00.00	730958.261	1104451.323	1.00002771
25+00.00	730179.373	1105848.941	1.00002829
45+45.51	729183.610	1107635.714	1.00002892
63+00.00	728109.980	1109014.692	1.00002967
81+53.78	726580.821	1110048.276	1.00003004
84+99.67	726266.795	1110193.287	1.00003049

LEGEND

- ○ = SET 5/8" IRC STAMPED F.D.O.T. REF.
- ⊙ = SET NAIL W/ DISC STAMPED F.D.O.T. CONTROL
- ⊗ = SET X CUT IN CONCRETE NO ID
- ⦸ = FOUND 100D NAIL NO ID
- ⊖ = FOUND 1/2" IRON ROD NO ID
- ⊕ = FOUND 5/8" IRON ROD NO ID

PROJECT CONTROL NOTES

1. PROJECT IS BASED ON THE FLORIDA STATE PLANE COORDINATE SYSTEM NAD 1983 / 2011 HORIZONTAL DATUM.

2. ELEVATIONS ARE BASED ON NORTH AMERICAN VERTICAL DATUM 1988 (NAVD88)

HORIZONTAL AND VERTICAL CONTROL

CONTROL POINT	℄ SURVEY STATION	OFFSET	(Z) ELEVATION	DESCRIPTION	(Y) NORTHING	(X) EASTING	LATITUDE	LONGITUDE	SCALE FACTOR
C-02	08+22.65	44.80' LT.	3.05'	FOUND FDOT BRASS DISK IN CONCRETE STAMPED "842 86 1"	731019.964	1104363.964	26°07'18.96289"	80°09'56.29283"	1.00002712
B-01	14+66.25	33.25' LT.	7.23'	SET FDOT BRASS DISK IN CONCRETE STAMPED "842 86 1 B1"	730958.234	1104451.326	26°07'18.90268"	80°09'45.88657"	1.00002967
C-03	25+73.33	36.96' RT.	4.18'	FOUND FDOT BRASS DISK IN CONCRETE STAMPED "842 1 C3"	730456.349	1105848.917	26°07'18.38998"	80°09'35.78475"	1.00003088
B-02	31+18.07	25.60' RT.	4.05'	SET FDOT BRASS DISK IN CONCRETE STAMPED "842 86 B2"	730229.364	1108642.646	26°07'18.79454"	80°09'24.88094"	1.00003148
C-04	46+75.51	83.53' LT.	4.12'	FOUND FDOT BRASS DISK IN CONCRETE STAMPED "842 C04"	729283.642	1109014.635	26°07'20.21998"	80°09'11.99337"	1.00003203
B-03	55+98.14	22.04' LT.	4.84'	SET FDOT BRASS DISK IN CONCRETE STAMPED "842 8 B03"	729002.211	1109544.542	26°07'19.77658"	80°08'41.06068"	1.00003253
C-05	63+00.00	40.41' RT.	4.23'	FOUND FDOT BRASS DISK IN CONCRETE STAMPED "842 8 C5"	728109.925	1110193.265	26°07'19.35577"	80°08'31.67213"	1.00003301

Exhibit 912-1
Project Control
Date: 1/1/2023

REVISIONS			
DATE	DESCRIPTION	DATE	DESCRIPTION

ENGINEER OF RECORD
LUKE S. WALKER, P.E.
LICENSE NUMBER: 99991
ROADWAY ENGINEERS, INC.
123 MAIN STREET
TALLAHASSEE, FL 32301

STATE OF FLORIDA
DEPARTMENT OF TRANSPORTATION

ROAD NO.	COUNTY	FINANCIAL PROJECT ID
SR 22	BAY	123456-1-52-01

PROJECT CONTROL

SHEET NO.
10

8/30/2022 1:47:39 PM PS972BW
C:\Worksets\FDOT\123456152O1\Survey\CTLSRD01.dgn

THE OFFICIAL RECORD OF THIS SHEET IS THE ELECTRONIC FILE DIGITALLY SIGNED AND SEALED UNDER RULE 61G15-23.004, F.A.C.

913 Typical Sections

913.1 General

The primary purpose of Typical Section sheets is to provide sectional depictions of the roadway, bridge, and toll site elements that illustrate “typical” conditions between specified station or milepost limits. Typical Section sheets also provide the traffic data and pavement design associated with the typical section being displayed.

The typical section design files used to create the Typical Section Package (see ***FDM 120***) should be used to prepare the Typical Section sheets.

For illustrations of various typical sections, see ***Exhibits 913-1*** through ***913-13***.

913.2 Typical Sections

Typical sections must cover the entire project limits; i.e., omit only Project Exceptions. Include the limits of typical section transitions with the typical section that begins the transition. Conditions such as turn lanes that occur for short distances should not be shown as separate typical sections.

Include typical sections for each proposed toll site. These typical sections must represent the required 100 feet of loop pavement underneath the toll gantry, tolling equipment building, gantry, and foundation outlines.

To aid in the development of typical section depictions, the FDOT CADD Software contains templates for generic typical sections that can be modified to reflect project conditions.

Typical Section sheets should contain only one typical section. Place Typical Section sheets in the plans in the following order:

(1) Roadway mainline

(2) Bridges for projects with bridges (new or widened)

(3) Toll sites

(4) Ramps and service roads for projects which include an interchange

(5) Intersecting roadways when significant work length is required

(6) Sideroads or streets when significant work length is required

913.2.1 Required Information

Show the road name and station (or milepost) limits below the TYPICAL SECTION header.

Typical sections are typically not drawn to scale, but the horizontal distances and slope angles shown must be proportionate. Existing typical section elements are shown as dashed lines and proposed as solid lines. Typical sections must label and dimension the following information, as applicable:

(1) Centerline or baseline of construction.

(2) Natural ground.

(3) Profile grade point.

(4) R/W or easements, and limits of construction.

(5) Limits of Clearing and Grubbing (Standard and Selective).

(6) Limits of sod and turf.

(7) Total shoulder widths and paved shoulder widths. Label shoulder treatments on RRR projects.

(8) Travel lane widths (total and individual lanes) and limits of friction course.

(9) Show median or roadside barriers when continuous (or mostly continuous) through the typical section limits.

(10) Bicycle lanes.

(11) Indicate the widths of existing pavement and proposed pavement on widening projects.

(12) Curb locations and types (show Type E or F Curb, not the dimension).

(13) Sidewalk locations and widths.

(14) Cross slopes of roadway pavements, shoulder surfaces, sidewalks, and bridge decks as a decimal part of a foot vertical per foot horizontal. These cross slopes should be rounded to two decimal places, i.e., 0.02, 0.06. Three decimal places may be required for pavement cross slopes.

(15) Bridge traffic railings and parapets.

(16) Median width and type, show slopes by ratio, vertical to horizontal, i.e., 1:4, 1:2.

(17) Roadside slopes and ditches, show slopes by ratio, vertical to horizontal.

(18) Depict pavement construction by indicating the LBR requirement and the thickness of the subgrade stabilization, subbase, or base, as well as the thickness of the structural course, friction course and shoulder pavement. Use 4 inches for both the base extension on rural sections and the stabilization extension on curbed sections. For mainline travel lanes on non-Limited Access roadways with design speeds of 55 mph and higher and project length of 0.5 miles or greater, obtain the Smoothness Class (associated with ***Standard Specification 330***) from the State Materials Office (SM-LaserAcceptance@dot.state.fl.us). Include the Smoothness Class on the applicable Typical Section sheet (see ***Exhibit 913-1*** for an example).

(19) Toll equipment building, gantry and foundation outlines.

(20) For Turnpike projects only, show and label Florida Gas Transmission (FGT) facilities. Dimension the location to the center of the utility from the construction centerline or baseline.

913.2.2 Required Notes and Details

Show the following notes and details on Typical Section sheets as applicable:

(1) For projects using Selective Clearing and Grubbing, include the following note:

See the Selective Clearing and Grubbing sheets for details and limits of selective clearing and grubbing.

(2) For new construction flush shoulder projects, include a shoulder pavement detail (shown on ***Exhibit 913-1***) with the following note:

This area may be constructed of base material (granular only) at no additional compensation.

(3) For widening projects, include the following note:

Actual width of base widening may vary due to actual existing pavement width. A uniform width base widening strip may be constructed at no additional compensation.

(4) For projects constructing ditches, include the following note:

Depth and bottom width of ditch may vary.

(5) For new construction curbed roadway projects with asphalt base course Type B-12.5 only, indicate the asphalt curb pad on the typical section and include an asphalt base curb pad detail.

(6) For resurfacing projects on curbed roadways where the milling depth is less than the overlay thickness, include a feathering detail with notes.

913.2.3 Partial Sections

Partial sections are used to illustrate a changed condition (e.g., ditch or drainage features, bicycle or pedestrian features, longitudinal barriers) that occur for significant limits with the typical section being shown. ***Exhibit 913-4*** demonstrates the use of a partial section.

Place partial sections on the same sheet as the typical section to which they apply.

913.3 Traffic Data

Traffic data is required only for mainline roadways and bridges and for ramps. Show the following traffic data (consistent with the data used for the pavement design) below and to the left of the typical section:

(1) Current Year and AADT

(2) Estimated Opening Year and AADT (not required for skid hazard projects)

(3) Estimated Design Year and AADT (not required for skid hazard projects)

(4) K, D, T (24 hour) and T (Design Hour) factors

(5) Design Speed (do not show Posted Speed or Target Speed)

(6) Context Classification

913.4 Pavement Design

Show the approved pavement design directly below the typical section, in the order of construction as follows:

- For new construction, start with the optional base group and end with the friction course.

- For resurfacing projects, start with the milling depth, then list the structural courses and end with the friction course.

913.5 Cross Slope Correction Details

When cross slope correction is necessary, include special milling and layering details showing the method of correction in the plans.

Exhibit 913-13 provides an example of overbuild details.

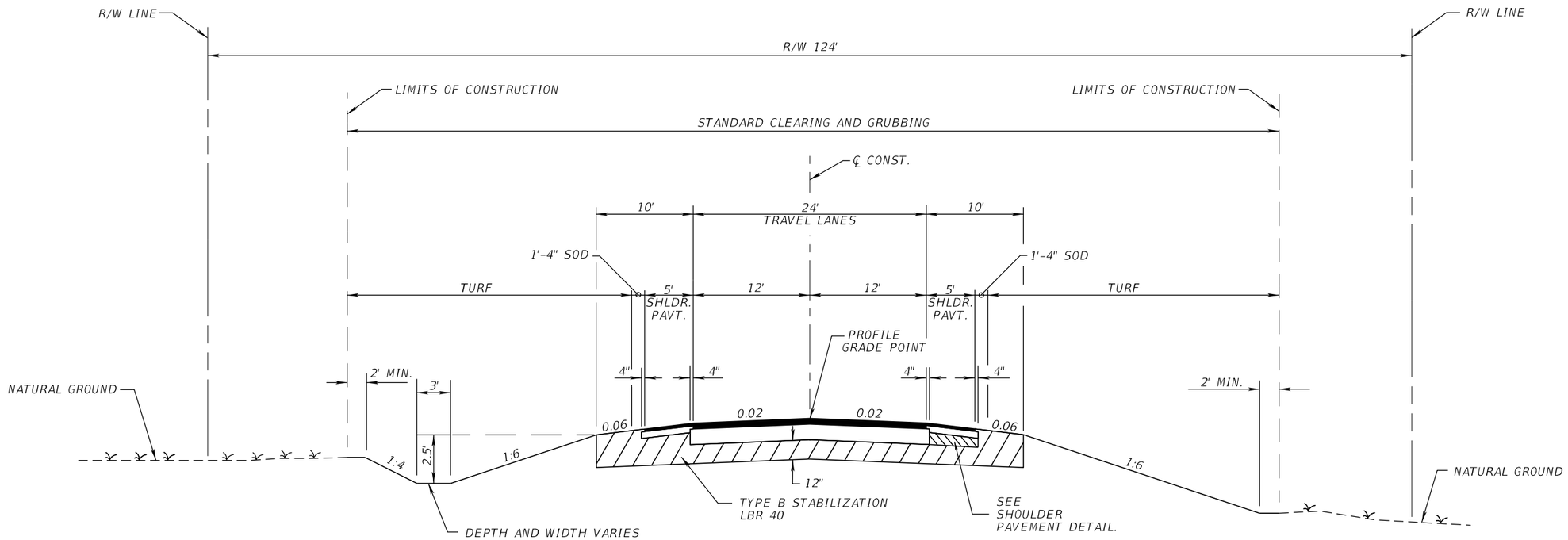

TYPICAL SECTION
SR 22
STA. 10+00.00 TO STA. 98+40.00
SMOOTHNESS CLASS 3

TRAFFIC DATA

CURRENT YEAR = 2018 AADT = 6800
ESTIMATED OPENING YEAR = 2020 AADT = 7600
ESTIMATED DESIGN YEAR = 2040 AADT = 12000
K = 6% D = 55% T = 2% (24 HOUR)
DESIGN HOUR T = 1%
DESIGN SPEED = 55 MPH
CONTEXT CLASSIFICATION = C2

TRAVEL LANES

OPTIONAL BASE GROUP 8
TYPE SP STRUCTURAL COURSE (TRAFFIC C) (2")
FRICTION COURSE FC-12.5 (TRAFFIC C) (1 ½") (PG 76-22)

SHOULDER PAVEMENT

OPTIONAL BASE GROUP 1
FRICTION COURSE FC-12.5 (TRAFFIC C) (1 ½") (PG 76-22)

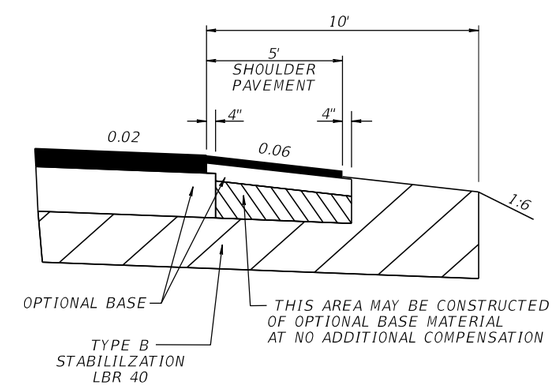

SHOULDER PAVEMENT DETAIL

Exhibit 913-1
2-Lane Flush Shoulder
Date: 1/1/2025

REVISIONS			
DATE	DESCRIPTION	DATE	DESCRIPTION

ENGINEER OF RECORD
LUKE S. WALKER, P.E.
LICENSE NUMBER: 12345
ROADWAY ENGINEERS, INC.
123 MAIN ST
TALLAHASSEE, FL 32301

STATE OF FLORIDA
DEPARTMENT OF TRANSPORTATION

ROAD NO.	COUNTY	FINANCIAL PROJECT ID
SR 22	LEON	123456-1-52-01

TYPICAL SECTION

SHEET NO. 4

THE OFFICIAL RECORD OF THIS SHEET IS THE ELECTRONIC FILE DIGITALLY SIGNED AND SEALED UNDER RULE 61G15-23.004, F.A.C.

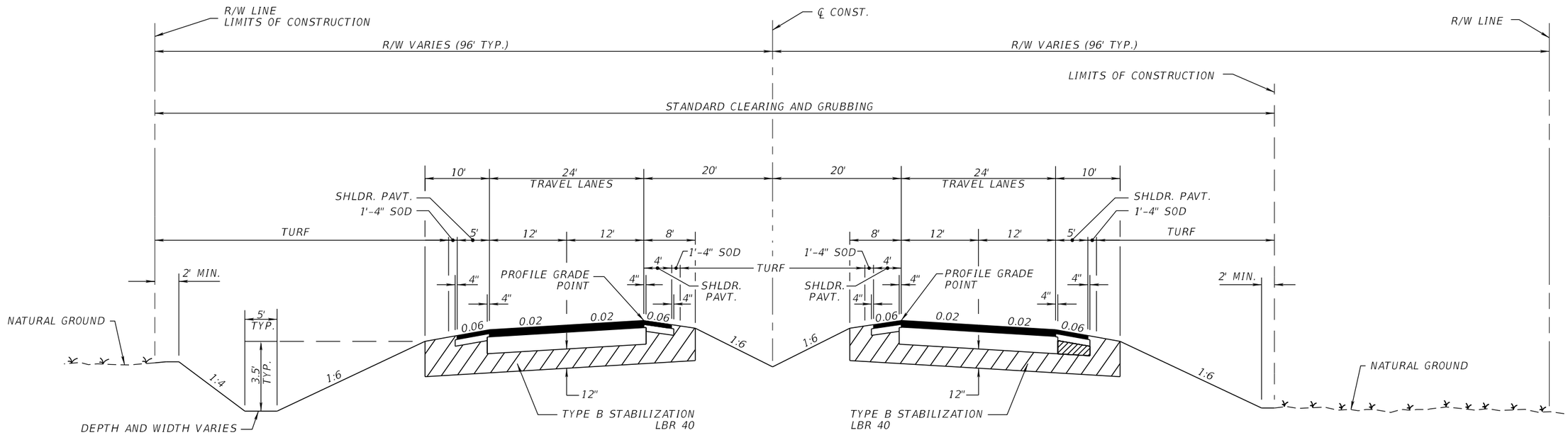

TRAFFIC DATA

CURRENT YEAR = 2018 AADT = 22300
ESTIMATED OPENING YEAR = 2020 AADT = 23300
ESTIMATED DESIGN YEAR = 2040 AADT = 51500
K = 9% D = 56% T = 10% (24 HOUR)
DESIGN HOUR T = 5%
DESIGN SPEED = 55 MPH
CONTEXT CLASSIFICATION = C1 STA. 63+65.42 TO STA. 108+35.00
C2 STA. 108+35.00 TO STA. 328+65.14

TYPICAL SECTION
SR 22
STA. 63+65.42 TO STA. 328+65.14
SMOOTHNESS CLASS 3

TRAVEL LANES

OPTIONAL BASE GROUP 9
TYPE SP STRUCTURAL COURSE (TRAFFIC E) (2")
TYPE SP STRUCTURAL COURSE (TRAFFIC E) (1 ½") (PG 76-22)
FRICTION COURSE FC-12.5 (TRAFFIC E) (1 ½") (PG 76-22)

SHOULDER PAVEMENT

OPTIONAL BASE GROUP 1
TYPE SP STRUCTURAL COURSE (TRAFFIC E) (1 ½") (PG 76-22)
FRICTION COURSE FC-12.5 (TRAFFIC E) (1 ½") (PG 76-22)

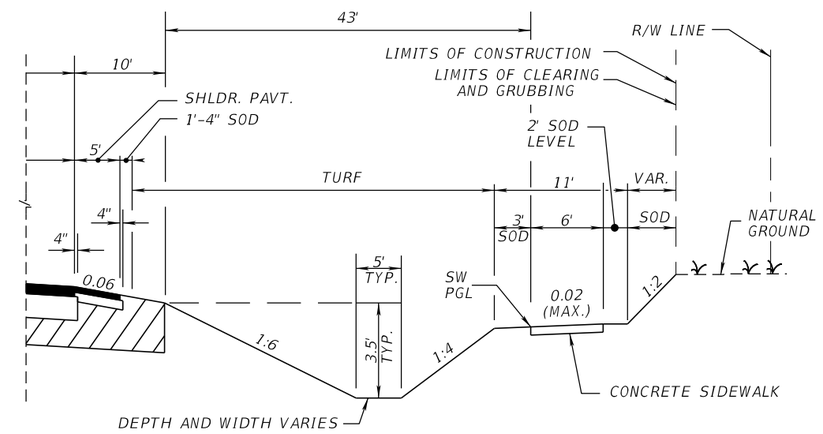

TYPICAL SECTION DETAIL
STA. 157+75.40 TO STA. 215+45.22

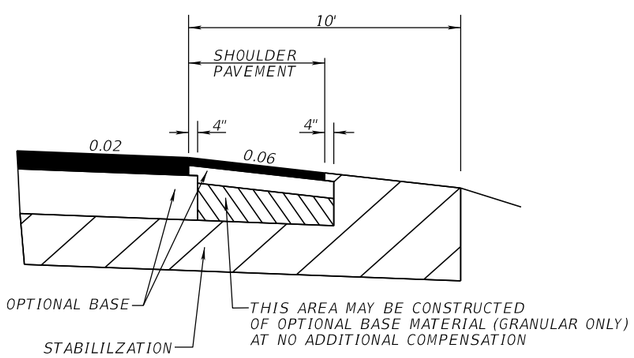

SHOULDER PAVEMENT DETAIL

Exhibit 913-2
4-Lane Flush Shoulder
Date: 1/1/2025

REVISIONS			
DATE	DESCRIPTION	DATE	DESCRIPTION

ENGINEER OF RECORD
LUKE S. WALKER, P.E.
LICENSE NUMBER: 99991
ROADWAY ENGINEERS, INC.
123 MAIN STREET
TALLAHASSEE, FL 32301

STATE OF FLORIDA
DEPARTMENT OF TRANSPORTATION

ROAD NO.	COUNTY	FINANCIAL PROJECT ID
SR 22	BAY	123456-1-52-01

TYPICAL SECTION

SHEET NO. 5

9/3/2024 8:27:05 AM KWASDMS
C:\Worksets\FDOT\123456789D1\Roadway\FDM_900_Exhibit_Master.dgn

THE OFFICIAL RECORD OF THIS SHEET IS THE ELECTRONIC FILE DIGITALLY SIGNED AND SEALED UNDER RULE 61G15-23.004, F.A.C.

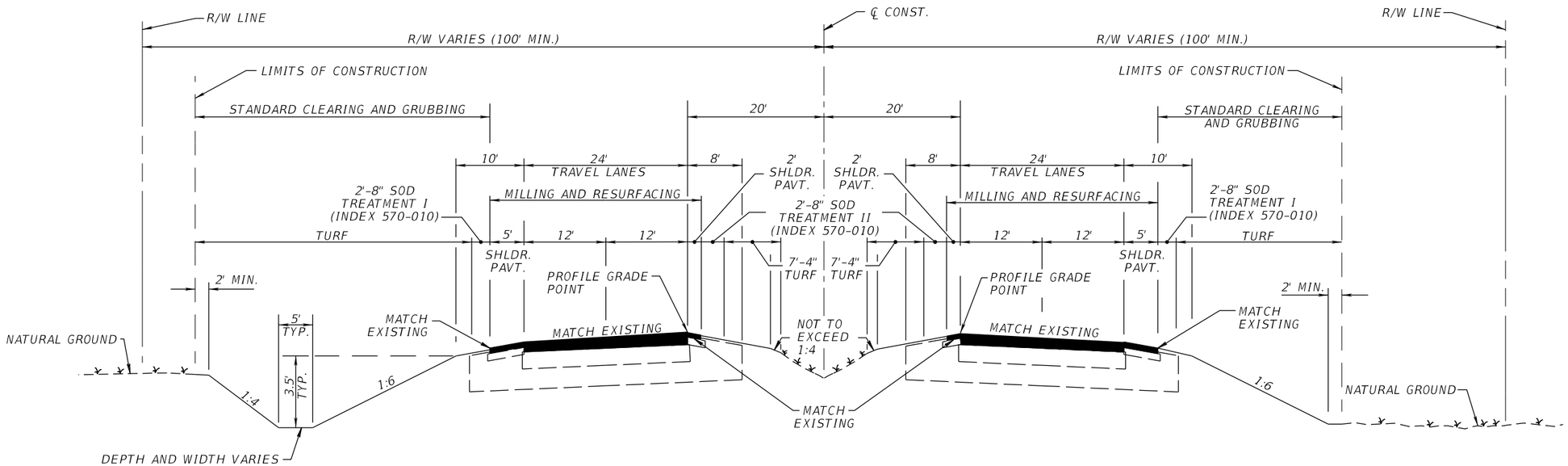

TRAFFIC DATA

CURRENT YEAR = 2018 AADT = 18100
ESTIMATED OPENING YEAR = 2020 AADT = 21000
ESTIMATED DESIGN YEAR = 2036 AADT = 38900
K = 11% D = 58% T = 22% (24 HOUR)
DESIGN HOUR T = 11%
DESIGN SPEED = 60 MPH
CONTEXT CLASSIFICATION = C2

TYPICAL SECTION
SR 22
STA. 145+00.00 TO STA. 166+00.00
SMOOTHNESS CLASS 3

EASTBOUND AND WESTBOUND TRAVEL LANES

MILL EXISTING ASPHALT PAVEMENT (1 ½" DEPTH)
TYPE SP STRUCTURAL COURSE (TRAFFIC E) (1 ½") (PG 76-22)
FRICTION COURSE FC-5 (¾") (PG 76-22)

SHOULDER PAVEMENT

MILL EXISTING ASPHALT PAVEMENT (1 ½" DEPTH)
TYPE SP STRUCTURAL COURSE (TRAFFIC E) (1 ½") (PG 76-22)
FRICTION COURSE FC-5 (¾") (PG 76-22)

Exhibit 913-3
4-Lane Flush Shoulder Resurfacing
Date: 1/1/2025

REVISIONS			
DATE	DESCRIPTION	DATE	DESCRIPTION

ENGINEER OF RECORD
LUKE S. WALKER, P.E.
LICENSE NUMBER: 99991
ROADWAY ENGINEERS, INC.
123 MAIN STREET
TALLAHASSEE, FL 32301

STATE OF FLORIDA
DEPARTMENT OF TRANSPORTATION

ROAD NO.	COUNTY	FINANCIAL PROJECT ID
SR 22	BAY	123456-1-52-01

TYPICAL SECTION

SHEET NO. 6

THE OFFICIAL RECORD OF THIS SHEET IS THE ELECTRONIC FILE DIGITALLY SIGNED AND SEALED UNDER RULE 61G15-23.004, F.A.C.

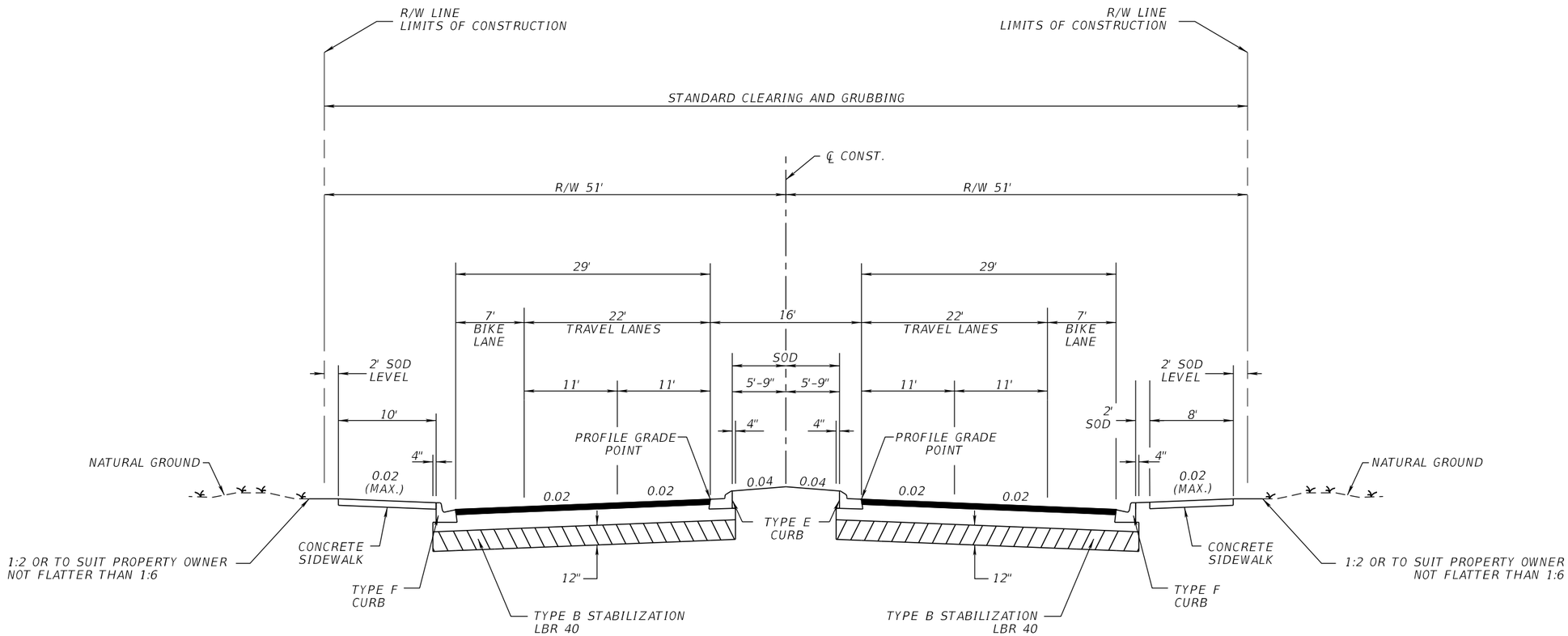

TYPICAL SECTION
SR 22
STA. 98+40.00 TO STA. 202+33.00

TRAFFIC DATA

CURRENT YEAR = 2018 AADT = 22800
ESTIMATED OPENING YEAR = 2020 AADT = 25800
ESTIMATED DESIGN YEAR = 2040 AADT = 30600
K = 6% D = 55% T = 2% (24 HOUR)
DESIGN HOUR T = 1%
DESIGN SPEED = 30 MPH
CONTEXT CLASSIFICATION = C2T

TRAVEL AND BIKE LANES

OPTIONAL BASE GROUP 9 (TYPE B-12.5 ONLY)
TYPE SP STRUCTURAL COURSE (TRAFFIC C) (2")
FRICTION COURSE FC-12.5 (TRAFFIC C) (1 ½") (PG 76-22)

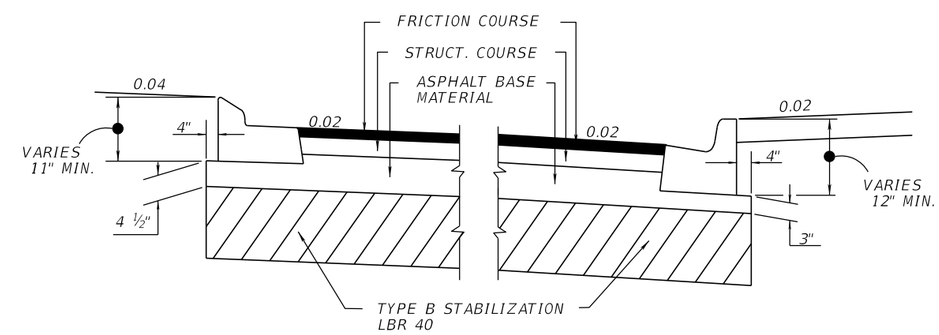

DETAIL OF ASPHALT BASE CURB PAD

Exhibit 913-4
4-Lane Curbed
Date: 1/1/2025

REVISIONS			
DATE	DESCRIPTION	DATE	DESCRIPTION

ENGINEER OF RECORD
LUKE S. WALKER, P.E.
LICENSE NUMBER: 99991
ROADWAY ENGINEERS, INC.
123 MAIN STREET
TALLAHASSEE, FL 32301

STATE OF FLORIDA
DEPARTMENT OF TRANSPORTATION

ROAD NO.	COUNTY	FINANCIAL PROJECT ID
SR 22	BAY	123456-1-52-01

TYPICAL SECTION

SHEET NO.

8/7/2024 2:47:28 PM KWASDMS
C:\Worksets\FDOT\123456789D1\Roadway\FDM_900_Exhibit_Master.dgn

THE OFFICIAL RECORD OF THIS SHEET IS THE ELECTRONIC FILE DIGITALLY SIGNED AND SEALED UNDER RULE 61G15-23.004, F.A.C.

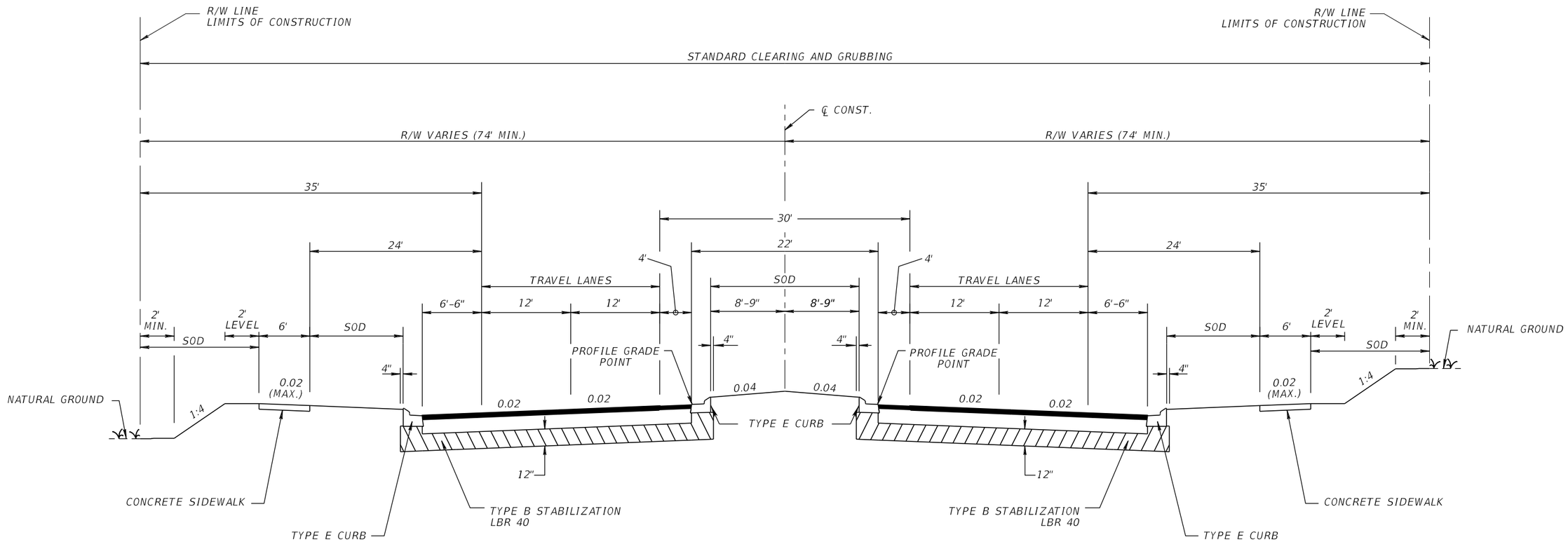

TYPICAL SECTION
SR 22
STA. 560+50.00 TO STA. 882+25.00

TRAFFIC DATA

CURRENT YEAR = 2018 AADT = 22800
ESTIMATED OPENING YEAR = 2020 AADT = 25800
ESTIMATED DESIGN YEAR = 2040 AADT = 30600
K = 6% D = 55% T = 2% (24 HOUR)
DESIGN HOUR T = 1%
DESIGN SPEED = 50 MPH
CONTEXT CLASSIFICATION = C3

TRAVEL LANES AND SHOULDER PAVEMENT

OPTIONAL BASE GROUP 9
TYPE SP STRUCTURAL COURSE (TRAFFIC B) (2 ½")
FRICTION COURSE FC-12.5 (TRAFFIC B) (1 ½") (PG 76-22)

Exhibit 913-5
4-Lane High Speed
Curbed
Date: 1/1/2023

REVISIONS			
DATE	DESCRIPTION	DATE	DESCRIPTION

ENGINEER OF RECORD
LUKE S. WALKER, P.E.
LICENSE NUMBER: 99991
ROADWAY ENGINEERS, INC.
123 MAIN STREET
TALLAHASSEE, FL 32301

STATE OF FLORIDA
DEPARTMENT OF TRANSPORTATION

ROAD NO.	COUNTY	FINANCIAL PROJECT ID
SR 22	BAY	123456-1-52-01

TYPICAL SECTION

SHEET NO.

10/26/2022 4:26:42 PM PS972BW
C:\Worksets\FDOT\12345615201\Roadway\TYPSRD01.dgn

THE OFFICIAL RECORD OF THIS SHEET IS THE ELECTRONIC FILE DIGITALLY SIGNED AND SEALED UNDER RULE 61G15-23.004, F.A.C.

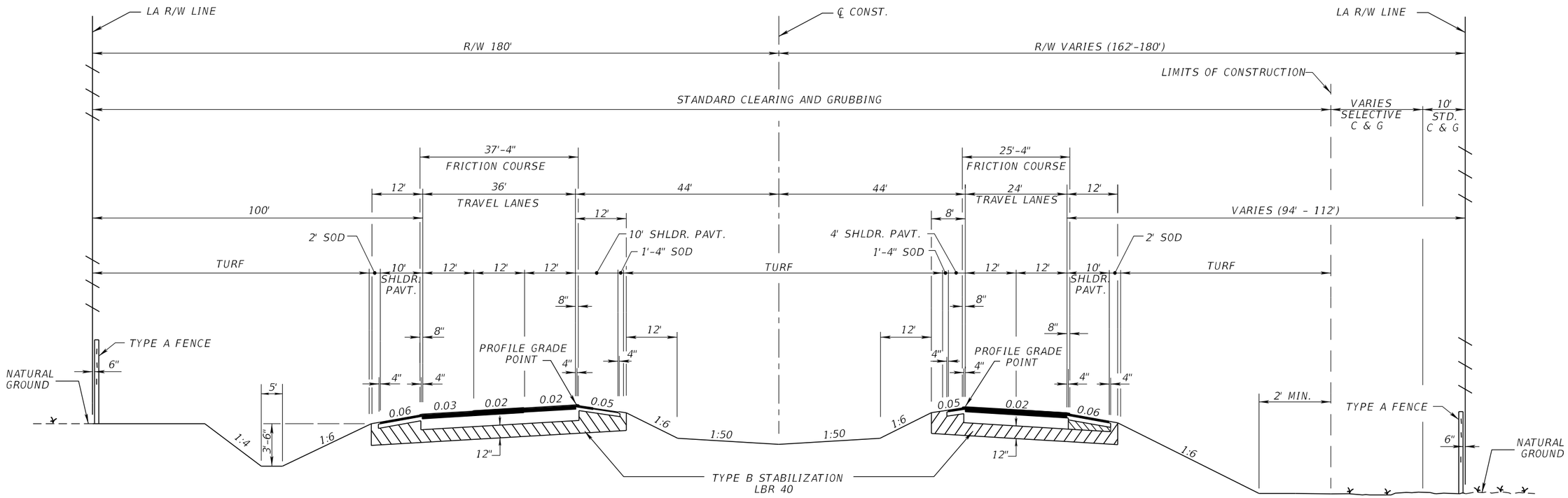

TYPICAL SECTION
I-10 (SR 8)
STA. 567+25.67 TO STA. 1056+84.35

TRAFFIC DATA

CURRENT YEAR = 2018 AADT = 22300
ESTIMATED OPENING YEAR = 2020 AADT = 23300
ESTIMATED DESIGN YEAR = 2040 AADT = 51500
K = 9 % D = 56 % T = 10 % (24 HOUR)
DESIGN HOUR T = 5 %
DESIGN SPEED = 70 MPH
CONTEXT CLASSIFICATION = N/A

TRAVEL LANES

OPTIONAL BASE GROUP 9
TYPE SP STRUCTURAL COURSE (TRAFFIC E) (2 ½")
TYPE SP STRUCTURAL COURSE (TRAFFIC E) (1 ½") (PG 76-22)
FRICTION COURSE FC-5 (¾") (PG 76-22)

SHOULDER PAVEMENT

OPTIONAL BASE GROUP 1
TYPE SP STRUCTURAL COURSE (TRAFFIC E) (1 ½") (PG 76-22)
GROUND-IN RUMBLE STRIPS (INDEX 546-010)

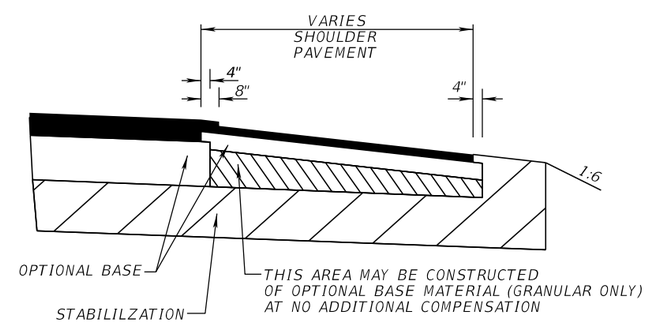

SHOULDER PAVEMENT DETAIL

Exhibit 913-6
4-Lane Limited Access Facility
Date: 1/1/2023

REVISIONS			
DATE	DESCRIPTION	DATE	DESCRIPTION

ENGINEER OF RECORD
LUKE S. WALKER, P.E.
LICENSE NUMBER: 99991
ROADWAY ENGINEERS, INC.
123 MAIN STREET
TALLAHASSEE, FL 32301

STATE OF FLORIDA
DEPARTMENT OF TRANSPORTATION

ROAD NO.	COUNTY	FINANCIAL PROJECT ID
SR 8	BAY	123456-1-52-01

TYPICAL SECTION

SHEET NO.

10/26/2022 4:29:50 PM PS972BW
C:\Worksets\FDOT\12345615201\Roadway\TYPSRD01.dgn

THE OFFICIAL RECORD OF THIS SHEET IS THE ELECTRONIC FILE DIGITALLY SIGNED AND SEALED UNDER RULE 61G15-23.004, F.A.C.

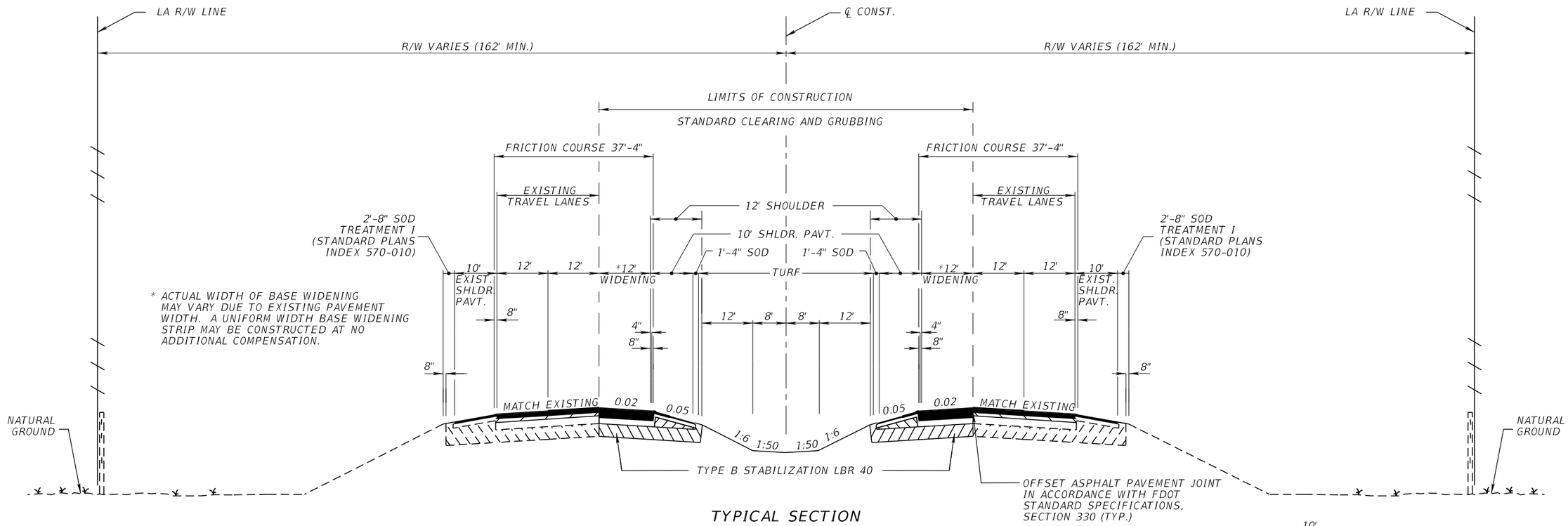

TRAFFIC DATA

CURRENT YEAR = 2018 AADT = 22300
ESTIMATED OPENING YEAR = 2020 AADT = 23300
ESTIMATED DESIGN YEAR = 2040 AADT = 51500
K = 9 % D = 56 % T = 10 % (24 HOUR)
DESIGN HOUR T = 5 %
DESIGN SPEED = 70 MPH
CONTEXT CLASSIFICATION = N/A

TYPICAL SECTION
I-75 (SR 93)
STA. 1342+25.00 TO STA. 1950+85.75

WIDENING

OPTIONAL BASE GROUP 9
TYPE SP STRUCTURAL COURSE (TRAFFIC E) (2 ½")
TYPE SP STRUCTURAL COURSE (TRAFFIC E) (1 ½") (PG 76-22)
FRICTION COURSE FC-5 (¾") (PG 76-22)

EXISTING TRAVEL LANES

MILL EXISTING ASPHALT PAVEMENT (2 ¼" DEPTH)
TYPE SP STRUCTURAL COURSE (TRAFFIC E) (1 ½") (PG 76-22)
FRICTION COURSE FC-5 (¾") (PG 76-22)

EXISTING OUTSIDE SHOULDER PAVEMENT

MILL EXISTING ASPHALT PAVEMENT (1 ½" DEPTH)
TYPE SP STRUCTURAL COURSE (TRAFFIC E) (1 ½") (PG 76-22)
GROUND-IN RUMBLE STRIPS (INDEX546-010)

NEW INSIDE SHOULDER PAVEMENT

OPTIONAL BASE GROUP 1
TYPE SP STRUCTURAL COURSE (TRAFFIC E) (1 ½") (PG 76-22)
GROUND-IN RUMBLE STRIPS (INDEX 546-010)

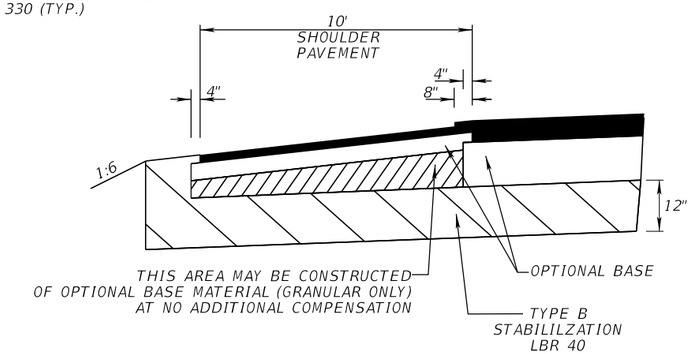

INSIDE SHOULDER PAVEMENT DETAIL

Exhibit 913-7
6-Lane Limited Access Facility
Date: 1/1/2023

REVISIONS			
DATE	DESCRIPTION	DATE	DESCRIPTION

ENGINEER OF RECORD
LUKE S. WALKER, P.E.
LICENSE NUMBER: 99991
ROADWAY ENGINEERS, INC.
123 MAIN STREET
TALLAHASSEE, FL 32301

STATE OF FLORIDA
DEPARTMENT OF TRANSPORTATION

ROAD NO.	COUNTY	FINANCIAL PROJECT ID
SR 93	BAY	123456-1-52-01

TYPICAL SECTION

SHEET NO. 10

12/19/2023 3:41:47 PM PS972CT
C:\Worksets\FDOT\FDM Exhibits\Roadway\FDM_900_Exhibit_Master.dgn

THE OFFICIAL RECORD OF THIS SHEET IS THE ELECTRONIC FILE DIGITALLY SIGNED AND SEALED UNDER RULE 61G15-23.004, F.A.C.

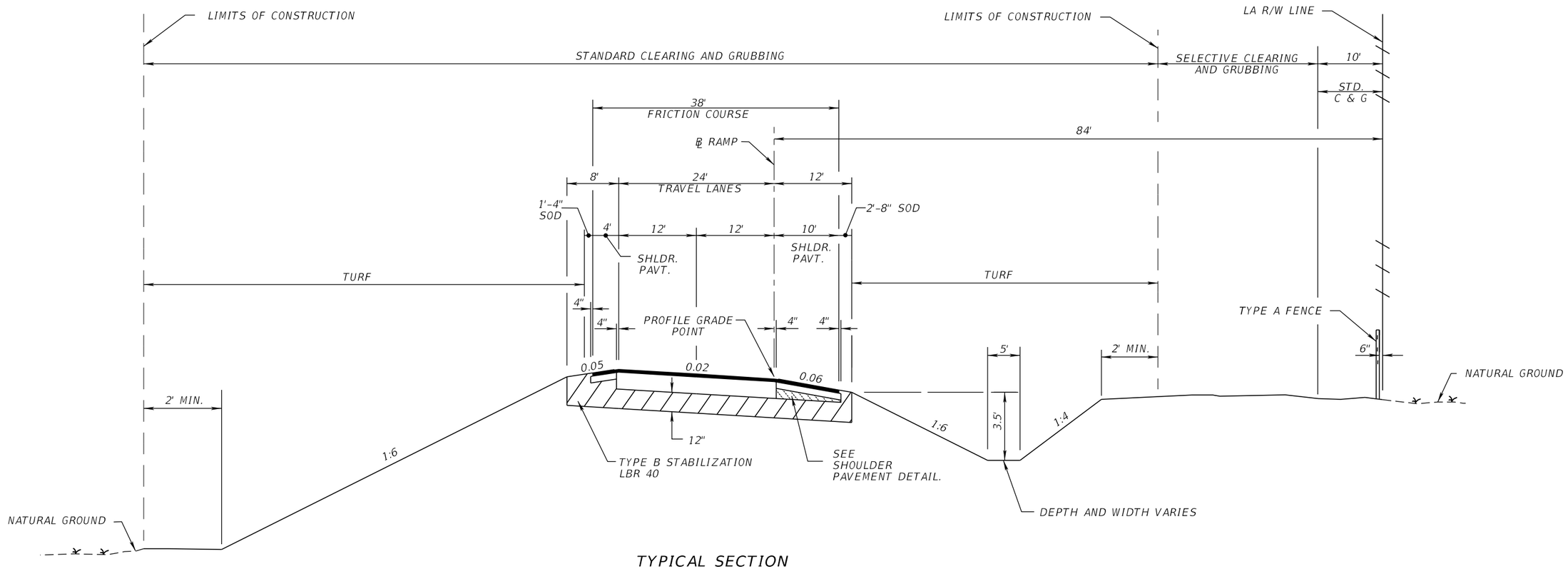

TYPICAL SECTION
RAMP "C"
STA. 623+28.64 TO STA. 629+13.78

TRAFFIC DATA

CURRENT YEAR = 2018 AADT = 8,000
ESTIMATED OPENING YEAR = 2020 AADT = 8,800
ESTIMATED DESIGN YEAR = 2040 AADT = 12,000
K = 10% D = 100% T = 8% (24 HOUR)
DESIGN SPEED = 30 MPH
CONTEXT CLASSIFICATION = N/A

TRAVEL LANES

OPTIONAL BASE GROUP 9
TYPE SP STRUCTURAL COURSE (TRAFFIC B) (1 ½")
FRICTION COURSE FC-12.5 (TRAFFIC B) (1 ½") (PG 76-22)

SHOULDER PAVEMENT

OPTIONAL BASE GROUP 1
FRICTION COURSE FC-12.5 (TRAFFIC B) (1 ½") (PG 76-22)

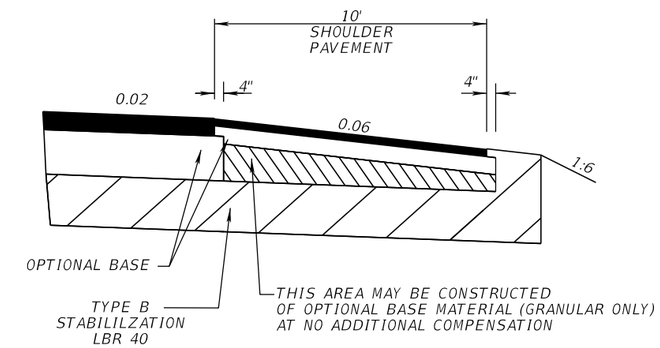

SHOULDER PAVEMENT DETAIL

Exhibit 913-8
Ramp
Date: 1/1/2022

REVISIONS			
DATE	DESCRIPTION	DATE	DESCRIPTION

ENGINEER OF RECORD
LUKE S. WALKER, P.E.
LICENSE NUMBER: 99991
ROADWAY ENGINEERS, INC.
123 MAIN STREET
TALLAHASSEE, FL 32301

STATE OF FLORIDA
DEPARTMENT OF TRANSPORTATION

ROAD NO.	COUNTY	FINANCIAL PROJECT ID
SR 93	BAY	123456-1-52-01

TYPICAL SECTION

SHEET NO.

9/14/2022 3:17:37 PM ps972bw
C:\Worksets\FDOT\12345615201\Roadway\TYPSRD01.dgn

THE OFFICIAL RECORD OF THIS SHEET IS THE ELECTRONIC FILE DIGITALLY SIGNED AND SEALED UNDER RULE 61G15-23.004, F.A.C.

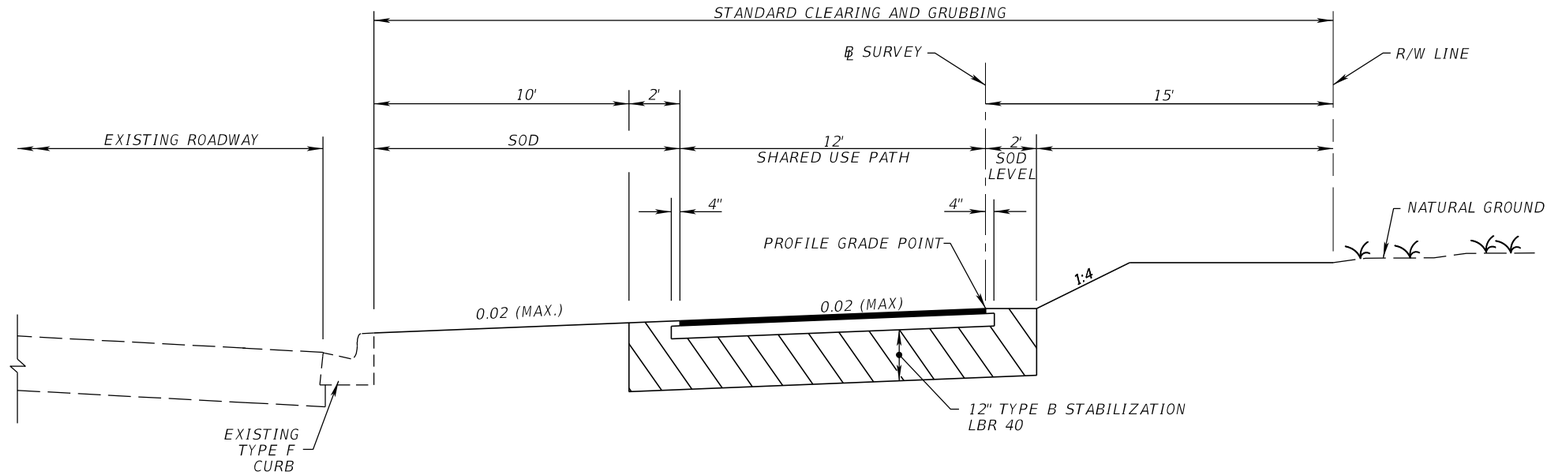

TYPICAL SECTION
SR 22 (WILLOW BEND WAY)
STA. 122+00.000 TO STA. 210+65.000

SHARED USE PATH

OPTIONAL BASE GROUP 1
TYPE SP STRUCTURAL COURSE (TRAFFIC B) (1 $\frac{1}{2}$")

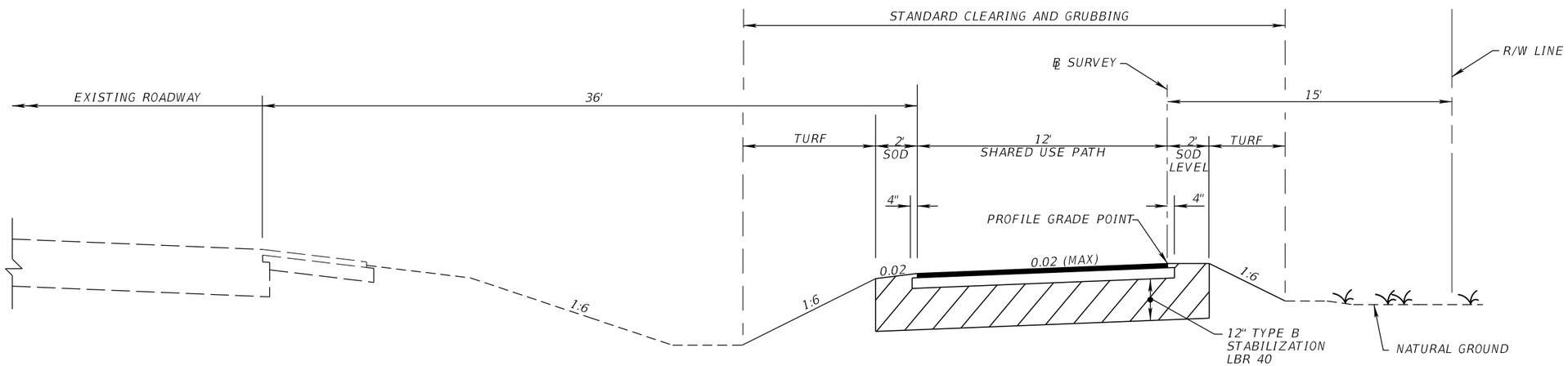

TYPICAL SECTION
SR 22 (WILLOW BEND WAY)
STA. 210+65.000 TO STA. 305+15.000

SHARED USE PATH

OPTIONAL BASE GROUP 1
TYPE SP STRUCTURAL COURSE (TRAFFIC B) (1 $\frac{1}{2}$")

Exhibit 913-9
Shared Use Path
Date: 1/1/2023

REVISIONS			
DATE	DESCRIPTION	DATE	DESCRIPTION

ENGINEER OF RECORD
LUKE S. WALKER, P.E.
LICENSE NUMBER: 99991
ROADWAY ENGINEERS, INC.
123 MAIN STREET
TALLAHASSEE, FL 32301

STATE OF FLORIDA
DEPARTMENT OF TRANSPORTATION

ROAD NO.	COUNTY	FINANCIAL PROJECT ID
SR 22	BAY	123456-1-52-01

TYPICAL SECTION

SHEET NO.

10/26/2022 4:53:34 PM PS972BW
C:\Worksets\FDOT\123456152D1\Roadway\TYPSRD01.dgn

THE OFFICIAL RECORD OF THIS SHEET IS THE ELECTRONIC FILE DIGITALLY SIGNED AND SEALED UNDER RULE 61G15-23.004, F.A.C.

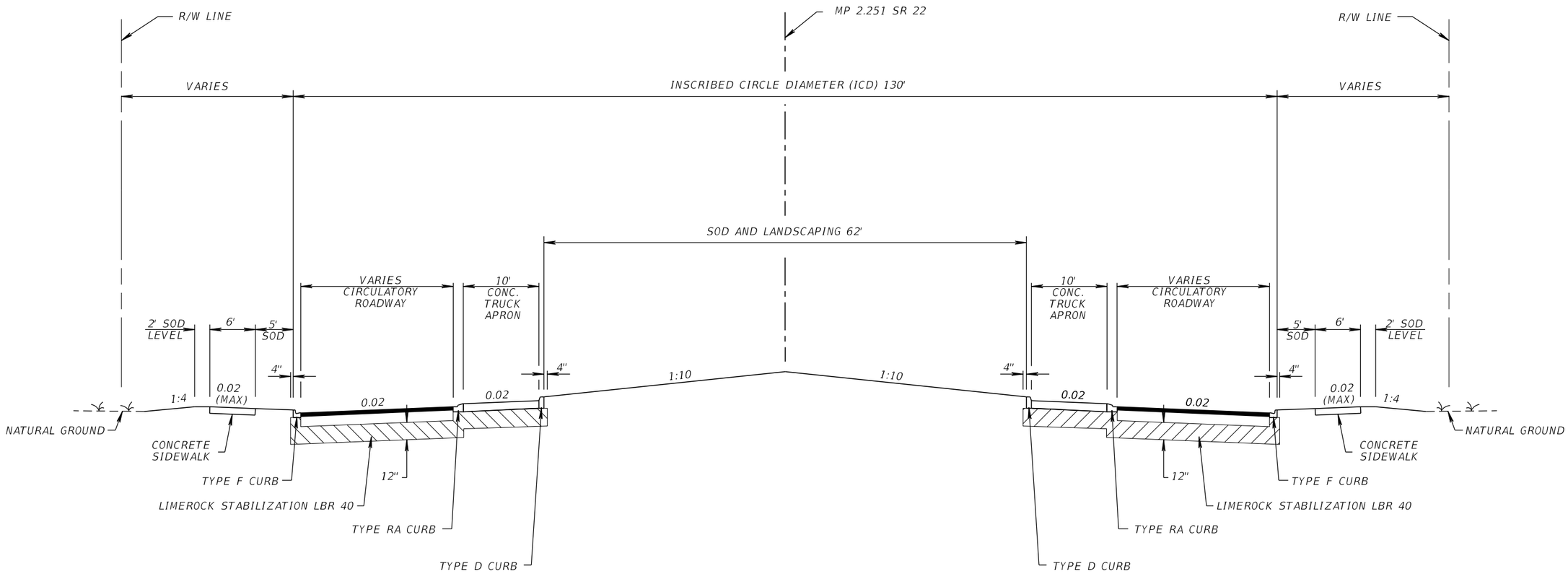

TYPICAL SECTION
MP 2.251 SR 22 = ℄ ALDERAAN RD.

TRAFFIC DATA

CURRENT YEAR = 2018 AADT = 22800
ESTIMATED OPENING YEAR = 2020 AADT = 25800
ESTIMATED DESIGN YEAR = 2040 AADT = 30600
K = 6% D = 55% T = 2% (24 HOUR)
DESIGN HOUR T = 1%
CONTEXT CLASSIFICATION = N/A

CIRCULATORY AND CONNECTING ROADWAYS

OPTIONAL BASE GROUP 9
TYPE SP STRUCTURAL COURSE (TRAFFIC C) (1 ½")
FRICTION COURSE FC-9.5 (TRAFFIC C) (1 ½")

Exhibit 913-10
Roundabout
Date: 1/1/2023

REVISIONS			
DATE	DESCRIPTION	DATE	DESCRIPTION

ENGINEER OF RECORD
LUKE S. WALKER, P.E.
LICENSE NUMBER: 99991
ROADWAY ENGINEERS, INC.
123 MAIN STREET
TALLAHASSEE, FL 32301

STATE OF FLORIDA
DEPARTMENT OF TRANSPORTATION

ROAD NO.	COUNTY	FINANCIAL PROJECT ID
SR 22	BAY	123456-1-52-01

TYPICAL SECTION

SHEET NO.

9/14/2022 2:51:41 PM ps972bw
C:\Worksets\FDOT\123456\15201\Roadway\TYPSRD01.dgn

THE OFFICIAL RECORD OF THIS SHEET IS THE ELECTRONIC FILE DIGITALLY SIGNED AND SEALED UNDER RULE 61G15-23.004, F.A.C.

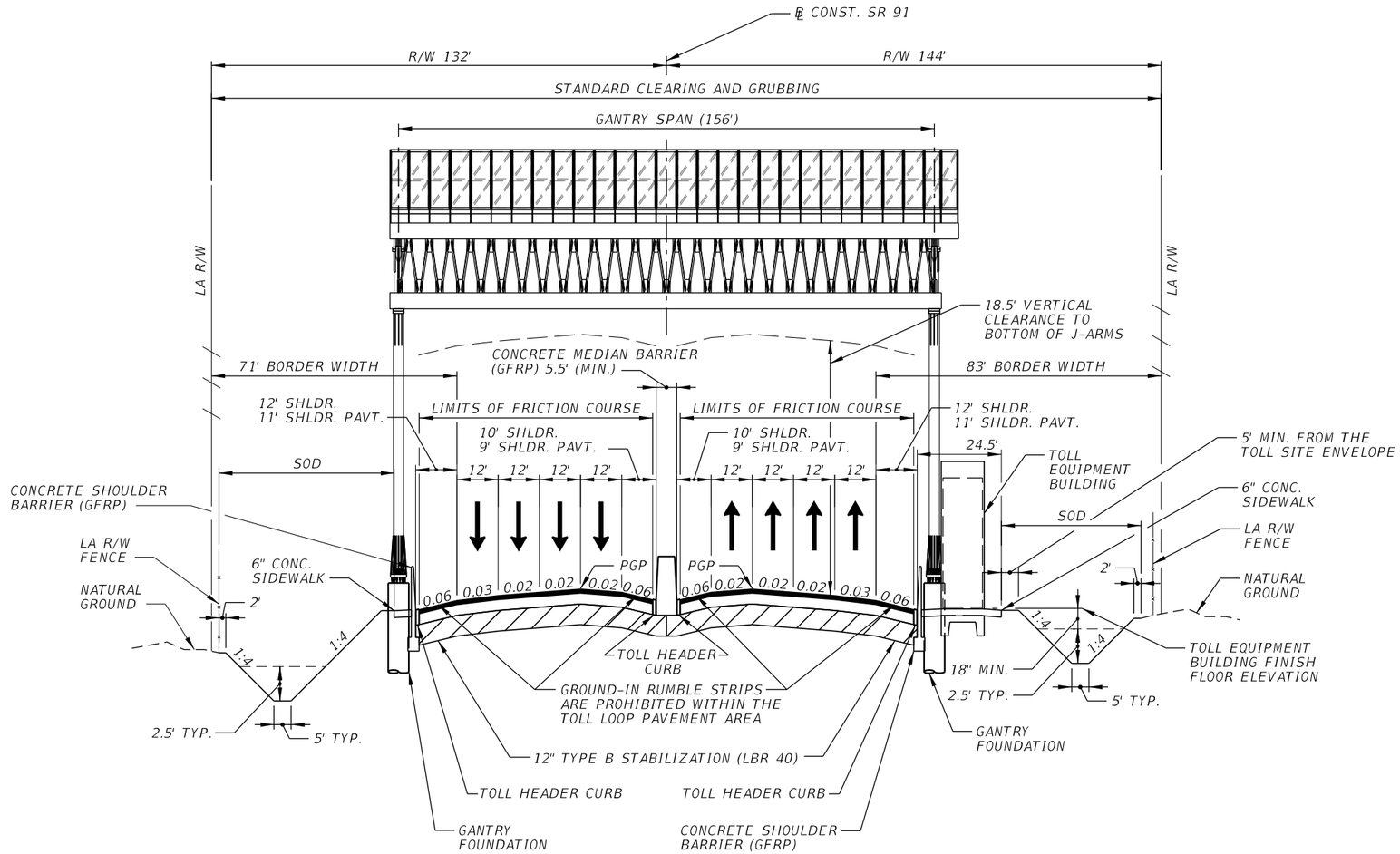

TYPICAL SECTION
SR 91 - MAINLINE
SITE 3 - TES 3M ACCESSIBLE GANTRY
STA. 2677+77.82 TO STA. 2678+77.82

TRAFFIC DATA

CURRENT YEAR = 2015 AADT = 69,200
ESTIMATED OPENING YEAR = 2022 AADT = 83,300
ESTIMATED DESIGN YEAR = 2042 AADT = 126,900
K = 9.50% D = 52% T = 12.8% (24 HOUR)
DESIGN HOUR T = 6.5%
DESIGN SPEED = 70 MPH

TOLL SITE LANES AND SHOULDERS

OPTIONAL BASE GROUP 11 (TYPE B-12.5) (7") WITH
TYPE SP STRUCTURAL COURSE (TRAFFIC D) (2½")
TYPE SP STRUCTURAL COURSE (TRAFFIC D) (1½") (PG 76-22)
AND FRICTION COURSE FC-12.5 (TRAFFIC D) (1½") (PG 76-22)

TOLL FACILITY MAINTENANCE PULL-OFF AREA

TYPE B STABILIZATION (12")
OPTIONAL BASE GROUP 6 (8") WITH
TYPE SP STRUCTURAL COURSE (TRAFFIC B) (2")

Exhibit 913-11
Mainline Toll Gantry
Date: 1/1/2023

REVISIONS			
DATE	DESCRIPTION	DATE	DESCRIPTION

ENGINEER OF RECORD
LUKE S. WALKER, P.E.
LICENSE NUMBER: 99991
ROADWAY ENGINEERS, INC.
123 MAIN STREET
TALLAHASSEE, FL 32301

STATE OF FLORIDA
DEPARTMENT OF TRANSPORTATION

ROAD NO.	COUNTY	FINANCIAL PROJECT ID
SR 91	ORANGE	123456-1-52-01

TYPICAL SECTION

SHEET NO.

9/14/2022 2:52:01 PM ps972bw
C:\Worksets\FDOT\12345615201\Roadway\TYPSRD01.dgn

THE OFFICIAL RECORD OF THIS SHEET IS THE ELECTRONIC FILE DIGITALLY SIGNED AND SEALED UNDER RULE 61G15-23.004, F.A.C.

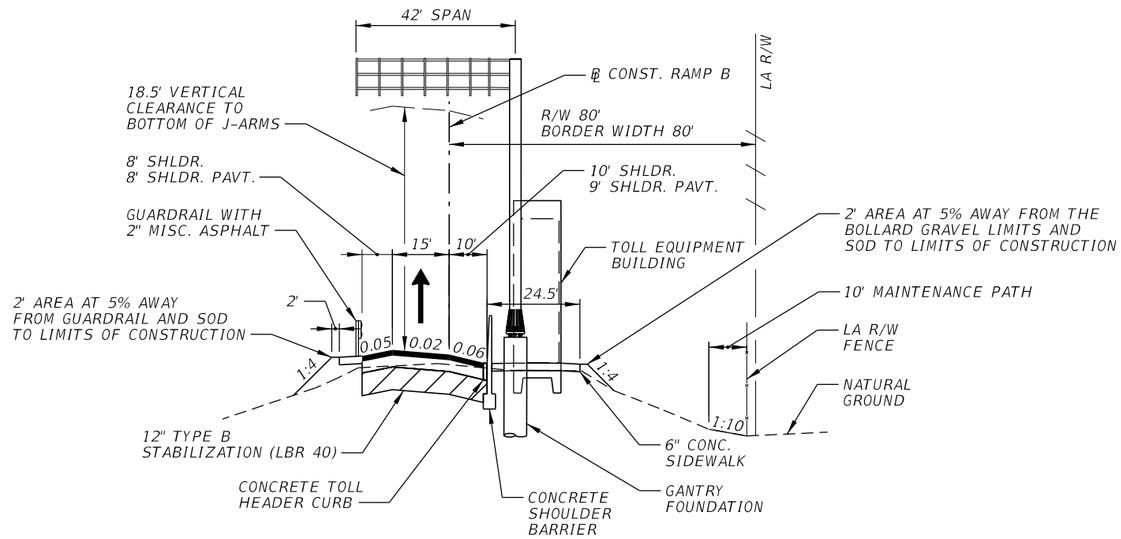

TYPICAL SECTION
RAMP B - TOLL SITE
STA. 2033+50.00 TO STA. 2034+00.00

TOLL SITE LANES AND SHOULDERS

OPTIONAL BASE GROUP 11 WITH
TYPE SP STRUCTURAL COURSE (TRAFFIC D) (2½")
TYPE SP STRUCTURAL COURSE (TRAFFIC D) (1½") (PG 76-22)
AND FRICTION COURSE FC-12.5 (TRAFFIC D) (1½") (PG 76-22)

TOLL FACILITY MAINTENANCE PULL-OFF AREA

TYPE B STABILIZATION (12")
OPTIONAL BASE GROUP 6 (8") WITH
TYPE SP STRUCTURAL COURSE (TRAFFIC B) (2")

TRAFFIC DATA - RAMP B

CURRENT YEAR = 2016 AADT = 37,100
ESTIMATED OPENING YEAR = 2025 AADT = 36,200
ESTIMATED DESIGN YEAR = 2045 AADT = 50,000
K = 10% D = 61% T = 15.7% (24 HOUR)
DESIGN HOUR T = 8%
DESIGN SPEED = 45 MPH

Exhibit 913-12
Ramp Toll Gantry
Date: 1/1/2023

REVISIONS			
DATE	DESCRIPTION	DATE	DESCRIPTION

ENGINEER OF RECORD
LUKE S. WALKER, P.E.
LICENSE NUMBER: 99991
ROADWAY ENGINEERS, INC.
123 MAIN STREET
TALLAHASSEE, FL 32301

STATE OF FLORIDA
DEPARTMENT OF TRANSPORTATION

ROAD NO.	COUNTY	FINANCIAL PROJECT ID
SR 91	ORANGE	123456-1-52-01

TYPICAL SECTION

SHEET NO.

9/14/2022 2:52:25 PM ps972bw
C:\Worksets\FDOT\123456\5201\Roadway\TYPSRD01.dgn

THE OFFICIAL RECORD OF THIS SHEET IS THE ELECTRONIC FILE DIGITALLY SIGNED AND SEALED UNDER RULE 61G15-23.004, F.A.C.

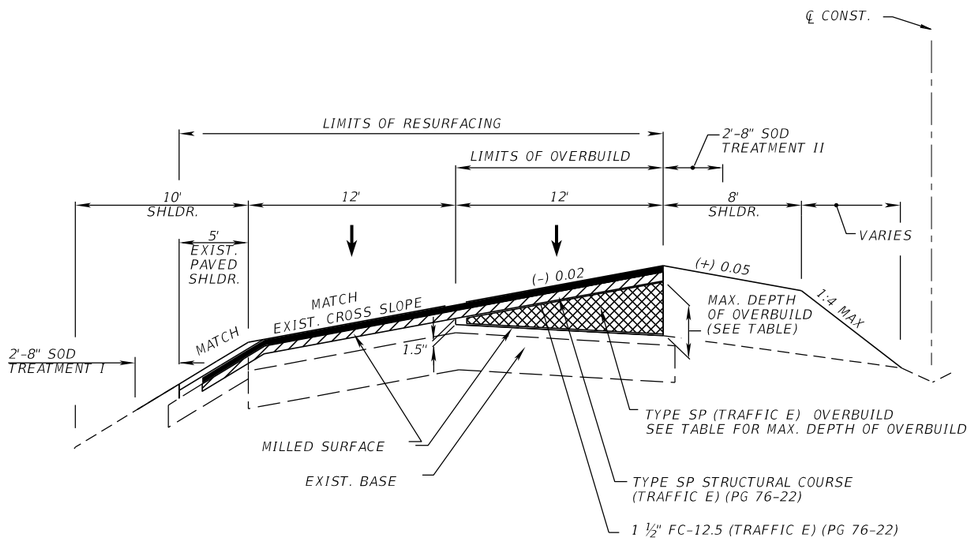

OVERBUILD
AND RESURFACING DETAIL

NTS

STA. 145+00.00 TO STA. 166+00.00

SR 22 WESTBOUND LANES

OVERBUILD DETAILS

LOCATION		EXIST. SLOPE (%)	PROPOSED SLOPE (%)	MAX. DEPTH OF OVERBUILD (IN.)	WIDTH OF OVERBUILD (FT.)	AREA OF OVERBUILD (SQ. FT.)	AMOUNT OF OVERBUILD (TON)	
STATION	LANE							
145+00	WESTBOUND INSIDE	(+) 1.6	EXISTING	1.5	12.0	1.5	--	
146+00	WESTBOUND INSIDE	(+) 1.0	(-) 2.0	5.8	12.0	3.6	18.7	
147+00	WESTBOUND INSIDE	(+) 1.6	(-) 2.0	6.7	12.0	4.1	28.2	
148+00	WESTBOUND INSIDE	(+) 0.9	(-) 2.0	5.7	12.0	3.6	28.2	
149+00	WESTBOUND INSIDE	(+) 0.4	(-) 2.0	4.9	12.0	3.2	24.9	
150+00	WESTBOUND INSIDE	(+) 0.9	(-) 2.0	5.7	12.0	3.6	24.9	
151+00	WESTBOUND INSIDE	(+) 0.4	(-) 2.0	4.9	12.0	3.2	24.9	
152+00	WESTBOUND INSIDE	(+) 0.3	(-) 2.0	4.8	12.0	3.2	23.5	
153+00	WESTBOUND INSIDE	(+) 0.0	(-) 2.0	4.4	12.0	3.0	22.7	
154+00	WESTBOUND INSIDE	(+) 0.6	(-) 2.0	5.2	12.0	3.4	23.5	
155+00	WESTBOUND INSIDE	(+) 1.2	(-) 2.0	6.1	12.0	3.8	26.4	
156+00	WESTBOUND INSIDE	(+) 1.4	(-) 2.0	6.4	12.0	4.0	28.6	
157+00	WESTBOUND INSIDE	(+) 0.8	(-) 2.0	5.5	12.0	3.5	27.5	
158+00	WESTBOUND INSIDE	(+) 1.1	(-) 2.0	6.0	12.0	3.8	26.8	
159+00	WESTBOUND INSIDE	(+) 1.0	(-) 2.0	5.8	12.0	3.6	27.1	
160+00	WESTBOUND INSIDE	(+) 1.2	(-) 2.0	6.1	12.0	3.8	27.1	
161+00	WESTBOUND INSIDE	(+) 2.2	(-) 2.0	7.5	12.0	4.5	30.4	
162+00	WESTBOUND INSIDE	(+) 2.2	(-) 2.0	7.5	12.0	4.5	33.0	
163+00	WESTBOUND INSIDE	(+) 1.2	(-) 2.0	6.1	12.0	3.8	30.4	
164+00	WESTBOUND INSIDE	(+) 0.8	(-) 2.0	5.5	12.0	3.5	26.8	TOTAL
165+00	WESTBOUND INSIDE	(+) 0.6	(-) 2.0	5.2	12.0	3.4	25.3	OVERBUILD
166+00	WESTBOUND INSIDE	(+) 1.5	EXISTING	1.5	12.0	1.5	18.0	546.9 TONS

Exhibit 913-13
Overbuild Details
Date: 1/1/2025

REVISIONS			
DATE	DESCRIPTION	DATE	DESCRIPTION

ENGINEER OF RECORD
LUKE S. WALKER, P.E.
LICENSE NUMBER: 99991
ROADWAY ENGINEERS, INC.
123 MAIN STREET
TALLAHASSEE, FL 32301

STATE OF FLORIDA
DEPARTMENT OF TRANSPORTATION

ROAD NO.	COUNTY	FINANCIAL PROJECT ID
SR 22	BAY	123456-1-52-01

TYPICAL SECTION

SHEET NO.

9/9/2024 1:44:05 PM KNASDMS
C:\Worksets\FDOT\12345678901\Roadway\FDM_900_Exhibit_Master.dgn

THE OFFICIAL RECORD OF THIS SHEET IS THE ELECTRONIC FILE DIGITALLY SIGNED AND SEALED UNDER RULE 61G15-23.004, F.A.C.

914 General Notes

914.1 General

Place the General Notes sheet before the first Roadway Plan-Profile sheet in the plans set. See ***Exhibit 914-1*** for an example of a General Notes sheet.

Many Department offices may be involved in the determination of the suitability of general notes or pay item notes added to the plans, however, the final acceptance of the proposed language is the responsibility of the District Specifications Office.

914.2 General Notes

General notes provide information and direction to the contractor by clarifying design details or construction practices. General notes are project-specific and must not restate, broaden or curtail requirements in the ***Standard Specifications*** or ***Standard Plans***.

General notes are not a substitute for specifications. Product and material requirements must be included in the applicable specifications. Refer to the Specifications Handbook for guidance.

914.2.1 Writing General Notes

Notes are written to the contractor and should be written as commands.

Follow the Federal Guidelines for Plain Language when writing notes and use terminology and abbreviations commonly used in the ***Standard Specifications*** and ***Standard Plans***. Other rules to follow include:

(1) Do not include “Contractor must”, “by the Contractor”, or similar phrases in notes.

(2) Use “must” instead of “shall”.

(3) Use active voice and present tense to structure the sentence as a command. “Must” is often not needed when writing in active voice.

(4) Use short sentences, i.e., be precise and concise.

(5) Omit unnecessary words such as particularly, somewhat, absolutely, actually, completely, really, quite, totally, all, utmost, and very.

(6) Avoid using “if-then” sentence structure, e.g., “If base is exposed during milling, immediately place tack coat over area.” A more correct sentence structure is: “Immediately place tack coat over any base that is exposed during milling.”

914.2.2 Required General Notes

Place the following notes on the General Notes sheet when applicable:

(1) All survey information was obtained from a licensed Florida Professional Surveyor and Mapper and utilized as supporting data in the production of design plans and for construction on subject project. The professional surveyor and mapper of record is:

{Surveyor name, P.S.M.}
{P.S.M. NO: #}
{Company Name}
{Company Address}
{Certificate of Authorization: #}

(2) The location(s) of the utilities shown in the plans (including those designated Vv, Vh, and Vvh) are based on limited investigation techniques and should be considered approximate only. The verified locations/elevations apply only at the points shown. Interpolations between these points have not been verified.

(3) Utility/Agency Owners for this project include:

{List Company Name, Contact Name, and Phone Number. As a best practice, the contact email may also be included.}

Also include:

- Contact information for persons responsible for the maintenance of FDOT infrastructure such as traffic counters, lighting, signal components, and ITS.
- Transportation Data and Analytics Office when there is a traffic monitoring site on the project or within one half mile of the construction. The contact person is the Traffic Data Section Manager.

(4) SR XX is an Emergency Shoulder Use (ESU) route between _____ and _____. Maintain a usable shoulder during all phases of construction that can be open to ESU traffic when directed by the Department.

914.2.3 Bridge Clearance

For projects affecting an existing bridge (e.g., bridge widenings or resurfacing) that propose a minimum design vertical clearance between 16’-0” and 16'-2", or if a Design Variation or Design Exception is required, place the following general note in the plans:

When construction is complete, submit a certified survey confirming the as-built minimum vertical clearance is equal to or greater than the minimum design vertical clearance called for in the plans.

914.3 Pay Item Notes

Place pay item notes on the General Notes sheet.

Information on how quantities are determined is contained in the Estimated Quantities (EQ) Report and should not be repeated in the plans as a pay item note.

Pay item notes are used to provide unique project information not covered by the basis of payment information contained in the ***Standard Specifications***, such as:

- Clarify how incidental work is to be paid for.
- Clarify the purpose, uses, or requirements.

914.4 Notes to Reviewer

The use of Notes to Reviewer is optional. However, these notes are particularly useful in documenting a project’s status when the plans are to be “shelved”.

Notes to Reviewer provide relevant information to reviewers, such as:

(1) Special directives and project details.

(2) Status of utility, R/W, and permit activities that may have a bearing on the level of completion for plan sheets.

(3) Clarification of Department commitments or agreements that reviewers should be apprised of.

(4) List of Design Exceptions, Design Variations, or Design Variation Memorandums being processed.

Place the Notes to Reviewer conspicuously on the General Notes sheet. Include these notes only with Phase I, Phase II and Phase III submittals.

GENERAL NOTES

1. ALL SURVEY INFORMATION WAS OBTAINED FROM A LICENSED FLORIDA PROFESSIONAL SURVEYOR AND MAPPER AND UTILIZED AS SUPPORTING DATA IN THE PRODUCTION OF DESIGN PLANS AND FOR CONSTRUCTION ON SUBJECT PROJECT. THE PROFESSIONAL SURVEYOR AND MAPPER OF RECORD IS:
   ANNA KING, P.S.M.
   P.S.M. NO.: 9993
   MAPS R US, INC.
   678 COMPASS ROAD
   MIAMI, FL 33179

2. THE LOCATION(S) OF THE UTILITIES SHOWN IN THE PLANS (INCLUDING THOSE DESIGNATED Vv, Vh AND Vvh) ARE BASED ON LIMITED INVESTIGATION TECHNIQUES AND SHOULD BE CONSIDERED APPROXIMATE ONLY. THE VERIFIED LOCATIONS/ELEVATIONS APPLY ONLY AT THE POINTS SHOWN. INTERPOLATIONS BETWEEN THESE POINTS HAVE NOT BEEN VERIFIED.

3. UTILITY/AGENCY OWNERS:

COMPANY	CONTACT	TELEPHONE NUMBERS	EMAIL (IF PROVIDED)
SHINRA POWER	CLOUD CROSS	(407) 555-1234	ccross@shinra.com
ENCOM	NOLEY McGEE	(407) 555-2345	mcgeen@encom.com
SILPH CO.	GIO KOALA	(407) 555-3456	giokoala@gmail.com
MAKO COMMUNICATION	ROB CUE	(407) 555-4567	not provided
BAY COUNTY UTILITIES	CHESTER DIGGER	(407) 555-5678	diggerc@bay.county.gov

4. SR 22 IS AN EMERGENCY SHOULDER USE (ESU) ROUTE BETWEEN I-10 AND US 319. MAINTAIN A USABLE SHOULDER DURING ALL PHASES OF CONSTRUCTION THAT CAN BE OPEN TO ESU TRAFFIC WHEN DIRECTED BY THE DEPARTMENT.

PHASE II NOTES FOR REVIEWERS

1. A RRR REPORT HAS BEEN PREPARED AND IS INCLUDED WITH THIS SUBMITTAL.

2. THE TYPICAL SECTION PACKAGE IS COMPLETE AND PENDING SIGNATURE CONCURRENCE.

3. DESIGN VARIATIONS ARE BEING PROCESSED FOR:
   - PAVEMENT CROSS SLOPE
   - SHOULDER CROSS SLOPE
   - SHOULDER WIDTH
   - LATERAL WIDTH TO GUARDRAIL
   - SUPERELEVATION
   - MAXIMUM CHANGE IN CROSS SLOPE BETWEEN ADJACENT LANES
   - 10-FT-WIDE MAINTENANCE AREA FOR RETAINING WALL
   - DEFLECTION IN ALIGNMENT
   - MAXIMUM DEFLECTION THROUGH AN INTERSECTION
   - CLEAR ZONE FOR DRAINAGE FEATURES

   THESE VARIATIONS WILL BE SUBMITTED FOR REVIEW AND APPROVAL PRIOR TO PHASE III SUBMITTAL.

4. MAINTENANCE AGREEMENT FOR ARCHITECTURAL LIGHTING IS BEING PROCESSED.

5. DDI DESIGN FOLLOWS CRITERIA SET BY FDM D217 DATED JANUARY 2022.

Exhibit 914-1
General Notes
Date: 1/1/2025

THE OFFICIAL RECORD OF THIS SHEET IS THE ELECTRONIC FILE DIGITALLY SIGNED AND SEALED UNDER RULE 61G15-23.004, F.A.C.

915 Roadway Plan-Profile Sheet

915.1 General

The signed and sealed Building Information Model (BIM) files contain the complete horizontal and vertical geometry definitions for the project. The Roadway Plan-Profile sheet shows a 2D representation of the design contained within the model(s). Various roadway elements such as pavement width, medians, paved shoulders, curbs, drainage elements, tapers, turn provisions, and intersecting roadways, are annotated on this sheet.

Roadway profiles are typically provided for new construction and reconstruction projects and are shown with the plan view on the same sheet. When roadway profiles are not needed, title the sheet as Roadway Plan Sheet.

When appropriate, the plan or plan-profile sheet may utilize multi-stacking (subdividing sheet horizontally); each panel containing a roadway plan view with (when appropriate) the corresponding roadway profile directly below.

Use the following horizontal scales:

	Standard	Optional
Curbed Roadways	1” = 40’	1” = 50’
Flush-shoulder Roadways	1” = 50’	1” = 100’

See ***Exhibit 915-1*** for an example of a Roadway Plan-Profile sheet.

915.2 Roadway Plan

Display a north arrow and scale within each plan view, typically in the upper right portion.

Display the roadway plan view such that the centerline of construction or baseline of construction stationing increases from left to right. Display bearings for tangent sections (in the direction of stationing) below the centerline or baseline. Display station numbers close to station ticks.

Display existing topography including roads, streets, drives, buildings, underground and overhead utilities, walls, curbs, pavements, fences, railroads, and bridges, drainage structures and similar items, as well as streams, ponds, lakes, wooded areas, ditches, existing gasoline storage tanks within limits of topographical survey, and other physical features. Label existing features as needed to clarify the design intent.

915.2.1 Required Labeling and Information

Include labeling and dimensions only to the extent necessary to convey the design intent of the improvements. Provide the following labeling and dimensions:

- Flag and station the begin and end project limits and construction limits. The project limits should be at the beginning and the end of the full typical sections. Include the begin and end construction limits where they differ from the project limits. Transitions for maintenance of traffic and other construction work such as feathering, friction course, guardrail, drainage work, signing and marking work, and sidewalk may fall outside of the project limits but must be included within the construction limits. If plans include more than one project, identify the limits for each by Financial Project ID.
- Display station equations along the centerline or baseline of construction.
- Flag and station the begin and end of project exceptions (e.g., excluded intersections, bridges).
- Indicate each type of construction classification where more than one type is involved (e.g., new construction, resurfacing, bridge work, widening, and milling). Use shading, patterning, or labeling to convey the information. Indicate the limits of pavement and grading at side street intersections. Provide a legend when shading or patterning is used.
- Display proposed curbs, traffic separators, sidewalks, curb ramps, retaining walls, and driveways. Label curbs and curb ramps indicating type. Label and dimension sidewalks, medians, and traffic separators.
- Dimension the traveled way along the mainline and where pavement widths change. Dimension the traveled way of side streets and driveways.
- Display proposed drainage systems by depicting drainage pipes and French drain with a single line, and the outline of inlets, manholes, junction boxes, and outfall features (e.g., mitered end section (MES), end wall). Identify by structure number only. Do not label pipe sizes or lengths.
- Display box culverts and three-sided culverts. Identify by structure number only. Do not label culvert sizes or lengths.
- Display and label R/W lines. Display and label construction easements or license agreements.
- Display and label the limits of wetlands based on permit or regulatory requirements.

- Display and label Verified Vertical Elevation and Horizontal Location (V_{vh}) for underground utilities.
- Display and label overhead utilities indicating the line voltage. For a multi-line electrical overhead crossing, accurately show the location of each line. Show utility line heights where overhead lines may impact proposed construction.
- Identify all traffic monitoring sites in or within one-half mile of the project limits with the following notation:

  Traffic Monitoring Site Number (XXXX)
  Roadway Section Number (XXXX)
  Milepost (XX.XXX)
  Site includes vehicle detectors in roadway and pedestal, pole or base mounted cabinet, buried cable, and solar power unit on R/W. Inquiries about monitoring sites should be addressed to the Traffic Data Section Manager of the Transportation Data and Analytics Office, Office of Planning.

- When it is determined that a sectional view is helpful to convey the design intent at critical locations, display and label the sectional view near the critical location.

Projects with minor utility work or impacts may include these features on the Roadway Plan-Profile sheet.

915.2.2 Horizontal Curves

PC and PT points of horizontal curves are designated by small circles with short radial lines from these points, and PI points by a small triangle with a short section of tangent on either side. Display the following horizontal curve data on the plan view:

PI	(Station)	R	(Radius Length)
Δ	(Delta Angle with Direction)	PC	(Station)
D	(Degree of Curve)	PT	(Station)
T	(Tangent Length)	e	(Superelevation Rate)
L	(Length of Curve)		

915.2.3 Bridges and Bridge Culverts

Bridge-sized culverts (a.k.a., bridge culverts) are defined in ***FDM 265.1***. Flag and station the begin station and end station for bridge culverts (outside wall to outside wall). Provide a bridge number and a drainage structure number for all bridge culverts.

Display proposed bridges and approach slabs by simple outline. Flag and station the begin station and end station for the bridge and for the approach slabs. Provide a bridge number for all bridges.

When appropriate, display a short section of lateral ditch/outfall centerline on the Roadway Plan-Profile sheet.

915.2.4 Interchanges

The entire interchange should be shown on one sheet using a 1" = 400' scale. With larger interchanges, consider using match lines and placing extended portions of the alignment in available space on the sheet.

Display the ramp baseline of construction, typically located along the right edge of pavement with respect to the direction of traffic. Ramp stationing should be increasing in the same direction as the project.

Identify ramps using letters or a combination of letters and numbers (e.g., Ramp A, Ramp B-1, Ramp B-2). Ramps in the first left quadrant along mainline stationing should be assigned first. Name assignments progress in a counterclockwise direction around the interchange (see ***Figure 915.2.1***). For projects with two or more interchanges, continue name assignments with the next letter and in same counterclockwise direction noted above.

Figure 915.2.1 Interchange Layout

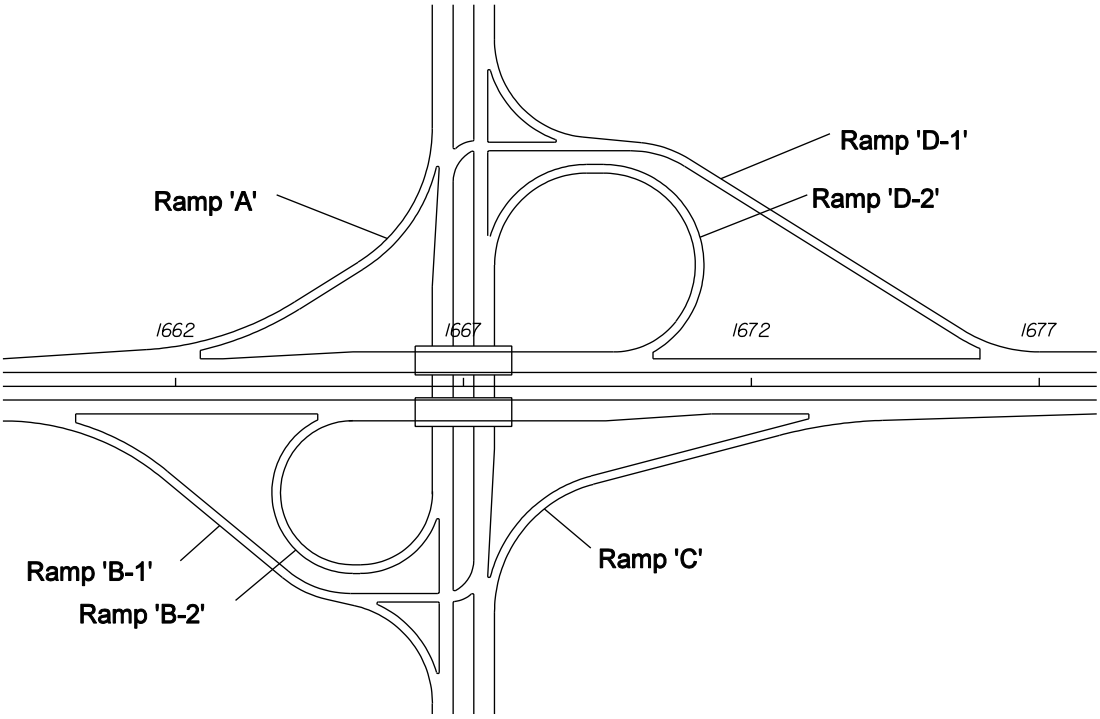

Frontage roads should be assigned a unique alpha or numeric designation to avoid confusion with ramp nomenclature.

915.2.4.1 Ramp Terminal Details

Consider providing ramp terminal details at a scale of 1" = 40'. Ramp terminal details should be shown on the same page as the interchange.

915.3 Roadway Profile

Display roadway profiles directly below the corresponding roadway plan view. As illustrated in ***Exhibit 915-1***, each roadway profile must include a background grid at the appropriate scale. The horizontal scale and interval stationing for the roadway profile must be the same as that used for the roadway plan view. The vertical scale is typically 10% of the horizontal scale (e.g., 1” = 100’ horizontal scale would typically use a 1” = 10’ vertical scale).

Align the begin roadway profile stationing with the begin roadway plan view stationing. Display stationing along the bottom of the grid. Display vertical elevations along both sides of the grid.

915.3.1 Required Labeling and Information

Include labeling and dimensions only to the extent necessary to convey the design intent of the improvements. Provide the following labeling and dimensions:

- Flag and station the begin and end project and construction limits matching what is shown in the roadway plan view.
- Label the percent grade for each tangent section. When two tangent grades intersect and no vertical curve is required, label the PI station and elevation.
- Flag and station the superelevated sections (see ***FDM 915.3.3***).
- Show the cross section template of the underlying road, railroad, or waterway for bridges and box culverts along the centerline or baseline of construction. Display minimum vertical clearances for bridges.
- Show and label all high-water elevations affecting base clearance and roadway grades.
- Display and label only transverse underground utilities.

Do not display proposed drainage pipes or inlets in the profile view.

915.3.2 Vertical Curves

Indicate vertical curve PCs and PTs by small circles and PIs by a small triangle with short sections of tangent shown on each side. Extend vertical lines from the PC and PT points and place a dimension line indicating the length of the vertical curve. The PC and PT stations and elevations must be labeled on the vertical lines.

For vertical curves, show the profile grade elevations on even stations and at appropriate intervals. Place the elevations between the dimension line and the grade line. Also, place the curve length, dimension lines and the profile grade elevations above the grade line for sag vertical curves and below the grade line for crest vertical curves. Place the dimensions and elevations reasonably near the grade line. The PI station and elevation must be noted, lettered vertically above the PI symbol for crest curves and below for sag curves.

Show the profile grade elevation of the beginning and ending station of each sheet vertically just above the grade line, except when the beginning or ending station is on a vertical curve.

915.3.3 Superelevation

Standard superelevation details shown in ***Standard Plans***, ***Indexes 000-510*** and ***000-511*** may be used for projects with simple curves.

Show superelevation profiles for:

- Reverse curves
- Compound curves
- Other conditions requiring special superelevation not covered in the standards

Show complete profile grade line and edges of pavement (right and left) within the superelevation zone on the grid format. Label the begin and end superelevation stations and indicate the section in full superelevation.

915.3.4 Special Ditch Profile

Display and label special ditches and treatment swales (ditch blocks) in the profile. Show the percent ditch grade and a beginning or ending ditch PI with elevation and station plus. Show the ditch PI with elevation at the begin and end points of ditch blocks.

For multi-lane divided projects, three special ditch grades (right and left roadway ditches and a median ditch) may occur at the same location. In such cases, it may be advantageous to:

- Show the median ditch at a convenient location on the sheet with a separate elevation datum, or
- Provide spot elevation labels in the plan view.

Depict uniform ditches of non-standard depth by a dimension line in the lower portion of the grid and label as a special ditch with location and depth or show them by flagging the DPIs at each end with station elevation and side. Standard depth ditches are not labeled.

915.3.5 Special Gutter Grades

Show special gutter grades in profile for cases where the gutter grades are not controlled by the typical section. Include prolongations of gutter profile grades across street intersections on plan-profile sheets if an inlet is not provided before the intersection.

915.3.5.1 Shoulder Rocking Gutter Profiles

Shoulder rocking is used to achieve positive drainage when a minimum 0.3% longitudinal gutter grade cannot be maintained using uniform shoulder cross slopes. Provide a gutter profile for each side of a concrete barrier wall, along with the profile of the wall top. The top of the wall profile must follow the roadway profile which will create a varied wall height between the high and low points along the gutter profile.

A special detail depicting the concrete barrier wall reveal is often provided to supplement the ***Standard Plans*** details. These profiles may be depicted in either table or graphical format on the Roadway Plan-Profile sheet.

See ***FDM 210.4.1 or FDM 211.4.1*** for more information on design requirements for shoulder rocking profiles.

915.3.6 Special Sidewalk Profiles

Display and label special sidewalk profiles when the profile grade of the proposed sidewalk is independent of the roadway profile. Sidewalk profiles are typically located at the back of the proposed sidewalk (closest to the R/W).

When special sidewalk profiles are included on the Roadway Plan-Profile sheet, indicate the location of the sidewalk profile grade line (PGL) on the typical section.

915.4 Ramp Profiles

Develop ramp profile grades along the baseline of each ramp. A profile of the edge of the pavement opposite the baseline is typically shown as well. Show ramp profiles anywhere within available space on the Roadway Plan-Profile sheet.

Use the same scales used for the Roadway Plan-Profile sheet displaying the interchange. Each ramp profile must include a background grid at the appropriate scale.

915.4.1 Spline Grade

Spline grades are used to show the interconnection and interrelation of the ramp edge of pavement with the mainline edge of pavement. Showing this profile in the plans is typically not necessary. However, if the mainline pavement is superelevated or within the superelevation transition zone, the profile can be beneficial to illustrate the design intent.

Display the spline grade elevations at intervals of 20 or 40 feet. Show elevations for the outer edge of mainline pavement and inner and outer edges of the ramp pavement at the nose areas.

Join the grades of each pavement edge by smooth splines or simple curves. Label the three grade profiles and all equality stations. Flag and label nose stations. Place the scale near the profile.

915.5 Special Profiles

Showing special profiles in the plans is typically not necessary. However, if it is determined that providing a special profile in the plans is helpful to convey the design intent, they should be shown anywhere within available space on the Roadway Plan-Profile sheet.

The standard scale used for special profiles should be 1" = 20' horizontally and 1" = 2' vertically. Each profile must include a background grid at the appropriate scale.

915.5.1 Intersections

Supplemental profiles at intersections may be necessary to define edge of pavement profiles. Include sections showing pavement surface elevations for nose points and other critical locations. Label the existing ground line and curb line per the ***CADD Manual***.

915.5.2 Curb Returns

Curb return profiles may be necessary to define the gutter flow line from the PC to the PT point of the return at an intersection.

Identify each curb return profile with its PC and PT stations shown. Elevations should be shown at appropriate intervals and low and high spots must be identified by location and elevation.

915.5.3 At-Grade Railroad Crossings

Supplemental profiles for at-grade railroad crossings may be necessary to define lane lines, edges of pavement, and gutter flow lines.

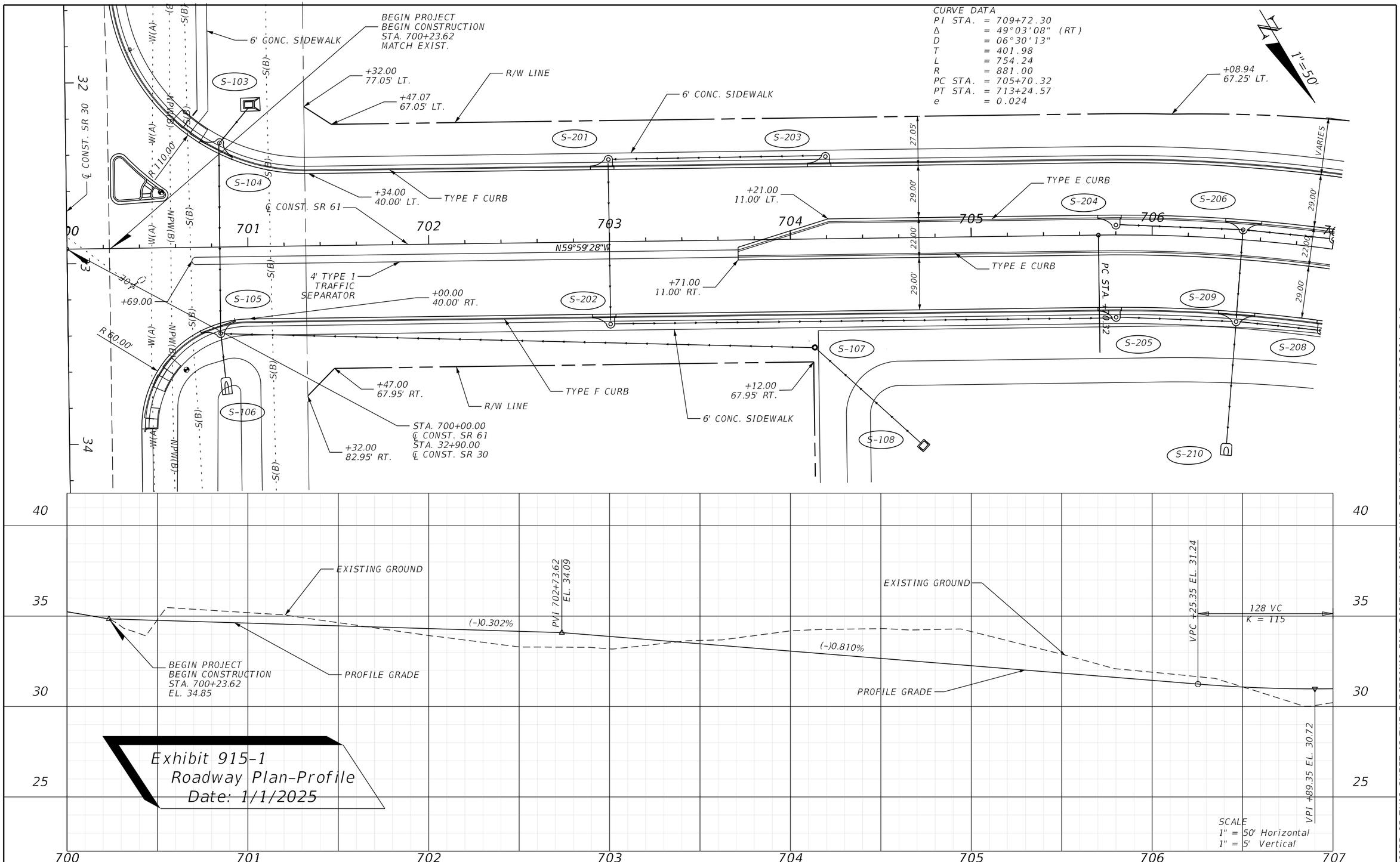

Exhibit 915-1
Roadway Plan-Profile
Date: 1/1/2025

THE OFFICIAL RECORD OF THIS SHEET IS THE ELECTRONIC FILE DIGITALLY SIGNED AND SEALED UNDER RULE 61G15-23.004, F.A.C.

REVISIONS			
DATE	DESCRIPTION	DATE	DESCRIPTION

ENGINEER OF RECORD
LUKE S. WALKER, P.E.
LICENSE NUMBER: 12345
ROADWAY ENGINEERS, INC
123 MAIN ST
TALLAHASSEE, FL 32301

STATE OF FLORIDA
DEPARTMENT OF TRANSPORTATION

ROAD NO.	COUNTY	FINANCIAL PROJECT ID
SR 61	WAKULLA	22049555201

ROADWAY PLAN-PROFILE

SHEET NO.
12

C:\Worksets\FDOT\22049555201\Roadway\PLPRRD02.dgn : SR61_CL - PLAN 1 [SHEET]
KNASDMS 4/8/2025 1:37:49 PM

916 Drainage Sheets

916.1 General

The signed and sealed Building Information Model (BIM) files contain the complete drainage system information for the project. The Drainage Sheets provide supplemental data and information for the proposed drainage networks, including:

(1) The Drainage Network Plan sheet shows the plan view of the drainage conveyance network as it relates to the proposed project components and underground utilities. This sheet shows the drainage structure information. See ***Exhibit 916-1*** for an example of a Drainage Network Plan sheet.

(2) The Drainage Network Profile sheet shows the portions of the drainage conveyance network that run parallel to the baseline or centerline. This sheet indicates the pipe network's longitudinal line and grade. See ***Exhibit 916-2*** for an example of a Drainage Network Profile sheet.

(3) The Drainage Network Cross Section sheet shows the portions of the drainage conveyance network that intersects proposed roadway centerline. See ***Exhibit 916-3*** for an example of a Drainage Network Cross Section sheet.

(4) The Optional Materials Tabulation sheet is included for providing acceptable options for pipe materials and sizes that will satisfy the Design Service Life. The sheet format is available in the FDOT CADD Software. See ***Exhibit 916-4*** for an example of an Optional Materials Tabulation sheet.

(5) The Drainage Special Details sheet shows the design intent of special, non-standard drainage features.

The Drainage Sheets are produced as contract documents and are placed within the Roadway Plans set. The Drainage Sheets should display the complete extents of the individual drainage network(s).

Use the following horizontal scales:

	Standard	Optional
Curbed Roadways	1" = 40'	1" = 50'
Flush-Shoulder Roadways	1" = 50'	1" = 100'

916.2 Drainage Network Plan Sheet

The purpose of the Drainage Network Plan sheet is to highlight the storm drain pipe network(s), cross drains, and side drains that will be shown in the profile and cross section views. A Drainage Network Plan sheet is not required when side drains are the only drainage structures included with the project; however, side drains must be shown and labeled on the Roadway Plan sheet and must be included in the Estimated Quantities Report in the Summary of Side Drains Table.

The display limits of the Drainage Network Plan sheets should contain the entire proposed drainage pipe networks (using multiple sheets if needed). Where multiple drainage networks are shown or overlap, clearly indicate which network the plan is associated with.

916.2.1 Required Information

Provide the following information:

(1) Display the view such that the centerline of construction or baseline of survey stationing is increasing from left to right. Display station numbers close to station ticks. Include a north arrow and scale.

(2) Display proposed limits of pavement, curbs, traffic separators, sidewalks, curb ramps, driveways, and R/W lines. Show proposed bridges and approach slabs by simple outline and indicate the bridge structure number. The intent is to show an outline of the proposed roadway to give context to the location of the drainage structures. The elements of the proposed roadway should be gray-scaled.

(3) Display and label existing and proposed underground utilities only where conflicts exist. Identify the underground utility as a conflict node.

(4) Display the proposed drainage system by depicting drainage pipes with a single pipeline style indicating direction of flow, and the outline of inlets, manholes, junction boxes, and outfall features (e.g., MES, endwall). The outlines of structure bottoms may be shown.

(5) Label the pipe number, size, and length, in linear feet, between structures.

(6) Display and label existing structures and pipes that are to be filled or plugged and will remain in place.

(7) When appropriate, show a short section of lateral ditch/outfall centerline on the Drainage Network Plan sheet, and include a note referring to the Lateral Ditch sheet for details.

(8) Place a note as close to the drainage structure as possible, or on a separate sheet if space does not allow, with following information for each structure:

(a) Structure number, station and offset, structure type including J-Bottom dimensions as applicable, standard plan index, end treatment (if applicable), and flow line elevations.

(b) Provide elevations for manhole tops and ditch bottom inlet grates and slots. Show reference point elevations, as indicated in the ***Standard Plans***. Include special grate treatment requirements in the inlet note. Include additional details; e.g., special bedding, 36" manhole rings.

Do not display existing topography, except to the extent those elements are to be incorporated into, affected by, or accommodated by the proposed drainage system. Existing topography elements may include roads, streets, driveways, buildings, underground and overhead utilities, walls, curbs, pavements, fences, railroads, bridges, drainage structures and similar items, as well as streams, ponds, lakes, wooded areas, ditches, existing gasoline storage tanks within limits of topographical survey, and other physical features. When shown, display existing topography elements as gray-scaled.

916.2.2 Structure and Pipe Numbers

Provide drainage structure numbers (w/ prefix “S”) and a pipe number (w/ prefix “P”) between structures. Include the bridge number for proposed bridge culverts. Establish the structure and pipe numbers using the convention shown in ***Exhibit 916-1*** and described as follows:

(1) Storm drain networks: Assign structure numbers in ascending order along the centerline of construction or baseline of survey. Assign pipe numbers that correlate with the structure at the hydraulically upper end of pipe.

(2) Cross drains and side drains: Assign structure numbers in ascending order along the direction of flow (hydraulically upper end to lower end). Assign the same structure number to intermediate or end structures with a suffix letter (i.e., A, B, C). Assign pipe numbers to correlate with the structure at the hydraulically upper end of pipe. When there are multiple pipes associated with a cross drain or side drain, include a suffix letter.

916.3 Drainage Network Profile Sheet

Stack or space the profiles to avoid overlapping of structures or notes. Stack profiles from top to bottom of the plan sheet. Display drainage profiles from left to right, in the order of the roadway stationing. Drainage Network Profiles are not intended to include the entire project limits, but must be shown where there are drainage structure and pipe networks along the roadway.

Do not include profile views for side drains.

Each drainage profile must include a background grid at the appropriate scale. Use the same horizontal scale for the profile portion that is used for the plan portion. The vertical scale is typically 10% of the horizontal scale (e.g., 1” = 50’ horizontal scale would typically use a 1” = 5’ vertical scale).

916.3.1 Required Information

Drainage profiles depict vertical relationships of the drainage network or cross drain along the centerline of the pipes. Provide the following information for each drainage profile:

(1) Plot the profile along the drainage network sequentially along the alignment stationing from the beginning to the end of the pipe network.

(2) Display drainage structures (typically depicted as rectangles) and connecting pipes. Place the outside edge of the first structure at the first vertical grid line as shown in ***Exhibit 916-2***. Assign the value of zero to the first vertical grid line; subsequent vertical grid lines reflect the true distance along the pipe system.

(3) Label wall zone pipes.

(4) Label drainage pipe number, flow lines, slope, and structure numbers.

(5) Display and label existing and proposed surfaces along the centerline of the pipe network. Displaying surfaces past the limits of the first and last structures is not required.

(6) Provide horizontal grid line elevations along the left side of the background grid.

(7) Display and label existing and proposed underground utilities. When appropriate, identify an underground utility as a conflict node.

(8) Plot proposed cross drain pipes and culverts at the correct location and elevation of the proposed structure crossing the centerline of the pipe network. Identify cross drains by structure number only.

916.4 Drainage Network Cross Section Sheet

Drainage Network Cross Section sheets show the following information:

(1) All drainage structures and their location

(2) Flow line elevation(s)

(3) Utilities

(4) Vertical relationships of the drainage system

Plot Drainage Network Cross Section sheets for all projects. When only cross drains are proposed for construction or modification, drainage structures may be plotted on the Roadway Cross Section sheets. Otherwise, plot drainage structures on separate Drainage Network Cross Section sheets utilizing the sheet available in the FDOT CADD Software. See ***FDM 922*** for additional requirements for box and three-sided culverts proposed as drainage structures.

916.4.1 Required Information

For flush shoulder projects, show the existing ground line at the location of the structure, with the existing elevation placed immediately below the ground line at the survey baseline. Do not show existing structures, except those proposed for incorporation into the proposed drainage system or otherwise modified. Note the flow line elevations of the drainage structures shown in the plans. Where storm drains run laterally or diagonally across the project, the drawing should show the pipe cover.

Show the roadway template and proposed structures, with the proposed profile grade elevation, placed above the grade point. Locate the structure by station and offset from the centerline of construction. Provide flow line information at each structure and at each culvert end. Plot drainage structure details according to the applicable ***Standard Plans Index***; e.g., show walls, grates, tops, pipes.

Include the size and length of each proposed J-bottom structure. Show box and three-sided culvert lengths. Depict sections for skewed cross drains along the centerline of the structure. Measure clear zone distances at right angles to the traffic lane for all structures.

Determine where the construction of a drainage structure may have potential impact on existing R/W.

916.4.2 Utility Conflicts

Identify and resolve drainage structure conflicts with existing or proposed utilities as early in the design process as possible. Plot major underground utilities, as defined in ***FDM 221***, in conjunction with the structures to identify potential conflicts.

Note and plot (to scale) utilities that have been field-verified (Quality Level "A" locate) in the appropriate locations on the Drainage Network Cross Section sheets. These utilities should be labeled with the following symbol:

Vvh = Verified Vertical Elevation and Horizontal Location

916.4.3 Sheet Setup

Place as many cross sections on a sheet as possible using multiple columns of sections when appropriate. Use the same scale that is used for the Roadway Cross Sections.

Show cross sections with stations increasing from the bottom to the top of the sheet and multiple columns placed from the left to the right. Show the sections successively by stations and number them sequentially, from the beginning to the end of the project.

Label the station and offsets from the appropriate baseline or centerline, as indicated in the ***Standard Plans***.

916.5 Optional Materials Tabulation Sheet

Consider optional materials for all pipes; however, match pipe extensions and end section replacements to the existing pipe material. See the Department's ***Drainage Manual*** Chapter 6 and ***Drainage Design Guide*** (Optional Pipe Material Chapter) for more information.

Conduct an Optional Pipe Materials Analysis and prepare an Optional Materials Tabulation sheet. The Optional Materials table shows all pipe materials allowed and indicates which material is plotted in the plans and used as the basis for pay item quantities. The Optional Materials Tabulation sheet includes:

- Optional Pipe Group Number

- Size(s)
- Design Service Life
- Material, thickness or class, corrugation requirements, and protective coating
- Plotted and as-built notations, and construction remarks

Include a separate flex table which identifies the Pipe Label and the Optional Pipe Group Number for each pipe.

Modification for Non-Conventional Projects:
Delete ***FDM 916.5*** and see ***Chapter 6*** of the ***Drainage Manual*** for Optional Material requirements.

916.6 Drainage Special Details Sheet

Showing special horizontal or vertical details in the plans is typically not necessary. However, if it is determined that providing a special drainage detail is beneficial to conveying the design intent, the detail is typically placed on a plan sheet. Any scale may be used.

The following are examples of information that may be depicted:

- Clash detection results and utility clearances
- Drainage structure details (non-standard structures, pond outfall structures, multiple or off-centered pipe connections to a structure wall)
- Isometric and 3D views with identifying labels

Exhibit 916-1: Drainage Network Plan Sheet

(UNDER DEVELOPMENT)

Exhibit 916-2: Drainage Network Profile Sheet

(UNDER DEVELOPMENT)

Exhibit 916-3: Drainage Network Cross Section Sheet

(UNDER DEVELOPMENT)

Exhibit 916-4: Optional Materials Tabulation Sheet

(UNDER DEVELOPMENT)

917 Stormwater Facilities

917.1 General

This chapter discusses the content and requirements for plan sheets relating to stormwater facilities, including the following systems:

(1) Retention Areas

(2) Detention Areas

(3) Mitigation Areas

917.2 Stormwater Facility Detail Sheet

The retention or detention pond, including the outlet structure, is usually the end point of the drainage system for a particular project. The retention or detention pond detail sheet shows the pond in plan view.

917.2.1 Required Information

Display and label the following information in the plan view:

(1) Baseline of construction stationing (typically increasing from left to right) with station and offset ties to the project centerline of construction. Include a north arrow and scale above and near the drainage plan view.

(2) Elements of the proposed roadway, including drainage pipes and structures.

(3) Location of stormwater facility sectional views (i.e., A-A, B-B).

(4) Location of soil borings.

(5) Stormwater facility delineations:

  (a) Facility bottom and top (often referred to as top of bank) elevations. Provide station/offset callouts and radii along the inside top of bank delineation.

  (b) Changes in side slopes (e.g., 1:2 to 1:4).

  (c) Maintenance berm limits.

(6) Maintenance access road, fence and gates, and R/W lines.

(7) Stormwater facility drainage structures and pipes with locations of outlet structure sectional views (e.g., C-C, D-D).

(8) Any other necessary data pertaining to the pond

917.3 Stormwater Facility Cross Sections

Include a minimum of two sectional views, taken in directions perpendicular to each other. The horizontal scale should be the same as used for the stormwater facility plan view. A horizontal scale of 1” = 10’ is preferred. Use a vertical scale of 1" = 10'. If material is to be excavated from the pond, plot the soil borings on the cross sections.

917.3.1 Required Information

Display and label the following information in the sectional views:

- Stormwater facility bottom and top (often referred to as top of bank) with elevations, side slopes, and maintenance berm.
- Existing groundline, limits of clearing and grubbing, limits of sod or vegetation, and the locations of R/W lines and fences.
- Symbols and elevations for Normal Highwater and Peak Design Stage.
- Soil borings.

Dimension the maintenance berm and the horizontal distances between the stormwater facility delineations.

917.4 Outlet Structure Details

Outlet structure information, elevations, and dimensions may be placed in a data table or be labeled directly on the outlet structure plan view. Information, elevation, and dimensions should clearly indicate the fabrication requirements of the modified inlet and skimmers.

917.4.1 Required Information

Provide a 3D isometric view of the stormwater facility outlet structure that illustrates:

- Inlet with weir and drawdown.
- Outlet structure drainage structure number.
- Outlet pipe(s) with pipe number(s).
- Skimmer(s).
- Concrete apron.

Placement of the 3D isometric view may use any scale and angle that best displays the various components of the outlet structure.

917.5 Stormwater Facility Typical Section

A typical section is required when the pond sections do not represent the typical design features of the pond. The following is a list of appropriate information to be shown on the typical section:

- Limits of clearing and grubbing
- Side slopes
- Bottom and top elevations
- Details of maintenance berm
- Fence location
- R/W
- Water level information
- Vegetation requirements

The typical section does not need to be to scale but must be dimensionally proportionate. It should be shown on the pond detail sheet, if room allows, or on a separate sheet when necessary.

918 Drainage Map

918.1 General

The Drainage Map sheet is required for new construction and reconstruction projects, and for other project types that propose significant changes to the existing hydrology and hydraulics.

The Drainage Map sheet provides an overview of the overland drainage patterns as well as the storm drain system layout and outfall locations. This sheet is used for establishing the appropriate drainage facilities during design, confirmation of overland flow patterns during construction, and for emergency response and maintenance purposes.

Use the following horizontal scales:

	Standard	Optional
Closed Drainage System	1” = 200’	1” = 500’
Open Drainage System	1” = 1000’	1” = 2000’

See ***Exhibit 918-1*** for an example of a Drainage Map.

918.2 Required Information

The Drainage Map sheet must comply with the following:

(1) Use a gray-scaled photographic (aerial) base map as shown in ***Exhibit 918-1***.

(2) Display a north arrow and scale, typically in the upper right portion.

(3) Display the centerline or baseline of construction with station equations. Show stationing at an appropriate interval.

(4) Flag and station the begin and end project limits.

(5) Flag and station the begin and end of bridges and bridge culverts.

(6) Label road names and state numbers, and side street names.

(7) Display and label existing physical land features affecting drainage (e.g., lakes, streams, swamps) by name and direction of flow. Indicate if feature is an FDEP impaired water body when known. Show past highwater elevations with date of occurrence, if available, and present water elevations with date of reading.

(8) Label known landfill areas, contamination sites, and wellfield protection sites.

(9) Show drainage divides and other information (e.g., pop-off elevations, spot elevations) to indicate the overland flow of water. Show drainage areas in acres.

Use inserts to show areas that are of such magnitude that the boundaries cannot be plotted at the selected scale. Display basin or subbasin names.

(10) Display the 100-year flood plain boundaries and elevations. Display delineated wetlands. Identify sink holes and depressions.

(11) Display arrows to indicate direction of flow along proposed ditches. Show flow arrows from offsite areas at the point where stormwater would approach the FDOT R/W to be routed or controlled by FDOT. Show flow arrows from onsite areas where the flow leaves FDOT R/W.

(12) Display and label existing drainage structures with type, size, flow line elevations, flow arrows and any other pertinent data. Refer to the ***CADD Manual*** for correct symbols for existing drainage facilities.

Data relating to existing drainage structures and pipes may be compiled in a table format and placed within available space on the sheet.

(13) Display proposed drainage structures, cross drains, storm drain pipes, outfall structures and retention/detention pond locations.

(a) Label cross drains by pipe size and structure number

(b) Label structures by structure number

(c) Label ponds or treatment swales by pond number

918.2.1 Flood Data Summary Box

The Flood Data Summary box provides design discharge, base discharge, and overtopping or greatest flood discharge with corresponding stage values.

Provide the Flood Data Summary box when a new or modified cross drain or box culvert (regardless of size) is proposed, or an existing cross drain or box culvert is impacted by changes to the existing hydrology and hydraulics, and the location of the cross drain or box culvert is within the 100-year floodplain or has a history of flooding or other hydraulic problems.

If there is insufficient space on the Drainage Map sheet, or the Drainage Map is not produced, place the Flood Data Summary box on its own sheet titled “Flood Data Sheet”.

The required preformatted summary box is available within the FDOT CADD Software. An example of a Flood Data Summary box is shown in ***Table 918.2.1***.

Table 918.2.1 Example of a Flood Data Summary Box

STRUCT. NO.	STATION	DESIGN FLOOD		BASE FLOOD		OVERTOPPING FLOOD				GREATEST FLOOD	
		2% PROB. DISCHARGE	50 YR. FREQ. STAGE	1% PROB. DISCHARGE	100 YR. FREQ. STAGE	DISCHARGE	STAGE	PROB. X	FREQ. YR.	0.2% PROB. DISCHARGE	500 YR. FREQ. STAGE
CD-1	1525+40.00	15.6	34.84	17.8	34.86	--	--	--	--	30.3	34.96
CD-2	1561+00.00	39.4	38.35	44.9	38.54	65.75	39.5	0.32	314	--	--
CD-3	1679+00.00	24.0	34.60	28.0	34.73	--	--	--	--	48.0	35.36
CD-4	2257+22.00	9.0	35.77	11.0	35.77	--	--	--	--	18.0	35.81
CD-5	2283+02.75	24.0	35.70	28.0	35.90	--	--	--	--	48.0	36.87

NOTE: THE HYDRAULIC DATA IS SHOWN FOR INFORMATIONAL PURPOSES ONLY, TO INDICATE THE FLOOD DISCHARGES AND WATER SURFACE ELEVATIONS WHICH MAY BE ANTICIPATED IN ANY GIVEN YEAR. THIS DATA WAS GENERATED USING HIGHLY VARIABLE FACTORS DETERMINED BY A STUDY OF THE WATERSHED. MANY JUDGEMENTS AND ASSUMPTIONS ARE REQUIRED TO ESTABLISH THESE FACTORS. THE RESULTANT HYDRAULIC DATA IS SENSITIVE TO CHANGES, PARTICULARLY OF ANTECEDENT CONDITIONS, URBANIZATION, CHANNELIZATION, AND LAND USE. USERS OF THIS DATA ARE CAUTIONED AGAINST THE ASSUMPTION OF PRECISION WHICH CANNOT BE ATTAINED. DISCHARGES ARE IN CUBIC FEET PER SECOND AND STAGES ARE IN FEET, NGVD '88.

DEFINITIONS:

DESIGN FLOOD: THE FLOOD SELECTED BY FOOT TO BE UTILIZED TO ASSURE A STANDARD LEVEL OF HYDRAULIC PERFORMANCE.

BASE FLOOD: THE FLOOD HAVING A 1% CHANCE OF BEING EXCEEDED IN ANY YEAR. (100 YR. FREQUENCY)

OVERTOPPING FLOOD: THE FLOOD WHERE FLOW OCCURS (A) OVER THE HIGHWAY, (B) OVER A WATERSHED DIVIDE, OR (C) THROUGH EMERGENCY RELIEF STRUCTURES.

GREATEST FLOOD: THE MOST SEVERE FLOOD WHICH CAN BE PREDICTED WHERE OVERTOPPING IS NOT PRACTICABLE, NORMALLY ONE WITH A 0.2% CHANCE OF BEING EXCEEDED IN ANY YEAR (500 YR. FREQUENCY)

Exhibit 918-1
Drainage Map
Date: 1/1/23

REVISIONS			
DATE	DESCRIPTION	DATE	DESCRIPTION

LUKE S. WALKER, P.E.
P.E. NO.: 99991
ROADWAY ENGINEERS, INC.
123 MAIN STREET
TALLAHASSEE, FL 32301

STATE OF FLORIDA
DEPARTMENT OF TRANSPORTATION

ROAD NO.	COUNTY	FINANCIAL PROJECT ID
SR 61	WAKULLA	220495-5-52-01

DRAINAGE MAP

SHEET NO.
5

8/12/2020 2:52:07 PM RD960JM
C:\Worksets\FDOT\drainage doodle\roadway\FDM900Drainage.dgn

919 Lateral Ditches

919.1 General

Lateral ditches are sometimes needed to convey stormwater runoff to retention areas, detention areas, or convey the discharge to an outfall point. This information may be placed on the Network Plan,Profile, or Stormwater Facilities sheet when space is available.

A Lateral Ditch sheet or Outfall sheet consists of a plan view and a profile view but may also include typical sections and cross sections.

The standard horizontal scale for the plan and profile views is 1” = 100’. However, if storm drain construction is proposed for a portion of the ditch, a scale of 1” = 40’ or 1” = 50’ may be used. The vertical scale for the profile view is typically 10% of the horizontal scale (e.g., 1” = 100’ horizontal scale would use a 1” = 10’ vertical scale).

919.2 Plan View

Display a north arrow and scale within each plan view, typically in the upper right portion.

Display the lateral ditch plan view such that the centerline or baseline of construction stationing is increasing from left to right. Display bearings for tangent sections (in the direction of stationing) below the centerline or baseline. Display station numbers close to station ticks. Display station equations along centerline or baseline.

Show R/W (or easement), alignment data, and topography. Tie the alignment of the lateral ditch to the centerline of construction.

919.2.1 Required Information

Include labeling and dimensions only to the extent necessary to convey the design intent. Provide the following labeling and dimensions as appropriate:

- Flag and station the begin and end lateral ditch or outfall construction limits.
- Display planned improvements.
- Label and dimension lateral ditch or outfall, and tie to the baseline alignment of construction.
- Display drainage pipes, inlets, manholes, box culverts, and outfall features.

- Display and label R/W lines, and construction easements or license agreements.
- Display and label the limits of wetlands based on permit or regulatory requirements.

919.3 Profile View

Each profile must include a background grid at the appropriate scale. Align the begin lateral ditch profile stationing with the begin lateral ditch plan view stationing. Display stationing along the bottom of the grid. Display the vertical elevation along both sides of the grid.

Display the following information:

- Existing ground line profiles
- High water elevations
- Transverse underground utilities
- Benchmark information
- Elevation datum

If storm drain construction is proposed along a lateral ditch or at an outfall, plot the proposed structures on the lateral ditch profile. Include the following information for the structures shown in the profile:

- Flow line elevations
- Structure numbers
- Pipe or culvert sizes
- Utilities (if applicable)
- Label the normal water elevation of the receiving system.

919.3.1 Required Labeling and Information

Required labeling and dimensions necessary to convey the design intent, include the following:

- Flag and station the begin and end lateral ditch.
- Label percent grade for each tangent section. When two tangent grades intersect and no vertical curve is required, label the PI station and elevation.
- Label transverse underground utilities.

919.4 Cross Sections

Lateral ditch cross section sheets are included in the plans. These sheets include the following:

- R/W
- Limits of clearing and grubbing
- Earthwork quantity

Cross sections often use a horizontal scale of 1” = 20’ and a vertical scale of 1" = 10', and display the same elements listed for the typical section.

919.5 Typical Section

A typical section is required when the lateral ditch cross sections do not represent the typical features of the lateral ditch. Display a lateral ditch typical section on the Lateral Ditch sheet showing the following:

- Limits of clearing and grubbing
- R/W or easement limits
- Ditch bottom width
- Side slopes or berms

The typical section does not need to be to scale but must be dimensionally proportionate. If the width of proposed clearing and grubbing is variable, note the various widths and their respective station limits below the typical section.

920 Soil Survey Sheet and Boring Coring Data

920.1 General

This chapter provides the requirements for the development of Soil Survey sheets and Boring Cross Sections sheets.

Place a core bore symbol on the Roadway Plan-Profile sheet at the location (station/offset) where the bore was taken. Label the symbol with the assigned bore number.

Refer to the ***FDOT Soils and Foundation Handbook*** for additional information.

920.2 Soil Survey Sheet

The Soil Survey sheet describes the various types of soils encountered within the limits of the project, including the environmental classification, mechanical properties, and recommended usage of those soils. A preformatted CADD sheet can be found in the FDOT CADD Software.

Assign a stratum number and provide a description of the material encountered. Include the results for the following tests (as applicable):

- Organic Content
- Moisture Content
- Sieve Analysis
- Atterberg Limits
- Corrosion Test

Assign (group) soils having the same characteristics. Include applicable notes regarding each stratum group on this sheet. Provide the date and weather conditions at the time of sampling.

Include a legend for any symbology used in the Boring Cross Section sheets.

Refer to ***Exhibit 920-1*** for an example of a Soil Survey sheet and ***Exhibit 920-2*** for a Report of Core Borings sheet.

920.3 Boring Cross Sections Sheets

Boring Cross Section sheets display the results of each core boring on a cross section at the station and offset at which the boring was taken. To create these sheets, Final Geotechnical Data must be deliverable in a xml file (3D model) generated from the FDOT

Geotechnical Data Manager (GDM) application. Cross sections are generated, inclusive of all core boring locations, in conformance with the requirements contained in ***FDM 925***. Show the core bores on the corresponding cross section as a ¼-inch wide column below the ground line. Show stratum limits at appropriate depths with the assigned stratum numbers inside the column.

920.3.1 Report of Core Borings Sheets

When the geotechnical data is not available in an xml file (3D model), or there are only a few core borings, core boring illustrations can be shown on Report of Core Borings sheets instead of Boring Cross Section sheets.

Show the core bores as a ¼-inch wide column below the ground line with a vertical scale adjacent to the core to indicate depth. Show stratum limits at appropriate depths with the assigned stratum numbers inside the column.

When there are only a few isolated cores, the soil survey data is often included on the Report of Core Borings sheet.

DATE OF SURVEY: 2/15/2018-5/1/2018
SURVEY MADE BY: SOIL SURVEY, INC.
SUBMITTED BY: LEIA I. CROSSWELL, P.E.
DISTRICT: THREE

STATE OF FLORIDA
DEPARTMENT OF TRANSPORTATION
MATERIALS AND RESEARCH

FINANCIAL PROJECT ID : 123456-1-52-01
PROJECT NAME: SR 22 (WEWA HWY)

CROSS SECTION SOIL SURVEY FOR THE DESIGN OF ROADS

SURVEY BEGINS STA. : 125+87 SURVEY ENDS STA. : 442+67 REFERENCE: BASELINE SURVEY

	ORGANIC CONTENT		MOISTURE CONTENT		SIEVE ANALYSIS RESULTS PERCENT PASS (%)						ATTERBERG LIMITS (%)					CORROSION TEST RESULTS				
STRATUM NO.	NO. OF TESTS	% ORGANIC	NO. OF TESTS	MOISTURE CONTENT	NO. OF TESTS	10 MESH	40 MESH	60 MESH	100 MESH	200 MESH	NO. OF TESTS	LIQUID LIMIT	PLASTIC INDEX	AASHTO GROUP	DESCRIPTION	NO. OF TESTS	RESISTIVITY ohm-cm	CHLORIDE ppm	SULFATES ppm	pH
1	1	1	1	6	14	100	82-88	39-41	12-16	5-10	--	--	--	A-3	GRAY TO BROWN SAND TO SAND WITH SILT	3	14,000-17,000	15	<4.8	7.1-7.9
2	--	--	--	--	9	100	68-78	36-37	15-21	11-34	--	--	--	A-2-4	LIGHT BROWN TO BROWN SILTY SAND	1	22,000	15	<4.8	--
3	--	--	11	7-18	11	100	77-80	41-46	27-30	20-34	11	25-34	11-18	A-2-4/A-2-6	LIGHT GRAY TO BROWN SILTY SAND TO CLAYEY SAND	--	--	--	--	--
4	54	5-56	54	17-575	54	--	--	--	--	4-64	--	--	--	A-8	DARK BROWN TO BLACK SAND TO SILTY SAND WITH ORGANIC MATERIAL	--	--	--	--	--
5	13	1-4	13	9-38	13	--	--	--	--	5-10	--	--	--	A-3/A-2-4	DARK BROWN SAND TO SAND WITH SILT WITH TRACE ORGANICS	--	--	--	--	--
6	--	--	18	11-35	18	--	--	--	--	36-76	18	22-49	10-26	A-6/A-7-6	GRAY CLAYEY SAND TO SANDY CLAY TO CLAY	--	--	--	--	--
7	--	--	7	19-31	8	100	86-89	58-73	47-68	45-66	7	51-66	32-42	A-7-5/A-7-6	GREEN TO BROWN CLAYEY SAND TO CLAY	--	--	--	--	--

NOTES:

1. THE MATERIAL FROM STRATUM 1 (A-3) APPEARS SATISFACTORY FOR USE IN THE EMBANKMENT WHEN UTILIZED IN ACCORDANCE WITH STANDARD PLANS, INDEX 120-001.
2. THE MATERIAL FROM STRATUM 2 (A-2-4) APPEARS SATISFACTORY FOR USE IN THE EMBANKMENT WHEN UTILIZED IN ACCORDANCE WITH STANDARD PLANS, INDEX 120-001. HOWEVER, THIS MATERIAL IS LIKELY TO RETAIN EXCESS MOISTURE AND MAY BE DIFFICULT TO DRY AND COMPACT. IT SHOULD BE USED IN THE EMBANKMENT ABOVE THE WATER LEVEL EXISTING AT THE TIME OF CONSTRUCTION.
3. THE MATERIAL FROM STRATA 3 AND 6 IS PLASTIC (A-2-4/A-2-6/A-6/A-7-6) MATERIAL AND SHALL BE REMOVED IN ACCORDANCE WITH STANDARD PLANS, INDEX 120-002 AND UTILIZED IN ACCORDANCE WITH STANDARD PLANS, INDEX 120-001.
4. THE MATERIAL FROM STRATUM 7 IS HIGH PLASTIC (A-7-5/A-7-6) MATERIAL AND SHALL BE REMOVED IN ACCORDANCE WITH STANDARD PLANS, INDEX 120-002 AND UTILIZED IN ACCORDANCE WITH STANDARD PLANS, INDEX 120-001.
5. THE MATERIAL FROM STRATUM 5 (A-2-4) APPEARS SATISFACTORY FOR USE IN THE EMBANKMENT WHEN UTILIZED IN ACCORDANCE WITH STANDARD PLANS, INDEX 120-001. HOWEVER, THIS MATERIAL MAY NOT BE USED IN THE SUBGRADE PORTION OF THE ROADBED DUE TO ITS ORGANIC CONTENT. THIS MATERIAL IS LIKELY TO RETAIN EXCESS MOISTURE AND MAY BE DIFFICULT TO DRY AND COMPACT. IT SHOULD BE USED IN THE EMBANKMENT ABOVE THE WATER LEVEL EXISTING AT THE TIME OF CONSTRUCTION.
6. THE MATERIAL FROM STRATUM NUMBER 4 IS MUCK (A-8) MATERIAL AND SHALL BE REMOVED IN ACCORDANCE WITH STANDARD PLANS, INDEX 120-002. THE REMOVAL LIMITS ARE PRESENTED ON THE MUCK DELINEATION PLAN SHEETS AND THE ROADWAY CROSS-SECTIONS.

EMBANKMENT AND SUBGRADE MATERIAL

STRATA BOUNDARIES ARE APPROXIMATE. MAKE FINAL CHECK AFTER GRADING.

▽ - SEASONAL HIGH WATER TABLE
▼ - WATER TABLE ENCOUNTERED
GNE - GROUNDWATER NOT ENCOUNTERED
GNA - GROUNDWATER NOT APPARENT DUE TO THE INTRODUCTION OF DRILLING FLUID

LEIA I. CROSSWELL
LICENSE
No 99995
STATE OF FLORIDA
PROFESSIONAL ENGINEER

THIS ITEM HAS BEEN DIGITALLY SIGNED AND SEALED BY:

Leia I. Crosswell
2018.10.11 8:31:01 - 4'00'

ON THE DATE ADJACENT TO THE SEAL

SIGNATURE MUST BE VERIFIED ON ANY ELECTRONIC COPIES.

SOIL SURVEY, INC.
321 EAST 2ND STREET
TALLAHASSEE, FL 32301
LEIA I. CROSSWELL, P.E. NO. 99995

Exhibit 920-1
Soil Survey
Date: 1/1/2025

REVISIONS			
DATE	DESCRIPTION	DATE	DESCRIPTION

PROFESSIONAL ENGINEER
LEIA I. CROSSWELL, P.E.
LICENSE NUMBER: 99995
SOIL SURVEY, INC.
321 EAST 2ND STREET
TALLAHASSEE, FL 32301

STATE OF FLORIDA
DEPARTMENT OF TRANSPORTATION

ROAD NO.	COUNTY	FINANCIAL PROJECT ID
SR 22	BAY	123456-1-52-01

SOIL SURVEY

SHEET NO.
GR-1

6/11/2025 10:47:45 AM RD9600L
C:\Projects\standards\roadway\FDM_900_Exhibit_Master.dgn

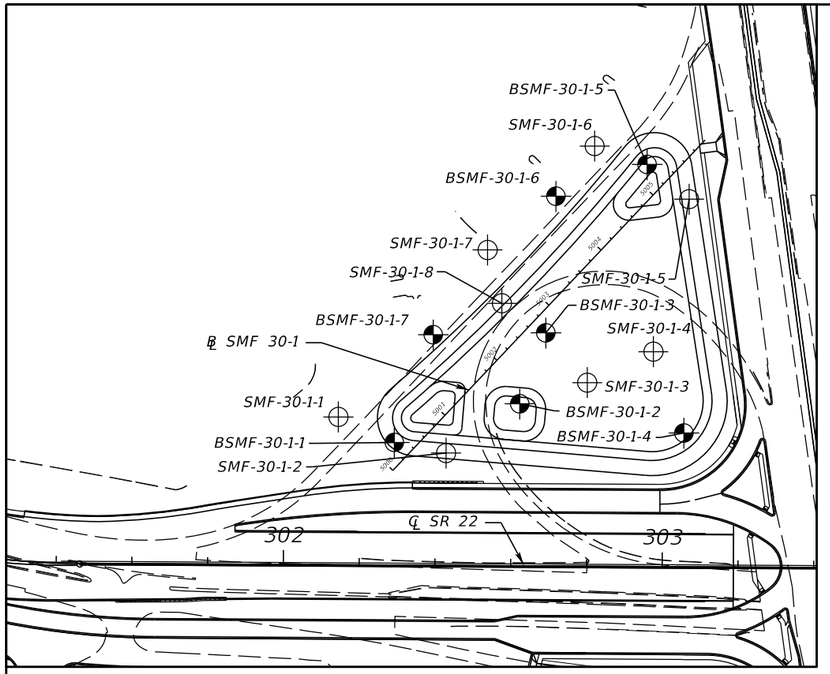

BORING LOCATION

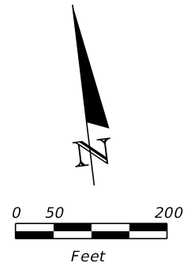

Exhibit 920-2
Report of Core Borings
Date: 1/1/2023

LEGEND

1.	GRAY TO BROWN SAND TO SAND WITH SILT (A-3)
2.	LIGHT BROWN TO BROWN SILTY SAND (A-2-4)
3.	LIGHT GRAY TO BROWN SILTY SAND TO CLAYEY SAND (A-2-4/A-2-6)
4.	DARK BROWN TO BLACK SAND TO SILTY SAND WITH ORGANIC MATERIAL (A-8)
5.	DARK BROWN SAND TO SILTY SAND WITH TRACE ORGANICS (A-3/A-2-4)
6.	GRAY CLAYEY SAND TO SANDY CLAY TO CLAY (A-6/A-7-6)
7.	GREEN TO BROWN CLAYEY SAND TO CLAY (A-7-5/A-7-6)
A-3	AASHTO GROUP SYMBOL AS DETERMINED BY VISUAL REVIEW AND LABORATORY TESTING ON SELECTED SAMPLES FOR CONFIRMATION OF VISUAL REVIEW
HA	HAND AUGERED TO VERIFY UTILITY CLEARANCE
-200	PERCENT PASSING #200 SIEVE
NMC	NATURAL MOISTURE CONTENT (%)
LL	LIQUID LIMIT (%)
PI	PLASTICITY INDEX (%)
NGVD	NATIONAL GEODETIC VERTICAL DATUM OF 1929
▼	GROUNDWATER LEVEL ENCOUNTERED DURING FIELD EXPLORATIONS
▽	ESTIMATED SEASONAL HIGH GROUND WATER TABLE
GNE	GROUNDWATER NOT ENCOUNTERED
GNA	GROUNDWATER NOT APPARENT DUE TO THE INTRODUCTION OF DRILLING FLUID.
⊕	APPROXIMATE SPT BORING LOCATION
⊕	APPROXIMATE AUGER BORING LOCATION
℄ SR 22	CENTERLINE OF CONSTRUCTION OF SR 22
℄ SMF 30-1	BASELINE OF CONSTRUCTION OF POND SMF-30-1

NOTE: THE LOCATIONS OF THE BORINGS WERE RECORDED IN THE FIELD BY SOIL SURVEY, INC. USING HAND-HELD GPS EQUIPMENT WITH A REPORTED ACCURACY OF ±10 FEET. THE LOCATIONS OBTAINED FROM THE GPS COORDINATES RECORDED BY SOIL SURVEY, INC. WERE UTILIZED IN CONJUNCTION WITH MICROSTATION DESIGN FILES TO OBTAIN STATION, OFFSET, AND ELEVATION.

	SAFETY HAMMER	AUTOMATIC HAMMER
GRANULAR MATERIALS- RELATIVE DENSITY	SPT N-VALUE (BLOWS/FT.)	SPT N-VALUE (BLOWS/FT.)
VERY LOOSE	LESS THAN 4	LESS THAN 3
LOOSE	4 to 10	3 to 8
MEDIUM DENSE	10 to 30	8 to 24
DENSE	30 to 50	24 to 40
VERY DENSE	GREATER THAN 50	GREATER THAN 40
SILTS AND CLAYS CONSISTENCY	SPT N-VALUE (BLOWS/FT.)	SPT N-VALUE (BLOWS/FT.)
VERY SOFT	LESS THAN 2	LESS THAN 1
SOFT	2 to 4	1 to 3
FIRM	4 to 8	3 to 6
STIFF	8 to 15	6 to 12
VERY STIFF	15 to 30	12 to 24
HARD	GREATER THAN 30	GREATER THAN 24

BOR # SMF-30-1-1
STA. 5000+02
REF. ℄ SMF 30-1
OFF. 101' LT.
ELEV. 122.5
DATE 3/20/2017

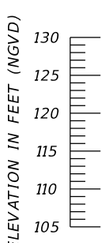

BORING TERMINATED AT ELEVATION 115.0 FT (NGVD)

BOR # BSMF-30-1-1
STA. 5000+28
REF. ℄ SMF 30-1
OFF. 24' LT.
ELEV. 125.0
DATE 4/5/2017
DRILLER A. JACKSON
HAMMER AUTOMATIC
RIG D-25

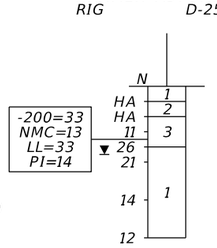

BORING TERMINATED AT ELEVATION 105.0 FT (NGVD)

BOR # BSMF-30-1-7
STA. 5001+67
REF. ℄ SMF 30-1
OFF. 84' LT.
ELEV. 127.5
DATE 4/5/2017
DRILLER A. JACKSON
HAMMER AUTOMATIC
RIG D-25

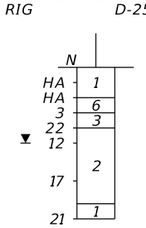

BORING TERMINATED AT ELEVATION 107.5 FT (NGVD)

BOR # SMF-30-1-2
STA. 5000+64
REF. ℄ SMF 30-1
OFF. 35' RT.
ELEV. 125.1
DATE 3/20/2017

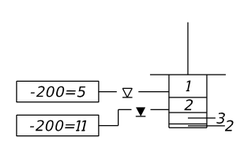

BORING TERMINATED AT ELEVATION 118.1 FT (NGVD)

BOR # SMF-30-1-7
STA. 5002+97
REF. ℄ SMF 30-1
OFF. 109' LT.
ELEV. 125.9
DATE 3/20/2017

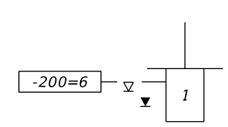

BORING TERMINATED AT ELEVATION 118.9 FT (NGVD)

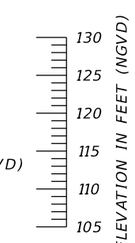

SMF 30-1

REVISIONS			
DATE	DESCRIPTION	DATE	DESCRIPTION

PROFESSIONAL ENGINEER
LEIA I. CROSSWELL, P.E.
LICENSE NUMBER: 99995
SOIL SURVEY, INC.
321 EAST 2ND STREET
TALLAHASSEE, FL 32301

STATE OF FLORIDA
DEPARTMENT OF TRANSPORTATION

ROAD NO.	COUNTY	FINANCIAL PROJECT ID
SR 22	BAY	123456-1-52-01

REPORT OF CORE BORINGS
POND #30

SHEET NO.
GR-2

THE OFFICIAL RECORD OF THIS SHEET IS THE ELECTRONIC FILE DIGITALLY SIGNED AND SEALED UNDER RULE 61G15-23.004, F.A.C.

11/9/2023 1:01:09 PM RD960DL
C:\Projects\standards\roadway\FDM_900_Exhibit_Master.dgn

921 Temporary Traffic Control Plan

921.1 General

A project-specific Temporary Traffic Control Plan (TTCP) is required for all projects. The TTCP is used to communicate the requirements for conveying pedestrian, bicycle, and motorized traffic through established work zones.

This chapter provides the requirements for the development of TTCP sheets. See ***FDM 240*** for requirements of TTCP designs.

The amount of information that must be communicated depends on the complexity of the TTCP, which is defined as Level I or Level II TTCP. Regardless of level, TTCPs should not exceed four major phases.

(1) Level I TTCP - Simple construction projects, such as RRR, Minor Widening, New Alignment.

- (a) General / Phasing Notes
- (b) Phase Typical Sections
- (c) Special Details

(2) Level II TTCP – Complex construction projects, such as Major Widening or Reconstruction, Innovative Intersections (Roundabouts, Diverging Diamond Interchanges) or projects requiring a diversion. This level typically includes the following sheets:

- (a) General / Phasing Notes
- (b) Phase Typical Sections
- (c) Special Details / Critical Sectional Views
- (d) TTCP Plan
- (e) Detour Plan
- (f) Temporary Signal Plan
- (g) Temporary Highway Lighting Plan

921.2 General / Phasing Notes

TTCP notes must communicate the following information (when they apply):

- Description of work to be accomplished during each phase of construction
- Project-specific requirements (e.g., school zones, hospitals, fire stations, railroads, waterborne vessels)
- Work zone speed
- Pedestrian and bicycle accommodations
- Lane closure restrictions, traffic pacing restrictions, and portable changeable message sign (PCMS) messages for each phase
- Legend for traffic control devices

921.3 Phase Typical Sections

Typical sections must communicate the following information (when they apply):

- Defined work area limits
- Available lane widths (motor vehicle and bicycle) and shoulder widths
- Locations of temporary traffic control devices
- Offset requirements

921.4 Special Details Sheet

Include Special Details to provide project-specific requirements and construction details not covered by the ***Standard Plans*** or ***Standard Specifications***. Details are often used to illustrate placement of construction signs and traffic control devices when TTCP Plan sheets are not required.

Place details on the General Notes sheet, or on a separate sheet.

921.5 Critical Sectional Views

Provide sectional views where clarification is necessary. Sectional views should provide pertinent dimensions and illustrate the locations of active traffic lanes, work zones, walls or piers, and temporary barrier walls.

Place critical sectional views on TTCP Plan sheets near the location the view pertains to, or on a separate sheet.

921.6 TTCP Plan Sheets

These sheets are typically created referencing the survey and design CADD files.

Use levels, fonts, and line weights in accordance with the ***CADD Manual***.

A common horizontal scale for the TTCP plan sheets is 1” = 50’ for curbed roadways and 1” = 100’ for flush shoulder roadways. Another scale may be used if clarity and legibility are maintained.

TTCP plan sheets are often produced for each major phase of construction. These sheets must communicate the following information (when they apply):

- Orientation of the roadway (i.e., north arrow, stationing, road names)
- Open travel lanes, work area, geometry for lane tapers or shifts
- Placement of temporary pavement
- Placement of temporary construction signs and traffic control devices
- Temporary or permanent drainage work
- Disposition of existing sign installations (e.g., guide signs, route signs, speed limit signs)
- Pedestrian and bicycle accommodations

921.6.1 Temporary Diversions (Special Detour)

When temporary ramps or other roadways are necessary, provide diversion horizontal and vertical geometry. Include pavement and shoulder widths, curvature, elevations, cross slope, grades, and tapers. Also display and label required temporary drainage on the TTCP sheet. Include critical sectional views as discussed in ***FDM 921.5***.

921.7 Detour Plan Sheets

Detours often use an outline (stick diagram) of the roadway network as a background and use any appropriate horizontal scale that clearly communicates the alternate routes.

Detour Plan sheets must communicate the following information (when they apply):

- Orientation of the roadway (i.e., north arrow, road names, railroad, river crossing)
- Location of temporary construction and detour signs necessary to direct pedestrian, bicycle, and motorized traffic
- Location of PCMS
- Movement of traffic (i.e., arrows)
- Legend for traffic control devices

921.8 Temporary Signal Plan Sheets

Include Temporary Signal Plan sheets for temporary or portable signals and for alterations to existing signals.

Provide signal timing for each phase, including temporary actuation, to maintain all existing actuated or traffic responsive mode signal operations for the duration of the contract.

Refer to ***FDM 941*** for required plan content.

921.9 Temporary Highway Lighting Plan

Refer to ***FDM 943*** for required plan content.

922 Miscellaneous Structures

922.1 General

Miscellaneous Structures sheets provide details and data when the information is not provided in the ***Standard Plans*** or ***Standard Specifications***.

These sheets are typically placed in the associated component plans set. Miscellaneous structures include:

- Supports for high mast lighting, traffic mast arms, and overhead signs
- Signal strain poles
- Rest area structures or buildings
- Barrier walls (traffic or sound)
- Retaining or gravity walls
- Bridge approach slabs
- Toll facilities

For guidelines on structural detailing, refer to the ***Structures Detailing Manual***.

922.2 Retaining Walls

Non-proprietary retaining walls require design and construction details in the Structure Plans component.

Proprietary retaining walls require a set of control plan details to be included in the Structure Plans component for projects with bridges. Place the control plan details in the appropriate component plans when there are no bridge plans. Examples of control plan details are included in the ***Structures Detailing Manual***.

See ***FDM 262*** for retaining wall plans submittal procedures. See the ***Structures Manual*** for plan content requirements.

Vendor Drawings for proprietary wall systems listed on the ***APL*** are provided on the Program Management Office website.

922.3 Approach Slabs

Approach slab sheets provide details and information that are not addressed in ***Standard Plans, Indexes 400-090*** and ***400-091***.

Some roadway elements may need to be carried onto the approach slab. In these cases, clarify in the plans which elements are to be included as part of the roadway. Elements that are part of the roadway approaches to the bridge and interface with the approach slabs areas (e.g., stabilization, guardrail, earthwork, sidewalks, approach slab surfacing) are to be included and paid for in the roadway quantities.

922.4 Concrete Box Culverts

Place these sheets in a Structure Plans component, even when there are no bridge plans. In accordance with the ***BOE Manual,*** load pay items and quantities in the structures category.

Concrete box culverts require complete design and construction details to be included in the contract plans. Include the following minimum design details:

(1) Plan and Elevation Sheets:

(a) Plan view showing: Grid north arrow; scale bar; existing highway boundaries including existing R/W monuments; new R/W line(s) including proposed R/W monuments; culvert or bridge identification number; culvert and highway alignment; survey baseline; profile grade line; direction of stationing; stream channel alignment; stream flow direction; skew angle of the culvert relative to the centerline of roadway; stationing along the profile grade line including the begin and end stations of the culvert (outside face of sidewalls); length of the culvert; subsurface exploration locations (e.g., boring locations); culvert end treatments (e.g., headwall and wing wall orientation); scour protection; slope protection; limits of stream work; utilities; traffic railing and pedestrian/bicycle railing type.

(b) Elevation view showing: Elevation vertical scale; profile grade line and vertical data; existing stream bottom and ground line (along PGL); utilities.

(2) A longitudinal section along the culvert centerline showing: Culvert or bridge identification number; invert elevations; existing stream bottom or original ground; culvert stationing at centerline; typical highway section (including rail treatments); design earth cover height (measured from the top of the top slab to the top of pavement); limits of scour protection (including any keyways or geotextile fabric lining); channel work; culvert end treatments; utilities (either attached to the fascia,

or in the embankment, traffic railing or sidewalk); wing walls; headwalls; cutoff walls; references to the appropriate ***Standard Plans***.

(3) Data Sheets: Box Culvert Data Table and Reinforcing Bar List.

(4) Miscellaneous details showing: Construction phasing information (affects lengths of precast segments and potential need for skewed segments) including appropriate excavation support and protection systems (e.g., critical temporary walls); traffic railing details including connection details; slope and/or stream bank protection; channel section detail; culvert-end safety grates, guardrail or fencing details when applicable; removal of existing culvert(s); cofferdams or water diversion.

(5) Notes indicating: Live loading requirements (HL-93 or HS-25); hydraulic data (show 100-year design flow or the design flow used and the minimum hydraulic area perpendicular to flow below the Design High Water); environmental classification for durability; minimum concrete class and reinforcing steel grade; assumed soil weight, angle of internal friction and nominal bearing capacity; differential soil settlement height and effective length (when significant); precast culvert limitations; any special joint waterproofing requirements; restrictions for work in streams; estimated quantities.

(6) A Load Rating Summary sheet is required for box culverts classified as bridge culverts (per ***FDM 265.1***).

922.5 Three-Sided Concrete Culverts

These sheets are to be placed in a Structure Plans component, even when there are no bridge plans.

Complete footing, wingwall and channel lining designs and construction details are required for three-sided culverts. However, only conceptual culvert barrel and headwall design details need to be provided. Include the following minimum design details in the plans:

(1) Plan and Elevation Sheets

(a) Plan view showing the orientation of the ends of the structure. The two most typical options for culverts on a skew are ends parallel to the centerline of the roadway (skewed ends) or ends perpendicular to the centerline of the structure (square ends). The end treatment depends upon the skew, whether it is in a fill section or at grade, the location within the R/W, conflicts with utilities, phased construction details, the alignment of the feature crossed, and other site limitations.

(b) Elevation view showing the configuration of the most appropriate type of unit; e.g., frame or arch. Show any limitations on using a larger span (some manufacturers only fabricate units at fixed increments of span length, therefore showing the limitations will allow the manufacturers to bid using special units or the next larger span length of their standard units). Show other acceptable structure types in separate partial elevation views. Show limiting spans and heights for all alternatives.

(2) No precast manufacturer should be eliminated from consideration for a given project. However, specific project requirements that may exclude some manufacturers must be identified (such as fabrication on a skew or a desired arched appearance).

(3) Complete details for a cast-in-place footing design, including design loads and assumptions for the spread footings.

(4) Complete details for cast-in-place wingwalls, including geometry and reinforcement details.

(5) Include the applicable details in ***FDM 922.4***.

(6) Place the following notes adjacent to the plan or elevation views, as applicable:

(a) The assumed foundation vertical reaction is ____ kips/ft. The assumed foundation horizontal reaction is ____ kips/ft. The contractor must submit a revised foundation design to the Engineer if the actual loads of the supplied structure exceed these assumed values. Any revised foundation design must be included in the shop drawings and submitted for approval at the same time as the design calculations for the three-sided structure.

(b) In cases where squaring of the unit ends would create a geometric conflict with right of way, utilities, phase construction or site geometry, include the following note:

(c) Due to site restrictions, only skewed end units are acceptable.

(d) If site constraints do not eliminate the squaring of the ends, include the following note:

(e) Squared end units may be substituted for skewed end units with no change in the payment limits and no additional cost to the Department.

(f) When traffic railings are attached to skewed headwalls and site constraints do not eliminate the squaring of the ends, include the following note:

If the contractor proposes to substitute square ends, details of the traffic railing attachment must be provided in the shop drawings and approved by the Engineer.

923 Utility Adjustments

923.1 General

Utility Adjustments sheets provide a plan view that highlights the location of existing, proposed, and relocated utilities. These sheets are used when the project corridor contains numerous utilities with significant potential for conflict or harm. Projects with minor utility work or impacts may include this information on roadway (or other component) plan sheets.

923.1.1 Utility Notes

See ***FDM 914*** for required utility notes to be included on the General Notes sheet.

923.2 Required Information

The Utility Adjustments sheets are typically developed from the CADD files for the Roadway Plan-Profile sheets (showing only the plan portion). Display a north arrow and scale within each plan view, typically in the upper right portion.

Display the roadway plan view (gray-scaled as background) such that the centerline of construction or baseline of construction stationing increases from left to right. Other proposed design elements should also be shown, such as overhead signs and mast arms. Do not display information and graphic data that is not relevant.

Display and label the following information:

(1) Display existing and proposed utilities within the project limits using lines and standard utility symbols (see the ***CADD Manual***). Though not utilities, display and label Department-owned subsurface communication (ITS) lines.

(2) Indicate the disposition of existing utilities which are not to remain in service (e.g., "To Be Removed", "To Be Adjusted", "To Be Relocated", "To Be Placed Out Of Service”).

(3) Indicate the utility type, Agency Owner (UAO), and size and material of existing utilities which are to remain in service.

(4) Display and label overhead utilities indicating the line voltage. For a multi-line electrical overhead crossing, accurately show the location of each line.

(5) Indicate the field-verified vertical elevation and horizontal location (V_{vh}) of existing utilities (SUE data). A leader line must point to the location in plan view where the field data was taken. Include the V_{vh} number shown in the Utility Verification table.

(6) Display a Utility Verification table in each view panel of the sheet that contains V_{vh} information for utilities shown in that panel. Required table information includes:

(a) V_{vh} number

(b) Utility type and owner

(c) Size and material

(d) Location (Sta/Offset/Lt or Rt)

(e) Existing ground and top of utility elevations

If the number of V_{vh} data points or required view panels are extensive, the table may be shown on separate sheets titled Utility Verification Sheets.

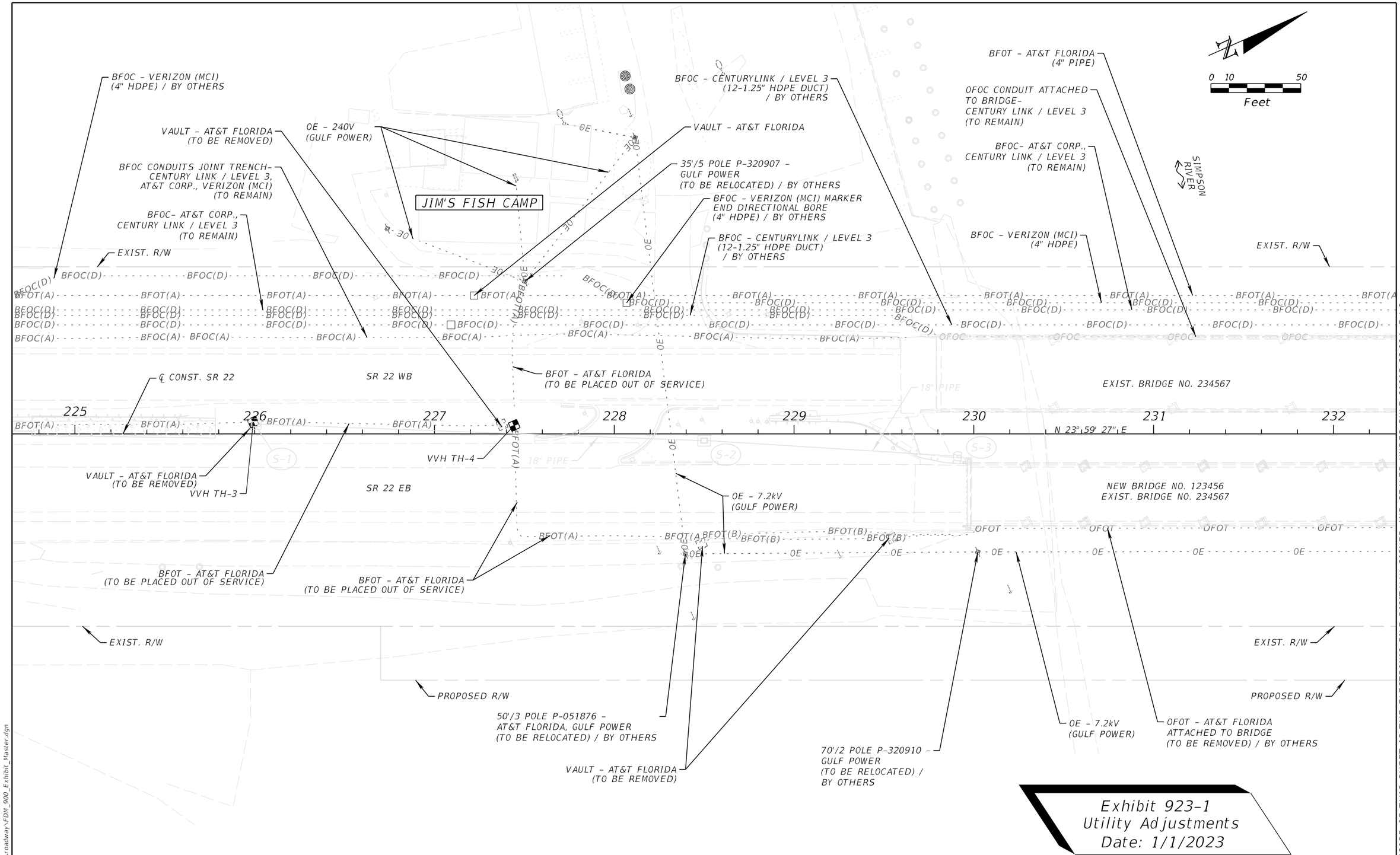

Exhibit 923-1
Utility Adjustments
Date: 1/1/2023

REVISIONS			
DATE	DESCRIPTION	DATE	DESCRIPTION

ENGINEER OF RECORD
LUKE S. WALKER, P.E.
LICENSE NUMBER: 99991
ROADWAY ENGINEERS, INC.
123 MAIN STREET
TALLAHASSEE, FL 32301

STATE OF FLORIDA
DEPARTMENT OF TRANSPORTATION

ROAD NO.	COUNTY	FINANCIAL PROJECT ID
SR 22	BAY	123456-1-52-01

UTILITY ADJUSTMENTS

SHEET NO. 102

10/20/2023 4:13:18 PM RD960DL
C:\Projects\standards\roadway\FDM_900_Exhibit_Master.dgn

THE OFFICIAL RECORD OF THIS SHEET IS THE ELECTRONIC FILE DIGITALLY SIGNED AND SEALED UNDER RULE 61G15-23.004, F.A.C.

924 Selective Clearing and Grubbing Plans

924.1 General

This chapter provides the requirements for the development of Selective Clearing and Grubbing (C&G) Plan sheets. See ***FDM 274*** for the purpose, criteria, and requirements of Selective C&G designs.

Selective C&G Plan sheets provide the data and information for existing vegetation, trees, and palms. Selective C&G Plan sheets are placed in the Roadway Plans only when:

(1) Contract Plans do not include a Landscape Plans component, and

(2) The District Landscape Architect or manager has determined that one or more of the Selective C&G activities is to be included in the Roadway Plans set.

Selective C&G activities are as follows:

(1) Removal of undesirable trees and vegetation

(2) Preservation and protection of desirable trees and vegetation

(3) Branch and root pruning

(4) Tree relocations

When tree relocations are the only Selective C&G activity, show relocation requirements on the Selective C&G Plan sheets or include Tree Relocation Plan sheets in the Roadway Plans set (see ***FDM 944***).

See ***Exhibit 924-1*** for an example of a Selective C&G Plan sheet. Refer to the ***CADD Manual*** for CADD standards associated with Selective C&G.

924.2 Selective C&G Plan Sheet

The Selective C&G Plan sheet provides a plan view of the project indicating the location(s) where Selective C&G activities are to be performed and the areas to be protected or preserved.

The standard horizontal scale is 1” = 100’, however an alternate scale may be approved by the Project Manager.

Display aerial photography or available topography, including R/W lines, roadways and driveways, buildings, underground and overhead utilities, walls, sidewalks and curbs, pavements, fencing, railroads, bridges, drainage structures and similar items that are relevant to the proposed Selective C&G activities. Display the proposed roadway improvements when a landscape project will follow or is part of a roadway project.

Display a north arrow and scale within each plan view, typically in the upper right portion. Display the existing or proposed roadway and the centerline of construction or baseline of construction such that the stationing is increasing from left to right.

Display and label the following:

(1) Existing tree canopy for individual trees or tree groups

(2) Trees to be relocated or removed

(3) Tree protection fencing

(4) Preservation areas

(5) Removal of undesirable vegetation

(6) Branch and root pruning

Include a legend on each sheet depicting the type of Selective C&G activities to be performed. Provide a designation (ID) number for each tree and palm and for each area where removal of undesirable vegetation will occur. Each tree does not need a designation number when a group of trees are to be branch pruned, but the quantity of trees to be pruned must be provided.

When a tree protection area is adjacent to a barrier (e.g., fencing, wall, guardrail, sediment barrier), the tree protection fencing that is parallel to the barrier may be omitted.

924.3 Selective C&G Detail Sheet

The notes required for Selective C&G vary depending on the project. It may be desirable to provide a separate Selective C&G Detail sheet to display the notes, symbols, and details that are applicable to the project. Place Vegetation Removal Tables, Root and Branch Pruning Tables, and Tree Disposition Tables on Selective C&G Detail sheets.

See ***Exhibit 924-2*** for an example of a Selective C&G Detail Sheet.

924.3.1 Vegetation Removal Table

Provide a Vegetation Removal Table when the project includes removal of undesirable vegetation. The table includes:

(1) Area ID number for the removal area. Numbers can be based on roadway stationing numbers, quadrants, or sheet numbers.

(2) Clear and precise description of the work to be performed.

(3) Estimated percent of target species to be removed or eradicated from the area.

(4) List of primary species targeted for removal or eradication. Use species symbol.

(5) List of primary species to remain or preserve. Use species symbol.

(6) Additional information or notes concerning the removal area, such as:

  (a) Florida Exotic Pest Plant Council Category I species to be removed

  (b) Estimated percent of Category I vegetative cover for each area

  (c) Additional species to target for removal or preservation

Include a species legend indicating the plant species Botanical Name (common name) and symbol. Plant species symbols are typically abbreviated by the first letter of the genus and the first letter of the botanical name; e.g., Live Oak, *Quercus virginiana* is QV. Include project-specific notes on the Selective C&G Detail sheet.

924.3.2 Root and Branch Pruning Table

Provide a Root and Branch Pruning Table when the project includes root or branch pruning of existing trees. The table should include the following:

(1) Tree ID number and location (e.g., station/offset, coordinates). Payment for the pruning activity is per tree which requires that each tree be listed in the table.

(2) Botanical and common name of tree

(3) Clear and precise description of the work to be performed, including:

  (a) Root Pruning objectives (e.g., preparation for relocation, required for construction of project)

  (b) Branch Pruning objectives (e.g., structural, aesthetics, safety, clearance)

924.3.3 Tree Disposition Table

Provide a Tree Disposition Table when existing trees and palms are to be protected, relocated, or removed. Include the following in the table:

(1) Tree ID number.

(2) Existing and proposed location of the tree (e.g., station/offset, coordinates, site numbers).

(3) Botanical and common name of the tree.

(4) Diameter of the tree trunk at breast height (DBH), and estimated tree height and canopy spread.

(5) Disposition of the tree (e.g., “To Remain”, “To Be Protected”, “To Be Removed”, “To Be Relocated”).

(6) Condition of the tree utilizing the International Society of Arboriculture (ISA) tree rating system (Excellent, Good, Fair, Poor, Dead). Also note issues with structure or damage.

Site-specific requirements may be included under the “Notes” column. Site-specific requirements may include:

(1) Watering schedule

(2) Fertilizer mix

(3) Fertilizer schedule

(4) Backfill or soil amendments

(5) Root or branch pruning and intent (structural, aesthetic, safety, etc.)

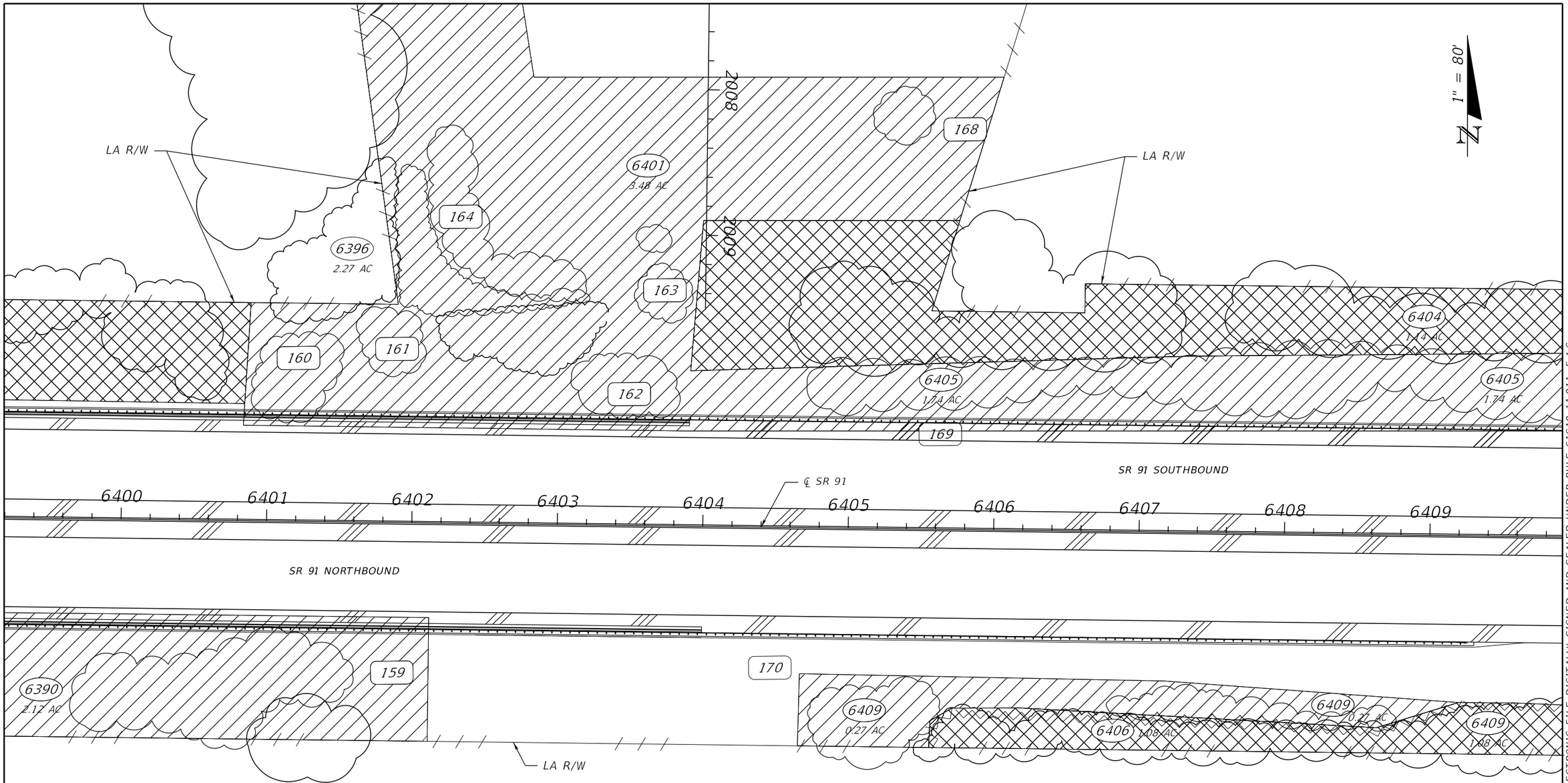

LEGEND:

- TREE PROTECTION BARRIER
- ROOT PRUNING LINE
- CANOPY OF EXISTING TREE (LINE DENOTES DRIPLINE OF TREE)
- XXXX EXISTING TREE TO REMAIN
- XXXX EXISTING TREE TO BE REMOVED
- XXXX SELECTIVE CLEARING AND GRUBBING
- XXXX PLANT PRESERVATION AREAS

Exhibit 924-1
Selective Clearing and Grubbing Plan
Date: 1/1/2024

REVISIONS			
DATE	DESCRIPTION	DATE	DESCRIPTION

LANDSCAPE ARCHITECT
ARTURITO T. GOMEZ, L.A.
LICENSE NUMBER: 99999
LAND DESIGN, LLC.
345 IVY LANE
ORLANDO, FL 32801

STATE OF FLORIDA
DEPARTMENT OF TRANSPORTATION

ROAD NO.	COUNTY	FINANCIAL PROJECT ID
SR 91	ORANGE	123456-1-52-01

SELECTIVE CLEARING AND GRUBBING PLAN (1)

SHEET NO.
1371

THE OFFICIAL RECORD OF THIS SHEET IS THE ELECTRONIC FILE DIGITALLY SIGNED AND SEALED UNDER RULE 61G10-11.011, F.A.C.

10/25/2023 7:56:39 AM RD960DL
C:\Projects\standards\roadway\FDM_900_Exhibit_Master.dgn

VEGETATION REMOVAL TABLE

AREA ID	WORK DESCRIPTION	EST. % OF PRIMARY SPECIES TO TARGET	PRIMARY SPECIES TO TARGET	SPECIES TO PRESERVE	NOTES
424	DESIGNATES AREAS WHERE CATEGORY #1 INVASIVE, EXOTIC VEGETATION AND NATIVE UNDERSTORY WILL BE SELECTIVELY REMOVED. LARGE DESIREABLE TREES TO REMAIN. ALL TREES UNDER 4" DBH TO BE REMOVED.	75%	AA, ST	PE, SP	REMOVE LARGE TREE DEBRIS OR GRIND ON SITE AND SPREAD AS DIRECTED BY DISTRICT LANDSCAPE ARCHITECT
426	DESIGNATES AREAS WHERE ALL NATIVE VEGETATION WILL BE MOWED FLUSH WITH THE GROUND AND ALL CATEGORY #1 INVASIVE, EXOTIC VEGETATION WILL BE TREATED WITH HERBICIDES.	100%	AA, ST, TS	NONE	INCLUDES REMOVAL OF WILLOWS AND WAX MYRTLE

WORK TABLE NOTES

1. "PRIMARY" SPECIES TO TARGET (REMOVE) OR PRESERVE ARE THOSE THAT WERE DETERMINED TO BE MOST PREVALENT IN THAT AREA, AND ARE NOT INTENDED TO BE THE ONLY SPECIES THAT OCCUR.
   THE FOLLOWING ADDITIONAL UNDESIREABLE NATIVE SPECIES WILL BE TARGETED FOR REMOVAL IN ALL AREAS LISTED IN THE WORK TABLE:
   BOTANICAL NAME (COMMON NAME)
   MYRICA CERIFERA (SOUTHERN WAX MYRTLE)
   TYPHA SPP. (CATTAILS)
2. THE FOLLOWING CATEGORY #1 INVASIVE SPECIES WILL NOT BE TARGETED FOR REMOVAL:
   BOTANICAL NAME (COMMON NAME)
   SOLANUM TAMPICENSE (WETLAND NIGHTSHADE)
   PANICUM REPENS (TORPEDO GRASS)

SPECIES LEGEND

(SYM)	BOTANICAL NAME (COMMON NAME)
(AA)	ACACIA AURICULIFORMIS (EARLEAF ACACIA)
(ST)	SCHINUS TEREBINTHIFOLIUS (BRAZILIAN PEPPER)
(TS)	TYPHA SPP. (CATTAILS)
(PE)	PINUS ELLIOTTII (SLASH PINE)
(SP)	SABAL PALMETTO (SABAL PALM)

ROOT AND BRANCH PRUNING TABLE

TREE ID	LOCATION (Station/Offset or Coordinates)	BOTANICAL NAME	COMMON NAME	WORK DESCRIPTION	NOTES
1125	428+40 150' LT	QUERCUS VIRGINIANA	LIVE OAK	TRIM CO-DOMINANT LEADER	INCLUDES REMOVAL OF DEBRIS
1126	430+50 120' LT	QUERCUS VIRGINIANA	LIVE OAK	PRUNE TO IMPROVE STRUCTURAL INTEGRITY OF TREE	INCLUDES REMOVAL OF DEBRIS

TREE DISPOSITION TABLE

SHEET NUMBER	TREE NO.	SYMBOL	BOTANICAL NAME	COMMON NAME	DBH (IN.) FOR TREES/ CTH (FT.) FOR PALMS	HEIGHT (FT.) (APPROX.)	CANOPY SPREAD (FT.) (APPROX.)	LOCATION		CONDITION	DISPOSITION	NOTES
								STATION	OFFSET/SIDE			
TD-1	1121	QV	QUERCUS VIRGINIANA	LIVE OAK	4	16	7	424+20	130' LT	AVERAGE	RELOCATE TO STA. 429+30, 145' LT	NURSEY MATERIAL PLANTED IN 2017 AS PART OF A LANDSCAPE PROJECT
TD-1	1122	RR	ROYSTONIA REGIA	ROYAL PALM	19	19 GW		423+60	210' RT	AVERAGE	RELOCATE TO STA. 430+90, 130' LT	
TD-1	1123	PC	PINUS CLAUSA	SAND PINE				430+70 -434+95	RT	AVERAGE	REMAIN	GROUP OF PINES
TD-1	1124	QV	QUERCUS VIRGINIANA	LIVE OAK	6	20	25	437+95	300' RT	POOR	REMOVE	SEE SELECTIVE CLEARING AND GRUBBING PLAN

Exhibit 924-2
Selective Clearing
and Grubbing Detail
Date: 1/1/2024

REVISIONS			
DATE	DESCRIPTION	DATE	DESCRIPTION

LANDSCAPE ARCHITECT
ARTURITO T. GOMEZ, L.A.
LICENSE NUMBER: 99999
LAND DESIGN, LLC.
345 IVY LANE
ORLANDO, FL 32801

STATE OF FLORIDA
DEPARTMENT OF TRANSPORTATION

ROAD NO.	COUNTY	FINANCIAL PROJECT ID
SR 91	ORANGE	123456-1-52-01

SELECTIVE CLEARING AND GRUBBING DETAIL

SHEET NO.
1396

THE OFFICIAL RECORD OF THIS SHEET IS THE ELECTRONIC FILE DIGITALLY SIGNED AND SEALED UNDER RULE 61G10-11.011, F.A.C.

10/25/2023 7:57:10 AM RD960DL
C:\Projects\standards\roadway\FDM_900_Exhibit_Master.dgn

925 Roadway Cross Sections

925.1 General

Cross sections depict the existing ground and manmade features and proposed roadway template as sections perpendicular to the respective stations along a centerline or baseline of construction.

Roadway Cross Sections sheets can be used to convey supplemental information during the plans phase review process and may also be used for coordination purposes (e.g., permit or utility, local agency, public meetings).

See ***Exhibit 925-1*** for an example of a Roadway Cross Sections sheet.

925.2 Sheet Set Up

Show cross sections on standard preformatted cross section sheets (available in the FDOT CADD Software).

Place as many cross sections on a sheet as possible with sections spaced to avoid overlapping. Create cross sections using a scale of 1” = 20' horizontal and 1” = 10’ vertical. Show the scale at the bottom right corner of the sheet above the title block. The standard cross section interval is 50 feet. Another interval may be used when appropriate based on the type and complexity of the project.

Show cross sections with stations increasing from the bottom to the top of the sheet and with multiple columns placed from the left to the right.

The order of cross sections within the plan set should be the mainline, side streets, then ramps.

Display the begin and end construction limits and include the name of the mainline (e.g., SR 22), side street (e.g., Easy Street), or ramp (e.g., Ramp A). Indicate exception limits (e.g., Bridge No. 770175 STA 105+20 to 109+60).

Center the cross sections on the sheet with the survey baseline or the construction centerline placed vertically in the center. Where the survey baseline and the construction centerline are not parallel, show the distance between the two at each cross section.

925.3 Required Information

As illustrated in ***Exhibit 925-1***, each cross section must include a background grid at the appropriate scale. Display the station for each cross section in the lower right area of the grid. Display (in feet) the horizontal offsets from the centerline along the bottom of the grid. Display the vertical elevations along both sides of the grid.

Each cross section must provide the following:

(1) Label the centerline or baseline of construction.

(2) Show and label R/W limits.

(3) Show existing ground lines.

(4) Show below-ground portions of existing features, e.g., pavement, curb, sidewalk.

(5) Show and label parallel underground utilities. Label only the utility type (e.g., “G”, “W”); the size of pipe is not required.

(6) Show the proposed roadway template and include:

  (a) Profile grade elevation(s)

  (b) Special ditch elevations

  (c) Pavement and sidewalk cross slopes

  (d) Median and outer slope ratios

(7) Show and label the lower limits (undercut line) of the removal of organic or plastic materials. See ***FDM 216*** and ***Standard Plans***, ***Index 120-002*** for the requirements of subsoil excavation; i.e., removal of unsuitable organic or plastic soils.

Showing parallel drainage pipes or structures is not required.

Exhibit 925-1
Roadway Cross Sections
Date: 1/1/2025

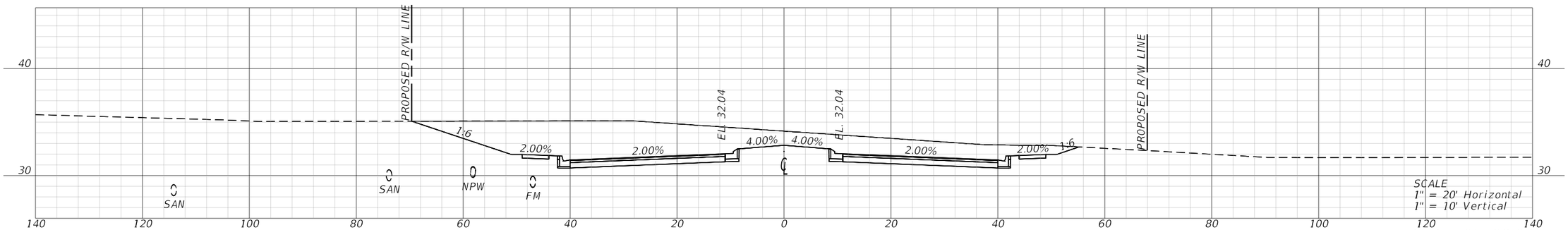

STA. 705+00.00

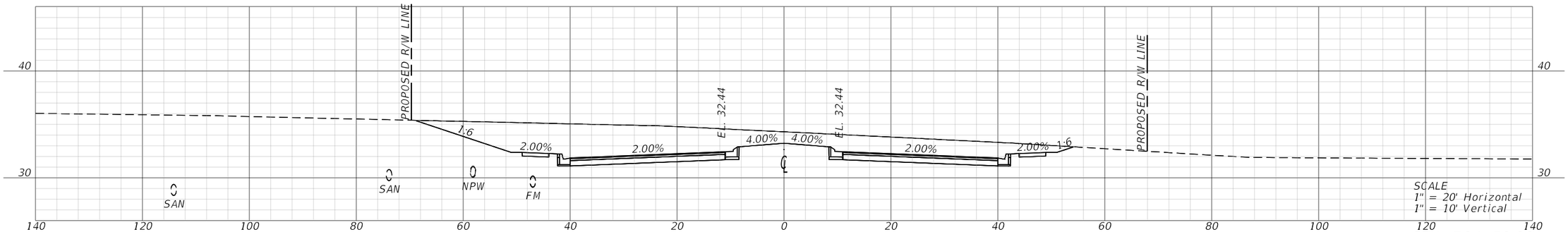

STA. 704+50.00

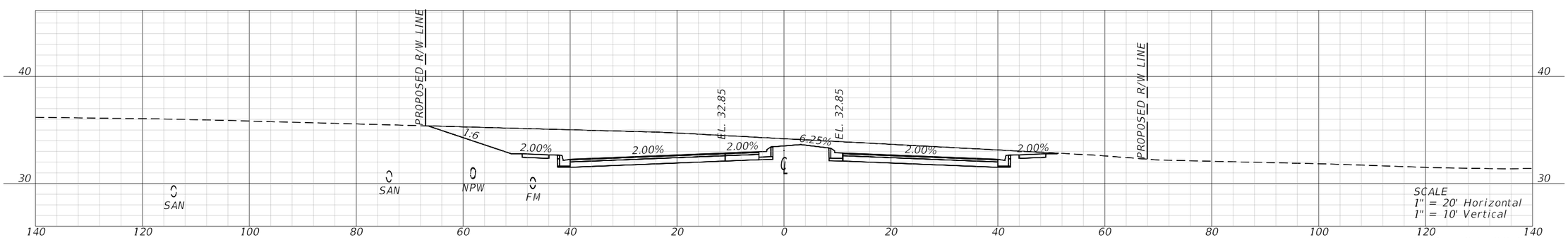

STA. 704+00.00

REVISIONS			
DATE	DESCRIPTION	DATE	DESCRIPTION

ENGINEER OF RECORD
LUKE S. WALKER, P.E.
LICENSE NUMBER: 99991
ROADWAY ENGINEERS, INC.
123 MAIN STREET
TALLAHASSEE, FL 32301

STATE OF FLORIDA
DEPARTMENT OF TRANSPORTATION

ROAD NO.	COUNTY	FINANCIAL PROJECT ID
SR 61	WAKULLA	220495-5-52-01

ROADWAY CROSS SECTIONS

SHEET NO.
10

THE OFFICIAL RECORD OF THIS SHEET IS THE ELECTRONIC FILE DIGITALLY SIGNED AND SEALED UNDER RULE 61G15-23.004, F.A.C.

940 Signing and Pavement Marking Plans

940.1 General

This chapter provides the requirements for the development of Signing and Pavement Marking (S&PM) Plans. See ***FDM 230*** for the requirements of S&PM designs.

S&PM Plans are usually a component set of plans. Projects with minimal S&PM improvements may include S&PM sheets in the Roadway Plans set.

940.1.1 Signs Mounted on Signal Installations

Place details for signs mounted on signal span wires or mast arms in the Signalization Plans set.

940.2 Key Sheet and Signature Sheet

The Key Sheet is the first sheet of the S&PM Plans set. The Signature Sheet, when required, is placed behind the Key Sheet. These sheets are created using the FDOT CADD Software.

Follow the same requirements contained in ***FDM 910*** for the development of a Key Sheet and Signature Sheet. Assemble the S&PM Plans in the following order:

<u>Index of S&PM Plans</u>

(1) Key Sheet

(2) Signature Sheet

(3) General Notes

(4) S&PM Plan

(5) Guide Sign Worksheet

(6) Overhead Sign Cross Section

(7) Sign Structures Data Table

(8) Foundation Details

(9) Bridge Mounted Sign Details

(10) Report of Core Borings

S&PM Plans may require insertion of sheets that were prepared early, or prior to the design process (aka early works). See ***FDM 910.2.6.1*** for instructions on including early works sheets.

For standalone signing or pavement marking projects, include the list of Contract Plans Components even if the S&PM Plans are the only component.

See ***FDM 910*** for an example of a Key Sheet and Signature Sheet.

940.3 General Notes Sheet

General Notes sheets convey site-specific requirements not covered by the ***Standard Plans*** or ***Standard Specifications***.

940.3.1 Pay Item Notes

Place pay item notes on the General Notes sheet.

Information on how quantities are determined is contained in the Estimated Quantities (EQ) Report and should not be repeated in the plans as a pay item note.

Pay item notes are used to provide unique project information not covered by the basis of payment information contained in the ***Standard Specifications***, such as:

- Clarify how incidental work is to be paid for.
- Clarify the purpose, uses, or requirements.

940.4 S&PM Plan Sheets

S&PM Plan sheets convey a graphic depiction and the necessary information for the installation of signs and pavement marking elements.

Produce the S&PM Plan sheets using sheets that are contained in the FDOT CADD Software.

When appropriate, the sheet may utilize multi-stacking (subdividing sheet horizontally); with each panel containing a plan view.

Use the following horizontal scales:

	Standard	Optional
Curbed Roadways	1” = 40’	1” = 50’
Flush-shoulder Roadways	1” = 50’	1” = 100’

940.4.1 Required Information

Provide the same basic information required on the Roadway Plan sheet, including roadway geometrics, project limits, street names, curb and gutter, drainage inlets, sidewalks, and R/W lines.

Show underground and overhead utilities, lighting structures, signal structures and ITS structures that may conflict with the installations of sign components. Identify potential conflicts with utilities, drainage, landscape features, sidewalks, and driveways in the plans.

Provide the following on the S&PM Plan sheet:

(1) Display a north arrow and scale within each plan view, typically in the upper right portion. Display centerline of construction or baseline of construction such that the stationing is increasing from left to right. Flag and station the begin and end of the S&PM limits.

(2) Place proposed signs at the proper locations. Display the sign face near its respective sign with a leader line connecting the sign location and sign face. Orient each sign face on the plan sheet to be read as viewed from the direction of travel along the roadway. Indicate next to each sign face the station (or mile post), pay item number, sign size, standard designation, or assigned number (if nonstandard). In addition, provide sign placement (offset) when its installation may conflict with utilities, drainage, lighting, sidewalks, driveways, or landscape features.

(3) Display existing signs in the same manner as proposed signs. Indicate next to each sign face the station (or mile post), disposition (remain, relocate, or remove), and pay item number.

(4) Display and label permanent pavement markings specifying width, color and spacing. Indicate begin and end pavement marking stations including offsets. Provide radii information and dimension lane widths at appropriate intervals or at changes.

(5) Label Ground-in Rumble Strips with the permanent pavement marking callout labels. It is not necessary to call out the array type (skip or continuous) for arterials and collectors.

(6) Display and label raised pavement markers and delineators specifying type, color, and spacing. Indicate begin and end of application by stations.

(7) Display and label tubular markers specifying color and spacing. Indicate begin and end of application by stations.

(8) Label the field-verified vertical elevation and horizontal location (V_{vh}) of existing utilities (SUE data) for overhead sign installations on the plan view. Include the following with the label (or in a summary table):

(a) V_{vh} number

(b) Utility type and owner

(c) Size and material

(d) Location (Sta/Offset/Lt or Rt)

(e) Existing ground and top of utility elevations

940.4.2 Typical Pavement Marking Sheet

For simple projects, or sections of a project, S&PM Plan details may be conveyed using a typical section indicating the placement of pavement markings (in lieu of full plan sheets). Provide typical pavement marking plan details for median crossovers, turn lanes, or other similar features.

Proposed and existing signs may be tabulated to convey location, disposition, and other required information.

940.5 Guide Sign Worksheet

The Guide Sign Worksheet provides information necessary for sign panel fabrication. Each proposed sign panel must be shown with a complete message layout (sign face) and supporting information, including:

- panel color, dimensions, and corner radii
- border width and color
- lettering (copy) color, height, and spacing

For multi-post signs, include the number of posts needed and the column size and length.

The number of signs shown on a single sheet depends on the sign size and complexity.

Output from the Transoft GuidSign Program or a similar format may be used.

940.6 Overhead Sign Cross Section Sheets

Overhead Sign Cross Section sheets provide a sectional view of overhead signs (e.g., cantilever or span structures, bridge mounted) as viewed by approaching traffic.

The cross section must be at the station of the overhead sign and include ditches, guardrails, barrier walls, right of way lines, potentially conflicting utilities, and lane lines. Create the section using a horizontal and vertical scale of 1" = 10' or 1”-5’.

Any arrow included on the sign panel that designates a lane assignment must be located within the center 1/3 of the associated traffic lane.

Display the foundation, sign structure and panel, and cross section on a background grid. Indicate the sign number, station, direction of travel, and scale used. Dimension and label the following:

- Highest elevation of the roadway surface
- Elevation of the foundation top
- Vertical distance from highest elevation of the roadway surface to the bottom of the sign panel
- Horizontal distance from the edge of the panel to the center of the foundation
- Horizontal distance from the edge of the travel lane to the closest edge of the foundation
- Width and height of the sign panel

When replacing signs on existing overhead sign structures, show the chord outside diameter and center-to-center distance between the chords.

940.6.1 Multi-Post Sign Cross Section Sheets

Muti-post sign cross sections, though not placed in plans, are often created to:

- Support the reported column size and length data on the Guide Sign Worksheet.
- Support the planning of future overlays of the rates on Toll Schedule Signs.

When created, place final cross sections in the PSEE Project Documentation module.

940.7 Sign Structures Data Table Sheet

Provide design information for the support truss, columns, and foundations on either the "Cantilever Sign Structures Data Table" or the "Span Sign Structures Data Table". These tables should be completed by the Structures Engineer of Record (EOR).

The information shown on these sheets, along with details contained in ***Standard Plans***, ***Indexes 700-040*** and ***700-041*** provide all of the information necessary for sign structure fabrication and installation.

Computer programs for the design of overhead cantilever sign structures and overhead span sign structures were developed by the Structures Design Office and may be downloaded from the Structures Design web site.

940.8 Foundation Details Sheet

Required construction details for standard foundations are provided in ***Standard Plans, Index 700-040*** and ***Index 700-041***.

Provide a Foundation Details sheet when any of the following apply:

(1) Proposing a non-standard foundation.

(2) Project soil conditions are weaker than soil conditions which the standard foundation designs are based on.

(3) Unavoidable site restrictions (e.g., limited R/W, utility conflicts).

940.9 Bridge Mounted Sign Details Sheet

The design of the attachment system for signs mounted on bridge structures is the responsibility of the Structures EOR. Include the design of the attachment system in the Structures Plans if bridge work is included in the project. If bridge work is not included in the project, place the Bridge Mounted Sign Details sheet in the S&PM Plans.

940.10 Report of Core Borings Sheet

The Report of Core Borings sheets provide soil information for each proposed overhead sign structure. See ***FDM 920*** for additional information.

The following information is required:

(1) Depiction of the boring identifying the type and depth of soil strata encountered and the water level encountered. Provide boring number and location.

(2) Soil boring location map illustrating where boring was taken. Provide boring number.

(3) Soil properties and environmental classification.

941 Signalization Plans

941.1 General

This chapter provides the requirements for the development of Signalization Plans. See ***FDM 232*** for the requirements of signalization designs.

Signalization Plans are usually a component set of plans. Projects with minimal signalization improvements may include signalization sheets in the Roadway Plans set.

941.1.1 Signs Mounted on Signal Installations

Place details for signs mounted on signal span wires or mast arms in the Signalization Plans.

941.1.2 Rectangular Rapid Flashing Beacons (RRFBs)

Place details for RRFBs mounted overhead or as a standalone assembly in the Signalization Plans.

941.2 Key Sheet and Signature Sheet

The Key Sheet is the first sheet of the Signalization Plans set. The Signature Sheet, when required, is placed behind the Key Sheet. These sheets are created using the FDOT CADD Software.

Follow the same requirements contained in ***FDM 910*** for the development of a Key Sheet and Signature Sheet. Assemble the Signalization Plans in the following order:

<u>Index of Signalization Plans</u>

(1) Key Sheet

(2) Signature Sheet

(3) General Notes

(4) Signalization Plan

(5) Interconnect/Communication Plan

(6) Mast Arm Details

(7) Foundation Details

(8) Service Point Details

(9) Internally Illuminated Street Name Sign Details

(10) Mast Arm Assemblies Data Table

(11) Report of Core Borings

Signalization Plans may require insertion of sheets that were prepared early, or prior to the design process (aka early works). See ***FDM 910.2.6.1*** for instructions on including early works sheets.

For standalone signalization projects, include the list of Contract Plans Components even if the Signalization Plans set is the only component.

See ***FDM 910*** for an example of a Key Sheet and Signature Sheet.

941.3 General Notes Sheet

General Notes sheets convey site-specific requirements not covered by the ***Standard Plans*** or ***Standard Specifications***. See ***FDM 914*** for additional information concerning general notes.

General notes often include signal design information for the following:

- controller operations
- signal heads
- computer interface
- loop installations
- interconnect cable

941.3.1 Pay Item Notes

Place pay item notes on the General Notes sheet.

Information on how quantities are determined is contained in the Estimated Quantities (EQ) Report and should not be repeated in the plans as a pay item note.

Pay item notes are used to provide unique project information not covered by the basis of payment information contained in the ***Standard Specifications***, such as:

- Clarify how incidental work is to be paid for.
- Clarify the purpose, uses, or requirements.

941.3.2 Signals Legend

Place a signals legend (i.e., symbol and description) and other abbreviations used in the Signalization Plans on the General Notes sheet, or on a separate “Signals Legend” sheet. Use symbols in accordance with the requirements of the FDOT CADD Software.

941.4 Signalization Plan Sheet

Signalization Plan sheets convey a graphic depiction, and necessary information for the installation of signals, including:

- Construction details
- Electrical circuits
- Signal phasing
- Pay item number and quantity for each element of the signal design.

Produce the Signalization Plan sheet using sheets that are contained in the FDOT CADD Software. Use a horizontal scale of 1" = 20' or 1" = 40' to display the entire intersection on one plan sheet.

941.4.1 Required Information

Provide the same basic information required on the Roadway Plan sheet, including roadway geometrics, project limits, street names, curb and gutter, drainage inlets, sidewalks, and R/W lines.

Show underground and overhead utilities, signing structures, lighting structures, and ITS structures that may conflict with the installation of signal components. Identify potential conflicts with utilities, drainage, landscape features, sidewalks, and driveways in the plans.

Provide the following on the Signalization Plan sheet:

(1) Display a north arrow and scale within each plan view, typically in the upper right portion. Display the centerline of construction or baseline of construction such that the stationing is increasing from left to right. Flag and station the begin and end of the signalization limits. Provide the bearing on each roadway approach.

(2) Signal head locations with orientation arrows and movements (movements 2 and 6 are the major streets).

(3) Details of signal heads in tabular form.

(4) Phasing diagram or signal operating plan (SOP). If the SOP conforms to the ***Standard Plans, Index 671-001***, only a reference to the index is required.

(5) Signal controller timing chart.

(6) Display loop detectors, stop bars, and pedestrian crosswalks. Indicate the locations and orientations of pedestrian push buttons.

(7) Identify electrical service locations and routing to the power source.

(8) Display signal wire signs.

(9) Identify conduits and pull boxes.

(10) Locations of signal poles and span wires. Label ground and roadway crown elevations.

(11) Locations of pedestrian signals. See ***Standard Plans Instructions*** for ***Index 665-001*** for additional information on pedestrian detector assembly installation.

(12) Lane lines with vehicle orientation arrows and median nose locations with turning radii.

(13) Coordination unit-timing chart.

(14) Label field-verified vertical elevation and horizontal location (V_{vh}) of existing utilities (SUE data) for signal pole or mast arm installations in the plan view. Include the following with the label (or in a summary table):

(a) V_{vh} number

(b) Utility type and owner

(c) Size and material

(d) Location (Sta/Offset/Lt or Rt)

(e) Existing ground and top of utility elevations

(15) Label signalization equipment, including applicable pay item numbers.

941.5 Interconnect/Communication Plan Sheet

Provide an Interconnect/Communication (I/C) Plan sheet when signal equipment is being coordinated with other signal installations.

Prepare the I/C Plan sheet using sheets that are contained in the FDOT CADD Software.

Use a horizontal scale of 1" = 100' for underground cable and 1" = 200' for aerial cable.

941.5.1 Required Information

Provide the same basic information required on the Roadway Plan sheet, including a graphic display of the roadway, cross streets, driveways, sidewalks, and R/W lines.

Provide the following on the I/C Plan sheet:

(1) Display a north arrow and scale within each plan view, typically in the upper right portion. Display the centerline of construction or baseline of construction such that the stationing is increasing from left to right.

(2) Display and label the signal controller, I/C cable, and pull boxes or aerial junction boxes. Labels must include the pay item number and quantity for each I/C element.

(3) Identify signal poles, service poles, and joint-use poles to which I/C cable will be attached.

941.6 Signalization Details

Construction details for mast arm assemblies and foundations are provided in ***Standard Plans, Index 649-030*** (Standard Mast Arm Assemblies) and ***Index 649-031*** (Mast Arm Assemblies).

Use signalization detail sheets to provide project-specific requirements and construction details not covered by the ***Standard Plans*** or ***Standard Specifications***.

FDM 941.6.1 through ***942.6.4*** are common details provided in plans. Other details, such as video detection, controller cabinets or service poles may be required.

941.6.1 Mast Arm Details

Provide a Mast Arm Details sheet when proposing a non-standard mast arm assembly.

941.6.2 Foundation Details

Provide a Foundation Details sheet when any of the following apply:

(1) Proposing a non-standard mast arm assembly.

(2) Project soil conditions are weaker than the soil conditions which the standard foundation designs are based on.

(3) Unavoidable site restrictions (e.g., limited R/W, utility conflicts).

941.6.3 Service Point Details

Provide a one-line diagram and panel schedule for each service point. Panel schedules must include the following:

(1) Panel ratings: voltage, phases, capacity (main lugs or main circuit breaker) and short circuit current rating.

(2) Enclosure type.

(3) Neutral bus and ground bus requirements.

(4) Capacity of the circuit breakers.

(5) Circuit loads.

(6) Total and demand loads.

941.6.4 Internally Illuminated Street Signs Details

Provide an Internally Illuminated Street Signs Details sheet when proposing illuminated street signs placed on mast arm assemblies.

941.7 Mast Arm Assemblies Data Table

The Mast Arm Assembly Data Table provides the necessary arm, pole, and foundation information for each mast arm assembly.

The table and required notes are available through the CADD tools.

941.8 Report of Core Borings Sheet

The Report of Core Borings sheets provide soil information for each proposed mast arm assembly. See ***FDM 920*** for additional information.

The following information is required:

(1) Depiction of the boring identifying type and depth of the soil stratas and water levels encountered. Provide boring number and location.

(2) Soil boring location map illustrating where the boring was taken. Provide boring number.

(3) Soil properties and environmental classification.

942 Intelligent Transportation Systems Plans

942.1 General

This chapter provides the requirements for the development of Intelligent Transportation Systems (ITS) Plans. See ***FDM 233*** for the requirements of ITS designs.

ITS plans provide construction details, electrical circuits, and other relevant data for various types of ITS systems, including:

- Freeway Management Systems
- Incident Management Systems
- Arterial Management Systems
- Emergency Management Systems
- Transit Management Systems
- Electronic Toll Collection or Fare Payment
- Highway Rail Intersections (under electronic surveillance)
- Regional Multimodal Traveler Information

ITS Plans are usually a component set of plans. Projects with minimal ITS improvements may include ITS sheets in either the Roadway Plans or Signalization Plans set.

942.1.1 FDOT Fiber Optic Cable

When FDOT fiber optic cable exists within the project limits, coordinate the proposed improvements with the ITS and TSM&O staff within the District Traffic Operations Office.

When the fiber optic cable is buried, include the pay item for “Fiber Optic Cable Locator” in the Estimated Quantities Report.

942.2 Key Sheet and Signature Sheet

The Key Sheet is the first sheet in the ITS Plans set. The Signature Sheet, when required, is placed behind the Key Sheet. These sheets are created using the FDOT CADD Software.

Follow the same requirements contained in ***FDM 910*** for the development of a Key Sheet and Signature Sheet. Assemble the ITS Plans in the following order:

Index of ITS Plans

(1) Key Sheet

(2) Signature Sheet

(3) General Notes

(4) Legend

(5) Pole Data Table

(6) ITS Plan

(7) Dynamic Message Sign Details

(8) Highway Advisory Radio Details

(9) Video Display System Details

(10) Network Devices Details

(11) Vehicle Detection Details

(12) Service Point Details

(13) Foundation Details

(14) ITS Cross Sections

(15) Report of Core Borings

ITS Plans may require insertion of sheets that were prepared early, or prior to the design process (aka early works). See ***FDM 910.2.6.1*** for instructions on including early works sheets.

See ***FDM 910*** for an example of a Key Sheet and Signature Sheet.

942.3 General Notes Sheet

General Notes sheets convey site-specific requirements not covered by the ***Standard Plans*** or ***Standard Specifications***.

General notes may include:

(1) Department's contact information for the fiber optic cable route marker label.

(2) Submittal of equipment specifications or design and shop drawings proposed for the project.

(3) Required coordination.

942.3.1 Pay Item Notes

Place pay item notes on the General Notes sheet.

Information on how quantities are determined is contained in the Estimated Quantities (EQ) Report and should not be repeated in the plans as a pay item note.

Pay item notes are used to provide unique project information not covered by the basis of payment information contained in the ***Standard Specifications***, such as:

- Clarify how incidental work is to be paid for.
- Clarify the purpose, uses, or requirements.

942.3.2 ITS Legend

Place an ITS legend (i.e., symbol and description) and other abbreviations used in the ITS Plans on the General Notes sheet or on a separate “ITS Legend” sheet. Use symbols in accordance with the requirements of the FDOT CADD Software.

942.4 ITS Plan Sheets

ITS Plan sheets convey a graphic depiction and necessary information for the installation of ITS systems, including:

- ITS cabinets, equipment, and devices
- Power sources and electrical circuits
- Conduits and pull boxes
- Pay item number, quantity, and description for each element of the ITS installation.

Assign a unique ID name to each proposed ITS device, hub, and service point. Refer to the Standard Naming Conventions per the FDOT Intelligent Transportation System Facilities Management (ITSFM) Standards. Examples of IDs include CCTV-SR91-126.2-NB-A; EPB-SR528-4.8-SB-B; FSV-SR417-52.2-WB-A.

Produce the ITS Plan sheet using sheets that are contained in the FDOT CADD Software.

The standard horizontal scale is 1” = 100’, however an alternate scale may be approved by the Project Manager.

942.4.1 Required Information

Provide the same basic information required on the Roadway Plan sheet, including, roadway geometrics, project limits, street names, construction stationing or milepost, curb and gutter, drainage inlets, sidewalks and right of way lines. Where details normally shown on the Roadway Plan sheet would obscure ITS features, the details may be screened, so long as the details remain plainly legible.

Aerial photography may be used as a background in lieu of a topographic survey and the roadway design file.

Show underground and overhead utilities, signing structures, and lighting structures that may conflict with the installation of ITS components. Identify potential conflicts with utilities, drainage, landscape features, sidewalks, and driveways in the plans.

Provide the following on the ITS Plan sheet:

(1) Display existing ITS elements and label them to remain or to be removed.

(2) Display and label the following proposed ITS equipment with their associated ID name and pay item numbers:

    (a) Fiber optic cable, conduit, conductors, and access points.

    (b) System communication devices.

    (c) Electrical power service equipment, interconnects, and service voltage.

    (d) Grounding and transient voltage protection.

    (e) Structure-mounted or ground-mounted field cabinets for system electronics, maintenance service points, and interconnect.

    (f) Circuit numbers with load center identification.

(3) Display the location and placement of ITS installations, such as

(a) Dynamic Message Signs

(b) Highway Advisory Radio

(c) Vehicle Detection Systems

(d) Video Display Systems

(4) Illustrate the cone of vision or detection zone when applicable.

(5) Label the field-verified vertical elevation and horizontal location (V_{vh}) of existing utilities (SUE data) for ITS installations in the plan view. Include the following with the label (or in a summary table):

(a) V_{vh} number

(b) Utility type and owner

(c) Size and material

(d) Location (Sta/Offset/Lt or Rt)

(e) Existing ground and top of utility elevations

942.4.2 Modified ITS Plan Sheets Format

Modified plans format (aka “letter type” plans) provides the locations of ITS devices in table format in lieu of plan sheets. The table includes device ID, description, milepost (to 3 decimal places), offset from the edge of the traveled way to the aboveground ITS device installation, and a comment field. Global positioning system (GPS) coordinates can be utilized as supplemental information in the table.

The modified plans should also include the following:

(1) A cross section for devices such as DMS that require overhead structures.

(2) Number and sizes for conduit.

(3) Number of fibers for fiber optic cable.

(4) Size and numbers of pairs for twisted pair copper cables.

Aerial photographs should be furnished with the table above to provide supplementary information. The aerial plan sheets do not require R/W lines, baselines, or roadway edges to be shown. The aerial plan sheets are used as a base for the as-built plans.

942.5 ITS Details Sheet

Use ITS Details sheets to provide project-specific requirements and construction details not covered by the ***Standard Plans*** or ***Standard Specifications***.

Common ITS details include:

- Fiber optic cable splices, terminations, and designating systems
- Splice Diagrams and Logical Network Diagrams
- Electrical Information (e.g., transformers and disconnect switches, panel board schedules)
- Electrical Line Diagrams and Service Details
- Cabinet Details and Wiring Diagrams
- ITS Device Mounting Details

942.5.1 Dynamic Message Sign (DMS)

Provide the following details for DMS installations:

(1) DMS housing, including details and notes that identify the type of display (monochrome, full-color, or tricolor), the size of display matrix (height, width, number of lines, and number of characters per line), and the type of mechanical construction (walk-in, front access, or embedded).

(2) DMS controllers, cabinets, and associated electronic equipment. Include telemetry equipment details for remote sensing and control.

(3) DMS Uninterruptible Power Supply (UPS) systems.

(4) DMS support structures, including external walkways, safety railings, and ladders.

(5) DMS mounting brackets and hardware.

942.5.2 Highway Advisory Radio (HAR)

Provide the following details for HAR installations:

(1) HAR operator workstation and central recording facility.

(2) HAR antennas, transmitters, and electronics.

(3) HAR support structures, signage, and beacons.

(4) HAR mounting brackets and hardware.

942.5.3 Video Display System

Provide the following details for video display system installations:

(1) Detailed structural mounting information for each color video monitor, flat panel display, and rear projection video unit in the video display system, including support structures, wall attachment methods, and the weight of each display unit.

(2) Cable routing plan and diagrams, including maintenance and service points.

(3) Video display controller and operator workstations.

(4) Encoders, decoders, multiplexers, and routing equipment.

(5) Cross sections and elevations for all modifications to existing wall systems in the TMC facility.

For the rear projection video unit mounting and installation plans, include details that illustrate stacking configuration and support design, along with a ventilation and climate control plan. Provide cable routing plans that include detailed connection diagrams for individual and stacked configurations.

942.5.4 Network Devices

Provide the following details for network devices:

(1) System diagrams illustrating network and device interconnect.

(2) General network topology.

(3) Notes regarding special configurations or options for specific devices that are required to achieve a specific system function.

942.5.5 Vehicle Detection and Traffic Data Collection

Provide the following details for vehicle detection and traffic data collection systems:

(1) Diagrams illustrating detection system interconnect.

(2) General network topology.

(3) Notes regarding any special configurations or options for specific devices that are required to achieve a specific system function.

(4) Illustrate detection zones on respective lanes. Identify lanes numerically from the inside to the outside lane.

942.5.6 Service Point Details

Provide a one-line diagram and panel schedule for each service point. Panel schedules must include the following:

(1) Panel ratings: voltage, phases, capacity (main lugs or main circuit breaker) and short circuit current rating.

(2) Enclosure type.

(3) Neutral bus and ground bus requirements.

(4) Capacity of the circuit breakers.

(5) Circuit loads.

(6) Total and demand loads.

The panel schedules must comply with the load analysis submitted as part of the ITS Power Design Analysis Report (PDAR).

Provide a Technical Special Provision (TSP) for automatic transfer switches (ATS), fuel tanks and engine generators, when a permanent ITS generator is required.

942.5.7 Foundation Details Sheet

The required construction details for mast arm foundations are provided in ***Standard Plans, Index 649-030*** or ***Index 649-031***.

Provide necessary construction details on a Foundation Detail sheet when either of the following apply:

(1) Proposing a non-standard mast arm assembly.

(2) Project soil conditions are weaker than soil conditions which the standard foundation designs are based on.

(3) Unavoidable site restrictions (e.g., limited R/W, utility conflicts).

942.6 ITS Cross Sections Sheet

The ITS Cross Sections sheet provides a sectional view of the installation of camera poles and other similar ITS devices as they relate to the roadway elements. The sectional view also illustrates the cone of view or detection, location of R/W, and relevant utility or drainage features.

Follow the requirements contained in ***FDM 925*** for the development of Cross Sections sheets.

The section view must be shown at the proposed station of the ITS installation. Display, label, and dimension relevant information, such as setback, height of pole and IT device, depth of foundation and top elevation, and offset to R/W and centerline of construction.

942.7 Pole Data Table

The Pole Data Table sheet provides the following information for ITS poles:

(1) The ITS device to be mounted on the pole, and the mounting height

(2) The location of the pole (station/offset), and the slope of the ground at the pole

(3) The type of pole (e.g., concrete, P-III)

(4) The pole length, embedment depth, and height of the pole above ground

942.8 Report of Core Borings Sheet

The Report of Core Borings sheets provide soil information for each proposed ITS pole. See ***FDM 920*** for additional information.

The following information is required:

(1) Depiction of the boring identifying the type and depth of soil strata encountered, and the water level encountered. Provide boring number and location.

(2) Soil boring location map illustrating where the boring was taken. Provide boring number.

(3) Soil properties and environmental classification.

943 Lighting Plans

943.1 General

This chapter provides the requirements for the development of Lighting Plans. See ***FDM 231*** for requirements of lighting designs.

Lighting Plans are usually a component set of plans. Projects with minimal lighting improvements may include lighting sheets in the Roadway Plans set.

943.2 Key Sheet and Signature Sheet

The Key Sheet is the first sheet of the Lighting Plans set. The Signature Sheet, when required, is placed behind the Key Sheet. These sheets are created using the FDOT CADD Software.

Follow the same requirements contained in ***FDM 910*** for the development of a Key Sheet and Signature Sheet. Assemble the Lighting Plans in the following order:

Index of Lighting Plans

(1) Key Sheet

(2) Signature Sheet

(3) General Notes

(4) Legend

(5) Lighting Data Table

(6) Lighting Plan

(7) Pole Details

(8) Foundation Details

(9) Underdeck Lighting Details

(10) Box Girder Maintenance Lighting Details

(11) Service Point Details

(12) Report of Core Borings

Lighting Plans may require insertion of sheets that were prepared early or prior to the design process (aka early works). See ***FDM 910.2.6.1*** for instructions on including early works sheets.

See ***FDM 910*** for an example of a Key Sheet and Signature Sheet.

943.3 General Notes

General Notes sheets convey site-specific requirements not covered by the ***Standard Plans*** or ***Standard Specifications***. See ***FDM 914*** for additional information concerning general notes.

General notes often include lighting design information, including:

- maintaining agency
- proximity to airport over overhead utilities
- load center location
- lighting design criteria (average illumination level, uniformity ratio, veiling luminance ratio)

943.3.1 Pay Item Notes

Place pay item notes on the General Notes sheet.

Information on how quantities are determined is contained in the Estimated Quantities (EQ) Report and should not be repeated in the plans as a pay item note.

Pay item notes are used to provide unique project information not covered by the basis of payment information contained in the Standard Specifications, such as:

- Clarify how incidental work is to be paid for.
- Clarify the purpose, uses, or requirements.

943.3.2 Lighting Legend

A lighting legend provides symbols and descriptions and other abbreviations used in the Lighting Plans. Place a lighting legend on the General Notes sheet, or on a separate Lighting Legend sheet. Use symbols in accordance with the requirements of the FDOT CADD Software.

Provide a unique light pole symbol and description for each different type of installation or work (e.g., ”New Light Pole Installation”, "Retrofit Existing Light Pole”, “Existing Light Pole to Remain”).

943.4 Lighting Data Table

The table provides a listing of each light assembly, and includes the following information (as applicable):

- Pole Number
- Station and Offset
- Coordinates
- Roadway Setback
- Pole Owner
- Maintaining Agency
- Pole Type (Standard or other)
- Arm Length
- Quantity of Luminaires
- Luminaire Type
- Luminaire Make/Model
- Lumen Output
- IES Distribution Pattern
- Correlated Color Temperature (CCT)
- Mounting Height
- Tilt Angle
- Input Wattage
- Input Voltage
- Load Center Number
- Circuit Number
- Foundation Type
- Pay Item Number

The table must list all luminaire installations, including underdeck lighting, sign mounted luminaires, and luminaires mounted on existing utility poles.

943.5 Lighting Plan Sheets

Lighting Plan sheets convey a graphic depiction and necessary information for the installation of lighting, including:

- Construction details
- Light poles and luminaire installations
- Electrical circuits, conduits, wires, and pull boxes
- Load center information

Produce the Lighting Plan sheet using sheets that are contained in the FDOT CADD Software.

Use the following horizontal scales:

	Standard	Optional
Curbed Roadways	1” = 40’	1” = 50’
Flush-shoulder Roadways	1” = 50’	1” = 100’

943.5.1 Required Information

Provide the same basic information required on the Roadway Plan sheet, including roadway geometrics, project limits, street names, curb and gutter, drainage inlets, sidewalks, and R/W lines.

Show underground and overhead utilities, signing structures, lighting structures, and ITS structures that may conflict with the installation of the lighting components. Identify potential conflicts with utilities, drainage, landscape features, sidewalks, and driveways in the plans.

Provide the following on the Lighting Plan sheet:

(1) Display a north arrow and scale within each plan view, typically in the upper right portion. Display the centerline of construction or baseline of construction such that the stationing is increasing from left to right. Flag and station the begin and end of the lighting limits.

(2) Display and label existing and proposed lighting features at their correct locations (station/offset) using symbols which represent poles, conduits, pull boxes, and underdeck luminaires.

(a) Include pay item number, number of conduits, length of conduits, and conductor sizes when labeling conduit runs.

(b) Include pole number, description of installation and arm length, baseline or centerline station and offset, and circuit number when labeling poles.

(c) Include the estimated foundation depth as “for information only” when labeling existing high mast light poles that are to be removed.

(3) Display and label service point locations and electrical devices. Display the routing of the service feeder from the power company service pole to the load center. ***Standard Plans, Index 639-001*** provides details for the service point. Provide the following service point information:

(a) Power company providing service.

(b) Baseline or centerline station and offset.

(c) Voltages and phases (e.g., 240/480 Volt, 3 phase).

(d) Main or overhead breaker size.

(e) Number of branch circuits and breaker size of each.

(4) Label the field-verified vertical elevation and horizontal location (V_{vh}) of existing utilities (SUE data) on the plan view. Include the following with the label (or in a summary table):

(a) V_{vh} number

(b) Utility type and owner

(c) Size and material

(d) Location (Sta/Offset/Lt or Rt)

(e) Existing ground and top of utility elevations

943.6 Lighting Details Sheets

The required construction details for light poles and foundations are provided in ***Standard Plans:***

- ***Index 715-001*** (Conventional Lighting)
- ***Index 715-002*** (Standard Aluminum Lighting)

- ***Index 715-003*** (Utility Conflict Pole)
- ***Index 715-010*** (High Mast Lighting)
- ***Index 715-240*** (Maintenance Lighting for Box Girders)

Use Lighting Details sheets to provide project-specific requirements and construction details not covered by the ***Standard Plans*** or ***Standard Specifications***.

943.6.1 Pole Details Sheet

Provide a Pole Details sheet when proposing a non-standard light assembly.

Pole details may also include:

- Tilt angle details when luminaire is tilted
- Installation and wiring requirements
- Identification ID tag

943.6.2 Foundation Details Sheet

Provide a Foundation Details sheet when any of the following apply:

(1) Proposing a non-standard light assembly.

(2) Project soil conditions are weaker than soil conditions which the standard foundation designs are based on.

(3) Unavoidable site restrictions (e.g., limited R/W, utility conflicts).

943.6.3 Underdeck Lighting Details Sheet

The Underdeck Lighting Details sheet provides the following information:

(1) The location of the embedded junction boxes, conduits and associated electrical work with standard notation to indicate the items that are incidental to the bridge.

(2) Mounting details and associated hardware needed for the installation of the underdeck luminaires.

(3) Electrical work associated with bridge mounted signs, when applicable.

943.6.4 Box Girder Maintenance Lighting Details Sheet

The Box Girder Maintenance Lighting Details sheet provides the following information:

(1) The location of internal lighting, receptacles, switches, load centers, life safety devices, and wiring needed for maintenance.

(2) The quantity of each electrical item within each box girder.

(3) A panelboard schedule for the distribution panelboard and for each mini power center.

943.6.5 Service Point Details

Provide a one-line diagram and panel schedule for each service point. Panel schedules must include the following:

(1) Panel ratings: voltage, phases, capacity (main lugs or main circuit breaker) and short circuit current rating.

(2) Enclosure type.

(3) Neutral bus and ground bus requirements.

(4) Capacity of the circuit breakers.

(5) Circuit loads.

(6) Total and demand loads.

943.7 Report of Core Borings Sheet

The Report of Core Borings sheets provide soil information for each proposed high-mast pole and for non-standard foundations. See ***FDM 920*** for additional information.

The following information is required:

(1) Depiction of the boring identifying the type and depth of soil strata encountered, and the water level encountered. Provide boring number and location.

(2) Soil boring location map illustrating where the boring was taken. Provide boring number.

(3) Soil properties and environmental classification.

943.8 Temporary Highway Lighting Sheets

Temporary Highway Lighting is not required. See ***FDM 240*** for additional guidance for temporary highway lighting.

If included with the Contract Plans Set, provide Temporary Highway Lighting sheets that provide the following, at a minimum:

(1) Temporary Lighting Data Table, that includes the following listed by TTC phase and stationing range:

- (a) Light pole type (e.g., standard, temporary)
- (b) Light pole spacing
- (c) Light pole offset
- (d) Foundation type (e.g., standard, barrier-mounted)

(2) Temporary Lighting Plan sheets for complex projects (i.e., typically not necessary for simple layouts)

(3) Temporary Lighting Details sheets, including barrier bracket mount details and Type K Temporary Barrier anchorage details.

944 Landscape Plans

944.1 General

The chapter provides the requirements for the development of Landscape Plans. See ***FDM 270*** through ***276*** for requirements of landscape designs.

Landscape Plans are most often developed as a standalone maintenance project or occasionally as a component set of plans. Projects with minor landscaping may include landscape sheets in the Roadway Plans set.

944.1.1 Estimated Quantity Report

Prepare an Estimated Quantity (EQ) Report in accordance ***FDM 902***. Landscape quantities are determined by location identified by a site number, location description, or both. The location description can be identified as:

- "project-wide" for small projects,
- individual Landscape Plan sheets, or
- designated areas within a sheet.

Pay items categorized as small are plants with less than a 7-gallon container size.

Pay items categorized as large are plants with a 7 gallon or greater container size.

944.1.2 Landscape Construction Cost Estimate

Include a Landscape Construction Cost Estimate (typically an Excel spreadsheet) at each phase submittal beginning with Phase III. The estimate provides the cost for all landscape improvements, including irrigation systems and hardscape.

Do not include the cost estimate in the construction contract documents. It is intended solely for use by the Department.

944.2 Key Sheet and Signature Sheet

The Key Sheet is the first sheet of the Landscape Plans set. The Signature Sheet, when required, is placed behind the Key Sheet. These sheets are created using the FDOT CADD Software.

Follow the same requirements contained in ***FDM 910*** for the development of a Key Sheet and Signature Sheet. Assemble the Landscape Plans in the following order:

Index of Landscape Plans

(1) Key Sheet

(2) Signature Sheet

(3) General Notes

(4) Legend

(5) Planting Plans and Details

(6) Irrigation Plans and Details

(7) Hardscape Plans and Details

(8) Temporary Traffic Control Plan

Landscape Plans may require insertion of sheets that were prepared early or prior to the design process (aka early works). See ***FDM 910.2.6.1*** for instructions on including early works sheets.

For standalone maintenance contracts, include the list of Contract Plans Components even if the Landscape Plans set is the only component.

944.3 General Notes Sheet

The General Notes sheet provides site-specific requirements not covered by the ***Standard Plans*** or ***Standard Specifications***.

General notes may include:

- Benchmark datum
- Maintaining authority contact information
- Utility information and owners contact information
- Mowing requirements, including requirements for wildflower areas
- Planting area preparation (e.g., soil scarification and amendment requirements)

Notes are written to the contractor and should be written as commands. Do not include “Contractor must”, “by the Contractor”, or similar phrases in notes. Also, use “must” instead of “shall”.

944.3.1 Pay Item Notes

Place pay item notes on the General Notes sheet.

Information on how quantities are determined is contained in the EQ Report and should not be repeated in the plans as a pay item note.

Pay item notes are used to provide unique project information not covered by the basis of payment information contained in the Standard Specifications, such as:

- Clarify how incidental work is to be paid for.
- Clarify the purpose, uses, or requirements.

944.3.2 Plant Legend

Place a plant legend (e.g., plant symbol, abbreviated plant name (code), and common name) and other abbreviations used in the Landscape Plans on the General Notes sheet, or on a separate “Plant Legend” sheet.

944.4 Landscape Plan Sheets

Landscape Plan sheets convey a graphic depiction and necessary information for the installation of plant materials, irrigation systems, and hardscape elements.

Plan sheets may be produced on sheets that are contained in the FDOT CADD Software. The standard horizontal scale is 1” = 50’; however, an alternate scale may be approved by the Department Project Manager.

For simple landscape projects, all elements of the landscape design may be shown together on a single “Landscape Plan” sheet. For most landscape projects, each element of the landscape design is shown on individual sheets, as follows:

- Planting Plan
- Irrigation Plan
- Hardscape Plan

944.4.1 Planting Plan

Planting designs may be displayed on aerial photography or on available topographic surveys. Information from a prior construction project may also be used.

Display and label existing topography, including R/W lines, roadways and driveways, buildings, underground and overhead utilities, walls, sidewalks and curbs, fencing, guardrail, railroads, bridges, drainage structures, and other similar items that are relevant to the planting design. Existing topography elements are often displayed as “gray-screened”.

Display the proposed roadway improvements when the landscape project follows or is part of a roadway project (e.g., edge of pavement and shoulder, sidewalks, utilities, lighting, or signal installations).

Display a north arrow and scale within each plan view, typically in the upper right portion. Display the centerline of construction or baseline of construction such that the stationing is increasing from left to right. Indicate beginning and end project limits.

Display and label the following planting design information:

(1) Location of new planting areas, indicating:

  (a) Planting Area ID number for location identification in the EQ Report. This is required only when multiple areas (locations) are designated within a sheet.

  (b) Plant Symbol, abbreviated plant name (code), and number of plants, trees, or palms.

  (c) Clear trunk height for trees and palms.

  (d) Delineated mulch area with estimated cubic yards of material needed.

(2) Location and depth to improve soil structure (a.k.a., soil scarification), amend existing soil, or replace existing soil with Landscape Soil.

(3) Demonstrate the following requirements are met:

  (a) Clear zones or lateral offsets

  (b) Limits of clear sight (see ***FDM 212.11***)

(c) View zones for outdoor advertising signs

(d) Setbacks from structural elements or drainage systems

(4) Mowing limits

(5) Installations of tree protection fencing

(6) Selective Clearing and Grubbing activities (remove or relocate trees, eradicate undesirable vegetation, and branch and root pruning) are often shown on the Planting Plan sheet, but can be shown on separate Selective C&G sheets when the work is significant. See ***FDM 924*** for Selective C&G sheet requirements.

944.4.1.1 Planting Details

Planting Details sheets provide details and information that are applicable to the project and are not addressed in the Standard Plans or Standard Specifications.

Construction details for tree bracing during root establishment are provided in Standard Plans***, Index 580-001***. Provide tree bracing details in the plans when ***Index 580-001*** does not apply.

944.4.2 Irrigation Plan

When separate Irrigation Plan sheets are necessary, use the Planting Plan sheets, “gray screened” in the background, and devoid of unnecessary text and labeling.

Display and label the location of spray heads and rotors, valves, mainlines, lateral lines, sleeves (noting the diameter sizes), controllers, water sources and points of connection, backflow preventers, and isolation valves.

944.4.2.1 Irrigation Details

Irrigation Details sheets provide details and information that are applicable to the project and not addressed in the Standard Plans or Standard Specifications.

Include a legend depicting the symbology used on the Irrigation Plan sheets and an associative description for each entry. Additional information such as the nozzle and component schedule, irrigation zone, or pipe schedule can be included on these sheets.

944.4.3 Hardscape Plan

When separate Hardscape Plan sheets are necessary, use the Planting Plan sheets, “gray screened” in the background, and devoid of unnecessary text and labeling.

Display and label hardscape and site amenities, e.g., street furniture, specialty paving, tree grates, walls, planters, fountains, fences, and lighting (excluding public utility street and area lighting).

944.4.3.1 Hardscape Details

Hardscape Details sheets provide details and information that are applicable to the project and not addressed in the Standard Plans or Standard Specifications.

944.5 Landscape Maintenance Guide Sheet

The Landscape Maintenance Guide sheet provides the long-term design intent, the limits of landscape maintenance, and the necessary activities for maintaining the planting and irrigation designs.

See ***FDM 273*** for more information on the Landscape Maintenance Guide.

948 Utility Work by Highway Contractor (UWHC) Plans

948.1 General

Most utility adjustment work is performed by the utility owner.

On occasion, the Department and utility owner enter into an agreement called a “Utility Work by Highway Contractor Agreement”. The agreement stipulates that the highway contractor is to construct or relocate the specified utilities in accordance with the UWHC Plans and special provisions developed by the utility owner. The agreement also establishes what costs the utility owner will reimburse the Department for the highway contractor utility work.

UWHC Plans are prepared in the same basic format as Department contract plans set components.

UWHC Plans are typically included as a strung project with a separate Estimated Quantities (EQ) Report. The EQ Report must identify which pay item quantities are reimbursable and which are not.

When utility work is minimal, UWHC Plans may be included as component plans within the Contract Plans Set, with utility quantities included in the highway project EQ Report.

948.2 Key Sheet and Signature Sheet

The Key Sheet is the first sheet of the UWHC Plans set. The Signature Sheet, when required, is placed behind the Key Sheet. These sheets are created using the FDOT CADD Software.

Follow the same requirements contained in ***FDM 910*** for the development of a Key Sheet and Signature Sheet. Assemble the UWHC Plans in the following order:

<u>Index of UWHC Plans</u>

(1) Key Sheet

(2) Signature Sheet

(3) General Notes

(4) Legend

(5) UWHC Plan-Profile

(6) UWHC Details

(7) Cross Sections

(8) Temporary Traffic Control Plan

When utility work extends outside the highway project limits of construction, note this in the work program data box on the Key Sheet.

Refer to the ***Work Program Instructions*** for guidance on the Financial Project ID phase number identification.

948.3 General Notes Sheet

General Notes sheets convey site-specific requirements not covered by the ***Standard Plans*** or ***Standard Specifications***.

General notes may include:

(1) The disposition and final ownership of any utility infrastructure that is to be removed as specified in the UWHC Agreement.

(2) Submittal requirements for equipment specifications or shop drawings.

(3) Required coordination.

The Department follows the FHWA Guidelines for Plain Language. Notes are written to the contractor and should be written as commands. Do not include “Contractor will”, “by the Contractor”, or similar phrases as notes. Also, use “must” instead of “shall”.

948.3.1 Pay Item Notes

Place pay item notes on the General Notes sheet.

Information on how quantities are determined is contained in the EQ Report and should not be repeated in the plans as a pay item note.

Pay item notes are used to provide unique project information not covered by the basis of payment information contained in the Standard Specifications, such as:

- Clarify how incidental work is to be paid for.
- Clarify the purpose, uses, or requirements.

948.3.2 UWHC Legend

Place a UWHC legend (i.e., symbol and description) and other abbreviations used in the UWHC Plans on the General Notes sheet or on a separate UWHC Legend sheet. Use symbols in accordance with the requirements of the FDOT CADD Software.

948.4 UWHC Plan-Profile Sheets

UWHC Plan-Profile sheets convey a graphic depiction and necessary information for the relocation or construction of utilities by the highway contractor.

A plan-profile sheet format must be utilized when any underground utility is 4" or greater. When utility profiles are not needed, title the sheet as UWHC Plan.

Use a scale of:

- 1” = 40’ horizontal and 1” = 4’ vertical, or
- 1” = 50’ horizontal and 1” = 5’ vertical.

948.4.1 Required Information

Provide the following information in the plan view:

(1) Display a north arrow and scale within each plan view, typically in the upper right portion.

(2) Display and label the centerline of construction or baseline of construction in the plan view such that the stationing is increasing from left to right. Flag and station the begin and end of the utility work limits. Display and label R/W lines.

(3) Display and label existing and proposed roadway profiles in the profile view.

(4) Display proposed roadway improvements to give context to the location of the utility work. Show proposed bridges and approach slabs by simple outline. The elements of the proposed roadway should be gray-scaled. Provide road and street names.

(5) Display and label existing and proposed utilities. Convey the disposition of existing utilities (e.g., "To Be Removed", "To Be Relocated", "To Be Abandon”). Identify new utility installations (e.g., utility type and size, sleeves, valves, fire hydrants) with approximate length and station information.

(6) Display and label overhead utilities indicating the line voltages. For a multi-line electrical overhead crossing, accurately show the location of each line.

(7) Display proposed drainage systems by depicting drainpipes with a single pipeline style, and the outline of inlets, manholes, junction boxes, and outfall features (e.g., MES, endwall). Display signing structures, lighting structures, and ITS structures that may conflict with the proposed utility work.

(8) Display and label existing utilities that are to be filled, plugged, and remain in place.

948.5 UWHC Cross Sections Sheet

The UWHC Cross Sections sheet provides sectional views of critical utility installations. Follow the requirements contained in ***FDM 925*** for the development of Cross Sections sheets.

Display and label existing and proposed utilities. Convey the disposition of existing utilities and identify new utility installations.

948.6 UWHC TTC Plan Sheets

Typically, the Roadway Plans provide the plan details and quantities for conveying pedestrian, bicycle, and motorized traffic through the work zone, to allow the utility work to be performed.

UWHC Temporary Traffic Control (TTC) Plan sheets are required when the roadway TTC Plan does not cover the utility work.

Include the quantities associated with the UWHC TTC Plan in the UWHC EQ Report.