ROADWAY AND TRAFFIC DESIGN STANDARDS

FOR DESIGN, CONSTRUCTION, MAINTENANCE AND UTILITY OPERATIONS ON THE STATE HIGHWAY SYSTEM

JANUARY 1994

TOPIC NO. 625-010-003-c

Freddie Simmons 6/1/94

Freddie Simmons

State Roadway Design Engineer

PATENTED DEVICES, MATERIALS AND PROCESSES

The use of any design, method, process, material or device either expressed or implied by these standards that are covered by patent, copyright, or proprietary priviledge is the sole responsibility of the user. Any infringement on the rights of the inventor, patentee, assignee or licensee shall be the sole responsibility of the user. For additional information refer to Subsection 7-3 of the FDOT Standard Specifications for Road and Bridge Construction.

This publication was produced at an annual cost of $138,800 or $22.00 per copy to provide standards and criteria for the design, construction and maintenance of highway transportation facilities constructed or maintained by or for the Department Of Transportation.

This publication is printed on recycled paper.

This document can be procured by contacting the following:

FLORIDA DEPARTMENT OF TRANSPORTATION
MAP & PUBLICATION SALES
MAIL STATION 12
605 SUWANNEE STREET
TALLAHASSEE, FLORIDA 32399-0450

Phone (904) 488-9220

Revisions
Roadway And Traffic Design Standards
1994

Index Number	Sheet Number	Description
		Every standard drawing sheet in the 1994 Roadway And Traffic Design Standards has been produced by computer drafting.
		In taking advantage of verification, registering and other features of CADD, and due to certain restraints of CADD, changes appear on the sheets that are not listed in the tabulated revisions. These changes may include reformatting, typographical corrections, alignment of views and details, scale, rotations, skew, abbreviation, grouping, shape, proportion and other nonfunctional changes. The revision number on each Standard Sheet reflects the year of the latest change in function, intent and purpose on that sheet.
		Revisions to the standards that reflect function, intent and purpose are tabulated below.
001	1 of 1	Expanded List.
102	3 of 3	Posts: 1½" x 1½" Oak Post Option added.
104	1 of 1	Asphalt mulch terms changed to "emulsified" asphalt mulch and limits clarified.
105	1 of 1	Asphalt mulch term changed to "emulsified" asphalt mulch.
199	1 of 1	Tables and notes replaced.
200	1 of 2	'GENERAL NOTES' notes Nos. 8 & 9 revised.
	2 of 2	'WALL DESIGNS-RECTANGULAR STRUCTURES' table, footnotes added.
201	1 of 6	'WEIGHT OF CASTING' table weights revised. 'COVER FOR ALL FRAMES', dimensions revised.
	2 of 6	'MANHOLE TOPS,' 'TYPE 7-T (TRAFFIC) (H-20)' deleted and replaced with 'TYPE 7'.
	3 of 6	'OPTIONAL CONSTRUCTION JOINTS' note No. 5 revised. 'REBAR STRAIGHT END EMBEDMENT OR PERIPHERAL REINFORCEMENT IN LIEU OF ACI STANDARD HOOKS FOR TOP AND BOTTOM SLABS' detail deleted.
	6 of 6	'INDEX 200' detail added.
205	1 of 4	'FRANGIBLE BASE'-pay note revised. 'MINIMUM COVER FOR CONCRETE, STEEL, ALUMINUM AND POLYETHYLENE PIPE' 'POLYVINYL CLORIDE' pipe added.
	4 of 4	Table 'ROUND PIPE-SPIRAL RIB' 'RIB SPACING', (⅜" x 1" x 11½")' deleted and legend and note added. Table 'PIPE ARCH 2⅔" x ½" CORRUGATION, pipe types 'PIPE ARCH': SPIRAL RIB' and subscripts 5 & 6 deleted. Table 'PIPE ARCH-SPIRAL RIB' added.
232	4 of 4	'DESIGN NOTES' and 'METHOD OF PAYMENT' headings revised.
249	1 of 1	Deleted all references to Index 274 (bottom line of chart).
272	1 of 6	'DIMENSIONS AND QUANTITIES' Table - 4:1 Slope - 72" pipe - dimension and quantities changed.
273	6 of 6	'GENERAL NOTE' No. 7 revised.
280	1 of 4	'FILTER FABRIC JACKET' detail revised.
	4 of 4	'EXTRA BASE FOR CROSS BOX CULVERTS UNDER FLEXIBLE PAVEMENT' 'ASPHALTIC CONCRETE BASE' sentence added for cost; 'FRANGIBLE BASE' note for cost of base modified.
281	2 of 2	'GEOTEXTILE PLACEMENT AT CONCRETE STRUCTURE' details added.
282	1 of 1	'INLET TYPE C (MODIFIED)' revised note No. 3.
286	1 of 2	'UNDERDRAIN' 'TYPE IV' detail and related notes deleted.
	2 of 2	Outlet Pipe notations and notes revised.
300	1 of 1	Sheet reformatted; 'CONTRACTION JOINT IN CURB OR CURB AND GUTTER' expanded to include other type curbs; 'CURB AND GUTTER AND TYPE A CURB ADJACENT TO FLEXIBLE PAVEMENT' notation revised; 'GENERAL NOTES' note No. 1 expanded.
301	1 of 1	Sheets expanded to include double left turns; Revised tabular values reflecting Rural and Urban conditions; Deleted table notes and added 'GENERAL NOTES' and 'DESIGN NOTES'.
302	1 of 1	'NOTES' added note No. 3 and revised note No. 4. 'TYPE II AND TYPE V CONCRETE TRAFFIC SEPARATOR' joint seal modified.
303	1 of 1	Index reinstated; note No. 4 revised.
304	1 of 3	'DIAGONAL RAMPS' and 'INTERMEDIATE RAMPS' revised to reflect 3' walkaround. 'INTERBLOCK RAMPS AND DIMENSIONAL FEATURES FOR RAMPS TRANSVERSE TO SIDEWALKS' drawings revised to reflect dimensional changes required by ADA and retitled to 'DIMENSIONAL FEATURES FOR RAMPS'. 'GENERAL NOTES' revised and moved to this sheet. 'MEDIAN CROSS RAMP' moved to Sheet 3 of 3.
	2 of 3	'RAMPS FOR LINEAR PEDESTRIAN TRAFFIC' plan and pictorial view for sidewalk adjacent to curb modified; 'GENERAL NOTES' moved to 1 of 3.
	3 of 3	New sheet. Includes 'LANDINGS FOR RAMPS CONSTRUCTED AT LOCATIONS WITHOUT SIDEWALK and 'MEDIAN CROSSWALK (WITH AND WITHOUT RAMP SLOPES)'.
305	1 of 5	'LONGITUDINAL JOINTS' TIE BAR SPACING' chart bar spacing revised and tie bar note added. 'DEFORMED METAL PLATE' notation revised.
	4 of 5	'STEEL HOOK BOLT ASSEMBLY' added bolt and sleeve notes. 'EXPANSION AND CONTRACTION JOINT DOWEL ASSEMBLY' Section revised. 'DETAIL OF JOINT ARRANGEMENT' revised for clarity.
310	1 of 1	New Index 'CONCRETE SIDEWALK'.
400	6 of 15	Application 'Note' added.
	8 of 15	'GUARDRAIL LOCATION DETAIL K' revised for clarity. SHOULDER, SLOPES AND MISCELLANEOUS PAVING FOR THE STANDARD FLARE' offset dimension in plan views revised. 'MISCELLANEOUS PAVEMENT FOR STANDARD SECTIONS' 'SHOULDER GUTTER' reference notation revised.
	11 of 15	'ADHESIVE REFLECTORS-DETAIL M' reflector mounting note No. 4 and spacing notation revised. 'PERMISSIBLE POST AND OFFSET BLOCK COMBINATION' added 9.0# Steel Post & Offset Block; added note allowing use of offset blocks listed on Q.P.L.
	14 of 15	'⅜" STEEL WASHER' note added.
	15 of 15	New sheet 'CONTROLLED RELEASE RETURN FOR SIDE ROAD AND DRIVEWAY ACCESS'.
401	2 of 9	'SCHEME 1 & 2' embedment revised . 'SCHEME 1' offset control relocated to face of curb.
	4 of 9	'SCHEME 9'-embedment revised.
	6 of 9	'SCHEME 17'-embedment revised.
	7 of 9	'SCHEME 19' offset control relocated to face of curb.
	9 of 9	'SCHEME 29' embedment revised.
410	1 of 15	'STANDARD BARRIER WALL SECTION' reflector notation revised and trapizoidal wall shape design added.
	12 of 15	'GENERAL NOTES' note No. 2 revised.
	15 of 15	'TRAPEZOIDAL CONCRETE BARRIER WALL', added sheet with new detail.
415	2 of 2	Added steel connecting pin for use with knitted polyester glare screen.
437	1-6 of 6	New Index 'HEX-FOAM SANDWICH SYSTEM'.
438	1 of 2	The 4' dimension between the end support bracket and anchor post changed to 42". 'GENERAL NOTES' note No. 6 added.
	2 of 2	'ANCHOR DETAILS' 'TIE DOWN' base plate size reduced.
439	5 of 5	New Sheet.
452	1 of 2	'GENERAL NOTES' note No.4 galvanizing requirements revised. Note No. 10 added.
	2 of 2	'OPTIONAL "C" LINE POST FOR TYPE B FENCE'-Thin wall option added. 'FENCE MOUNTING ON CONCRETE ENDWALL AND RETAINING WALLS'-'TWO ANCHOR OPTION' and 'BASE PLATE And ANCHOR NOTES' added. 'FOUR ANCHOR OPTION' notations revised.
460	1 of 1	'CENTER POST AND BASE' expanded to include steel center post assembly. 'NOTICE' note added.
500	1 of 2	Index renamed. Headings, notes and notations revised.
	2 of 2	Index renamed. Headings revised.
505	1 of 1	Sections renamed and excess dimensions deleted. 'GENERAL NOTES' notes Nos. 1 & 5 revised. 'DESIGN NOTES' note No. 1 revised.

Revisions
Roadway And Traffic Design Standards
1994

Index Number	Sheet Number	Description
511	1 of 3	Index renamed. 'REMOVAL OF CROWN AND/OR SUPERELEVATION FOR CURVATURE AT VARIOUS DESIGN SPEEDS' chart renamed, portions of curves revised and tabular values added.
	2 of 3	Added sheet. Sections for transition transferred from Sheet 1 to this Sheet.
	3 of 3	Former sheet No. 2. 'RATES' table deleted.
513	1 of 1	'GENERAL NOTES' note No. 5 revised. 'DESIGN NOTES' FC-4 eliminated.
514	1 of 2	'GENERAL USE OPTIONAL BASE GROUP AND STRUCTURAL NUMBER' 'ABC-1 and 4" Bank Run Coquina Subbase LBR 100' changed to 'ABC-1 and 4" Bank Run Shell Subbase LBR 100'. Added a column for 'Shell Rock LBR 100'. Footnote □ revised and footnote ** deleted.
	2 of 2	'LIMITED USE OPTIONAL BASE GROUP AND STRUCTURAL NUMBER' - Table 'Notes' deleted. 'GENERAL NOTES FOR LIMITED USE OPTIONAL BASES' and 'DESIGN NOTES FOR LIMITED USE OPTIONAL BASES' added.
515	1 of 6	'GENERAL NOTES' note No. 5 revised.
	2 of 6	Drawings revised to meet ADA requirements and desirable profiles shown on new Sheets 3 & 4; identification footnotes added; 'DESIGN NOTES' added; Profile and section views deleted; 'INSET' added. Plan views depicting 'R/W MORE THAN 2' BACK OF SIDEWALK' deleted: Note added refering to Sheet 1 for 'GENERAL NOTES'.
	3 & 4 of 6	Sheets replaced.
	6 of 6	'URBAN TURNOUT PROFILE' revised to reflect 3' walkaround.
518	1 of 2	Sheet rearranged and expanded to include thermoplastic rumble strips. 'INTERSECTIONS' consolidated plan views and inset and changed rumble strip spacing.
	2 of 2	New sheet. For shoulder ground-in rumble strips.
520	1 of 2	Index renamed. 'GRAVITY WALL', 'KEY DETAIL' (TOP VIEW) drawing revised and 'GRAVITY WALL NOTES' note No. 2 revised. 'ALLUMINUM PIPE HANDRAIL' details transferred to Sheet 2.
	2 of 2	Added Sheet 'ALUMINUM PIPE HANDRAIL'. 'TYPICAL SECTIONS AT POSTS' Section with lower sidewalk added and anchorage notation revised, 'CONCRETE STEPS' handrail height increased.
525	3 of 5	Paved shoulder width revised.
	5 of 5	'LEFT TURN CONTROL' Queue length minimum value deleted.
526	1 of 8	Added 'GENERAL NOTE'. Removed stop bars. Queue length minimum values deleted.
	2 of 8	Removed stop bars. Queue length minimum values deleted.
530		Reinstated Index to reflect' PICNIC PAVILIONS' details only.
546	1 of 2	Reformated, renamed and expanded to two sheets. Revised 'd' values ; 'GENERAL NOTES' and 'DESIGN NOTES' revised, 'WINDOW DETAIL' moved to Sheet 2 Of 2.
	2 of 2	New Sheet. 'CHANNELIZED DIRECTIONAL MEDIAN OPENINGS' and 'ORIGIN OF CLEAR SIGHT LINE AND PROPERTY CORNER CLIPS' details added.
560	1-8 of 8	Reduced to 5 sheets. 'TYPE D, E, G, G-Mod., H, L & S' 'TYPICAL FLEXIBLE PAVEMENT REPLACEMENT AT RR CROSSINGS'-added. REPLACEMENT AT RR CROSSING'- added. 'TYPE J deleted. 'TYPE R FULL DEPTH' new crossing added. 'TYPE M' deleted. 'Type RS' new crossing added. 'CROSSING TYPE P' removed.

Index Number	Sheet Number	Description
600 (Series 600-660)		'SYMBOLS' Description 'Cones Or Tubular Markers May Be Used During Daylight Only' changed to read 'Tubular Markers May Be Used During Daylight Only'.
600	1 of 10	"SYMBOLS'-The 6th symbol down notation revised.
	2 of 10	'REGULATORY SPEEDS IN WORK ZONES'- 2nd paragraphh revised.
	3 of 10	'CHANNELIZING AND LIGHTING DEVICES', 'DROPOFFS IN WORK ZONES', 'REMOVING PAVEMENT MARKINGS', 'SUPERELEVATION' chart, and 'LANE WIDTHS' revised.
	4 of 10	'CLEAR ZONE WIDTH' text and table revised. 'CONSTRUCTION SIGN SUPPORTS' added.
	5 of 10	'OPTIONAL SHOULDER TREATMENT' slope reference revised.
	6 of 10	'TEMPORARY CURB' note No. 3 revised. Title changed.
	7 of 10	Channelizing devices details and 'CHANNELIZING AND LIGHTING DIVICE NOTES' revised.
	9 of 10	More MOT signs added.
	10 of 10	'APPLICATION'-Class D & E revised. 'NOTES'- note Nos. 1, 3, & 4 revised.
605	1 of 1	'GENERAL NOTES'-note No. 4 revised.
607	1 of 1	'GENERAL NOTES'-note No. 4 revised.
608	1-4 of 4	'GENERAL NOTE'-note No. 5 revised and note No. 14 added. Reference to sheet numbers revised.
612	1 of 1	Worker Sign Symbol changed to Flagger Sign Symbol.
614	1 of 2	'DETAIL OF TEMPORARY ASPHALT SEPARATOR'-revised.
650	1 of 2	Above 'PHASE II' R4-7 notation revised.
660	1 of 1	New Index-'PEDESTRIAN CONTROL FOR CLOSURE OF SIDEWALK'.
700	1 of 2	'DESIGN CRITERIA RELATED TO HIGHWAY SAFETY' Column 4 'CLEAR ZONE' width revised; Column 6 'CLEAR ZONE' width revised. Column 6 'LIGHT POLES', 'UTILITY POLES' and 'TREES' location revised. Column 6 'TREES' symbol deleted. 'Clear Zone Footnotes' 7, 8, & 10 revised.
9535	2 of 4	'SIGN COL. & STUB COL. ELEVATION I-BEAM SHAPES'-revised.
17328	1-2 of 2	Sheets reformatted.
17344	1 of 6	Deleted S2-1 signs at stop signs.
	6 of 6	Sheets reformatted.
17345	2 of 4	Reduced length of taper.
	4 of 4	Changed location of delineators; eliminated some RPM's added additional chevron in core area.
17346	1 of 9	'PAVEMENT MARKINGS AND DELINEATORS FOR MEDIAN CROSS-OVER' spacing offset revised. 'PAVEMENT ARROW AND MESSAGE DETAILS' square footage added. 'PAVEMENT MARKINGS FOR INTERSECTIONS WITH MAJOR AND MINOR ROADS' note "Delineators optional" added.
	2 of 9	'PAINTED LEFT TURN STORAGE LANE(S) DETAILS' revised.
	3 of 9	'TYPICAL INTERSECTIONS 2 THRU LANES PLUS LEFT TURN LANE, WITH CROSSWALK' revised.
	5 of 9	Detail under 'TYPICAL TRANSITION MARKING' revised.
	6 of 9	Note No. 4 revised.
	8 of 9	'PAVEMENT MESSAGE DETAILS' revised.
	9 of 9	New Sheet. Formerly Index No. 17358.

Revisions
Roadway And Traffic Design Standards
1994

Index Number	Sheet Number	Description	Index Number	Sheet Number	Description
17349	1 of 1	Added note No. 4.			
17350A	1 of 1	Sign tables removed.			
17351	1-2 of 2	Dimensions removed from sign details. Note No. 6 added. Sheet 2 of 2 note No. 5 added.			
17353	1 of 1	Contract unit price notation revised.			
17355	1 -8 of 8	Index completely revised to consolidate all sign details.			
17356	1 of 2	Note No. 7 revised.			
17357	1 of 1	Sign dimensions removed. 'NOTE:' note No. 3 revised.			
17358	1 of 1	Index deleted. Contents moved to Index No. 17346.			
17500	1 of 1	All notations revised and wiring details modified.			
17501	1 of 1	Note No. 6 revised.			
17502	3 of 3	All notations revised and wiring details modified.			
17503	1 of 1	All notations revised. 'SCREW TYPE FOUNDATION DETAIL' deleted.			
17504	1 of 1	'DETAIL A' and 'DETAIL B' revised.			
17721	2 of 2	Conduit routing changed.			
17736	1 of 1	'FIGURES B, C, D & E' revised.			
17781	1 of 2	'GENERAL NOTES' note No. 6 added.			
17784	2 of 2	Dimensions removed.			
17870	2 of 2	S.O.P. 18 and 19 revised.			

TABLE OF CONTENTS
ROADWAY AND TRAFFIC DESIGN STANDARDS

ABBREVIATIONS AND SYMBOLS

001 Standard Abbreviations
002 Standard Symbols (3 Sheets)

EROSION CONTROL AND WATER QUALITY

100 Temporary Slope Drain And Sod Flume
101 Trash Retainer And Sediment Basin
102 Baled Hay Or Straw Barriers And Silt Fences (3 Sheets)
103 Turbidity Barriers
104 Erosion Control Details For Permanent Construction
105 Shoulder Sodding And Reworking On Existing Facilities

DRAINAGE

199 Geotextile Criteria
200 Structure Bottoms - Type J And P (2 Sheets)
201 Supplementary Details For Manholes And Inlets (6 Sheets)
205 Cover Height (4 Sheets)
209 Curb Inlet And Gutter Inlet Application Guide
210 Curb Inlet Tops - Types 1, 2, 3 And 4
211 Curb Inlet Tops - Types 5 and 6 (2 Sheets)
212 Curb Inlet - Type 7
213 Curb Inlet - Type 8
214 Curb Inlet Top - Type 9
215 Curb Inlet Top - Type 10
217 Median Barrier Inlets Types 1, 2, 3, 4 And 5
218 Barrier Wall Inlet (2 Sheets)
219 Barrier Wall Inlet - Concrete Barrier Wall (Rigid) (C & G) (2 Sheets)
220 Gutter Inlet - Type S
221 Gutter Inlet - Type V
229 Ditch Bottom And Median Inlet Application Guide
230 Ditch Bottom Inlet - Type A
231 Ditch Bottom Inlet - Type B
232 Ditch Bottom Inlets - Types C, D, E And H (4 Sheets)
233 Ditch Bottom Inlets - Types F And G
234 Ditch Bottom Inlet - Type J
235 Ditch Bottom Inlet - Type K
245 Underdrain Inspection Box
249 Pipe End Treatment Application Guide
250 Straight Concrete Endwalls - Single And Multiple Pipe (2 Sheets)
251 Straight Concrete Endwalls - Single And Double 60" Pipe (2 Sheets)
252 Straight Concrete Endwalls - Single And Double 66" Pipe (2 Sheets)
253 Straight Concrete Endwalls - Single And Double 72" Pipe (2 Sheets)
255 Straight Concrete Endwall - Single 84" Pipe
258 Straight Sand - Cement Endwalls
260 U - Type Concrete Endwalls With Grates - 15" To 30" Pipe

DRAINAGE (CONT.)

261 U - Type Concrete Endwalls - Baffles And Grate Optional - 15" To 30" Pipe (3 Sheets)
264 U - Type Concrete Endwall - Energy Dissipator - 30" To 72" Pipe
266 Winged Concrete Endwalls - Single Round Pipe
268 U - Type Sand - Cement Endwalls
270 Flared End Section
272 Cross Drain Mitered End Section (6 Sheets)
273 Side Drain Mitered End Section (6 Sheets)
280 Miscellaneous Drainage Details (4 Sheets)
281 Ditch Pavement And Sodding (2 Sheets)
282 Back Of Sidewalk Drainage
283 Median Opening Flume
284 Concrete Spillways (2 Sheets)
285 French Drain (2 Sheets)
286 Underdrain And Edgedrain (2 Sheets)
290 Concrete Box Culvert (5 Sheets)
293 Safety Modifications For Inlets In Box Culverts
295 Safety Modifications For Endwalls

CURBS AND PAVEMENT JOINTS

300 Curb & Curb And Gutter
301 Turn Lanes
302 Traffic Separators
303 Curb Return Profiles
304 Curb Cut Ramps - Physically Handicapped (3 Sheets)
305 Concrete Pavement Joints (5 Sheets)
306 Bridge Approach Expansion Joint - Concrete Pavement
310 Concrete Sidewalk

BARRIERS AND FENCES

400 Guardrail (15 Sheets)
401 Guardrail Anchorage And Continuous Barrier For Existing Bridges (9 Sheets)
410 Concrete Barrier Wall (15 Sheets)
415 Precast Concrete Temporary Barrier Wall (2 Sheets)
431 G - R - E - A - T System (6 Sheets)
432 C - A - T System (2 Sheets)
433 Brakemaster (4 Sheets)
437 Hex - Foam Sandwich System (6 Sheets)
438 Dragnet (2 Sheets)
439 Construction Zone G - R - E - A - T (5 Sheets)
450 Fence Location (2 Sheets)
451 Fence - Type A (2 Sheets)
452 Fence - Type B (2 Sheets)
453 Cantilever Slide Gate - Type B Fence
460 Glare Screen - Knitted Polyester
461 Opaque Visual Barrier

1994

TABLE OF CONTENTS
ROADWAY AND TRAFFIC DESIGN STANDARDS

GENERAL

500 Removal Of Organic And Plastic Material (2 Sheets)
505 Embankment Utilization
506 Miscellaneous Earthwork Details
510 Superelevation (2 Sheets)
511 Superelevation-Urban Highways And Streets (3 Sheets)
513 Flexible Pavement-Layer Thickness For Structural Courses
514 Optional Base Group And Structural Numbers (2 Sheets)
515 Turnouts (6 Sheets)
516 Turnouts-Resurfacing Projects
517 Temporary Crossover-Construction Details-Rural
518 Rumble Strips (2 Sheets)
520 Aluminum Pipe Handrails, Gravity walls and Steps (2 Sheets)
525 Ramp Terminals (5 Sheets)
526 Roadway Transitions (8 Sheets)
530 Rest Area Equipment (3 Sheets)
532 Mailboxes (3 Sheets)
535 Tractor Crossings
540 Settlement Plate
545 Landscaping-Back Of Guardrail Application
546 Sight Distance At Intersections (2 Sheets)
560 Railroad Crossings (5 Sheets)

TRAFFIC CONTROL THROUGH WORK ZONES

600 General Information For Traffic Control Through Work Zones (10 Sheets)
601 Two-Lane, Two-Way Rural Day Or Night Operations
602 Two-Lane, Two-Way Rural Day Or Night Operations
603 Two-Lane, Two-Way Rural Operations One Daylight Period Or Less
604 Two-Lane, Two-Way Rural Night Operations Or Operations Exceeding One Daylight Period
605 Two-Lane, Two-Way Rural Moving Operations-Daylight Only
606 Moving Operations Rural Two-Lane, Two-Way Daylight Only
607 Two-Lane,Two-Way Rural Short-Time Day Or Night Operations
608 Two-Lane, Two-Way Lane Closure By Signal Control, Day Or Night Operations (4 Sheets)
609 Two-Lane, Two-Way Rural Temporary Detour Day Or Night Operations
610 Multilane, Divided Or Undivided Rural Day Or Night Operations
611 Multilane, Divided Or Undivided Rural Day Or Night Operations
612 Multilane, Divided And Undivided Rural, Operations One Daylight Period Or Less
613 Multilane, Divided And Undivided Rural Night Operations Or Operations Exceeding One Daylight Period (2 Sheets)
614 Multilane Divided Rural Day Or Night Operations (2 Sheets)
615 Multilane Undivided Rural Day Or Night Operations
616 Multilane Divided Rural (2 Sheets)
617 Multilane Divided Rural
620 Two-Lane, Two-Way Urban Day Or Night Operations
621 Two-Lane, Two-Way Urban Day Or Night Operations

TRAFFIC CONTROL THROUGH WORK ZONES (CONT.)

622 Multilane, Two-Way Urban Divided Or Undivided Day Or Night Operations
623 Multilane, Two-Way Urban Divided Or Undivided Day Or Night Operations (2 Sheets)
624 Multilane, Divided With Traversable Median Or Undivided, Urban Day Or Night Operations
625 Multilane One-Way Or Multilane Divided With Non-Traversable Median Urban Day Or Night Operations (2 Sheets)
626 Multilane One-Way Or Multilane Divided With Non-Traversable Median Urban Day Or Night Operations
627 Moving Operations
630 Temporary Crossover For Paving Train Operations Rural (2 Sheets)
640 Converting Two-Lanes To Four-Lanes Divided Rural (2 Sheets)
641 Converting Two-Lanes To Four-Lanes Divided Urban (2 Sheets)
650 Two-Lane, Two-Way Rural Structure Replacement (2 Sheets)
651 Multilane Divided Maintenance And Construction (2 Sheets)
660 Pedestrian Control For Closure Of Sidewalks

DESIGN CRITERIA

700 Design Criteria Related To Highway Safety (2 Sheets)

SIGNING AND MARKINGS

9535 Standard Roadside Sign Break Away Post & Panel Detail (4 Sheets)
11037 Overhead Sign Structures, Details Of Sign Faces & Truss Connection
11860 Type "C" Single Column Ground Signs (Sign Profile & Identification Numbers) (2 Sheets)
11861 Single Column Ground Signs (60 MPH) (Columns Size, Column Height & Column Footings)
11862 Single Column Ground Signs (70 MPH) (Column Size, Column Height & Column Footings)
11863 Single Column Ground Signs (80 MPH) (Column Size, Column Height & Column Footings)
11864 Single Column Ground Signs (90 MPH) (Column Size, Column Height & Column Footings)
11865 Single Column Ground Signs (ALL WIND ZONES) (Column Size, Column Height & Column Footings)
13417 Details For Mounting Exit Numbering Panels To Highway Signs
17302 Typical Sections For Placement Of Single & Multi-Column Signs
17328 Signing For Truck Weigh & Inspection Station
17344 School Signs & Markings (6 Sheets)
17345 Interchange Markings (4 Sheets)
17346 Special Marking Areas (9 Sheets)
17349 Traffic Control For Street Terminations
17350A Signing For Motorist Services
17351 Welcome Center Signing (2 Sheets)
17352 Typical Placement Of Reflective Pavement Markers (2 Sheets)
17353 Markings For Attenuation Systems
17355 Special Sign Details (8 Sheets)
17356 Span Wire Mounted Sign Details (2 Sheets)
17357 Bridge Weight Restrictions
17359 Rural Narrow Bridge Treatment

TABLE OF CONTENTS
ROADWAY AND TRAFFIC DESIGN STANDARDS

ROADWAY LIGHTING

17500 Conventional Pole Details
17501 Highway Lighting General Notes
17502 Highmast Lighting Details (3 Sheets)
17503 Roadway Lighting Details
17504 Service Point Details
17505 External Lighting For Signs (2 Sheets)

TRAFFIC SIGNAL AND EQUIPMENT

17721 Conduit Installation Details (2 Sheets)
17727 Signal Cable And Span Wire Installation Details (2 Sheets)
17733 Aerial Interconnect
17736 Electric Power Service
17764 Pedestrian Control Signal Installation Details
17781 Vehicle Loop Installation Details (2 Sheets)
17784 Pedestrian Detector Assembly Installation Details (2 Sheets)
17841 Cabinet Installation Details
17870 Standard Signal Operating Plans (2 Sheets)
17881 Advance Warning For R/R Crossing
17882 Railroad Grade Crossing Traffic Control Devices (4 Sheets)
17890 Traffic Control Devices For Movable Span Bridge Signals (3 Sheets)

A	AREA
AAA	AMERICAN AUTOMOBILE ASSOCIATION
AASHO	AMERICAN ASSOCIATION OF STATE HIGHWAY OFFICIALS
AASHTO	AMERICAN ASSOCIATION OF STATE HIGHWAY AND TRANSPORTATION OFFICIALS
ABC	ASPHALT BASE COURSE
ABD	ABANDONED
ABS	ACRYLONITRITE-BUTADIENE-STYRENE PIPE
AC	ACRE
AC or ASPH CONC	ASPHALTIC CONCRETE
ACCEL	ACCELERATION
ACT	ACTUATED
ADJ	ADJUST
ADT	AVERAGE DAILY TRAFFIC
AADT	ANNUAL AVERAGE DAILY TRAFFIC
AGG	AGGREGATE
AH	AHEAD
AISC	AMERICAN INSTITUTE OF STEEL CONSTRUCTION
ALT	ALTERNATE
ALUM	ALUMINUM
AM	12:00 MIDNIGHT UNTIL 12:00 NOON
ANSI	AMERICAN NATIONAL STANDARDS INSTITUTE
AOS	APPARENT OPENING SIZE
APPL	APPLIED, APPLICATION
APPRH	APPROACH
APPROX	APPROXIMATE
ARTBA	AMERICAN ROAD & TRANSPORTATION BUILDERS ASSOCIATION
ARTF	ARTIFICIAL
ASPH	ASPHALT
ASSEM	ASSEMBLY
ASTM	AMERICAN SOCIETY FOR TESTING MATERIALS
ATTNUATR	ATTENUATOR
AUX or AUXIL	AUXILIARY
AVE	AVENUE
AWG	AMERICAN WIRE GAUGE
AWS	AMERICAN WELDING SOCIETY
B to B	BACK TO BACK
BASC	BASCULE
BBL	BARREL
BC	BOTTLE CAP or BOLT CIRCLE
B/C	BACK OF CURB
BCCMP	BITUMINOUS COATED CORRUGATED METAL PIPE CULVERT
BCPA	BITUMINOUS COATED PIPE ARCH CULVERT
BCPCMP	BITUMINOUS COATED AND PAVED CORRUGATED METAL PIPE CULVERT
BCPPA	BITUMINOUS COATED AND PAVED PIPE ARCH CULVERT
BCT	BREAKAWAY CABLE TERMINAL
BE	BURIED ELECTRIC
BEG	BEGIN
BIT	BITUMINOUS
BK	BACK
BL	BASE LINE
BLDG	BUILDING
BLKHD	BULKHEAD
BLVD	BOULEVARD
BM	BENCH MARK
BOR	BORDER
BOT	BOTTOM
BP	BORROW PIT
BR	BRIDGE
BRG	BEARING
BRKWY	BREAKAWAY
BT	BURIED TELEPHONE CABLE or DUCT
BTFLY	BUTTERFLY
BW	BARBED WIRE or BOTTOM WIDTH
C	CANTILEVER LENGTH, CENTIGRADE, CELSIUS, CUT or COLORLESS
C & G	CURB AND GUTTER
CA	COARSE AGGREGATE
CAP	CAPACITY or CORRUGATED ALUMINUM PIPE
CAPS	CAPITAL LETTERS
CATV	CABLE TELEVISION
CB	CATCH BASIN
CBC	CONCRETE BOX CULVERT
CBS	CONCRETE BOX STRUCTURE
CC, C/C, or C to C	CENTER TO CENTER
CCEW	CENTER TO CENTER EACH WAY
CD	CROSS DRAIN or CANDELA
CEM	CEMENT
CEM'D	CEMENTED
CFS	CUBIC FEET PER SECOND
CH	CHANNEL
CH CH	CHANNEL CHANGE
CHG	CHANGEABLE
CI	CAST IRON
CIP	CAST IRON PIPE
CIPL	CAST IN PLACE
CKT	CIRCUIT
CL	CLEARANCE OR CENTER LINE
CM	CONCRETE MONUMENT or CENTIMETER
CMB	CONCRETE MEDIAN BARRIER
CMP	CORRUGATED METAL PIPE
CMPA	CORRUGATED METAL PIPE ARCH
CO	COUNTY or COMPANY
COL	COLUMN
COM	COMMERCIAL
COMP	COMPOSITE
CONC	CONCRETE
CONST	CONSTRUCT or CONSTRUCTION
CONTRL	CONTROLLER
CONT	CONTINUATION
CONTR	CONTRACTOR
COORD	COORDINATE
COR	CORNER
CORR	CORRUGATED
CP	CONCRETE PIPE
CPE	CORRUGATED POLYETHYLENE PIPE
CR	CONTROL RADIUS or COUNTY ROAD
CRA	CLEAR RECOVERY AREA
CRS	COURSE
CS	CURVE TO SPIRAL
CSE	COURSE
CSP	CORRUGATED STEEL PIPE
CT	CLEAR TRUNK
CTLVR	CANTILEVER
CTR	CENTER
CU	COPPER
CULV	CULVERT
CY	CUBIC YARD
CYL	CYLINDRICAL
CZ	CLEAR ZONE
D	DEGREE OF CURVATURE, DEPTH, DENSITY, DISTANCE, DIAMETER or DIRECTIONAL DISTRIBUTION
DA	DRAINAGE AREA
DBI	DITCH BOTTOM INLET
DBL	DOUBLE
DCS	DEGREE OF CURVATURE (SPIRAL)
DD	DRY DENSITY
DDHV	DIRECTIONAL DESIGN HOUR TRAFFIC
DECEL	DECELERATION
DELIN	DELINEATORS
DEMOBL	DEMOBILIZATION
DEPT	DEPARTMENT
DET	DETOUR
DHV	DESIGN HOURLY VOLUME
DHW	DESIGN HIGH WATER
DT	DITCH
DI	DROP INLET
DIA or D	DIAMETER
DIM	DIMENSION
DISP	DISPOSAL
DMM	DOMESTIC MAIL MANUAL
DOT	DEPARTMENT OF TRANSPORTATION
DPI	DITCH POINT INTERSECTION
DR	DRAIN, DRIVE or DESIGN REVIEW
DRIV	DRIVEN
DRWY	DRIVEWAY
DS	DESIGN SPEED
DSL	DESIGN SERVICE LIFE
DTOE	DISTRICT TRAFFIC OPERATIONS ENGINEER
DWG	DRAWING
E	EAST or EXTERNAL DISTANCE
e	RATE OF SUPERELEVATION
E to E	END TO END
EA	EACH
EB	EASTBOUND
EL OR ELEV	ELEVATION
ELAST	ELASTOMERIC
ELEC	ELECTRIC
ELLIP	ELLIPTICAL
EMBK	EMBANKMENT
EMUL	EMULSIFIED
ENCL	ENCLOSURE
ENGR	ENGINEER
EOS	END OF SURVEY or EQUIVALENT OPENING SIZE
EQ	EQUATION OR EQUAL
EQUIP	EQUIPMENT
ESMT	EASEMENT
EST or ESTM	ESTIMATE
ESTBLMNT	ESTABLISHMENT
ETC	ET CETERA (AND SO FORTH)
EW	ENDWALL
EXCAV or EXC	EXCAVATION
EXIST	EXISTING
EXP	EXPANSION
EXT	EXTENSION
F	FILL
F or FINAL	FINAL QUANTITY
F & I	FURNISH & INSTALL
F to F	FACE TO FACE
FA	FEDERAL AID or FINE AGGREGATE
FAC	FLORIDA ADMINISTRATIVE CODE
FAP	FEDERAL AID PROJECT
FC	FRICTION COURSE
FD	FRENCH DRAIN
FDN	FOUNDATION
FDOT	FLORIDA DEPARTMENT OF TRANSPORTATION
FE	FLOOR ELEVATION
FED	FEDERAL
FERT	FERTILIZER
FES	FLARED END SECTION
FETS	FLARED END TERMINAL SECTION
FH	FIRE HYDRANT
FHWA	FEDERAL HIGHWAY ADMINISTRATION
FIN	FINISH
FL	FLOW LINE or FLASH
FL or FLA	FLORIDA
FLEX	FLEXIBLE
FNO	FUSE (TYPE SLOW BURN)
FPS	FEET PER SECOND
FR	FRAME
FRANG	FRANGIBLE
FREQ	FREQUENCY
FS	FAR SIDE
FT	FOOT or FEET
FURN	FURNISH
FUT	FUTURE
G	GRAM
G or GALV	GALVANIZED
GA	GAUGE or GAGE
GA or GAL	GALLON
GAR	GARAGE
GD	GUTTER DRAIN
GIP	GALVANIZED IRON PIPE
GM	GAS MAIN
GP	GRADE POINT
GR	GRADE, GUARDRAIL or GRATE
GRD	GROUND
GTTR	GUTTER
H or HT	HEIGHT
HD	HEAD or HIGH DENSITY
HDWL	HEADWALL
HH	HEAVY HEX
HNDRL	HANDRAIL
HOA	HAND/OFF/AUTOMATIC
HORIZ	HORIZONTAL
HP	HIGH PRESSURE or HORSEPOWER
HR	HOUR
HS	HIGH STRENGTH
HSE	HOUSE
HW	HIGH WATER
HWY	HIGHWAY
HYD	HYDRANT or HYDRAULIC
I	EXTERNAL ANGLE (DELTA)
ICHG	INTERCHANGE
IES	ILLUMINATING ENGINEERING SOCIETY
ID	INSIDE DIAMETER
IMC	INTERMEDIATE METAL CONDUIT
IN	INCH
INC	INCORPORATED or INCLUDING
INCL or INC	INCLUDED
IP	IRON PIPE
INSTL	INSTALL
ISECT	INTERSECTION
ITE	INSTITUTE OF TRANSPORTATION ENGINEERS
JB	JUNCTION BOX
JCT	JUNCTION
JT	JOINT
K	PEAK HOUR FACTOR
KIP	1000 POUNDS (FORCE)
km	KILOMETRE
KSI	KIPS PER SQUARE INCH
KV	KILOVOLT
KVA	KILOVOLT AMPERES
L	LENGTH or LENGTH OF CURVE, LITRE
2L	TWO LANE
LA or L/A	LIMITED ACCESS
LAT	LATERAL or LATITUDE
LB	POUND
LBR	LIMEROCK BEARING RATIO
LC	LONG CHORD
LGTH	LENGTH
LIN	LINEAR
LMRK	LIMEROCK
LOC	LOCATION
LS	LENGTH OF SPIRAL
LT	LEFT
LTD	LIGHTED
LUM	LUMINAIRE
L/W	LIGHTWEIGHT
M	MASS, METER or MIDDLE ORDINATE LENGTH
MACH	MACHINE
MAINT	MAINTENANCE
MATL	MATERIAL
MAX	MAXIMUM
MB	MEDIAN BARRIER
MBM	THOUSAND (FEET) BOARD MEASURE
MED	MEDIAN
MEMB	MEMBER
MES	MITERED END SECTION
MESS	MESSAGE
MG	1000 GALLONS
MH	MANHOLE
MHW	MEAN HIGH WATER
MI	MILE
MID	MIDDLE
MIL	MILITARY (SPEC) or ONE THOUSANDTH OF AN INCH
MIN	MINIMUM
MISC	MISCELLANEOUS
MLW	MEAN LOW WATER
mm	MILLIMETRE
MOBL	MOBILIZATION
MOD	MODIFY or MODIFIED
MON	MONUMENT
MOT	MAINTENANCE OF TRAFFIC
MP	MILE POST
MPH	MILES PER HOUR
MSL	MEAN SEA LEVEL
MTD	MOUNTED
MUTCD	MANUAL ON UNIFORM TRAFFIC CONTROL DEVICES
N	NORTH
NA or N/A	NOT AVAILABLE or NOT APPLICABLE
N & C	NAIL & (BOTTLE) CAP
NB	NORTHBOUND
NC	NATIONAL COARSE
NDCBU	NEIGHBORHOOD DELIVERY AND COLLECTION BOX UNIT
NE	NORTHEAST
NEMA	NATIONAL ELECTRICAL MANUFACTURERS ASSOCIATION
NGVD	NATIONAL GEODETIC VERTICAL DATUM of 1929
NGS	NATIONAL GEODETIC SURVEY
NHW	NORMAL HIGH WATER
NIC	NOT IN CONTRACT
NJ	NEW JERSEY
NO	NUMBER
NOM	NOMINAL
NORM	NORMAL
NS	NON STRESS, NOT SUITABLE or NEAR SIDE
NT	NON TRAFFIC
NTS	NOT TO SCALE
NW	NORTHWEST
O PASS	OVERPASS
O to O	OUT TO OUT
OA	OVERALL
OC	ON CENTER
OD	OUTSIDE DIAMETER
OE	OVERHEAD ELECTRIC
OH or OVHD	OVERHEAD
OPT	OPTION, OPTIONAL or OPTICALLY
OT	OVERHEAD TELEPHONE
OZ	OUNCE
P	PASSENGER CAR & LIGHT DELIVERY TRUCK
P or PLAN	PLAN QUANTITY
PAR	PARALLEL
PART	PARTICIPATION
PAVT	PAVEMENT
PC	POINT OF CURVATURE
PCBC	PRECAST CONCRETE BOX CULVERT
PCC	POINT OF COMPOUND CURVATURE or PLAIN CEMENT CONCRETE
PCE	PERMANENT CONSTRUCTION EASEMENT
PE	PROFESSIONAL ENGINEER
PED	PEDESTRIAN or PEDESTAL
PEN	PENETRATION
PG	PROFILE GRADE
PGL	PROFILE GRADE LINE
PH	PHASE
pH	MEASURE OF ACIDITY OR ALKALINITY
PI	POINT OF INTERSECTION
PK	PER CAP
PKG	PARKING
PL	PROPERTY LINE or PLATE
PM	12:00 NOON UNTIL 12:00 MIDNIGHT
POC	POINT ON CURVE
POST	POINT ON SEMI-TANGENT
POT	POINT ON TANGENT
PP	POWER POLE
PR	PAIR
PRC	POINT OF REVERSE CURVATURE
PRCST	PRECAST
PREST	PRESTRESSED
PROB	PROBABILITY
PROG	PROGRAMMED
PROJ	PROJECT or PROJECTION
PRM	PERMANENT REFERENCE MONUMENT
PROV	PROVISIONS
PRSE	PRESSURE
PS&E	PLANS, SPECIFICATIONS AND ESTIMATES
PSI	POUNDS PER SQUARE INCH
PT	POINT OF TANGENCY
P-TIME	PRE-TIMED
PVC	POLYVINYL CHLORIDE
PW	PRESSURE WATER
Q	PEAK DISCHARGE or FLOW VOLUME (CFS)
R or RAD	RADIUS
R or RNG	RANGE
RBAC	ROCK BASE ASPHALTIC CONCRETE
RBST	ROCK BASE SURFACE TREATMENT
RCP	REINFORCED CONCRETE PIPE
RCPA	REINFORCED CONCRETE PIPE ARCH
RD	ROAD or ROUND
RD-SD	ROADSIDE
RDWY	ROADWAY
REC	RECOVERY
RECT	RETICULINE or RECTANGULAR
REF	REFERENCE
REFL	REFLECTIVE
REINF	REINFORCED or REINFORCING
REJUV	REJUVENATION
RELOC	RELOCATED
REM	REMOVAL
REPL	REPLACE
REQ or REQD	REQUIRED
RES	RESIDENCE or RESIDENTIAL
RHW	INSULATION (MOISTURE & HEAT RESISTANT RUBBER)
RM	REFERENCE MONUMENT
RP	REFERENCE POINT
RPM	RAISED REFLECTIVE PAVEMENT MARKERS
RR	RAILROAD
RSF	RESURFACE
RT	RIGHT
R/W	RIGHT OF WAY
S	SPEED or SOUTH
SAHM	SAND-ASPHALT HOT MIX
SAN	SANITARY
SB	SOUTHBOUND
SBAC	SHELL BASE ASPHALTIC CONCRETE
SBRM	SAND BITUMINOUS ROAD MIX
SBST	SHELL BASE SURFACE TREATMENT
SC	SEAL COAT or SPIRAL TO CURVE
SCH	SCHEDULE
SCST	SAND-CLAY SURFACE TREATMENT
SD	SIDE DRAIN
SE	SOUTHEAST,
SEC	SECOND
SECT	SECTION
SED	SEDIMENT
SEP	SEPARATOR
SEQ	SEQUENTIAL
SERV	SERVICE
SF	SHRINKAGE FACTOR
SG	SUBGRADE
SG or SP GR	SPECIFIC GRAVITY
SH or SHT	SHEET
SHLDR	SHOULDER
SHW	SEASONAL HIGH WATER
SPA	SPACE
SPCG or SP	SPACING
SPEC	SPECIFICATION
SQ FT or SF	SQUARE FOOT
SQ IN	SQUARE INCH
SQ YD OR SY	SQUARE YARD
SR	STATE ROAD
SS	STORM SEWER
SSMD	SOLID STATE MODULAR DESIGN
ST	STREET, SURFACE TREATMENT SPIRAL TO TANGENT
STA	STATION
STAB	STABILITY or STABILIZATION
STD	STANDARD
STG	STRONG
STL	STEEL
STR	STRUCTURE
STY	STORY
SU	SINGLE UNIT TRUCKS
SUB or SUBS	SUBSOIL
SUBGR	SUBGRADE
SUPPTS	SUPPORTS
SUR	SURVEY
SURF	SURFACE
SW	SOUTHWEST
SW or SWK	SIDEWALK
SYST	SYSTEM
T	PERCENT TRUCKS or THICKNESS
T or TAN	TANGENT LENGTH OF CURVE
T or TWP	TOWNSHIP
TBM	TEMPORARY BENCH MARK
TC	TANGENT TO CURVE
TCB	TEMPORARY CONCRETE BARRIER
TCE	TEMPORARY CONSTRUCTION EASEMENT
TCP	TERRA COTTA PIPE
TCZ	TRAFFIC CONTROL ZONE
TEL	TELEPHONE
TEMP	TEMPERATURE or TEMPORARY
TF or TRAF	TRAFFIC
THEO	THEORETICAL
THRMPLSTC	THERMOPLASTIC
THW or THWN	INSULATION (FLAME RETARDANT, MOISTURE AND HEAT RESISTANT THERMOPLASTIC)
TK or THICK	THICKNESS
TN	TON
TRANS	TRANSITION or TRANSVERSE
TREAT	TREATMENT
TS	TANGENT TO SPIRAL
TSC	LENGTH OF TANGENT (SPIRAL CURVE)
TYP	TYPICAL
U PASS	UNDERPASS
UG or UNDGRD	UNDERGROUND
UL	UNDERWRITERS LABORATORIES
UNDDR	UNDERDRAINS
UNDRDWY	UNDERROADWAY
UNL	UNLOADED
UNTR	UNTREATED
USC&GS	US COAST AND GEODETIC SURVEY (NOW NATIONAL GEODETIC SURVEY)
USF	UNIVERSITY OF SOUTH FLORIDA
USGS	US GEOLOGICAL SURVEY
USPS	UNITED STATES POSTAL SERVICE
UTIL	UTILITIES
V	VOLT, VELOCITY or VOLUME
VAR	VARIABLE
VC	VERTICAL CURVE
VCP	VITRIFIED CLAY PIPE
VEH	VEHICLE
VERT	VERTICAL
VF	VERTICAL FOOT
Vh	VERIFIED HORIZONTAL LOCATION
VMS	VARIABLE MESSAGE SIGN
VOL	VOLUME
VP	VERTICAL PANEL
VPD	VEHICLES PER DAY
VRMS	VOLTS ROOT MEAN SQUARE
Vv	VERIFIED VERTICAL ELEVATION
Vvh	VERIFIED VERTICAL ELEVATION AND HORIZONTAL LOCATION
VW	VARIABLE WIDTH
W	WIDTH or WEST
W/C	WATER-CEMENT RATIO
WB	WESTBOUND
WB40	INTERMEDIATE SEMI TRAILER (40' WB)
WB50	LARGE SEMI TRAILER (50' WB)
WB60	TANDEM SEMI TRAILER (60' WB)
WM	WATER MAIN
W.P.I.	WORK PROGRAM ITEM
WT	WATER TABLE OR WEIGHT
WWF	WELDED WIRE FABRIC
X	COORDINATE DISTANCE (EAST-WEST) or EXTRA
X RD	CROSS ROAD
XING	CROSSING
XSEC	CROSS SECTION
Y	COORDINATE DISTANCE (NORTH-SOUTH)
YR	YEAR

UNITS OF MEASURE

AC	ACRE	LU	PER LUMINAIRE
AS	ASSEMBLY	MG	THOUSAND GALLONS
BA	BARREL	NM	NET MILE
BU	BUSHEL	PB	PER BUILDING
CF	CUBIC FT.	PC	PER CLUSTER
CO	PER CLEANOUT	PE	PILE
CY	CUBIC YARD	PI	PER INTERSECTION
CW	CWT	PJ	PER JOINT
DA	DAYS	PL	PLANT
EA	EACH	PO	POST
MB	(MBM) 1000 BOARD MEASURE	PP	PER POLE
		PW	PER WELL
FT	FOOT or FEET	RM	ROAD MILE
GA	GALLON	SF	SQUARE FOOT
GM	GROSS MILE	SP	SPAN
LB	POUND	SY	SQUARE YARD
LF	LINEAR FOOT	TN	TON
LS	LUMP SUM	VF	VERTICAL FOOT
ED	PER EACH PER DAY		

STATE OF FLORIDA DEPARTMENT OF TRANSPORTATION
ROAD DESIGN

STANDARD ABBREVIATIONS

	Names	Dates
Designed By		
Drawn By		
Checked By		

Approved By: Freddie Simmons, State Roadway Design Engineer

F.H.W.A. Approved:

Revision No.	Sheet No.	Index No.
94	1 of 1	001

STANDARD SYMBOLS FOR KEY MAP

- Highway With Full Control of Access
- Highway With Frontage Roads
- Highway Interchange
- Proposed Controlled Access Highway
- Divided Highway
- Hard Surfaced Road
- Soil, Gravel Or Shell Surfaced Road
- Graded And Drained Road
- Unimproved Road
- Primitive Road
- P — Private Road
- Streets In Inset Or Delimited Areas
- Extension Of Local Roads Within Cities
- FAI — Federal Aid Interstate Highway
- FAU — Federal Aid Urban Highway
- FAP — Federal Aid Primary Highway
- FAS — Federal Aid Secondary Highway
- NFR — National Forest Road
- SFR — State Forest Road
- SPR — State Park Road
- Interstate Highway
- US Numbered Highway
- State Highway
- County Road

- Railroad
- Double Track Railroad
- Abandoned Railroad
- Railroad Station
- Grade Crossing
- Railroad Above
- Railroad Below
- Military Field
- Commercial Or Municipal Airport
- Landing Area Or Strip
- Runways

- FF — Free Ferry
- TF — Toll Ferry
- Canal Or Drainage Ditch
- Intracoastal Waterway
- Narrow Stream
- Wide Stream
- Dam
- Dam Or Spillway With Lock
- Dam With Road
- Flood Control Structure
- Lake, Reservoir Or Pond
- Intermittent Pond
- Meandered Lake
- Marsh Or Swamp
- Mangroves
- Levee Or Dike
- Levee Or Dike With Road
- Highway Bridge
- 3 — Small Bridges Closely Spaced
- Drawbridge
- Highway Grade Separation
- Tunnel
- State Boundary Line
- County Boundary Line
- Civil Township Boundary
- Extended Township Line
- Land Grant Line
- Land Section Line
- State Survey Section Line
- Survey By Others
- Location Of Inset Boundary Within Map
- Military Reservation Boundary
- College Or University Boundary
- Corporate Limits
- Delimited Area, Population Est.
- Reservation, Forest Or Park Boundary
  Wildlife Refuge Boundary

- Residential Area Under Development
- Lighthouse
- State Capital
- County Seat
- Other City Or Village
- Seminole Indian Village
- Welcome Station
- WS — Wayside Park Or Small Park
- WS — Park With Boat Ramp
- B — Boat Ramp
- Museum
- Recreational Area Or Historic Site
- Scenic Site
- Post Office
- School
- Church
- Cemetery
- Church And Cemetery
- Hospital, Health Center Or Rest Home
- Toll House, Port Of Entry Or Weight Station
- Fair Grounds, Race Course Or Rodeo Arena
- Mine Or Strip Mine
- Governmental Research Station

- Agricultural Inspection Station
- FM — Farmers Market
- Game Preserve
- Game Checking Station
- Bird Sanctuary
- Fire Control Headquarters
- Lookout Tower
- FS — Fire Station
- Patrol Or Police Station
- Correctional Institution Or Road Camp
- DOT — Department of Transportation Facility
- Coast Guard Station
- A — Armory
- J — Junkyard
- F — Sanitary Fill
- S — Sewage Disposal Plant
- I — Incinerator
- Power Plant
- Power Substation
- Communications Facility
- Locked Gate Or Fence
- WOOD — Triangulation Station

GENERAL NOTE

1. Symbols on this index are for use on all Roadway, Signing and Marking, Signalization, and Lighting projects. For work zone traffic control symbols refer to Index 600. When similar symbols are used, additional notations may be required for clarity.

STATE OF FLORIDA DEPARTMENT OF TRANSPORTATION
ROAD DESIGN

STANDARD SYMBOLS

	Names	Dates
Designed By		
Drawn By		
Checked By		
F.H.W.A. Approved:		

Approved By: Freddie Simmons
State Roadway Design Engineer

Revision No.	Sheet No.	Index No.
92	1 of 3	002

STANDARD SYMBOLS FOR PLAN SHEETS

TRAFFIC SIGNALS SYMBOLS

EXISTING	PROPOSED	
		Traffic Signal Head (Span Wire Mounted)
		Traffic Signal Head (Pedestal Mounted)
		Traffic Signal Head (Mast Arm Mounted)
		Traffic Signal Pole (Concrete, Wood, Metal)
		Vehicle Detector (Loop)
		Signal Cable (On Messenger Wire)
		Conduit
		Vehicle Detector (Points)
		Pedestrian Detector
		Pedestrian Signal Head (Pole Or Pedestal Mounted)
		Controller Cabinet (Base Mounted)
		Controller Cabinet (Base Mounted)
W - D W		Walk - Dont Walk
FDW		Flashing Dont Walk
5		Signal Face Number
		Signal Lens
P		Programmed Signal Head
		Messenger Wire
3		Pole Tabulation Cross Reference
*3		Pole Tabulation Cross Reference (Joint Use Pole)
∅		Signal Phase

LIGHTING SYMBOLS

EXISTING	PROPOSED	
		Pole & Luminaire
		Existing Pole & Luminaire To Be Removed
		Final Position Of Relocated Or Adjusted Pole & Luminaire
		High Mast Lighting Tower
		City Or Utility Owned Luminaire & Pole
		PVC (Polyvinyl Chloride) Lighting Conduit And Conductors
		Rigid Galvanized Lighting Conduit And Conductors
		Lighting Pull-Box
		Light Distribution Point
		Joint Use Pole
		Pier Cap Underdeck Luminaire
		Pendant Hung Under Deck Luminaire

SIGNING AND PAVEMENT MARKING SYMBOLS

	Pavement Arrow
	Single Solid Line
	Double Solid Line
	Skip Line
	Stop Bar
	Traffic Sign (Post Mounted)
	Traffic Sign (Overhead)
13	Sign Number
700-83	Sign Item Number
	Traffic Flow Arrow

See General Notes, Sheet 1 of 3

STATE OF FLORIDA DEPARTMENT OF TRANSPORTATION
ROAD DESIGN

STANDARD SYMBOLS

	Names	Dates
Designed By		
Drawn By	COP	08/12
Checked By	COP	08/12
F.H.W.A. Approved: 08/08/13		

Approved By: State Roadway Design Engineer

Revision No.	Sheet No.	Index No.
92	3 of 3	002

STANDARD SYMBOLS FOR PLAN SHEETS

GENERAL SYMBOLS

- State Line
- County Line
- Township Line
- Section Line
- City Line
- Base Or Survey Line
- Right-Of-Way
- Easement Line
- Limited Access Line
- Fence Line
- National Or State Park Or Forest
- Grant Line
- Railroad (Drainage Maps)
- Railroad (Detail Plans)
- Fence (Limited Access)
- Box Culvert
- Bridge
- Pipe Culvert-Mitered End Section
- Pipe Culvert-Straight Endwall
- Pipe Culvert-U-Type Endwall
- Pipe Culvert-Median Drain
- Pipe Culvert-Other End Treatments
- 18" Storm Sewer
- Inlet
- Manhole
- Tied Longitudinal Joint
- Keyed Longitudinal Joint
- Doweled Transverse Expansion Joint
- Doweled Transverse Contraction Joint
- Tansverse Contraction Joint Without Dowels
- Survey Reference Point
- ALACHUA Triangulation Station
- B.M. NO. 112 Bench Mark
- Point Of Intersection
- North Arrow
- TYP. TYPE PAVT WALK Edges Of Existing Pavement And Sidewalk
- Guardrail

- Base Line
- Centerline
- Property Line
- Delta Angle
- ± Approximate
- Round Or Diameter
- Curb
- Curb And Gutter
- Water Well, Spring
- Levee
- MP 327 Railroad Mile Post
- 12' Gate
- Pump Island
- Storage Tank (Surface)
- Storage Tank (Underground)
- Mine Or Quarry
- B P Borrow Pit
- Church
- S Store
- RES Residence
- B Barn
- School
- Stream
- Shore Line
- Marsh
- Hedge
- Trees
- Edge Of Wooded Area
- Shrubbery
- Grove Or Orchard
- Lt. Skew Rt. ℄ Rt. Skew Lt. Definition Of Skew For Cross Drains And Barrels Of Conrete Box Culverts
- Concrete
- Wood
- e Rate Of Superelevation

UTILITY ADJUSTMENT SYMBOLS

EXISTING	PROPOSED	
		Power Pole
OE (7.5KV)	OE (7.5KV)	Overhead Electric
		Telephone Pole
OT (100PR)	OT (100PR)	Overhead Telephone Cable
OH (CATV)	OH (CATV)	Overhead Cable Television
		Combination Pole
		Guy Wire And Anchor Pin
BE (7.5KV)	BE (7.5KV)	Buried Electric
BE 4MTD (7.5KV)	BE 4MTD (7.5KV)	Buried Electric Duct
BT (200PR)	BT (200PR)	Buried Telephone Cable
BT 6MTD	BT 6MTD	Buried Telephone Duct
UG (CATV)	UG (CATV)	Underground Cable Television
		Tower
		Light Pole
6" GM	6" GM	Gas Main
6" WM	6" WM	Water Main
8" SAN	8" SAN	Sanitary Sewer
		Manhole
		Water Meter
		Valve
		Fire Hydrant

See General Note Sheet 1 Of 3.

STATE OF FLORIDA DEPARTMENT OF TRANSPORTATION
ROAD DESIGN

STANDARD SYMBOLS

	Names	Dates	Approved By
Designed By			Freddie Simmons, State Roadway Design Engineer
Drawn By	CDP	08/72	
Checked By	COR	08/72	Revision No. 92 · Sheet No. 2 of 3 · Index No. 002
F.H.W.A. Approved: 07/07/75			

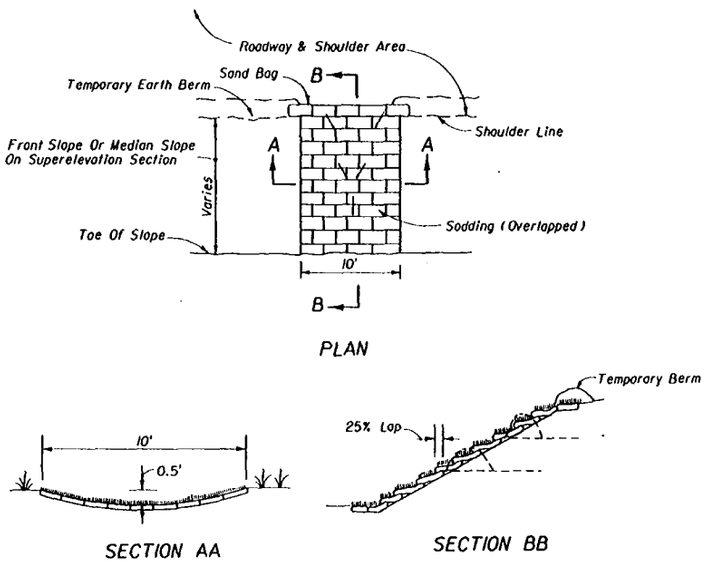

SOD FLUME (SODDING OVERLAPPED)

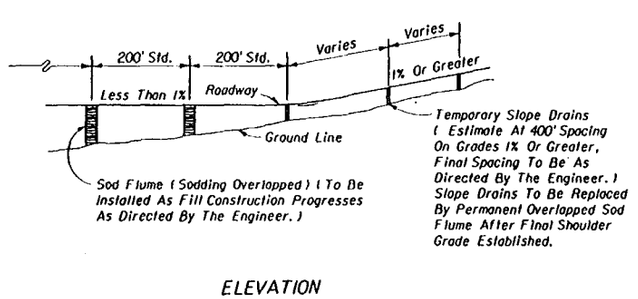

SLOPE DRAIN APPLICATION

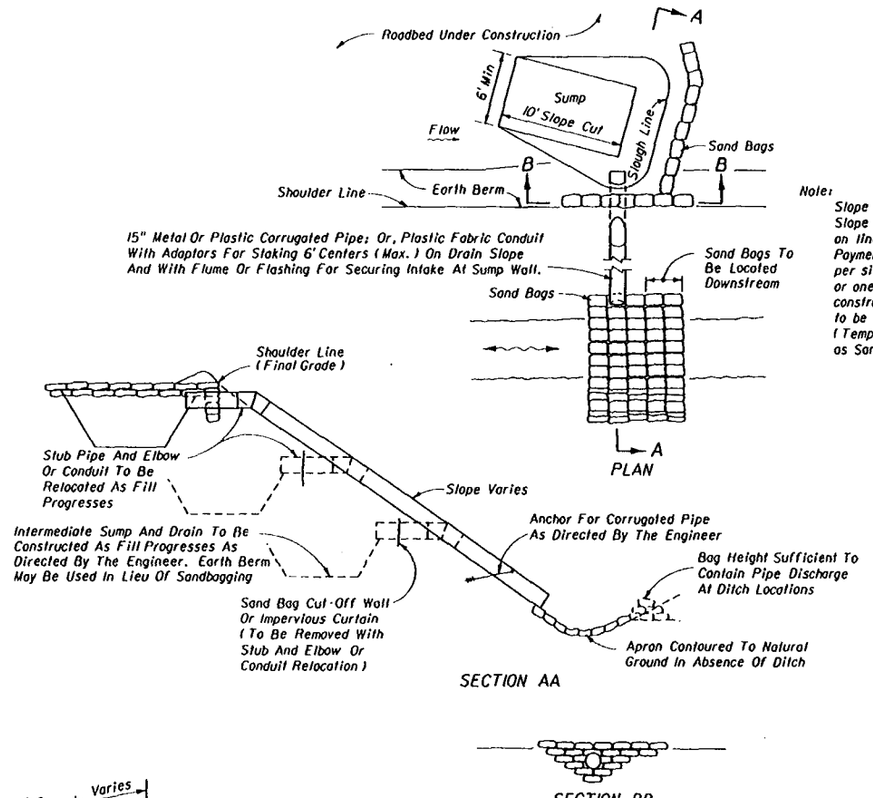

Note:
Slope drain pipe to be paid for as Slope Drains (Temporary) LF, based on linear feet of pipe or conduit installed. Payment to be made for one installation per site, including one stub and elbow or one intake flume or flashing. Sump construction and maintenance and curtains to be included in cost for Slope Drains (Temporary). Sand bags to be paid for as Sandbagging CY.

TEMPORARY SLOPE DRAIN

STATE OF FLORIDA DEPARTMENT OF TRANSPORTATION
ROAD DESIGN

TEMPORARY SLOPE DRAIN AND SOD FLUME

	Names	Dates	Approved By
Designed By			S A McLemore, State Roadway Design Engineer
Drawn By			
Checked By			
F.H.W.A. Approved:		10/07/80	

Revision No.	Sheet No.	Index No.
83	1 of 1	100

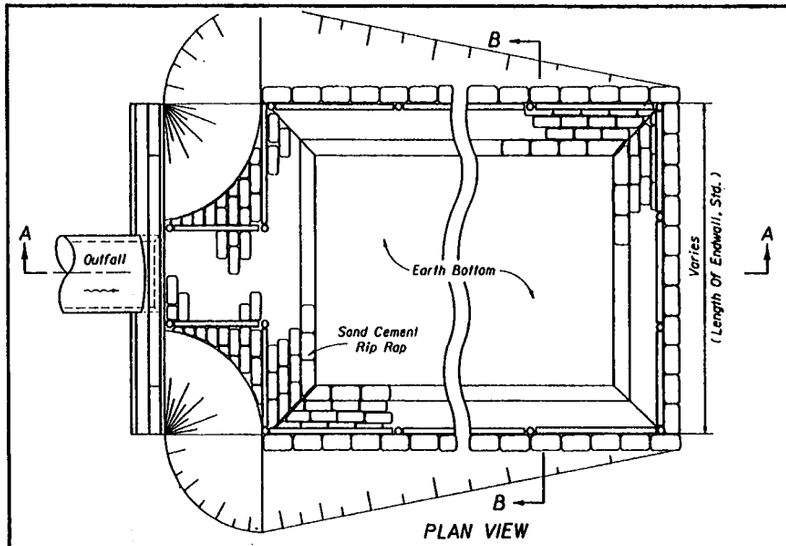

PLAN VIEW

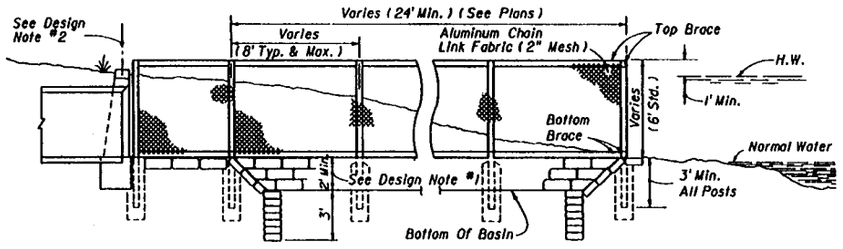

SECTION AA

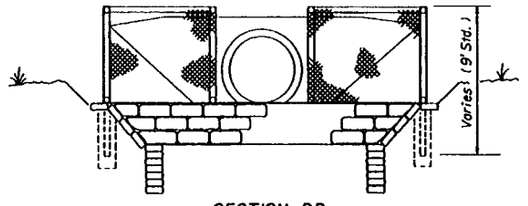

SECTION BB

INTENDED FOR USE WHEN THE STORM SEWER OUTFALLS ADJACENT TO A SHORE LINE

TYPE A

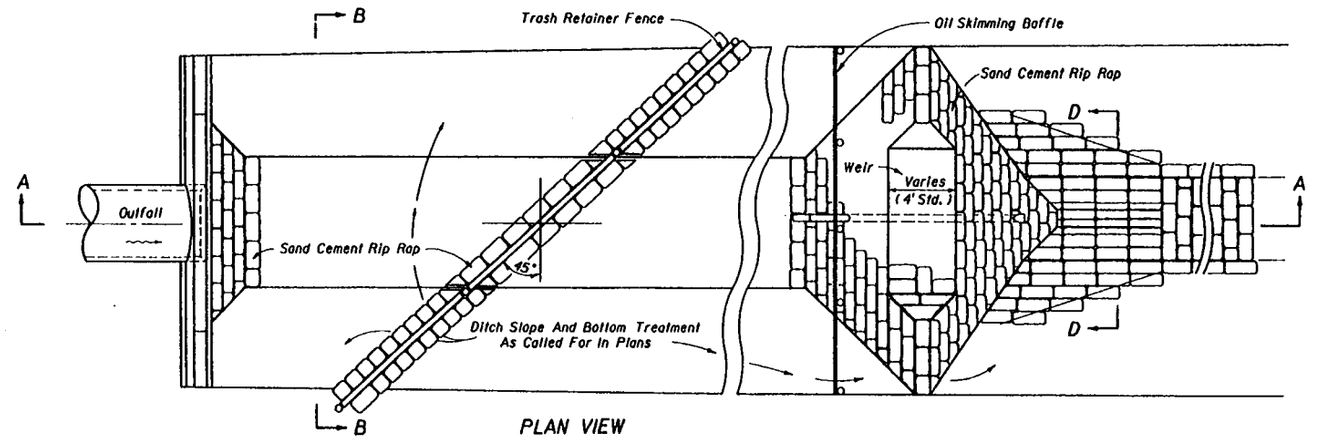

PLAN VIEW

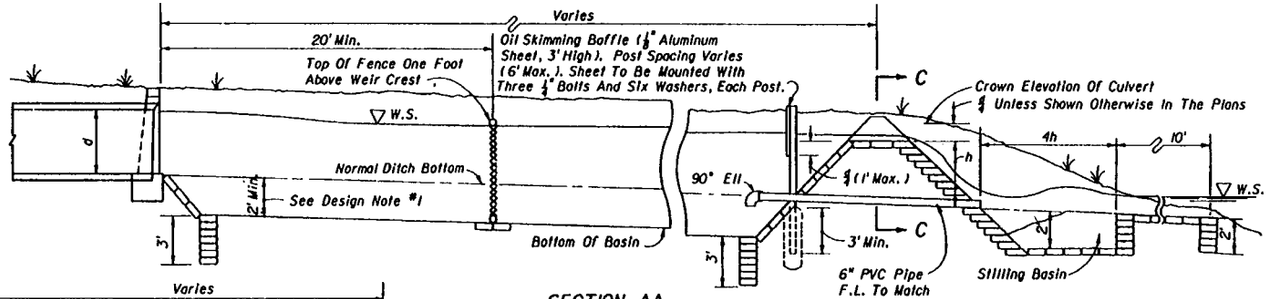

SECTION AA

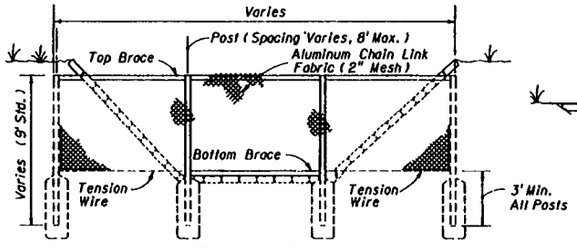

SECTION BB

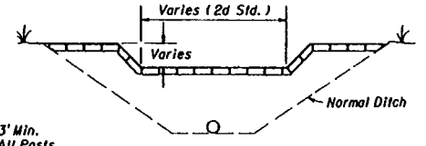

SECTION CC

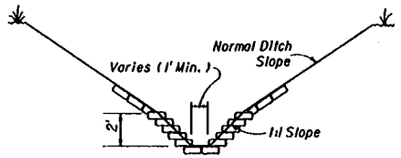

SECTION DD

INTENDED FOR USE WHEN THE STORM SEWER OUTFALLS IN AN OPEN DITCH

TYPE B

DESIGN NOTES

1. Basins should be as deep as practical with a minimum depth of 2.0 feet.
2. In Type A, when the top of endwall is below high water, fence also will be required along the top of the endwall.
3. In Type B, the weir shall be located as far from the endwall as practical. On steep ditch grades two or more weirs may be required. Intermediate weirs shall be constructed without stilling basins.
4. In Type B, the 6" PVC pipe shall be constructed unless shown otherwise in the plans.

GENERAL CONSTRUCTION NOTES

1. Fence materials shall be aluminum or concrete only.
2. Aluminum posts shall be 3" diameter minimum. Aluminum rail braces shall be in accordance with Index 452. Concrete posts and rail braces shall be in accordance with Index 451. All posts to be set in concrete.
3. Fabric shall be installed to inside of posts and rail braces, and tied to posts and braces at 6" centers.
4. For additional details on fencing, see Index Nos. 451 and 452.
5. All basin slopes to be 1:1 unless detailed otherwise in the plans.
6. Sediment basins to be constructed prior to commencement of upland construction. Maintenance and clean out to be by the Contractor until acceptance of project by the Engineer.

GENERAL NOTES

1. The cost for Type A and Type B trash retainer and sediment basins shall include the cost for riprap, fencing, baffles, piping and for sump and weir earthwork over and above ditch excavation called for in the plans. Payment for both Type A Type B shall be under the contract unit price for Sediment Basins, Each. Cleanouts as called for in the plans shall be paid for under the contract unit price for Sediment Basin Cleanouts, CO.

STATE OF FLORIDA DEPARTMENT OF TRANSPORTATION
ROAD DESIGN

TRASH RETAINER AND SEDIMENT BASIN

	Names	Dates
Designed By	W.H	05/74
Drawn By		
Checked By	H.L.B	05/74
F.H.W.A. Approved		10/07/80

Approved By _____ State Drainage Engineer

Revision No.	Sheet No.	Index No.
90	1 of 1	101

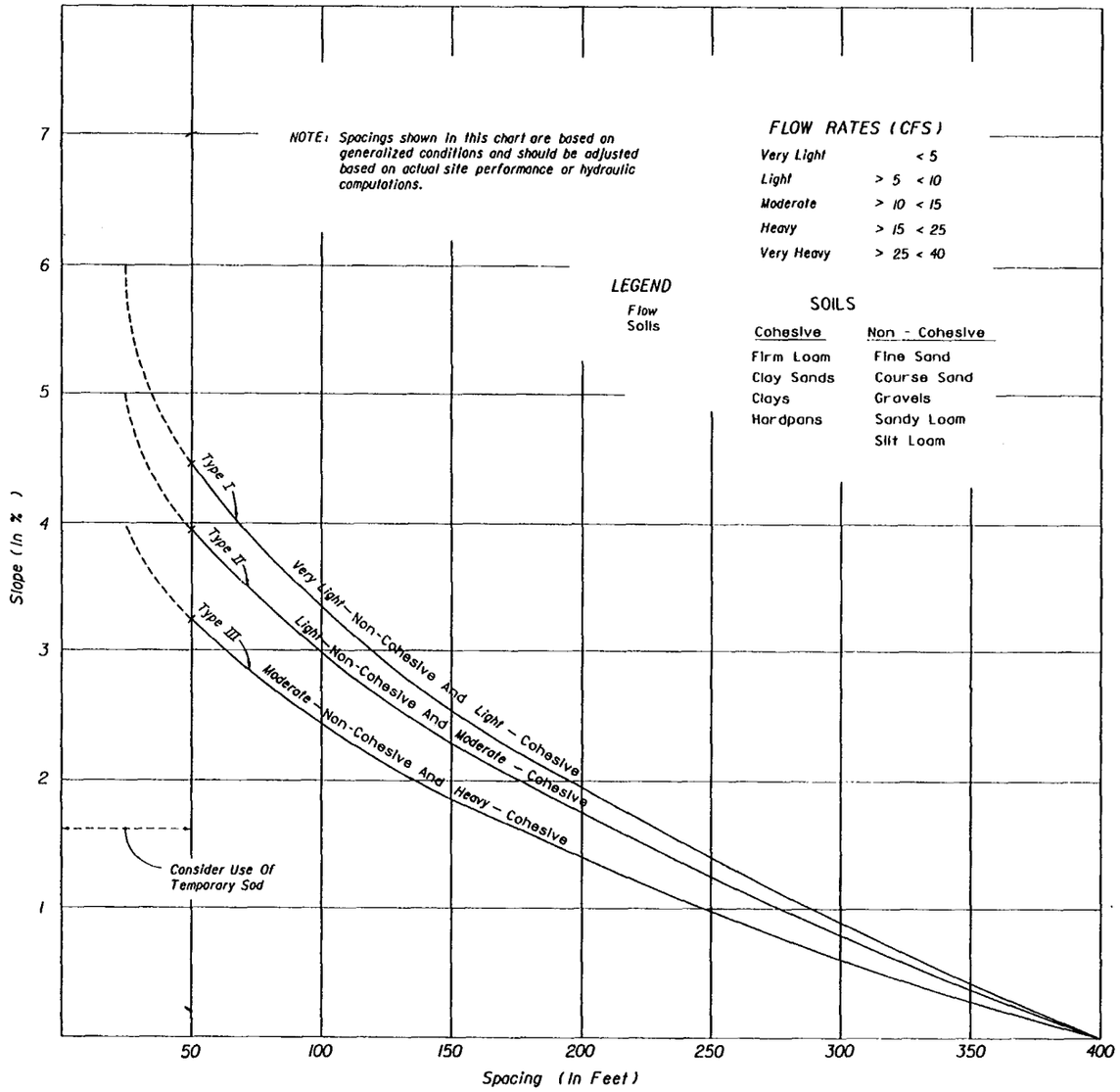

CHART I

RECOMMENDED SPACING FOR TYPE I AND TYPE II HAY BALE BARRIERS, AND TYPE III SILT FENCES

STATE OF FLORIDA DEPARTMENT OF TRANSPORTATION
ROAD DESIGN

BALED HAY OR STRAW BARRIERS AND SILT FENCES

	Names	Dates
Designed By	EGR	02/80
Drawn By	HSD	09/82
Checked By	JVG	09/82
F.H.W.A. Approved:		09/23/82

Approved By _____
State Roadway Design Engineer

Revision No.	Sheet No.	Index No.
92	1 of 3	102

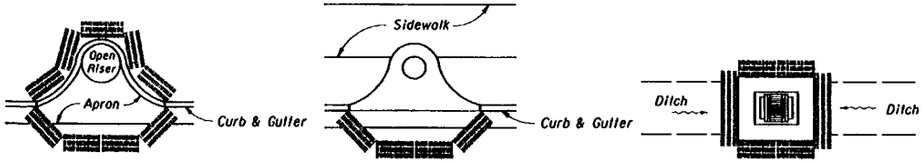

PARTIAL INLET COMPLETED INLET DITCH BOTTOM INLET

Anchor Bales With 2- 2" x 2" x 4' Stakes Per Bale

PROTECTION AROUND INLETS OR SIMILAR STRUCTURES

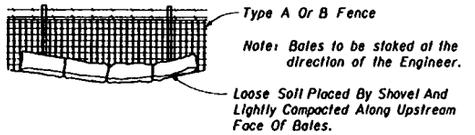

BALES BACKED BY FENCE

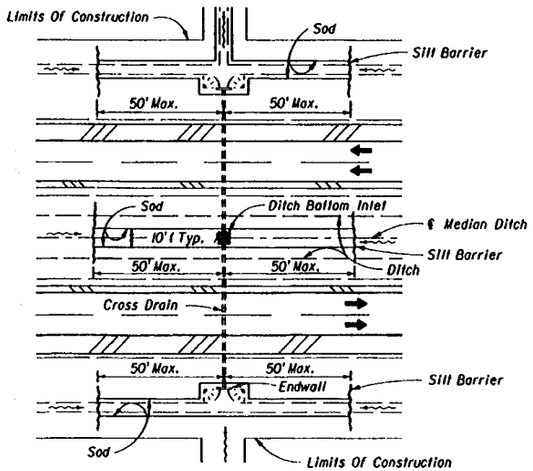

DITCH INSTALLATIONS AT DRAINAGE STRUCTURES

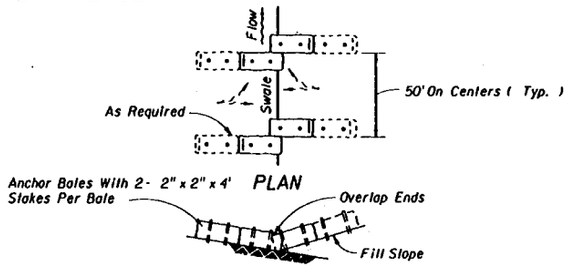

ELEVATION

TO BE USED AT SELECTED SITES WHERE THE NATURAL GROUND SLOPES TOWARD THE TOE OF SLOPE

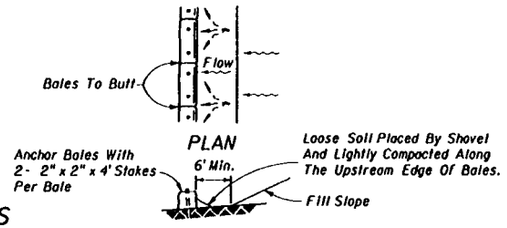

ELEVATION

TO BE USED AT SELECTED SITES WHERE THE NATURAL GROUND SLOPES TOWARD THE TOE OF SLOPE

BARRIERS FOR FILL SLOPES

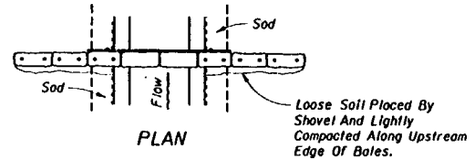

Spacing: Bale barriers for paved ditches should be spaced in accordance with Chart I, Sheet 1 of 3, Index No. 102

BARRIER FOR PAVED DITCH

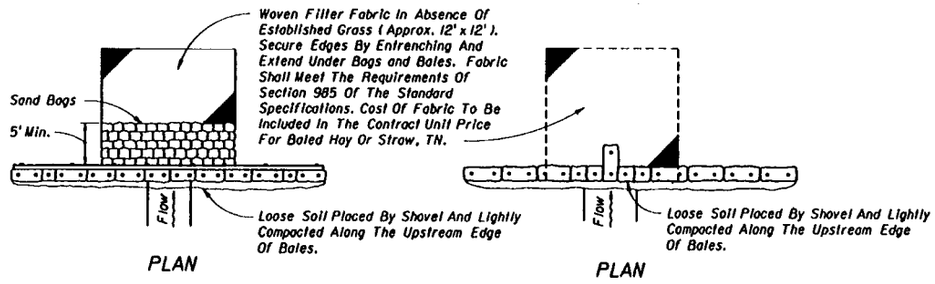

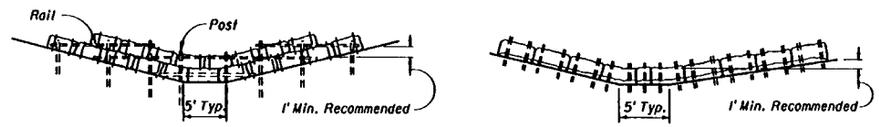

Anchor Lower Bales With 2- 2" x 2" x 4' Stakes Per Bale. Anchor Top Bales To Lower Bales With 2- 2" x 2" x 4' Stakes Per Bale.

ELEVATION

Anchor Bales With 2- 2" x 2" x 4' Stakes Per Bales

ELEVATION

Application and Spacing: The use of Types I & II bale barriers should be limited to the conditions outlined in Chart I, Sheet 1 of 3, Index No. 102

TYPE II TYPE I

BARRIER FOR UNPAVED DITCHES

STATE OF FLORIDA DEPARTMENT OF TRANSPORTATION
ROAD DESIGN

BALED HAY OR STRAW BARRIERS AND SILT FENCES

	Names	Dates
Designed By	W.M.	5/14
Drawn By		
Checked By	H.L.B.	6/14
F.H.W.A. Approved:		10/01/80

Approved By J. A. McLemore
State Roadway Design Engineer

Revision No.	Sheet No.	Index No.
86	2 of 3	102

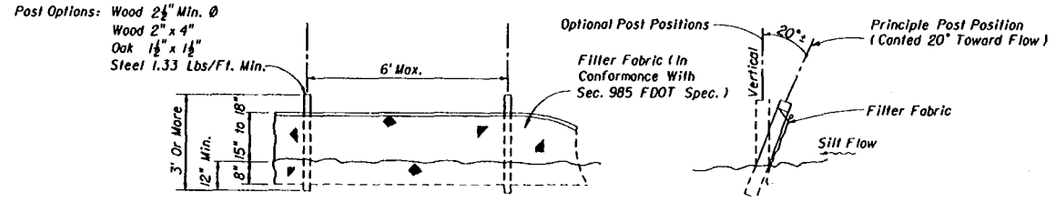

Note: Silt Fence to be paid for under the contract unit price for Staked Silt Fence (LF).

TYPE III SILT FENCE

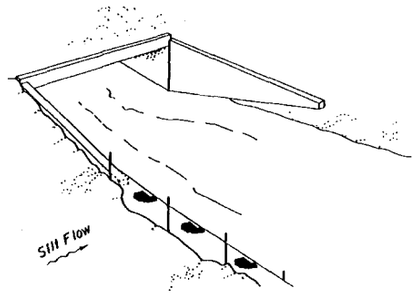

Type III Silt Fence

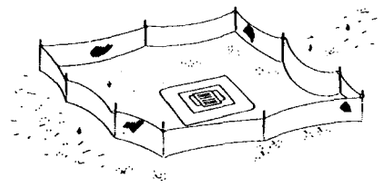

Type III Silt Fence Protection Around Ditch Bottom Inlets.

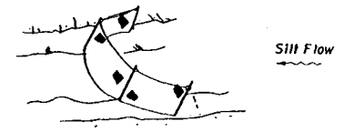

Note: Spacing for Type III Fence to be in accordance with Chart I, Sheet 1 of 3 and ditch installations at drainage structures Sheet 2 of 3.

Type III Silt Fence

Do not deploy in a manner that silt fences will act as a dam across permanent flowing watercourses. Silt fences are to be used at upland locations and turbidity barriers used at permanent bodies of water.

SILT FENCE APPLICATIONS

STATE OF FLORIDA DEPARTMENT OF TRANSPORTATION
ROAD DESIGN

BALED HAY OR STRAW BARRIERS AND SILT FENCES

	Names	Dates
Designed By	RAA/CJA	09/85
Drawn By	LRE	09/85
Checked By	RAA	10/85

Approved By: L. A. McLemore
State Roadway Design Engineer

F.H.W.A. Approved:

Revision No.	Sheet No.	Index No.
94	3 of 3	102

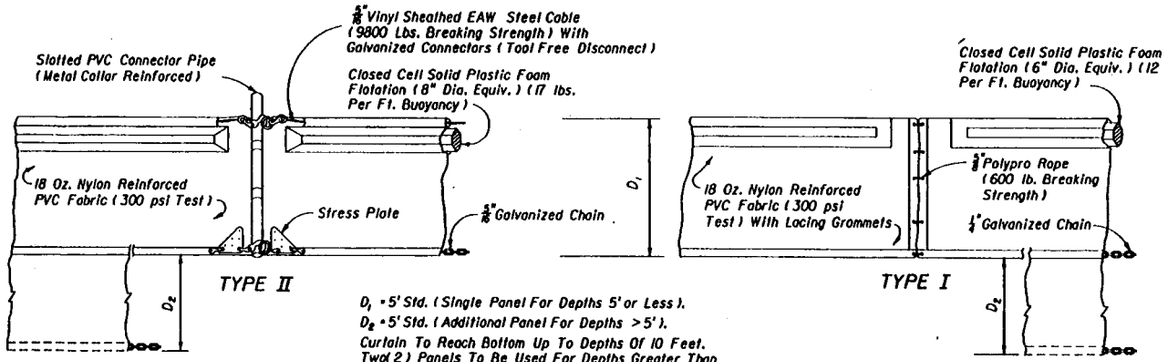

D_1 = 5' Std. (Single Panel For Depths 5' or Less).
D_2 = 5' Std. (Additional Panel For Depths > 5').
Curtain To Reach Bottom Up To Depths Of 10 Feet. Two(2) Panels To Be Used For Depths Greater Than 10 Feet Unless Special Depth Curtains Specifically Called For In The Plans Or As Determined By The Engineer.

NOTICE: COMPONENTS OF TYPES I AND II MAY BE SIMILAR OR IDENTICAL TO PROPRIETARY DESIGNS. ANY INFRINGEMENT ON THE PROPRIETARY RIGHTS OF THE DESIGNER SHALL BE THE SOLE RESPONSIBILITY OF THE USER. SUBSTITUTIONS FOR TYPES I AND II SHALL BE AS APPROVED BY THE ENGINEER.

FLOATING TURBIDITY BARRIERS

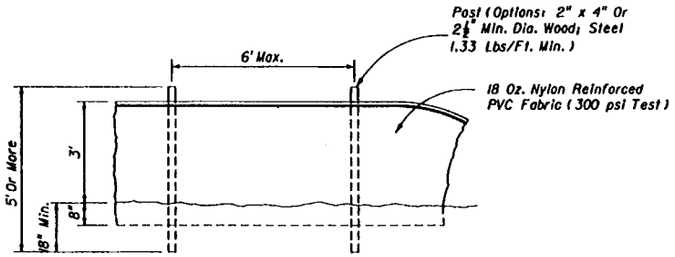

STAKED TURBIDITY BARRIER

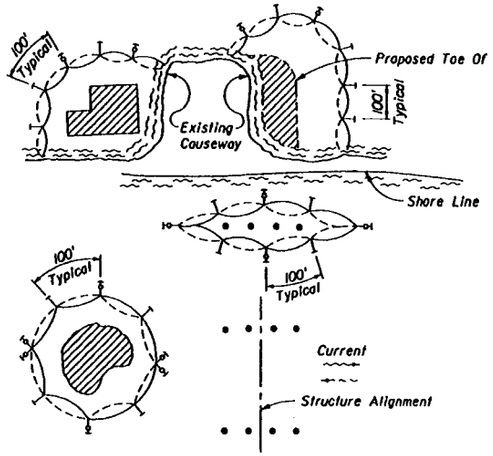

LEGEND
- Pile Locations
- Dredge Or Fill Area
- Mooring Buoy w/Anchor
- Anchor
- Barrier Movement Due To Current Action

NOTES:
1. Turbidity barriers are to be used in all permanent bodies of water regardless of water depth.
2. Number and spacing of anchors dependent on current velocities.
3. Deployment of barrier around pile locations may vary to accommodate construction operations.
4. Navigation may require segmenting barrier during construction operations.
5. For additional information see Section 104 of the Standard Specifications.

TURBIDITY BARRIER APPLICATIONS

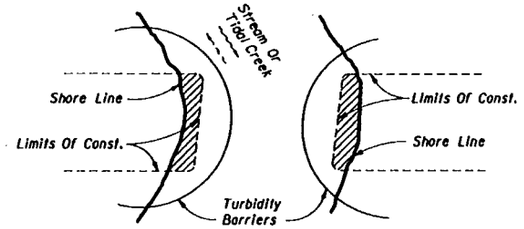

Note:
Turbidity barriers for flowing streams and tidal creeks may be either floating, or staked types or any combinations of types that will suit site conditions and meet erosion control and water quality requirements. The barrier type(s) will be at the Contractors option unless otherwise specified in the plans, however payment will be under the pay item(s) established in the plans for Floating Turbidity Barrier and/or Staked Turbidity Barrier. Posts in staked turbidity barriers to be installed in vertical position unless otherwise directed by the Engineer.

GENERAL NOTES

1. Floating turbidity barriers are to be paid for under the contract unit price for Floating Turbidity Barrier, LF.
2. Staked turbidity barriers are to be paid for under the contract unit price for Staked Turbidity Barrier, LF.

STATE OF FLORIDA DEPARTMENT OF TRANSPORTATION
ROAD DESIGN

TURBIDITY BARRIERS

	Names	Dates
Designed By	RAA/CJA	9/85
Drawn By	LRE	9/85
Checked By	RAA	10/85
F.H.W.A. Approved:		

Approved By: _____ State Roadway Design Engineer

Revision No.	Sheet No.	Index No.
90	1 of 1	103

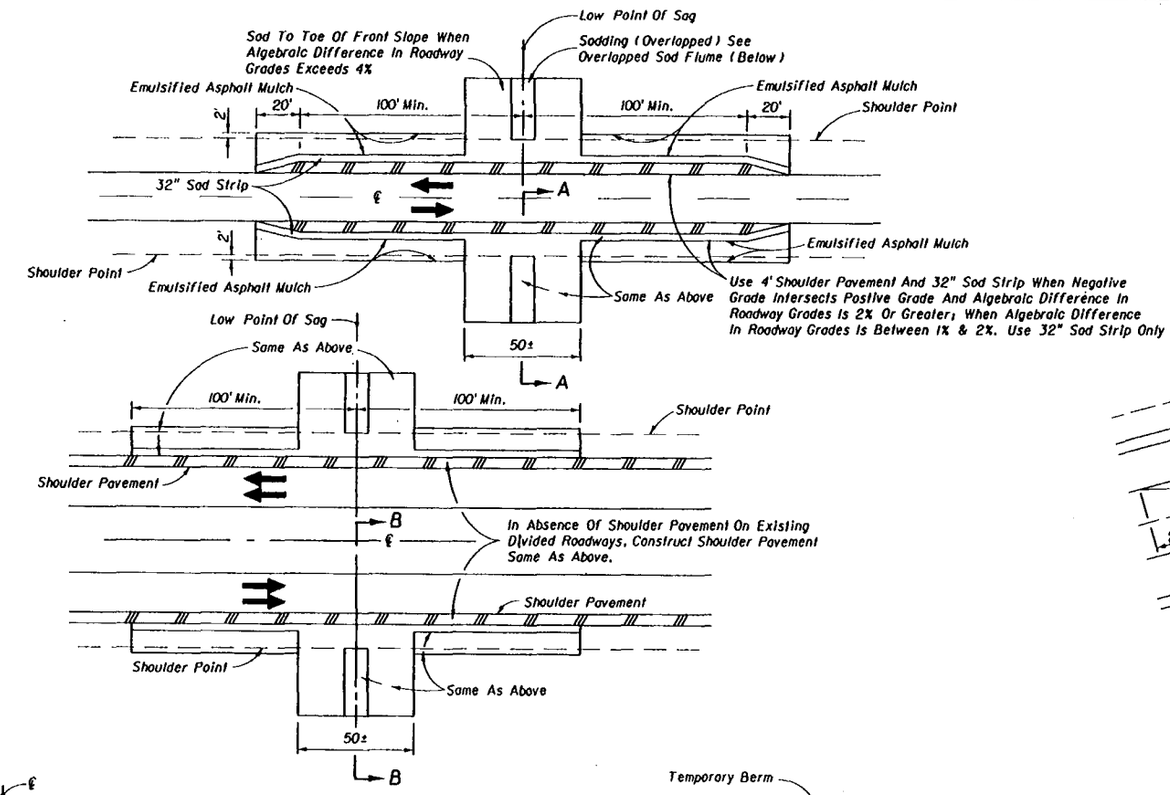

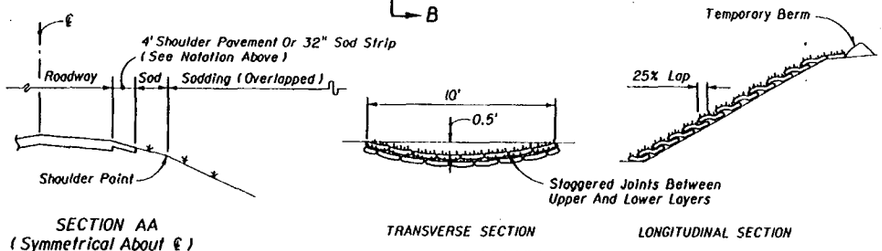

SECTION AA
(Symmetrical About ℄)

TRANSVERSE SECTION

LONGITUDINAL SECTION

OVERLAPPED SOD FLUME

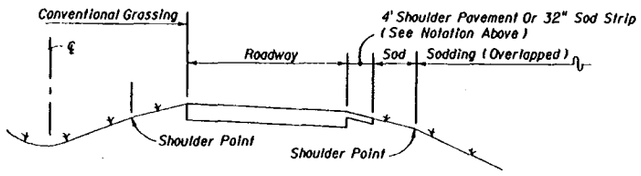

SECTION BB
(Symmetrical About ℄)

SHOULDER AND SLOPE TREATMENT IN SAG VERTICAL CURVES

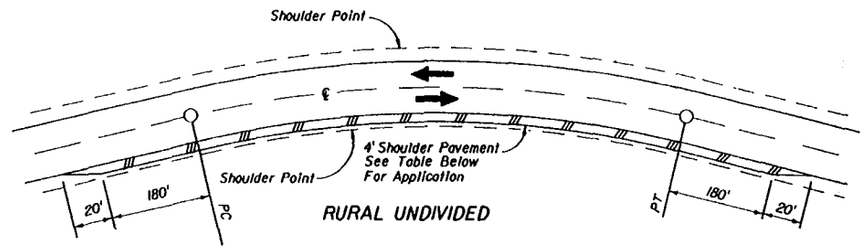

RURAL UNDIVIDED

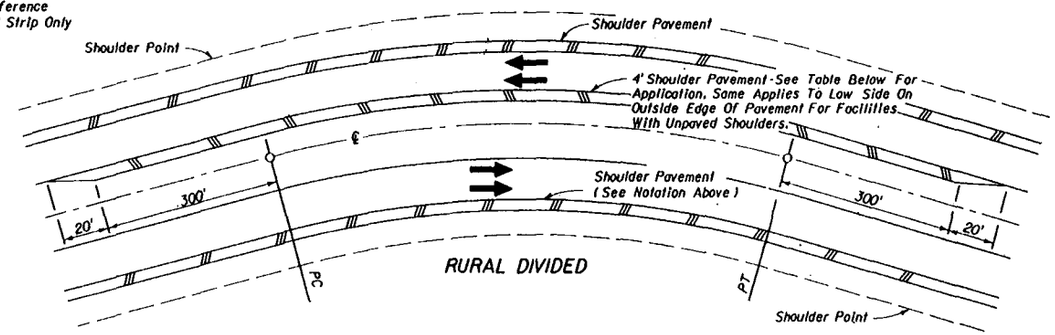

RURAL DIVIDED

CRITERIA FOR PAVING SHOULDER ON DIVIDED AND UNDIVIDED FACILITIES		
Design Speed	Degree Of Curve	Note: Shoulder Pavement is required on all curves meeting the criteria tabulated. For curves not meeting the criteria, shoulders are to be paved where erosion of the shoulder is evident or anticipated.
30	7° Or Greater	
40	5° Or Greater	
50	4° Or Greater	
60	3° Or Greater	
65	3° Or Greater	
70	2° Or Greater	

SHOULDER AND SLOPE TREATMENT FOR SUPERELEVATED ROADWAYS

SEEDING RATES (Lbs/Ac) FOR NEW SHOULDERS AND SLOPES*								
	ZONE I				ZONE II			
	COASTAL		INLAND		COASTAL		INLAND	
TYPE OF SEED	Mar. to Nov.	Nov. to Mar.	Mar. to Oct.	Oct. to Mar.	Feb. to Dec.	Dec. to Feb.	Feb. to Dec.	Dec. to Feb.
PERMANENT GRASS								
Unhulled Bermuda	20	20	20	20	20	20	20	20
Bahia Argentina Or Pensacola			80	80			80	80
QUICK GROWING								
Brown Top Millet	20		20		20		20	
Annual Rye Grass		20		20		20		20
TOTAL POUNDS PER ACRE	40	40	120	120	40	40	120	120

Note: The seeding rates shown in this table apply only when seed is spread by an approved mechanical spreader meeting the requirements of Section 570 and 577 of the Standard Specifications.

*See Index No. 105 for zone boundaries and seeding rates for shoulder reworking.

GENERAL NOTES

1. Erosion control details are applicable to new construction, reconstruction and RRR projects. Project requirements for shoulder pavement and sodding that exceed the limits of this standard take precedence.
2. For sodding adjacent to ditches and at headwalls, see Index No. 281.
3. All front slopes steeper than 3:1 are to be sodded.

STATE OF FLORIDA DEPARTMENT OF TRANSPORTATION
ROAD DESIGN

EROSION CONTROL DETAILS FOR PERMANENT CONSTRUCTION

	Names	Dates	Approved By
Designed By	HLG	04/75	S.A. McLenore, State Drainage Engineer
Drawn By			
Checked By	DCB	04/75	
F.H.W.A. Approved:		10/07/80	

Revision No.	Sheet No.	Index No.
94	1 of 1	104

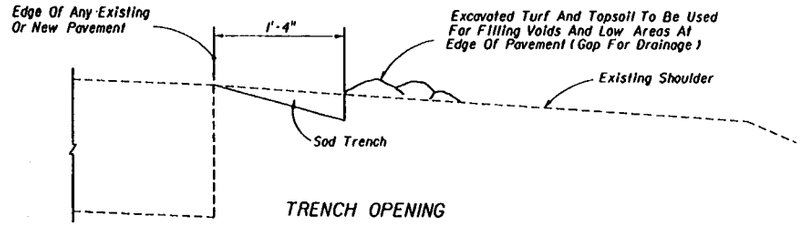

TRENCH OPENING

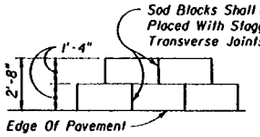

PLAN VIEW

PATTERN DETAIL

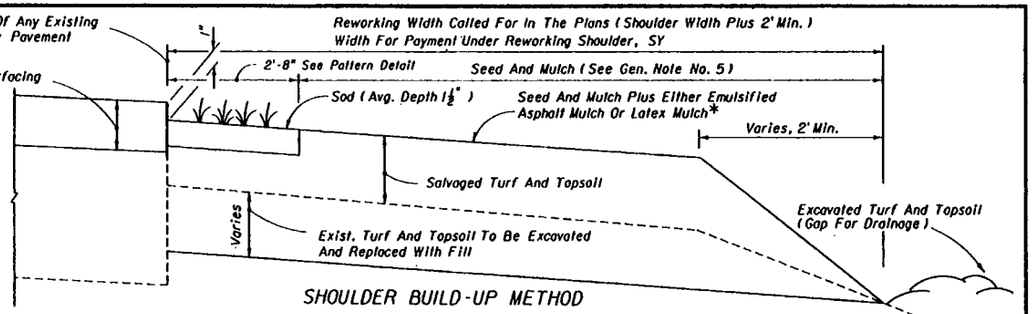

SHOULDER BUILD-UP METHOD

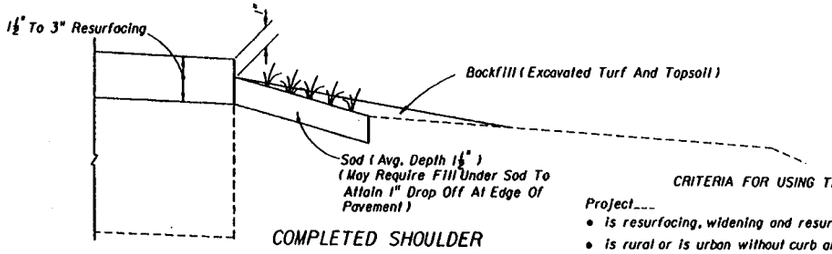

COMPLETED SHOULDER

CRITERIA FOR USING TREATMENT TYPE R-1

Project___

- is resurfacing, widening and resurfacing or construction of shoulder pavement
- is rural or is urban without curb and gutter
- has good existing soil and turf with no significant shoulder erosion (isolated areas of significant erosion will require additional special treatment. Where poor soil and/or turf conditions exist shoulder reworking, Type R-2, should be applied.)
- resurfacing build-up is 1½" to 3"

TYPE R-1

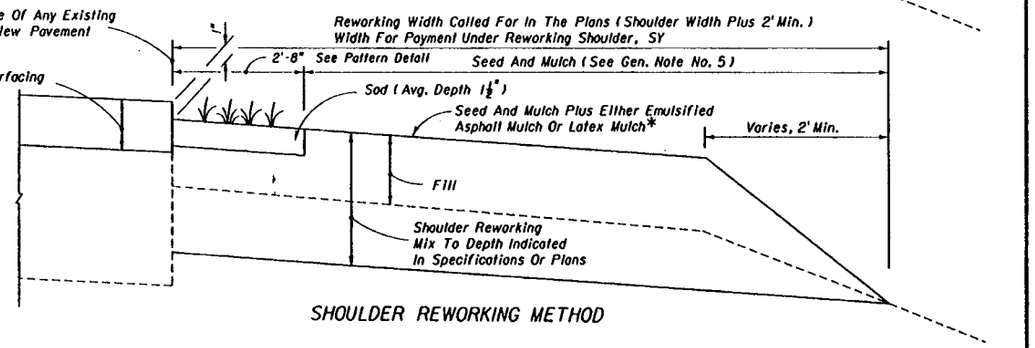

SHOULDER REWORKING METHOD

*Emulsified Asphalt Mulch Or Latex Mulch May Be Deleted For Low Volume Roadways (ADT Less Than 1600) Or Where Shoulder Pavement Is Constructed.

CRITERIA FOR USING TREATMENT TYPE R-2

Project___

Is resurfacing or construction of shoulder pavement
Is rural or is urban without curb and gutter
has good existing soil and turf
resurfacing build-up is 3" or more

A SIMILAR TREATMENT MAY BE USED FOR PROJECTS THAT REQUIRE SHOULDER WIDENING. DETAILS ARE TO BE SHOWN IN THE PLANS.

TYPE R-2

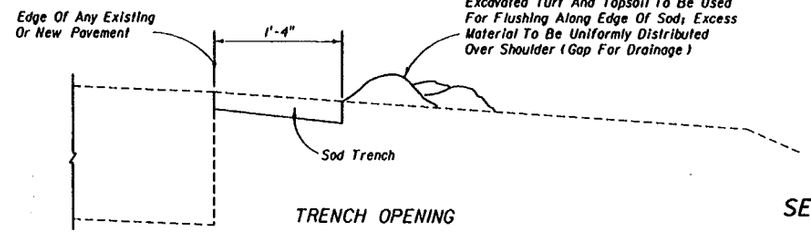

TRENCH OPENING

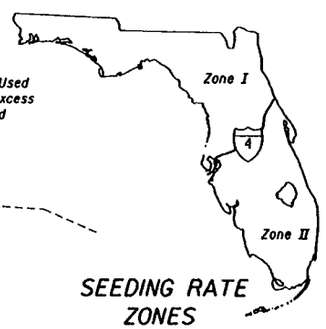

SEEDING RATE ZONES

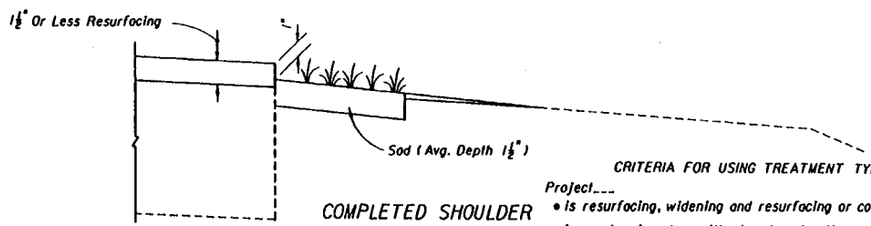

COMPLETED SHOULDER

CRITERIA FOR USING TREATMENT TYPE R-3

Project___

- is resurfacing, widening and resurfacing or construction of shldr. pavt.
- is rural or is urban without curb and gutter
- has good existing soil and turf with no significant shoulder erosion (isolated areas of significant erosion will require additional special treatment. Where poor soil and/or turf conditions exist shoulder reworking, Type R-2, should be applied.)
- resurfacing build-up is 1½" or less

TYPE R-3

SEEDING RATES (Lbs/Ac)

TYPE OF SEED	ZONE I				ZONE II			
	COASTAL		INLAND		COASTAL		INLAND	
	Mar. to Nov.	Nov. to Mar.	Mar. to Oct.	Oct. to Mar.	Feb. to Dec.	Dec. to Feb.	Feb. to Dec.	Dec. to Feb.
PERMANENT GRASS								
Unhulled Bermuda	15	15	10	15	15	15	10	15
Bahia Argentina Or Pensacola			30	30			30	30
QUICK GROWING								
Brown Top Millet	20		20		20		20	
Annual Rye Grass		20		20		20		20
TOTAL POUNDS PER ACRE	35	35	60	65	35	35	60	65

Note: The seeding rates shown in this table apply only when seed is spread by an approved mechanical spreader meeting the requirements of Section 570 and 577 of the Standard Specifications.

GENERAL NOTES

1. Special attention is to be directed to the construction of the required 1" drop-off at edge of pavement.
2. Fertilize entire unpaved shoulder and front slope to toe of slope or bottom of ditch.
3. Topsoil obtained from borrow pits or other sources may be used in lieu of excavated turf and topsoil when economically feasible. No additional payment will be made for substituting topsoil for excavated turf or topsoil.
4. Payment for excavation of turf and topsoil and for backfill of this material under Types R-1 and R-3, is to be included in the contract unit price for Sodding, SY.
5. Payment for reworking shoulders, shall include the cost for those seeding and mulching operations within the limits for reworking shoulders. Materials (Seed, Mulch, Fertilizer and Water) and Sodding shall be paid for as separate items. Reworking shoulders shall be paid for under the contract unit price for Reworking Shoulders, SY.

STATE OF FLORIDA DEPARTMENT OF TRANSPORTATION
ROAD DESIGN

SHOULDER SODDING AND REWORKING ON EXISTING FACILITIES

	Names	Dates	Approved By
Designed By	EGR	09/07/84	Freddi Simmons
Drawn By	HSD	09/07/84	State Roadway Design Engineer
Checked By	EGR	09/07/84	
F.H.W.A. Approved		09/21/84	

Revision No.	Sheet No.	Index No.
94	1 of 1	105

STANDARD CRITERIA

CLASS	TYPE (1)	APPLICATION DESCRIPTION	STANDARD INDEX NO.	PERMEABILITY cm/sec	A. O. S. Range U.S. Sieve #	GRAB TENSILE STRENGTH lbs.	PUNCTURE lbs.	TRAPEZOIDAL TEAR lbs.	MULLEN BURST PSI	ELONGATION %	SEAM STRENGTH lbs.	U V RESISTANCE (Min. Allowed) %	U V RESISTANCE (Min. Allowed) Time (Hrs.)	FILTRATION EFFICIENCY %	FLOW RATE Gal./Min.	COMMENTS
DRAINAGE (D)	D-1	Revetment (Special)		1×10^{-2}	* 40-70	250	115	50	500	15-30	225	80	500	—	—	Woven Monofilament only
	D-2	Revetment (Standard)		1×10^{-2}	* 70-100	200	80	50	320	15-50	180	80	500	—	—	Woven Monofilament only
		Cyclopean Stone														
		Articulating Block														
		Gabions														
		Rock, Rubble, Broken Concrete	280													
	D-3	Underdrain Trench Wrap	286	1×10^{-2}	* 70-100	90	45	35	140	50 (Min.)	81	80	150	—	—	When placed adjacent to temporary sheeting which will be removed, the filter fabric shall meet the requirements of D-2 fabric.
		French Drain	285													
		Sheet Piling Filter														
		Filter Fabric Jacket (Culvert)	280													
	D-4	Slope Pavement (Sand-Cement)		1×10^{-2}	* 70-100	180	50	35	180	50 (Min.)	162	80	150	—	—	Non-Woven only Min. Thickness 90 Mils
		Ditch Pavement (Sand-Cement)	281													
	D-5	Mechanical Stabilized Retaining Wall		1×10^{-2}	* 70-100	90	50	40	180	50 (Min.)	81	80	150	—	—	
		Cast-In-Place Retaining Wall														
	D-6	Slope Pavement (Concrete)		1×10^{-2}	* 70-100	180	50	35	180	50 (Min.)	162	80	150	—	—	Non-Woven only Min. Thickness 120 Mils
		Ditch Pavement (Concrete)	281													
	D-7	Underdrain Filter Sock	286	—	* 70-100	**50	—	—	100	—	—	—	—	—	—	See Standard Specification 948
EROSION (E)	E-1	Staked Silt Fence		1×10^{-2}	NA	90	—	35	180	15-40	81	80	500	75	0.3	
	E-2	Wind Screen	103	1×10^{-2}	NA	90	—	—	—	15-40	81	80	150	—	—	
STABILIZATION (R)	R-1	Reinforcement		1×10^{-3}	30	200	90	90	210-430	15-40	180	80	150	—	—	
	R-2	Separation		1×10^{-3}	30	180	80	50	290	15-40	162	—	—	—	—	

(1) Type refers to FDOT class and application. * See DESIGN NOTE No. 3 ** See TABLE I below

TABLE I

Test	Unit	Test Method
Permeability	cm/sec	ASTM-D-4491
AOS	U.S. Sieve No.	ASTM-D-4751
Grab Tensile Strength	LBS	ASTM-D-4632
(**Ball Burst Test LBS		ASTM-D-3787 (tested wet))
Puncture	LBS	ASTM-D-4833
Trapezoidal Tear	LBS	ASTM-D-4533
Mullen Burst	PSI	ASTM-D-3786
Elongation	%	ASTM-D-4632
Ultra Violet Resistance	% Retained in Strength	ASTM-D-4355
Filtration Efficiency	%	ASTM-D-5141
Flow Rate	Gal./Min.	ASTM-D-5141

GENERAL NOTES

1. Specifications for geotextiles are Section 985 or the Section identified by the specific application. Physical criteria for each application is provided by this standard, in conjunction with those sections.
2. All values are MINIMUM AVERAGE ROLL values in the weakest principal direction unless otherwise stated.
3. Range of values do not preclude the responsibility to design the fabric to the insitu materials and conditions.
4. Unless specifically restricted in COMMENTS column, any type of material may be used.

DESIGN NOTES

1. The Designer shall review this criteria and adjust the values as necessary to satisfy project requirements. These adjustments shall be called for in the plans or contained in the project special provisions. (See design note 3.)
2. U V Resistance: The value represents the percent of minimum textile strength retained (ASTM-D-4632) after weathering per ASTM-D-4355 for the test period (hours).
3. A. O. S. Design Guide.
   Soil with ≥ 50% passing No. 200 sieve, A. O. S. Range is 100-140.
   Soil with ≥ 15% but < 50% passing No. 200 sieve, A. O. S. Range is 70-100.
   Soil with < 15% passing No. 200 sieve, A. O. S. Range is 40-70.

STATE OF FLORIDA DEPARTMENT OF TRANSPORTATION
ROAD DESIGN

GEOTEXTILE CRITERIA

	Names	Dates
Designed By	COWM	8/94
Drawn By	DLD	8/94
Checked By	KHH	8/94
F.H.W.A. Approved:		

Approved By P A McLemore State Drainage Engineer

Revision No.	Sheet No.	Index No.
94	1 of 1	199

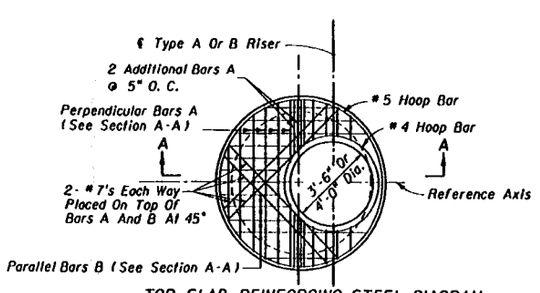

TOP SLAB REINFORCING STEEL DIAGRAM

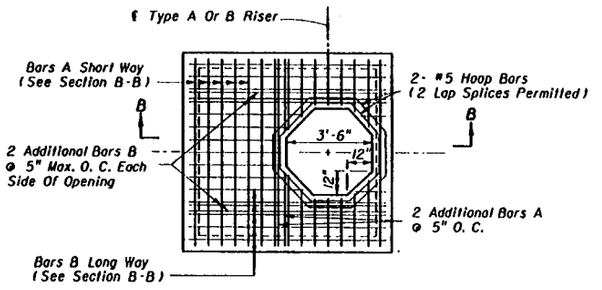

TOP SLAB REINFORCING STEEL DIAGRAM

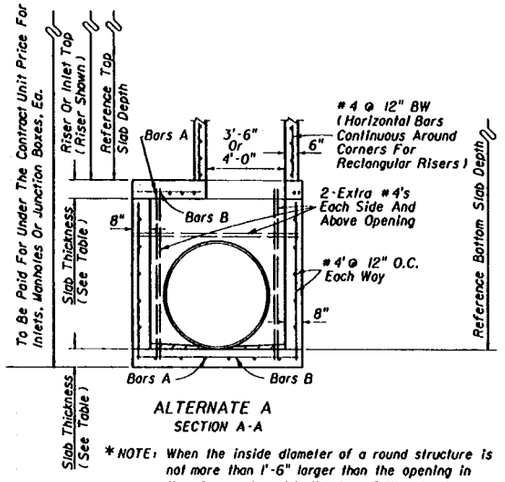

ALTERNATE A
SECTION A-A

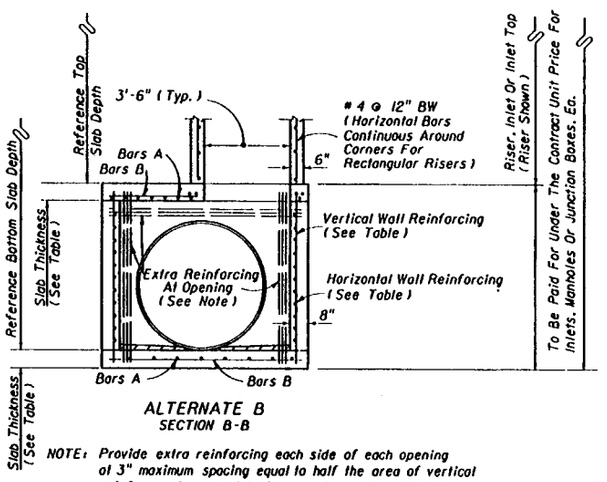

ALTERNATE B
SECTION B-B

* NOTE: When the inside diameter of a round structure is not more than 1'-6" larger than the opening in the riser or top slab, the top of the structure or riser shall be constructed according to the "Special Top Slab" details on this sheet.

NOTE: Provide extra reinforcing each side of each opening of 3" maximum spacing equal to half the area of vertical reinforcment removed by the opening and provide the same area of reinforcment above each opening at 3" maximum spacing as removed by the opening.

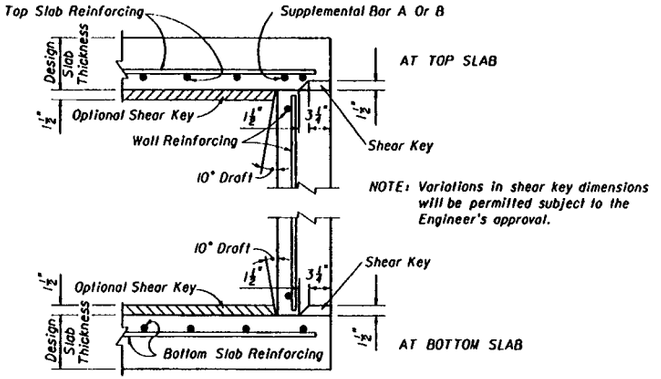

SLAB TO WALL DETAILS FOR PRECAST ALTERNATE WITH 8" WALLS

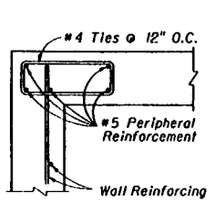

SECTION C-C

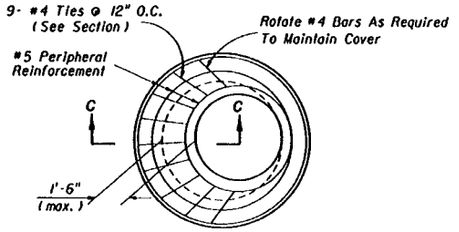

SPECIAL TOP SLAB *

GENERAL NOTES

1. Standard structure bottoms 4'-0" diameter and smaller (Alt. A) and 3'-6" square (Alt. B) are designated Type P. Larger standard structure bottoms are designated Type J. Risers are permitted for all structures.
2. Walls of circular structures (Alternate A) constructed in place may be of non-reinforced concrete or brick or reinforced concrete. Precast and rectangular structures (Alternate B) shall be constructed of reinforced concrete only.
3. Wall thickness and reinforcement are for either reinforced cast-in-place or precast concrete units except that precast circular units may be furnished with walls in accordance with either A.S.T.M. C-478 (up to 96" diameter) or A.S.T.M. C-76, Class III, B Wall, modified where the elliptical steel cage area is placed in the center one-third of the wall.
4. Top and floor slab thickness and reinforcement are for precast and cast in place construction. Top and floor slabs shall be of Class II concrete. Concrete as specified in A.S.T.M. C-478 (4000 psi) may be used in lieu of Class I and Class II concrete in precast items manufactured in plants which are under the 'Standard Operating Procedures' for the inspection of precast drainage products.
5. All reinforcement shall be A.S.T.M. A615, Grade 60 or 65 KSI welded wire fabric, either smooth or deformed.
6. Structure bottoms may be used in conjunction with curb inlet tops Types 1, 2, 3, 4, 5, 6, 9, and 10, and any manhole or junction box unless otherwise shown in the plans or other standard drawings. Alt. B structure bottoms may be used in conjunction with curb inlet Types 7 & 8, or any ditch bottom inlet unless otherwise shown in the plans or other standard drawings.
7. Rectangular structures may be rotated as directed by the Engineer in order to facilitate connections between the structure walls and storm sewer pipes.
8. Except when ACI hooks are specifically required, reinforcement top and slab shall be straight embedment.
9. All steel bars shall have 1½" minimum cover unless otherwise shown except for precast circular units manufactured under ASTM C-76 or ASTM C-478. Horizontal steel in rectangular structures shall be lapped a minimum of 24 bar diameters at corners.
10. The corner fillets shown are necessary for rectangular structures used with circular risers and inlet throats and used on skew with rectangular risers, inlet and inlet throats. Fillets will be required in lieu of the bottom slab of the Alt. B riser when used with the Alt. A box. Each fillet shall be reinforced with 2- #5 bars.
11. Inlet throats, riser or manhole tops shall be secured to structures as shown on Index No. 201.
12. Structures with depths over 14' are to be checked for floatation by designer of project drainage.
13. Units larger than specified standard may be substituted at the contractor's option when these units will not cause or increase the severity of utility conflicts. Such larger units shall be furnished at no additional cost to the Department. Larger Alternate A units cannot replace Alternate B units without approval of the Engineer. This note applies to this index only.
14. For manhole and junction box tops, for frames and covers, and, for supplementary details see Index No. 201.

STATE OF FLORIDA DEPARTMENT OF TRANSPORTATION
ROAD DESIGN

STRUCTURE BOTTOMS TYPE J AND P

	Names	Dates
Designed By		
Drawn By		
Checked By		
F.H.W.A. Approved:		05/01/75

Approved By: M. McLemore
State Drainage Engineer

Revision No.	Sheet No.	Index No.
94	1 of 2	200

SLAB DESIGNS - SQUARE AND RECTANGULAR STRUCTURES

(ALL SLABS 8" THICK - REINFORCING PARALLEL TO SHORT WAY AND LONG WAY)

SHORT - WAY		LONG - WAY	
SLAB DEPTH	SCHEDULE	SLAB DEPTH	SCHEDULE
SIZE: 3'-6" x UNLIMITED			
≥ 0.5' < 29'	B	≥ 0.5' - 40'	B
29' - 40'	C		
SIZE: 4'-0" x UNLIMITED			
≥ 0.5' < 19'	B	≥ 0.5' < 34'	B
19' < 29'	C	34' - 40'	C
29' - 40'	D		
SIZE: 5' x 5'			
≥ 0.5' < 3'	C	≥ 0.5' < 3'	C
3' < 19'	B	3' < 19'	B
19' < 28'	C	19' < 28'	C
28' < 38'	D	28' < 38'	D
38' - 40'	F	38' - 40'	F
SIZE: 5' x 6'			
≥ 0.5' < 3'	C	≥ 0.5' < 3'	C
3' < 16'	B	3' < 20'	B
16' < 24'	C	20' < 29'	C
24' < 34'	D	29' - 40'	D
34' - 40'	F		
SIZE: 5' x 7'			
≥ 0.5' < 3'	C	≥ 0.5' < 3'	C
3' < 14'	B	3' < 22'	B
14' < 21'	C	22' < 33'	C
21' < 39'	D	33' - 40'	D
39' - 40'	F		
SIZE: 5' x 8'			
≥ 0.5' < 3'	C	≥ 0.5' < 39'	B
3' < 8'	B	39' - 40'	C
8' < 17'	C		
17' < 23'	D		
23' - 40'	F		
SIZE: 5' x 9'			
≥ 0.5' < 3'	C	≥ 0.5' < 32'	B
3' < 8'	B	32' - 40'	C
8' < 17'	C		
17' < 23'	D		
23' - 40'	F		

SHORT - WAY		LONG - WAY	
SLAB DEPTH	SCHEDULE	SLAB DEPTH	SCHEDULE
SIZE: 6' x 6'			
≥ 0.5' < 3'	D	≥ 0.5' < 3'	D
3' < 4'	C	3' < 4'	C
4' < 14'	B	4' < 14'	B
14' < 21'	C	14' < 21'	C
21' < 28'	D	21' < 28'	D
28' - 40'	F	28' - 40'	F
SIZE: 6' x 7'			
≥ 0.5' < 3'	D	≥ 0.5' < 3'	D
3' < 4'	C	3' < 4'	C
4' < 12'	B	4' < 15'	B
12' < 19'	C	15' < 21'	C
19' < 26'	D	21' < 30'	D
26' - 40'	F	30' - 40'	F
SIZE: 6' x 8'			
≥ 0.5' < 3'	D	≥ 0.5' < 3'	D
3' < 4'	C	3' < 4'	C
4' < 7'	B	4' < 16'	B
7' < 16'	C	16' < 23'	C
16' < 23'	D	23' < 32'	D
23' - 40'	F	32' - 40'	F
SIZE: 6' x 9'			
≥ 0.5' < 3'	D	≥ 0.5' < 3'	D
3' < 15'	C	3' < 4'	C
15' < 21'	D	4' < 18'	B
21' < 27'	E	18' < 27'	C
27' - 40'	G	27' < 37'	D
		37' - 40'	E
SIZE: 7' x 7'			
≥ 0.5' < 3'	E	≥ 0.5' < 3'	E
3' < 4'	D	3' < 4'	D
4' < 16'	C	4' < 16'	C
16' < 22'	D	16' < 22'	D
22' < 28'	E	22' < 28'	E
28' - 40'	G	28' - 40'	G
SIZE: 7' x 8'			
≥ 0.5' < 3'	E	≥ 0.5' < 3'	E
3' < 4'	D	3' < 4'	D
4' < 15'	C	4' < 17'	C
15' < 21'	D	17' < 23'	D
21' < 27'	E	23' < 29'	E
27' - 40'	G	29' - 40'	G
SIZE: 7' x 9'			
≥ 0.5' < 3'	E	≥ 0.5' < 3'	E
3' < 4'	D	3' < 4'	D
4' < 12'	C	4' < 18'	C
12' < 18'	D	18' < 24'	D
18' < 24'	E	24' < 32'	E
24' - 40'	G	32' - 40'	G

SHORT - WAY		LONG - WAY	
SLAB DEPTH	SCHEDULE	SLAB DEPTH	SCHEDULE
SIZE: 8' x 8'			
≥ 0.5' < 3'	D	≥ 0.5' < 3'	D
3' < 4'	C	3' < 4'	C
4' < 9'	B	4' < 9'	B
9' < 17'	C	9' < 17'	C
17' < 31'	D	17' < 31'	D
31' - 40'	G	31' - 40'	G
SIZE: 8' x 9'			
≥ 0.5' < 3'	D	≥ 0.5' < 3'	E
3' < 4'	C	3' < 4'	D
4' < 16'	B	4' < 18'	C
16' < 22'	C	18' < 25'	D
22' < 29'	D	25' < 32'	F
29' - 40'	F	32' - 40'	G
SIZE: 9' x 9'			
≥ 0.5' < 3'	F	≥ 0.5' < 3'	F
3' < 14'	C	3' < 14'	C
14' < 20'	D	14' < 20'	D
20' < 26'	E	20' < 26'	E
26' - 40'	G	26' - 40'	G

WALL DESIGNS - RECTANGULAR STRUCTURES

VERTICAL REINFORCING		HORIZONTAL REINFORCING	
WALL DEPTH	SCHEDULE	WALL DEPTH	SCHEDULE
SIZE: 3'-6" * SEE NOTE BELOW			
≥ 1.17' - 40'	A	≥ 1.17' - 40'	B
SIZE: 4'-0"			
≥ 1.17' - 40'	A	≥ 1.17' - 40'	B
SIZE: 5'-0"			
≥ 1.17' - 40'	A	≥ 1.17' < 33'	B
		33' - 40'	C
SIZE: 6'-0"			
≥ 1.17' - 40'	A	≥ 1.17' < 22'	B
		22' - 40'	C
SIZE: 7'-0"			
≥ 1.17' - 40'	A	≥ 1.17' < 15'	B
		15' < 25'	C
		25' - 40'	D
SIZE: 8'-0"			
≥ 1.17' - 40'	A	≥ 1.17' < 11'	B
		11' < 19'	C
		19' < 29'	D
		29' - 40'	F
SIZE: 9'-0"			
≥ 1.17' - 40'	A	≥ 1.17' < 15'	C
		15' < 22'	D
		22' - 40'	F

SIZE is the inside length of a structure wall.

* Precast structures 3'-6" x 3'-6" maybe cast with 6" walls to depths of 15'. See Index 201

SLAB DESIGNS - ROUND STRUCTURES

SLAB DEPTH	SLAB THICKNESS	REINFORCING (2 WAYS) SCHEDULE
SIZE: 3'-6"		
≥ 0.5' - 40'	8"	C
SIZE: 4'-0"		
≥ 0.5' - 40'	8"	C
SIZE: 5'-0"		
≥ 0.5' < 30'	8"	C
30' - 40'	8"	D
SIZE: 6'-0"		
≥ 0.5' < 8'	8"	B
8' < 18'	8"	C
18' < 30'	8"	D
30' < 37'	8"	E
37' - 40'	8"	G
SIZE: 8'-0"		
≥ 0.5' < 9'	10"	C
9' < 15'	10"	D
15' < 23'	10"	E
23' < 33'	12"	E
33' - 40'	12"	G
SIZE: 10'-0"		
≥ 0.5' < 6'	10"	C
6' < 11'	10"	D
11' < 17'	10"	E
17' < 23'	12"	E
23' - 40'	12"	G
SIZE: 12'-0"		
≥ 0.5' < 6'	12"	C
6' < 11'	12"	D
11' < 16'	12"	E
16' < 20'	14"	E
20' - 40'	14"	G

GENERAL NOTES

1. Slab reinforcement is appropriate for top, intermediate, and bottom slabs.
2. Slab depth is measured from finished grade to top of slab.
3. Wall design depth is measured to the top of the bottom slab for boxes and to the top of the intermediate slab for risers.
4. Wall height is the distance between top of lower slab to bottom of upper slab.

REINFORCING SCHEDULE

SCHEDULE	GRADE 60 STEEL OR 65 KSI (WIRE FABRIC) in^2/ft
A	0.20
B	0.24
C	0.37
D	0.53
E	0.73
F	1.06
G	1.45

STATE OF FLORIDA DEPARTMENT OF TRANSPORTATION
ROAD DESIGN

STRUCTURE BOTTOMS TYPE J AND P

	Names	Dates
Designed By		
Drawn By	dds	05/86
Checked By	JBW	05/86
F.H.W.A. Approved:		11/07/86

Approved By: J. A. McLaurine
State Drainage Engineer

Revision No.	Sheet No.	Index No.
94	2 of 2	200

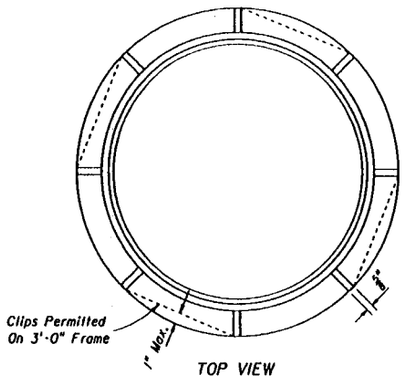

TYPE I

For Manholes

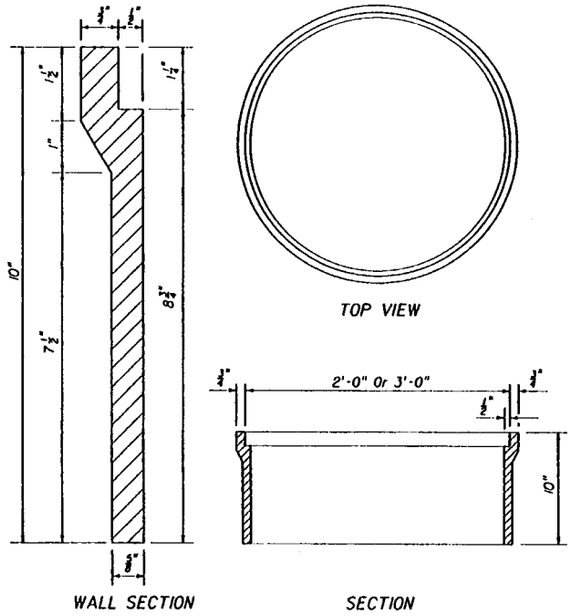

TYPE II

For Curb Inlets Types 1, 2, 3, & 4

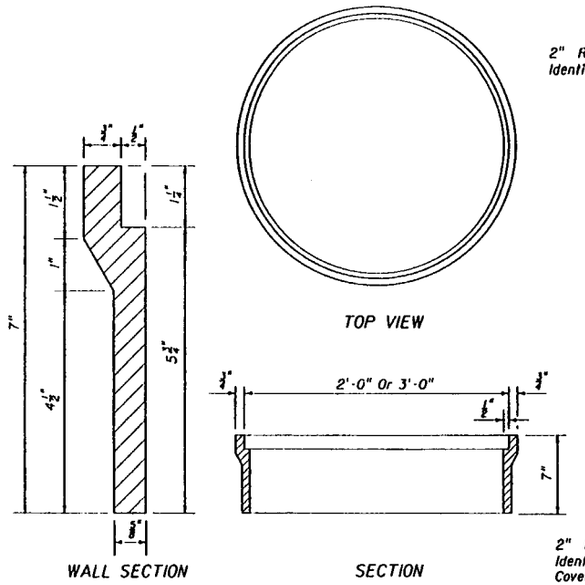

TYPE III

For Curb Inlets Types 7 & 8

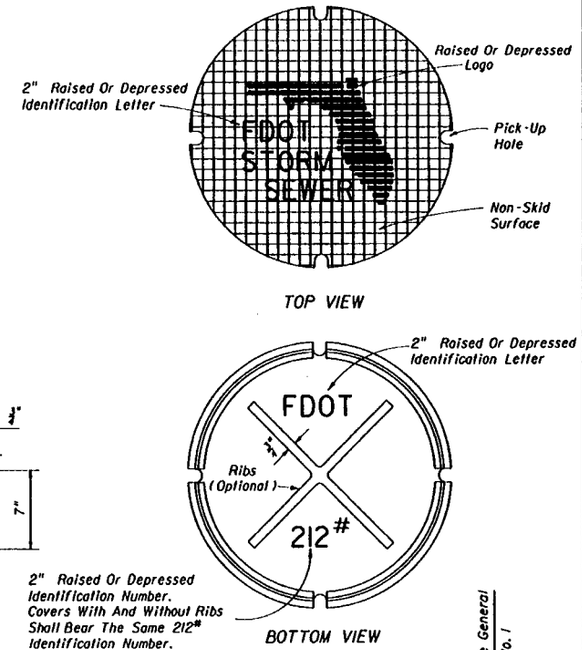

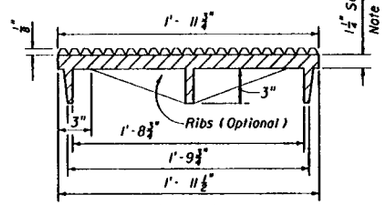

COVER FOR ALL FRAMES

WEIGHT OF CASTINGS						
Frame Type	2' OPENING		3' OPENING			
	Frame	Cover (Std.)	Frame	2-Piece Cover		
				Inside	Outside	Total
I	155 Lbs.	190 Lbs.	220 Lbs.	190 Lbs.	220 Lbs.	410 Lbs.
II	145 Lbs.	190 Lbs.	255 Lbs.	190 Lbs.	220 Lbs.	410 Lbs.
III	90 Lbs.	190 Lbs.	180 Lbs.	190 Lbs.	220 Lbs.	410 Lbs.

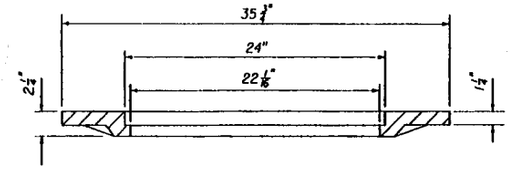

2-PIECE COVER

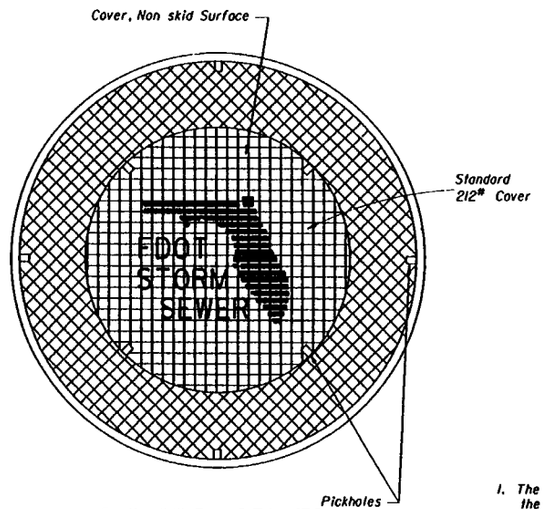

For Use With Types I, II And III Frames With 3'-0" Opening

2-PIECE COVER

CAST IRON FRAMES

NOTES (FRAMES, AND COVER)

1. The 212# cover is to be used for all frames Types I, II, III and the 2-Piece Cover, and is the replacement cover for all previous frames with 1¼" deep seats (traffic type). The 185 lb. cover (non-traffic type), 1984 Roadway and Traffic Design Standards Index No. 201, is the replacement cover for existing frames with ¼" deep seats. Installation of frames with ½" deep seats is not permitted. The 185 lb. covers are to be placed in existing ¼" deep seated frames only when specifically called for in the plans or as specifically directed by the Engineer.

STATE OF FLORIDA DEPARTMENT OF TRANSPORTATION
ROAD DESIGN

SUPPLEMENTARY DETAILS FOR MANHOLES AND INLETS

	Names	Dates
Designed By		
Drawn By	HSD	06/82
Checked By	JBW	06/82
F.H.W.A. Approved:		09/23/82

Approved By J. A. McLemore
State Drainage Engineer

Revision No.	Sheet No.	Index No.
94	1 of 6	201

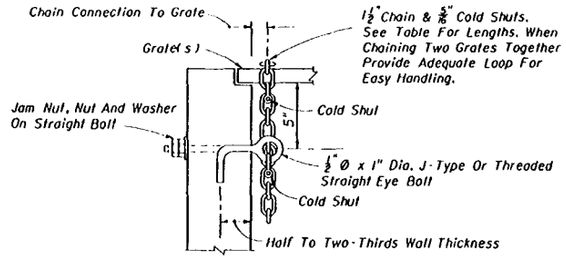

Note: When Alternate G grate is specified, the chain, bolt, nuts, washer and cold shuts shall be galvanized in accordance with the specifications for the grate.

Cost of eye bolt and chain to be included in the contract unit price for inlets.

EYE BOLT AND CHAIN REQUIREMENTS				
Index Number	Inlet Type	Eye Bolts	Length Of Chain	Handling & Remarks
217	(MB) 1	1	4'-0"	Slide & Spin
	(MB) 2	1	4'-0"	Slide & Spin
	(MB) 3	2	2 @ 4'-0"	Slide & Spin
	(MB) 4	2	2 @ 4'-0"	Slide & Spin
	(MB) 5	2	2 @ 4'-0"	Slide & Spin
218	(BW)	1	3'-8"	Slide Or Slide & Spin
219	(BW, RGD)	1	4'-0"	Slide & Spin
220	S	1	4'-0"	Slide & Spin
221	V	1	4'-0"	Slide & Spin
230	A	1	3'-0"	Slide
231	B	1	5'-0"	Slide & Spin
232	C	1	2'-6"	Slide & Spin
	D	1	2'-6"	Slide & Spin
	E	2	2 @ 2'-6"	Slide & Spin
	H	2	2 @ 2'-6"	Flip Ctr. Grate and Slide & Spin Single Free Grate
			1 @ 1'-6"	Ctr. Grate To One End Grate
233	F	1	3'-6"	Flip Or Slide & Spin
	G	1	6'-0"	Slide
			2'-0"	Lifting Loop
234	J	1	4'-0"	Slide & Spin

EYE BOLT AND CHAIN FOR LOCKING GRATES TO INLETS

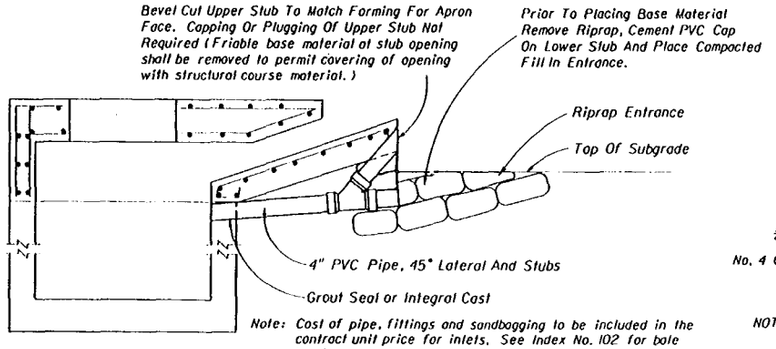

Note: Cost of pipe, fittings and sandbagging to be included in the contract unit price for inlets. See Index No. 102 for bale barrier protection at inlet.

TEMPORARY DRAINS FOR SUBGRADE AND BASE

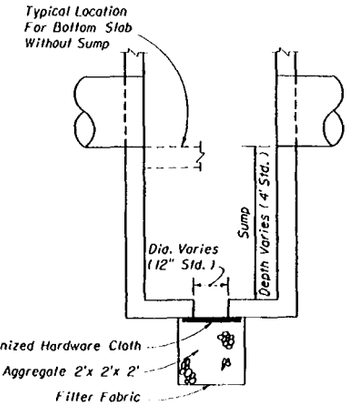

NOTE: Sump bottom appropriate for all manhole and inlet types. Cost for sump bottom to be included in the contract unit price for inlet or manhole.

SUMP BOTTOM

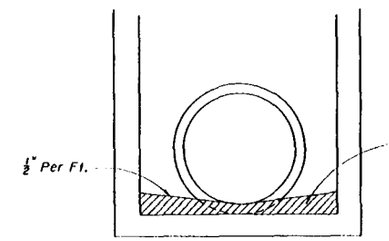

Note: Grout to consist of 3:1 Sand-Cement Mixture or any Class Concrete.

FOR ALL STRUCTURES UNLESS EXCLUDED BY SPECIAL DETAIL

DRAINAGE STRUCTURE INVERT

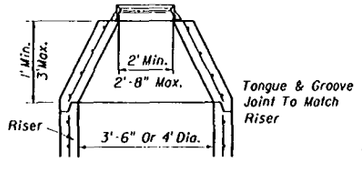

PRECAST CONCENTRIC CONE

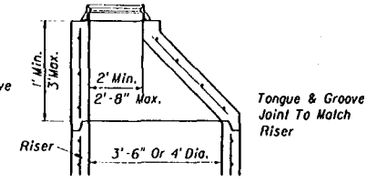

PRECAST ECCENTRIC CONE

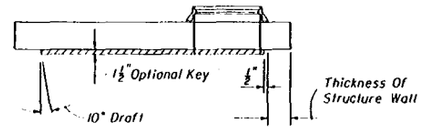

SECTION

Note: See Slab Designs Index 200.

TYPE 7

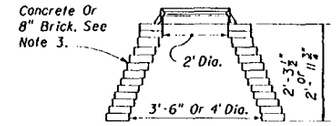

BRICK OR CONCRETE

TYPE 8

MANHOLES

MANHOLE TOPS

NOTES (TOPS)

1. Manhole top Type 7 slabs shall be of Class II concrete. Concrete as specified in ASTM C-478 may be used for precast units; see General Note No. 3.
2. Manhole top Type 7 slabs may be of cast-in-place or precast construction. The optional key is for precast tops and in lieu of dowels. Frame and slab openings are to be omitted when top is used over a junction box. Frames can be adjusted with from one to six courses of brick.
3. Manhole top Type 8 may be of cast-in-place or precast concrete construction or brick construction. For concrete construction, the concrete and steel reinforcement shall be the same as the supporting wall unit. An eccentric cone may be used.
4. Manhole tops shall be secured to structures by optional construction joints as shown on Sheet 3 of 6.

STATE OF FLORIDA DEPARTMENT OF TRANSPORTATION
ROAD DESIGN

SUPPLEMENTARY DETAILS FOR MANHOLES AND INLETS

	Names	Dates
Designed By	HLB	04/75
Drawn By		
Checked By	LWF	04/75
F.H.W.A. Approved:		10/01/80

Approved By: S. D. McLemore, State Drainage Engineer

Revision No.	Sheet No.	Index No.
94	2 of 6	201

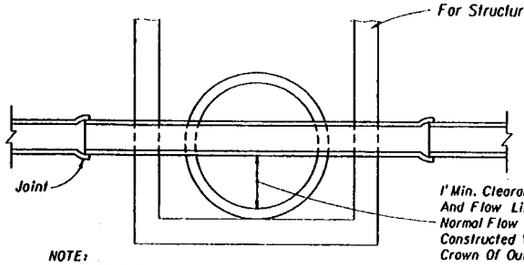

NOTE:
1. No joints allowed inside the Condition I structure.

CONDITION I

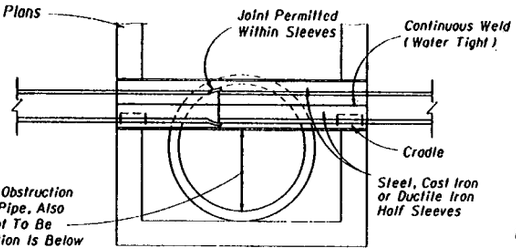

NOTE:
1. Only water mains will be allowed to pass through a Condition II structure.

CONDITION II

DESIGNERS NOTE

"Sumped" conflict manholes shall not be used unless the system is hydraulically designed to take in account the headloss generated if the sump is completely blocked. "Sumped" conflict manholes must be larger than those normally provided.

UTILITY PIPES THRU STORM SEWER STRUCTURES

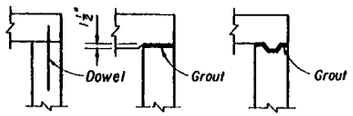

TOP SLABS TO WALLS

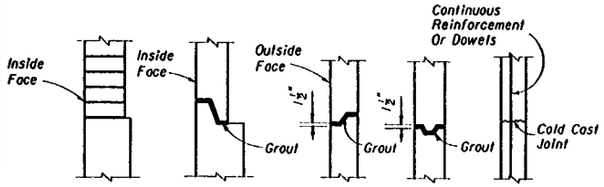

WALL JOINTS

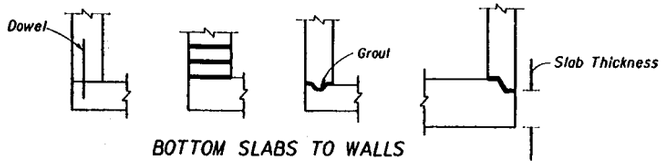

BOTTOM SLABS TO WALLS

1. One or more types of joints may be used in a single structure, except brick wall structure. Brick wall construction is permitted on circular units only.
2. All grouted joints are to have a maximum thickness of 1".
3. Keyways are to be a minimum of 1½" deep.
4. Joint dowels are to be #4 bars, 12" long with a minimum of 6 bars per joint for circular structures approximately evenly spaced, and, 2 bars per side at approximate quarter points for rectangular structures.
5. Minimum cover on reinforcing bars is 1½".
6. Joints between wall segments and between wall segments and top or bottom slabs may be sealed either by preformed plastic gasket material using the procedures given in Section 430-7.3 or by grout.
7. Approved product inserts may be used in lieu of dowel embedment.

OPTIONAL CONSTRUCTION JOINTS

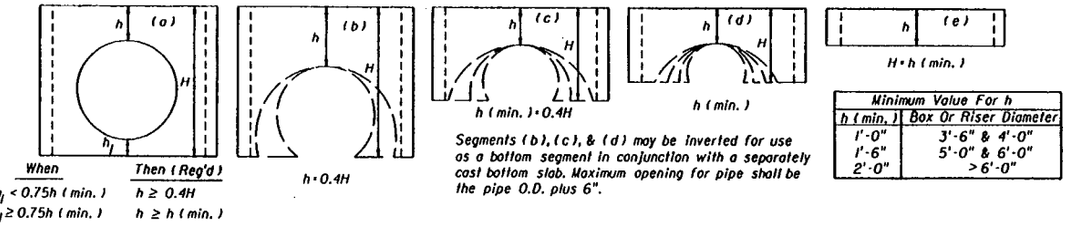

When $h_1 < 0.75h$ (min.) Then (Req'd) $h \geq 0.4H$

When $h_1 \geq 0.75h$ (min.) Then (Req'd) $h \geq h$ (min.)

Segments (b), (c), & (d) may be inverted for use as a bottom segment in conjunction with a separately cast bottom slab. Maximum opening for pipe shall be the pipe O.D. plus 6".

Minimum Value For h	
h (min.)	Box Or Riser Diameter
1'-0"	3'-6" & 4'-0"
1'-6"	5'-0" & 6'-0"
2'-0"	> 6'-0"

TOP OR BOTTOM SEGMENTS WITH CONSTRUCTION JOINTS OTHER THAN DOWEL OPTION

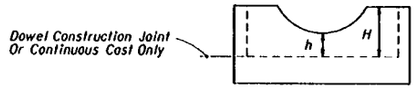

h ≥ zero

H ≥ h

(Minimums Tabulated Above Do Not Apply)

TOP OR BOTTOM SEGMENT FOR DOWEL CONSTRUCTION JOINTS OR CONTINUOUS CAST SEGMENTS

COMPARATIVE SIDE VIEWS

MINIMUM DIMENSIONS FOR BOX AND RISER SEGMENTS

GENERAL NOTES

1. For square or rectangular precast drainage structures, either deformed or smooth welded wire fabric may be used provided:
   a) The smooth welded wire fabric shall comply with ASTM A-185, and deformed welded wire fabric shall comply with ASTM A-497.
   b) Width and length of the unit is four times the spacing of the cross wires.
   c) Wire fabric shall be continuous around the box, spliced at quarter point(s) with overlap of not less than the spacing of the cross wires plus two inches.
2. For equivalent steel areas for precast drainage structures, see Sheet 4 of 6.
3. Horizontal steel in the walls of rectangular structures shall be lapped a minimum of 24 bar diameter at corners.
4. Welding of splices and laps is permitted. The requirements and restrictions placed on welding in AASHTO M-259 shall apply.
5. Rebar straight end embeddment or peripheral reinforcement may be used in lieu of ACI standard hooks for top and bottom slabs except when hooks are specifically called for in plans or standard drawings.
6. Concrete as specified in ASTM C-478, (4000 psi) may be used in lieu of Class I and Class II concrete in precast items manufactured in plants which are under the 'Standard Operating Procedures For The Inspection Of Precast Drainage Products'.
7. Maximum opening for pipe shall be the pipe o.d. plus 6". Mortar used to seal the pipe into the opening will be of such a mix that shrinkage will not cause leakage into or out of the structure.
8. For pay item purposes, the height used to determine if a drainage structure is less than or greater than 10 feet shall be computed using (a) the elevation of the top of the manhole lid, (b) the grate elevation or the theoretical gutter grade elevation of an inlet, or (c) the outside top elevation of a junction box less the flow line elevation of the lowest pipe or to top of sump floor.

STATE OF FLORIDA DEPARTMENT OF TRANSPORTATION
ROAD DESIGN

SUPPLEMENTARY DETAILS FOR MANHOLES AND INLETS

	Names	Dates
Designed By	HLB	04/75
Drawn By		
Checked By	LWF	04/75
F.H.W.A. Approved:		10/07/80

Approved By: A. O. McInnore, State Drainage Engineer

Revision No.	Sheet No.	Index No.
94	3 of 6	201

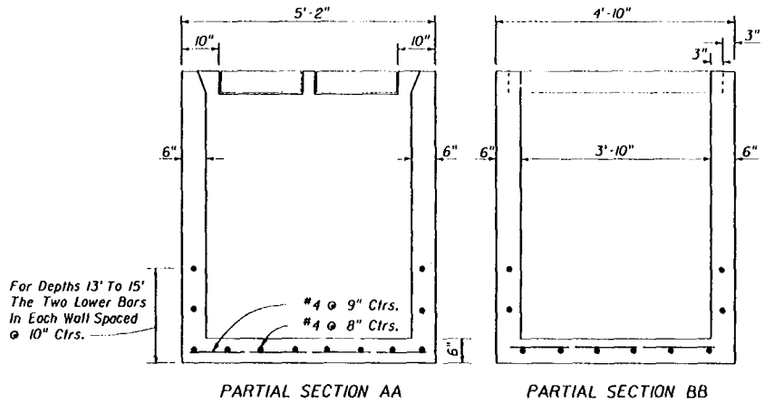

DITCH BOTTOM INLET TYPE B

INDEX 231

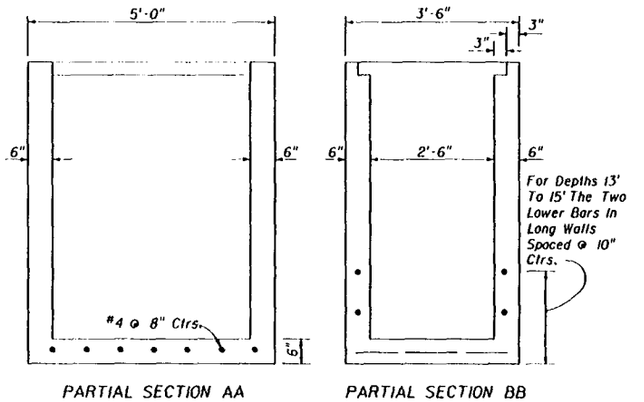

DITCH BOTTOM INLET TYPE F

INDEX 233

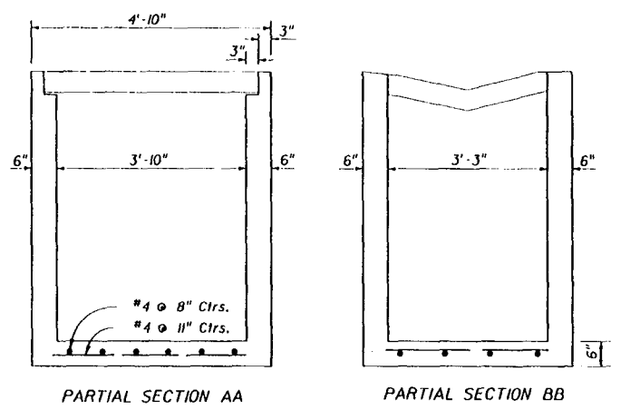

GUTTER INLET TYPE S

INDEX 220

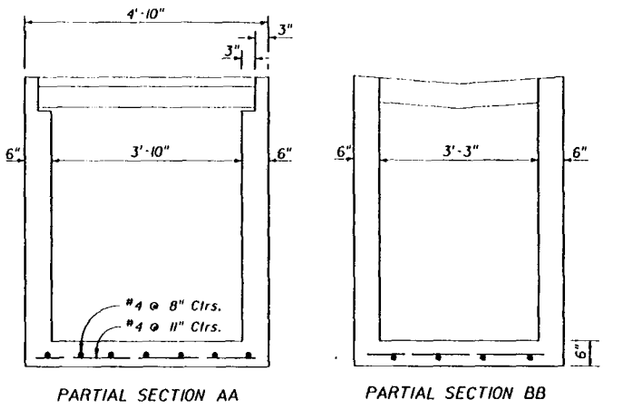

GUTTER INLET TYPE J & V

INDEX 221 & 234

NOTES FOR THIN-WALL PRECAST OPTIONS

1. The details on Sheets 4, 5 & 6 are optional for precast inlet construction up to depths of 15'. These inlets can be used with Alt. "B" Bottoms, Index 200. Cast-in-place construction must adhere to the details contained on the referenced indexes.
2. Only the dimensions and reinforcement changes or other modifications are indicated. For all other dimensions and details, the referenced index drawings apply. When these precast units are used inconjunction with Alt "B" Structure Bottoms, Index 200, the interior dimensions of an Alt. "B" Bottom can be adjusted to reflect these inlet interior dimensions.
3. Concrete which meets the requirements of ASTM C-478 shall be used for structures constructed to these details.
4. Reinforcement can be either deformed bar reinforcement or welded wire fabric. Bar reinforcement other than 40 KSI may be used, however only two grades are recognized; Grade 40 and Grade 60. Welded wire fabric, including deformed welded wire fabric, will be recognized as having a design strength of 65 KSI. The area of reinforcement required may be reduced in accordance with the Equivalent Steel Area Table provided. For bars and spacings not given, the steel area required can be determined by the following equations:

$$\text{Grade 60 Steel Area} = A_{s\,60} = \frac{40}{60} \times A_{s\,40}$$

$$\text{Welded Wire Fabric Steel Area} = A_{s\,65} = \frac{40}{65} \times A_{s\,40}$$

In no case will fabric with wires smaller than W3.1 or spacings greater than 8" be permitted. Bar reinforcement shall show the minimum yield designation grade mark of either the number 60 or one (1) grade mark line to be acceptable at the higher value. Maximum bar spacing shall not be greater than two (2) times the slab thickness with a maximum spacing of 12" or three (3) times the wall thickness, with a maximum spacing of 18".

EQUIVALENT STEEL AREA TABLE

GRADE 40 REINFORCING BAR		EQUIVALENT GRADE 60 REINFORCING BAR		EQUIVALENT 65 KSI WELDED WIRE FABRIC	
Bar Size & Spacing	Steel Area	Bar Size & Spacing	Min. Steel Area	Style Designation	Min. Steel Area
#4 @ 12" CCEW	0.20	#3 @ 9½" CCEW	.1333	3" x 3" - W3.1 x W3.1 or 4" x 4" - W4.5 x W4.5 or 6" x 6" - W6.5 x W6.5	.1230
#4 @ 9" CCEW	0.267	#4 @ 13½" CCEW or #3 @ 7" CCEW	.1778	3" x 3" - W4.5 x W4.5 or 4" x 4" - W5.5 x W5.5 or 6" x 6" - W8.5 x W8.5	.1641
#6 @ 6" CCEW	0.88	#5 @ 6" CCEW or #6 @ 9" CCEW	.5867	4" x 4" - W20 x W20 or 6" x 6" - W30 x W30	.5415
#7 @ 6" CCEW	1.20	#6 @ 6½" CCEW or #7 @ 9" CCEW	.80	4" x 4" - W26 x W26	.7385

STATE OF FLORIDA DEPARTMENT OF TRANSPORTATION
ROAD DESIGN

SUPPLEMENTARY DETAILS FOR MANHOLES AND INLETS

	Names	Dates
Designed By	EGR/JGW	09/86
Drawn By	WPH/dds	09/86
Checked By	EGR	09/86
F.H.W.A. Approved:		11/07/86

Approved By: [signature]
State Drainage Engineer

Revision No.	Sheet No.	Index No.
92	4 of 6	201

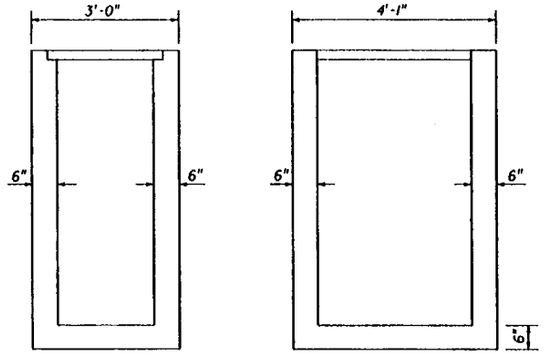

PARTIAL SECTION BB PARTIAL SECTION CC

DITCH BOTTOM INLET C

INDEX 232

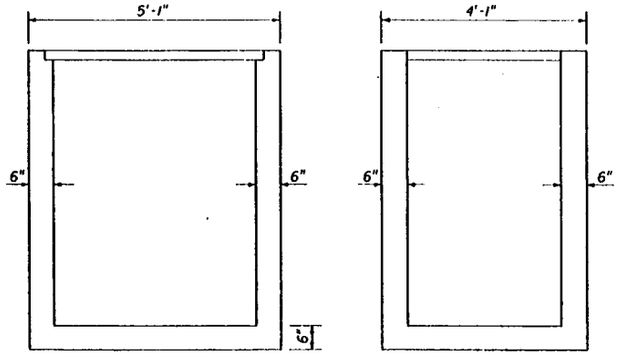

PARTIAL SECTION BB PARTIAL SECTION CC

DITCH BOTTOM INLET D

INDEX 232

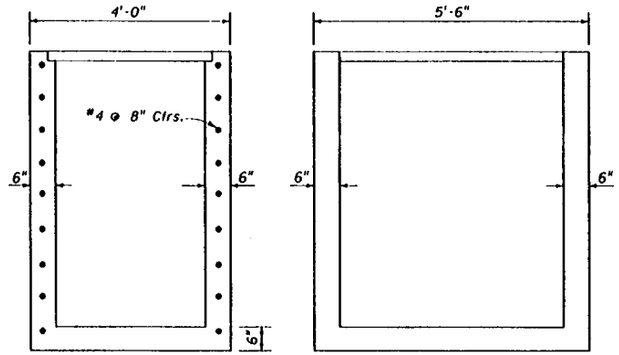

PARTIAL SECTION BB PARTIAL SECTION CC

DITCH BOTTOM INLET E

INDEX 232

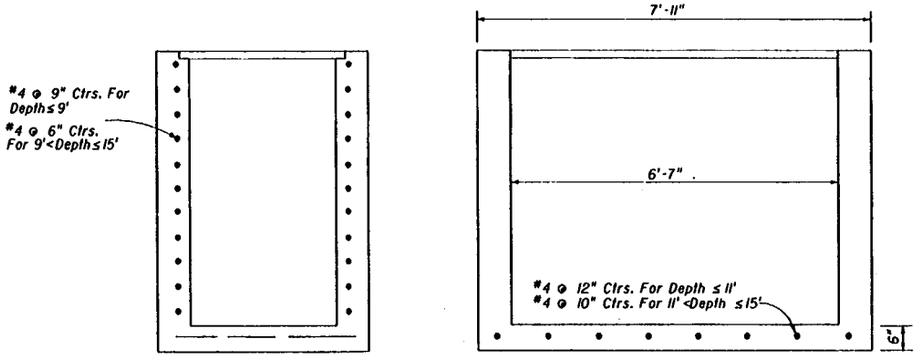

PARTIAL SECTION BB PARTIAL SECTION CC

DITCH BOTTOM INLET H (3-GRATE)

INDEX 232

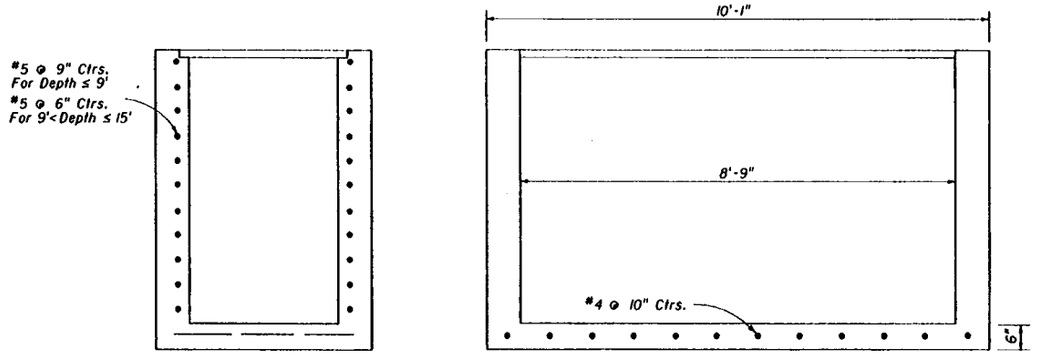

PARTIAL SECTION BB PARTIAL SECTION CC

DITCH BOTTOM INLET H (4-GRATE)

INDEX 232

STATE OF FLORIDA DEPARTMENT OF TRANSPORTATION
ROAD DESIGN

SUPPLEMENTARY DETAILS FOR MANHOLES AND INLETS

	Names	Dates
Designed By	EGR/JGW	09/86
Drawn By	WPH/dds	09/86
Checked By	EGR	09/86
F.H.W.A. Approved:		11/07/86

Approved By E G Rice
State Drainage Engineer

Revision No.	Sheet No.	Index No.
90	5 of 6	201

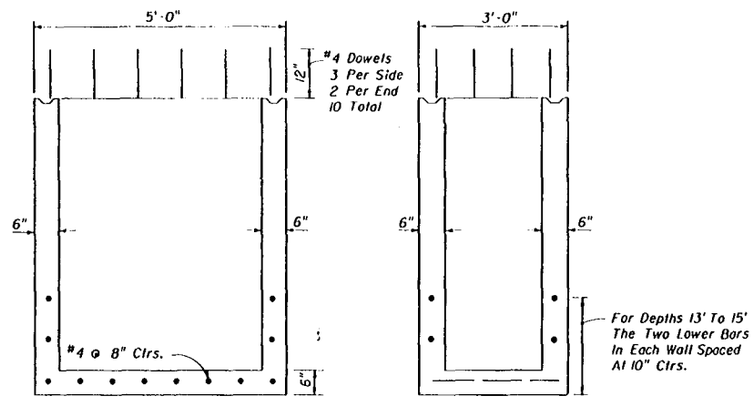

PARTIAL SECTION AA PARTIAL SECTION BB

MEDIAN BARRIER INLET TYPES 1 & 2

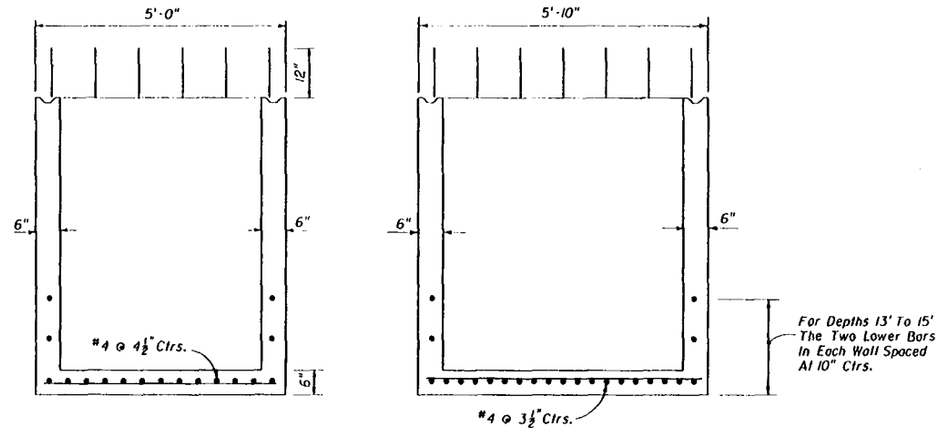

PARTIAL SECTION AA PARTIAL SECTION BB

MEDIAN BARRIER INLET TYPES 3,4, & 5

INDEX 217

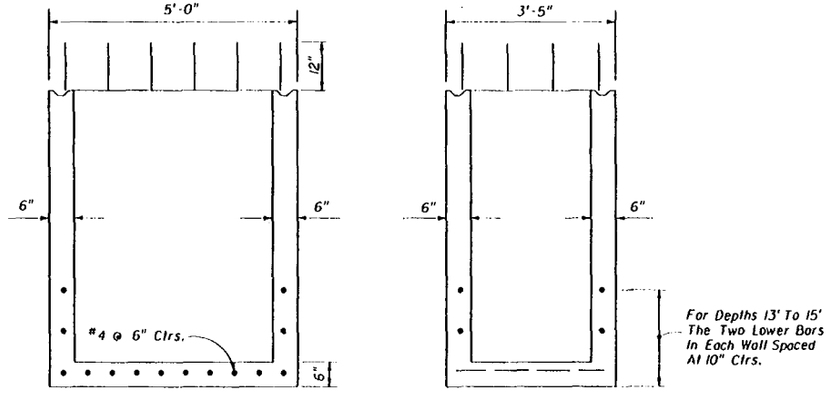

PARTIAL SECTION AA PARTIAL SECTION BB

BARRIER WALL (RIGID) (C & G)

INDEX 219

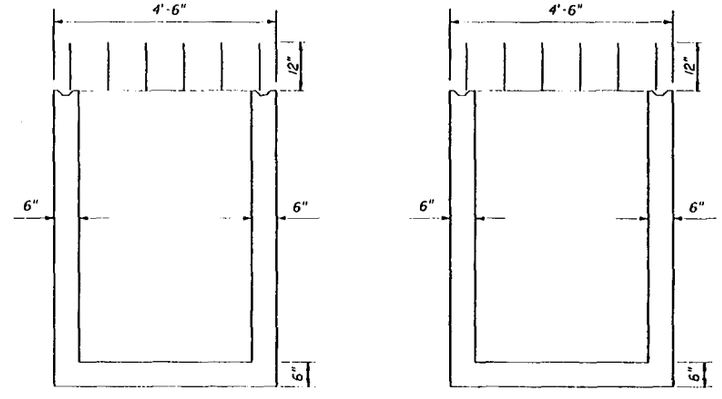

PARTIAL SECTION AA PARTIAL SECTION BB

STRUCTURE BOTTOM TYPE P

SIZE 3'-6" x 3'-6"

INDEX 200

STATE OF FLORIDA DEPARTMENT OF TRANSPORTATION
ROAD DESIGN

SUPPLEMENTARY DETAILS FOR MANHOLES AND INLETS

	Names	Dates
Designed By		
Drawn By		
Checked By		
F.H.W.A. Approved:		

Approved By: S. A. McLemore, State Drainage Engineer

Revision No.	Sheet No.	Index No.
94	6 of 6	201

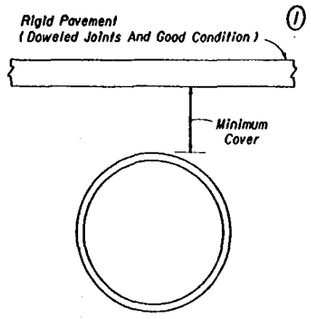

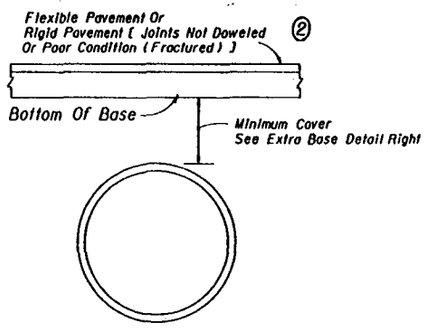

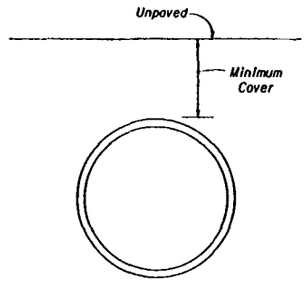

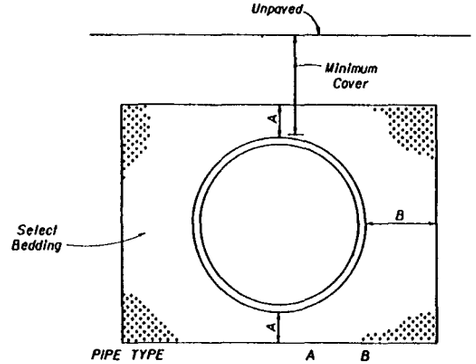

PIPE TYPE	A	B
Concrete	3"	12"
Corrugated Steel	6"	$\frac{D}{8}$ but not less than 12"
Corrugated Aluminum	6"	$\frac{D}{8}$ but not less than 18"
Corrugated Polyethlyene	6"	24"

Extra Base Required When This Dimension Is Less Than 12" For Concrete Pipe, 15" For Corrugated Steel Pipe And 18" For Corrugated Aluminum Pipe And Corrugated Polyethylene Pipe; See Application Note Below.

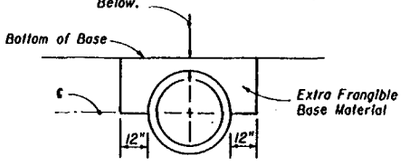

The cost of furnishing and installing the extra base material shall be included in the cost of the culvert.

FRANGIBLE BASE

Extra Material Shown Required When This Dimension Is Less Than 12" For Concrete Pipe, 15" For Corrugated Steel Pipe And 18" For Corrugated Aluminum Pipe And Corrugated Polyethylene Pipe; See Application Note Below.

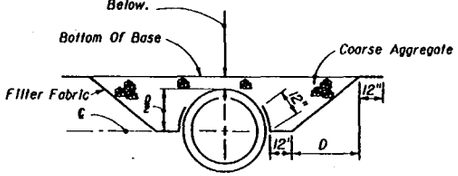

The Contractor shall furnish and install coarse aggregate on filter fabric. The coarse aggregate shall be placed in 6 inch lifts and compacted sufficiently as to be firm and unyielding. The coarse aggregate shall be gravel or stone meeting the requirements of Section 901-2 or 901-3 respectively. The gradation shall meet Section 901-6, Grades 4, 467, 5, 56, or 57 unless restricted in the plans. The filter fabric shall be Type D-3 (See Index 199). The cost of furnishing and installing the coarse aggregate and filter fabric shall be included in the cost of the culvert.

ASPHALTIC CONCRETE BASE

Note: Extra base is required when cross culverts are located on facilities subject to high speed traffic (> 45 mph) or high traffic volumes (> 1600 ADT) and the cover is within the ranges specified in the notations above.

EXTRA BASE FOR CROSS CULVERTS UNDER FLEXIBLE PAVEMENTS

RIGID PAVEMENT ①

PIPE TYPE/SIZE & SHAPE	MINIMUM COVER
CONCRETE	
All Round & Elliptical	6"
CORRUGATED STEEL	
15"-72" Round & Arch Equiv.	9"
78" & Larger Round & Arch Eq.	15"
CORRUGATED ALUMINUM	
15"-72" Round & Arch Equiv.	9"
78"-102" Round & Arch Equiv.	15"
108" & Larger Round	18"
CORRUGATED POLYETHYLENE	
15"-30" Round	9"
POLYVINYL CHLORIDE	
15"-30" Round	9"

FLEXIBLE PAVEMENT ②

PIPE TYPE/SIZE & SHAPE	MINIMUM COVER
CONCRETE	
All Round & Elliptical	6"
CORRUGATED STEEL	
12"-30" Round	12" (12")
36"-48" Round	18" (12") (15")
54"-72" Round	21" (15") (18")
78"-96" Round	(18") (27")
102 & Larger Round	(24") (33")
15"-30" Arch Equivalent	18" (18")
36"-48" Arch Equivalent	24" (12") (18")
54"-72" Arch Equivalent	27" (15") (24")
78"-96" Arch Equivalent	(18") (30")
102" & Larger Arch Equivalent	(24")
CORRUGATED ALUMINUM	
12"-24" Round	15" (12")
30"-48" Round	18" (12") (18")
54"-72" Round	24" (18") (24")
78"-102" Round	(24") (30")
108" & Larger	(30")
15"-24" Arch Equivalent	24" (21")
30"-48" Arch Equivalent	27" (15") (24")
54"-72" Arch Equivalent	30" (18") (27")
78"-90" Arch Equivalent	(24") (30")
96"-102" Arch Equivalent	(30")
CORRUGATED POLYETHYLENE	
15"-30" Round	15"
POLYVINYL CHLORIDE	
15"-30" Round	15"

UNPAVED W/O SELECT BEDDING

PIPE TYPE/SIZE & SHAPE	MINIMUM COVER	
	COMM	NON COMM
CONCRETE		
All Round & Elliptical	12"	9"
CORRUGATED STEEL		
12"-30" Round	24" (18")	18" (15")
36"-48" Round	24" (18") (21")	18" (12") (15")
54"-72" Round	24" (18") (21")	18" (12") (15")
78"-96" Round	(24") (30")	(18") (27")
102 & Larger Round	(30") (36")	(24") (33")
15"-30" Arch Equivalent	24" (18")	18" (15")
36"-48" Arch Equivalent	30" (18") (24")	24" (12") (18")
54"-72" Arch Equivalent	36" (24") (30")	30" (18") (24")
78"-96" Arch Equivalent	(30") (36")	(24") (30")
102" & Larger Arch Equivalent	(36")	(30")
CORRUGATED ALUMINUM		
12"-24" Round	27" (24")	21" (18")
30"-48" Round	30" (24") (27")	24" (18") (21")
54"-72" Round	36" (30") (33")	30" (24") (27")
78"-102" Round	(36") (42")	(30") (36")
108" & Larger	42"	36"
15"-24" Arch Equivalent	36" (33")	27" (24")
30"-48" Arch Equivalent	39" (27") (36")	33" (21") (30")
54"-72" Arch Equivalent	42" (30") (36")	36" (24") (30")
78"-90" Arch Equivalent	(36") (42")	(30") (36")
96"-102" Arch Equivalent	(42")	(36")
CORRUGATED POLYETHYLENE		
15"-30" Round	27"	21"
POLYVINYL CHLORIDE		
15"-30" Round	27"	21"

UNPAVED WITH SELECT BEDDING

PIPE TYPE/SIZE & SHAPE	MINIMUM COVER	
	COMM	NON COMM
CONCRETE		
All Round & Elliptical	9"	6"
CORRUGATED STEEL		
12"-30" Round	18" (15")	12" (12")
36"-48" Round	18" (12") (15")	12" (12") (12")
54"-72" Round	18" (12") (15")	15" (12") (12")
78"-96" Round	(18") (27")	(12") (12")
102 & Larger Round	24" (33")	18" (21")
15"-30" Arch Equivalent	18" (18")	12" (12")
36"-48" Arch Equivalent	24" (12") (21")	18" (12") (15")
54"-72" Arch Equivalent	30" (18") (24")	24" (12") (18")
78"-96" Arch Equivalent	(24") (27")	(18") (21")
102" & Larger Arch Equivalent	(30")	(24")
CORRUGATED ALUMINUM		
12"-24" Round	21" (21")	15" (15")
30"-48" Round	24" (18") (21")	18" (12") (15")
54"-72" Round	30" (24") (27")	24" (18") (21")
78"-102" Round	(30") (33")	(24") (27")
108" & Larger	36"	30"
15"-24" Arch Equivalent	27" (24")	24" (21")
30"-48" Arch Equivalent	33" (21") (27")	27" (15") (21")
54"-72" Arch Equivalent	36" (24") (30")	30" (18") (24")
78"-90" Arch Equivalent	(30") (36")	(24") (30")
96"-102" Arch Equivalent	(36")	(30")
CORRUGATED POLYETHYLENE		
15"-30" Round	21"	15"
POLYVINYL CHLORIDE		
15"-30" Round	21"	15"

GENERAL NOTES

1. The tabulated values are recommended minimum dimensions to withstand anticipated highway traffic loads. Additional cover may be required to support construction equipment loads or highway traffic loads before pavement is completed. Some size thickness combinations may require minimum cover greater than those listed above. See Sheets 2, 3, & 4.
2. Less than the tabulated minimum cover may be used provided suitable method (s) are detailed in the plans. These features may include but are not limited to extra strength pipe, select bedding, select backfill and encasement,
3. Values shown in parentheses are for 3" x 1" corrugations which must be specified to utilize the lesser cover.
4. The tabulated values in the brackets [ ] apply to Type I-R (Spiral Rib) pipe which must be specified to utilize the lesser cover.
5. Commercial and noncommercial refers to typical vehicular utilization of unpaved roads and drives where rutting and cover displacement may occur.

MINIMUM COVER FOR CONCRETE, STEEL, ALUMINUM AND POLYETHYLENE PIPE

STATE OF FLORIDA DEPARTMENT OF TRANSPORTATION
ROAD DESIGN

COVER HEIGHT

	Name	Date
Designed By	EGR	09/84
Drawn By	DAE	09/84
Checked By	EGR	09/84
F.H.W.A. Approved: 09/21/84		

Approved By A. D. McLemore
State Roadway Engineer

Revision No.	Sheet No.	Index No.
94	1 of 4	205

ROUND PIPE DIMENSIONS

Equiv. Dia. (In.)	Area (Sq. Ft.)	Wall Thickness (In.)* Classes II, III, IV, V		
		A WALL	B WALL	C WALL
12	0.8	1¾	2	NA
15	1.2	1⅞	2¼	NA
18	1.8	2	2½	NA
24	3.1	2½	3	3¾
30	4.9	2¾	3½	4¼
36	7.1	3	4	4¾
42	9.6	3½	4½	5¼
48	12.6	4	5	5¾
54	15.9	4½	5½	6¼
60	19.6	5	6	6¾
66	23.8	5½	6½	7¼
72	28.3	6	7	7¾
78	33.2	6½	7½	8¼
84	38.5	7	8	8¾
90	44.4	7½	8½	9¼
96	50.3	8	9	9¾
102	56.7	8½	9½	10¼
108	63.7	9	10	10¾
114	70.9	9½	—	—
120	78.5	10	—	—

* For Informational Purposes Only
Do Not Specify Wall Thickness
Option B Wall Is Industry Standard

ROUND PIPE INSTALLATIONS
(All Sizes)

Design	Height Of Fill (Ft.)	Pipe Class	Bedding Class	Projection Condition
Standard	1-8	II	C	Positive
	9-14	III	C	Positive
	15-22	IV	C	Positive
	23-26*	V *	C *	Positive
Modified Bedding	27-32	V	B	Positive
Modified Trench	33-43	V	B	Zero
	44-70	V	B	Negative
	71+	V	B	Imperfect

Pipe Class II — D-Load = 1000 Lbs/Ft/Ft (.01" Crack)
D-Load = 1500 Lbs/Ft/Ft (Ultimate)

Pipe Class III — D-Load = 1350 Lbs/Ft/Ft (.01" Crack)
D-Load = 2000 Lbs/Ft/Ft (Ultimate)

Pipe Class IV — D-Load = 2000 Lbs/Ft/Ft (.01" Crack)
D-Load = 3000 Lbs/Ft/Ft (Ultimate)

Pipe Class V — D-Load = 3000 Lbs/Ft/Ft (.01" Crack)
D-Load = 3750 Lbs/Ft/Ft (Ultimate)

* Under some conditions, the use of Class IV pipe and Class B bedding should be considered in lieu of Class V with Class C bedding.

ELLIPTICAL PIPE DIMENSIONS

Nominal Dimensions				Equiv. Dia. (In.)	Area (Sq.Ft.)	Wall Thickness (In.)
Horiz.		Vert.				
Rise (In.)	Span (In.)	Rise (In.)	Span (In.)			Classes HE II, III, IV VE II, III, IV
NA	NA	NA	NA	12	NA	NA
12	18	18	12	15	1.3	2½
14	23	23	14	18	1.8	2¾
19	30	30	19	24	3.3	3¼
24	38	38	24	30	5.1	3¾
29	45	45	29	36	7.4	4½
34	53	53	34	42	10.2	5
38	60	60	38	48	12.9	5½
43	68	68	43	54	16.6	6
48	76	76	48	60	20.5	6½
53	83	83	53	66	24.8	7
58	91	91	58	72	29.5	7½
63	98	98	63	78	34.6	8
68	106	106	68	84	40.1	8½
72	113	113	72	90	46.1	9
77	121	121	77	96	52.4	9½
82	128	128	82	102	59.2	10
87	136	136	87	108	66.4	10½
92	143	143	92	114	74.0	11
97	151	151	97	120	82.0	11½

For Informational Purposes Only

ELLIPTICAL PIPE INSTALLATIONS
(All Sizes)

Installation	Height Of Fill (Ft.)	Pipe Class	Bedding Class
Horizontal	1-6*	HE II*	C
	7-10	HE III	C
	11-16	HE IV	C
	17+	Special Design	Modified
Vertical	1-6*	VE II*	C
	7-10	VE III	C
	11-16	VE IV	C
	17+	Special Design	Modified

Pipe Class HE II And VE II — D-Load = 1000 Lbs/Ft/Ft (.01" Crack)
D-Load = 1500 Lbs/Ft/Ft (Ultimate)

Pipe Class HE III And VE III — D-Load = 1350 Lbs/Ft/Ft (.01" Crack)
D-Load = 2000 Lbs/Ft/Ft (Ultimate)

Pipe Class HE IV And VE IV — D-Load = 2000 Lbs/Ft/Ft (.01" Crack)
D-Load = 3000 Lbs/Ft/Ft (Ultimate)

*Note: HE III and VE III pipe required for depths of cover less than 2' for 15", 18" and 24" equivalent.

Note: Height of fill (maximum cover) is measured from top of finished grade to outside top of pipe.

MAXIMUM COVER FOR REINFORCED CONCRETE PIPE ROUND AND ELLIPTICAL

STATE OF FLORIDA DEPARTMENT OF TRANSPORTATION
ROAD DESIGN

COVER HEIGHT

	Names	Dates
Designed By	EGR	09/85
Drawn By	HSD	09/85
Checked By	EGR	09/85

Approved By _____
State Drainage Engineer

Revision No.	Sheet No.	Index No.
90	2 of 4	205

F.H.W.A. Approved

ROUND PIPE - 2⅔" x ½" CORRUGATION

D (In)	Area (Sq. Ft.)	Maximum Height Of Fill (Ft.) Sheet Thickness In Inches (Gage) 0.064 (16)	0.079 (14)	0.109 (12)	0.138 (10)	0.168 (8)	Min. Cover (Ft.)
12	.79	100+	100+	NA	NA	NA	See Sheet 1 of 4
15	1.23	100+	100+	NA	NA	NA	
18	1.77	100+	100+	100+	NA	NA	
21	2.40	100+	100+	100+	NA	NA	
24	3.14	100+	100+	100+	NA	NA	
30	4.91	85	100+	100+	NA	NA	
36	7.1	71+	88	100+	100+	NA	
42	9.6	60+	76	100+	100+	NA	
48	12.6	53	66	93	100+	100+*	
54	16.0	NS	59	82	100+	100+*	
60	19.6	NS	NS	74	95	100+*	
66	23.8	NS	NS	NS	87	100+*	
72	28.3	NS	NS	NS	79	97*	
78	33.2	NS	NS	NS	NS	90*	
84	38.5	NS	NS	NS	NS	83*	

ROUND PIPE - 3" x 1" CORRUGATION

D (In)	Area (Sq. Ft.)	Maximum Height Of Fill (Ft.) Sheet Thickness In Inches (Gage) 0.064 (16)	0.079 (14)	0.109 (12)	0.138 (10)	0.168 (8)	Min. Cover (Ft.)
36	7.1	81	100+	100+	NA	NA	See Sheet 1 of 4
42	9.6	70	87	100+	NA	NA	
48	12.6	61	76	100+	100+	NA	
54	16.0	54	68	95	100+	NA	
60	19.6	48	61	85	100+	NA	
66	23.8	44	55	78	100	100+*	
72	28.3	40	51	71	91	100+*	
78	33.2	37	47	66	84	100+*	
84	38.5	35	43	61	78	100+*	
90	44.2	32	40	57	73	90*	
96	50.3	NS	38	53	68	84*	
102	56.7	NS	36	50	64	79*	
108	63.6	NS	NS	47	61	75*	
114	70.9	NS	NS	45	58	71*	
120	78.5	NS	NS	42	55	67*	
132	95.0	NS	NS	NS	50	61*	

ROUND PIPE - 5" x 1" CORRUGATION ③

D (In)	Area (Sq. Ft.)	Maximum Height Of Fill (Ft.) Sheet Thickness In Inches (Gage) 0.064 (16)	0.079 (14)	0.109 (12)	0.138 (10)	0.168 (8)	Min. Cover (Ft.)
36	7.1	72	90	100+	NA	NA	See Sheet 1 of 4
42	9.6	62	77	100+	NA	NA	
48	12.6	54	68	95	100+	NA	
54	16.0	48	60	84	100+	NA	
60	19.6	43	54	76	98	NA	
66	23.8	39	49	69	89	100+*	
72	28.3	36	45	63	81	100*	
78	33.2	33	41	58	75	92*	
84	38.5	31	38	54	70	85*	
90	44.2	29	36	50	65	80*	
96	50.3	NS	34	47	61	75*	
102	56.7	NS	32	44	57	70*	
108	63.6	NS	NS	42	54	66*	
114	70.9	NS	NS	40	51	63*	
120	78.5	NS	NS	38	49	60*	
132	95.0	NS	NS	NS	44	54*	

Notes:

Increase the minimum cover values shown on Sheet 1 of 4 by 6" for gage and size combinations below the heavy lines.

Height of fill (maximum cover) is measured from top of finished grade to outside top of pipe.

**Recorrugated end not available. May be considered for cross drain and side drain applications only.*

NA - Not Available

NS - Not Suitable (For Highway H-20 Loadings)

① Limited availability of this product. Check availability before specifying (generally limited to 3" x 1" corrugation pipe arch fabricated from 60" and smaller diameter round pipe in 12 ga. and thicker material).

② 360° perforated pipe arch (french drain pipe) is not recommended. Do not specify without checking suitability and availability.

③ 5" x 1" corrugated pipe is currently not manufactured for the Florida market. Check availability before specifying.

④ .109 in. (12 gage) for spiral rib, 8' maximum cover, ⅔" x 1" x 11½" rib spacing (2 rib) only.

PIPE ARCH: SPIRAL RIB: ⅔" x ¾" x 7½" RIB SPACING
PIPE ARCH: SPIRAL RIB: ⅔" x 1" x 11½" RIB SPACING
PIPE ARCH - 2⅔" x ½" CORRUGATION

Span (In)	Rise (In)	Equiv. Round Pipe (In)	Area (Sq. Ft.)	Minimum Sheet Thickness Required (In) (Ga)	Maximum Height Of Fill (Ft.) Maximum Corner Pressure Lbs/Sq. Ft. 4000	6000	Min. Cover (Ft.)
17	13	15	1.1	.064 (16)	12	14	See Sheet 1 of 4
21	15	18	1.6	.064 (16)	10	14	
24	18	21	2.2	.064 (16)	7	13	
28	20	24	2.9	.064 (16)	5	11	
35	24	30	4.5	.064 (16)	NS	7	
42	29	36	6.5	.064 (16)	NS	7	
49	33	42	8.9	.079 (14)	NS	6	
57	38	48	11.6	.109 (12)	NS	8	
64	43	54	14.7	.109 (12)	NS	9	
71	47	60	18.1	.138 (10) ④	NS	10 ④	
77	52	66	21.9	.168 (8)* ④	5	10 ④	
83	57	72	26.0	.168 (8)* ④	5	10 ④	

PIPE ARCH - 3" x 1" ①②③ and 5" x 1" ②③ CORR.

Span (In)	Rise (In)	Equiv. Round Pipe (In)	Area (Sq. Ft.)	Minimum Sheet Thickness Required (In) (Ga)	Maximum Height Of Fill (Ft.) Maximum Corner Pressure Lbs/Sq.Ft. 4000	6000	Min. Cover (Ft.)
40	31	36	7.0	.079 (14)	8	12	See Sheet 1 of 4
46	36	42	9.4	.079 (14)	8	13	
53	41	48	12.3	.079 (14)	8	13	
60	46	54	15.6	.079 (14)	8	13	
66	51	60	19.3	.079 (14)	9	13	
73	55	66	23.2	.079 (14)	11	16	
81	59	72	27.4	.079 (14)	11	17	
87	63	78	32.1	.079 (14)	10	16	
95	67	84	37.0	.079 (14)	11	17	
103	71	90	42.4	.109 (12)	10	15	
112	75	96	48.0	.109 (12)	10	16	
117	79	102	54.2	.109 (12)	10	15	
128	83	108	60.5	.138 (10)	9	14	
137	87	114	67.4	.138 (10)	8	13	
142	91	120	74.5	.168 (8)	7	12	

ROUND PIPE - SPIRAL RIB
RIB SPACING (⅔" x ¾" x 7½") or (⅔" x 1" x 11½")

D (In.)	Area (Sq. Ft.)	Maximum Height Of Fill (Ft.) Sheet Thickness In Inches (Gage) 0.064 (16)	0.079 (14)	0.109 (12)	0.138 (10)	0.168 (8)	Min. Cover (Ft.)
12	0.79	NA	NA	NA	NA	NA	See Sheet 1 of 4
15	1.23	NA	NA	NA	NA	NA	
18	1.77	68	72	NA	NA	NA	
21	2.40	58	62	100+	NA	NA	
24	3.14	51	72	100+	NA	NA	
30	4.91	41	58	97	NA	NA	
36	7.1	34	48	81	NA	NA	
42	9.6	29	41	69	NA	NA	
48	12.6	26	36	61	NA	NA	
54	16.0	23	32	54	NA	NA	
60	19.6	NS	29	49	NA	NA	
66	23.8	NS	26	44	NA	NA	
72	28.3	NS	24	40	NA	NA	
78	33.2	NS	NS	37	NA	NA	
84	38.5	NS	NS	35	NA	NA	
90	44.2	NS	NS	32	NA	NA	
96	50.3	NS	NS	30	NA	NA	
102	56.7	NS	NS	29	NA	NA	
108	63.6	NS	NS	27 Ⓐ	NA	NA	

Ⓐ - ⅔" x 1" x 11½" Only.

MAXIMUM COVER FOR CORRUGATED STEEL PIPE ROUND AND PIPE ARCH

STATE OF FLORIDA DEPARTMENT OF TRANSPORTATION
ROAD DESIGN

COVER HEIGHT

	Names	Dates
Designed By	EGR	09/85
Drawn By	HSD	09/85
Checked By	EGR	09/85
F.H.W.A. Approved:		

Approved By: J. A. McLemore
State Drainage Engineer

Revision No.	Sheet No.	Index No.
92	3 of 4	205

ROUND PIPE - 2⅔" x ½" CORRUGATION

D (In)	Area (Sq. Ft.)	Maximum Height Of Fill (Ft.) Sheet Thickness In Inches (Gage) 0.060 (16)	0.075 (14)	0.105 (12)	0.135 (10)	0.164 (8)	Min. Cover (Ft.)
12	0.8	90	100+	NA	NA	NA	See Sheet 1 of 4
15	1.2	72	90	NA	NA	NA	
18	1.8	59	75	100+	NA	NA	
21	2.4	52	65	92	NA	NA	
24	3.1	44	56	79	NA	NA	
30	4.9	35 DR	44	63	NA	NA	
36	7.1	NS	36 DR	52	68	NA	
42	9.6	NS	NS	44 DR	58	NA	
48	12.6	NS	NS	38 DR	50 DR	61	
54	15.9	NS	NS	34 DR	45 DR	54 DR	
60	19.6	NS	NS	NS	39 DR	49 DR	
66	23.8	NS	NS	NS	NS	44 DR	
72	28.3	NS	NS	NS	NS	40 DR	

ROUND PIPE - 3" x 1" CORRUGATION

D (In)	Area (Sq. Ft.)	Maximum Height Of Fill (Ft.) Sheet Thickness In Inches (Gage) 0.060 (16)	0.075 (14)	0.105 (12)	0.135 (10)	0.164 (8)	Min. Cover (Ft.)
36	7.1	33	42	60	NA	NA	See Sheet 1 of 4
42	9.6	28	36	51	NA	NA	
48	12.6	24	31	45	58	NA	
54	15.9	21	28	39	51	NA	
60	19.6	19	24	35	46	NA	
66	23.8	15 DR	22	32	42	51	
72	28.3	NS	20 DR	29	38	47	
78	33.2	NS	15 DR	27	35	43	
84	38.5	NS	NS	24 DR	32	40	
90	44.2	NS	NS	23 DR	30	37	
96	50.3	NS	NS	21 DR	28 DR	34	
102	56.7	NS	NS	NS	26 DR	32	
108	63.6	NS	NS	NS	24 DR	30 DR	
114	70.9	NS	NS	NS	NS	28 DR	
120	78.5	NS	NS	NS	NS	27 DR	

ROUND PIPE - SPIRAL RIB
RIB SPACING (¾" x ¾" x 7½")

D (In.)	Area (Sq. Ft.)	Maximum Height Of Fill (Ft.) Sheet Thickness In Inches (Gage) 0.060 (16)	0.075 (14)	0.105 (12)	0.135 (10)	0.164 (8)	Min. Cover (Ft.)
12	0.79	NA	NA	NA	NA	NA	See Sheet 1 of 4
15	1.23	63 ①	81 ①	NA	NA	NA	
18	1.77	55	76	NA	NA	NA	
21	2.40	47	65	NA	NA	NA	
24	3.14	41	57	NA	NA	NA	
30	4.91	33 DR	45	73	NA	NA	
36	7.1	27 ④	38 DR	61	NA	NA	
42	9.6	NS	32 ④	52	NA	NA	
48	12.6	NS	NS	46	65	NA	
54	16.0	NS	NS	40 DR	57	NA	
60	19.6	NS	NS	36 ④	52	NA	
66	23.8	NS	NS	NS	47 DR	NA	
72	28.3	NS	NS	NS	43 ④	NA	
78	33.2	NS	NS	NS	39 ④	NA	
84	38.5	NS	NS	NS	34 ④	NA	
90	44.2	NS	NS	NS	30 ①③④	NA	
96	50.3	NS	NS	NS	27 ①③④	NA	

▨ - NOTE
Special installation required.
Refer to AASHTO Standard Specifications for Highway Bridges or ASTM B788-88 and manufacturer's recommendations.

PIPE ARCH - 2⅔" x ½" CORRUGATION ②

Span (In)	Rise (In)	Equiv. Round Pipe (In)	Area (Sq. Ft.)	Minimum Sheet Thickness Required (In) (Ga)	Maximum Height Of Fill (Ft.) Maximum Corner Pressure - Lbs/Sq.Ft. 4000	6000	Min. Cover (Ft.)
17	13	15	1.1	.060 (16)	12	15	See Sheet 1 of 4
21	15	18	1.6	.060 (16)	10	14	
24	18	21	2.2	.060 (16)	7	13	
28	20	24	2.9	.075 (14)	5	11	
35	24	30	4.5	.075 (14)	NS	7	
42	29	36	6.5	.105 (12)	NS	7	
49	33	42	8.9	.105 (12)	NS	6	
57	38	48	11.6	.135 (10)	NS	8	
64	43	54	14.7	.135 (10)	NS	9	
71	47	60	18.1	.164 (8)	NS	10	
77	52	66	21.9	.164 (8)	NS	10	
83	57	72	26.0	.164 (8)	NS	10	

PIPE ARCH - 3" x 1" CORRUGATION ①②

Span (In)	Rise (In)	Equiv. Round Pipe (In)	Area (Sq. Ft.)	Minimum Sheet Thickness Required (In) (Ga)	Maximum Height Of Fill (Ft.) Maximum Corner Pressure - Lbs/Sq.Ft. 4000	6000	Min. Cover (Ft.)
40	31	36	7.0	.060 (16)	8	12	See Sheet 1 of 4
46	36	42	9.4	.060 (16)	8	13	
53	41	48	12.3	.060 (16)	8	13	
60	46	54	15.6	.075 (14)	8	13	
66	51	60	19.3	.075 (14)	8	13	
73	55	66	23.2	.105 (12)	11	16	
81	59	72	27.4	.105 (12)	11	17	
87	63	78	32.1	.105 (12)	10	16	
95	67	84	37.0	.105 (12)	11	17	
103	71	90	42.4	.135 (10)	10	15	
112	75	96	48.0	.135 (10)	10	16	
117	79	102	54.2	.164 (8)	10	15	

PIPE ARCH - SPIRAL RIB
RIB SPACING (¾" x ¾" x 7½")

Span (In)	Rise (In)	Equiv. Round Pipe (In)	Area (Sq. Ft.)	Minimum Sheet Thickness Required (In) (Ga)	Maximum Height Of Fill (Ft.) Maximum Corner Pressure - Lbs/Sq.Ft. 4000	6000	Min. Cover (Ft.)
16	14	15	1.2	.060 (16)	12	13	See Sheet 1 of 4
20	16	18	1.7	.060 (16)	10	12	
23	19	21	2.3	.060 (16)	7	11	
27	21	24	3.0	.060 (16)	5	10	
33	26	30	4.7	.075 (14)	NS	9	
40	31	36	7.0	.075 (14)	NS	8	
46	36	42	9.4	.105 (12)	NS	8	
53	41	48	12.3	.105 (12)	NS	8	
60	46	54	15.6	.105 (10)	NS	8	
66	51	60	19.3	.135 (10)	NS	8	
73	55	66	23.2	.135 (10) ④	NS	8	
81	59	72	27.4	.135 (10) ④	NS	8	

Notes:

Increase the minimum cover values shown on Sheet 1 of 4 by 6" for gage and size combinations below the heavy lines.

Height of fill (maximum cover) is measured from top of finished grade to outside top of pipe.

NA - Not Available

NS - Not Suitable (For Highway H-20 Loadings)

DR - Design Review is recommended for each specific application. The review should identify any special handling, installation, backfill procedures, and construction load restrictions which may be required. See FDOT Drainage Manual, Chapter 19, Section 19.4, Vol. II, 1987. The specification of the next thicker culvert in lieu of this review is not appropriate. (The review performed by the designer does not relieve the contractor from analyzing and taking any necessary precautions required to protect partially or completely constructed pipe from the equipment used during construction.)

① Limited availability of this product. Check availability before specifying.

② 360° perforated pipe (french drain pipe) is not recommended in the pipe arch shape. Do not specify without checking both for suitability and availability.

③ This size and gage combination must be strutted during installation per manufacturers recommendations. Extra care will be required during handling and installation.

④ Use of this size and gage combination must be approved by the State Drainage Engineer.

CORRUGATED ALUMINUM ALLOY ROUND PIPE AND PIPE ARCH

STATE OF FLORIDA DEPARTMENT OF TRANSPORTATION
ROAD DESIGN

COVER HEIGHT

	Name	Date
Designed By	EGR	09/85
Drawn By	HSD	09/85
Checked By	EGR	09/85
F.H.W.A. Approved:		

Approved By: A. O. M. Lemmon, State Drainage Engineer

Revision No.	Sheet No.	Index No.
94	4 of 4	205

APPLICATION GUIDELINES TO CURB INLETS AND GUTTER INLETS

INDEX NO.	INLET TYPE	TYPE CURB/GUTTER	GRADE CONSIDERATION	HYDRAULIC INTAKE (CFS) (1)	BICYCLE SAFE / PEDESTRIAN SAFE	UTILITY LOCATION FROM CURB	MAXIMUM PIPE SIZE WITH STANDARD BOTTOMS (5)	COMMENTS
210 (2)	1	E & F	Continuous	4.1	Yes / Limited	Inside	30"	
	2 (3)	E & F	Sag	9.0	Yes / Limited	Inside	30"	
	3	E & F	Continuous	1.9	Yes / Limited	Inside	30"	
	4 (3)	E & F	Sag	6.5	Yes / Limited	Inside	30"	
211 (2)	5	E & F	Continuous	3.1	Yes / Limited	Outside	30"	
	6 (3)	E & F	Sag	7.5	Yes / Limited	Outside	30"	
212 (2)	7	Separator I & II	Continuous or Sag	4.4	Yes / Limited	Inside	24" Longitudinal 30" Transverse	
213 (2)	8	Separator IV & V	Continuous or Sag	4.4	Yes / Limited	Inside	24" Longitudinal 30" Transverse	
214 (2)	9	D & F	Continuous or Sag	0.5	Yes / Yes	Outside	30"	To be used only where flows are light to moderate and R/W does not permit the use of throated curb inlets. Vanes to be directed to major flow direction.
215 (2)	10	D & F	Continuous or Sag	0.3	Yes / Yes	Outside	30"	To be used only where flows are light and R/W does not permit the use of throated curb inlets.
217	1	Median Barrier Wall	Continuous	4.0	No / Yes (4)	NA	15" Longitudinal 30" Transverse	
	2	Median Barrier Wall	Sag	5.0	No / No (4)	NA	15" Longitudinal 30" Transverse	
	3 (3)	Median Barrier Wall	Double Inlet Continuous	4.0	No / Yes (4)	NA	42" Longitudinal 30" Transverse	
	4 (3)	Median Barrier Wall	Double Inlet Sag	5.0	No / Yes (4)	NA	42" Longitudinal 30" Transverse	
	5 (3)	Median Barrier Wall	Double Inlet Sag & Continuous	5.0	No / Yes (4)	NA	42" Longitudinal 30" Transverse	
218	—	Barrier Wall	Continuous or Sag	5.2	Yes / Yes	NA	30"	
220	S	Shoulder	Continuous	4.0	No / Yes (4)	NA	30" Transverse	
221	V	Valley	Continuous or Sag	5.0	Yes / Yes	NA	30" Transverse	

(1) Hydraulic intake values do not represent hydraulic capacity but are shown to compare inlets based on a 0.2% longitudinal slope, .02 cross slope and a 90% efficiency factor. For other conditions the values shown should be adjusted for bypass flow or debris blockage. Sag inlet intake value is based on flooding the outside lane or shoulder, where spread rather than hydraulic intake may dictate inlet selection or spacing. Full design data and additional information is available in "A Study of Stormwater Inlet Capacities" by U.S.F., and the Department's 1987 Drainage Manual Vol. 2, Chapter 12 and Vol. 3, Chapter 2.

(2) Curb inlets and transitions should be located outside pedestrian cross walk areas, preferably upgrade from these locations.

(3) Double throated inlets are usually not warranted unless the minor flow is in excess of 50 feet distance or 0.5 cfs.

(4) Median Barrier Inlets Types 1, 2, 3, 4, 5 & Shoulder Inlet Type S can be made bicycle safe by specifying the reticuline grate.

(5) Pipe sizes are circular, Class III, B Wall, concrete pipe. Elliptical pipe and corrugated pipe are to be checked for fit in accordance with Index No. 201; metal pipe sizes should be reviewed using 2⅔" x ½" corrugation up to 30" and 3" x 1" corrugation for larger sizes.

STATE OF FLORIDA DEPARTMENT OF TRANSPORTATION
ROAD DESIGN

CURB INLET & GUTTER INLET APPLICATION GUIDE

	Names	Dates
Designed By	E G R	09/06/84
Drawn By	D A E	09/06/84
Checked By	E G R	09/06/84
F.H.W.A. Approved:		09/21/84

Approved By: State Drainage Engineer

Revision No.	Sheet No.	Index No.
92	1 of 1	209

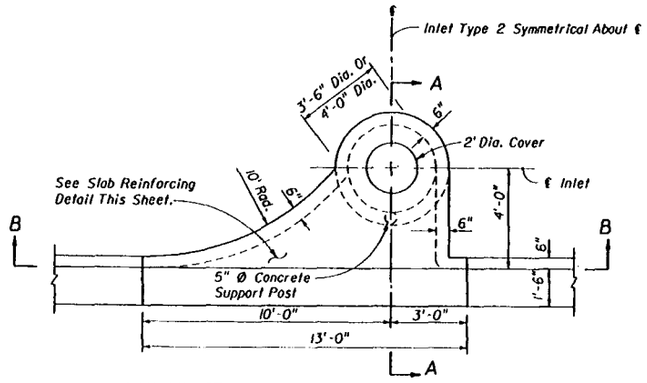

PLAN (INLET TYPE 2 SYMMETRICAL ABOUT ℄)

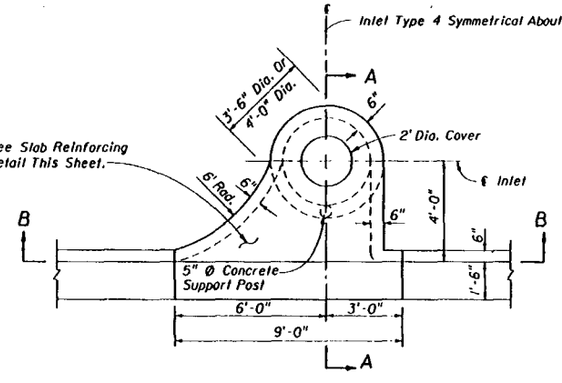

PLAN (INLET TYPE 4 SYMMETRICAL ABOUT ℄)

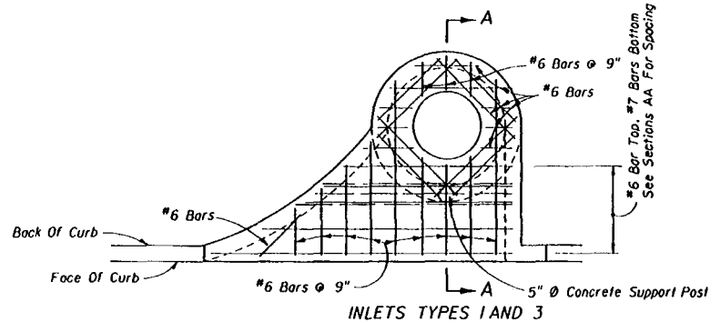

INLETS TYPES 1 AND 3

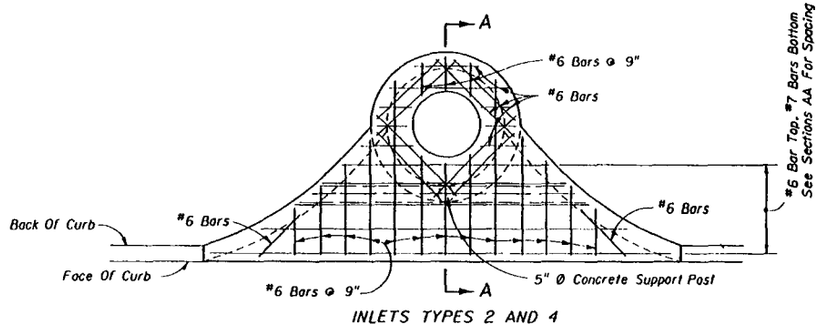

INLETS TYPES 2 AND 4

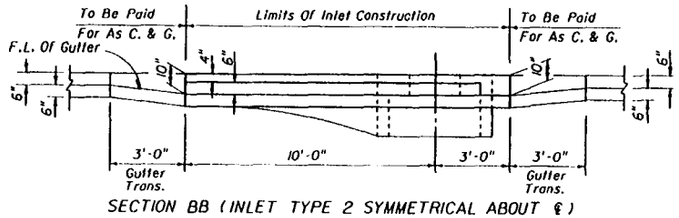

SECTION BB (INLET TYPE 2 SYMMETRICAL ABOUT ℄)

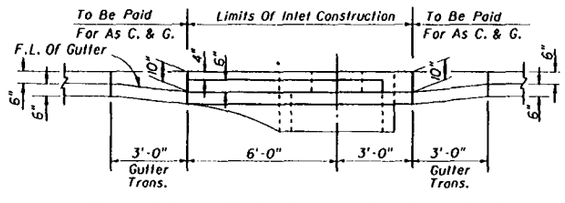

SECTION BB (INLET TYPE 4 SYMMETRICAL ABOUT ℄)

SLAB REINFORCING

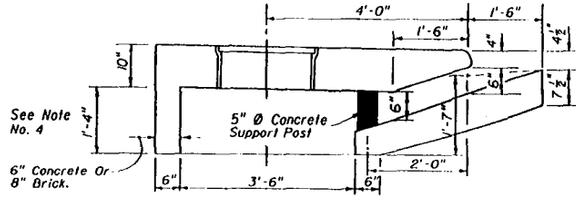

DIMENSIONAL SECTION

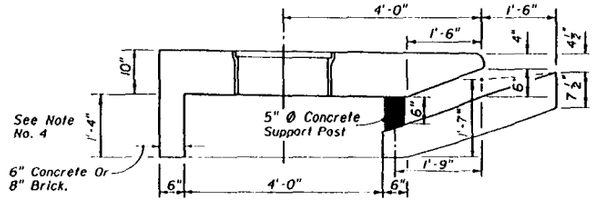

DIMENSIONAL SECTION

INLETS TYPES 1 AND 2

INLETS TYPES 3 AND 4

GENERAL NOTES

1. The finished grade and slope of the inlet tops are to conform with the finished cross slope and grade of the proposed sidewalk and/or border.
2. When inlets are to be constructed on a curve, refer to the plans to determine the radius and, where necessary, modify the inlet details accordingly. Bend steel when necessary.
3. All steel in inlet top shall have 1" minimum cover unless otherwise shown. Inlet tops shall be either cast-in-place or precast concrete.
4. The rear wall portion of inlet tops Types 1, 2, 3 & 4 may be constructed with brick. Dowels to top slab required.
6. For supplemental details see Index No. 201.
5. Only round concrete support post will be acceptable.
7. These inlets are to be used with Curb and Gutter Types E and F. Locate outside of pedestrain crosswalk where practical.
8. For structure bottoms see Index No. 200.
9. Inlet to be paid for under the contract unit price for Inlets (Curb) (Type ___), Each.

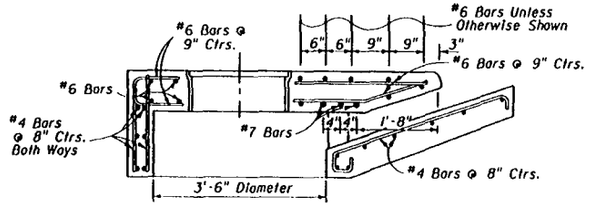

REINFORCING SECTION
3'-6" DIA. STRUCTURE BOTTOM (SECTION AA)

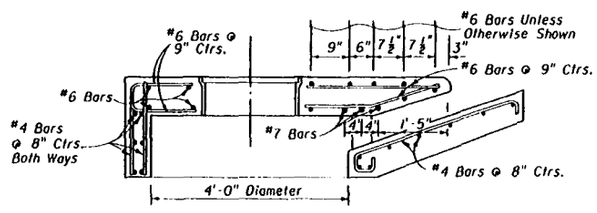

REINFORCING SECTION
4'-0" DIA. STRUCTURE BOTTOM (SECTION AA)

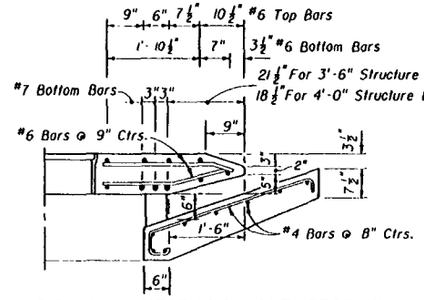

DIMENSION & REINFORCING HALF SECTION
TYPES A & E CURB (HALF SECTION AA)
(TYPE E GUTTER SHOWN)

TRANSVERSE SECTIONS FOR INLETS TYPES 1, 2, 3 & 4

STATE OF FLORIDA DEPARTMENT OF TRANSPORTATION
ROAD DESIGN

CURB INLET TOPS
TYPES 1, 2, 3, & 4

	Names	Dates
Designed By		
Drawn By		
Checked By		
F.H.W.A. Approved:		05/01/75

Approved By: L.A. McLemore
State Drainage Engineer

Revision No.	Sheet No.	Index No.
92	1 of 1	210

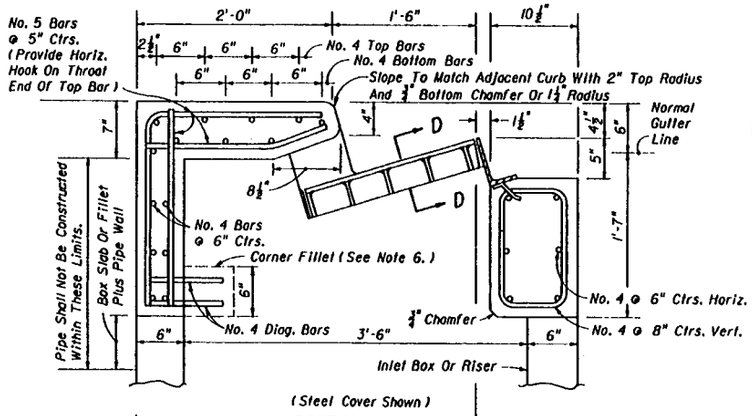

(Steel Cover Shown)

SECTION AA

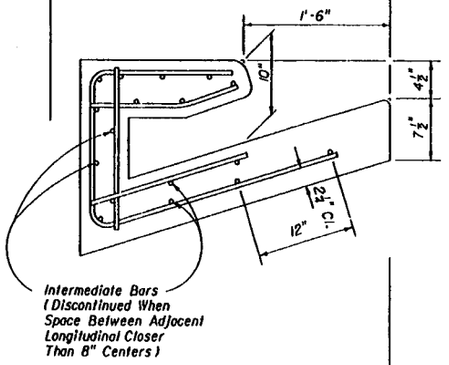

SECTION PP

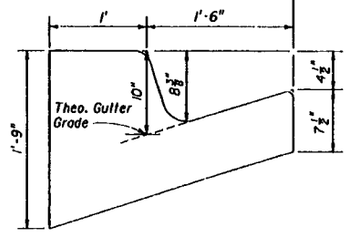

SECTION QQ

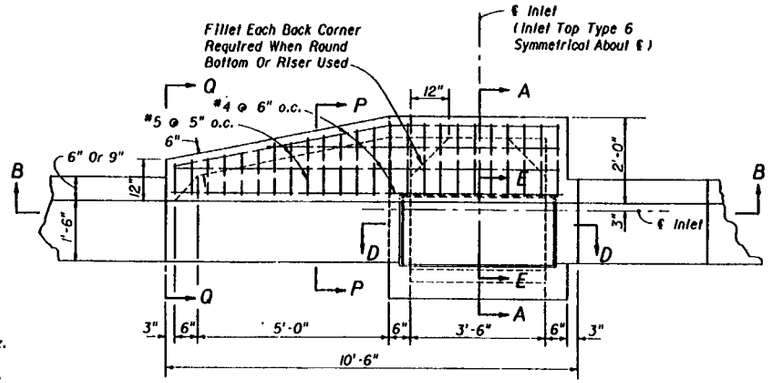

TOP VIEW

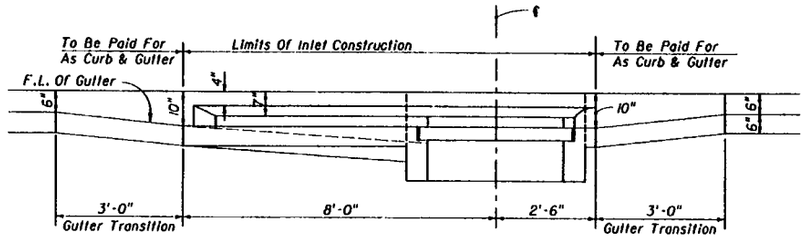

SECTION BB

(Curb Inlet Top Type 6 Symmetrical With Left Half)

INLET TYPE 5

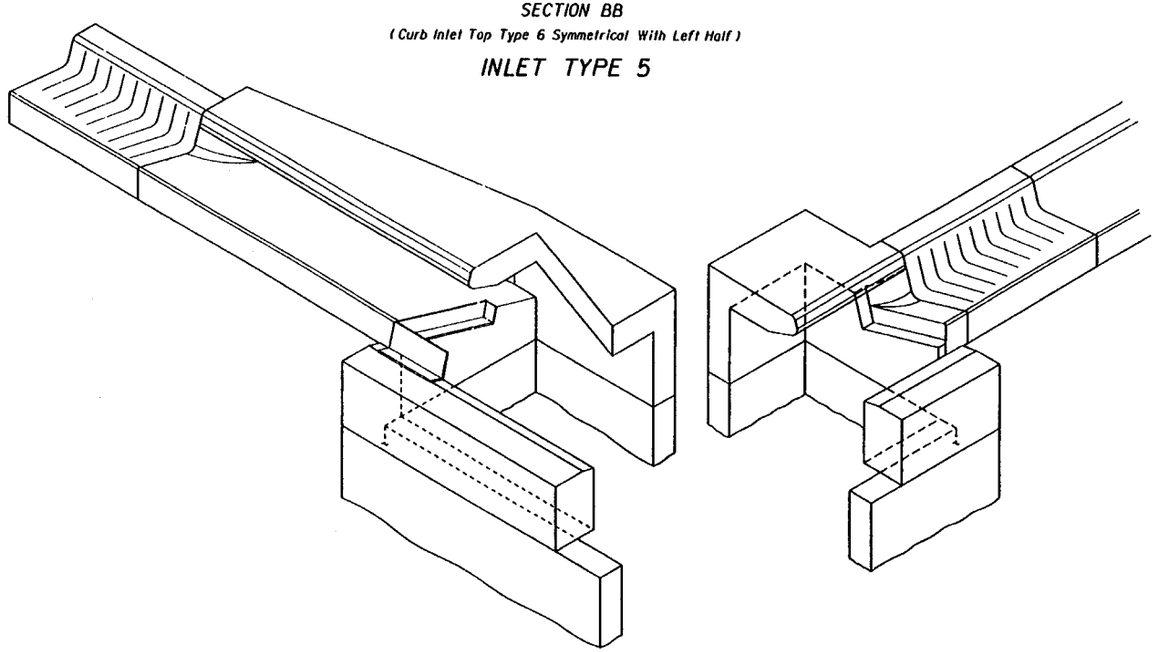

SKETCHS SHOWING FRAME SEAT AND THROAT RECESS

GENERAL NOTES

1. The finished grade and slope of the inlet tops are to conform with the finished cross slope and grade of the proposed sidewalk and/or parkway.
2. When inlets are to be constructed on a curve, refer to the plans to determine the radius and, where necessary, modify the inlet details accordingly. Bend steel when necessary.
3. All reinforcing steel shall have 1½" minimum cover unless otherwise shown. Inlet tops shall be either cast-in-place or precast concrete.
4. Precasting of this inlet top will be permitted. Precast units shall conform to the dimensions shown or in accordance with approved shop drawings. Request for shop drawing approval shall be directed to the State Drainage Engineer.
5. Concrete meeting the requirements of A.S.T.M. C 478 (4,000 P.S.I.) may be used in lieu of Class I concrete for precast units, manufactured in plants which are under the Standard Operating Procedures for the inspection of precast drainage products.
6. The corner fillets shown for rectangular throats are necessary only when throats are to be used in conjunction with circular inlet bottoms or when used on skew with rectangular inlet boxes.
7. For inlet bottoms see Index No. 200.
8. These inlet tops are designed for use with standard curb and gutter Type E and Type F. Locate outside of pedestrian crosswalk where practical.
9. See Index 201 for supplemental details.
10. All steel used for frame and cover shall meet the requirements of ASTM A-36.
11. Either cast iron covers or steel covers may be used. Iron covers shall be Class No. 30 castings in accordance with ASTM A-48.
12. When Alternate "G" Cover is specified in plans either the cast iron cover and galvanized steel frame or the the galvanized steel cover and frame must be used. Covers are to be grouted in accordance with the grouting detail shown on sheet 2 of 2, in lieu of tack welding.
13. Inlet to be paid for under the contract unit price for Inlets (Curb) (Type ___), Each.

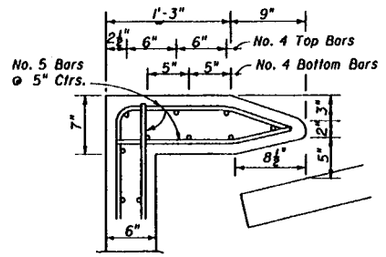

TOP MODIFICATION FOR TYPE E CURB

STATE OF FLORIDA DEPARTMENT OF TRANSPORTATION
ROAD DESIGN

CURB INLET TOPS TYPES 5 & 6

	Names	Dates
Designed By		
Drawn By		
Checked By		
F.H.W.A. Approved:		

Approved By: [signature]
State Drainage Engineer

Revision No.	Sheet No.	Index No.
92	1 of 2	211

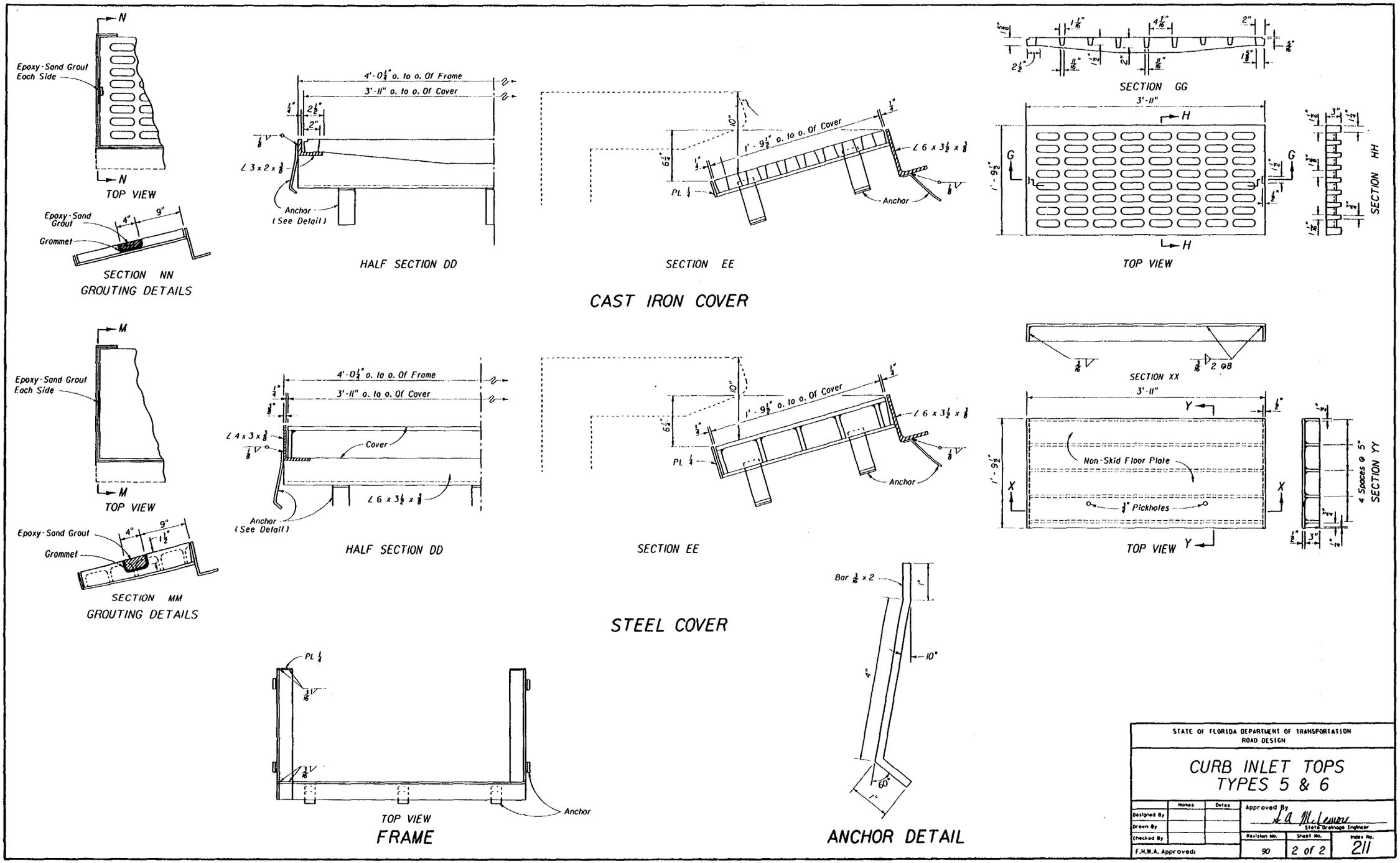

STATE OF FLORIDA DEPARTMENT OF TRANSPORTATION
ROAD DESIGN

CURB INLET TOPS
TYPES 5 & 6

	Names	Dates
Designed By		
Drawn By		
Checked By		

Approved By S. A. McLemore
State Drainage Engineer

F.H.W.A. Approved:

Revision No.	Sheet No.	Index No.
90	2 of 2	211

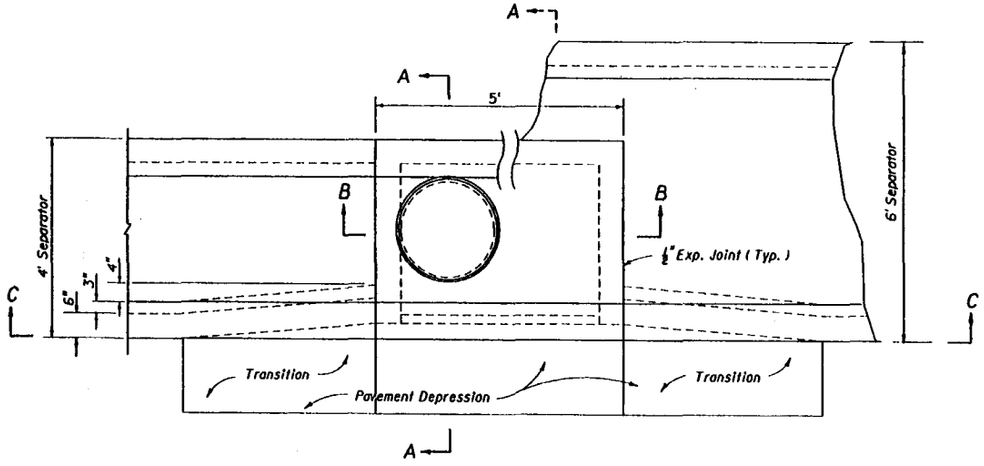

PLAN

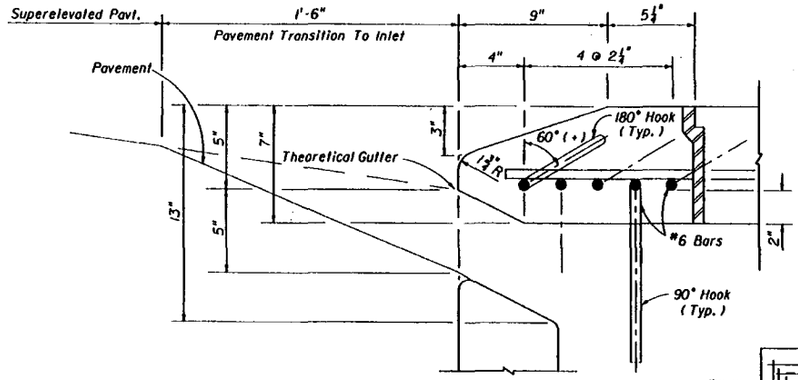

THROAT DETAIL

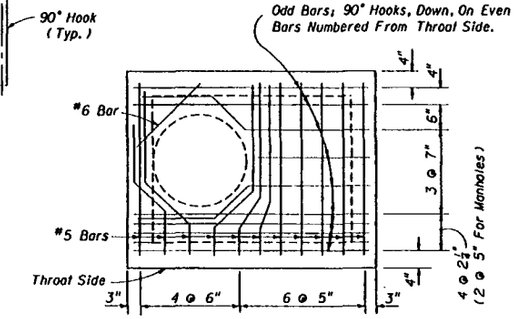

REINFORCING STEEL DIAGRAM
TOP SLAB OF INLETS

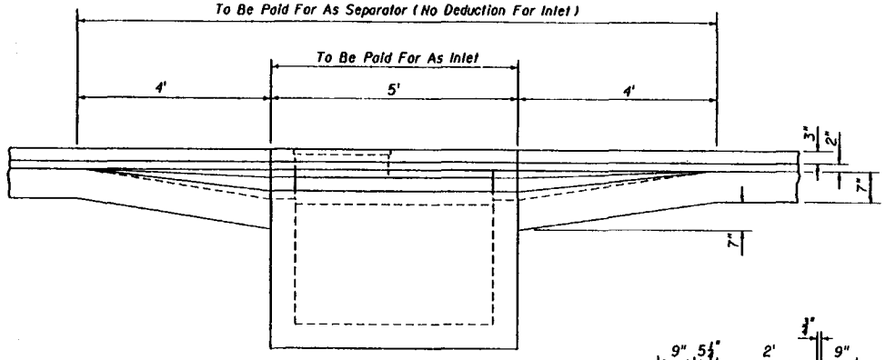

SECTION CC

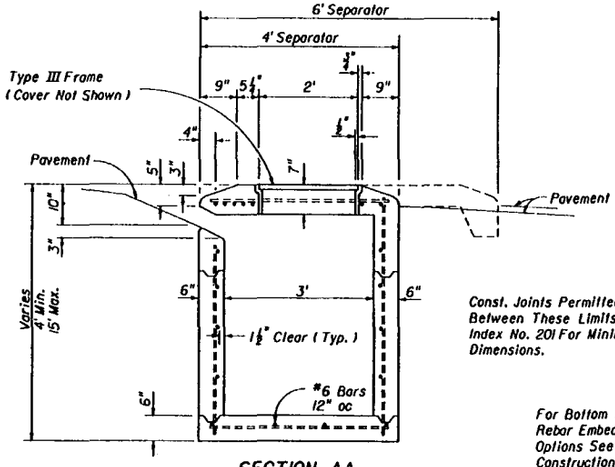

SECTION AA

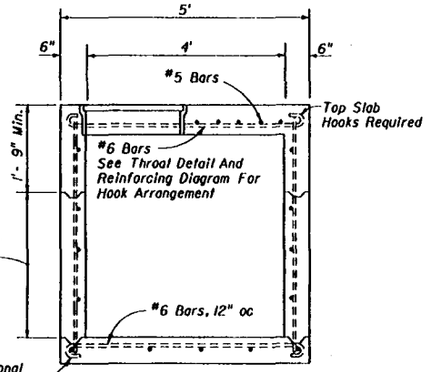

SECTION BB

Const. Joints Permitted Between These Limits-See Index No. 201 For Minimum Dimensions.

For Bottom Slab Rebar Embedment Options See Optional Construction Joints, Index No. 201.

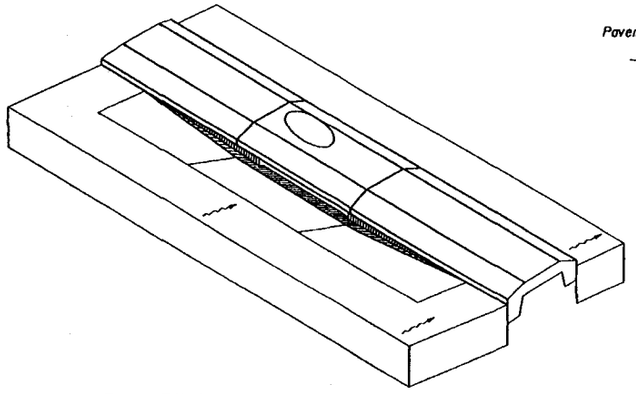

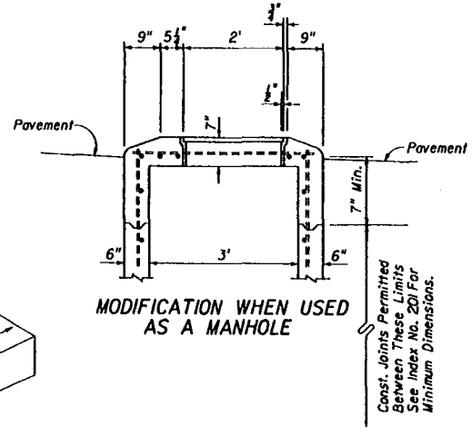

MODIFICATION WHEN USED AS A MANHOLE

GENERAL NOTES

1. This inlet is used in Traffic Separators Types I and II, or, in separators constructed with Curbs Types A, B and E and sidewalk paving, which cannot accommodate inlets Types 1, 2, 3, 4, 5, or 6. Use of this inlet on through traffic side of the separator is not permitted in medians with Curbs Types A and B. Locate inlet outside of pedestrian cross traffic.
2. Reinforcing-No. 4 bars @ 12" centers unless otherwise noted. Cut or bend bars out of way of pipe when necessary. Bars to clear pipe by 1½".
3. Recommended maximum pipe sizes are 24" longitudinal and 30" transverse. For larger pipe, inlets with Alt. B bottoms, Index No. 200 are recommended.
4. For supplementary details see Index No. 201.
5. Inlet to be paid for under the contract unit price for Inlets (Curb) (Type __), Each.

STATE OF FLORIDA DEPARTMENT OF TRANSPORTATION
ROAD DESIGN

CURB INLET TYPE 7

	Names	Dates
Designed By	EGR	08/81
Drawn By	HSD	08/81
Checked By	JG	08/81
F.H.W.A. Approved: 10/08/81		

Approved By: E.G. Regan, State Drainage Engineer

Revision No.	Sheet No.	Index No.
92	1 of 1	212

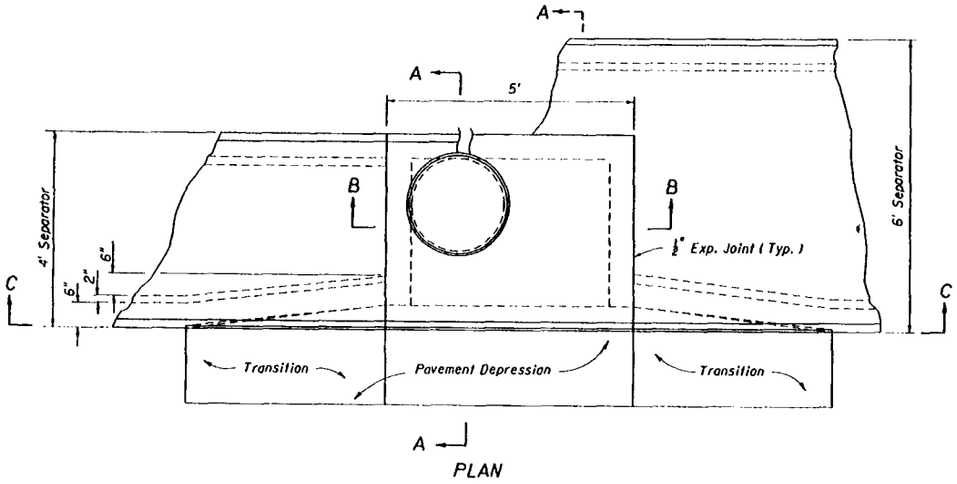

PLAN

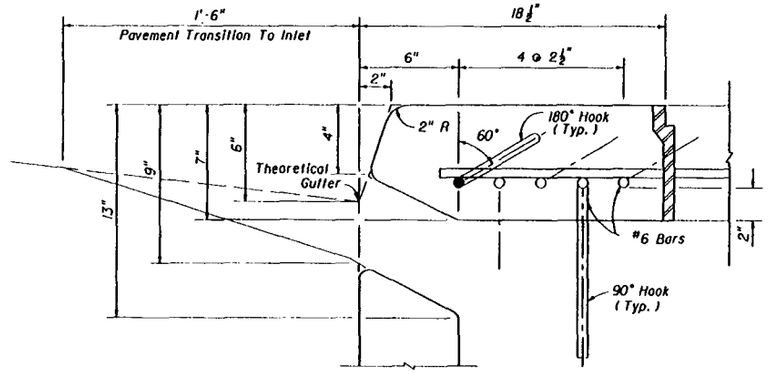

THROAT DETAIL (SECTION AA)

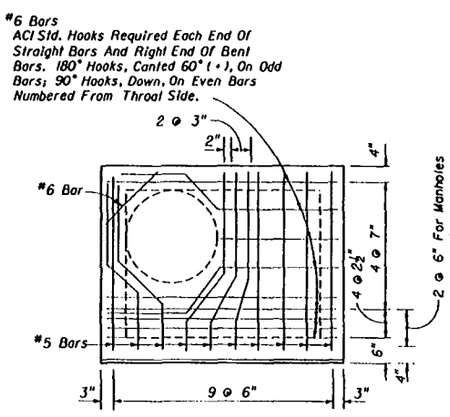

REINFORCING STEEL DIAGRAM
TOP SLAB OF INLET

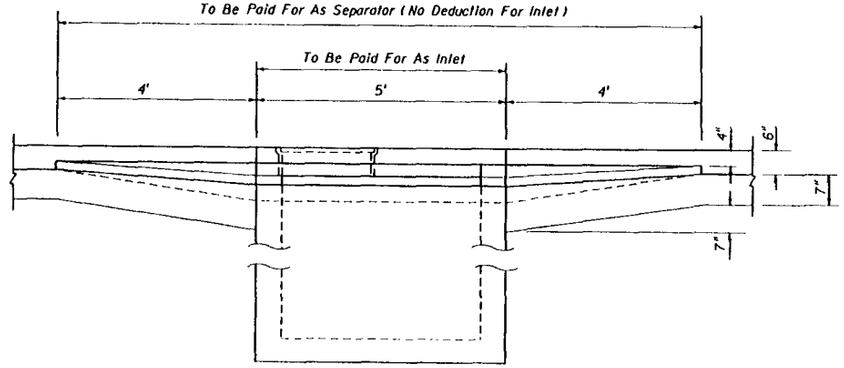

SECTION CC

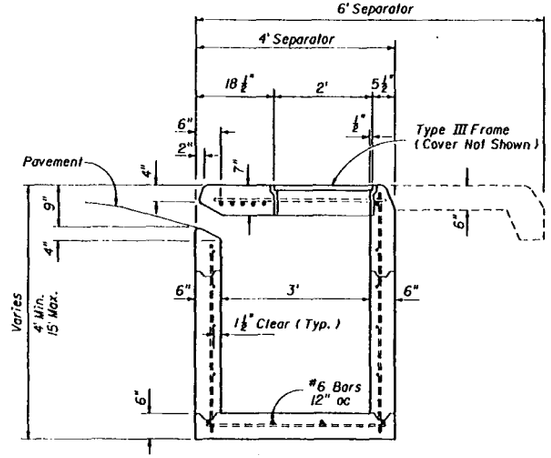

SECTION AA

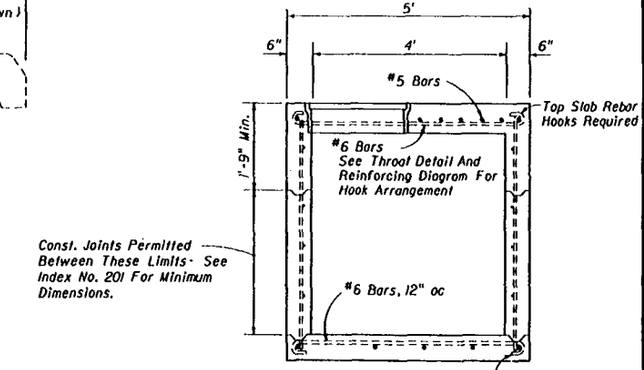

Const. Joints Permitted Between These Limits - See Index No. 201 For Minimum Dimensions.

SECTION BB

For Bottom Slab Rebar Embedment Options See Optional Construction Joints, Index No. 201.

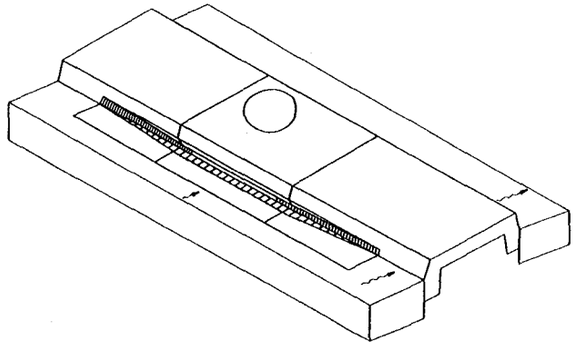

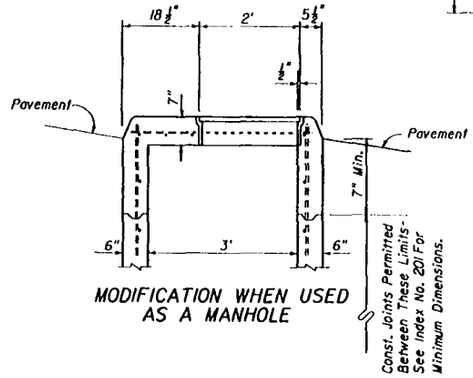

MODIFICATION WHEN USED AS A MANHOLE

Const. Joints Permitted Between These Limits - See Index No. 201 For Minimum Dimensions.

GENERAL NOTES

1. This inlet is to be used only in Traffic Separators Types IV and V; or, in separators constructed with Curbs Types D and F and sidewalk paving, which cannot accommodate Inlets Types 1, 2, 3, 4, 5 or 6. Use of this inlet on the through traffic side of the separator should be avoided in medians constructed with Curb Type D (Curb Inlets Types 9 or 10 are recommended). Locate inlet outside of pedestrian cross traffic.
2. Reinforcing - No. 4 bars at 12" centers unless otherwise noted. Cut or bend bars out of way of pipe when necessary. Bars to clear pipe by 1½".
3. Recommended maximum pipe sizes are 24" longitudinal and 30" transverse. For larger pipe, inlets with All. B bottoms, Index No. 200 are recommended.
4. For supplemental details see Index No. 201.
5. Inlet to be paid for under the contract unit price for Inlets (Curb) (Type _), Each.

STATE OF FLORIDA DEPARTMENT OF TRANSPORTATION
ROAD DESIGN

CURB INLET TYPE 8

	Names	Dates
Designed By	EGR	07/81
Drawn By	HSD	07/81
Checked By	JG	07/81
F.H.W.A. Approved:		10/08/81

Approved By _____ State Drainage Engineer

Revision No.	Sheet No.	Index No.
92	1 of 1	213

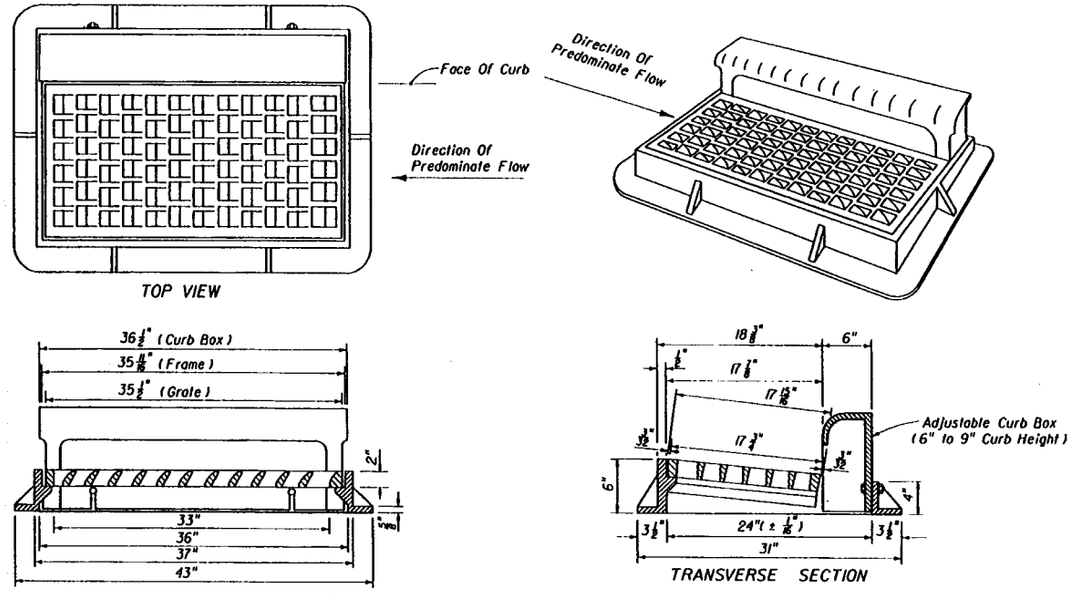

FRAME AND GRATE

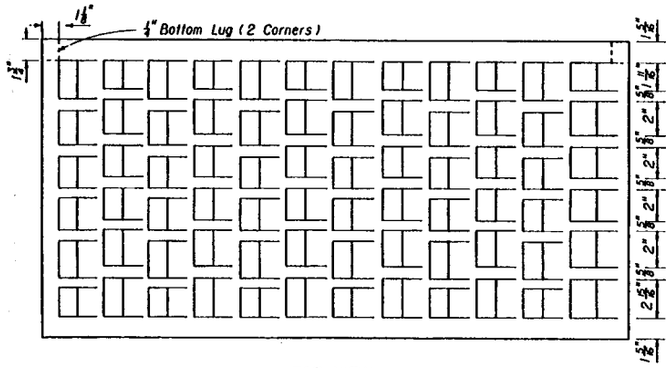

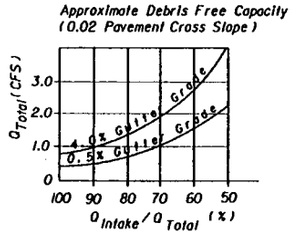

EFFICIENCY CURVE

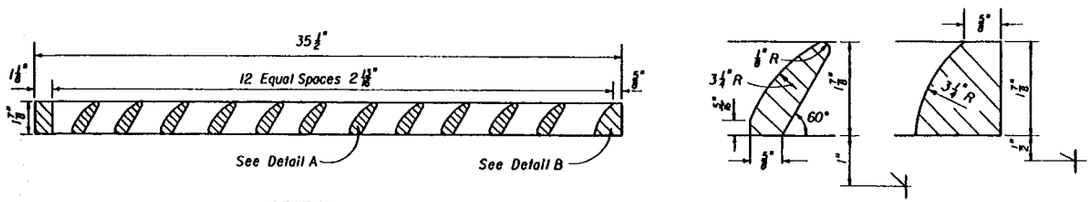

GRATE DETAIL

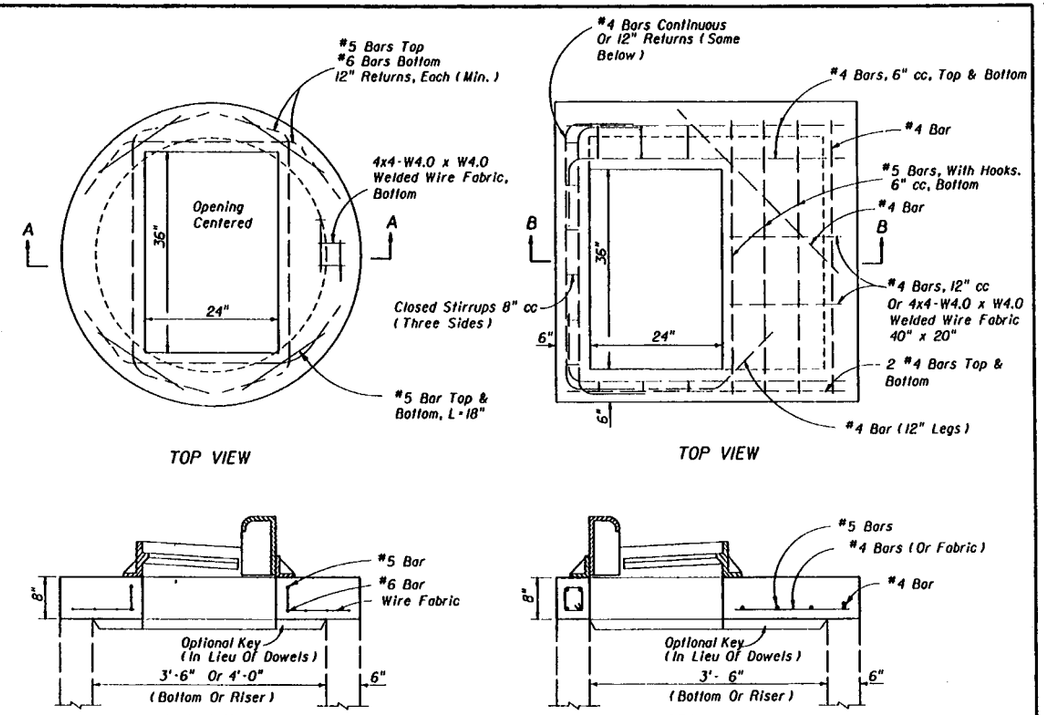

TOP SLABS

GENERAL NOTES

1. This inlet is primarily intended for locations with light to moderate flows where right of way does not permit the use of throated Curb Inlets Types 1 through 6. The typical application is on curb returns to city streets. The inlet grate is suitable for pedestrian and bicycle traffic.
2. This inlet to be located in vertical faced curbs such as Curb and Gutter Type F. Grate shall be oriented with vanes directed toward predominate flow. Inlet to be located outside pedestrian crosswalk where practical.
3. For structure bottoms see Index No. 200. For supplemental details see Index No. 201.
4. All steel in slab tops shall have 1 1/4" minimum cover unless otherwise shown. Tops shall be either cast-in-place or precast concrete.
5. For Alternate B applications, top slab openings shall be placed such that 2 edges of inlet frame will be located directly above bottom wall or riser wall.
6. When used on a structure with dimensions larger than those detailed above and risers are not applied, the top slab shall be constructed using Index 200 with the slab opening adjust to 24" x 36". The "Special Top Slab" on Index 200 is not permitted.
7. Frame may be adjusted with one to six courses of brick.
8. Inlet and grate detail shown is Neenah R-3067-L. Vaned grates with approximately equal openings will be permitted that satisfy AASHTO H-20 loading. Inlet and grate shall be Class 30 castings in accordance with ASTM A 48. Grates shall be reversible, right or left.

STATE OF FLORIDA DEPARTMENT OF TRANSPORTATION
ROAD DESIGN

CURB INLET TOP TYPE 9

	Names	Dates	Approved By
Designed By	EGR		State Drainage Engineer
Drawn By	HSD	01/81	
Checked By	JVG	01/81	Revision No. 92 · Sheet No. 1 of 1 · Index No. 214
F.H.W.A. Approved: 10/08/81			

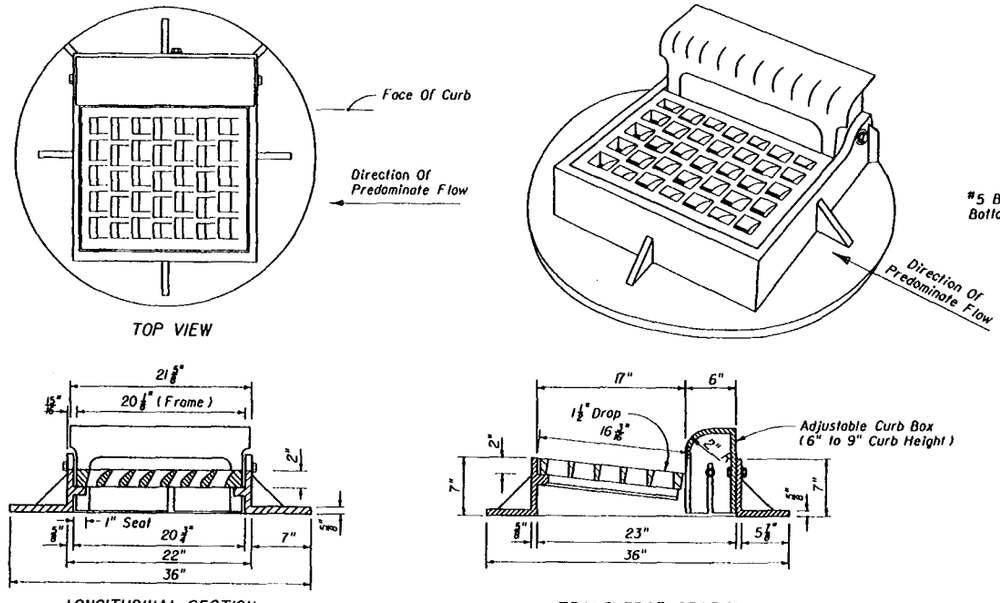

TOP VIEW

LONGITUDINAL SECTION

TRANSVERSE SECTION

FRAME AND GRATE

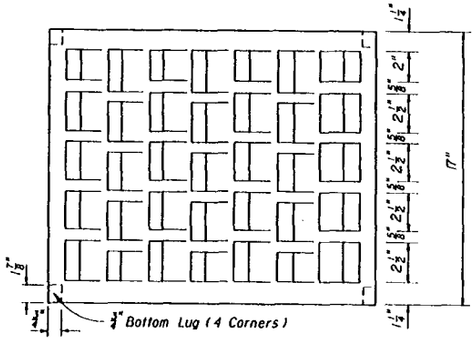

PLAN

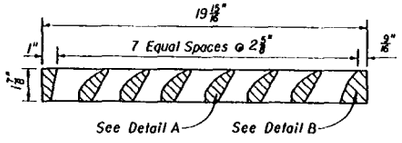

SECTION

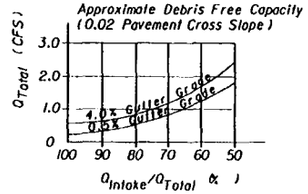

EFFICIENCY CURVE

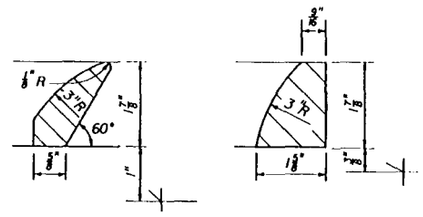

DETAIL A

DETAIL B

GRATE DETAIL

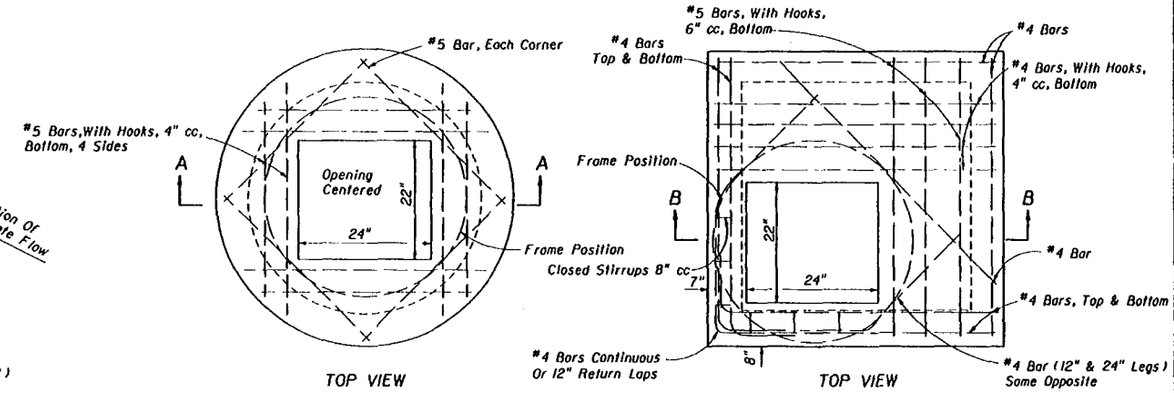

TOP VIEW

TOP VIEW

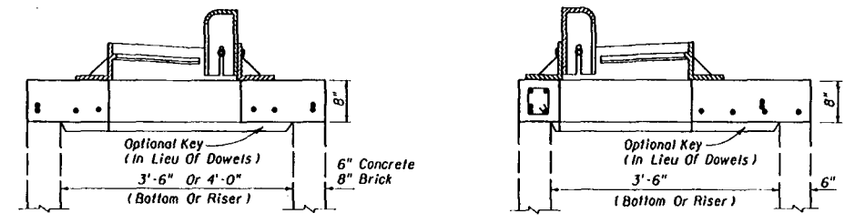

SECTION AA

(SEE NOTE 6 BELOW)

SECTION BB

(SEE NOTE 6 BELOW)

TOP SLABS

GENERAL NOTES

1. This inlet is primarily intended for locations with light flows where right of way does not permit the use of throated Curb Inlets Types I through 6. The typical application is on curb returns to city streets. The inlet grate is suitable for pedestrian and bicycle traffic.
2. This inlet to be located in vertical faced curbs such as Curb and Gutter Type F. Grate shall be oriented with vanes directed toward predominate flow. Inlet to be located outside pedestrian crosswalk where practical.
3. For structure bottoms see Index No. 200. For supplemental details see Index No. 201.
4. All steel in slab tops shall have 1 1/4" minimum cover unless otherwise shown. Tops shall be either cast-in-place or precast concrete.
5. For Alternate B applications, top slab openings shall be placed such that 2 edges of inlet frame will be located directly above bottom or riser walls.
6. When used on a structure with dimensions larger than those detail above and risers are not applied, the top slab shall be constructed using Index 200 with the slab opening adjusted to 24" x 36". The "Special Top Slab" on Index 200 is not permitted.
7. Frame may be adjusted with one to six courses of brick.
8. Inlet and grate detail shown is Neenah R-3065-L. Vaned grates with approximately equal openings will be permitted that satisfy AASHTO H-20 loading. Inlet and grate shall be Class 30 castings in accordance with ASTM A 48. Grates shall be reversible, left or right.

STATE OF FLORIDA DEPARTMENT OF TRANSPORTATION
ROAD DESIGN

CURB INLET TOP TYPE 10

	Names	Dates
Designed By	EGR	
Drawn By	HSD	1/81
Checked By	JVG	1/81

Approved By
State Drainage Engineer

Revision No.	Sheet No.	Index No.
92	1 of 1	215

F.H.W.A. Approved: 10/8/81

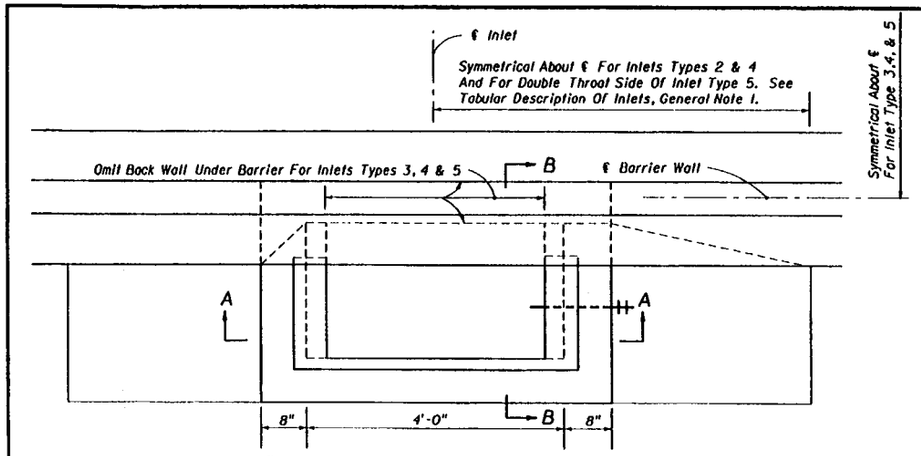

PLAN (INLETS TYPES 1 THRU 5)

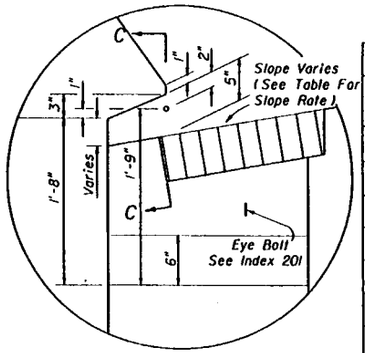

INSET A

GRATE SLOPE		
Shoulder Slope	Grate Slope Rate	Remarks
0.03	6.7:1	Std. Med. Conc. Shldr.
0.05	6:1	Std. Med. Flex. Shldr.
0.06	5.6:1	
0.07	5.2:1	
0.08	5:1	
0.09	4.7:1	
0.10	4.5:1	e (max)

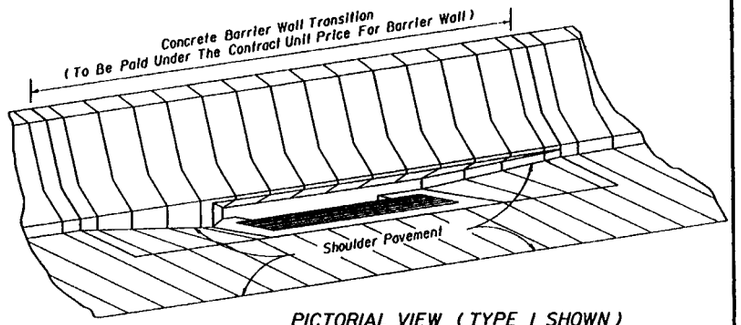

PICTORIAL VIEW (TYPE 1 SHOWN)

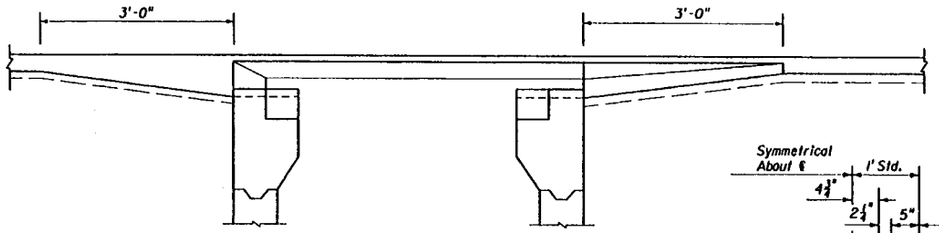

SECTION CC

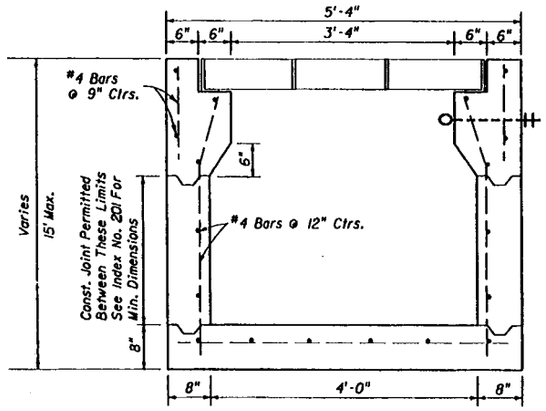

SECTION AA

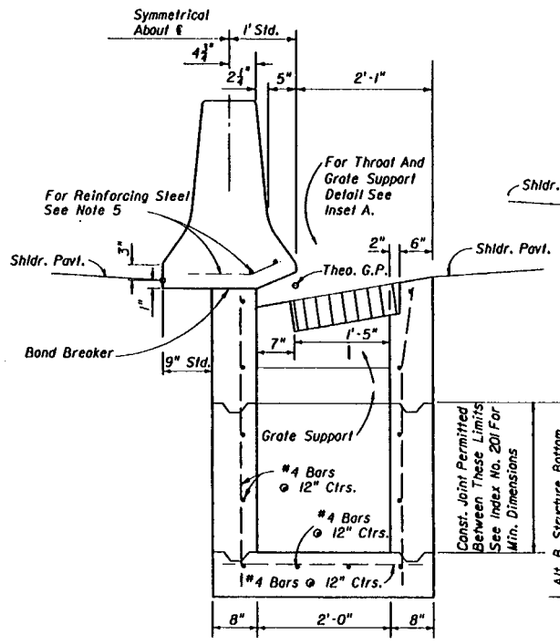

SECTION (INLETS TYPES 1 & 2)

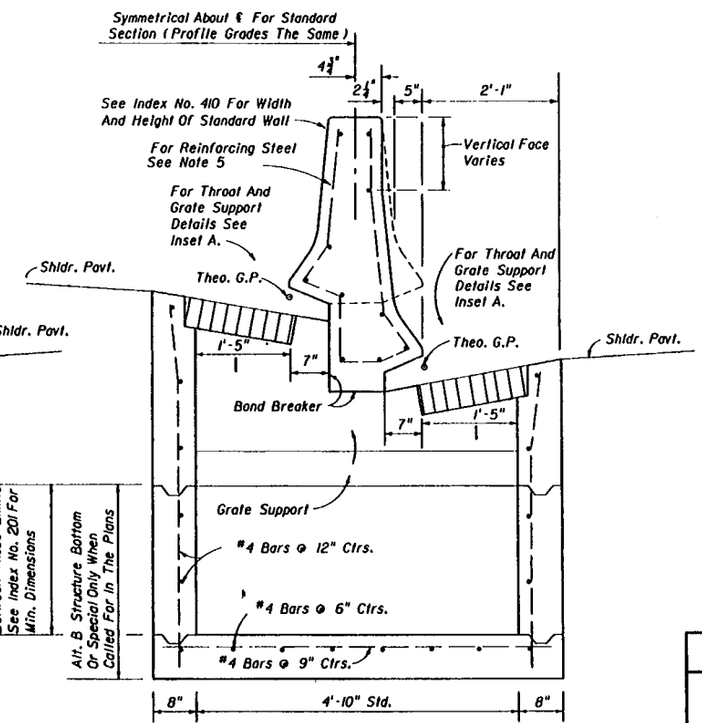

SECTION (INLETS TYPES 3, 4 & 5)
(NON-SYMMETRICAL SECTION SHOWN)

SECTION BB

GENERAL NOTES

1. Inlet Descriptions:
   - Type 1 Single throat, one side of barrier wall.
   - Type 2 Double throats, one side of barrier wall.
   - Type 3 Two single throats, opposite sides of barrier wall.
   - Type 4 Two double throats, opposite sides of barrier wall.
   - Type 5 Double throats, one side of barrier wall, and single throat other side of barrier wall.
2. For grate details see Index No. 220. The parallel bar grate shall be used unless the reticuline grate is called for in the plans. The reticuline grate shall be specified where bicycle traffic is anticipated.
3. For standard concrete barrier wall dimensions, and for dimensions of concrete barrier wall incorporating light standards within the wall, see Index No. 410.
4. Reinforcing steel shall have 2" minimum cover.
5. All reinforcing steel #4 bars. Longitudinal steel bars extend over full length of concrete barrier wall transition. Tie bars @ 12" ctrs. Reinforcing to be paid for under the contract unit price for concrete barrier wall.
6. For supplemental details see Index No. 201.
7. Inlets to be paid for under the contract unit price for Inlets (MB) (Type 1, 2, 3, 4, or 5), each. Barrier wall to be paid for under the contract unit price for Concrete Barrier Wall, LF.

STATE OF FLORIDA DEPARTMENT OF TRANSPORTATION
ROAD DESIGN

MEDIAN BARRIER INLETS TYPES 1, 2, 3, 4 & 5

	Names	Dates
Designed By		
Drawn By	HSD	06/83
Checked By	JVG/JBW	07/83

Approved By: [signature] State Drainage Engineer

Revision No.	Sheet No.	Index No.
92	1 of 1	217

F.H.W.A. Approved: 10/06/83

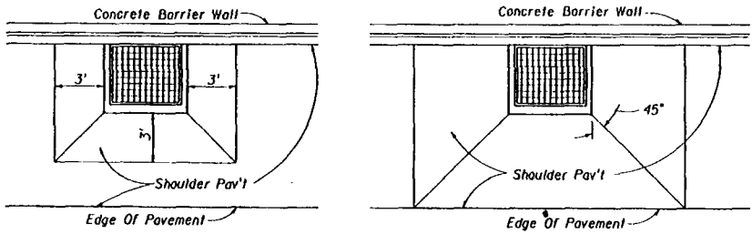

LOW SIDE SUPERELEVATION HIGH SIDE TRANSITION

PAVEMENT WARP FOR SHOULDERS IN SUPERELEVATION

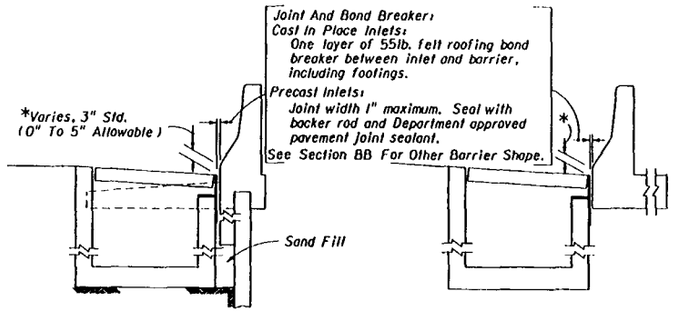

BARRIER WALL / RETAINING WALL SINGLE FACE ROADWAY BARRIER

INLET SECTION AT WALLS

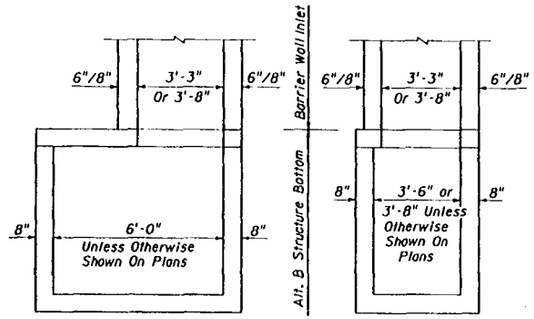

Note: Alt. B Structure Bottom Only. See Index No. 200.

INLET WITH STRUCTURE BOTTOM

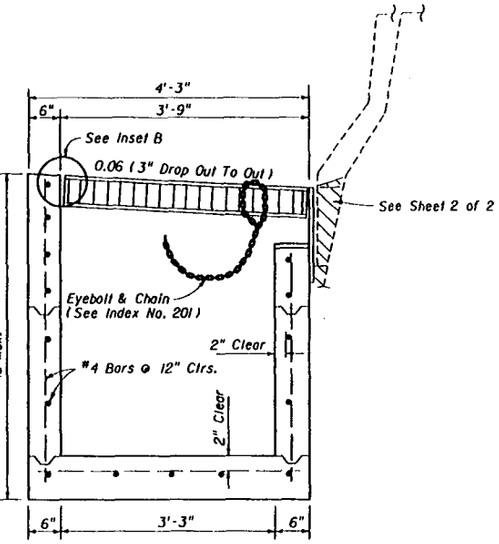

SECTION AA (WITHOUT GRATE) SECTION BB

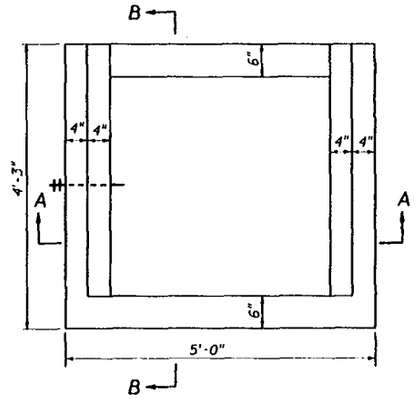

TOP VIEW (WITHOUT GRATE)

GENERAL NOTES

1. This inlet is primarily intended for use adjacent to concrete barrier walls on paved shoulders. Use of the inlet adjacent to other wall types shall be approved by the Drainage Engineer. The inlet is suitable for bicycle and occasional pedestrian traffic. It is not intended for use in curb and gutter or other areas where throated inlets are required, nor areas subject to high debris.
2. Inlets located in embankments constructed with earth anchored retaining wall shall be designed with minimum depths to reduce adverse impact on the anchorage system. Runs of pipe parallel to and near anchored wall shall be avoided wherever practical. Special coordination must be exercised during the design and construction of storm water systems within anchored wall systems.
3. Inlet bottoms and/or tops may be either precast or cast-in-place. Whether cast as a single unit or as multiple segments, and whether precast or cast-in-place, the upper 2'-3" of the inlet shall be reinforced in accordance with sections CC, DD and EE.
4. Exposed edges shall be chamfered ¾"
5. When Alternate G grate is specified in the plans, the grate is to be hot dipped galvanized after fabrication. Field installation of the filler bar called for in Inset B will not be permitted, thereby requiring tolerance adjustment during fabrication and/or casting, or, matching grate to structure prior to galvanizing.
6. For supplemental details see Index Nos. 200 and 201.
7. Inlets to be paid for under the contract unit for Inlets (Barrier Wall), Each.

STATE OF FLORIDA DEPARTMENT OF TRANSPORTATION
ROAD DESIGN

BARRIER WALL INLET

	Names	Dates
Designed By	JVG/EGR	09/86
Drawn By	HSD	09/86
Checked By	JVG	09/86
F.H.W.A. Approved: 11/07/86		

Approved By: State Drainage Engineer

Revision No.	Sheet No.	Index No.
92	1 of 2	218

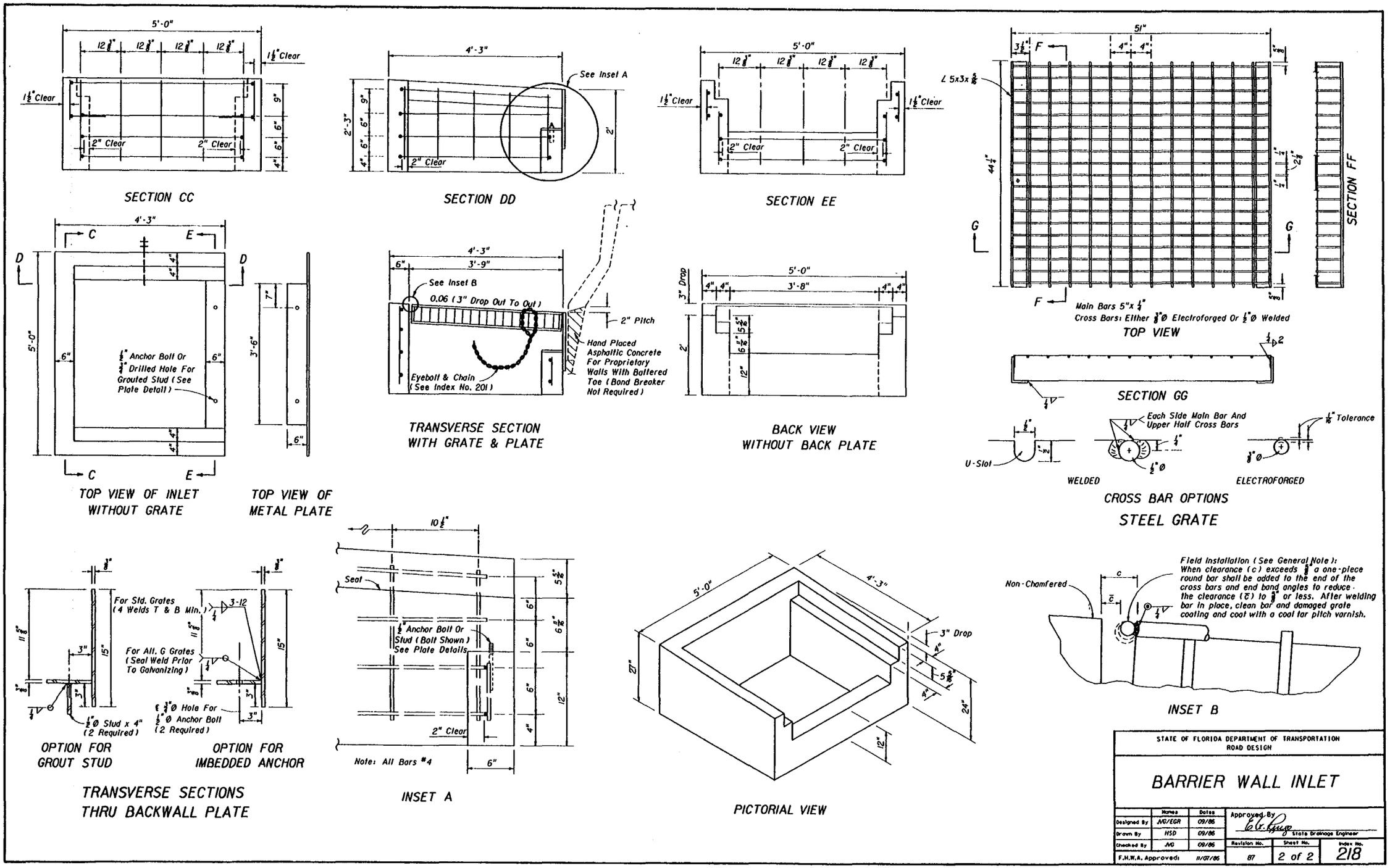
SECTION CC
SECTION DD
See Inset A
SECTION EE
TOP VIEW
Main Bars 5"x 1/4"
Cross Bars: Either 3/8"Ø Electroforged Or 1/2"Ø Welded
SECTION FF
SECTION GG
TOP VIEW OF INLET WITHOUT GRATE
1/2" Anchor Bolt Or 3/4" Drilled Hole For Grouted Stud (See Plate Detail)
TOP VIEW OF METAL PLATE
TRANSVERSE SECTION WITH GRATE & PLATE
See Inset B
0.06 (3" Drop Out To Out)
2" Pitch
Hand Placed Asphaltic Concrete For Proprietary Walls With Battered Toe (Bond Breaker Not Required)
Eyebolt & Chain (See Index No. 201)
BACK VIEW WITHOUT BACK PLATE
Each Side Main Bar And Upper Half Cross Bars
U-Slot
WELDED
ELECTROFORGED
CROSS BAR OPTIONS
STEEL GRATE
For Std. Grates (4 Welds T & B Min.)
For All. G Grates (Seal Weld Prior To Galvanizing)
1/2"Ø Stud x 4" (2 Required)
1/2"Ø Hole For 1/2"Ø Anchor Bolt (2 Required)
OPTION FOR GROUT STUD
OPTION FOR IMBEDDED ANCHOR
TRANSVERSE SECTIONS THRU BACKWALL PLATE
Seat
1/2" Anchor Bolt Or Stud (Bolt Shown) See Plate Details
Note: All Bars #4
INSET A
PICTORIAL VIEW
Non-Chamfered
Field Installation (See General Note): When clearance (c) exceeds 5/8" a one-piece round bar shall be added to the end of the cross bars and end bend angles to reduce the clearance (c̄) to 5/8" or less. After welding bar in place, clean bar and damaged grate coating and coat with a coal tar pitch varnish.
INSET B
STATE OF FLORIDA DEPARTMENT OF TRANSPORTATION
ROAD DESIGN
BARRIER WALL INLET
Designed By JVG/EGR 09/86
Drawn By HSD 09/86
Checked By JVG 09/86
F.H.W.A. Approved: 11/07/86
Approved By
State Drainage Engineer
Revision No. 87
Sheet No. 2 of 2
Index No. 218

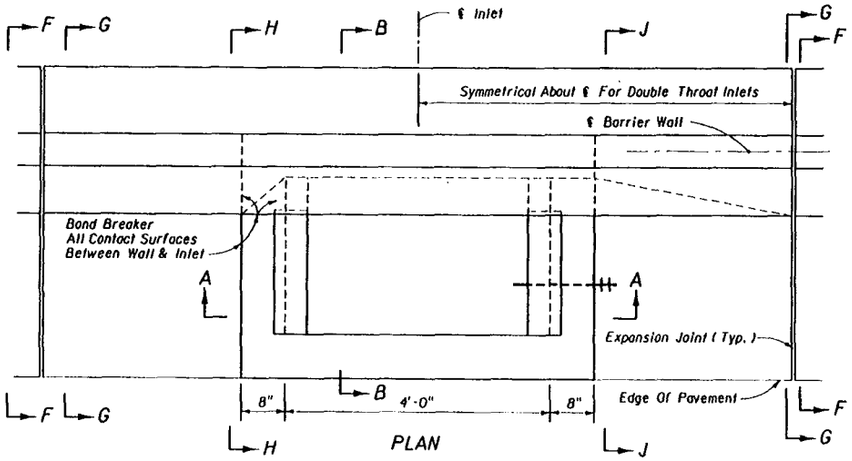

PLAN

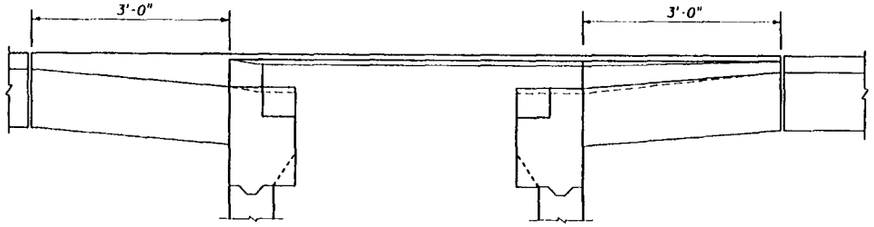

SECTION CC

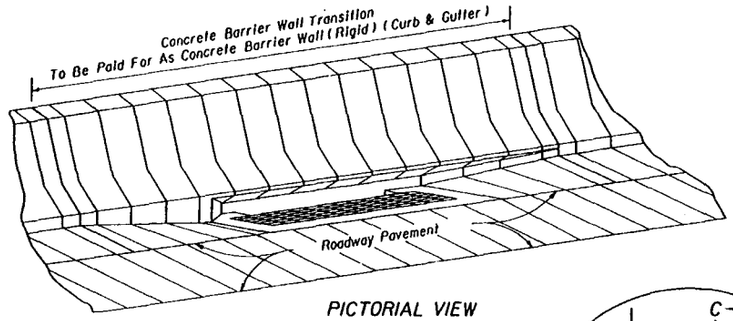

PICTORIAL VIEW

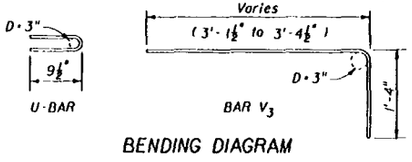

BENDING DIAGRAM

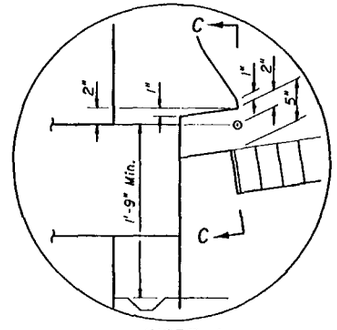

INSET A

GENERAL NOTES

1. This inlet to be used in conjunction with Concrete Barrier Wall (Rigid) (Curb & Gutter), Index No. 410.
2. All reinforcing steel #4 bars. Reinforcing shall have 2" min. cover unless otherwise shown. Cost to be included in cost for concrete barrier wall.
3. Barrier wall shall be Class II concrete, finished in accordance with Index No. 410.
4. A flat 18" x 2½" drainage slot shall be constructed at the inlet centerline when the inlet is located in a curb sag. No more than one V1 bar, one V3 bar and one U-bar are to be deleted for construction of the drainage slot.
5. For supplemental details see Index Nos. 201, 209 and 410.
6. Recommended maximum pipe sizes are 18" longitudinal and 30" transverse. For larger pipe, use Alt. B bottoms, Index No. 200.
7. Grates can be fabricated with reticuline bars or with either ⅜"Ø electroforged or ½"Ø welded cross bars and full depth bars as detailed.
8. When Alternate G grate is specified in plans, the grate is to be hot dipped galvanized after fabrication.
9. For pay item purposes the height of the structure shall be computed using the theoretical gutter elevation, less the flow line elevation of the lowest pipe or to top of sump floor.
10. Inlets to be paid for under the contract unit price for Inlets (Barrier Wall) (Rigid) (Curb & Gutter), Each.

Barrier wall to be paid for under the contract unit price for Concrete Barrier Wall (Rigid-Curb & Gutter) LF.

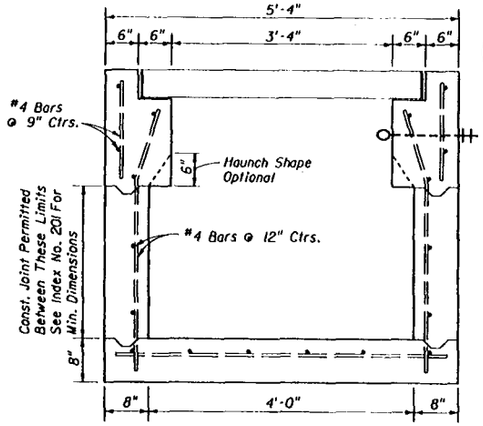

SECTION AA

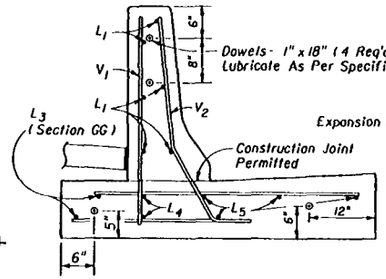

Note: For SECTION FF and additional details see Index No. 410, 'CONCRETE BARRIER WALL (RIGID) (CURB & GUTTER) '

SECTION FF & GG

Bars L_1: Length 11'-1", Straight
Bars L_3 & L_4: Length 11'-1"
Field Bend For 4" Drop (Top Bars)
3" Drop (Bottom Bars)
Bars L_5: Length 2'-8"
Field Bend For Drop Same As L_3 & L_4
Bars V_1: 18" Ctrs., Length Varies
Bars V_2: 12" Ctrs., Field Bend

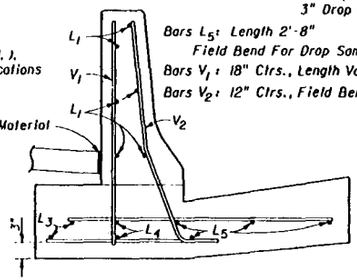

SECTION HH

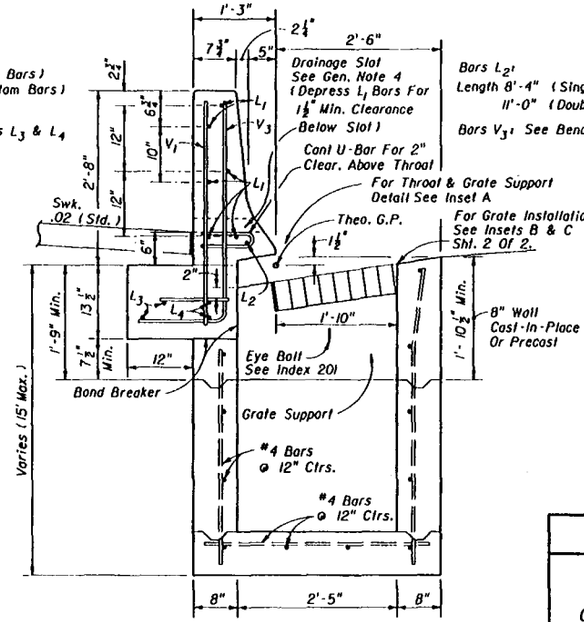

Bars L_2: Length 8'-4" (Single Throat) 11'-0" (Double Throat)

Bars V_3: See Bending Diagram

SECTION BB

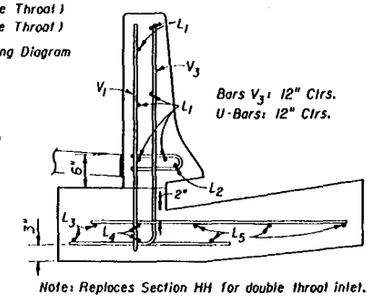

Note: Replaces Section HH for double throat inlet.

SECTION JJ

STATE OF FLORIDA DEPARTMENT OF TRANSPORTATION
ROAD DESIGN

BARRIER WALL INLET

CONCRETE BARRIER WALL (RIGID) (C & G)

	Names	Dates
Designed By	EGR/MG	9/89
Drawn By	JBW	9/89
Checked By	EGR/MG	9/89

Approved By: G.G. Kuse — State Drainage Engineer

F.H.W.A. Approved:

Revision No.	Sheet No.	Index No.
92	1 of 2	219

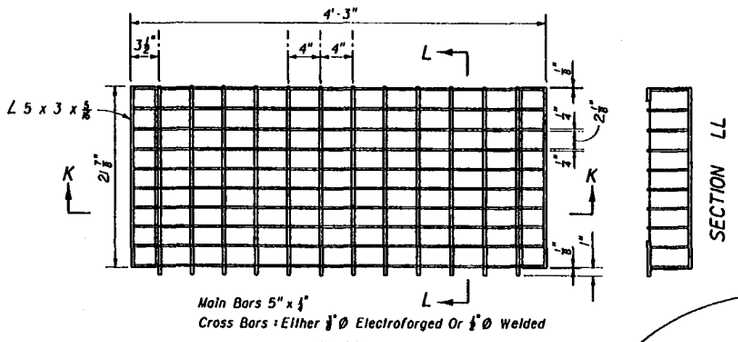

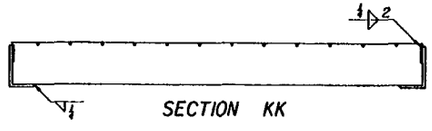

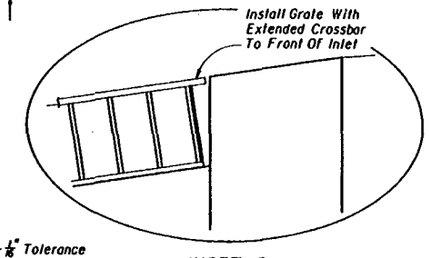

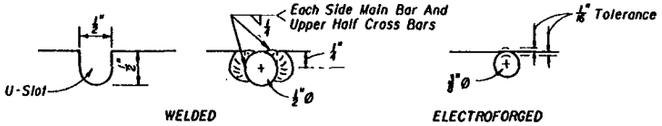

CROSS BAR OPTIONS

CROSS BAR

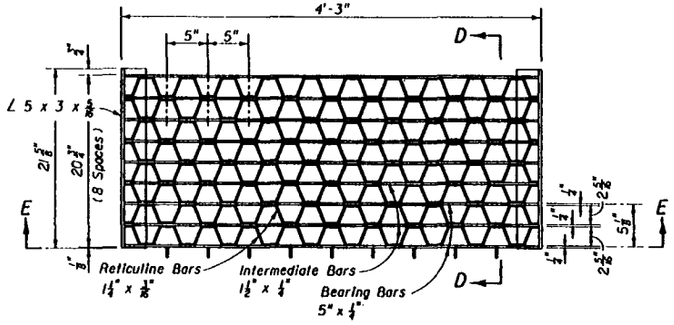

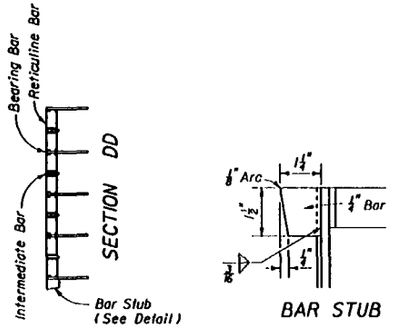

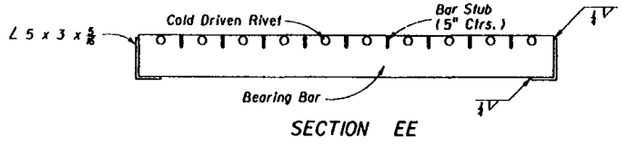

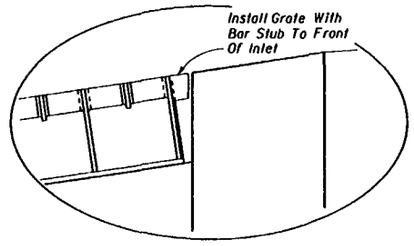

RETICULINE

OPTIONAL STEEL GRATES

STATE OF FLORIDA DEPARTMENT OF TRANSPORTATION
ROAD DESIGN

BARRIER WALL INLET

CONCRETE BARRIER WALL (RIGID) (C & G)

	Names	Dates
Designed By	EGR/JVG	9/89
Drawn By	JBW	9/89
Checked By	EGR/JVG	9/89
F.H.W.A. Approved:		

Approved By E. G. Rice
State Drainage Engineer

Revision No.	Sheet No.	Index No.
90	2 of 2	219

RECOMMENDED MAXIMUM PIPE SIZES	
INLET INSIDE WIDTH	PIPE SIZE
2'-11"	24"
4'-0"	36"

Note: Recommended sizes are for concrete pipe. Sizes for other types of pipe must be verified for fit in accordance with Index No. 201. For larger pipe see bottom detail right and Index No. 200.

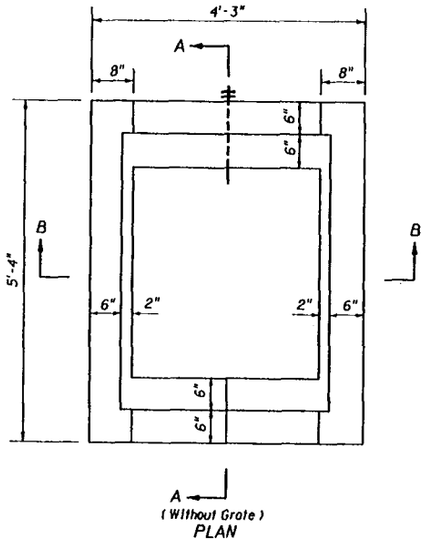

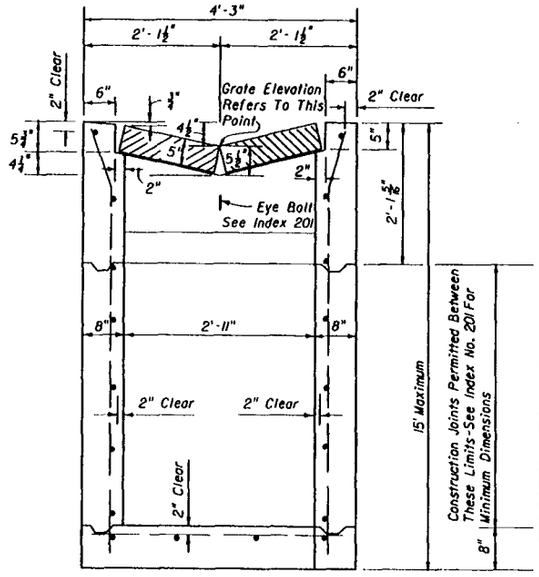

SECTION BB

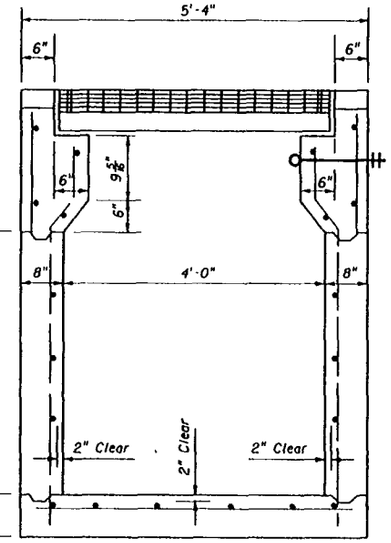

SECTION AA

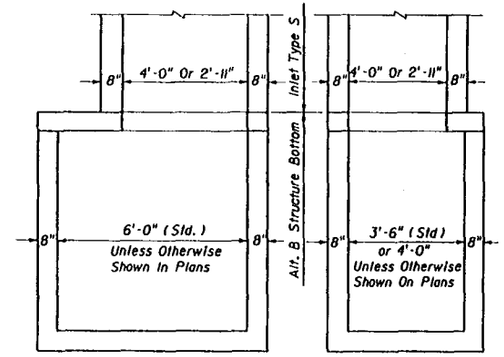

NOTE: Alt. B Structure Bottom Only. See Index No. 200

INLET WITH STRUCTURE BOTTOM

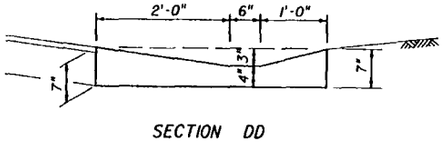

SECTION DD

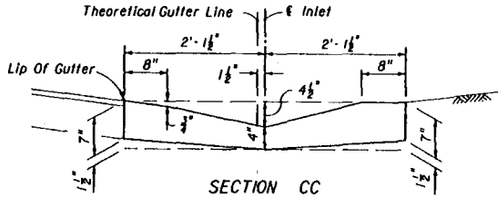

SECTION CC

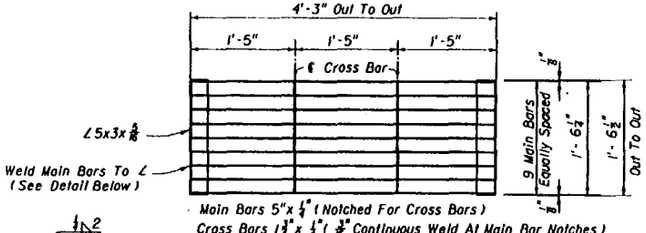

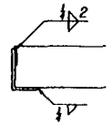

DETAIL

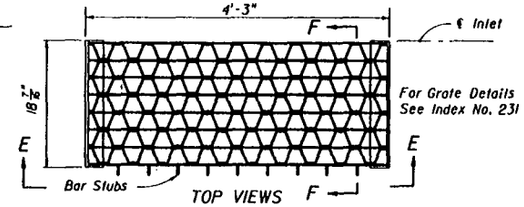

TOP VIEWS

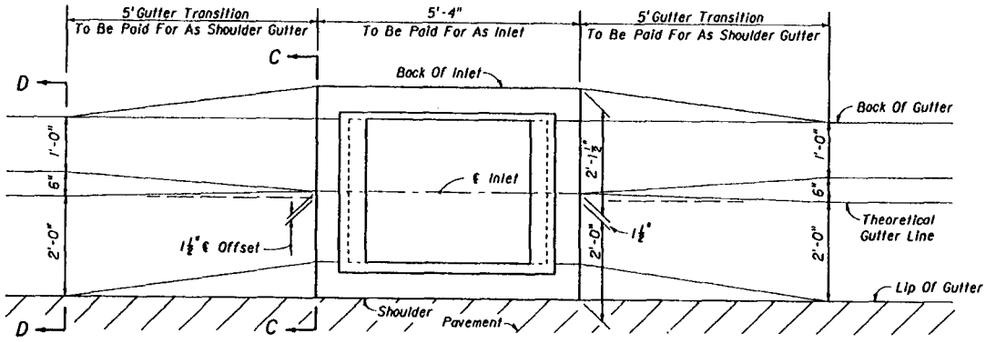

SHOULDER GUTTER TRANSITION

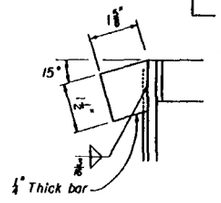

DETAIL OF BAR STUB

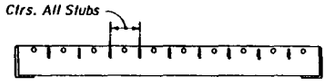

SECTION EE

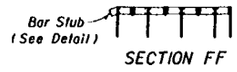

SECTION FF

GENERAL NOTES

1. This inlet with parallel bar grate shall be used for limited access facilities and other bicycle restricted facilities subject to heavy loads, and, may be used in locations where inlets Type A and B, with wide grate opening, are unacceptable. On limited access facilities with designated bicycle access and on all other facilities, including roads overpassing limited access highways, the reticuline grate shall be used.
2. Reinforcing steel all No. 4 bars at 12" centers both ways with 2" clearance to inside of walls and bottom. Bars to be cut or bent for 1½ minimum clearance around pipe.
3. All exposed edges and corners shall be tooled to ½" radius.
4. When Alternate G grate is specified in plans, the grate is to be hot dipped galvanized after fabrication.
5. For supplementary details see Index Nos. 200 and 201.

STEEL GRATE

STATE OF FLORIDA DEPARTMENT OF TRANSPORTATION
ROAD DESIGN

GUTTER INLET TYPE S

	Names	Dates
Designed By		
Drawn By		
Checked By		
F.H.W.A. Approved:		05/01/75

Approved By: State Drainage Engineer

Revision No.	Sheet No.	Index No.
92	1 of 1	220

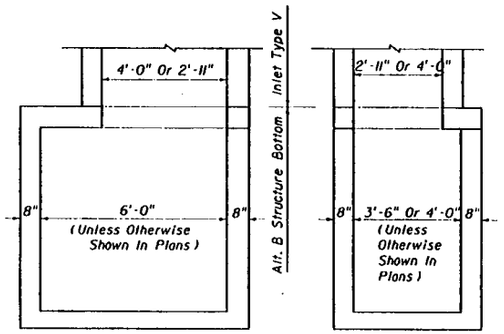

NOTE: Alt. B Structure Bottom Only. See Index No. 200

(For Pipes 30" Dia. And Larger)

INLET WITH STRUCTURE BOTTOM

GENERAL NOTES

1. This inlet is designed for village swales, ditches, or other areas subject to heavy wheel loads, minimum debris and subject to pedestrian and/or bicycle traffic.
2. When alternate "G" grate is specified in plans, the grate is to be hot dipped galvanized after fabrication.
3. Reinforcing - No. 4 bars at 12" ctrs. both ways. Cut or bend bars out of way of pipe to clear pipe $1\frac{1}{2}$".
4. All exposed edges and corners shall be tooled to $\frac{1}{4}$" radius.
5. Recommended maximum pipe sizes shown are for concrete pipe.
6. For supplementary details see Index No. 201.

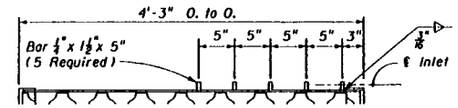

OPTIONAL BAR SPACING

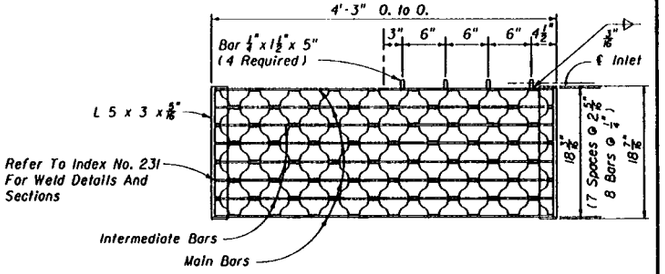

STEEL GRATE

TWO REQUIRED PER INLET

5" Steel Grate — Main Bars 5" x $\frac{1}{4}$"

Intermediate Bars $1\frac{1}{2}$" x $\frac{1}{4}$" — Reticuline Bars $1\frac{1}{4}$" x $\frac{3}{16}$"

Steel Grate : Manufactured By Borden, Florida Steel, U.S. Foundry Irving, Reliance, Greulich (Or Equal).

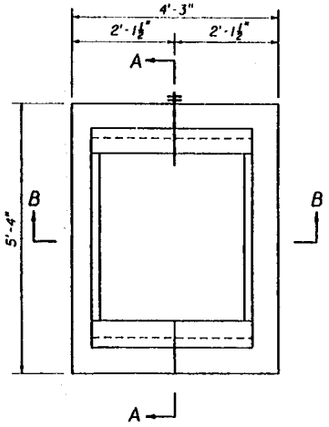

PLAN

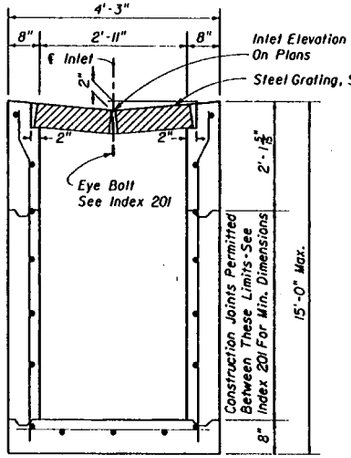

SECTION BB

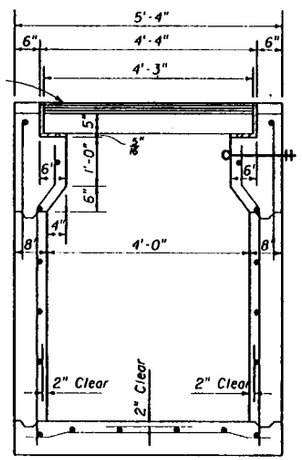

SECTION AA

Recomended Maximum Pipe Size:
2'-11" Wall - 24" Size
4'-0" Wall - 36" Size

STATE OF FLORIDA DEPARTMENT OF TRANSPORTATION
ROAD DESIGN

GUTTER INLET TYPE V

	Names	Dates	Approved By
Designed By			S. A. McLemore, State Drainage Engineer
Drawn By	WHW	4/57	
Checked By	RMM	4/57	Revision No. 92 — Sheet No. 1 of 1 — Index No. 221
F.H.W.A. Approved:		5/1/75	

APPLICATION GUIDELINES FOR DITCH BOTTOM AND MEDIAN INLETS

INDEX NO.	TYPE	LOCATION	CAPACITY (CFS) GRATE ONLY FLOW CONDITION A	GRATE ONLY FLOW CONDITION B	GRATE WITH SINGLE STD. SLOT FLOW CONDITION A	GRATE WITH SINGLE STD. SLOT FLOW CONDITION B	GRATE WITH SINGLE TRAV. SLOT FLOW CONDITION A	GRATE WITH SINGLE TRAV. SLOT FLOW CONDITION B	SAFETY TRAFFIC	SAFETY PEDESTRIAN	SAFETY BICYCLE	DEBRIS TOLERANCE	PIPE SIZE LIMITATION INLET INSIDE WIDTH	PIPE SIZE LIMITATION MAXIMUM PIPE SIZE	OTHER DESIGN CONSIDERATIONS
230	A	Limited Access Facilities	7	4	NA	NA	NA	NA	Heavy Wheel Loads	No	No	Good	2'-0" 3'-1"	18" 24"	
231	B	Limited Access Facilities	16	6	NA	NA	NA	NA	Heavy Wheel Loads	No	No	Excellent	3'-8" 4'-2"	30" 36"	
232	C	*Outside CZ	5	4	11	8	7	5	Infrequent Traffic	Yes	Yes	Poor*	2'-0" 3'-1"	18" 24"	* See Note 4. For back of sidewalk location see Index No. 282
	D	*Outside CZ	14	6	27	15	20	8	Infrequent Traffic	Yes	Yes	Poor*	3'-1" 4'-1"	24" 36"	* See Note 4.
	E	*Outside CZ	10	6	19	13	14	7	Infrequent Traffic	Yes	Yes	Poor*	3'-0" 4'-6"	24" 42"	* See Note 4.
	H	Outside CZ	15	7	24	14	NA	NA	Infrequent Traffic	Yes	Yes	Poor*	3'-0" 7'-8"	24" 66" Or 2-30"	* See Note 4.
233	F	Inside CZ	9	5	NA	NA	NA	NA	Heavy Wheel Loads	Yes	Yes	Poor	2'-0" 4'-0"	18" 36"	
	G	Inside CZ	23	7	NA	NA	NA	NA	Heavy Wheel Loads	Yes	Yes	Poor	4'-4" 5'-0"	36" 42"	
234	J	Inside CZ	9	4	NA	NA	NA	NA	Heavy Wheel Loads	Yes	No	Fair	2'-11" 4'-0"	24" 36"	
235	K	Outside CZ	NA	NA	NA	NA	NA	NA	NA	NA	NA	Good	3'-8" See Index	36"	Debris buildup may occur on Type B fencing.

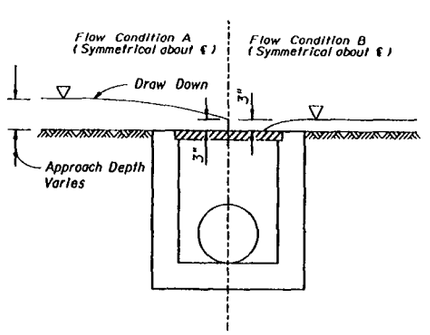

GENERAL NOTES

1. All inlets must be selected to satisfy hydraulic suitability, with proper consideration given to safety and economics.
2. CZ denotes clear zone, formerly CRA denoting clear recovery area.
3. Alternate G grates should be specified when in salt water environment.
4. Inlets without slots or inlets with traversable slots maybe located within the clear zone. Inlets C, D and E capacity and debris tolerance may be increased by the addition of a slot. Slotted inlets located within roadway clear zones and in areas accessible to pedestrians shall have traversable slots. Traversable slots are not adaptable to inlet Type H.
5. Special ditch blocks require plan details.
6. Pipe size limitations are based on circular Class III, B Wall, Concrete Pipe. Elliptical pipe and corrugated pipe are to be checked for fit in accordance with Index No. 201; metal pipe sizes should be reviewed using $2\frac{2}{3}$" x $\frac{1}{2}$" corrugation up through 30" and 3" x 1" corrugation for larger sizes.
7. The capacity values shown are approximate and are intended as a guide to assist in describing relative performance. Inlets are assumed to be in a sag condition (No Bypass Flow). The effects of vortex flow have not been considered. Inlet control is assumed. The Designer must verify the outlet conditions and design assumptions before accepting the capacity values shown; outlet constraints are likely to control with minimum pipe sizes.

Flow condition A - Orifice Flow Conditions

1. Grates are 50% blocked with 3" of water depth above the grate.
2. Slots are 25% blocked.
3. Orifice Equation: $Q = 0.67\ A\ \sqrt{2gH}$

Flow Condition B - Weir Flow Conditions

1. A 3" head above the top of the inlet is assumed.
2. The effective weir length is assumed to be equal to the inlet perimeter with no deduction for the grate or debris.
3. For inlets with slots, the effective head for the side of the inlet with the slot is 15" for standard 12" slots and 10" for traversable slots. The slot is assumed to be 25% blocked. In some instances the flow will be in orifice conditions into the slot.
4. Weir Equation: $Q = 3.0\ LH^{3/2}$

Note: NA = Not Applicable

STATE OF FLORIDA DEPARTMENT OF TRANSPORTATION
ROAD DESIGN

DITCH BOTTOM AND MEDIAN INLET APPLICATION GUIDE

	Names	Dates
Designed By	EGR	09/06/84
Drawn By	NSD	09/06/84
Checked By	EGR	09/06/84
F.H.W.A. Approved:		09/21/84

Approved By: [signature] State Drainage Engineer

Revision No.	Sheet No.	Index No.
92	1 of 1	229

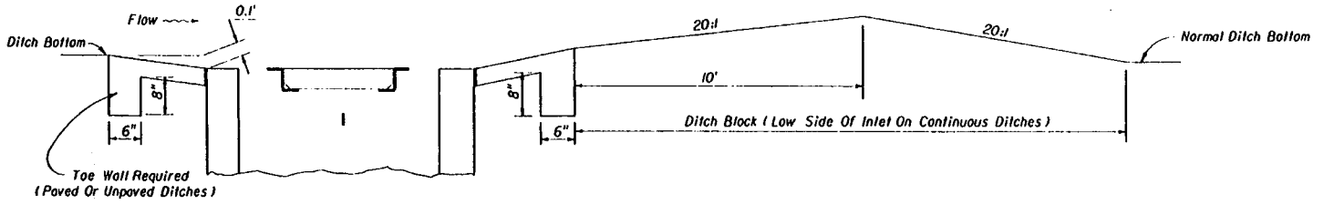

SECTION DD

RECOMMENDED MAXIMUM PIPE SIZES	
INLET INSIDE WIDTH	PIPE SIZE
2'-0"	18"
3'-1"	24"

Note: Recommended sizes are for concrete pipe. Sizes for other types of pipe must be verified for fit in accordance with Index No. 201. For larger pipe see bottom detail right and Index No. 200.

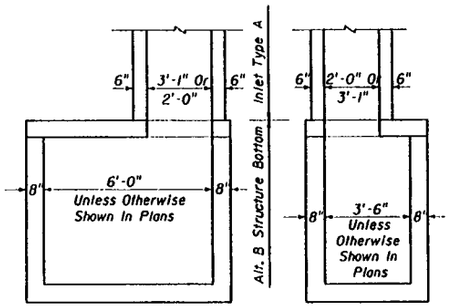

NOTE: Alt. B Structure Bottom Only. See Index No. 200

INLET WITH STRUCTURE BOTTOM

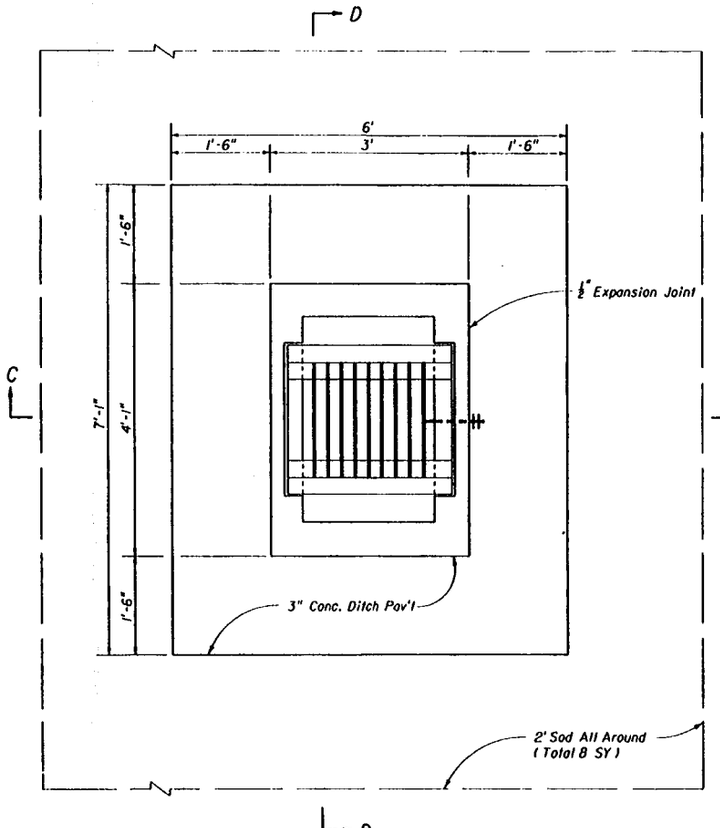

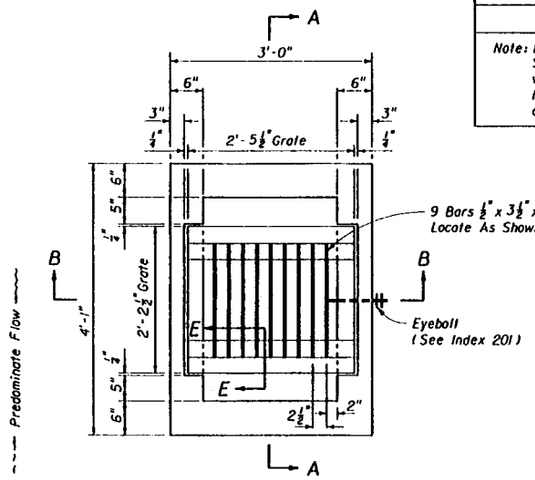

PLAN

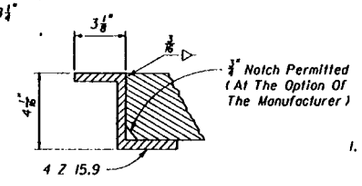

SECTION EE

GENERAL NOTES

1. This inlet is designed for ditches, medians, or other areas subject to heavy wheel loads on limited access facilities where debris may be a problem and flow through this grate is less than 7cfs. NOTICE: This inlet is not for use in areas subject to pedestrian and/or bicycle traffic.
2. Reinforcing 2" clearance to inside face. Cut or bend bars out of way of pipe to clear pipe by 1 1/2".
3. Chamfer exposed edges (3/4" Chamfer).
4. When alternate "G" grate is specified in plans, the grate is to be hot dipped galvanized after fabrication.
5. Cost of ditch paving to be included in the cost of inlet. Sodding to be paid for under contract unit price for Sodding, SY.
6. For supplemental details see Index No. 201.

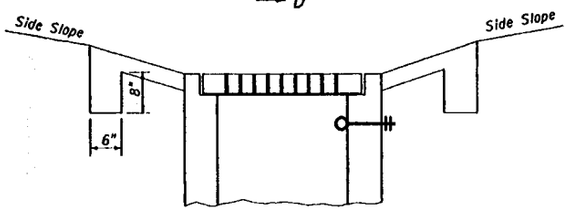

SECTION CC

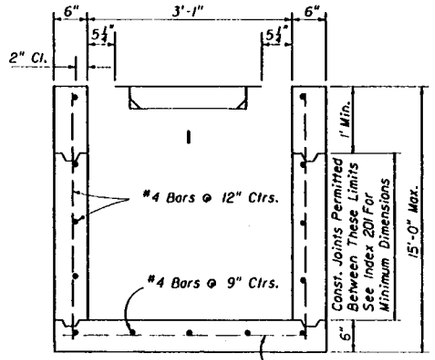

SECTION AA

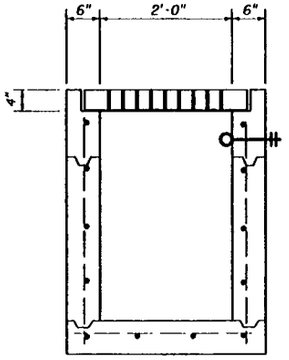

SECTION BB

STATE OF FLORIDA DEPARTMENT OF TRANSPORTATION
ROAD DESIGN

DITCH BOTTOM INLET TYPE A

	Names	Dates
Designed By		
Drawn By		
Checked By		
F.H.W.A. Approved:		7/18/75

Approved By: A. A. McLemore, State Drainage Engineer

Revision No.	Sheet No.	Index No.
92	1 of 1	230

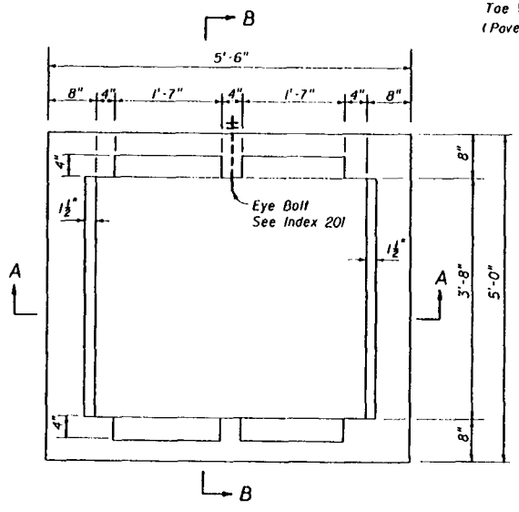

PLAN
(Grate Not Shown)

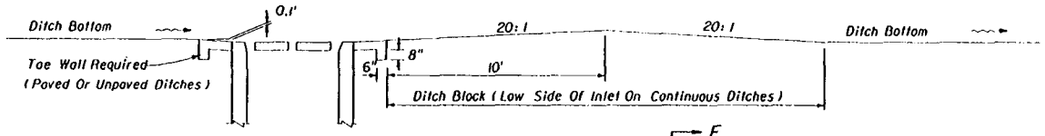

SECTION EE

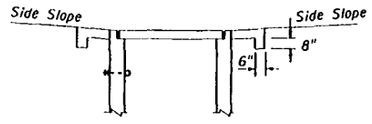

SECTION FF

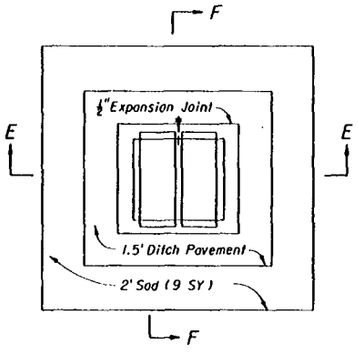

SODDING, PAVEMENT AND DITCH BLOCK

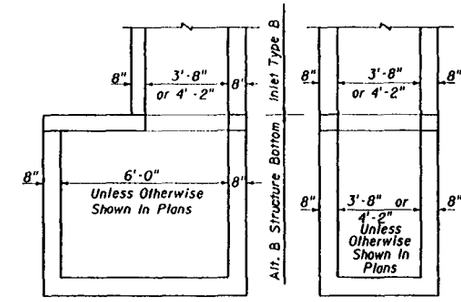

NOTE: Alt. B Structure Bottom Only. See Index No. 200

INLET WITH STRUCTURE BOTTOM

RECOMMENDED MAXIMUM PIPE SIZES	
INLET INSIDE WIDTH	PIPE SIZE
3' - 8"	30"
4' - 2"	36"

Note: Recommended sizes are for concrete pipe. Sizes for other types of pipe must be verified for fit in accordance with Index No. 201. For larger pipe see bottom detail above and Index No. 200.

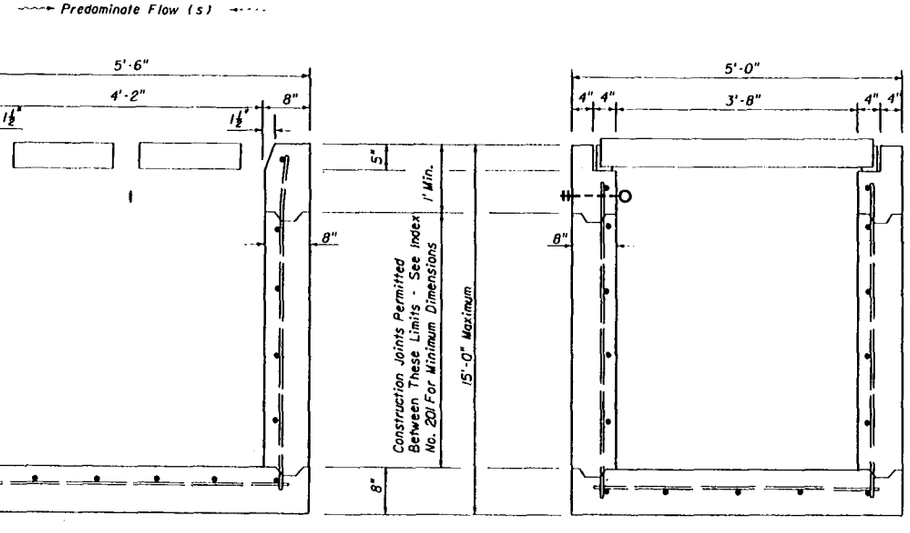

SECTION AA

SECTION BB

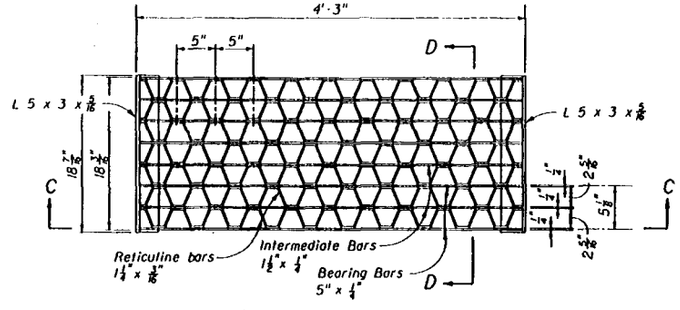

PLAN

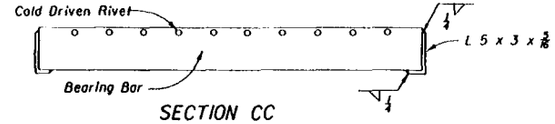

SECTION CC

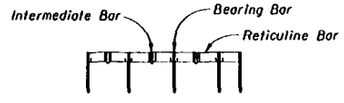

SECTION DD

STEEL GRATE

GENERAL NOTES

1. NOTICE: Inlet intended for use only on that portion of limited access facilities not subject to pedestrian and / or bicycle traffic.
2. Inlet designed for ditches, medians or other areas subject to heavy wheel loads, where debris may be a problem, and inlet intake is 7 cfs or more.
3. Reinforcing steel all No. 4 bars at 12" centers both ways with 2" clearance to inside of walls and bottom. Bars to be cut or bent for 1½" minimum clearance around pipe.
4. When alternate G grates are specified in the plans, the grates are to be hot dipped galvanized after fabrication.
5. Ditch paving to be included in cost of inlet. Sodding to be paid for under the contract unit price for Sodding, SY.
6. For supplementary details see Index No. 201.

STATE OF FLORIDA DEPARTMENT OF TRANSPORTATION
ROAD DESIGN

DITCH BOTTOM INLET TYPE B

	Names	Dates
Designed By	HAB	04/67
Drawn By	RWR	05/82
Checked By	JVC	05/82
F.H.W.A. Approved:		07/18/72 09/23/82

Approved By: J. A. McLemore
State Drainage Engineer

Revision No.	Sheet No.	Index No.
92	1 of 1	231

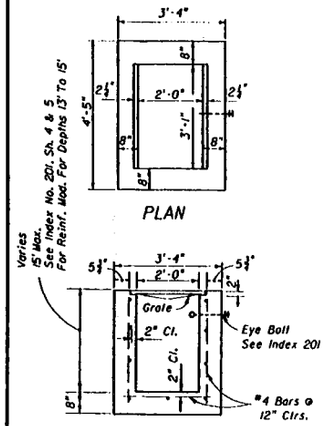

SECTION

TYPE C

Recommended Maximum Pipe Size:
2'-0" Wall-18" Pipe
3'-1" Wall-24" Pipe

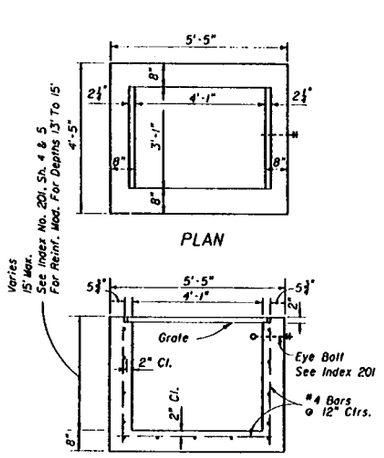

SECTION

TYPE D

Recommended Maximum Pipe Size:
3'-1" Wall-24" Pipe
4'-1" Wall-36" Pipe

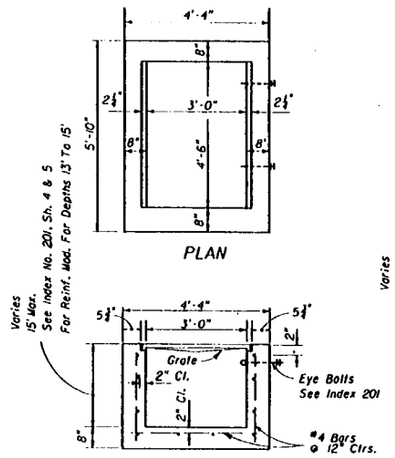

SECTION

TYPE E

Recommended Maximum Pipe Size:
3'-0" Wall-24" Pipe
4'-6" Wall-42" Pipe

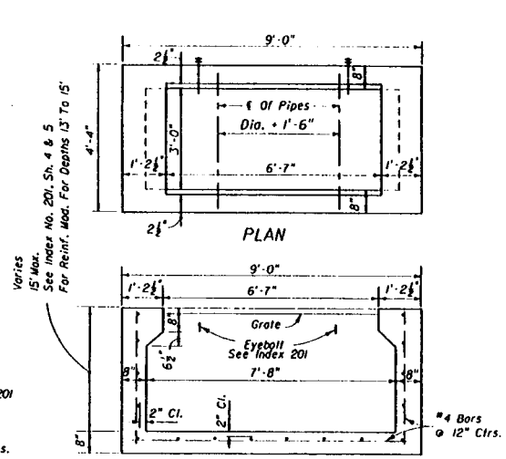

SECTION

TYPE H

Recommended Maximum Pipe Size:
3'-0" Wall-24" Pipe
7'-8" Wall-1-66" Pipe
2-30" Pipe

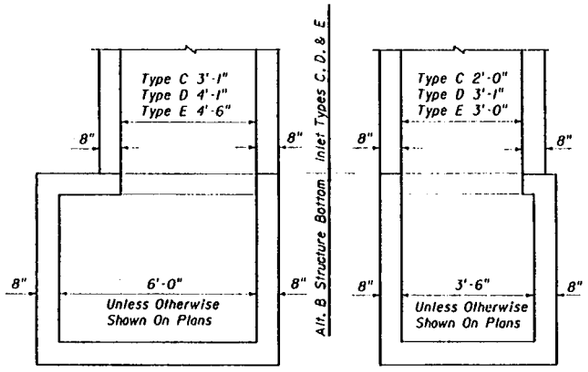

NOTE: Alt. B Structure Bottom Only. See Index No. 200

STRUCTURE BOTTOM FOR INLETS TYPE C, D & E

INLETS

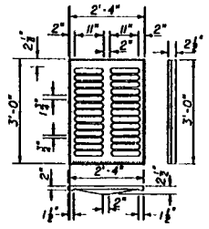

TYPE C

Approx. Weight 235 Lbs.

CAST IRON GRATE NOT PERMITTED ON INLET TYPE D

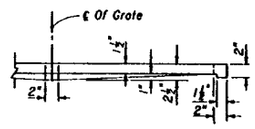

HALF SECTION CAST IRON GRATES

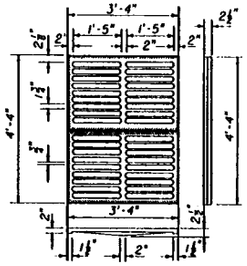

TYPE E

Approx. Weight 465 Lbs.

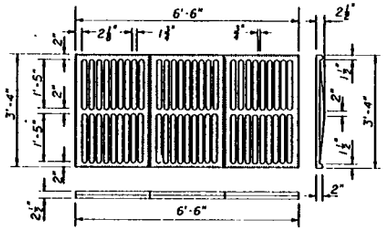

TYPE H

Approx. Weight 725 Lbs.

CAST IRON GRATES

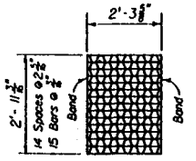

TYPE C

Straight Bars 2"x ⅜"
Reticuline Bars 1¼" x ⅜"
Bands 1½"x ⅜"
Approx. Weight 100 Lbs.

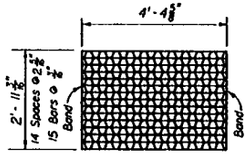

TYPE D

Straight Bars 2"x ⅜"
Reticuline Bars 1¼" x ⅜"
Bands 1½"x ⅜"
Approx. Weight 180 Lbs.

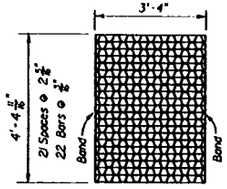

TYPE E

Straight Bars 2"x ⅜"
Reticuline Bars 1¼" x ⅜"
Bands 1½"x ⅜"
Approx. Weight 215 Lbs.

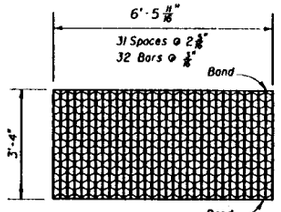

TYPE H

Straight Bars 2"x ⅜"
Reticuline Bars 1¼" x ⅜"
Bands 1½"x ⅜"
Approx. Weight 315 Lbs.

NOTICE: Steel Grates Are Required On Inlets With Traversable Slots And On Inlets where Bicycle Traffic Is Anticipated.

STEEL GRATES

GENERAL NOTES

1. These inlets are suitable for bicycle and pedestrian areas and are to be used in ditches, medians and other areas subject to infrequent traffic loadings but are not to be placed in areas subject to any heavy wheel loads.
2. Inlets subject to minimal debris should be constructed without slots. Where debris is a problem inlets should be constructed with slots. Slotted inlets located within roadway clear zones and in areas accessible to pedestrians shall have traversable slots. The traversable slot modification is not adaptable to inlet Type H. Slots may be constructed at either or both ends as shown on plans.
3. Steel grates are to be used on all inlets where bicycle traffic is anticipated. Steel grates are to be used on all inlets with traversable slots. Either cast iron or steel grates may be used on inlets without slots where bicycle traffic is not anticipated. Either cast iron or steel grates may be used on all inlets with non-traversable slots. Subject to the selection described above, when Alternate G grate is specified in the plans, either the steel grate, hot dipped galvanized after fabrication, or the cast iron grate may be used, unless the plans stipulate the particular type.
4. Recommended maximum pipe sizes shown are for concrete pipe. Pipe sizes larger than those recommended must be checked for fit.
5. All exposed corners and edges of concrete are to be chamfered ¾".
6. Pavement to be used on inlets without slots and inlets with non-traversable slots only when called for in the plans; but required on all traversable slot inlets. Cost to be included in contract unit price for inlets. Quantities shown are for information only.
7. Traversable slots constructed in existing inlets shall be paid for as inlets partial, and shall include the cost for slot openings, paving and any required replacement grates.
8. Sodding to be used on all inlets not located in paved areas and paid for under contract unit price for Sodding, SY.
9. For supplementary details see Index No. 201.

STATE OF FLORIDA DEPARTMENT OF TRANSPORTATION
ROAD DESIGN

DITCH BOTTOM INLETS TYPES C, D, E & H

	Names	Dates
Designed By		
Drawn By		
Checked By	EGR/JG	07/81
F.H.W.A. Approved:		10/07/80

Approved By: S. A. McLemore, State Drainage Engineer

Revision No.	Sheet No.	Index No.
92	1 of 4	232

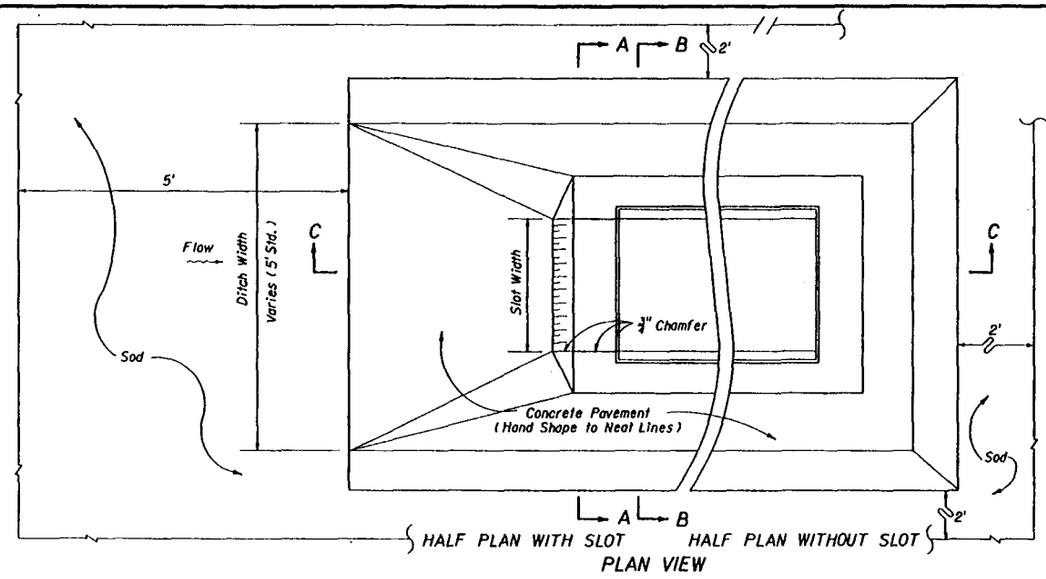

PLAN VIEW

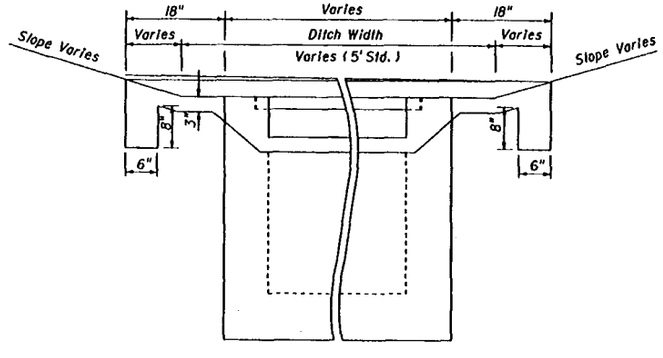

SECTION AA

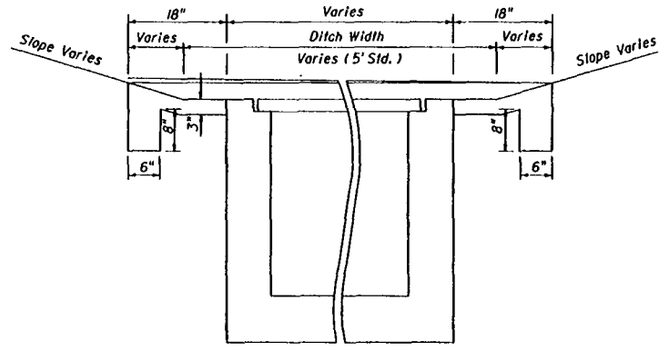

SECTION BB

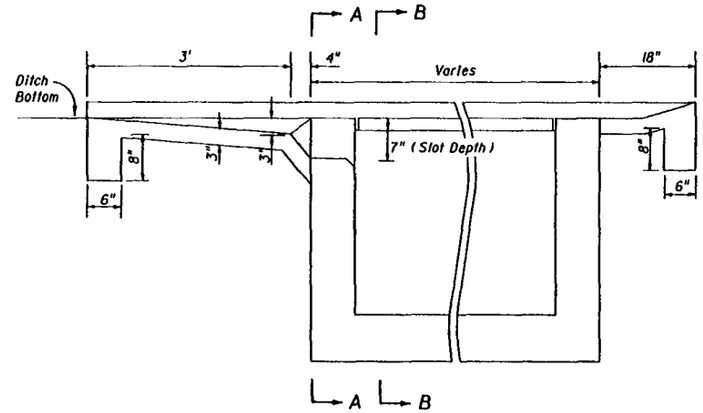

HALF PLAN WITH SLOT HALF PLAN WITHOUT SLOT

SECTION CC

PAVEMENT AND SODDING QUANTITIES FOR TRAVERSABLE SLOTS						
Inlet	Pavement				Sod	
	Single Slot		Double Slot		Single Slot	Double Slot
	SY	CY	SY	CY	SY	SY
C	4.87	0.77	6.16	0.93	12	16
D	5.99	0.91	7.70	1.10	14	19
E	5.88	0.91	7.37	1.08	14	18

TRAVERSABLE SLOTS

STATE OF FLORIDA DEPARTMENT OF TRANSPORTATION
ROAD DESIGN

DITCH BOTTOM INLETS TYPES C, D, E, & H

	Names	Dates
Designed By	EGR	02/80
Drawn By	JW	02/80
Checked By	JVO	02/80
F.H.W.A. Approved		10/01/80

Approved By _____ State Drainage Engineer

Revision No.	Sheet No.	Index No.
87	2 of 4	232

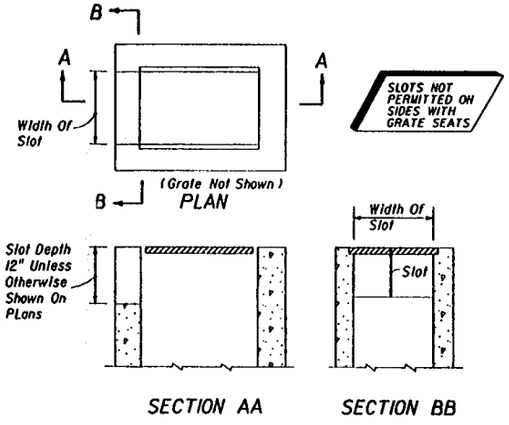

NOTE: See Index No. 229 For Application Guidelines

NON-TRAVERSABLE SLOTS

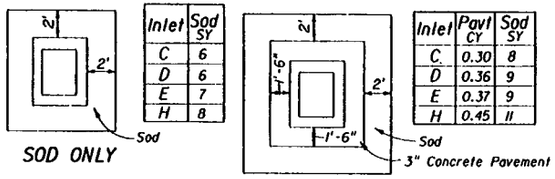

Inlet	Sod SY
C	6
D	6
E	7
H	8

Inlet	Pavt CY	Sod SY
C	0.30	8
D	0.36	9
E	0.37	9
H	0.45	11

NOTE: See General Notes Nos. 6 and 7

SODDING AND PAVEMENT FOR INLETS WITHOUT SLOTS AND INLETS WITH NON-TRAVERSABLE SLOTS

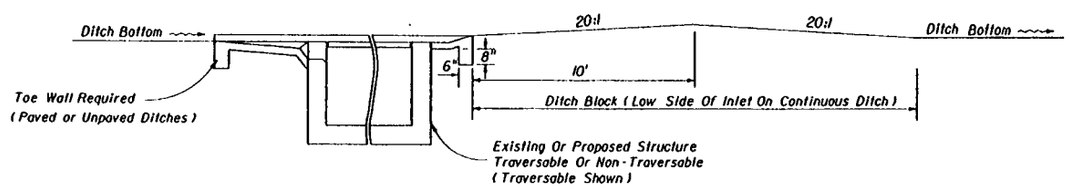

DITCH BLOCK FOR INLETS WITH OR WITHOUT SLOTS

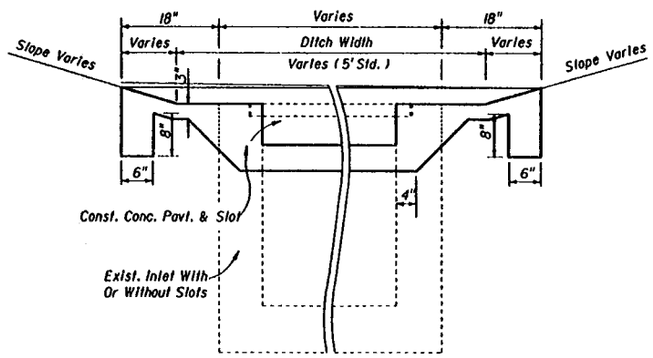

SECTION AA

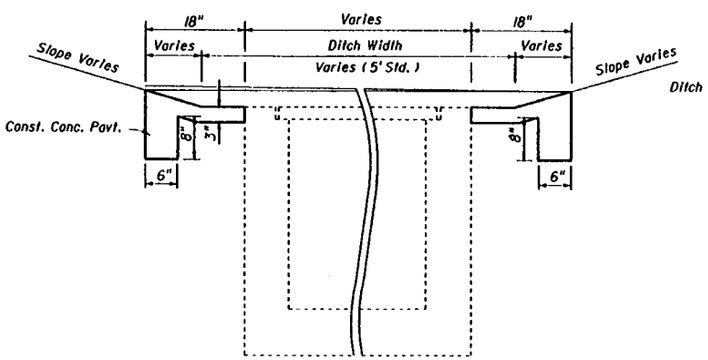

SECTION BB

PAVEMENT AND SODDING QUANTITIES FOR TRAVERSABLE SLOTS						
Inlet	Pavement				Sod	
	Single Slot		Double Slot		Single Slot	Double Slot
	SY	CY	SY	CY	SY	SY
C	4.87	0.83	6.16	1.05	12	16
D	5.99	1.01	7.70	1.30	14	19
E	5.88	0.99	7.37	1.24	14	18

NOTE: For plan view and additional details see sheet 2 of 4.
For payment see General Notes Nos. 6 and 7.

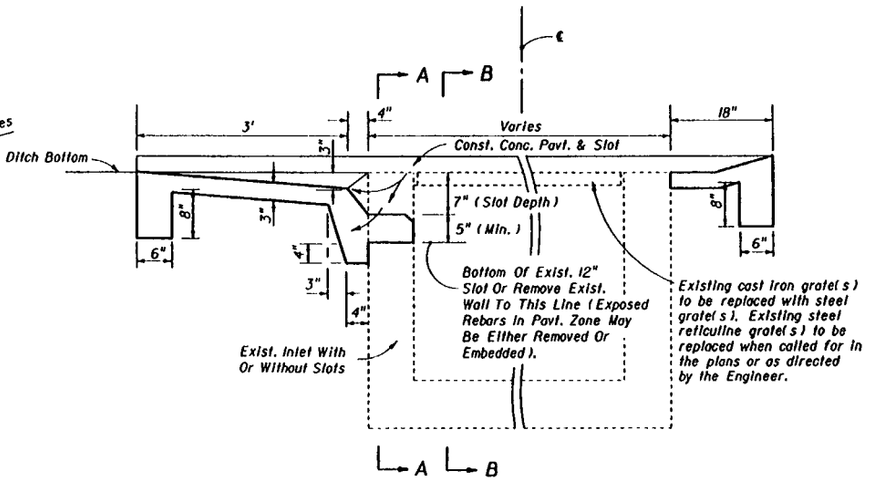

SINGLE SLOT SHOWN (DOUBLE SLOTS SYMMETRICAL ABOUT CENTERLINE)

SECTION CC (CASE 1)

TRAVERSABLE SLOTS FOR EXISTING INLETS

STATE OF FLORIDA DEPARTMENT OF TRANSPORTATION
ROAD DESIGN

DITCH BOTTOM INLETS TYPES C,D,E & H

	Names	Dates
Designed By	EGR	07/84
Drawn By	DAE	07/84
Checked By	JBW/JVG	07/84
F.H.W.A. Approved:		09/21/84

Approved By: Ed Kruse
State Drainage Engineer

Revision No.	Sheet No.	Index No.
90	3 of 4	232

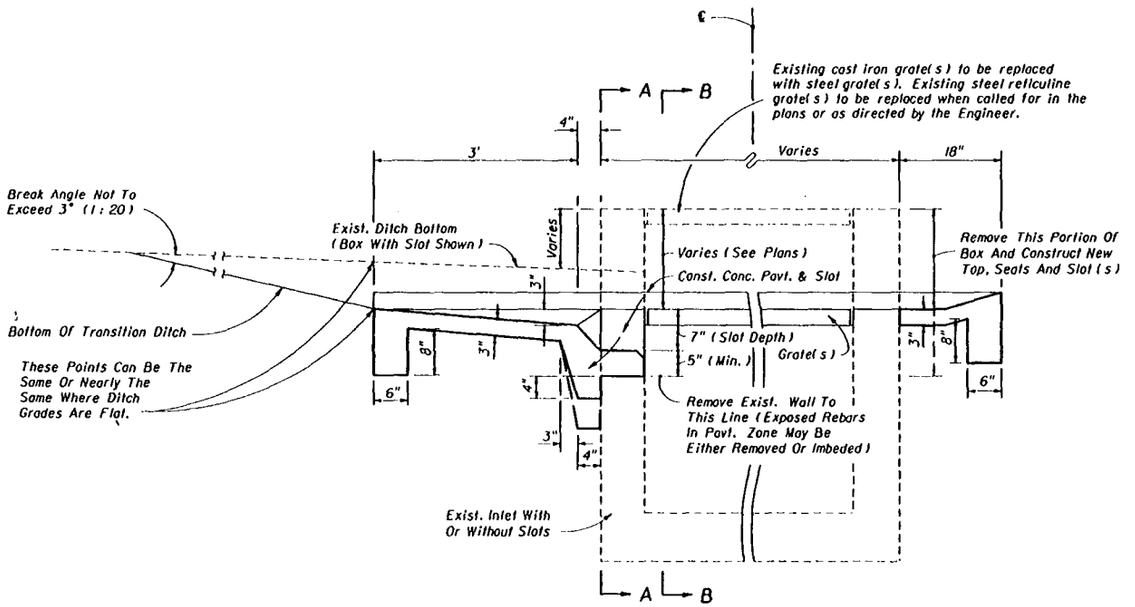

SINGLE SLOT SHOWN (DOUBLE SLOTS SYMMETRICAL ABOUT CENTERLINE)
SECTION CC (CASE 2)

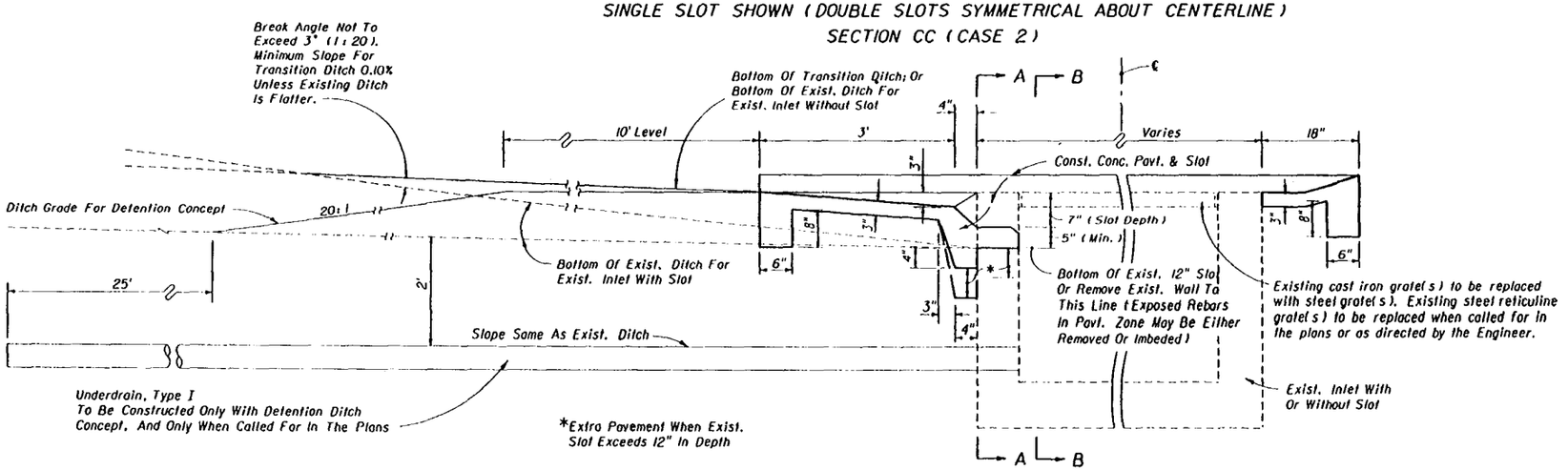

SINGLE SLOT SHOWN (DOUBLE SLOTS SYMMETRICAL ABOUT CENTERLINE)
SECTION CC (CASE 3)

TRAVERSABLE SLOT INLETS (PARTIAL) FOR EXISTING INLETS

DESIGN NOTES FOR TRAVERSABLE SLOT INLETS (PARTIAL) FOR EXISTING INLETS

1. The general purpose of these conversions is to remove the hazard of the protruding inlet top, while not creating a hazard by depressing the top too deeply.

2. The corrective procedure depends on the approach ditch grade and hydraulic requirements of the site. The selection of the appropriate case depends on the relationship between inlet top and ditch elevation, and, on the vertical clearance between the top of the uppermost pipe(s) and the grate. The purpose for the Case 1 conversion is to add the traversable slot to an existing inlet where top removal, change in grate elevation and ditch transitions are not required. Case 2 will normally be applicable to ditches with flatter grades adjoining the inlet. Case 3 will normally be applicable to ditches with steeper grades adjoining the inlet where buildup of the existing ditch is acceptable.

3. The designer shall stipulate in the plans which case is to be constructed at each individual inlet location.

   Where the existing inlet top is above the existing ditch (Case 2) but borrow material will be required to adjust the ditch (Case 3), and vertical clearance or other conditions do not prevent removal of the inlet top, the designer should call for Case 2. The designer shall determine if ditch reconstruction is required more than 35 feet beyond any traversable slot side and shall include separate pay items in the plans to cover the cost for that portion of required ditch reconstruction exceeding the 35 foot limit. The designer shall also determine whether ditch pavement is required for ditch restoration within the 35 foot limit and include that pavement under a pay item separate from the inlets partial.

   When the detention ditch concept is to be used with Case 3, the designer shall stipulate 'Case 3 (Detention)' in the plans.

   The designer shall determine whether tight soil or other conditions at each individual inlet indicates the need for underdrain in Case 3 conversions and shall call for Underdrain, Type I in the plans.

METHOD OF PAYMENT FOR TRAVERSABLE SLOT INLETS (PARTIAL) FOR EXISTING INLETS

1. Existing inlets converted to traversable slot tops under Cases 1, 2 and 3 shall be paid for as inlets partial, each. Case shall not be included in the pay item description.

2. All ditch reconstruction work within 35 feet of each traversable slot conversion, whether required by these details or as a direct result of the conversion, shall be included as a part of the partial cost. Reconstruction work shall include excavation and removal of surplus materials or borrow materials in place, grading, compaction, shaping and seeding and mulching. Sodding, ditch pavement and underdrain are not included as part of the inlet partial cost and are to be paid for separately.

3. Inlet pavement and sodding shall be in accordance with the sections on this detail and with the Plan on Sheet 2 of 4 and Sections AA, BB and CC (as Case 1) and tabular quantities on Sheet 3 of 4.

4. Unit price and payment shall constitute full compensation for inlet conversion, replacement grate(s) ditch reconstruction, seeding and mulching, and shall be paid for under the contract unit price for Inlets (DT Bot) (Type ___) (Partial), each.

   Sodding shall be paid for under the contract unit price for Sodding, SY.

   Ditch pavement shall be paid for separate from the inlet by pavement type(s) and unit(s) as called for in the plans.

   Underdrain called for in the plans for Case 3 conversions shall be paid for as Underdrain, Type I, LF.

STATE OF FLORIDA DEPARTMENT OF TRANSPORTATION
ROAD DESIGN

DITCH BOTTOM INLETS TYPES C, D, E & H

	Names	Dates
Designed By	JVG/EGR	03/10/86
Drawn By	HSD/dds	05/20/86
Checked By	JVG/EGR	05/22/86
F.H.W.A. Approved:		11/07/86

Approved By: L. A. McLemore, State Drainage Engineer

Revision No.	Sheet No.	Index No.
94	4 of 4	232

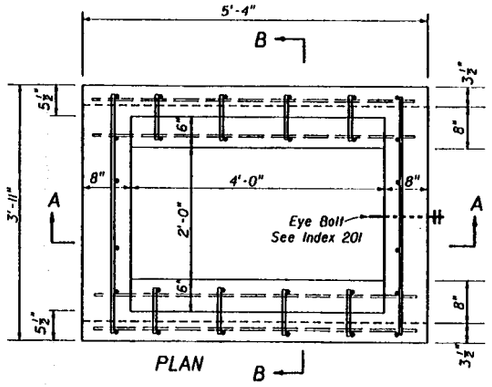

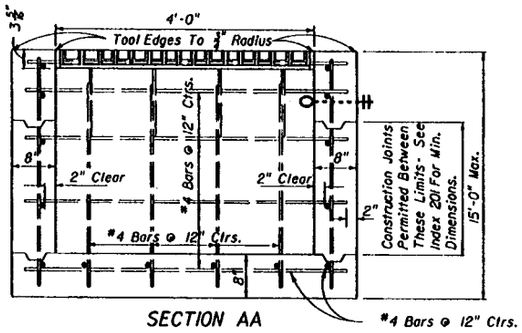

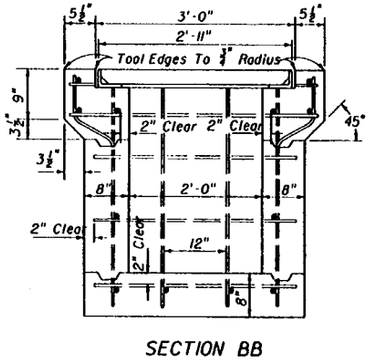

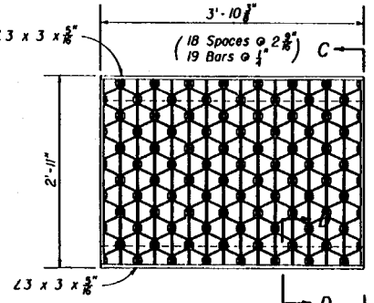

TYPE F

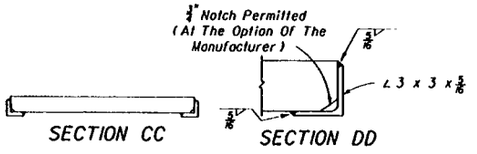

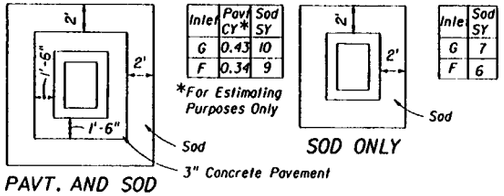

Inlet	Pavt. CY*	Sod SY
G	0.43	10
F	0.34	9

*For Estimating Purposes Only

Inlet	Sod SY
G	7
F	6

Notes: 1. Pavement and/or sod to be used only where called for in the plans.
2. Cost of paving to be included in cost of inlet.

PAVEMENT AND SODDING

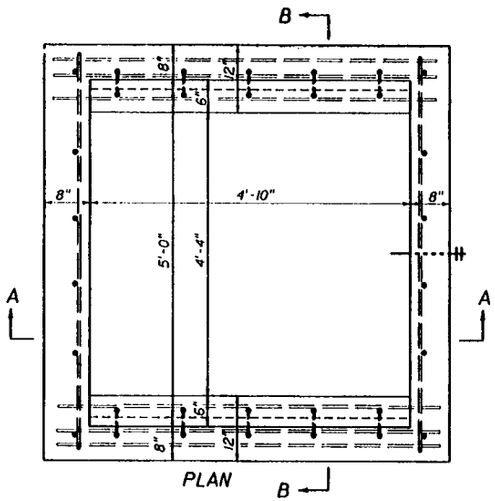

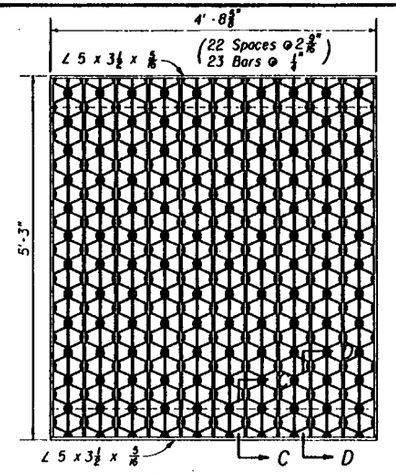

STEEL GRATE
5" Steel Decking, Weight 630 Lbs. Main Bars 5" x ¼"
Intermediate Bars 1½" x ¼", Reticuline Bars 1¼" x 1/16"

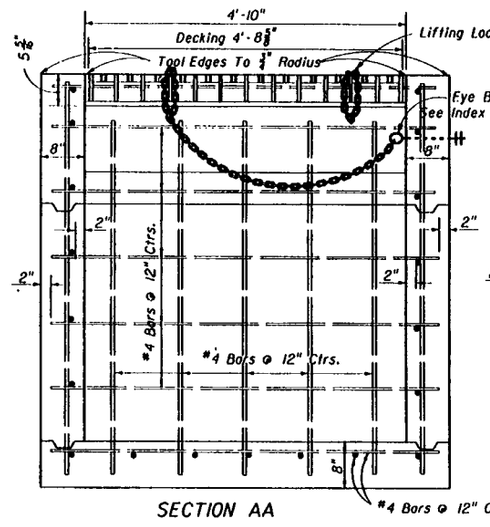

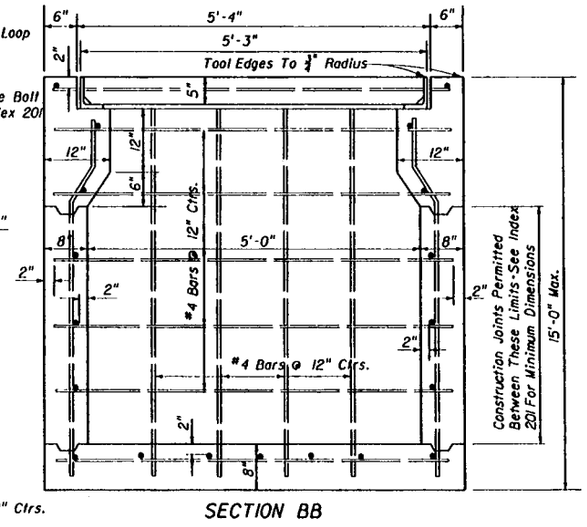

TYPE G

GENERAL NOTES

1. These inlets are designed for use in ditches, medians, pavement areas, or other areas subject to heavy wheel loads where debris is minimal and is subject to pedestrian and/or bicycle traffic.
2. When alternate G grate is specified in plans, the grate is to be hot dipped galvanized after fabrication.
3. These inlets may be used with Alt. B structure bottoms, Index 200. The inlet and bottom combinations are to be paid for under the contract unit price for Inlets (DT Bot) (Type F (or G)) (J Bot, Depth), Ea.

STATE OF FLORIDA DEPARTMENT OF TRANSPORTATION
ROAD DESIGN

DITCH BOTTOM INLETS TYPES F & G

	Names	Dates
Designed By	TWJ	01/50
Drawn By	MEF	01/50
Checked By	WHW	01/50
F.H.W.A. Approved:		05/01/75

Approved By: S. A. McLemore
State Drainage Engineer

Revision No.	Sheet No.	Index No.
92	1 of 1	233

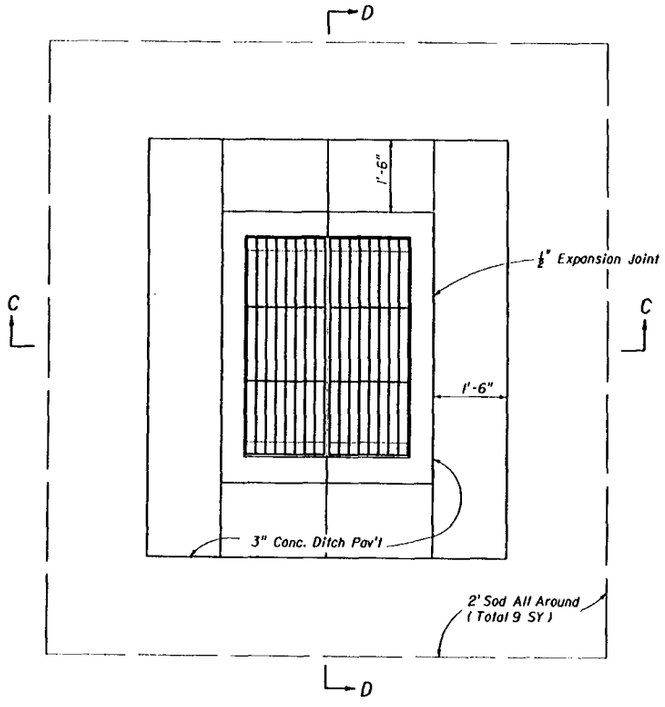

PAVEMENT & SODDING

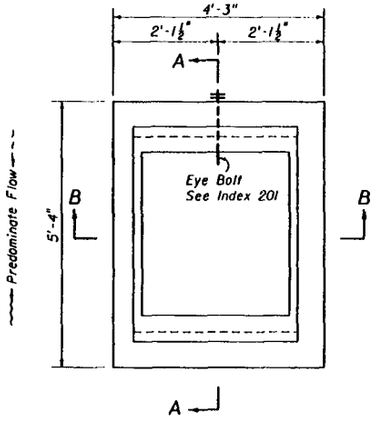

PLAN

RECOMMENDED MAXIMUM PIPE SIZES	
INLET INSIDE WIDTH	PIPE SIZE
2'-11"	24"
4'-0"	36"

Note: Recommended sizes are for concrete pipe. Sizes for other types of pipe must be verified for fit in accordance with Index No. 201. For larger pipe see bottom detail right and Index No. 200.

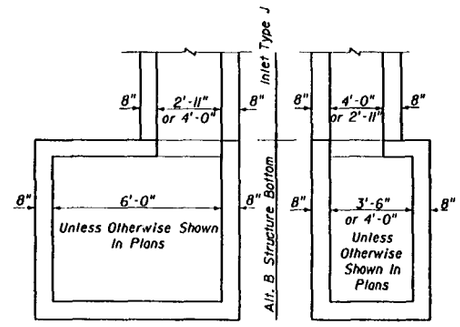

NOTE: Alt. B Structure Bottom Only. See Index 200

INLET WITH STRUCTURE BOTTOM

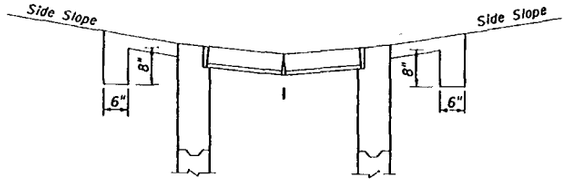

SECTION CC

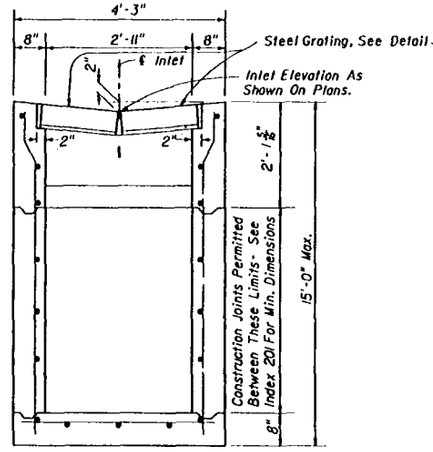

SECTION BB

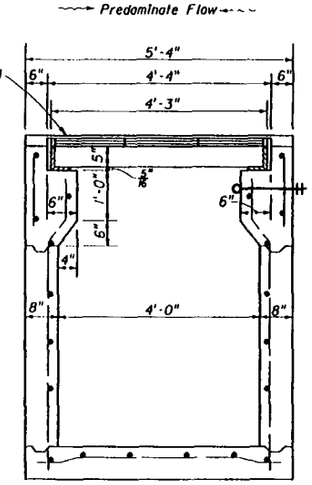

SECTION AA

GENERAL NOTES

1. This inlet is designed for ditches, medians or other areas subject to heavy wheel loads, where only light debris is expected and pedestrian traffic is anticipated. NOTICE: Inlet not for use in areas subject to bicycle traffic.
2. Reinforcing- No. 4 bars at 12" centers both ways with 2" clearance to inside face. Cut or bend bars out of way of pipe when necessary; bars to clear pipe by 1½".
3. When alternate G grate is specified in plans the grate is to be hot dipped galvanized after fabrication.
4. For supplemental details, see Index 201.
5. Cost of ditch paving to be included in cost of inlet. Sodding to be paid for under contract unit price for Sodding, SY.

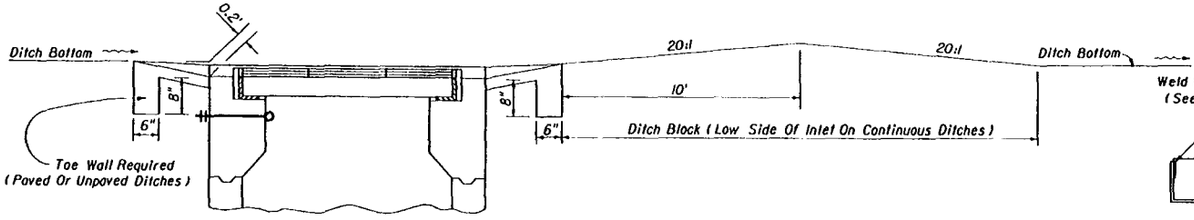

SECTION DD

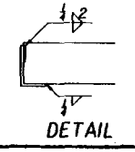

DETAIL

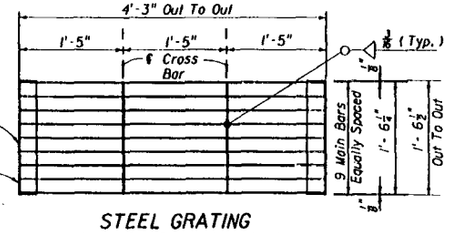

STEEL GRATING

Note: Two Required Per Inlet

Main Bars 5" x ¼" (Notched For Cross Bars).

Cross Bars 1½" x ⅛" (Continuously Welded At Main Bar Notches).

Main Bars And Cross Bars Flush On Top.

STATE OF FLORIDA DEPARTMENT OF TRANSPORTATION
ROAD DESIGN

DITCH BOTTOM INLET TYPE J

	Name	Date
Designed By	LWF	08/16
Drawn By		
Checked By	SRL	08/16
F.H.W.A. Approved:		09/03/16

Approved By: [signature]
State Drainage Engineer

Revision No.	Sheet No.	Index No.
92	1 of 1	234

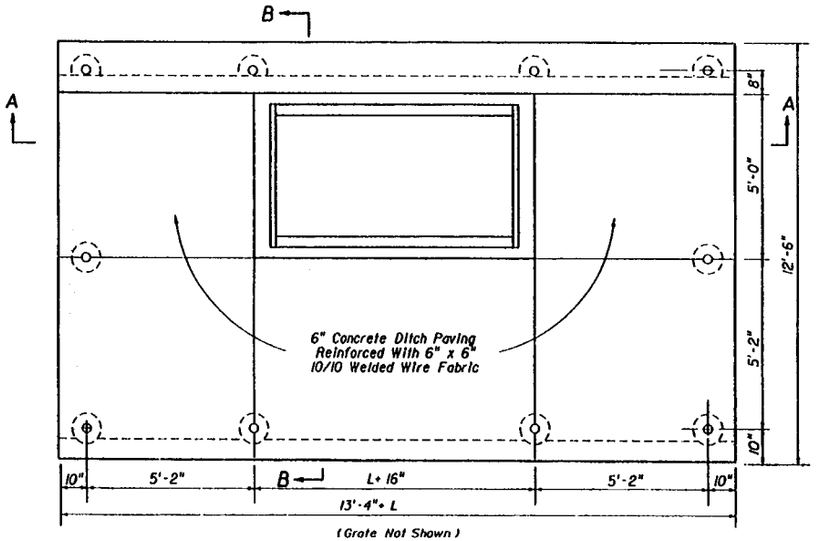

(Grate Not Shown)

PLAN

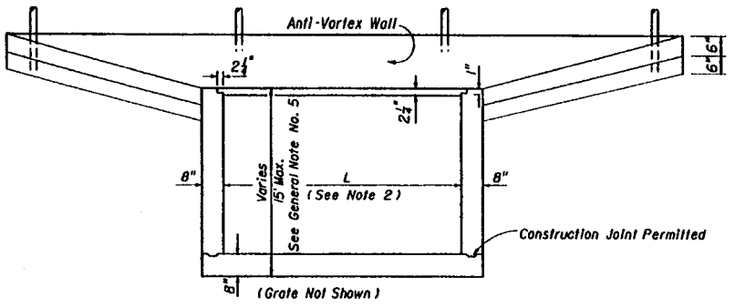

(Grate Not Shown)

SECTION AA

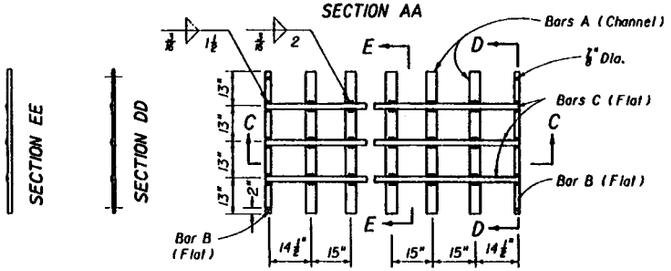

SECTION EE

SECTION DD

STEEL GRATE

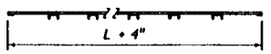

SECTION CC

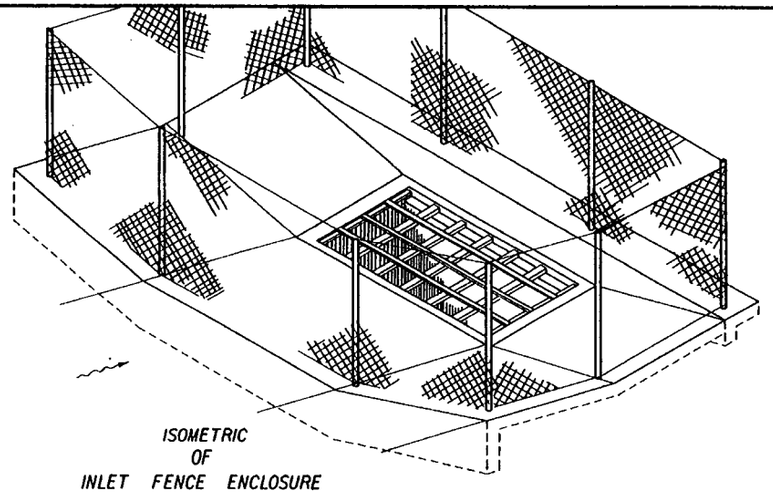

ISOMETRIC
OF
INLET FENCE ENCLOSURE

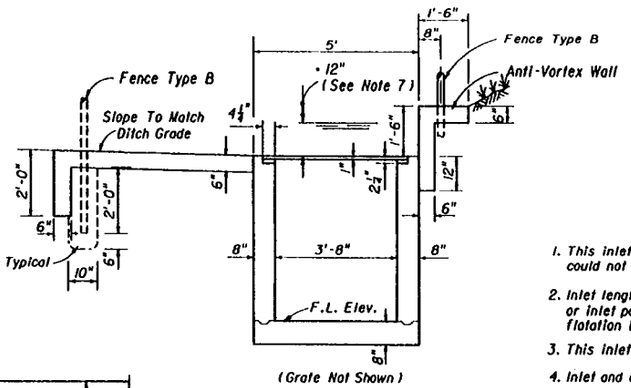

(Grate Not Shown)

SECTION BB

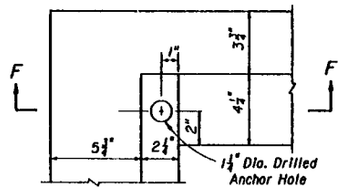

GRATE SEAT AND ANCHOR HOLE PLAN

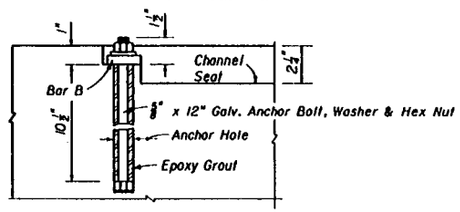

(With Bar B And Anchor Bolt)

SECTION FF

GRATE QUANTITIES

PIPE SIZE	L	BILL OF STEEL			STEEL WEIGHT	
		BAR	No. REQ'D.	LENGTH	CHANNEL 4"x 5.4#	FLAT 2"x ⅜"(3.4#)
30"& 36"	4'-9"	A	3	4'-4"	70	
		B	2	4'-4"		30
		C	3	5'-1"		52
42"& 48"	6'-0"	A	4	4'-4"	94	
		B	2	4'-4"		30
		C	3	6'-4"		65
54"& 60"	7'-3"	A	5	4'-4"	117	
		B	2	4'-4"		30
		C	3	7'-7"		77
66"& 72"	8'-6"	A	6	4'-4"	140	
		B	2	4'-4"		30
		C	3	8'-10"		90
SPECIAL	9'-9"	A	7	4'-4"	164	
		B	2	4'-4"		30
		C	3	10'-1"		103
SPECIAL	11'-0"	A	8	4'-4"	187	
		B	2	4'-4"		30
		C	3	11'-4"		116
SPECIAL	12'-3"	A	9	4'-4"	211	
		B	2	4'-4"		30
		C	3	12'-7"		128
SPECIAL	13'-6"	A	10	4'-4"	234	
		B	2	4'-4"		30
		C	3	13'-10"		141
SPECIAL	14'-9"	A	11	4'-4"	257	
		B	2	4'-4"		30
		C	3	15'-1"		154
SPECIAL	16'-0"	A	12	4'-4"	281	
		B	2	4'-4"		30
		C	3	16'-4"		167
SPECIAL	17'-3"	A	13	4'-4"	304	
		B	2	4'-4"		30
		C	3	17'-7"		179
SPECIAL	18'-6"	A	14	4'-4"	328	
		B	2	4'-4"		30
		C	3	18'-10"		192

GENERAL NOTES

1. This inlet is to be used at locations having high flow rates, usually where an endwall could not be utilized without hazardous intake.
2. Inlet length (L) shall be set by the designer for the greater of either culvert requirement or inlet pool not to exceed 12" depth. Structures over 6' in depth are to be checked for flotation by the designer of project drainage.
3. This inlet is not intended for use with Alternate B structure bottoms.
4. Inlet and anti-vortex wall to be Class I Concrete.
5. Reinforcing- No. 4 bars at 12" centers both ways for pipe sizes up to 72" diameter; 1½" clearance to inside face and bottom of inlet. See Index No. 201, Sh. 4 & 5 for reinf. steel modification for depths 13' to 15'. Bend top and corner bars to clear anchor holes. Inlets for special size pipe require special reinforcement design and design approval by the project design engineer.
6. Channel section C 3 x 6 may be used as an alternate for the C 4 x 5.4 channel.
7. Channels and bars shall be ASTM A 242, A 441, A 572 or A 588, Grade 50 steel, and galvanized in accordance with Section 962-7 of the Standard Specifications.
8. Fence enclosure shall be Fence Type B (Index No. 452). All posts to be set in concrete. A minimum of 10 posts required. Corner and approach side posts to be 3" nominal.
9. Cost of ditch paving, anti-vortex wall, grate, concrete, reinforcing steel and fence enclosure to be included in the cost of inlet. Inlet to be paid for under the contract unit price for Inlets (DT Bot) (Type K), Each.

STATE OF FLORIDA DEPARTMENT OF TRANSPORTATION
ROAD DESIGN

DITCH BOTTOM INLET TYPE K

	Names	Dates
Designed By	FHWA	
Drawn By	SM	6/79
Checked By	JG	6/79

Approved By: G.G. Lingo
State Drainage Engineer

F.H.W.A. Approved:

Revision No.	Sheet No.	Index No.
92	1 of 1	235

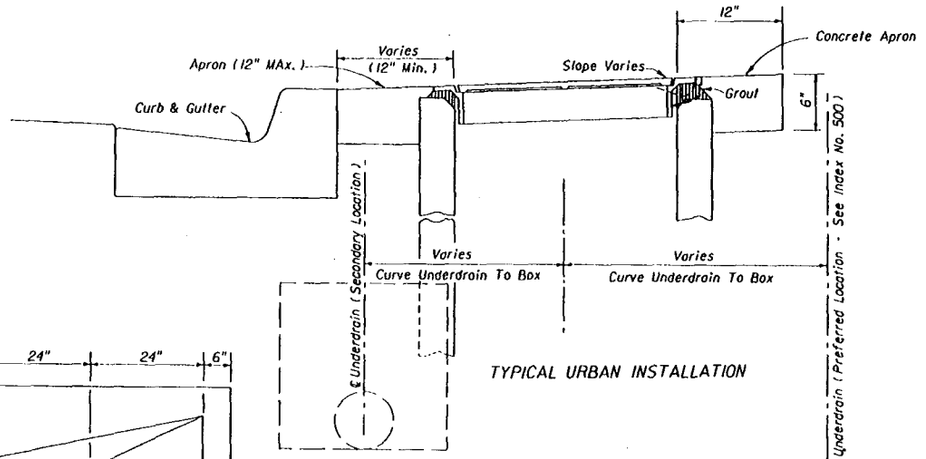

TYPICAL URBAN INSTALLATION

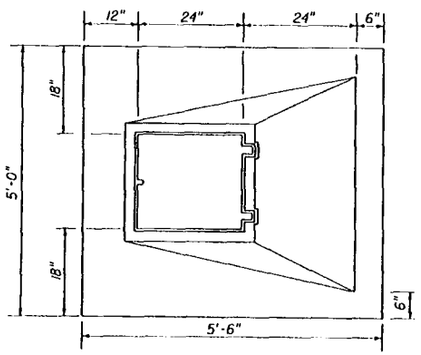

TOP VIEW

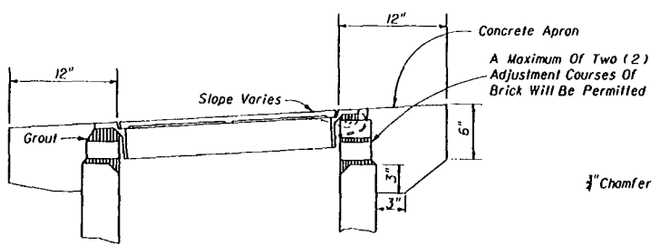

PERMISSIBLE TOP ADJUSTMENT

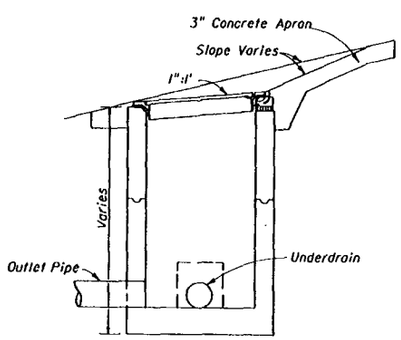

SECTION

TYPICAL INSTALLATION ON SLOPES

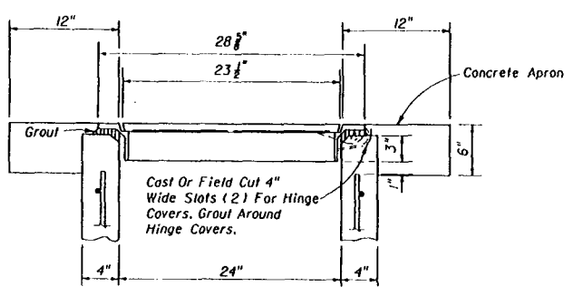

TYPICAL TOP AND APRON

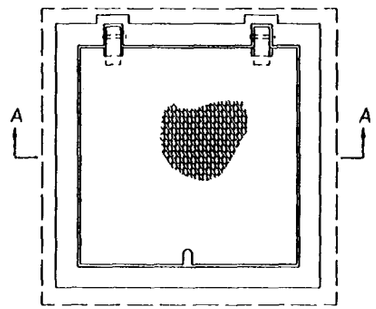

TOP VIEW

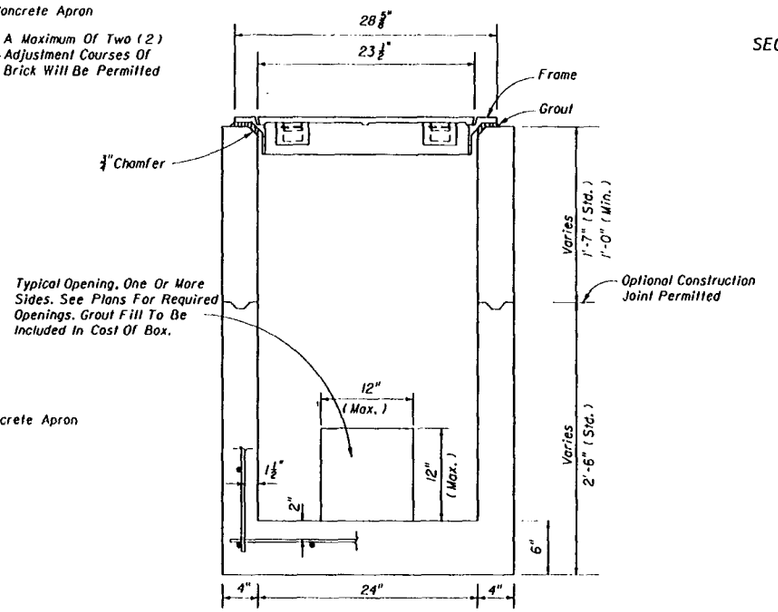

SECTION AA

BOX AND TOP

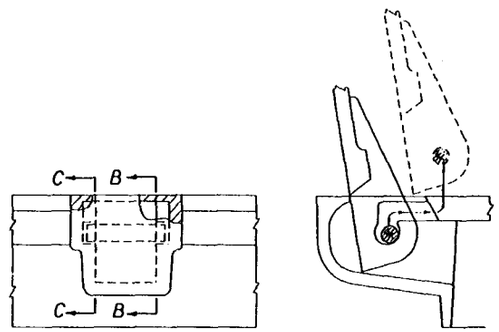

BACK VIEW

COVER REMOVAL

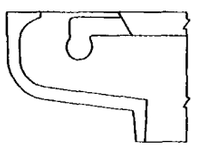

SECTION CC

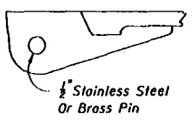

SECTION BB

HINGE DETAIL

GENERAL NOTES

1. Cast iron cover and frame to be Neenah Foundary Company R-6660-JH, U.S. Foundary Manufacturing Corporation No. A-632 or equal. Neenah R-6660-JH detailed this index.
2. Box to be Class I Concrete, reinforced with No. 3 bars on 8" centers both ways, sides and bottom.
3. Concrete apron to be included in the contract unit price for Underdrain Inspection Box.
4. All covers shall be furnished with pick holes. Fitted lifts or handles are not permitted.
5. Manhole Type P Alternate A, Index 200, with Type I Frame and Cover, Index 201, may be used in lieu of the box detailed on this sheet, and is recommended when high ADT increases chance of the repeated vehicle loadings.

STATE OF FLORIDA DEPARTMENT OF TRANSPORTATION
ROAD DESIGN

UNDERDRAIN INSPECTION BOX

	Names	Dates
Designed By	WS	05/81
Drawn By	JH	05/81
Checked By	WG	05/81
F.H.W.A. Approved:		10/08/81

Approved By: [signature]
State Drainage Engineer

Revision No.	Sheet No.	Index No.
82	1 of 1	245

APPLICATION GUIDELINES FOR PIPE END TREATMENTS

INDEX NO.	DESCRIPTION		APPLICATION			INLET END			OUTLET END		SAFETY		ECONOMIC RATING	
	TYPE	PIPE SIZE	CROSSDRAIN	SIDEDRAIN	MEDIAN	APPLICABLE	HYDRAULIC PERFORMANCE	K_e	APPLICABLE	EROSION TOLERANT	PERMITTED LOCATION	TRAFFIC-SAFE GRATE AVAILABLE		
250	Straight Concrete	Single and Multiple 15" Thru 54"	Yes	No	Limited	Yes	Excellent	0.2	Limited	Good	Outside CZ	No	Fair	For back of sidewalk location see Index No. 282
251	Straight Concrete	Single and Double 60"	Yes	No	Limited	Yes	Excellent	0.2	Limited	Good	Outside CZ	No	Fair	
252	Straight Concrete	Single and Double 66"	Yes	No	Limited	Yes	Excellent	0.2	Limited	Good	Outside CZ	No	Fair	
253	Straight Concrete	Single and Double 72"	Yes	No	Limited	Yes	Excellent	0.2	Limited	Good	Outside CZ	No	Fair	
255	Straight Concrete	Single 84"	Yes	No	Limited	Yes	Excellent	0.2	Limited	Good	Outside CZ	No	Fair	
258	Straight Sand Cement	Single & Multiple 18" Thru 84"	Limited*	No	Limited	Yes	Very Good	0.3	Yes	Good	Outside CZ	No	Good	*For temporary construction or use on a minor facility
260	U Type With Grate Concrete	Single 15" Thru 30"	Limited	No	Yes	Yes	Fair	0.7	Yes	Very Good	Inside CZ	Required	Good	
261	U Type Concrete	Single 15" Thru 30"	Limited	No	Yes	Limited	Good	0.5-0.7	Yes	Good	Grate Required Inside CZ	Yes	Fair	
264	Concrete Energy Dissipator	Single 30" Thru 72"	Limited	No	No	No	NA	NA	Yes	Excellent	Outside CZ	No	NA	
266	Winged Concrete	Single 12" Thru 48"	Yes	No	Yes	Yes	Very Good	0.3	Yes	Good	Outside CZ	No	Good	
268	U Type Sand Cement	Single &* Multiple 15" Thru 60"	Limited	No	Limited	Yes	Good	0.5	Yes	Very Good	Outside CZ	No	Good	*For temporary construction or use on a minor facility.
270	Flared End Section Concrete	Single 12" Thru 72"	Yes	No	Yes	Yes	Good	0.5	Yes	Very Good*	Outside* CZ	No	Very Good	*Construction of optional toewall and concrete jacket may be necessary. Flared end sections sizes 12" and 15" may be located as close as 8' beyond the outside edge of the shoulder.
272	Cross Drain Mitered End Section	Single & Multiple 15" Thru 72"	Yes	No	Yes	Yes	Fair	0.7	Yes	Good	Outside* CZ	No	Very Good	*Mitered end sections sizes 15", 18" and 24" may be located as close as 8' beyond the outside edge of the shoulder.
273	Side Drain Mitered End Section	Single & Multiple 15" Thru 60"	No	Yes	No	Yes	Fair	0.7 (w/o grate) 1.0 (with grate)	Yes	Good	Inside* CZ	Yes	Good	*Mitered end section size 30" and larger require use of grate. Grate may be deleted if pipe is located outside CZ and is offset from approach ditch alignment.

1. All end treatments must be selected to satisfy hydraulic suitabilities with proper consideration given to safety and economics.
2. CZ denotes clear zone, formerly CRA denoting clear recovery area.
3. Grates should not be placed on outlet ends unless positive debris protection is provided at inlet end.
4. Additional notes concerning application restrictions may be shown on individual indexes.
5. Economic ratings are based on statewide average costs.
6. End treatments with a K_e of 0.5 or greater should be used only in areas of low design velocities and negligible debris.
7. Pipe sizes are circular, Class III B Wall, concrete pipe. Elliptical pipe and corrugated pipe are to be checked for fit in accordance with Index No. 201; metal pipe sizes should be reviewed using $2\frac{2}{3}" \times \frac{1}{2}"$ corrugation up to 30" and 3" x 1" corrugation for larger sizes.

STATE OF FLORIDA DEPARTMENT OF TRANSPORTATION
ROAD DESIGN

PIPE END TREATMENT APPLICATION GUIDE

	Names	Dates	Approved By
Designed By	EGR	09/06/84	A. A. McLemore, State Drainage Engineer
Drawn By	DAE	09/06/84	
Checked By	EGR	09/06/84	Revision No. 94 / Sheet No. 1 of 1 / Index No. 249
F.H.W.A. Approved: 09/21/84			

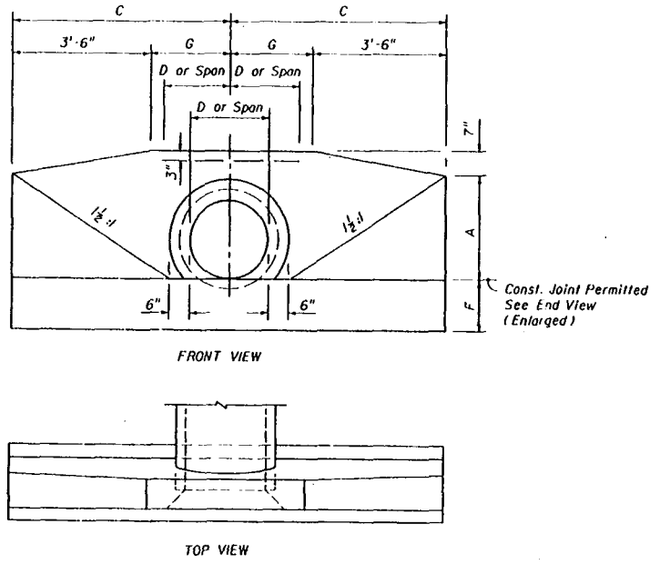

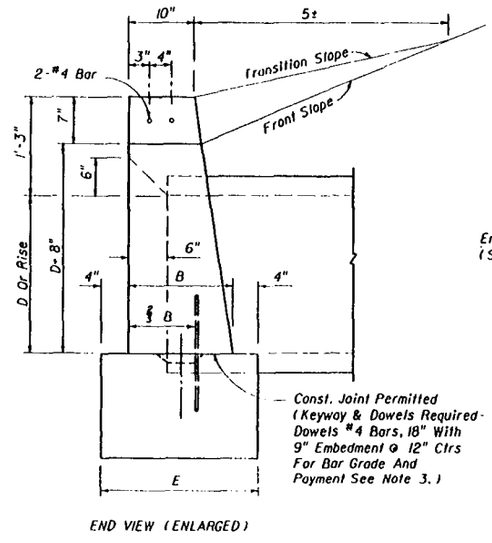

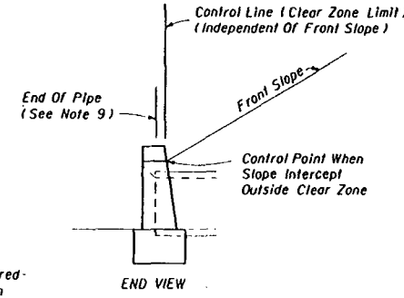

STANDARD LOCATION CONTROL

ENDWALL DIMENSIONS (EXCLUSIVE OF MULTIPLE PIPE SPACING)

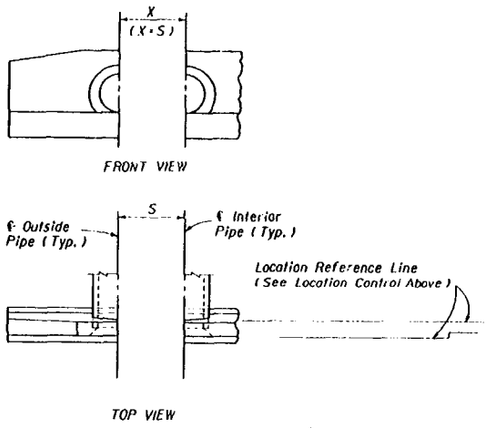

NORMAL PIPE

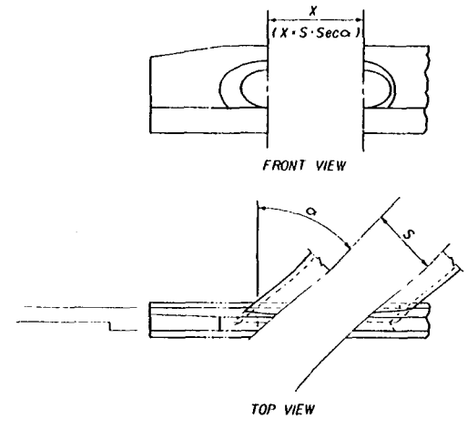

SKEWED PIPE

LEGEND

- α Pipe Skew
- S Center To Center Pipe Spacing
- X Centerline To Centerline Dimension At Face Of Headwall

ENDWALL POSITIONS FOR SINGLE AND MULTIPLE PIPE AND SPACING FOR MULTIPLE PIPE

GENERAL NOTES

1. Endwall dimensions, locations and positions are for round and elliptical concrete pipe and for round and pipe-arch corrugated metal pipe. Round concrete pipe shown.
2. Front slope and ditch transitions shall be in accordance with Index No. 280.
3. Endwalls may be cast in place or precast concrete. Reinforcing steel shall be Grades 40 or 60. Additional reinforcement necessary for handling precast units shall be determined by the Contractor or the supplier. Cost of reinforcement shall be included in the contract unit price for concrete, (endwalls).
4. All exposed corners and edges of concrete are to be chamfered ¾".
5. Concrete meeting the requirements of ASTM C-478 (4000 psi) may be used in lieu of Class I concrete in precast items manufactured in plants which are under the Standard Operating Procedures for the inspection of precast drainage products.
6. On outfall ditches with side slopes flatter than 1½:1, provide 20' transitions from the endwall to the flatter side slopes, right of way permitting.
7. For sodding around endwalls see Index No. 281.
8. Payment for concrete quantities for endwalls skewed to the pipe shall be made on the following basis:

Endwall Skew To Pipe	Use Tabulated Value
0° to 5°	0°
6° to 15°	15°
16° to 30°	30°
31° or over	45°

9. Pipe length plan quantities shall be based on the pipe end locations shown in the standard location control end view, or lengths based on special endwall locations called for in the plans.
10. Payment for pipe in pipe culverts shall be based on plan quantities, adjusted for endwall locations subsequently established by the Engineer.
11. Endwalls to be paid for under the contract unit price for Class I Concrete (Endwalls), CY.

STATE OF FLORIDA DEPARTMENT OF TRANSPORTATION
ROAD DESIGN

STRAIGHT CONCRETE ENDWALLS
SINGLE AND MULTIPLE PIPE

	Names	Dates	Approved By
Designed By	HAB/EGR	73/83	State Drainage Engineer
Drawn By	RWR/HSD	83	
Checked By	JBW/JVG	83	Revision No. 92 · Sheet No. 1 of 2 · Index No. 250
F.H.W.A. Approved:		10/06/83	

DATA AND ESTIMATED QUANTITIES FOR ONE ENDWALL

ROUND CONCRETE AND CORRUGATED METAL PIPE

D	Opening Area (SF) Number Of Pipes 1	2	3	4	Dimensions A	B	C	E	F	G	S	X 0°	15°	30°	45°	Class I Concrete (CY) Number And Type Of Pipe And Skew Angle Of Pipe — Single Concrete 0°	Single Metal 0°	Double Concrete 0°	15°	30°	45°	Double Metal 0°	15°	30°	45°	Triple Concrete 0°	15°	30°	45°	Triple Metal 0°	15°	30°	45°	Quadruple Concrete 0°	15°	30°	45°	Quadruple Metal 0°	15°	30°	45°	D
15"	1.23	2.46	3.69	4.92	1'-11"	1'-2"	4'-0"	1'-10"	1'-2"	0'-6"	2'-7"	2'-7"	2'-8"	3'-0"	3'-8"	1.23	1.24	1.59	1.60	1.65	1.74	1.62	1.63	1.68	1.78	1.94	1.96	2.05	2.23	1.99	2.02	2.11	2.30	2.30	2.34	2.47	2.74	2.37	2.41	2.75	2.84	15"
18"	1.77	3.54	5.31	7.08	2'-2"	1'-3"	4'-6"	1'-11"	1'-3"	1'-0"	2'-10"	2'-10"	2'-11"	3'-3"	4'-0"	1.56	1.59	1.99	2.01	2.06	2.17	2.04	2.06	2.11	2.23	2.43	2.46	2.56	2.79	2.51	2.54	2.65	2.89	2.86	2.91	3.06	3.40	2.96	3.01	3.17	3.53	18"
21"	2.41	4.82	7.23	9.64	2'-5"	1'-4"	5'-0"	2'-0"	1'-4"	1'-6"	3'-2"	3'-2"	3'-3"	3'-8"	4'-6"	1.97																										21"
24"	3.14	6.28	9.42	12.56	2'-8"	1'-4"	5'-6"	2'-0"	1'-4"	2'-0"	3'-5"	3'-5"	3'-6"	3'-11"	4'-10"	2.24	2.29	2.82	2.84	2.91	3.06	2.91	2.93	3.01	3.17	3.39	3.43	3.57	3.87	3.52	3.56	3.71	4.03	3.97	4.03	4.24	4.69	4.14	4.20	4.43	4.91	24"
27"	3.98	7.96	11.94	15.92	2'-11"	1'-5"	6'-0"	2'-1"	1'-5"	2'-6"	3'-10"	3'-10"	4'-0"	4'-5"	5'-5"	2.73																										27"
30"	4.91	9.82	14.73	19.64	3'-2"	1'-6"	6'-6"	2'-2"	1'-6"	3'-0"	4'-3"	4'-3"	4'-5"	4'-11"	6'-0"	3.26	3.34	4.13	4.16	4.26	4.49	4.28	4.31	4.43	4.67	4.98	5.04	5.25	5.69	5.20	5.27	5.49	5.97	5.84	5.93	6.24	6.91	6.13	6.23	6.56	7.29	30"
36"	7.07	14.14	21.21	28.28	3'-8"	1'-8"	7'-6"	2'-4"	1'-8"	4'-0"	5'-1"	5'-1"	5'-3"	5'-10"	7'-2"	4.53	4.64	5.73	5.77	5.92	6.23	5.95	6.00	6.15	6.49	6.92	7.00	7.29	7.91	7.25	7.34	7.65	8.33	8.13	8.26	8.69	9.62	8.57	8.71	9.18	10.20	36"
42"	9.62	19.24	28.86	38.48	4'-2"	1'-10"	8'-6"	2'-6"	2'-0"	5'-0"	6'-0"	6'-0"	6'-3"	6'-11"	8'-6"	6.33	6.49	8.11	8.17	8.39	8.85	8.43	8.50	8.73	9.23	9.90	10.02	10.45	11.38	10.38	10.52	10.98	11.99	11.68	11.87	12.51	13.89	12.32	12.52	13.22	14.73	42"
48"	12.57	25.14	37.71	50.28	4'-8"	2'-1"	9'-6"	2'-9"	2'-0"	6'-0"	6'-9"	6'-9"	7'-0"	7'-10"	9'-7"	8.15	8.38	10.40	10.48	10.75	11.33	10.85	10.94	11.23	11.87	12.64	12.80	13.34	14.50	13.34	13.51	14.11	15.39	14.89	15.13	15.93	17.68	15.82	16.08	16.97	18.90	48"
54"	15.90	31.80	47.70	63.60	5'-2"	2'-6"	10'-6"	3'-2"	2'-3"	7'-0"	7'-8"	7'-8"	7'-11"	8'-10"	10'-10"	11.71	11.77	15.23	15.35	15.78	16.69					18.77	19.02	19.86	21.69					22.29	22.66	23.93	26.67					54"

CORRUGATED METAL PIPE ARCH

Span	Rise	Opening Area (SF) Number Of Pipes 1	2	3	4	Dimensions A	B	C	E	F	G	S	X 0°	15°	30°	45°	Class I Concrete (CY) Number Of Pipe And Skew Angle Of Pipe — Single 0°	Double 0°	15°	30°	45°	Triple 0°	15°	30°	45°	Quadruple 0°	15°	30°	45°	Span	Rise	Approx. Equiv. Round Pipe
17"	13"	1.1	2.2	3.3	4.4	1'-9"	1'-2"	3'-10"	1'-10"	1'-2"	0'-4"	2'-6"	2'-6"	2'-7"	2'-11"	3'-6"	1.16	1.47	1.48	1.52	1.60	1.78	1.80	1.88	2.04	2.09	2.12	2.23	2.48	17"	13"	15"
21"	15"	1.6	3.2	4.8	6.4	1'-11"	1'-2"	4'-3"	1'-10"	1'-2"	0'-9"	2'-10"	2'-10"	2'-11"	3'-3"	4'-0"	1.33	1.69	1.70	1.75	1.84	2.04	2.06	2.15	2.33	2.40	2.44	2.57	2.84	21"	15"	18"
28"	20"	2.8	5.6	8.4	11.2	2'-4"	1'-3"	5'-2"	1'-11"	1'-3"	1'-8"	3'-5"	3'-5"	3'-6"	3'-11"	4'-10"	1.78	2.31	2.33	2.39	2.53	2.83	2.87	2.99	3.26	3.36	3.42	3.60	4.01	28"	20"	24"
35"	24"	4.3	8.6	12.9	17.2	2'-8"	1'-4"	5'-11½"	2'-0"	1'-4"	2'-5½"	4'-0"	4'-0"	4'-2"	4'-7"	5'-8"	2.34	3.03	3.05	3.14	3.32	3.72	3.77	3.93	4.29	4.40	4.47	4.72	5.25	35"	24"	30"
42"	29"	5.9	11.8	17.7	23.6	3'-1"	1'-5"	6'-10½"	2'-1"	1'-5"	3'-4½"	4'-9"	4'-9"	4'-11"	5'-6"	6'-9"	3.13	4.06	4.09	4.20	4.45	4.99	5.06	5.28	5.76	5.93	6.03	6.36	7.09	42"	29"	36"
49"	33"	8.4	16.8	25.2	33.6	3'-5"	1'-6"	7'-8"	2'-2"	1'-6"	4'-2"	5'-6"	5'-6"	5'-8"	6'-4"	7'-9"	3.83	5.00	5.04	5.18	5.48	6.16	6.24	6.52	7.12	7.32	7.44	7.86	8.76	49"	33"	42"
57"	38"	10.6	21.2	31.8	42.4	3'-10"	1'-7"	8'-7½"	2'-3"	1'-7"	5'-1½"	6'-4"	6'-4"	6'-7"	7'-4"	8'-11"	4.87	6.31	6.36	6.53	6.91	7.74	7.84	8.18	8.93	9.18	9.33	9.85	10.96	57"	38"	48"
64"	43"	13.2	26.4	39.6	52.8	4'-3"	1'-8"	9'-6½"	2'-4"	1'-8"	6'-0½"	7'-1"	7'-1"	7'-4"	8'-2"	10'-0"	5.88	7.64	7.70	7.91	8.37	9.40	9.52	9.94	10.86	11.15	11.33	11.97	13.33	64"	43"	54"
71"	47"	16.9	33.8	50.7	67.6	4'-7"	1'-10"	10'-4"	2'-6"	2'-0"	6'-10"	7'-10"	7'-10"	8'-1"	9'-1"	11'-1"	7.80	10.15	10.23	10.51	11.12	12.49	12.65	13.22	14.43	14.85	15.10	15.94	17.77	71"	47"	60"

Note: Use the guidelines of General Note No. 8 for selecting tabular quantities.

CONCRETE ELLIPTICAL PIPE

Rise	Span	Opening Area (SF) Number Of Pipes 1	2	3	4	Dimensions A	B	C	E	F	G	S	X 0°	15°	30°	45°	Class I Concrete (CY) Number Of Pipe And Skew Angle Of Pipe — Single 0°	Double 0°	15°	30°	45°	Triple 0°	15°	30°	45°	Quadruple 0°	15°	30°	45°	Rise	Span	Approx. Equiv. Round Pipe
12"	18"	1.3	2.6	3.9	5.2	1'-8"	1'-2"	3'-9"	1'-10"	1'-2"	0'-3"	2'-10"	2'-10"	2'-11"	3'-3"	4'-0"	1.09	1.45	1.46	1.51	1.60	1.80	1.82	1.91	2.09	2.16	2.20	2.33	2.60	12"	18"	15"
14"	23"	1.8	3.6	5.4	7.2	1'-10"	1'-3"	4'-2½"	1'-11"	1'-3"	8½"	3'-5"	3'-5"	3'-6"	3'-11"	4'-10"	1.36	1.82	1.84	1.89	2.01	2.29	2.32	2.43	2.68	2.75	2.80	2.97	3.33	14"	23"	18"
19"	30"	3.3	6.6	9.9	13.2	2'-3"	1'-4"	5'-1½"	2'-0"	1'-4"	1'-7½"	4'-2"	4'-2"	4'-4"	4'-10"	5'-11"	1.89	2.55	2.57	2.65	2.82	3.22	3.27	3.43	3.77	3.88	3.95	4.19	4.70	19"	30"	24"
24"	38"	5.1	10.2	15.3	20.4	2'-8"	1'-5"	6'-3"	2'-1"	1'-5"	2'-9"	5'-2"	5'-2"	5'-4"	6'-0"	7'-4"	2.64	3.55	3.58	3.69	3.93	4.48	4.54	4.77	5.24	5.39	5.49	5.82	6.53	24"	38"	30"
29"	45"	7.4	14.8	22.2	29.6	3'-1"	1'-6"	7'-0"	2'-2"	1'-6"	3'-6"	6'-0"	6'-0"	6'-3"	6'-11"	8'-6"	3.32	4.48	4.52	4.66	4.96	5.64	5.72	6.00	6.60	6.80	6.92	7.34	8.24	29"	45"	36"
34"	53"	10.2	20.4	30.6	40.8	3'-6"	1'-7"	7'-11½"	2'-3"	1'-7"	4'-5½"	7'-1"	7'-1"	7'-4"	8'-2"	10'-0"	4.24	5.76	5.81	6.00	6.39	7.29	7.40	7.76	8.55	8.81	8.97	9.52	10.70	34"	53"	42"
38"	60"	12.9	25.8	38.7	51.6	3'-10"	1'-8"	8'-9"	2'-4"	1'-8"	5'-3"	7'-11"	7'-11"	8'-2"	9'-2"	11'-2"	5.22	7.16	7.23	7.46	7.96	9.10	9.24	9.70	10.71	11.05	11.25	11.95	13.46	38"	60"	48"
43"	68"	16.6	33.2	49.8	66.4	4'-3"	1'-10"	9'-8½"	2'-6"	1'-10"	6'-2½"	8'-10"	8'-10"	9'-2"	10'-2"	12'-6"	6.63	9.01	9.09	9.38	10.00	11.39	11.56	12.13	13.36	13.77	14.02	14.88	16.73	43"	68"	54"
48"	76"	20.5	41.0	61.5	82.0	4'-8"	2'-1"	10'-8"	2'-9"	2'-0"	7'-2"	9'-9"	9'-9"	10'-1"	11'-3"	13'-9"	8.66	11.74	11.85	12.22	13.02	14.82	15.04	15.77	17.37	17.91	18.23	19.34	21.74	48"	76"	60"
53"	83"	24.8	49.6	74.4	99.2	5'-1"	2'-6"	11'-7"	3'-2"	2'-6"	8'-1"	10'-7"	10'-7"	10'-11"	12'-3"	15'-0"	12.50	16.98	16.98	17.67	18.83	21.47	21.78	22.86	25.18	25.97	26.44	28.06	31.55	53"	83"	66"
58"	91"	29.5	59.0	88.5	118.0	5'-6"	2'-10"	12'-6½"	3'-6"	2'-10"	9'-0½"	11'-4"	11'-4"	11'-9"	13'-1"	16'-0"	16.46	22.26	22.46	23.16	24.66	28.05	28.46	29.85	32.85	33.85	34.46	36.55	41.05	58"	91"	72"

STATE OF FLORIDA DEPARTMENT OF TRANSPORTATION
ROAD DESIGN

STRAIGHT CONCRETE ENDWALLS SINGLE AND MULTIPLE PIPE

	Names	Dates
Designed By	HAB/EGR	73/83
Drawn By	RWR/HSD	83
Checked By	JBW/MC	83
F.H.W.A. Approved:		10/06/83

Approved By E. E. Lynch
State Drainage Engineer

Revision No.	Sheet No.	Index No.
88	2 of 2	250

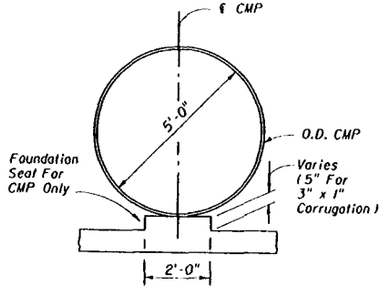

SECTION BB

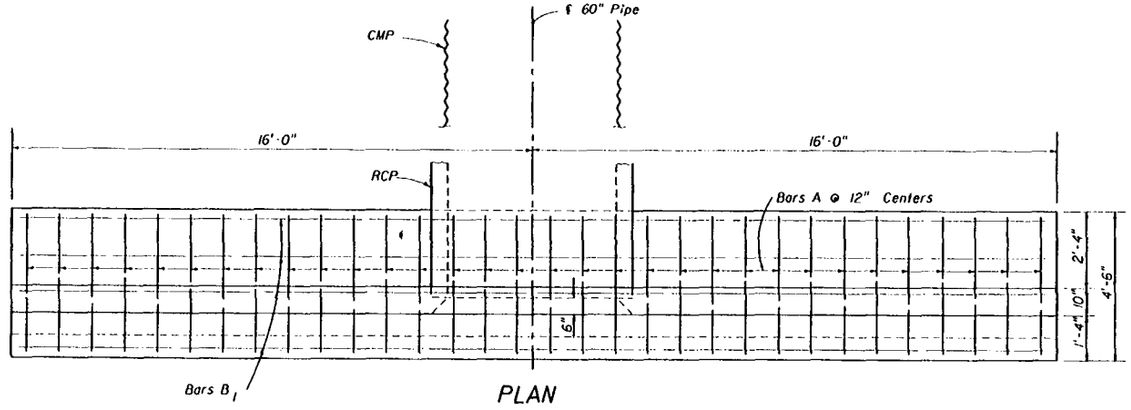

PLAN
(Showing Bar In Footing)

BILL OF REINFORCING STEEL

MARK	SIZE	NO. REQ'D	LENGTH	LOCATION	BENDING
A	No. 4	32	4'-2"	Footing	Straight
B_1	No. 4	13	31'-8"	Footing And Wall	Straight
B_2	No. 4	4	12'-4"	Wall	Straight
B_3	No. 4	4	13'-9"	Wall	Straight
C	No. 4	26	9'-4"	Wall	Bend
D	No. 4	18	7'-6"	Wall	Straight
E	No. 4	8	1'-8"	Footing And Wall	Straight

BENDING DIAGRAM

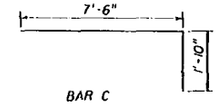

BAR C

NOTE: All bar dimensions are out to out

ESTIMATED QUANTITIES

ITEM	UNIT	RCP	CMP
Concrete Class II	Cu. Yd.	11.3	11.4
Reinforcing Steel	Lb.	695	695

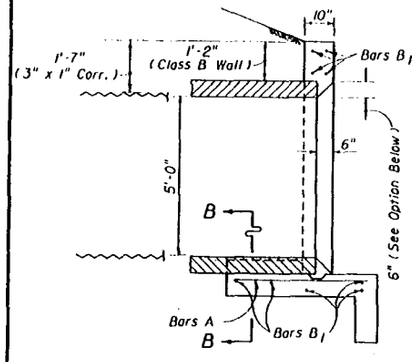

SECTION AA

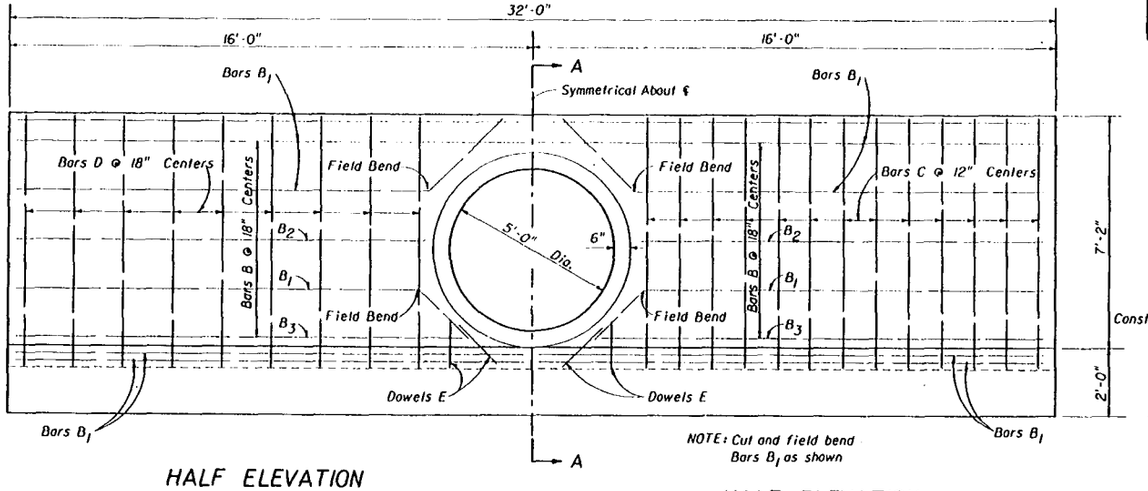

HALF ELEVATION
(Showing Bars In Front Face Of Wall)

NOTE: Cut and field bend Bars B_1 as shown

HALF ELEVATION
(Showing Bars In Back Face Of Wall)

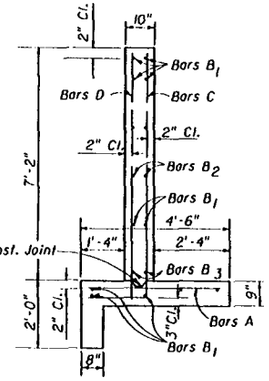

TYPICAL SECTION THRU ENDWALL

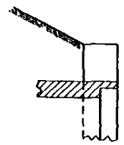

OPTIONAL ENTRANCE FOR CONCRETE PIPE

GENERAL NOTES

1. Endwalls may be cast-in-place or precast construction. Cast-in-place endwalls shall conform to the details on this index, design specifications AASHTO 1989. Precast construction which adheres to this Index, including any additional reinforcement required for handling which shall be determined by the Contractor or supplier, does not require additional approvals. Deviations from this Index, for precast units, shall require the approval of the State Drainage Engineer prior to construction. For precast construction, see Index No. 201 for opening and grouting details.
2. Reinforcing steel shall be either Grade 40 or 60.
3. Concrete shall be Class II except concrete meeting the requirements of ASTM C 478 (4000 PSI) may be used in lieu of Class II concrete in precast units manufactured in plants which are under the Standard Operating Procedures for the inspection of precast drainage products.
4. Chamfer: All exposed edges and corners to be chamfered $\frac{3}{4}$" unless otherwise shown.
5. Metal pipe shall be bituminous coated on all surfaces in contact with concrete and 12" beyond the boundary of contact. Any suitable bituminous material may be field applied.
6. Sodding shall be in accordance with Index No. 281 and paid for under the contract unit price for Sodding, SY.
7. Basis of payment for either cast-in-place or precast construction shall be the estimated quantities tabulated on the Index. Concrete and reinforcing steel shall be paid for under the contract unit prices for Class II Concrete (Endwalls), CY and Reinforcing Steel (Roadway), LB.

STATE OF FLORIDA DEPARTMENT OF TRANSPORTATION
ROAD DESIGN

STRAIGHT CONCRETE ENDWALLS
SINGLE AND DOUBLE 60" PIPE

	Names	Dates
Designed By		
Drawn By	TWJ	11/99
Checked By	WHW	11/99
F.H.W.A. Approved:		03/20/15

Approved By: S. A. McLemore, State Drainage Engineer

Revision No.	Sheet No.	Index No.
92	1 of 2	251

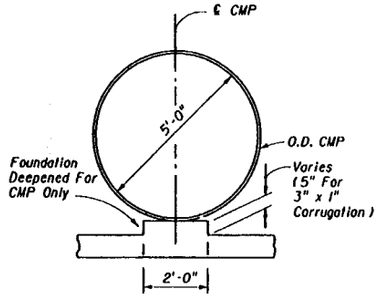

SECTION BB

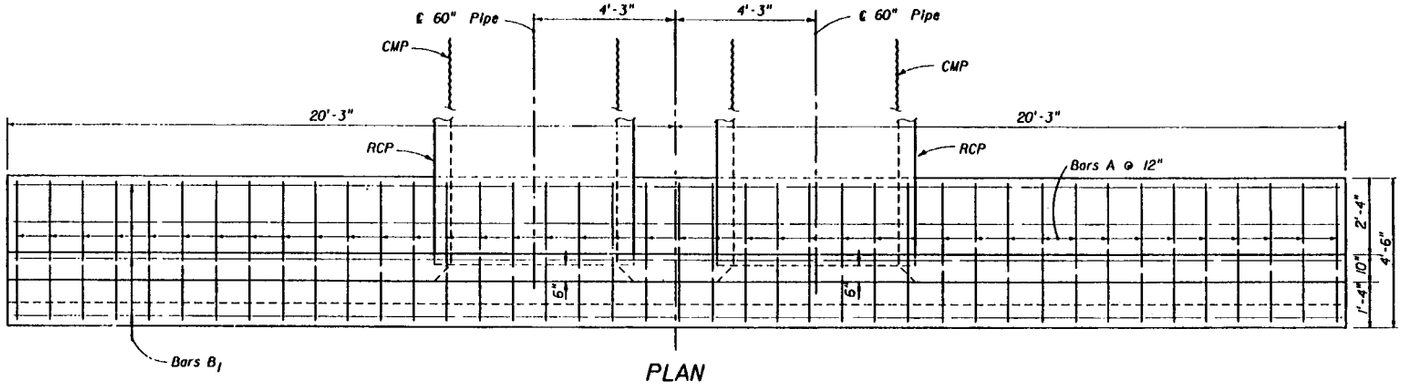

PLAN

(Showing Bar In Footing)

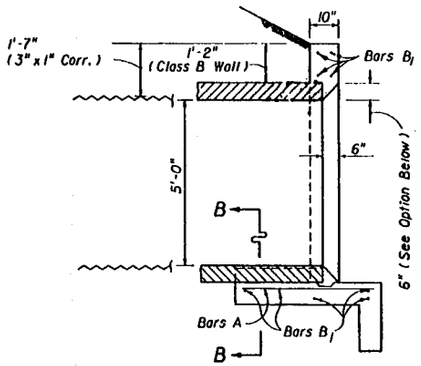

SECTION AA

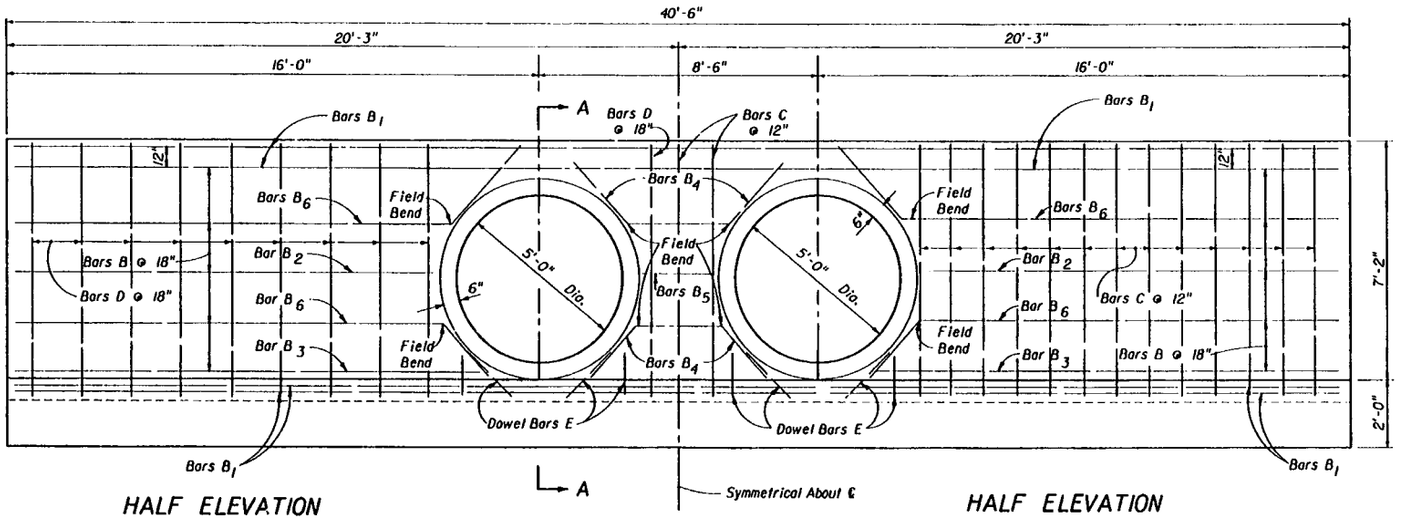

HALF ELEVATION

(Showing Bars In Front Face Of Wall)

HALF ELEVATION

(Showing Bars In Back Face Of Wall)

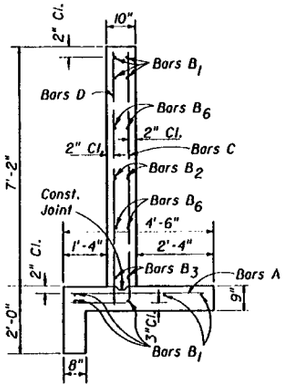

TYPICAL SECTION THRU ENDWALL

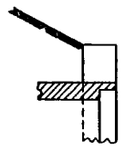

OPTIONAL ENTRANCE FOR CONCRETE PIPE

BILL OF REINFORCING STEEL

MARK	SIZE	NO. REQ'D	LENGTH	LOCATION	BENDING
A	4	41	4'-2"	Footing	Straight
B_1	4	9	40'-2"	Footing & Wall	Straight
B_2	4	4	12'-6"	Wall	Straight
B_3	4	4	13'-9"	Wall	Straight
B_4	4	4	6'-0"	Wall	Field Bend
B_5	4	2	2'-2"	Wall	Straight
B_6	4	8	15'-0"	Wall	Field Bend
C	4	29	9'-4"	Footing & Wall	Bend
D	4	20	7'-6"	Footing & Wall	Straight
E	4	16	1'-8"	Footing & Wall	Straight

BENDING DIAGRAM

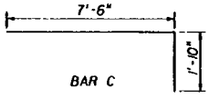

NOTE: All bar dimensions are out to out

ESTIMATED QUANTITIES

ITEM	UNIT	RCP	CMP
Concrete Class II	Cu. Yd.	13.7	13.8
Reinforcing Steel	Lb.	824	824

NOTE: See Sheet 1 of 2 For General Notes.

STATE OF FLORIDA DEPARTMENT OF TRANSPORTATION
ROAD DESIGN

STRAIGHT CONCRETE ENDWALLS
SINGLE AND DOUBLE 60" PIPE

	Names	Dates
Designed By		
Drawn By	TWJ	11/49
Checked By	WHW	11/49
F.H.W.A. Approved:		03/20/75

Approved By: G.C. Rauch
State Drainage Engineer

Revision No.	Sheet No.	Index No.
92	2 of 2	251

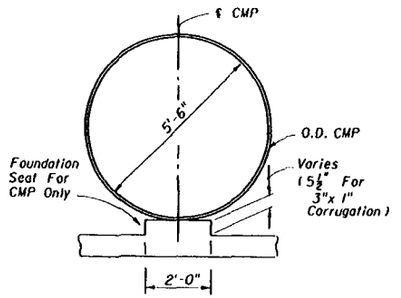

SECTION BB

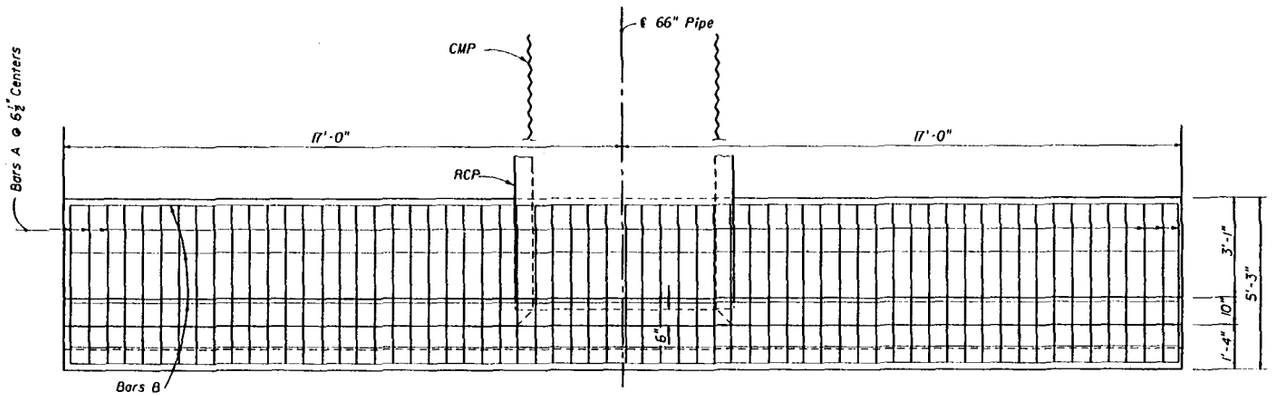

PLAN
(Showing Bars In Footing)

BILL OF REINFORCING STEEL

MARK	SIZE	NO. REQ'D	LENGTH	LOCATION	BENDING
A	5	63	4'-11"	Footing	Straight
B	4	17	33'-8"	Footing & Wall	Straight
C	5	34	9'-11"	Wall	Bend
D	4	20	8'-1"	Wall	Straight
E	4	4	1'-8"	Wall	Straight

BENDING DIAGRAM

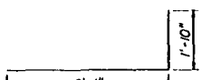

NOTE: All bar dimensions are out to out

ESTIMATED QUANTITIES

ITEM	UNIT	RCP	CMP
Concrete Class II	Cu. Yd.	13.2	13.3
Reinforcing Steel	Lb.	1170	1170

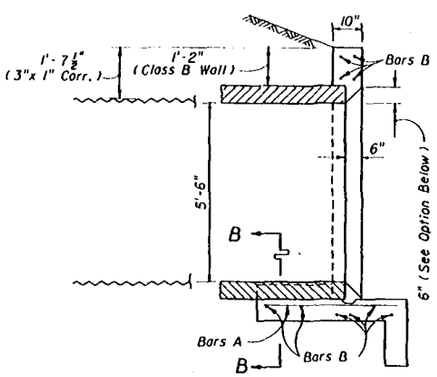

SECTION AA

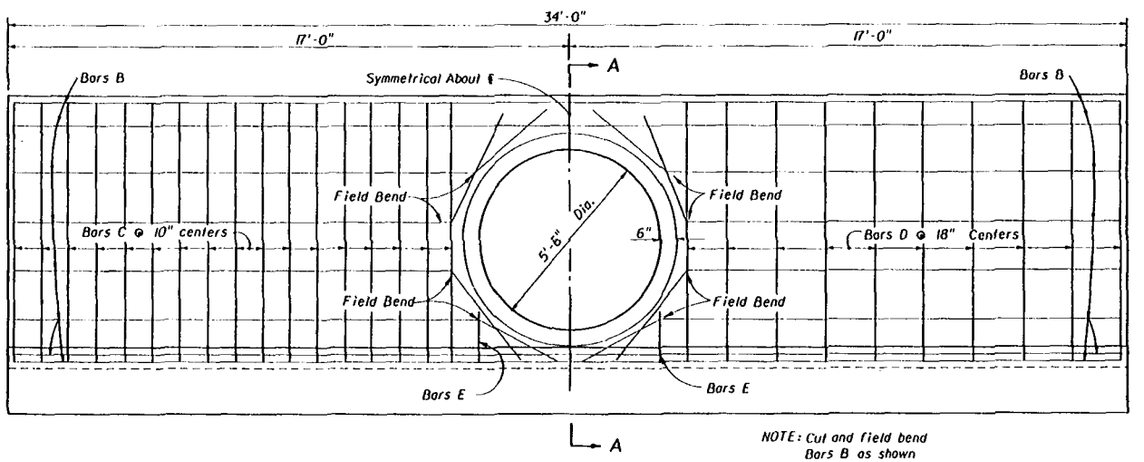

NOTE: Cut and field bend Bars B as shown

HALF ELEVATION
(Showing Bars In Back Face Of Wall)

HALF ELEVATION
(Showing Bars In Front Face Of Wall)

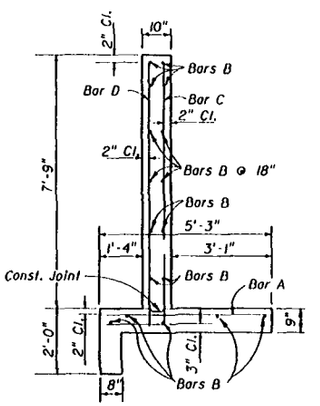

TYPICAL SECTION
THRU ENDWALL

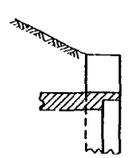

OPTIONAL ENTRANCE
FOR CONCRETE PIPE

GENERAL NOTES

1. Endwalls may be cast-in-place or precast construction. Cast-in-place endwalls shall conform to the details on this index, design specifications AASHTO 1989. Precast construction which adheres to this Index, including any additional reinforcement required for handling which shall be determined by the Contractor or supplier, does not require additional approvals. Deviations from this Index, for precast units, shall require the approval of the State Drainage Engineer prior to construction. For precast construction, see Index No. 201 for opening and grouting details.
2. Reinforcing steel shall be either Grade 40 or 60.
3. Concrete shall be Class II except concrete meeting the requirements of ASTM C 478 (4000 psi) may be used in lieu of Class II concrete in precast units manufactured in plants which are under the Standard Operating Procedures for the inspection of precast drainage products.
4. Chamfer: All exposed edges and corners to be chamfered ¾" unless otherwise shown.
5. Metal pipe shall be bituminous coated on all surfaces in contact with concrete and 12" beyond the boundary of contact. Any suitable bituminous material may be field applied.
6. Sodding shall be in accordance with Index No. 281 and paid for under the contract unit price for Sodding, SY.
7. Basis of payment for either cast-in-place or precast construction shall be the estimated quantities tabulated on the Index. Concrete and reinforcing steel shall be paid for under the contract unit prices for Class II Concrete (Endwalls), CY and Reinforcing Steel (Roadway), LB.

STATE OF FLORIDA DEPARTMENT OF TRANSPORTATION
ROAD DESIGN

STRAIGHT CONCRETE ENDWALLS
SINGLE AND DOUBLE 66" PIPE

	Names	Dates
Designed By	JLW	03/54
Drawn By		
Checked By	RCB	03/54
F.H.W.A. Approved:		10/07/80

Approved By J. A. McLemore
State Drainage Engineer

Rev. No.	Sheet No.	Index No.
92	1 of 2	252

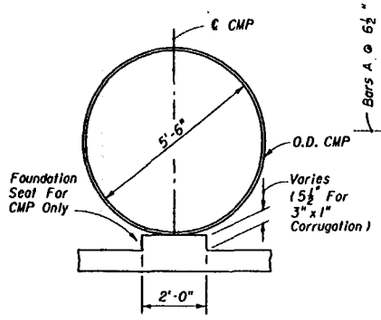

SECTION BB

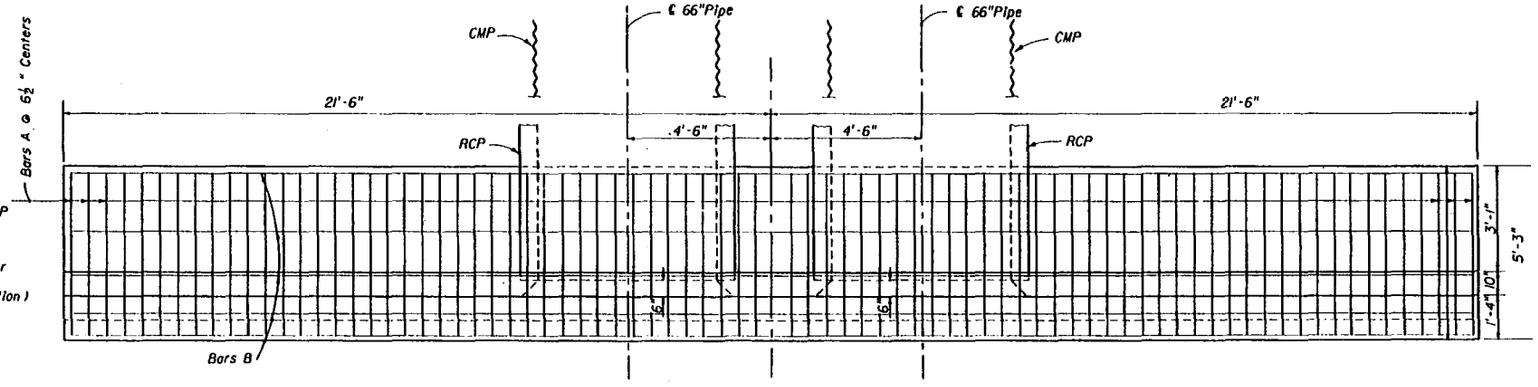

PLAN
(Showing Bars In Footing)

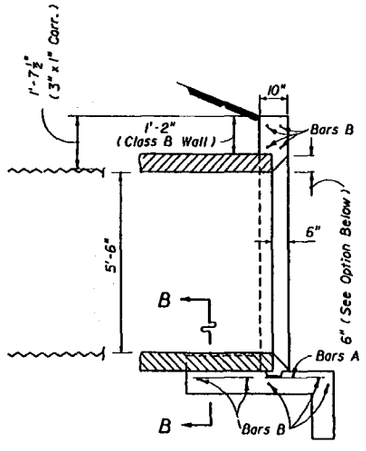

SECTION AA

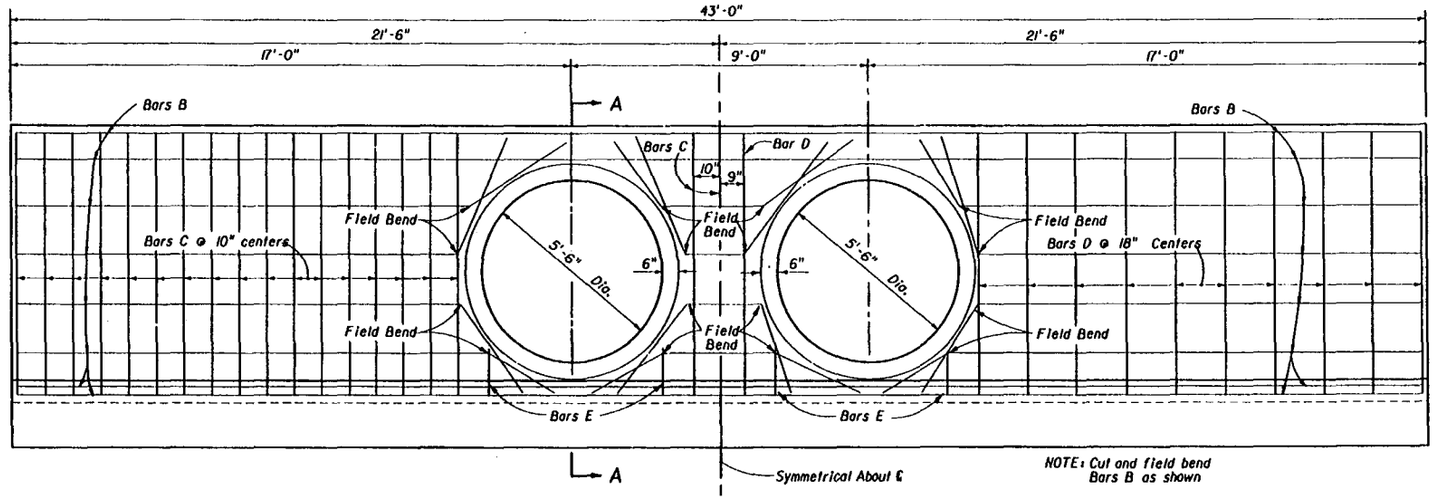

NOTE: Cut and field bend Bars B as shown

HALF ELEVATION
(Showing Bars In Back Face Of Wall)

HALF ELEVATION
(Showing Bars In Front Face Of Wall)

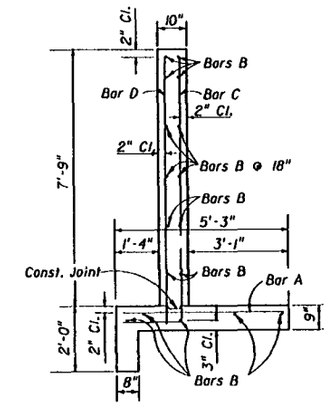

TYPICAL SECTION THRU ENDWALL

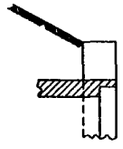

OPTIONAL ENTRANCE FOR CONCRETE PIPE

BILL OF REINFORCING STEEL					
MARK	SIZE	NO. REQ'D	LENGTH	LOCATION	BENDING
A	5	80	4'-11"	Footing	Straight
B	4	17	42'-8"	Footing & Wall	Straight
C	5	37	9'-11"	Wall	Bend
D	4	22	8'-1"	Wall	Straight
E	4	8	1'-8"	Wall	Straight

BENDING DIAGRAMS

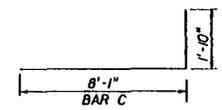

NOTE: All bar dimensions are out to out

ESTIMATED QUANTITIES			
ITEM	UNIT	RCP	CMP
Concrete Class II	Cu. Yd.	16.0	16.2
Reinforcing Steel	Lb.	1,406	1,406

NOTE: See Sheet 1 of 2 for General Notes.

STATE OF FLORIDA DEPARTMENT OF TRANSPORTATION
ROAD DESIGN

STRAIGHT CONCRETE ENDWALLS
SINGLE AND DOUBLE 66" PIPE

	Names	Dates
Designed By	JSP	11/79
Drawn By	FWT	11/79
Checked By		
F.H.W.A. Approved:		10/07/80

Approved By: State Drainage Engineer

Revision No.	Sheet No.	Index No.
92	2 of 2	252

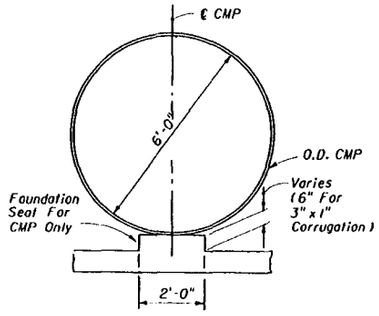

SECTION BB

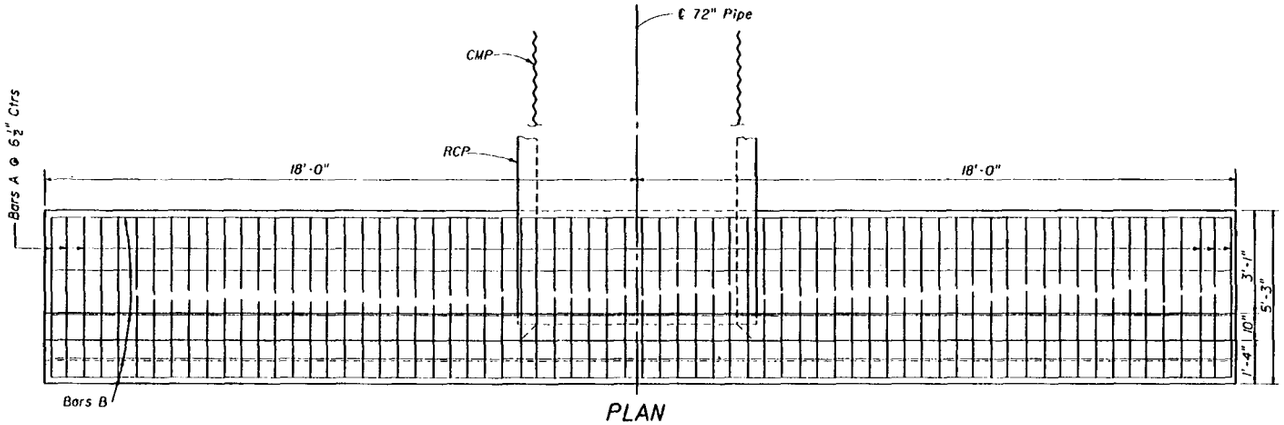

PLAN

(Showing Bars In Footing)

BILL OF REINFORCING STEEL					
MARK	SIZE	NO. REQ'D	LENGTH	LOCATION	BENDING
A	5	68	4'-11"	Footing	Straight
B	4	17	35'-8"	Footing & Wall	Straight
C	5	34	10'-5"	Wall	Bend
D	4	20	8'-7"	Wall	Straight
E	4	4	2'-6"	Wall	Straight
F	4	4	1'-6"	Wall	Straight

BENDING DIAGRAM

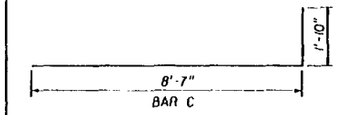

NOTE: All bar dimensions are out to out

ESTIMATED QUANTITIES			
ITEM	UNIT	RCP	CMP
Concrete Class II	Cu. Yd.	14.4	14.5
Reinforcing Steel	Lb.	1249	1249

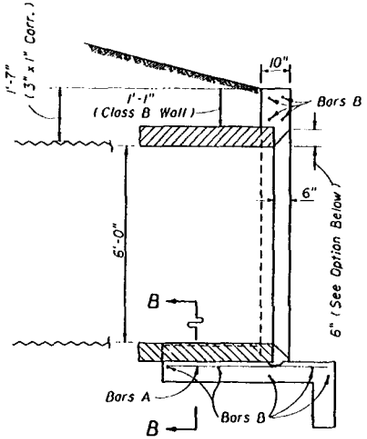

SECTION AA

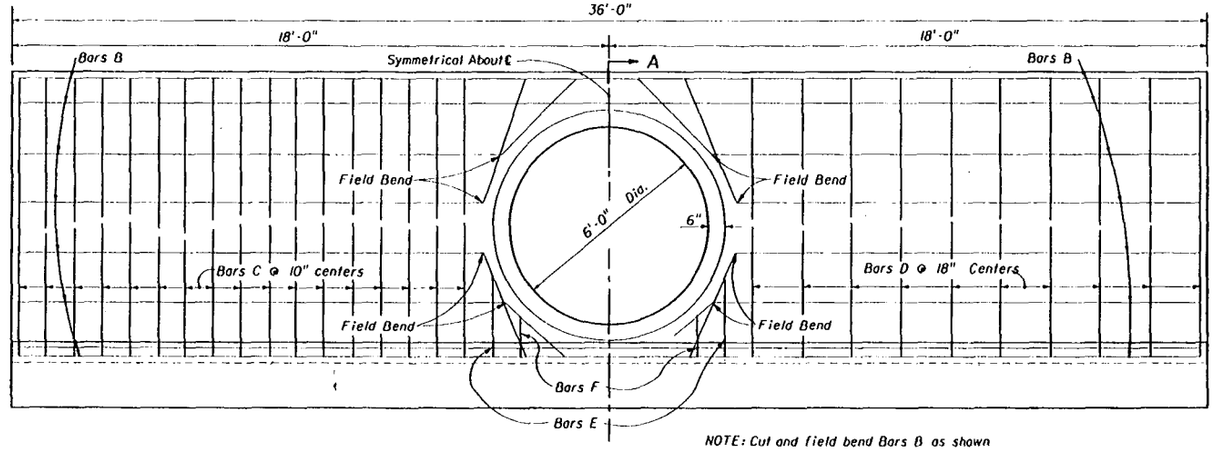

NOTE: Cut and field bend Bars B as shown

HALF ELEVATION

(Showing Bars In Back Face Of Wall)

A

HALF ELEVATION

(Showing Bars In Front Face Of Wall)

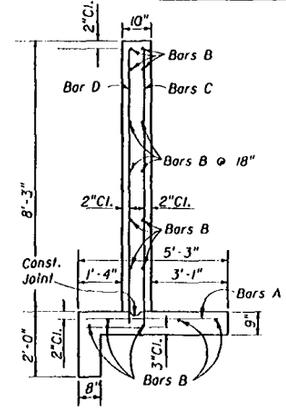

TYPICAL SECTION THRU ENDWALL

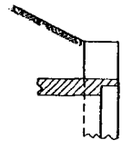

OPTIONAL ENTRANCE FOR CONCRETE PIPE

GENERAL NOTES

1. Endwalls may be cast-in-place or precast construction. Cast-in-place endwalls shall conform to the details on this index, design specifications AASHTO 1989. Precast construction which adheres to this index, including any additional reinforcement required for handling which shall be determined by the Contractor or supplier, does not require additional approvals. Deviations from this index, for precast units, shall require the approval of the State Drainage Engineer prior to construction. For precast construction, see Index No. 201 for opening and grouting details.
2. Reinforcing steel shall be either Grade 40 or 60.
3. Concrete shall be Class II except concrete meeting the requirements of ASTM C 478 (4000 PSI) may be used in lieu of Class II concrete in precast units manufactured in plants which are under the Standard Operating Procedures for the inspection of precast drainage products.
4. Chamfer: All exposed edges and corners to be chamfered ¾" unless otherwise shown.
5. Metal pipe shall be bituminous coated on all surfaces in contact with concrete and 12" beyond the boundary of contact. Any suitable bituminous material may be field applied.
6. Sodding shall be in accordance with Index No. 281 and paid for under the contract unit price for Sodding, SY.
7. Basis of payment for either cast-in-place or precast construction shall be the estimated quantities tabulated on the Index. Concrete and reinforcing steel shall be paid for under the contract unit prices for Class II Concrete (Endwalls), CY and Reinforcing Steel (Roadway), LB.

STATE OF FLORIDA DEPARTMENT OF TRANSPORTATION
ROAD DESIGN

STRAIGHT CONCRETE ENDWALLS

SINGLE AND DOUBLE 72" PIPE

	Names	Dates
Designed By	EVC	10/55
Drawn By		
Checked By	WHW	10/55
F.H.W.A. Approved:		03/20/75

Approved By S A McLemore
State Drainage Engineer

Revision No.	Sheet No.	Index No.
92	1 of 2	253

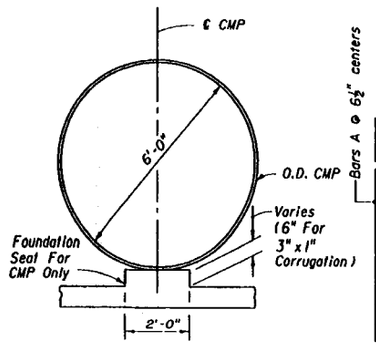

SECTION BB

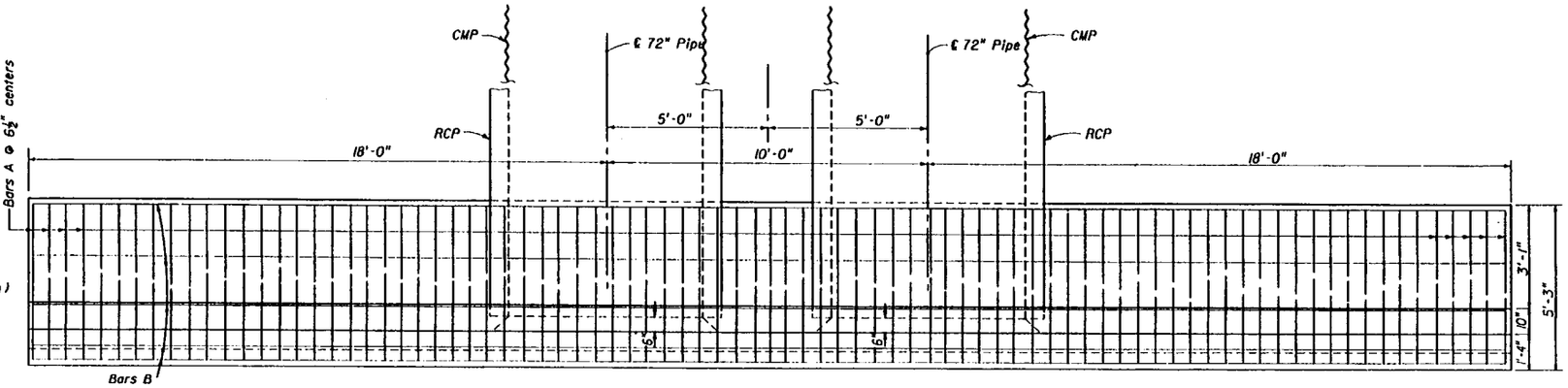

PLAN

(Showing Bars In Footing)

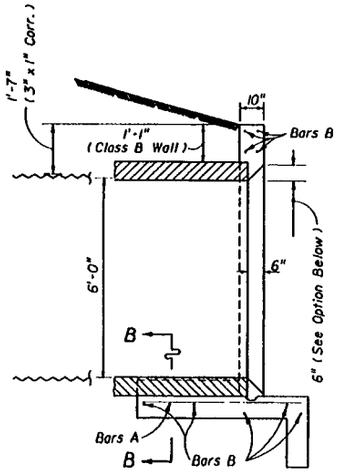

SECTION AA

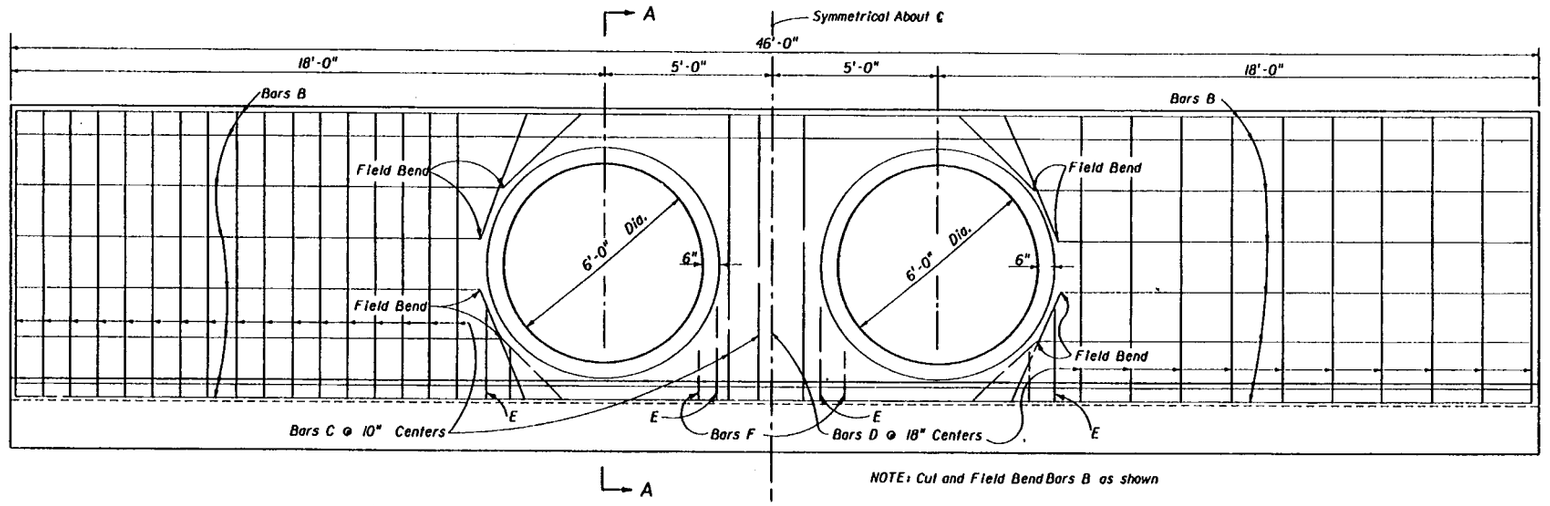

HALF ELEVATION

(Showing Bars In Back Face Of Wall)

NOTE: Cut and Field Bend Bars B as shown

HALF ELEVATION

(Showing Bars In Front Face Of Wall)

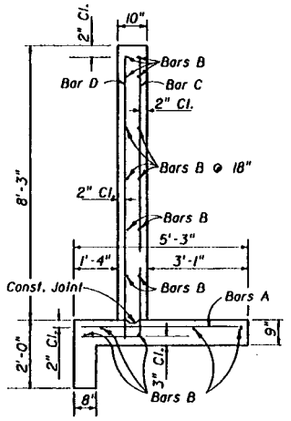

TYPICAL SECTION THRU ENDWALL

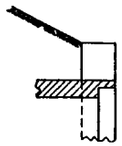

OPTIONAL ENTRANCE FOR CONCRETE PIPE

BILL OF REINFORCING STEEL

MARK	SIZE	NO. REQ'D	LENGTH	LOCATION	BENDING
A	5	85	4'-11"	Footing	Straight
B	4	17	45'-8"	Footing & Wall	Straight
C	5	38	10'-5"	Wall	Bend
D	4	23	8'-7"	Wall	Straight
E	4	8	2'-6"	Wall	Straight
F	4	8	1'-6"	Wall	Straight

BENDING DIAGRAM

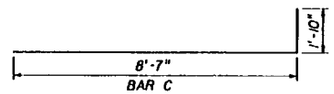

NOTE: All bar dimensions are out to out

ESTIMATED QUANTITIES

ITEM	UNIT	RCP	CMP
Concrete Class II	Cu. Yd.	17.5	17.8
Reinforcing Steel	Lb.	1519	1519

NOTE: See Sheet 1 of 2 for General Notes.

STATE OF FLORIDA DEPARTMENT OF TRANSPORTATION
ROAD DESIGN

STRAIGHT CONCRETE ENDWALLS

SINGLE AND DOUBLE 72" PIPE

	Names	Dates
Designed By	EVC	10/55
Drawn By		
Checked By	WHW	10/55
F.H.W.A. Approved		07/07/15

Approved By _____ State Drainage Engineer

Revision No.	Sheet No.	Index No.
92	2 of 2	253

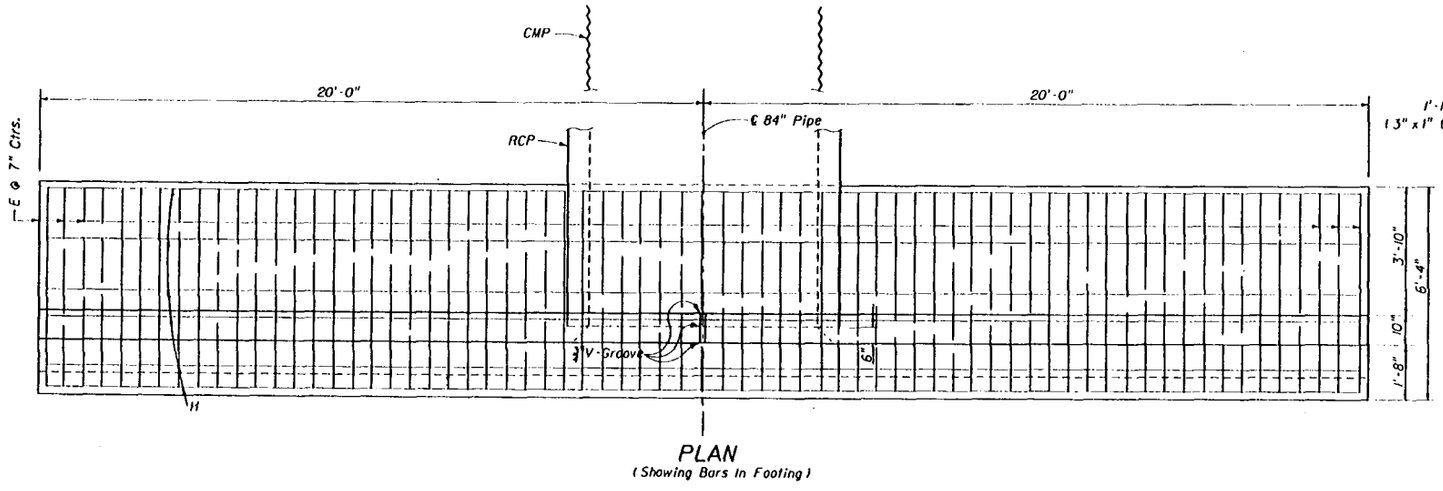

PLAN
(Showing Bars In Footing)

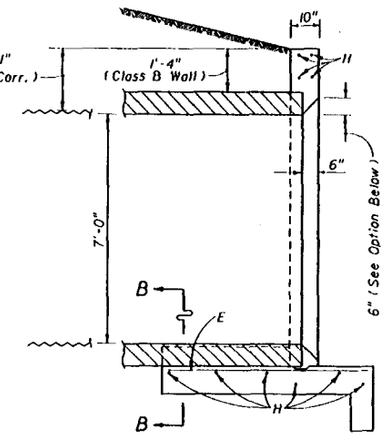

SECTION AA

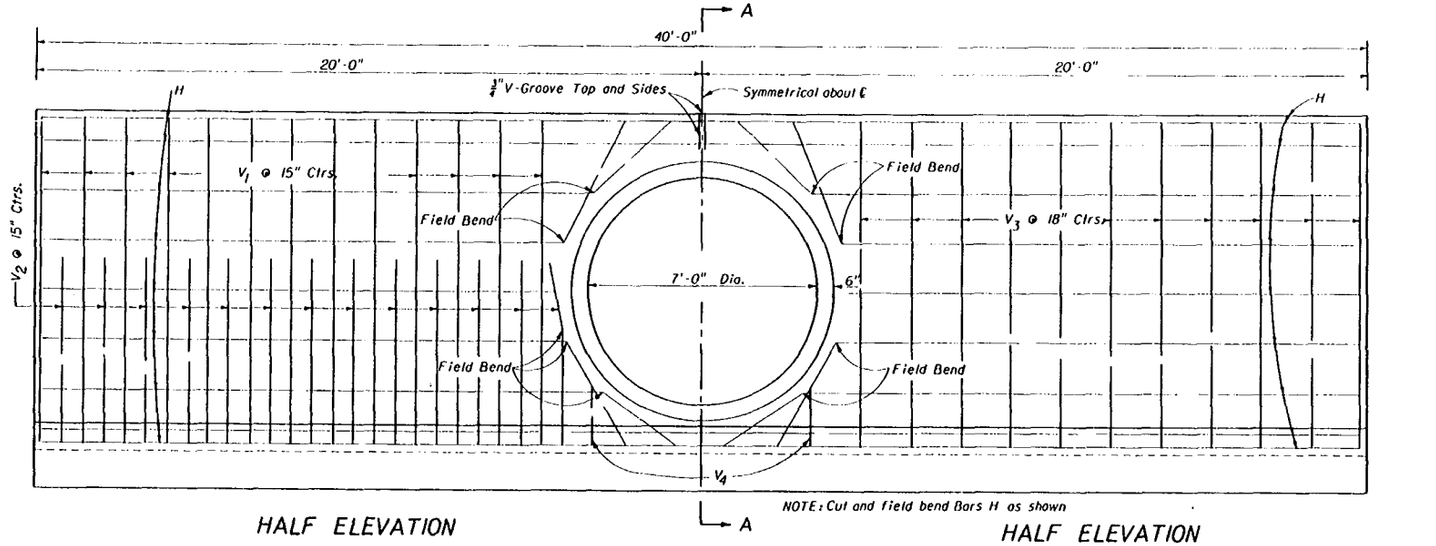

NOTE: Cut and field bend Bars H as shown

HALF ELEVATION
(Showing Bars In Back Face Of Wall)

HALF ELEVATION
(Showing Bars In Front Face Of Wall)

BILL OF REINFORCING STEEL			
MARK	SIZE	NO. REQ'D	LENGTH
E	6	69	6'-0"
H	4	20	39'-8"
V_1	6	26	12'-4"
V_2	6	26	7'-10"
V_3	4	22	10'-2"
V_4	4	4	2'-0"

BENDING DIAGRAM

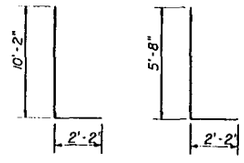

NOTE: All bar dimensions are out to out

ESTIMATED QUANTITIES			
ITEM	UNIT	RCP	CMP
Concrete Class II	Cu. Yd.	20.0	20.2
Reinforcing Steel	Lb.	2,095	2,095

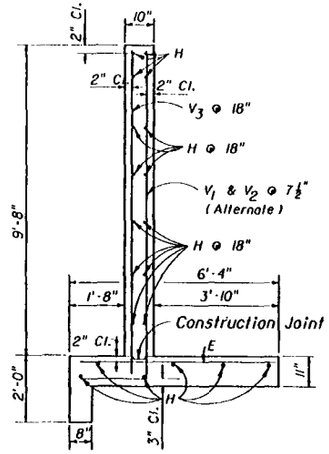

TYPICAL SECTION THRU ENDWALL

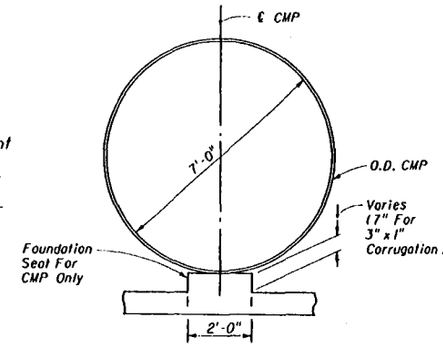

SECTION BB

GENERAL NOTES

1. Endwalls may be cast-in-place or precast construction. Cast-in-place endwalls shall conform to the details on this index, design specifications AASHTO 1989. Precast construction which adheres to this index, including any additional reinforcement required for handling which shall be determined by the Contractor or supplier, does not require additional approvals. Deviations from this index, for precast units, shall require the approval of the State Drainage Engineer prior to construction. For precast construction, see Index No. 201 for opening and grouting details.
2. Reinforcing steel shall be either Grade 40 or 60.
3. Concrete shall be Class II except concrete meeting the requirements of ASTM C 478 (4000 PSI) may be used in lieu of Class II concrete in precast units manufactured in plants which are under the Standard Operating Procedures for the inspection of precast drainage products.
4. Chamfer: All exposed edges and corners to be chamfered ¾" unless otherwise shown.
5. Metal pipe shall be bituminous coated on all surfaces in contact with concrete and 12" beyond the boundary of contact. Any suitable bituminous material may be field applied.
6. Sodding shall be in accordance with Index No. 281 and paid for under the contract unit price for Sodding, SY.
7. Basis of payment for either cast-in-place or precast construction shall be the estimated quantities tabulated on the index. Concrete and reinforcing steel shall be paid for under the contract unit prices for Class II Concrete (Endwalls), CY and Reinforcing Steel (Roadway), LB.

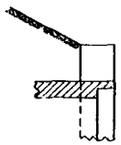

OPTIONAL ENTRANCE FOR CONCRETE PIPE

STATE OF FLORIDA DEPARTMENT OF TRANSPORTATION
ROAD DESIGN

STRAIGHT CONCRETE ENDWALL
SINGLE 84" PIPE

	Names	Dates
Designed By		
Drawn By	WHW	01/58
Checked By	HCG	07/58
F.H.W.A. Approved:		03/20/75

Approved By: J. A. McLemore, State Drainage Engineer

Revision No.	Sheet No.	Index No.
92	1 of 1	255

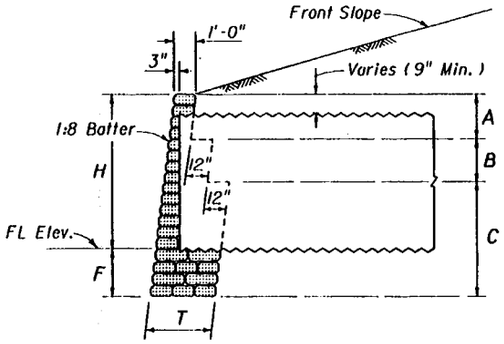

CORRUGATED METAL PIPE

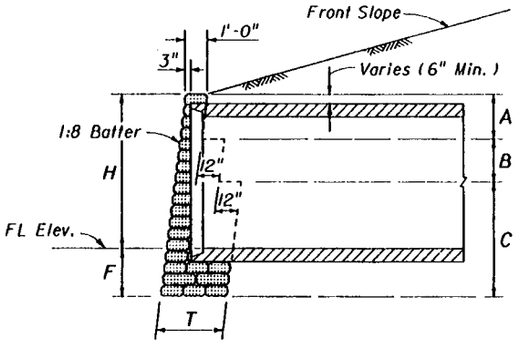

CONCRETE PIPE

SECTION YY

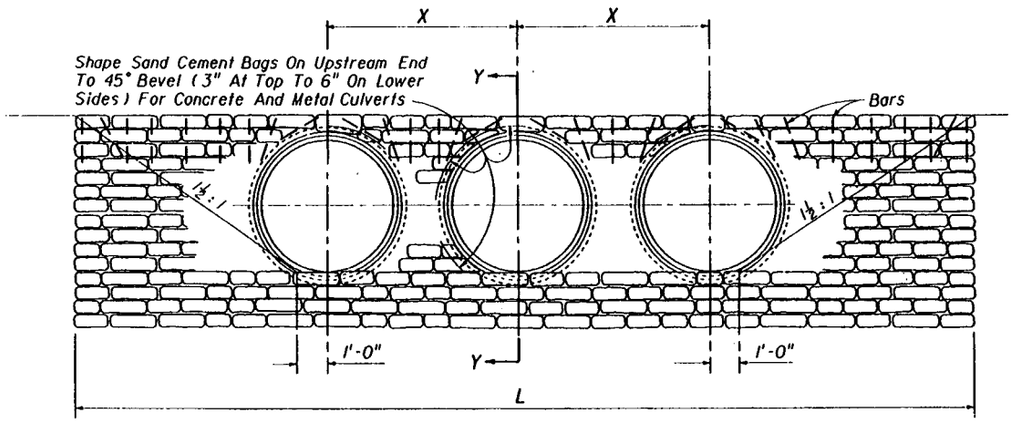

FRONT ELEVATION

Note: (1) For concrete and corrugated metal pipes. Concrete pipe shown.

(2) The top row of riprap bags shall be secured by pinning, using No. 4 reinforcing bars 18 inches in length, as follows:

(a) The end bags shall be secured using two bars per bag, one vertical and one diagonal as shown.

(b) The next to last bag on each end shall be secured with two bars vertically.

(c) Bags located over the pipe shall be secured by a bar which is driven diagonally except that for concrete pipe two bars shall be used for single bags above the pipe.

(d) Intermediate bags shall be secured with a single bar.

Bars shall be driven to one inch below the surface of the bag.

The cost of furnishing and installing the bars shall be included in the cost of the riprap.

TABLE OF DIMENSIONS AND QUANTITIES FOR ONE ENDWALL

SIZE OF PIPE	H	T	A	B	C	F	X	ONE PIPE CULVERTS			TWO PIPE CULVERTS			THREE PIPE CULVERTS			FOUR PIPE CULVERTS		
								L	RIPRAP CY		L	RIPRAP CY		L	RIPRAP CY		L	RIPRAP CY	
									CP	CMP		CP	CMP		CP	CMP		CP	CMP
18"	2'-3"	1'-0"	4'-0"	0'-0"	0'-0"	1'-9"	2'-10"	8'-9"	1.2	1.2	11'-7"	1.5	1.6	14'-5"	1.8	1.9	17'-3"	2.1	2.3
24"	2'-9"	2'-0"	2'-0"	2'-6"	0'-0"	1'-9"	3'-5"	10'-3"	2.4	2.5	13'-8"	3.0	3.2	17'-1"	3.7	4.0	20'-6"	4.3	4.7
30"	3'-4"	2'-0"	2'-0"	3'-2"	0'-0"	1'-10"	4'-3"	12'-0"	3.3	3.4	16'-3"	4.2	4.5	20'-6"	5.1	5.5	24'-9"	6.0	6.5
36"	3'-10"	2'-0"	2'-0"	3'-8"	0'-0"	1'-10"	5'-1"	13'-6"	4.0	4.2	18'-7"	5.2	5.7	23'-8"	6.3	6.9	28'-9"	7.4	8.2
42"	4'-5"	3'-0"	2'-0"	2'-0"	2'-4"	1'-11"	6'-0"	15'-3"	6.4	6.7	21'-3"	8.3	8.9	27'-3"	10.2	11.2	33'-3"	12.3	13.4
48"	4'-11"	3'-0"	2'-0"	2'-0"	2'-10"	1'-11"	6'-9"	16'-9"	7.7	8.1	23'-6"	10.0	10.8	30'-3"	12.3	13.5	37'-0"	14.5	16.2
54"	5'-6"	3'-0"	2'-0"	2'-0"	3'-6"	2'-0"	7'-8"	18'-6"	9.5	10.1	26'-2"	12.4	13.5	33'-10"	15.3	17.0	41'-6"	18.2	20.4
60"	6'-0"	3'-0"	2'-0"	2'-0"	4'-0"	2'-0"	8'-6"	20'-0"	11.0	11.7	28'-6"	14.4	15.8	37'-0"	17.8	19.8	45'-6"	21.1	23.8
66"	6'-7"	3'-0"	2'-0"	2'-0"	4'-8"	2'-1"	9'-3"	21'-9"	13.2	14.1	31'-0"	17.2	18.9	40'-3"	21.2	23.7	49'-6"	25.1	28.5
72"	7'-1"	3'-0"	2'-0"	2'-0"	5'-2"	2'-1"	10'-0"	23'-3"	15.0	16.0	33'-3"	19.4	21.4	43'-3"	23.9	26.8	53'-3"	28.3	32.3
78"	7'-8"	3'-0"	2'-0"	2'-0"	5'-10"	2'-2"	10'-9"	25'-0"	17.5	18.7	35'-9"	22.6	25.0	46'-6"	27.8	31.3	57'-3"	32.9	37.6
84"	8'-2"	3'-0"	2'-0"	2'-0"	6'-4"	2'-2"	11'-8"	26'-6"	19.5	20.9	38'-2"	25.3	28.1	49'-10"	31.1	35.2	61'-6"	36.9	42.4

STATE OF FLORIDA DEPARTMENT OF TRANSPORTATION
ROAD DESIGN

STRAIGHT SAND-CEMENT ENDWALLS

	Names	Dates
Designed By		
Drawn By	JBW	07/88
Checked By	JVG/ECR	08/88

Approved By: E.C. Rugi, State Drainage Engineer

F.H.W.A. Approved: 12/08/76

Revision No.	Sheet No.	Index No.
90	1 of 1	258

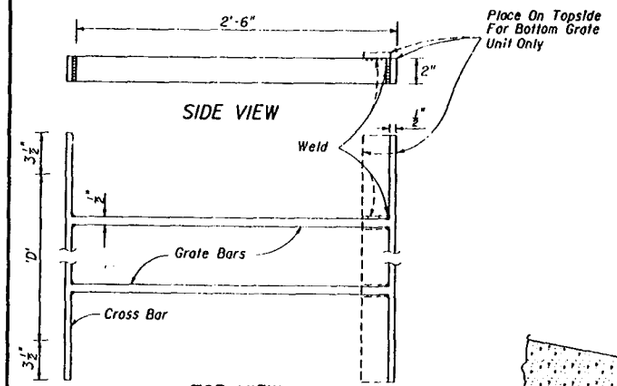

TOP VIEW
GRATE TYPE NO. 1

Pipe Size	Grate Bars Reqd.	Grate Wt.
15"	2	28.93

Bars to be evenly spaced across dimension 'D'.
All bars ½" x 2".

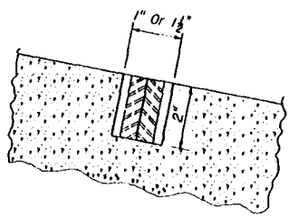

SECTION AA

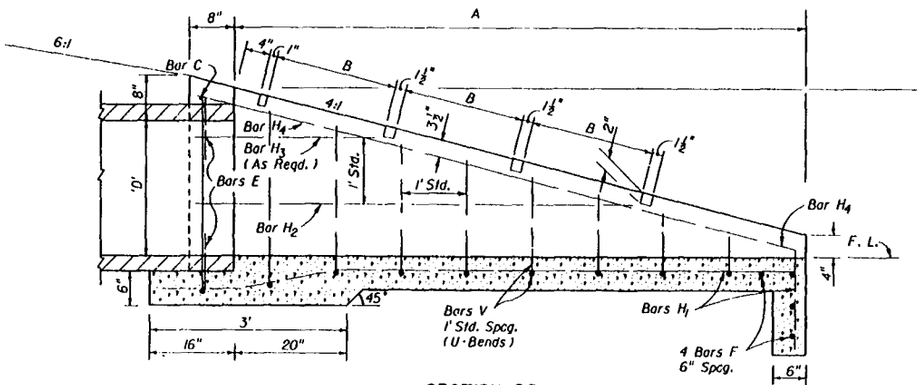

SECTION BB

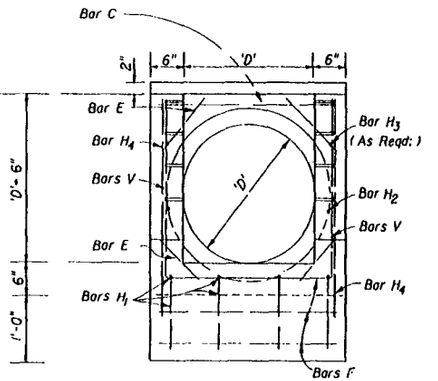

END VIEW

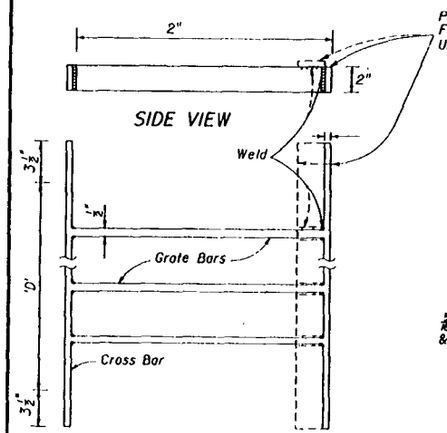

TOP VIEW
GRATE TYPE NO. 2

Pipe Size	Grate Bars Reqd.	Grate Wt.
18"	3	33.69
24"	4	43.63
30"	5	53.55

Bars to be evenly spaced across dimension 'D'.
All bars ½" x 2".

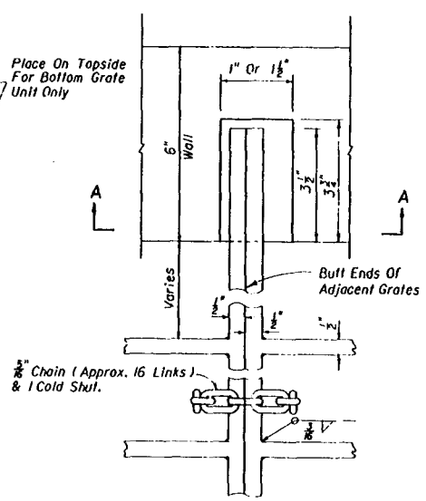

TOP VIEW

GRATE, SEAT, WELD & CHAIN DETAIL

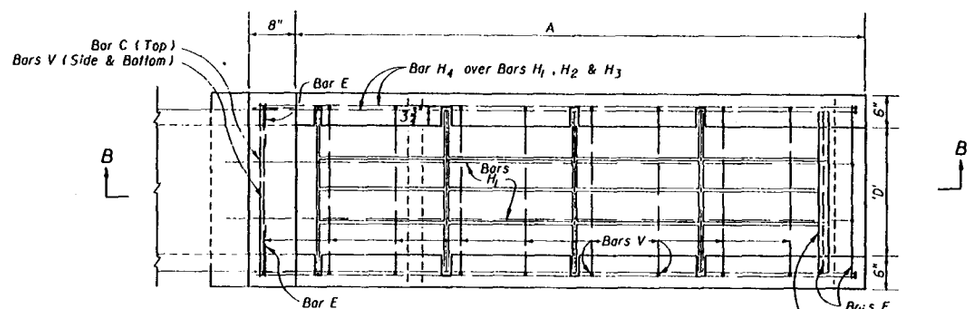

TOP VIEW

TABLE OF DIMENSIONS AND QUANTITIES

Slope	Pipe Size D	A	B	Conc. Class I (CY)	Reinf. Steel (Lbs.)	Number Of Grates Req'd Type No. 1	Number Of Grates Req'd Type No. 2	Total Grate Wt. (Lbs.)	Sodding (SY)	Slope Transition Offset	Slope Transition L
4:1	15"	5.67'	2.38'	0.85	56	2	0	57.86	15	4.2'	42'
	18"	6.67'	1.875'	1.01	73	0	3	101.08	16	4.8'	48'
	24"	8.67'	1.875'	1.65	97	0	4	174.52	19	5.8'	58'
	30"	10.67'	1.875'	2.33	129	0	5	267.75	21	6.9'	69'

GENERAL NOTES

1. This endwall is to be used only in the clear zone for the drainage of medians and other areas having low design velocities and negligible debris. Grates exposed to salt water shall be designated in the plan as Alternate G.
2. Reinforcing steel: All bars are size #4. Spacings shown are center to center. Laps to be 12" minimum. Clearance is 2" except as noted.
   Square welded wire fabric (two cages max.) having an equivalent cross sectional area (0.20 sq. in.) may be substituted for bar reinforcement.
3. Grates shall be ASTM A 242, A 441, A 572 or A 588, Grade 50 steel, and galvanized in accordance with Section 962-7 of the Standard Specifications.
4. Endwall to be paid for under the contract unit price for U-Endwall With Grate, Each. Payment shall include cost of concrete, reinforcing steel, grate, and accessories. Quantities shown are for estimating purposes only.
5. Sod slopes 5' each side and above endwall. Sodding to be paid for under contract unit price for sodding.
6. Precasting of this endwall will be permitted. Precast units shall conform to the dimensions shown or in accordance with approved shop drawings. Request for shop drawing approval shall be directed to the State Drainage Engineer. Use Index No. 201 for opening and grouting details.
7. Concrete meeting the requirements of A.S.T.M. C 478 (4,000 P.S.I.) may be used in lieu of Class I concrete for precast units manufactured in plants which are under the Standard Operating Procedures for the inspection of precast drainage products.

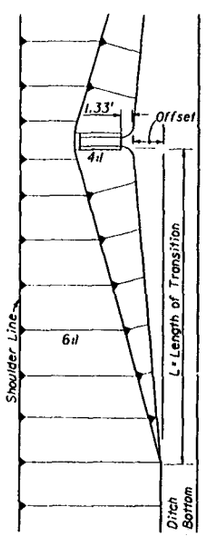

FRONT SLOPE TRANSITION AT ENDWALL

STATE OF FLORIDA DEPARTMENT OF TRANSPORTATION
ROAD DESIGN

U-TYPE CONCRETE ENDWALLS WITH GRATES
15" TO 30" PIPE

	Names	Dates
Designed By	EGR	06/77
Drawn By	HKH	06/77
Checked By	JVG	06/77
F.H.W.A. Approved:		07/15/77

Approved By: [signature]
State Drainage Engineer

Revision No.	Sheet No.	Index No.
92	1 of 1	260

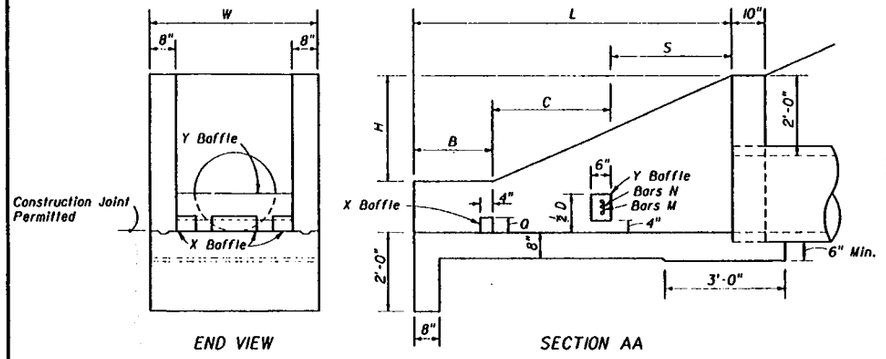

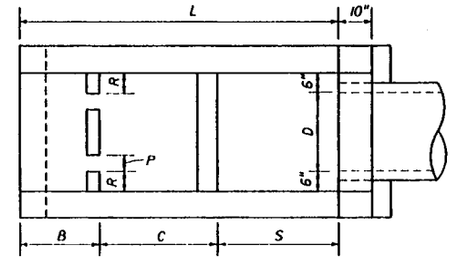

DIMENSIONAL DETAILS

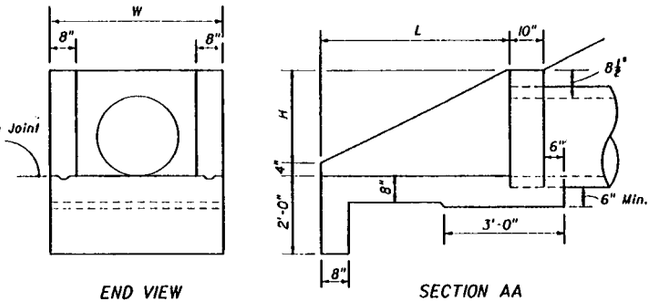

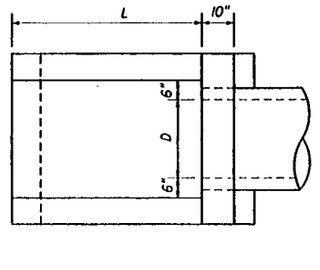

DIMENSIONAL DETAILS

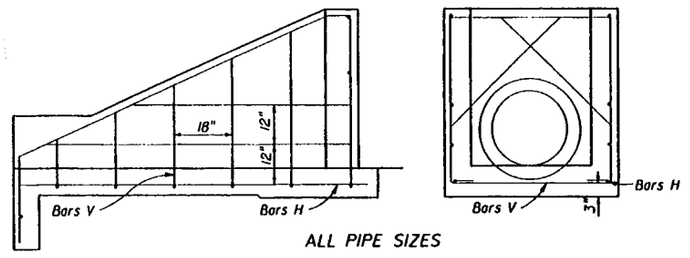

ALL PIPE SIZES
SIDE VIEW AND BACKWALL SECTION

REINFORCING DETAIL

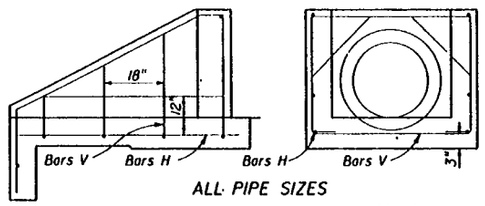

ALL PIPE SIZES
SIDE VIEW AND BACKWALL SECTION

REINFORCING DETAIL

GENERAL NOTES

1. Baffles to be constructed only when called for in plans.
2. When steel grating is required on endwall see Sheet 3 of 3 for details.
3. All reinforcing No. 4 bars with 2" clearance except as noted.
4. All angles, channels and bars shall be ASTM A 242, A 441, A 572 or A 588, Grade 50 steel, and galvanized in accordance with Section 962-7 of the Standard Specifications.
5. Channel section C 3 x 6 may be substituted for C 4 x 5.4 channel.
6. Precasting of this endwall will be permitted. Precast units shall conform to the dimensions shown or in accordance with approved shop drawings. Request for shop drawing approval shall be directed to the State Drainage Engineer. Use Index No. 201 for opening and grouting details.
7. Concrete meeting the requirements of ASTM C-478 (4000 psi) may be used in lieu of Class I concrete in precast units manufactured in plants which are under the Standard Operating Procedures for the inspection of precast drainage products.
8. Sodding shall be in accordance with Index No. 281, and paid for under the contract unit price for Sodding, SY.
9. Endwall to be paid for under the contract unit price for Class I Concrete (Endwalls), CY and Reinforcing Steel (Roadway), LB. Cost of grates to be paid for under the contract unit price for Endwall Grate, LB, plan quantity. Cost of galvanized bolts and nuts to be included in the bid price for the grate.

DIMENSIONS AND QUANTITIES FOR ONE U-ENDWALL

Pipe Size								X Baffle			Y Baffle Reinf. Steel		Concrete Class I Cu. Yd.	Reinf. Steel Lbs.
D	Area Sq. Ft.	L	H	W	S	B	C	P	Q	R	Bar M	Bar N		
15"	1.23	5'-9"	2'-3½"	3'-7"	2'-3"	1'-3"	2'-3"	4"	4"	4"	2 #4	1 #4	1.61	72
18"	1.77	6'-6"	2'-5"	3'-10"	2'-6"	1'-6"	2'-6"	4"	4"	5"	3 #4	2 #4	1.89	86
24"	3.14	8'-0"	2'-8"	4'-4"	3'-0"	2'-0"	3'-0"	5"	5"	6"	4 #4	3 #4	2.52	108
30"	4.91	9'-6"	2'-11"	4'-10"	3'-6"	2'-6"	3'-6"	5"	5"	7"	4 #4	4 #4	3.34	131

WITH BAFFLES

DIMENSIONS AND QUANTITIES FOR ONE U-ENDWALL

Pipe Size					Concrete Class I Cu. Yd.	Reinf. Steel Lbs.
D	Area Sq. Ft.	L	H	W		
15"	1.23	3'-3"	1'-7⅛"	3'-7"	0.89	39
18"	1.77	3'-9"	1'-10⅛"	3'-10"	1.05	43
24"	3.14	4'-9"	2'-4½"	4'-4"	1.40	55
30"	4.91	5'-9"	2'-10⅛"	4'-10"	1.88	64

WITHOUT BAFFLES

ENDWALLS FOR 2:1 SLOPES

STATE OF FLORIDA DEPARTMENT OF TRANSPORTATION
ROAD DESIGN

U-TYPE CONCRETE ENDWALLS BAFFLES AND GRATE OPTIONAL 15" TO 30" PIPE

	Names	Dates
Designed By		
Drawn By	dds	09/85
Checked By		
F.H.W.A. Approved:		03/20/75

Approved By: S.A. McLemore, State Drainage Engineer

Revision No.	Sheet No.	Index No.
90	1 of 3	261

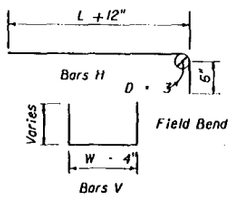

BENDING DIAGRAM

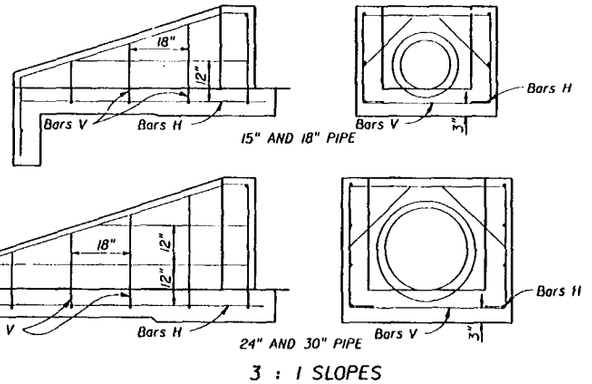

3 : 1 SLOPES

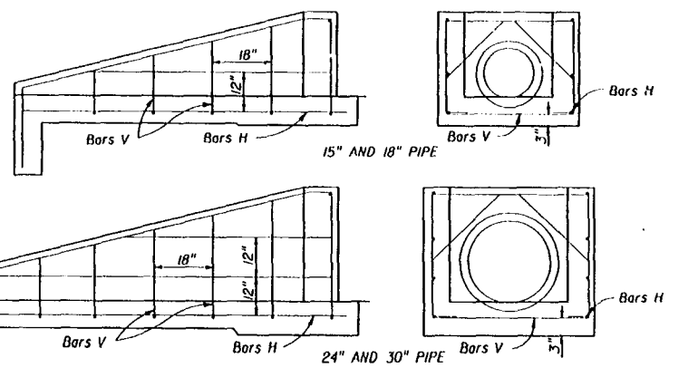

4 : 1 SLOPES

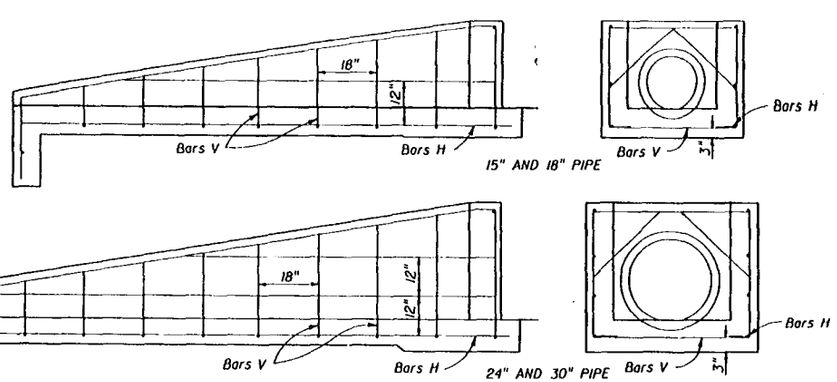

6 : 1 SLOPES

SIDE VIEWS AND BACKWALL SECTIONS
REINFORCING DETAILS

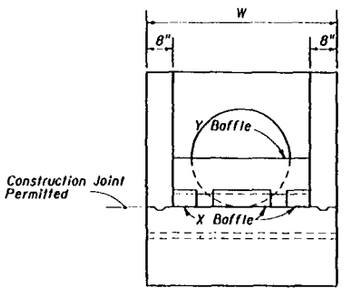

END VIEW

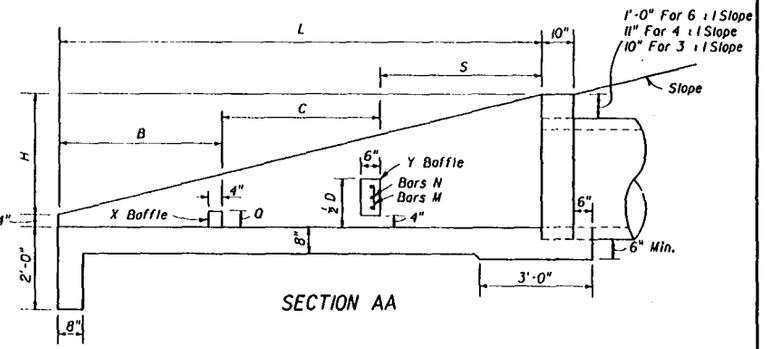

SECTION AA

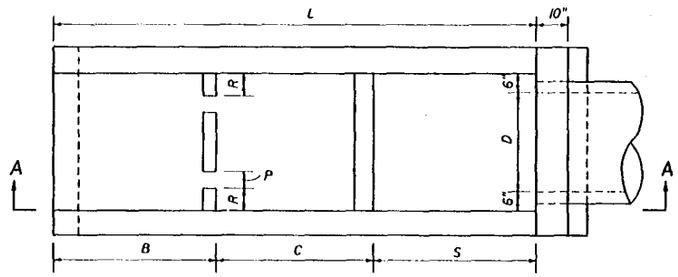

PLAN

DIMENSIONAL DETAILS

DIMENSIONS AND QUANTITIES FOR ONE U-ENDWALL

Rate Of Slope	Pipe Size D	Pipe Size Area Sq. Ft.	L	H	W	Baffle Locations (When Required) S	Baffle Locations (When Required) B	Baffle Locations (When Required) C	Concrete Class I Cu. Yd.	Reinf. Steel Lbs.
3 : 1	15"	1.23	5'-3"	1'-9"	3'-7"	1'-9"	1'-9"	1'-9"	1.19	51
	18"	1.77	6'-0"	2'-0"	3'-10"	2'-0"	2'-0"	2'-0"	1.42	56
	24"	3.14	7'-6"	2'-6"	4'-4"	2'-6"	2'-6"	2'-6"	1.94	77
	30"	4.91	9'-0"	3'-0"	4'-10"	3'-0"	3'-0"	3'-0"	2.54	96
4 : 1	15"	1.23	7'-4"	1'-10"	3'-7"	2'-6"	2'-6"	2'-4"	1.54	64
	18"	1.77	8'-4"	2'-1"	3'-10"	2'-10"	2'-10"	2'-8"	1.84	71
	24"	3.14	10'-4"	2'-7"	4'-4"	3'-6"	3'-6"	3'-4"	2.53	92
	30"	4.91	12'-4"	3'-1"	4'-10"	4'-2"	4'-2"	4'-0"	3.34	124
6 : 1	15"	1.23	11'-6"	1'-11"	3'-7"	3'-10"	3'-10"	3'-10"	2.19	89
	18"	1.77	13'-0"	2'-2"	3'-10"	4'-4"	4'-4"	4'-4"	2.63	103
	24"	3.14	16'-0"	2'-8"	4'-4"	5'-4"	5'-4"	5'-4"	3.59	143
	30"	4.91	19'-0"	3'-2"	4'-10"	6'-4"	6'-4"	6'-4"	4.81	180

DIMENSIONS AND QUANTITIES FOR BAFFLES

Pipe Size D	X Baffle P Width	X Baffle Q Height	X Baffle R Length	Y Baffle Reinf. Steel Bar M	Y Baffle Reinf. Steel Bar N	Concrete Class I Cu. Yd.	Reinf. Steel Lbs.
15"	4"	4"	4"	2-#4	1-#4	0.10	4
18"	4"	4"	5"	3-#4	2-#4		8
24"	5"	5"	6"	4-#4	3-#4		12
30"	5"	5"	7"	4-#4	4-#4		16

ENDWALLS WITH AND WITHOUT BAFFLES FOR 3 : 1, 4 : 1 AND 6 : 1 SLOPES

STATE OF FLORIDA DEPARTMENT OF TRANSPORTATION
ROAD DESIGN

U-TYPE CONCRETE ENDWALLS BAFFLES AND GRATE OPTIONAL 15" TO 30" PIPE

	Names	Dates
Designed By		
Drawn By	dds	9/85
Checked By		
F.H.W.A. Approved:		

Approved By: E. G. Lynga
State Drainage Engineer

Revision No.	Sheet No.	Index No.
88	2 of 3	261

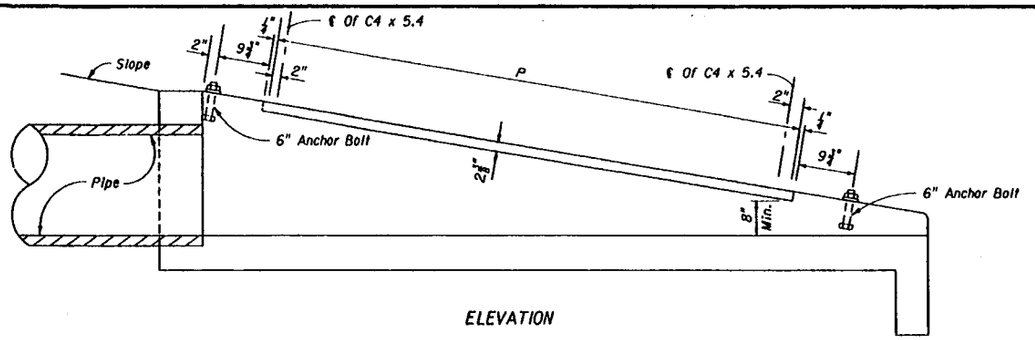

ELEVATION

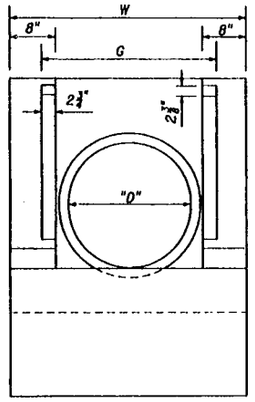

END VIEW

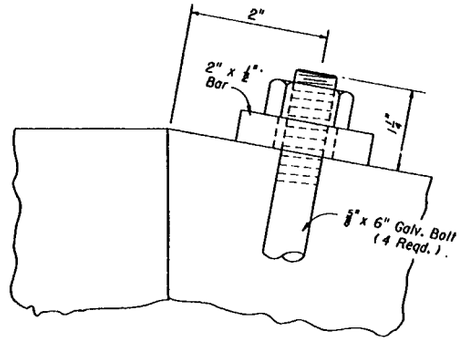

ANCHOR BOLT DETAIL

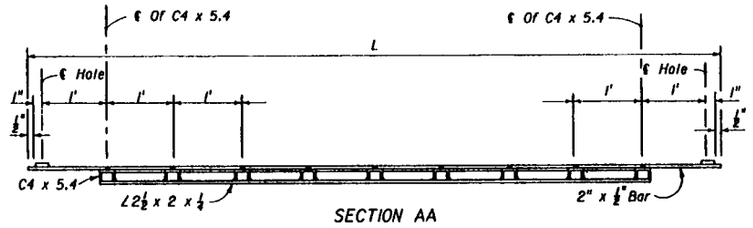

SECTION AA

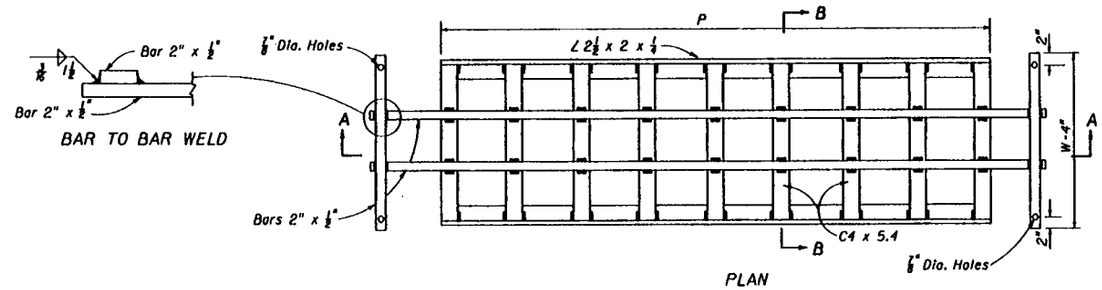

BAR TO BAR WELD

PLAN

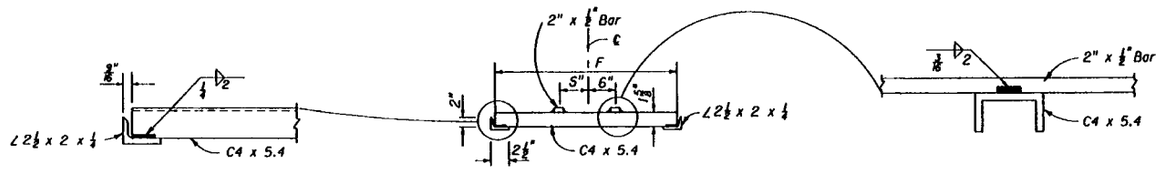

CHANNEL TO ANGLE WELD

SECTION BB

BAR TO CHANNEL WELD

MOUNTING FOR STEEL GRATE

STEEL GRATING USE CRITERIA

1. Grates to be used on pipe culvert endwalls located within the designated clear zone. Positive debris control shall be provided at all upgradient openings. Grates shall not be used unless one or more of the following conditions exist :
   - A. Drainage area to culvert consists of median or infield areas or areas where debris and/or drift is negligible.
   - B. Runoff to culvert is by sheet flow or in such ill defined channels that debris transport is not considered a major problem.
   - C. Runoff to culvert is minor except on an infrequent basis (10 to 15 year frequency); for example a drainage basin in flat sandy terrain with normally low ground water table.
   - D. Areas where culvert blockage with resultant backwater would not seriously affect roadway embankment, traffic operation or upland property.
2. Steel grating to be used only where called for in plans.

TABLE OF DIMENSIONS AND QUANTITIES FOR ONE GRATE

Rate Of Slope	Size Pipe " D "	G	2 Each Bars @ 3.4 Lbs./L.F.			(X) Channels @ 5.4 Lbs./L.F.			2 Angles @ 3.62 Lbs./L.F.		Total Weight Lbs.
			L	W-4"	Lbs.	(X)	F	Lbs.	P	Lbs.	
6:1	15"	2'-8½"	9'-3"	3'-3"	85	8	2'-6½"	111	7'-4"	53	249
	18"	2'-11½"	10'-3"	3'-6"	94	9	2'-9⅝"	137	8'-4"	62	292
	24"	3'-5½"	13'-3"	4'-0"	117	12	3'-3⅞"	215	11'-4"	82	414
	30"	3'-11½"	16'-3"	4'-6"	141	15	3'-9⅝"	310	14'-4"	104	555
4:1	15"	2'-8½"	6'-3"	3'-3"	65	5	2'-6½"	70	4'-4"	32	167
	18"	2'-11½"	7'-3"	3'-6"	73	6	2'-9⅝"	92	5'-4"	39	204
	24"	3'-5½"	9'-3"	4'-0"	90	8	3'-3⅞"	144	7'-4"	53	287
	30"	3'-11½"	11'-3"	4'-6"	107	10	3'-9⅝"	206	9'-4"	68	381
3:1	15"	2'-8½"	4'-3"	3'-3"	51	3	2'-6½"	42	2'-4"	17	110
	18"	2'-11½"	5'-3"	3'-6"	60	4	2'-9⅝"	61	3'-4"	24	145
	24"	3'-5½"	6'-3"	4'-0"	70	5	3'-3⅞"	90	4'-4"	31	191
	30"	3'-11½"	8'-3"	4'-6"	87	7	3'-9⅝"	145	6'-4"	46	278

STEEL GRATE

STATE OF FLORIDA DEPARTMENT OF TRANSPORTATION
ROAD DESIGN

U-TYPE CONCRETE ENDWALLS BAFFLES AND GRATE OPTIONAL 15" TO 30" PIPE

	Names	Dates
Designed By		
Drawn By	CDP	07/11
Checked By		
F.H.W.A. Approved:		03/20/75

Approved By
State Drainage Engineer

Revision No.	Sheet No.	Index No.
92	3 of 3	261

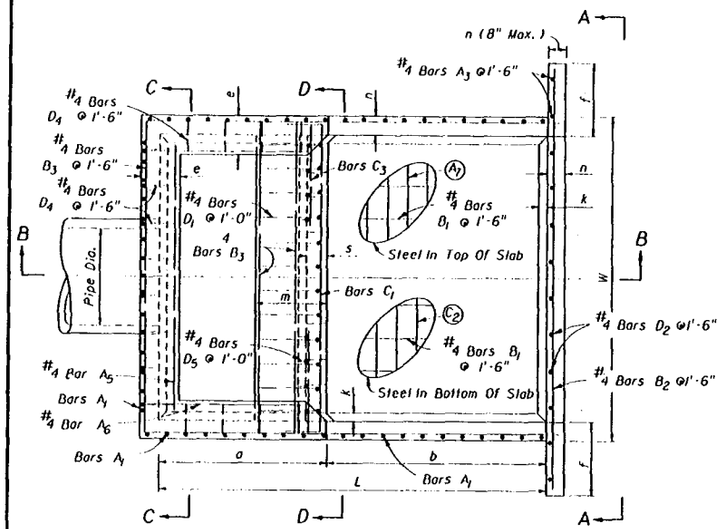

PLAN

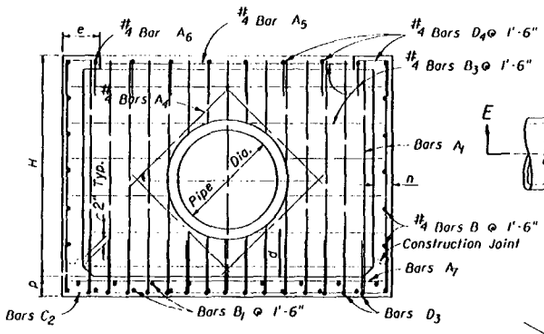

SECTION CC

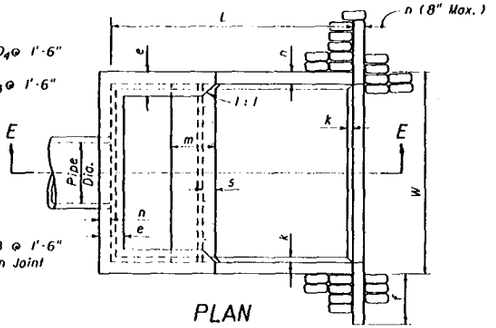

PLAN

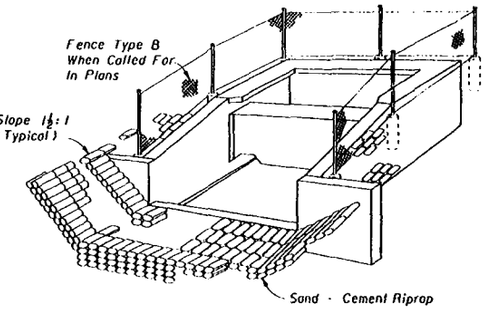

PERSPECTIVE

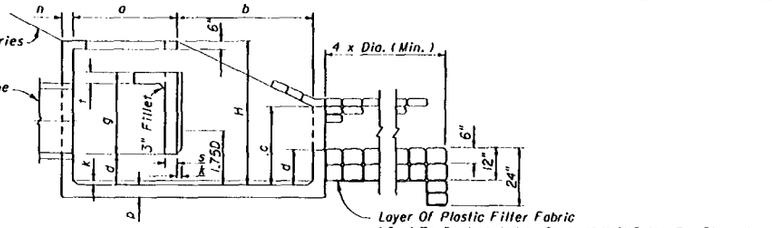

SECTION EE

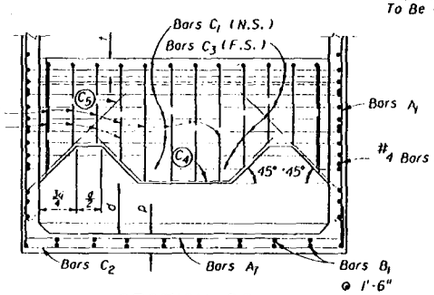

Note: Bars C_4 & C_5 (N.S. & F.S.) equivalent in size to C_3 (cut and bend as required)

SECTION DD

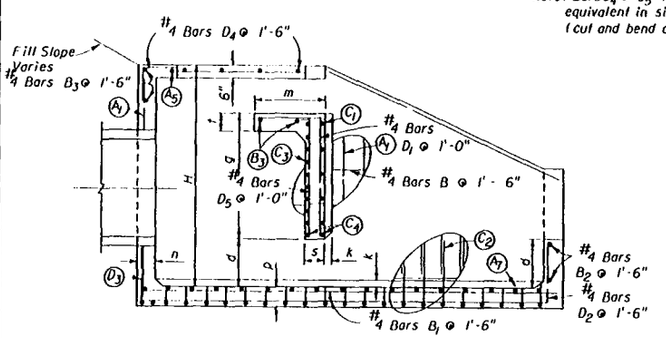

SECTION BB

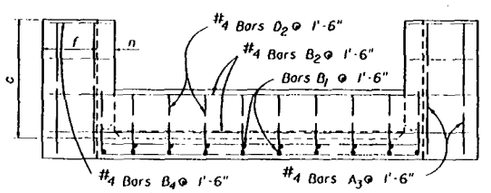

VIEW AA

Pipe Size		Q (Max.)	Dimensions											Concrete Class I C.Y.	Reinf. Steel Lbs.	Sand Cement Riprap C.Y. (Nom.)
			Ft. - In.									Inches							
Dia. In.	Area S.F.	(cfs)	W	H	L	a	b	c	d	e	f	g	m	n	p	s	t	k			
30	4.91	59	9-0	6-3	10-8	4-7	6-1	3-4	1-4	1-2	2-6	3-0	1-11	6	6½	7	7	3	6.72	736	10.6
36	7.07	85	10-5	7-3	12-4	5-3	7-1	3-10	1-7	1-3	3-0	3-6	2-3	7	7½	8	8	3	10.34	1,072	13.6
42	9.62	115	11-10	8-0	14-0	6-0	8-0	4-5	1-9	1-6	3-0	3-11	2-6	8	8½	9	8	4	14.82	1,429	17.5
48	12.57	151	13-3	9-0	15-8	6-9	8-11	4-11	2-0	1-7	3-0	4-5	2-10	9	9½	10	8	4	20.36	2,000	22.1
54	15.90	191	14-8	9-9	17-4	7-4	10-0	5-5	2-2	1-10	3-0	4-11	3-0	10	10½	10	8	4	27.19	2,659	27.2
60	13.63	236	16-1	10-9	19-0	8-0	11-0	5-11	2-5	1-11	3-0	5-4	3-4	11	11½	11	8	6	34.49	3,552	32.5
66	23.76	285	17-3	11-6	20-6	8-8	11-10	6-5	2-7	2-1	3-0	5-9	3-7	12	12½	12	8	6	42.82	4,472	38.3
72	28.27	339	18-6	12-3	22-0	9-3	12-9	6-11	2-9	2-3	3-0	6-2	3-9	12	12½	12	8	6	50.68	5,426	44.5

GENERAL NOTES

1. Chamfer all exposed edges ¾"
2. Concrete meeting the requirements of ASTM C-478 (4000 psi) may be used in lieu of Class I Concrete in precast items manufactured in plants which are under the Standard Operating Procedures for the inspection of precast drainage products.
3. Endwall to be paid for under the contract unit price for Class I Concrete (Endwalls), CY and Reinforcing Steel (Roadway), LB. Riprap to be paid for under the contract unit price for Riprap (Sand-Cement) (Roadway), CY. Cost of plastic filter fabric to be included in the contract unit price for riprap.
4. Fencing, when called for in the plans, to be paid for under the contract unit price for Fencing, Type B, LF. Corner posts and end posts to be paid for under the contract unit price for Corner Post Assembly (Type B Fence), EA. and End Post Assembly (Type B Fence), EA. respectively. See Index No. 452 for details of Type B fencing.

Pipe Size	A_1		A_7		C_1		C_2		C_3		D_3	
	Size (No.)	Spacing (Ft.-In.)	Size (No.)	Spacing (Ft.-In.)	Size (No.)	Spacing (Ft.-In.)	Size (No.)	Spacing (Ft.-In.)	Size (No.)	Spacing (Ft.-In.)	Size (No.)	Spacing (Ft.-In.)
30"	4	0-9½	4	1-6	5	0-11	4	0-9½	5	0-5½	4	0-9½
36"	5	1-0	4	1-6	5	0-10	5	1-0	5	0-5	5	1-0
42"	5	0-11	4	1-6	6	1-1	5	0-11	6	0-6½	5	0-11
48"	5	0-9½	4	1-0	6	1-0	5	0-9½	6	0-6	5	0-9½
54"	5	0-8½	4	0-10	7	1-1	5	0-8½	7	0-6½	5	0-8½
60"	6	0-10	5	1-1	7	1-0	6	0-10	7	0-6	6	0-10
66"	6	0-8½	5	0-11½	7	0-11	6	0-8½	7	0-5½	6	0-8½
72"	6	0-7½	5	0-10	7	0-10	6	0-7½	7	0-5	6	0-7½

BARS

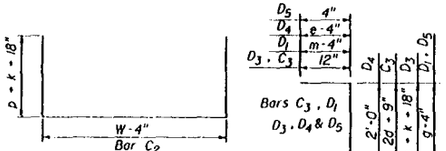

Note: All bar dimensions are out to out.

BENDING DIAGRAM

STATE OF FLORIDA DEPARTMENT OF TRANSPORTATION
ROAD DESIGN

U-TYPE CONCRETE ENDWALL ENERGY DISSIPATOR 30" TO 72" PIPE

	Names	Dates
Designed By	HAB	10/69
Drawn By	RWR	02/84
Checked By	JVG	02/84
F.H.W.A. Approved:		03/20/15

Approved By: A. D. McKenzie, State Drainage Engineer

Revision No.	Sheet No.	Index No.
92	1 of 1	264

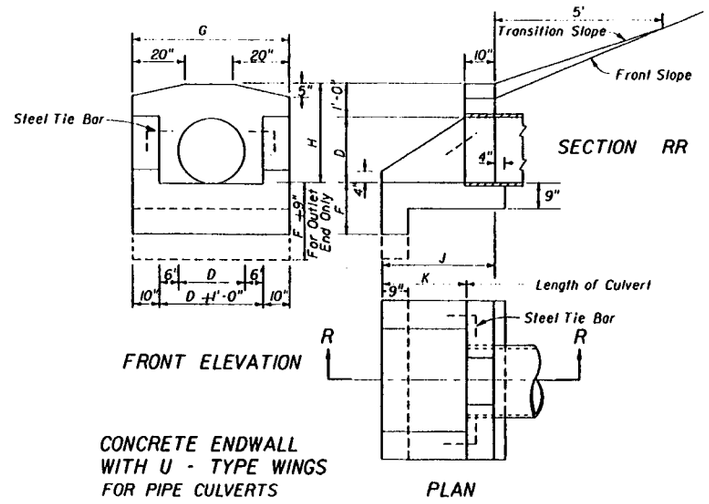

CONCRETE ENDWALL
WITH U - TYPE WINGS
FOR PIPE CULVERTS

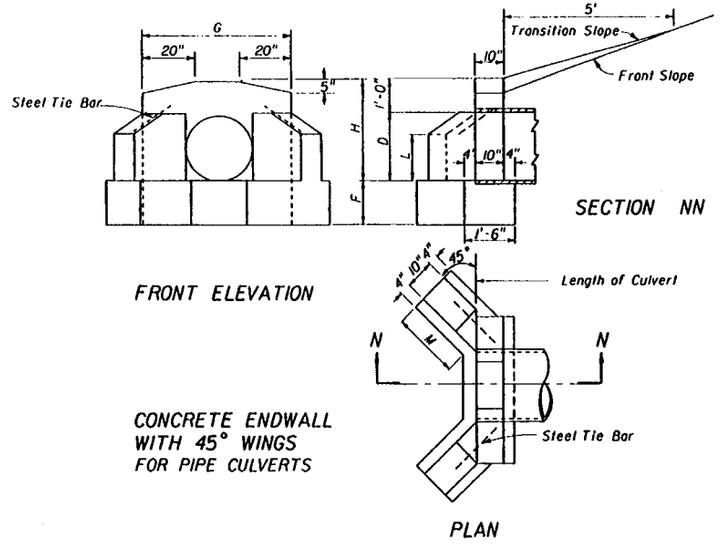

CONCRETE ENDWALL
WITH 45° WINGS
FOR PIPE CULVERTS

TABLE OF DIMENSIONS AND ESTIMATED QUANTITIES
PIPE CULVERT ENDWALLS WITH U - TYPE WINGS

DIMENSIONS							QUANTITIES IN ONE ENDWALL						
Opening		Wall			Footing		Total Cu. Yds. Concrete, Class I						Steel Tie Bars
							Conc. Pipe		C.M. Pipe		C.I. Pipe		
D	Area Sq.Ft.	G	H	K	F	J	Inlet	Outlet	Inlet	Outlet	Inlet	Outlet	
12"	0.8	3'-8"	2'-0"	1'-0"	1'-3"	2'-2"	0.48	0.55	0.49	0.57	0.49	0.57	none
15"	1.2	3'-11"	2'-3"	1'-5"	1'-3"	2'-7"	0.59	0.67	0.62	0.70	0.61	0.70	none
18"	1.8	4'-2"	2'-6"	1'-9"	1'-3"	2'-11"	0.70	0.79	0.74	0.82	0.74	0.82	none
24"	3.1	4'-8"	3'-0"	2'-6"	1'-6"	3'-8"	1.01	1.11	1.06	1.16	1.06	1.16	2 -#8 x 2'-0"
30"	4.9	5'-2"	3'-6"	3'-3"	1'-6"	4'-5"	1.33	1.44	1.41	1.51	1.40	1.51	2 -#8 x 2'-0"
36"	7.1	5'-8"	4'-0"	4'-0"	1'-9"	5'-2"	1.73	1.85	1.84	1.96	1.82	1.94	2 -#8 x 2'-6"
42"	9.6	6'-2"	4'-6"	4'-9"	2'-0"	5'-11"	2.19	2.32	2.32	2.45			2 -#8 x 2'-6"
48"	12.6	6'-8"	5'-0"	5'-6"	2'-0"	6'-8"	2.64	2.78	2.81	2.95			2 -#8 x 3'-0"

TABLE OF DIMENSIONS AND ESTIMATED QUANTITIES
PIPE CULVERT ENDWALLS WITH 45° WINGS

DIMENSIONS							QUANTITIES IN ONE ENDWALL			
Opening		Wall				Footing	Concrete, Class I			Steel Tie Bars
							Total Cu. Yds.			
D	Area Sq.Ft.	H	G	L	M	F	Conc. Pipe	C.M. Pipe	C.I. Pipe	
18"	1.8	2'-6"	3'-10"	1'-2"	1'-7"	1'-3"	0.74	0.77	0.77	none
24"	3.1	3'-0"	4'-4"	1'-5"	2'-1"	1'-4"	1.01	1.06	1.06	2 -#8 x 2'-0"
30"	4.9	3'-6"	4'-10"	1'-9"	2'-5"	1'-6"	1.32	1.40	1.39	2 -#8 x 2'-0"
36"	7.1	4'-0"	5'-4"	2'-0"	2'-11"	1'-8"	1.72	1.83	1.82	2 -#8 x 3'-0"
42"	9.6	4'-6"	5'-10"	2'-3"	3'-6"	2'-0"	2.34	2.47		2 -#8 x 3'-0"
48"	12.6	5'-0"	6'-4"	2'-6"	4'-0"	2'-0"	2.74	2.90		2 -#8 x 3'-0"
15"	1.2	2'-3"	3'-7"	1'-0"	1'-3"	1'-3"	0.56	0.59	0.59	none

GENERAL NOTES

1. Chamfer all exposed edges ¾"
2. Concrete meeting the requirements of ASTM C-478 (4000 psi) may be used in lieu of Class I concrete in precast units manufactured in plants which are under the Standard Operating Procedures for the inspection of precast drainage products.
3. Endwall to be paid for under the contract unit price for Class I Concrete (Endwalls), CY. Cost of steel tie bars to be included in the contract unit price for Class I Concrete.
4. Sodding to be in accordance with Index No. 281, and paid for under the contract unit price for Sodding, Sy.

STATE OF FLORIDA DEPARTMENT OF TRANSPORTATION
ROAD DESIGN

WINGED CONCRETE ENDWALLS SINGLE ROUND PIPE

	Names	Dates
Designed By		
Drawn By	TJK	12/31
Checked By	GEF	03/32
F.H.W.A. Approved:		03/20/75

Approved By: A. W. Lemmon
State Drainage Engineer

Revision No.	Sheet No.	Index No.
86	1 of 1	266

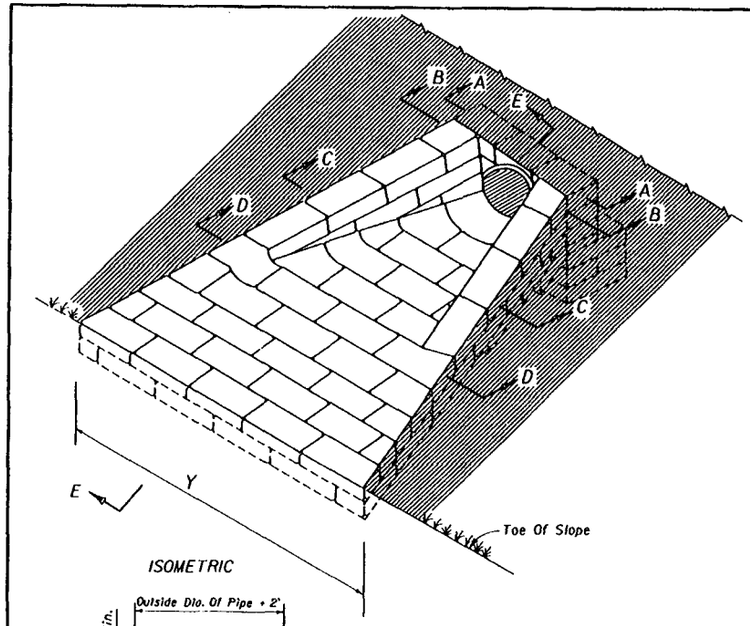

ISOMETRIC

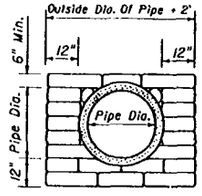

SECTION AA

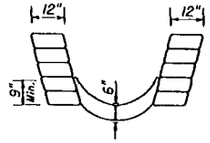

SECTION BB

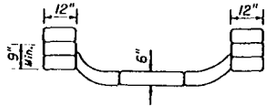

SECTION CC

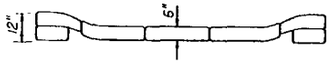

SECTION DD

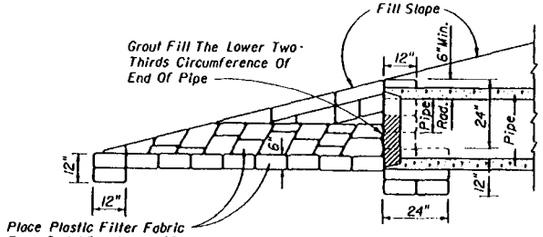

Place Plastic Filter Fabric Type D-4 (See Index 199) Around And Below Sand Cement Riprap. Cost Of Fabric To Be Included In Cost Of Sand Cement Riprap

SECTION EE

DETAIL FOR SINGLE PIPE CULVERT

Note: For multiple pipe culvert spacing between pipe centers = X

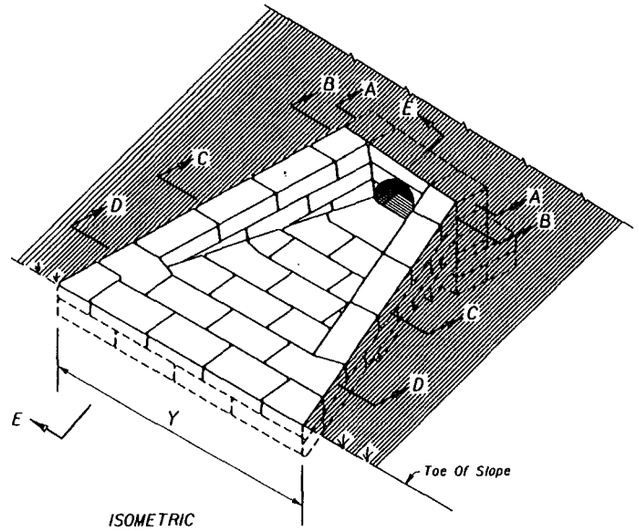

ISOMETRIC

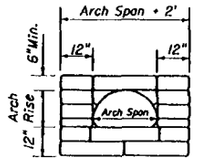

SECTION AA

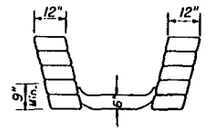

SECTION BB

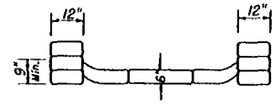

SECTION CC

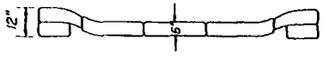

SECTION DD

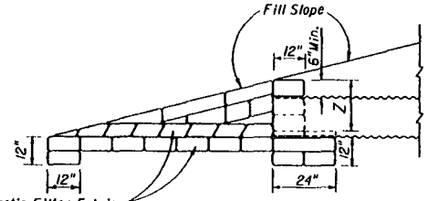

Place Plastic Filter Fabric Type D-4 (See Index 199) Around And Below Sand Cement Riprap. Cost Of Fabric To Be Included In Cost Of Sand Cement Riprap

SECTION EE

DETAILS FOR SINGLE METAL PIPE ARCH CULVERTS

NOTE: For multiple metal pipe arch culvert spacing between arch centers = X

DIMENSIONS AND QUANTITIES FOR METAL PIPE ARCH CULVERTS

Span	Rise	Dimensions							Quantity of Sand-Cement Riprap in Cu. Yds. for One Endwall											
		X	Y				Z		For 2:1 Slopes				For 4:1 Slopes				For 6:1 Slopes			
			1-Arch	2-Arch	3-Arch	4-Arch			1-Arch	2-Arch	3-Arch	4-Arch	1-Arch	2-Arch	3-Arch	4-Arch	1-Arch	2-Arch	3-Arch	4-Arch
17"	13"	2'-6"	6'-6"	9'-0"	11'-6"	14'-0"	1'-7"		1.0	1.5	2.0	2.5	1.5	2.2	2.9	3.6				
21"	15"	2'-10"	7'-6"	10'-4"	13'-2"	16'-0"	1'-9"		1.2	1.8	2.4	3.0	1.9	2.7	3.5	4.3				
28"	20"	3'-5"	9'-3"	12'-8"	16'-1"	19'-6"	2'-0"		1.7	2.5	3.3	4.1	2.6	3.7	4.8	5.9				
35"	24"	4'-0"	11'-0"	15'-0"	19'-0"	23'-0"	2'-0"		2.2	3.1	4.0	4.9	3.4	4.7	6.0	7.3				
42"	29"	4'-9"	12'-9"	17'-6"	22'-3"	27'-0"	2'-0"		2.9	4.1	5.3	6.5	4.5	6.1	7.7	9.3				
49"	33"	5'-6"	14'-6"	20'-0"	25'-6"	31'-0"	2'-0"		3.5	4.9	6.3	7.7	5.5	7.4	9.3	11.2				
57"	38"	6'-4"	16'-6"	22'-10"	29'-2"	35'-6"	2'-0"		4.4	6.1	7.8	9.5	6.9	9.2	11.5	13.8				
64"	43"	7'-1"	18'-3"	25'-4"	32'-5"	39'-6"	2'-0"		5.1	7.0	8.9	10.8	8.1	10.7	13.3	15.9				
71"	47"	7'-10"	20'-0"	27'-10"	35'-8"	43'-6"	2'-0"		5.9	8.1	10.3	12.5	9.5	12.4	15.3	18.2				

DIMENSIONS AND QUANTITIES FOR ROUND PIPE CULVERTS

Pipe Dia.	Dimensions					Quantity of Sand-Cement Riprap in Cu. Yds. for One Endwall										
	X	Y				For 2:1 Slopes				For 4:1 Slopes				For 6:1 Slopes			
		1-Pipe	2-Pipes	3-Pipes	4-Pipes	1-Pipe	2-Pipes	3-Pipes	4-Pipes	1-Pipe	2-Pipes	3-Pipes	4-Pipes	1-Pipe	2-Pipes	3-Pipes	4-Pipes
15"	2'-7"	7'-0"	9'-7"	12'-2"	14'-9"	1.2	1.6	2.1	2.6	1.7	2.4	3.0	3.6				
18"	2'-10"	8'-0"	10'-10"	13'-8"	16'-6"	1.4	2.0	2.6	3.1	2.1	2.9	3.7	4.4				
24"	3'-5"	10'-0"	13'-5"	16'-10"	20'-3"	1.9	2.7	3.5	4.3	2.9	4.0	5.1	6.3				
30"	4'-3"	12'-0"	16'-3"	20'-6"	24'-9"	2.5	3.6	4.8	5.9	3.8	5.4	7.0	8.6				
36"	5'-1"	14'-0"	19'-1"	24'-2"	29'-3"	3.1	4.6	6.2	7.7	4.8	7.0	9.2	11.4				
42"	6'-0"	16'-0"	22'-0"	28'-0"	34'-0"	3.8	5.8	7.7	9.7	6.0	8.8	11.7	14.5				
48"	6'-9"	18'-0"	24'-9"	31'-6"	38'-3"	4.5	7.0	9.4	11.8	7.2	10.8	14.3	17.9				
54"	7'-8"	20'-0"	27'-8"	35'-4"	43'-0"	5.3	8.3	11.3	14.2	8.5	12.9	17.3	21.7				
60"	8'-6"	22'-0"	30'-6"	39'-0"	47'-6"	6.2	9.7	13.3	16.9	10.0	15.3	20.6	25.9				

STATE OF FLORIDA DEPARTMENT OF TRANSPORTATION
ROAD DESIGN

U-TYPE SAND-CEMENT ENDWALLS

	Names	Dates
Designed By	JEP	12/48
Drawn By	HW	03/54
Checked By	COD	03/54
F.H.W.A. Approved:		08/30/77

Approved By: C. D. Curee
State Drainage Engineer

Revision No.	Sheet No.	Index No.
92	1 of 1	268

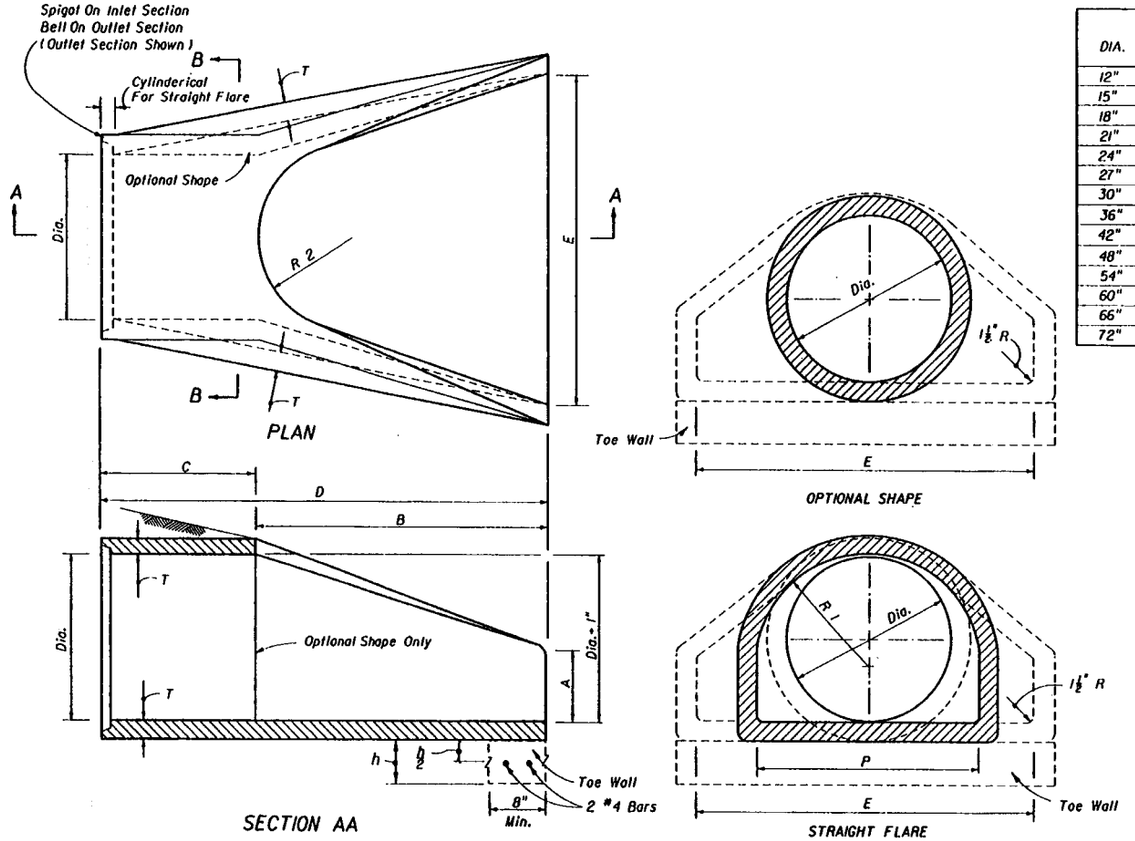

FLARED END SECTION

DIA.	T	REINF REINF. SQ IN/LF	BELL Or SPIGOT	A	B	C	D	E	P	R 1	R 2	FLAT	WEIGHT (LBS.)	h	TOE WALL CLASS I CONC (Misc.) CY
12"	2"	0.07	1½"	4"	2'-0"	4'-0½"	6'-0½"	2'-0"	19⅛"	10⅛"	9"	3½"	530	12"	.06
15"	2½"	0.07	2"	6"	2'-3"	3'-10"	6'-1"	2'-6"	24⅛"	12½"	11"	3½"	740	12"	.07
18"	2½"	0.07	2½"	9"	2'-3"	3'-10"	6'-1"	3'-0"	29"	15½"	12"	4"	990	15"	.11
21"	2½"	0.07	2½"	9"	2'-11"	3'-2"	6'-1"	3'-6"	31⅛"	16½"	13"	4"	1280	15"	.12
24"	3"	0.07	2½"	9½"	3'-7½"	2'-6"	6'-1½"	4'-0"	33⅝"	16½"	14"	4½"	1520	18"	.17
27"	3½"	0.148	2½"	10½"	4'-0"	2'-1½"	6'-1½"	4'-6"	36"	18⅝"	14½"	4½"	1930	18"	.19
30"	3½"	0.148	3"	1'-0"	4'-6"	1'-7½"	6'-1½"	5'-0"	37"	18½"	15"	5"	2190	21"	.24
36"	4"	0.148	3½"	1'-3"	5'-3"	2'-10½"	8'-1½"	6'-0"	47⅛"	24⅛"	20"	5½"	4100	21"	.29
42"	4½"	0.148	3½"	1'-9"	5'-3"	2'-11"	8'-2"	6'-6"	53⅛"	27½"	22"	5½"	5380	24"	.36
48"	5"	0.148	4½"	2'-0"	6'-0"	2'-2"	8'-2"	7'-0"	56⅛"	28½"	22"	5½"	6550	24"	.39
54"	5½"	0.174	4½"	2'-3"	5'-5"	2'-11"	8'-4"	7'-6"	65½"	33½"	24"	6½"	8040	24"	.42
60"	6"	0.174	5"	2'-6"	5'-0"	3'-3"	8'-3"	8'-0"	72½"	36⅛"	24"	6½"	8750	24"	.44
66"	6½"	0.174	5½"	2'-0"	6'-6"	1'-9"	8'-3"	8'-6"	72"	36½"	24"	7½"	10630	24"	.47
72"	7"	0.174	6"	2'-0"	6'-6"	1'-9"	8'-3"	9'-0"	77¹³⁄₁₆"	38⅝"	24"	7½"	12520	24"	.50

GENERAL NOTES

1. Flared end sections shall conform to the requirements of ASTM C-76 with the exception that dimensions and reinforcement shall be as prescribed in the table above. Circumferential reinforcement may consist of either one cage or two cages of steel. Compressive strength of concrete shall be 4000 psi. Shop drawings for flared end sections having dimensions other than above must be submitted for approval to the State Drainage Engineer.

2. Connections between the flared end section and the pipe culvert may be any of the following types unless otherwise shown on the plans.
   a. Joints meeting the requirements of Section 941-1.5 of the Standard Specifications (O-Ring Gasket).
      Flared end section joint dimensions and tolerances shall be identical or compatible to those used in the pipe culvert joint. When pipe culvert and flared end section manufacturers are different, the compatibility of joint designs shall be certified to by the manufacturer of the flared end sections.
   b. Joints sealed with preformed plastic gaskets.
      The gaskets shall meet the requirements of Section 942-2 of the Standard Specifications and the minimum sizes for gaskets shall be as that specified for equivalent sizes of elliptical pipe.
   c. Reinforced concrete jackets, as detailed on this drawing.
      Cost of the reinforced concrete jacket to be included in the contract unit price for the flared end section.
      When non-coated corrugated metal pipe is called for in the plans, the pipe shall be bituminous coated in the jacketed area as specified on Index No. 280. Bituminous coating to be included in the contract unit price for the pipe culvert.

3. Toe walls shall be constructed when shown on the plans or at locations designated by the Engineer. Toe walls are to be cast-in-place with Class I Concrete and paid for under the contract unit price for Class I Concrete (Miscellaneous), CY. Reinforcing steel to be included in cost of toe wall.

4. On skewed pipe culverts the flared end sections shall be placed in line with the pipe culvert. Side slopes shall be warped as required to fit the flared end sections.

5. Flared End Section to be paid for under the contract unit price for Flared End Section (Concrete), Each. Sodding shall be in accordance with Index No. 281, and paid for under the contract unit price for Sodding, SY.

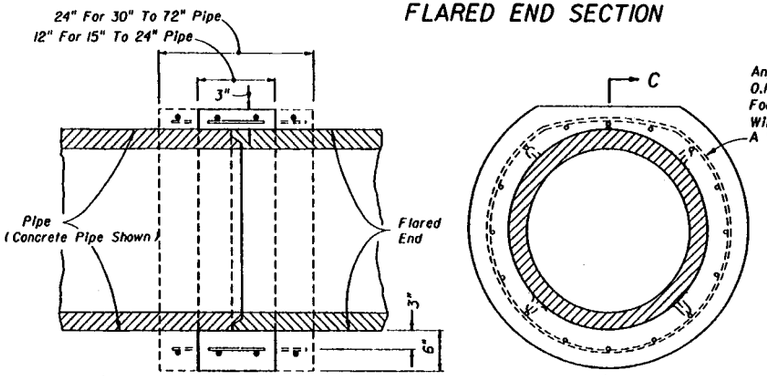

Any Wire Mesh Arrangement Which Provides 0.126 Square Inches Of Steel Area Per Linear Foot Both Ways May Be Used, Provided The Wires Are Spaced A Minimum Of 2" And/Or A Maximum Of 6" On Centers.

REINFORCED CONCRETE JACKET DETAIL

DESIGN NOTES

1. Flared end sections are intended for use outside the clear zone on median drain and cross drain installation, except that flared end sections for pipe sizes 12" and 15" are permitted within the clear zone. When the slope intersection permits, these flared end sections may be located with the culvert opening as close as 8' beyond the outside edge of the shoulder.

   Flared end sections are not intended for side drain installations.

2. Reinforced concrete jackets shall be used at all locations where high velocities and/or highly erosive soils may cause disjointing. These locations are to be shown on the plans.

3. Toe walls shall be used whenever the anticipated velocity of discharge and soil type are such that erosive action would occur. Toe walls are not required where ditch pavement is provided, except when disjointing would occur if the ditch pavement should fail.

STATE OF FLORIDA DEPARTMENT OF TRANSPORTATION
ROAD DESIGN

FLARED END SECTION

	Names	Dates
Designed By	EGR	09/77
Drawn By	HKH	09/77
Checked By	JVG	09/77
F.H.W.A. Approved:		09/23/77

Approved By: S A McLemore
State Drainage Engineer

Revision No.	Sheet No.	Index No.
90	1 of 1	270

DIMENSIONS AND QUANTITIES

	D	X	A	B	C	E	F	G	M Single Pipe	M Double Pipe	M Triple Pipe	M Quad. Pipe	N	5½" CONCRETE SLAB (CY) ◪ Single Pipe	5½" CONCRETE SLAB (CY) ◪ Double Pipe	5½" CONCRETE SLAB (CY) ◪ Triple Pipe	5½" CONCRETE SLAB (CY) ◪ Quad. Pipe	SODDING (SQ. YDS.) Single Pipe	SODDING (SQ. YDS.) Double Pipe	SODDING (SQ. YDS.) Triple Pipe	SODDING (SQ. YDS.) Quad. Pipe
2:1 Slope	15"	2'-7"	1.92'	2.18'	4.10'	2.06'	5'	1.22'	4.63'	7.21'	9.79'	12.37'	1.19'	0.38	0.58	0.77	0.96	21	24	27	30
	18"	2'-10"	1.97'	2.74'	4.71'	2.56'	6'	1.41'	4.92'	7.75'	10.58'	13.42'	1.21'	0.44	0.65	0.87	1.09	22	25	28	31
	24"	3'-5"	2.06'	3.85'	5.91'	3.56'	7'	1.73'	5.50'	8.92'	12.33'	15.75'	1.25'	0.54	0.83	1.12	1.42	24	28	32	35
	30"	4'-3"	2.15'	4.95'	7.10'	4.56'	8'	2.00'	6.08'	10.33'	14.58'	18.83'	1.29'	0.66	1.09	1.50	1.91	26	31	35	40
	36"	5'-1"	2.25'	6.08'	8.33'	5.56'	9'	2.24'	6.67'	11.75'	16.83'	21.92'	1.33'	0.81	1.38	1.95	2.51	28	34	39	45
	42"	6'-0"	2.34'	7.21'	9.55'	6.56'	10'	2.45'	7.25'	13.25'	19.25'	25.25'	1.38'	0.97	1.70	2.45	3.19	30	37	43	50
	48"	6'-9"	2.43'	8.33'	10.76'	7.56'	11'	2.65'	7.83'	14.58'	21.33'	28.08'	1.42'	1.13	2.04	2.93	3.84	32	39	47	54
	54"	7'-8"	2.52'	9.44'	11.96'	8.56'	12'	2.83'	8.42'	16.08'	23.75'	31.42'	1.46'	1.31	2.44	3.58	4.72	34	42	51	59
	60"	8'-6"	2.62'	10.56'	13.18'	9.56'	14'	3.00'	9.00'	17.50'	26.00'	34.50'	1.50'	1.51	2.89	4.28	5.68	36	45	55	64
	66"	9'-2"	2.71'	11.68'	14.39'	10.56'	15'	3.18'	9.58'	18.75'	27.92'	37.08'	1.54'	1.68	3.25	4.84	6.43	38	48	58	68
	72"	10'-0"	2.80'	12.80'	15.60'	11.56'	16'	3.30'	10.16'	20.16'	30.16'	40.16'	1.58'	1.89	3.74	5.59	7.45	40	51	62	73
4:1 Slope	15"	2'-7"	2.27'	4.09'	6.36'	4.03'	8'	1.22'	4.63'	7.21'	9.79'	12.37'	1.19'	0.57	0.87	1.15	1.44	23	26	29	32
	18"	2'-10"	2.36'	5.12'	7.48'	5.03'	9'	1.41'	4.92'	7.75'	10.58'	13.42'	1.21'	0.66	0.99	1.31	1.65	25	28	31	35
	24"	3'-5"	2.53'	7.18' △	9.71'	7.03' △	11'	1.73'	5.50'	8.92'	12.33'	15.75'	1.25'	0.85	1.30	1.75	2.20	28	32	36	40
	30"	4'-3"	2.70'	9.25'	11.95'	9.03'	13'	2.00'	6.08'	10.33'	14.58'	18.83'	1.29'	1.10	1.74	2.39	3.05	31	36	41	46
	36"	5'-1"	2.87'	11.31' ◇	14.18'	11.03' ◇	15'	2.24'	6.67'	11.75'	16.83'	21.92'	1.33'	1.32	2.21	3.08	3.96	34	40	46	52
	42"	6'-0"	3.05'	13.37'	16.42'	13.03'	17'	2.45'	7.25'	13.25'	19.25'	25.25'	1.38'	1.58	2.76	3.91	5.09	38	44	51	58
	48"	6'-9"	3.22'	15.43'	18.65'	15.03'	19'	2.65'	7.83'	14.58'	21.33'	28.08'	1.42'	1.85	3.30	4.73	6.17	41	48	56	63
	54"	7'-8"	3.39'	17.49'	20.88'	17.03'	21'	2.83'	8.42'	16.08'	23.75'	31.42'	1.46'	2.14	3.95	5.77	7.58	44	52	61	69
	60"	8'-6"	3.56'	19.55'	23.11'	19.03'	23'	3.00'	9.00'	17.50'	26.00'	34.50'	1.50'	2.45	4.66	6.87	9.07	47	56	66	75
	66"	9'-2"	3.73'	21.62'	25.35'	21.03'	25'	3.18'	9.58'	18.75'	27.92'	37.08'	1.54'	2.88	5.54	8.18	10.84	49	59	69	80
	72"	10'-0"	3.91'	23.68'	27.59'	23.03'	27'	3.30'	10.16'	20.16'	30.16'	40.16'	1.58'	3.54	6.61	9.87	13.13	52	63	74	85

◪ See General Note No. 3.
See Sheet 5 Of 6 For 3" Slab Quantities

B E

△ 6.42' △ 6.25' Dimensions permitted to allow use of 8' standard pipe lengths.

◇ 10.40' ◇ 10.10' Dimensions permitted to allow use of 12' standard pipe lengths.

△◇ Concrete slab shall be deepened to form bridge across crown of pipe. See section below.

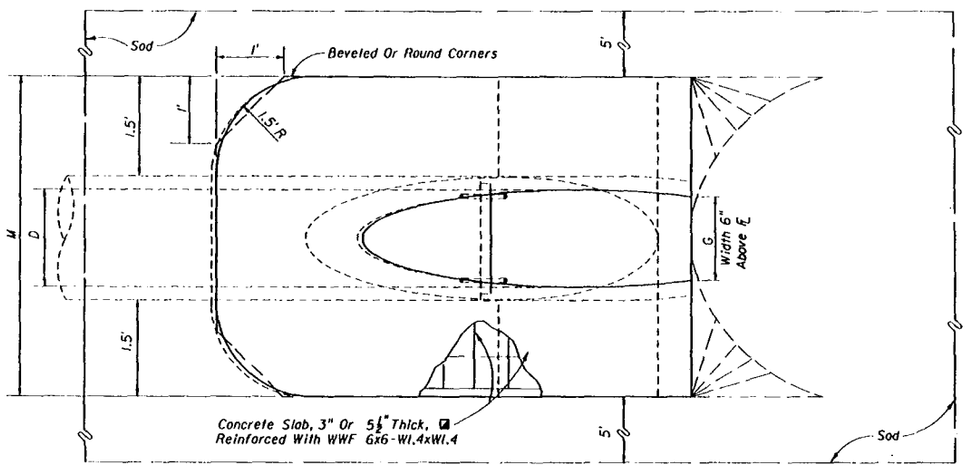

TOP VIEW - SINGLE PIPE

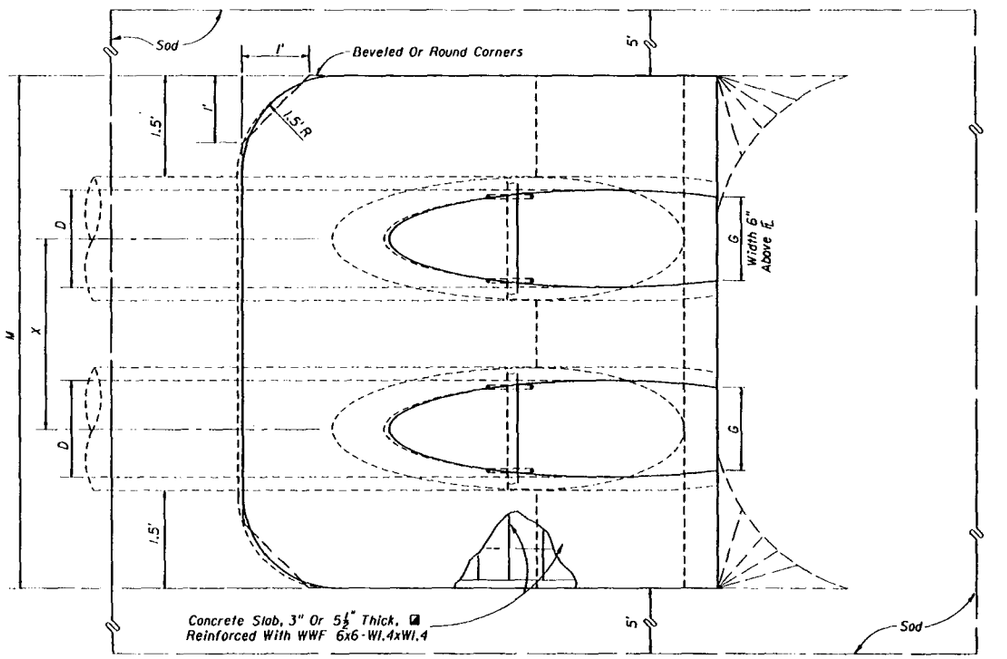

TOP VIEW - MULTIPLE PIPE

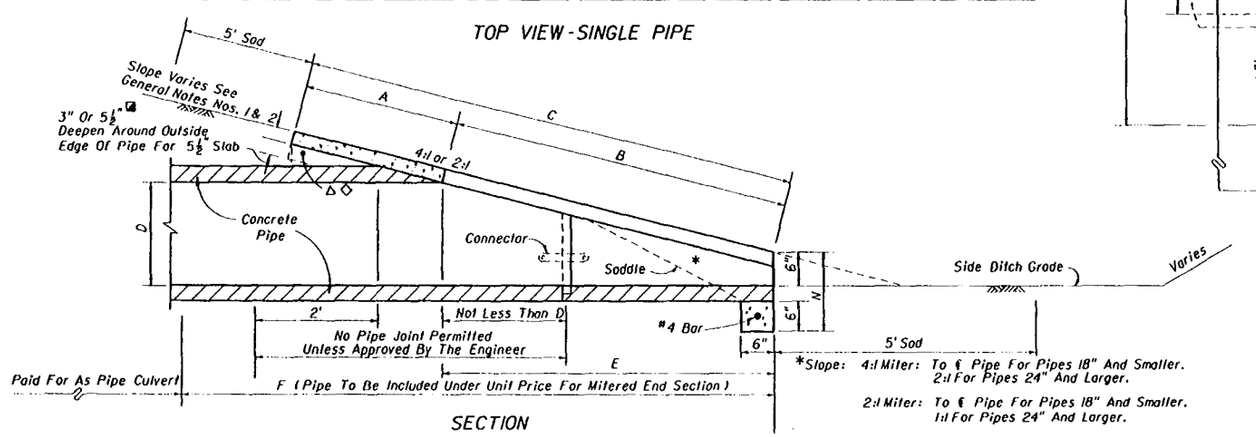

SECTION

*Slope: 4:1 Miter: To ℄ Pipe For Pipes 18" And Smaller.
2:1 For Pipes 24" And Larger.

2:1 Miter: To ℄ Pipe For Pipes 18" And Smaller.
1:1 For Pipes 24" And Larger.

NOTE: See sheet 6 for details and notes.

STATE OF FLORIDA DEPARTMENT OF TRANSPORTATION
ROAD DESIGN

CROSS DRAIN MITERED END SECTION

SINGLE AND MULTIPLE ROUND CONCRETE PIPE

	Names	Dates
Designed By	DCB	05/18
Drawn By		
Checked By	KNM	05/18
F.H.W.A. Approved:		07/21/18

Approved By J. A. McLemore, State Drainage Engineer

Revision No.	Sheet No.	Index No.
94	1 of 6	272

DIMENSIONS AND QUANTITIES

	D	X	A	B	C	E	F	G	M Single Pipe	M Double Pipe	M Triple Pipe	M Quad. Pipe	N	5½" CONCRETE SLAB (CY) ◪ Single Pipe	5½" CONCRETE SLAB (CY) ◪ Double Pipe	5½" CONCRETE SLAB (CY) ◪ Triple Pipe	5½" CONCRETE SLAB (CY) ◪ Quad. Pipe	SODDING (SQ. YDS.) Single Pipe	SODDING (SQ. YDS.) Double Pipe	SODDING (SQ. YDS.) Triple Pipe	SODDING (SQ. YDS.) Quad. Pipe
2:1 Slope	15"	2'-7"	2.5'	1.68'	4.18'	1.50'	5'	1.23'	4.33'	6.92'	9.50'	12.08'	1.04'	0.35	0.54	0.74	0.94	21	24	27	29
	18"	2'-10"	2.5'	2.24'	4.74'	2.00'	6'	1.41'	4.58'	7.42'	10.25'	13.08'	1.04'	0.38	0.62	0.87	1.12	22	25	28	31
	24"	3'-5"	2.5'	3.35'	5.85'	3.00'	7'	1.73'	5.08'	8.50'	11.92'	15.33'	1.04'	0.47	0.76	1.05	1.34	23	27	31	35
	30"	4'-3"	2.5'	4.47'	6.97'	4.00'	8'	2.00'	5.58'	9.83'	14.08'	18.33'	1.04'	0.57	0.96	1.37	1.77	25	30	35	39
	36"	5'-1"	2.5'	5.59'	8.09'	5.00'	9'	2.24'	6.08'	11.17'	16.25'	21.33'	1.04'	0.67	1.19	1.72	2.26	27	33	38	44
	42"	6'-0"	2.5'	6.71'	9.21'	6.00'	10'	2.45'	6.58'	12.58'	18.58'	24.58'	1.04'	0.78	1.48	2.17	2.87	29	36	42	49
	48"	6'-9"	2.5'	7.83'	10.33'	7.00'	11'	2.65'	7.08'	13.83'	20.58'	27.33'	1.04'	0.89	1.71	2.54	3.36	31	38	46	53
	54"	7'-8"	2.5'	8.94'	11.44'	8.00'	12'	2.83'	7.58'	15.25'	22.92'	30.58'	1.04'	1.02	2.06	3.10	4.14	33	41	50	58
	60"	8'-6"	2.5'	10.06'	12.56'	9.00'	13'	3.00'	8.08'	16.58'	25.08'	33.58'	1.04'	1.14	2.38	3.63	4.89	34	44	53	63
4:1 Slope	15"	2'-7"	2.5'	3.09'	5.59'	3.0'	7.0'	1.23'	4.33'	6.92'	9.50'	12.08'	1.04'	0.44	0.68	0.91	1.15	22	25	28	31
	18"	2'-10"	2.5'	4.12'	6.62'	4.0'	8.0'	1.41'	4.58'	7.42'	10.25'	13.08'	1.04'	0.49	0.77	1.03	1.31	24	27	30	33
	24"	3'-5"	2.5'	6.18'	8.68'	6.0'	10.0'	1.73'	5.08'	8.50'	11.92'	15.33'	1.04'	0.65	1.09	1.38	1.77	27	30	34	38
	30"	4'-3"	2.5'	8.25'	10.75'	8.0'	12.0'	2.00'	5.58'	9.83'	14.08'	18.33'	1.04'	0.81	1.34	1.90	2.44	29	34	39	44
	36"	5'-1"	2.5'	10.31'	12.81'	10.0'	14.0'	2.24'	6.08'	11.17'	16.25'	21.33'	1.04'	0.97	1.68	2.41	3.14	32	38	44	49
	42"	6'-0"	2.5'	12.37'	14.87'	12.0'	16.0'	2.45'	6.58'	12.58'	18.58'	24.58'	1.04'	1.13	2.08	3.06	4.02	35	42	48	55
	48"	6'-9"	2.5'	14.43'	16.93'	14.0'	18.0'	2.65'	7.08'	13.83'	20.58'	27.33'	1.04'	1.29	2.49	3.69	4.88	38	46	53	60
	54"	7'-8"	2.5'	16.49'	18.99'	16.0'	20.0'	2.83'	7.58'	15.25'	22.92'	30.58'	1.04'	1.48	2.98	4.47	5.98	41	49	58	66
	60"	8'-6"	2.5'	18.55'	21.05'	18.0'	22.0'	3.00'	8.08'	16.58'	25.08'	33.58'	1.04'	1.66	3.49	5.31	7.13	44	53	63	72

◪ See General Note No. 3.
See Sheet 5 Of 6 For 3" Slab Quantities

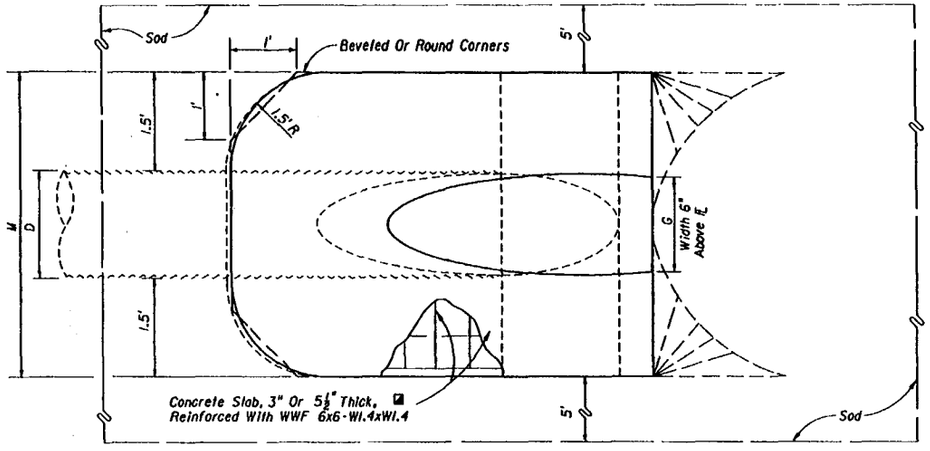

TOP VIEW-SINGLE PIPE

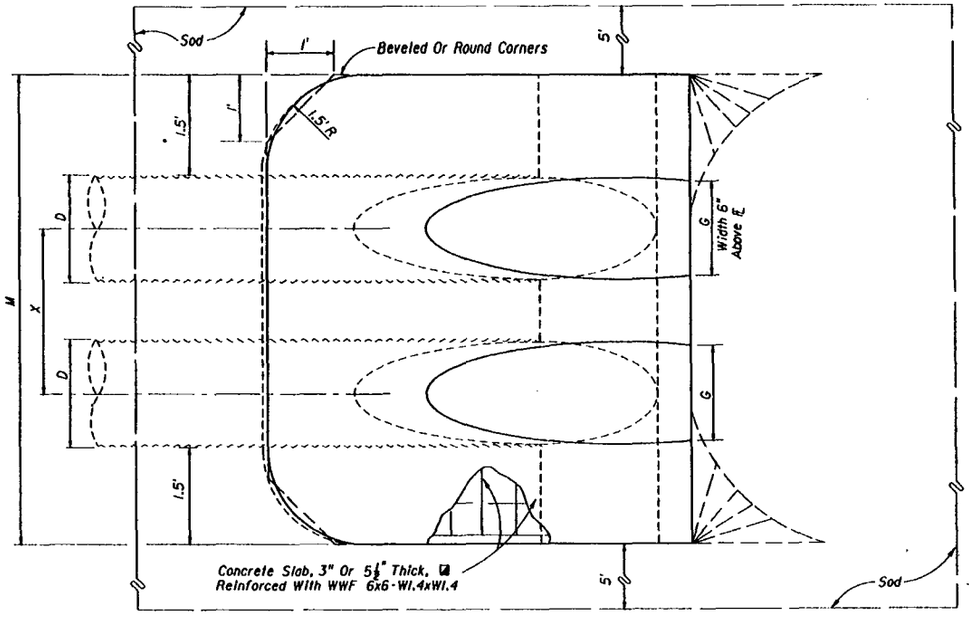

TOP VIEW-MULTIPLE PIPE

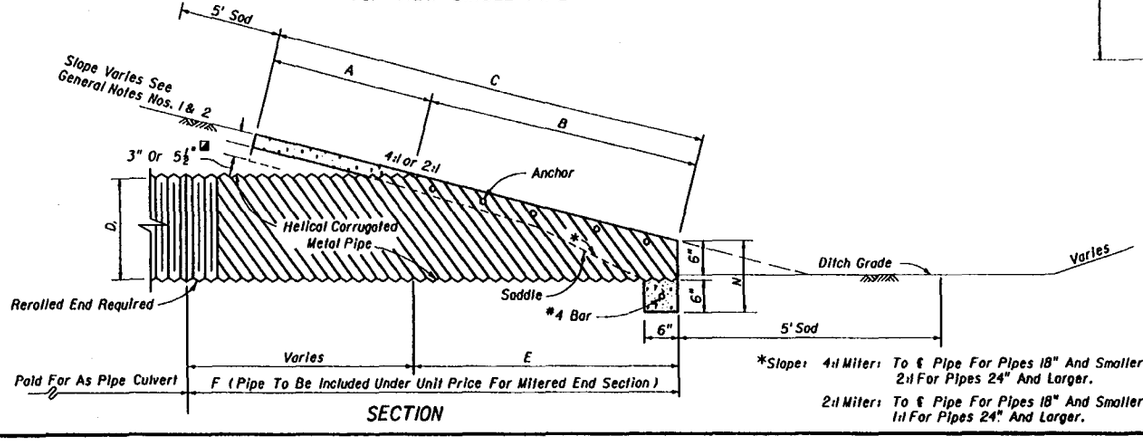

SECTION

*Slope: 4:1 Miter: To 6 Pipe For Pipes 18" And Smaller.
2:1 For Pipes 24" And Larger.
2:1 Miter: To 6 Pipe For Pipes 18" And Smaller.
1:1 For Pipes 24" And Larger.

NOTE: See Sheet 6 For Details And Notes.

STATE OF FLORIDA DEPARTMENT OF TRANSPORTATION
ROAD DESIGN

CROSS DRAIN MITERED END SECTION

SINGLE AND MULTIPLE ROUND CORRUGATED METAL PIPE

	Names	Dates
Designed By	DCB	05/18
Drawn By		
Checked By	KHH	05/18
F.H.W.A. Approved:		07/21/18

Approved By: E.W. Lange
State Drainage Engineer

Revision No.	Sheet No.	Index No.
92	2 of 6	272

DIMENSIONS AND QUANTITIES

1974 AASHTO

	SPAN	RISE	X	A	B	C	E	F	G	M Single Pipe	M Double Pipe	M Triple Pipe	M Quad. Pipe	N	5½" CONCRETE SLAB (CY) ◪ Single Pipe	5½" CONCRETE SLAB (CY) ◪ Double Pipe	5½" CONCRETE SLAB (CY) ◪ Triple Pipe	5½" CONCRETE SLAB (CY) ◪ Quad. Pipe	SODDING (SQ. YDS.) Single Pipe	SODDING (SQ. YDS.) Double Pipe	SODDING (SQ. YDS.) Triple Pipe	SODDING (SQ. YDS.) Quad. Pipe
2:1 Slope	17"	13"	2'-6"	2.5'	1.30'	3.80'	1.17'	4'	1.39'	4.50'	7.00'	9.50'	12.00'	1.04'	0.41	0.61	0.81	1.02	21	23	26	29
	21"	15"	2'-10"	2.5'	1.68'	4.11'	1.50'	5'	1.76'	4.83'	7.67'	10.50'	13.33'	1.04'	0.43	0.66	0.88	1.10	22	25	28	31
	28"	20"	3'-5"	2.5'	2.61'	5.11'	2.33'	6'	2.22'	5.42'	8.83'	12.25'	15.67'	1.04'	0.51	0.78	1.06	1.33	23	27	30	34
	35"	24"	4'-0"	2.5'	3.35'	5.85'	3.00'	7'	2.55'	6.00'	10.00'	14.00'	18.00'	1.04'	0.57	0.90	1.22	1.55	24	29	33	38
	42"	29"	4'-9"	2.5'	4.29'	6.79'	3.83'	8'	2.97'	6.58'	11.33'	16.08'	20.83'	1.04'	0.64	1.04	1.46	1.87	26	31	37	42
	49"	33"	5'-6"	2.5'	5.03'	7.53'	4.50'	9'	3.34'	7.17'	12.67'	18.17'	23.67'	1.04'	0.73	1.23	1.72	2.22	28	34	40	46
	57"	38"	6'-4"	2.5'	5.96'	8.46'	5.33'	10'	3.65'	7.83'	14.17'	20.50'	26.83'	1.04'	0.83	1.44	2.04	2.64	29	36	44	51
	64"	43"	7'-1"	2.5'	6.89'	9.39'	6.17'	11'	3.89'	8.42'	15.50'	22.58'	29.67'	1.04'	0.95	1.67	2.39	3.11	31	39	47	55
	71"	47"	7'-10"	2.5'	7.64'	10.14'	6.83'	12'	4.14'	9.00'	16.83'	24.67'	32.50'	1.04'	1.05	1.89	2.74	3.57	33	41	50	59
4:1 Slope	17"	13"	2'-6"	2.5'	2.41'	4.91'	2.33'	7'	1.39'	4.50'	7.00'	9.50'	12.00'	1.04'	0.48	0.71	0.95	1.18	22	25	27	30
	21"	15"	2'-10"	2.5'	3.09'	5.59'	3.00'	8'	1.76'	4.83'	7.67'	10.50'	13.33'	1.04'	0.52	0.80	1.09	1.31	23	26	29	32
	28"	20"	3'-5"	2.5'	4.81'	7.31'	4.67'	9'	2.22'	5.42'	8.83'	12.25'	15.67'	1.04'	0.61	0.92	1.27	1.59	25	29	33	37
	35"	24"	4'-0"	2.5'	6.18'	8.68'	6.00'	11'	2.55'	6.00'	10.00'	14.00'	18.00'	1.04'	0.73	1.14	1.55	1.97	28	32	37	41
	42"	29"	4'-9"	2.5'	7.90'	10.40'	7.67'	12'	2.97'	6.58'	11.33'	16.08'	20.83'	1.04'	0.87	1.39	1.92	2.45	30	35	41	46
	49"	33"	5'-6"	2.5'	9.28'	11.78'	9.00'	14'	3.34'	7.17'	12.67'	18.17'	23.67'	1.04'	1.00	1.66	2.30	2.96	32	38	45	51
	57"	38"	6'-4"	2.5'	11.00'	13.50'	10.67'	16'	3.65'	7.83'	14.17'	20.50'	26.83'	1.04'	1.18	2.00	2.82	3.64	35	42	49	56
	64"	43"	7'-1"	2.5'	12.71'	15.21'	12.33'	17'	3.89'	8.42'	15.50'	22.58'	29.67'	1.04'	1.36	2.39	3.38	4.38	38	45	53	61
	71"	47"	7'-10"	2.5'	14.09'	16.59'	13.67'	19'	4.14'	9.00'	16.83'	24.67'	32.50'	1.04'	1.50	2.65	3.81	4.97	40	48	57	66

◪ See General Note No. 3.
See Sheet 5 Of 6 For 3" Slab Quantities

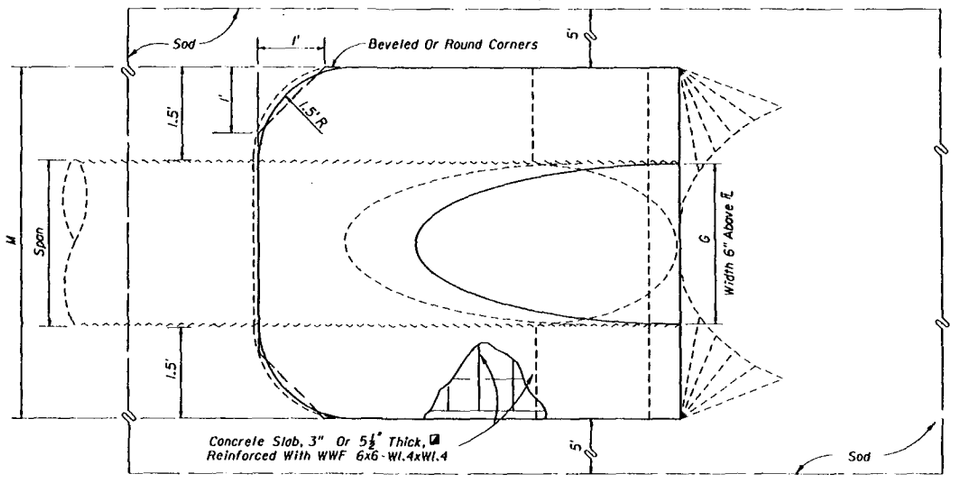

TOP VIEW-SINGLE PIPE

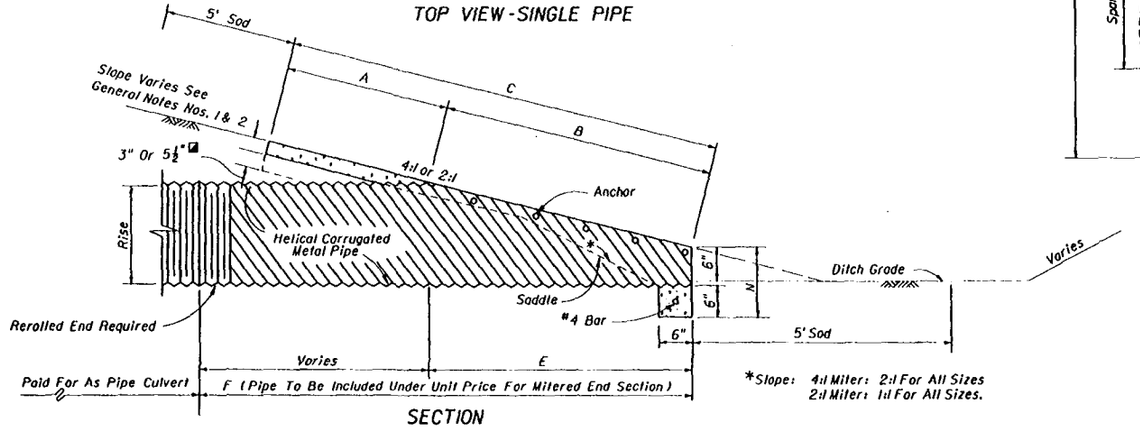

SECTION

*Slope: 4:1 Miter: 2:1 For All Sizes
2:1 Miter: 1:1 For All Sizes.

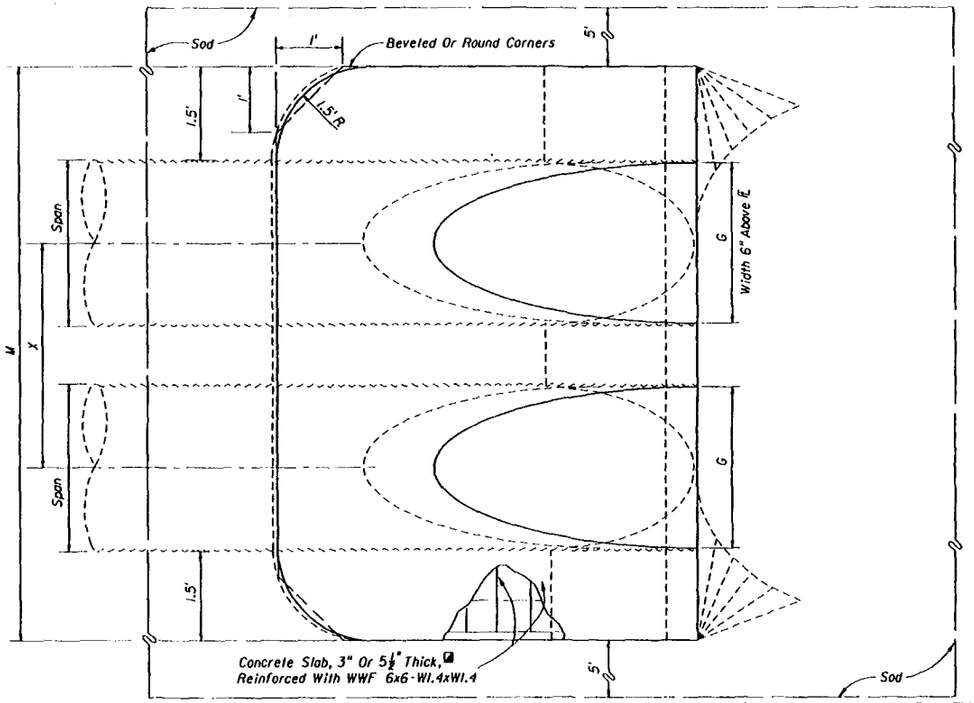

TOP VIEW-MULTIPLE PIPE

NOTE: See Sheet 6 For Details And Notes.

STATE OF FLORIDA DEPARTMENT OF TRANSPORTATION
ROAD DESIGN

CROSS DRAIN MITERED END SECTION

SINGLE AND MULTIPLE CORRUGATED METAL PIPE-ARCH

	Name	Date
Designed By	DCB	06/18
Drawn By		
Checked By	KHH	06/18
F.H.W.A. Approval:		01/21/19

Approved By: State Drainage Engineer

Revision No.	Sheet No.	Index No.
92	3 of 6	272

DIMENSIONS & QUANTITIES

	Rise R	Span S	X	A	B	C	E	F	G	M Single Pipe	M Double Pipe	M Triple Pipe	M Quad. Pipe	N	5½" CONC. SLAB (CY) ◪ Single Pipe	5½" CONC. SLAB (CY) ◪ Double Pipe	5½" CONC. SLAB (CY) ◪ Triple Pipe	5½" CONC. SLAB (CY) ◪ Quad. Pipe	SODDING (SQ. YDS.) Single Pipe	SODDING (SQ. YDS.) Double Pipe	SODDING (SQ. YDS.) Triple Pipe	SODDING (SQ. YDS.) Quad. Pipe
2:1 Slope	12"	18"	2'-10"	1.97'	1.62'	3.59'	1.56'	4'	1.50'	4.92'	7.75'	10.58'	13.42'	1.21'	0.30	0.49	0.67	0.85	21	24	27	30
	14"	23"	3'-4"	2.01'	1.99'	4.00'	1.89'	5'	1.50'	5.38'	8.71'	12.04'	15.38'	1.23'	0.37	0.59	0.81	1.02	22	26	29	33
	19"	30"	4'-0"	2.11'	2.92'	5.03'	2.73'	6'	2.37'	6.04'	10.04'	14.04'	18.04'	1.27'	0.50	0.80	1.09	1.39	24	28	33	37
	24"	38"	5'-0"	2.20'	3.85'	6.05'	3.56'	7'	2.85'	6.79'	11.79'	16.79'	21.79'	1.31'	0.62	1.03	1.45	1.86	26	31	37	42
	29"	45"	5'-11"	2.34'	4.79'	7.13'	4.39'	8'	3.19'	7.50'	13.42'	19.33'	25.25'	1.38'	0.75	1.30	1.84	2.39	28	34	41	47
	34"	53"	7'-0"	2.43'	5.72'	8.15'	5.23'	9'	3.57'	8.25'	15.25'	22.25'	29.25'	1.42'	0.90	1.61	2.32	3.03	30	37	45	53
	38"	60"	7'-10"	2.52'	6.46'	8.98'	5.89'	9'	3.95'	8.92'	16.75'	24.58'	32.42'	1.46'	1.03	1.89	2.74	3.60	31	40	49	57
	43"	68"	8'-11"	2.62'	7.39'	10.01'	6.73'	10'	4.28'	9.67'	18.58'	27.50'	36.42'	1.50'	1.19	2.26	3.33	4.40	33	43	53	63
	48"	76"	9'-11"	2.71'	8.33'	11.04'	7.56'	11'	4.59'	10.42'	20.33'	30.25'	40.17'	1.54'	1.38	2.65	3.93	5.21	35	46	57	68
	53"	83"	10'-8"	2.80'	9.26'	12.06'	8.39'	12'	4.77'	11.08'	21.75'	32.42'	43.08'	1.58'	1.55	3.03	4.50	5.96	37	49	61	73
	58"	91"	11'-8"	2.90'	10.19'	13.09'	9.23'	13'	5.01'	11.83'	23.50'	35.17'	46.83'	1.63'	1.75	3.47	5.20	6.93	39	52	65	78
4:1 Slope	12"	18"	2'-10"	2.36'	3.06'	5.42'	3.03'	5'	1.50'	4.92'	7.75'	10.58'	13.42'	1.21'	0.45	0.68	0.92	1.14	23	26	29	32
	14"	23"	3'-4"	2.44'	3.75'	6.19'	3.70'	6'	1.90'	5.38'	8.71'	12.04'	15.38'	1.23'	0.53	0.83	1.13	1.42	24	28	32	35
	19"	30"	4'-0"	2.62'	5.47'	8.09'	5.36'	8'	2.37'	6.04'	10.04'	14.04'	18.04'	1.27'	0.74	1.15	1.57	1.98	27	32	36	40
	24"	38"	5'-0"	2.79'	7.18'	9.99'	7.03'	10'	2.85'	6.79'	11.79'	16.79'	21.79'	1.31'	0.97	1.57	2.18	2.81	30	36	41	47
	29"	45"	5'-11"	3.05'	8.90'	11.95'	8.70'	12'	3.19'	7.50'	13.42'	19.33'	25.25'	1.38'	1.22	2.07	2.92	3.77	33	40	46	53
	34"	53"	7'-0"	3.22'	10.62'	13.84'	10.36'	13'	3.57'	8.25'	15.25'	22.25'	29.25'	1.42'	1.48	2.62	3.77	4.92	36	44	52	59
	38"	60"	7'-10"	3.39'	11.95'	15.38'	11.70'	15'	3.95'	8.92'	16.75'	24.58'	32.42'	1.46'	1.72	3.12	4.51	5.92	38	47	56	65
	43"	68"	8'-11"	3.56'	13.71'	17.27'	13.36'	17'	4.28'	9.67'	18.58'	27.50'	36.42'	1.50'	2.02	3.78	5.56	7.32	41	51	61	71
	48"	76"	9'-11"	3.73'	15.43'	19.16'	15.03'	19'	4.59'	10.42'	20.33'	30.25'	40.17'	1.54'	2.34	4.49	6.64	8.79	44	55	66	77
	53"	83"	10'-8"	3.91'	17.15'	21.06'	16.70'	20'	4.77'	11.08'	21.75'	32.42'	43.08'	1.58'	2.66	5.17	7.66	10.16	47	59	71	83
	58"	91"	11'-8"	4.08'	18.87'	22.95'	18.36'	22'	5.01'	11.83'	23.50'	35.17'	46.83'	1.63'	3.02	5.98	8.95	11.90	50	63	76	89

◪ See General Note No. 3.
See Sheet 5 Of 6 For 3" Slab Quantities

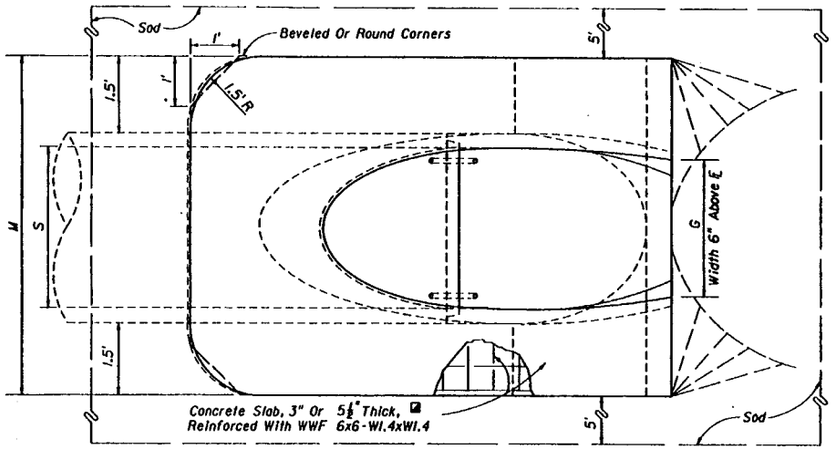

TOP VIEW - SINGLE PIPE

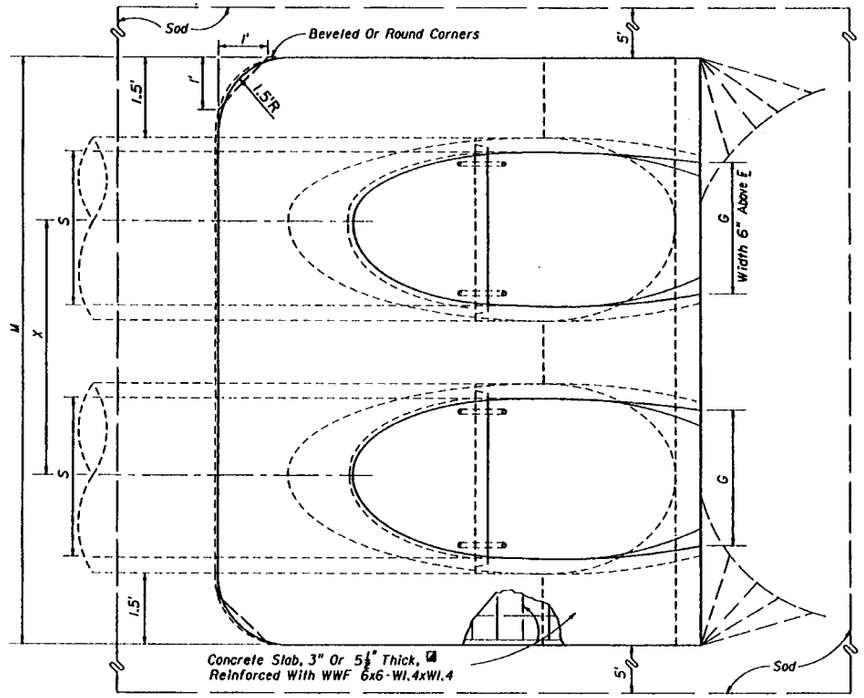

TOP VIEW - MULTIPLE PIPE

NOTE: See Sheet 6 For Details And Notes.

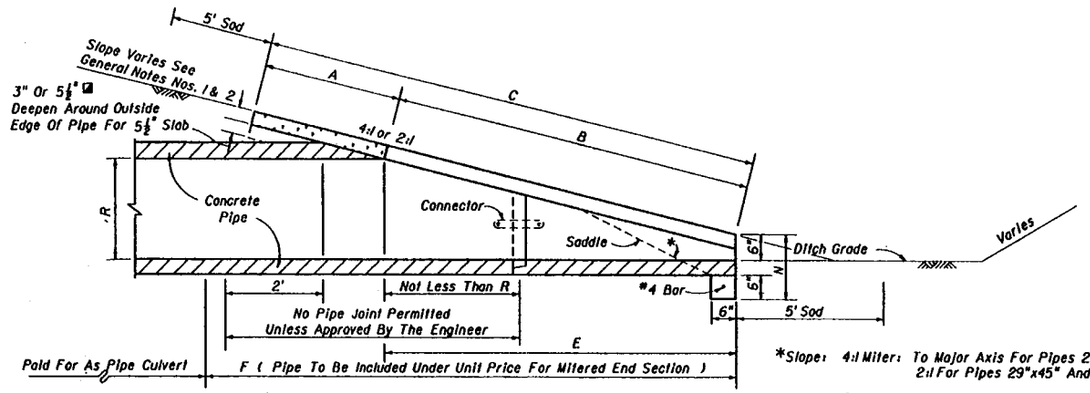

SECTION

*Slope: 4:1 Miter: To Major Axis For Pipes 24"x38" And Smaller.
2:1 For Pipes 29"x45" And Larger.

2:1 Miter: To Major Axis For Pipes 29"x45" And Smaller.
1:1 For Pipes 34"x53" And Larger.

STATE OF FLORIDA DEPARTMENT OF TRANSPORTATION
ROAD DESIGN

CROSS DRAIN MITERED END SECTION

SINGLE AND MULTIPLE ELLIPTICAL CONCRETE PIPE

	Names	Dates
Designed By	EGA	05/81
Drawn By	HSD	05/81
Checked By	AMD/JBW	05/81
F.H.W.A. Approved:		10/08/81

Approved By _____
State Drainage Engineer

Revision No.	Sheet No.	Index No.
92	4 of 6	272

QUANTITIES FOR 3" THICK CONCRETE SLABS (CY)

	D	ROUND-CONCRETE			
		Single Pipe	Double Pipe	Triple Pipe	Quad. Pipe
2 : 1 Slope	15"	0.27	0.41	0.54	0.67
	18"	0.31	0.45	0.60	0.75
	24"	0.39	0.59	0.79	1.00
	30"	0.46	0.76	1.04	1.32
	36"	0.55	0.94	1.33	1.71
	42"	0.66	1.15	1.66	2.15
	48"	0.76	1.37	1.96	2.57
	54"	0.87	1.62	2.38	3.14
	60"	0.99	1.90	2.81	3.73
	66"	1.11	2.15	3.21	4.27
	72"	1.24	2.46	3.68	4.90
4 : 1 Slope	15"	0.40	0.61	0.80	1.00
	18"	0.47	0.69	0.91	1.14
	24"	0.60	0.90	1.21	1.52
	30"	0.76	1.19	1.63	2.07
	36"	0.89	1.48	2.05	2.63
	42"	1.05	1.82	2.57	3.34
	48"	1.21	2.15	3.07	4.00
	54"	1.39	2.55	3.72	4.88
	60"	1.59	3.02	4.44	5.86
	66"	1.91	3.66	5.40	7.15
	72"	2.12	4.18	6.24	8.30

	D	ROUND-CMP			
		Single Pipe	Double Pipe	Triple Pipe	Quad. Pipe
2 : 1 Slope	15"	0.24	0.37	0.51	0.64
	18"	0.26	0.43	0.61	0.78
	24"	0.32	0.52	0.72	0.91
	30"	0.38	0.64	0.91	1.18
	36"	0.44	0.78	1.13	1.48
	42"	0.51	0.96	1.41	1.87
	48"	0.57	1.09	1.63	2.15
	54"	0.65	1.32	1.99	2.66
	60"	0.71	1.49	2.28	3.07
4 : 1 Slope	15"	0.31	0.47	0.63	0.79
	18"	0.34	0.53	0.71	0.90
	24"	0.44	0.69	0.92	1.18
	30"	0.53	0.88	1.25	1.60
	36"	0.62	1.07	1.53	2.00
	42"	0.71	1.30	1.92	2.52
	48"	0.80	1.54	2.29	3.02
	54"	0.91	1.83	2.74	3.67
	60"	1.02	2.15	3.27	4.39

	Span	Rise	CMP-ARCH			
			Single Pipe	Double Pipe	Triple Pipe	Quad. Pipe
2 : 1 Slope	17"	13"	0.33	0.49	0.65	0.81
	21"	15"	0.33	0.50	0.67	0.83
	28"	20"	0.37	0.56	0.76	0.95
	35"	24"	0.40	0.62	0.84	1.07
	42"	29"	0.43	0.70	0.98	1.25
	49"	33"	0.49	0.82	1.15	1.48
	57"	38"	0.55	0.95	1.35	1.75
	64"	43"	0.62	1.10	1.57	2.05
	71"	47"	0.69	1.24	1.80	2.35
4 : 1 Slope	17"	13"	0.38	0.56	0.74	0.92
	21"	15"	0.39	0.59	0.80	0.95
	28"	20"	0.43	0.64	0.88	1.10
	35"	24"	0.49	0.77	1.05	1.33
	42"	29"	0.57	0.92	1.27	1.62
	49"	33"	0.65	1.08	1.50	1.93
	57"	38"	0.76	1.30	1.83	2.37
	64"	43"	0.87	1.55	2.18	2.83
	71"	47"	0.95	1.68	2.43	3.17

	Rise	Span	ELLIPTICAL-CONCRETE			
			Single Pipe	Double Pipe	Triple Pipe	Quad. Pipe
2 : 1 Slope	12"	18"	0.19	0.33	0.45	0.57
	14"	23"	0.25	0.40	0.55	0.69
	19"	30"	0.34	0.55	0.75	0.95
	24"	38"	0.43	0.71	1.00	1.28
	29"	45"	0.52	0.90	1.27	1.65
	34"	53"	0.62	1.11	1.60	2.09
	38"	60"	0.70	1.29	1.87	2.46
	43"	68"	0.81	1.54	2.26	2.99
	48"	76"	0.93	1.79	2.66	3.53
	53"	83"	1.04	2.04	3.03	4.02
	58"	91"	1.17	2.33	3.49	4.66
4 : 1 Slope	12"	18"	0.30	0.45	0.61	0.76
	14"	23"	0.36	0.56	0.76	0.95
	19"	30"	0.51	0.79	1.08	1.36
	24"	38"	0.68	1.10	1.53	1.96
	29"	45"	0.86	1.45	2.04	2.63
	34"	53"	1.02	1.81	2.60	3.39
	38"	60"	1.18	2.14	3.10	4.05
	43"	68"	1.38	2.58	3.79	4.99
	48"	76"	1.59	3.05	4.51	5.97
	53"	83"	1.80	3.50	5.19	6.88
	58"	91"	2.04	4.04	6.05	8.05

STATE OF FLORIDA DEPARTMENT OF TRANSPORTATION
ROAD DESIGN

CROSS DRAIN MITERED END SECTION

	Names	Dates
Designed By		
Drawn By	dds	05/86
Checked By	JBW	05/86
F.H.W.A. Approved:		11/07/86

Approved By: [signature]
State Drainage Engineer

Revision No.	Sheet No.	Index No.
92	5 of 6	272

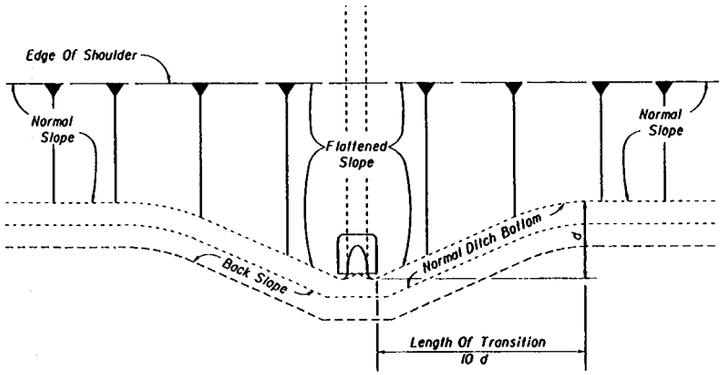

PLAN

NOTE: See General Note 2

SLOPE AND DITCH TRANSITIONS

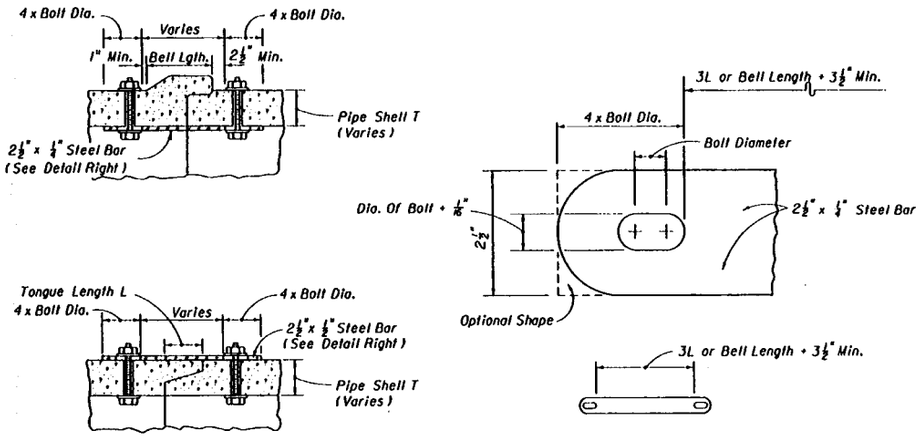

All bars, bolts, nuts and washers are to be galvanized steel.
Bolts diameters shall be ⅝" for 15" to 36" pipe and ¾" for 42" to 72" pipe.
Two connectors required per joint, located 60° right and left of bottom center of pipe.
Bolt holes in pipe shell are to be drilled.

CONCRETE PIPE CONNECTOR

GENERAL NOTES

1. Mitered end sections for pipe sizes 15", 18" and 24" round or equivalent pipe arch or elliptical pipe are permitted within the clear zone. When the slope intersection permits, the mitered end section may be located with the culvert opening as close as 8' beyond the outside edge of the shoulder.
2. Slope and ditch transitions shall be used when the normal roadway slope must be flattened to place end section outside clear zone. See detail left.
3. The reinforced concrete slab shall be constructed for all sizes of cross drain pipe and cast in place with Class I concrete. Slabs shall be 5½" thick unless 3" thickness called for in plans.
4. Concrete pipe used in the assembly of mitered end sections shall be selective lengths to avoid excessive connections.
5. Corrugated metal pipe galvanizing that is damaged during beveling and perforating for mitered end section shall be repaired.
6. That portion of corrugated metal pipe in direct contact with the concrete slab shall be bituminous coated prior to placing of the concrete.
7. Unless otherwise designated in the plans, concrete pipe mitered end sections may be used with any type of cross drain pipe; corrugated steel pipe mitered end sections may be used with any type of cross drain pipe except aluminum pipe; and, corrugated aluminum mitered end sections may be used with any type of cross drain pipe except steel pipe. When bituminous coated metal pipe is specified for cross drain pipe, mitered end sections shall be constructed with like pipe or concrete pipe.
8. When the mitered end section pipe is dissimilar to the cross drain pipe, a concrete jacket shall be constructed in accordance with Standard Index 280.
9. When existing multiple cross drain pipes are spaced other than the dimensions shown in this detail, or have non-parallel axes, or have non-uniform sections, the mitered end sections will be constructed either separately as single pipe mitered end sections or collectively as multiple pipe end sections as directed by the Engineer; however, mitered end sections will be paid for each based on each independent pipe end.
10. The cost of all pipe(s), fasteners, reinforcing, connectors, anchors, concrete, sealants, jackets, and coupling bands shall be included in the cost for the mitered end section. Sodding shall be paid for separately under the contract unit price of Sodding, SY.
11. Mitered end sections shall be paid for under the contract unit price for Mitered End Section (CD), Each, based on each independent pipe end. Mitered end sections used for detention/retention basin outlets are to be paid for under the contract unit price for Mitered End Section (BO), Each.

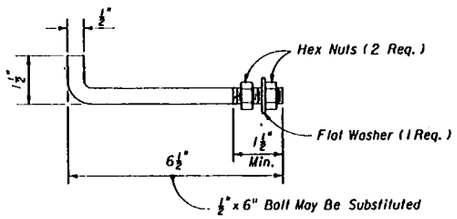

Anchors required for CMP only.

Anchor, washer and nuts to be galvanized steel.

Bend anchor where required to center in concrete slab. Damaged surfaces to be repaired after bending. Anchors are to be spaced a distance equal to four (4) corrugations. Place the anchors in the outside crest of corrugation.

Flat washers to be placed on inside wall of pipe.

Holes in the mitered end pipe are to be drilled or punched; burning not permitted.

ANCHOR DETAIL

STATE OF FLORIDA DEPARTMENT OF TRANSPORTATION
ROAD DESIGN

CROSS DRAIN MITERED END SECTION

SPECIAL DETAILS AND NOTES

	Names	Dates
Designed By	DCB	05/78
Drawn By		
Checked By	KNM	06/78
F.H.W.A. Approved:		07/21/78

Approved By: A. D. McLemore, State Drainage Engineer

Revision No.	Sheet No.	Index No.
92	6 of 6	272

DIMENSIONS & QUANTITIES

D	X	A	B	C	E	F	G	M Single Pipe	M Double Pipe	M Triple Pipe	M Quad Pipe	N	GRATE SIZES Standard Weight Pipe	GRATE SIZES Extra Strong Pipe	CONCRETE (Cu. Yds.) Single Pipe	CONCRETE (Cu. Yds.) Double Pipe	CONCRETE (Cu. Yds.) Triple Pipe	CONCRETE (Cu. Yds.) Quad Pipe	SODDING (Sq. Yds.) Single Pipe	SODDING (Sq. Yds.) Double Pipe	SODDING (Sq. Yds.) Triple Pipe	SODDING (Sq. Yds.) Quad Pipe
15"	2'-7"	2.27'	4.09'	6.36'	4.03'	8'	1.22'	4.63'	7.21'	9.79'	12.37'	1.19'			0.76	1.16	1.54	1.94	8	10	11	12
18"	2'-10"	2.36'	5.12'	7.48'	5.03'	9'	1.41'	4.92'	7.75'	10.58'	13.42'	1.21'			0.85	1.28	1.71	2.17	9	10	12	13
24"	3'-5"	2.53'	7.18' △	9.71'	7.03' △	11'	1.73'	5.50'	8.92'	12.33'	15.75'	1.25'			1.02	1.58	2.15	2.75	10	12	13	15
30"	4'-3"	2.70'	9.25'	11.95'	9.03'	13'	2.00'	6.08'	10.33'	14.58'	18.83'	1.29'	2½"	3"	1.23	1.98	2.74	3.50	12	14	15	17
36"	5'-1"	2.87'	11.31' ◇	14.18'	11.03' ◇	15'	2.24'	6.67'	11.75'	16.83'	21.92'	1.33'	2½"	3"	1.40	2.38	3.33	4.24	13	15	17	20
42"	6'-0"	3.05'	13.37'	16.42'	13.03'	17'	2.45'	7.25'	13.25'	19.25'	25.25'	1.38'	2½"	3½"	1.60	2.83	4.04	5.26	14	17	19	22
48"	6'-9"	3.22'	15.43'	18.65'	15.03'	19'	2.65'	7.83'	14.58'	21.33'	28.08'	1.42'	2½"	3½"	1.81	3.26	4.70	6.14	15	18	21	24
54"	7'-8"	3.39'	17.49'	20.88'	17.03'	21'	2.83'	8.42'	16.08'	23.75'	31.42'	1.46'	3"	4"	2.03	3.78	5.54	7.28	17	20	23	27
60"	8'-6"	3.56'	19.55'	23.11'	19.03'	23'	3.00'	9.00'	17.50'	26.00'	34.50'	1.50'	3"	4"	2.28	4.36	6.43	8.50	18	22	25	29

△ 6.42' △ 6.25' Dimensions permitted to allow use of 8' standard pipe lengths.

◇ 10.40' ◇ 10.10' Dimensions permitted to allow use of 12' standard pipe lengths.

△ ◇ Concrete slab shall be deepened to form bridge across crown of pipe. See section below.

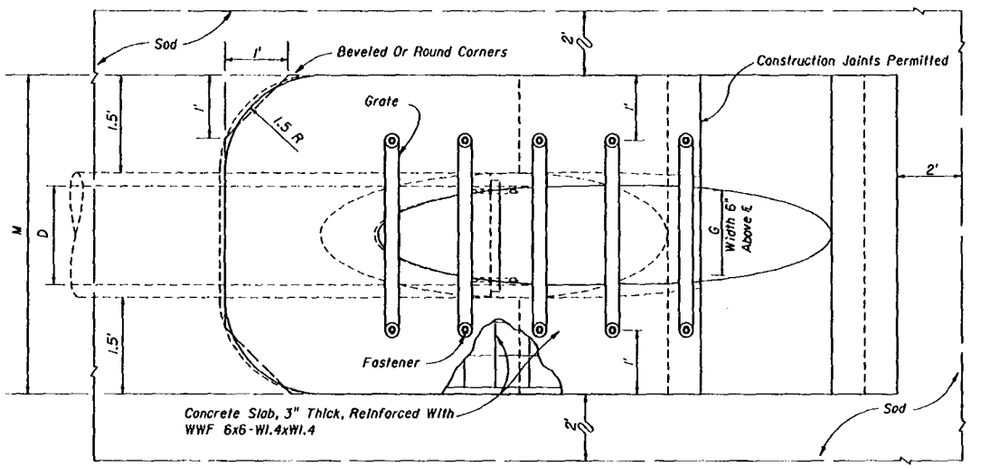

TOP VIEW - SINGLE PIPE

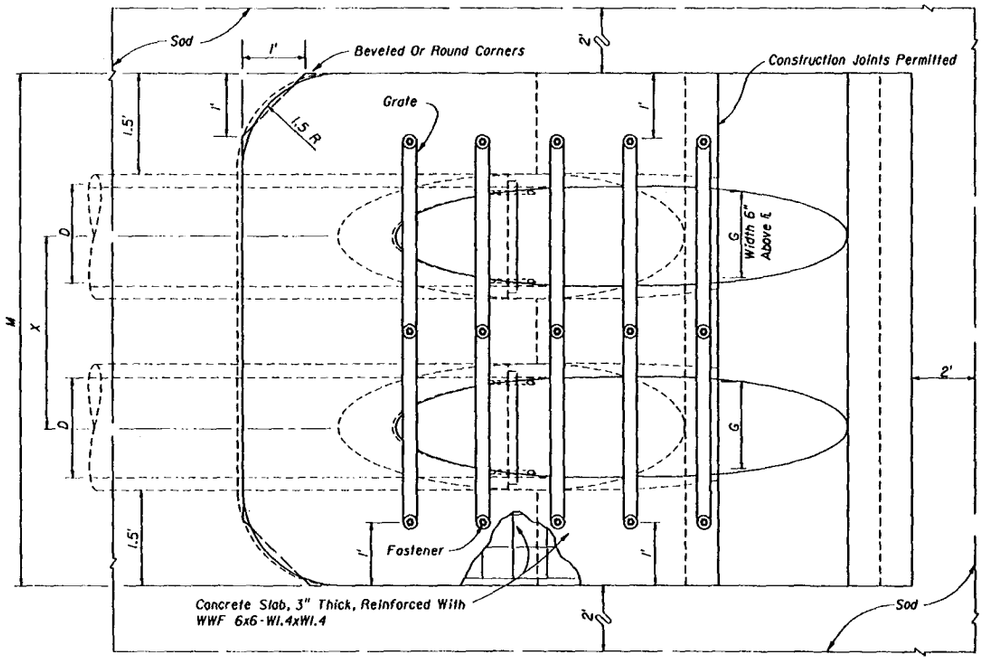

TOP VIEW - MULTIPLE PIPE

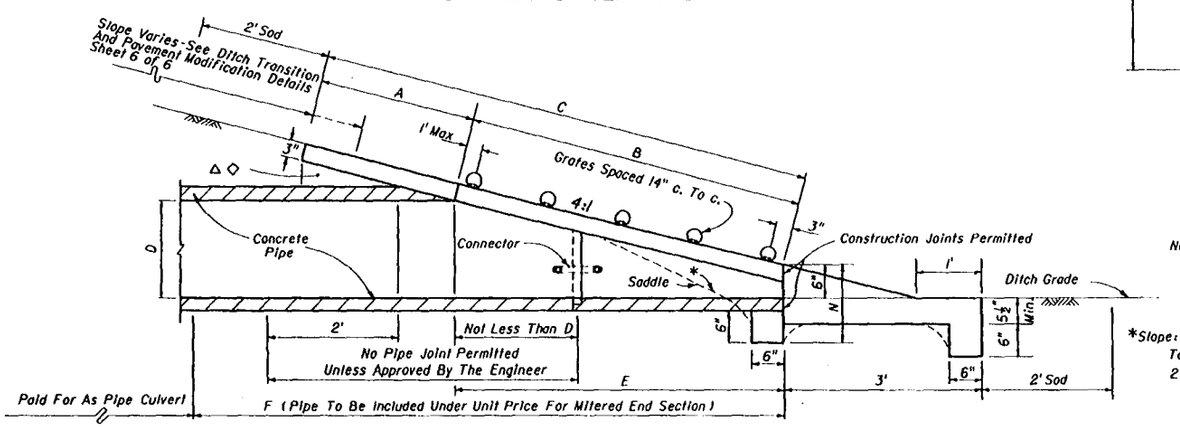

SECTION

*Slope:
To ℄ Pipe For Pipes 18" And Smaller
2:1 For Pipes 24" And Larger.

Note: See Sheets 5 and 6 for details and general notes.

STATE OF FLORIDA DEPARTMENT OF TRANSPORTATION
ROAD DESIGN

SIDE DRAIN MITERED END SECTION
SINGLE AND MULTIPLE ROUND CONCRETE PIPE

	Names	Dates
Designed By	EGR	06/18
Drawn By	HKH	06/18
Checked By	JVO	06/18
F.H.W.A. Approved:	10/25/17	

Approved By: _____ State Drainage Engineer

Revision No.	Sheet No.	Index No.
92	1 of 6	273

DIMENSIONS & QUANTITIES

D	X	A	B	C	E	F	G	M Single Pipe	M Double Pipe	M Triple Pipe	M Quad. Pipe	N	GRATE SIZES Standard Weight Pipe	GRATE SIZES Extra Strong Pipe	CONCRETE (Cu. Yds.) Single Pipe	CONCRETE (Cu. Yds.) Double Pipe	CONCRETE (Cu. Yds.) Triple Pipe	CONCRETE (Cu. Yds.) Quad. Pipe	SODDING (Sq. Yds.) Single Pipe	SODDING (Sq. Yds.) Double Pipe	SODDING (Sq. Yds.) Triple Pipe	SODDING (Sq. Yds.) Quad. Pipe
8"	2'-0"	2.5'	0.72'	3.22'	0.7'	4.0'	0.58'	3.75'	5.75'	7.75'	9.75'	1.04'			0.52	0.90	1.22	1.54	7	8	8	9
10"	2'-2"	2.5'	1.34'	3.84'	1.3'	5.0'	0.81'	3.92'	6.08'	8.25'	10.41'	1.04'			0.64	0.99	1.34	1.70	7	8	9	10
12"	2'-4"	2.5'	2.06'	4.56'	2.0'	6.0'	1.00'	4.08'	6.42'	8.75'	11.08'	1.04'			0.68	1.09	1.48	1.88	7	8	10	11
15"	2'-7"	2.5'	3.09'	5.59'	3.0'	7.0'	1.23'	4.33'	6.92'	9.50'	12.08'	1.04'			0.64	1.00	1.35	1.71	8	9	10	11
18"	2'-10"	2.5'	4.12'	6.62'	4.0'	8.0'	1.41'	4.58'	7.42'	10.25'	13.08'	1.04'			0.69	1.09	1.49	1.89	9	10	11	12
24"	3'-5"	2.5'	6.18'	8.68'	6.0'	10.0'	1.73'	5.08'	8.50'	11.92'	15.33'	1.04'			0.83	1.34	1.82	2.34	10	11	13	14
30"	4'-3"	2.5'	8.25'	10.75'	8.0'	12.0'	2.00'	5.58'	9.83'	14.08'	18.33'	1.04'	2½"	3"	0.96	1.63	2.32	2.99	11	13	15	17
36"	5'-1"	2.5'	10.31'	12.81'	10.0'	14.0'	2.24'	6.08'	11.17'	16.25'	21.33'	1.04'	2½"	3"	1.08	1.92	2.77	3.62	12	14	17	19
42"	6'-0"	2.5'	12.37'	14.87'	12.0'	16.0'	2.45'	6.58'	12.58'	18.58'	24.58'	1.04'	2½"	3½"	1.20	2.26	3.34	4.61	13	16	18	21
48"	6'-9"	2.5'	14.43'	16.93'	14.0'	18.0'	2.65'	7.08'	13.83'	20.58'	27.33'	1.04'	2½"	3½"	1.60	3.11	4.62	6.12	14	17	20	23
54"	7'-8"	2.5'	16.49'	18.99'	16.0'	20.0'	2.83'	7.58'	15.25'	22.92'	30.58'	1.04'	3"	4"	1.76	3.56	5.34	7.14	15	19	22	26
60"	8'-6"	2.5'	18.55'	21.05'	18.0'	22.0'	3.00'	8.08'	16.58'	25.08'	33.58'	1.04'	3"	4"	1.94	4.03	6.12	8.20	17	20	24	28

REMARKS

These sizes are restricted to inlet and outlet treatment for water management systems or similar applications.

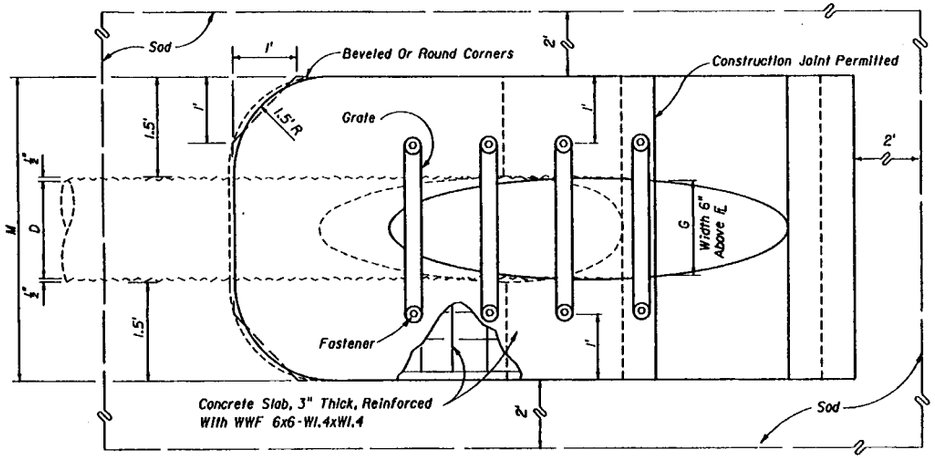

TOP VIEW - SINGLE PIPE

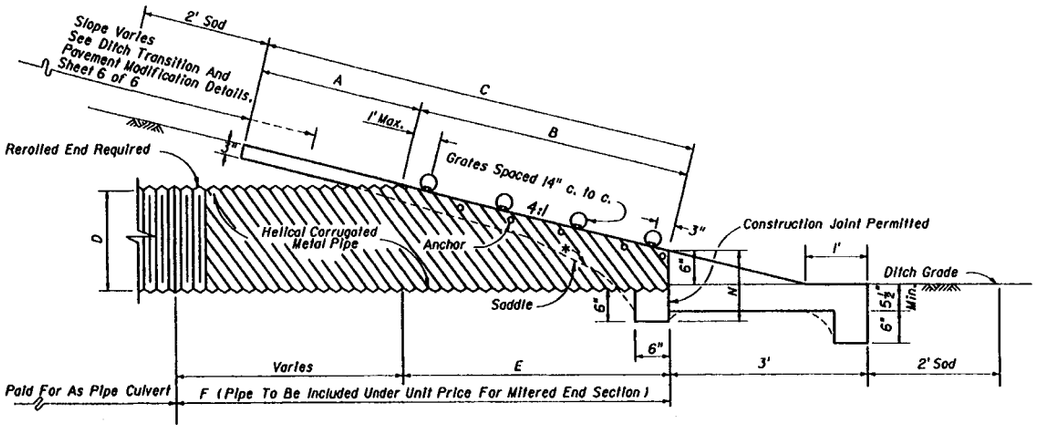

SECTION

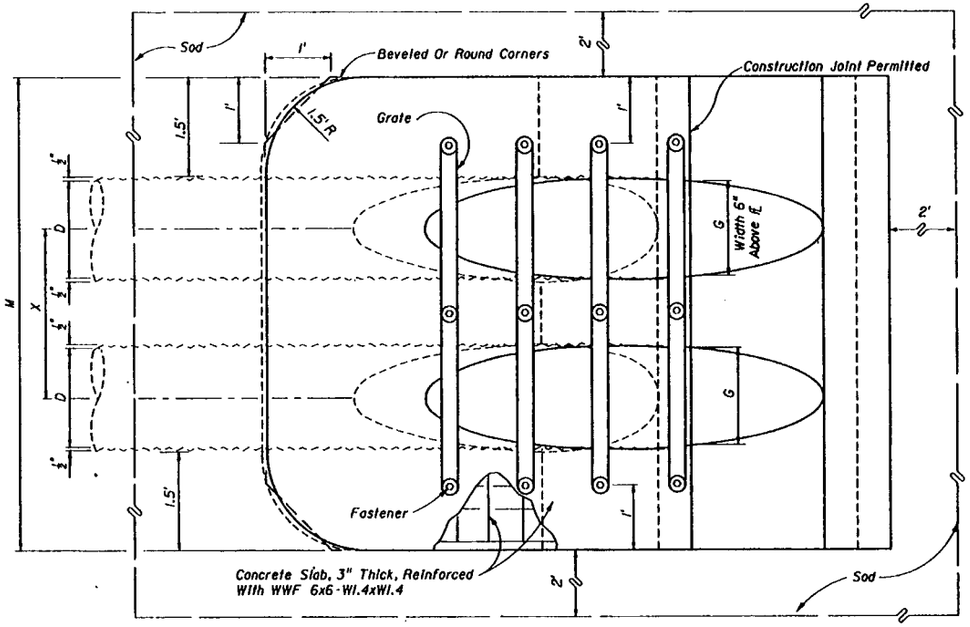

TOP VIEW - MULTIPLE PIPE

NOTE: See Sheets 5 and 6 for details and general notes.

*Slope:
To 6 Pipe For Pipe 18" And Smaller
2:1 For Pipe 24" And Larger

STATE OF FLORIDA DEPARTMENT OF TRANSPORTATION
ROAD DESIGN

SIDE DRAIN MITERED END SECTION

SINGLE AND MULTIPLE ROUND CORRUGATED METAL PIPE

	Names	Dates
Designed By	EGR	08/77
Drawn By	HKH	08/77
Checked By	JVO	08/77
F.H.W.A. Approved		10/21/77

Approved By: [signature] State Drainage Engineer

Revision No.	Sheet No.	Index No.
92	2 of 6	273

DIMENSIONS & QUANTITIES

1974 AASHTO									M					GRATE SIZES		CONCRETE (Cu. Yds.)				SODDING (Sq. Yds.)			
Span	Rise	X	A	B	C	E	F	G	Single Pipe	Double Pipe	Triple Pipe	Quad. Pipe	N	Standard Weight Pipe	Extra Strong Pipe	Single Pipe	Double Pipe	Triple Pipe	Quad. Pipe	Single Pipe	Double Pipe	Triple Pipe	Quad. Pipe
17"	13"	2'-6"	2.5'	2.41'	4.91'	2.33'	7'	1.39'	4.50'	7.00'	9.50'	12.00'	1.04'			0.62	0.95	1.27	1.60	8	9	10	11
21"	15"	2'-10"	2.5'	3.09'	5.59'	3.00'	8'	1.76'	4.83'	7.67'	10.50'	13.33'	1.04'			0.69	1.06	1.44	1.77	8	9	11	12
28"	20"	3'-5"	2.5'	4.81'	7.31'	4.67'	9'	2.22'	5.42'	8.83'	12.25'	15.67'	1.04'			0.81	1.26	1.73	2.19	9	11	12	14
35"	24"	4'-0"	2.5'	6.18'	8.68'	6.00'	11'	2.55'	6.00'	10.00'	14.00'	18.00'	1.04'	2½"	3"	0.94	1.51	2.09	2.66	10	12	14	15
42"	29"	4'-9"	2.5'	7.90'	10.40'	7.67'	12'	2.97'	6.58'	11.33'	16.08'	20.83'	1.04'	2½"	3½"	1.06	1.76	2.46	3.16	11	13	15	17
49"	33"	5'-6"	2.5'	9.28'	11.78'	9.00'	14'	3.34'	7.17'	12.67'	18.17'	23.67'	1.04'	2½"	3½"	1.19	2.02	2.84	3.68	12	14	17	19
57"	38"	6'-4"	2.5'	11.00'	13.50'	10.67'	16'	3.65'	7.83'	14.17'	20.50'	26.83'	1.04'	3"	4"	1.35	2.35	3.35	4.36	13	16	19	22
64"	43"	7'-1"	2.5'	12.71'	15.21'	12.33'	17'	3.89'	8.42'	15.50'	22.58'	29.67'	1.04'	3"	4"	1.50	2.70	3.86	5.03	14	17	20	24
71"	47"	7'-10"	2.5'	14.09'	16.59'	13.67'	19'	4.14'	9.00'	16.83'	24.67'	32.50'	1.04'	3"	4"	1.62	2.94	4.27	5.59	15	18	22	25

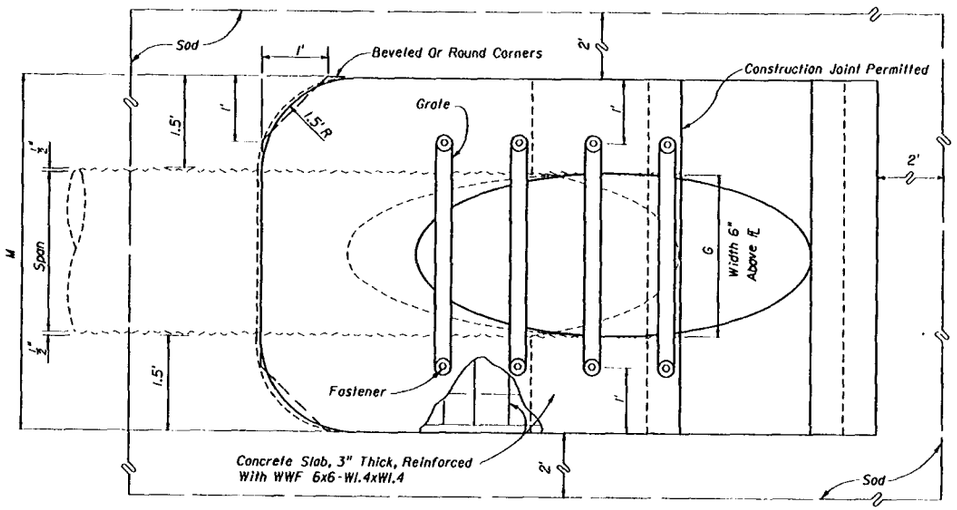

TOP VIEW - SINGLE PIPE

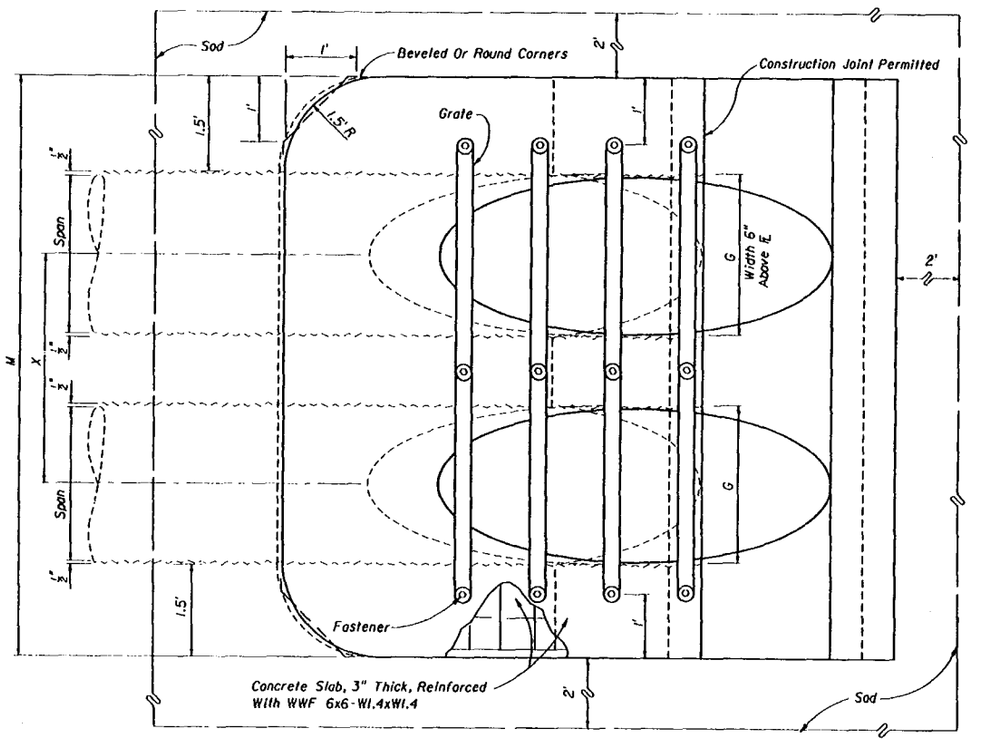

TOP VIEW - MULTIPLE PIPE

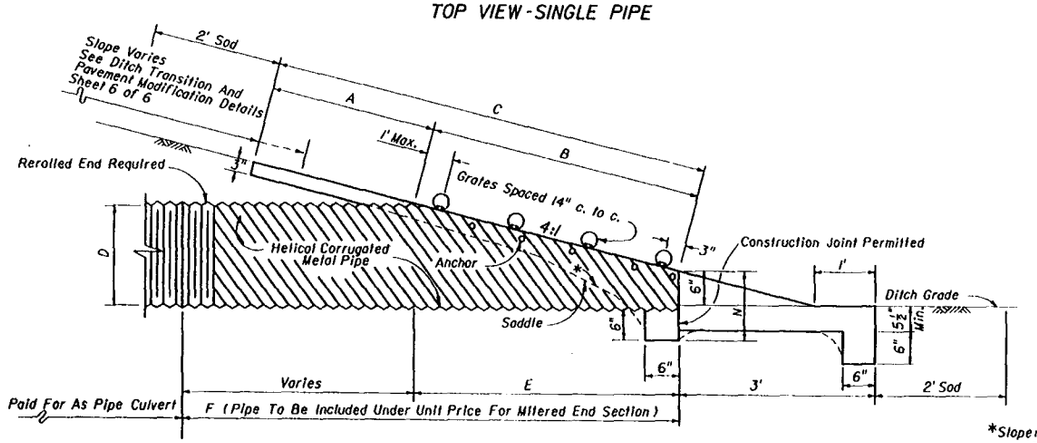

SECTION

NOTE: See Sheets 5 and 6 for details and general notes.

*Slope:
To Span Line For Pipe Arch 28" x 20" And Smaller
2:1 For Pipe Arch 35" x 24" And Larger

STATE OF FLORIDA DEPARTMENT OF TRANSPORTATION
ROAD DESIGN

SIDE DRAIN MITERED END SECTION

SINGLE AND MULTIPLE CORRUGATED METAL PIPE-ARCH

	Names	Dates
Designed By	EGR	08/77
Drawn By	HKH	08/77
Checked By	JVO	08/77
F.H.W.A. Approved:		10/21/77

Approved By: [signature]
State Drainage Engineer

Revision No.	Sheet No.	Index No.
92	3 of 6	273

DIMENSIONS & QUANTITIES

Rise R	Span S	X	A	B	C	E	F	G	M Single Pipe	M Double Pipe	M Triple Pipe	M Quad. Pipe	N	Grate Sizes Standard Weight Pipe	Grate Sizes Extra Strong Pipe	Concrete (Cu. Yds.) Single Pipe	Concrete (Cu. Yds.) Double Pipe	Concrete (Cu. Yds.) Triple Pipe	Concrete (Cu. Yds.) Quad. Pipe	Sodding (Sq. Yds.) Single Pipe	Sodding (Sq. Yds.) Double Pipe	Sodding (Sq. Yds.) Triple Pipe	Sodding (Sq. Yds.) Quad. Pipe
12"	18"	2'-10"	2.36'	3.06'	5.42'	3.03'	5'	1.50'	4.92'	7.75'	10.58'	13.42'	1.21'			0.68	1.04	1.41	1.77	8	9	11	12
14"	23"	3'-4"	2.44'	3.75'	6.19'	3.70'	6'	1.90'	5.38'	8.71'	12.04'	15.38'	1.23'			0.76	1.19	1.63	2.05	9	10	12	13
19"	30"	4'-0"	2.62'	5.47'	8.09'	5.36'	8'	2.37'	6.04'	10.04'	14.04'	18.04'	1.27'	2½"	3"	0.95	1.52	2.09	2.65	10	12	13	15
24"	38"	5'-0"	2.79'	7.18'	9.97'	7.03'	10'	2.85'	6.79'	11.79'	16.79'	21.79'	1.31'	2½"	3"	1.18	1.95	2.74	3.53	11	13	15	18
29"	45"	5'-11"	3.05'	8.90'	11.95'	8.70'	12'	3.19'	7.50'	13.42'	19.33'	25.25'	1.38'	2½"	3½"	1.41	2.42	3.44	4.45	12	15	18	20
34"	53"	7'-0"	3.22'	10.62'	13.84'	10.36'	13'	3.57'	8.25'	15.25'	22.25'	29.25'	1.42'	3"	3½"	1.63	2.92	4.22	5.52	13	17	20	23
38"	60"	7'-10"	3.39'	11.99'	15.38'	11.70'	15'	3.95'	8.92'	16.75'	24.58'	32.42'	1.46'	3"	4"	1.83	3.36	4.89	6.41	14	18	21	25
43"	68"	8'-11"	3.56'	13.71'	17.27'	13.36'	17'	4.28'	9.67'	18.58'	27.50'	36.42'	1.50'	3"	4"	2.09	3.95	5.80	7.65	16	20	23	27
48"	76"	9'-11"	3.73'	15.43'	19.16'	15.03'	19'	4.59'	10.42'	20.33'	30.25'	40.17'	1.54'	Special	Special	2.37	4.54	6.73	8.92	17	21	26	30
53"	83"	10'-8"	3.91'	17.15'	21.06'	16.70'	20'	4.77'	11.08'	21.75'	32.42'	43.08'	1.58'	Special	Special	2.61	5.09	7.56	10.03	18	23	27	32
58"	91"	11'-8"	4.08'	18.87'	22.95'	18.36'	22'	5.01'	11.83'	23.50'	35.17'	46.83'	1.63'	Special	Special	2.91	5.77	8.64	11.50	19	24	29	35

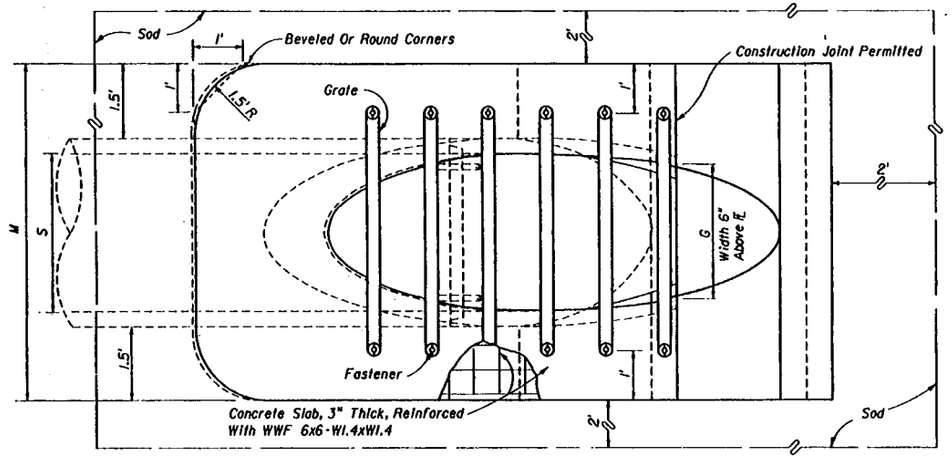

TOP VIEW - SINGLE PIPE

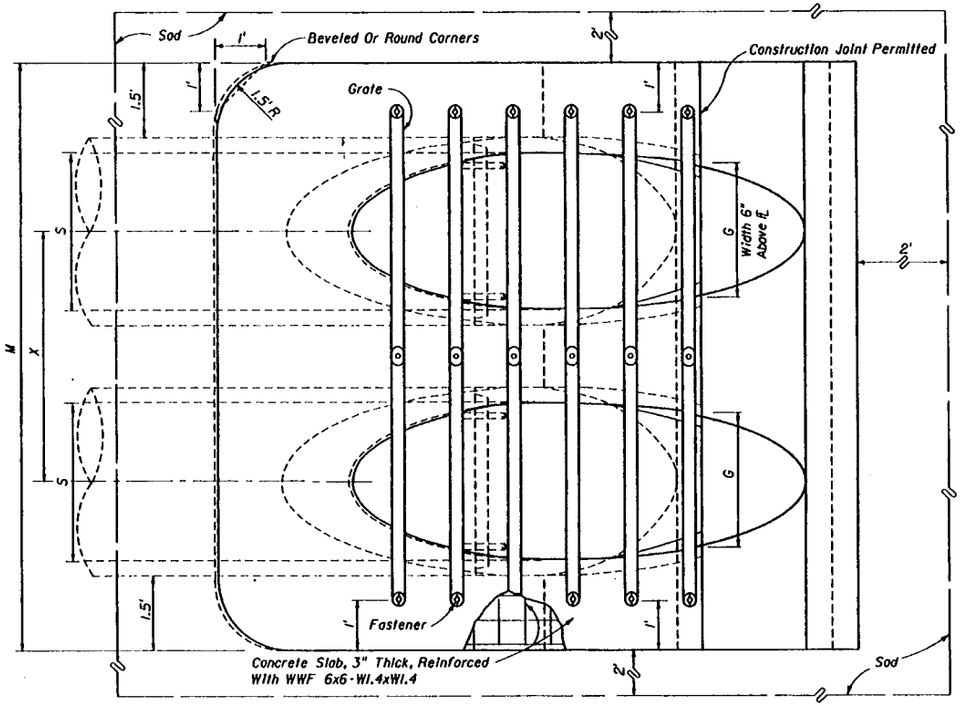

TOP VIEW - MULTIPLE PIPE

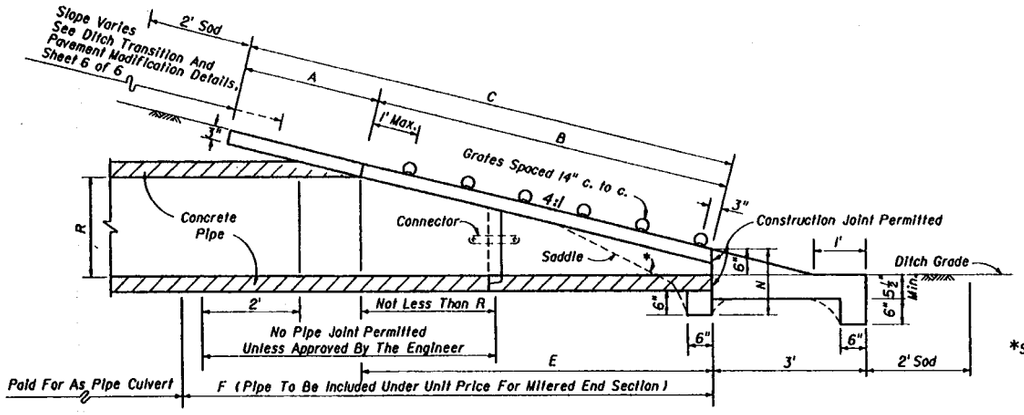

SECTION

NOTE: See Sheets 5 and 6 for details and general notes.

*Slope:
To Major Axis For Pipes 24" x 38" And Smaller.
2:1 For Pipes 29" x 45" And Larger.

STATE OF FLORIDA DEPARTMENT OF TRANSPORTATION
ROAD DESIGN

SIDE DRAIN MITERED END SECTION

SINGLE AND MULTIPLE ELLIPTICAL CONCRETE PIPE

	Names	Dates
Designed By	EGR	06/81
Drawn By	MSD	06/81
Checked By	JWG/JBW	06/81
F.H.W.A. Approved:		10/08/81

Approved By: E.G. Ruiz
State Drainage Engineer

Revision No.	Sheet No.	Index No.
92	4 of 6	273

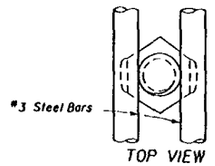

⅝" Galvanized Bolt
Hex Head Bolt Shown; Either Hex Head Or Square Head Bolt May Be Used. Only Hex Nut To Be Used.

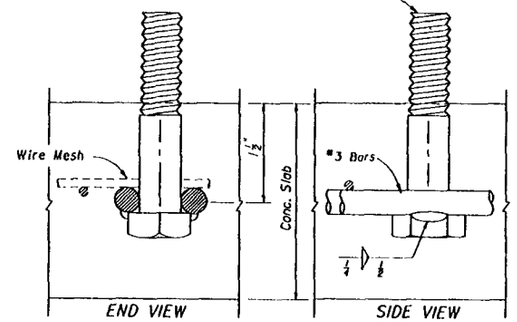

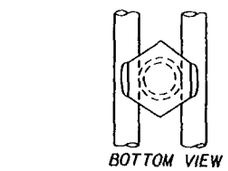

The specified weld shall be made when the fabricated unit is subject to harzardous hauls and repeated handling. Tack welds are permitted for local or job site fabrication. Galvanizing over welded surface not required.

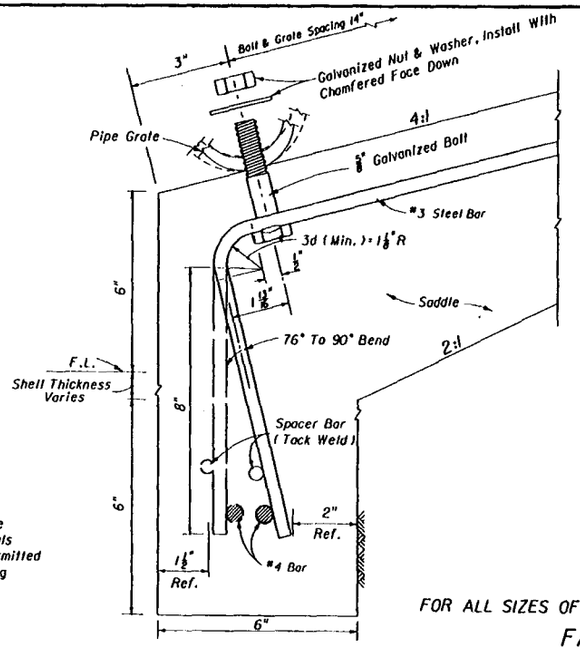

FOR ALL SIZES OF SINGLE AND MULTIPLE DRAIN PIPE

FASTENER UNIT

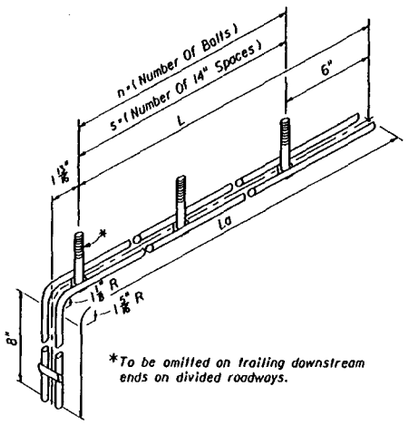

*To be omitted on trailing downstream ends on divided roadways.

Drain Size	s	n	L	La
CONCRETE PIPE (ROUND)				
15"	3	4	4'-0"	4'-11"
18"	4	5	5'-2"	6'-1"
24"	6	7	7'-6"	8'-5"
30"	7	8	8'-8"	9'-7"
36"	9	10	11'-0"	11'-11"
42"	11	12	13'-4"	14'-3"
48"	13	14	15'-8"	16'-7"
54"	14	15	16'-10"	17'-9"
60"	16	17	19'-2"	20'-1"
CORRUGATED METAL PIPE (ROUND)				
15"	2	3	2'-10"	3'-9"
18"	3	4	4'-0"	4'-11"
24"	5	6	6'-4"	7'-3"
30"	7	8	8'-8"	9'-7"
36"	8	9	9'-10"	10'-9"
42"	10	11	12'-2"	13'-1"
48"	12	13	14'-6"	15'-5"
54"	14	15	16'-10"	17'-9"
60"	15	16	18'-0"	18'-11"
CORRUGATED METAL PIPE (ARCH) ***				
17" x 13"	1	2	1'-8"	2'-7"
21" x 15"	2	3	2'-10"	3'-9"
28" x 20"	4	5	5'-2"	6'-1"
35" x 24"	5	6	6'-4"	7'-3"
42" x 29"	6	7	7'-6"	8'-5"
49" x 33"	7	8	8'-8"	9'-7"
57" x 38"	9	10	11'-0"	11'-11"
64" x 43"	10	11	12'-2"	13'-1"
71" x 47"	12	13	14'-6"	15'-5"

** To be used only when grates are called for in the plans.

*** 1974 AASHTO Pipe Arch Sizes.

Drain Size	s	n	L	La
ELLIPTICAL CONCRETE PIPE				
12" x 18"	2	3	2'-10"	3'-9"
14" x 23"	3	4	4'-0"	4'-11"
19" x 30"	4	5	5'-2"	6'-1"
24" x 38"	5	6	6'-4"	7'-3"
29" x 45"	7	8	8'-8"	9'-7"
34" x 53"	8	9	9'-10"	10'-9"
38" x 60"	10	11	12'-2"	13'-1"
43" x 68"	11	12	13'-4"	14'-3"
48" x 76"	13	14	15'-8"	16'-7"
53" x 83"	14	15	16'-10"	17'-9"
58" x 91"	15	16	18'-0"	18'-11"

** To be used only when grates are called for in the plans.

Note: ⅝" x 3" bolts are standard for all grate fasteners, except when the contractor elects to use the slotted upper holes for the intermediate fasteners on multiple drain pipe, which will require the following bolt lengths:

Grate Size (Std. & X-Stg.)	Bolt Length
2½"	5½"
3"	6"
3½"	6½"
4"	7"

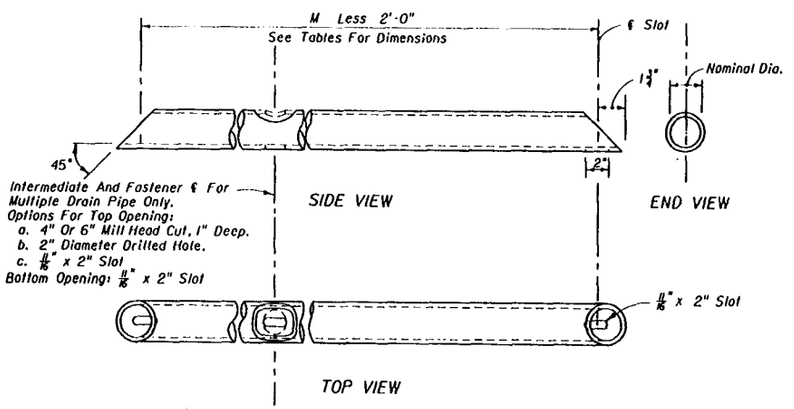

See General Notes, Sheet 6.

GRATE DETAIL

FOR SINGLE & MULTIPLE DRAIN PIPE

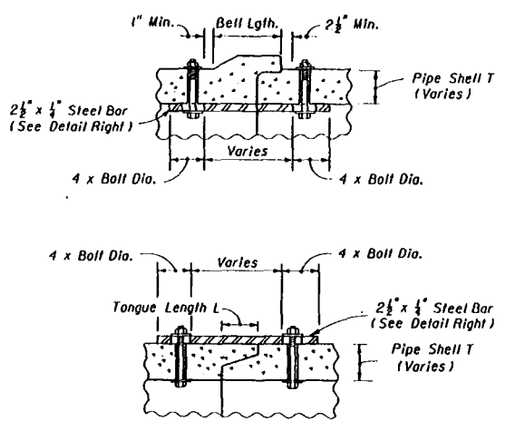

All bars, bolts, nuts and washers are to be galvanized steel.
Bolt diameters shall be ½" for 15" to 36" pipe and ⅝" for 42" to 60" pipe.
Two connectors required per joint, located 60° right and left of bottom center of pipe.
Bolt holes in pipe shell are to be drilled.

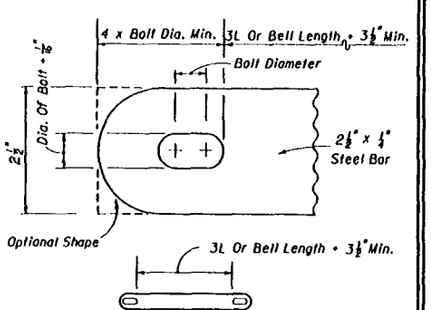

CONCRETE PIPE CONNECTOR DETAIL

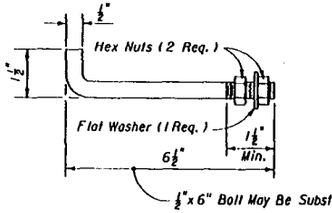

Anchors required for CMP only.
Anchor, washer and nuts to be galvanized steel.
Bend anchor where required to center in concrete slab. Damaged surfaces to be repaired after bending.
Anchors are to be spaced a distance equal to four (4) corrugations. Place the anchors in the outside crest of corrugation.
Flat washer to be placed on inside wall of pipe.

Holes in the mitered end pipe are to be drilled or punched; burning not permitted.

ANCHOR DETAIL

STATE OF FLORIDA DEPARTMENT OF TRANSPORTATION
ROAD DESIGN

SIDE DRAIN MITERED END SECTION

DETAILS FOR CONCRETE & CORRUGATED METAL PIPE

	Names	Dates
Designed By	EGR	08/77
Drawn By	HKH	08/77
Checked By	JVC	08/77
F.H.W.A. Approved:		10/21/77

Approved: C.E. Bunge
State Drainage Engineer

Revision No.	Sheet No.	Index No.
88	5 of 6	273

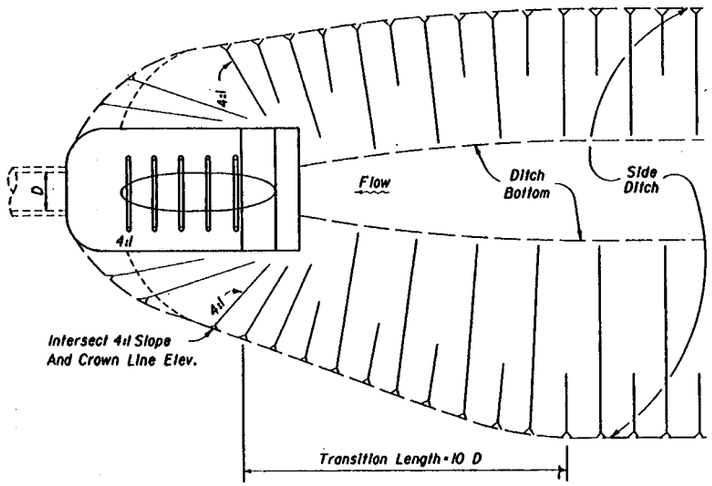

PLAN

DITCH TRANSITION

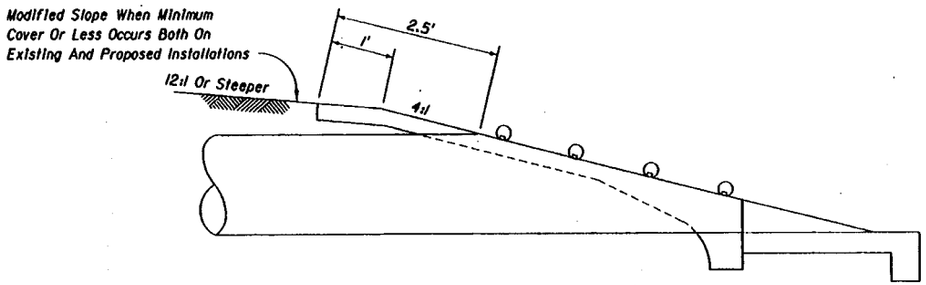

PERMISSIBLE PAVEMENT MODIFICATION

GENERAL NOTES

1. Unless otherwise designated in the plans, concrete pipe mitered end sections may be used with any type of side drain pipe; corrugated steel pipe mitered end sections may be used with any type of side drain pipe except aluminum pipe; and, corrugated aluminum mitered end sections may be used with any type of side drain pipe except steel pipe. When bituminous coated metal pipe is specified for side drain pipe, mitered end sections shall be constructed with like pipe or concrete pipe. When the mitered end section pipe is dissimilar to the side drain pipe, a concrete jacket shall be constructed in accordance with Index No. 280.
2. Concrete pipe used in the assembly of mitered end sections shall be of selective lengths to avoid excessive connections.
3. Corrugated metal pipe galvanizing that is damaged during beveling and perforating for mitered end section shall be repaired.
4. That portion of corrugated metal pipe in direct contact with the concrete slab shall be bituminous coated prior to placing of the concrete.
5. Corrugated polyethylene pipe (CPE) for side drain application of 15", 18" or 24" diameter shall utilize either corrugated metal or concrete mitered end sections. When used in conjunction with corrugated metal mitered end sections, connection shall be by either a formed metal band specifically designated to join CPE pipe and metal pipe or other coupler approved by the State Drainage Engineer. When used in conjunction with a concrete mitered end section, connection shall be by concrete jacket constructed in accordance with Index No. 280.
6. When existing multiple side drain pipes are spaced other than the dimensions shown in this detail, or have non-parallel axes, or have non-uniform sections, the mitered end sections will be constructed either separately as single pipe mitered end sections or collectively as multiple pipe end sections as directed by the Engineer; however, mitered end sections will be paid for each, based on each independent pipe end.
7. In addition to the requirements of Section 430-4, side drain culverts shall comply with the cover requirements shown on Index No. 205.
8. The reinforced concrete slab shall be constructed for all sizes of side drain pipe and cast in place with Class I concrete.
9. Round pipe size 30" or greater, pipe-arch size 35" x 24" or greater and elliptical pipe 19" x 30" or greater shall be grated unless excepted in the plans. Smaller sizes of pipe shall be grated only when called for in plans. The lower grate on trailing downstream ends on divided highways shall be omitted.
10. Grates are to be fabricated from steel ASTM A 53, Grade B, pipe. The lower grate on all traffic approach ends shall be Schedule 80 and all remaining grates shall be Schedule 40.
    Grates subject to salt free and corrosive free environment may be fabricated from galvanized pipe, with base metal exposed during fabrication repaired as specified in Section 562, Standard Specifications; or, fabricated from black pipe and hot dipped galvanized after fabrication in accordance with ASTM A 123.
    Grates subject to salt water or highly corrosive environment shall be hot dipped galvanized after fabrication in accordance with ASTM A 123.
11. Ditch transitions shall be used on all grades in excess of 3% as directed by the Engineer.
12. The project engineer shall contact the District Drainage Engineer for possible alternate treatment prior to constructing side drain mitered end sections where a minimum spacing of 30' will not result between the toe points of the mitered end sections.
13. The cost of all pipe (s), grates, fasteners, reinforcing, connectors, anchors, concrete, sealants, jackets and coupling bands shall be included in the cost for the mitered end section. Sodding shall be paid for separately under the contract unit price for Sodding, SY.
14. Mitered end sections shall be paid for under the contract unit price for Mitered End Section (SD), Ea., based on each independent pipe end.

DESIGN NOTES

1. In critical hydraulic locations, grates shall not be used until potential debris transport has been evaluated by the drainage engineer and appropiate adjustments made. Ditch grades in excess of 3% or pipe with less than 1.5' of cover and grades in excess of 1% will require such an evaluation (General Note 9).
2. The design engineer shall determine highly corrosive locations and specify in the plans when the grates shall be hot-dipped galvanized after fabrication (General Note 10).
3. The design engineer shall determine and designate in the plans which alternate types of mitered end section will not be permitted. The restriction shall be based on corrosive or structural requirements.

STATE OF FLORIDA DEPARTMENT OF TRANSPORTATION
ROAD DESIGN

SIDE DRAIN MITERED END SECTION
NOTES & INFORMATION

	Name	Date
Designed By	EGR	08/77
Drawn By	MKH	08/77
Checked By	JVK	08/77
F.H.W.A. Approved:		10/21/77

Approved By: A. M. Conrad
State Drainage Engineer

Revision No.	Sheet No.	Index No.
94	6 of 6	273

SCHEDULE OF BELL REINFORCEMENT
Classes II, III, IV, V; Wall A, B, C

Nominal Pipe Diameter	Design Bell Reinforcement	Maximum Reinforcement Under Tolerance
	SQ. IN. PER FOOT	SQ. IN. PER FOOT
15"	0.07	0.010
18"	0.07	0.010
24"	0.09	0.010
30"	0.12	0.010
36"	0.14	0.010
42"	0.16	0.010
48"	0.19	0.011
54"	0.21	0.012
60"	0.23	0.0135
66"	0.26	0.015
72"	0.28	0.0165
78"	0.30	0.018
84"	0.33	0.0195
90"	0.35	0.021
96"	0.37	0.0225
102"	0.40	0.024
108"	0.42	0.0255

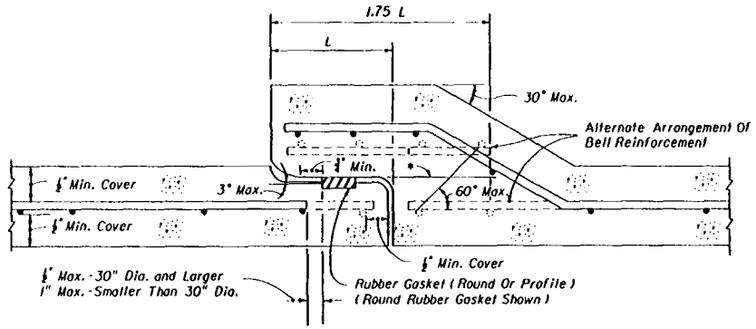

*All circumferential steel located above this line within 1.75 L is defined as bell reinforcement.

ROUND RUBBER GASKET SHOWN

DETAIL OF BELL & SPIGOT CONCRETE PIPE JOINT USING ROUND OR PROFILE RUBBER GASKET

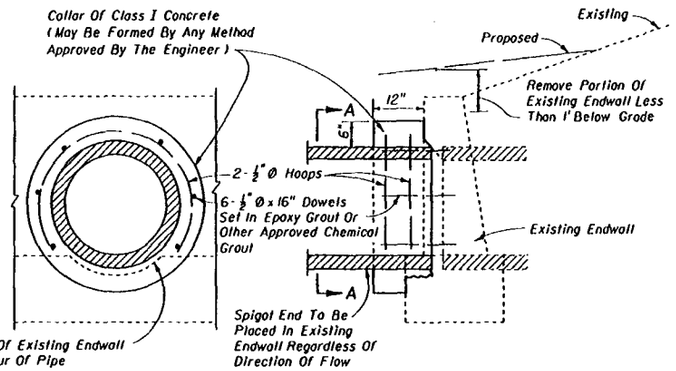

SECTION AA LONGITUDINAL SECTION

Note: Cost for removal and disposal of portions of top and toe of existing endwall and cost of concrete, reinforcing steel and construction of collar to be included in the contract unit price for pipe culvert.

CONCRETE COLLAR FOR EXTENSION OF EXISTING PIPE CULVERTS

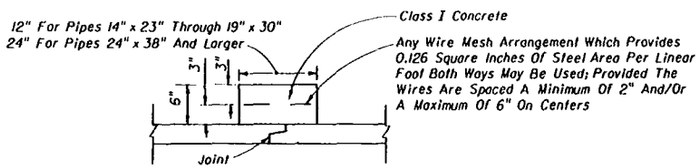

CONCRETE JACKET

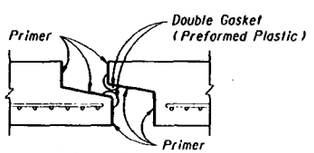

PREFORMED PLASTIC JOINT (BEFORE PULL-UP)

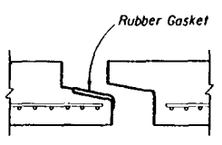

PROFILE RUBBER GASKET (BEFORE PULL-UP)

Cost of concrete jacket or filter fabric jacket to be included in cost of elliptical concrete pipe culverts.

ELLIPTICAL CONCRETE PIPE JOINTS

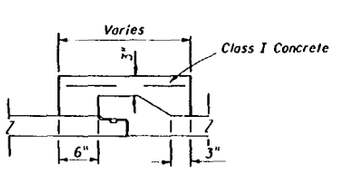

(All Pipe Sizes) BELL AND SPIGOT

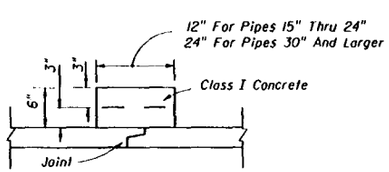

TONGUE & GROOVE

Note: For reinforcement see elliptical pipe concrete jacket.

DISSIMILAR JOINTS

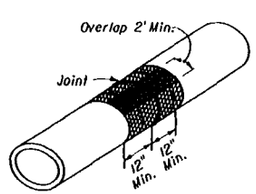

ELLIPTICAL PIPE SHOWN ISOMETRIC VIEW

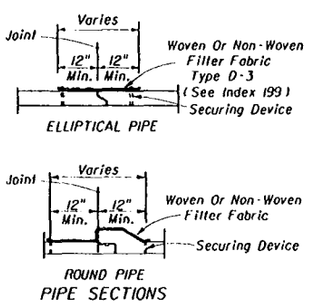

Cost of filter fabric jacket to be included in cost of pipe culverts.

FOR ALL PIPE TYPES - CONCRETE PIPE SHOWN

FILTER FABRIC JACKET

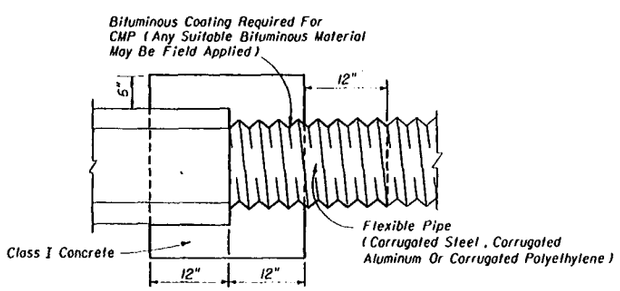

Note: Cost of concrete and bituminous coating to be included in contract unit price for either new pipe or Mitered End Section.
A concrete jacket shall not be used to join:
(a) metal pipe of dissimilar materials
(b) flexible pipe when the minimum cover required in accordance with Index No. 205 cannot be obtained.

DISSIMILAR TYPES

CONCRETE JACKET FOR CONNECTING DISSIMILAR TYPES OF PIPE AND CONCRETE PIPES WITH DISSIMILAR JOINTS

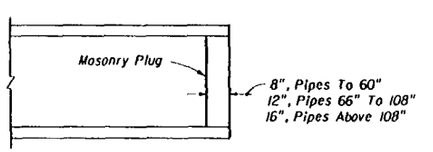

Note: Unless otherwise called for in the plans, the cost of plugging pipes to be included in contract unit price for new pipe.

PIPE PLUG

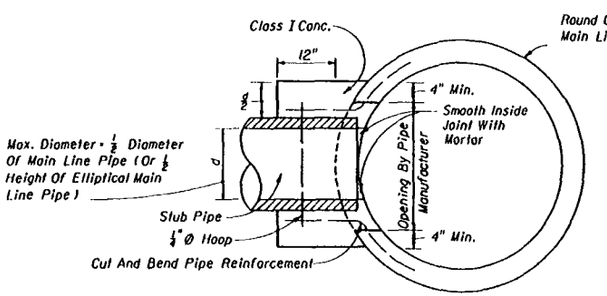

Cost of concrete and steel to be included in contract unit price for pipe culvert.

CONCRETE COLLAR FOR JOINING MAINLINE PIPE AND STUB PIPE

STATE OF FLORIDA DEPARTMENT OF TRANSPORTATION
ROAD DESIGN

MISCELLANEOUS DRAINAGE DETAILS

	Names	Dates
Designed By		
Drawn By	HSD	01/85
Checked By	JBW/MC	09/85
F.H.W.A. Approved:		

Approved By: L. A. McLemore, State Drainage Engineer

Revision No.	Sheet No.	Index No.
94	1 of 4	280

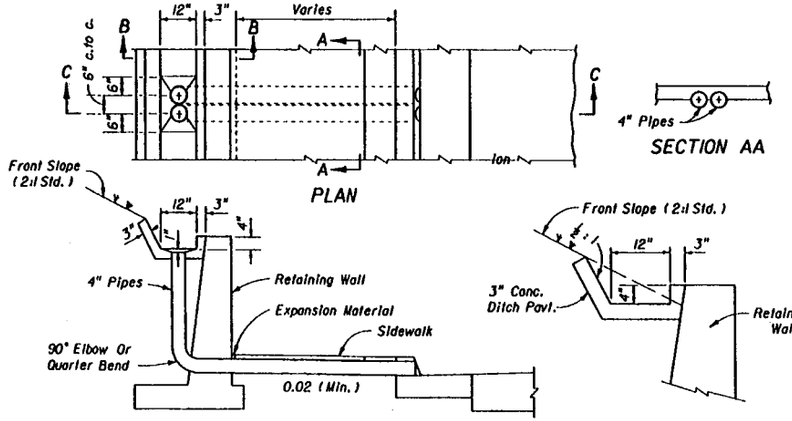

Note: Either cast iron pipe or PVC pipe, Schedule 40, may be used. Pipe to be paid for under the contract unit price for either Cast Iron Pipe For Roof Drains (4"), LF, or Polyvinyl Chloride Pipe Culvert (4"), LF.

CONCRETE GUTTER AND DRAINS AT RETAINING WALLS

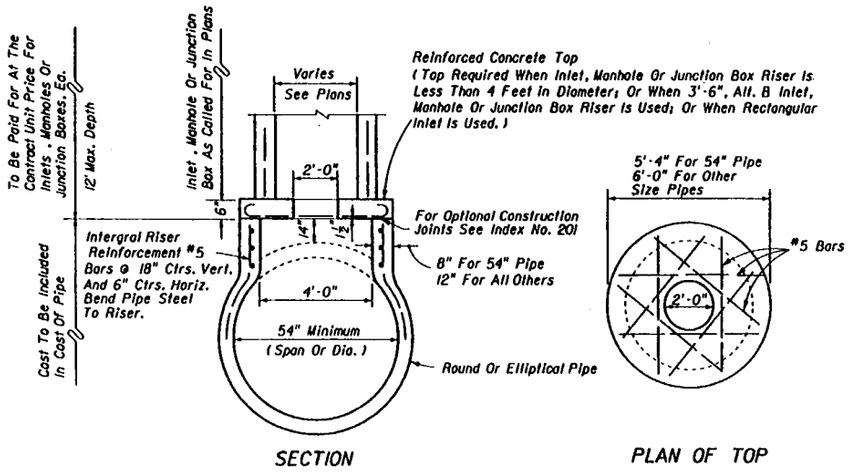

INLETS, MANHOLES OR JUNCTION BOXES ON INTEGRAL PRECAST CONCRETE RISER FOR CONCRETE PIPE

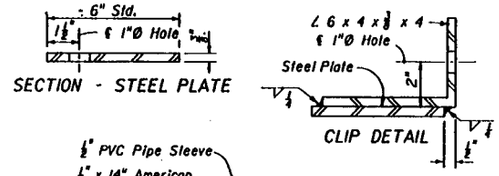

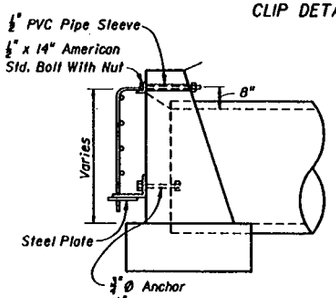

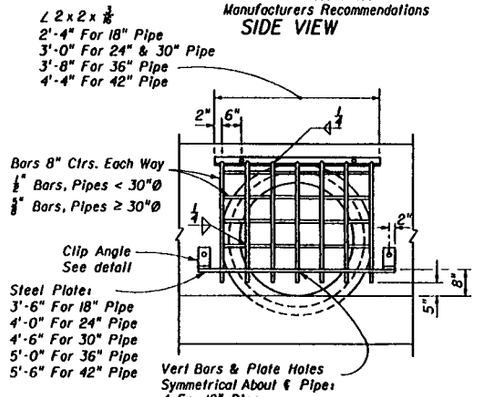

Pipe Dia.	18"	24"	30"	36"	42"
Grate (Lbs.)	48	58	74	90	111

FRONT VIEW

Note: Guards to be constructed only at locations specifically called for in plans. Guard, plate & clips, bolts, nuts and sleeves to be included in the contract unit price for Endwall Grate, LB.

GUARD AT PIPE ENDS

RAILROAD COMPANY	CLEARANCE BELOW BOTTOM OF RAIL (FEET)	STRENGTH ASTM (C76) CLASS
Apalachicola Northern	4.0	IV
Atlanta And St. Andrews Bay	4.0	IV
Florida East Coast	5.5 *	IV
Burlington Northern Railroad	S-TRK M/L	
	4.5 5.5	IV
CSX Transportation, Inc.	5.5	IV
Southern Railway System		
Georgia Southern And Florida	5.5	V
Live Oak Perry And South Georgia	5.5	V
St. Johns River Terminal	5.5	V

*Clearance is for casing pipe. All subgrade carrier pipelines and wirelines will be installed within a casing pipe which will extend from Right-of-Way line to Right-of-Way line.

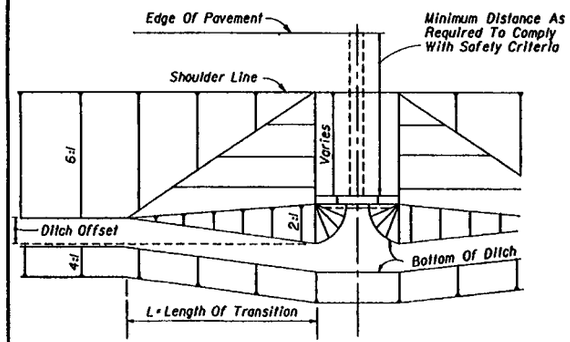

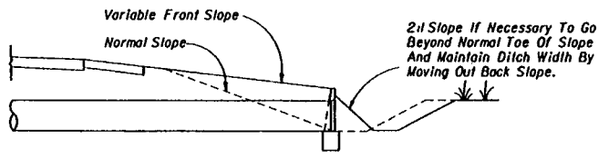

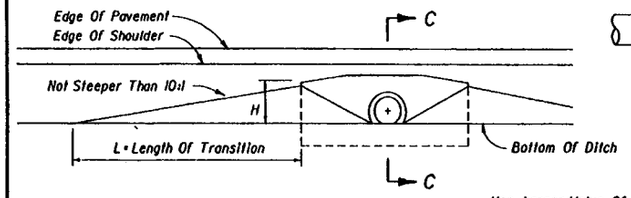

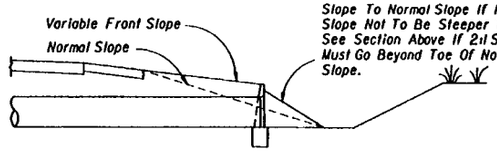

NOTE: Filling or excavation of variable slopes to be done during normal grading operations.

SECTION CC

Use Larger Value Of Either:
1. L = 10 x H (No Maximum)
2. L = 10 x Ditch Offset (Maximum L = 100')

METHOD FOR SETTING LIMITS OF VARIABLE FRONT SLOPES AT DRAINAGE STRUCTURES

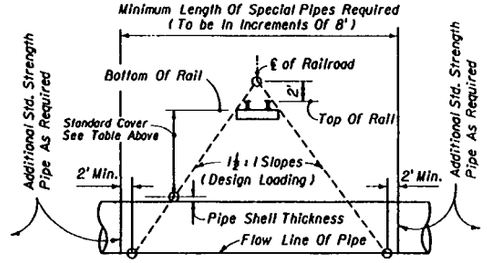

METHOD FOR DETERMINING THE LENGTH OF SPECIAL PIPE REQUIRED UNDER RAILROADS

STATE OF FLORIDA DEPARTMENT OF TRANSPORTATION
ROAD DESIGN

MISCELLANEOUS DRAINAGE DETAILS

	Names	Dates
Designed By		
Drawn By		
Checked By		
F.H.W.A. Approved:		11/15/78

Approved By: State Drainage Engineer

Revision No.	Sheet No.	Index No.
92	2 of 4	280

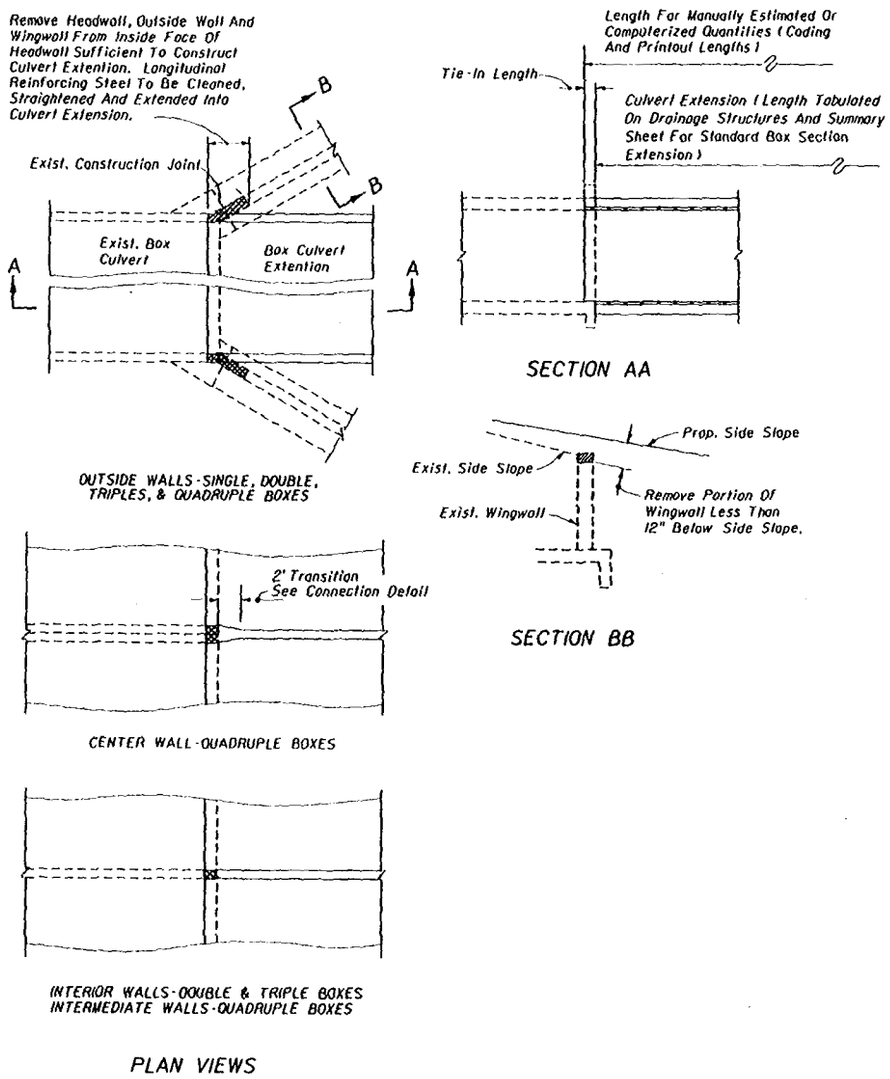

FLARED ENDWALL

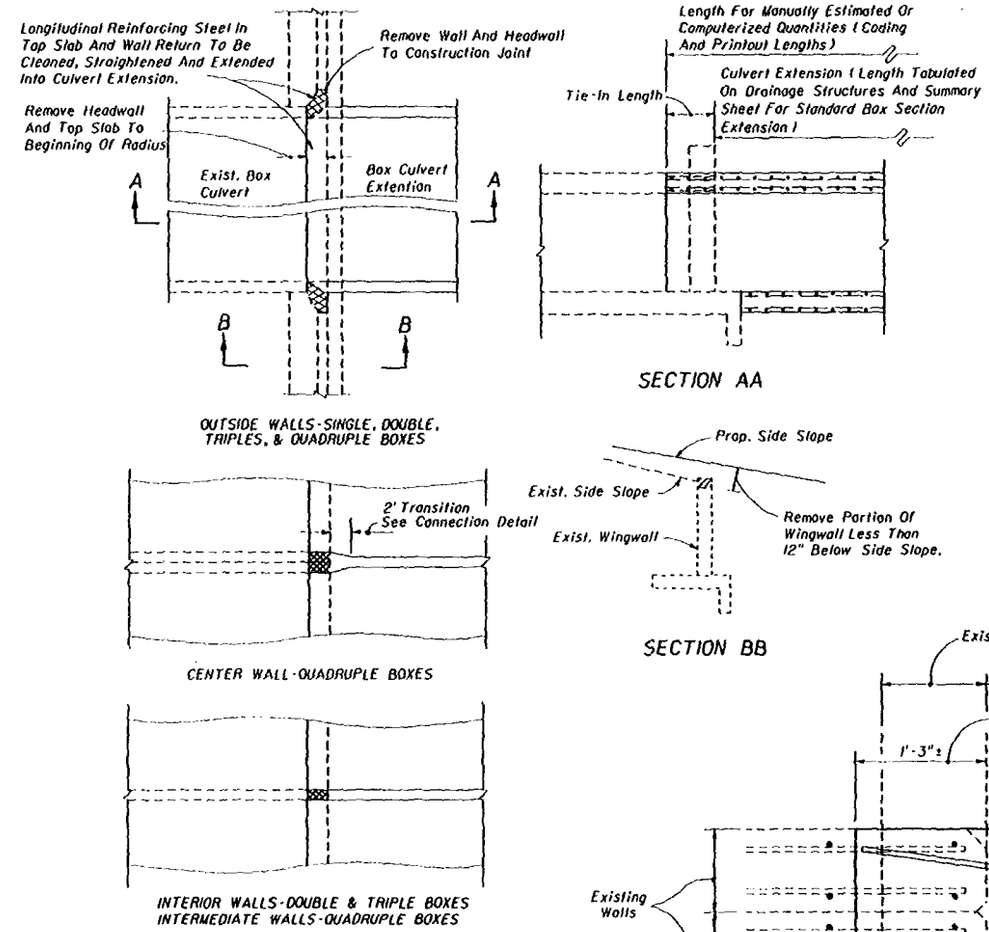

STRAIGHT ENDWALL

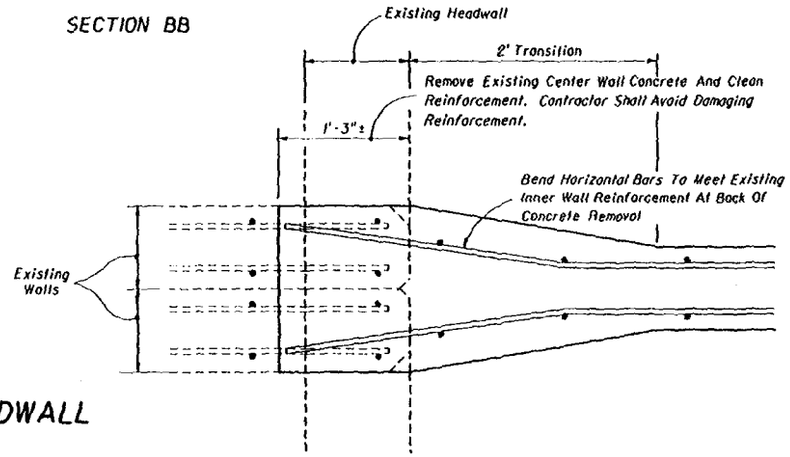

CONNECTION AT CENTER WALL OF QUADRUPLE CULVERTS

NOTE: The computerized printout for reinforcing steel does not include the additional lengths needed for extension and overlaps or connections to the horizontal reinforcement in the interior walls of double, triple and quadruple existing concrete box culverts; the cost for additional reinforcement and the thickened concrete wall in the transitional area shall be included in the costs for constructing the tie-in.

Cost for removal and disposal of material from existing headwalls, wingwalls and the top slab, and cost of cleaning, straightening and extending longitudinal reinforcing steel shall be included in the cost for concrete and steel of the culvert extension.

For concrete box culvert details, see Index No. 290.

CONNECTION DETAILS FOR CONCRETE BOX CULVERT EXTENSIONS

STATE OF FLORIDA DEPARTMENT OF TRANSPORTATION
ROAD DESIGN

MISCELLANEOUS DRAINAGE DETAILS

	Names	Dates	Approved By
Designed By			S. A. McGuire, State Drainage Engineer
Drawn By			
Checked By			
F.H.W.A. Approved:		11/16/78	

Revision No.	Sheet No.	Index No.
90	3 of 4	280

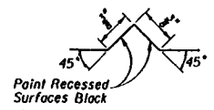

Black Plastic Figures 3" In height as approved by the Engineer may be used in lieu of numbers formed by ¾" "V" Grooves. "V" Grooves shall be formed by preformed figures.

SECTION THRU RECESSED "V" GROOVE TO FORM INSCRIBED FIGURES

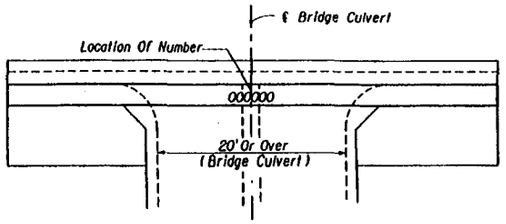

The number is to be placed in the center of the top surface of all bridge culvert headwalls.
For Bridge Number See Plan-Profile Sheet(s).

TOP VIEW OF HEADWALL

BRIDGE CULVERT NUMBER LOCATION

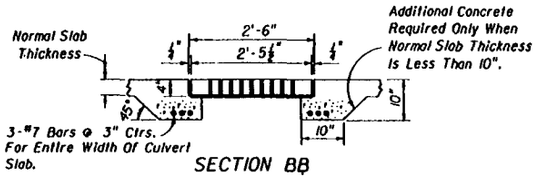

SECTION BB

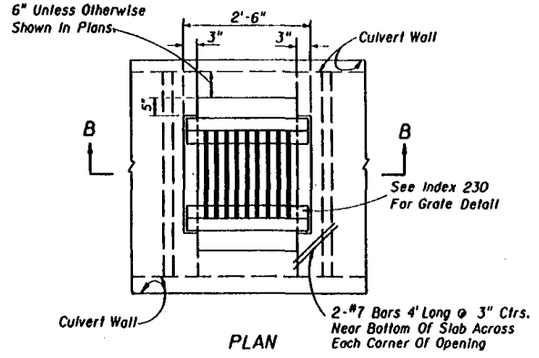

PLAN

INLET TYPE A GRATE

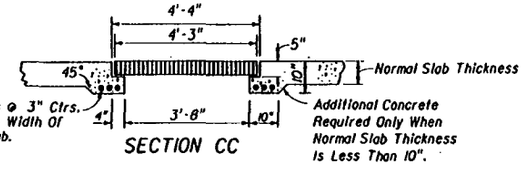

SECTION CC

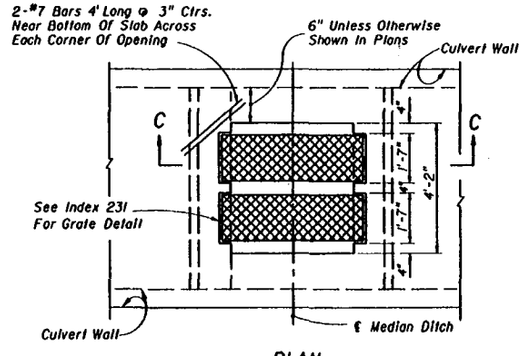

PLAN

INLET TYPE B GRATE

NOTE: 1. Cost of Steel Grating to be included in cost of Box Culvert.
2. All steel shall be 1½" clear.

INLET IN TOP OF BOX CULVERT

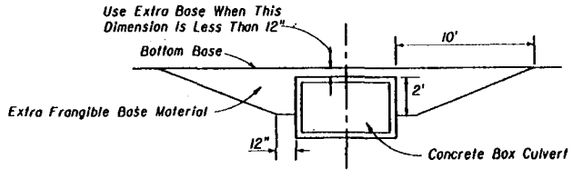

The cost of furnishing and installing extra frangible base material shall be included in the cost of the Box Culvert.

FRANGIBLE BASE

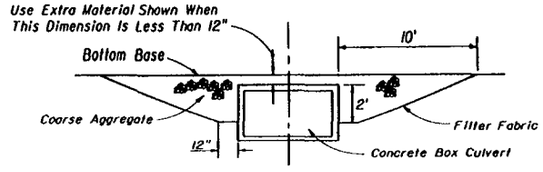

The Contractor shall furnish and install coarse aggregate on filter fabric. The coarse aggregate shall be placed in 6 inch lifts and compacted sufficiently as to be firm and unyielding. The coarse aggregate shall be gravel or stone meeting the requirements of Section 901-2 or 901-3 respectively. The gradation shall meet Section 901-6, Grades 4, 467, 5, 56 or 57 unless restricted in the plans. The filter fabric shall be Type D-3 (See Index 199). The cost of furnishing and installing the coarse aggregate and filter fabric shall be included in the cost of the Box Culvert.

ASPHALTIC CONCRETE BASE

NOTE: Extra base is required when cross box culverts are located on facilities subject to high speed traffic (>45 mph) or high traffic volumes (>1600 ADT) and the cover is within the range specified in the notation above.

EXTRA BASE FOR CROSS BOX CULVERTS UNDER FLEXIBLE PAVEMENT

STATE OF FLORIDA DEPARTMENT OF TRANSPORTATION
ROAD DESIGN

MISCELLANEOUS DRAINAGE DETAILS

	Name	Date
Designed By		
Drawn By		
Checked By		
F.H.W.A. Approved:		

Approved By S. A. McLemore
State Drainage Engineer

Revision No.	Sheet No.	Index No.
94	4 of 4	280

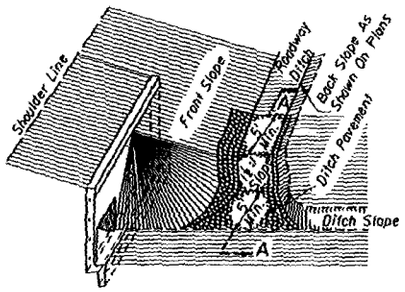

JUNCTION OF ROADWAY DITCH * AND LATERAL DITCH

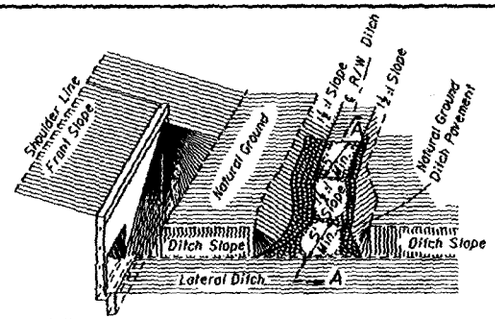

JUNCTION OF R/W DITCH * AND LATERAL DITCH

* Soil cement or misc. asphalt will not be permitted for this type of construction

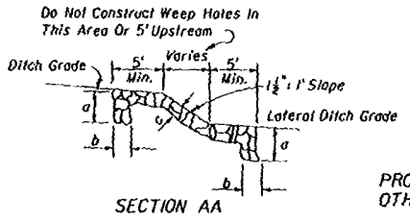

SECTION AA

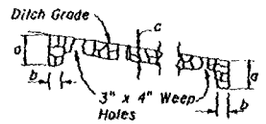

PROFILE OF DITCH PAV'T AT LOCATIONS OTHER THAN JUNCTION WITH LATERAL DITCH

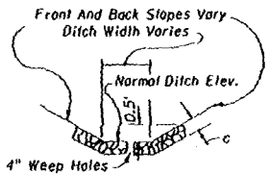

TYPICAL SECTION

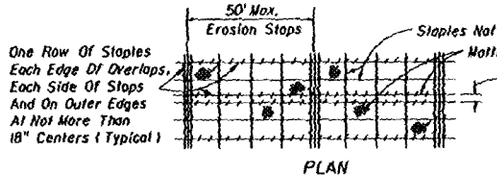

PLAN

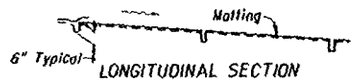

LONGITUDINAL SECTION



SECTION

MATTING FOR DITCH

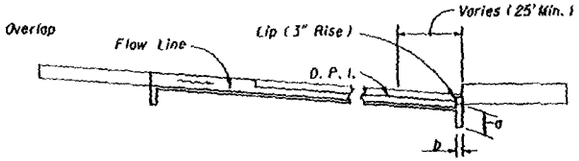

SECTION EE

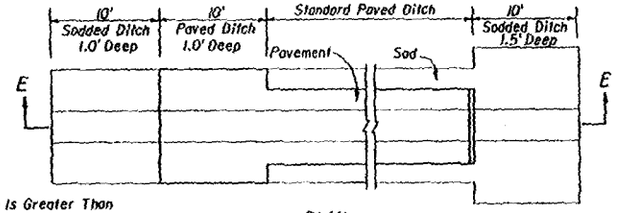

PLAN

PAVED DITCH END TREATMENT

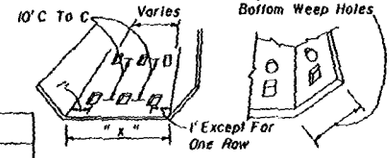

When Width Is Greater Than 4', Const. Weep Holes Half-Way Up The Side In Line With Bottom Weep Holes

When "X" = 1' To 4' Const. 1 Row (Centered)
"X" = 5' To 7' Const. 2 Rows
"X" = 8' To 12' Const. 3 Rows
"X" = 13' To 17' Const. 4 Rows
"X" = 18' To 22' Const. 5 Rows

DITCH PAVEMENT

Pavement Type	Dimensions a	b	c	Payment Unit	Basis Of Estimate	Filter Fabric Type	Velocity Range	References & Remarks
Concrete	24"	6"	3"	SY	SY	D-6	Low-High	Section 524 of the Standard Specifications.
Miscellaneous Asphalt	24"	12"	4"	TN	0.2 TN/SY	None	Low-Moderate	Section 339.
Soil-Cement	24"	12"	4"	SY	SY	None	Low	Section 270.
Riprap (Sand-Cement)	24"	12"	4"	CY	0.11 CY/SY	D-4	Low-Moderate	Section 530. Grouting of joints required.
Riprap (Concrete Block)	15 5/8"	7 5/8"	7 5/8"	CY	0.22 CY/SY	D-2	Low	Subsection 530.-2.2. Hole side up, closed staggerd joints (no grout), swaled section only.
Riprap (Broken Concrete Or Stone) + Slurry	24"	12"	9"	SY	SY	D-2	Moderate-High	Section 530 (Expanded).

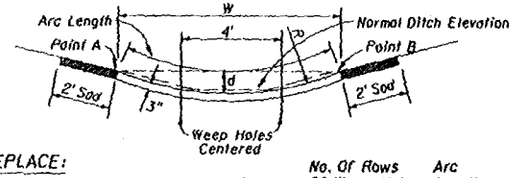

TO REPLACE:

	W	d	R	No. Of Rows Of Weep Holes	Arc Length
6' Median Swale 6:1 Front Slopes; 4:1 Back Slope	6'	.24'	19'	0	6.0
5' B.W. Ditch	10'	.67'	19'	2	10.1
4' B.W. Ditch	9'	.54'	19'	2	9.1
4:1 Front Slopes & Back Slope					
5' B.W. Ditch	9'	.74'	14'	2	9.2
4' B.W. Ditch	8'	.58'	14'	1 (in center)	8.1

ALTERNATE DITCH PAVEMENT

For use only where side slopes are 4:1 or flatter. Point "A" and "B" are to be the same elevation and should be used to locate the paved section.

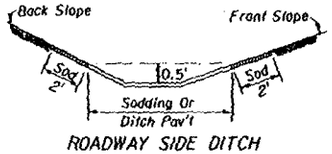

ROADWAY SIDE DITCH

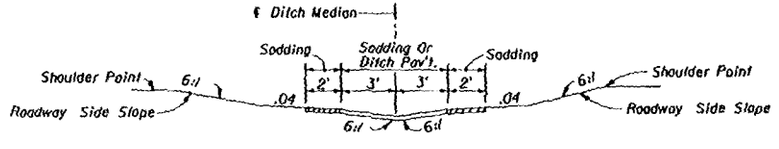

SWALED MEDIAN (No Weep Holes)

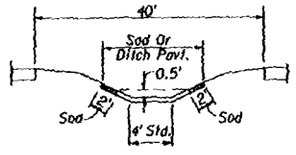

40' MEDIAN

Notes: All weep holes to be 3" x 4" rectangle or 4" or 5" dia. circular hole. ½ cu. ft. (12" x 12" x 6") of No. 6 aggregate to be placed under each hole. 1 sq. ft. of galvanized wire mesh (¼" openings) shall be placed between the aggregate and the concrete. Cost of holes, aggregate and wire mesh to be included in the cost of ditch pavement.

WEEP HOLE ARRANGEMENT

GENERAL NOTES

1. Type of ditch pavement shall be as shown on plans.
2. In concrete ditch pavement, contraction joints are to be spaced at 25' maximum intervals, or as directed by the Engineer. Contraction joints may be either formed (construction joint) or tooled. No open joints will be permitted.

   Expansion joints with ½" preformed joint filler shall be constructed at all inlets, endwalls, and at intervals of not more than 200'.
3. Lip at end of ditch pavement shall normally be located downstream at D.P.I. or on flatter grades where there is a decrease in ditch velocity.
4. Toewalls are to be used with all ditch paving. A toewall is not required adjacent to drainage structures.
5. When directed by the Engineer, weep hole spacing may be reduced to 5' minimum.
6. For junction of R/W ditch spillway and lateral ditch, sides of paving to be 1' high minimum.
7. For ditch pavements requiring filter fabric the fabric shall be placed directly beneath the pavement for the entire length and width of the pavement. When weep holes with aggregate are used the filter fabric shall be placed below the aggregate to form a mat continuous with or underlapping the pavement fabric. (See Index 199 for fabric type and application).
8. Cost of plastic filter fabric to be included in the contract unit price for ditch pavement.

STATE OF FLORIDA DEPARTMENT OF TRANSPORTATION
ROAD DESIGN

DITCH PAVEMENT & SODDING

	Names	Dates
Designed By		
Drawn By		
Checked By		
F.H.W.A. Approved:		05/01/75

Approved By: C. E. Ruge, State Drainage Engineer

Revision No.	Sheet No.	Index No.
92	1 of 2	281

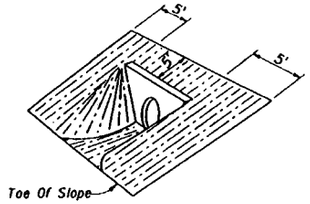

Note: Sodding quantities for each endwall to be determined by the designer from this detail.

(EXCEPT INDEX 250)
STRAIGHT ENDWALL

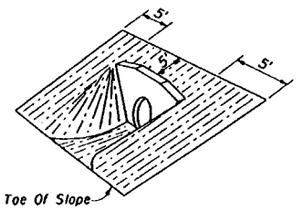

STRAIGHT ENDWALL
INDEX 250

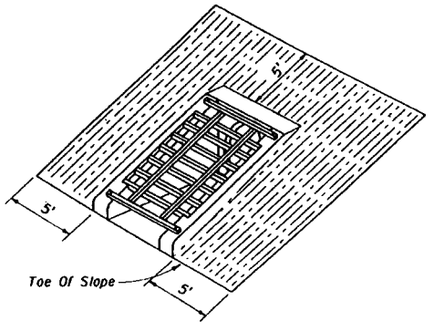

U - TYPE ENDWALL
INDEX 261

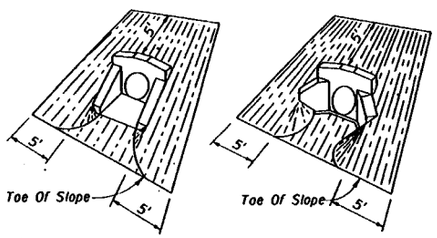

U - TYPE WINGS 45° WINGS

WINGED ENDWALLS
INDEX 266

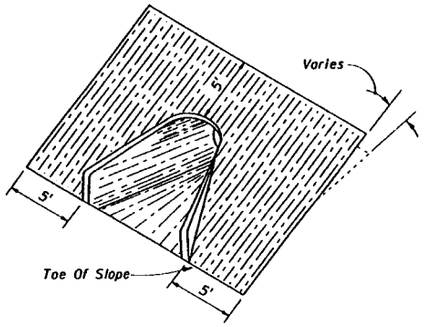

FLARED END SECTION
INDEX 270

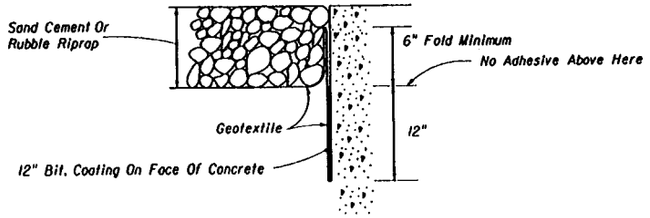

BONDED OPTION

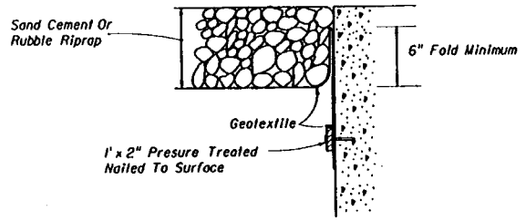

NAILED OPTION

Note: Either option maybe used unless otherwise called for in the plans.

GEOTEXTILE PLACEMENT AT CONCRETE STRUCTURE

SODDING QUANTITIES (S. Y.)

PIPE SIZE	INDEX 250												INDEX 261				INDEX 266				INDEX 270
	SLOPE												SLOPE				SLOPE				ALL SLOPES
	2 : 1			3 : 1			4 : 1			6 : 1			2 : 1	3 : 1	4 : 1	6 : 1	2 : 1	3 : 1	4 : 1	6 : 1	
	PIPES												PIPES				PIPES				PIPES
	1	2	3	1	2	3	1	2	3	1	2	3	1	1	1	1	1	1	1	1	1
12"																	14	15	18	22	10
15"	19	21	24	22	26	29	26	30	33	34	38	43	13 (15)	16	17	23	15	17	20	25	11
18"	21	24	27	25	29	33	30	34	38	39	44	50	14 (16)	17	19	25	16	18	22	28	11
21"																					12
24"	26	30	34	32	37	42	38	44	50	50	58	66	15 (17)	19	21	28	19	22	26	34	14
27"																					15
30"	31	37	42	39	46	53	46	55	63	62	74	85	17 (18)	21	24	32	21	25	30	40	16
36"	37	44	52	46	56	65	56	67	79	76	91	107					24	29	35	47	18
42"	43	53	62	55	67	79	67	82	96	91	111	132					27	32	39	54	19
48"	50	62	73	64	79	93	78	97	115	108	133	158					30	36	44	61	21
54"	57	71	85	74	92	110	91	113	136	126	157	188									21
60"																					22
66"																					25
72"																					26

( ) Endwall With Baffles

SODDING

STATE OF FLORIDA DEPARTMENT OF TRANSPORTATION
ROAD DESIGN

DITCH PAVEMENT & SODDING

	Names	Dates
Designed By		
Drawn By	HSD	08/85
Checked By	JBW/JVG	09/85
F.H.W.A. Approved:		07/07/75

Approved By
A. A. McLemore
State Drainage Engineer

Revision No.	Sheet No.	Index No.
94	2 of 2	281

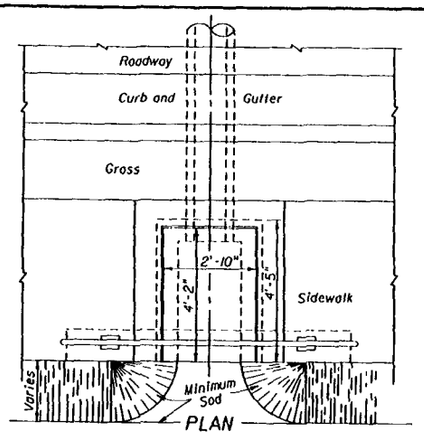

PLAN

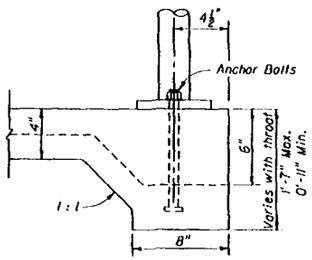

SECTION BB

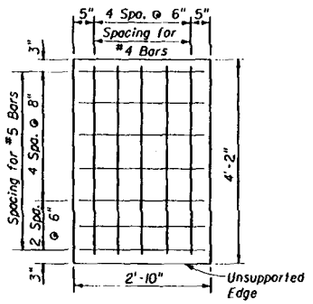

SLAB REINFORCEMENT



SLAB SECTION

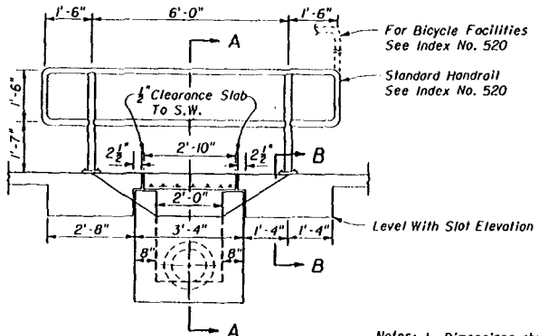

FRONT ELEVATION

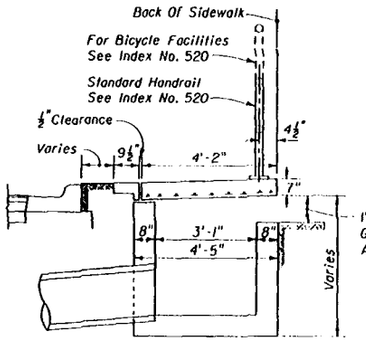

SECTION AA

1' Max., 4" Min. Grading And Sodding Back Of Sidewalk As Directed By The Engineer

Notes: 1. Dimensions shown are for a 5' sidewalk with utility strip.
2. For additional details see Index No. 232.
3. Inlet to be paid for under the contract unit price for Inlets (Ditch Bottom) (Type C Modified), Ea. Handrail to be paid for under the contract unit price for Pipe Handrail, LF..

INLET TYPE C (MODIFIED)

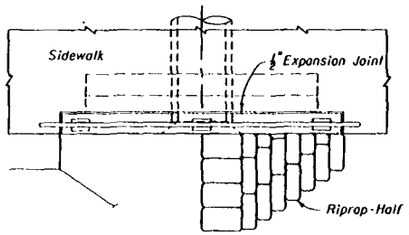

PLAN

Pipe Size	C	Conc.-CY	Riprap-CY (Sand-Cement)
15"	4'-9"	2.27	1.1
18"	5'-3"	2.59	1.3
24"	6'-3"	3.26	1.8

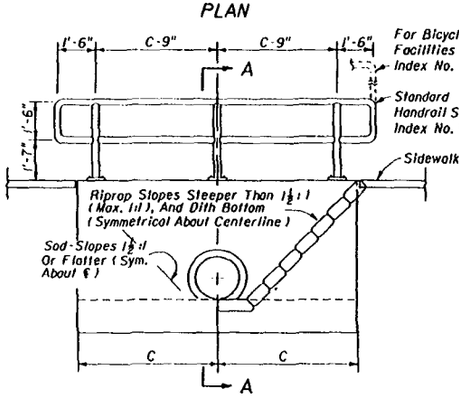

FRONT ELEVATION

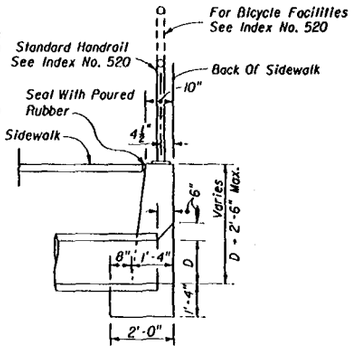

SECTION AA

Notes: 1. Maximum pipe size shall be 24" diameter.
2. Grading back of sidewalk varies and shall be done as directed by the Engineer.
3. Concrete quantities shown are for maximum wall heights, and shall be basis for estimate and payment.
4. Riprap quantities shown are for estimate purposes only. Cost of riprap to be included in cost of the endwall.
5. Endwalls to be paid for under the contract unit price for Class I Concrete (Endwalls), CY. Handrail to be paid for under the contract unit price for Pipe Handrail, LF..

SPECIAL CONCRETE ENDWALL

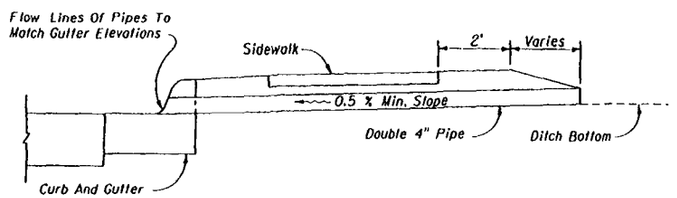

Notes: 1. To be constructed at locations as directed by the Engineer.
2. Either cast iron pipe or PVC rigid conduit, U.L. listed for direct sunlight exposure, Schedule 40, may be used.
3. Pipe to be paid for under the contract unit price for either Cast Iron Soil Pipe (Standard) (4"), LF or Polyvinyl Chloride Pipe Culvert (4"), LF.

SHALLOW DITCHES

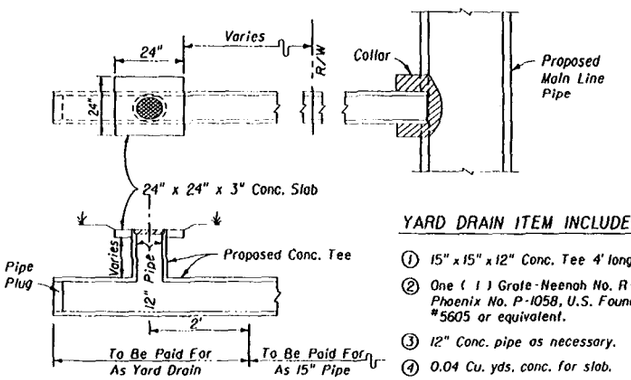

YARD DRAIN ITEM INCLUDES :

1. 15" x 15" x 12" Conc. Tee 4' long.
2. One (1) Grate-Neenah No. R-4030, Phoenix No. P-1058, U.S. Foundry #5605 or equivalent.
3. 12" Conc. pipe as necessary.
4. 0.04 Cu. yds. conc. for slab.

Notes: 1. Yard drains to be located outside the R/W. Drainage area should not exceed 750 S.F. (grate flow 0.1 cfs).
2. Yard drains may be constructed at the option of the property owner as shown on the plans.
3. Cost of plugs and collars to be included in the cost for 15" concrete pipe. For collar and plug details see Index No. 280.
4. Yard drains to be paid for under the contract unit price for Yard Drains, Each.

YARD DRAINS

STATE OF FLORIDA DEPARTMENT OF TRANSPORTATION
ROAD DESIGN

BACK OF SIDEWALK DRAINAGE

	Names	Dates
Designed By		
Drawn By		
Checked By		
F.H.W.A. Approved:		05/01/75

Approved By L. A. McLemore
State Drainage Engineer

Revision No.	Sheet No.	Index No.
94	1 of 1	282

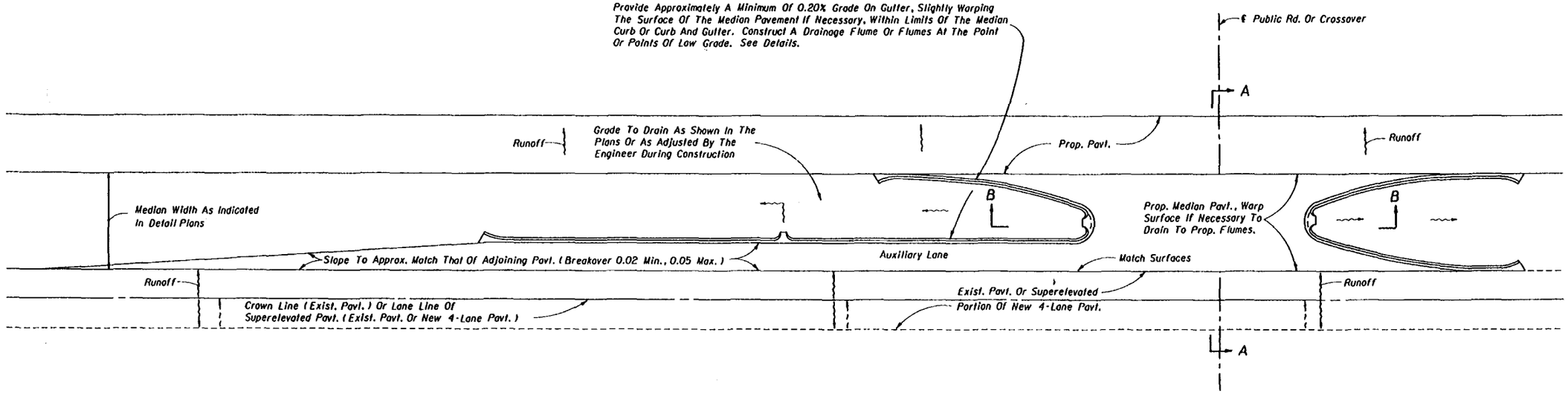

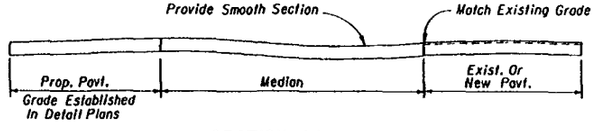

SECTION AA



SECTION BB

(May Drain From Any Point Designated In the Plans Or As Adjusted By The Engineer During Construction)

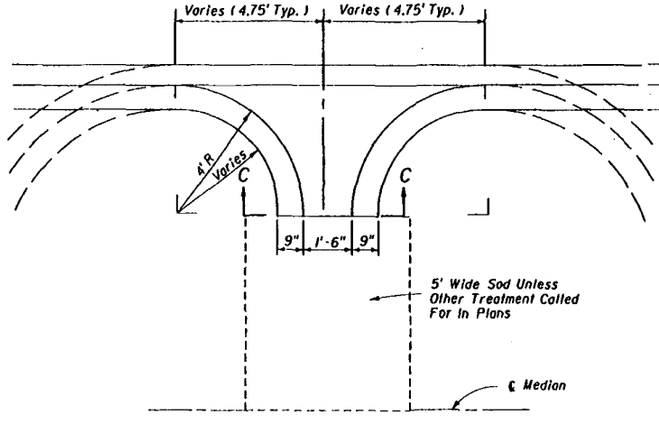

FLUME DETAIL

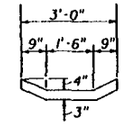

SECTION CC

GENERAL NOTES

1. These details are to apply to projects which provide for the conversion of 2-lane sections to 4-lane divided highway sections and for superelevated sections of new 4-lane divided highways. Layout above is illustration only. Cost of flumes to be included in the contract price for Curb or Curb and Gutter. Sod to be paid for under the contract unit price for Sodding, SY.
2. Flumes to be located in low point of noses and at other points as designated in the plans. The locations may be adjusted by the Engineer during construction.

STATE OF FLORIDA DEPARTMENT OF TRANSPORTATION
ROAD DESIGN

MEDIAN OPENING FLUME

	Names	Dates
Designed By	CHR	03/59
Drawn By		
Checked By	CDO	03/59
F.H.W.A. Approved:		03/20/75

Approved By: L. D. McLemore
State Design Engineer, Roadways

Revision No.	Sheet No.	Index No.
83	1 of 1	283

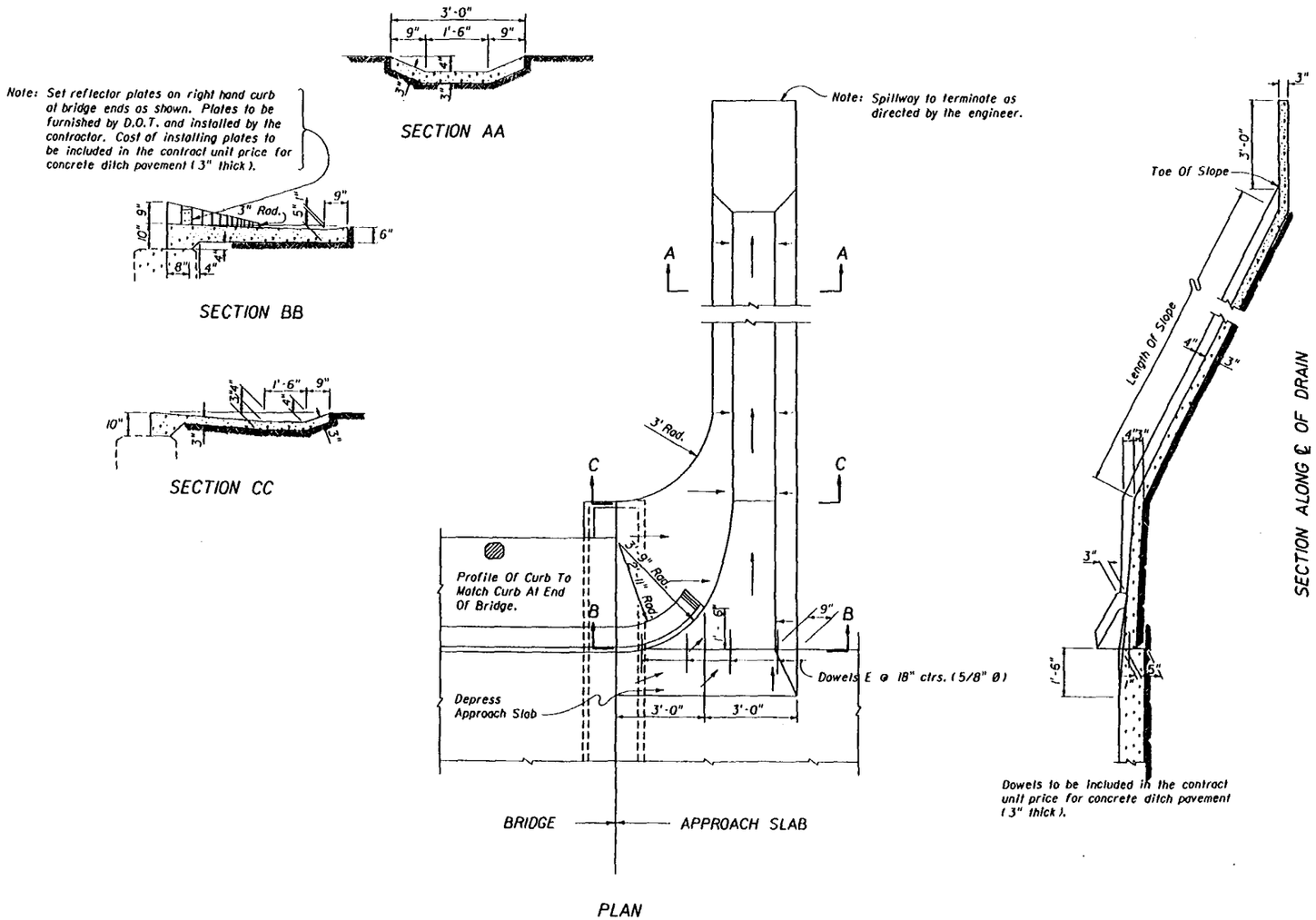

GENERAL NOTES

1. This detail not recommended for grades greater than 0.5% or discharges exceeding 0.5 cfs.

ESTIMATED QUANTITIES		
ITEM	UNIT	QUANTITY
Concrete Ditch Pavement (3" Thick)	Sq. yd.	* 10.87

* Quantity shown above includes pavement for 10 ft. "Length of Slope". For each additional foot of slope length add 0.349 sq. yds.

STATE OF FLORIDA DEPARTMENT OF TRANSPORTATION
ROAD DESIGN

CONCRETE SPILLWAYS
BRIDGE END SPILLWAY

	Names	Dates	Approved By
Designed By	CES	12/51	E. G. Bunge, State Drainage Engineer
Drawn By			
Checked By	HLF	12/51	
F.H.W.A. Approved:		03/20/75	

Revision No.	Sheet No.	Index No.
88	1 of 2	284

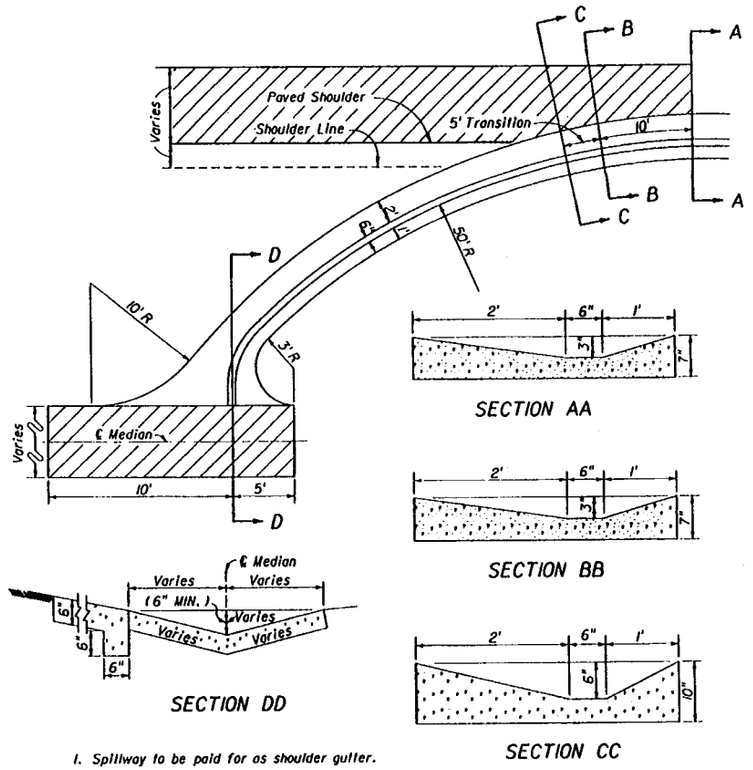

1. Spillway to be paid for as shoulder gutter.
2. If spillway empties into a shallow or median ditch, the detail should be modified as necessary.

DETAIL OF CONC. SPILLWAY AT END OF SHOULDER GUTTER

(TO BE USED WHERE INLETS, PIPES & ENDWALLS ARE IMPRACTICAL)

STATE OF FLORIDA DEPARTMENT OF TRANSPORTATION
ROAD DESIGN

CONCRETE SPILLWAYS
SHOULDER GUTTER SPILLWAY

	Names	Dates	Approved By
Designed By			State Drainage Engineer
Drawn By			
Checked By			
F.H.W.A. Approved:		11/16/78	

Revision No.	Sheet No.	Index No.
81	2 of 2	284

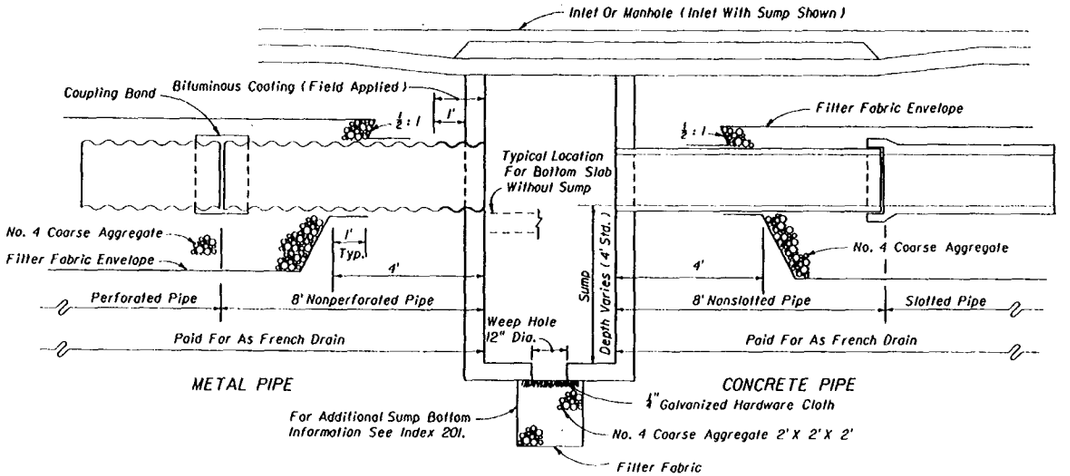

LONGITUDINAL SECTION

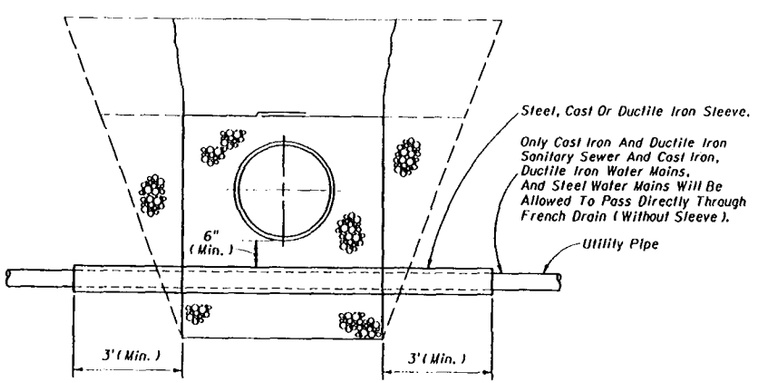

ROUND PIPE SHOWN

UTILIITY PIPES THRU FRENCH DRAIN

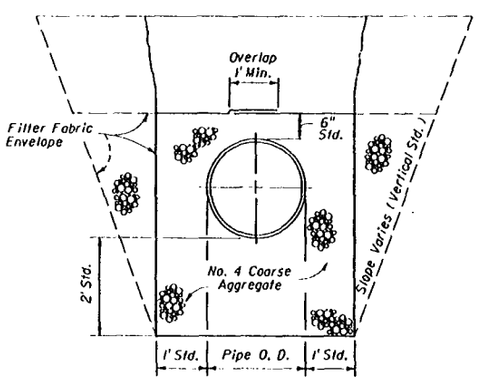

ROUND PIPE SHOWN

STANDARD CROSS SECTION (ENLARGED)

FRENCH DRAIN SYSTEM

GENERAL NOTES

1. Pipe shall be any of the optional types permitted in Section 443 of the Specifications unless otherwise restricted in the plans. Dissimilar types of pipe will not be permitted in a continuous run of pipe.
2. Concrete pipe shall be placed with the slots positioned on sides.
3. Alignment joints are standard (gaskets not required). Recorrugation of metal pipe ends not required.
4. The contractor may submit other methods of providing slots having equal or greater area of opening, for approval by the Engineer.
5. Filter fabric shall be Subsurface Drainage type meeting the requirements of Section 985. All filter fabric joints shall lap a minimum of one (1) foot.
6. The standard cross section shall be constructed unless other section(s) described or detailed in the plans.
7. For supplemental details see Index No. 280.
8. The contractor shall take the necessary precautions to prevent contamination of the trench with sand, silt and foreign materials.
9. The 12" diameter weep hole shall be eliminated, when the bottom of the inlet is below the normal water table, unless otherwise shown in the plans.
10. French drains following the typical cross section shall be paid for under the contract unit price for French Drains, LF. The unit price shall include the cost of pipe, pipe plugs, pipe fittings, coarse aggregate and filter fabric in place, and the cost for trench excavation, backfill and compaction. The unit price shall also include the cost for disposal of surplus excavated materials and cost for restoration of pavement removed or damaged by french drain construction, but shall not include payments for items paid for elsewhere.

    French drains with a significantly different cross section shall be paid for under the contract unit prices for separate items as follows:

    (a) Slotted or Perforated Pipe Culvert, LF. Unit price shall include cost for pipe, pipe plugs and fittings in place.

    (b) Ballast Rock (French Drain Aggregate), CY. Unit price shall include cost for coarse aggregate in place, and cost for trench excavation, backfill and compaction. The unit price shall also include the cost for disposal of surplus excavated materials and cost for restoration of pavement removed or damaged by french drain construction, but shall not include payment for items paid for elsewhere.

    (c) Plastic Filter Fabric (Subsurface), SY. Unit price shall be for cost of fabric in place. Quantity shall be determined by plan neat dimensions of the fabric envelope.

DESIGN NOTES

1. Pipe invert should be at or above the water table whenever possible.
2. French drains with minor dimensional changes or otherwise different from the standard cross-section shall be either described or detailed in the plans.

   French drains with significantly different cross-sections shall be detailed in the plans.

STATE OF FLORIDA DEPARTMENT OF TRANSPORTATION
ROAD DESIGN

FRENCH DRAIN

	Names	Dates	Approved By
Designed By	WPS	09/83	S. A. McLemore, State Drainage Engineer
Drawn By	RWR	09/83	
Checked By	EGR	09/83	Revision No. 92 · Sheet No. 1 of 2 · Index No. 285
F.H.W.A. Approved:		10/06/83	

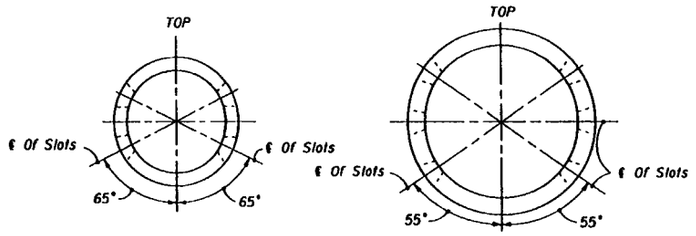

15"-30" 36"-72"

ELLIPTICAL PIPE		
Pipe Size	Slot Cut Opening c	
	Min.	Max.
14"x23"	10"	12"
19"x30"	14"	16"
24"x38"	14"	16"
29"x45"	20"	22"
34"x53"	20"	22"
38"x60"	20"	22"

ROUND PIPE		
Pipe Size	Slot Cut Opening c	
	Min.	Max.
15"	12"	14"
18"	12"	14"
24"	16"	18"
30"	16"	18"
36"	22"	24"
42"	22"	24"
48"	22"	24"
54"	24"	26"
60"	24"	26"
66"	24"	26"
72"	24"	26"

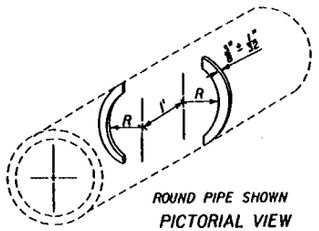

ROUND PIPE SHOWN
PICTORIAL VIEW

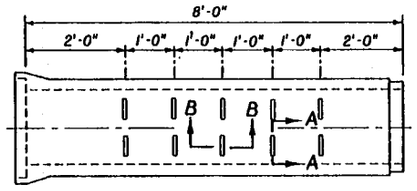

SIDE VIEW

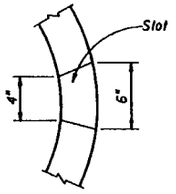

SECTION AA

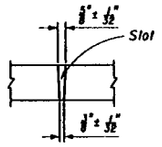

SECTION BB

OPTION A - ROUND PIPE

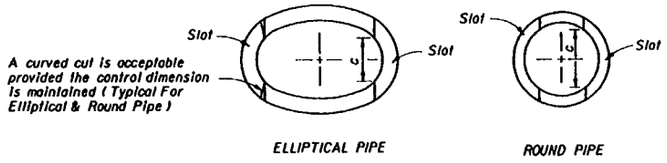

ELLIPTICAL PIPE ROUND PIPE

SECTION AA

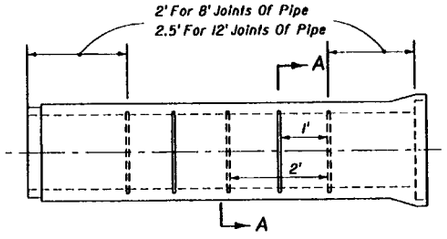

SIDE VIEW

OPTION B - ROUND OR ELLIPTICAL PIPE

SLOTTED PIPE OPTIONS

STATE OF FLORIDA DEPARTMENT OF TRANSPORTATION
ROAD DESIGN

FRENCH DRAIN

	Names	Dates
Designed By		
Drawn By		
Checked By		
F.H.W.A. Approved:		

Approved By
State Drainage Engineer

Revision No.	Sheet No.	Index No.
92	2 of 2	285

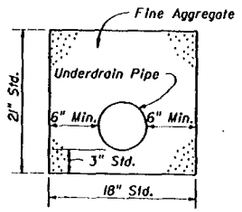

TYPE I

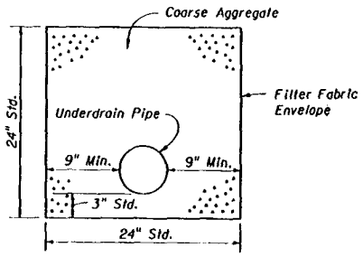

TYPE II

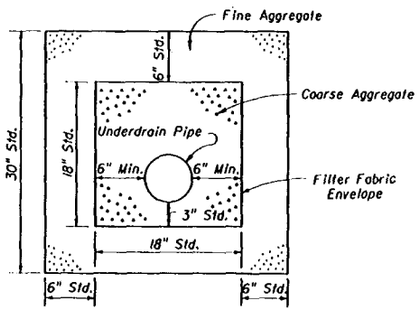

TYPE III

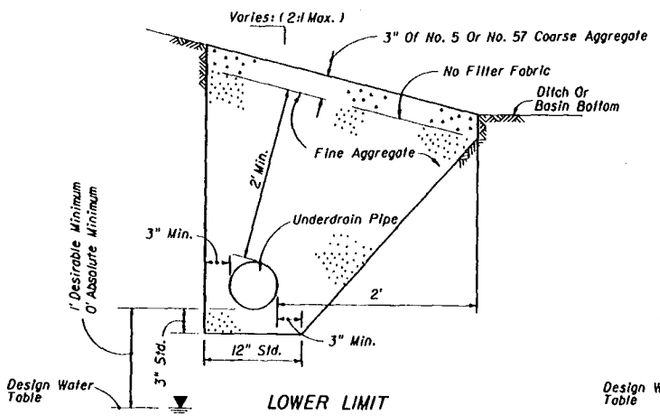

LOWER LIMIT

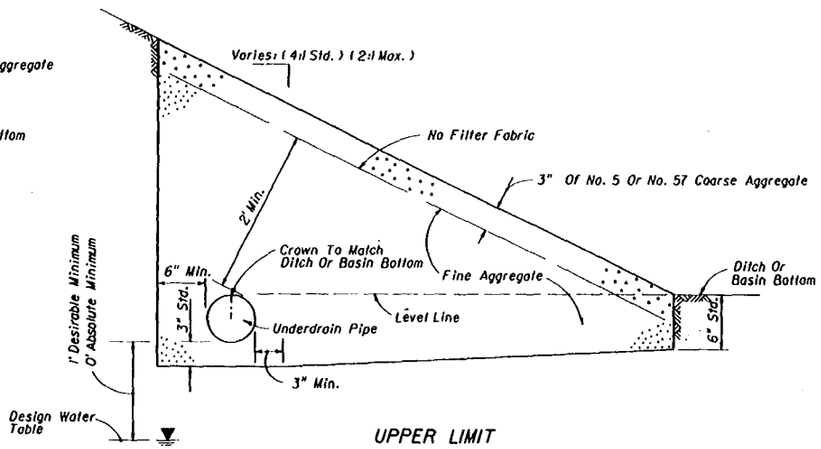

UPPER LIMIT

TYPE V a

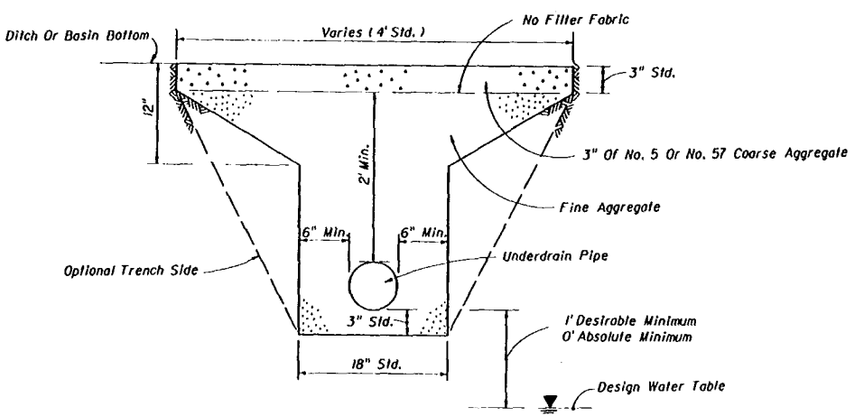

TYPE V b

DESIGN NOTES FOR UNDERDRAIN

1. The type of underdrain should be selected to meet design water removal rate and soil conditions. Caution is prescribed in the use of these typical sections since special designs may be required to satisfy project conditions.
2. Type I underdrain is intended for minimum water removal conditions.
3. Type II underdrain is intended for moderate water removal conditions. Where reactive conditions may create chemical clogging, the use of an inert material and/or elimination of the filter fabric may be necessary.
4. Type III underdrain is intended for maximum water removal conditions. The filter fabric separation is required between the coarse aggregate or fine aggregate including those described in general notes 2 and 3. Design note 3 applies for reactive conditions.
5. Type V underdrain is intended for use in detention basins and other locations which require a filtration system. Type Va is recommended and Type Vb should be used only when Type Va is inappropriate. The standard fine aggregate specified for Type V underdrain conforms to filtration gradation requirements of Chapter 17-25.025 F.A.C..
6. The designer should evaluate whether a filter fabric envelope is required around underdrain Types I, III, and Va. When required, fabric shall be specified in the plans. Fabric to be paid for separately.

GENERAL NOTES FOR UNDERDRAIN

1. The underdrain pipe shall be either 4" smooth or 5" corrugated tubing unless otherwise shown in the plans. The size to be furnished will be based on the nominal internal diameter of a pipe with a smooth interior wall. Except when prohibited by the plans, the special provisions or this standard, pipe with a corrugated interior wall may be provided based on the following size equivalency.
   - 4" smooth interior equivalent to 5" corrugated interior
   - 5" smooth interior equivalent to 6" corrugated interior
   - 6" smooth interior equivalent to 8" corrugated interior
   - 8" smooth interior equivalent to 10" corrugated interior
2. Fine aggregate shall be quartz sand meeting the requirements of Sections 902-4 of the Standard Specifications.
3. Coarse aggregate shall be gravel or stone meeting the requirements of Sections 901-2 or 901-3 respectively. The gradation shall meet Section 901-6, Grades 4, 467, 5, 56 or 57 stone unless restricted in the plans.
4. Underdrain Type I, II, III and V shall be in accordance with Section 440.
5. Filter fabric shall be Type D-3 (See Index 199).
6. When corrugated polyethylene tubing with slots or 360° perforations is used in conjunction with fine aggregate, a filter fabric sock meeting Section 948-5 is required.
7. For standard location details, see Index 500. Special locations require location details in the plans.
8. All filter fabric joints shall overlap a minimum of one (1) foot.
9. Underdrain outlet pipes shall be constructed in accordance with the outlet pipe details and general notes for Draincrete Edgedrain, Sheet 2 of 2. Outlet pipes are to be 4" diameter unless larger pipe sizes are specified in the plans.
10. Pay item shall be based on the size of the smooth interior products. The contract unit price for Underdrain, LF., shall include the following components for each underdrain type as follows:
    - Type I: Pipe, sock and aggregate.
    - Type II: Pipe, aggregate and filter fabric envelope.
    - Type III: Pipe, aggregates and internal filter fabric envelope.
    - Type Va & Vb: Pipe, sock and aggregates.

    External filter fabric envelopes, when specified for underdrain Types I, III, and Va, shall be paid for separately under the contract unit price for Plastic Filter Fabric (SY).

    The contract unit price for Pipe Underdrain Outlet (4") LF., shall be full compensation for removal of existing shoulder pavement, trench excavation, pipe and fittings, hardware cloth, stubbing into existing inlets and paved ditches, restoration of ditch pavement, backfill in place and disposal of excess materials.

    Concrete apron shall be paid for under the contract unit price for Class I Concrete (Miscellaneous), CY.

    Sodding shall be paid for under the contract unit price for Sodding, SY.

    Shoulder pavement shall be paid for under the contract unit price for Asph Conc Type S, TN.

    Tack coat shall be paid for under the contract unit price for Bit Matl (Tack Coat), GA.

UNDERDRAIN

STATE OF FLORIDA DEPARTMENT OF TRANSPORTATION
ROAD DESIGN

UNDERDRAIN AND EDGEDRAIN

	Name	Date
Designed By	EGR	10/85
Drawn By	HSD	10/85
Checked By	EGR	10/85
F.H.W.A. Approved:		

Approved By: S. A. McLemore, State Drainage Engineer

Revision No.	Sheet No.	Index No.
94	1 of 2	286

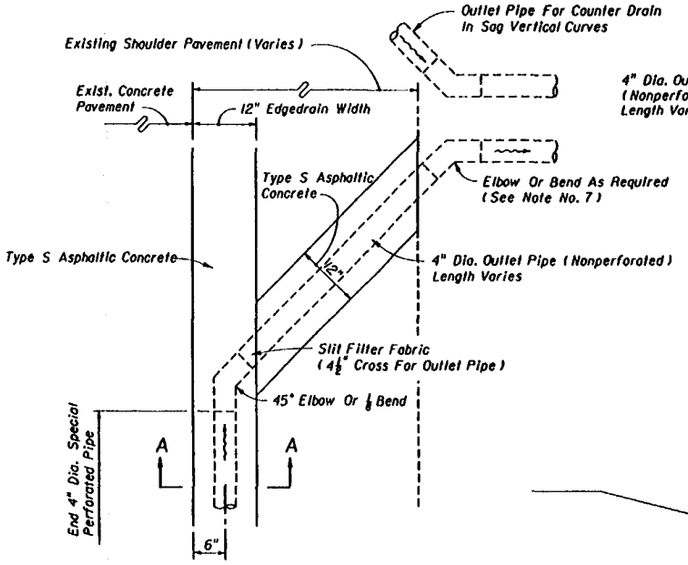

ALIGNMENT OF OUTLET PIPE

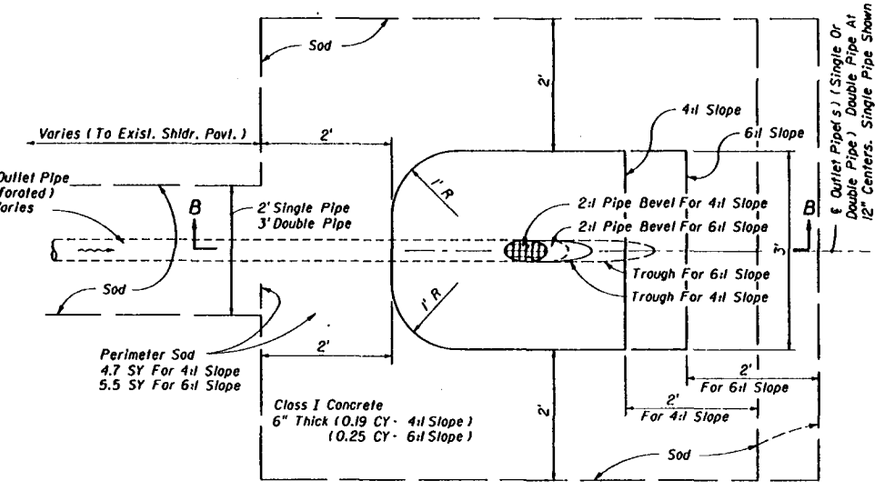

PLAN - OUTLET PIPE APRON

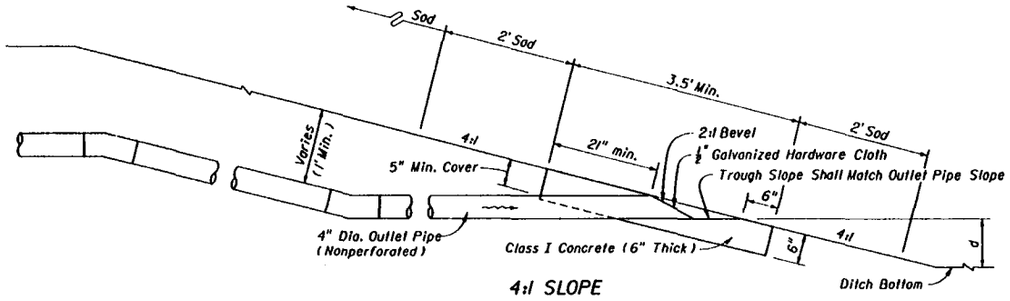

4:1 SLOPE

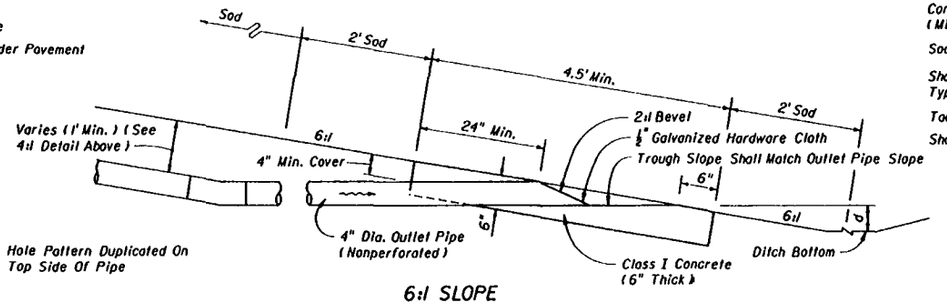

6:1 SLOPE

SECTIONS BB

d = 1.75' std. for grassed ditches; 0.5' std. for paved ditches [less is acceptable to provide minimum 0.1% outlet pipe slope]

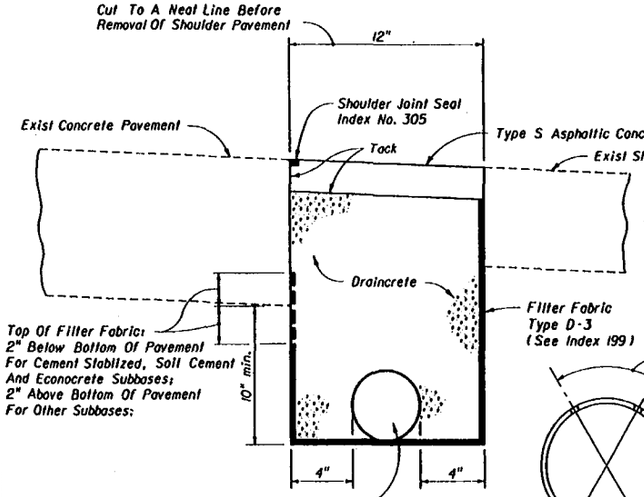

SECTION AA

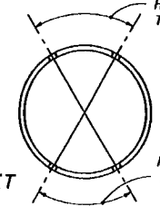

INSET

GENERAL NOTES FOR DRAINCRETE EDGEDRAIN

1. The contractor shall confine the construction of draincrete edgedrain to an area in which the entire operation can be carried out in five (5) work days, unless another construction period is called for in the plans, with sufficient time allowed for the draincrete to set before placement of the Type S asphaltic concrete pavement.
   No trench greater than 2" in depth will be allowed overnight. Trenches shall be barricaded at all times.
2. Draincrete edgedrain shall be constructed adjacent to the low edge of the roadway pavement. When the low edge shifts between outside and inside edges of pavement the draincrete edgedrain shall extend 50' beyond and begin 50' before the flat point (100' overlap).
   Draincrete edgedrain shall be placed on the low side of ramps of crossrood terminals.
3. Draincrete edgedrain shall be constructed on a grade parallel with the edge of pavement profile, except on profiles flatter than one-tenth percent (0.10%) the draincrete edgedrain shall be constructed on a grade of one-tenth percent (0.10%).
4. Immediately prior to placing the filter fabric the entire vertical face of the concrete pavement shall be cleaned to remove adhering base material and soil.
5. The Contractor shall devise a procedure for holding the filter fabric in position on the vertical face of the trench. The procedure must be approved by the Engineer prior to placement of the draincrete.
6. The upper end of each separate run of draincrete edgedrain pipe shall be capped.
7. Edgedrain outlet pipes shall be constructed at a maximum of 500' intervals. Elbows or ⅛ bends shall be used to connect the outlet pipe to the edgedrain pipe. The elbows or bends shall be of the same material as the outlet pipe but compatible with the edgedrain pipe.
   When directed by the Engineer, outlet pipes shall be stubbed into existing inlets or into existing ditch pavements at an elevation 0.5' above the inlet flowline or ditch bottom. Concrete apron and bordering sod are not required for stubbed outlets, but replacement sodding will be required at trenches for pipes stubbed into paved ditches.
   In sag vertical curves separate outlet pipes for edgedrains from opposite directions shall use a single apron unless otherwise shown in the plans or otherwise directed by the Engineer.
   Backfill around outlet pipes shall be of cohesive soils, draincrete will not be permitted.
8. Existing paved shoulder that is removed for the construction of outlet pipes shall be replaced with Type S asphaltic concrete at the rate of 500 lbs. per square yard.
9. The contract unit price for Edgedrain (Draincrete) (4") LF., shall be full compensation for removal of existing shoulder pavement, trench excavation, disposal of excess materials, filter fabric, draincrete edgedrain pipe and fittings, draincrete, and barricades necessary for underdrain construction.

   The contract unit price for Edgedrain Outlet Pipe (4") LF., shall be full compensation for removal of existing shoulder pavement, trench excavation, pipe and fittings, hardware cloth, stubbing into existing inlets and paved ditches, restoration of ditch pavement, backfill in place and disposal of excess materials.

   Concrete apron shall be paid for under the contract unit price for Class I Concrete (Miscellaneous), CY.

   Sodding shall be paid for under the contract unit price for Sodding, SY.

   Shoulder pavement shall be paid for under the contract unit price for Asph Conc Type S, TN.

   Tack coat shall be paid for under the contract unit price for Bit Matl (Tack Coat), GA.

   Shoulder joint seal shall be paid for under the contract unit price for Pavt Joint Seal, LF.

EDGEDRAIN

DRAINCRETE EDGEDRAIN ON RURAL FACILITIES

STATE OF FLORIDA DEPARTMENT OF TRANSPORTATION
ROAD DESIGN

UNDERDRAIN AND EDGEDRAIN

	Names	Dates
Designed By		
Drawn By	HSD/dds	06/86
Checked By	JWC/RWL KGH	06/86
F.H.W.A. Approved:		11/07/86

Approved By: J. A. M. Cervera, State Drainage Engineer

Revision No.	Sheet No.	Index No.
94	2 of 2	286

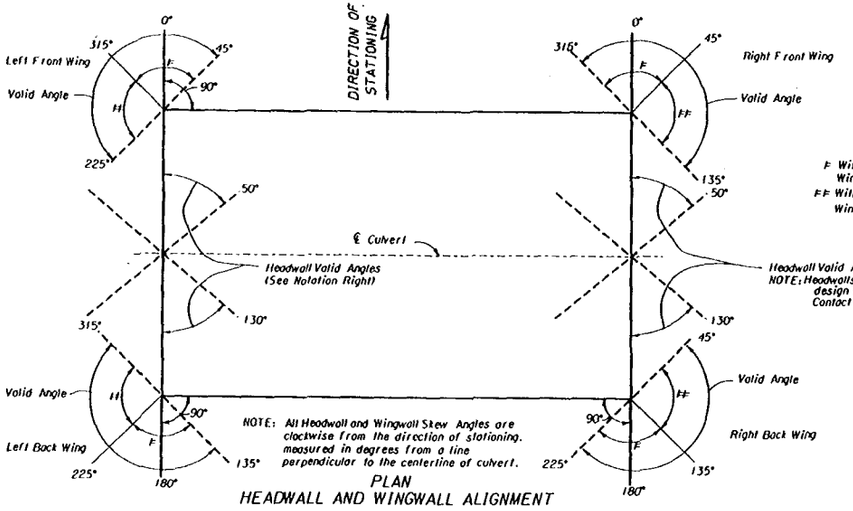

F Within these limits the top surface of the Wingwalls shall be level.

FF Within these limits the top surface of the Wingwalls shall be sloped.

Headwall Valid Angles
NOTE: Headwalls with skew angles between 51° and 129° require special design authorization. Other design options should be considered. Contact the District Drainage Engineer to obtain authorization.

NOTE: All Headwall and Wingwall Skew Angles are clockwise from the direction of stationing, measured in degrees from a line perpendicular to the centerline of culvert.

PLAN
HEADWALL AND WINGWALL ALIGNMENT

NOTE: Designs for box culverts under this index are to be produced only by computer analysis, utilizing the program named PSTDN55. Designs under this index are to be limited to the live loads and dimensional restraints shown in the General Notes of this index and to the fill on the barrel(s) as shown in the roadway plans. It is the construction Contractors responsibility to provide for suppporting construction loads that exceed the above loadings.

GENERAL NOTES

DESIGN SPECIFICATIONS: A.A.S.H.T.O. 1983.

LOADING: HS20-44, Modified for Military Loading as Required

SURFACE FINISH: The Class Surface finish for all concrete surfaces shall be a general surface finish.

SKEWED CONSTRUCTION JOINTS: Construction joints in barrels of culverts with skewed wingwalls may be placed parallel to the headwalls and the reinforcing steel in the slabs may be cut provided that the cut reinforcing steel extends beyond the construction joint enough for splices to be made in accordance with the table (lower right) this sheet. The cost of construction joints shall be at the expense of the contractor.

CULVERT EXTENTIONS: For cut backs and ties into existing concrete box culverts see Index No. 280

* REINFORCING BAR SCHEDULE:

A. When the depth is less than or equal to 2.0 feet, Bars C2 are utilized in the bottom of the top slab. In all other cases, Bars C2 are replaced with Bars C1 spaced at 18 inches on centers.

B. When the skew angle for a headwall equals 0 degrees plus or minus 11 degrees the respective S Bars (S2 or S3) will not be utilized.

C. When the barrel height is less than 6 Feet, Bars B2 will be eliminated as shown in Detail J.

D. If the span is less than five feet, Bars A1 and A2 will be Type 11 Bars.

E. The portions of Bars "W" that extend thru Construction Joints into wingwalls above footings shall be wrapped with one layer of 55 lb smooth roofing.

F. For culvert extensions Bar C1 is redesignated Bar C3 in the bottom slab.

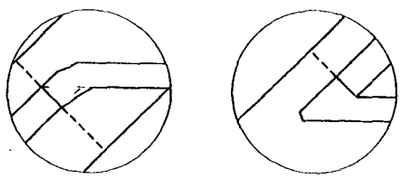

DETAIL "G"

DETAIL "H"

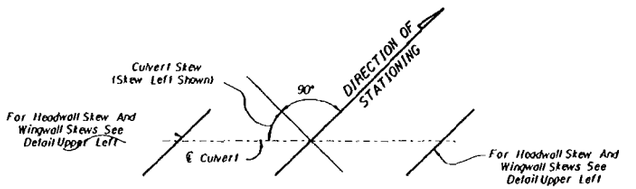

SKETCH "A"

NOTE: For Culvert Skew see Roadway Plans.

CULVERT ALIGNMENT

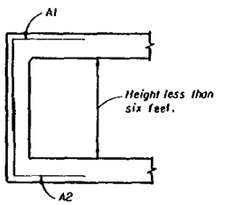

DETAIL "J"

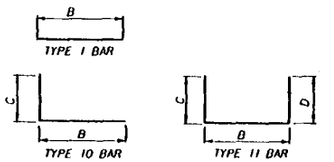

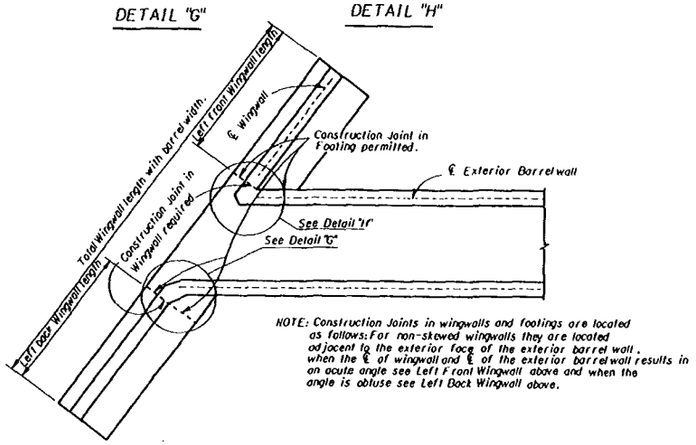

NOTE: Construction Joints in wingwalls and footings are located as follows: For non-skewed wingwalls they are located adjacent to the exterior face of the exterior barrel wall, when the ℄ of wingwall and ℄ of the exterior barrel wall results in an acute angle see Left Front Wingwall above and when the angle is obtuse see Left Back Wingwall above.

PART PLAN SHOWING WINGWALLS AND THE LOCATION OF CONSTRUCTION JOINTS

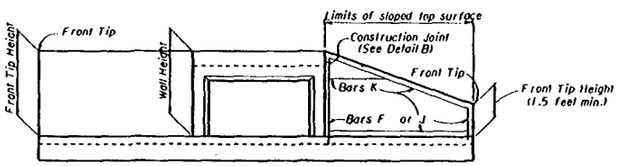

END ELEVATION OF CULVERT

NOTE: Cut the vertical bars F as required for the longest bar and use the remainder for the shortest bar in the wingwall. The vertical bars J and the horizontal bars K shall be constructed likewise. The lengths shown in the reinforcing steel bar schedule for bars F, J and K require cutting for sloped top wingwalls only.

TABLE OF MINIMUM BAR SPLICE LENGTHS

BAR SIZE	SPLICE	BAR SIZE	SPLICE
4	1'-8"	8	3'-10"
5	2'-2"	9	4'-10"
6	2'-7"	10	6'-1"
7	3'-0"	11	7'-6"

STATE OF FLORIDA DEPARTMENT OF TRANSPORTATION
ROAD DESIGN

CONCRETE BOX CULVERT
CULVERT DETAILS

	Names	Dates
Designed By		
Drawn By	GFG	1-86
Checked By	RCB	1-86
F.H.W.A. Approved:		

Approved By: S.A. McLemore, State Drainage Engineer

Revision No.	Sheet No.	Index No.
90	1 of 5	290

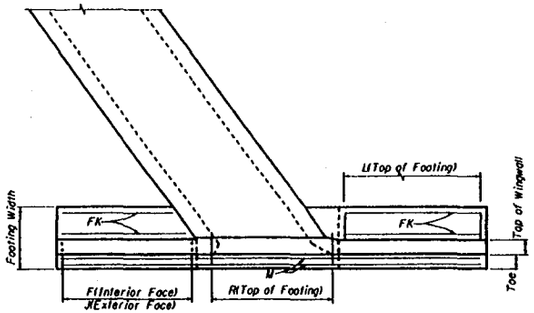

PART PLAN AT END OF CULVERT

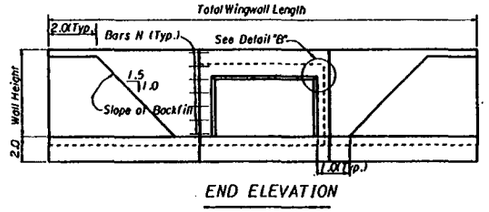

END ELEVATION

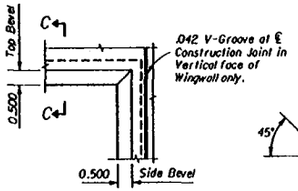

DETAIL "B"



SECTION C-C

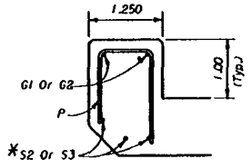

DETAIL "D"

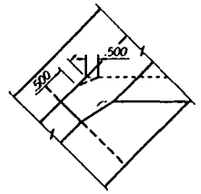

DETAIL "E"

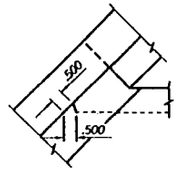

DETAIL "F"

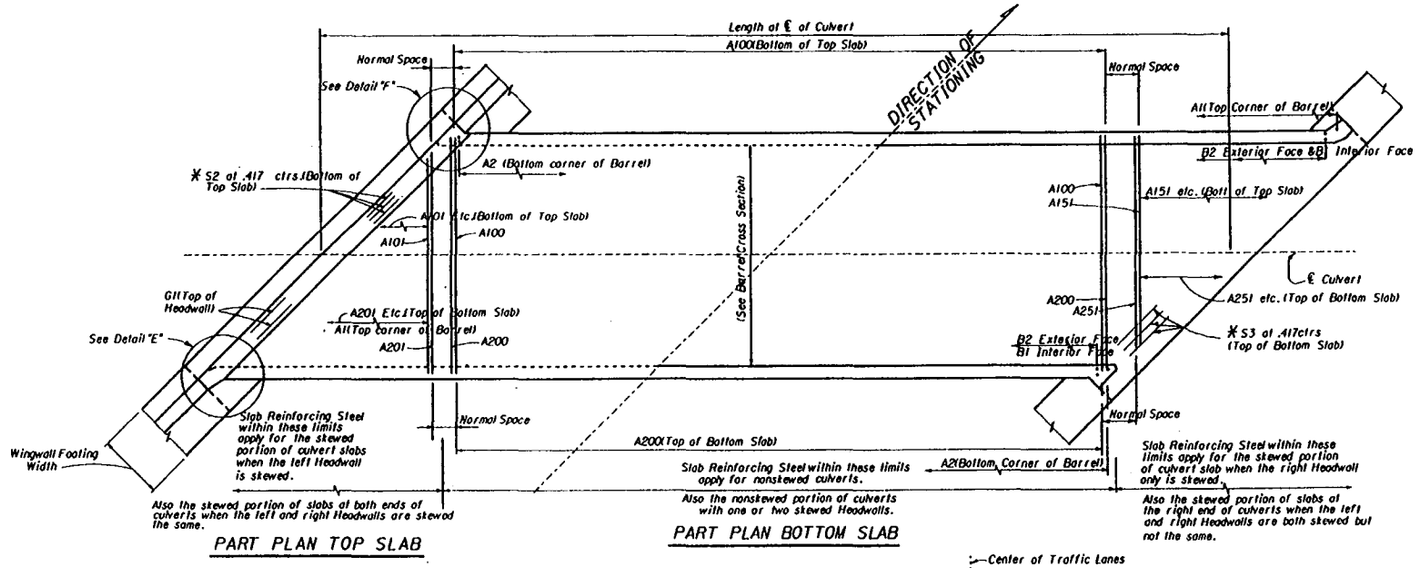

PART PLAN TOP SLAB

PART PLAN BOTTOM SLAB

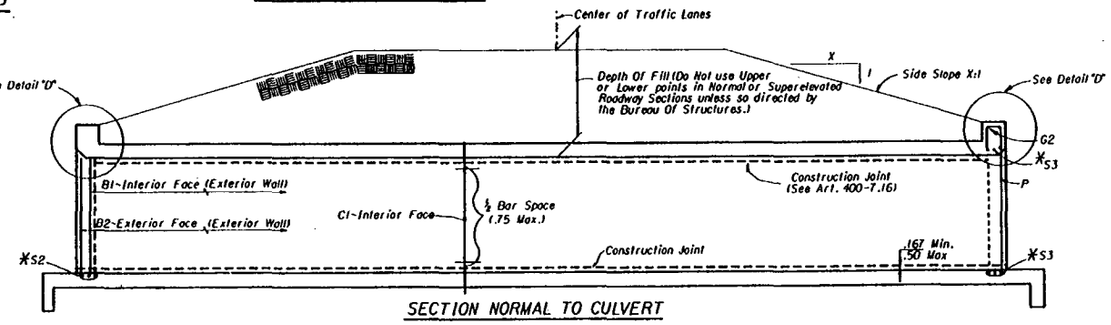

SECTION NORMAL TO CULVERT

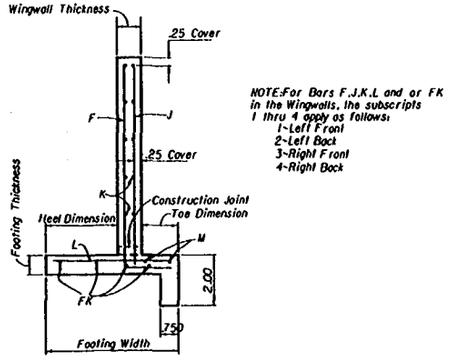

NOTE: For Bars F, J, K, L and or FK in the Wingwalls, the subscripts 1 thru 4 apply as follows:
1-Left Front
2-Left Back
3-Right Front
4-Right Back

SECTION THRU WINGWALL

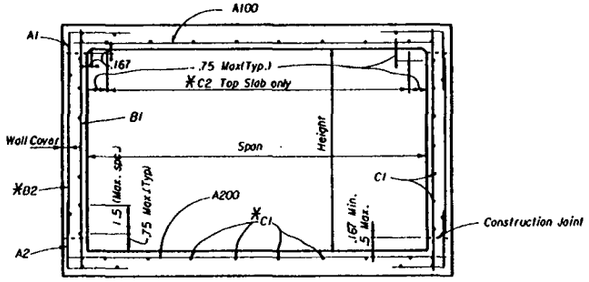

SECTION THRU BARREL

NOTE: The location of the first bar from the ends of the culvert shall not be less than .25, but not greater than one half the bar spacing.

* See Culvert Details and Reinforcing Bar Schedule, Sheet 1 of 5

STATE OF FLORIDA DEPARTMENT OF TRANSPORTATION
ROAD DESIGN

CONCRETE BOX CULVERT
SINGLE BARREL

	Names	Dates
Designed By		
Drawn By	GFG	1-86
Checked By	RCB	1-86
F.H.W.A. Approved:		

Approved By S.A. McClemore
State Drainage Engineer

Revision No.	Sheet No.	Index No.
90	2 of 5	290

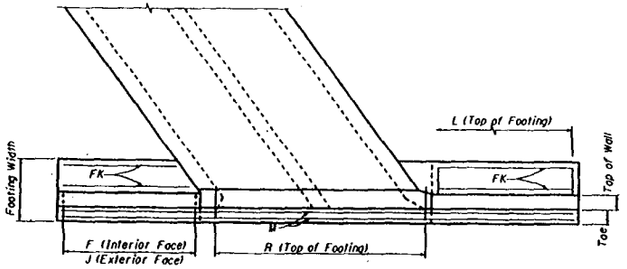

PART PLAN AT END OF CULVERT

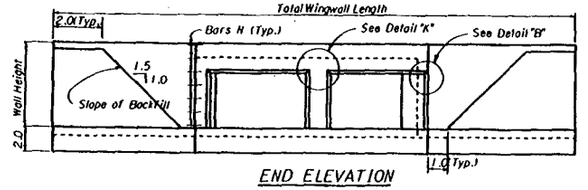

END ELEVATION

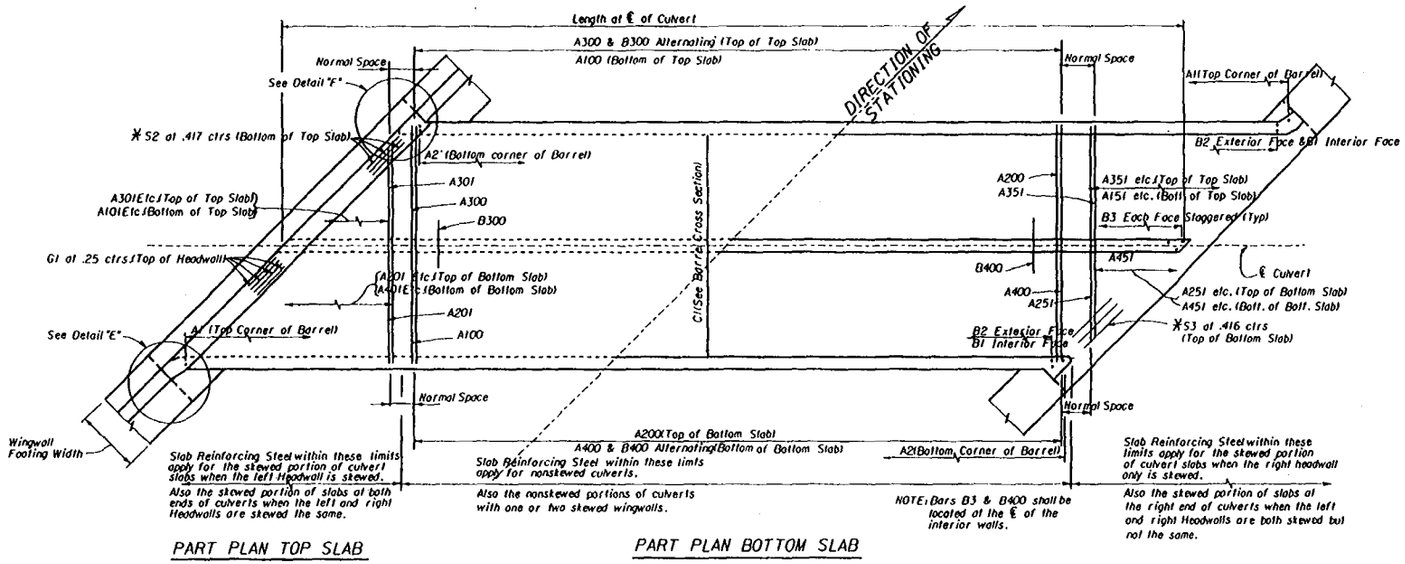

PART PLAN TOP SLAB

PART PLAN BOTTOM SLAB

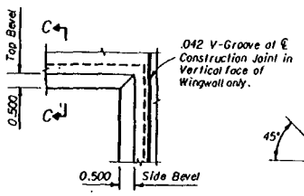

DETAIL "B"

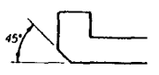

SECTION C-C

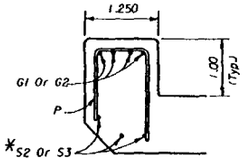

DETAIL "D"

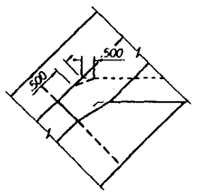

DETAIL "E"

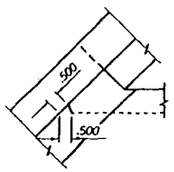

DETAIL "F"

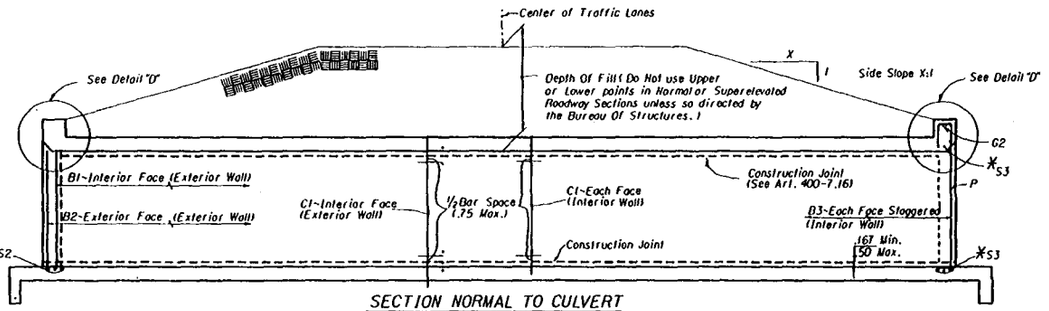

SECTION NORMAL TO CULVERT

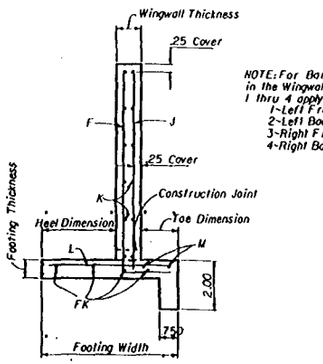

SECTION THRU WINGWALL

NOTE: For Bars F, J, K, L and or FK in the Wingwalls, the subscripts 1 thru 4 apply as follows:
1-Left Front
2-Left Back
3-Right Front
4-Right Back

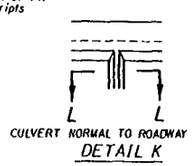

CULVERT NORMAL TO ROADWAY SHOWN

DETAIL K

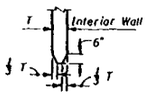

SECTION LL

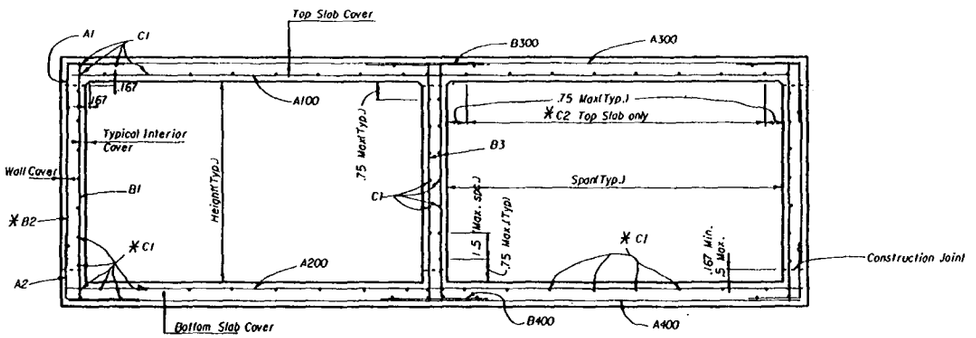

SECTION THRU BARREL

NOTE: The location of the first bar from the ends of the culvert shall not be less than .25, but not greater than one half the bar spacing.

* See Culvert Details and Reinforcing Bar Schedule, Sheet 1 of 5

STATE OF FLORIDA DEPARTMENT OF TRANSPORTATION
ROAD DESIGN

CONCRETE BOX CULVERT
DOUBLE BARREL

	Names	Dates
Designed By		
Drawn By	GFG	1-86
Checked By	RCB	1-86
F.H.W.A. Approved:		

Approved By: A. A. McLemore
State Bridge Engineer

Revision No.	Sheet No.	Index No.
90	3 of 5	290

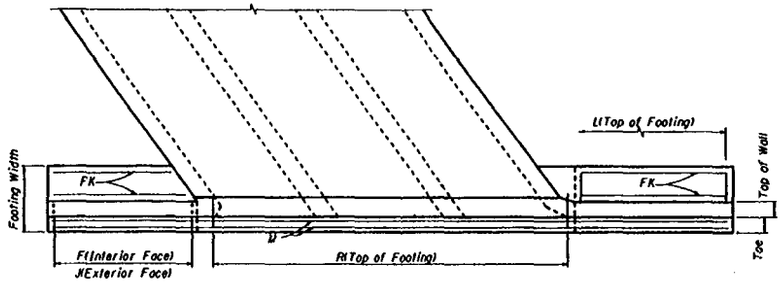

PART PLAN AT END OF CULVERT

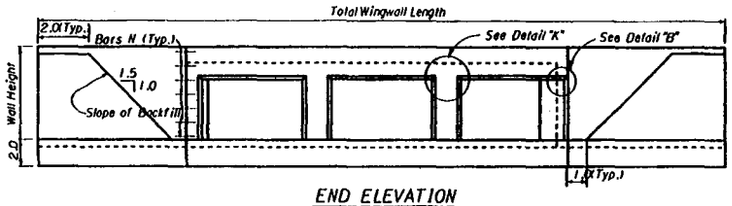

END ELEVATION

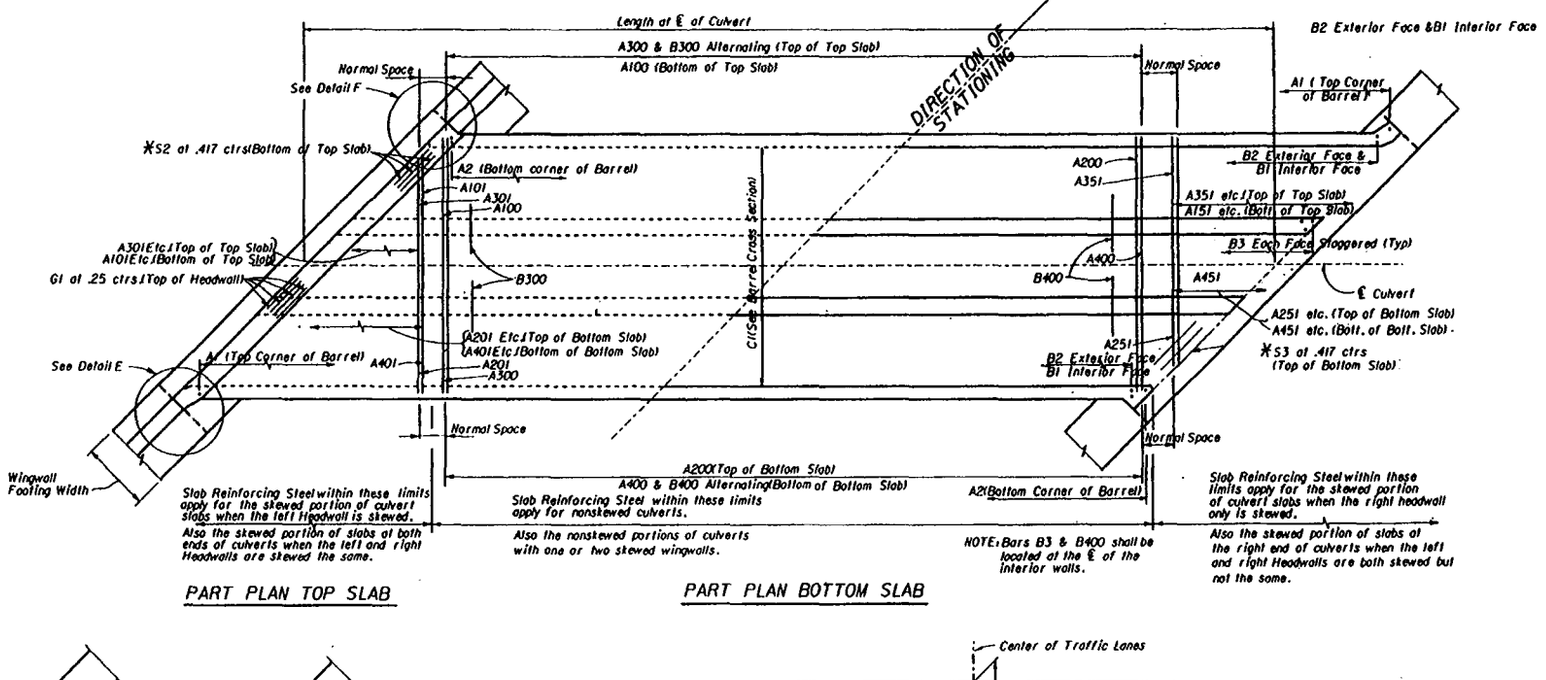

PART PLAN TOP SLAB

PART PLAN BOTTOM SLAB

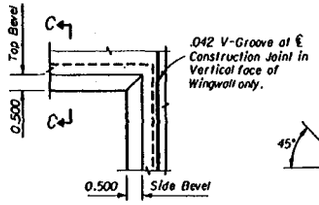

DETAIL "B"



SECTION C-C

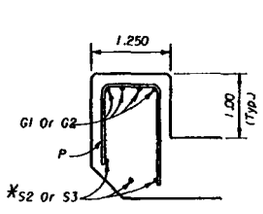

DETAIL "D"

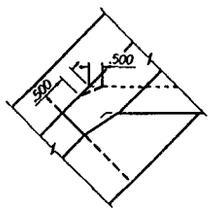

DETAIL "E"

DETAIL "F"

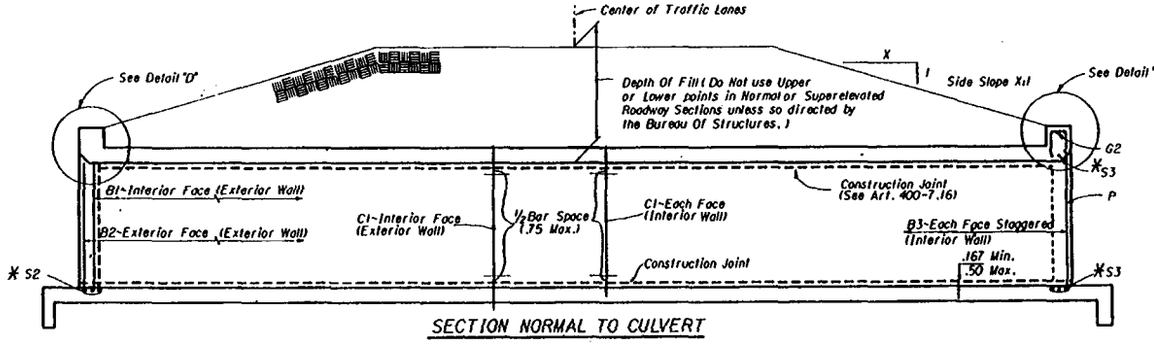

SECTION NORMAL TO CULVERT

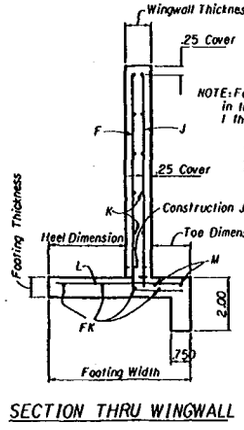

SECTION THRU WINGWALL

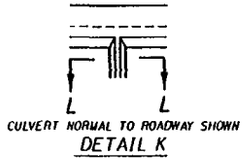

CULVERT NORMAL TO ROADWAY SHOWN

DETAIL K

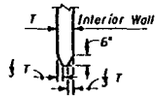

SECTION LL

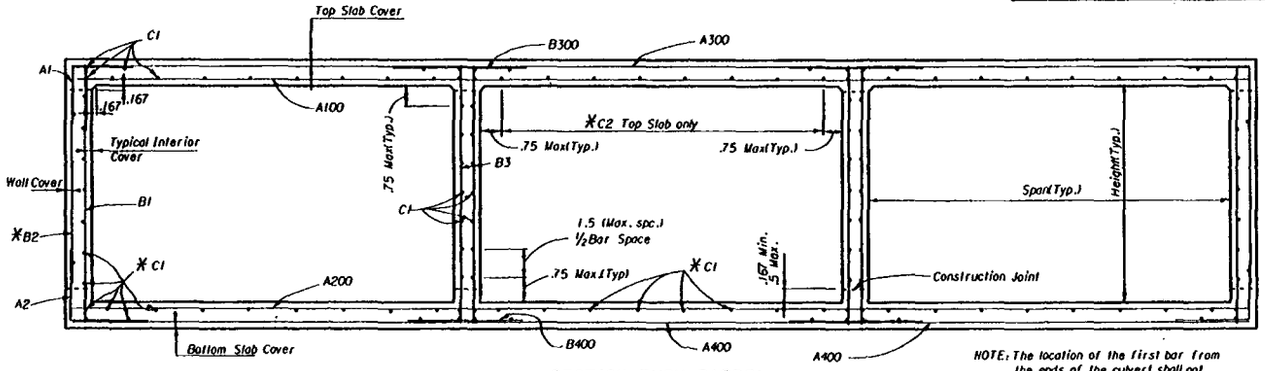

SECTION THRU BARREL

NOTE: The location of the first bar from the ends of the culvert shall not be less than .25, but not greater than one half the bar spacing.

*See Culvert Details and Reinforcing Bar Schedule, Sheet 1 of 5

STATE OF FLORIDA DEPARTMENT OF TRANSPORTATION
ROAD DESIGN

CONCRETE BOX CULVERT
TRIPLE BARREL

	Names	Dates
Designed By		
Drawn By	GFO	1-86
Checked By	RCB	1-86
F.H.W.A. Approved:		

Approved By: J. A. M. Lessing
State Drainage Engineer

Revision No.	Sheet No.	Index No.
90	4 of 5	290

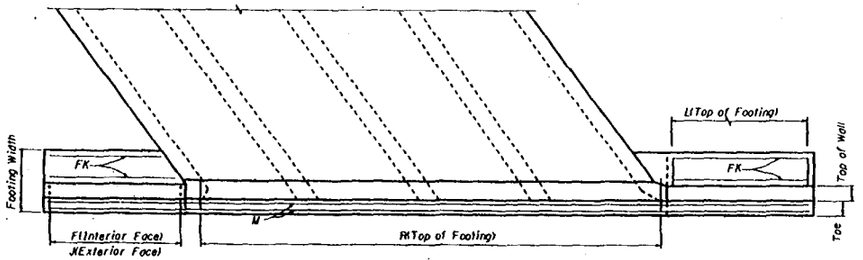

PART PLAN AT END OF CULVERT

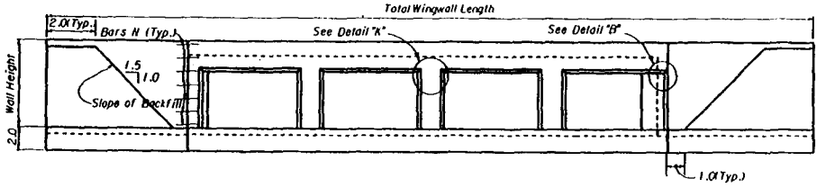

END ELEVATION

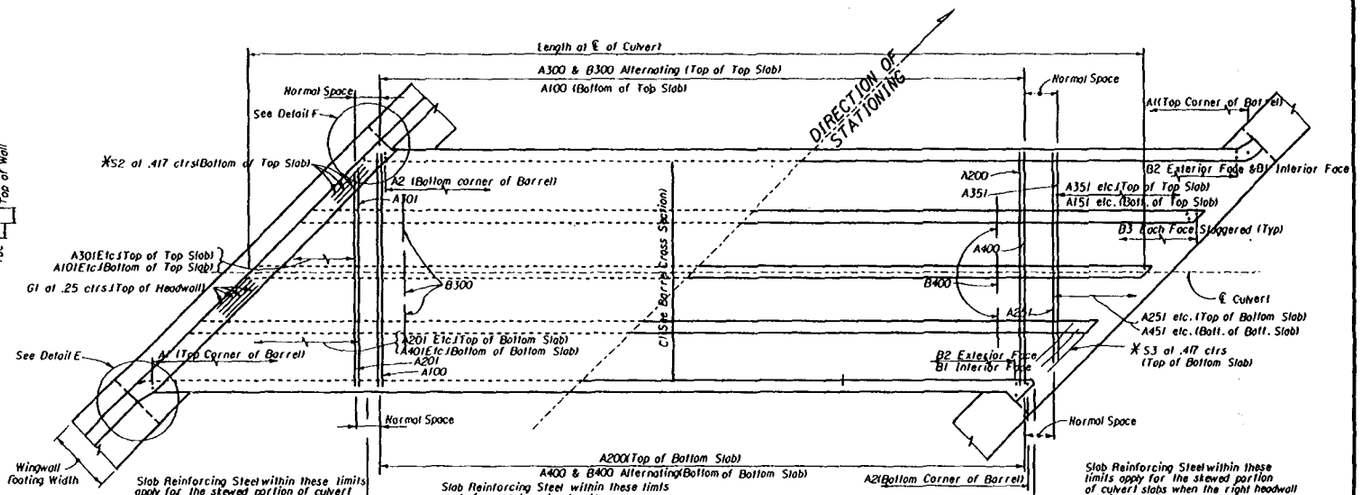

Slab Reinforcing Steel within these limits apply for the skewed portion of culvert slabs when the left Headwall is skewed.
Also the skewed portion of slabs at both ends of culverts when the left and right Headwalls are skewed the same.

PART PLAN TOP SLAB

Slab Reinforcing Steel within these limits apply for nonskewed culverts.
Also the nonskewed portions of culverts with one or two skewed Headwalls.

NOTE: Bars B300 & B400 shall be located at the ℄ of the interior walls.

PART PLAN BOTTOM SLAB

Slab Reinforcing Steel within these limits apply for the skewed portion of culvert slabs when the right headwall only is skewed.
Also the skewed portion of slabs at the right end of culverts when the left and right Headwalls are both skewed but not the same.

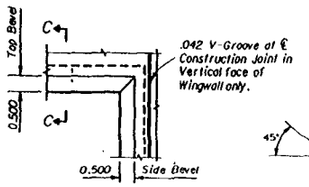

DETAIL "B"



SECTION C-C

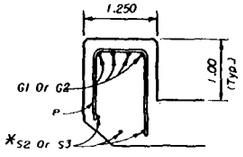

DETAIL "D"

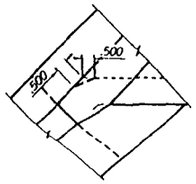

DETAIL "E"

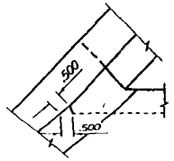

DETAIL "F"

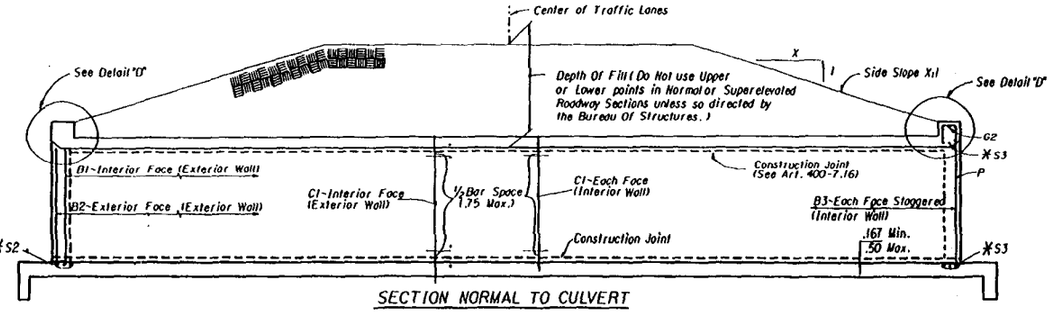

SECTION NORMAL TO CULVERT

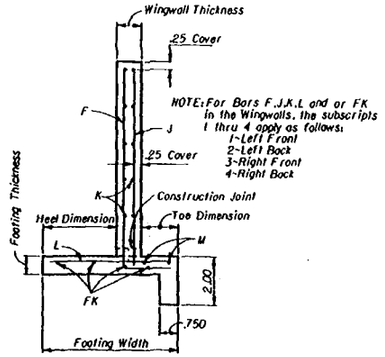

NOTE: For Bars F,J,K,L and or FK in the Wingwalls, the subscripts 1 thru 4 apply as follows:
1-Left Front
2-Left Back
3-Right Front
4-Right Back

SECTION THRU WINGWALL

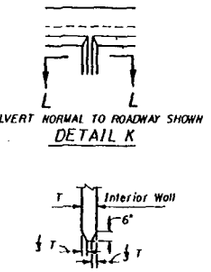

CULVERT NORMAL TO ROADWAY SHOWN

DETAIL K

SECTION LL

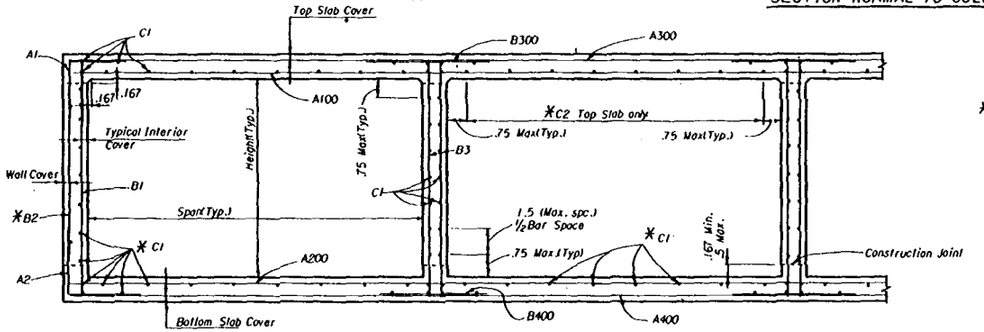

SECTION THRU BARREL

NOTE: The location of the first bar from the ends of the culvert shall not be less than .25, but not greater than one half the bar spacing.

* See Culvert Details and Reinforcing Bar Schedule, Sheet 1 of 5

STATE OF FLORIDA DEPARTMENT OF TRANSPORTATION
ROAD DESIGN

CONCRETE BOX CULVERT

QUADRUPLE BARREL

	Names	Dates
Designed By		
Drawn By	GFG	1-86
Checked By	RCB	1-86
F.H.W.A. Approved		

Approved By J.D. McLemore
State Drainage Engineer

Revision No.	Sheet No.	Index No.
90	5 of 5	290

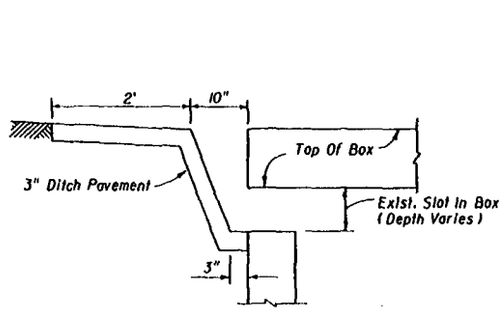

ELEVATION

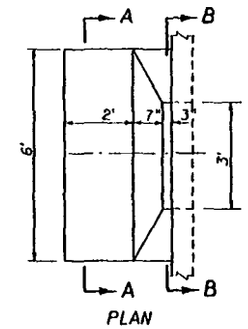

PLAN

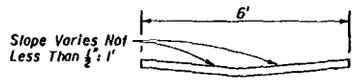

SECTION AA

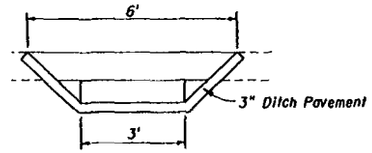

SECTION BB

SAFETY MODIFICATION FOR INLETS IN BOX CULVERTS

SAFETY MODIFICATION FOR INLETS IN BOX CULVERTS

STATE OF FLORIDA DEPARTMENT OF TRANSPORTATION
ROAD DESIGN

SAFETY MODIFICATIONS FOR INLETS IN BOX CULVERTS

	Names	Dates
Designed By	HAB	07/67
Drawn By	MJT	07/67
Checked By	DWS	07/67
F.H.W.A. Approved		03/20/75

Approved By: L. A. McLemore
State Drainage Engineer

Revision No.	Sheet No.	Index No.
81	1 of 1	293

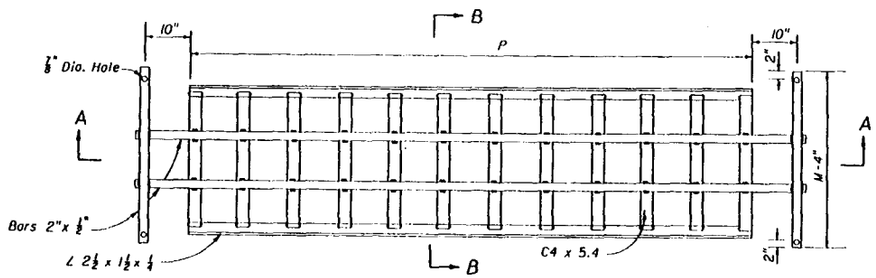

PLAN

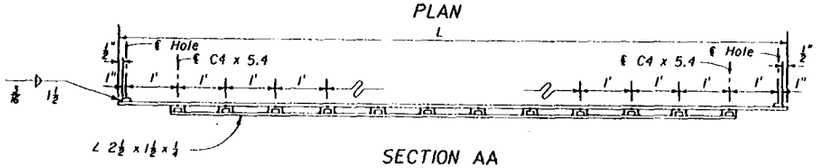

SECTION AA

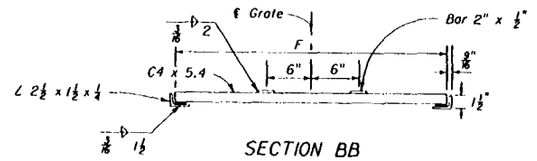

SECTION BB

GRATE DETAIL

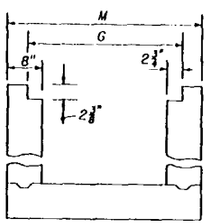

GRATE SEAT DETAIL

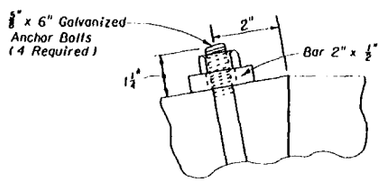

ANCHOR BOLT DETAIL

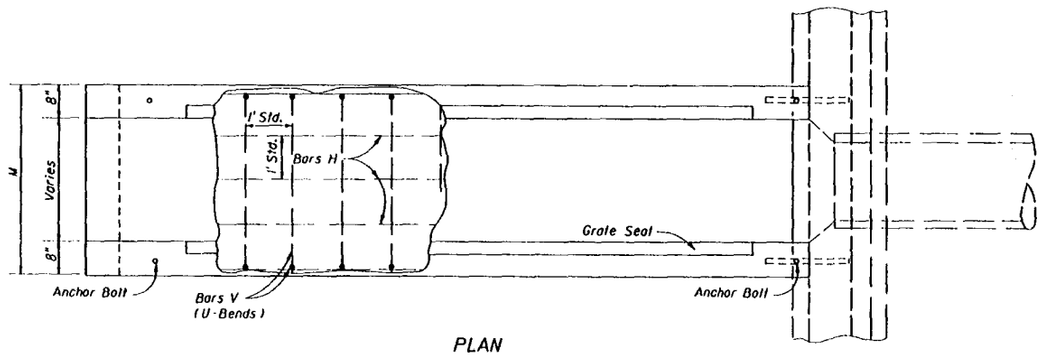

PLAN

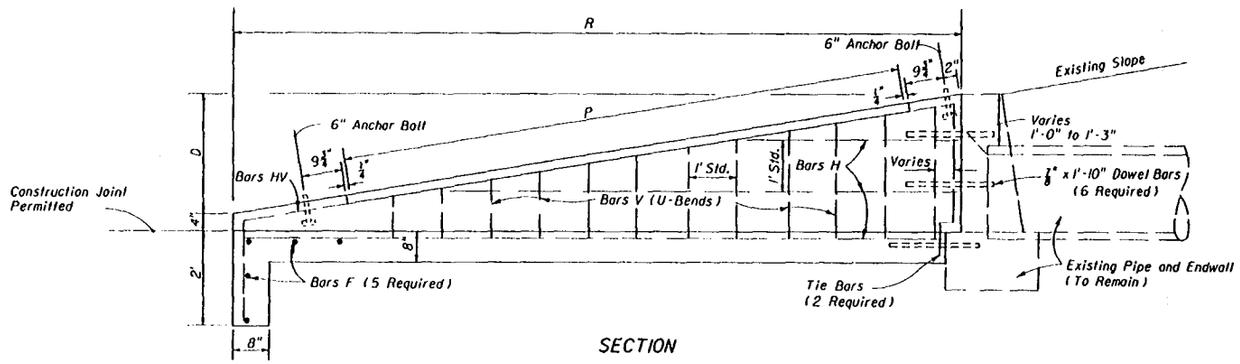

SECTION

GENERAL NOTES

1. For use criteria see " Steel Grating Use Criteria " Index No. 261.
2. Grates shall be ASTM A 242, A 441, A 572 or A 588, Grade 50 steel, and galvanized in accordance with Section 962-7 of the Standard Specifications.
3. Channel section C3 x 6.0 may be substituted for the C4 x 5.4 channel.
4. All reinforcing No. 4 bars with 2" clearance except as noted. Spacings shown are center to center. Laps to be 12" minimum. Welded wire fabric (two cages max.) having an equivalent cross section area (0.20 sq. in.) may be substituted for bar reinforcement.
5. Drill 1 1/4" holes 8" deep with a rotary drill in existing endwall for dowel bars. Holes shall be thoroughly cleaned prior to placing dowel bars and epoxy.
6. Endwall to be paid for under the contract unit price for Class I Concrete (Endwalls), CY and Reinforcing Steel (Roadway), LB. Cost of dowel bars and epoxy mortar to be included in the contract unit price for reinforcing steel. Cost of grates to be paid for under the contract unit price for Endwall Grate, LB., plan quantity. Cost of galvanized bolts and nuts to be included in the contract unit price for the grate.
7. Sod slopes 5' each side and above endwall. Sodding to be paid for under the contract unit price for Sodding, SY.

DIMENSIONS AND QUANTITIES PER GRATE

Slope	Pipe Size	Channels @ 5.4 Lbs./L.F. Quantity	F	Lbs.	Bars @ 3.4 lbs/L.F. (2 ea.) L	M-4"	Lbs.	Angles @ 3.2 Lbs./L.F. (2) P	Lbs.	Total Weight-Lbs.
6:1	15"	10	2'-6 1/2"	139	11'-3"	3'-3"	99	9'-4"	60	298
	18"	12	2'-9 1/2"	183	13'-3"	3'-6"	114	11'-4"	73	370
	24"	15	3'-3 1/2"	269	16'-3"	4'-0"	138	14'-4"	92	499
	30"	18	3'-9 1/2"	372	19'-3"	4'-6"	162	17'-4"	111	645
4:1	15"	6	2'-6 1/2"	83	7'-3"	3'-3"	71	5'-4"	34	188
	18"	7	2'-9 1/2"	107	8'-3"	3'-6"	80	6'-4"	41	228
	24"	9	3'-3 1/2"	161	10'-3"	4'-0"	97	8'-4"	53	311
	30"	11	3'-9 1/2"	227	12'-3"	4'-6"	114	10'-4"	66	407

DIMENSIONS AND QUANTITIES PER U-ENDWALL

Pipe Size	G	M	D	R	P	Class I Concrete-C.Y.	Reinforcing Steel-Lbs.	Sodding S Y
15"	2'-8 1/2"	3'-7"	2'-2"	13'-0"	9'-4"	2.12	167	23
18"	2'-11 1/2"	3'-10"	2'-5"	14'-6"	11'-4"	2.53	173	25
24"	3'-5 1/2"	4'-4"	2'-11"	17'-6"	14'-4"	3.48	238	29
30"	3'-11 1/2"	4'-10"	3'-5"	20'-6"	17'-4"	4.57	315	32
15"	2'-8 1/2"	3'-7"	2'-2"	8'-8"	5'-4"	1.44	120	19
18"	2'-11 1/2"	3'-10"	2'-5"	9'-8"	6'-4"	1.72	130	20
24"	3'-5 1/2"	4'-4"	2'-11"	11'-8"	8'-4"	2.36	167	22
30"	3'-11 1/2"	4'-10"	3'-5"	13'-8"	10'-4"	3.09	225	25

STATE OF FLORIDA DEPARTMENT OF TRANSPORTATION
ROAD DESIGN

SAFETY MODIFICATIONS FOR ENDWALLS

	Names	Dates
Designed By		
Drawn By		
Checked By		
F.H.W.A. Approved		

Approved By S.A.M. Lemore
State Drainage Engineer

Revision No.	Sheet No.	Index No.
90	1 of 1	295

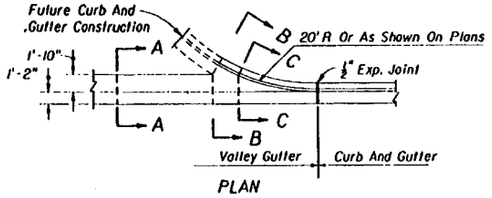

PLAN

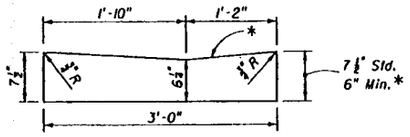

SECTION AA

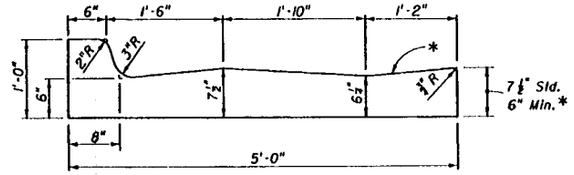

SECTION BB

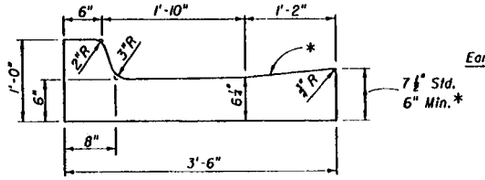

SECTION CC

VALLEY GUTTER

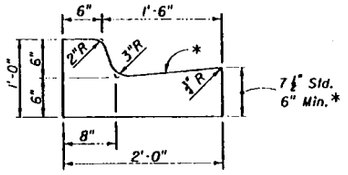

TYPE F

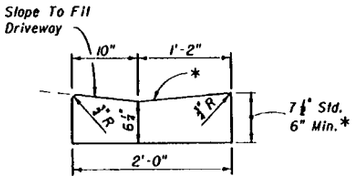

Note: To be paid for as parent curb.

DROP CURB

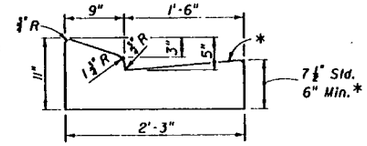

TYPE E

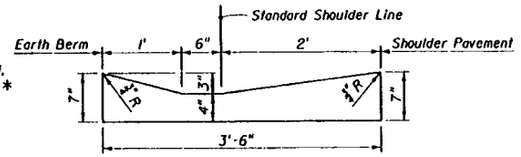

SHOULDER GUTTER

* When used on high side of roadways, the cross slope of the gutter shall match the cross slope of the adjacent pavement. The thickness of the lip shall be 6", unless otherwise shown on plans.

Note: For use adjacent to concrete or flexible pavement, concrete shown. For details depicting usage adjacent to flexible pavement, see diagram right. Expansion joint, preformed joint filler and joint seal are required between curb & gutter and concrete pavement only, see diagram right.

CONCRETE CURB AND GUTTER

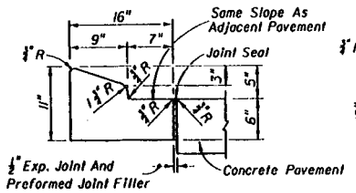

For details depicting usage adjacent to flexible pavement, see diagram right.

TYPE A

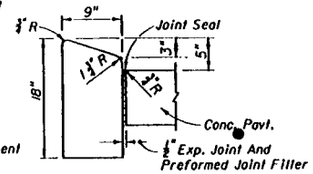

TYPE B

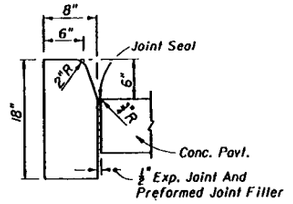

TYPE D

Note: For use adjacent to concrete or flexible pavement, concrete shown. Expansion joint, preformed joint filler and joint seal are required between curbs and concrete pavement only, see diagram right.

CONCRETE CURB

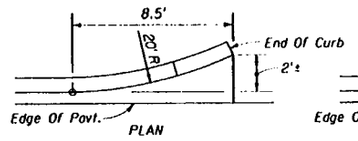

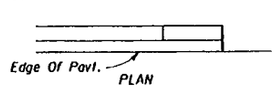

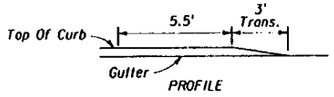

FLARED END

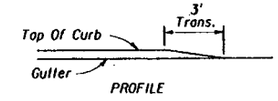

STRAIGHT END

CURB TYPE A

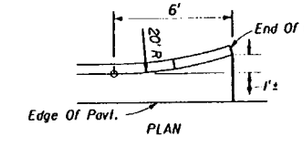

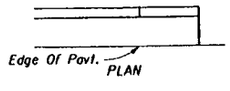

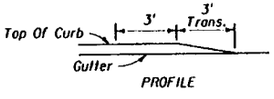

FLARED END

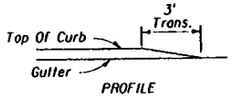

STRAIGHT END

CURB AND GUTTER TYPES E & F

CURB AND GUTTER ENDINGS

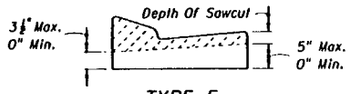

TYPE E

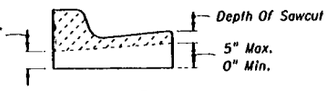

TYPE F

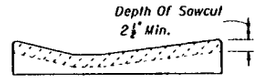

SHOULDER GUTTER

Sawcuts should be avoided within valley gutter and within curb and gutter endings.

CONTRACTION JOINT IN CURB AND GUTTER

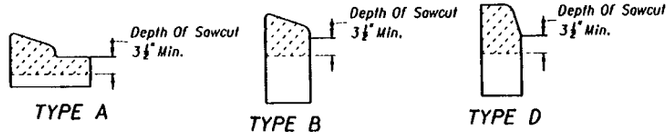

TYPE A TYPE B TYPE D

CONTRACTION JOINT IN CURB

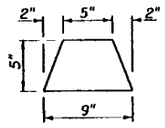

ASPHALTIC CONCRETE CURB

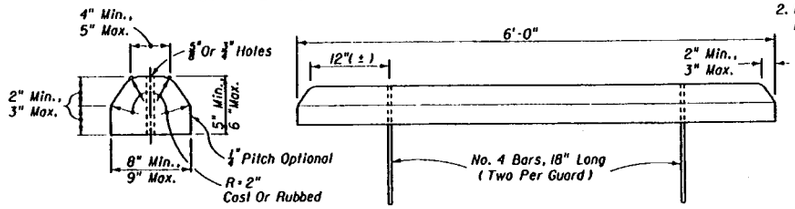

CONCRETE BUMPER GUARD

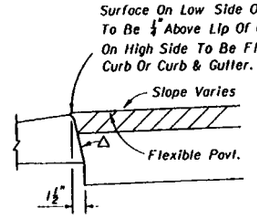

△ Applies to both high and low sides of pavement, low side shown.

CURB AND GUTTER AND TYPE A CURB ADJACENT TO FLEXIBLE PAVEMENT

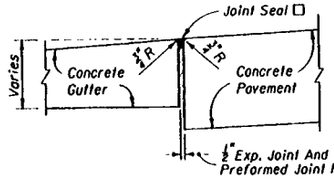

□ Applies to both high and low sides of pavement, low side shown.

EXPANSION JOINT BETWEEN GUTTER AND CONCRETE PAVEMENT

GENERAL NOTES

1. For curb, gutter and curb and gutter provide ⅜" - ½" contraction joints at 10' centers (max.). Contraction joints adjacent to concrete pavement on tangents and flat curves are to match the pavement joints, with intermediate joints not to exceed 10' centers. Curb, gutter and curb & gutter expansion joints shall be located in accordance with Section 520 of the standard specifications.
2. Ends of Curbs Types B and D shall transition from full to zero heights in 3 feet.

STATE OF FLORIDA DEPARTMENT OF TRANSPORTATION
ROAD DESIGN

CURB & CURB AND GUTTER

	Names	Dates
Designed By		
Drawn By		
Checked By		
F.H.W.A. Approved: 07/07/15		

Approved By Freddie Simmons
State Roadway Design Engineer

Revision No.	Sheet No.	Index No.
94	1 of 1	300

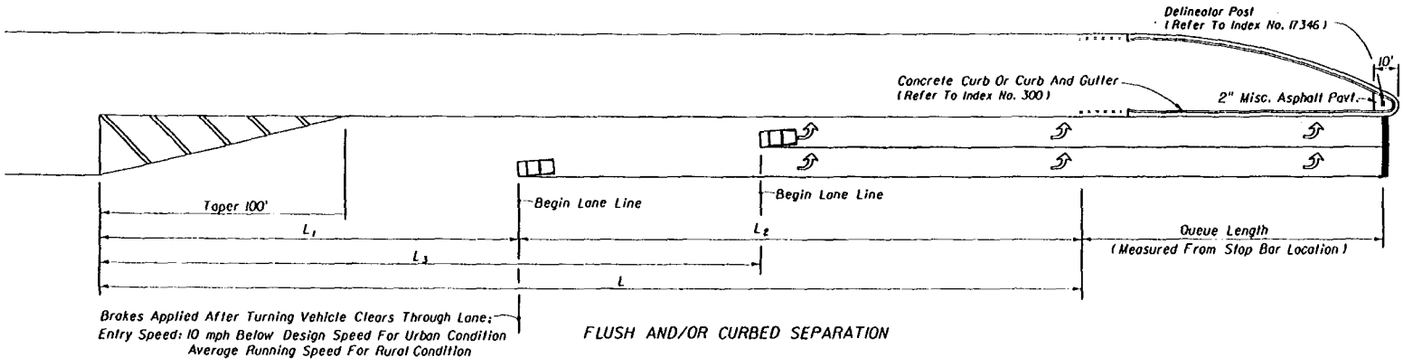

Brakes Applied After Turning Vehicle Clears Through Lane;
Entry Speed: 10 mph Below Design Speed For Urban Condition
Average Running Speed For Rural Condition

FLUSH AND/OR CURBED SEPARATION

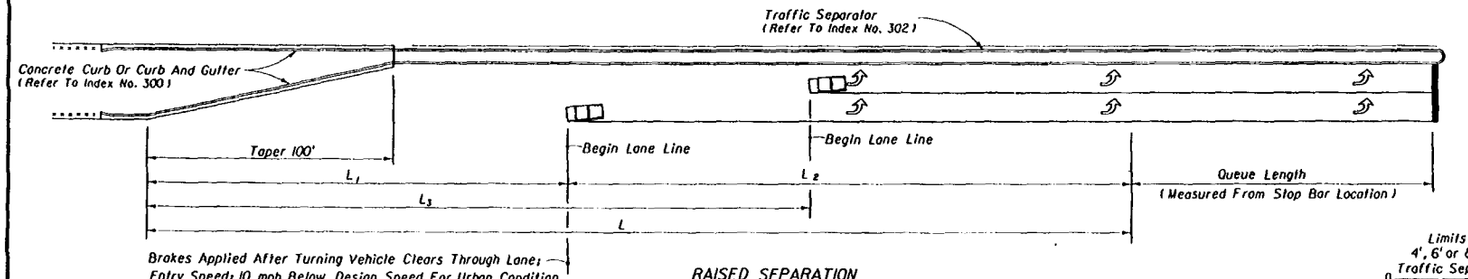

Brakes Applied After Turning Vehicle Clears Through Lane;
Entry Speed: 10 mph Below Design Speed For Urban Condition
Average Running Speed For Rural Condition

RAISED SEPARATION

DOUBLE LEFT TURNS

TURN LANES • CURBED AND UNCURBED MEDIANS								
			URBAN CONDITITONS			RURAL CONDITITONS		
Design Speed (mph)	Entry Speed (mph)	Clearance Distance L_1	Brake To Stop Distance L_2	Total Decel. Distance L	Clearance Distance L_3	Brake To Stop Distance L_2	Total Decel. Distance L	Clearance Distance L_3
35	25	70'	75'	145'	110'	----	----	----
40	30	80'	75'	155'	120'	----	----	----
45	35	85'	100'	185'	135'	----	----	----
50	40/44	105'	135'	240'	160'	215'	320'	160'
55	48	125'	----	----	----	260'	385'	195'
60	52	145'	----	----	----	310'	455'	230'
65	55	170'	----	----	----	350'	520'	270'

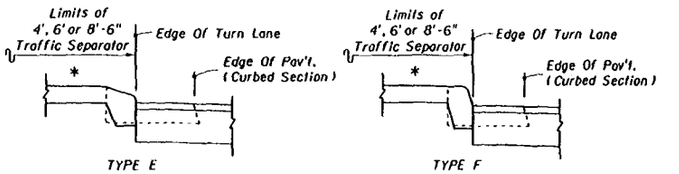

CURB AND GUTTER

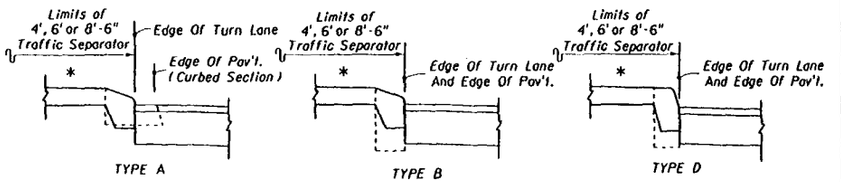

CURB

For Curb And Curb & Gutter Types, See Index No. 300
* Option I Separators Shown (Refer To Index No. 302)

MEDIAN CURB AND TRAFFIC SEPARATOR JUNCTURE DETAILS

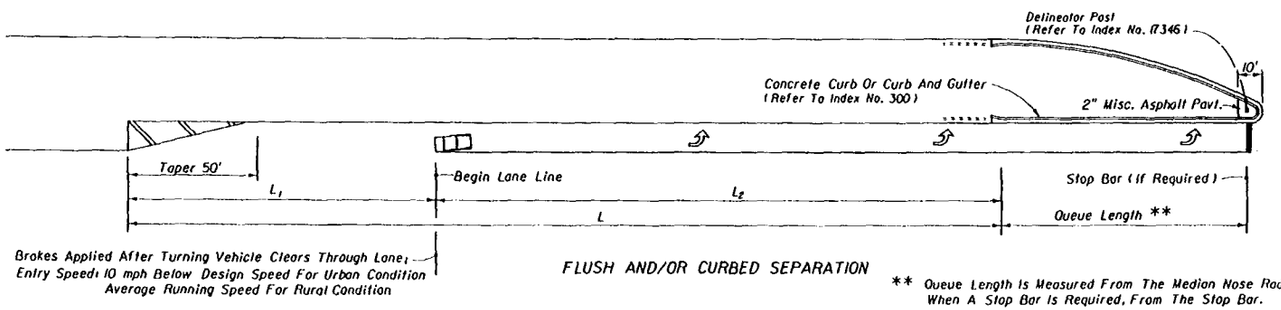

Brakes Applied After Turning Vehicle Clears Through Lane;
Entry Speed: 10 mph Below Design Speed For Urban Condition
Average Running Speed For Rural Condition

FLUSH AND/OR CURBED SEPARATION

** Queue Length Is Measured From The Median Nose Radial Point Or, When A Stop Bar Is Required, From The Stop Bar.

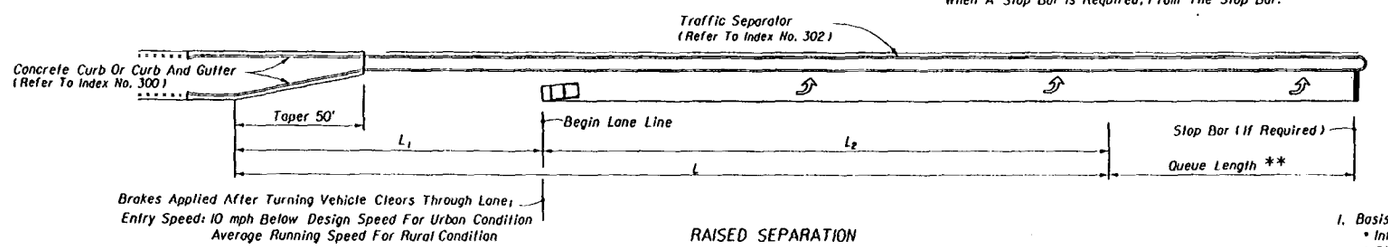

Brakes Applied After Turning Vehicle Clears Through Lane;
Entry Speed: 10 mph Below Design Speed For Urban Condition
Average Running Speed For Rural Condition

RAISED SEPARATION

SINGLE LEFT TURNS

GENERAL NOTES

1. The plan views shown are for turn lane taper shapes and dimensional purposes only, they do not prescribe the use of curb, curb and gutter, shoulders nor separators specifically to either rural or urban conditions.
2. Total deceleration distances must not be reduced except where lesser values are imposed by unrelocatable control points.
3. Right turn lane tapers and distances identical to left turn lanes under stop control conditions. Right turn lane tapers and/or distances are site specific under free flow or yield conditions.
4. These left turn configurations apply to continuous left turn lanes only where specifically called for in the plans.
5. For pavement markings see Index No. 17346.

DESIGN NOTES

1. Basis for turn lane configurations:
   - Informed Driver.
   - Stop condition (With Or Without Stop Control).
   - Wet Pavement.
   - Reaction preceeding entry point.
   - Maximum safe deceleration rates for urban conditions.
   - Comfortable deceleration rates for rural conditions.

TURN LANES

STATE OF FLORIDA DEPARTMENT OF TRANSPORTATION
ROAD DESIGN

TURN LANES

	Names	Dates
Designed By	RER	05/91
Drawn By	HSD/HKH	05/91
Checked By	JVO/RER	05/91

Approved By: Freddie Simmons
State Roadway Design Engineer

F.H.W.A. Approved: Revision No. 94 | Sheet No. 1 of 1 | Index No. 301

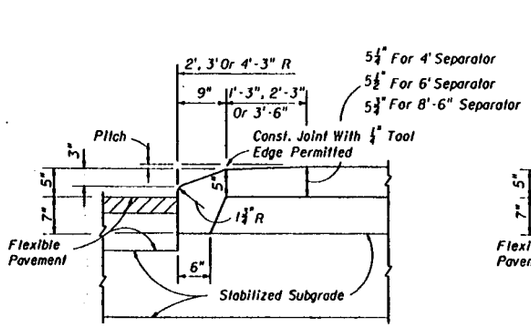

LONGITUDINAL SECTION (NOSE)

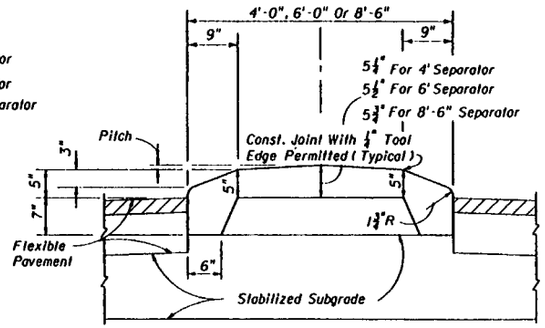

TRANSVERSE SECTION

OPTION I

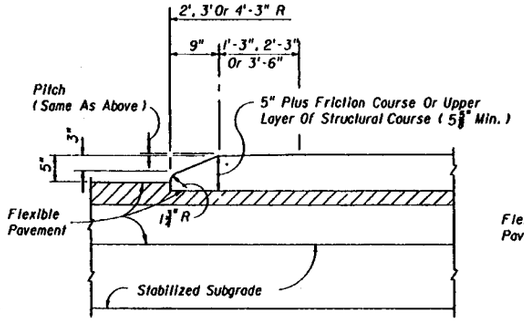

LONGITUDINAL SECTION (NOSE)

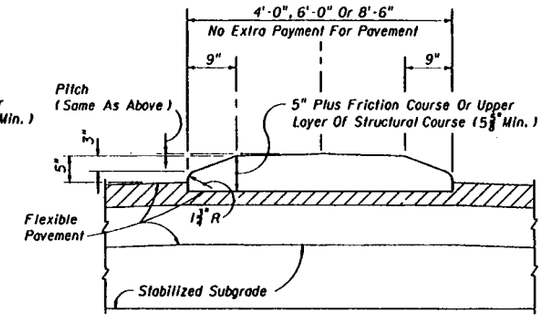

TRANSVERSE SECTION

OPTION II

TYPE I CONCRETE TRAFFIC SEPARATOR

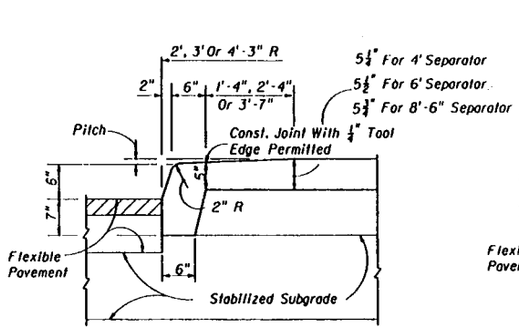

LONGITUDINAL SECTION (NOSE)

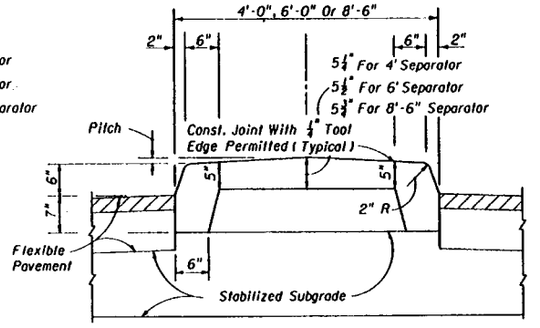

TRANSVERSE SECTION

OPTION I

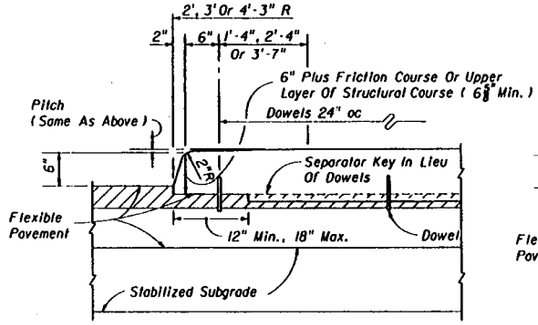

LONGITUDINAL SECTION (NOSE)

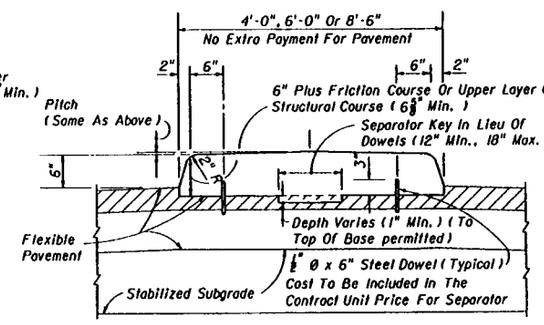

TRANSVERSE SECTION

OPTION II

TYPE IV CONCRETE TRAFFIC SEPARATOR

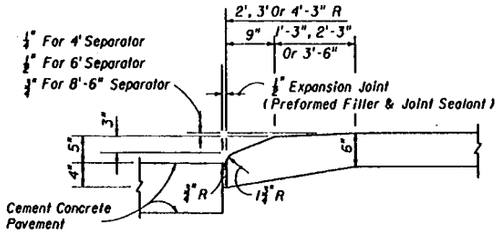

LONGITUDINAL SECTION (NOSE)

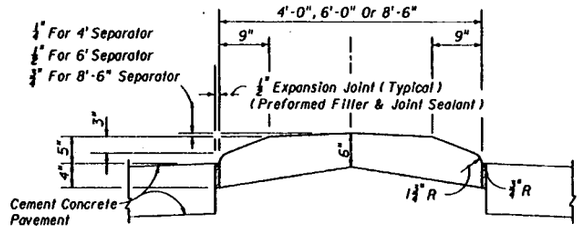

TRANSVERSE SECTION

TYPE II CONCRETE TRAFFIC SEPARATOR

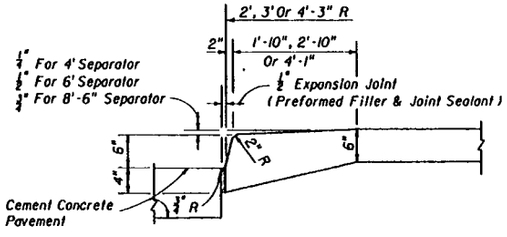

LONGITUDINAL SECTION (NOSE)

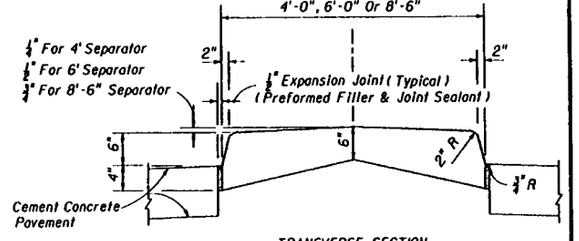

TRANSVERSE SECTION

TYPE V CONCRETE TRAFFIC SEPARATOR

NOTES

1. Separators Type I and IV are to be used with flexible pavement. Separators Types II and V are to be used with rigid pavement.
2. Either Option I or Option II may be used for Types I and IV separators except when a specific option is called for in the plans.
3. For all separators provide ⅛" - ¼" contraction joints at 10' centers (max.). Contraction joints adjacent to concrete pavement on tangents and flat curves are to match the pavement joints, with intermediate joints not to exceed 10' centers.
4. Separators having widths of 4', 6' or 8'-6" shall be paid for under the contract unit price for Traffic Separator Concrete (Type __) (__' Wide) LF. Separators having widths other than 4', 6' or 8'-6" shall be detailed in the plans as special separators and paid for under the contract unit price for either Traffic Separator Concrete (Special) (__' Wide) LF or Traffic Separator Concrete (Special) (VW) SY.

STATE OF FLORIDA DEPARTMENT OF TRANSPORTATION
ROAD DESIGN

TRAFFIC SEPARATORS

	Names	Dates
Designed By		
Drawn By	HSD	09/81
Checked By	JWG	09/81
F.H.W.A. Approved:		09/23/82

Approved By Freddie Simmons
State Roadway Design Engineer

Revision No.	Sheet No.	Index No.
94	1 of 1	302

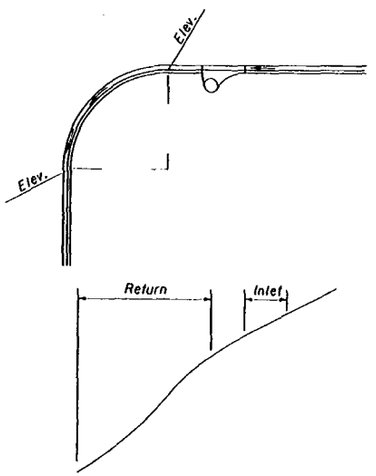

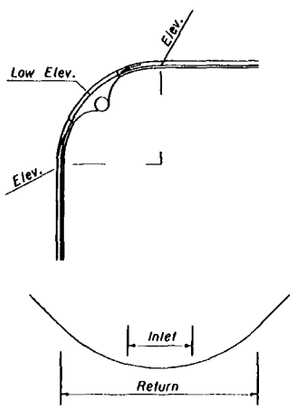

Note : See General Note No. 3

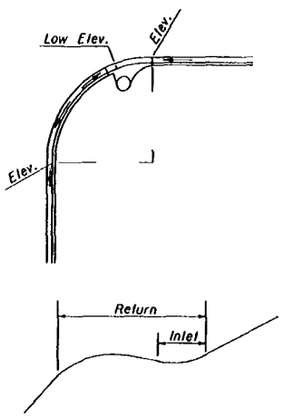

Note : See General Note No. 3

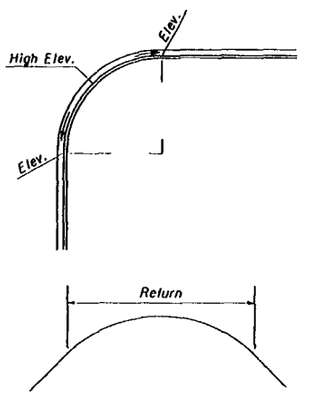

TYPICAL RETURN PROFILES

INCLUDING DETAIL SHOWING LOCATION OF INLETS ON RETURN

Note :

1. On normal intersections, profiles need not be included in the plans as the above typicals adequately present the desired configuration.
2. For major intersections, where extreme grades are involved or where it is deemed necessary to included profiles in order to present adequate design data; return profiles may be included in the plans.
3. Profile grades should be established that will allow inlets to be located outside the return whenever practical. Inlets should be located to avoid conflict with pedestrian movement. Special care must be exercised to prevent conflict with curb cut ramps for the physically handicapped. For information on curb cut ramps refer to Index No. 304.
4. Grades of 0.3% or greater should be maintained on sag profiles outside the inlet limits.

STATE OF FLORIDA DEPARTMENT OF TRANSPORTATION
ROAD DESIGN

CURB RETURN PROFILES

	Names	Dates
Designed By		
Drawn By		
Checked By		
F.H.W.A. Approved:		07/01/75

Approved By Freddie Simmons
State Design Engineer, Roadways

Revision No.	Sheet No.	Index No.
94	1 of 1	303

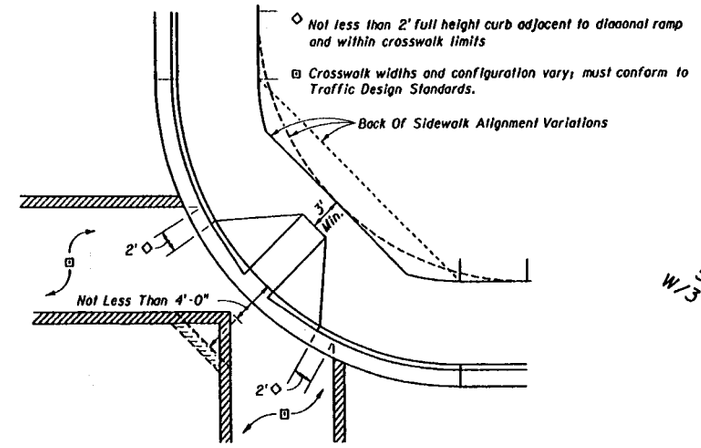

DIAGONAL RAMPS

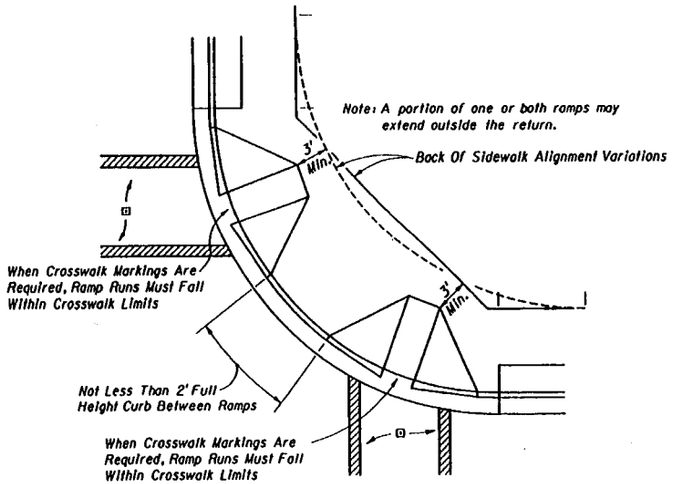

INTERMEDIATE RAMPS

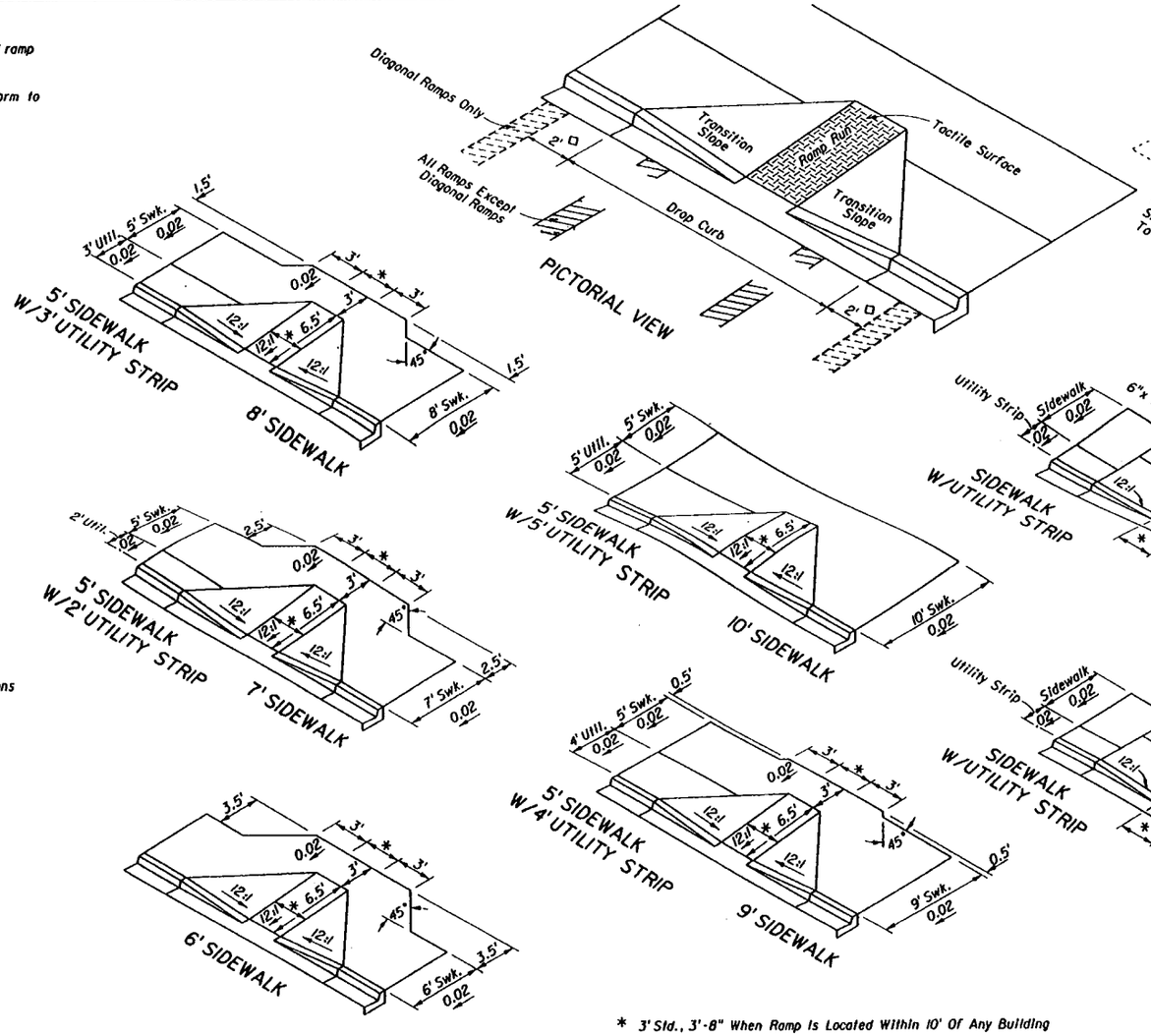

DIMENSIONAL FEATURES FOR RAMPS

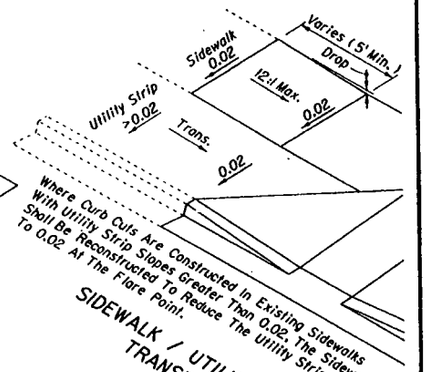

SIDEWALK / UTILITY STRIP TRANSITION

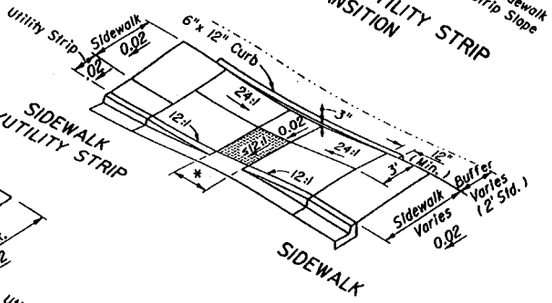

SIDEWALK W/UTILITY STRIP

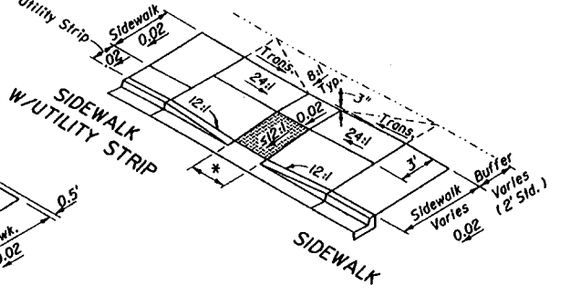

SIDEWALK W/UTILITY STRIP

GENERAL NOTES

1. Pedestrian pathways with running slopes steeper than 20:1 are considered ramps. Ramp running slopes shall not exceed 12:1. Ramp cross slopes shall not exceed 0.02.
2. Curbed facilities with sidewalks and those without sidewalks are to have curb cut ramps constructed at all street intersections and at turnouts that have curbed returns. Partial curb returns shall extend to the limit prescribed by Index No. 515 to accommodate curb cut ramps. Ramps constructed at locations without sidewalks shall have a landing constructed at the top of each ramp, see Sheet 3 of 3.
3. The location and orientation of curb cut ramps shall be as shown in the plans.
4. If a curb cut ramp is located where pedestrians must walk across the ramp, then the walk shall have transition slopes to the ramp; the maximum slope of the transitions shall be 12:1. Curb cut ramps with returned curbs may be used where pedestrians would not normally walk across the ramp, see Sheet 2 of 3.
5. Ramps runs shall have a tactile surface. Ramp landings adjoining vehicular ways shall have a tactile surface 36" wide bordering the vehicular way. Tactile surfaces shall be constructed by texturing to a depth not exceeding ¼" by use of a tamp or roller fabricated with an imprinting surface of either 1" mesh 0.250 wire cloth (plain weave, conventional crimp), #6 expanded metal (standard) or 3 lb. expanded metal grating. Transition slopes are not to have tactile surfaces.
6. Where a curb cut ramp is constructed within existing curb, curb and gutter and/or sidewalk, the existing curb or curb and gutter shall be removed to the nearest joint beyond the drop curb or to the extent that no remaining section of curb or curb and gutter is less than 5' long. The existing sidewalk shall be removed to the nearest joint beyond the transition slope or walk around or to the extent that no remaining section of sidewalk is less than 5' long.
7. Ramps to be paid for as follows:

   Ramps, reconstructed sidewalks, walk around sidewalks and landings are to be paid for under the contract unit price for Concrete Sidewalk (__), SY.

   Drop curbs and reconstructed curbs are to be paid for under the contract unit price for the parent curb, i.e., Conc. Curb (Type __), LF. or Conc. Curb and Gutter (Type __), LF.

   When a seperate pay item for the removal and disposal of existing curb, curb and gutter, and/or sidewalk is not provided in the plans, the cost of removal and disposal of these features shall be included in the contract unit price for new curb, curb and gutter and/or sidewalk respectively.

STATE OF FLORIDA DEPARTMENT OF TRANSPORTATION
ROAD DESIGN

CURB CUT RAMPS

	Name	Date
Designed By		
Drawn By		
Checked By		
F.H.W.A. Approved:		

Approved By: Freddie Simmons
State Roadway Design Engineer

Revision No.	Sheet No.	Index No.
94	1 of 3	304

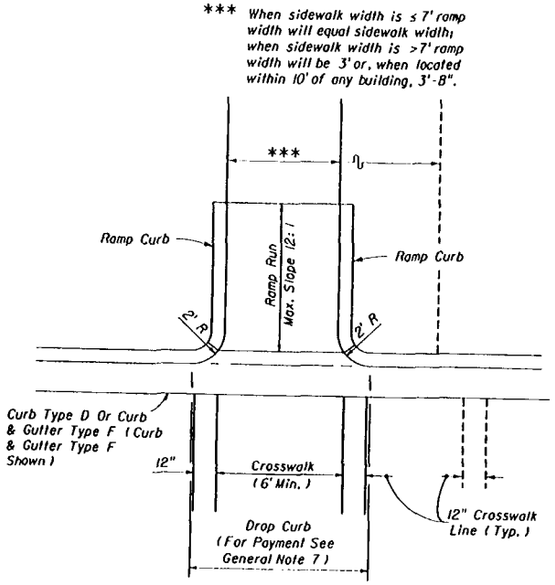

PLAN VIEW

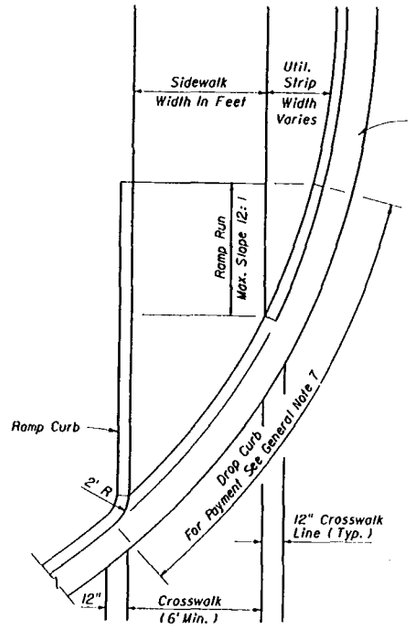

PLAN VIEW

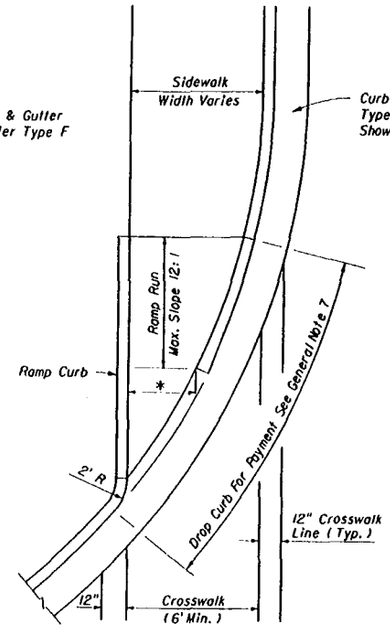

* 3' Std., 3'-8" When Ramp is Located Within 10' Of Any Building.

PLAN VIEW

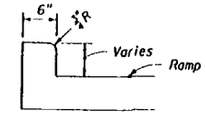

RAMP WITH INTEGRAL CAST CURB

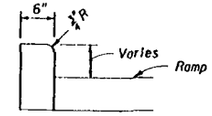

RAMP WITH SEPARATELY CAST CURB

RAMP CURB OPTIONS

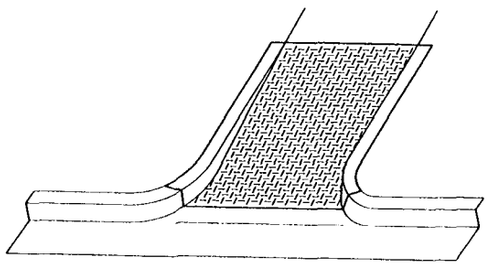

PICTORIAL VIEW

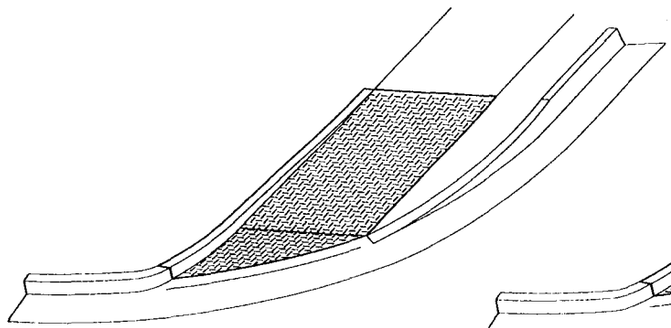

PICTORIAL VIEW

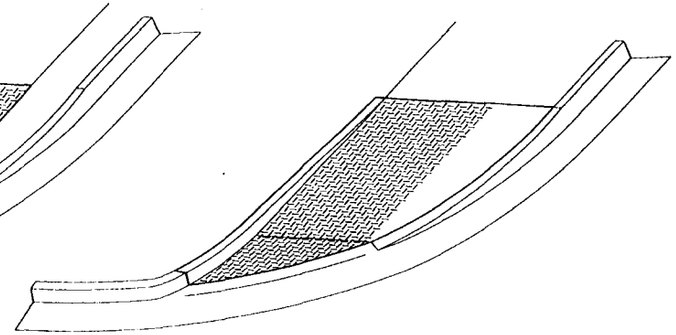

PICTORIAL VIEW

RAMPS FOR LINEAR PEDESTRIAN TRAFFIC

STATE OF FLORIDA DEPARTMENT OF TRANSPORTATION
ROAD DESIGN

CURB CUT RAMPS

	Names	Dates
Designed By		
Drawn By		
Checked By		
F.H.W.A. Approved:		02/08/79

Approved By: Freddie Simmons
State Roadway Design Engineer

Revision No.	Sheet No.	Index No.
94	2 of 3	304

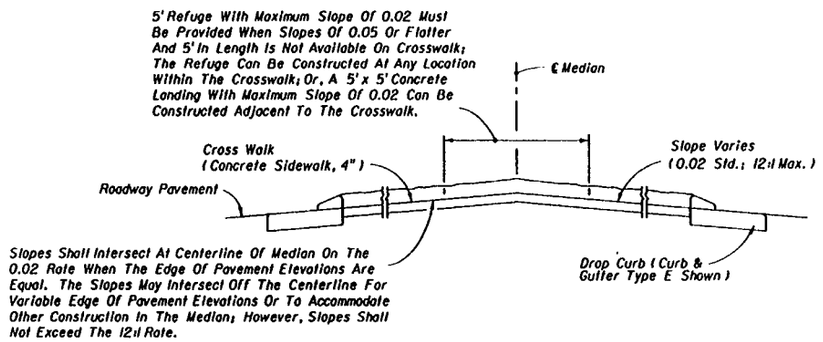

SECTION CC

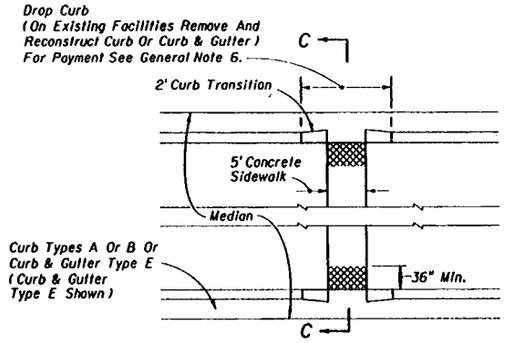

PLAN

MEDIAN CROSS WALK (WITH AND WITHOUT RAMP SLOPES)

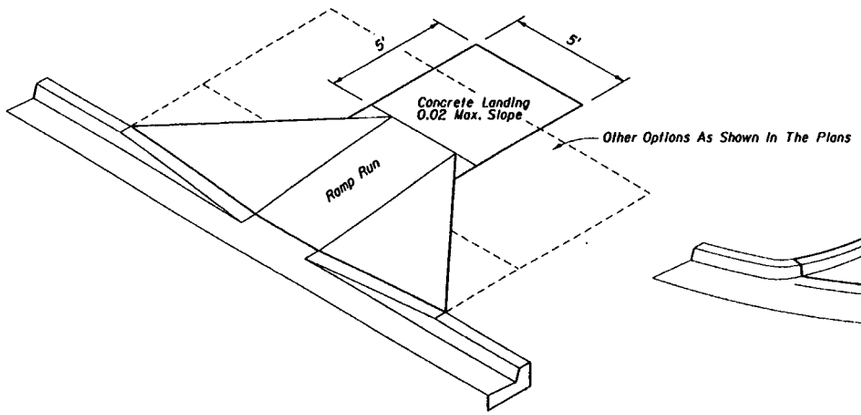

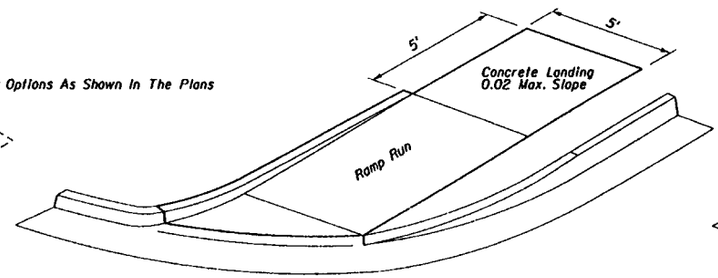

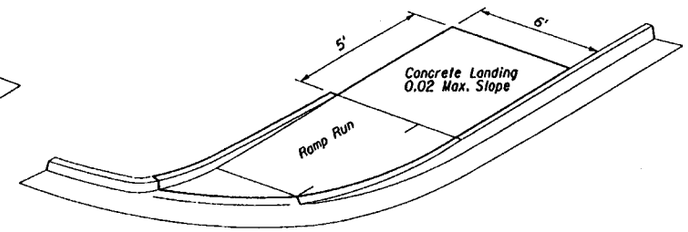

LANDINGS FOR RAMPS CONSTRUCTED AT LOCATIONS WITHOUT SIDEWALK

STATE OF FLORIDA DEPARTMENT OF TRANSPORTATION
ROAD DESIGN

CURB CUT RAMPS

	Names	Dates
Designed By		
Drawn By		
Checked By		

Approved By Freddie Simmons
State Roadway Design Engineer

F.H.W.A. Approved:

Revision No.	Sheet No.	Index No.
94	3 of 3	304

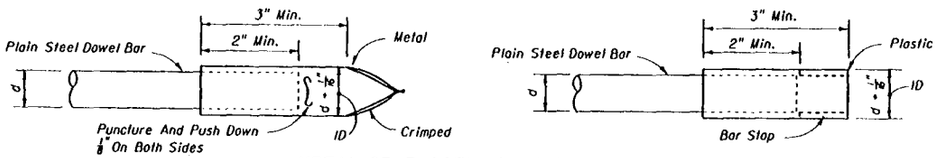

METAL OR PLASTIC CAPS FOR DOWEL BARS

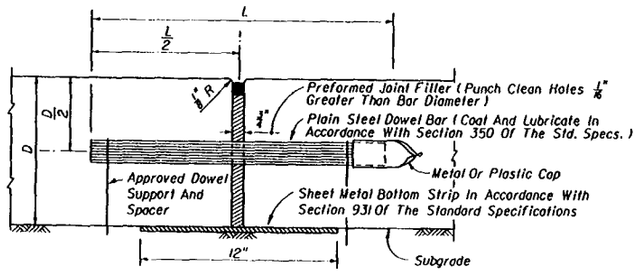

Note: Expansion joints to be placed on approaches to bridges, at street intersections and other locations indicated in detail plans.

TRANSVERSE EXPANSION JOINT

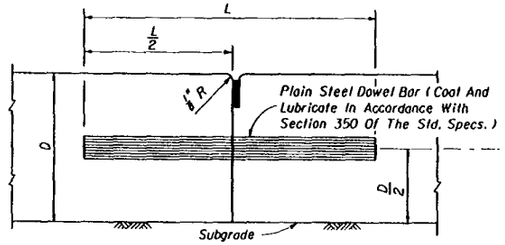

BUTT CONSTRUCTION JOINT TO BE USED AT DISCONTINUANCES OF WORK

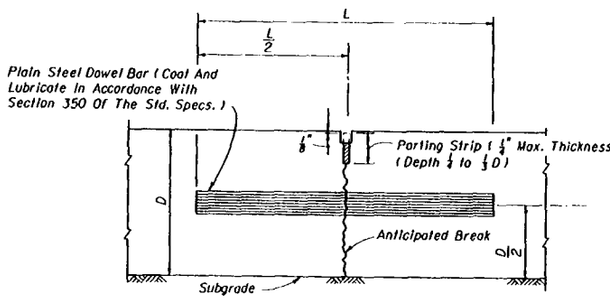

TRANSVERSE CONTRACTION JOINT, VIBRO CAST METHOD

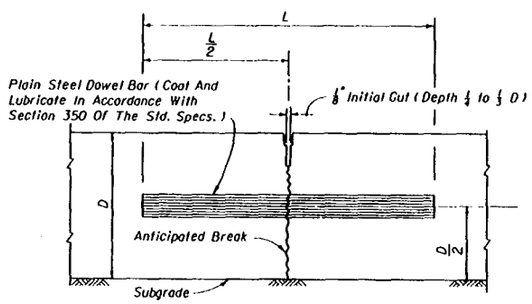

TRANSVERSE CONTRACTION JOINT, SAWED METHOD

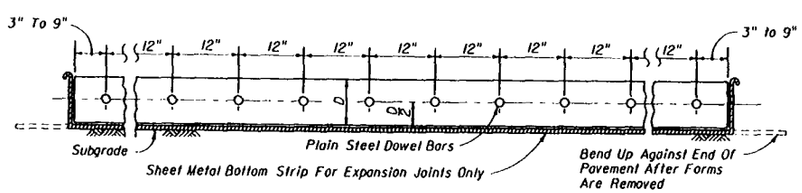

DOWEL BAR LAYOUT

DOWELS (LENGTH 18")	
Pavement Thickness "D"	Diameter
6"	1"
7"	1"
8"	1"
9"	1 1/4"
10"	1 1/4"
11"	1 1/4"
12"	1 1/4"

TRANSVERSE JOINTS ARE TO BE SPACED AT A MAXIMUM OF 20'. DOWELS ARE REQUIRED AT ALL TRANSVERSE JOINTS UNLESS OTHERWISE NOTED IN PLANS.

TRANSVERSE JOINTS

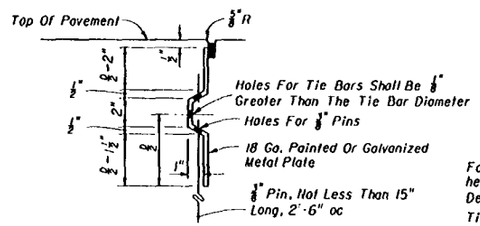

DEFORMED METAL PLATE

TIE BAR SPACING WITH MAXIMUM DISTANCE TO FREE EDGE 12'		
Pavement Thickness "D"	Maximum Spacing	
	No. 4 Bars Length 25"	No. 5 Bars Length 30"
6"	48"	48"
7"	45"	48"
8"	39"	48"
9"	35"	48"
10"	31"	48"
11"	29"	45"
12"	26"	41"

For pavement thickness or for joint spacings not covered herein refer to FDOT Jointed Plain Concrete Pavement Design Manual or Rigid Pavement Rehabilitation Manual.

Tie bars are deformed No. 4 or No. 5 reinforcing steel bars meeting the requirements of Section 931 of the Standard Specifications.

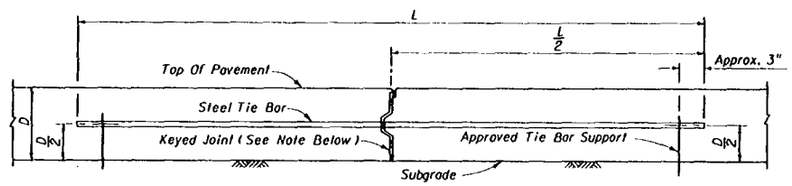

Note: Keyed longitudinal joints are required on all concrete pavement 9" thick or greater. The keyed joint may be formed by either the metal plate detailed above; by bolting shaped timber to the side form; or, by extrusion from slip-form paver. Alternate keyway shape and tie bar details may be approved by the Engineer.

LONGITUDINAL CONSTRUCTION JOINT

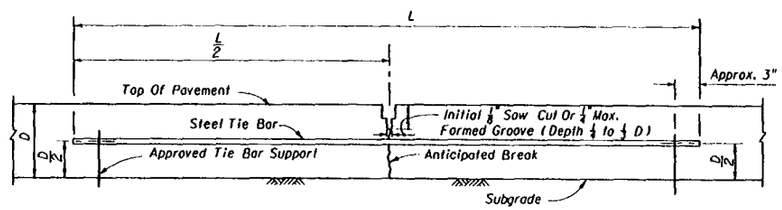

Note: Slabs poured simultaneously. Tie bars may be inserted in the plastic concrete by means approved by the Engineer.

LONGITUDINAL LANE-TIE JOINT

LONGITUDINAL JOINTS

Note: For joint seal dimensions see Sheet 2 of 5.

STATE OF FLORIDA DEPARTMENT OF TRANSPORTATION
ROAD DESIGN

CONCRETE PAVEMENT JOINTS

	Names	Dates	Approved By
Designed By			Bruce Dietrich
Drawn By	HW	08/87	State Pavement Design Engineer
Checked By	HEC	08/87	
F.H.W.A. Approved:	10/07/80	Revision No. 94	Sheet No. 1 of 5
			Index No. 305

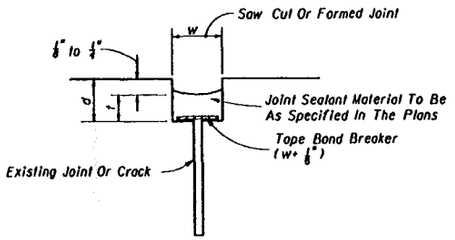

Note: Dimension w will be shown in the plans or established by the Engineer based on field conditions. Dimension d will be constructed so that the shape factor ¥ has a maximum value of 2.0 and a mimimum value of 1.0.

FOR REHABILITATION PROJECTS

TAPE BOND BREAKER

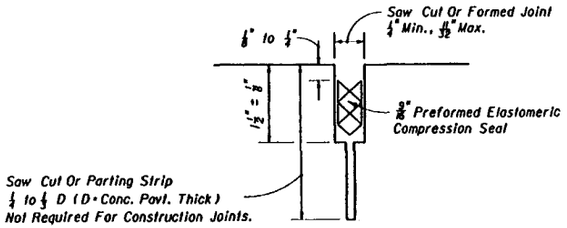

FOR NEW PROJECTS

PREFORMED ELASTOMERIC COMPRESSION SEAL

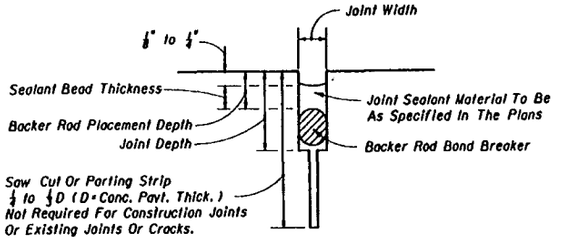

FOR NEW AND REHABILITATION PROJECTS

BACKER ROD BOND BREAKER

BACKER ROD BOND BREAKER (CONCRETE-CONCRETE JOINTS)

JOINT DIMENSIONS (INCHES)

JOINT WIDTH	SEALANT BEAD THICKNESS	BACKER ROD DIAMETER	MINIMUM JOINT DEPTH	BACKER ROD PLACEMENT DEPTH
¼	¼	⅜	1	½
⅜	¼	½	1¼	½
½	¼	⅝	1¼	½
⅝	5/16	¾	1½	5/8
¾	⅜	1	1¾	⅝
⅞	7/16	1⅛	1¾	¾
1	½	1¼	2	¾
>1	½	1¼ +	2+	¾

Unless otherwise indicated on the plans the joint width for new construction will be ¼" for construction joints, ⅜" for all other joints.

For rehabilitaion projects the joint width will be shown on the plans or established by the Engineer based on field conditions.

CONCRETE-CONCRETE JOINTS

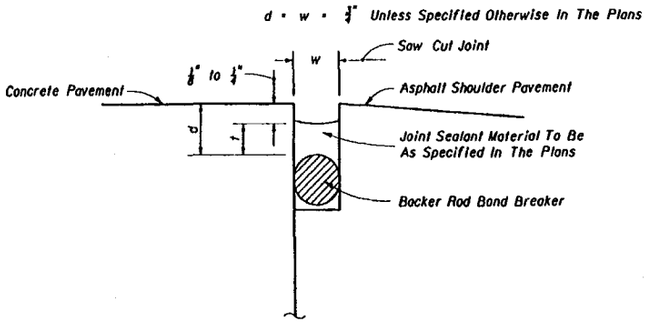

BACKER ROD BOND BREAKER

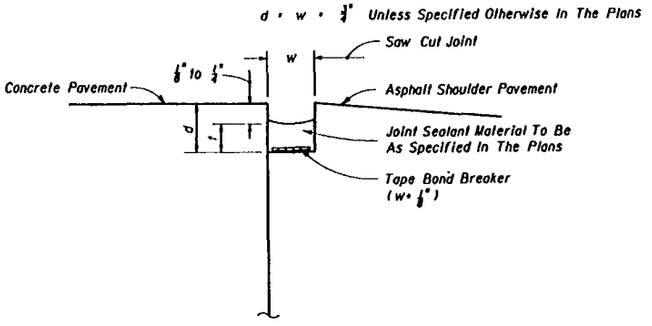

TAPE BOND BREAKER

FOR NEW AND REHABILITATION PROJECTS;
EITHER TAPE-OR BACKER ROD BOND BREAKER REQUIRED;
SHOULDER MUST BE REPAIRED IF PROPER JOINT SHAPE
CAN NOT BE ATTAINED

CONCRETE-ASPHALT SHOULDER JOINTS

JOINT SEAL DIMENSIONS

STATE OF FLORIDA DEPARTMENT OF TRANSPORTATION
ROAD DESIGN

CONCRETE PAVEMENT JOINTS

	Names	Dates
Designed By	WWL	05/86
Drawn By	HSD	05/86
Checked By	JVO	05/86
F.H.W.A. Approved:		11/07/86

Approved By _____ State Pavement Design Engineer

Revision No.	Sheet No.	Index No.
90	2 of 5	305

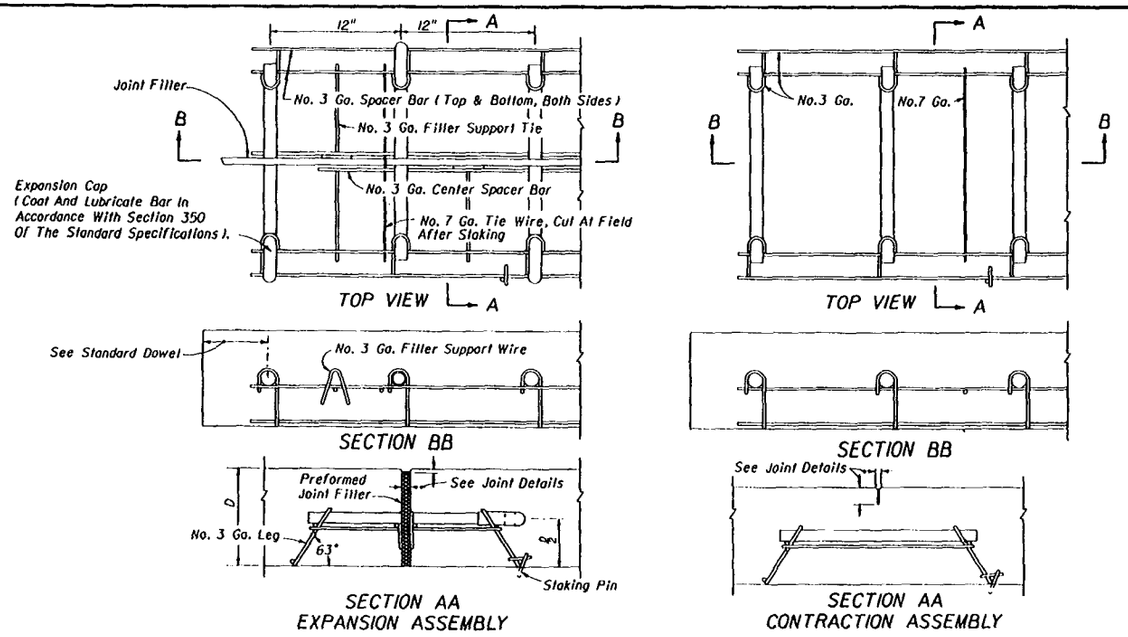

WADY INDUSTRIES, INC.

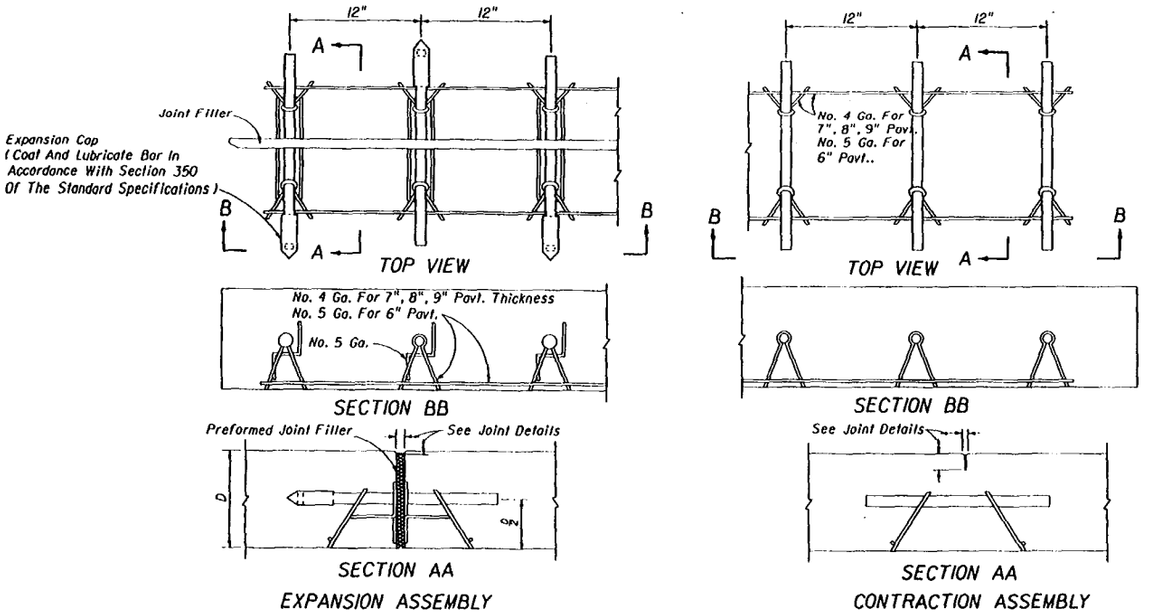

FLORIDA STEEL CORPORATION

DOWEL ASSEMBLIES FOR EXPANSION AND CONTRACTION JOINTS

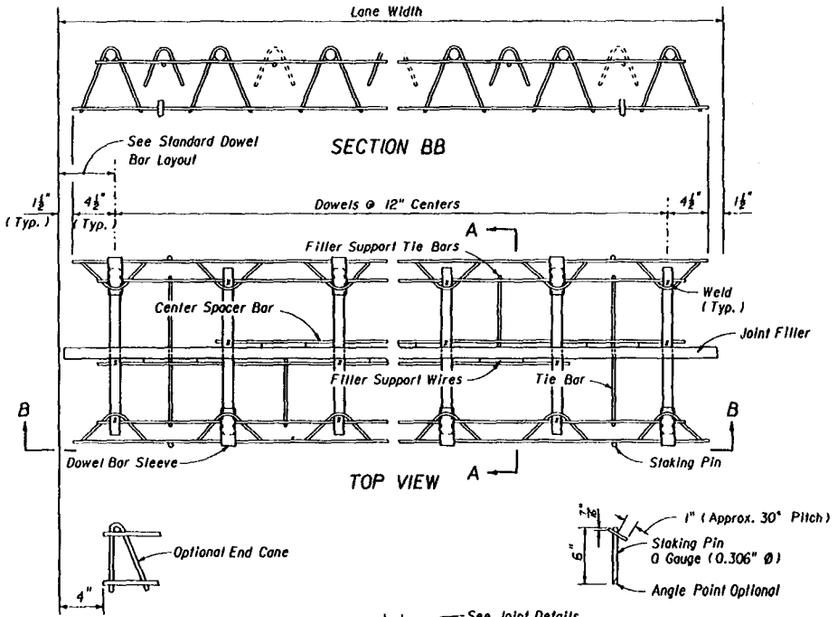

*Expansion assembly is illustrated. For contraction assembly omit expansion joint material, center spacer bars, filler support wires, support tie bars and dowel bar sleeves.

EXPANSION AND CONTRACTION ASSEMBLY*

THE DAYTON SURE GRIP AND SHORE COMPANY

STATE OF FLORIDA DEPARTMENT OF TRANSPORTATION
ROAD DESIGN

CONCRETE PAVEMENT JOINTS

	Names	Dates
Designed By		
Drawn By	JAD	09/81
Checked By	AVG	09/81
F.H.W.A. Approved:		10/07/80

Approved By: State Pavement Design Engineer

Revision No.	Sheet No.	Index No.
87	3 of 5	305

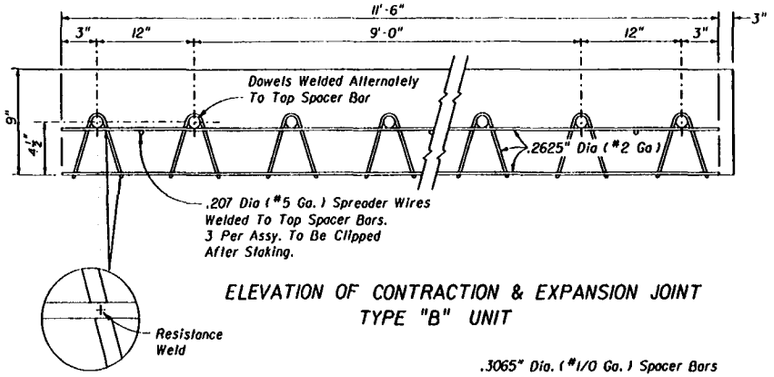

ELEVATION OF CONTRACTION & EXPANSION JOINT
TYPE "B" UNIT

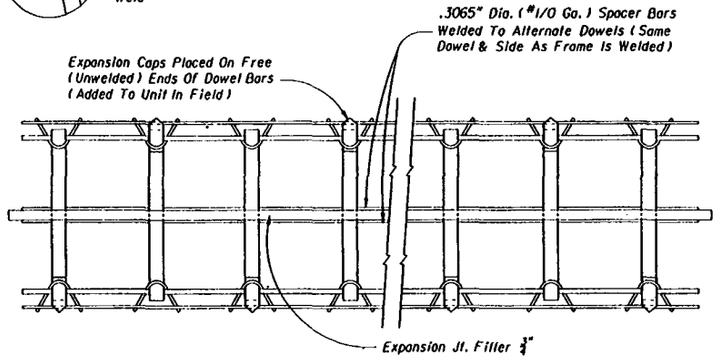

PLAN
TYPE "B" UNIT

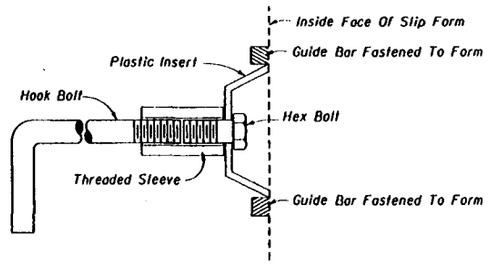

NOTE: After the concrete has set to the extent that the Keyway will retain its shape, the hex bolt and plastic insert shall be removed. The remaining portion of the hook bolt assembly shall be installed immediately prior to placing of concrete in the adjacent lane.

ALTERNATE KEYWAY AND HOOK BOLT

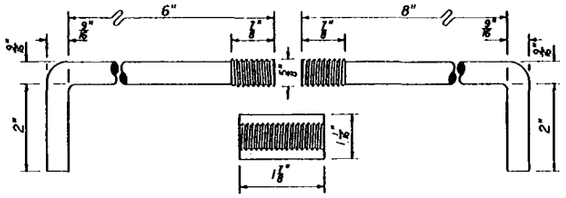

Anchor bolts shall be Grade C in accordance with ASTM A 307.

Threaded sleeves shall develop the full strength of the bolt and meet the material and thread requirements of ASTM A 563.

STEEL HOOK BOLT ASSEMBLY

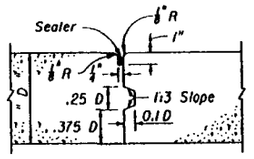

DETAIL OF KEYED JOINT

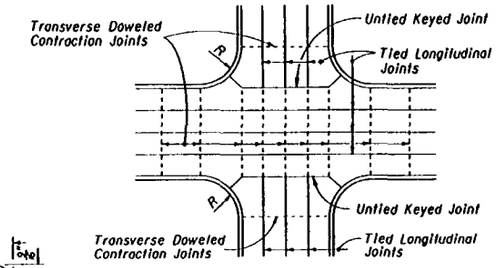

JOINT LAYOUT AT THRU INTERSECTION

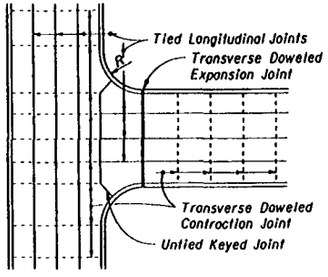

JOINT LAYOUT AT 'T' INTERSECTIONS

NOTES

1. Longitudinal joints will not be required for single lane pavement 14' or less in width. For entrance and exit ramp joint details, see sheet 5 of 5.
2. When pavement width necessitates five or more longitudinal joints which would normally be tied, provide one or more untied but keyed joints. No joint shall be tied that is more than 24' from a free edge or free joint including tied rigid shoulders.
3. Arrangement of longitudinal joints are to be as directed by the Engineer.
4. All manholes, meter boxes and other projections into the pavement shall be boxed-in with ½" preformed expansion joint material.

DETAIL OF JOINT ARRANGEMENT

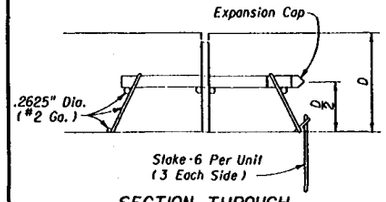

SECTION THROUGH
EXPANSION JOINT UNIT

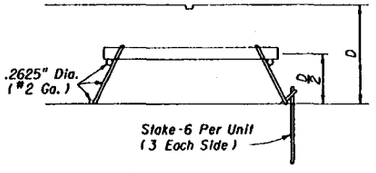

SECTION THROUGH
CONTRACTION JOINT UNIT

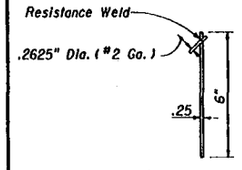

STAKE DETAIL

EXPANSION AND CONTRACTION JOINT DOWEL ASSEMBLY
ALTERNATE

IRONCO MFG. CO. INC.
HELENA, AL

(Formerly Hugensmith Materials, Inc. Pelham, AL)

STATE OF FLORIDA DEPARTMENT OF TRANSPORTATION
ROAD DESIGN

CONCRETE PAVEMENT JOINTS

	Names	Dates
Designed By		
Drawn By	LMF	06/75
Checked By	SFA	06/75
F.H.W.A. Approved:		10/07/80

Approved By: Bruce Dietrich
State Pavement Design Engineer

Revision No.	Sheet No.	Index No.
94	4 of 5	305

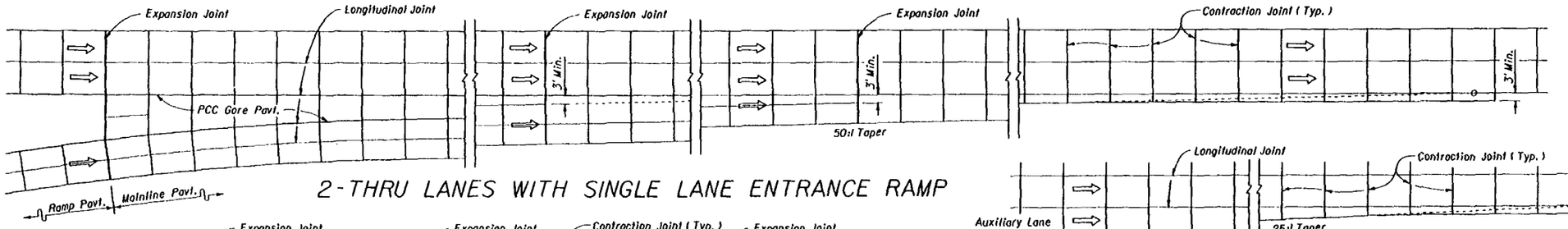

2-THRU LANES WITH SINGLE LANE ENTRANCE RAMP

ENTRANCE TAPER WITH AUXILIARY LANE

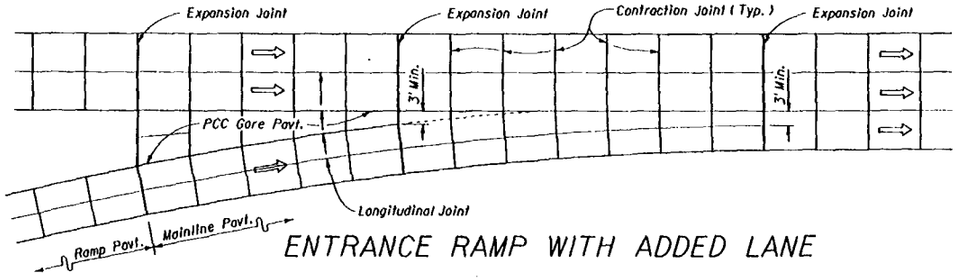

ENTRANCE RAMP WITH ADDED LANE

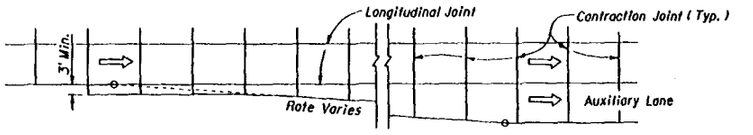

EXIT TAPER WITH AUXILIARY LANE

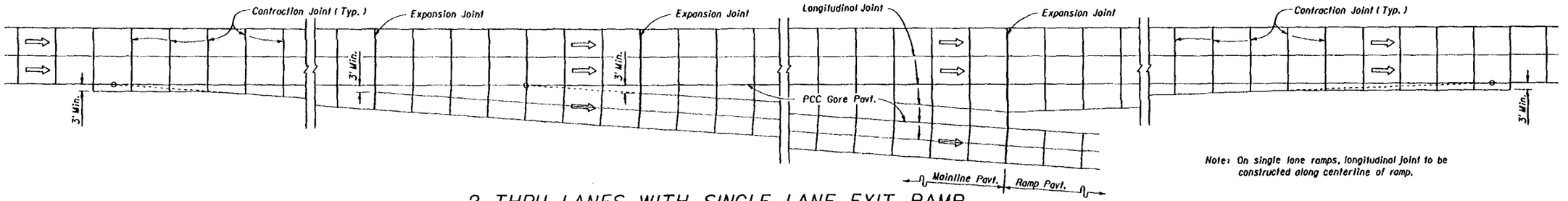

Note: On single lane ramps, longitudinal joint to be constructed along centerline of ramp.

2-THRU LANES WITH SINGLE LANE EXIT RAMP

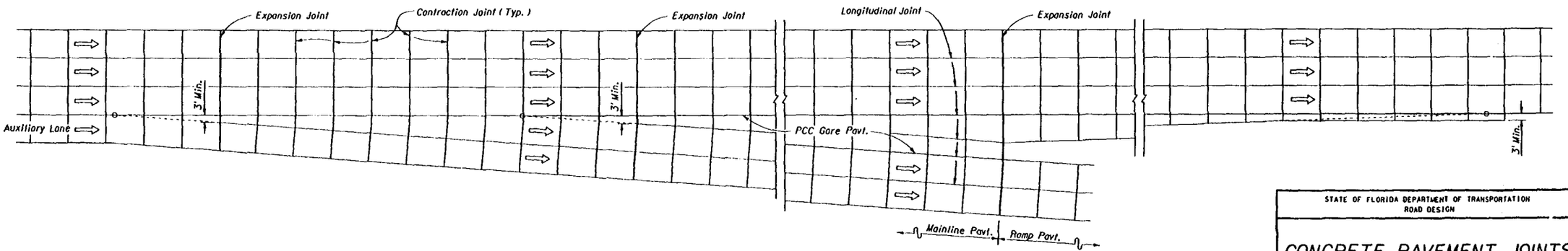

3-THRU LANES WITH AUXILIARY LANE AND 2-LANE EXIT RAMP

JOINT LAYOUT AT ENTRANCE AND EXIT RAMP TERMINALS

STATE OF FLORIDA DEPARTMENT OF TRANSPORTATION
ROAD DESIGN

CONCRETE PAVEMENT JOINTS

	Names	Dates
Designed By	HKH/BTD	11/91
Drawn By	HKH	11/91
Checked By	WNL	11/91
F.H.W.A. Approved:		

Approved By _____ State Pavement Design Engineer

Revision No.	Sheet No.	Index No.
92	5 of 5	305

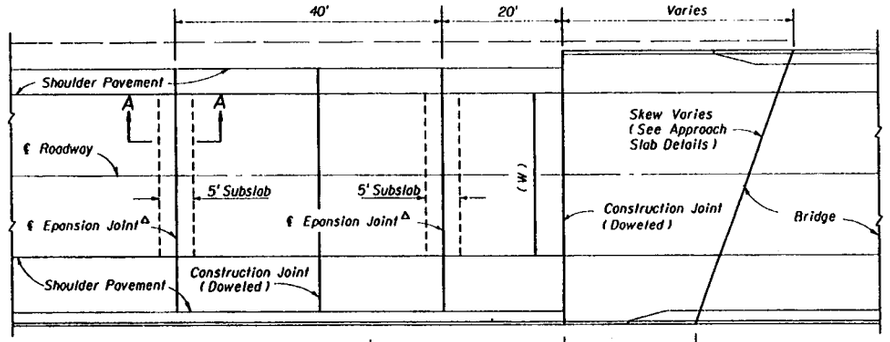

△Expansion Joints Shall Be Constructed Parallel To The Existing Transverse Pavement Joints On Rehabilitation Projects, And Parallel To The Standard Transverse Pavement Joints Shown In The Plans For New Construction.

PLAN

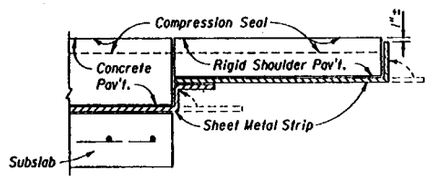

WITH RIGID SHOULDER PAVEMENT

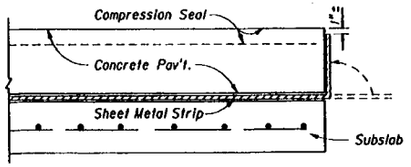

WITH GRASSED SHOULDER OR FLEXIBLE SHOULDER PAVEMENT

Note: Immediately prior to placing the seal, the joint shall be thoroughly cleaned of all foreign material. Immediately after the seal is placed, sheet metal strip shall be bent up against the pavement edge.

The sheet metal strip shall be a minimum 16 gage steel, 12" wide and shall be galvanized in accordance with ASTM A-526, Coating Designation G90.

Rigid shoulder pavement shall be concrete or econcrete as called for in the plans.

DETAIL SHOWING SHEET METAL STRIP

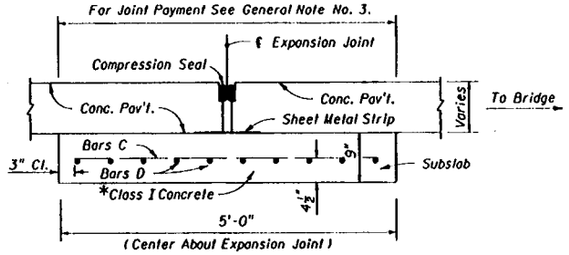

REINFORCING STEEL				
Mark	Size	Spac.	No. Req.	Lgth.
C	5	6"	Varies	4'-6"
D	5	6"	10	W Minus 6"

*Finish surface smooth. Cure with heavy coating of wax base white pigmented curing compound. Apply second application immediately prior to placing pavement.

SECTION AA

EXPANSION JOINT

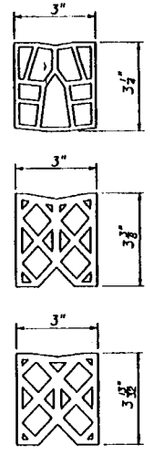

OPTIONAL SEALS

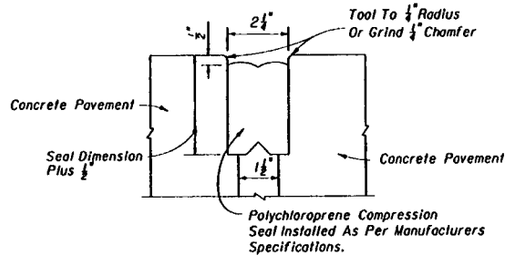

Note: All contacting surfaces between the compression seal and concrete shall be thoroughly coated with a lubricant-adhesive.

JOINT DIMENSIONS

COMPRESSION SEAL DETAIL

DESIGN NOTES

1. For rehabilitation projects, the designer must indicate in the plans the number of slabs to be removed, the number of sub slabs to be constructed/reconstructed, and the location of expansion joints.
2. Pay quantity of expansion joint to be calculated across pavement at right angles to the centerline of the roadway pavement. Shoulder pavement joint included.

GENERAL NOTES

1. The centerline of roadway and the centerline of bridge do not necessarily coincide. Prior to the placement of the expansion joint, the centerline of the roadway pavement shall be determined.
2. For information on other types of concrete pavement joints see Index No. 305.
3. Pay quantity for expansion joint is the length of joint to be constructed across the roadway and shoulder pavements, measured at right angles to the centerline of the roadway.

   Payment for expansion joint shall be full compensation for joint construction, including reinforced concrete subslab, sheet metal strip and compression seal, but, not including roadway pavement reconstruction associated with joint replacement or reconstruction.

   Expansion joint to be paid for under the contract unit price for Bridge Approach Expansion Joint, LF.

STATE OF FLORIDA DEPARTMENT OF TRANSPORTATION
ROAD DESIGN

BRIDGE APPROACH EXPANSION JOINT - CONCRETE PAVEMENT

	Names	Dates
Designed By		
Drawn By	LMF	06/15
Checked By	SFA	06/15
F.H.W.A. Approved:		08/16/17

Approved By: Bruce Dietrich
State Pavement Design Engineer

Revision No.	Sheet No.	Index No.
92	1 of 1	306

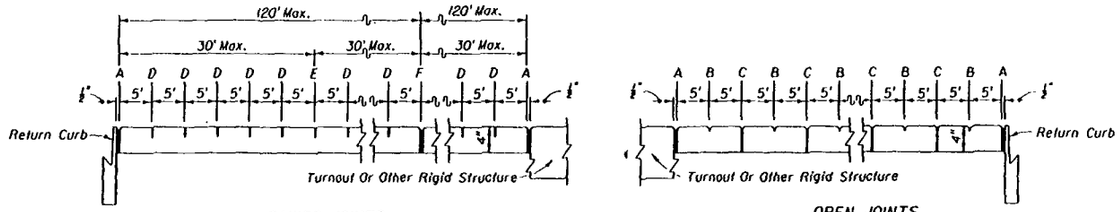

SAWED JOINTS

OPEN JOINTS

EXAGGERATED SCALE

LONGITUDINAL SECTION

SIDEWALK JOINTS

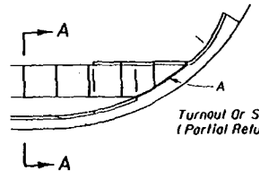

JOINT LEGEND

- A- ½" Expansion Joints (Preformed Joint Filler)
- B- ½" Dummy Joints, Tooled
- C- ½" Formed Open Joints
- D- ⅜" Saw Cut Joints, 1¼" Deep (96 Hour) Max. 5' Centers
- E- ⅜" Saw Cut Joints, 1¼" Deep (12 Hour) Max. 30' Centers
- F- ½" Expansion Joint When Run Of Sidewalk Exceeds 120'
- G- Cold Joint With Bond Breaker, Tooled

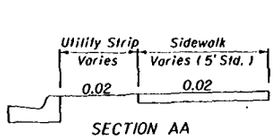

SECTION AA

SIDEWALK WITH UTILITY STRIP

GENERAL NOTES

1. Sidewalks shall be constructed in accordance with FDOT Standard Specification No. 522 except for curb cut ramp runs which shall be finished in accordance with Index No. 304.
2. Bond breaker material can be any impermeable coated or sheet membrane or preformed material having a thickness of not less than 6 mils nor more than ½".
3. For curb cut ramps see Index No. 304.
4. For turnouts see Index No. 515.
5. Sidewalk shall be paid for under the contract unit price for Sidewalk Concrete (4" Thick), S.Y.

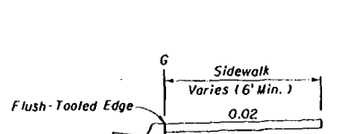

SECTION BB

SIDEWALK WITHOUT UTILITY STRIP

CONCRETE SIDEWALK FOR CURBED ROADWAYS

STATE OF FLORIDA DEPARTMENT OF TRANSPORTATION
ROAD DESIGN

CONCRETE SIDEWALK

	Name	Date
Designed By	SPECS	
Drawn By	HKH	11/93
Checked By	JVG	11/93

Approved By Freddie Simmons
State Roadway Design Engineer

F.H.W.A. Approved:

Revision No.	Sheet No.	Index No.
94	1 of 1	310

GENERAL NOTES

1. The illustrated applications for guardrail are standard requirements.

   The beginning of guardrail need shall be at the greatest of the upstream distances from the hazard, as determined from Figure 1, other application details of this index and the lengths described below for bridges.

   Bridges generally have associated lateral hazards, whereby the length of advancement is established by the intersect of the hazard boundary and the clear zone limit as shown in Figure 1. For bridges that extend in advance of the lateral hazard a distance sufficient to shield the hazard, and the ends of their traffic rails or handrail are the only hazards that require shielding, then the length of guardrail will be either 62.5 feet or 87.5 feet in accordance with Details H, I, S & T of this index; however, when Schemes 11, 12, 13 & 14 of Index No. 401 apply, these lengths must be increased to achieve the reverse bridge connections in those Schemes.

2. One panel equals 12.5 feet. Post spacings shall be 6'-3" except that reduced spacings shall be used for (a) transitions to anchorages at rigid structures such as bridges (See Detail J), (b) the conditions in Note No. 3 below, (c) special post applications, (d) the specific post spacings shown in Index No. 401, and, (e) specific spacings called for in the plans.

3. At above ground rigid hazards where the face of guardrail is offset from the hazard less than the desirable 4 foot minimum, a 3 foot minimum offset may be used with post spacing of 3'-1½" extending over the length of the hazard plus one panel of approach rail. For an offset less than 3 feet, the concrete safety shape shall be used unless other shielding is approved by the Engineer of record. See Index 410, detail "Shoulder Barrier At Rigid Above Ground Hazards" for typical safety shape, and the plans for special shapes and applications.

4. In addition to use at conventional roadside hazards, guardrail will be required where fill slopes within the clear zones exceed 3:1, except that where fill heights are less than 6 feet guardrail may be omitted (regardless of fill slope) unless in the opinion of the Engineer its use is deemed necessary due to other roadside features.

5. Straight rail sections may be used for all radii of 125 feet or greater. For radii less than 125 feet the rail must be fabricated to fit.

6. Corrugated sheet steel beams, end shoes, end sections and back-up plates shall conform to the current requirements of AASHTO M180, Class A (12 ga.), Type 2 (zinc) coating. Aluminum guardrail elements will not be permitted unless specifically called for in the plans. All other metallic components, hardware and accessories shall be in conformance with the appropriate current AASHTO requirements.

7. Permissible post and offset block combinations are tabulated on sheet 11 of 15.

8. Where necessary to enlarge or add holes to galvanized guardrail, the work will be done by drilling or reaming. Damaged galvanized guardrail will be metallized in accordance with Sections 562 and 971 of the Standard Specifications. No burning of holes will be permitted.

9. Guardrail reflector color (white or yellow) shall conform to the color of the near lane edgeline.

10. Crash cushions may be required in lieu of or in conjunction with guardrail at locations where space does not permit development of sufficient guardrail length, offset or crashworthiness at terminals. On high speed facilities (50 mph or greater) crash cushions shall be constructed at Type II end anchorages located in the median within the clear zone.

11. Median guardrail for bridges located on divided roadways shall be constructed the same as outer roadway guardrail under the following conditions:
    - (a) Medians of uniform width that are occupied by other transportation and joint use facilities.
    - (b) Medians of uniform variable widths with independent vertical alignments not suited to normal median guardrail installations.
    - (c) Medians of bifurcated roadways.

12. Any guardrail with existing concrete posts that is being reset under a construction contract shall be reset using wood or steel posts.

13. All guardrail panels, end sections and special end shoes shall be lapped in the direction of adjacent traffic.

14. Guardrail mounting height of 1'-9" to center of W beam and 1'-6" to lower post bolt in thrie beam is critical and shall be attained in all cases.

15. Guardrail connections to existing bridges shall be in accordance with this index and index No. 401. Connections to concrete barrier walls shall be in accordance with this index and index No. 410.

Design Speed (mph)	X (Length Of Advancement) Ft. ◪
50-70	= 13 (D-d)
45 Or Less	= 16 (D-d)

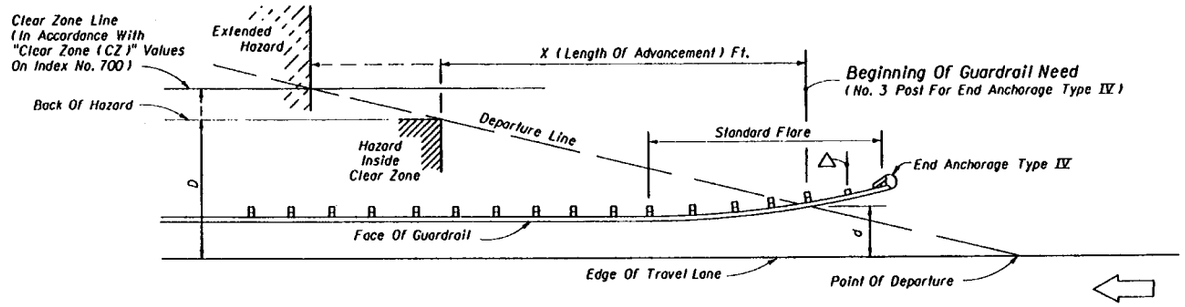

◪ Length of advancement determined from the diagram and equations above establishes the location of the upstream beginning of need for guardrail, however, the length of advancement can be no less than that required by other details of this index, and by the minimum lengths described by General Note No. 1.

The Standard Flare with End Anchorage Type IV is shown in the diagram above, however, the diagram applies to other configurations that may occur at the beginning of need, such as, other flare designs; upstream returns; and, other upstream deflected, tangent and curvilinear conditions.

△ Type IV End Anchorages constructed prior to July 1, 1990, which were located by the line of departure passing through the face of rail at the second breakaway post, will not require relocation except under the following conditions: (a) the plans call for resetting or relocation (b) so directed by the Engineer. Reset or relocated guardrail is to be set with the line of departure passing through the face of rail at the third post as shown.

Equation Variables:

D = Distance in feet from near edge of the near approach travel lane to either (a) the back of hazard, when the hazard is located inside the clear zone or (b) the clear zone line, when the hazard extends to or goes beyond the clear zone line. For left side hazards and clear zones on two-way undivided facilities, D is measured from the inside edge of the near approach travel lane.

d = Distance in feet from the near edge of the near approach travel lane to the face of guardrail at its intersection with the departure line (No. 3 post where End Anchorage Type IV used). For left side hazards and clear zones on two-way undivided facilities, d is measured from the inside edge of the near approach travel lane. See Standard Flare-Detail P for additional information.

LENGTH OF ADVANCEMENT

Figure 1

STATE OF FLORIDA DEPARTMENT OF TRANSPORTATION
ROAD DESIGN

GUARDRAIL

	Names	Dates
Designed By		
Drawn By	HSD	8/83
Checked By	JMC	8/83
F.H.W.A. Approved:		10/05/83

Approved By: Freddie Simmons
State Roadway Design Engineer

Revision No.	Sheet No.	Index No.
92	1 of 15	400

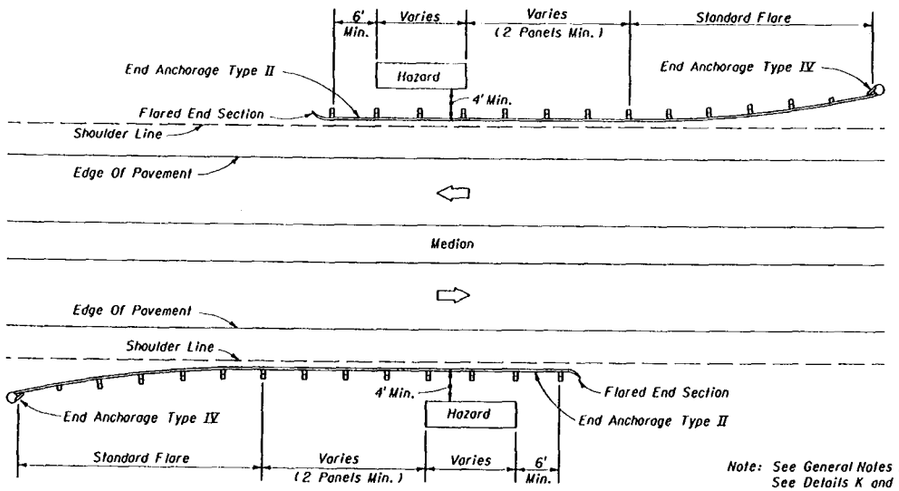

DIVIDED ROADWAY - DETAIL B

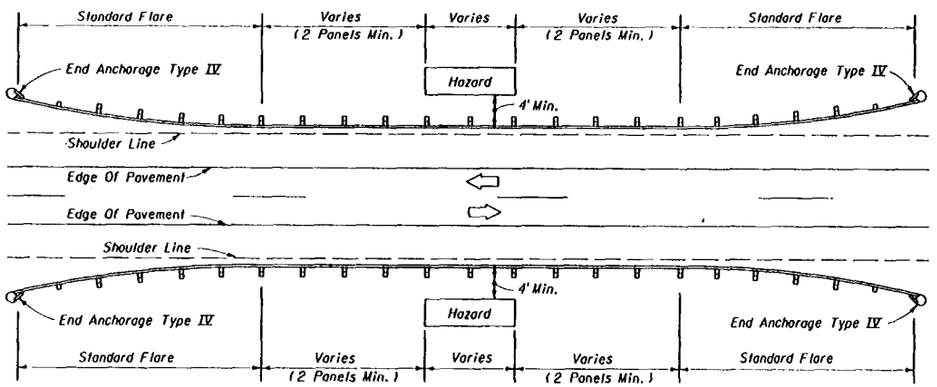

UNDIVIDED ROADWAY - DETAIL C

Note: See General Notes Nos. 1, 2, 3, and 4.
See Details K and L for guardrail offsets.
See Detail P for standard flare.
For urban curb and gutter sections that require shielding from hazards see concrete barrier wall Index No. 410.

GUARDRAIL APPLICATION FOR ROADSIDE HAZARDS

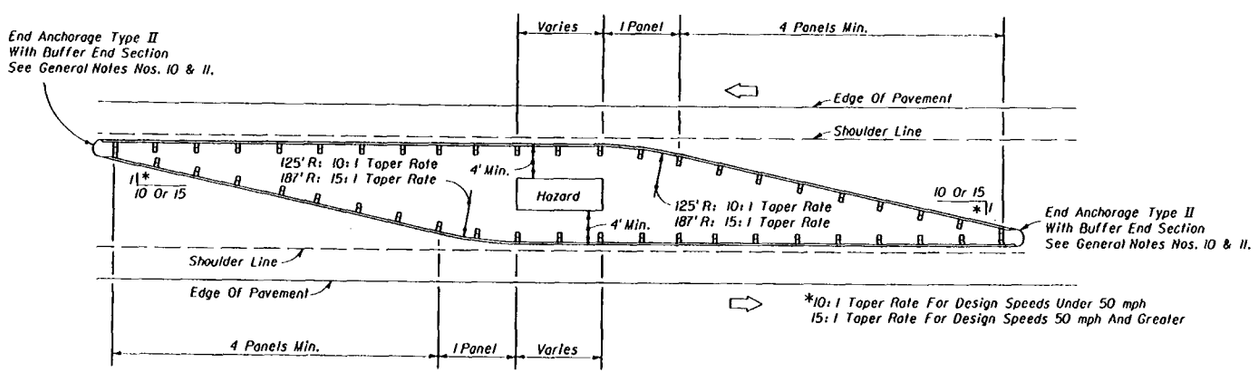

OPPOSING TRAFFIC - DETAIL D

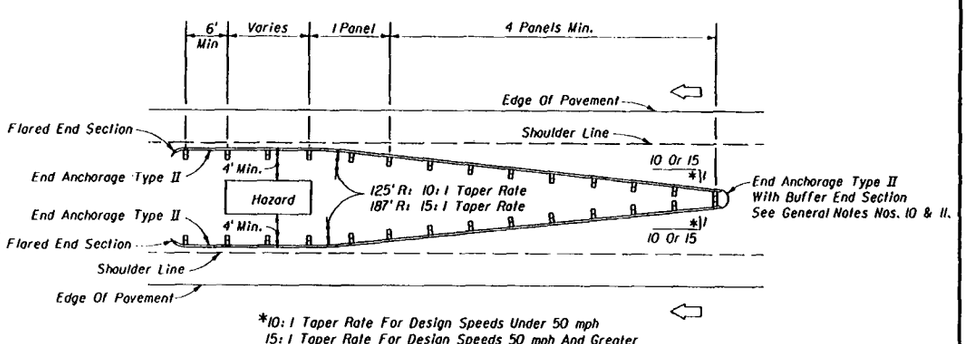

ONE-WAY TRAFFIC - DETAIL G

Note: See General Notes Nos. 1, 2, 3 and 11.
See Details K and L for guardrail offsets.
For urban curb and gutter sections that require shielding from hazards see concrete barrier wall Index No. 410.

GUARDRAIL APPLICATION FOR MEDIAN AND GORE HAZARDS

STATE OF FLORIDA DEPARTMENT OF TRANSPORTATION
ROAD DESIGN

GUARDRAIL

	Names	Dates
Designed By		
Drawn By	HSD	09/81
Checked By	JBW/JVC	09/81
F.H.W.A. Approved:		10/08/81

Approved By: Freddie Simmons
State Roadway Design Engineer

Revision No.	Sheet No.	Index No.
92	2 of 15	400

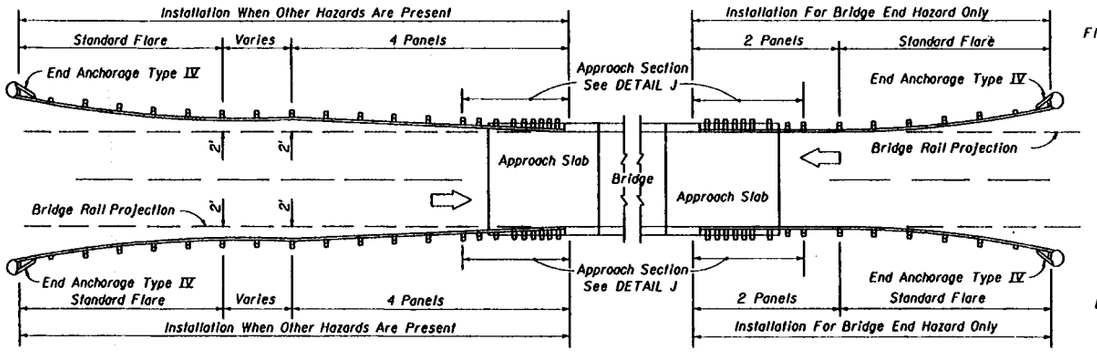

UNDIVIDED ROADWAY - DETAIL H

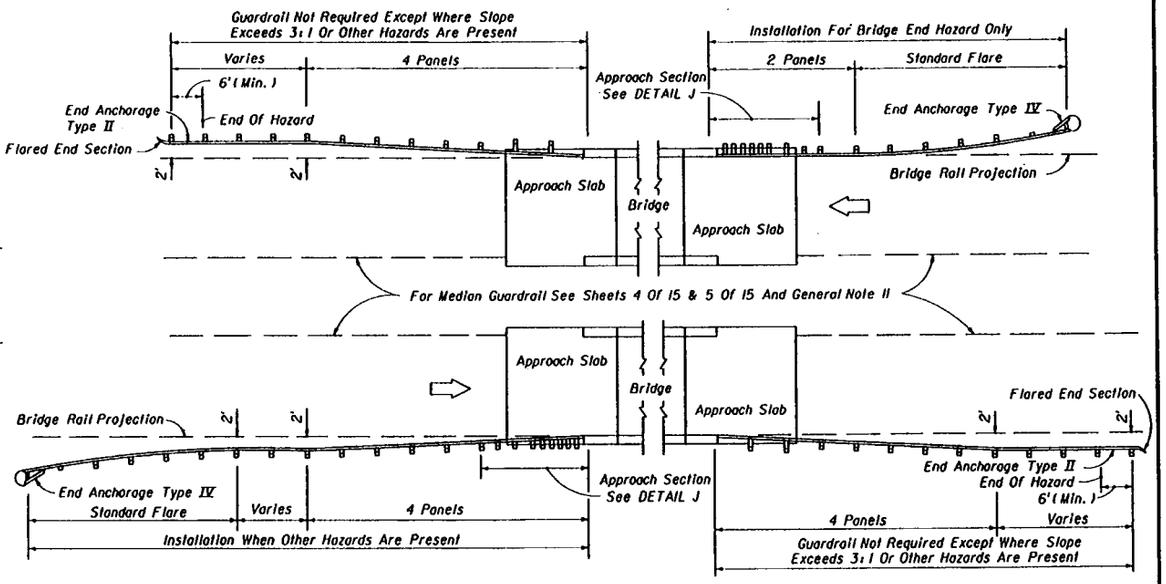

DIVIDED ROADWAY - DETAIL I

Note: See General Notes Nos. 1 and 2. See Details J and N For Connections To Bridges

GUARDRAIL APPLICATIONS FOR BRIDGES WITH FULL WIDTH SHOULDERS

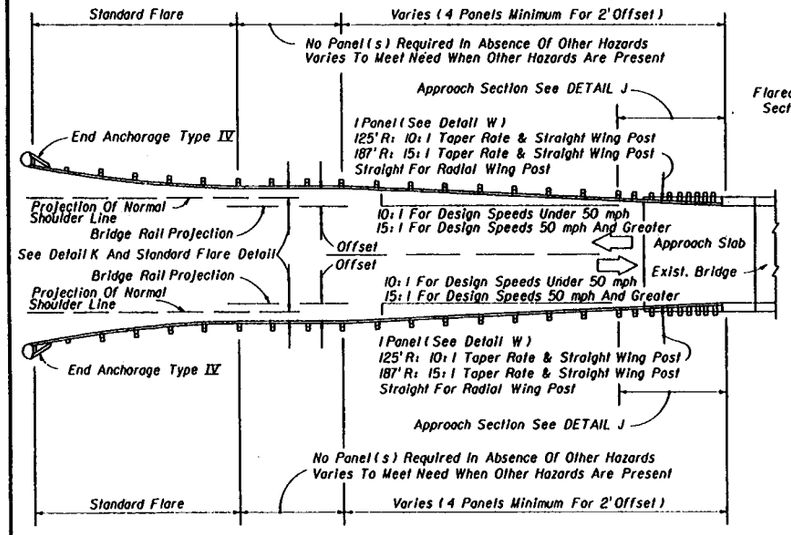

UNDIVIDED ROADWAY - DETAIL S

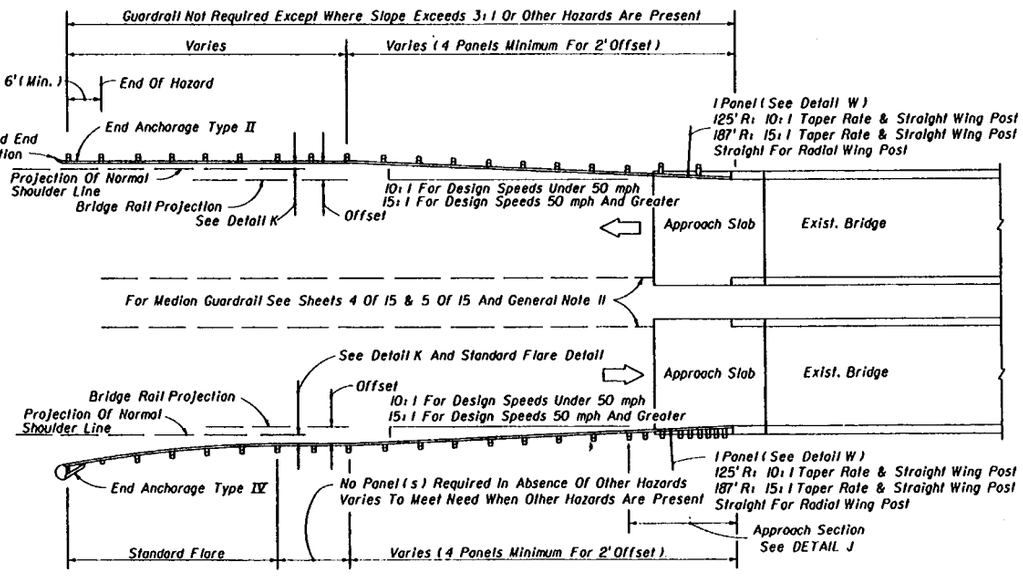

DIVIDED ROADWAY - DETAIL T

Note: See General Note No. 2. See Details J And N And Index No. 401 For Connections To Bridges.

GUARDRAIL APPLICATIONS FOR EXISTING BRIDGES WITH LESS THAN FULL WIDTH SHOULDERS

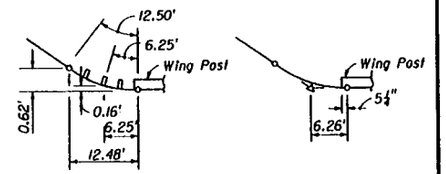

125' RADIAL PANEL

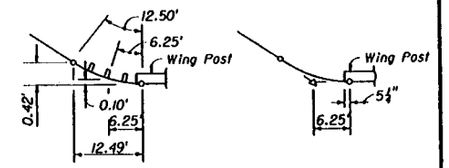

187' RADIAL PANEL

RADIAL PANELS ADJOINING BRIDGE

DETAIL W

STATE OF FLORIDA DEPARTMENT OF TRANSPORTATION
ROAD DESIGN

GUARDRAIL

	Names	Dates
Designed By		
Drawn By	HSD	08/83
Checked By	JBW/JNG	08/83
F.H.W.A. Approved:		10/05/83

Approved By: Freddie Simmons
State Roadway Design Engineer

Revision No.	Sheet No.	Index No.
92	3 of 15	400

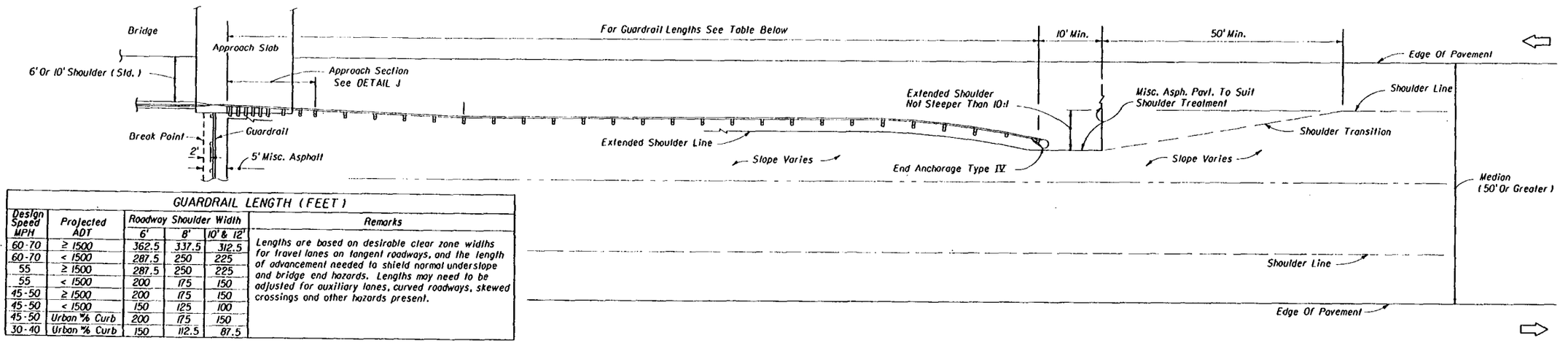

GUARDRAIL LENGTH (FEET)					
Design Speed MPH	Projected ADT	Roadway Shoulder Width 6'	8'	10' & 12'	Remarks
60-70	≥ 1500	362.5	337.5	312.5	Lengths are based on desirable clear zone widths for travel lanes on tangent roadways, and the length of advancement needed to shield normal underslope and bridge end hazards. Lengths may need to be adjusted for auxiliary lanes, curved roadways, skewed crossings and other hazards present.
60-70	< 1500	287.5	250	225	
55	≥ 1500	287.5	250	225	
55	< 1500	200	175	150	
45-50	≥ 1500	200	175	150	
45-50	< 1500	150	125	100	
45-50	Urban ⅝ Curb	200	175	150	
30-40	Urban ⅝ Curb	150	112.5	87.5	

GUARDRAIL APPLICATIONS FOR MEDIANS 50 FEET OR GREATER

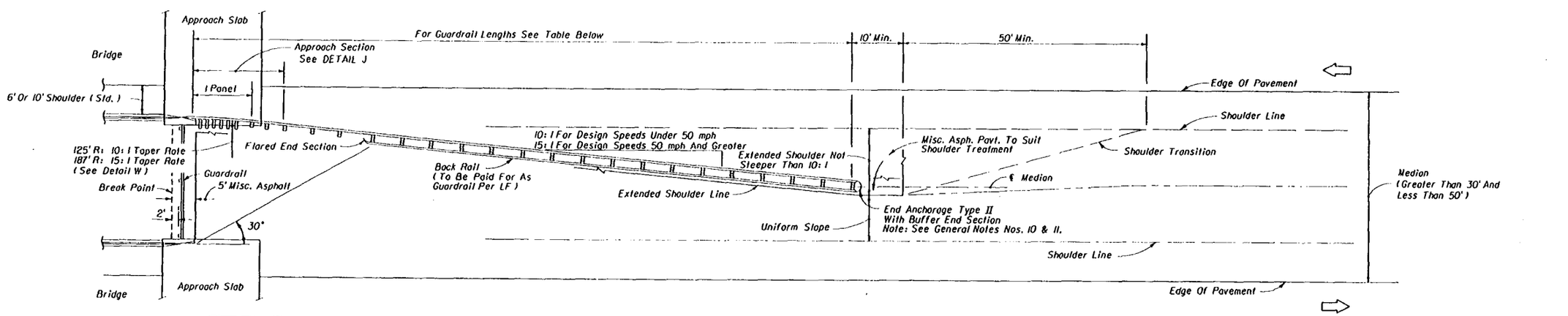

GUARDRAIL LENGTHS																							
Median Width (Ft.)	10:1 TAPER RATE												15:1 TAPER RATE										
	6' Bridge Shoulder						10' Bridge Shoulder						6' Bridge Shoulder						10' Bridge Shoulder				
	Panels (No.)			Length (Ft.)			Panels (No.)			Length (Ft.)			Panels (No.)			Length (Ft.)			Panels (No.)			Length (Ft.)		
	Front	Back	Total	Front	Back	Total	Front	Back	Total	Front	Back	Total	Front	Back	Total	Front	Back	Total	Front	Back	Total	Front	Back	Total
32	8	6	14	100	75	175	5	4	9	62.5	50	112.5	11	9	20	137.5	112.5	250	6	5	11	75	62.5	137.5
34	8	6	14	100	75	175	5	4	9	62.5	50	112.5	12	10	22	150	125	275	7	6	13	87.5	75	162.5
36	9	7	16	112.5	87.5	200	6	5	11	75	62.5	137.5	13	11	24	162.5	137.5	300	8	7	15	100	87.5	187.5
38	10	8	18	125	100	225	7	6	13	87.5	75	162.5	14	11	25	175	137.5	312.5	10	8	18	125	100	225
40	11	8	19	137.5	100	237.5	8	6	14	100	75	175	16	13	29	200	162.5	362.5	11	9	20	137.5	112.5	250
42	12	9	21	150	112.5	262.5	8	7	15	100	87.5	187.5	17	14	31	212.5	175	387.5	12	10	22	150	125	275
44	12	9	21	150	112.5	262.5	9	7	16	112.5	87.5	200	18	15	33	225	187.5	412.5	13	11	24	162.5	137.5	300
46	13	10	23	162.5	125	287.5	10	8	18	125	100	225	19	15	34	237.5	187.5	425	14	12	26	175	150	325
48	14	10	24	175	125	300	11	8	19	137.5	100	237.5	20	16	36	250	200	450	16	12	28	200	150	350

GUARDRAIL APPLICATIONS FOR MEDIANS GREATER THAN 30' AND LESS THAN 50'

STATE OF FLORIDA DEPARTMENT OF TRANSPORTATION
ROAD DESIGN

GUARDRAIL

	Names	Dates
Designed By		
Drawn By	11SD	09/81
Checked By	JBW/JVG	09/81
F.H.W.A. Approved		10/08/81

Approved By Freddie Simmons
State Roadway Design Engineer

Revision No.	Sheet No.	Index No.
92	4 of 15	400

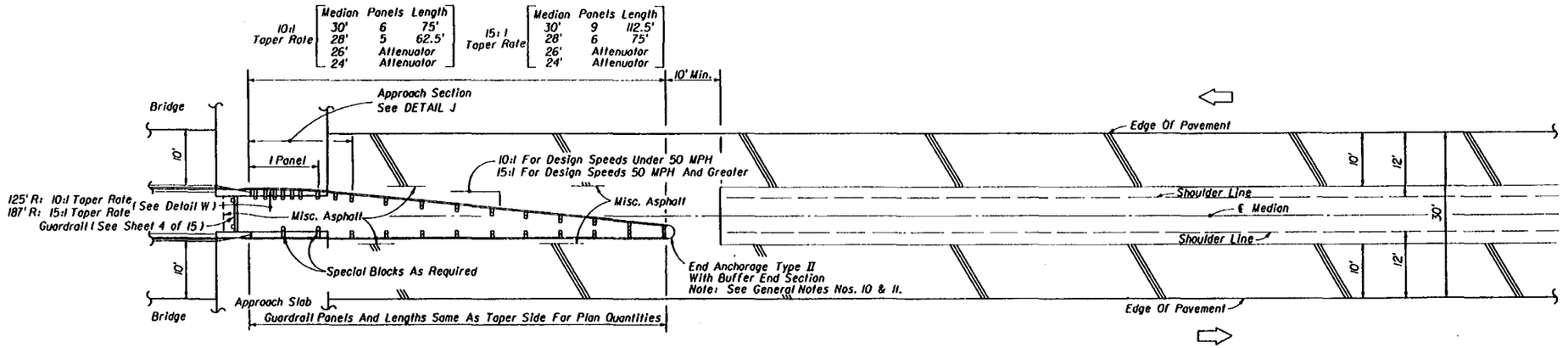

GUARDRAIL APPLICATIONS FOR MEDIANS 30' OR LESS WITH 10' BRIDGE SHOULDERS

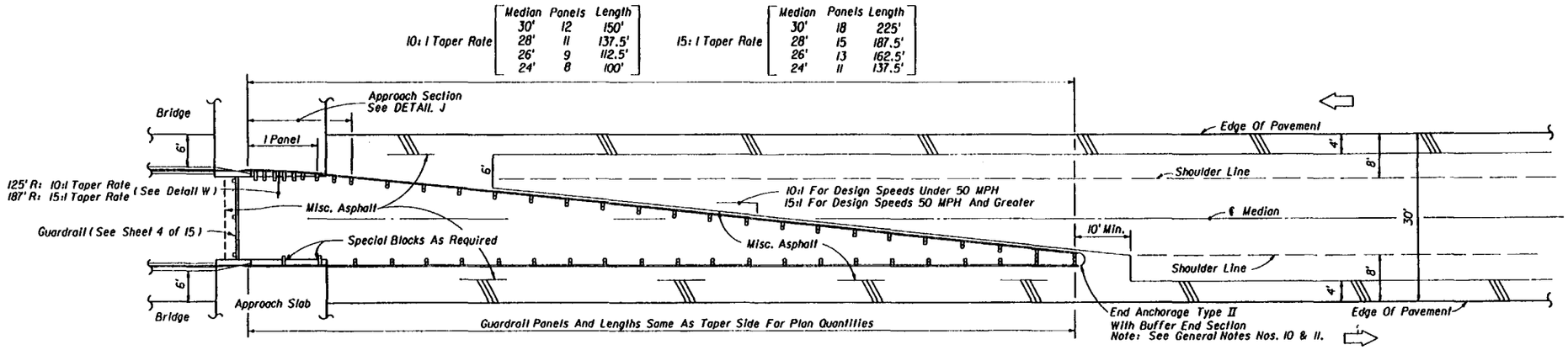

GUARDRAIL APPLICATIONS FOR MEDIANS 30' OR LESS WITH 6' BRIDGE SHOULDERS

NOTE:
The guardrail configurations shown apply only to parallel or near parallel bridges with open medians 30' or less in width. When medians 30' or less in width are closed by continuous decking between the bridge travel ways, traffic separation shall be attained by appropriate treatments such as, but not limited to, raised separators, curbs, guardrail, concrete barrier walls and special barriers.

STATE OF FLORIDA DEPARTMENT OF TRANSPORTATION
ROAD DESIGN

GUARDRAIL

	Names	Dates
Designed By		
Drawn By	RWA	08/82
Checked By	JVG/RW	08/82
F.H.W.A. Approved:		09/23/82

Approved By: Freddie Simmons
State Roadway Design Engineer

Revision No.	Sheet No.	Index No.
92	5 of 15	400

LEGEND

1. Edge of roadway pavement
2. Taper
3. Pavement return (radius R_1).
4. Standard flare to be installed except when existing guardrail on intersecting drive or side road adjoins the project.
5. Post for locating standard flare, proximate to PC or PT:
   No. 2 post - Radii 25' or less.
   No. 3 post - Radii 25' thru 50'.
   No. 4 post - Radii 50' or greater.
6. Post for locating standard flare, proximate to PC or PT:
   No. 3 post - Radii 25' or less.
   No. 4 post - Radii greater than 25'.
7. Expanded shoulder for standard flare.
8. Shoulder transition.
9. Type IV end anchorage, (standard flare only).
10. Shoulder for radial guardrail returns.
11. Radial guardrail to be installed when guardrail required on the intersecting drive or side road (radius R_2).
12. Type II end anchorage (radial return only).
13. Guardrail installation limited to roadway right of way unless otherwise called for in the plans.

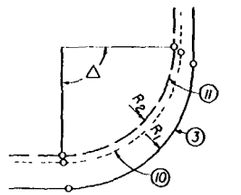

RADIAL GUARDRAIL

RADIAL GUARDRAIL						
	Normal Turnouts					
	Taper			Simple Curve		
R_1	R_2	Panels Required	Δ	R_2	Panels Required	Δ
15'	25'	3	85° 56'	25'	3	85° 56'
20'	25'	3	85° 56'	25'	3	85° 56'
25'	25'	3	85° 56'	25'	3	85° 56'
30'	25'	3	85° 56'	25'	3	85° 56'
35'	25'	3	85° 56'	25'	3	85° 56'
40'	40'	5	89° 31'	40'	5	89° 31'
45'	40'	5	89° 31'	40'	5	89° 31'
50'	40'	5	89° 31'	40'	5	89° 31'

Note: Only 25' and 40' radius panels are to be used for return guardrail on normal turnouts. On skewed turnouts the number of panels used and their arrangement with straight panels will be as shown in the plans or as directed by the Engineer.

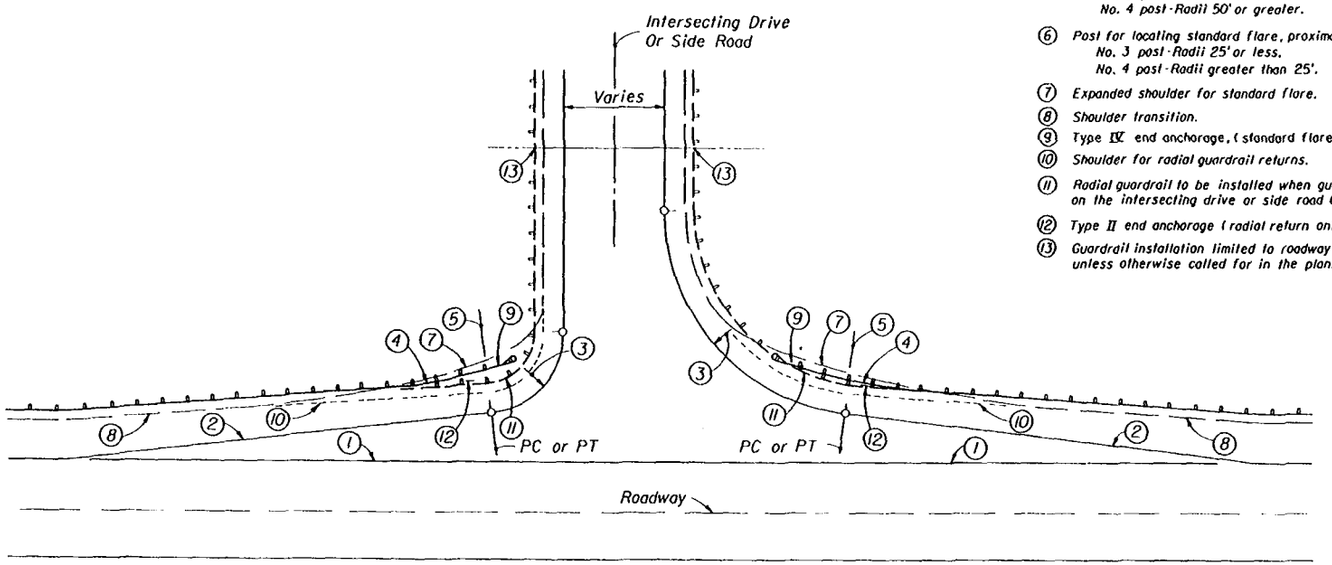

TAPER TURNOUTS

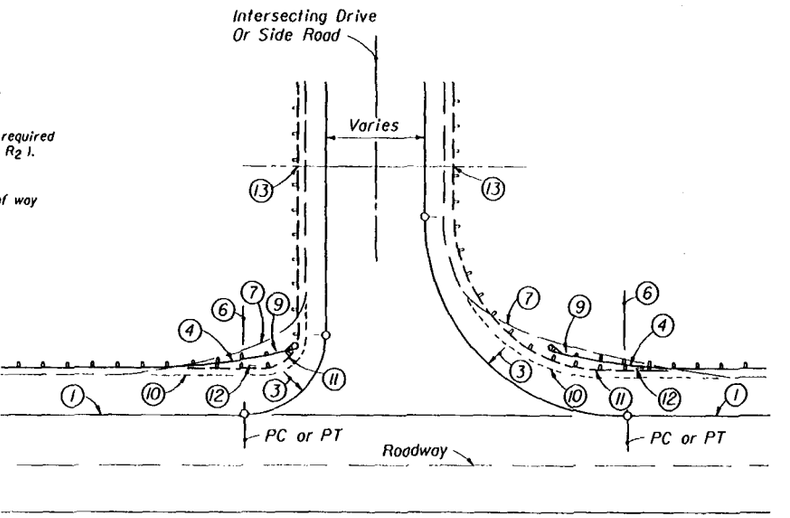

SIMPLE CURVE TURNOUTS

Note: The guardrail application shown on this sheet are for highways with flush shoulders and no restraints for constructing standard flares, anchorages and minimum lengths of guardrail.

Where openings in guardrail are required in close proximity to bridge traffic rails and concrete barrier walls and standard flares with minimum or greater lengths of guardrail can not be applied, either controlled release returns or energy absorbing terminals are to be applied.

GUARDRAIL APPLICATIONS FOR INTERSECTING DRIVES AND SIDE ROADS ON RURAL FACILITIES

STATE OF FLORIDA DEPARTMENT OF TRANSPORTATION
ROAD DESIGN

GUARDRAIL

	Names	Dates
Designed By		
Drawn By	HSD	09/83
Checked By	JVG	09/83
F.H.W.A. Approved:		10/06/83

Approved By: Judi Simmons
State Roadway Design Engineer

Revision No.	Sheet No.	Index No.
94	6 of 15	400

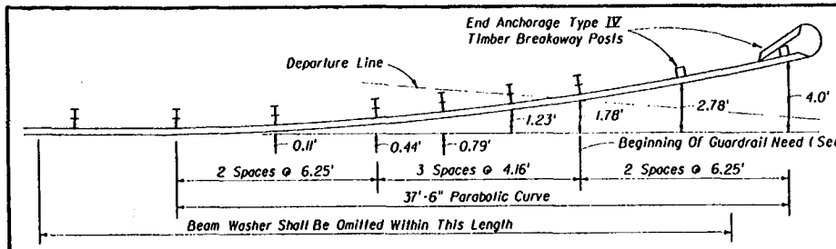

STEEL POSTS

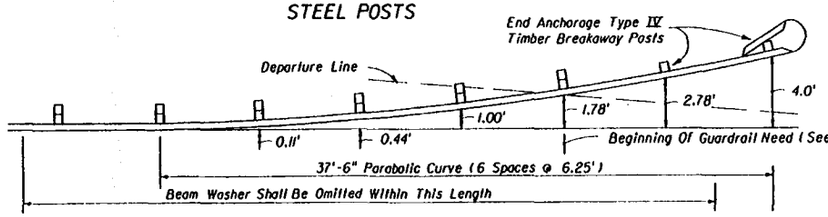

WOOD POSTS

STANDARD FLARE - DETAIL P

Notes:
All posts in flare except breakaway posts to be standard length posts.

All posts except breakaway post will have offset blocks. For post and offset block combinations see Sheet II of 15.

The beginning of guardrail need to be determined by Figure I (Length Of Advancement), Sheet I of 15.

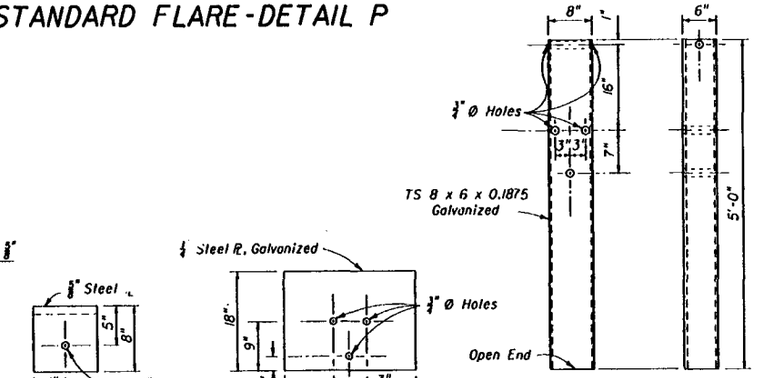

STEEL TUBE

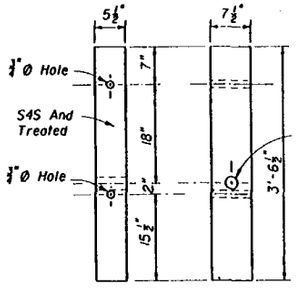

TIMBER BREAKAWAY POST

Note: Seal weld before galvanizing.

BEARING PLATE

SOIL PLATE

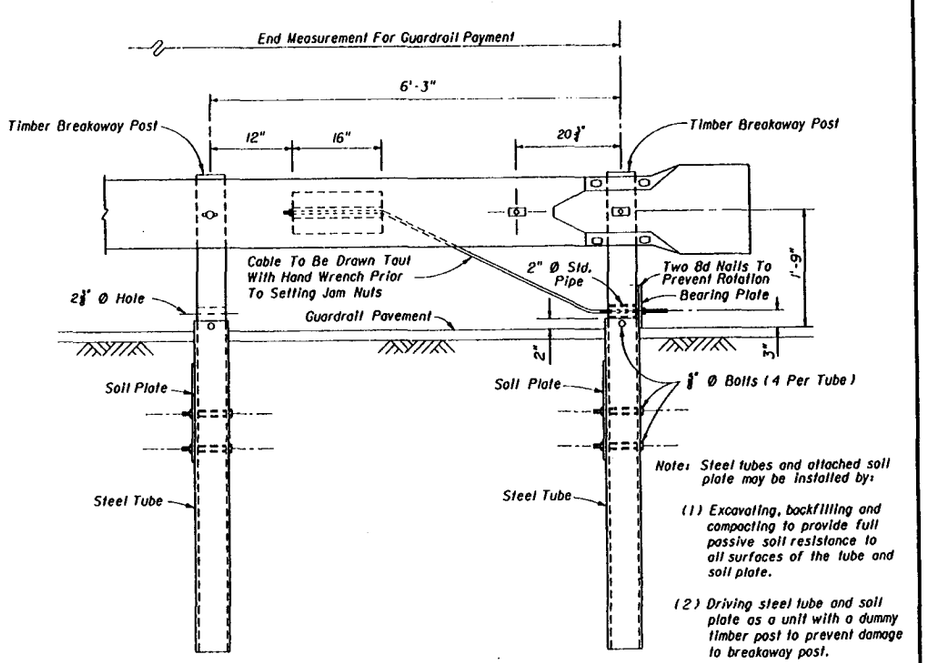

FRONT VIEW

Note: Steel tubes and attached soil plate may be installed by:

(1) Excavating, backfilling and compacting to provide full passive soil resistance to all surfaces of the tube and soil plate.

(2) Driving steel tube and soil plate as a unit with a dummy timber post to prevent damage to breakaway post.

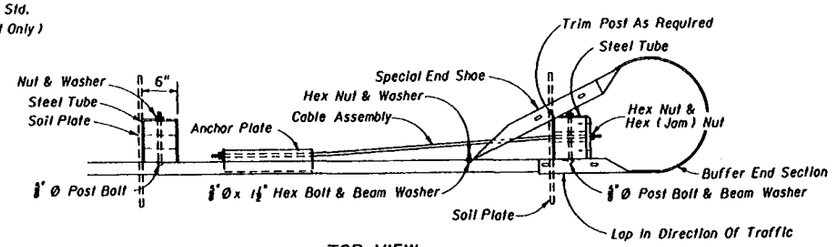

TOP VIEW

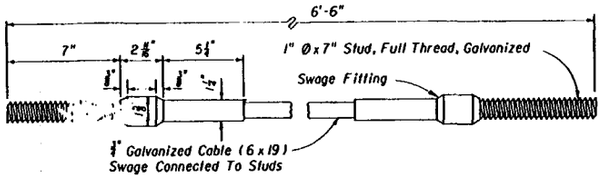

Note: BCT Cable Assembly to be in accordance with the specifications of Standard F-37-76, ARTBA Technical Bulletin No. 268-B, June 1979.

CABLE ASSEMBLY

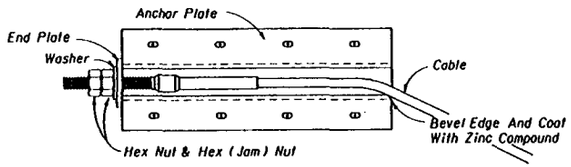

Note: For additional information see Anchor Plate detail.

INSIDE VIEW

CABLE CONNECTION TO BEAM

Note: The payment for the items of End Anchorage Assemblies Type IV shall include furnishing and installing the Buffer End Section, Special End Shoe, One-Piece Anchor Plate, Cable Assembly, Pipe Sleeve, Soil Plates, Steel Tubes, Bearing Plate, two Treated Timber Break-Away Posts, and the necessary hardware.

END ANCHORAGE TYPE IV

STATE OF FLORIDA DEPARTMENT OF TRANSPORTATION
ROAD DESIGN

GUARDRAIL

	Names	Dates
Designed By		
Drawn By	JM	01/81
Checked By	JGV	01/81
F.H.W.A. Approved:		10/08/81

Approved By Freddie Simmons
State Roadway Design Engineer

Revision No.	Sheet No.	Index No.
92	7 of 15	400

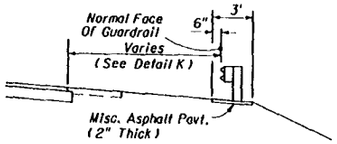

SHOULDER WITH OR WITHOUT 5' PAVEMENT

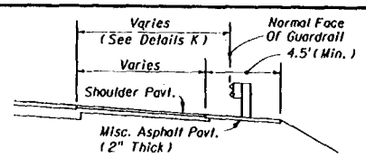

PAVED SHOULDERS

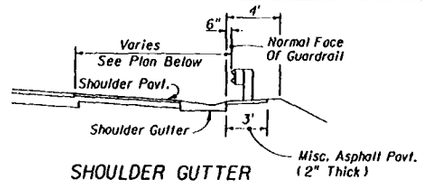

SHOULDER GUTTER

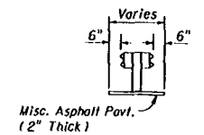

DOUBLE FACE RAIL

MISCELLANEOUS PAVEMENT FOR STANDARD SECTIONS

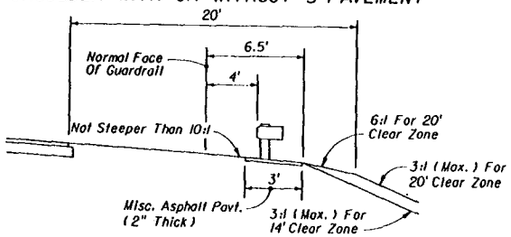

SECTION AA (EXAMPLE FOR 20' CLEAR ZONE)

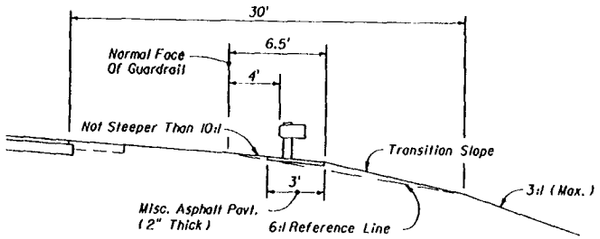

SECTION AA (EXAMPLE FOR 30' CLEAR ZONE)

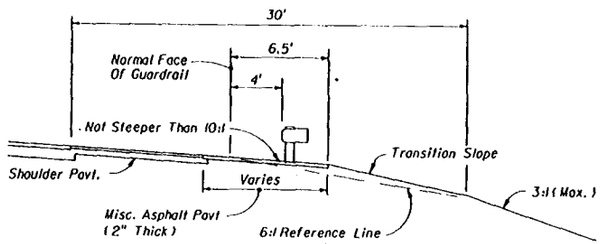

SECTION BB (EXAMPLE FOR 30' CLEAR ZONE)

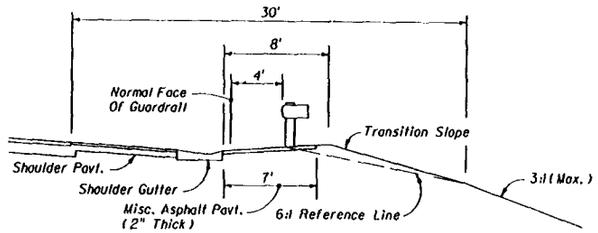

SECTION CC (EXAMPLE FOR 30' CLEAR ZONE)

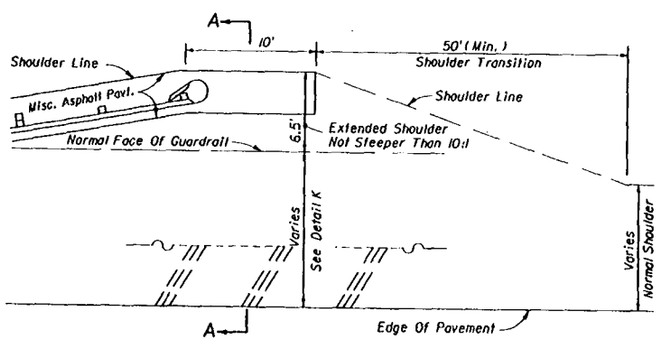

SHOULDER WITH OR WITHOUT 5' PAVEMENT

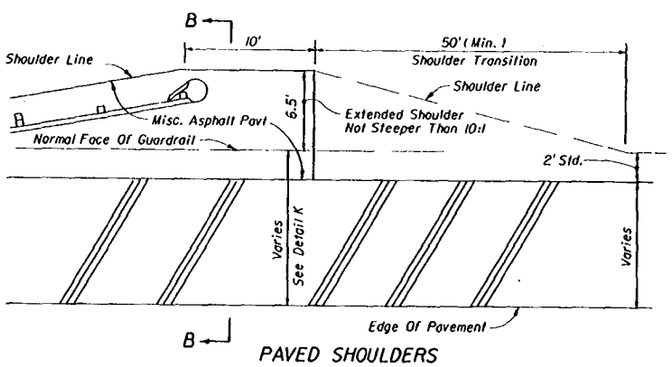

PAVED SHOULDERS

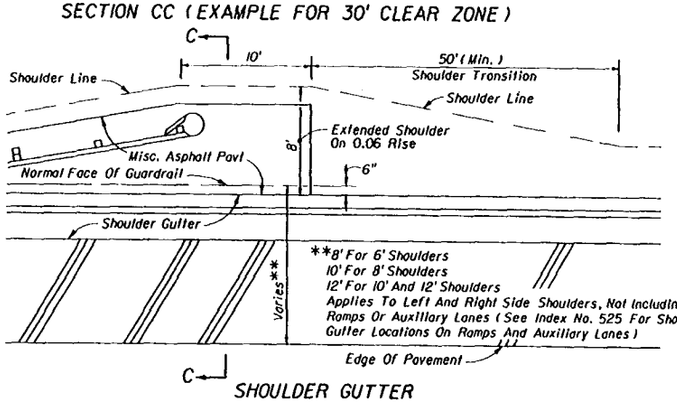

SHOULDER GUTTER

SHOULDERS, SLOPES AND MISCELLANEOUS PAVING FOR THE STANDARD FLARE

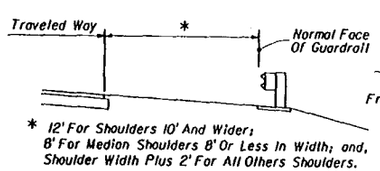

* 12' For Shoulders 10' And Wider;
8' For Median Shoulders 8' Or Less In Width; and,
Shoulder Width Plus 2' For All Others Shoulders.

STANDARD LOCATIONS

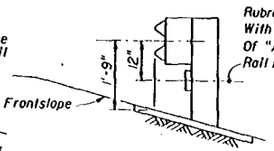

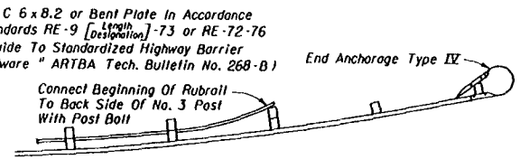

LOCATIONS ON FRONT SLOPES

GUARDRAIL LOCATION - DETAIL K

LATERAL PLACEMENT ON FRONTSLOPES (FROM EDGE OF TRAVELED WAY)

SLOPE	NOT RECOMMENDED	ACCEPTABLE WITH RUBRAIL
4:1	14' to 27'	28' to 45'
5:1	15' to 25'	26' to 45'
6:1	17' to 22'	23' to 45'
7:1	21' to 24'	25' to 45'
8:1	Acceptable to 25'	26' to 45'
9:1	Acceptable to 26'	27' to 45'
10:1	Acceptable to 27'	28' to 45'

Notes:
For shoulders less than 12' in width the tabulated values will be reduced by the difference between 12' and the shoulder width.

Placement of guardrail on frontslopes steeper than 4:1 not recommended.

Cost of rubrail to be included in the contract unit price for guardrail.

STATE OF FLORIDA DEPARTMENT OF TRANSPORTATION
ROAD DESIGN

GUARDRAIL

	Names	Dates
Designed By		
Drawn By	JM	07/81
Checked By	JGW/JWD	07/81
F.H.W.A. Approved		10/08/81

Approved By: Freddie Simmons
State Roadway Design Engineer

Revision No.	Sheet No.	Index No.
94	8 of 15	400

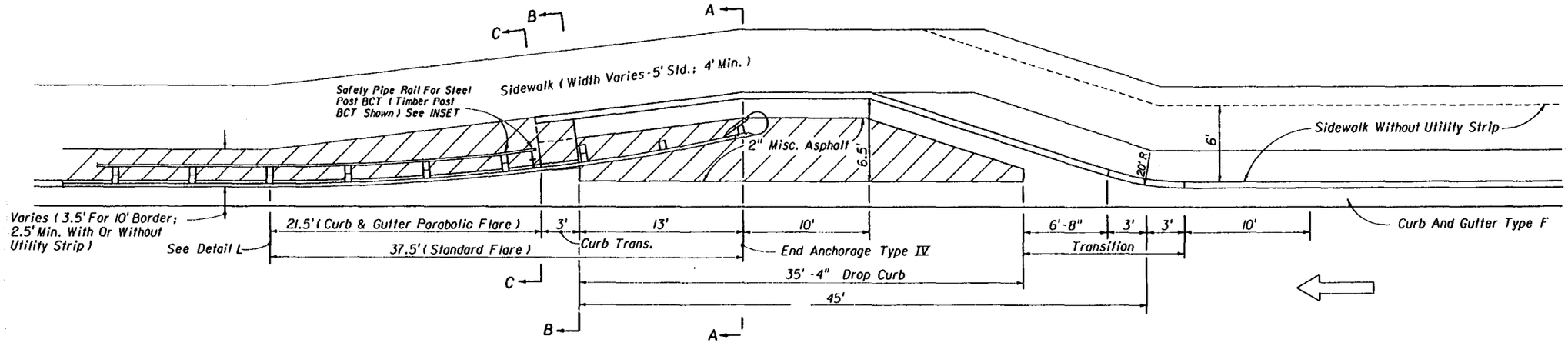

PLAN

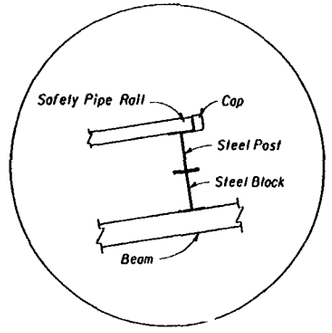

Safety Pipe Rail For Steel Post BCT

INSET

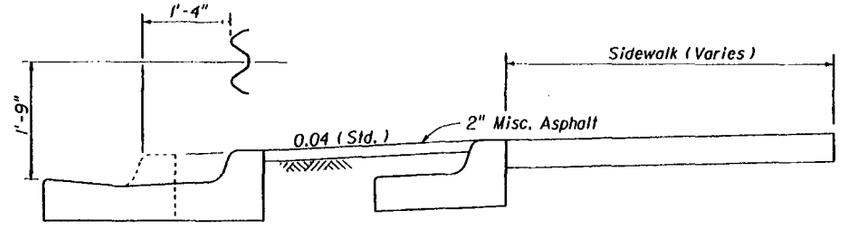

SECTION CC

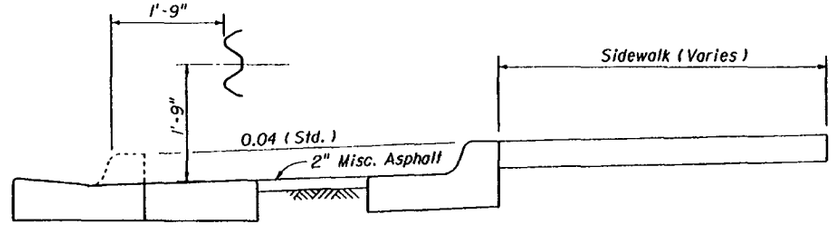

SECTION BB

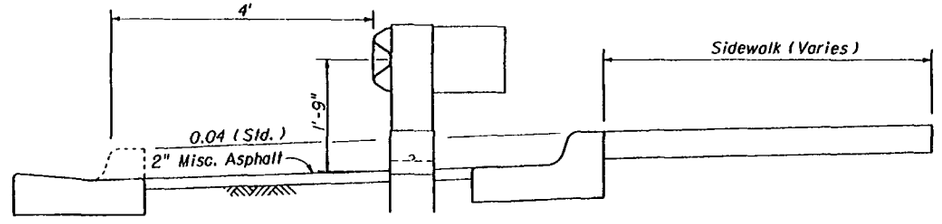

SECTION AA

APPROACH TREATMENT FOR STANDARD FLARE FOR CURB AND GUTTER

DETAIL Q

STATE OF FLORIDA DEPARTMENT OF TRANSPORTATION
ROAD DESIGN

GUARDRAIL

	Names	Dates
Designed By	JVG/JBW	10/87
Drawn By	JBW	10/87
Checked By	JVG	10/87
F.H.W.A. Approved:		

Approved By Freddie Simmons
State Roadway Design Engineer

Revision No.	Sheet No.	Index No.
92	9 of 15	400

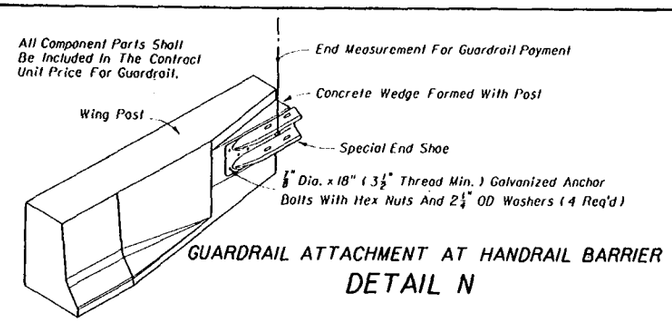

GUARDRAIL ATTACHMENT AT HANDRAIL BARRIER

DETAIL N

APPROACH POSTS AND SPECIAL OFFSET BLOCKS

OFFSET BLOCK DIMENSIONS	
(a)	6" x 17" x 14"
(b)	6" x 16½" x 14"
(c)	6" x 16" x 14"
(d)	6" x 15½" x 14"
(e)	6" x 15" x 14"
(f)	6" x 14" x 14"
(g)	6" x 13" x 14"
(h)	6" x 11" x 14"

Dimensions shown are suited to standard approach slabs with parallel curb configurations and typical guardrail lateral transitions. For other approach slab configurations and guardrail alignments, the approach posts are to be adjusted and the depth of the offset blocks adjusted for a snug fit against the back of the rail. Offset blocks can be no deeper than one special block plus one standard block. The nested rails shall not be bolted to the blocks and posts at blocks (a), (c) and (e). One 16d galvanized nail is to be used between timber blocks and posts (a) through (h) to prevent incidental rotation of blocks. All posts are standard posts except where approach slab configurations require the use of special steel posts. Where applicable, normal offset blocks are to be used with special steel posts. When steel offset blocks are used, rail back-up plates are not to be used at offset blocks (a) through (f).

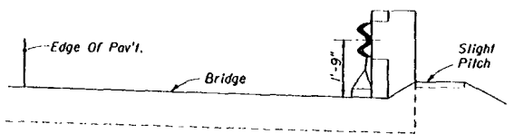

SECTION AA

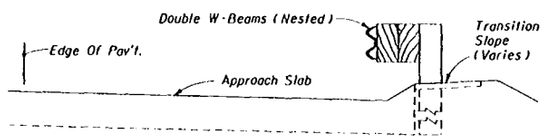

SECTION BB

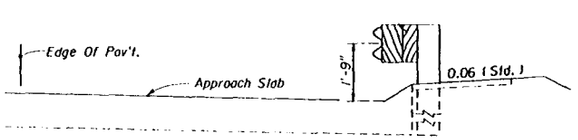

SECTION CC

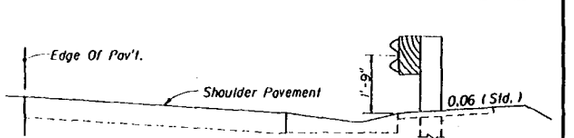

SECTION DD

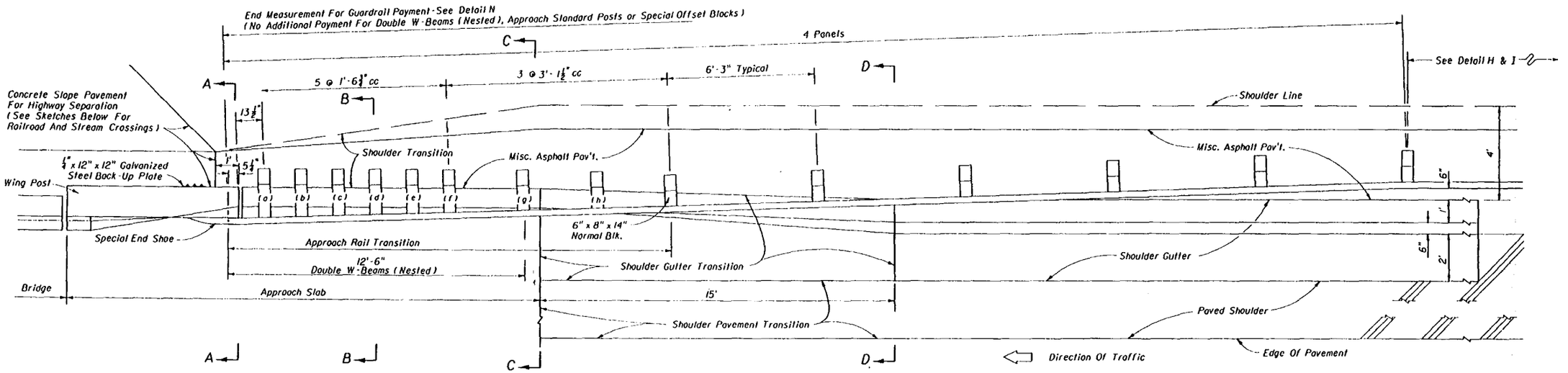

APPROACH GUARDRAIL FOR BRIDGE CONNECTIONS • GUARDRAIL, SHOULDER GUTTER AND SHOULDER TRANSITIONS AT BRIDGE APPROACHES

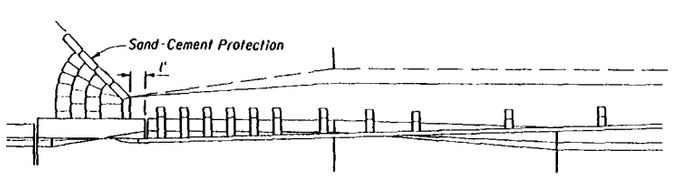

SKETCH - BRIDGES OVER RAILROADS*

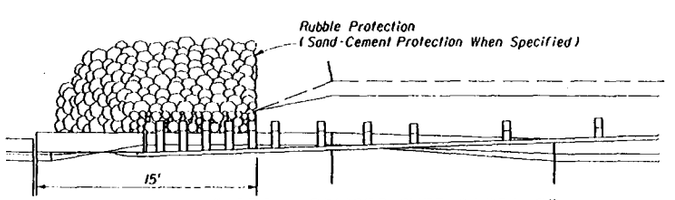

SKETCH - BRIDGES OVER STREAMS*

*For Additional Information See FDOT Structures Design Office "Detailing Manual" and "Design Guidelines".

DETAIL J

STATE OF FLORIDA DEPARTMENT OF TRANSPORTATION
ROAD DESIGN

GUARDRAIL

	Name	Date
Designed By		
Drawn By	JBW/HSD	04/91
Checked By	MG/JBW	04/91
F.H.W.A. Approved:		

Approved By Freddie Simmons
State Roadway Design Engineer

Revision No.	Sheet No.	Index No.
92	10 of 15	400

REFLECTOR NOTES

1. Reflectors shall conform to Section 993-5 of the Standard Specifications.
2. Reflector color (white or yellow) shall conform to the color of the near lane edgeline.
3. Face of rail bolt, screw, rivet or bracket mounted reflectors shall not be used in lieu of adhesive mounted reflectors.
4. Post mounted reflectors approved on the 'Qualified Products List' may be used by FDOT Maintenance to replace damaged or missing reflectors in a continuous run of existing post mounted reflectors. Adhesive and post mounted reflectors shall not be intermixed in a continuous run of guardrail.
5. The cost for reflectors shall be included in the contract unit price for Guardrail.

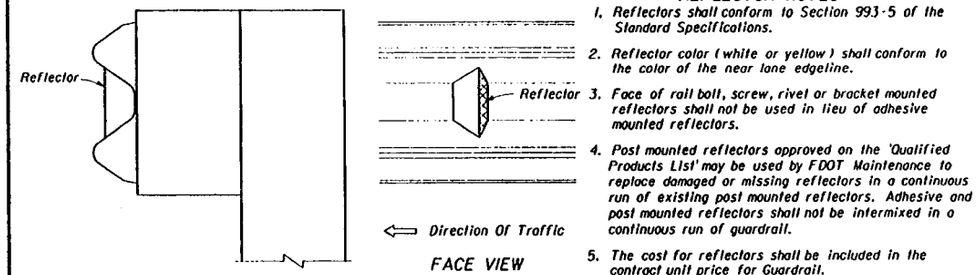

REFLECTOR MOUNTING

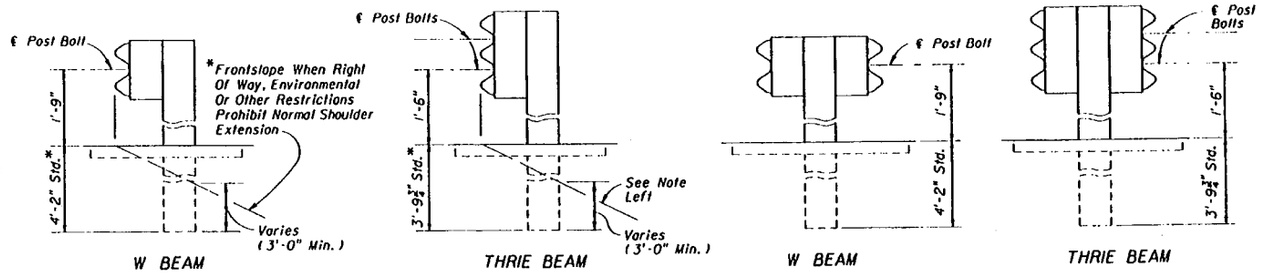

MOUNTING HEIGHTS ON SHOULDERS AND IN MEDIANS



Note: Adjustment in spacing may be required to fit exact guardrail lengths as directed by the Engineer. For minimum installations (length 62.5') provide one reflector at each end and at approximate center.

**For curves greater than 2° the spacing shall be reduced to 100' through the curve.

REFLECTOR SPACING

ADHESIVE REFLECTORS - DETAIL M

POST	OFFSET BLOCK	Remarks
Timber	6" x 8" & 5" x 8" (Nominal) x 14" Timber	Post bolt hole in timber block to be centered (± ¼"). All timber off set blocks shall be dressed on all four sides (S4S). See note 1 below.
Steel W6 x 8.5, W6 x 9 or 6" C	6" x 8" & 5" x 8" (Nominal) x 14" Timber W6 x 8.5 x 14", W6 x 9 x 14" or 6" C x 14" Steel To Match Post	Same as above ⅝"Ø x 1½" galv. hex head bolts with full length thread and nuts (2 Req'd.) and washers (4 Req'd.) for mounting steel block to post. Bolts are to be installed in opposite holes, top and bottom. See note 2 below.

Notes: 1. Thrie beam blocks are 22" in length.
2. Other offset blocks may be used in accordance with the Qualified Products List unless specified otherwise in the plans.

PERMISSIBLE POST AND OFFSET BLOCK COMBINATIONS

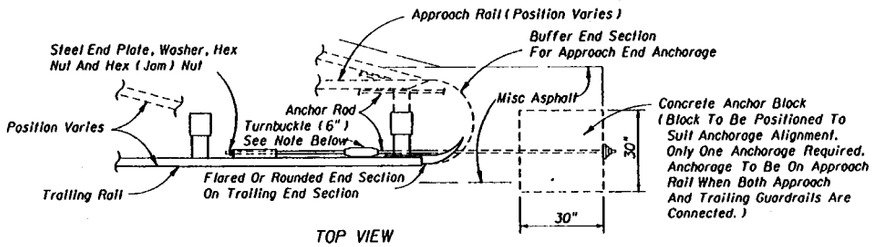

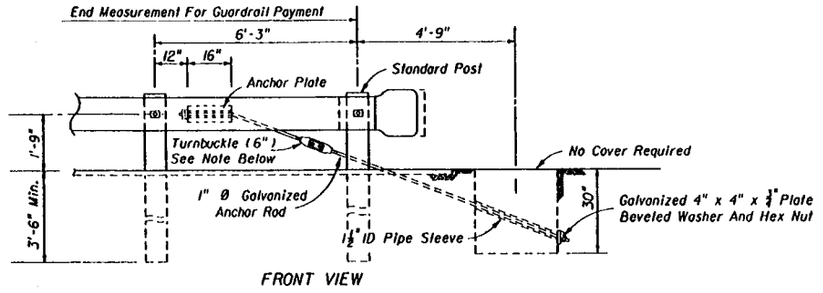

Note:
The payment for the items of End Anchorage Assemblies Type II shall include furnishing and installing anchor plate, anchor rod, pipe sleeve, anchor block, either flared, rounded or buffer end section, and the necessary hardware.

Turnbuckle to be used only for guardrail that is reset vertically. The existing anchor rod (1" or 1¼" Dia.) shall be field cut, threaded 4" on each end, and, metalized in accordance with Sections 562 and 971 of the Standard Specifications. The cost for cutting, threading, metalizing and the turnbuckle shall be included in the contract unit price for Reset Guardrail, LF.

END ANCHORAGE TYPE II - DETAIL R

2"Ø Galv. Pipe Rail Required For Steel Posts; Begin Pipe 2" Before First Post With Threaded Cap. (Pipe Rail To Be Used With Wood Posts Only When Called For In Plans; See Plans For Mounting Details. Bolts To Be Cut Off Flush With Nut And Metalized.)

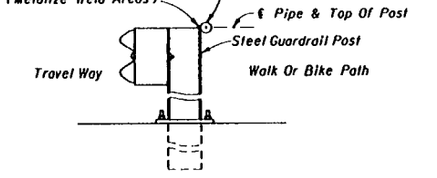

Note: Cost of pipe to be included in the contract unit price for Guardrail.

FOR LOCATIONS USED BY SUBSTANTIAL NUMBERS OF PEDESTRIANS, CYCLISTS OR FISHERMEN

SPECIAL SAFETY PIPE RAIL

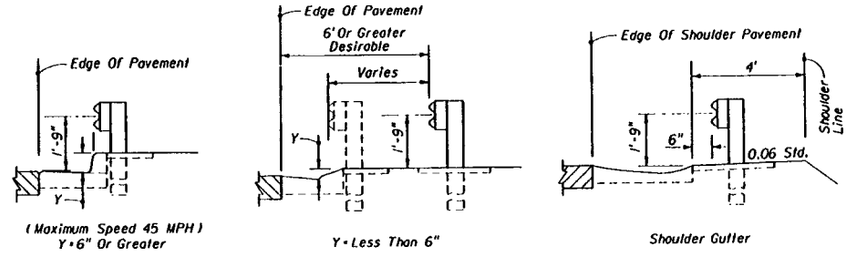

LOCATION AT CURB & GUTTER SECTIONS - DETAIL L

STATE OF FLORIDA DEPARTMENT OF TRANSPORTATION
ROAD DESIGN

GUARDRAIL

	Names	Dates
Designed By		
Drawn By	HSD	09/81
Checked By	JBV/JVG	09/81
F.H.W.A. Approved:		10/08/81

Approved By: Freddie Simmons
State Roadway Design Engineer

Revision No.	Sheet No.	Index No.
94	11 of 15	400

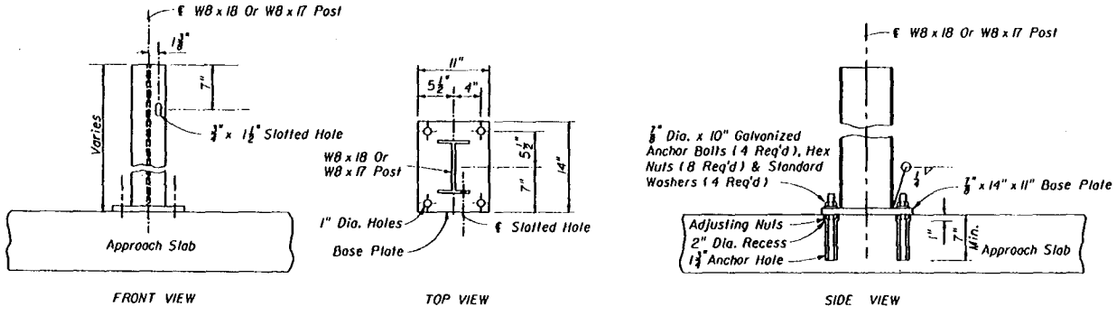

FOR MOUNTING GUARDRAIL ON EXISTING APPROACH SLABS

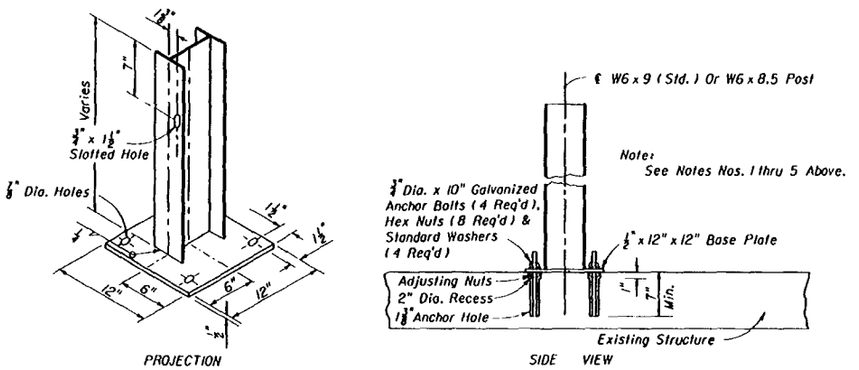

FOR CONSTRUCTION OF GUARDRAIL WHERE CULVERT, PIER FOOTING OR OTHER STRUCTURE PRECLUDES NORMAL POST INSTALLATION

NOTES: (SPECIAL STEEL POST)

1. Either anchor bolts, concrete wedge anchors or approved concrete adhesive (chemical) anchors may be used.

   Anchor bolts, wedge anchors and adhesive anchors shall have a minimum tensile strength of 60,000 psi and galvanized in accordance with ASTM A153 (stainless steel components may be substituted but components plated in accordance with ASTM B-633 are not acceptable). Adhesive anchor rods shall be equal in diameter to that detailed for anchor bolts. Wedge anchors are to be installed in accordance with the manufacturers recommendations, assuming 3000 psi compressive strength for concrete. Wedge anchors shall also meet the following requirements: (a) tensile load each anchor: approach slabs 14,000 lbs.; other structures 8000 lbs. (b) shear load each anchor: approach slabs 15,000 lbs.; other structures 7800 lbs.

2. Posts are to be plumbed by adjusting nuts or mortar seating. Posts installed using anchor bolts and adhesive anchors are to be set with adjusting nuts as detailed, unless the Engineer approves the use of mortar seating in lieu of adjusting nuts. Posts installed using wedge anchors are to be set with mortar seating. Base plates shall be grouted with neat finish.

3. Anchor bolts shall be set in approved epoxy mortar. Adhesive anchors shall be set in accordance with the manufacturers recommended adhesive as approved by the Qualified Product List, or as approved by the Engineer.

4. Anchor holes and recesses shall be drilled; wedge anchor holes are to be drilled in accordance with the manufacturers specifications. Encountered reinforcing steel shall be drilled through. Holes shall be thoroughly cleaned when setting bolts and anchors and dry when setting wedge anchors.

5. Steel post and base units shall be galvanized in accordance with ASTM A123. Any damaged galvanized areas are to be metalized in accordance with Section 562 of the Standard Specifications.

SPECIAL STEEL GUARDRAIL POSTS

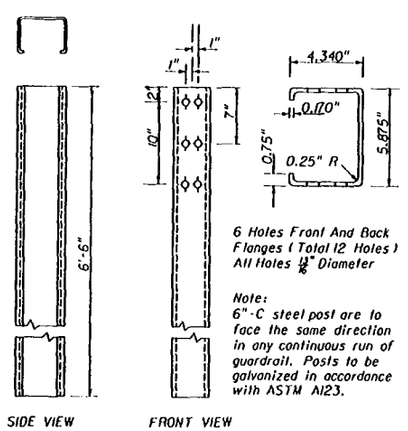

6 Holes Front And Back Flanges (Total 12 Holes) All Holes 13/16" Diameter

Note:
6"-C steel post are to face the same direction in any continuous run of guardrail. Posts to be galvanized in accordance with ASTM A123.

6"-C STEEL POST

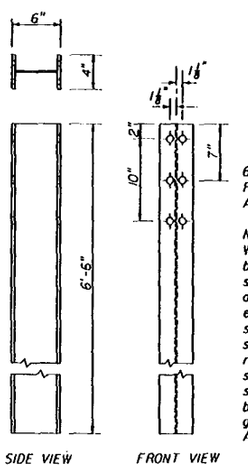

6 Holes Front And Back Flanges (Total 12 Holes) All Holes 13/16" Diameter

Note:
W6 x 9 and W6 x 8.5 steel posts may be either rolled or welded structural shapes conforming to or exceeding the design properties of W6 x 9, AISC, eight edition, or W6 x 8.5, AISC, seventh edition respectively. Welding shall be in accordance with the requirements of ASTM A769. Posts shall be cut to length and the ends seal welded between web and flange before galvanizing. Posts to be galvanized in accordance with ASTM A123.

W6 X 9 Or W6 X 8.5 STEEL POST

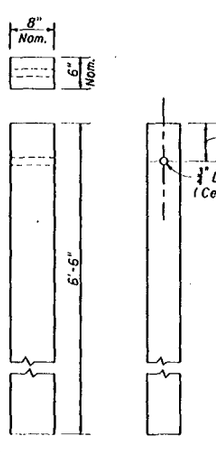

Note:
All Timber Posts Shall Be Dressed On All Four Sides (S4S)

TIMBER POST

STANDARD TIMBER AND STEEL GUARDRAIL POST

STATE OF FLORIDA DEPARTMENT OF TRANSPORTATION
ROAD DESIGN

GUARDRAIL

	Names	Dates
Designed By		
Drawn By	JM	08/81
Checked By	MG/JBW	08/81
F.H.W.A. Approved:		10/08/81

Approved By: Freddie Simmons
State Roadway Design Engineer

Revision No.	Sheet No.	Index No.
90	12 of 15	400

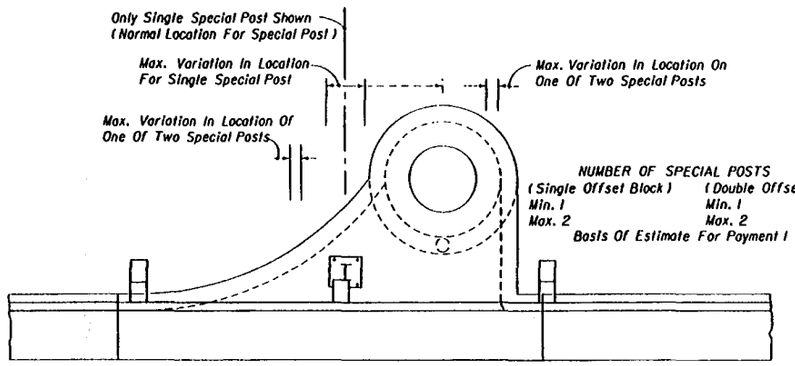

CURB INLET TYPE 1

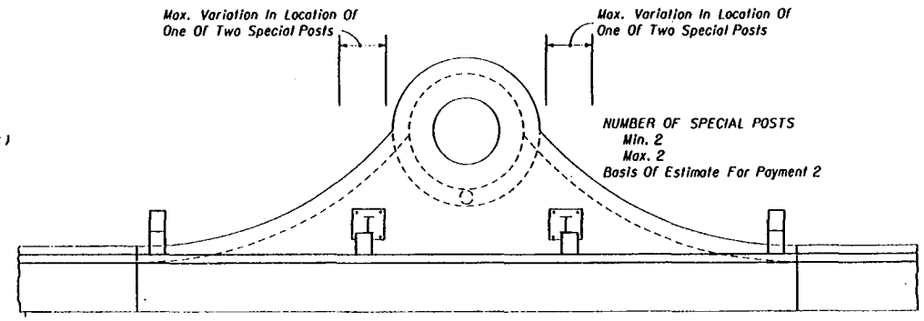

CURB INLET TYPE 2

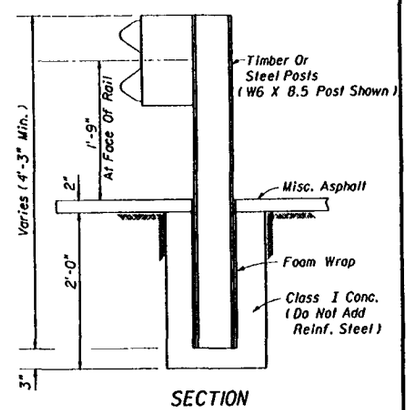

SECTION

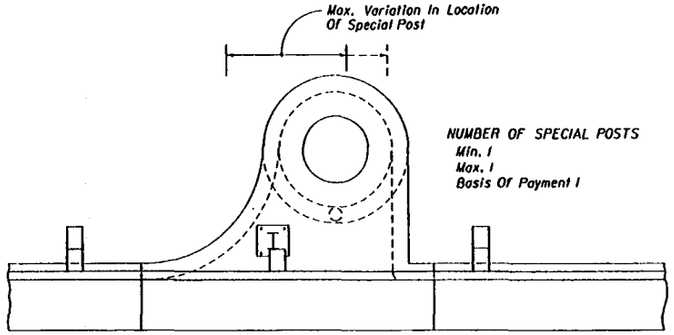

CURB INLET TYPE 3

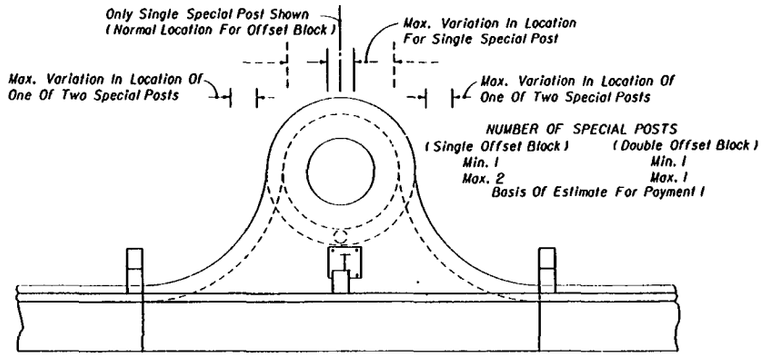

CURB INLET TYPE 4

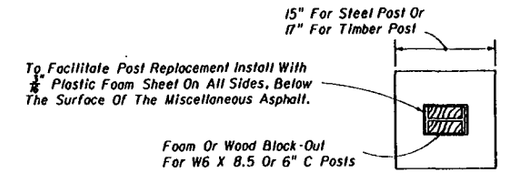

PLAN
(SQUARE OPTION)

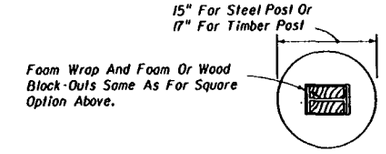

PLAN
(ROUND OPTION)

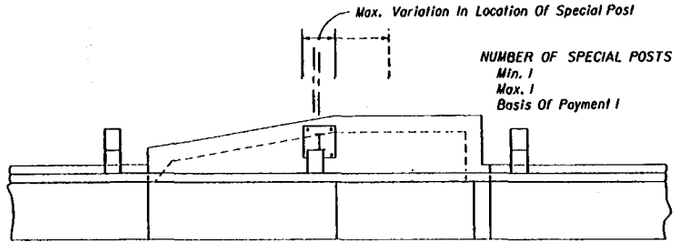

CURB INLET TYPE 5

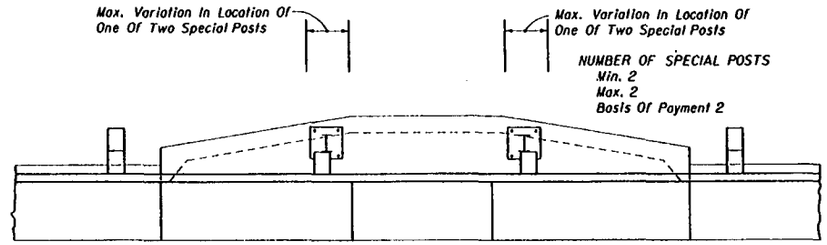

CURB INLET TYPE 6

TO BE USED PRINCIPALLY OVER SHALLOW UTILITIES

ENCASED GUARDRAIL POST

Notes:

1. The locations shown for special posts mounted on inlets are to be used as guidelines for positioning the posts and for estimating the number of required posts.
2. Special posts and their anchorages mounted on curb inlets shall be in accordance with special steel guardrail posts Sheet 12 of 15, and paid for under the contract unit price for Special Guardrail Post, each.
3. Variations shown for the locations of special posts mounted on inlets are established from standard post spacing (6'-3"); clearance of standard posts from inlets (4" min.); use of single and double offset blocks on standard posts adjacent to the inlets; optional flange mountings; and, concrete anchor edge distances (2" for grouted and 3½" for expansion anchors). The number of posts and their locations may vary by reducing post spacing and adjusting the length of rail panel(s).
4. Encased guardrail posts shall conform in section to standard timber and steel posts, and be paid for under the contract unit price for Special Guardrail Post, each. Payment shall include cost of foam wrap and concrete encasement.

LEGEND

Variation In Location Of Special Post:

Single Offset Block(s) On Adjacent Standard Post(s)

Expanded Location By Using Double Offset Blocks On Adjacent Standard Post(s)

SPECIAL POST LOCATIONS ON CURB INLETS

STATE OF FLORIDA DEPARTMENT OF TRANSPORTATION
ROAD DESIGN

GUARDRAIL

	Names	Dates
Designed By		
Drawn By	HSD	08/83
Checked By	JVG	08/83
F.H.W.A. Approved:		10/05/83

Approved By: Freddie Simmons
State Roadway Design Engineer

Revision No.	Sheet No.	Index No.
88	13 of 15	400

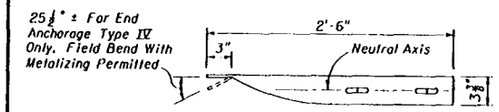

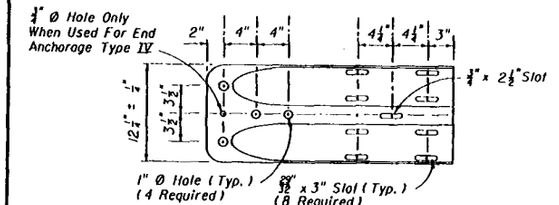

Note: ⅝" Steel washer required with splice bolts

SPECIAL END SHOE

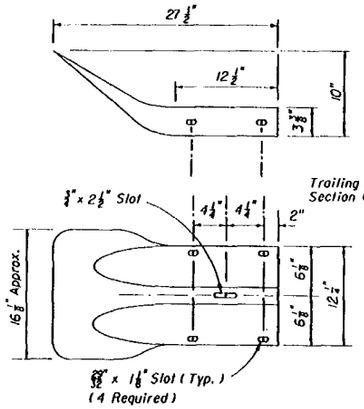

FLARED END SECTION

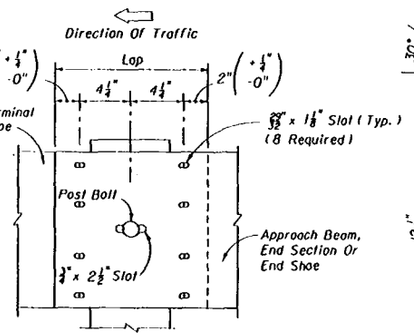

RAIL SPLICE

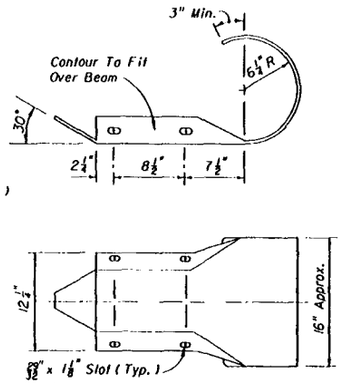

ROUNDED END SECTION

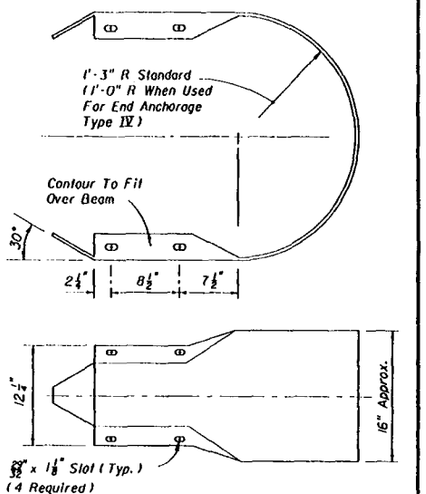

BUFFER END SECTION

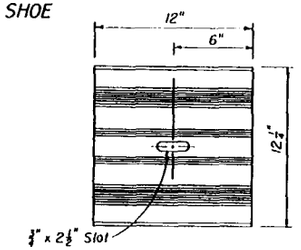

Note: Back up plate is placed behind rail elements at intermediate (non splice) post when steel offset block used.

BEAM BACK-UP PLATE

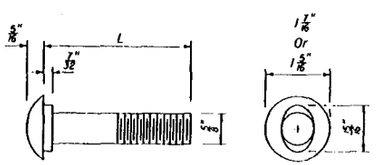

L	Thread Length	Application
1¼"	Full Length	Rail Splice Bolt
2"	1½" Min.	Rail To Steel Offset Block Bolt
9½"	1¾" Min.	Post Bolt - Single Faced Guardrail Timber Block On Steel Post
18"	2½" Min.	Post Bolt - Single Faced Guardrail Timber Posts
25"	2" Min.	Post Bolt - Double Faced Guardrail Timber Posts
Special bolts having lengths of 10" or greater shall have a thread length of not less than 2".		

Note: Specifications same as for hex bolts.

⅝" BUTTON HEAD BOLT

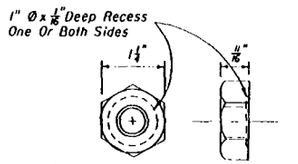

Note: Specifications same as for hex nuts.

⅝" RECESS NUT

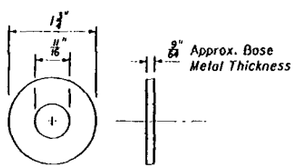

Note: The round washer is not intended for use under the recess nut for the beam to beam rail splice nor intended for use under the recess nut when connecting the rail to steel offset blocks. The washer is required under the recess nut for connecting the rail to the special end shoe; under the post bolt nut for connecting the rail to the timber post and offset block or connecting the rail to steel posts with timber offset blocks; under the hex bolt head for securing the beam anchor plate to the rail; and, for general guardrail connections by ⅝" hex bolts and nuts. For supplemental information see Beam Anchor Plate, Steel Offset Block, Type IV End Anchorage, Special Steel Guardrail Post and Special End Shoe details.

⅝" STEEL WASHER

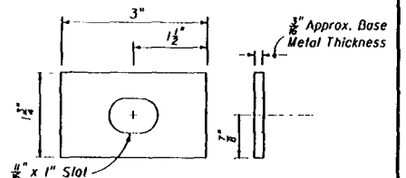

Note: Beam washers are required on the first post and buffer end section of End Anchorages Type IV and at the last two posts of End Anchorages Type II. Washers are to be used where necessary to accomplish alignment or where the post bolt head shows tendency to pull through the rail slot. Washers installed on guardrail, between end anchorages, prior to July 1, 1990 may remain in place until the guardrail is relocated or until repairs require removal and reinstallment of a post bolt.

(RECTANGULAR PLATE WASHER)

BEAM WASHER

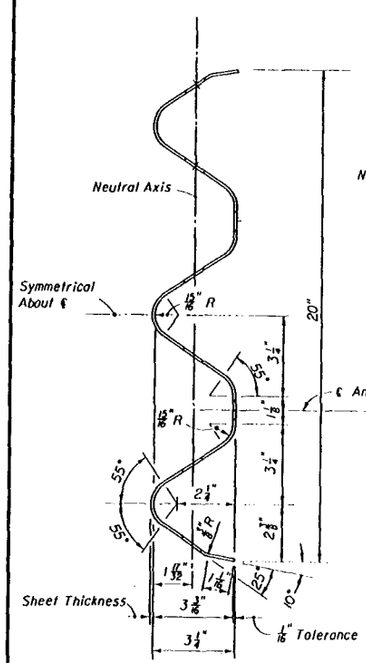

Use of thrie beam is subject to the approval of the State Roadway Design Engineer.

THRIE BEAM

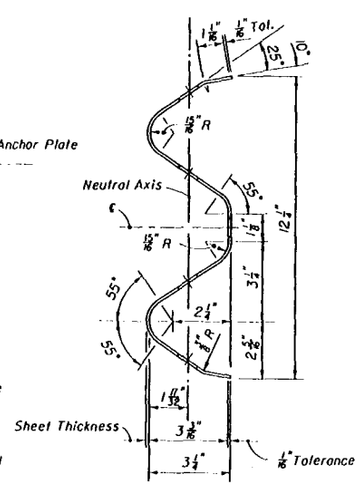

W BEAM

Hex bolts shall conform to the requirements of ASTM A307 and hex nuts to the requirements of ASTM A563, Grade A or better. Heavy hex nuts may be used in lieu of hex nuts and hex nuts used for jam nuts.

HEX BOLTS AND NUTS

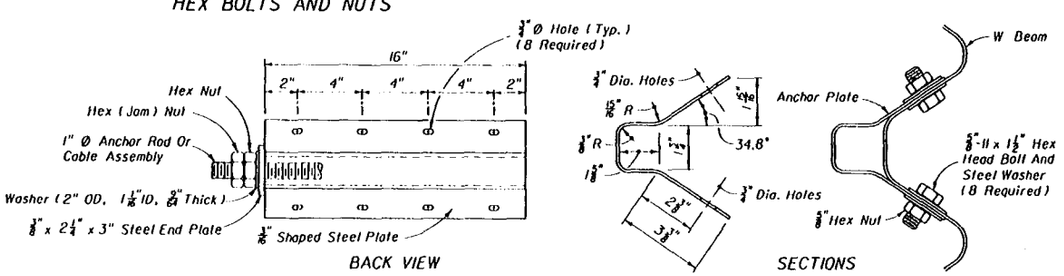

BACK VIEW

SECTIONS

BEAM ANCHOR PLATE

STATE OF FLORIDA DEPARTMENT OF TRANSPORTATION
ROAD DESIGN

GUARDRAIL

	Names	Dates
Designed By		
Drawn By	HSD	8/81
Checked By	JBW/JVG	8/81
F.H.W.A. Approved:		10/8/81

Approved By Freddie Simmons
State Roadway Design Engineer

Revision No.	Sheet No.	Index No.
94	14 of 15	400

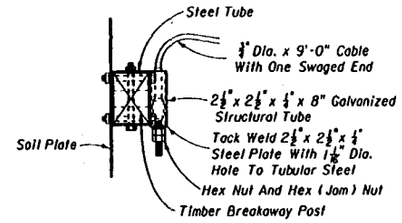

TOP VIEW

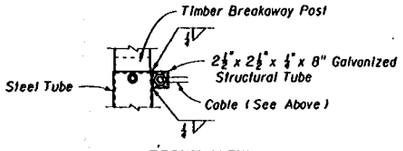

FRONT VIEW

LOWER CABLE ATTACHMENT

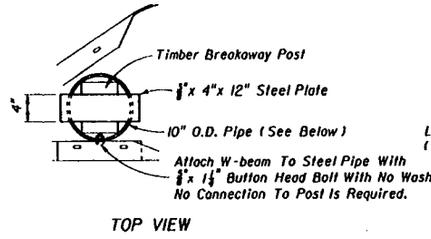

TOP VIEW

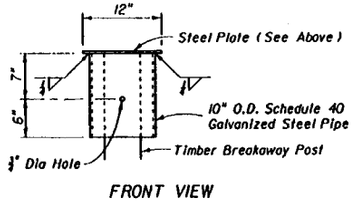

FRONT VIEW

SPECIAL GUARDRAIL PIPE ATTACHMENT

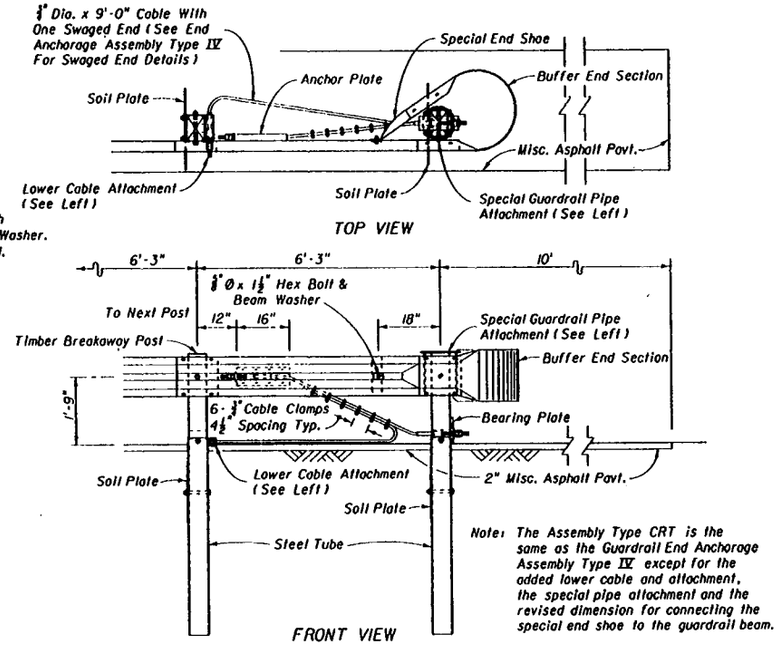

Note: The Assembly Type CRT is the same as the Guardrail End Anchorage Assembly Type IV except for the added lower cable and attachment, the special pipe attachment and the revised dimension for connecting the special end shoe to the guardrail beam.

GUARDRAIL END ANCHORAGE ASSEMBLY TYPE CRT

CONTROLLED RELEASE RETURN NOTES

1. Controlled release returns are intended for use in openings in continuous guardrail for driveway and side road access, and, for shielding the ends of bridge traffic rails and barrier walls where the driveway and sideroad access is in close proximity to the structure and space does not permit the proper use of Guardrail End Anchorage Assemblies Types II and IV.
2. Controlled release returns are not intended as a substitute or replacement for the appropriate use of approved vehicle impact attenuators.
3. Controlled release returns with either 8', 16' or 24' radii are designed for highway speeds of 60 mph or less; the 32' radius return is to be used only for highway speeds of 50 mph or less.
4. The controlled release returns shown are designed as full returns based on an intersection angle of 90°. The return can be terminated with the Guardrail End Anchorage Assembly Type CRT or connected to standard guardrail as shown or as otherwise detailed in the plans.
5. The Guardrail End Anchorage Assembly Type CRT is to be used only for the controlled release returns with 8', 16', 24' and 32' radii as shown; the assembly is not to be used in any tangent rail or flared rail applications. Other types of end anchorage assemblies are not to be used in the controlled release returns.
6. The area immediately behind the control release return shall have slopes not steeper than 2:1 and be maintained free of fixed objects in accordance with the area limits tabulated in the plan below.
7. The surface approaching the controlled release return shall have a transverse slope not exceeding 10:1. The effective width of the transverse surface is to be based on standard vehicle departure, return radii and preceding shielding; the width (beyond shoulder) shall be not greater than the corresponding 15' and 20' 'W' values tabulated below.
8. The curved guardrail portion of the controlled release return shall be full section shop bent panels (12.5' or 25' panels).
9. Washers are not to be used between the guardrail beam and the head of the button head post bolts at any controlled release terminal (CRT) post or at any Guardrail End Anchorage Terminal Type CRT breakaway timber post.
10. The guardrail beam of the 8' radius return is not bolted to the center control release post.
11. Curved W-beam Guardrail systems shall be paid for under the contract unit prices for Guardrail (Roadway), LF, Guardrail (Shop-bent Panels), LF, and Guardrail End Anchorage Assembly, Type CRT, Ea. and shall include furnishing and installing all components in accordance with this index. CRT posts are included in the cost for guardrail.

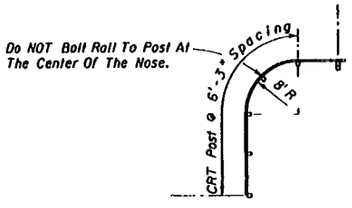

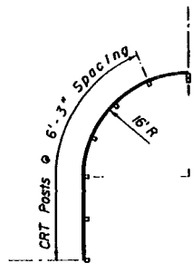

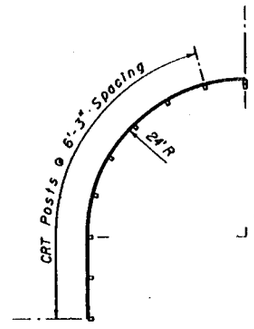

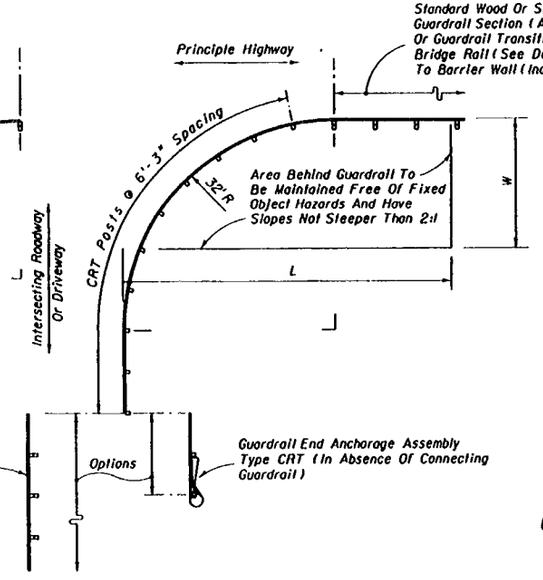

PLAN (OPTIONAL RADII)

Return Nom. R	Length Of Shop Bent Panels	No. Of CRT Posts	Required Area Free Of Hazards L	W
8'	12.5'	5	25' x 15'	
16'	25'	6	30' x 15'	
24'	37.5'	8	40' x 20'	
32'	50'	11	50' x 20'	

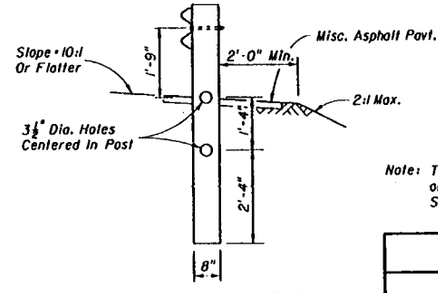

6"x 8"x 6' CONTROLLED RELEASING TERMINAL (CRT) WOOD POST

Note: To be constructed when standard flares and transitions or standard radial returns can not be applied. See Sheet 6.

CONTROLLED RELEASE RETURN FOR SIDE ROAD AND DRIVEWAY ACCESS

STATE OF FLORIDA DEPARTMENT OF TRANSPORTATION
ROAD DESIGN

GUARDRAIL

	Names	Dates
Designed By	FHWA	
Drawn By	HSD	1/93
Checked By	MG	1/93
F.H.W.A. Approved:		

Approved By: Freddie Simmons
State Roadway Design Engineer

Revision No.	Sheet No.	Index No.
94	15 of 15	400

GENERAL NOTES

1. Whether an existing bridge handrail is to remain in place, be retrofitted or be replaced, is a determination that must be made independent of any information contained on this index.

   Only after it has been established that an existing bridge handrail is to remain in place is this index to be used to analyze guardrail to bridge connections.

2. The schemes on this index are not to be used for new bridge construction, bridge widening, bridge barrier wall or handrail replacement, or, for existing bridges that have wing posts for guardrail connection that conform with configurations shown in current Roadway Design Standards and Bridge Design Standards.

3. The schemes on this index are divided into two general categories, representing curbed and uncurbed roadway approaches. A scheme selection guide is provided under 'Designer Notes' for curbed and uncurbed roadway approaches. Approach slabs with curbs or wing walls with radial safety curbs will be treated as curbed roadway approaches.

4. Existing bridge features shown in these schemes are example configurations only. The principle key to scheme selection is bridge curb or sidewalk width. Location control is keyed to bridge face of curb, except for certain trailing conditions.

5. Details that are repetitive on the schemes and features that are detailed on Index No. 400 have been purposely deleted to produce clarity and simplification in the schemes, and to emphasize proper location and positioning of the anchorage and connecting guardrail.

6. All schemes are right side or right hand details for traffic flow right to left. Left side applications are opposite hand.

7. For undivided two-way bridges 'trailing end', as used in this index, is in relation to the direction of travel of near lane traffic, but it is always considered as an approach for opposing lane traffic.

8. All connections of guardrail special end shoes to concrete anchorage posts, panels and walls shall have a $\frac{1}{4}$" x 12" x 12" galvanized steel back-up plate for gang tightening of hex nuts on $\frac{5}{8}$" diameter galvanized anchor bolts. Special end shoe anchor bolts shall have a nominal length equal to the thickness of the concrete anchorage plus $1\frac{1}{2}$".

   When thru bolts would penetrate existing bridge rails, $\frac{5}{8}$" diameter bolt clusters and chemical anchor bolts meeting the manufacturers recommendation may be substituted as approved by the Engineer.

9. Unless otherwise called for in the plans exposed concrete surfaces shall have a Class 3 surface finish and Class 5 Applied Finish Coating in accordance with Sections 521 and 400 respectively of the Standard Specifications.

10. The guardrail end anchorage schemes on this index do not include cost for payment of guardrail. See Index 400 Detail N for limit of guardrail measurement.

    Each independent anchorage described in these schemes shall be paid for as a bridge end anchorage assembly under the contract unit price for Bridge Anchorage Assembly, Each. The unit price shall be full compensation for the following :
    - (a) Each concrete anchor post, panel or transition wall including reinforcing steel, existing rail or rail and post removal, socket filling, bond breaker, post beveling, drilling, dowels, grouting, excavation, backfill, special end shoe and accessory items.
    - (b) Each guardrail steel terminal post, including flared end section, anchorage and accessory items (optional use not included).
    - (c) Each special end shoe anchored directly to an existing bridge end post or wing post, including back-up plate and accessory items.

    Continuous concrete safety barrier (Schemes 1 & 19) shall be paid for as a roadway item under the contract unit price for Concrete Handrail (Retrofit Barrier) (Vert Face), LF.

    Continuous guardrail across bridges shall be paid for as a roadway item under the contract unit price for Guardrail (Bridge) LF, and Special Guardrail Post, Each. The unit price for guardrail shall include the cost for all accessories prescribed under Index No. 400 and the unit price for special posts shall include the cost for all accessories and anchorage prescribed in Index 400 and in Scheme 16 of this Index.

DESIGN NOTES

1. The details in this index are intended to be used for existing bridges that have end and approach slab configurations constructed under former Department standards; and, are not intended to preclude special design details more suited to bridges with unusual handrail or wingpost configurations, or, when there is conflict with drainage structures or other features that can not be adjusted.

2. The schemes provide the designer with a convenient method of providing standardized information on the plans. In the selection and assignment of schemes the designer must predetermine existing bridge handrail, curb, sidewalk and approach slab conditions, particularly the location of embedded conduit. Special attention must be directed to the presence or absence of curbed approaches on each independent corner of the bridge.

3. Each corner of the bridge that requires a guardrail connection should be labeled independently by scheme number, and, where continuous barrier is required across a bridge the scheme number should be labeled independently on the side(s) of the bridge. When continuous guardrail is called for, bridge end anchorage assemblies will be omitted, but, when continuous concrete safety barrier is called for, one or more bridge end anchorage assemblies will be labeled on the plans.

4. The scheme selection guide below is to be used as a quick reference for determining anchorages and continuous barriers that are applicable to specific conditions for existing bridges. When appropriate, special details are to be used in lieu of schemes or to supplement or complement the scheme details. In selecting schemes the width of curb, safety curb and sidewalk is the distance from face of curb to the nearest face of post, rail or parapet.

SCHEME SELECTION GUIDE (NUMBERS)

	WITH ROADWAY CURBS APPROACHING BRIDGES Sheets 2 thru 6		WITHOUT ROADWAY CURBS APPROACHING BRIDGES Sheets 7 thru 9	
ONE-WAY BRIDGES	APPROACH END	TRAILING END	APPROACH END	TRAILING END
Handrail Curb	3, 4, 18	3, 4, 18	21, 22, 27, 30	23, 27, 30
Narrow Curb	2, 3, 8, 9, 10, 11, 12, 13, 14	2, 3, 8, 15	20, 21, 27, 29	23, 27, 29
Wide Safety Curb	1, 2, 8, 11, 12, 13, 14, 15, 16, 17	1, 2, 8, 11, 12, 13, 14, 15, 16	19, 20, 28, 29	19, 23, 29
Sidewalks	1, 16	1, 16	19	19
TWO-WAY BRIDGES	APPROACH AND TRAILING ENDS		APPROACH AND TRAILING ENDS	
Handrail Curb	3, 4, 9, 10, 18		21, 22, 26, 30	
Narrow Curb	2, 3, 6, 7, 9, 10, 11, 12, 13, 14		20, 21, 25, 29	
Wide Safety Curb	1, 2, 5, 6, 9, 10, 11, 12, 13, 14, 16		19, 20, 24, 25, 29	
Sidewalks	1, 16		19	

STATE OF FLORIDA DEPARTMENT OF TRANSPORTATION
ROAD DESIGN

GUARDRAIL ANCHORAGE AND CONTINUOUS BARRIER FOR EXISTING BRIDGES

	Names	Dates
Designed By	MG	09/86
Drawn By	HSD	09/86
Checked By	MG	09/86

Approved By Freddie Simmons
State Roadway Design Engineer

F.H.W.A. Approved

Revision No.	Sheet No.	Index No.
88	1 of 9	401

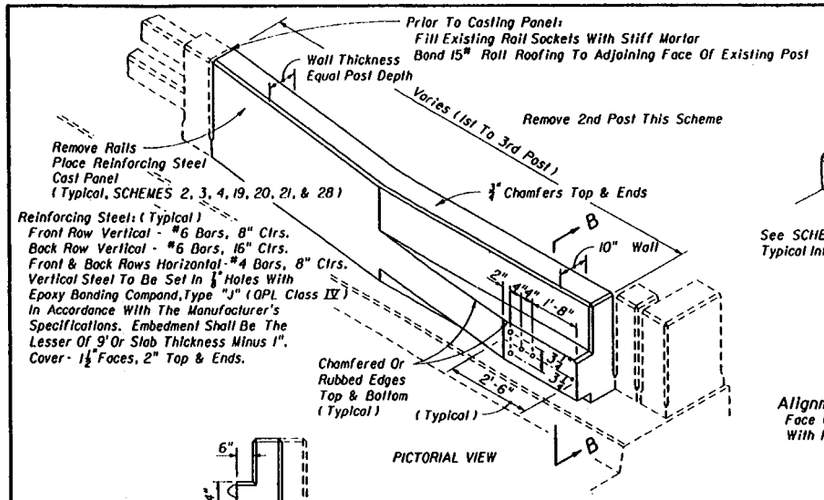

APPLICATIONS

SAFETY CURB 1'-1" TO 2'-0" WIDE
POST AND DISCOUNTINUOUS BEAM RAILING
APPROACH AND TRAILING ENDS OF TWO-WAY BRIDGES
APPROACH END OF ONE-WAY BRIDGES
TRAILING END OF ONE-WAY BRIDGES WHEN OTHER HAZARDS PRESENT

SCHEME 2

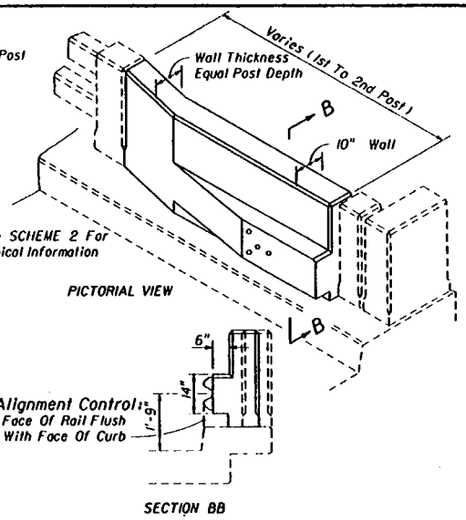

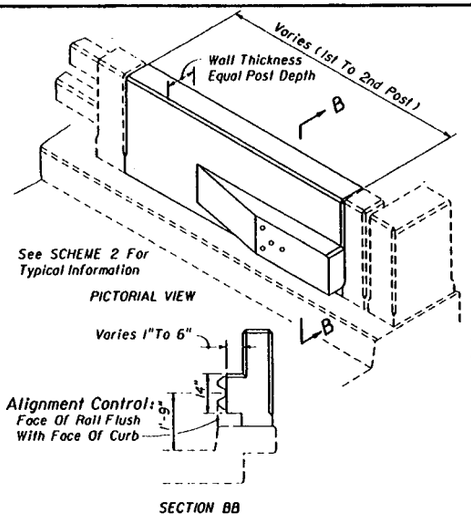

CURBS 4" TO 12" WIDE - DEPICTIONS ARE FOR 9" AND 12" WIDTHS

APPLICATIONS

SAFETY CURB LESS THAN 1'-0" WIDE
POST AND DISCOUNTINUOUS BEAM RAILING
APPROACH AND TRAILING ENDS OF TWO-WAY BRIDGES-WAY BRIDGES
APPROACH END OF ONE-WAY BRIDGES
TRAILING END OF ONE-WAY BRIDGES WHEN OTHER HAZARDS PRESENT

SCHEME 3

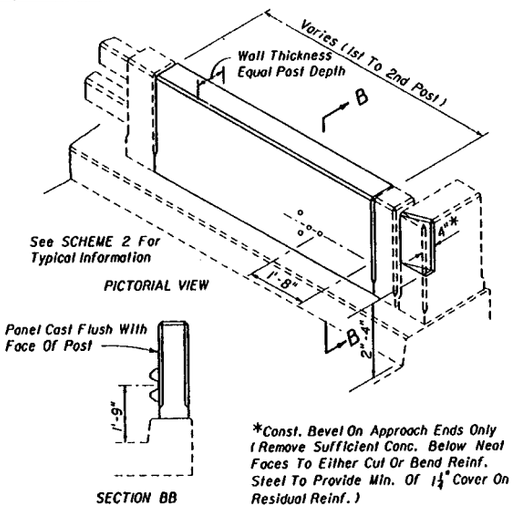

*Const. Bevel On Approach Ends Only (Remove Sufficient Conc. Below Neat Faces To Either Cut Or Bend Reinf. Steel To Provide Min. Of 1¼" Cover On Residual Reinf.)

APPLICATIONS

HANDRAIL CURB
POST AND DISCOUNTINUOUS BEAM RAILING
APPROACH AND TRAILING ENDS OF TWO-WAY BRIDGES
APPROACH END OF ONE-WAY BRIDGES
TRAILING END OF ONE-WAY BRIDGES WHEN OTHER HAZARDS PRESENT

SCHEME 4

CAST IN PLACE PANELS

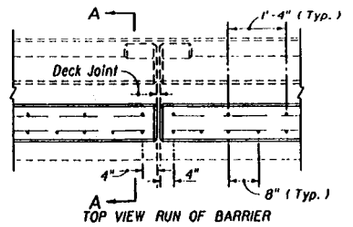

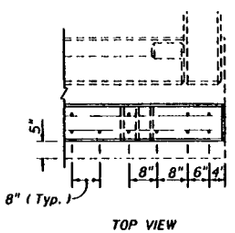

Estimated Quantities (Per L.F.)
Class II Concrete 0.06 CY
Reinforcing Steel 16# Per L.F.

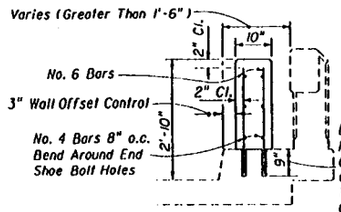

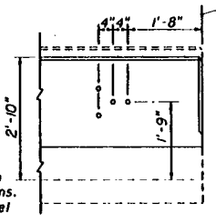

Note: Holes For Special End Shoe Required:
One-Way Bridges:
Approach Ends
Trailing Ends When Other Hazards Present
Two-Way Bridges:
Approach And Trailing Ends

APPLICATIONS

SAFETY CURB WIDER THAN 1'-6" AND SIDEWALKS
CONTINUOUS BARRIER ACROSS BRIDGE

SCHEME 1

CONCRETE SAFETY BARRIER

BRIDGES WITH APPROACHING ROADWAY CURB

STATE OF FLORIDA DEPARTMENT OF TRANSPORTATION
ROAD DESIGN

GUARDRAIL ANCHORAGE AND CONTINUOUS BARRIER FOR EXISTING BRIDGES

	Names	Dates
Designed By	JVG	09/86
Drawn By	HSD	09/86
Checked By	JVG	09/86

Approved By: Freddie Simmons
State Roadway Design Engineer

F.H.W.A. Approved:

Revision No.	Sheet No.	Index No.
94	2 of 9	401

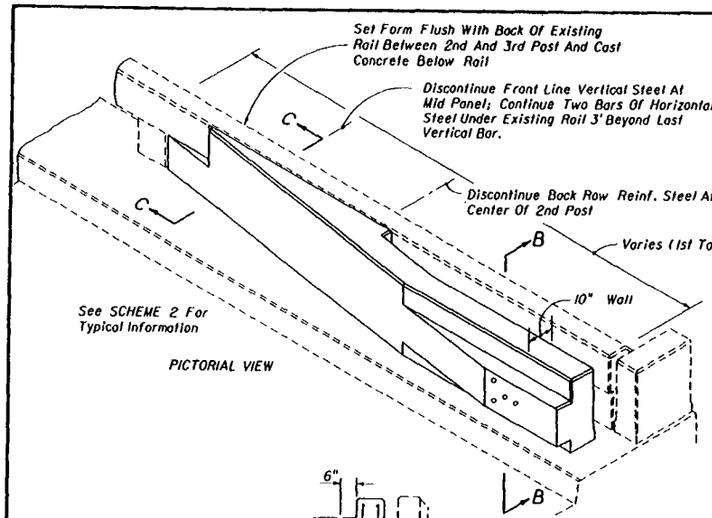

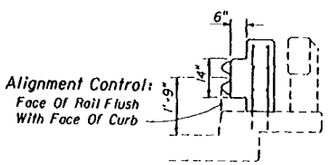

SECTION BB

APPLICATIONS

SAFETY CURB 2'-0" WIDE
CONCRETE CONTINUOUS BEAM RAILING
APPROACH AND TRAILING ENDS OF TWO-WAY BRIDGES
TRAILING END OF ONE-WAY BRIDGES WHEN OTHER HAZARDS PRESENT

SCHEME 5

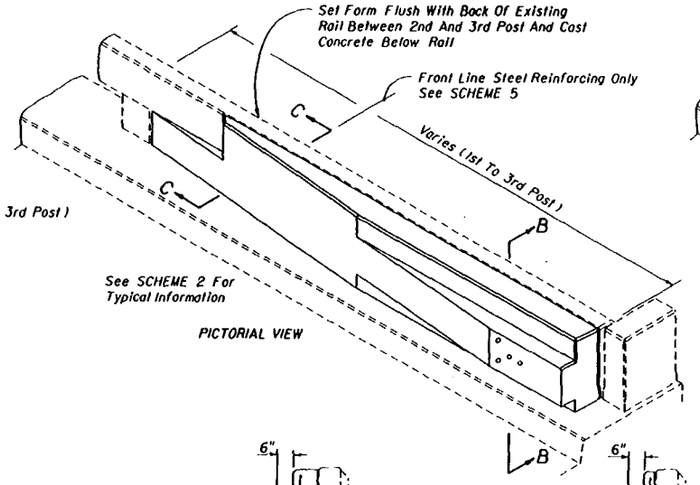

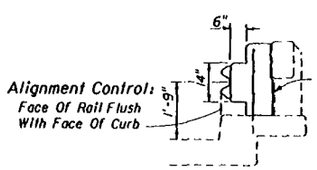

SECTION BB
CURBS 18" TO 23" WIDE (18" SHOWN)

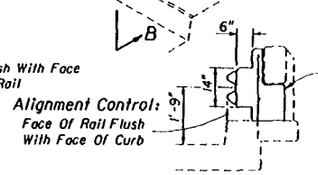

SECTION BB
CURBS 13" TO 17" WIDE (13" SHOWN)

APPLICATIONS

SAFETY CURB 1'-1" TO 1'-11" WIDE
CONCRETE CONTINUOUS BEAM RAILING
APPROACH AND TRAILING ENDS OF TWO-WAY BRIDGES (CURBS 1'-1" TO 1'-11" WIDE)
TRAILING END OF ONE-WAY BRIDGES WHEN OTHER HAZARDS PRESENT (CURBS 1'-8" TO 1'-11" WIDE)

SCHEME 6

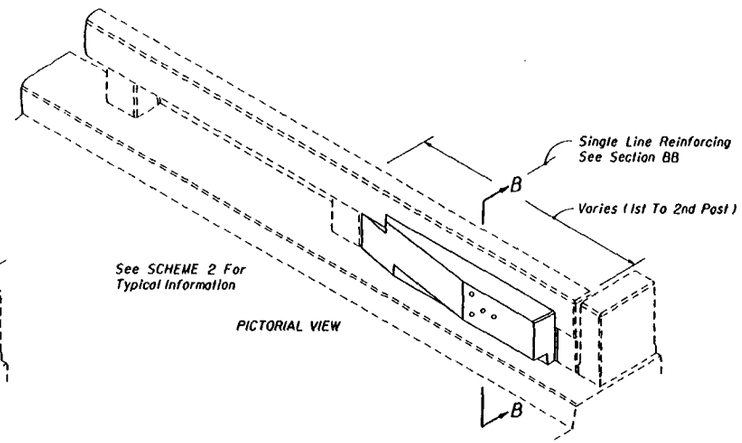

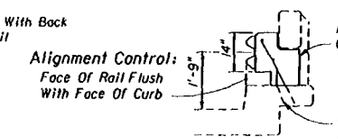

SECTION BB
(12" CURBS SHOWN)

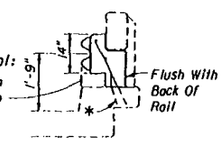

SECTION BB
(9" CURBS SHOWN)

APPLICATIONS

SAFETY CURB 9" TO 1'-0" WIDE
CONCRETE CONTINUOUS BEAM RAILING
APPROACH AND TRAILING ENDS OF TWO-WAY BRIDGES

SCHEME 7

CAST IN PLACE PANELS

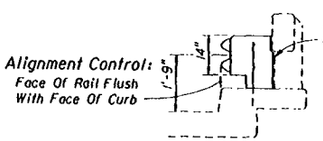

SECTION BB
CURBS 17" TO 19" WIDE (19" SHOWN)

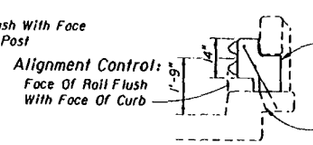

SECTION BB
CURBS 9" TO 16" WIDE (12" SHOWN)

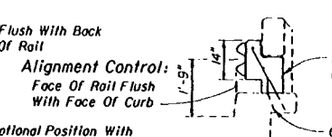

SECTION BB
CURBS 9" TO 16" WIDE (9" SHOWN)

APPLICATIONS

SAFETY CURB 9" TO 1'-7" WIDE
CONCRETE CONTINUOUS BEAM RAILING
APPROACH END OF ONE-WAY BRIDGES
TRAILING END OF ONE-WAY BRIDGES WHEN OTHER HAZARDS PRESENT

SCHEME 8

CAST IN PLACE PANELS

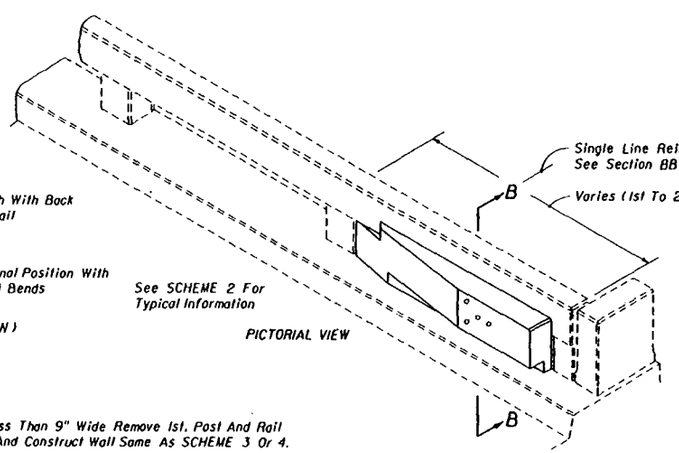

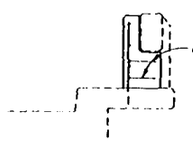

SECTION CC (SCHEMES 5, 6 & 8)

Note: For Curbs Less Than 9" Wide Remove 1st. Post And Rail To 2nd Post And Construct Wall Same As SCHEME 3 Or 4.

For Safety Curbs Wider Than 19" See SCHEME 5, 6 & 9.

BRIDGES WITH APPROACHING ROADWAY CURB

STATE OF FLORIDA DEPARTMENT OF TRANSPORTATION
ROAD DESIGN

GUARDRAIL ANCHORAGE AND CONTINUOUS BARRIER FOR EXISTING BRIDGES

	Names	Dates
Designed By	JVC	09/86
Drawn By	HSD	09/86
Checked By	JVC	09/86
F.H.W.A. Approved:		

Approved By: Freddie Simmons
State Roadway Design Engineer

Revision No.	Sheet No.	Index No.
8T	3 of 9	401

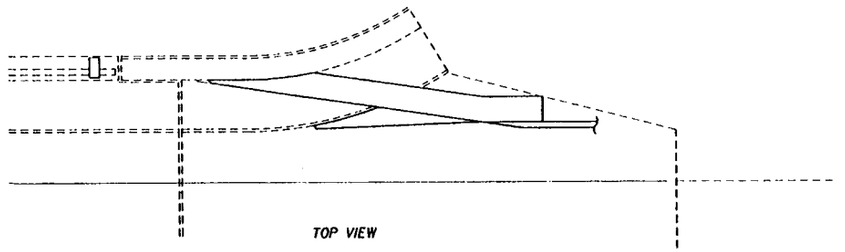

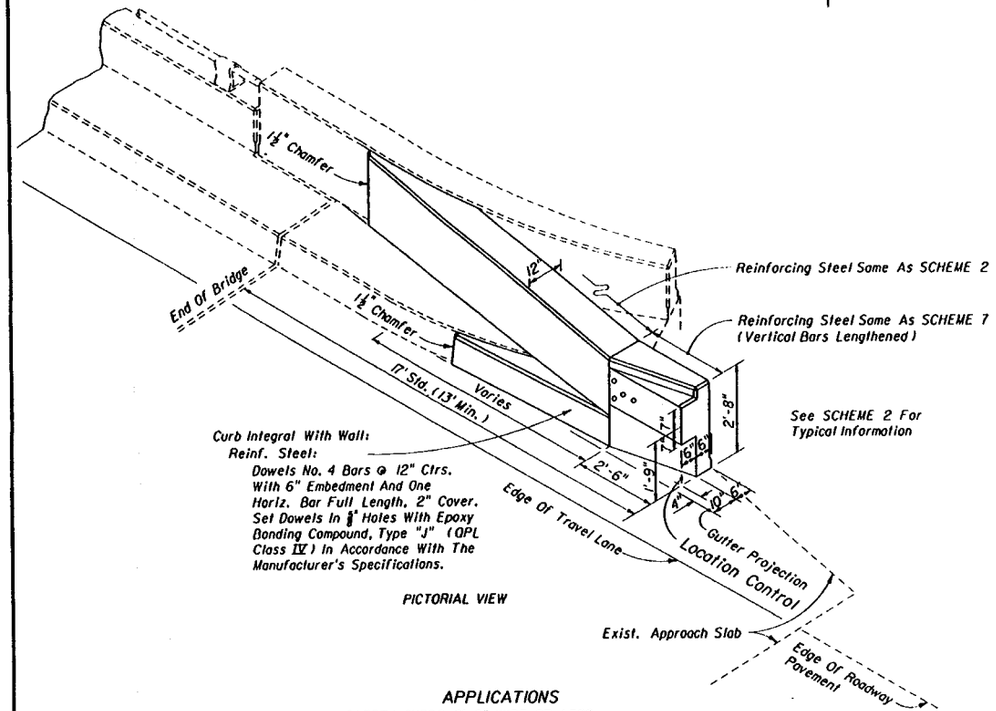

PICTORIAL VIEW

APPLICATIONS

SAFETY CURBS 2'-0" WIDE OR LESS
CONCRETE PARAPET WITH METAL PIPE RAILING
APPROACH AND TRAILING ENDS OF TWO-WAY BRIDGES
APPROACH END OF ONE-WAY BRIDGES
APPROACH SLAB FOUNDATION

SCHEME 9

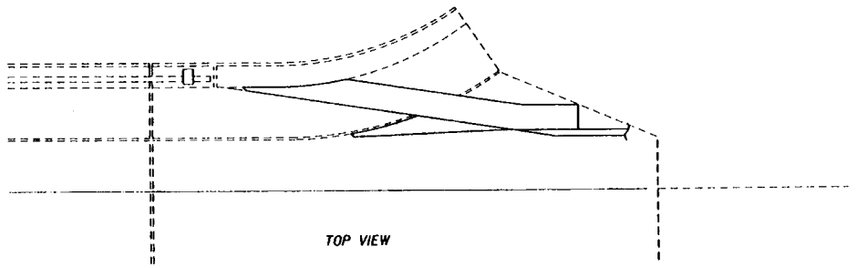

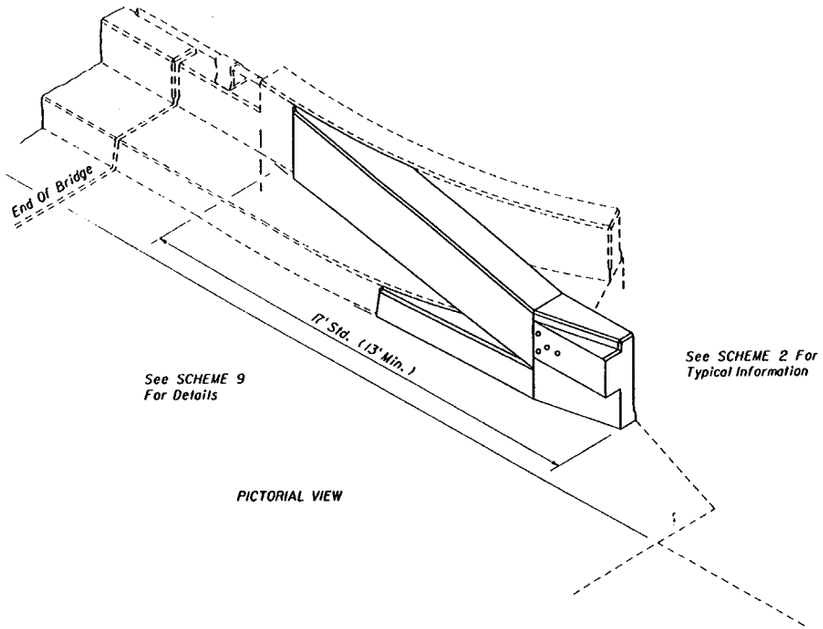

PICTORIAL VIEW

APPLICATIONS

SAFETY CURBS 2'-0" WIDE OR LESS
CONCRETE PARAPET WITH METAL PIPE RAILING
APPROACH AND TRAILING ENDS OF TWO-WAY BRIDGES
APPROACH END OF ONE-WAY BRIDGES
APPROACH SLAB FOUNDATION

SCHEME 10

CAST IN PLACE TRANSITION WALL

BRIDGE WITH APPROACHING ROADWAY CURB

STATE OF FLORIDA DEPARTMENT OF TRANSPORTATION
ROAD DESIGN

GUARDRAIL ANCHORAGE AND CONTINUOUS BARRIER FOR EXISTING BRIDGES

	Names	Dates
Designed By	JVG	09/86
Drawn By	HSD	09/86
Checked By	JVG	09/86
F.H.W.A. Approved:		

Approved By
Freddie Simmons
State Roadway Design Engineer

Revision No.	Sheet No.	Index No.
94	4 of 9	401

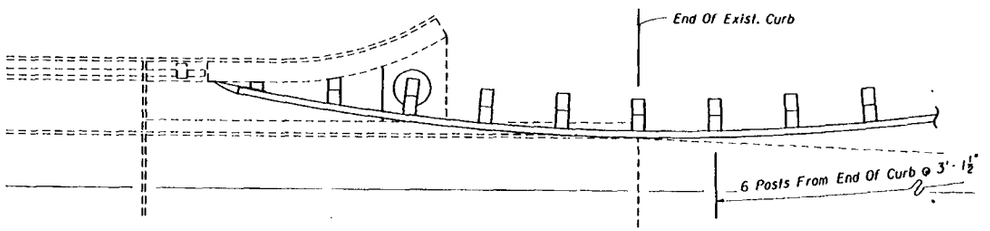

See SCHEME 11 For Additional Information

APPLICATIONS

SAFETY CURB 2'-0" WIDE OR LESS
APPROACH AND TRAILING ENDS OF TWO-WAY BRIDGES
APPROACH END OF ONE-WAY BRIDGES
TRAILING END OF ONE-WAY BRIDGES WHEN OTHER HAZARDS PRESENT

SCHEME 12

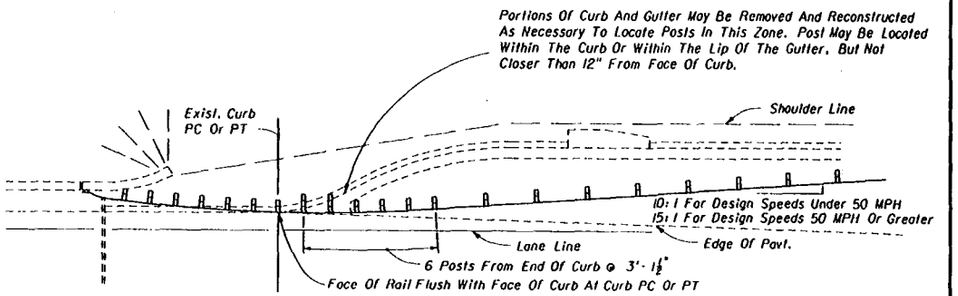

See SCHEMES 11 & 12 For Additional Information

APPLICATIONS

SAFETY CURB 2'-0" WIDE OR LESS
APPROACH AND TRAILING ENDS OF TWO-WAY BRIDGES
APPROACH END OF ONE-WAY BRIDGES
TRAILING END OF ONE-WAY BRIDGES WHEN OTHER HAZARDS PRESENT

SCHEME 13

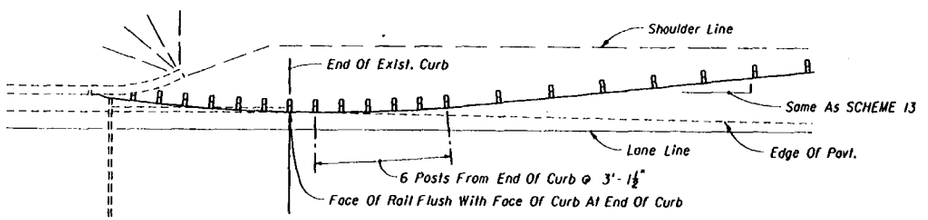

See SCHEMES 11 & 12 For Additional Information

APPLICATIONS

SAFETY CURB 2'-0" WIDE OR LESS
APPROACH AND TRAILING ENDS OF TWO-WAY BRIDGES
APPROACH END OF ONE-WAY BRIDGES
TRAILING END OF ONE-WAY BRIDGES WHEN OTHER HAZARDS PRESENT

SCHEME 14

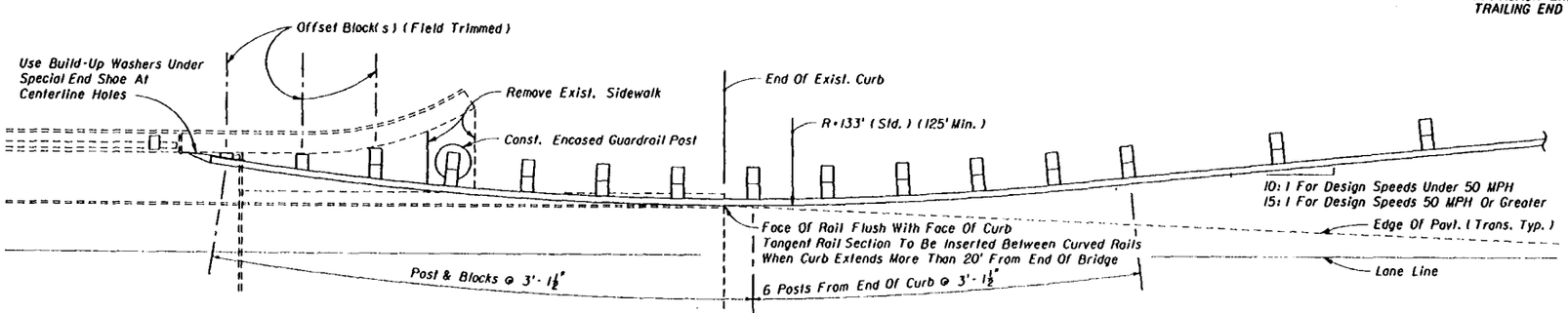

APPLICATIONS

SAFETY CURB 2'-0" WIDE OR LESS
APPROACH AND TRAILING ENDS OF TWO-WAY BRIDGES
APPROACH END OF ONE-WAY BRIDGES
TRAILING END OF ONE-WAY BRIDGES WHEN OTHER HAZARDS PRESENT

SCHEME 11

CURVILINEAR GUARDRAIL

BRIDGES WITH APPROACHING ROADWAY CURB

STATE OF FLORIDA DEPARTMENT OF TRANSPORTATION
ROAD DESIGN

GUARDRAIL ANCHORAGE AND CONTINUOUS BARRIER FOR EXISTING BRIDGES

	Names	Dates
Designed By	JVG	09/86
Drawn By	HSD	09/86
Checked By	JVG	09/86

Approved By Judi Summers
State Roadway Design Engineer

F.H.W.A. Approved:

Revision No.	Sheet No.	Index No.
87	5 of 9	401

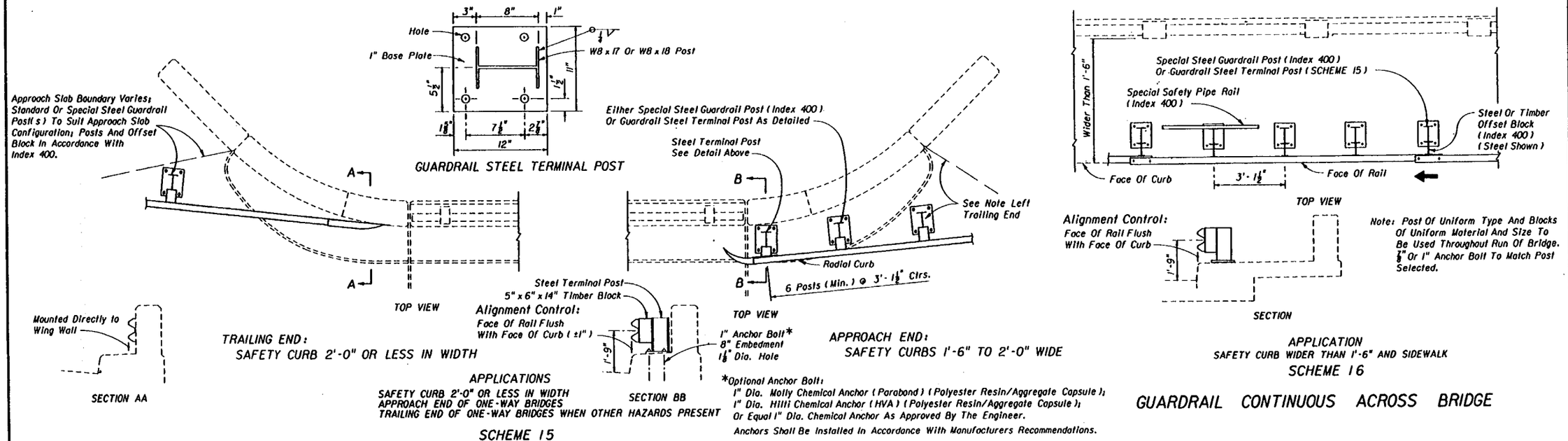

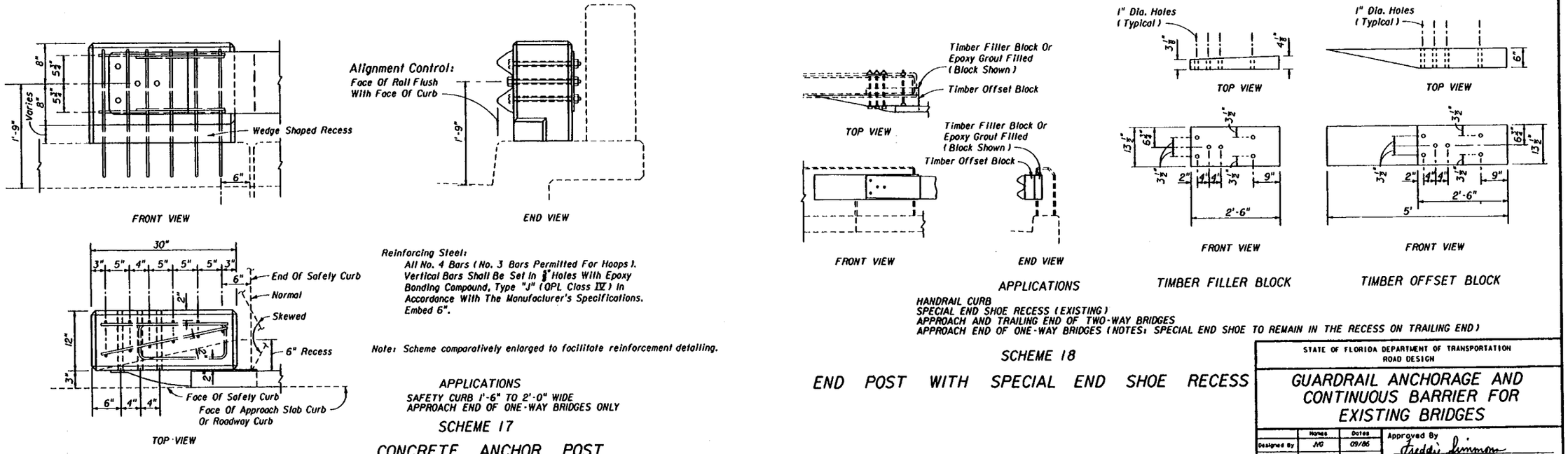

BRIDGES WITH APPROACHING ROADWAY CURB

STATE OF FLORIDA DEPARTMENT OF TRANSPORTATION
ROAD DESIGN

GUARDRAIL ANCHORAGE AND CONTINUOUS BARRIER FOR EXISTING BRIDGES

	Names	Dates
Designed By	JVG	09/86
Drawn By	HSD	09/86
Checked By	JVG	09/86
F.H.W.A. Approved:		

Approved By: Freddie Simmons
State Roadway Design Engineer

Revision No.	Sheet No.	Index No.
94	6 of 9	401

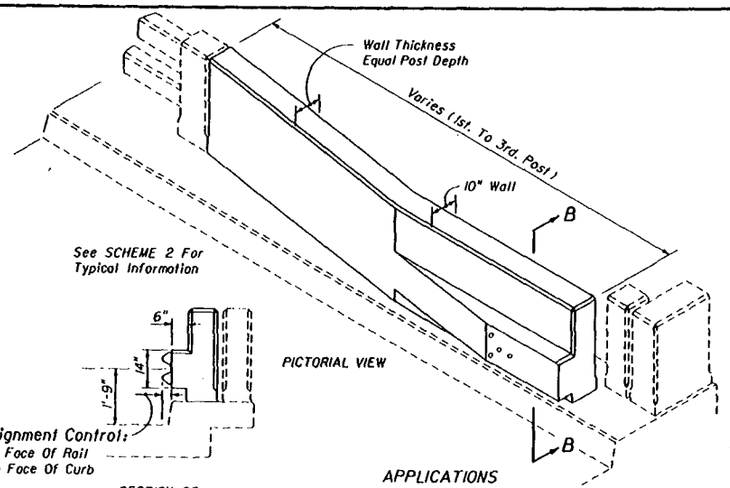

APPLICATIONS
SAFETY CURB 0'-11" TO 2'-0" WIDE
POST AND DISCONTINUOUS BEAM RAILING
APPROACH ENDS OF ONE-WAY BRIDGE
APPROACH AND TRAILING ENDS OF TWO-WAY BRIDGES

SCHEME 20

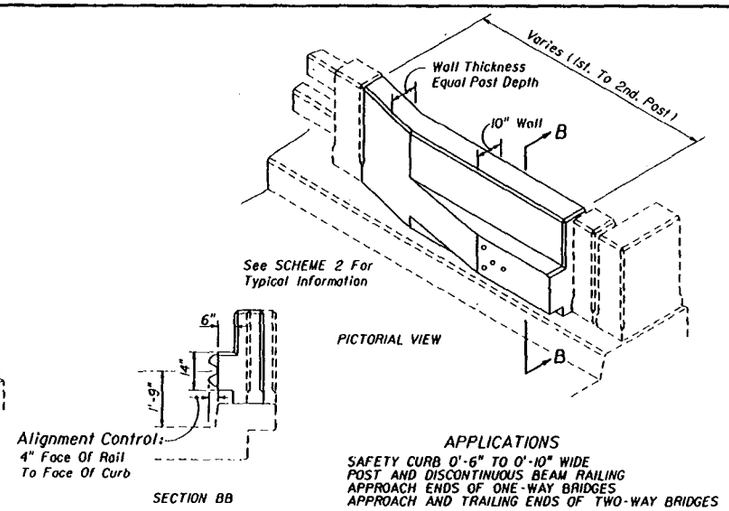

APPLICATIONS
SAFETY CURB 0'-6" TO 0'-10" WIDE
POST AND DISCONTINUOUS BEAM RAILING
APPROACH ENDS OF ONE-WAY BRIDGES
APPROACH AND TRAILING ENDS OF TWO-WAY BRIDGES

SCHEME 21

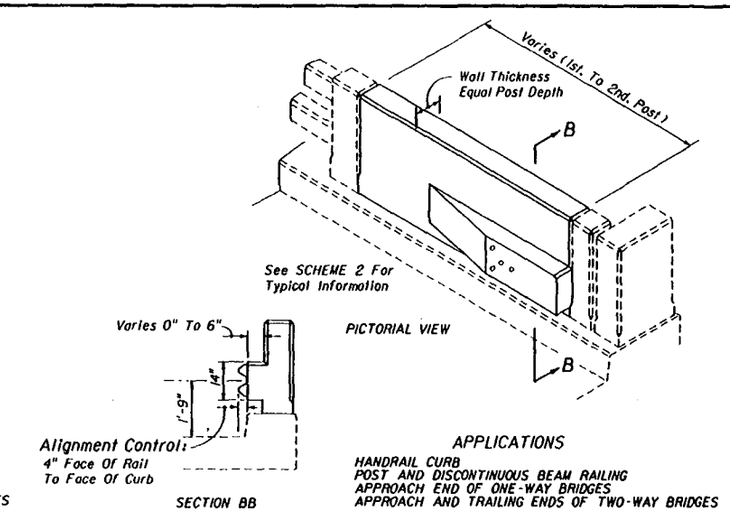

APPLICATIONS
HANDRAIL CURB
POST AND DISCONTINUOUS BEAM RAILING
APPROACH END OF ONE-WAY BRIDGES
APPROACH AND TRAILING ENDS OF TWO-WAY BRIDGES

SCHEME 22

CAST IN PLACE PANELS

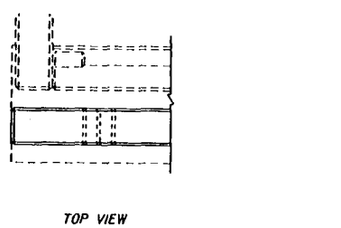

TRAILING END OF ONE-WAY BRIDGES

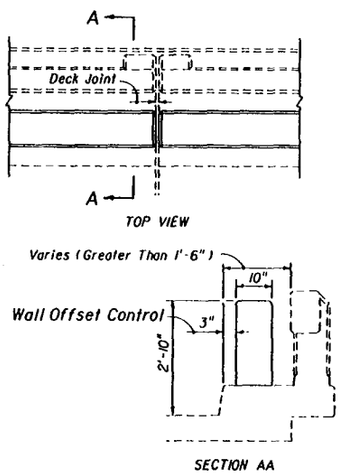

RUN OF BARRIER

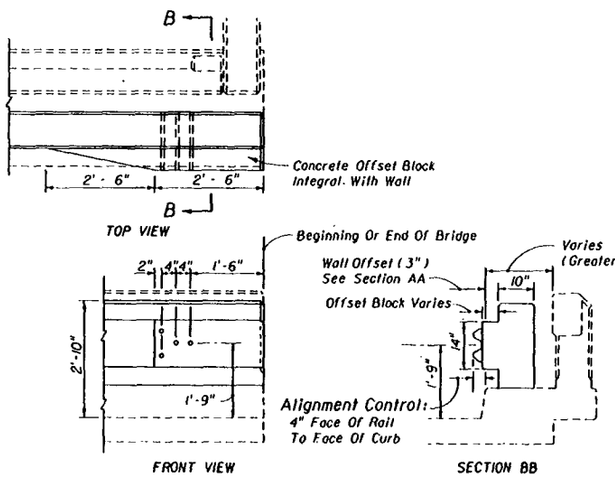

APPROACH END OF ONE-WAY BRIDGES
APPROACH AND TRAILING ENDS OF TWO-WAY BRIDGES

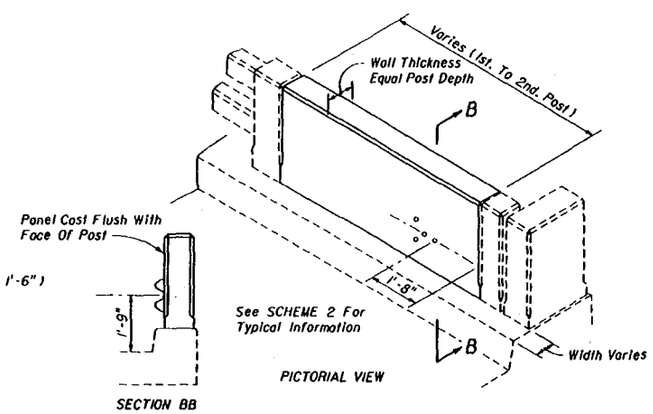

APPLICATION
TRAILING END ON ONE-WAY BRIDGES WHEN OTHER HAZARDS PRESENT

SCHEME 23

CAST IN PLACE CONCRETE PANEL

See SCHEME 1 For Reinforcing Details And Estimated Quantities

APPLICATIONS
SAFETY CURB WIDER THAN 1'-6", AND SIDEWALKS
CONTINUOUS BARRIER ACROSS BRIDGE

SCHEME 19

CONCRETE SAFETY BARRIER

BRIDGE WITHOUT APPROACHING ROADWAY CURB

STATE OF FLORIDA DEPARTMENT OF TRANSPORTATION
ROAD DESIGN

GUARDRAIL ANCHORAGE AND CONTINUOUS BARRIER FOR EXISTING BRIDGES

	Names	Dates
Designed By	JVG	09/86
Drawn By	HSD	09/86
Checked By	JVG	09/86
F.H.W.A. Approved:		

Approved By: Freddie Simmons
State Roadway Design Engineer

Revision No.	Sheet No.	Index No.
94	7 of 9	401

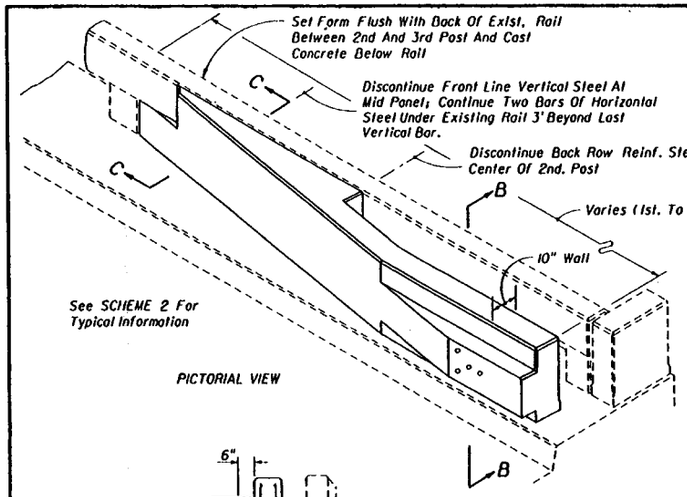

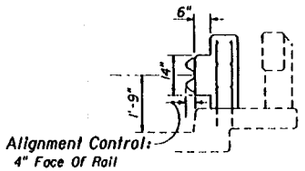

APPLICATIONS
SAFETY CURBS 1'-8" TO 2'-0" WIDE
CONCRETE CONTINUOUS BEAM RAILING
APPROACH AND TRAILING ENDS OF TWO-WAY BRIDGES

SCHEME 24

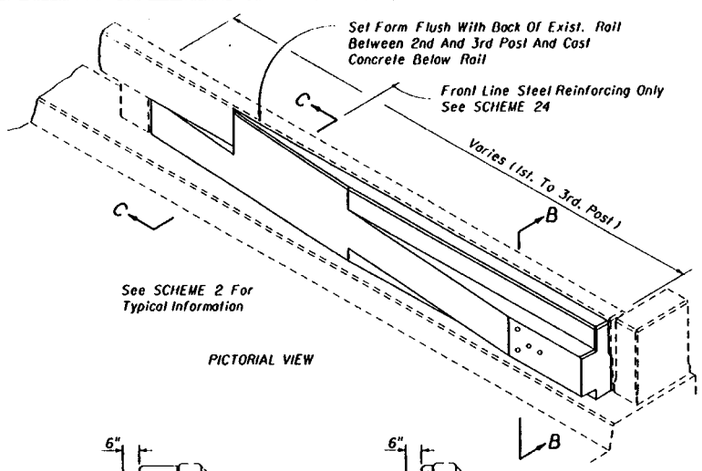

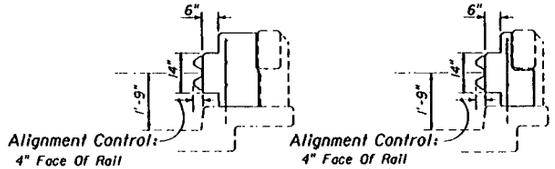

APPLICATIONS
SAFETY CURBS 9" TO 1'-7" WIDE
CONCRETE CONTINUOUS BEAM RAILING
APPROACH AND TRAILING ENDS OF TWO-WAY BRIDGES

SCHEME 25

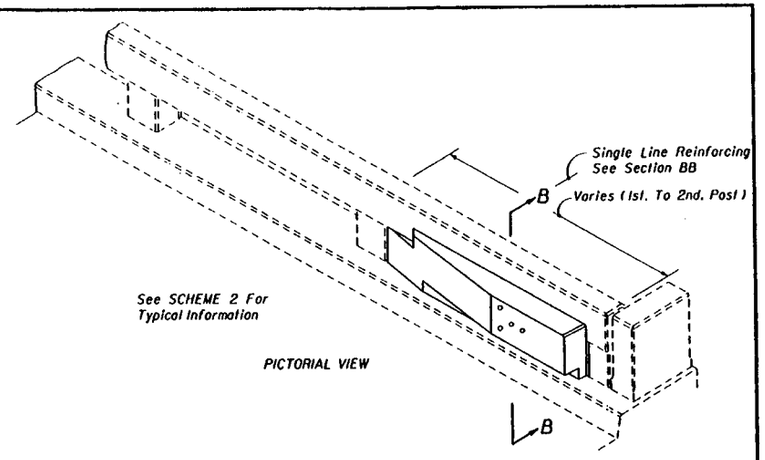

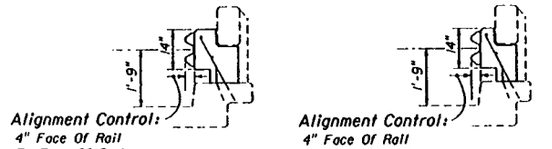

APPLICATIONS
SAFETY CURBS 5" TO 8" WIDE
CONCRETE CONTINUOUS BEAM RAILING
APPROACH AND TRAILING ENDS OF TWO-WAY BRIDGES

SCHEME 26

CAST IN PLACE PANELS

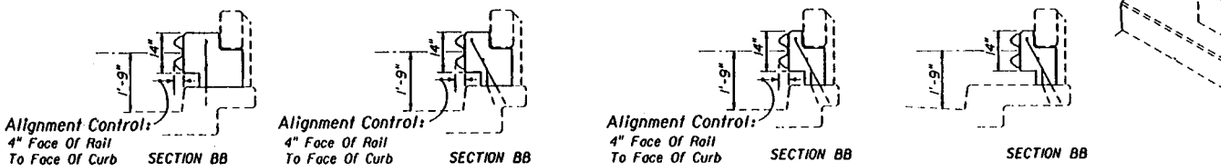

Note: For Approach End Curb Less Than 5" Wide See SCHEME 22.

Note: For Trailing End Curb Less Than 5" Wide See SCHEME 23

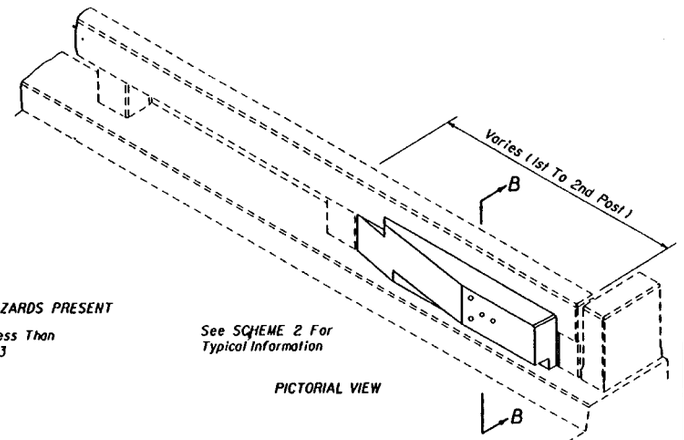

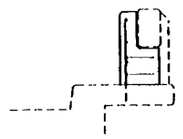

APPLICATIONS
SAFETY CURB 5" TO 1'-3" WIDE
CONCRETE CONTINUOUS BEAM RAILING
APPROACH END OF ONE-WAY BRIDGES
TRAILING END OF ONE-WAY BRIDGES WHEN OTHER HAZARDS PRESENT

SCHEME 27

CAST IN PLACE PANELS

BRIDGES WITHOUT APPROACHING ROADWAY CURB

STATE OF FLORIDA DEPARTMENT OF TRANSPORTATION
ROAD DESIGN

GUARDRAIL ANCHORAGE AND CONTINUOUS BARRIER FOR EXISTING BRIDGES

	Names	Dates
Designed By	JVG	09/86
Drawn By	HSD	09/86
Checked By	JVG	09/86
F.H.W.A. Approved:		

Approved By Freddie Simmons
State Roadway Design Engineer

Revision No.	Sheet No.	Index No.
87	8 of 9	401

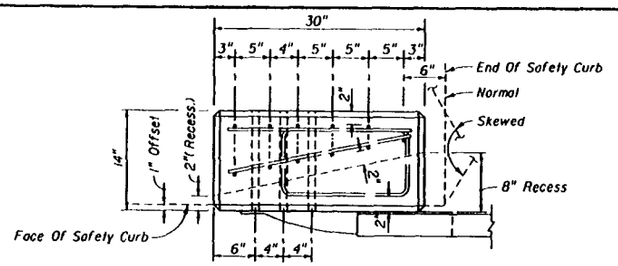

TOP VIEW

Reinforcing Steel: See SCHEME 17.

Note: Scheme comparatively enlarged to facilitate reinforcement detailing.

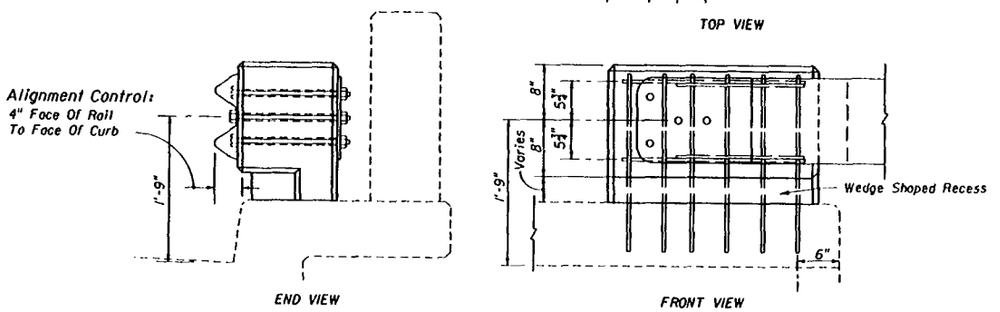

END VIEW FRONT VIEW

APPLICATIONS

SAFETY CURB WIDER THAN 1'-4" AND UP TO 2'-0"
APPROACH END OF ONE-WAY BRIDGES ONLY

SCHEME 28

CONCRETE ANCHOR POST



TOP VIEW

See SCHEME 18 For Complete Detailing

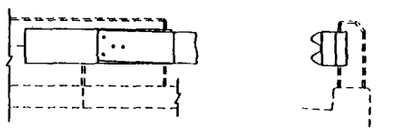

FRONT VIEW END VIEW

APPLICATIONS

HANDRAIL CURB
SPECIAL END SHOE RECESS (EXISTING)
APPROACH AND TRAILING END OF TWO-WAY BRIDGES
APPROACH END OF ONE-WAY BRIDGES (NOTE: SPECIAL END SHOE TO REMAIN IN THE RECESS ON TRAILING END)

SCHEME 30

END POST WITH SPECIAL END SHOE RECESS

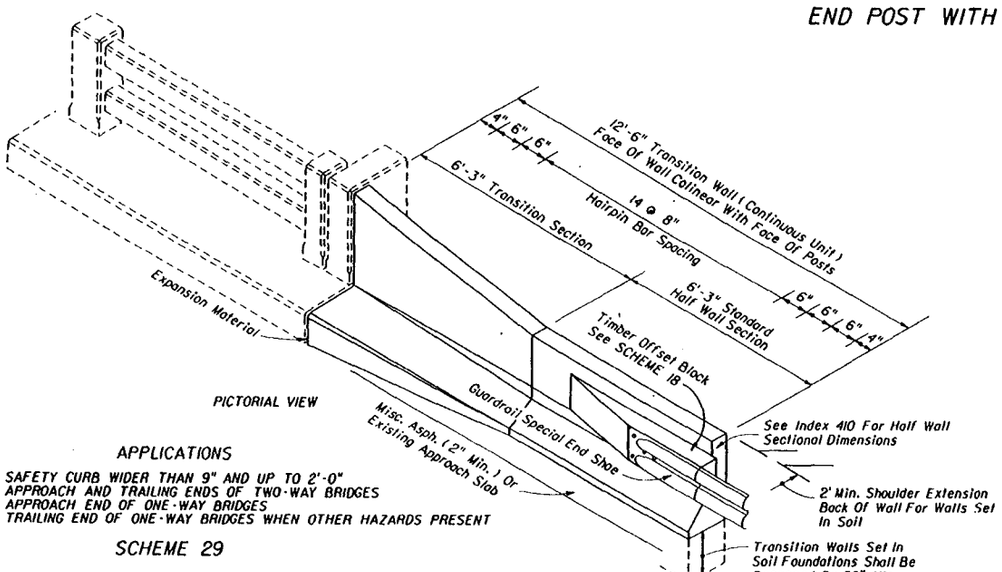

PICTORIAL VIEW

APPLICATIONS

SAFETY CURB WIDER THAN 9" AND UP TO 2'-0"
APPROACH AND TRAILING ENDS OF TWO-WAY BRIDGES
APPROACH END OF ONE-WAY BRIDGES
TRAILING END OF ONE-WAY BRIDGES WHEN OTHER HAZARDS PRESENT

SCHEME 29

CONCRETE BRIDGE ANCHORAGE TRANSITION WALL

Note (Scheme 29):

Portions of existing approach slab curbing, wingwalls, shoulder gutter, flumes and etc. may have to be revamped or removed.

Transition walls shall be reinforced in accordance with the 'Free End Reinforcement' detail of Index No. 410 with the hairpin bars spaced as shown in this pictorial. Walls mounted on existing approach slabs shall be anchored into the slabs with the front line of the hairpin reinforcement embedded 6" in the slab using ¾" holes with epoxy bonding compound, Type "J" (OPL Class IV) in accordance with the manufacturer's specifications.

Transition walls mounted on soil foundation shall have footings deepened 30" and the walls doweled into the end of the existing bridge in the following manner:
Four 1¼ diameter holes 6" deep shall be drilled in the end post of the existing bridge and No. 6 bars 15" long set in epoxy mortar. The holes shall be located as near as practical to the vertical center of the end of the transition wall and equally spaced to provide cover of 3" Minimum. The ends of the dowels extending into the transition wall shall be wrapped with on layer of 15# asphalt felt with the ends crimped.

Approaching guardrail shall have approach post spacings, offset blocks and double W-beams in accordance with Details H, I, S & T, Index No. 400.

BRIDGES WITHOUT APPROACHING ROADWAY CURB

STATE OF FLORIDA DEPARTMENT OF TRANSPORTATION
ROAD DESIGN

GUARDRAIL ANCHORAGE AND CONTINUOUS BARRIER FOR EXISTING BRIDGES

	Names	Dates
Designed By	JVG	09/86
Drawn By	HSD	09/86
Checked By	JVG	09/86
F.H.W.A. Approved:		

Approved By: Freddie Simmons
State Roadway Design Engineer

Revision No.	Sheet No.	Index No.
94	9 of 9	401

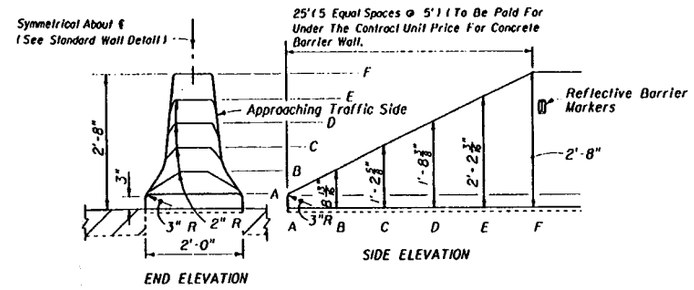

TO BE USED ONLY WHERE TERMINAL LOCATED CLEAR ZONE WIDTH FROM EDGE OF THE NEAR APPROACH DRIVING LANE. (SEE DETAIL A)

CONCRETE BARRIER WALL TERMINAL

DETAIL II

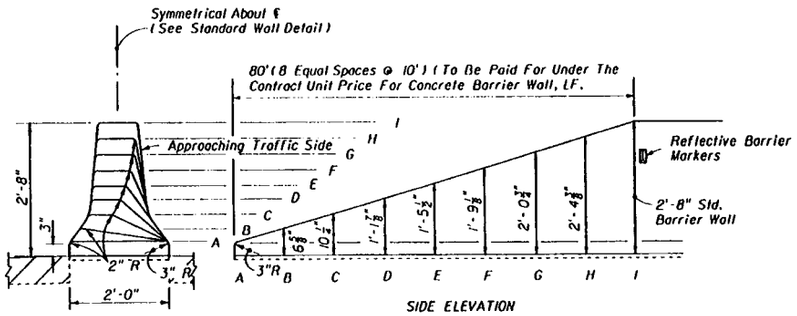

DESIGN SPEED 45 MPH OR LESS

CONCRETE BARRIER WALL TERMINAL FOR NARROW MEDIAN

DETAIL III

REFLECTIVE BARRIER MARKER SPACING ON WALL		
Distance - Edge of Travel Lane to Barrier Wall.	Spacing	REMARKS
1' to < 4'	40'	1. Reflectors shall conform to Section 993-5 of the Standard Specifications.
4' to 8'	80'	2. Reflector color (white or yellow) shall conform to the color of the near edgeline.
> than 8'	none required	

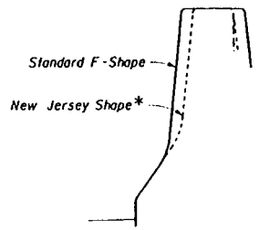

*Existing New Jersey shaped walls that are to remain in place or be modified as called for in the plans; or, walls that are to be repaired, modified or constructed as directed by the Engineer. Wall dimensions shall be in accordance with Index No. 410 of the 1988 Roadway and Traffic Design Standards.

Where standard F-Shape walls abut existing NJ Shape walls, face transitions of not less than 5' in length shall be constructed at the end of the F-Shape wall.

WALL FACE SAFETY SHAPES

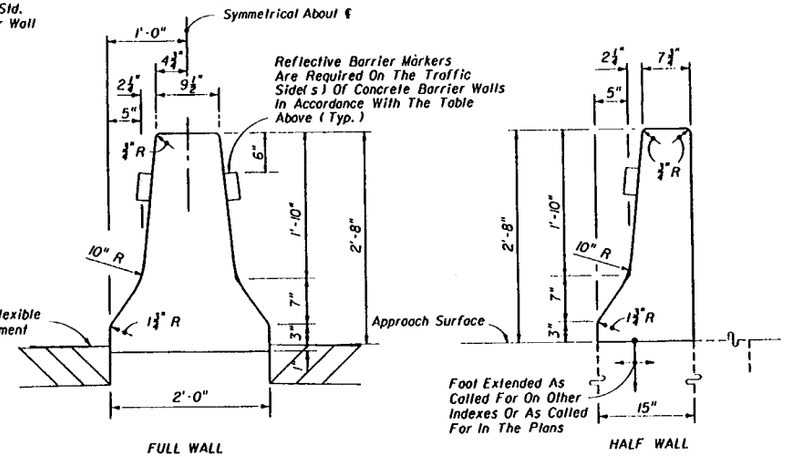

For concrete median barrier wall details at piers, highway lighting and guardrail connections, see Sheets 2, 3, 12 and 13.

Standard barrier to be paid for under the contract unit price for Concrete Barrier Wall, LF.

STANDARD BARRIER WALL SECTIONS

GENERAL NOTES

1. Class II concrete shall be used for all reinforced and plain (nonreinforced) concrete barrier walls; except, in moderately and extremely aggressive environments, Class IV concrete shall be used. Exposed concrete surfaces shall have a Class 3 surface finish in accordance with Section 521 of the Standard Specifications, unless other finish called for in the plans. The surfaces shall have a Class 5 Applied Finish Coating in accordance with Section 400 only when called for in the plans.
2. Concrete barrier wall terminal notes for design speeds greater than 45 mph.
   a. Terminated in a wide median section outside recovery area of the approach traffic. See Detail A.
   b. Terminated within a shielded location.
   c. Terminal protection by the use of an impact attenuator system.
   d. Terminated in conjunction with a suitably designed transition to another type median barrier that can be introduced more safely.
3. Expansion joints in wall required only at bridge ends and/or at locations where wall is an integral part of existing or proposed concrete slab; wall joints are to match an existing or proposed expansion joint.
4. When the barrier is installed adjacent to the pavement the top 12" of the subgrade shall be compacted to at least 100% of the density as defined in the AASHTO T-99 specifications.
5. Cast-in-place barrier wall normally will be a continuous pour without transverse contraction joints. Cast-in-place segments with a length < 40' shall be joined to adjacent sections by doweling. See Detail B.
6. Precast construction is allowed as an alternate to cast-in-place construction.
   a. Wall segments less than 40' in length shall be joined by a transverse joint in accordance with Details C & D. The minimum segment length is 20'.
   b. Bedding of the precast sections shall be facilitated by the use of sand-cement grout or equal method to assure uniform bearing.
   c. Reinforcement may be required for handling stresses.

GENERAL NOTES (CONT.)

7. Concrete barrier walls that are continuous over roadway and bridge shall be pin connected at the roadway end of the approach slab. Both cast-in-place and precast roadway barrier walls shall be connected at the approach slab by Option 3 or 4 end treatments of Index No. 415, and reinforced in accordance with the free end reinforcement details of this Index. Median and outside barrier walls on the approach slab shall be designed, constructed and paid for as a part of the approach slab. Pins shall remain free but secured from ready removal by spot welding a ½"Ø x 2" stud approximately 3 inches below the upper pair of eye connectors. This connection method also applies to standard barrier walls that are continuous with median barrier walls for superelevated sections and for variable roadway profile grades (see detail left).
8. Cost of reinforcing steel and reflective barrier markers shall be included in the contract unit price for concrete barrier wall. See individual details for pay item information.
9. For barrier wall inlet details see Indexes Nos. 217, 218 and 219.

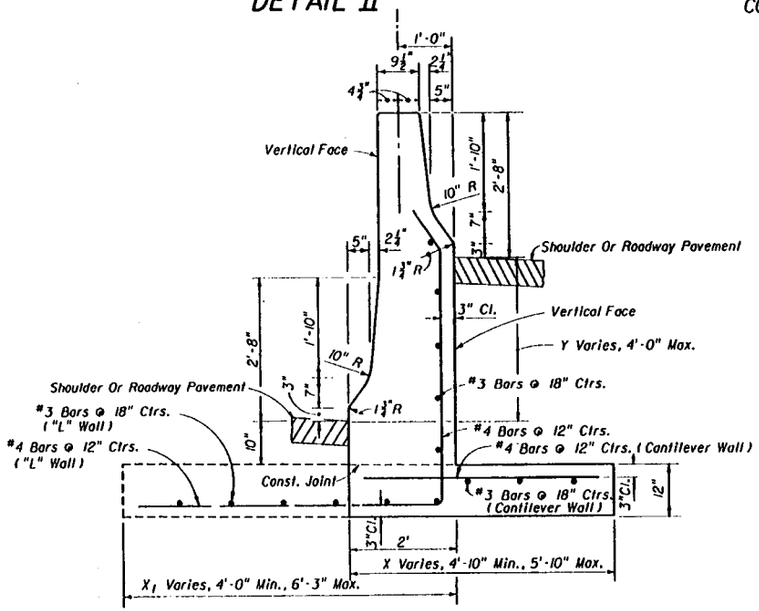

Note: Wall segments shall be 20 feet or more in length.

Design Criteria: Vehicle: 4000 lbs., 60 mph, 25°, Avg. Lat. Impact Deceleration Force - 7G's (28 Kips)
Vehicle Force Applications: 1000 lbs. Vert. At Top of Toe; 28 Kips Horiz. At 5½" Above Pavt.

Unless the plans stipulate a specific wall type, either the cantilever wall or the "L" wall may be constructed at the Contractors option.

Steel not required in walls of heights Y=0'-0" To 0'-6" when footing and stem cast as one unit. When footing and stem cast separately by construction joint, the footing joint surface shall be roughened and No. 4 dowels 24" long installed at the centerline of the stem on 24" centers with 9" embedment in the footing.

Cost of the steel and concrete footing to be included in the contract unit price for Concrete Barrier Wall, LF.

See General Note No. 7 for details of connection and reinforcement required when wall is continuous with standard barrier wall.

	Height Y	0'-0"	0'-6"	1'-0"	1'-6"	2'-0"	2'-6"	3'-0"	3'-6"	4'-0"
Cantilever Wall	Width X	4'-10"	5'-0"	5'-2"	5'-3"	5'-5"	5'-6"	5'-7"	5'-9"	5'-10"
"L" Wall	Width X_1	4'-0"	4'-4"	4'-8"	5'-0"	5'-3"	5'-6"	5'-9"	6'-0"	6'-3"

MEDIAN BARRIER WALL FOR SUPERELEVATED SECTIONS OR FOR VARIABLE ROADWAY PROFILE GRADES

STATE OF FLORIDA DEPARTMENT OF TRANSPORTATION
ROAD DESIGN

CONCRETE BARRIER WALL

	Names	Dates
Designed By		
Drawn By	AF/HSD	7/3/91
Checked By	LWF/JG	7/3/91
F.H.W.A. Approved:		5/20/77

Approved By: Freddie Simmons
State Roadway Design Engineer

Revision No.	Sheet No.	Index No.
94	1 of 15	410

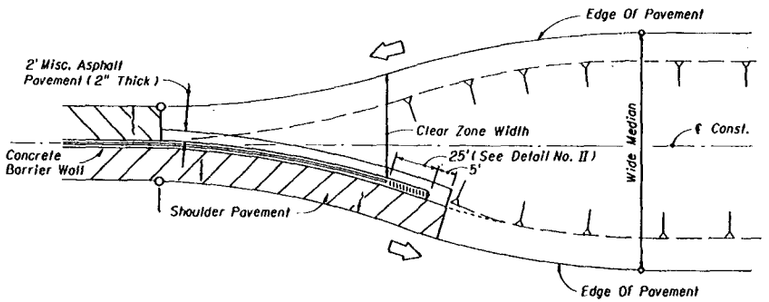

CONCRETE BARRIER WALL TRANSITION BETWEEN WIDE AND NARROW MEDIANS

DETAIL A

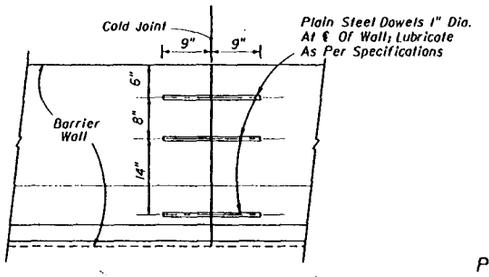

DOWELED TRANSVERSE CONSTRUCTION JOINT WHEN ABUTTING SEGMENT(S) LESS THAN 40' IN LENGTH

DETAIL B

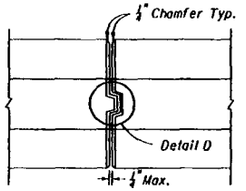

TOP VIEW

PRECAST BARRIER TRANSVERSE JOINTS

DETAIL C

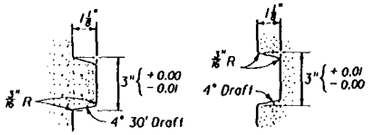

TOP VIEW

STRAIGHT TONGUE AND GROOVE

DETAIL D

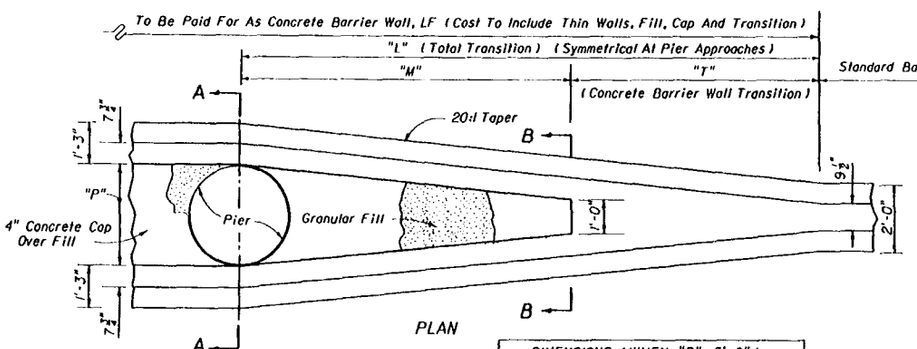

PLAN

DIMENSIONS (WHEN "P" = 3'-0")		
"L"	"M"	"T"
35'	20'	15.0'

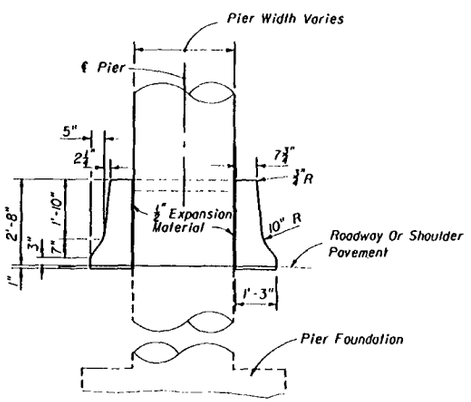

SECTION AA

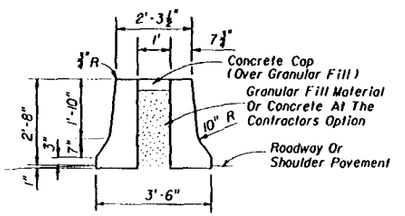

SECTION BB

CONCRETE MEDIAN BARRIER WALL (THIN WALLS, FILL, CAP AND TRANSITION)

DETAIL I

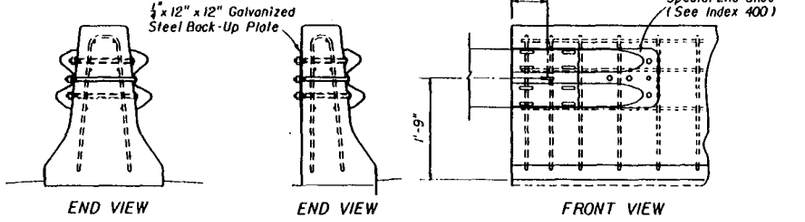

END VIEW

END VIEW

FRONT VIEW

NOTES

1. End of wall flush mounted connections are not applicable to two-lane two-way facilities. See Sheets 12, 13 and 14 for trailing end connections on two-lane two-way facilities and for approach guardrail connections.
2. Trailing guardrail connections to double face safety shaped walls will be under one of the following traffic conditions and mounting methods:
   (a) One-way traffic trailing condition one side only – flush mount with flat steel back-up plate on back side.
   (b) One-way traffic trailing condition both sides – flush mount both sides.
   (c) For trailing condition one side and approach traffic condition opposite side -- see "Median Barrier Wall" mounting, Sheets 13 and 14.

GUARDRAIL CONNECTION TO TRAILING END CONCRETE BARRIER WALL

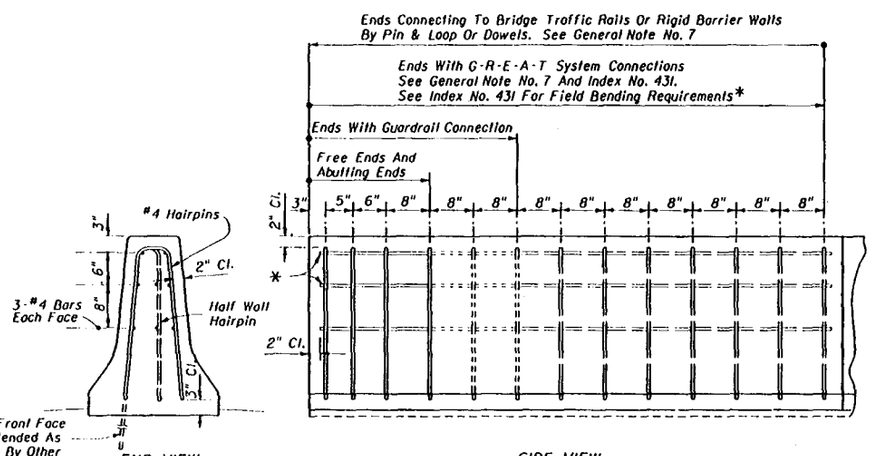

SIDE VIEW

END VIEW

Note: Free end reinforcement required for nonreinforced walls at all exposed ends; abutting ends of true joints; ends with guardrail connections; ends with G-R-E-A-T System connections; and, ends connecting to bridge traffic rails or other rigid barrier walls. See General Note No. 7 for free end reinforcement and connections to rigid structures.

FREE END REINFORCEMENT

STATE OF FLORIDA DEPARTMENT OF TRANSPORTATION
ROAD DESIGN

CONCRETE BARRIER WALL

	Names	Dates
Designed By		
Drawn By	AF/HSD	7/91
Checked By	LMF/JVG	7/91
F.H.W.A. Approved: 10/8/78		

Approved By: Freddie Simmons
State Roadway Design Engineer

Revision No.	Sheet No.	Index No.
92	2 of 15	410

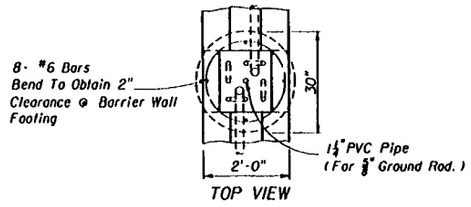

TOP VIEW

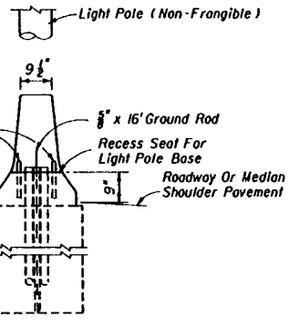

SECTION CC

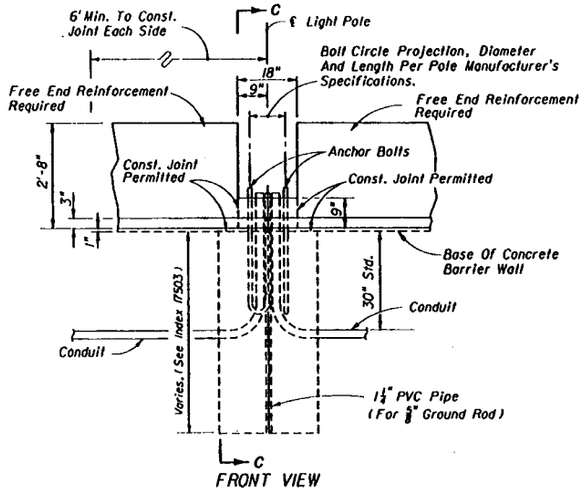

FRONT VIEW

Note: For foundation design and details see Index No. 17503.
Refer to Highway Lighting Plans for size of conduit.
Payment for the 30" concrete shaft including reinforcing steel, anchor bolts and accessories shall be included in the contract unit price for Lighting Pole Complete-Each.

LIGHT POLE MOUNTING IN MEDIAN BARRIER WALL

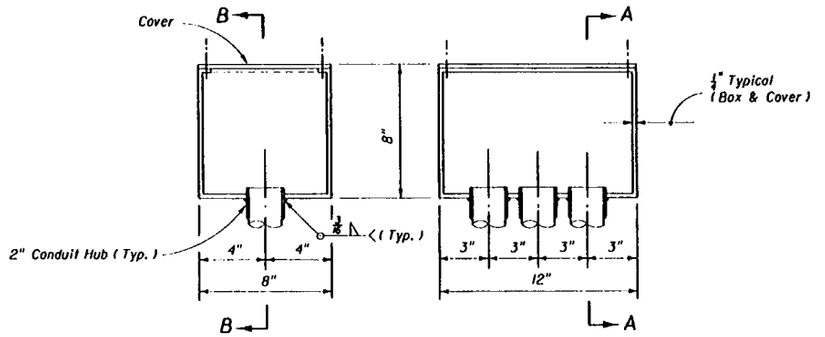

SECTION AA SECTION BB

JUNCTION BOX

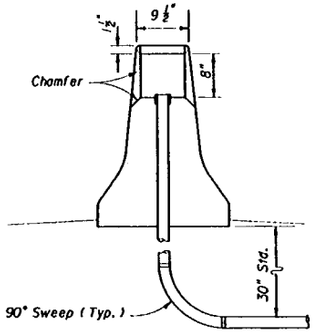

TRANSVERSE SECTION

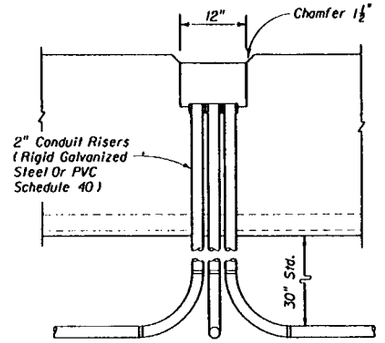

LONGITUDINAL SECTION

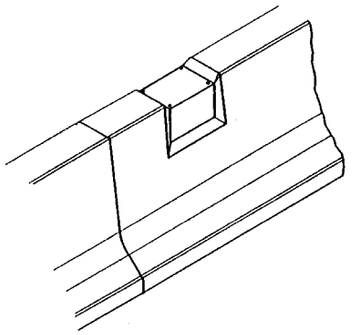

PICTORIAL

INSTALLATION

JUNCTION BOX NOTES

1. Junction boxes are to be fabricated from steel conforming to ASTM A-36 and be hot dipped galvanized after fabrication. All seams shall be continuously welded and ground smooth. A neoprene gasket shall be attached to the box to provide a watertight cover. The cover screws shall be fully galvanized.
2. Remove excess concrete while green and hand form chamfers.
3. Junction box complete and conduit risers are incidental to the construction and cost of the barrier wall; there is to be no separate compensation for the box, risers or installation unless specifically called for in the plans.

JUNCTION BOX - ELECTRICAL

STATE OF FLORIDA DEPARTMENT OF TRANSPORTATION
ROAD DESIGN

CONCRETE BARRIER WALL

	Name	Date
Designed By		
Drawn By	HSD	9/85
Checked By	JVG	9/85
F.H.W.A. Approved:		

Approved By Freddie Simmons
State Roadway Design Engineer

Revision No.	Sheet No.	Index No.
90	3 of 15	410

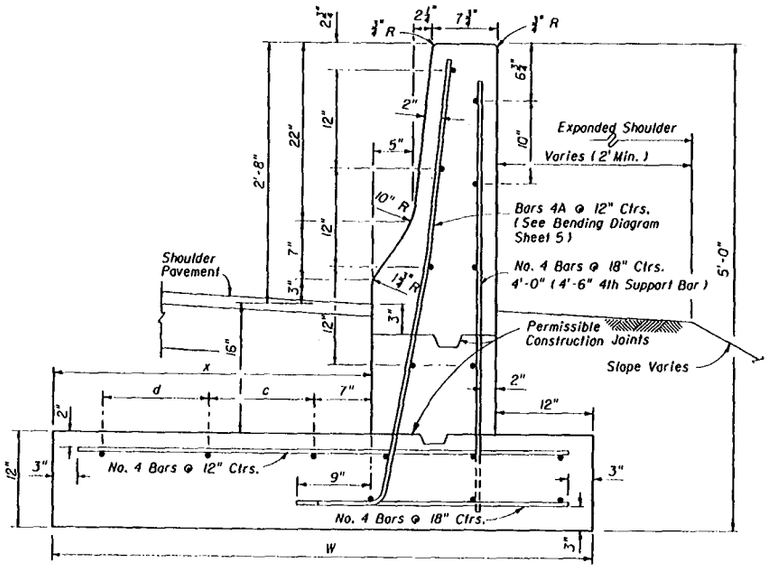

CANTILEVER WALL

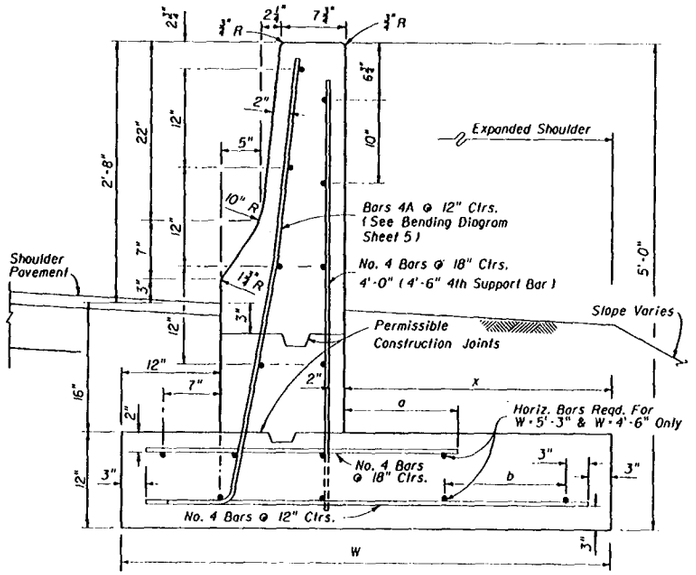

L-WALL

NOTE: All longitudinal reinforcement No. 4 bars.

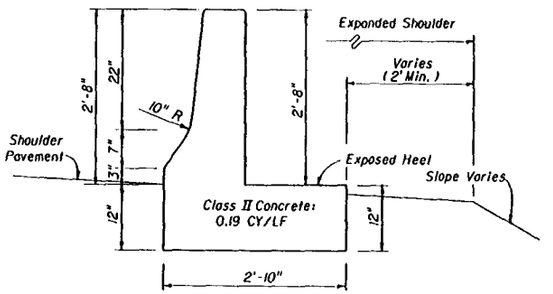

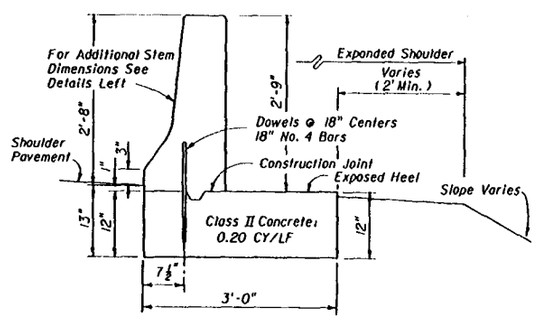

WALL OPTIONS

NOTE:
Wall to be paid for under the contract unit price for Concrete Barrier Wall (Plain-Shoulder), LF.

DESIGN NOTE:
Wall shall have a length of 40' or greater. Wall of 40' or more in length may be made up of segments of 20' or more in length provided the segments are joined by a transverse joint in accordance with Detail B, Sheet 2; segments shall have dimensions same as wall shown above.

PLAIN CONCRETE BARRIER WALL (SHOULDER)

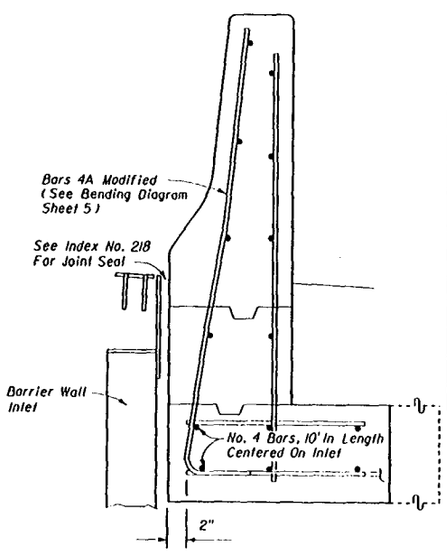

REINFORCING STEEL MODIFICATIONS AT BARRIER WALL INLETS (INDEX NO. 218)

DIMENSIONS AND QUANTITIES

CANTILEVER WALL							L-WALL						
Length* Of Barrier Wall	W	x	c	d	Class II Concrete CY Per Lin. Ft.	Reinforcing Steel LBS. Per Lin. Ft.	Length* Of Barrier Wall	W	x	a	b	Class II Concrete CY Per Lin. Ft.	Reinforcing Steel LBS. Per Lin. Ft.
≥ 40'	3'-3"	1'-0"	NA	NA	0.27	18	≥ 40'	3'-3"	1'-0"	6"	NA	0.27	18
35' to 39'	3'-6"	1'-3"	NA	NA	0.28	18	35' to 39'	3'-6"	1'-3"	6"	NA	0.28	18
30' to 34'	4'-0"	1'-9"	NA	NA	0.29	19	30' to 34'	3'-9"	1'-6"	6"	NA	0.29	18
25' to 29'	4'-6"	2'-3"	14"	NA	0.31	20	25' to 29'	4'-0"	1'-9"	9"	NA	0.30	19
21' to 24'	5'-0"	2'-9"	18"	NA	0.33	20	20' to 24'	4'-6"	2'-3"	12"	12"	0.31	20
19' & 20'	5'-6"	3'-3"	13"	13"	0.35	21	15' to 19'	5'-3"	3'-0"	16"	17"	0.34	21
17' & 18'	6'-0"	3'-9"	16"	16"	0.37	21							
15' & 16'	6'-6"	4'-3"	18"	18"	0.39	22							

Quantities shown are for information only. For method of payment see payment note below.
Barrier wall inlets (Index 218) shall be isolated from the barrier wall stem and footing by 1" expansion material.
*Any length less than 40' must be a continuous (non-jointed) segment. Walls of 40' or more in length may be made up of segments of 20' or more in length provided the segments are joined by a transverse joint in accordance with Detail B, Sheet 2; segments shall have dimensions same as wall ≥ 40' above.

PAYMENT:
Wall to be paid for under the contract unit price for Concrete Barrier Wall (Rigid-Shoulder), LF.

DESIGN NOTES:
Use of this barrier wall should be limited to special applications such as hazard encroachment into the clear zone where barrier wall deflection, rotation or translation cannot be tolerated; example hazards to consider are as follows:
(a) Structure supporting piers, bents and pylons (b) Pumping, metering, control or other similar critical stations (c) Quarries (d) Intolerable vertical drops (e) Historic structures or monuments (f) Rail transit travel way or passenger station (g) Other similar occupancies

REINFORCED CONCRETE BARRIER WALL (SHOULDER)

STATE OF FLORIDA DEPARTMENT OF TRANSPORTATION
ROAD DESIGN

CONCRETE BARRIER WALL

	Names	Dates
Designed By		
Drawn By	HSD	9/85
Checked By	JVO	9/85
F.H.W.A. Approved:		

Approved By: Freddie Simmons
State Roadway Design Engineer

Revision No.	Sheet No.	Index No.
90	4 of 15	410

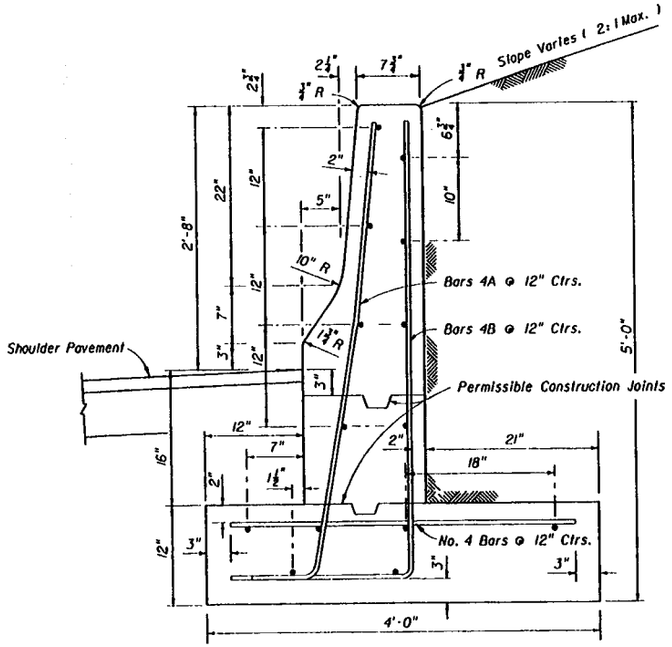

NOTE: All longitudinal reinforcement No. 4 bars.
Minimum segment length for this wall is 20 feet.
Wall to be paid for under the contract unit price
for Concrete Barrier Wall (Rigid-Retaining), LF.

QUANTITIES: Class II Concrete 0.29 CY/LF
Reinforcing Steel 20 LBS/LF

REINFORCED CONCRETE BARRIER WALL (RETAINING)

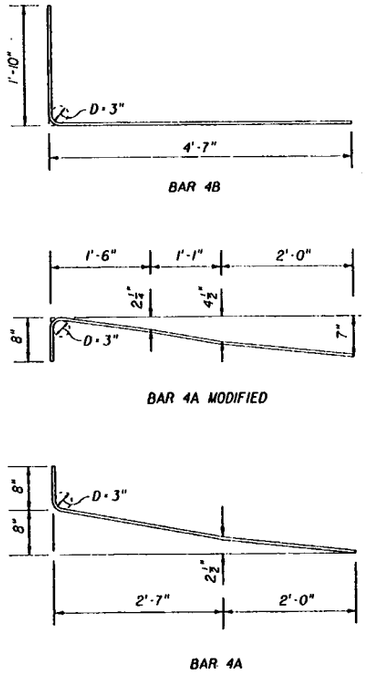

BENDING DIAGRAMS

STATE OF FLORIDA DEPARTMENT OF TRANSPORTATION
ROAD DESIGN

CONCRETE BARRIER WALL

	Names	Dates
Designed By		
Drawn By		
Checked By		
F.H.W.A. Approved:		

Approved By Freddie Simmons
State Roadway Design Engineer

Revision No.	Sheet No.	Index No.
90	5 of 15	410

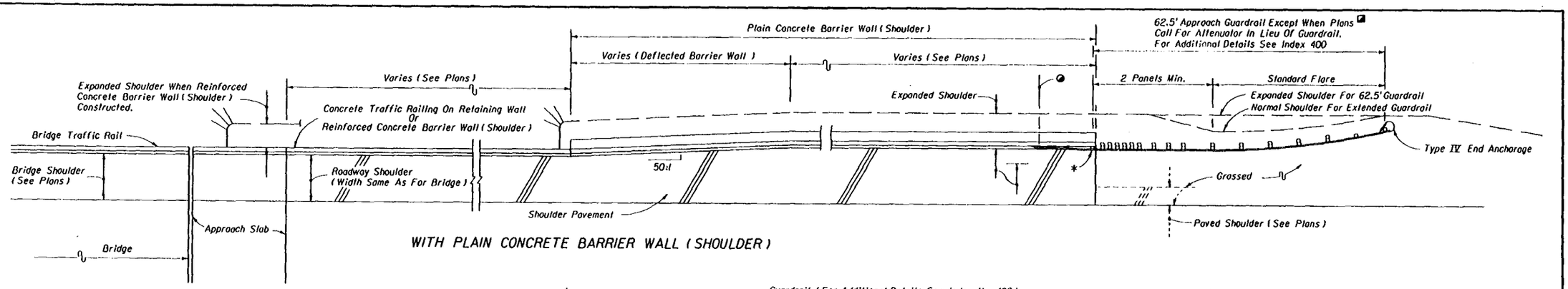

WITH PLAIN CONCRETE BARRIER WALL (SHOULDER)

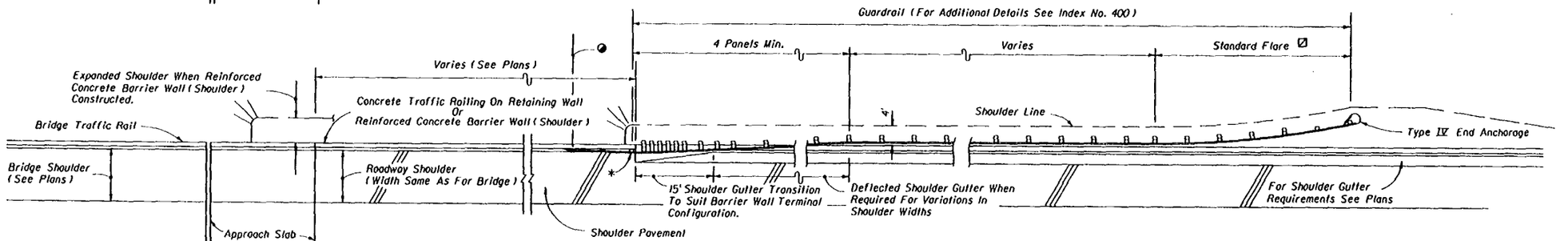

WITH SHOULDER GUTTER AND GUARDRAIL

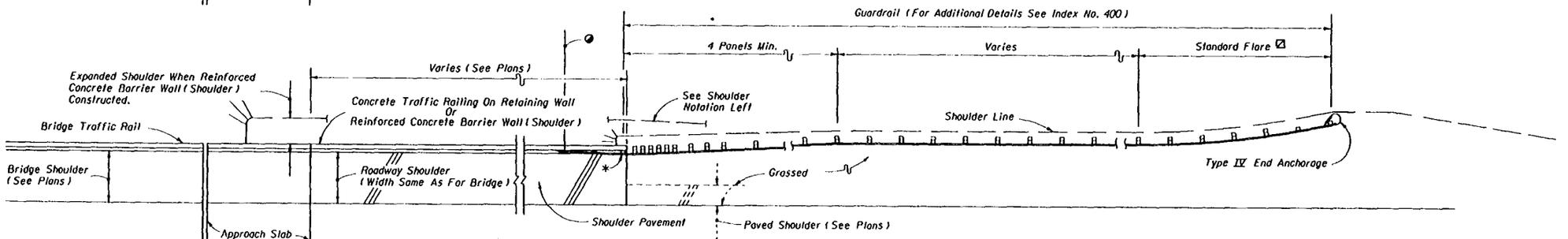

WITH GRASSED OR PAVED SHOULDERS AND GUARDRAIL

△ *Views show approach roadside barriers when length of need exceeds the length of either retaining walls with concrete traffic railings* or Reinforced Concrete Barrier Wall (Shoulder) on shoulders. When either of these rigid barriers alone satisfies the approach length of need, the wall ends shall be shielded by crash cushions, or, by guardrail the same as for bridge traffic rails, as detailed in Index No. 400.*

See other flagged notes for trailing end treatments.

Miscellaneous asphalt paving under guardrail not shown.

* *Guardrail connection to concrete traffic railings on retaining walls shall be in accordance with the Structures Design Office Standard Drawings and the plans. Guardrail connections to shoulder concrete barrier walls shall be in accordance with the details shown on Sheets 2, 13 and 14. Back-up plates, Index 400, Detail J, required for all connections.*

● *End measurement for guardrail payment when guardrail connected to shoulder barrier walls. See Index 400, Detail J for end measurement when guardrail connected to concrete traffic rails constructed with approach slab or on retaining walls.*

☑ *To be deleted on trailing ends except for 2-lane 2-way facilities. The tangent guardrail shall be anchored by End Anchorage Type II, Index No. 400.*

◪ *To be deleted on trailing ends except for 2-lane 2-way facilities.*

EITHER REINFORCED CONCRETE BARRIER WALL (SHOULDER) OR RETAINING WALL WITH CONCRETE TRAFFIC RAILING △

CONCRETE BARRIER WALLS ON APPROACHES TO BRIDGES

STATE OF FLORIDA DEPARTMENT OF TRANSPORTATION
ROAD DESIGN

CONCRETE BARRIER WALL

	Names	Dates
Designed By	KNW/JMC	8/89
Drawn By	HSO	8/89
Checked By	KNW/JMC	8/89
F.H.W.A. Approved:		

Approved By Freddie Simmons
State Roadway Design Engineer

Revision No.	Sheet No.	Index No.
92	6 of 15	410

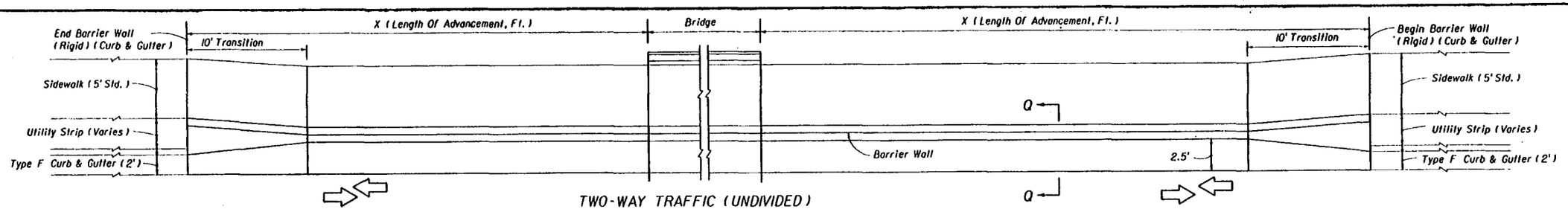

TWO-WAY TRAFFIC (UNDIVIDED)

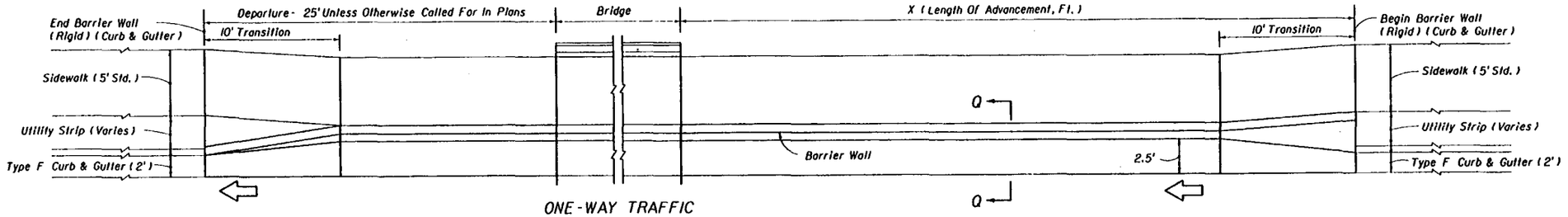

ONE-WAY TRAFFIC

BRIDGE END HAZARD

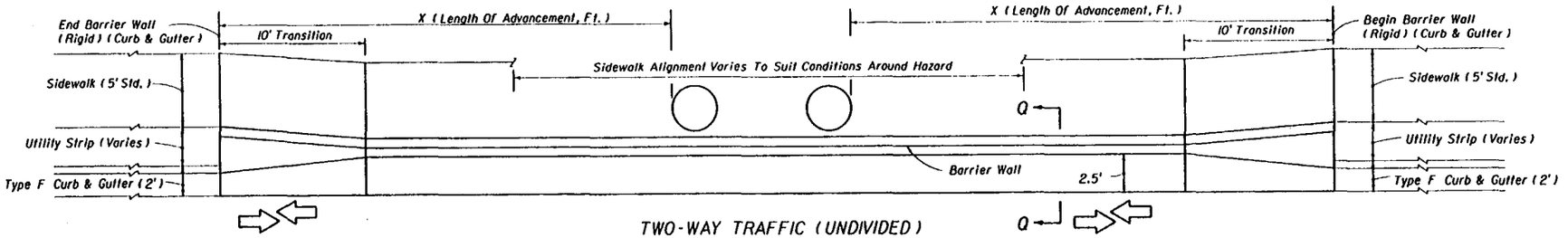

TWO-WAY TRAFFIC (UNDIVIDED)

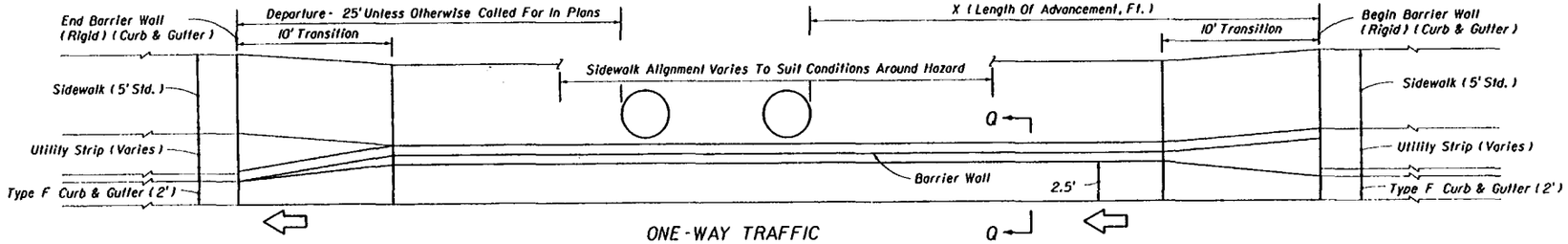

ONE-WAY TRAFFIC

HAZARD 4' OR LESS FROM FACE OF CURB

NOTE:

X = Length of advancement in feet for near and opposing approach lanes. See Sheet 11.

For locations without utility strips see Sheet 8.

For transition, sidewalk and sectional details see Sheets 9 & 10.

The 2.5' offsets to toe of barrier wall cannot be reduced to accommodate hazards; however, hazards located in the stem of the wall can be accommodated by the detail on Sheet 11.

CONCRETE BARRIER WALL (RIGID) (CURB & GUTTER) • CURB AND GUTTER WITH UTILITY STRIP

STATE OF FLORIDA DEPARTMENT OF TRANSPORTATION
ROAD DESIGN

CONCRETE BARRIER WALL

	Names	Dates
Designed By		
Drawn By	HSD	10/85
Checked By	JBW/MG	10/85
F.H.W.A. Approved:		

Approved By: Freddie Simmons
State Roadway Design Engineer

Revision No.	Sheet No.	Index No.
90	7 of 15	410

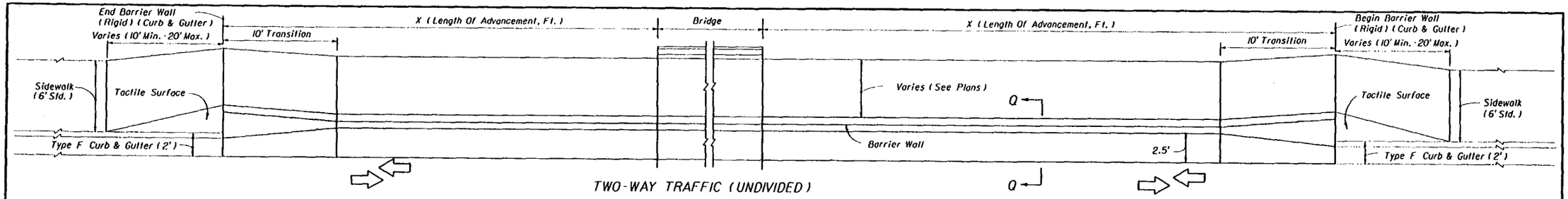

TWO-WAY TRAFFIC (UNDIVIDED)

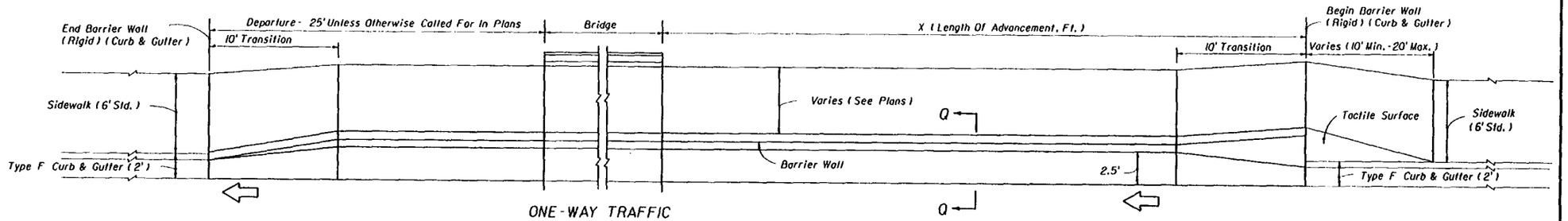

ONE-WAY TRAFFIC

BRIDGE END HAZARD

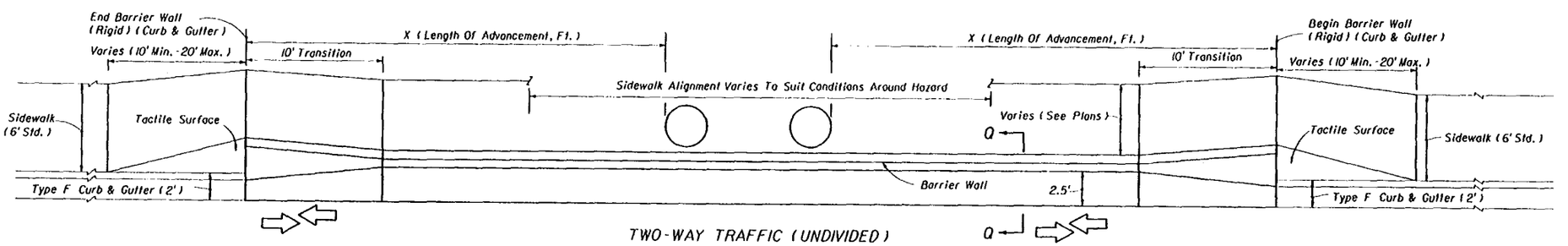

TWO-WAY TRAFFIC (UNDIVIDED)

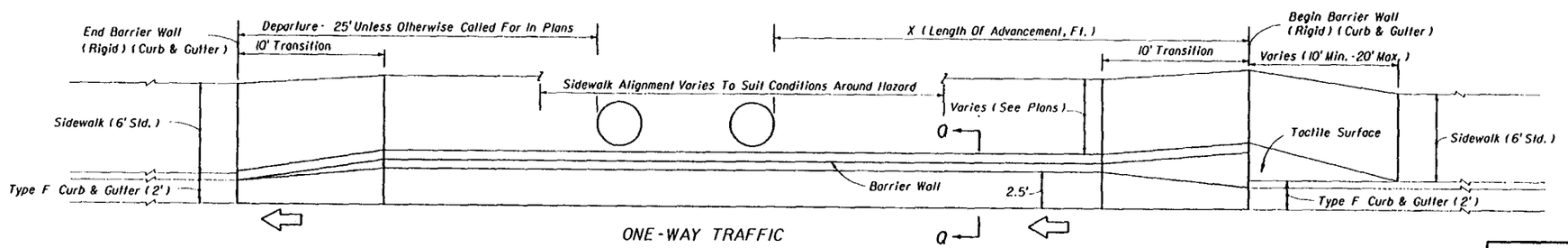

ONE-WAY TRAFFIC

HAZARD 4' OR LESS FROM FACE OF CURB

NOTE:

X = Length of advancement in feet for near and opposing approach lanes. See Sheet 11.

For locations with utility strips see Sheet 7.

For transition, sidewalk and sectional details see Sheet 9 & 10.

The 2.5' offsets to toe of barrier wall cannot be reduced to accommodate hazards; however, hazards located in the stem of the wall can be accommodated by the detail on Sheet 11.

CONCRETE BARRIER WALL (RIGID) (CURB & GUTTER) • CURB AND GUTTER WITHOUT UTILITY STRIP

STATE OF FLORIDA DEPARTMENT OF TRANSPORTATION
ROAD DESIGN

CONCRETE BARRIER WALL

	Names	Dates
Designed By		
Drawn By	HSD	10/85
Checked By	JBW/JVG	10/85
F.H.W.A. Approved:		

Approved By: Freddie Simmons
State Roadway Design Engineer

Revision No.	Sheet No.	Index No.
90	8 of 15	410

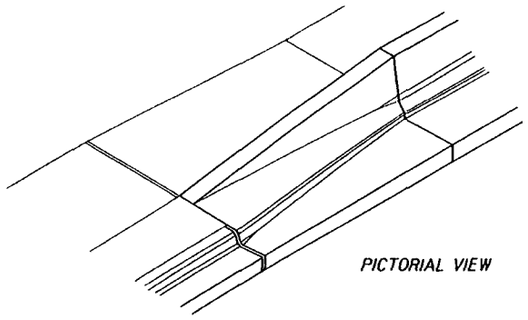

PICTORIAL VIEW

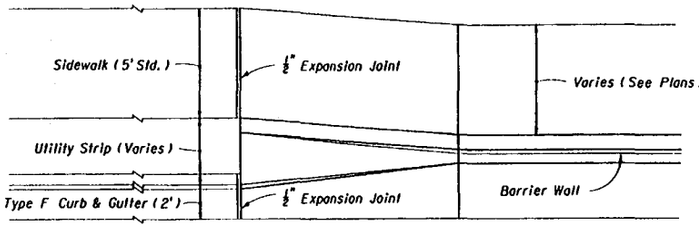

PLAN

WITH UTILITY STRIP

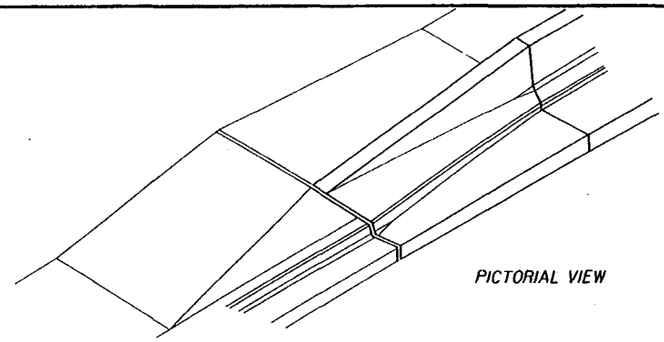

PICTORIAL VIEW

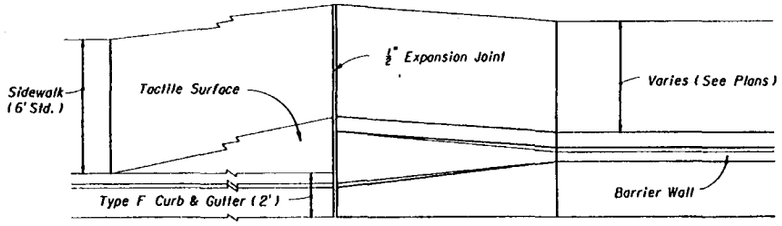

PLAN

WITH UTILITY STRIP

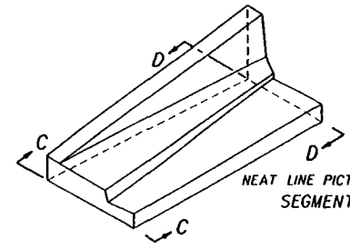

NEAT LINE PICTORIAL VIEW

SEGMENT

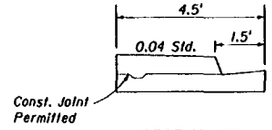

SECTION CC

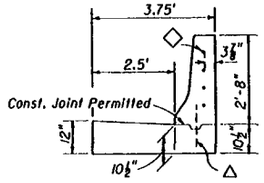

SECTION DD

◇ See Sheet 10

△ See Sheet 10

TWO-WAY TRAFFIC (OPPOSING LANE APPROACH)

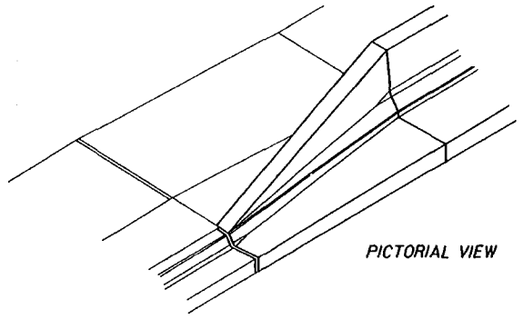

PICTORIAL VIEW

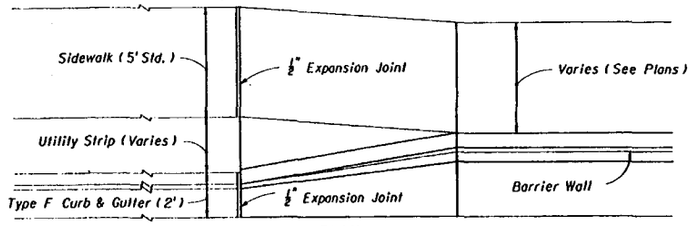

PLAN

WITH UTILITY STRIP

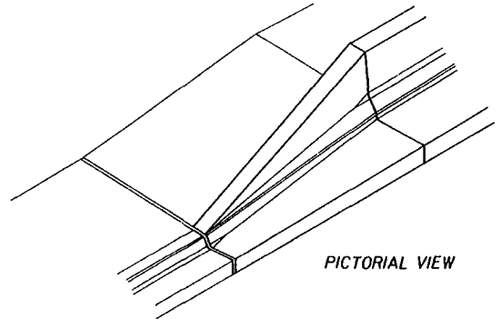

PICTORIAL VIEW

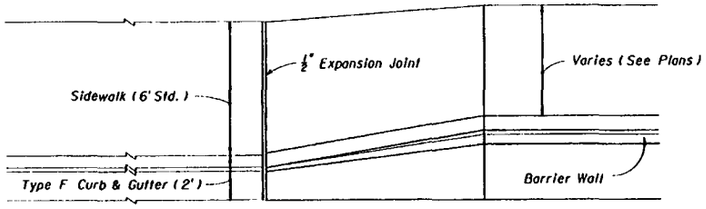

PLAN

WITH UTILITY STRIP

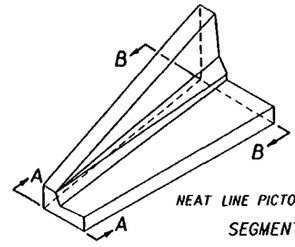

NEAT LINE PICTORIAL VIEW

SEGMENT

◇ See Sheet 10

△ See Sheet 10

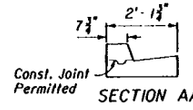

SECTION AA

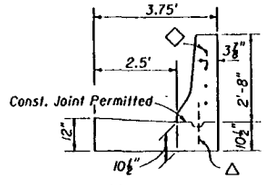

SECTION BB

ONE-WAY TRAFFIC (TRAILING END)

CONCRETE BARRIER WALL (RIGID) (CURB & GUTTER) • TRANSITION SEGMENTS

STATE OF FLORIDA DEPARTMENT OF TRANSPORTATION
ROAD DESIGN

CONCRETE BARRIER WALL

	Names	Dates
Designed By		
Drawn By	HSD	10/85
Checked By	JBW/MG	10/85
F.H.W.A. Approved:		

Approved By Freddie Simmons
State Roadway Design Engineer

Revision No.	Sheet No.	Index No.
90	9 of 15	410

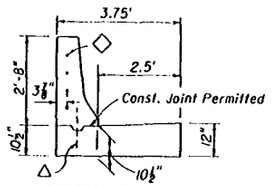

SECTION BB

◇ See Notes This Sheet

△ See Notes This Sheet

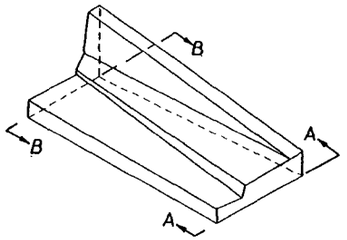

WITH OR WITHOUT UTILITY STRIP
NEAT LINE PICTORIAL VIEW

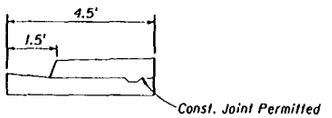

SECTION AA

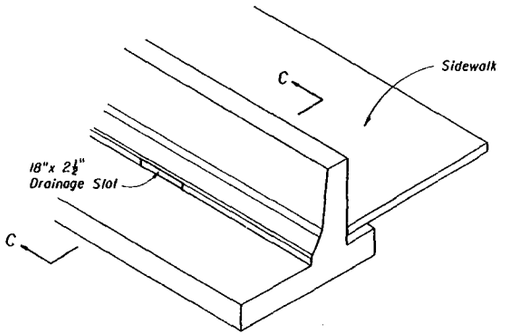

NEAT LINE PICTORIAL VIEW

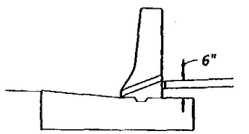

SECTION CC

Note: Drainage slots shall be located at all low points along the sidewalk, and, unless otherwise shown in the plans, slots shall be spaced at intervals not exceeding 50 feet in fill sections and 20 feet in cut sections. Slots shall be located such that only one bar is cut away or deleted in front and back lines of vertical reinforcement.

SIDEWALK DRAINAGE SLOT FOR BARRIER WALL (RIGID) (CURB & GUTTER)

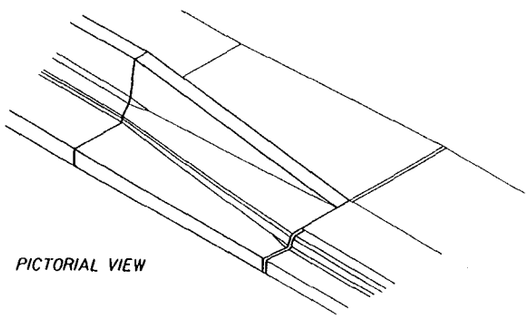

PICTORIAL VIEW

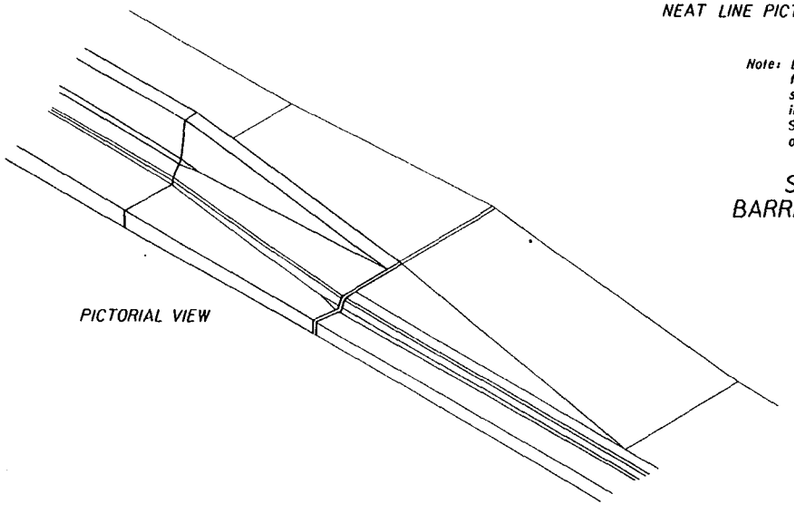

PICTORIAL VIEW

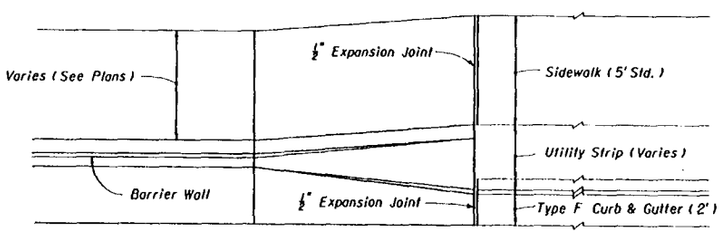

PLAN
WITH UTILITY STRIP

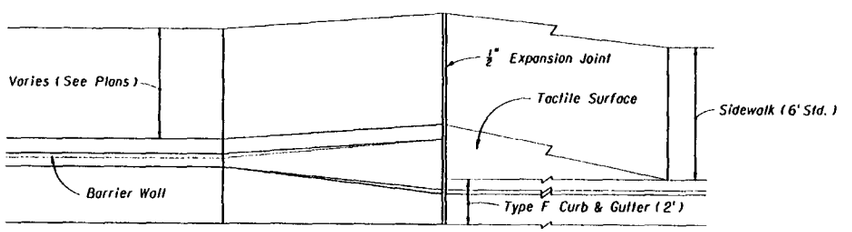

PLAN
WITHOUT UTILITY STRIP

NOTE:

◇ Transition Segments Shall Be Doweled Into The End Of The Barrier Wall In The Following Manner: Four 1¼" diameter holes 6" deep on 6" centers shall be drilled in the end of the barrier and No. 6 bars 15" long set in epoxy mortar. The ends of the dowels extending into the transition segment shall be wrapped with one layer of 15 lb. asphalt felt with the ends crimped.

△ When Construction Joints Are Utilized For Transition Segment Construction The Stem Shall Be Doweled To The Footing In The Following Manner: Five No. 4 bars 15" long shall be embedded 7" into the footing. The dowels shall be spaced 15" on centers with the first dowel located 12" from the barrier wall. Dowels may be placed within or adjacent to the keyway.

RIGHT SIDE SHOWN, LEFT SIDE OPPOSITE HAND

ONE-WAY AND TWO-WAY TRAFFIC (NEAR LANE APPROACH)

CONCRETE BARRIER WALL (RIGID) (CURB & GUTTER) • TRANSITION SEGMENT

STATE OF FLORIDA DEPARTMENT OF TRANSPORTATION
ROAD DESIGN

CONCRETE BARRIER WALL

	Names	Dates
Designed By		
Drawn By	HSD	10/85
Checked By	JBW/MG	10/85
F.H.W.A. Approved:		

Approved By: Freddie Simmons
State Roadway Design Engineer

Revision No.	Sheet No.	Index No.
90	10 of 15	410

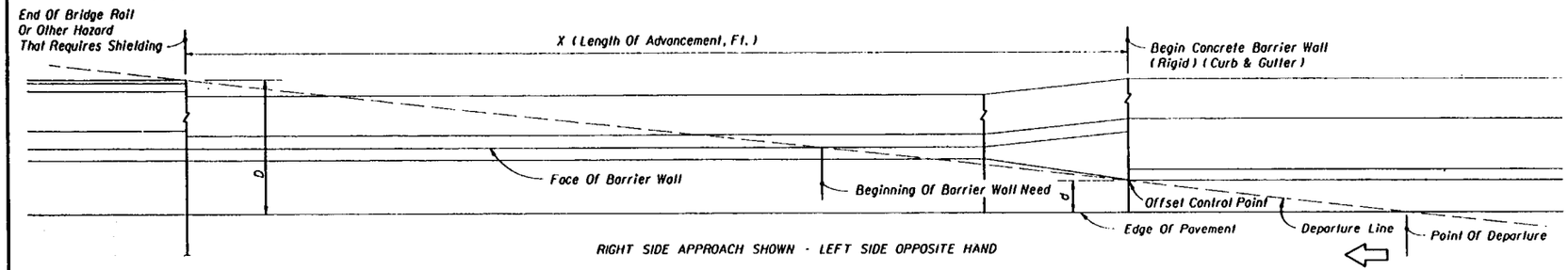

RIGHT SIDE APPROACH SHOWN - LEFT SIDE OPPOSITE HAND

NEAR LANE APPROACH

Design Speed (mph)	Length Of Advancement, Ft. (X)
45 Or Less	= 16 (D-d)

Note: The minimum length of advancement for both near and opposing lane approaches is 40 feet.

Equation Variables:

D = Distance in feet from near edge of the near approach travel lane to back of hazard or clear zone width whichever is lesser. For left side hazards and clear zones on two-way undivided facilities D is measured from the inside edge of the near approach travel lane.

d = Distance in feet from the near edge of the near approach travel lane to the face of curb (at offset control point). For left side hazards on two-way undivided facilities d is measured from the inside edge of the nearest opposing travel lane.

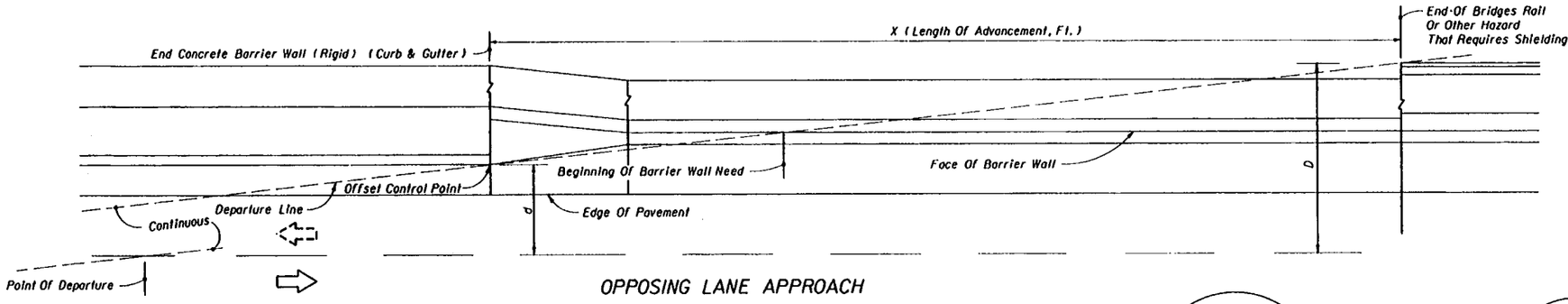

OPPOSING LANE APPROACH

WITH OR WITHOUT UTILITY STRIP - UTILITY STRIP SHOWN - SEE SHEET 7 & 8 FOR APPLICATIONS

LENGTH OF ADVANCEMENT

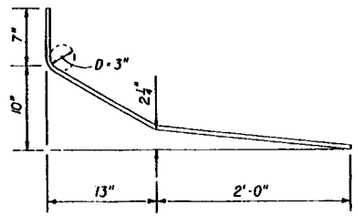

BAR 4 C
BENDING DIAGRAM

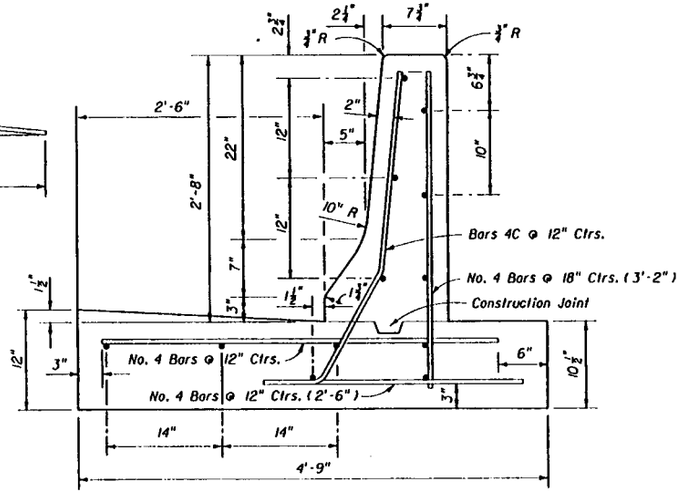

SECTION QQ

Estimated Quantities Per Linear Foot Of Wall:
Class II Concrete: 0.23 CY
Reinforcing Steel: 17 Lbs.

Note: All longitudinal reinforcement No. 4 bars. Minimum segment length for this wall is 40 feet. Shorter segments due to construction or expansion joint construction shall be doweled in the manner described for "Transition Segments" on Sheet 10.

Transverse expansion joints are to be constructed at the juncture of wall transitions and curb and gutter, and at intervals so that spacing will not exceed 100'.

For barrier wall inlet details see Index No. 219.

Wall to be paid for under the contract unit price for Concrete Barrier Wall (Rigid - Curb & Gutter), LF.

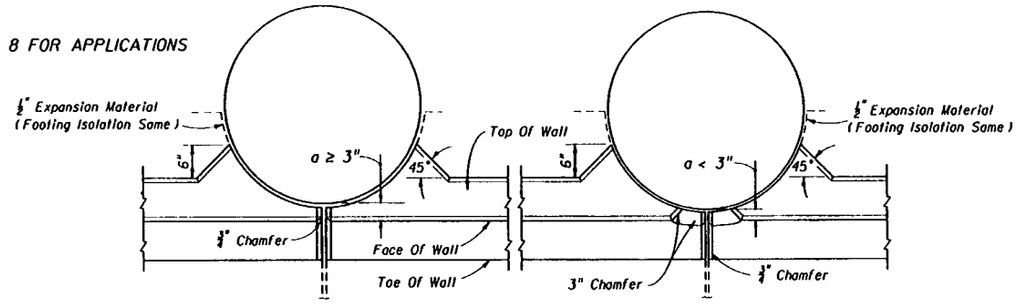

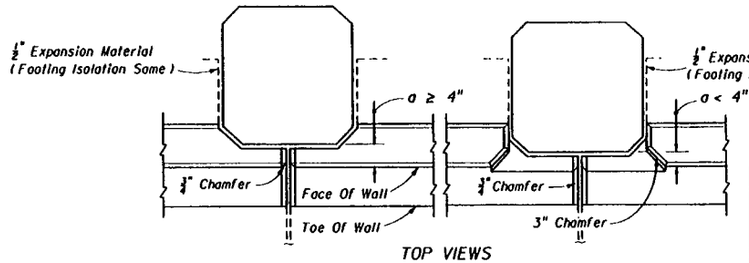

TOP VIEWS

'a' Varies (Circular Or Octagonal Hazard Not More Than 2" In Front Of Face Of Wall)

HAZARD PENETRATING STEM OF BARRIER WALL

STATE OF FLORIDA DEPARTMENT OF TRANSPORTATION
ROAD DESIGN

CONCRETE BARRIER WALL

	Names	Dates
Designed By		
Drawn By	MSD	10/85
Checked By	JBW/JVG	10/85
F.H.W.A. Approved:		

Approved By: Freddie Simmons
State Roadway Design Engineer

Revision No.	Sheet No.	Index No.
92	11 of 15	410

CONCRETE BARRIER WALL (RIGID) (CURB & GUTTER)

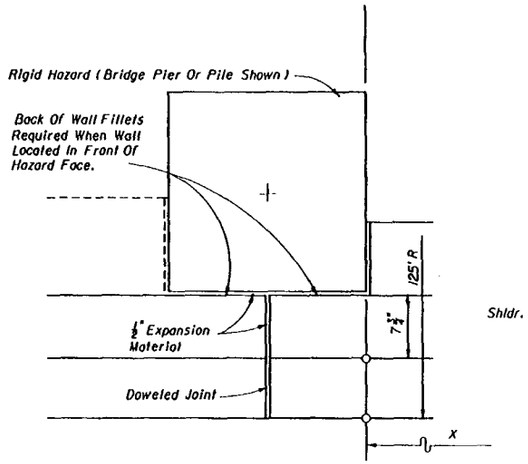

BARRIER WALL AT SQUARE OR RECTANGULAR SHAPED HAZARD
PARTIAL PLAN

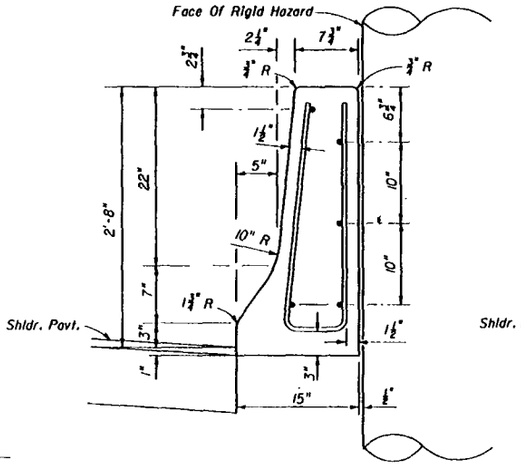

SECTION AA

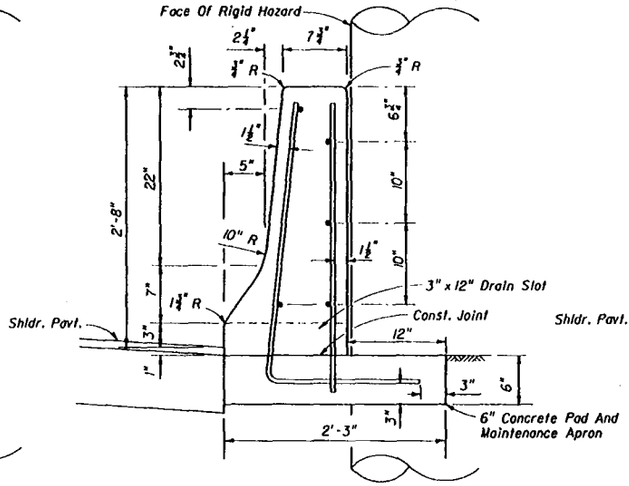

TO BE CONST. IN LIEU OF SECTION AA WHEN THRU DRAINAGE REQUIRED

SECTION BB

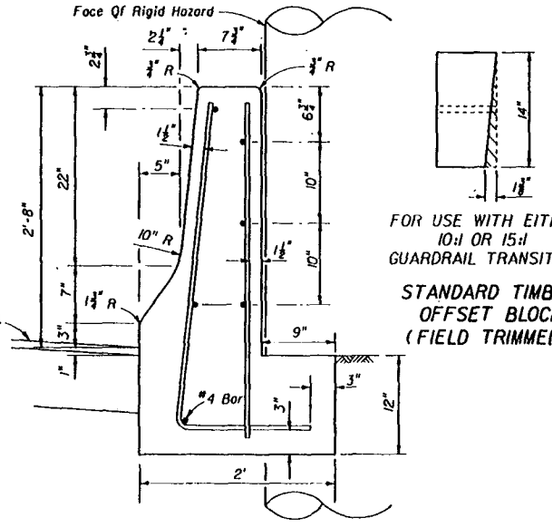

SECTION CC

FOR USE WITH EITHER 10:1 OR 15:1 GUARDRAIL TRANSITIONS

STANDARD TIMBER OFFSET BLOCK (FIELD TRIMMED)

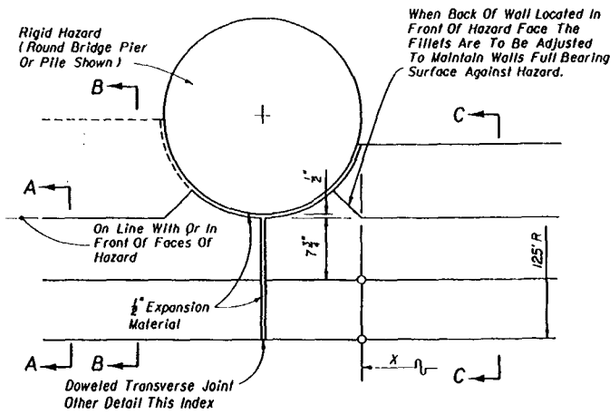

BARRIER WALL AT ROUND PIER
PARTIAL PLAN

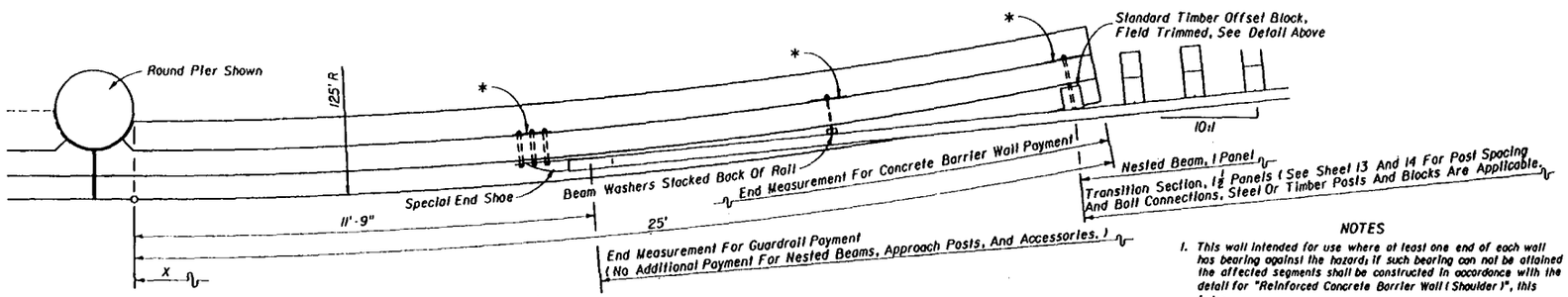

PLAN FOR DESIGN SPEED <50 MPH

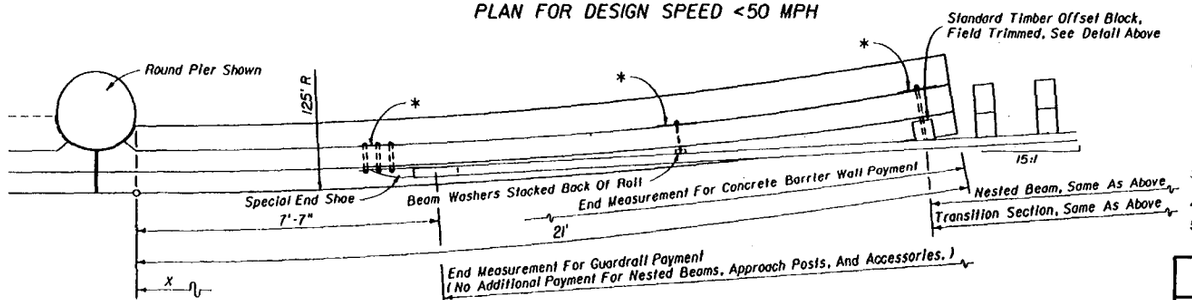

PLAN FOR DESIGN SPEED ≥50 MPH

* ¼" x 12" x 12" Galvanized Steel Back-Up Plate

ARC LENGTH (FT)	DISTANCE "x" (FT)	OFFSETS "y" (FT)
4	4.00	0.06
8	7.99	0.26
12	11.98	0.58
16	15.96	1.02
20	19.91	1.60
21	20.91	1.76
24	23.85	2.30
25	24.83	2.49

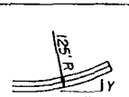

Note:
Wall may be constructed in chords having lengths ≤ 4 feet.

NOTES

1. This wall intended for use where at least one end of each wall has bearing against the hazard; if such bearing can not be attained the affected segments shall be constructed in accordance with the detail for "Reinforced Concrete Barrier Wall (Shoulder)", this Index.
   In cases where the barrier wall and slope pavement or other structure would occupy the same location, the wall and structure are to be modified as detailed in the plans.
2. The barrier wall radial segments are intended for use on approach and trailing ends of both one-way and two-way facilities. The guardrail connections shown on this sheet apply to one-way approaches and to the approaching and trailing ends of two-lane two-way facilities. On trailing ends of two-way multilane and one-way facilities the end connection on Sheet 2 may be used.
   For walls with normal offsets from hazards and their guardrail connections, see Sheets 13 and 14.
3. All vertical reinforcement #4 Bars at 15" centers. All horizontal bars #5 Bars except as shown.
4. Refer to Index No. 400 for additional guardrail information.
5. Wall to be paid for under the contract unit price for Concrete Barrier Wall (Rigid-Shoulder), LF.

SHOULDER BARRIER WALL AT ABOVE GROUND RIGID HAZARDS WHEN GUARDRAIL OFFSET FROM HAZARD LESS THAN 3 FEET

STATE OF FLORIDA DEPARTMENT OF TRANSPORTATION
ROAD DESIGN

CONCRETE BARRIER WALL

	Names	Dates
Designed By		11/89
Drawn By	KSD	11/89
Checked By	JVC/KHH	11/89

Approved By: Jaudis Simmons
State Roadway Design Engineer

Revision No.	Sheet No.	Index No.
92	12 of 15	410

F.H.W.A. Approved:

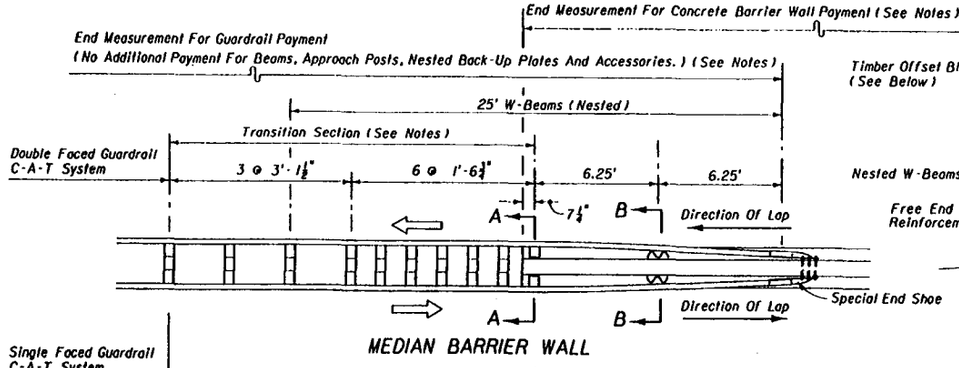

MEDIAN BARRIER WALL

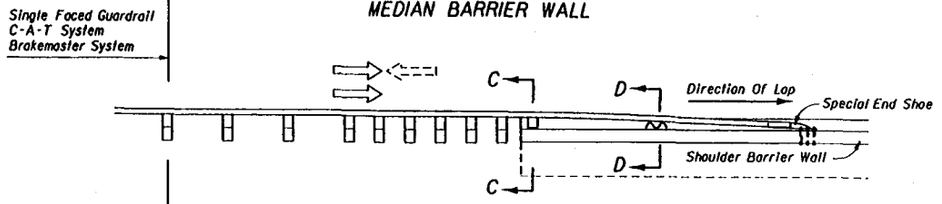

RIGHT SIDE APPROACH ONE-WAY LANES OR
RIGHT SIDE APPROACH TWO-LANE TWO-WAY

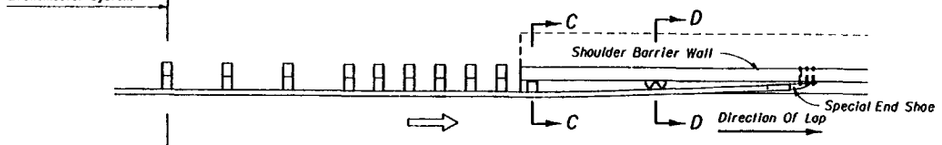

LEFT SIDE APPROACH ONE-WAY LANES

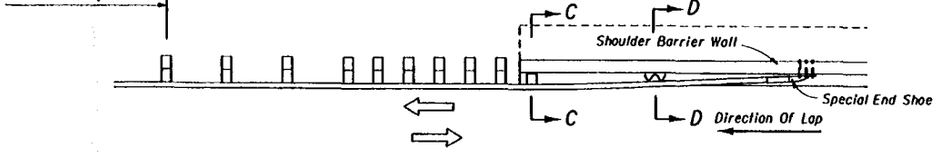

LEFT SIDE OF TWO-LANE TWO-WAY (APPROACH FOR FAR LANE)

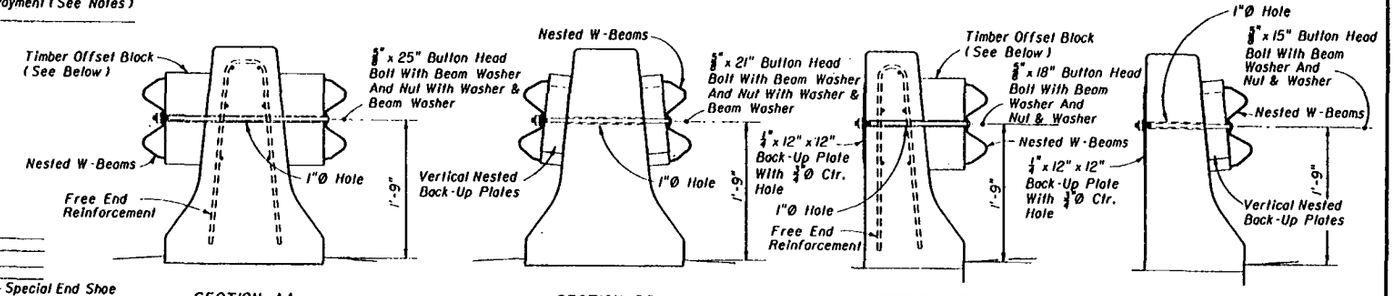

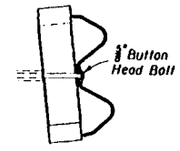

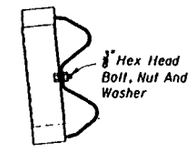

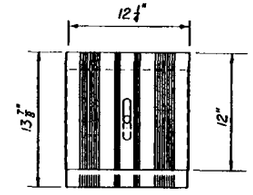

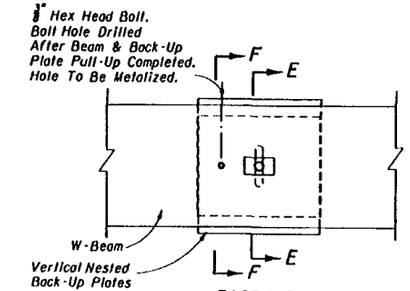

BACK-UP PLATE AND BEAM MOUNTING DETAIL

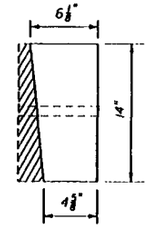

FOR DOUBLE FACED GUARDRAIL USING TIMBER POSTS AND FOR SINGLE FACED GUARDRAIL USING EITHER TIMBER OR STEEL POSTS

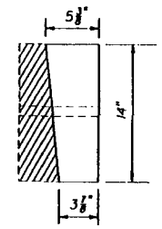

FOR DOUBLE FACED GUARDRAIL USING STEEL POSTS

STANDARD TIMBER OFFSET BLOCKS • FIELD TRIMMED FOR USE AT SECTIONS AA & CC

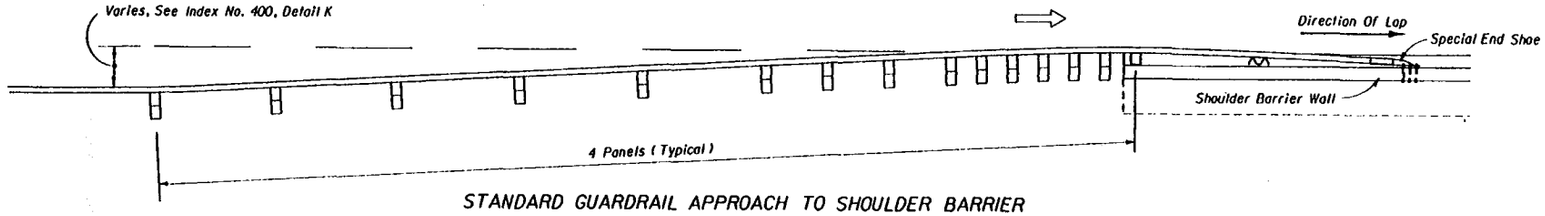

STANDARD GUARDRAIL APPROACH TO SHOULDER BARRIER

NOTES

1. The longitudinal dimensions and payment limits shown for median concrete barrier wall also apply to shoulder concrete barrier walls.
2. For barrier wall trailing end guardrail connections for one-way lanes, see Sheet 2.
3. Where reaming is necessary to fit nested beams the reamed surfaces shall be metalized in accordance with Index No. 400.
4. Steel guardrail post may be substituted for timber posts, when guardrail using steel posts connects to the transition section, however, when the C-A-T System connects to the double faced transition section, timber posts shall be used.
5. The nested beams shall not be bolted to blocks and posts at posts numbers 1, 3 and 5 from barrier wall.
6. For additional guardrail information refer to Index No. 400. For additional crash cushion/attenuating terminal information refer to Index No's. 432 and 433.

GUARDRAIL CONNECTION TO CONCRETE BARRIER WALLS

STATE OF FLORIDA DEPARTMENT OF TRANSPORTATION
ROAD DESIGN

CONCRETE BARRIER WALL

	Names	Dates
Designed By	JVG	05/91
Drawn By	HSD	05/91
Checked By	JVG	05/91

Approved By Freddie Simmons
State Roadway Design Engineer

F.H.W.A. Approved:

Revision No.	Sheet No.	Index No.
92	13 of 15	410

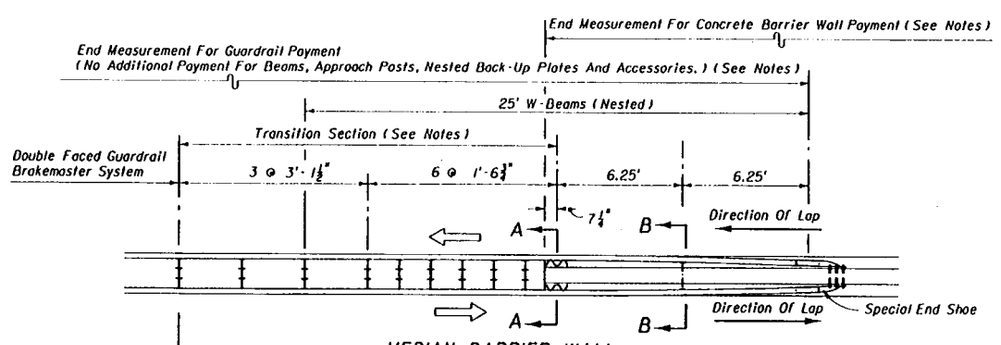

MEDIAN BARRIER WALL

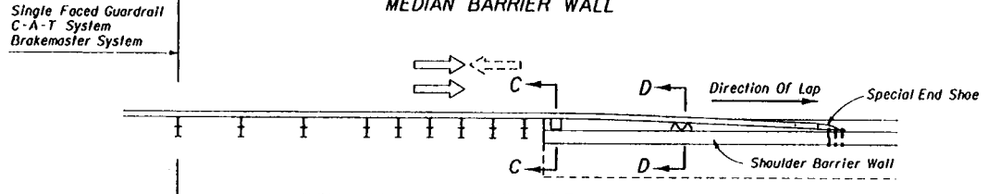

RIGHT SIDE APPROACH ONE-WAY LANES OR
RIGHT SIDE APPROACH TWO-LANE TWO-WAY

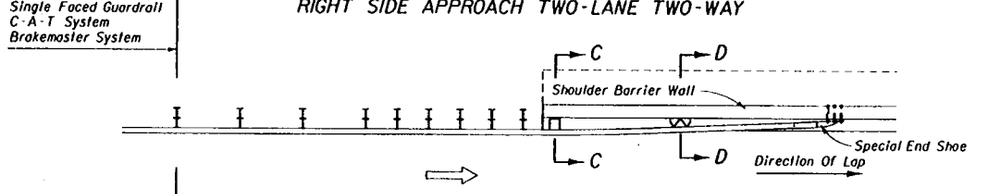

LEFT SIDE APPROACH ONE-WAY LANES

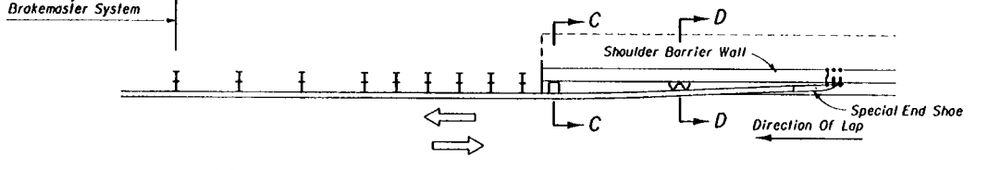

LEFT SIDE OF TWO-LANE TWO-WAY (APPROACH FOR FAR LANE)

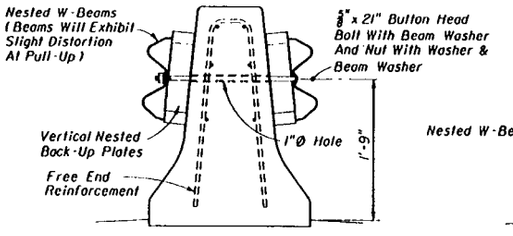

SECTION AA

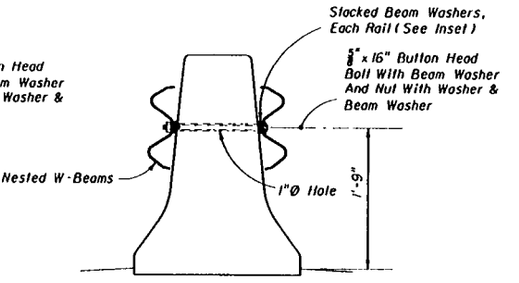

SECTION BB

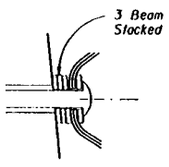

INSET

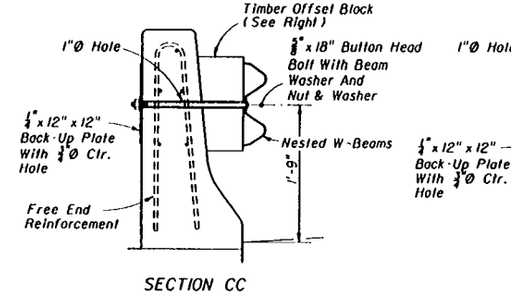

SECTION CC

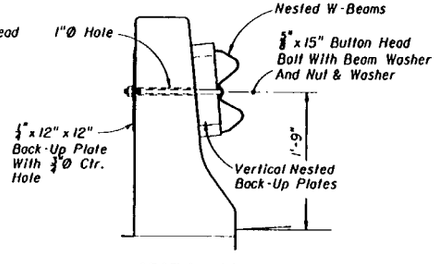

SECTION DD

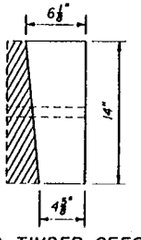

STANDARD TIMBER OFFSET BLOCK
FIELD TRIMMED
FOR USE AT SECTIONS CC

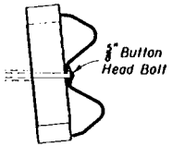

SECTION EE

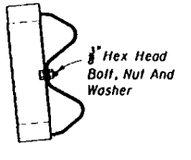

SECTION FF

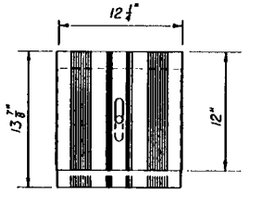

VERTICALLY NESTED
BACK-UP PLATES

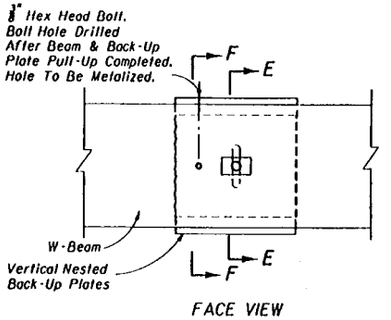

FACE VIEW

BACK-UP PLATE AND BEAM MOUNTING DETAIL

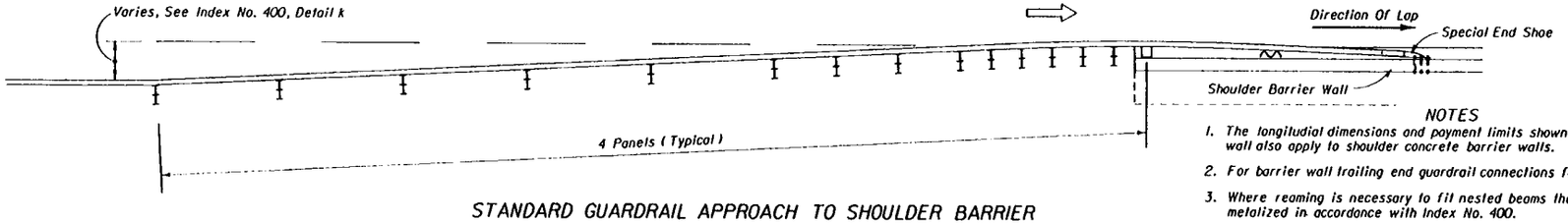

STANDARD GUARDRAIL APPROACH TO SHOULDER BARRIER

GUARDRAIL CONNECTION TO CONCRETE BARRIER WALLS

NOTES

1. The longitudial dimensions and payment limits shown for median concrete barrier wall also apply to shoulder concrete barrier walls.
2. For barrier wall trailing end guardrail connections for one-way lanes, see Sheet 2.
3. Where reaming is necessary to fit nested beams the reamed surfaces shall be metalized in accordance with Index No. 400.
4. Timber offset blocks may be substituted for steel offset blocks only where single faced guardrail using timber offset blocks connects to the transition section.
5. The nested beams shall not be bolted to blocks and posts at posts numbers 1, 3 and 5 from barrier wall.
6. For additional guardrail information refer to Index No. 400. For additional crash cushion/attenuating terminal information refer to Index No's. 432 and 433.

STATE OF FLORIDA DEPARTMENT OF TRANSPORTATION
ROAD DESIGN

CONCRETE BARRIER WALL

	Names	Dates
Designed By	JNG	05/94
Drawn By	HSD	05/94
Checked By	JNG	05/94
F.H.W.A. Approved:		

Approved By Freddie Simmons
State Roadway Design Engineer

Revision No.	Sheet No.	Index No.
92	14 of 15	410

GENERAL NOTES FOR TRAPEZOIDAL BARRIER WALL

1. Concrete trapezoidal barrier wall can be either precast or cast in place. The wall is designed for zero deflection and shall have a minimum system length of 120'.
2. Where concrete trapezoidal barrier wall height changes from 42" to 48" or from 48" to 54", height change will be uniform and limited to 2" per 30' of wall. Steel placement shall meet the dimensional positioning requirements of 42", 48" and 54" high barriers at the respective points along the vertical transition, with the vertical steel uniformly lengthened and the horizontal steel uniformly splayed throughout the 90' vertical transition.
3. Welded wire fabric (WWF) made in accordance with ASTM A497 may be used as an option to the conventional reinforcement for precast or cast in place barrier wall, with the exception that only conventional reinforcement shall be used for horizontal transition and half wall sections. These sections shall be cast in place with length, shape and reinforcement as shown in this Index.
4. To attain system length, precast segments shall be interconnected with rebar grids placed in the preformed slots and grouted into place. Segment length shall be not less than 30' unless otherwise specified in the plans.
5. The centerline axis of the barrier shall be vertical except where the roadway is superelevated in which case it shall be normal to the cross slope unless otherwise shown in the plans or directed by the Engineer.
6. For reflective barrier marker requirements see 'STANDARD BARRIER WALL SECTIONS' and the GENERAL NOTES, Sheet 1 of 15.
7. The concrete trapezoidal barrier wall is considered by the Federal Highway Administration to be innovative and may be used as such on Federal-Aid projects.
8. The concrete trapezoidal barrier wall is to be paid for under the contract unit price for Barrier Wall Concrete (Trapezoidal), LF. This price will include full payment for transitions, half walls, fill and concrete caps.

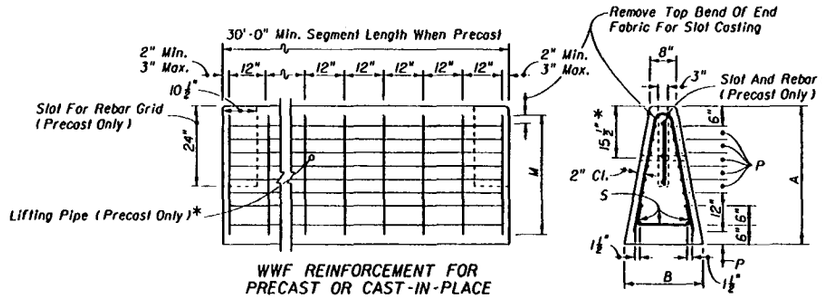

WWF REINFORCEMENT FOR PRECAST OR CAST-IN-PLACE

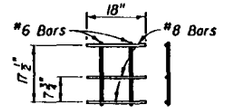

REBAR GRID FOR PRECAST INSTALLATION

All Transverse Reinforcing Wire Size D14
All Longitudinal Reinforcing Wire Size D20

WELDED WIRE FABRIC REINFORCING

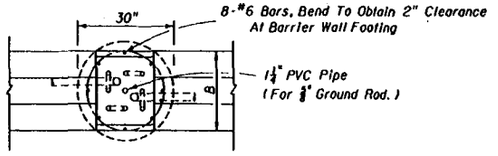

TOP VIEW

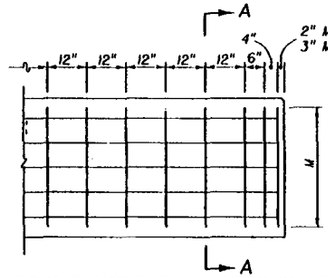

REINFORCEMENT FOR CAST-IN-PLACE

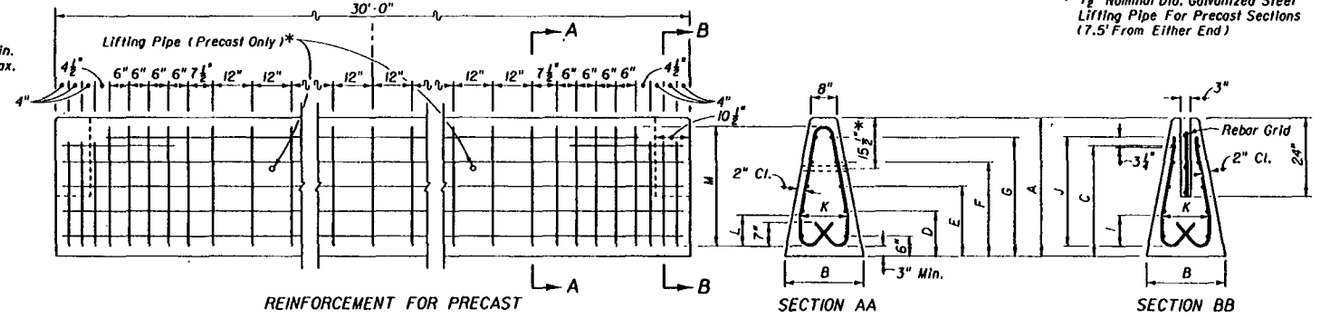

REINFORCEMENT FOR PRECAST

SECTION AA

SECTION BB

* 1½" Nominal Dia. Galvanized Steel Lifting Pipe For Precast Sections (7.5' From Either End)

All Vertical Reinforcing #4 Bars
All Horizontal Reinforcing #5 Bars

CONVENTIONAL REINFORCING

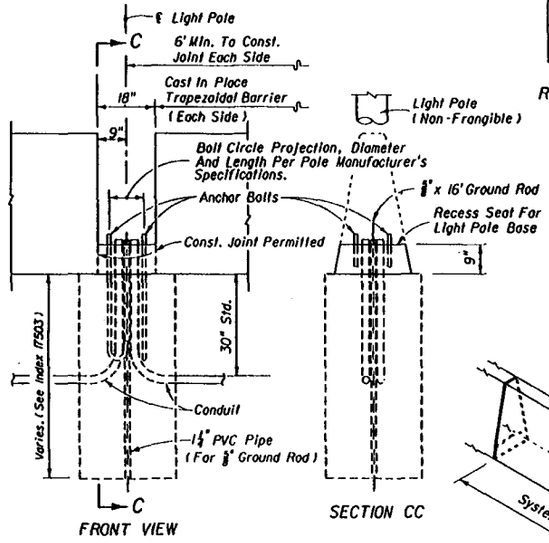

FRONT VIEW

SECTION CC

Note: For foundation design and details see Index No. 17503.
Refer to Highway Lighting Plans for size of conduit.
Payment for the 30" concrete shaft including reinforcing steel, anchor bolts and accessories shall be included in the contract unit price for Lighting Pole Complete, Each.

LIGHT POLE MOUNTING IN TRAPEZOIDAL SECTIONS

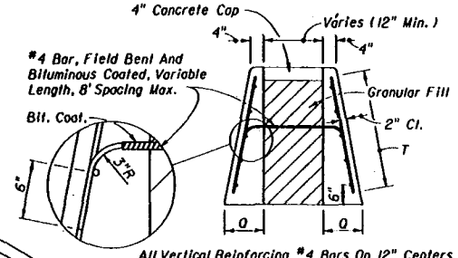

All Vertical Reinforcing #4 Bars On 12" Centers
All Horizontal Reinforcing #5 Bars Spaced As Tabulated

TYPICAL HALF WALLS AROUND OBSTRUCTION

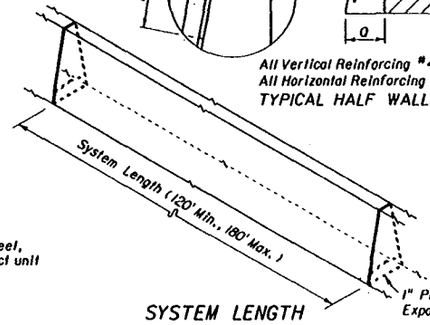

SYSTEM LENGTH

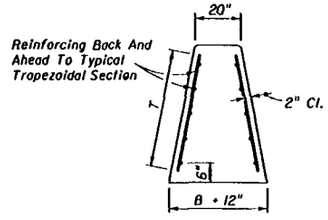

All Vertical Reinforcing #4 Bars On 12" Centers
All Horizontal Reinforcing #5 Bars Spaced As Tabulated

SECTION AT BEGIN AND END OF HALF WALLS

For Transition Wall Plan See DETAIL I 'PLAN'

TRANSITION SECTIONS

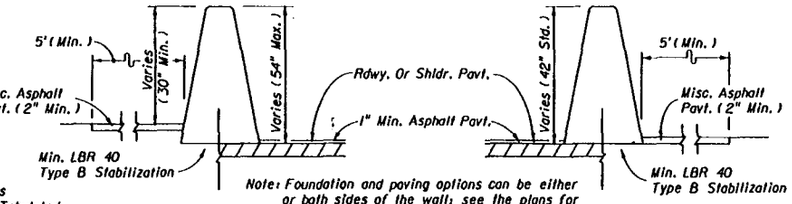

Note: Foundation and paving options can be either or both sides of the wall; see the plans for the options applied.

INDEPENDENT ROADWAY PROFILES

MATCHING ROADWAY PROFILES

TYPICAL TRAPEZOIDAL SECTIONS

Barrier Height (In.)	DIMENSIONS (Inches)																	
	A	B	C	D	E	F	G	H	I	J	K	L	M	N	P	Q	S	T
42	42	24	33½	13½	21	28½	36	15	9½	33½	15	9½	36	72	4	12	28	36
48	48	26 9/16	39½	15	24	33	42	17½	10 3/16	39½	17½	10 3/16	42	84	5	13 5/8	31½	42
54	54	28 5/8	45½	16½	27	37½	48	19½	12½	45½	19½	12½	48	96	6	14 5/16	34½	48

TRAPEZOIDAL BARRIER WALL

STATE OF FLORIDA DEPARTMENT OF TRANSPORTATION
ROAD DESIGN

CONCRETE BARRIER WALL

	Names	Dates
Designed By	FHWA	11/93
Drawn By	HKH	11/93
Checked By	JVG	11/93
F.H.W.A. Approved:		

Approved By: Freddie Simmons
State Roadway Design Engineer

Revision No.	Sheet No.	Index No.
94	15 of 15	410

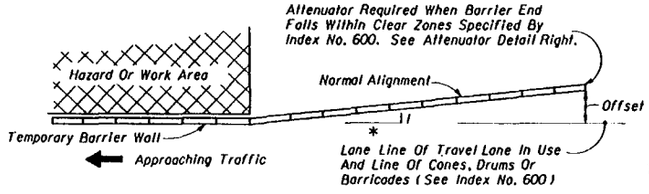

* Flare In Accordance With Other FDOT Roadway And Traffic Design Standards Or As Called For In The Plans, But Not Steeper Than 10:1.

PLAN

Notes:

1. Temporary barrier to be placed as shown in plans or as directed by the Engineer.
2. For additional information refer to Index No. 600.

WALL ALIGNMENT

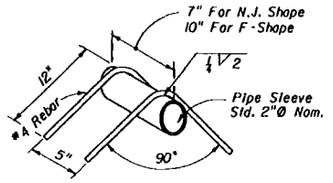

LIFTING SLEEVE

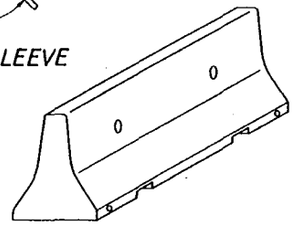

See Optional End Treatments For End Configurations Sheet 2 Of 2

PICTORIAL VIEW

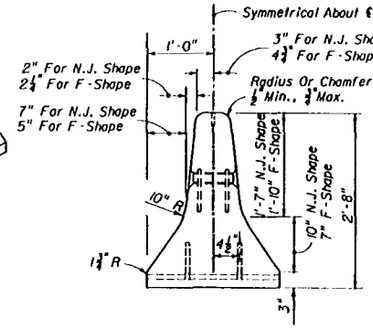

SECTION

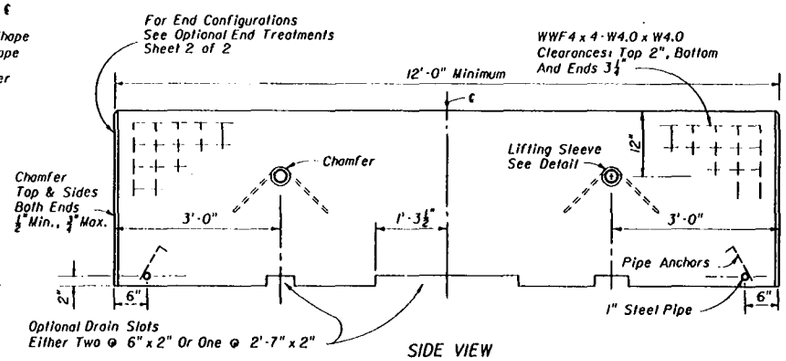

SIDE VIEW

WALL UNIT

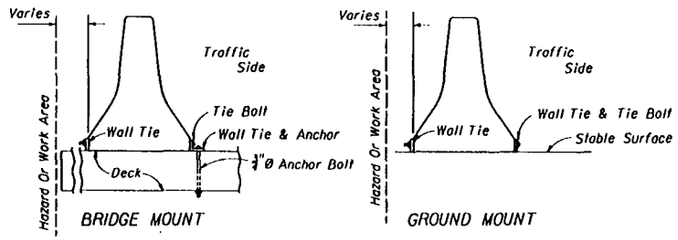

BRIDGE MOUNT GROUND MOUNT

Anchor bolts shall have a pullout and shear capacity of 14,000 lbs. Wedge or chemical anchor bolts may be used in lieu of bolt, washer and nut assembly shown. Core drills shall be used to construct through bolt holes, and, drills specified by the manufacturer shall be used to construct expansion and chemical anchor bolt holes. After removal of walls, anchors shall be removed to 1" min. below deck surface and holes filled with epoxy grout.

WALL TIES & ANCHORAGE

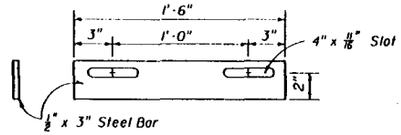

WALL TIE

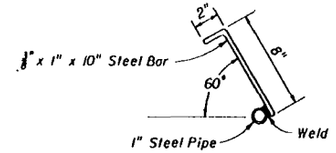

WALL TIE & ANCHOR PIPE

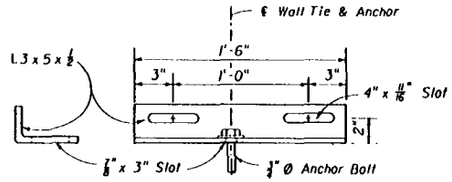

WALL TIE & ANCHOR

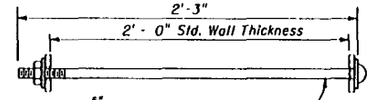

WALL TIE BOLT

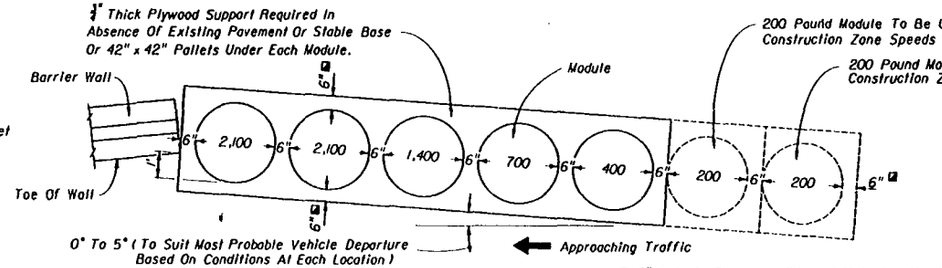

PLAN

Notes :

1. Number shown inside module indicates the weight in pounds of sand. All modules are approximately 36" inches in height and in diameter.
2. Inertial attenuator to be installed in accordance with manufacturers specifications and recommendations.
3. A Type I Object Marker panels shall be placed on the approach end module in accordance with Index No. 17353.
4. Inertial attenuators shall be paid for as Vehicular Impact Attenuator (Inertia) (Temp), Ea. Relocation of attenuators shall be paid for as Relocate Temporary Vehicular Impact Attenuator, Ea.

TEMPORARY INERTIAL ATTENUATOR

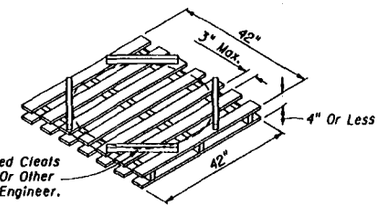

Pallet Shall Be Constructed Of Wood Or Other Frangible Or Resilient Materials Other Than Metals, And, Shall Be Sufficiently Durable To Support Modules For Their Expected Period Of Use; Wood Pallet Detail Shown.

PALLET DETAIL

GENERAL NOTES

1. Temporary concrete barrier wall units may be either the New Jersey safety shape or the F-Shape configuration, however, intermixing of units with different shapes in a continuous run of barrier will not be permitted.
2. Material and workmanship for the wall shall meet the requirements of Sections 400 and 521 of the Standard Specifications, except the bottom of the unit can be finished to a dense uniform surface by floating in lieu of the Class 3 finish. Concrete shall be Class II.
3. The wall units shall be used for temporary barrier walls unless the plans specify other types of barrier walls.
4. Type C Steady-Burn Lights are to be mounted on top of temporary concrete barrier walls that are used as barriers along travel ways in work zones. The lights are to be spaced at 50' centers. For additional information refer to 'Warning Lights' on Index No. 600.
5. Wall units shall not be used for permanent barrier wall construction regardless of unit length, unless specifically permitted by the plans.
6. Units with any of the optional end treatments may be used for temporary barrier wall installations, subject to the following requirements:
   (a) The plans may specify the option.
   (b) Option 1 and Option 2 units may not be mixed with each other or with Option 3 or Option 4.
   (c) Option 3 and Option 4 units are interchangable and may be mixed in a single run of wall, however, they may not be mixed with Option 1 or Option 2.
   (d) Option 1 units cast prior to August 1, 1982 shall be installed in accordance with Option 1 annotations.
7. Units may be reused provided they have the structural integrity and surface qualities of new units.
8. Units shall be furnished by the Contractor except when the plans stipulate the availability of Department owned units. Regardless of unit source the Contractor shall furnish all hardware and shall be responsible for all handling including loading, transport, unloading, stockpiling, installation, removal and return.

   When the plans stipulate that temporary concrete barrier wall(s) are to become property of the Department at completion of the project, only Option 4 end treatment units are to be used, except as otherwise specified in the plans.

   Units with plain ends will not be permitted regardless of end ties or anchorage.
9. Units used for work zone traffic control and other temporary applications shall be paid for under the contract unit price for Concrete Barrier (Temp), LF.

STATE OF FLORIDA DEPARTMENT OF TRANSPORTATION
ROAD DESIGN

PRECAST CONCRETE TEMPORARY BARRIER WALL

	Name	Date
Designed By		
Drawn By	HSD	04/82
Checked By	JVG	04/82
F.H.W.A. Approved:		04/28/82

Approved By _____ State Roadway Design Engineer

Revision No.	Sheet No.	Index No.
92	1 of 2	415

OPTION 1 ANNOTATIONS

1. Tolerances: Tongue 0" to (-) $\frac{1}{4}$", Groove 0" to (+) $\frac{1}{4}$"
2. Barrier unit without anchor pipes, with toe heights of not less than 3" nor more than 4" and with or without bottom keyways, produced prior to August 1, 1982 and used on projects let to contract after August 1, 1982 may be used under the following adaptations:
   (a) Ground Mounted Units: Units shall be tied front and back with wall ties mounted 4" above the top of the toe by anchors located 6" from the end of the unit. Anchor bolts shall be $\frac{3}{8}$" diameter providing a minimum pull-out strength of 9000 lbs. and may be either threaded insert, wedge or epoxy grouted sleeve types with 4$\frac{1}{2}$" minimum imbedment.
   (b) Bridge Mounted Units: Units shall be tied front and back same as ground mounted units. In addition, on "L" clip shall be welded on center to the bottom edge of the front wall tie to provide deck anchorage using the $\frac{3}{8}$" diameter anchor bolt. The clip shall have a $\frac{1}{8}$" x 2" minimum cross section and may be fabricated by either method shown in the sketches below. Units with varying toe heights will not be permitted in any single run of wall.

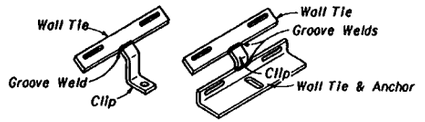

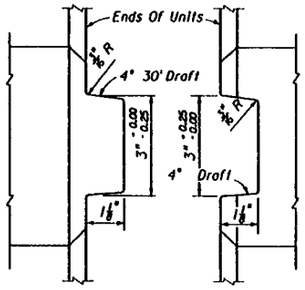

TOP VIEW

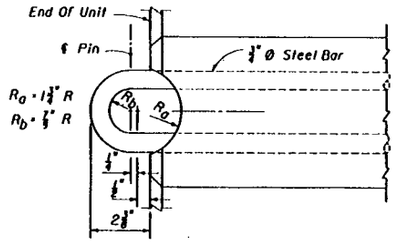

TOP VIEW

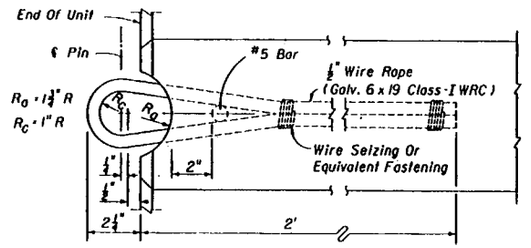

TOP VIEW

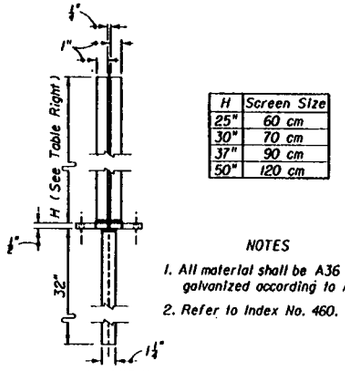

H	Screen Size
25"	60 cm
30"	70 cm
37"	90 cm
50"	120 cm

END VIEW

NOTES

1. All material shall be A36 steel galvanized according to ASTM A153.
2. Refer to Index No. 460.

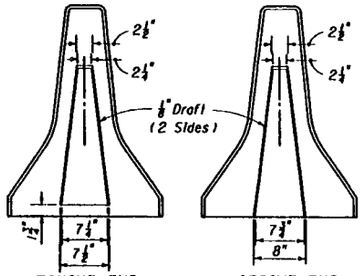

TONGUE END

GROOVE END

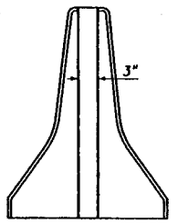

END VIEW

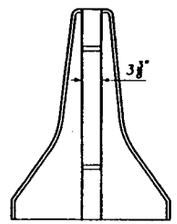

END VIEW

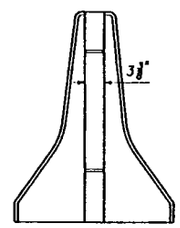

END VIEW

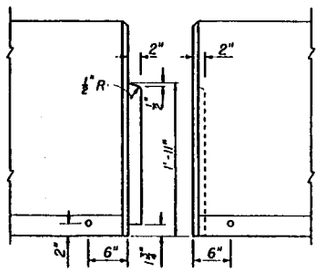

SIDE VIEW

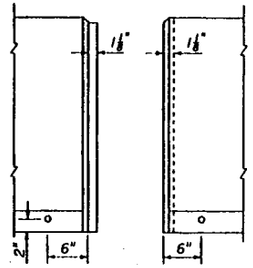

SIDE VIEW
STRAIGHT TONGUE AND GROOVE
OPTION 2

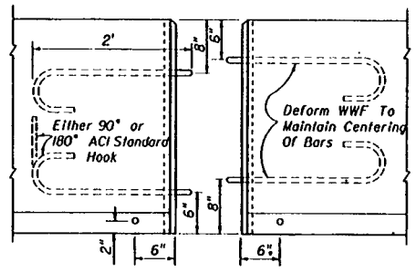

SIDE VIEW
ROUND BAR CONNECTOR
OPTION 3

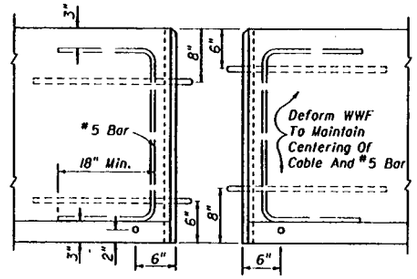

SIDE VIEW
WIRE ROPE CONNECTOR
OPTION 4

NOTICE: OPTION 1 IS A PROPRIETARY DESIGN. ANY INFRINGEMENT ON THE PROPRIETARY RIGHTS OF TIE DESIGNER SHALL BE THE SOLE RESPONSIBILITY OF THE USER.

TRAPEZOIDAL TONGUE AND GROOVE
OPTION 1

WALL TIE AND ANCHORAGE REQUIREMENTS			
END OPTION	GROUND MOUNT	BRIDGE MOUNT	REMARKS
1	Yes	Yes	
2	Yes	Yes	
3	No	Yes	
4	No	Yes	

Note: When the plans call for wall units furnished by the Department, ground and bridge mount ties and anchors will be required. Tie and anchor assemblies shall be furnished by the Contractor.

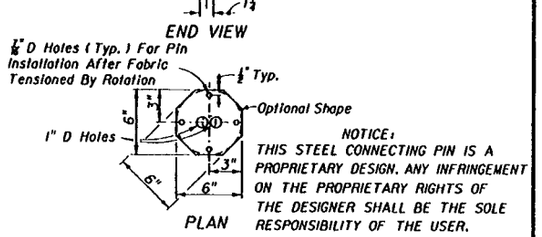

NOTICE:
THIS STEEL CONNECTING PIN IS A PROPRIETARY DESIGN. ANY INFRINGEMENT ON THE PROPRIETARY RIGHTS OF THE DESIGNER SHALL BE THE SOLE RESPONSIBILITY OF THE USER.

STEEL CONNECTING PIN
FOR OPTIONS 3 AND 4
WHEN KNITTED POLYESTER
GLARE SCREEN IS SPECIFIED

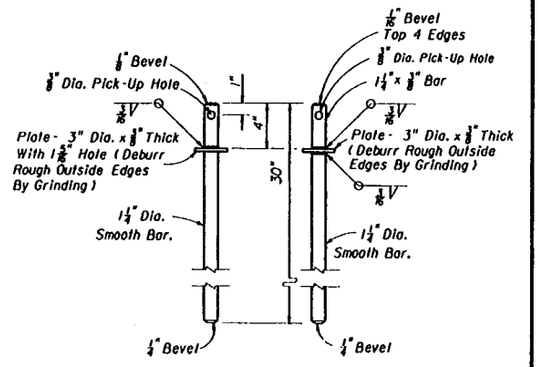

OPTIONAL PINS

STEEL CONNECTING PIN
FOR OPTIONS 3 AND 4

OPTIONAL END TREATMENTS FOR WALL UNITS

STATE OF FLORIDA DEPARTMENT OF TRANSPORTATION
ROAD DESIGN

PRECAST CONCRETE TEMPORARY BARRIER WALL

	Names	Dates
Designed By		
Drawn By	HSD	04/82
Checked By	JVC	04/82
F.H.W.A. Approved:		04/28/82

Approved By: Freddie Simmons
State Roadway Design Engineer

Revision No.	Sheet No.	Index No.
94	2 of 2	415

INDEX OF SHEETS

SHEET NO.	DESCRIPTION
1	General System Features And Bay Selection Guidelines
2	Concrete Backup Wall Assembly
3	Tension Strut Backup Assembly
4	Wide Flange Backup Assembly
5	Concrete Barrier Wall Backup Assembly
6	Transition Assembly Features

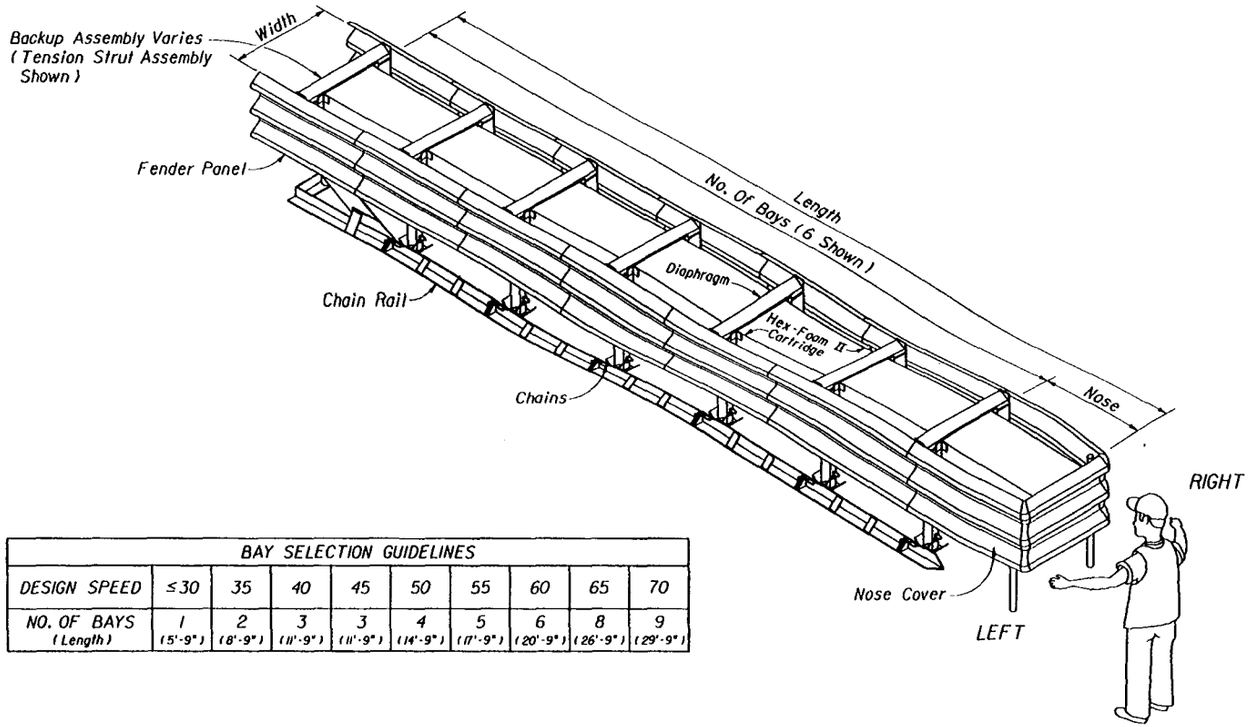

BAY SELECTION GUIDELINES									
DESIGN SPEED	≤30	35	40	45	50	55	60	65	70
NO. OF BAYS (Length)	1 (5'-9")	2 (8'-9")	3 (11'-9")	3 (11'-9")	4 (14'-9")	5 (17'-9")	6 (20'-9")	8 (26'-9")	9 (29'-9")

GENERAL NOTES

1. The energy absorbing system represented on this standard drawing is a proprietary design by Energy Absorption Systems, Inc. and marketed under the trade name G-R-E-A-T, short for Guard Rail Energy Absorbing Terminal. Any infringement on the rights of the designer shall be the sole responsibility of the user.

2. This standard drawing is produced by the Florida Department Of Transportation solely for use by the Department and its assignees. This standard drawing provides the general graphics and information necessary to field identify component parts of the G-R-E-A-T System (G-R-E-A-T) and their incorporation into a whole system.

3. This standard drawing is sufficient for plan details for the G-R-E-A-T installed as a free standing system or installed in connection with concrete barrier walls and other fixed barrier systems, and precludes the requirement for shop drawing submittals unless the plans otherwise call for such submittals.

4. The G-R-E-A-T shall be assembled and installed in accordance with the manufacturers detailed drawings, procedures and specifications.

5. The G-R-E-A-T is available in 2'-0", 2'-6" and 3'-0" widths. Each of these widths can be matched to any of the four backup assemblies shown in this index. The four backup assemblies are to be utilized as follows:
   (a) Independent systems:
      (1) Concrete backup wall assemblies.
      (2) Tension strut backup assemblies.
      (3) Wide flange backup assemblies.
   (b) Dependent systems:
      (1) Concrete barrier wall backup assemblies.
   (c) Combination systems:
      (1) Any of the independent systems (a) above with thrie beam/W-beam side panel transition assembly connected to single face or double face guardrail systems.
      (2) Dependent systems (b) above with bracket assemblies and transition panels connected to safety shaped concrete barrier wall systems.
   Variations from the uses described above shall be constructed as detailed in the plans and/or as required by shop drawings.

6. Only the G-R-E-A-T Hex-Foam II cartridges shall be used in all bays and the nose section.

7. Concrete foundations and backup blocks shall be constructed with 4000 psi min. compressive strength concrete.

8. The G-R-E-A-T shall be constructed on cross slopes 12.5:1 or flatter.

9. All metallic components shall meet the galvanizing requirements for guardrail, Index No. 400.

10. The G-R-E-A-T System will be paid for under the contract unit price for Impact Attenuator Vehicular (GREAT), Each.

DESIGN NOTES AND GUIDELINES

1. The G-R-E-A-T System (G-R-E-A-T) is designed to cushion automobile end-on hits and to redirect automobiles from side hits. The G-R-E-A-T is designed to shield narrow fixed hazards or the ends of other fixed barrier systems. The number of bays to be used in a specific unit will be determined by the design speed, except where the Engineer determines that another speed is more applicable. The unit width will be determined by the width of the object to be shielded or by the connecting barrier system. The backup assembly for a specific unit will be determined by either (a) the unit standing free of the object to be shielded or (b) the barrier system(s) to which it is connected.

2. The G-R-E-A-T is a resitorable system that is particularly suited to shielding hazards subject to high speed traffic, high volume traffic, and/or traffic with a history of frequent errant vehicle departures from the roadway or the potential exists for such departures. The G-R-E-A-T alone is not suited to shielding a wide hazard. The G-R-E-A-T is particularly suited to shielding hazards where the approach space is limited; and, is particularly suited to conditions where the terminal must be located close to the traffic lane.

3. Currently the Department does not recognize other proprietary items as being equally suitable alternatives to the G-R-E-A-T, and until such alternatives are available, the G-R-E-A-T need not be bid against other proprietary items.

GENERAL SYSTEM FEATURES AND BAY SELECTION GUIDELINES

STATE OF FLORIDA DEPARTMENT OF TRANSPORTATION
ROAD DESIGN

G-R-E-A-T SYSTEM

	Names	Dates
Designed By	WFG/JVG	10/91
Drawn By	JBW	10/91
Checked By	JVG/REA	10/91
F.H.W.A. Approved:		

Approved By: _____ State Roadway Design Engineer

Rev'sion No.	Sheet No.	Index No.
92	1 of 6	431

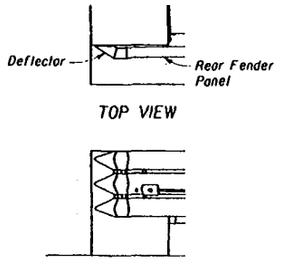

Note: Deflector required on left side for bidirectional facilities unless extension or transition panel called for.

INSET

ASSEMBLY LENGTHS		
NO. OF BAYS	L (Bays)	L_o (Foundation)
1	5'-9"	6'-6"
2	8'-9"	9'-6"
3	11'-9"	12'-6"
4	14'-9"	15'-6"
5	17'-9"	18'-6"
6	20'-9"	21'-6"
7	23'-9"	24'-6"
8	26'-9"	27'-6"
9	29'-9"	30'-6"
10	32'-9"	33'-6"
11	35'-9"	36'-6"
12	38'-9"	39'-6"

A (Assembly Width)	B (Anchor Bolt Clrs.)
2'-0"	2'-3"
2'-6"	2'-9"
3'-0"	3'-3"

Note: Bolt longitudinal spacing to be in accordance with the manufacturers installation drawings and specifications.

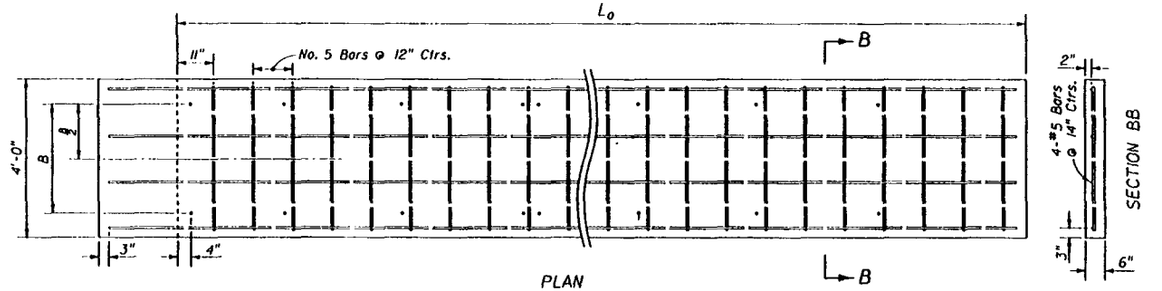

FOUNDATION

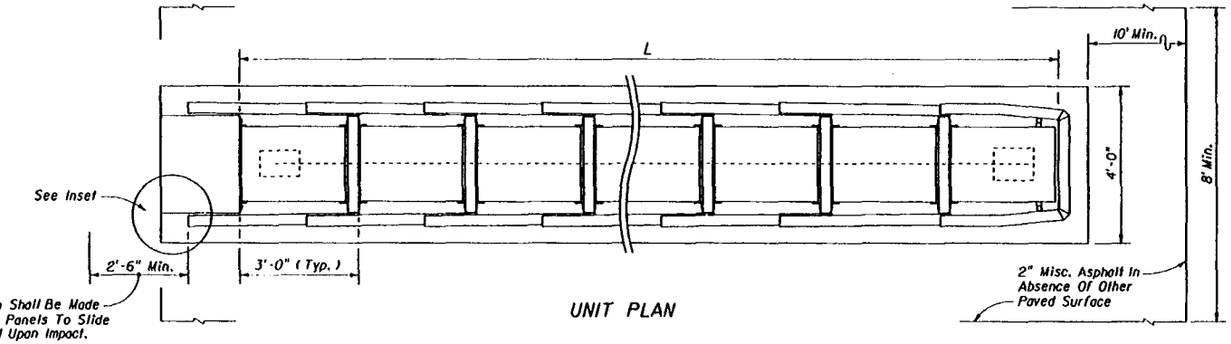

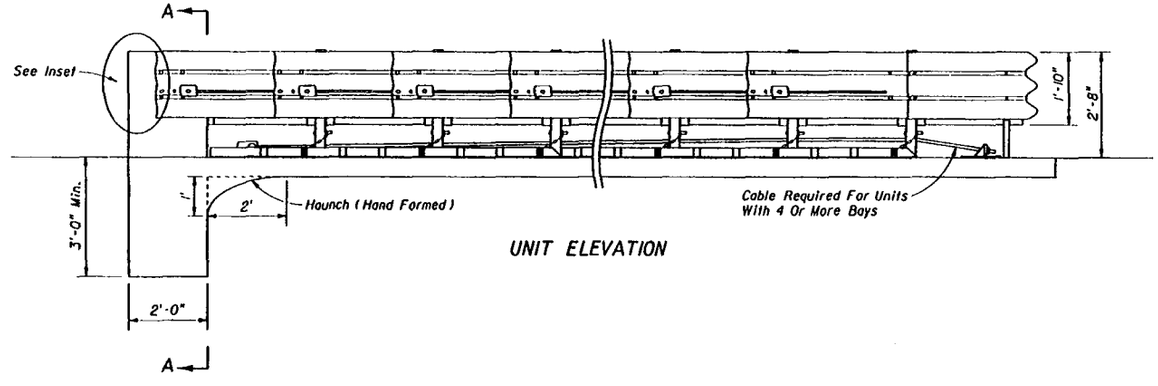

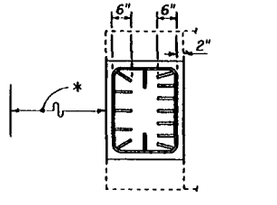

* Any shielding required behind the back-up wall shall be constructed in accordance with the roadway plans.

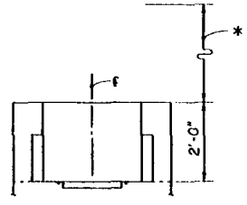

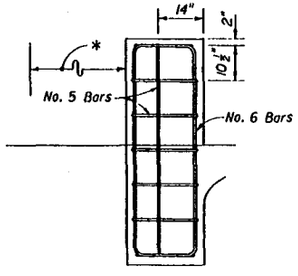

REINFORCEMENT

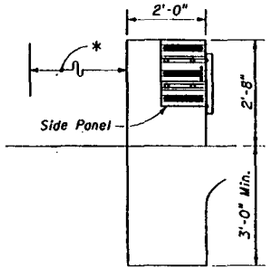

SIDE VIEW

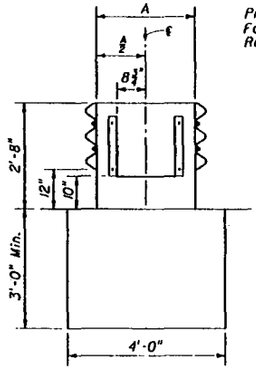

SECTION AA

WALL DETAILS

NOTES

1. For the number of bays required see table, Sheet 1.
2. See Transition Assembly Features for guardrail connections.
3. For design information see the General Notes.

CONCRETE BACKUP WALL ASSEMBLY

STATE OF FLORIDA DEPARTMENT OF TRANSPORTATION
ROAD DESIGN

G-R-E-A-T SYSTEM

	Names	Dates
Designed By	MFG/JMG	10/91
Drawn By	JBW	10/91
Checked By	JMG/RER	10/91
F.H.W.A. Approved:		

Approved By: Freddie Simmons
State Roadway Design Engineer

Revision No.	Sheet No.	Index No.
92	2 of 6	431

A (Assembly Width)	B (Anchor Bolt Ctrs.)
2'-0"	2'-3"
2'-6"	2'-9"
3'-0"	3'-3"

Note: Bolt longitudinal spacing to be in accordance with the manufacturers installation drawings and specifications.

ASSEMBLY LENGTHS		
NO. OF BAYS	L (Bays)	L_0 (Foundation)
1	5'-9"	10'-0"
2	8'-9"	10'-0"
3	11'-9"	13'-0"
4	14'-9"	16'-0"
5	17'-9"	19'-0"
6	20'-9"	22'-0"
7	23'-9"	25'-0"
8	26'-9"	28'-0"
9	29'-9"	31'-0"
10	32'-9"	34'-0"
11	35'-9"	37'-0"
12	38'-9"	40'-0"

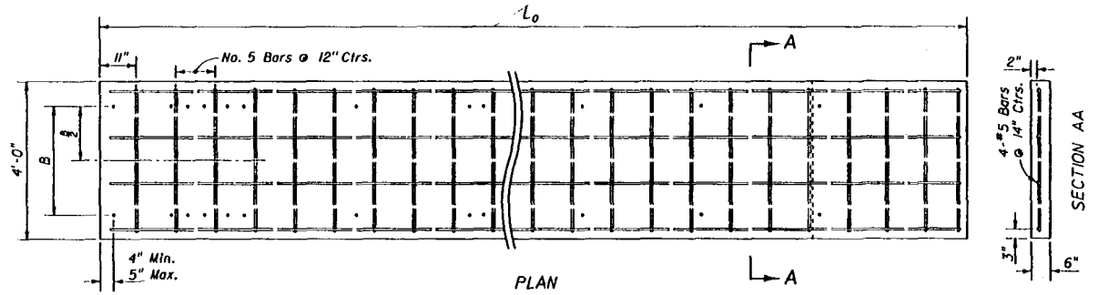

PLAN

FOUNDATION

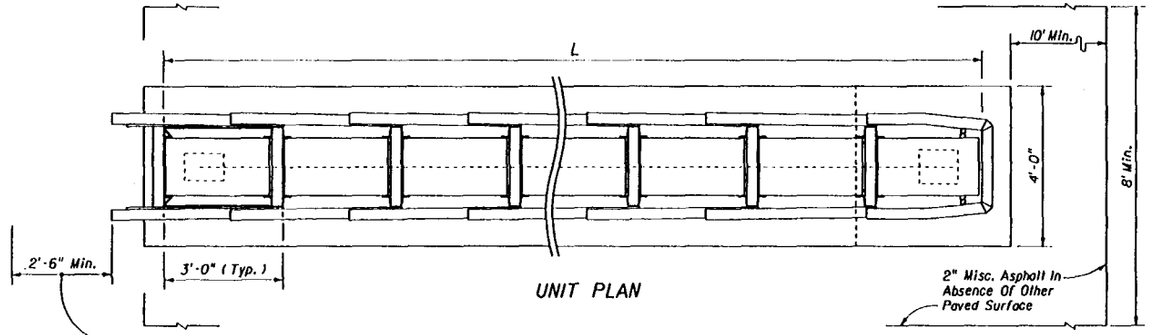

UNIT PLAN

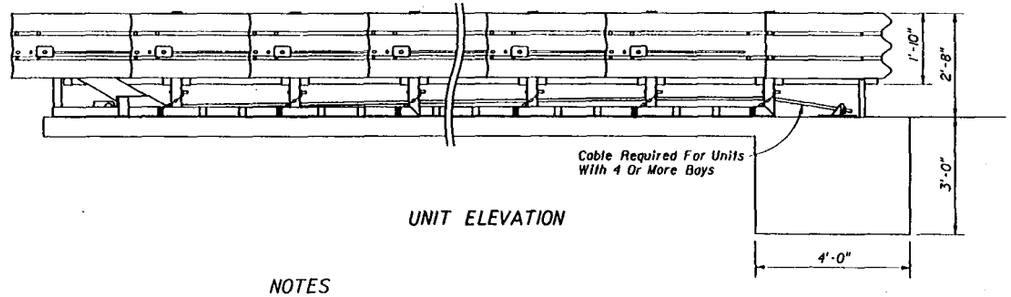

UNIT ELEVATION

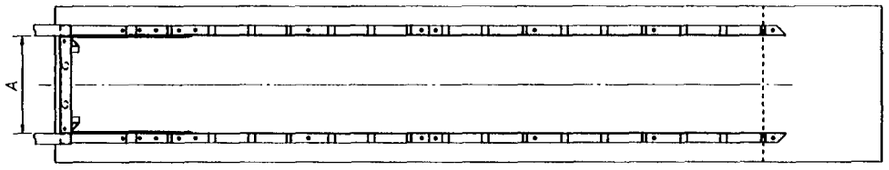

STRUT AND RAIL PLAN

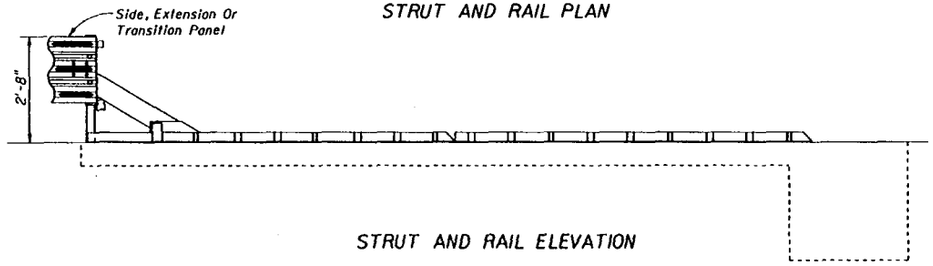

STRUT AND RAIL ELEVATION

NOTES

1. For the number of bays required see table, Sheet 1.
2. See Transition Assembly Features for guardrail connections.
3. For design information see the General Notes.

TENSION STRUT BACKUP ASSEMBLY

STATE OF FLORIDA DEPARTMENT OF TRANSPORTATION
ROAD DESIGN

G-R-E-A-T SYSTEM

	Names	Dates
Designed By	MFG/JWG	10/91
Drawn By	JBW	10/91
Checked By	JWG/RER	10/91

Approved By: State Roadway Design Engineer

F.H.W.A. Approved:

Revision No.	Sheet No.	Index No.
92	3 of 6	431

ASSEMBLY LENGTHS		
NO. OF BAYS	L (Bays)	L_o (Foundation)
1	5'-9"	7'-9"
2	8'-9"	10'-9"
3	11'-9"	13'-9"
4	14'-9"	16'-9"
5	17'-9"	19'-9"
6	20'-9"	22'-9"
7	23'-9"	25'-9"
8	26'-9"	28'-9"
9	29'-9"	31'-9"
10	32'-9"	34'-9"
11	35'-9"	37'-9"
12	38'-9"	40'-9"

A (Assembly Width)	B (Post Spacing)	C (Anchor Bolt Ctrs.)
2'-0"	1'-0"	2'-3"
2'-6"	1'-6"	2'-9"
3'-0"	2'-0"	3'-3"

Note: Bolt longitudinal spacing to be in accordance with the manufacturers installation drawings and specifications.

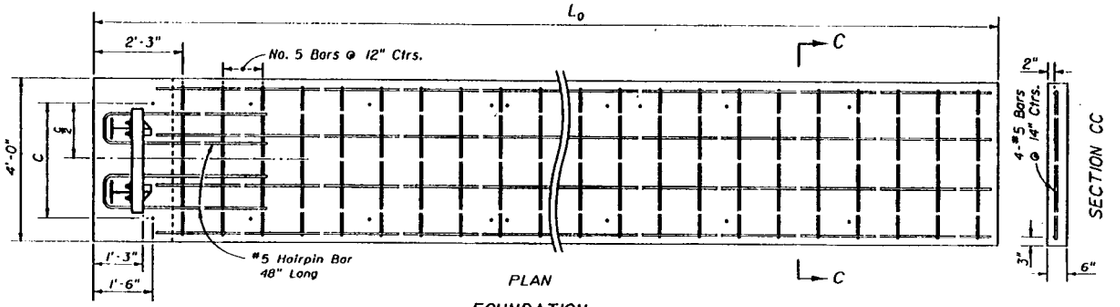

FOUNDATION

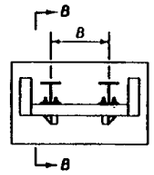

PLAN

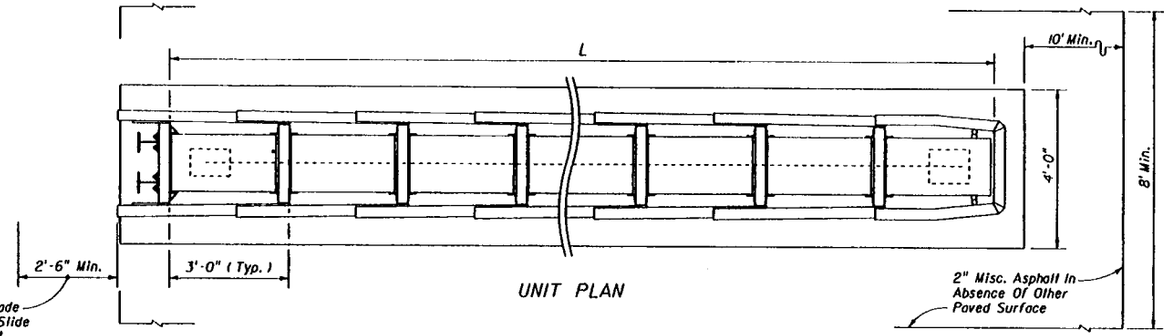

UNIT PLAN

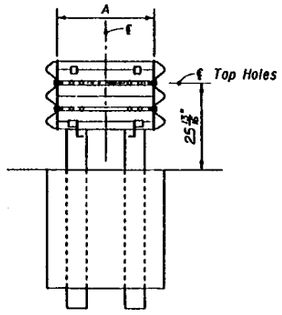

SECTION AA

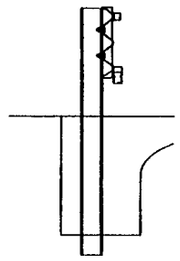

SECTION BB

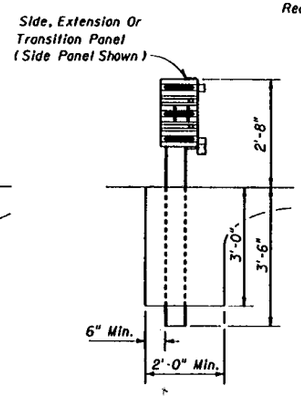

SIDE VIEW

WALL DETAILS

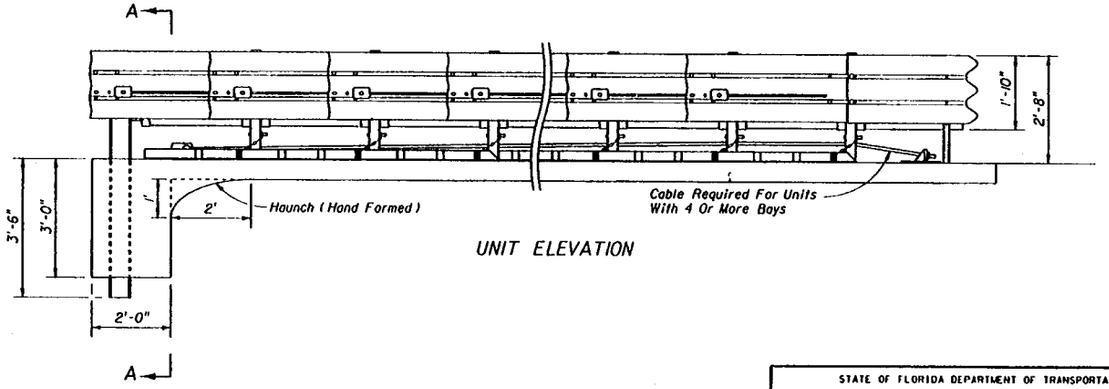

UNIT ELEVATION

NOTES

1. For the number of bays required see table, Sheet 1.
2. See Transition Assembly Features for guardrail connections.
3. For design information see the General Notes.

WIDE FLANGE BACKUP ASSEMBLY

STATE OF FLORIDA DEPARTMENT OF TRANSPORTATION
ROAD DESIGN

G-R-E-A-T SYSTEM

	Names	Dates
Designed By	MFG/JMG	10/91
Drawn By	JBW	10/91
Checked By	JMG/REA	10/91
F.H.W.A. Approved:		

Approved By Freddie Simmons
State Roadway Design Engineer

Revision No.	Sheet No.	Index No.
92	4 of 6	431

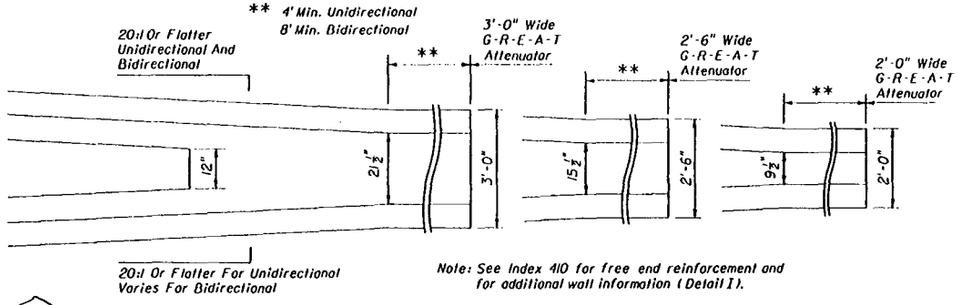

Note: See Index 410 for free end reinforcement and for additional wall information (Detail I).

TRANSITIONAL CONCRETE BARRIER WALL BACKUP

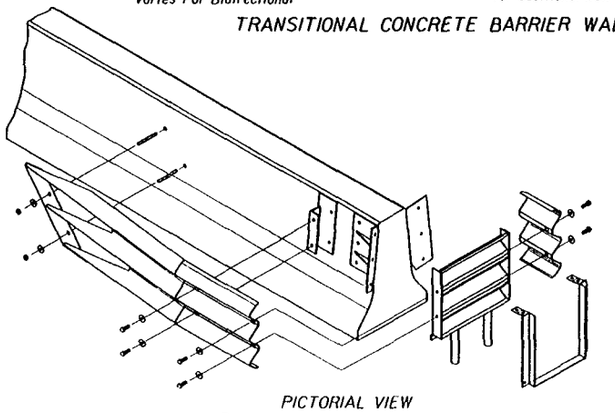

PICTORIAL VIEW

A (Assembly Width)	B (Anchor Bolt Ctrs.)
2'-0"	2'-3"
2'-6"	2'-9"
3'-0"	3'-3"

Note: Bolt longitudinal spacing to be in accordance with the manufacturers installation drawings and specifications.

ASSEMBLY LENGTHS		
NO. OF BAYS	L (Bays & Nose Section)	L_o (Foundation)
1	5'-9"	6'-6"
2	8'-9"	9'-6"
3	11'-9"	12'-6"
4	14'-9"	15'-6"
5	17'-9"	18'-6"
6	20'-9"	21'-6"
7	23'-9"	24'-6"
8	26'-9"	27'-6"
9	29'-9"	30'-6"
10	32'-9"	33'-6"
11	35'-9"	36'-6"
12	38'-9"	39'-6"

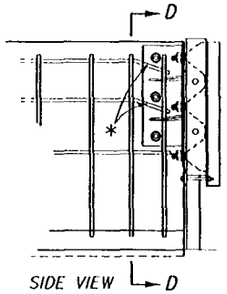

SIDE VIEW

* Bars to be field bent for anchor bolt clearance

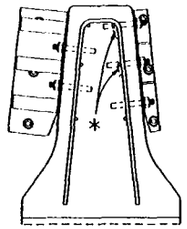

SECTION DD

BIDIRECTIONAL

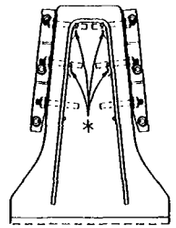

SECTION DD

UNIDIRECTIONAL

FIELD BENDING OF WALL REINFORCEMENT

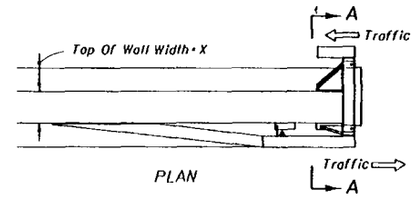

PLAN

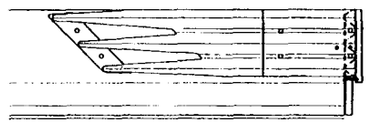

SIDE VIEW

BIDIRECTIONAL

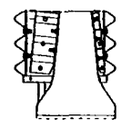

SECTION AA

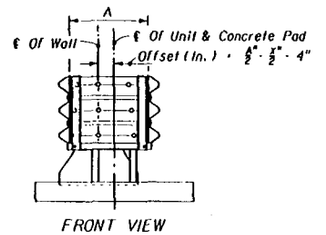

FRONT VIEW

BIDIRECTIONAL

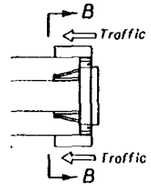

PLAN

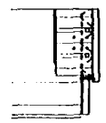

SIDE VIEW

UNIDIRECTIONAL

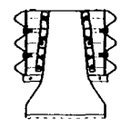

SECTION BB

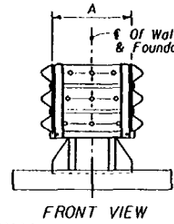

FRONT VIEW

UNIDIRECTIONAL

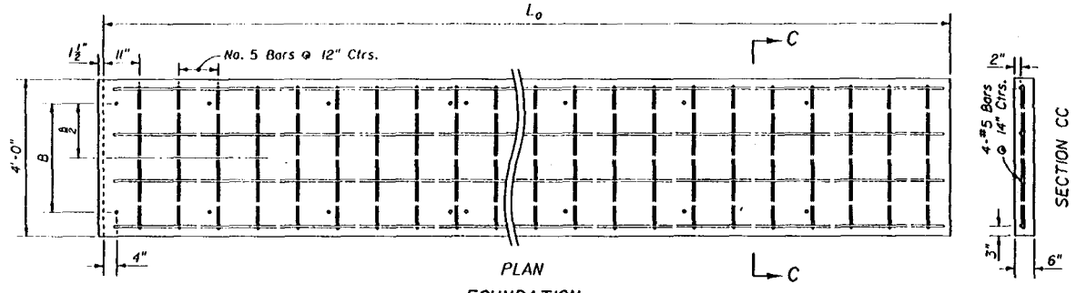

FOUNDATION

Unidirectional Alignment Shown. See Details Below For Both Unidirectional And Bidirectional Connections.

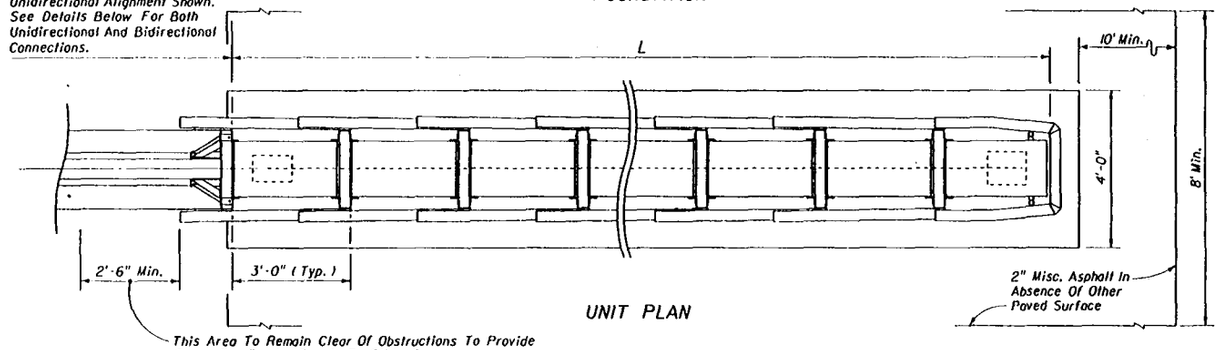

UNIT PLAN

This Area To Remain Clear Of Obstructions To Provide Space For Fender Panels To Slide Rearward.

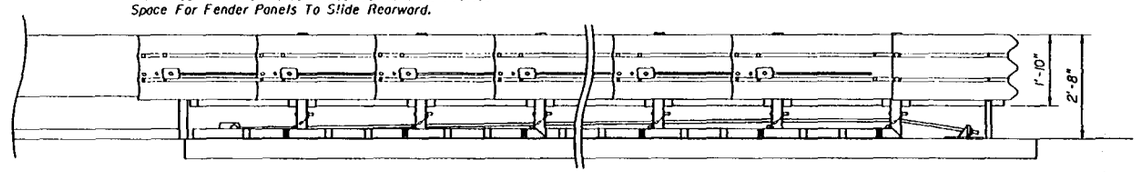

UNIT ELEVATION

NOTES

1. This backup assembly applies to single and double face F-Shape and single face New Jersey (NJ) Shape concrete barrier walls (double face F-Shape detailed). Adaptable to single face F-Shape walls by bracket adjustment. See Index No. 410 for barrier wall information.
2. Concrete barrier wall free end reinforcement required with G-R-E-A-T system connection; See Index No. 410.
3. For the number of bays required see table, Sheet 1.
4. For design information see the General Notes.

CONCRETE BARRIER WALL BACKUP ASSEMBLY

STATE OF FLORIDA DEPARTMENT OF TRANSPORTATION
ROAD DESIGN

G-R-E-A-T SYSTEM

	Name	Date
Designed By	WFG/JNG	10/91
Drawn By	JBW	10/91
Checked By	JNG/RER	10/91
F.H.W.A. Approved:		

Approved By: Freddie Simmons
State Roadway Design Engineer

Revision No.	Sheet No.	Index No.
92	5 of 6	431

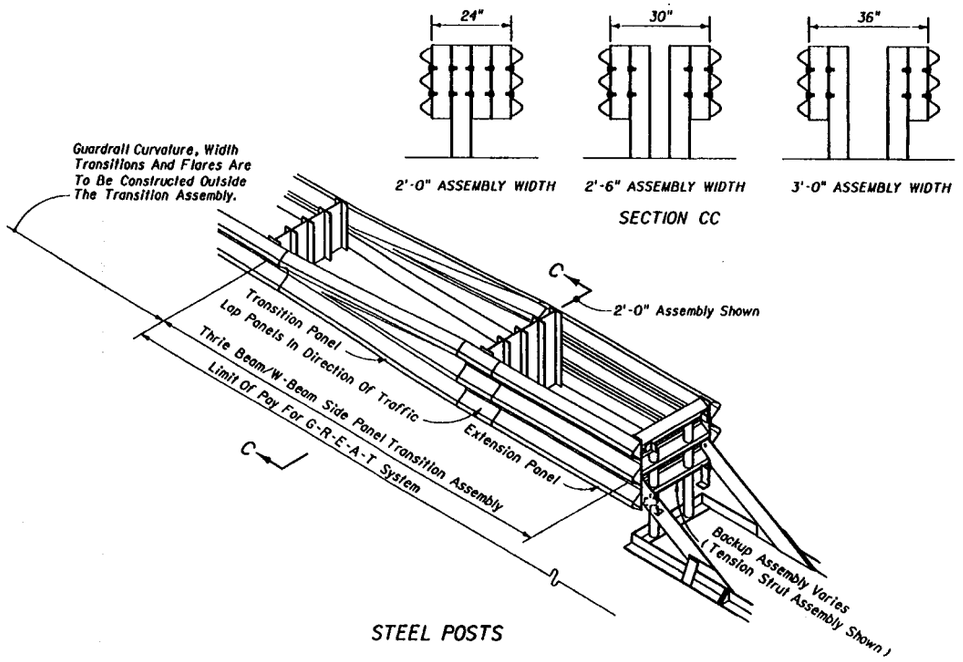

STEEL POSTS

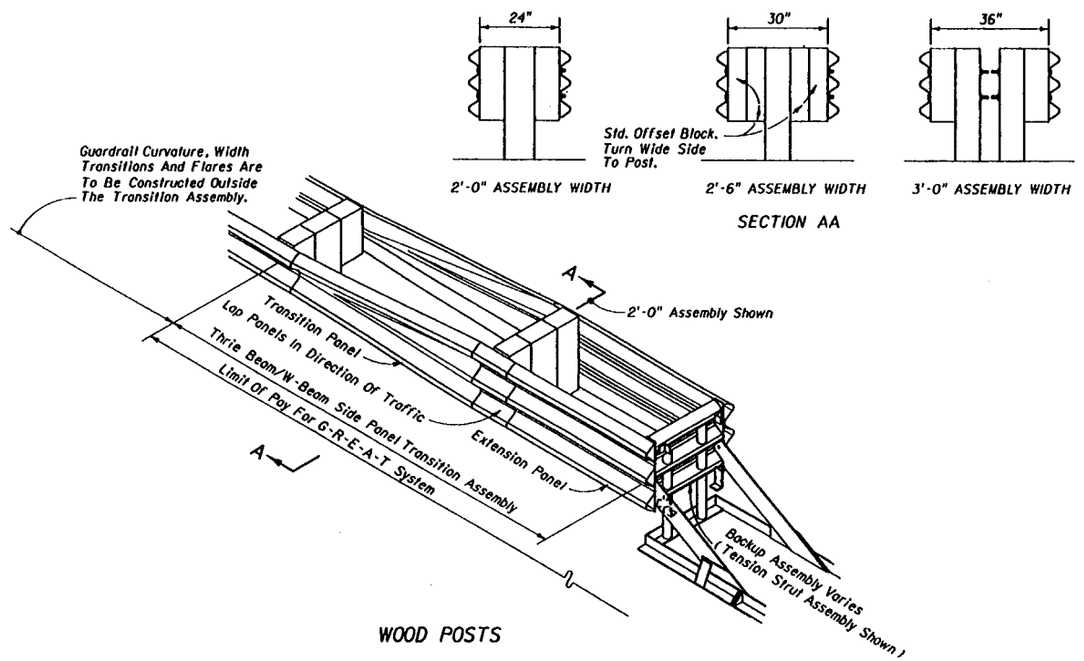

WOOD POSTS

DOUBLE FACE GUARDRAIL

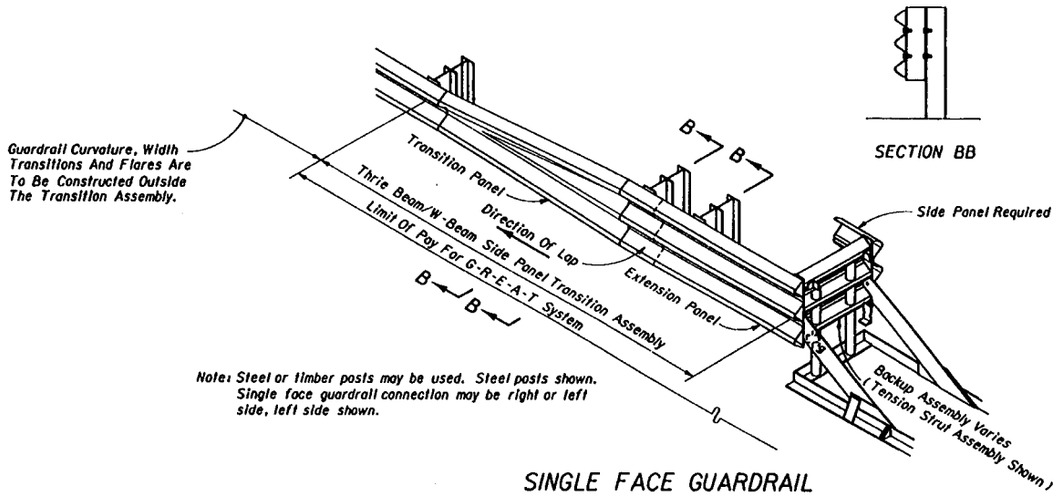

Note: Steel or timber posts may be used. Steel posts shown. Single face guardrail connection may be right or left side, left side shown.

SINGLE FACE GUARDRAIL

NOTES

1. The Thrie Beam/W-Beam Side Panel Assembly required for all Concrete Backup, Tension Strut Backup and Wide Flange Backup assembly connections to guardrail, unless other connection called for in the plans.
2. For additional information see the General Notes and assembly details.

TRANSITION ASSEMBLY FEATURES

STATE OF FLORIDA DEPARTMENT OF TRANSPORTATION
ROAD DESIGN

G-R-E-A-T SYSTEM

	Names	Dates
Designed By	MFG/MG	10/91
Drawn By	JBW	10/91
Checked By	MG/REA	10/91
F.H.W.A. Approved:		

Approved By: State Roadway Design Engineer

Revision No.	Sheet No.	Index No.
92	6 of 6	431

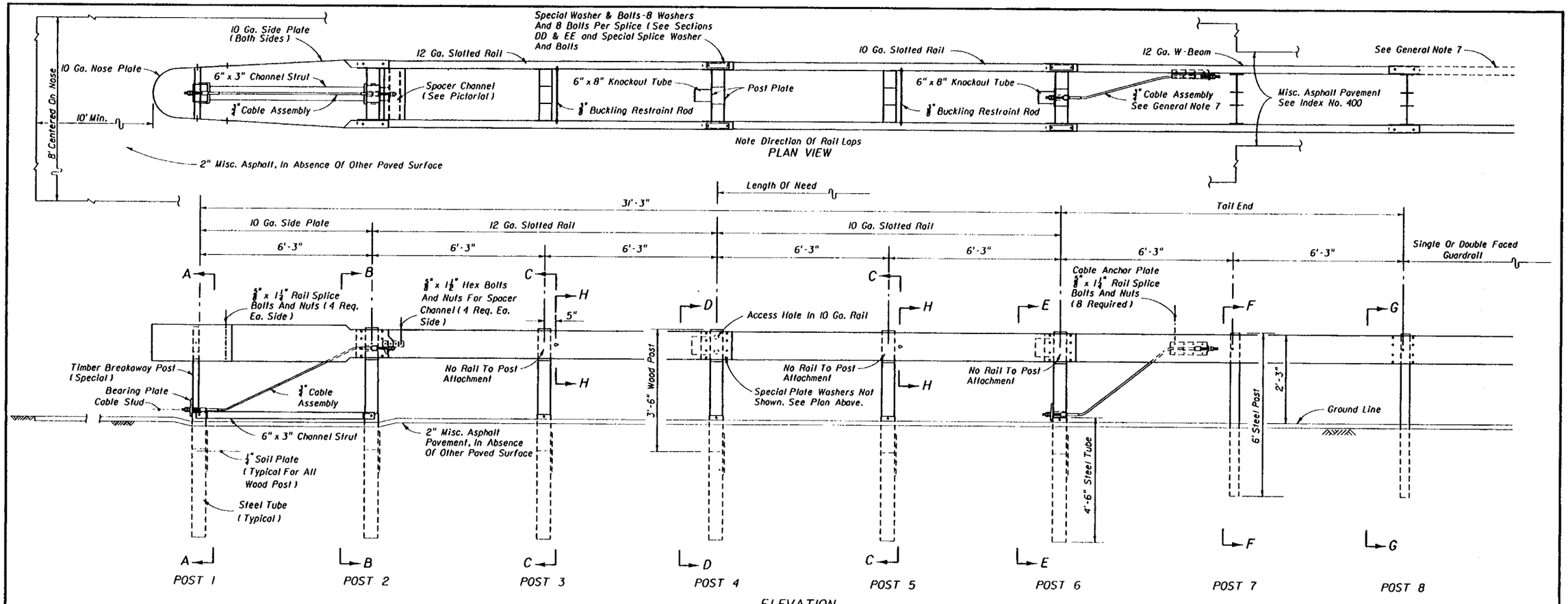

GENERAL NOTES

1. The energy absorbing system represented on this standard drawing is a proprietary design by SYRO Steel Company and marketed under the trade name C-A-T, short for Crash Cushion/Attenuating Terminal. Any infringement on the rights of the designer shall be the sole responsibility of the user.
2. This standard drawing is produced by the Florida Department Of Transportation solely for use by the Department and its assignees. This standard drawing provides the general graphics and information necessary to field identify component parts of the C-A-T system and their incorporation into a whole system.
3. This standard drawing is sufficient for plan details for the C-A-T system installed in connection with standard single and double faced W-beam guardrail systems, and precludes the requirement for shop drawing submittals unless the plans otherwise call for such submittals.
4. The C-A-T system shall be assembled and installed in accordance with the manufacturers detailed drawings, procedures and specifications.
5. The C-A-T system shall be constructed only on slopes 10:1 or flatter.
6. The C-A-T system shall not be located closer than eleven (11) feet to any traffic lane.
7. The 'tail end' section represented on this drawing applies to connections with single and double faced guardrail. The cable anchorage at Post No. 6 is to be used with single faced guardrail connections only.

   Where the C-A-T system is installed in conjunction with a rigid structure, a guardrail transition section shall be constructed between the C-A-T system and the structure connection. The transition sections shown on Indexes 400 and 410 shall be constructed for connections to bridge concrete traffic rails and roadway concrete barrier walls; transition sections for connections to other rigid structures shall be as detailed in the plans and/or as approved by shop drawings.
8. Metallic components shall meet the galvanizing requirements for guardrail, Index No. 400.
9. The C-A-T system for single and double faced guardrail applications will be paid for the under the contract unit price for Impact Attenuator Vehicular (CAT), Each.

DESIGN NOTES AND GUIDELINES

1. The C-A-T system is designed to cushion automobile end-on hits and to redirect automobiles from side hits when impacting at speeds up to and including 60 mph. The C-A-T unit has a singular design for all speeds of 60 mph or less, and any adjustment to its design will not be permitted except as authorized by the manufacturer.
2. The C-A-T system is not intended for use in gores of freeway and expressway mainline ramp terminals; gores of roadway forks; or other gore locations where there is a history of high frequency vehicle departure from the roadway or the potential exists for such departures. The C-A-T system is not a restorable design and therefore requires complete replacement after having sustained either an end-on or a side vehicular impact. Deformed side rail elements that will inhibit the shearing of lands between the rail slots will be subfunctional and are to be replaced immediately; deformed elements are not to be refurbished for reuse.
3. Currently the Department does not recognize other proprietary items as being equally suitable alternatives to the C-A-T, and until such alternatives are available, the C-A-T need not be bid against other proprietary items.

STATE OF FLORIDA DEPARTMENT OF TRANSPORTATION
ROAD DESIGN

C-A-T SYSTEM

	Name	Date
Designed By	WFG/MG	7/91
Drawn By	HSD	7/91
Checked By	MG/RER	7/91
F.H.W.A. Approved:		

Approved By: Freddie Simmons
State Roadway Design Engineer

Revision No.	Sheet No.	Index No.
92	1 of 2	432

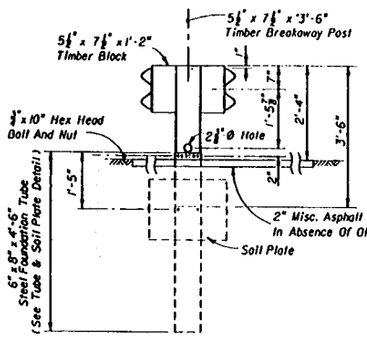

TYPICAL DIMENSIONING

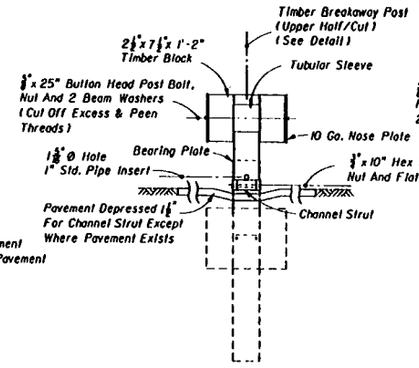

SECTION AA
POST NO. 1

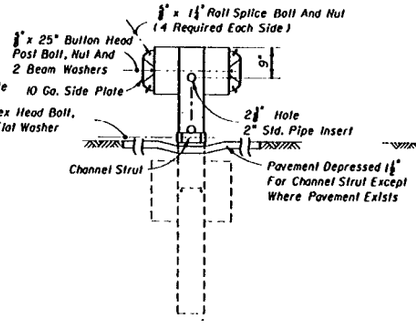

SECTION BB
POST NO. 2

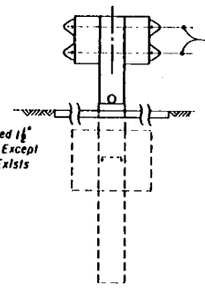

SECTION CC
POST 3 & 5

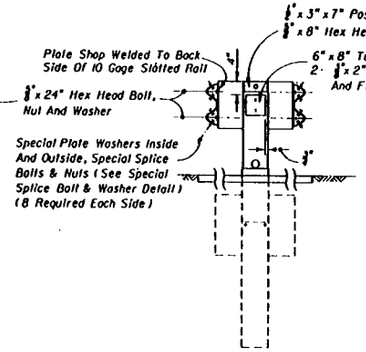

SECTION DD
POST NO. 4

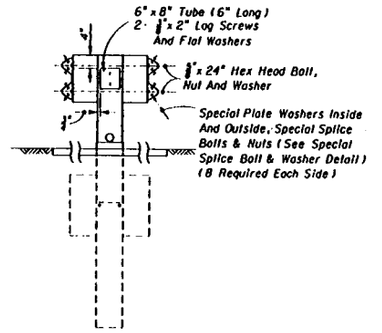

SECTION EE
POST NO. 6

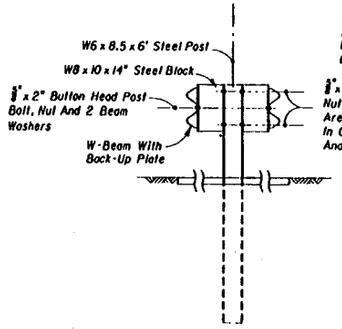

SECTION FF
POST NO. 7

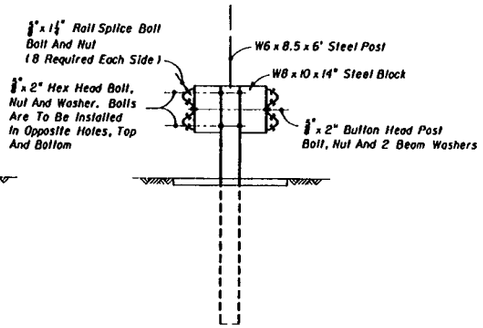

SECTION GG
POST NO. 8

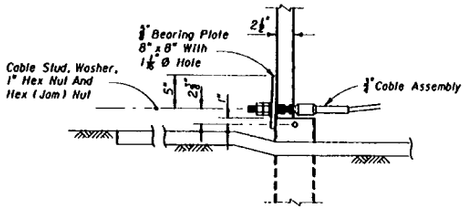

SIDE VIEW
(Channel Strut Not Shown)
CABLE-LOWER ASSEMBLY
POST NO. 1

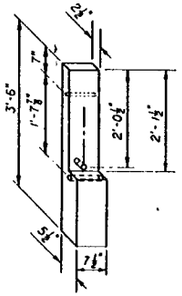

OBLIQUE VIEW-BACK VIEW
POST NO. 1

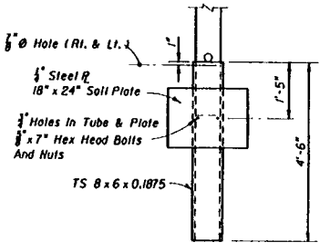

FOUNDATION TUBE AND SOIL PLATE

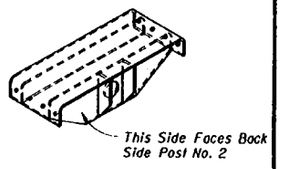

PICTORIAL VIEW
SPACER CHANNEL

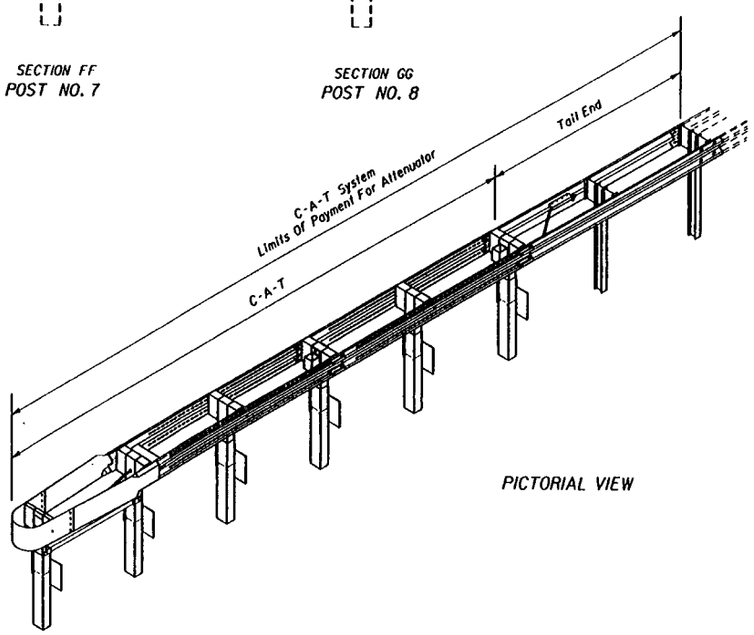

PICTORIAL VIEW

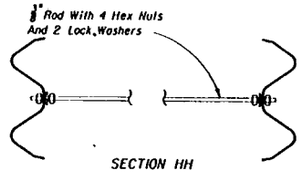

SECTION HH
BUCKLING RESTRAINT ROD

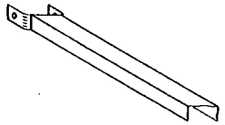

OBLIQUE HALF SECTION
6" x 3" CHANNEL STRUT

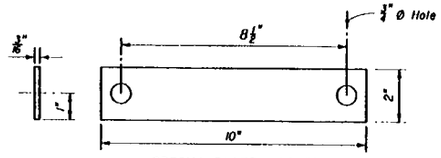

SPECIAL PLATE WASHER

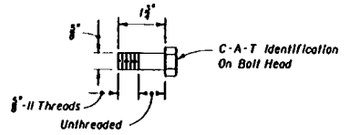

SPECIAL HEX HEAD BOLT
SPECIAL PLATE WASHER AND SPLICE BOLT

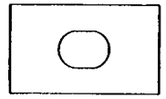

See Index 400 For Details
BEAM WASHER

STATE OF FLORIDA DEPARTMENT OF TRANSPORTATION
ROAD DESIGN

C-A-T SYSTEM

	Names	Dates
Designed By	MFG/MG	7/91
Drawn By	HSD	7/91
Checked By	MG/RER	7/91
F.H.W.A. Approved:		

Approved By: Freddie Simmons
State Roadway Design Engineer

Revision No.	Sheet No.	Index No.
92	2 of 2	432

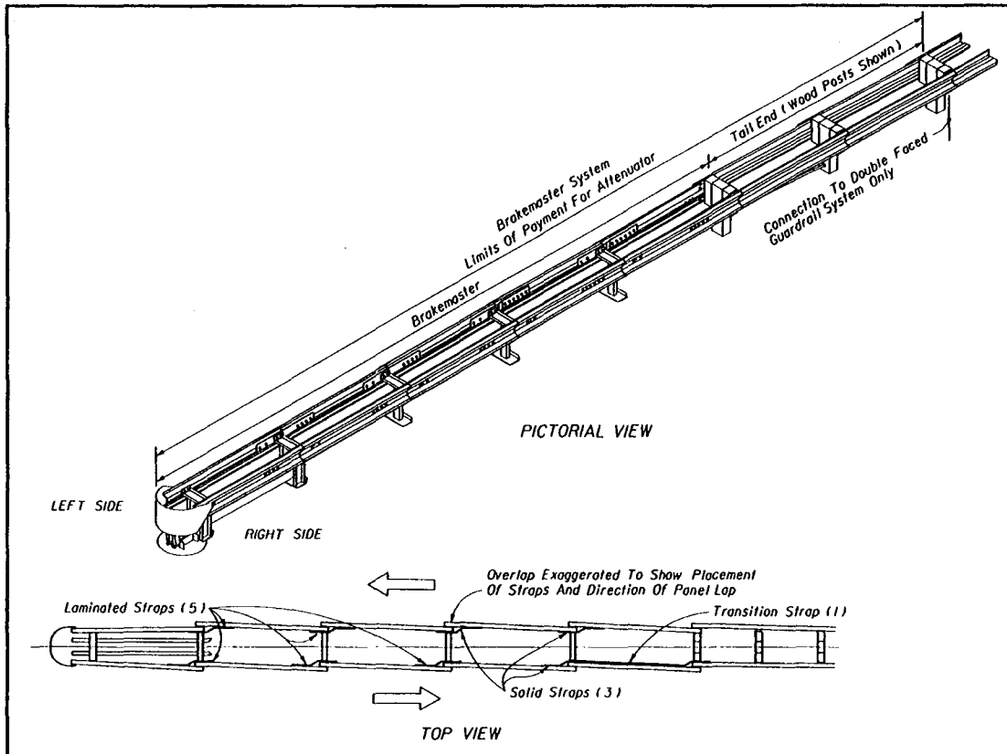

BIDIRECTIONAL SYSTEM

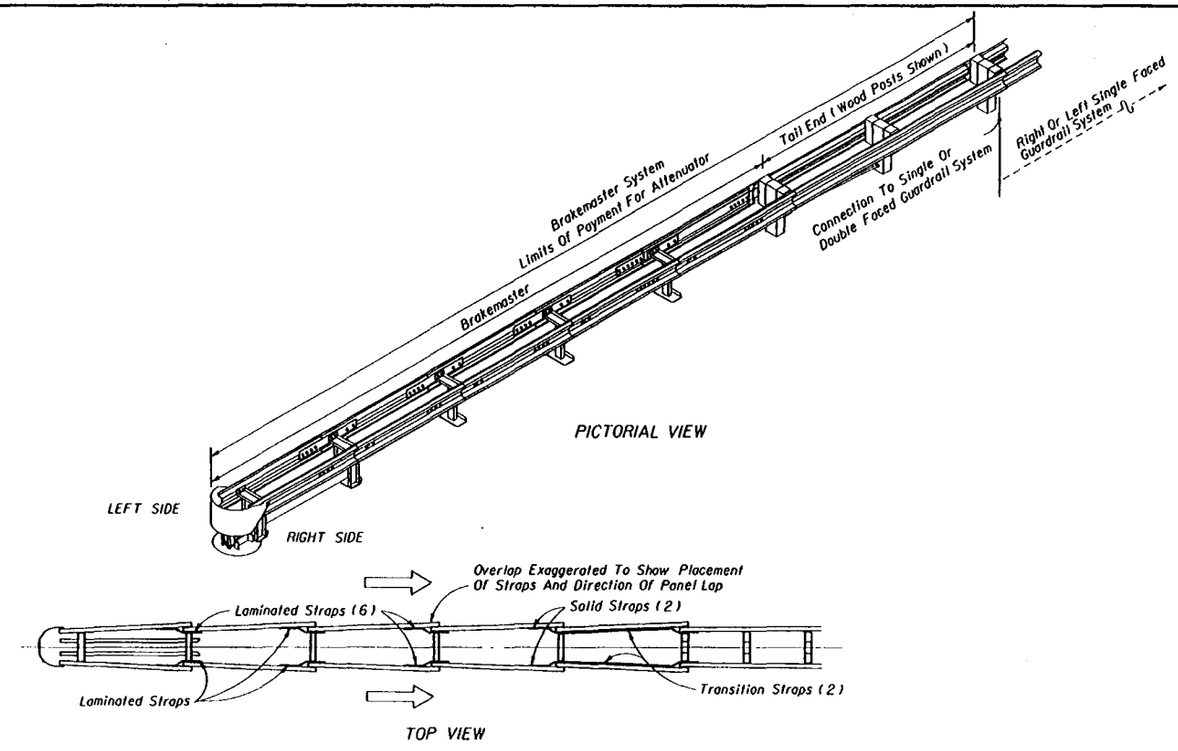

UNIDIRECTIONAL SYSTEM

GENERAL NOTES

1. The energy absorbing system represented on this standard drawing is a proprietary design by Energy Absorption Systems, Inc. and marketed under the trade name Brakemaster. Any infringement on the rights of the designer shall be the sole responsibility of the user.

2. This standard drawing is produced by the Florida Department Of Transportation solely for use by the Department and its assignees. This standard drawing provides the general information and graphics necessary to field identify component parts of the Brakemaster system and their incorporation into a whole system.

3. This standard drawing is sufficient for plan details for the Brakemaster system installed in connection with standard single and double faced W-beam guardrail systems, and precludes the requirement for shop drawing submittals unless the plans otherwise call for such submittals.

4. The Brakemaster system shall be assembled and installed in accordance with the manufacturers detailed drawings, procedures and specifications.

5. The Brakemaster system shall be constructed only on slopes 12:1 or flatter.

6. The Brakemaster system shall not be located closer than eleven (11) feet to any traffic lane.

7. The 'tail end' section represented on this drawing applies to connections with single and double faced guardrail. Where the Brakemaster system is installed in conjunction with safety shaped or vertical faced barrier walls or other rigid structures, a special transitional guardrail section between the Brakemaster and wall or structure shall be as detailed on Index No. 410 or as approved by shop drawings.

8. Metallic components shall meet the galvanizing requirements for guardrail, Index No. 400.

9. The Brakemaster system will be paid for under the contract unit price for Impact Attenuator Vehicular (Brakemaster), Each.

DESIGN NOTES AND GUIDELINES

1. The Brakemaster system is designed to cushion automobile end-on hits and to redirect automobiles from side hits when impacting at speeds up to and including 60 mph. The Brakemaster unit has a singular design for all speeds of 60 mph or less, and any adjustment to its design will not be permitted except as authorized by the manufacturer.

2. The Brakemaster system is specially designed to shield both narrow hazards and the ends of other fixed barriers located in low frequency impact areas. The Brakemaster system is not intended for use in gores of freeways and expressway mainline ramp terminals; gores of roadway forks; and, other gore locations where there is a history of high frequency vehicle departures from the roadway or the potential exists for such departures. The Brakemaster system is not a restorable design and therefore requires complete replacement after having sustained either an end-on or a side vehicular impact. Deformed side rail elements of the Brakemaster will be subfunctional and are to be replaced immediately; deformed elements are not to be refurbished for reuse. When replacing an impacted Brakemaster system the cable/brake assembly is not to be reused, if the cable sleeve is exposed. After vehicle impact on the Brakemaster system the cable/brake assembly can be returned to the manufacturer for credit toward replacement of the cable.

3. Currently the Department does not recognize other proprietary items as being equally suitable alternatives to the Brakemaster, and until such alternatives are available, the Brakemaster need not be bid against other proprietary items.

STATE OF FLORIDA DEPARTMENT OF TRANSPORTATION
ROAD DESIGN

BRAKEMASTER

	Names	Dates	Approved By
Designed By	MFG/JVG	7/91	Freddie Simmons
Drawn By	HSD	7/91	State Roadway Design Engineer
Checked By	JVG	7/91	

F.H.W.A. Approved:	Revision No.	Sheet No.	Index No.
	92	1 of 4	433

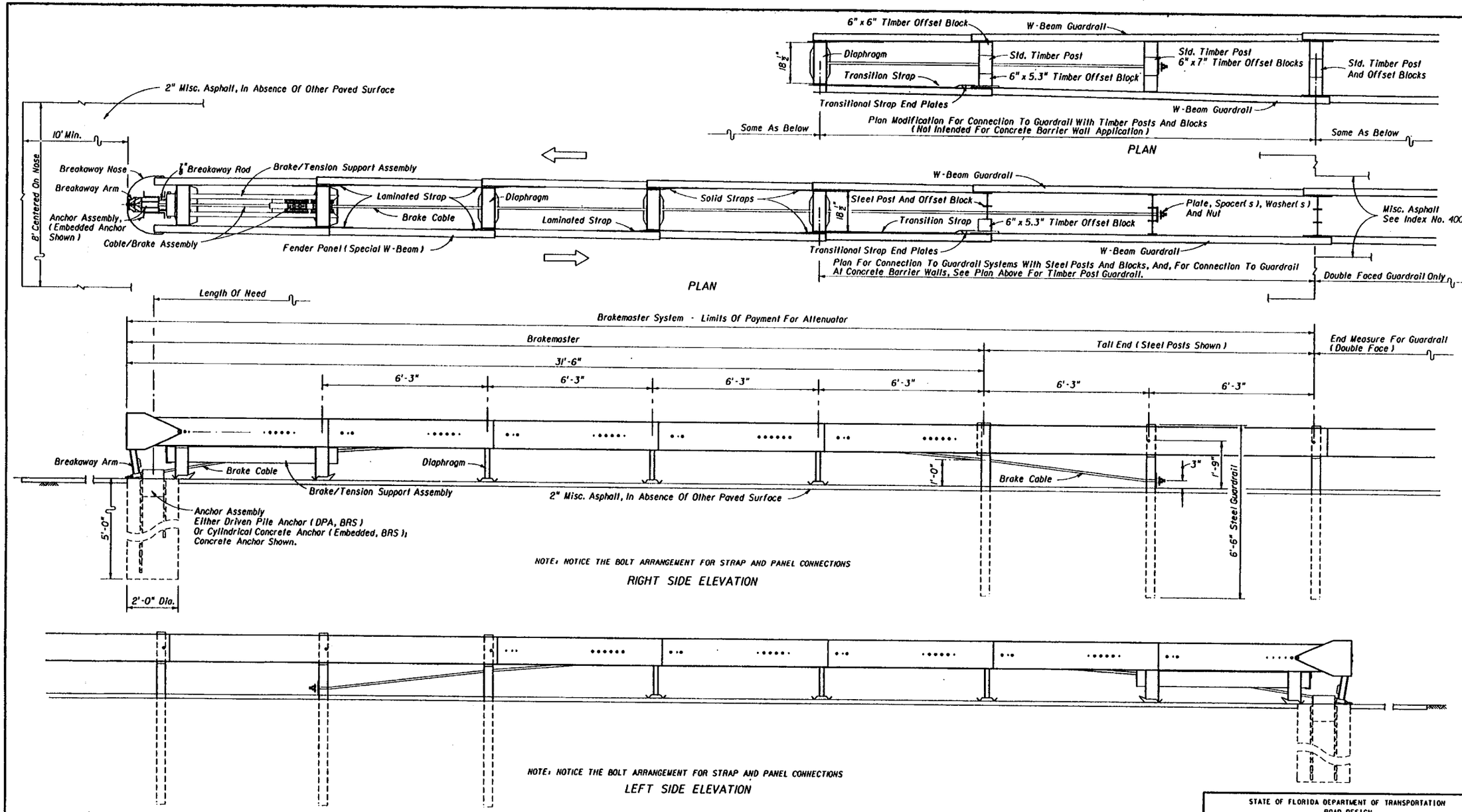

BIDIRECTIONAL SYSTEM

STATE OF FLORIDA DEPARTMENT OF TRANSPORTATION
ROAD DESIGN

BRAKEMASTER

	Names	Dates
Designed By	MFO/MO	7/91
Drawn By	HSD	7/91
Checked By	JMC	7/91
F.H.W.A. Approved:		

Approved By _____
State Roadway Design Engineer

Revision No.	Sheet No.	Index No.
92	2 of 4	433

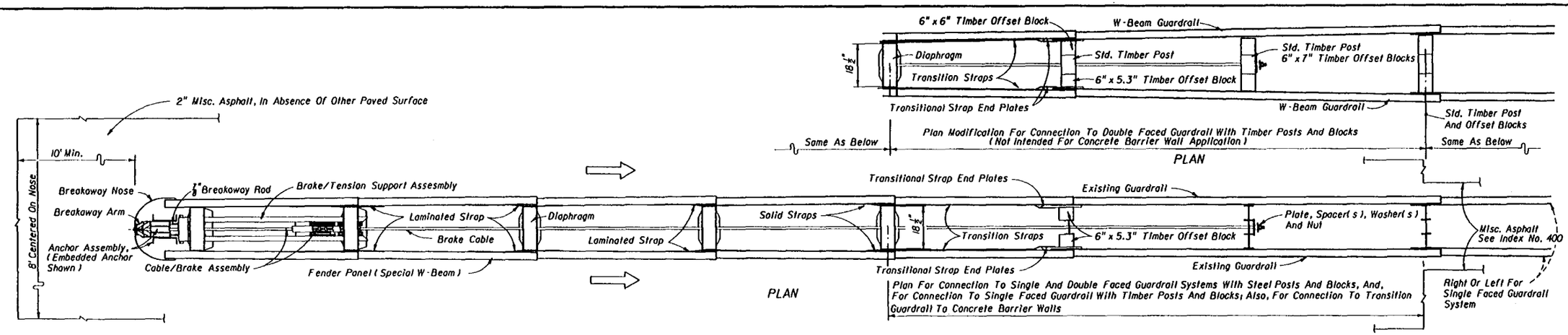

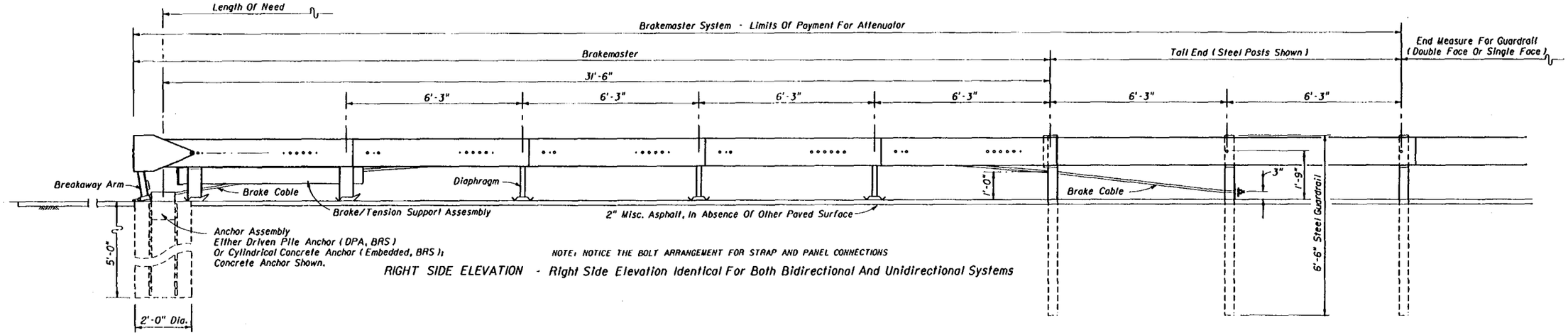

NOTE: NOTICE THE BOLT ARRANGEMENT FOR STRAP AND PANEL CONNECTIONS

RIGHT SIDE ELEVATION - Right Side Elevation Identical For Both Bidirectional And Unidirectional Systems

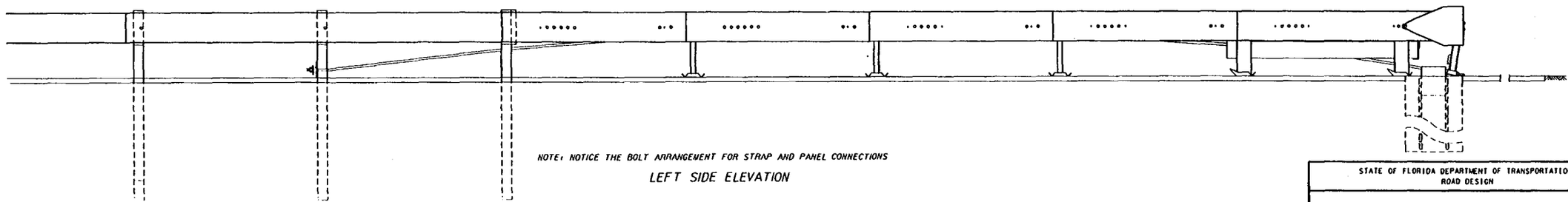

NOTE: NOTICE THE BOLT ARRANGEMENT FOR STRAP AND PANEL CONNECTIONS

LEFT SIDE ELEVATION

UNIDIRECTIONAL SYSTEM

STATE OF FLORIDA DEPARTMENT OF TRANSPORTATION
ROAD DESIGN

BRAKEMASTER

	Names	Dates
Designed By	WFC/JVD	7/91
Drawn By	HSD	7/91
Checked By	JVD	7/91
F.H.W.A. Approved:		

Approved By: _____ State Roadway Design Engineer

Revision No.	Sheet No.	Index No.
92	3 of 4	433

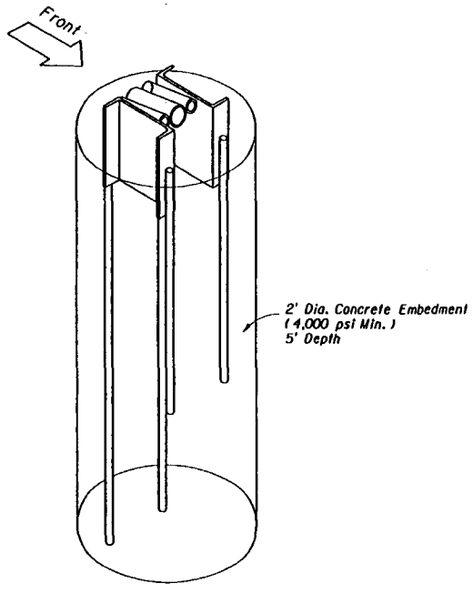

ISOMETRIC VIEW

ANCHOR ASSEMBLY, EMBEDDED BRS

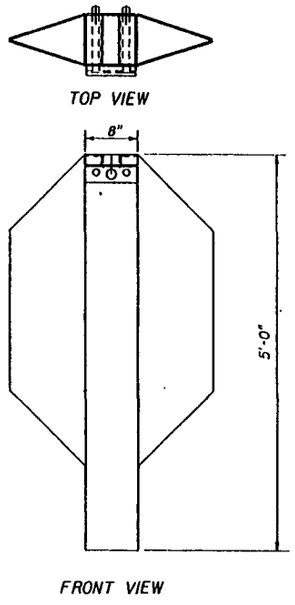

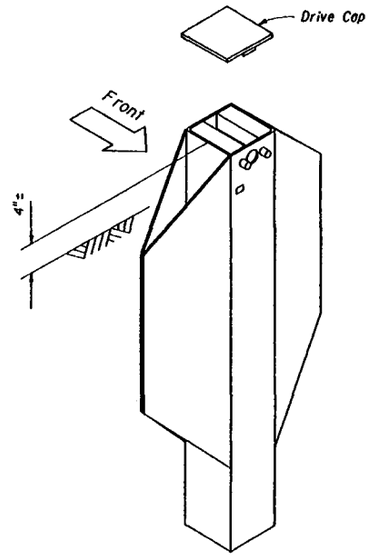

ISOMETRIC VIEW

Note: This assembly is driven into 8" dia. 5' deep pilot hole by drive cap furnished.

ANCHOR ASSEMBLY, DPA BRS

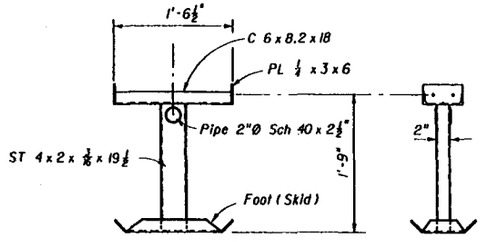

DIAPHRAGM, BRS

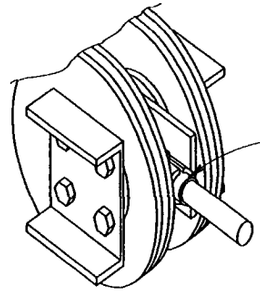

Cable Replacement Required When Cable Sleeve Exposed. See "Design Notes And Guidelines", Note No. 3, For Additional Information.

BRAKE/CABLE REPLACEMENT

STATE OF FLORIDA DEPARTMENT OF TRANSPORTATION
ROAD DESIGN

BRAKEMASTER

	Names	Dates
Designed By	MFG/JVD	7/91
Drawn By	HSD	7/91
Checked By	JVD	7/91
F.H.W.A. Approved:		

Approved By _____
State Roadway Design Engineer

Revision No.	Sheet No.	Index No.
92	4 of 4	433

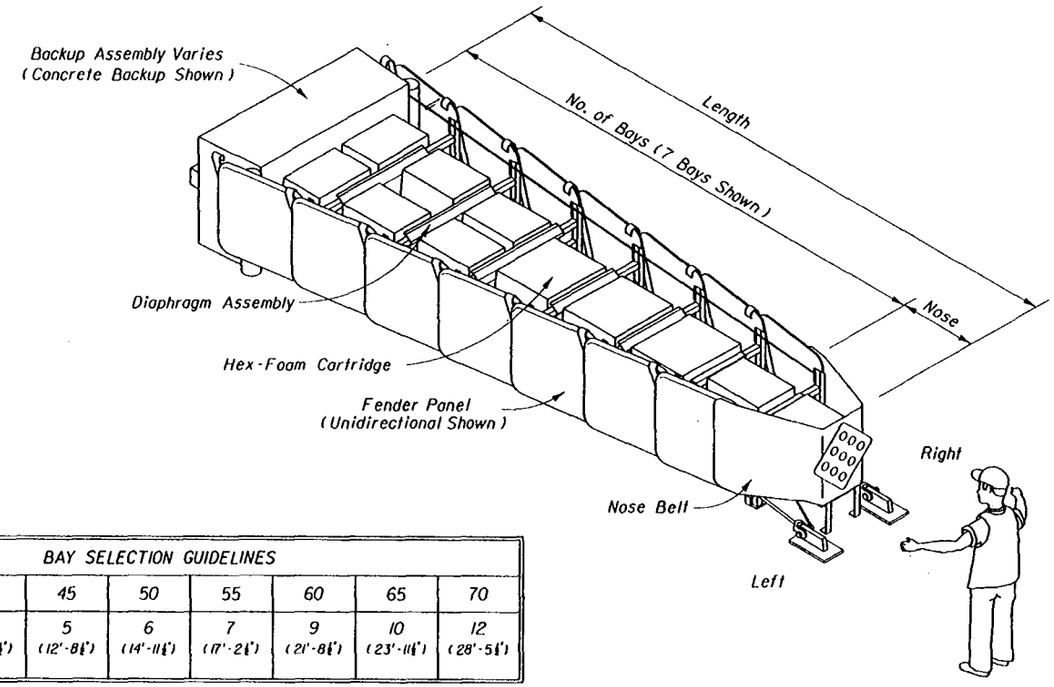

BAY SELECTION GUIDELINES							
DESIGN SPEED	40	45	50	55	60	65	70
NO. OF BAYS (Nominal Length)	4 (10'-5½")	5 (12'-8½")	6 (14'-11½")	7 (17'-2½")	9 (21'-8½")	10 (23'-11½")	12 (28'-5½")

HEX-FOAM CARTRIDGE SELECTION CHART												
Attenuator Type	Cartridge Type											
	Nose	Bay 1	Bay 2	Bay 3	Bay 4	Bay 5	Bay 6	Bay 7	Bay 8	Bay 9	Bay 10	Bay 11	Bay 12
4 Bay Narrow	80	80	80	80	81								
4 Bay Medium	80	80	82	(80)	(81)								
4 Bay Wide	80	80	82	(80)	(81)								
5 Bay Narrow	80	80	80	80	82	81							
5 Bay Medium	80	80	82	(80)	(80)	(81)							
5 Bay Wide	80	80	82	(80)	(80)	(81)							
6 Bay Narrow	80	80	80	80	80	82	81						
6 Bay Medium	80	80	82	82	(80)	(80)	(81)						
6 Bay Wide	80	80	82	82	(80)	(80)	(81)						
7 Bay Narrow	80	80	80	80	80	80	82	81					
7 Bay Medium	80	80	82	82	82	(80)	(80)	(81)					
7 Bay Wide	80	80	82	82	82	(80)	(80)	(81)					
9 Bay Narrow	80	80	80	80	80	80	80	80	82	81			
9 Bay Medium	80	80	82	82	82	82	(80)	(80)	(80)	(81)			
9 Bay Wide	80	80	82	82	82	82	(80)	(82)	(82)	(81)			
10 Bay Narrow	80	80	80	80	80	80	80	80	80	82	81		
10 Bay Medium	80	80	80	82	82	82	82	(80)	(80)	(80)	(81)		
10 Bay Wide	80	80	82	82	82	82	82	(80)	(80)	(82)	(81)		
12 Bay Narrow	80	80	80	80	80	80	80	80	80	82	82	82	81
12 Bay Medium	80	80	80	82	82	82	82	82	(80)	(80)	(80)	(80)	(81)
12 Bay Wide	80	80	82	82	82	82	82	82	(80)	(80)	(82)	(82)	(81)

1. Parentheses ( ) denote double cartridge bays.
2. Type 80 - 17" Wide x 24" Long (Part no. 350980I-0000)
   Type 81 - 24" Wide x 17" Long (Part no. 350981I-0000)
   Type 82 - 26" Wide x 24" Long (Part no. 350982I-0000)

INDEX OF SHEETS

SHEET NO.	DESCRIPTION
1	General System Features And Bay Selection Guidelines
2	Concrete Backup Assembly
3	Diagonal Braced Backup Assembly
4	Horizontal Braced Backup Assembly
5	Wide Flange Backup Assembly
6	Transition Sections

GENERAL NOTES

1. The energy absorbing system represented on this standard drawing is a proprietary design by Energy Absorption Systems, Inc. and marketed under the trade name Hex-Foam™ Sandwich System. Any infringement on the rights of the designer shall be the sole responsibility of the user.
2. This standard drawing is produced by the Florida Department Of Transportation solely for use by the Department and its assignees. This standard drawing provides the general graphics and information necessary to field identify componet parts of the Hex-Foam Sandwich System and their incorporation into a whole system.
3. This standard drawing is sufficient for plan details for the Hex-Foam Sandwich System installed as a free standing system or installed in connection with concrete barrier walls and other fixed barrier systems, and precludes the requirement for shop drawing submittals unless the plans otherwise call for such submittals. For unusual situations such as cross slopes exceeding 20:1 (0.05), expansion joints, drainage, deck structures, or extra wide hazards, Energy Absorption Systems, Inc. provides a free application service to ensure proper use of the system.
4. The Hex-Foam Sandwich System shall be assembled and installed in accordance with the manufacturers detailed drawings, procedures and specifications.
5. The standard Hex-Foam Sandwich System is available in 3 standard widths protecting hazards up to 7' wide. Each of these widths can be matched to any of the four backup assemblies shown in this index. The four backup assemblies are to be utilized as follows:
   (a) Independent systems:
      (1) Concrete backup assemblies.
      (2) Diagonal braced backup assemblies.
      (3) Wide flange backup assemblies.
   (b) Dependent systems:
      (1) Horizontal braced backup assemblies.
   (c) Combination systems:
      (1) Concrete backup assemblies.

   Variations from the uses described above shall be constructed as detailed in the plans and/or as required by shop drawings.
6. Only the Hex-Foam cartridges shall be used in all bays and the nose section.
7. Concrete foundations and backup blocks shall be constructed with 4000 psi min. compressive strength concrete.
8. The Hex-Foam Sandwich System can be constructed on cross slopes 20:1 or flatter without compensating alterations.
9. All metallic components shall meet the galvanizing requirements for guardrail, Index No. 400.
10. Fittings, hardware, anchorages and accessories not labled or described in these details are items furnished by the manufacturer/supplier and are to be installed in accordance to the manufacturers instructional drawings and specifications.
11. The Hex-Foam Sandwich System will be paid for under the contract unit price for Impact Attenuator Vehicular (Hex-Foam Sandwich), Each.

DESIGN NOTES AND GUIDELINES

1. The Hex-Foam Sandwich System is designed to cushion automobile end-on hits and to redirect automobiles from side hits. The standard width Hex-Foam Sandwich System is designed to shield fixed hazards (up to 7' wide) or the ends of other fixed barrier systems. The number of bays to be used in a specific unit will be determined by the design speed, except where the Engineer determines that another speed is more applicable. The unit width will be determined by the width of the object to be shielded or by the connecting barrier system. The backup assembly for a specific unit will be determined by either (a) the unit standing free of the object to be shielded or (b) the hazard or barrier system(s) to which it is connected. The order of priority for backup assembly selection is as follows:
   (a) Free standing:
      (1) Concrete backup assemblies.
      (2) Diagonal braced backup assemblies.
      (3) Wide flange backup assemblies.
   (b) Connections to concrete barrier systems:
      (1) Concrete backup assemblies.
      (2) Horizontal braced backup assemblies.
   (c) Connections to guardrail systems:
      (1) Concrete backup assemblies.
      (2) Diagonal braced backup assemblies.
      (3) Wide flange backup assemblies.
2. The Hex-Foam Sandwich System is a restorable system that is particularly suited to shielding wide (≥ 3') hazards subject to high speed traffic, high volume traffic, and/or traffic with a history of frequent errant vehicle departures from the roadway or the potential exists for such departures. The Hex-Foam Sandwich System is particularly suited to shielding hazards where the approach space is limited; and, is particularly suited to conditions where the terminal must be located close to the traffic lane. For unusual situations see General Note No. 3.
3. The Hex-Foam G-R-E-A-T System has Department established priority over the narrow Hex-Foam Sandwich System, and the G-R-E-A-T System is to be used unless the plans specifically call for the Hex-Foam Sandwich System. Currently the Department does not recognize other proprietary items as being equally suitable alternatives to the medium and wide Hex-Foam Sandwich Systems, and until such alternatives are available, the medium and wide Hex-Foam Sandwich Systems need not be bid against other proprietary items.

STATE OF FLORIDA DEPARTMENT OF TRANSPORTATION
ROAD DESIGN

HEX-FOAM SANDWICH SYSTEM

	Names	Dates
Designed By	MFG/MG	2/93
Drawn By	HKH	2/93
Checked By	MG	2/93
F.H.W.A. Approved:		

Approved By: Freddie Simmons
State Roadway Design Engineer

Revision No.	Sheet No.	Index No.
94	1 of 6	437

GENERAL SYSTEM FEATURES AND BAY SELECTION GUIDELINES

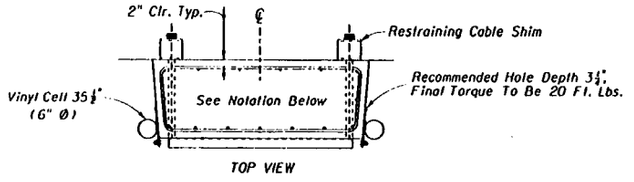

TOP VIEW

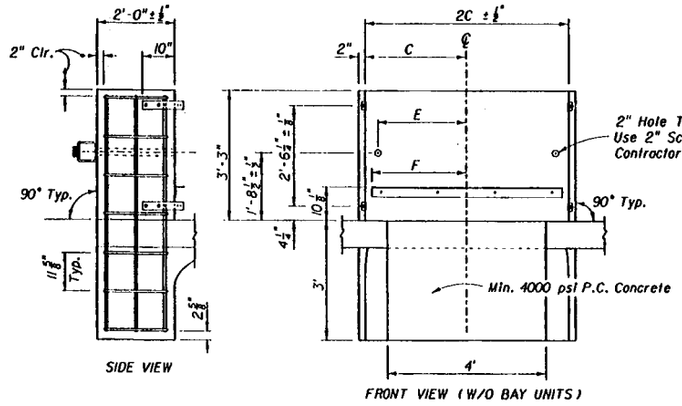

SIDE VIEW

FRONT VIEW (W/O BAY UNITS)

All concrete backup walls will be constructed with 7 No. 6 vertical reinforcing bars equally spaced across front face of the wall. All other backup wall reinforcing will be No. 5 bars. Narrow, medium and wide units will be constructed with 5, 6 and 9 equally spaced verticle bars along the back face of the wall respectively. All other reinforcing bars shall be constructed as shown.
Field bend vertical reinforcing steel to clear Schedule 40 pipe.
All exposid backup block edges shall be chamfered ¾".

BACKUP ASSEMBLY - UNIDIRECTIONAL

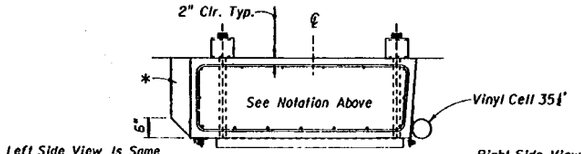

TOP VIEW

Left Side View Is Same As SIDE VIEW Above With Bracket Alteration

Right Side View Is Mirror Image Of SIDE VIEW Above

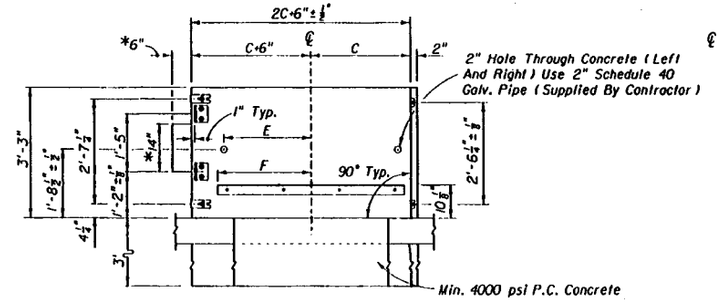

FRONT VIEW (W/O BAY UNITS)

For reinforcement and chamfers see notation above.

BACKUP ASSEMBLY - BIDIRECTIONAL

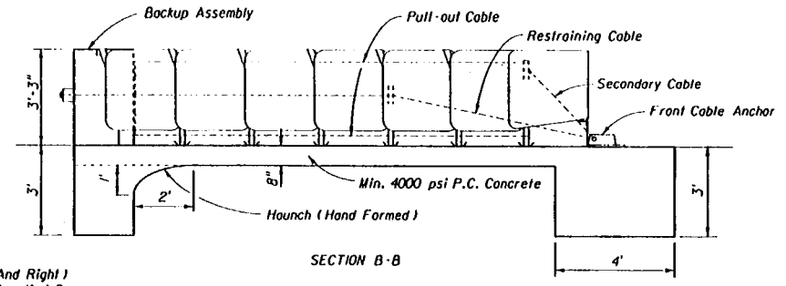

SECTION B-B

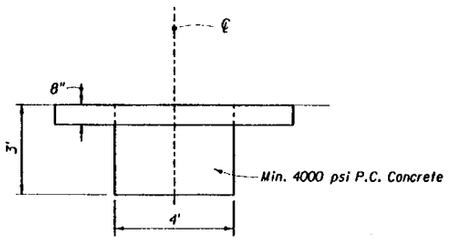

SECTION A-A

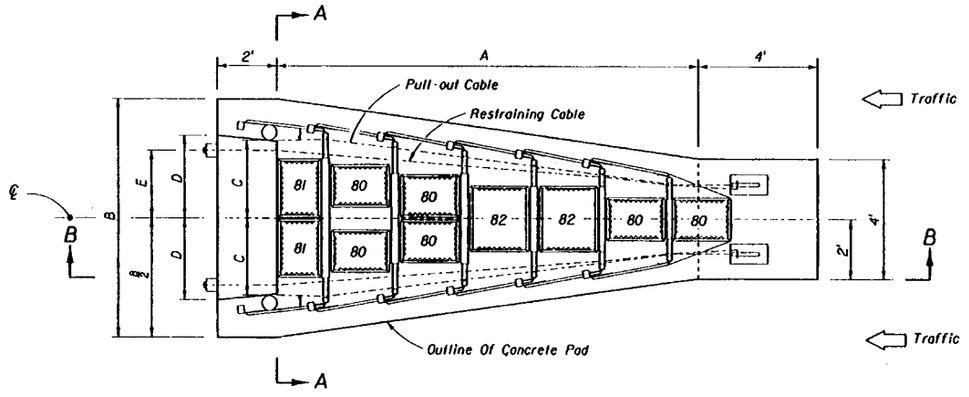

PLAN - UNIDIRECTIONAL UNIT (6 BAY UNIT SHOWN)

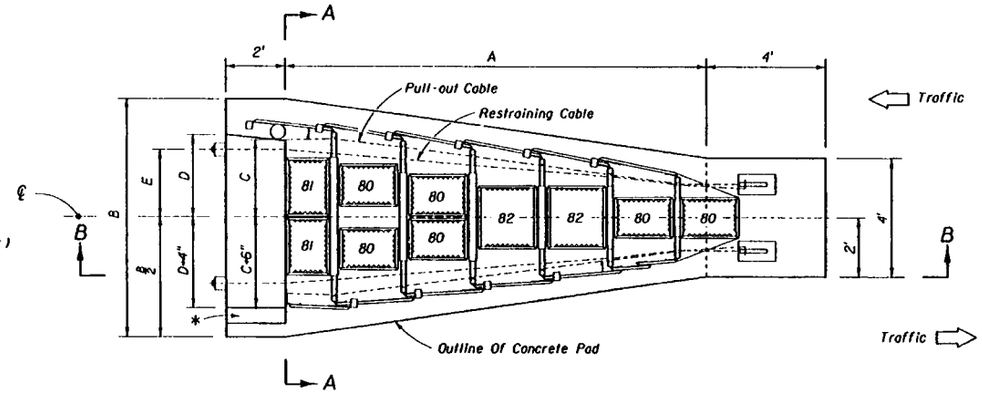

* Concrete guardrail offset lug to be cast with backup assembly when trailing end guardrail attachment is called for in the plans.

PLAN - BIDIRECTIONAL UNIT (6 BAY UNIT SHOWN)

SUPPLEMENTAL DIMENSIONS						
NO. OF BAYS	A	B	C	D	E	F
4 Bays	9'-8"	6'	1'-8"	1'-10"	1'-4"	1'-2"
		8'	2'-7"	2'-9"	2'-3"	2'-5"
		10'	3'-9"	3'-11"	2'-1½"	3'-6"
5 Bays	11'-11"	6'	1'-8"	1'-10"	1'-4"	1'-2"
		8'	2'-7"	2'-9"	2'-3"	2'-5"
		10'	3'-9"	3'-11"	2'-1½"	3'-6"
6 Bays	14'-2"	6'	1'-8"	1'-10"	1'-4"	1'-2"
		8'	2'-7"	2'-9"	2'-3"	2'-5"
		10'	3'-9"	3'-11"	2'-3½"	3'-6"
7 Bays	16'-5"	6'	1'-8"	1'-10"	1'-4"	1'-2"
		8'	2'-7"	2'-9"	2'-3"	2'-5"
		10'	3'-9"	3'-11"	2'-6"	3'-6"
9 Bays	20'-11"	6'	1'-8"	1'-10"	1'-4"	1'-2"
		8'	2'-7"	2'-9"	2'-3"	2'-5"
		10'	3'-9"	3'-11"	2'-8½"	3'-6"
10 Bays	23'-2"	6'	1'-8"	1'-10"	1'-4"	1'-2"
		8'	2'-7"	2'-9"	2'-3"	2'-5"
		10'	3'-9"	3'-11"	2'-8½"	3'-6"
12 Bays	27'-8"	6'	1'-8"	1'-10"	1'-4"	1'-2"
		8'	2'-7"	2'-9"	2'-3"	2'-5"
		10'	3'-9"	3'-11"	2'-8½"	3'-6"

CONCRETE BACKUP ASSEMBLY

STATE OF FLORIDA DEPARTMENT OF TRANSPORTATION
ROAD DESIGN

HEX-FOAM SANDWICH SYSTEM

	Names	Dates
Designed By	MFG/HKH	2/93
Drawn By	HKH	2/93
Checked By	JVG	2/93
F.H.W.A. Approved:		

Approved By Freddie Simmons
State Roadway Design Engineer

Revision No.	Sheet No.	Index No.
94	2 of 6	437

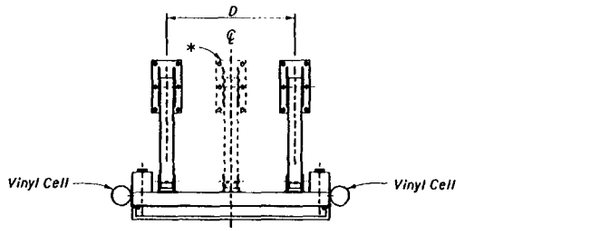

TOP VIEW

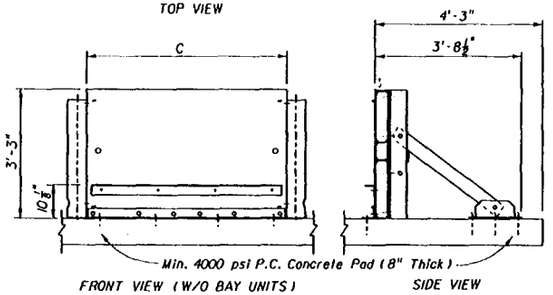

FRONT VIEW (W/O BAY UNITS) SIDE VIEW

BACKUP ASSEMBLY - UNIDIRECTIONAL

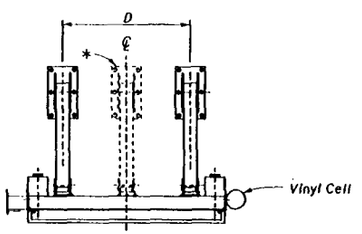

TOP VIEW

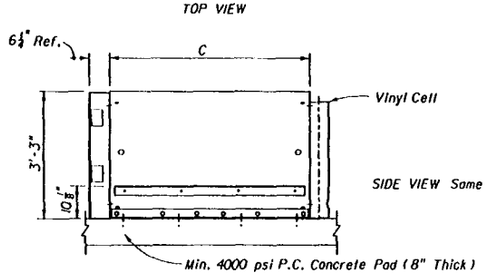

SIDE VIEW Same As Above

FRONT VIEW (W/O BAY UNITS)

BACKUP ASSEMBLY - BIDIRECTIONAL

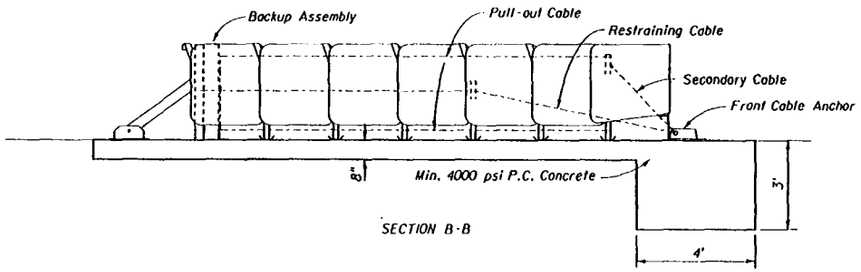

SECTION B-B

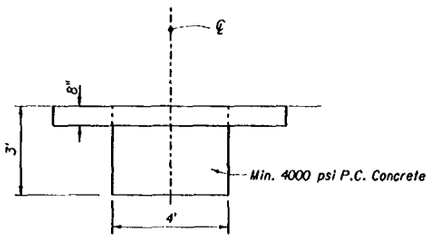

SECTION A-A

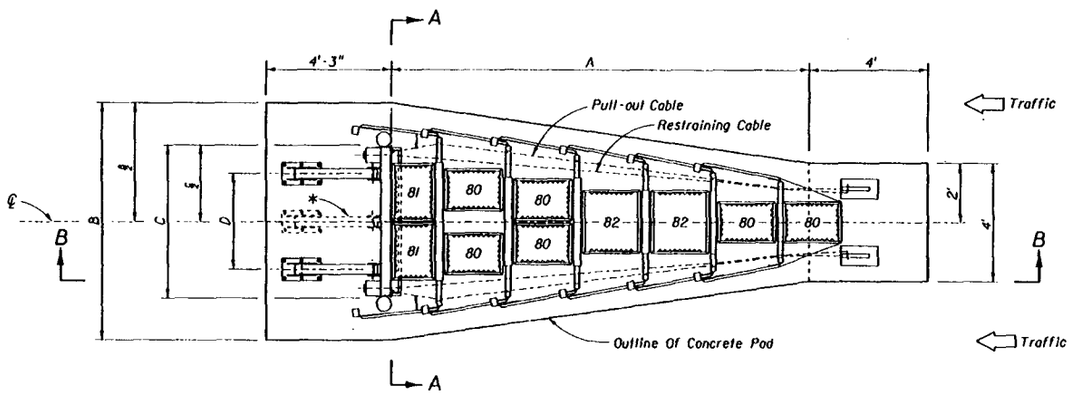

PLAN - UNIDIRECTIONAL UNIT (6 BAY UNIT SHOWN)

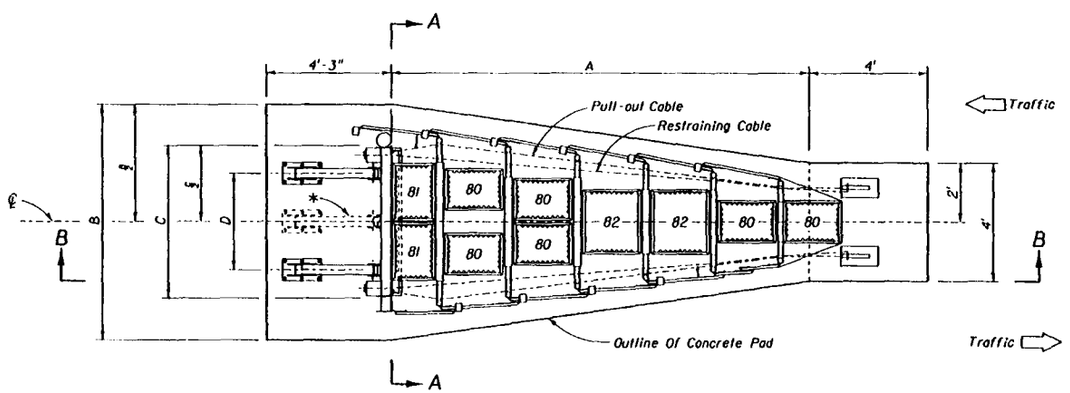

PLAN - BIDIRECTIONAL UNIT (6 BAY UNIT SHOWN)

* 2 diagonal support braces are required on narrow and medium width systems, 3 diagonal support braces are required on wide systems (C = 7'-6").

SUPPLEMENTAL DIMENSIONS				
NO. OF BAYS	A	B	C	D
4 Bays	9'-8"	6'	2'-11"	1'-11"
		8'	5'-1"	3'-3½"
		10'	7'-6"	6'-10½"
5 Bays	11'-11"	6'	2'-11"	1'-11"
		8'	5'-1"	3'-3½"
		10'	7'-6"	6'-10½"
6 Bays	14'-2"	6'	2'-11"	1'-11"
		8'	5'-1"	3'-3½"
		10'	7'-6"	6'-10½"
7 Bays	16'-5"	6'	2'-11"	1'-11"
		8'	5'-1"	3'-3½"
		10'	7'-6"	6'-10½"
9 Bays	20'-11"	6'	2'-11"	1'-11"
		8'	5'-1"	3'-3½"
		10'	7'-6"	6'-10½"
10 Bays	23'-2"	6'	2'-11"	1'-11"
		8'	5'-1"	3'-3½"
		10'	7'-6"	6'-10½"
12 Bays	27'-8"	6'	2'-11"	1'-11"
		8'	5'-1"	3'-3½"
		10'	7'-6"	6'-10½"

DIAGONAL BRACED BACKUP ASSEMBLY

STATE OF FLORIDA DEPARTMENT OF TRANSPORTATION
ROAD DESIGN

HEX-FOAM SANDWICH SYSTEM

	Names	Dates
Designed By	MFG/HKH	2/93
Drawn By	HKH	2/93
Checked By	JVG	2/93

Approved By: Freddie Simmons
State Roadway Design Engineer

F.H.W.A. Approved:

Revision No.	Sheet No.	Index No.
94	3 of 6	437

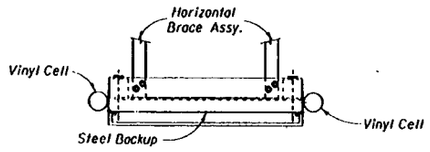

TOP VIEW (UNIDIRECTIONAL)

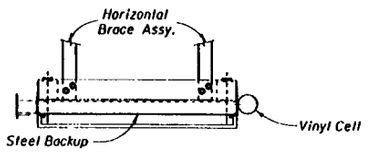

TOP VIEW (BIDIRECTIONAL)

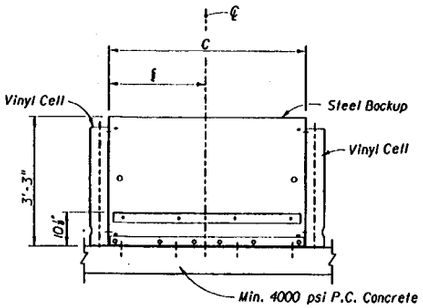

FRONT VIEW (W/O BAY UNITS)

STEEL BACKUP - UNIDIRECTIONAL

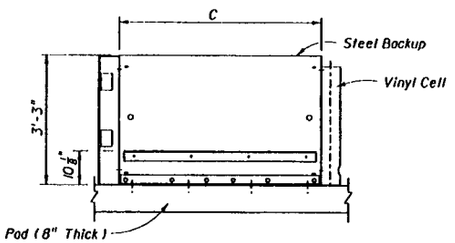

FRONT VIEW (W/O BAY UNITS)

STEEL BACKUP - BIDIRECTIONAL

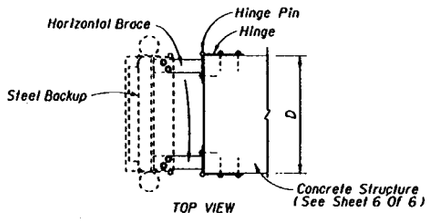

TOP VIEW

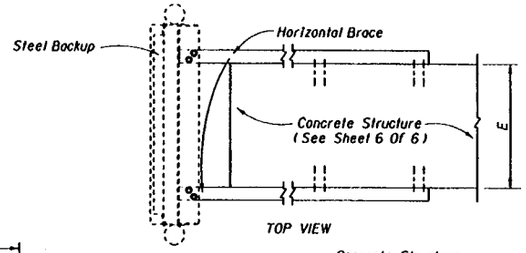

TOP VIEW

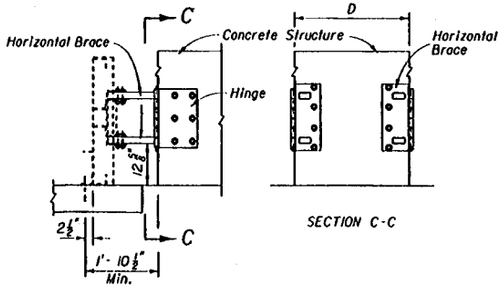

SECTION C-C

SIDE VIEW

Concrete Structure Widths (D)
Narrow Units - 2' Min., 2'-11" Max.
Medium Units - 3' Min., 5'-1" Max.
Wide Units - 5' Min., 7'-6" Max.

CORNER MOUNT

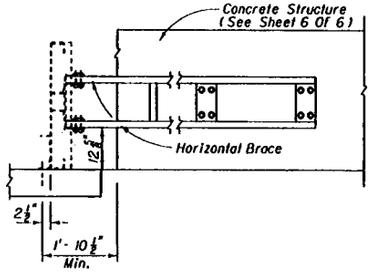

SIDE VIEW

Concrete Structure Widths (E)
Narrow Units - 1'-4" Min., 2'-2" Max.
Medium Units - 2'-4" Min., 4'-4" Max.
Wide Units - 4'-4" Min., 6'-9" Max.

SIDE MOUNT

Note: Horizontal braces are custom accessory items. Actual designs vary depending on the concrete backup structure.

TYPICAL HORIZONTAL BRACE ASSEMBLIES

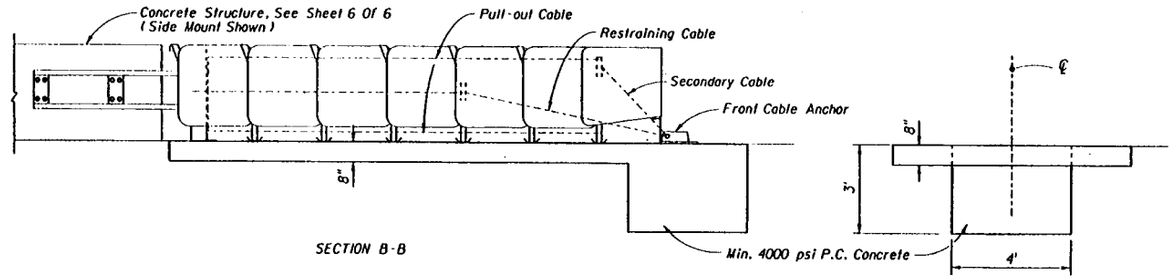

SECTION B-B

SECTION A-A

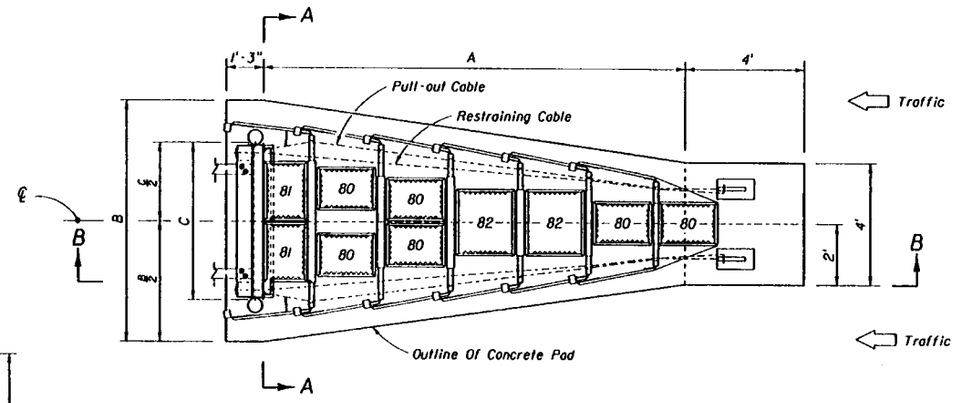

PLAN - UNIDIRECTIONAL UNIT (6 BAY UNIT SHOWN)

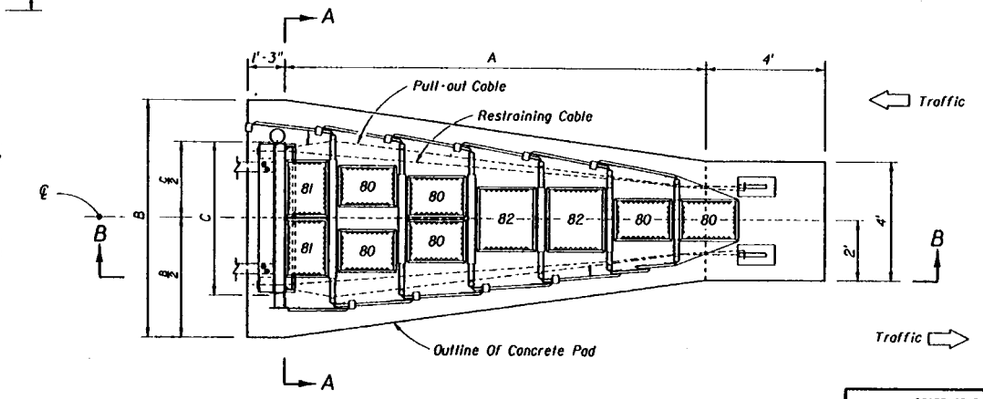

PLAN - BIDIRECTIONAL UNIT (6 BAY UNIT SHOWN)

SUPPLEMENTAL DIMENSIONS			
NO. OF BAYS	A	B	C
4 Bays	9'-8"	6'	2'-11"
		8'	5'-1"
		10'	7'-6"
5 Bays	11'-11"	6'	2'-11"
		8'	5'-1"
		10'	7'-6"
6 Bays	14'-2"	6'	2'-11"
		8'	5'-1"
		10'	7'-6"
7 Bays	16'-5"	6'	2'-11"
		8'	5'-1"
		10'	7'-6"
9 Bays	20'-11"	6'	2'-11"
		8'	5'-1"
		10'	7'-6"
10 Bays	23'-2"	6'	2'-11"
		8'	5'-1"
		10'	7'-6"
12 Bays	27'-8"	6'	2'-11"
		8'	5'-1"
		10'	7'-6"

Note: See Sheet 6 of 6 for minimum concrete structure reinforcement.

HORIZONTAL BRACED BACKUP ASSEMBLY

STATE OF FLORIDA DEPARTMENT OF TRANSPORTATION
ROAD DESIGN

HEX-FOAM SANDWICH SYSTEM

	Names	Dates
Designed By	WFG/HKH	2/93
Drawn By	HKH	2/93
Checked By	JVG	2/93
F.H.W.A. Approved:		

Approved By: Freddie Simmons
State Roadway Design Engineer

Revision No.	Sheet No.	Index No.
94	4 of 6	437

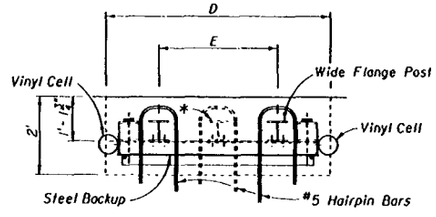

TOP VIEW

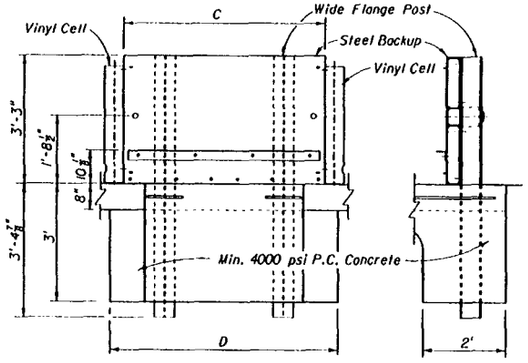

FRONT VIEW (W/O BAY UNITS) SIDE VIEW

BACKUP ASSEMBLY - UNIDIRECTIONAL

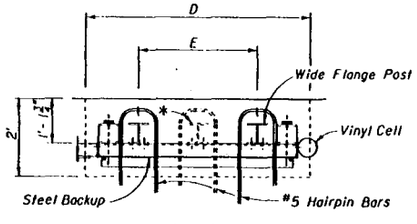

TOP VIEW

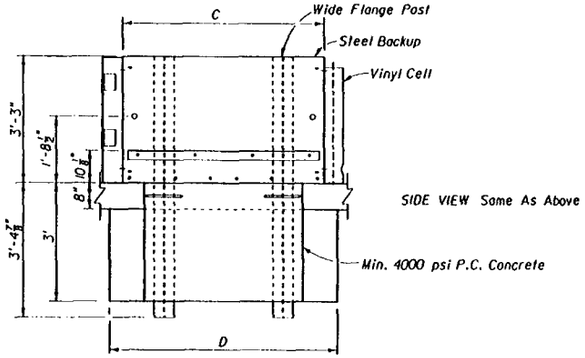

SIDE VIEW Same As Above

FRONT VIEW (W/O BAY UNITS)

BACKUP ASSEMBLY - BIDIRECTIONAL

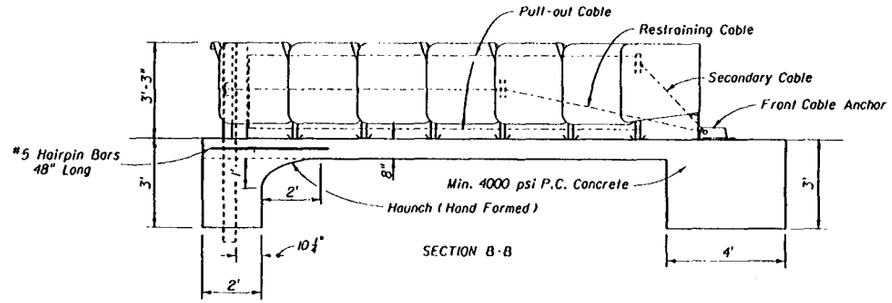

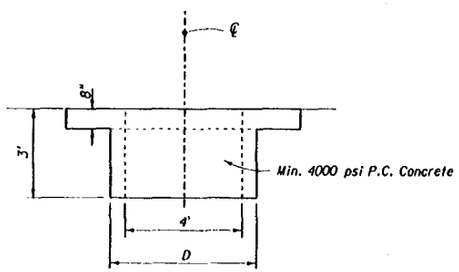

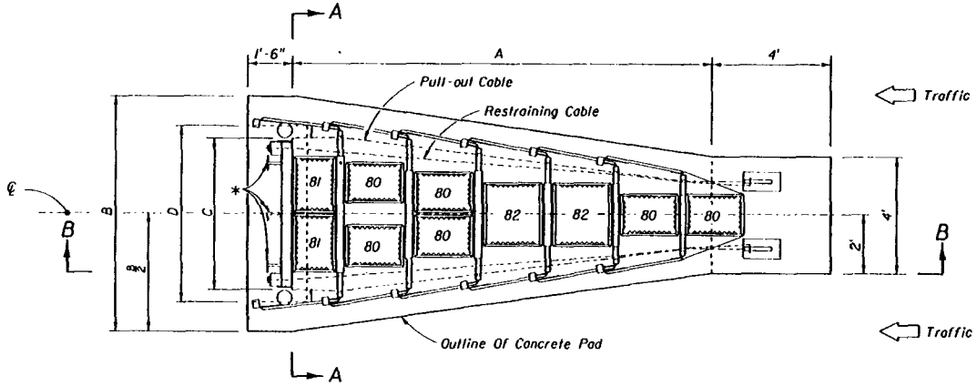

PLAN - UNIDIRECTIONAL UNIT (6 BAY UNIT SHOWN)

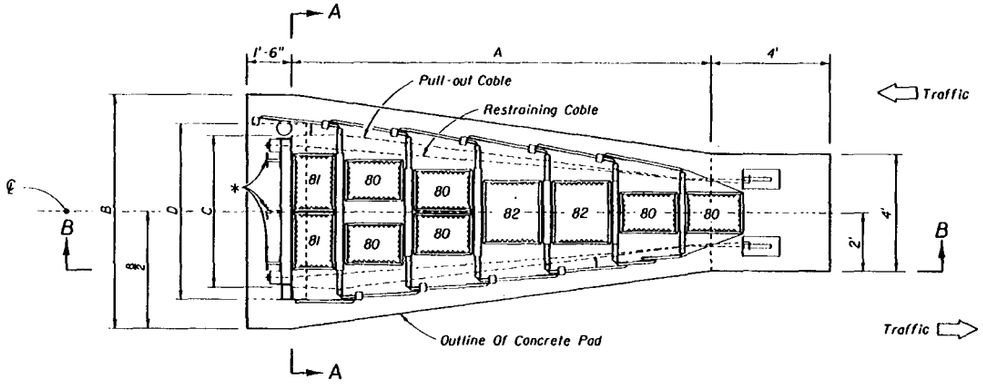

PLAN - BIDIRECTIONAL UNIT (6 BAY UNIT SHOWN)

* 2 WF posts are required on narrow and medium width systems,
3 WF posts are required on wide systems (C = 7'-6").

SUPPLEMENTAL DIMENSIONS					
NO. OF BAYS	A	B	C	D	E
4 Bays	9'-8"	6'	2'-11"	3'-7½"	1'-7½"
		8'	5'-1"	5'-0"	3'-0"
		10'	7'-6"	8'-6"	6'-8"
5 Bays	11'-11"	6'	2'-11"	3'-7½"	1'-7½"
		8'	5'-1"	5'-0"	3'-0"
		10'	7'-6"	8'-6"	6'-8"
6 Bays	14'-2"	6'	2'-11"	3'-7½"	1'-7½"
		8'	5'-1"	5'-0"	3'-0"
		10'	7'-6"	8'-6"	6'-8"
7 Bays	16'-5"	6'	2'-11"	3'-7½"	1'-7½"
		8'	5'-1"	5'-0"	3'-0"
		10'	7'-6"	8'-6"	6'-8"
9 Bays	20'-11"	6'	2'-11"	3'-7½"	1'-7½"
		8'	5'-1"	5'-0"	3'-0"
		10'	7'-6"	8'-6"	6'-8"
10 Bays	23'-2"	6'	2'-11"	3'-7½"	1'-7½"
		8'	5'-1"	5'-0"	3'-0"
		10'	7'-6"	8'-6"	6'-8"
12 Bays	27'-8"	6'	2'-11"	3'-7½"	1'-7½"
		8'	5'-1"	5'-0"	3'-0"
		10'	7'-6"	8'-6"	6'-8"

WIDE FLANGE BACKUP ASSEMBLY

STATE OF FLORIDA DEPARTMENT OF TRANSPORTATION
ROAD DESIGN

HEX-FOAM SANDWICH SYSTEM

	Names	Dates
Designed By	MFG/HKH	2/93
Drawn By	HKH	2/93
Checked By	JVG	2/93
F.H.W.A. Approved:		

Approved By: Freddie Simmons, State Highway Design Engineer

Revision No.	Sheet No.	Index No.
94	5 of 6	437

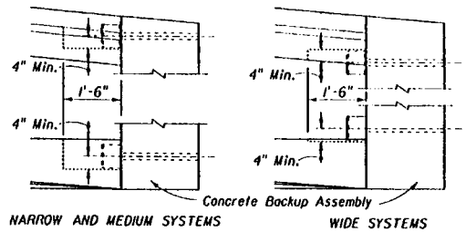

NARROW AND MEDIUM SYSTEMS WIDE SYSTEMS

RESTRAINING CABLE ACCESS NOTCH LOCATIONS WHEN CONNECTING TO CONCRETE BARRIER WALL (SHOULDER)

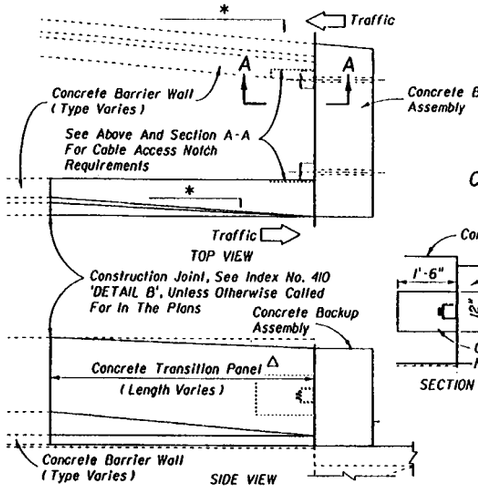

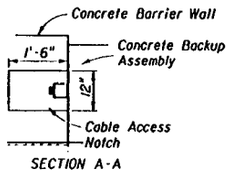

BARRIER WALL CONNECTION

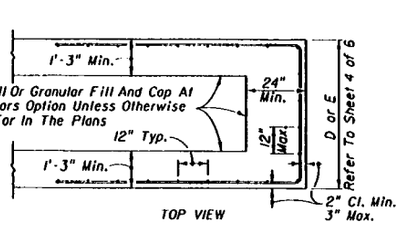

Note: All Reinforcement To Be No. 5 Bars

CONCRETE BACKUP STRUCTURE AND MINIMUM REINFORCEMENT FOR USE WITH HORIZONTAL BRACED BACKUP ASSEMBLIES

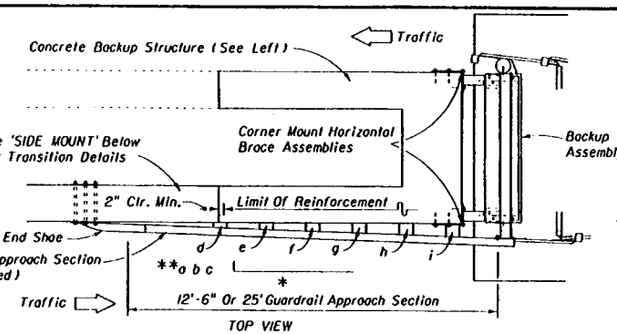

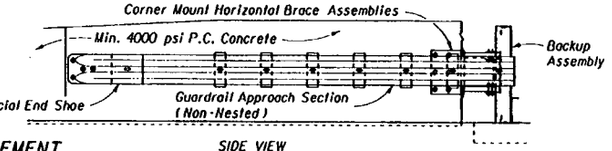

CORNER MOUNT

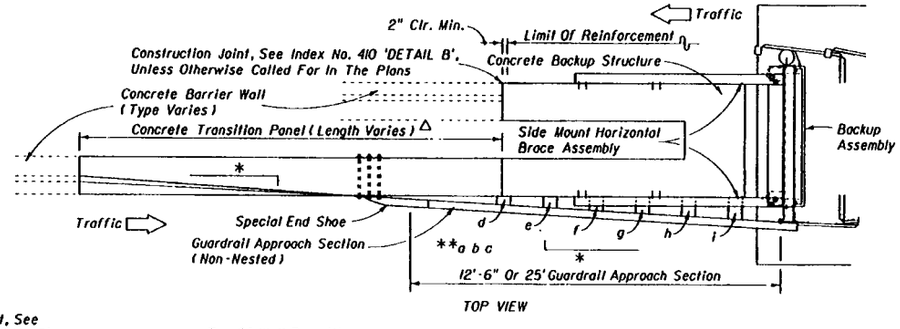

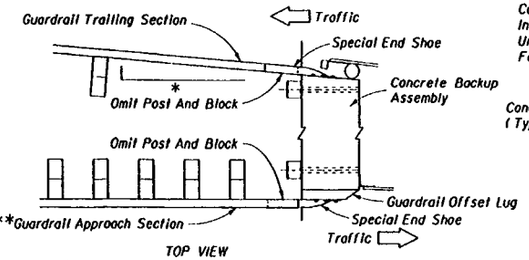

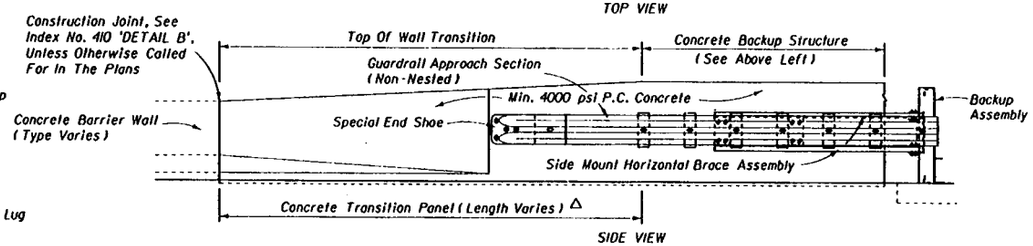

SIDE MOUNT

HORIZONTAL BRACED BACKUP ASSEMBLIES

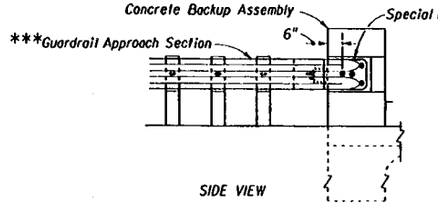

GUARDRAIL CONNECTION CONCRETE BACKUP ASSEMBLY

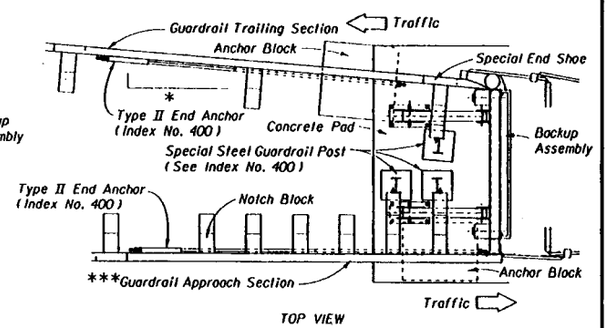

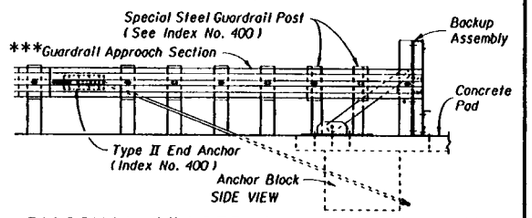

DIAGONAL BRACED BACKUP ASSEMBLY

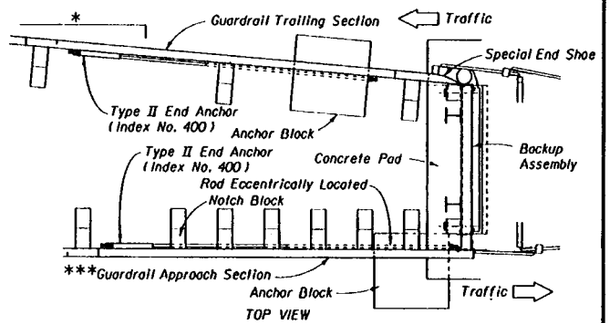

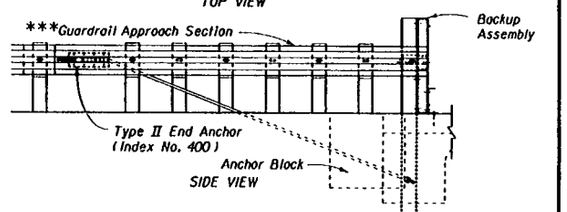

WIDE FLANGE BACKUP ASSEMBLY

△ In absence of core fill or fill and cap, construct footing in accordance with Index No. 410 'PLAIN CONCRETE BARRIER WALL (SHOULDER)'.

* 10:1 Or Flatter For Design Speeds Under 50 mph
15:1 Or Flatter For Design Speeds 50 mph And Greater

** Blocks a, b and c will be used on 25' guardrail approaches only. When 25' guardrail approaches are constructed, block a shall be spaced at 6'-3" and blocks b, c and d shall be spaced at 3'-1½". All other blocks shall be spaced 1'-6¼". Blocks a, c, d, f and h shall be anchored to the concrete structure with ⅝" dia. anchor bolts with 5" embedment, hex nuts and standard washers, all other blocks shall be bolted to the rail only. On 12'-6" guardrail approaches all blocks shall be spaced 1'-6¼". Blocks d, f, and h shall be anchored to the concrete structure, with ⅝" dia. anchor bolts with 5" embedment, hex nuts and standard washers, all other blocks shall be bolted to the rail only. All offset blocks are to be field trimmed.

*** For Approach Guardrail Information Including Post Spacing And Nested Beams See Index No. 400 'DETAIL J'.

When the use of thru bolts are impractical for the installation of guardrail, approved chemical anchors may be used when installed in accordance with the anchor manufacturers specifications. Diameters shall be in accordance with Index No. 400. Minimum embedment shall be 6¾" for ⅝" dia. anchors and 5" for ¾" dia. anchors.

Cost of furnishing and installing guardrail items, including guardrail panels, special end shoes, standard posts and offset blocks, and all guardrail attachment hardware, shall be included in the contract unit price for Guardrail (Roadway), L.F.

Cost of furnishing and installing special steel guardrail posts shall be included in the contract unit price for Guardrail Post Special, Each.

Cost of furnishing and installing concrete and reinforcing steel for concrete backup structures and concrete transition panels shall be included in the contract unit price for Impact Attenuator Vehicular (Hex-Foam Sandwich), Each.

TRANSITION SECTIONS

STATE OF FLORIDA DEPARTMENT OF TRANSPORTATION
ROAD DESIGN

HEX-FOAM SANDWICH SYSTEM

	Names	Dates
Designed By	MFG/HKH	2/93
Drawn By	HKH	2/93
Checked By	JVG	2/93

Approved By Jaddie Summers
State Roadway Design Engineer

F.H.W.A. Approved:

Revision No.	Sheet No.	Index No.
94	6 of 6	437

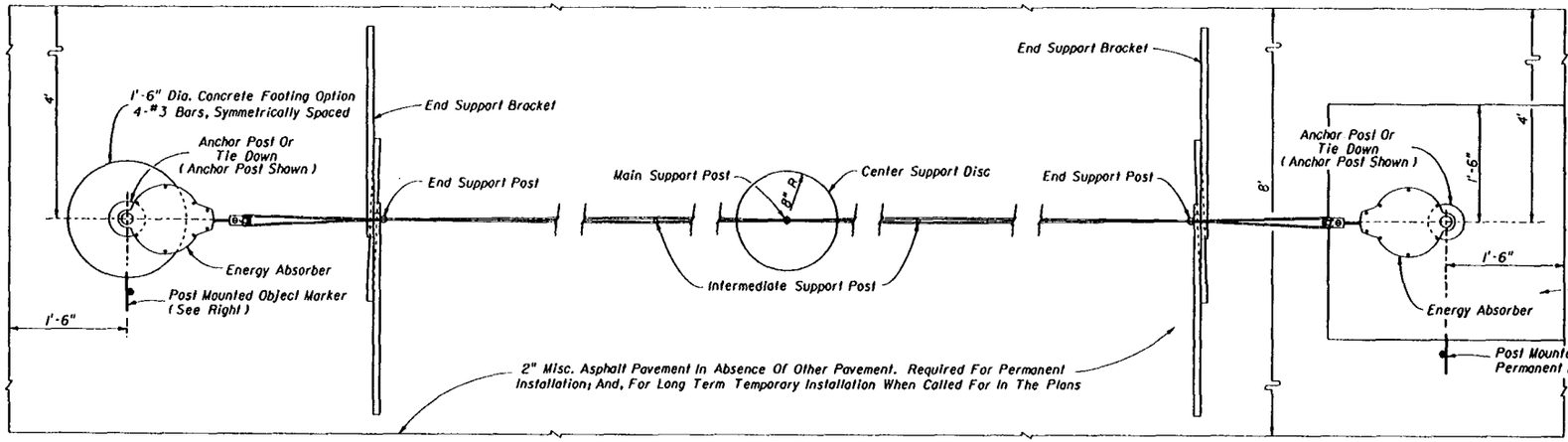

PLAN

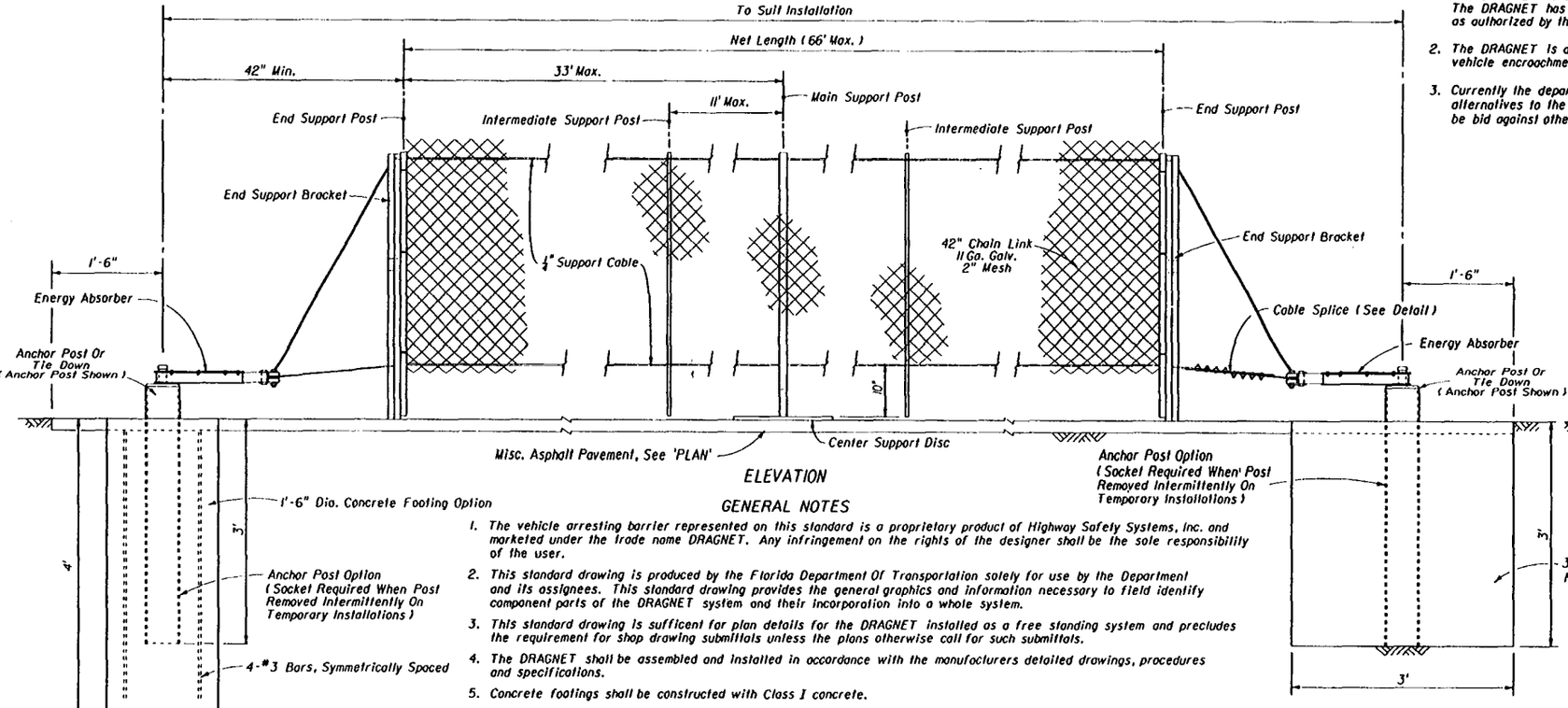

ELEVATION

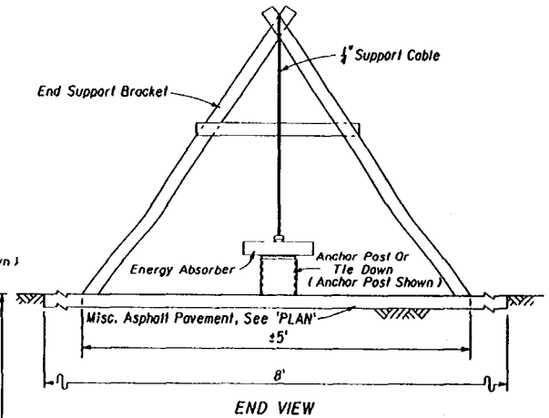

END VIEW

DESIGN NOTES AND GUIDELINES

1. The DRAGNET is designed to safely stop automobiles when impacted at speeds of 60 mph or less. The DRAGNET has a singular design and any adjustment to its design will not be permitted except as authorized by the manufacturer.
2. The DRAGNET is a restorable system that is particularly suited to the prevention of head-on vehicle encroachment into hazardous areas.
3. Currently the department does not recognize other proprietary items as being equally suitable alternatives to the DRAGNET and until such alternatives are available, the DRAGNET need not be bid against other proprietary items.

GENERAL NOTES

1. The vehicle arresting barrier represented on this standard is a proprietary product of Highway Safety Systems, Inc. and marketed under the trade name DRAGNET. Any infringement on the rights of the designer shall be the sole responsibility of the user.
2. This standard drawing is produced by the Florida Department Of Transportation solely for use by the Department and its assignees. This standard drawing provides the general graphics and information necessary to field identify component parts of the DRAGNET system and their incorporation into a whole system.
3. This standard drawing is sufficent for plan details for the DRAGNET installed as a free standing system and precludes the requirement for shop drawing submittals unless the plans otherwise call for such submittals.
4. The DRAGNET shall be assembled and installed in accordance with the manufacturers detailed drawings, procedures and specifications.
5. Concrete footings shall be constructed with Class I concrete.
6. Each temporary DRAGNET assembly shall include a spare parts package consisting of two extra arresting tapes and a set of end support brackets. The spare parts package shall be stored on site at locations approved by the Engineer. Damaged attenuators shall be restored within 24 hours. The cost of furnishing and maintaining spare parts packages for each attenuator shall be included in the cost of the attenuator.
7. The cost of the DRAGNET shall include furnishing and installing all components and materials necessary for a complete installation and will be paid for under the contract unit price for Impact Attenuator Vehicular (DRAGNET), Each, for permanent installations or Impact Attenuator Vehicular (DRAGNET) (Temp.), Each, for temporary installations.

STATE OF FLORIDA DEPARTMENT OF TRANSPORTATION
ROAD DESIGN

DRAGNET

	Names	Dates
Designed By	MFG/HKH	10/91
Drawn By	HKH	10/91
Checked By	JVG	10/91
F.H.W.A. Approved:		

Approved By Freddie Simmons
State Roadway Design Engineer

Revision No.	Sheet No.	Index No.
94	1 of 2	438

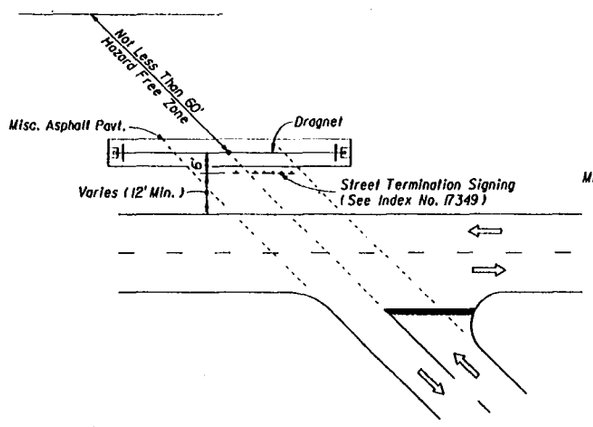

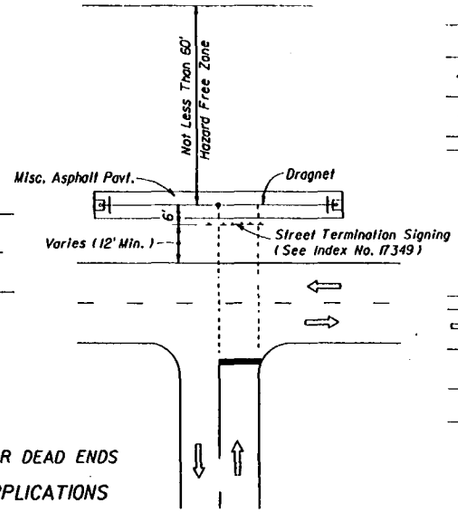

'T' INTERSECTIONS OR DEAD ENDS

PERMANENT APPLICATIONS

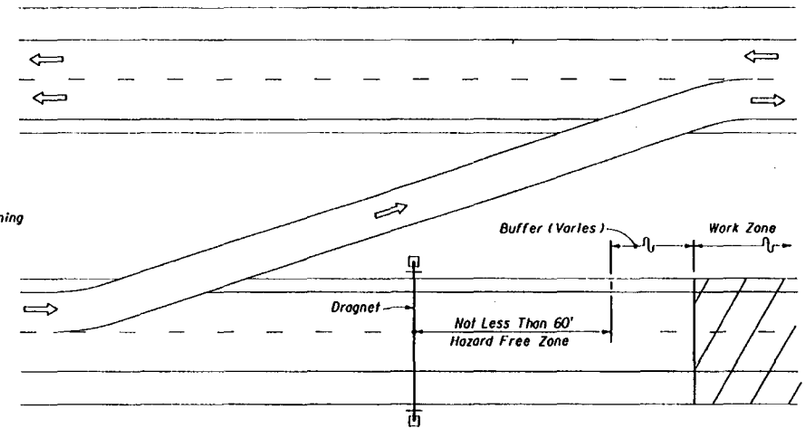

TEMPORARY ROADWAY CLOSURES

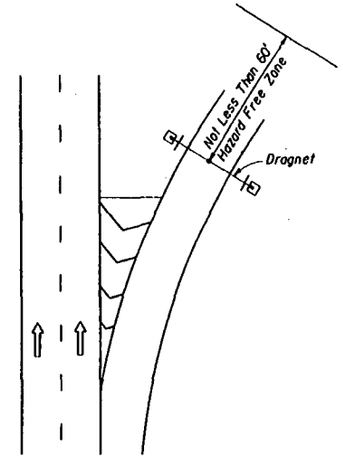

TEMPORARY RAMP CLOSURES

See Index No. 600 For Traffic Control Through Work Zones

TEMPORARY APPLICATIONS

TYPICAL APPLICATIONS

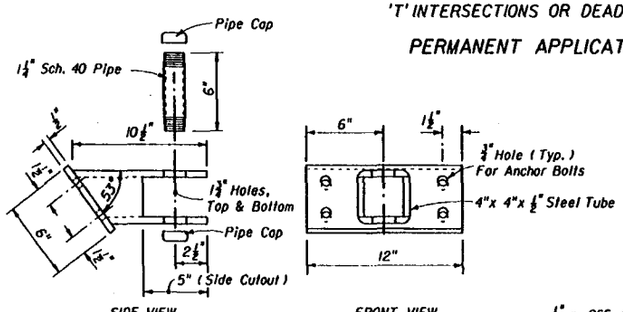

SIDE VIEW FRONT VIEW

For Use On Concrete Barrier Installation

TIE DOWN

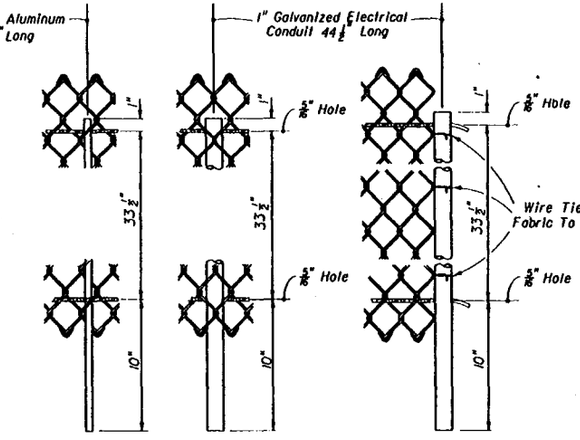

INTERMEDIATE SUPPORT POST

MAIN SUPPORT POST

END SUPPORT POST

SUPPORT POST DETAILS

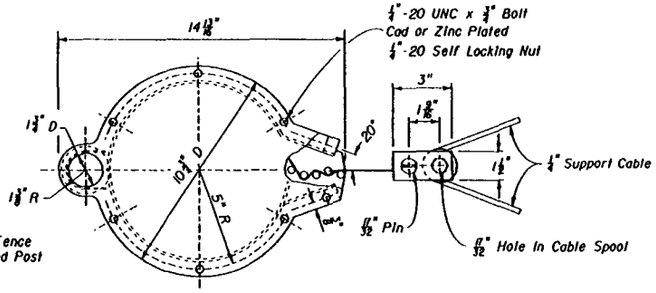

PLAN

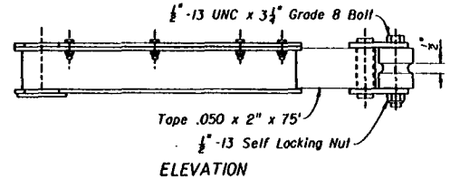

ELEVATION

ENERGY ABSORBER ASSEMBLY

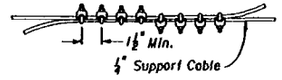

'U' Bolt Presses Against Dead End Of Cable.
Torque Nuts To 130 In. Lbs. (8 Required)

CABLE SPLICE DETAIL

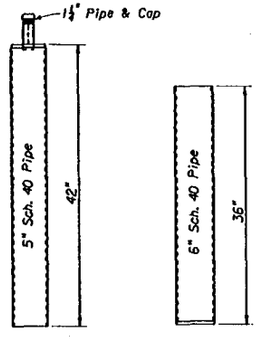

ANCHOR POST ASSEMBLY

ANCHOR POST SOCKET

For Use Where Anchor Post Is To Be Removed.

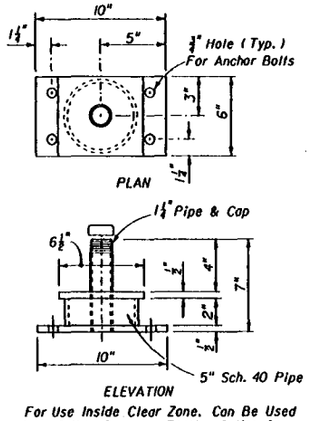

TIE DOWN

For Use Inside Clear Zone. Can Be Used With Either Concrete Footing Option Or On Existing Concrete Slab.

ANCHOR DETAILS

Note: Tie down anchor bolts shall be ½" dia. adhesive anchors with 4½" min. embedment, installed to manufacturers specifications; 4 required per tie down.

STATE OF FLORIDA DEPARTMENT OF TRANSPORTATION
ROAD DESIGN

DRAGNET

	Names	Dates
Designed By	WFG/HKH	10/91
Drawn By	HKH	10/91
Checked By	JVG	10/91
F.H.W.A. Approved:		

Approved By Freddie Simmons
State Roadway Design Engineer

Revision No.	Sheet No.	Index No.
94	2 of 2	438

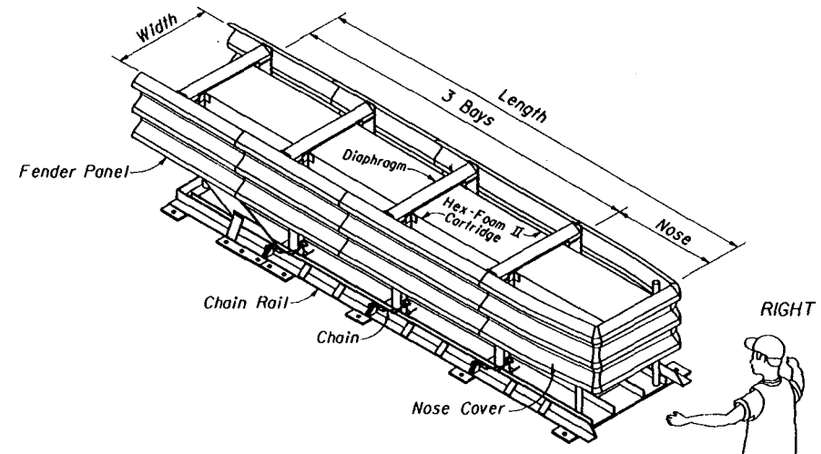

(45 mph Or Less)

3 BAY UNIT

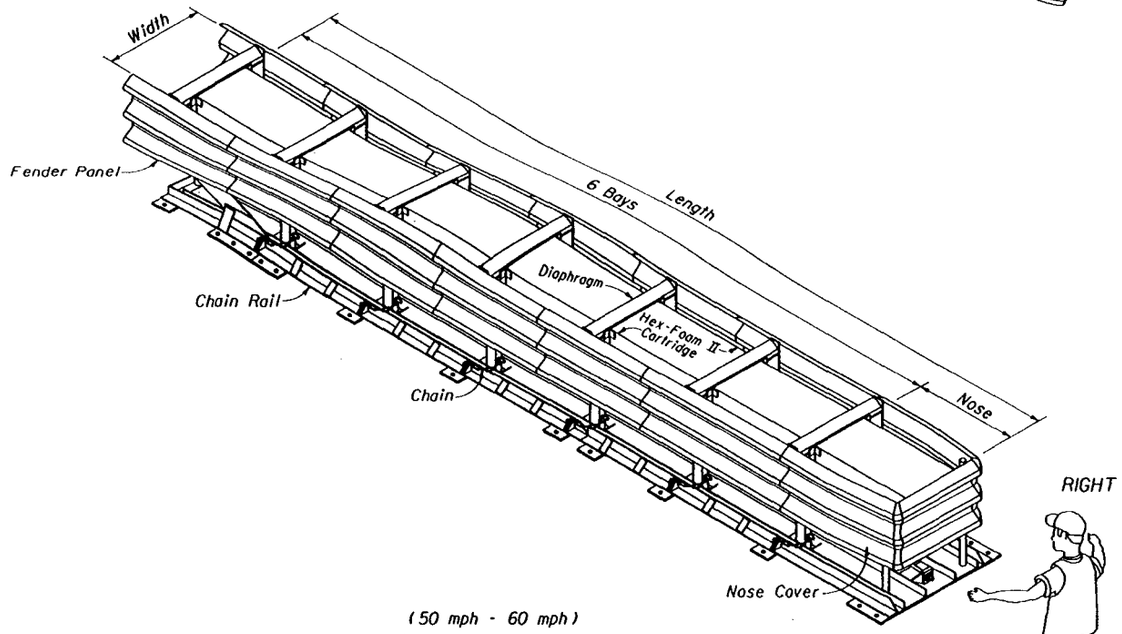

(50 mph - 60 mph)

6 BAY UNIT

GENERAL NOTES

1. The energy absorbing system represented on this standard drawing is a proprietary design by Energy Absorption Systems, Inc. and marketed under the trade name G-R-E-A-T_{CZ}, short for Construction Zone Guard Rail Energy Absorbing Terminal. Any infringement on the rights of the designer shall be the sole responsibility of the user.

2. This standard drawing is produced by the Florida Department Of Transportation solely for use by the Department and its assignees. This standard drawing provides the general graphics and information necessary to field identify component parts of the G-R-E-A-T_{CZ} System (G-R-E-A-T_{CZ}) and their incorporation into a whole system.

3. This standard drawing is sufficient for plan details for the G-R-E-A-T_{CZ} installed as a free standing system or installed in connection with concrete barrier walls and other fixed barrier systems, and precludes the requirement for shop drawing submittals unless the plans otherwise call for such submittals.

4. The G-R-E-A-T_{CZ} shall be assembled and installed in accordance with the manufacturers detailed drawings, procedures and specifications.

5. The standard widths for the 3-bay and 6-bay G-R-E-A-T_{CZ} are 2'-0" and 2'-6".

6. Connection between the G-R-E-A-T_{CZ} and guardrail shall be as shown in the 'Transition Assembly Features' on Index No. 431.

   For concrete barrier wall with unidirectional traffic there is no connection between the G-R-E-A-T_{CZ} and the wall. The G-R-E-A-T_{CZ} should abut the end of the wall, but a space not to exceed 1" is allowed. For concrete barrier wall with bidirectional traffic, the transitional panel shown on the "Tension Strut Backup Assembly 'Insert'" details shall be the only connection between the G-R-E-A-T_{CZ} and the wall.

   Variation from the connections described above shall be as detailed in the plans or as prescribed by the manufacturer.

7. Only the G-R-E-A-T_{CZ} Hex-Foam II cartridges shall be used in all bays and the nose section.

8. The G-R-E-A-T_{CZ} shall be constructed on cross slopes 12.5% or flatter.

9. All metallic components shall meet the galvanizing requirements for guardrail, Index No. 400.

10. Both chemical bolt anchors (MP-3 anchors) and anchor pins are supplied with each G-R-E-A-T_{CZ} unit purchase. For units that are relocated and require reset anchorage, the user shall reinstall the unit with manufacturer supplied new MP-3 anchors or anchor pins, or, with other anchors as approved by the G-R-E-A-T_{CZ} manufacturer.

11. G-R-E-A-T_{CZ} units that have been impacted by vehicles but are to be repaired and remain in service shall have design condition anchorages when restorations are complete. Units with disturbed anchors can be repositioned over undisturbed foundation and reset, or, reset in place with the disturbed portions of their foundations restored to design condition. All disturbed MP-3 anchors are to be replaced; any disturbed anchor pin that remains undamaged can be reused.

12. The G-R-E-A-T_{CZ} manufacturer's 'Driveable Pile Anchor System' (DPA system) is not a part of this standard. Any use of the DPA System will require shop drawing approval.

13. The cost for foundations, subgrade preparation and miscellaneous asphalt shown on this index shall be included in the cost for the G-R-E-A-T_{CZ} system. The G-R-E-A-T_{CZ} System will be paid for under the contract unit price for Impact Attenuator, Vehicular, With Spare Parts (GREAT) (TEMP), Each.

DESIGN NOTES AND GUIDELINES

1. The G-R-E-A-T_{CZ} System (G-R-E-A-T_{CZ}) is designed to cushion automobile end-on hits and to redirect automobiles from side hits. The G-R-E-A-T_{CZ} is designed to shield narrow fixed hazards or the ends of other fixed barrier systems. The 6 Bay Unit shall be used for work zone speeds of 50 mph and above, up to and including 60 mph. The 3 Bay Unit can be used for work zone speeds of 45 mph or less.

2. The G-R-E-A-T_{CZ} is a restorable system that is particularly suited to shielding hazards subject to high speed traffic, high volume traffic, and/or traffic with a history of frequent errant vehicle departures from the roadway or the potential exists for such departures. The G-R-E-A-T_{CZ} alone is not suited to shielding a wide hazard. The G-R-E-A-T_{CZ} is particularly suited to shielding hazards where the approach space is limited; and, is particularly suited to conditions where the terminal must be located close to the traffic lane.

3. Currently the Department does not recognize other proprietary items as being equally suitable alternatives to the G-R-E-A-T_{CZ}, and until such alternatives are available, the G-R-E-A-T_{CZ} need not be bid against other proprietary items.

STATE OF FLORIDA DEPARTMENT OF TRANSPORTATION
ROAD DESIGN

CONSTRUCTION ZONE G-R-E-A-T

	Names	Dates
Designed By	MFG/JVG	10/91
Drawn By	JBW	10/91
Checked By	JVG/RER	10/91
F.H.W.A. Approved:		

Approved By Freddie Simmons
State Roadway Design Engineer

Revision No.	Sheet No.	Index No.
92	1 of 5	439

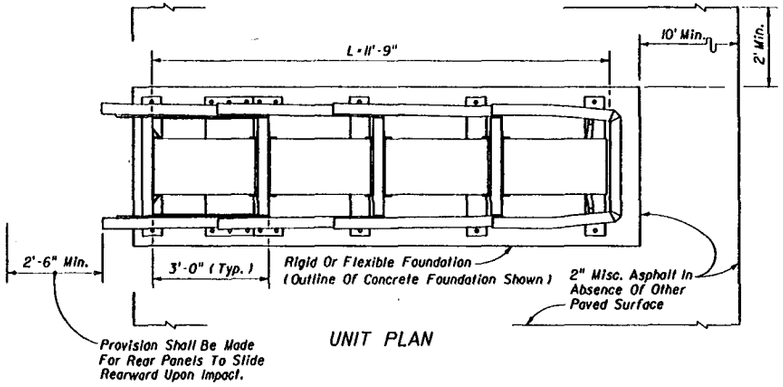

UNIT PLAN

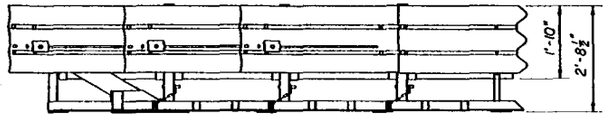

UNIT ELEVATION

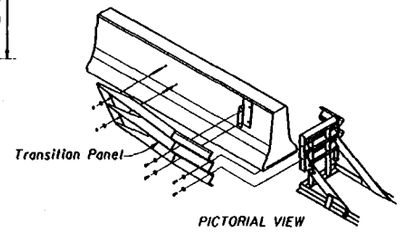

PICTORIAL VIEW

INSET

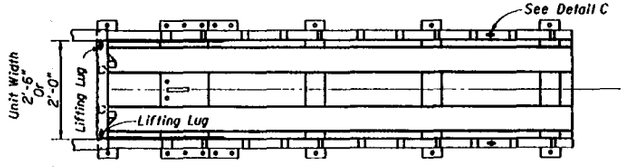

STRUT AND RAIL PLAN

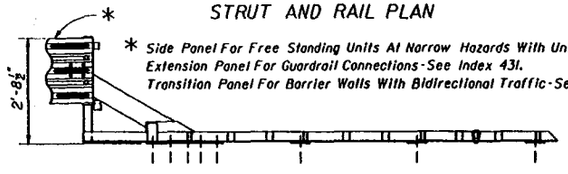

* Side Panel For Free Standing Units At Narrow Hazards With Unidirectional Traffic.
Extension Panel For Guardrail Connections - See Index 431.
Transition Panel For Barrier Walls With Bidirectional Traffic - See INSET.

STRUT AND RAIL ELEVATION

3 BAY UNIT

UNIT PLAN



UNIT ELEVATION

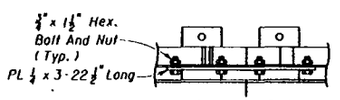

Chain Rail Splice
DETAIL A

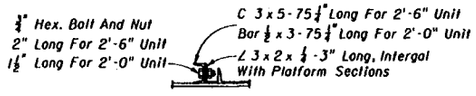

Channel Splice
DETAIL B

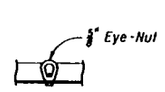

Lifting Lug
DETAIL C

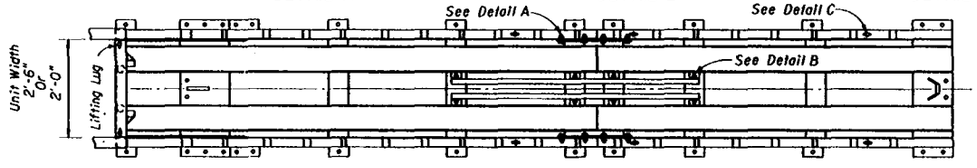

STRUT AND RAIL PLAN

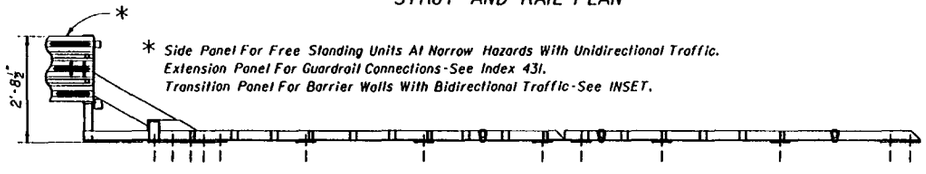

* Side Panel For Free Standing Units At Narrow Hazards With Unidirectional Traffic.
Extension Panel For Guardrail Connections - See Index 431.
Transition Panel For Barrier Walls With Bidirectional Traffic - See INSET.

STRUT AND RAIL ELEVATION

6 BAY UNIT

TENSION STRUT BACKUP ASSEMBLY

STATE OF FLORIDA DEPARTMENT OF TRANSPORTATION
ROAD DESIGN

CONSTRUCTION ZONE
G-R-E-A-T

	Names	Dates
Designed By	MFG/JNG	11/91
Drawn By	JBW	11/91
Checked By	JNG/RER	11/91
F.H.W.A. Approved:		

Approved By: Freddie Simmons
State Roadway Design Engineer

Revision No.	Sheet No.	Index No.
92	2 of 5	439

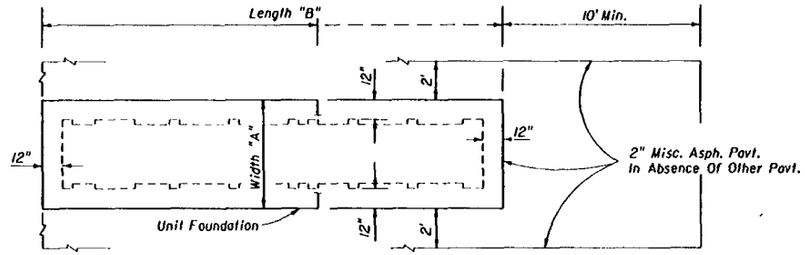

PLAN

FOUNDATION DIMENSIONS			
UNIT		Width "A"	Length "B"
Bays	Width		
3	2'-0"	5'-0"	14'-2½"
	2'-6"	5'-6"	14'-2½"
6	2'-0"	5'-0"	23'-2½"
	2'-6"	5'-6"	23'-2½"

FOUNDATION PAD & MISCELLANEOUS ASPHALT PAVEMENT

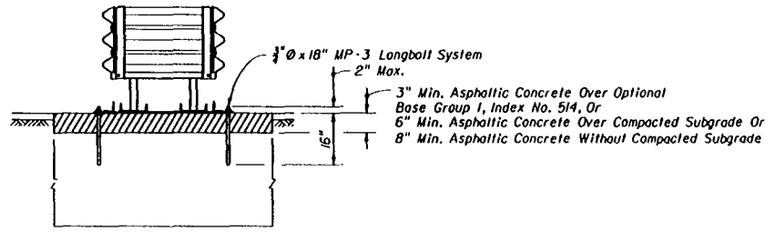

SECTION CC

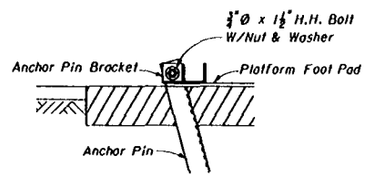

DETAIL A

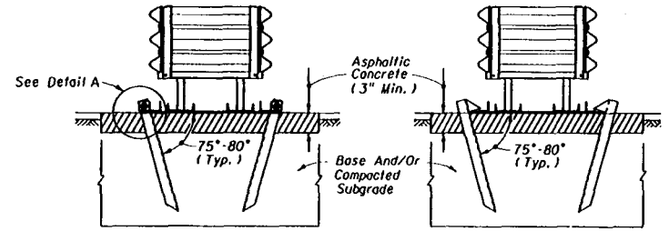

SECTION AA

SECTION BB

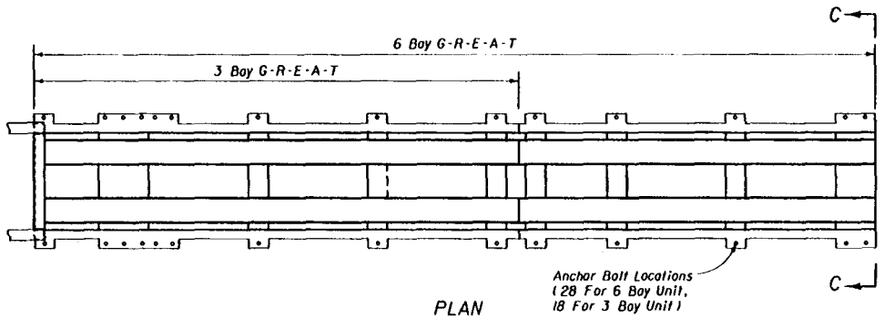

PLAN

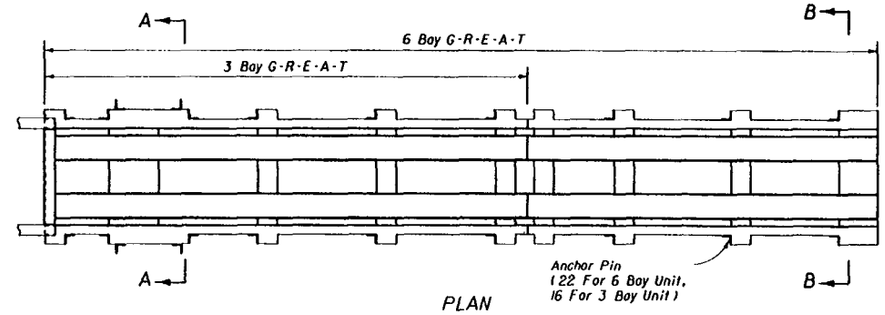

PLAN

MP-3 LONGBOLT ANCHOR SYSTEM

ANCHOR PIN SYSTEM

FLEXIBLE FOUNDATIONS

STATE OF FLORIDA DEPARTMENT OF TRANSPORTATION
ROAD DESIGN

CONSTRUCTION ZONE
G-R-E-A-T

	Names	Dates
Designed By	MFG/JWC	11/94
Drawn By	JBW	11/94
Checked By	JWC/REA	11/94
F.H.W.A. Approved:		

Approved By: Freddie Simmons
State Roadway Design Engineer

Revision No.	Sheet No.	Index No.
92	3 of 5	439

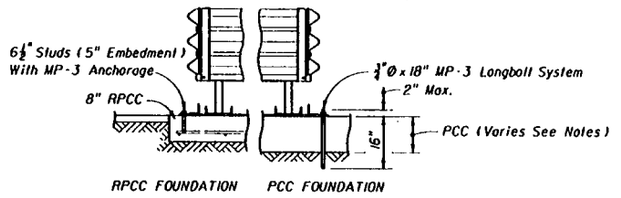

SECTIONS CC (HALF SECTIONS)

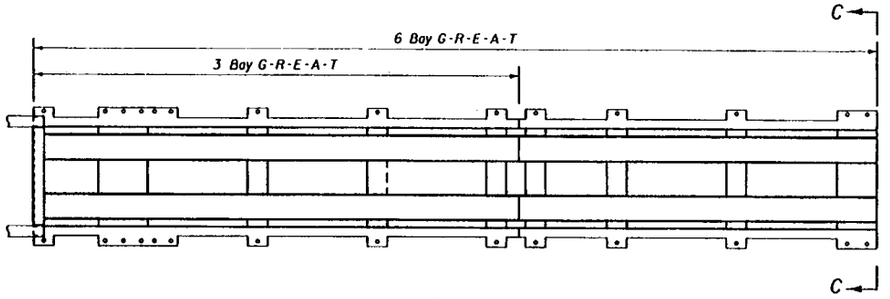

PLAN

MP-3 ANCHOR SYSTEM

RIGID FOUNDATION NOTES

1. The reinforced portland cement concrete (RPCC) foundation is designed to make the G-R-E-A-T_{CZ} a transportable system. The slab foundation shall be constructed with 4000 psi min. compressive strength concrete. The slab shall be seated so the top of the slab is flush with the surface intended for approaching vehicles. The surrounding surface shall be paved as shown in this index on the 'Unit Plan' for the 'Tension Strut Backup Assembly'. The G-R-E-A-T_{CZ} shall be anchored exclusively with the 6½" MP-3 anchor system supplied with the G-R-E-A-T_{CZ} unit, unless another anchor is supplied or approved by the G-R-E-A-T_{CZ} manufacturer.

2. The nonreinforced portland cement concrete (PCC) foundation shall be Class I concrete, having plan dimensions equal to or greater than those for the RPCC foundation. The PCC foundation utilization options are as follows: (a) Poured in place as an expendable slab, having a thickness of not less than 6"; disposal of the slab will be as approved by the Engineer, (b) Project constructed roadway PCC pavement, or, (c) Existing 9" PCC roadway pavement.

   The utilization option applied shall be as approved by the Engineer on a site specific basis. The top of the PCC foundation shall be flush with the surface intended for approaching vehicles. In absence of surrounding pavement the surrounding surface shall be paved as shown in this index on the 'Unit Plan' for the 'Tension Strut Backup Assembly'.

   The G-R-E-A-T_{CZ} installed on PCC pavement shall be anchored only with the MP-3 Longbolt system supplied with the G-R-E-A-T_{CZ} unit. Holes for the 18" anchors shall be drilled through both existing and new pavements. When the G-R-E-A-T_{CZ} is removed from the project pavement or from existing pavement that is to remain in place, the longbolt anchor shall be cut off flush with the top of the pavement, unless the plans call for other treatment.

3. For additional information see the General Notes.

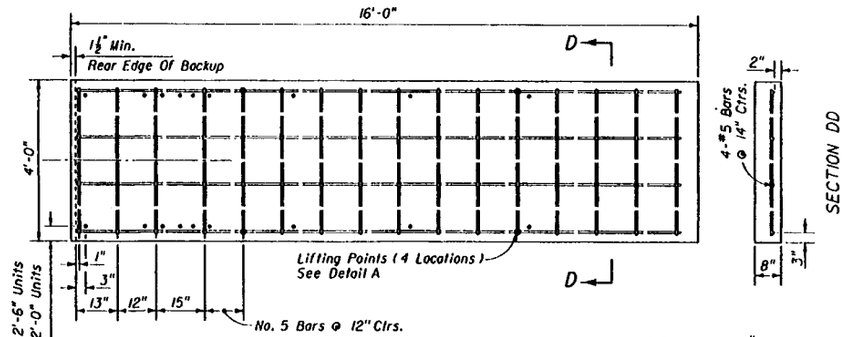

PLAN

3 BAY UNIT

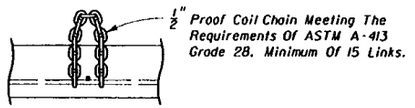

DETAIL A

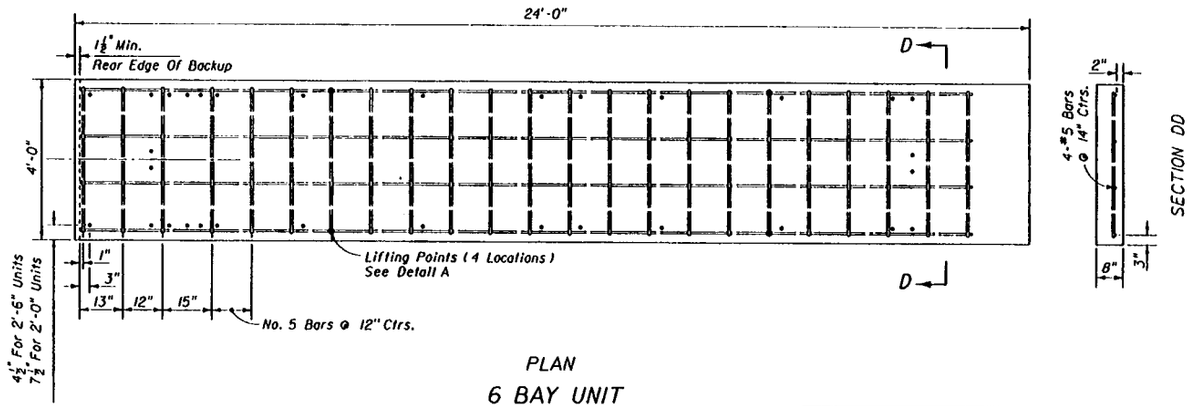

PLAN

6 BAY UNIT

REINFORCED CONCRETE PAD SYSTEM (RPCC)

RIGID FOUNDATIONS

STATE OF FLORIDA DEPARTMENT OF TRANSPORTATION
ROAD DESIGN

CONSTRUCTION ZONE G-R-E-A-T

	Names	Dates
Designed By	MFG/JMG	11/94
Drawn By	JBW	11/94
Checked By	JMG/RER	11/94
F.H.W.A. Approved:		

Approved By: Freddie Simmons
State Roadway Design Engineer

Revision No.	Sheet No.	Index No.
92	4 of 5	439

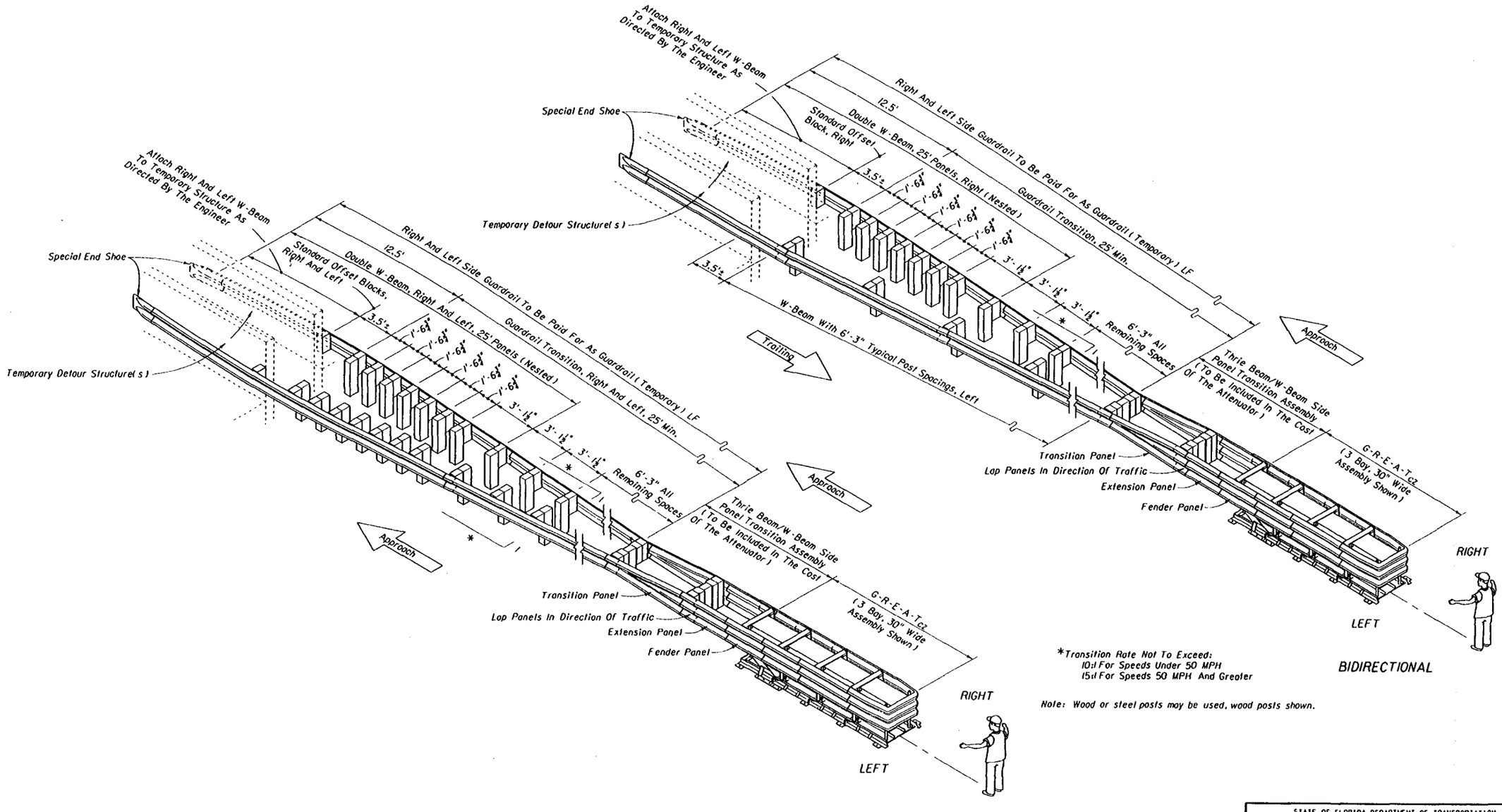

GUARDRAIL TRANSITION TO TEMPORARY DETOUR STRUCTURES

STATE OF FLORIDA DEPARTMENT OF TRANSPORTATION
ROAD DESIGN

CONSTRUCTION ZONE G-R-E-A-T

	Names	Dates
Designed By	MFG/STD	12/93
Drawn By	HKH	12/93
Checked By	JVG	12/93
F.H.W.A. Approved:		

Approved By: Freddie Simmons
State Roadway Design Engineer

Revision No.	Sheet No.	Index No.
94	5 of 5	439

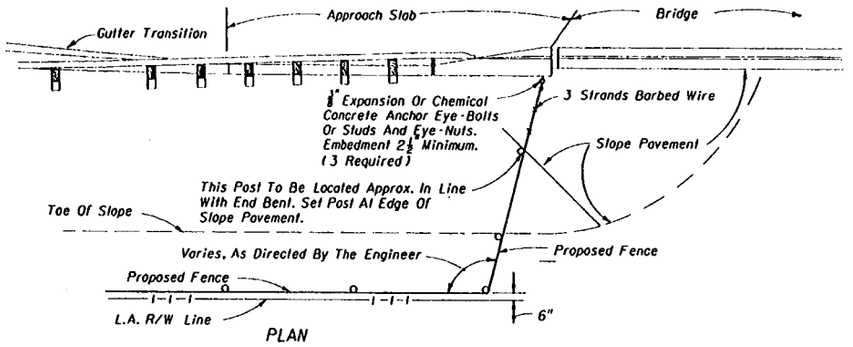

FENCING TERMINALS AT BRIDGE ENDS
(ROADWAY)

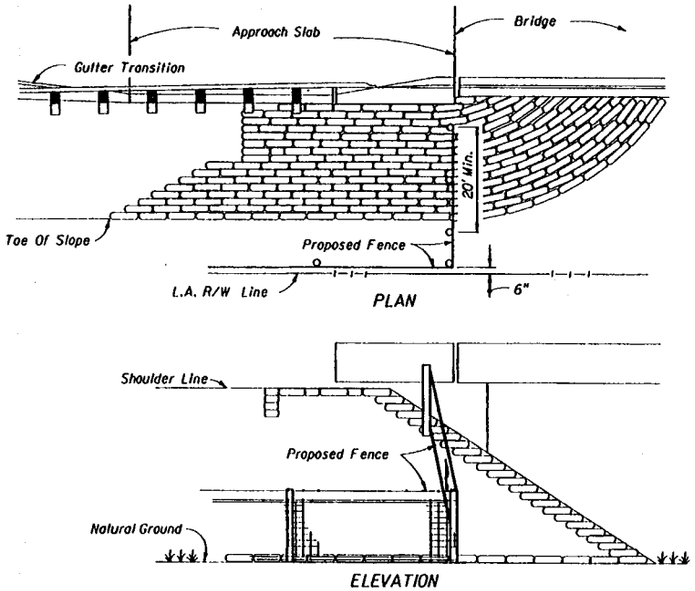

FENCING TERMINALS AT BRIDGE ENDS
(STREAM CROSSING)

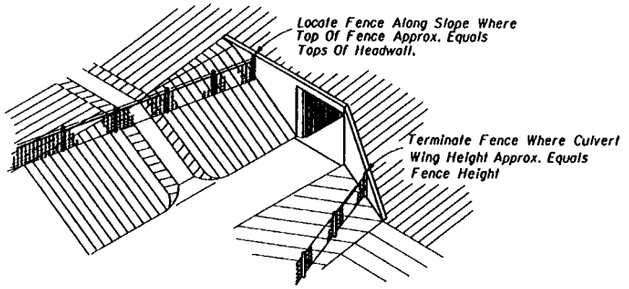

PICTORIAL VIEW

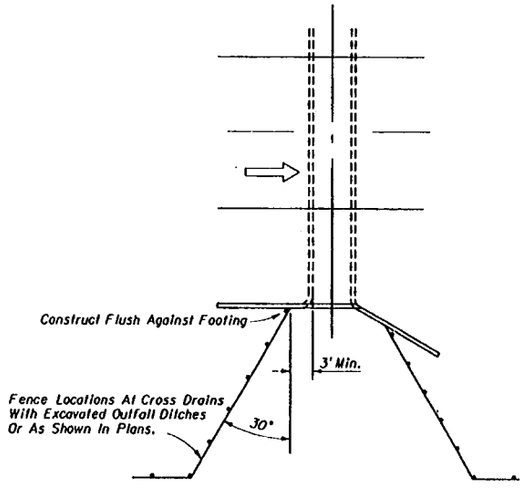

PLAN
(For Heights Of Headwall Greater Than 4')
FENCING TERMINALS AT BOX CULVERTS

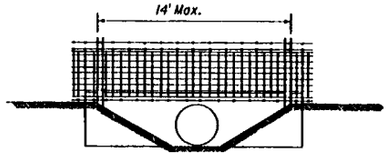

FENCING DETAIL AT CULVERT
(For Heights Of Headwalls 4' Or Less.)

Note: When height of headwall is 4' or less (drainage pipe 36" or less) the fence shall not be tied to the headwall, but shall span the lateral ditch.

STATE OF FLORIDA DEPARTMENT OF TRANSPORTATION
ROAD DESIGN

FENCE LOCATION

	Names	Dates
Designed By	HFW	02/65
Drawn By	HFW	02/65
Checked By	RLO	02/65
F.H.W.A. Approved:		06/18/74

Approved By: Freddie Simmons
State Roadway Design Engineer

Revision No.	Sheet No.	Index No.
92	1 of 2	450

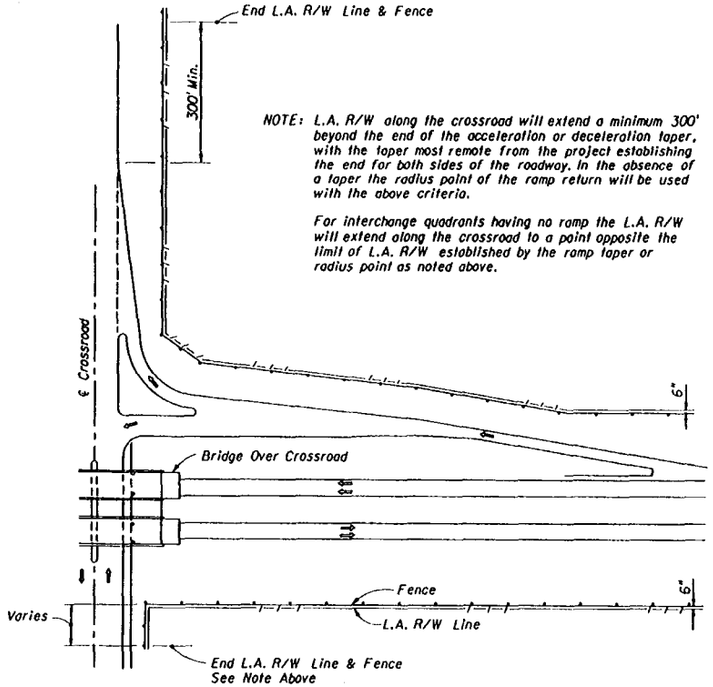

APPLIES TO BRIDGE OVER CROSSROAD AND CROSSROAD OVER FREEWAY (BRIDGE OVER CROSSROAD SHOWN)

FENCING TERMINALS AT RURAL INTERCHANGES

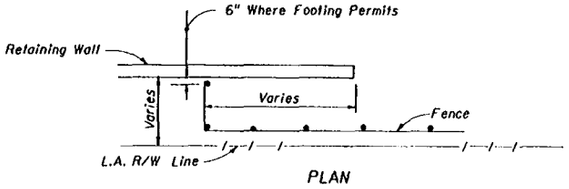

PLAN

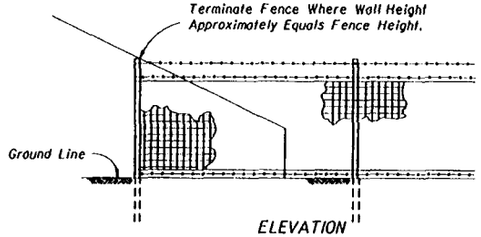

ELEVATION

FENCING TERMINALS AT RETAINING WALLS

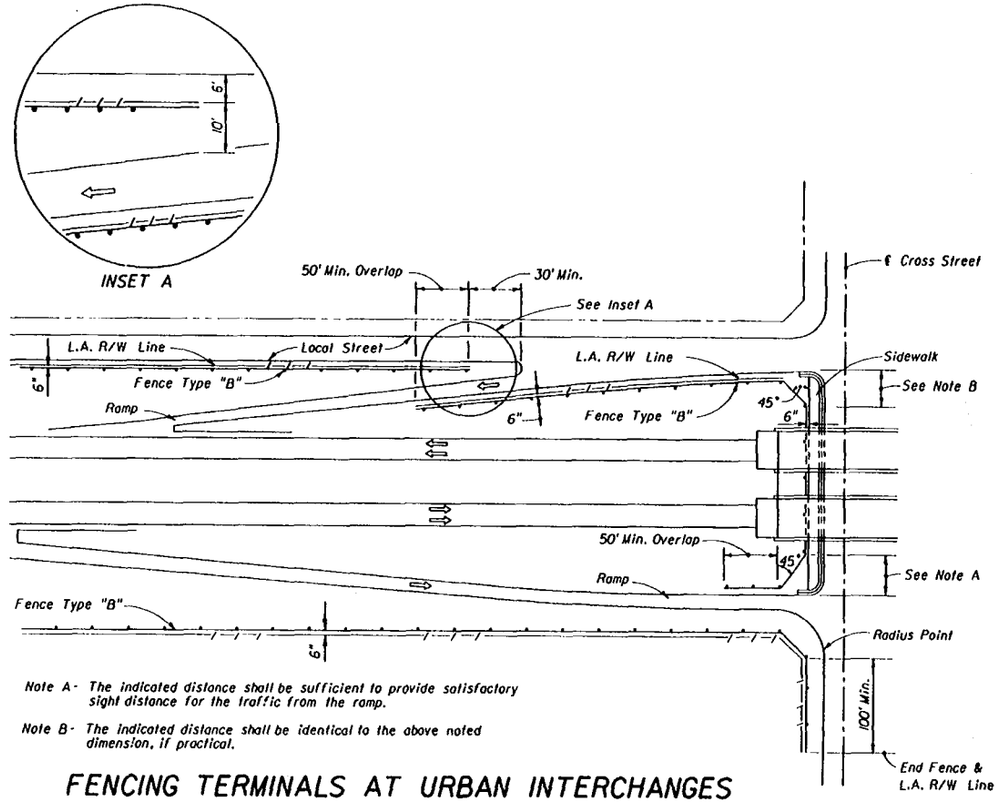

Note A- The indicated distance shall be sufficient to provide satisfactory sight distance for the traffic from the ramp.

Note B- The indicated distance shall be identical to the above noted dimension, if practical.

FENCING TERMINALS AT URBAN INTERCHANGES

STATE OF FLORIDA DEPARTMENT OF TRANSPORTATION
ROAD DESIGN

FENCE LOCATION

	Names	Dates
Designed By	HFW	02/65
Drawn By	HFW	02/65
Checked By	ALO	02/65
F.H.W.A. Approved:		05/18/74

Approved By: Freddie Simmons
State Roadway Design Engineer

Revision No.	Sheet No.	Index No.
92	2 of 2	450

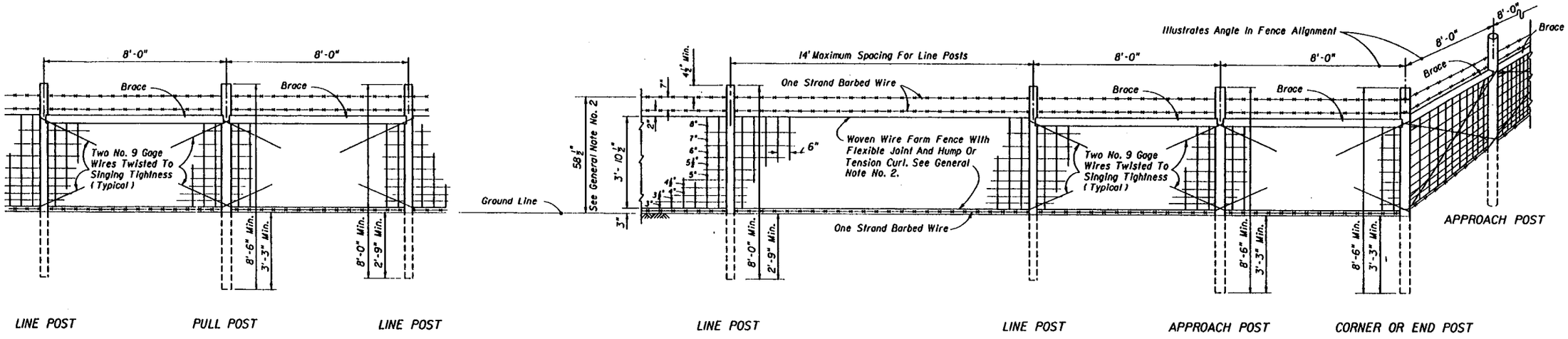

TIMBER POSTS ILLUSTRATED

GENERAL NOTES

1. This fence to be provided generally in rural areas. For supplemental information see Section 550 of the FDOT Specifications.
2. Fabric shall be woven wire, either galvanized steel, meeting the requirements of ASTM A116, No. 9 Farm, Design Number 1047-6-9, with Class 3 zinc coating, or aluminum coated steel, meeting the requirements of ASTM A584, No. 9 Farm, Design Number 1047-6-9, with a minimum coating weight of 0.40 ounces per square foot. For additional information see payment note below.
3. Fence shall be installed with wire side to private property except on horizontal curves greater than 3° the fence shall be installed so as to pull against all posts.
4. Posts and braces may be either steel, timber or concrete. Unless a specific post material is called for in the plans, the Contractor may elect to use either a single material or a combination of steel, timber or concrete materials. Line posts of one material may be used with corner, pull and end post assemblies of a different material. Line posts of only one optional material and pull post assemblies of only one optional material will be permitted between corner and end post assemblies. Within individual corner and end post assemblies only one optional material will be permitted.
5. Timber line posts are to be minimum 4" diameter. Timber corner, pull, approach and end posts are to be minimum 5" diameter. Timber braces are to be minimum 4" diameter.
   (A) Staples for line posts to be 1½" minimum length; for approach, corner and pull posts 1¾" minimum length. At approach, corner and pull posts, staple every line wire. At line posts, staple every line wire in top half and alternate line wires in bottom half. Staples shall be driven diagonally across the line wire with the points in separate grains.
   (B) Connections between timber posts and braces to be provided by dowels as shown in fastener details.
   (C) Wire to be wrapped and tied, as shown in the splice details, at the following locations:
      (a) All end posts (b) Corner post, including the assemblies at vertical breaks of 15° or more
      (c) Pull posts where the wire is not spliced and pulled through the assembly; see General Note 16.
   (D) For supplemental information see Section 954 of the Specifications.
6. Steel posts and braces shall be standard steel posts, galvanized at the rate of 2 oz. per sq. ft., together with necessary hardware and wire clamps and meeting the following requirements:
   (A) Line posts: 8' long; 1.33 lbs. per lin. ft.; studded; anchor plate attached; with necessary clamps, etc.
   (B) Approach posts: 2½" x 2½" x ¼" angles, 8' long; fabricated for attaching brace; with necessary hardware, clamps, etc.
   (C) Pull, end and corner posts: 2½" x 2½" x ¼" angles, 8' long; fabricated for attaching brace; with necessary hardware, clamps, etc.
   (D) Braces: 2" x 2" x ¼" angles with necessary hardware and fabricated for attaching to post.
   (E) The pull, corner, approach and end posts are to be set in concrete as per detail. (Also see Note No. 13)
   (F) For supplemental information see Section 966 of the Specifications.
7. The Contractor, at his option, may use any suitable precast or prestressed concrete posts; however, approval by the Engineer, of posts not shown on this index, will be required prior to construction of the fence. Precast posts shall be Class I concrete. Prestressed posts shall be Class III concrete. Lengths of concrete posts to be as indicated for timber posts.
8. Aluminum post, braces and accessory framing hardware shall not be used unless the plans specifically detail their application or the Engineer specifically approves their incorporation in fence construction or repair. Aluminum framed gates are permitted as described in General Note 17.
9. The woven wire shall be attached to steel and concrete posts by a minimum of five tie wires. The single wire ties shall be applied to the top, bottom and three intermittent line wires. The ends of each tie wire shall have a minimum of two light turns around the line wire. Tie wires shall be steel wire not less than 0.120" diameter, zinc coating Class 3, soft temper, in accordance with ASTM A641.
10. The woven wire shall be stretched only until one-half the tension curl has been pulled out of the line wires.
11. Posts to be set by driving or digging. If by digging, the posts shall be set at the center of the hole and the soil tamped securely on all sides.
12. Longer posts than those indicated above may be required by the plans or for deeper installations.
13. Concrete bases for angular steel posts (pull, corner, end and approach) shall be Class I as specified in Section 345 except that the requirements of 345-5.1, 10 & 11 shall not apply. Materials for Class I concrete may be proportioned by volume and/or by weight.
14. Pull post assemblies shall be installed at approximately 330' centers except that this maximum interval may be reduced by the Engineer on curves where the degree of curvature is greater than 3 degrees.
15. Corner post assemblies are to be installed at all horizontal and vertical breaks in fence of 15° or more.
16. A maximum length of 1320' of wire may be installed as a unit. For pulls through a pull post assembly the fabric shall be spliced by crimping sleeves only. Pulls through a corner post assembly will not be permitted.
17. Unless otherwise called for in the plans gates shall be commercially available metal swing gates assembled and installed in accordance with the manufacturers specifications as approved by the Engineer. Chain link swing gates in accordance with Index No. 452 may be substituted for metal swing gates as approved by the Engineer. Gate size is full opening width whether single leaf or double leaves. Payment for gates shall include the gate, single or double, all necessary hardware for installation and any additional length and/or size for posts at the opening. Gates shall be paid for under the contract unit price for Fence Gates, Type A, each.
18. For construction and pay purposes assemblies are defined as follows: End post assemblies shall consist of: one end post, one approach post, two braces, four diagonal tension wires and all necessary fittings and hardware. Pull post assemblies shall consist of: one pull post, two braces, four diagonal tension wires and necessary fittings and hardware. Corner post assemblies shall consist of: one corner post, two approach posts, four braces, eight diagonal tension wires and all necessary fittings and hardware.
19. This index details fencing that is constructed with farm fabric 46½" (47" nominal) in height and with specific ground clearance and specific barbed wire spacings, and, is to be paid for under the contract unit price for Fencing, Type A, LF. When the plans detail other combinations of materials or variation in dimensions, the fence shall be paid for under the contract unit price for Fencing, Type A, (x ') Height, LF. Fencing Type A, LF, shall be inclusive of the lengths of pull, end and corner post assemblies but exclusive of gate widths.

   Assemblies shall be paid for as follows:
   Corner Post Assemblies Each.
   Pull and End Post Assemblies, Each.

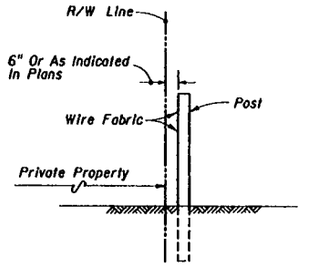

FENCE POSITION AT LOCATIONS WITHOUT FRONTAGE ROADS

(REFER TO DETAIL PLANS FOR FENCE POSITION AT LOCATIONS WITH FRONTAGE ROADS)

STATE OF FLORIDA DEPARTMENT OF TRANSPORTATION
ROAD DESIGN

FENCE TYPE A

	Names	Dates
Designed By		
Drawn By		
Checked By		

Approved By: _____
State Roadway Design Engineer

Revision No.	Sheet No.	Index No.
92	1 of 2	451

F.H.W.A. Approved: 09/03/76

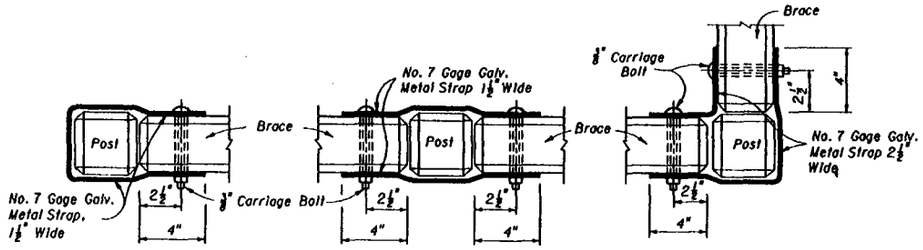

BRACE AND POST BRACE TO BRACE ON LINE BRACE TO BRACE AT CORNER

FASTENER FOR CONCRETE POST AND BRACES

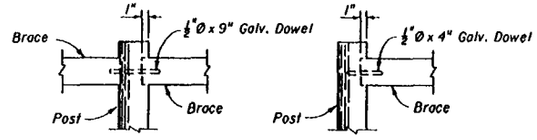

FASTENER FOR TIMBER POST AND BRACE

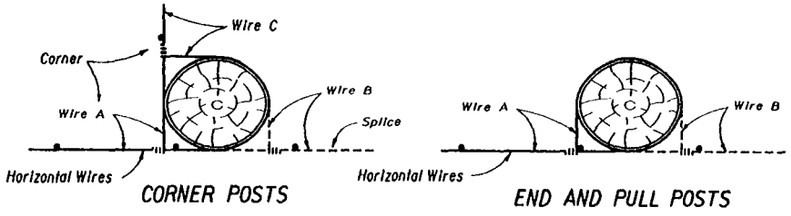

CORNER POSTS END AND PULL POSTS

Each horizontal wire to be wrapped around corner, end and pull posts and tied to same wire. See General Notes 5 and 15. Timber post illustrated. These methods also apply to steel and concrete post illustrations.

SPLICES

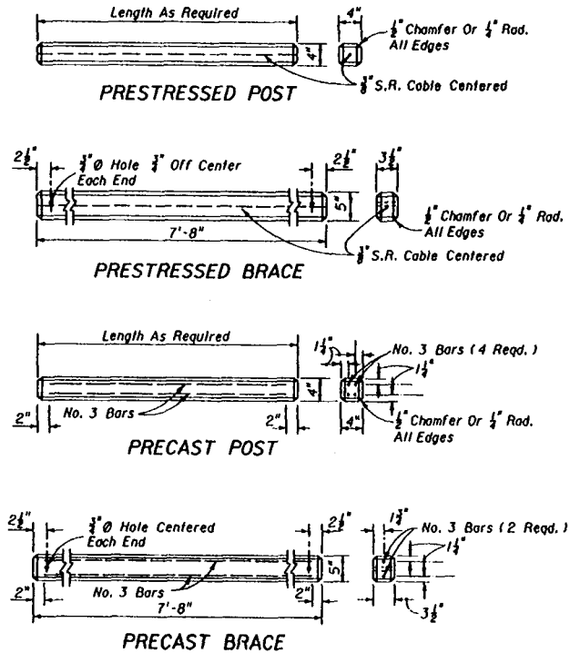

ALTERNATE CONCRETE POSTS AND BRACES

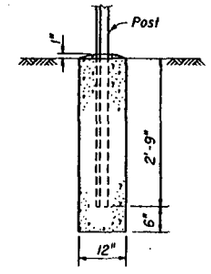

(Pull, Corner, End And Approach Posts)

CONCRETE BASE FOR ANGULAR STEEL POST

STATE OF FLORIDA DEPARTMENT OF TRANSPORTATION
ROAD DESIGN

FENCE TYPE A

	Names	Dates
Designed By		
Drawn By		
Checked By		
F.H.W.A. Approved:		

Approved By: Kenneth H. Mayfield
State Roadway Design Engineer

Revision No.	Sheet No.	Index No.
90	2 of 2	451

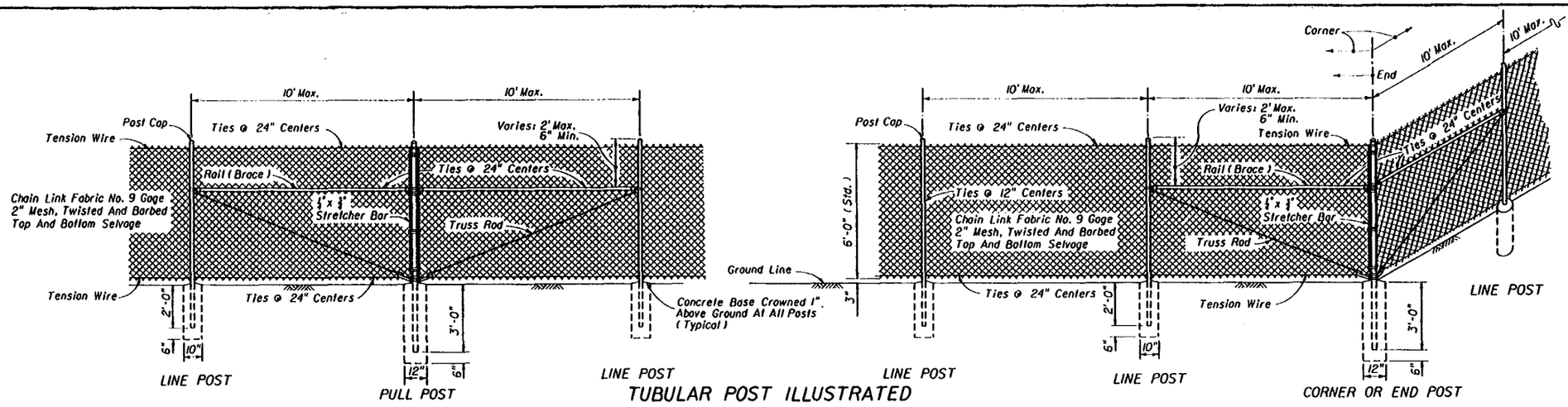

TUBULAR POST ILLUSTRATED

1. This fence to be used generally in urban areas.
2. For supplemental information refer to Sections 550 and 966 of FDOT Standard Specifications.
3. Chain link fabric, posts, rails, truss rods, tension wires, tie wires, stretcher bars, gates and all miscellaneous fittings and hardware shall meet the requirements of AASHTO M181 unless otherwise specified by this index. Stipulated AASHTO and ASTM signify current reference.
4. Fence Component Options:
   - A. Line post options:
     - (1) Galvanized steel pipe, Schedule 40 - 1½" nominal dia. zinc galvanized at the rate of 1.8 oz/sf: ASTM A53 Table X 2, ASTM F1083, and AASHTO M111.
     - (2) Aluminum coated steel pipe - 1½" nominal dia. coated at the rate of 0.40 oz/sf: Spec. Subarticle 966-1.5.
     - (3) Aluminum alloy pipe - 2" nominal dia.: ASTM B241 or B221, Alloy 6063, T6.
     - (4) Steel H-Beam - 1⅝" x 1⅝": Zinc Galv. 1.8 oz/sf: AASHTO M111 and Detail.
     - (5) Aluminum alloy H-Beam - 1⅝" x 1⅝": Detail.
     - (6) Steel C - 1⅝" x 1⅜": Galv.: 1.8 oz/sf zinc: AASHTO M111; or, 0.9 oz/sf zinc - 5% aluminum-mischmetal: ASTM F1234 and Detail.
     - (7) Resistance welded steel pipe - 1⅝" nominal dia.: ASTM F669 light industrial fence; and, coatings for Group IC materials: ASTM F1234.
   - B. Corner, end, and pull post options:
     - (1) Galvanized steel pipe, Schedule 40 - 2" nominal dia. zinc galvanized at the rate of 1.8 oz/sf: ASTM A53 Table X 2, ASTM F1083, and AASHTO M111.
     - (2) Aluminum coated steel pipe - 2" nominal dia. coated at the rate of 0.40 oz/sf: Spec. Subarticle 966-1.5.
     - (3) Aluminum alloy pipe - 2½" nominal dia.: ASTM B241 or B221, Alloy 6063, T6.
     - (4) Resistance welded steel pipe - 2" nominal dia.: ASTM F669 light industrial fence; and, coatings for Group IC materials: ASTM F1234.
   - C. Rail options:
     - (1) Galvanized steel pipe, Schedule 40 - 1½" nominal dia. zinc galvanized at the rate of 1.8 oz/sf: ASTM A53 Table X 2, ASTM F1083, and AASHTO M111.
     - (2) Aluminum coated steel pipe - 1½" nominal dia. coated at the rate of 0.40 oz/sf: Spec. Subarticle 966-1.5.
     - (3) Aluminum alloy pipe - 1¼" nominal dia.: ASTM B241 or B221, Alloy 6063, T6.
     - (4) Resistance welded steel pipe - 1½" nominal dia.: ASTM F669 light industrial fence; and, coatings for Group IC materials: ASTM F1234.
   - D. Chain link fabric options (2" mesh with twisted and barbed selvage top and bottom for all options):
     - (1) AASHTO M181 Type I - Zinc Coated Steel, No. 9 gage (coated wire diameter), coated at the rate of 1.8 oz/sf (M181 Class D 2.0 oz/sf modified to 1.8 oz/sf).
     - (2) AASHTO M181 Type II - Aluminum Coated Steel, No. 9 gage (coated wire diameter), coated at the rate of 0.40 oz/sf.
     - (3) AASHTO M181 Type IV - Polyvinyl Chloride (PVC) Coated Steel, No. 9 gage (coated core wire diameter), core wire-zinc coated steel. PVC coating: M181 Class A (either extruded or extruded and bonded) or Class B (bonded). See table right.
   - E. Tension wire options:
     - (1) No. 7 gage steel wire zinc galvanized at the rate of 1.8 oz/sf: AASHTO M181.
     - (2) Aluminum alloy wire conforming to the requirements of ASTM B211, Alloy 6061, Temper T89 or T94, with a wire diameter of 0.1875" or larger.
     - (3) No. 7 gage aluminum coated steel wire coated at the rate of 0.40 oz/sf: AASHTO M181.
   - F. Tie wire and hog ring options:
     - (1) No. 9 gage steel wire zinc galvanized at the rate of 1.8 oz/sf.
     - (2) Aluminum alloy wire conforming to the requirements of ASTM B211, Alloy 6061, Temper T89 or T94, with a wire diameter of 0.1443" or larger.
     - (3) No. 7 gage aluminum coated steel wire coated at the rate of 0.40 oz/sf.

GENERAL NOTES

5. Unless a specific material is called for in the plans the Contractor may elect to use either a single type of material or a combination of material types from the component options listed above. Combinations of optional materials are restricted as follows: (a) Only one fabric optional material will be permitted between corner and/or end post assemblies. (b) Only one line post optional material will be permitted between corner and/or end post assemblies. (c) Pull post assemblies shall be optional materials identical to either the line post optional material or the corner and end post assembly optional material; but, pull post assemblies shall be the same optional material between any set of corner and/or end post assemblies.
6. Concrete for bases shall be Class I as specified in Section 345 of the Standard Specifications except that the requirements contained in 345-5.1, 345-10 and 345-11 shall not apply. Materials for Class I concrete may be proportioned by volume and/or by weight.
7. Line posts are to be set in concrete as detailed above or by the following methods:
   - (a) In accordance with special details and/or as specifically described in the contract plans and specifications.
   - (b) In accordance with ASTM F567 Subsections 4.4 through 4.7 and 4.9 and 4.10 as approved by the Engineer.
   - (c) In soils that are firm, well drained and suitable for full stable embedment any of the optional steel posts may be driven in locations approved by the Engineer. Driving will not be permitted in sandy soils. Driven posts shall be set to a minimum depth of 3' for fences up through 6' in height, and, for each 1' of fence height above 6' the posts shall be set an additional 6" in depth. Posts shall be protected to prevent damage from driving. Damaged posts shall be repaired or removed and replaced as directed by the Engineer without additional cost to the Department.
   - (d) Posts mounted on concrete structure or solid rock shall be mounted in accordance with the base plate detail "Fence Mounting On Concrete Endwalls And Retaining Wall", Sheet 2; or, by embedment in accordance with ASTM F567 Subsection 4.5.

   End, pull and corner post assemblies shall be set in concrete as detailed above for all soil conditions other than solid rock. Posts within assemblies that are located on concrete structures or solid rock shall be set by base plate or by embedment as prescribed under (b) above for line posts.

   Line and assembly posts set in concrete bases shall be set an additional 3" in depth for each 1' of fence height greater than 6'.
8. Pull posts shall be used at breaks in vertical grades of 15° or more, or at approximately 350' centers except that this maximum interval may be reduced by the Engineer on curves where the degree of curvature is greater than 3°.
9. Corner posts are to be installed at all horizontal breaks in fence of 15° or more and as required at vertical breaks over 15° as determined by the Engineer.
10. When fence has an installed top of fabric height less than 6', knuckled top and bottom selvages shall be used unless the plans specifically identify locations for twisted selvage fabrics.
11. Unless sliding gates or special gates are called for in the plans, all gates shall be chain link swing gates meeting the material requirements described above as approved by the Engineer. Payment shall include the gates, single or double, all necessary hardware for installation and any additional length and/or size for posts at the opening. Gates shall be paid for under the contract unit price for Fence Gates, Type B, Each.
12. Line posts, tension wires, chain link fabric, tie wires, Class I concrete, and all miscellaneous fittings and hardware to be included in the cost for Fencing Type B, LF. The standard 6' high fence shall be paid for under the contract unit price for Fencing Type B, LF. Fence having other height, line components and/or barbed wire attachments shall be paid for under the contract unit price for Fencing Type B (__), LF.

    Corner post assemblies shall consist of one corner post, two braces, two truss rods, and all necessary fittings and hardware as detailed above and shall be paid for under the contract unit price for Corner Post Assembly (Type B Fence), Each.

    Pull post assemblies shall consist of one pull post, two braces, two truss rods and all necessary fittings and hardware as detailed above and shall be paid for under the contract unit price for Pull Post Assembly (Type B Fence), Each.

    End post assemblies shall consist of one end post, one brace, one truss rod and all necessary fittings and hardware as detailed above and shall be paid for under the contract unit price for End Post Assembly (Type B Fence), Each.

TYPE IV VINYL COATED FABRIC							
Specification Section 966 And AASHTO M181 Table 4 Redefined As Follows							
Specified Diameter Of Metallic Coated Core Wire			Minimum Weight Of Zinc Coating		PVC Thickness Range		
					M181 Class A (Extruded Or Extruded And Bonded Coating)		M181 Class B (Bonded Coating)
in.	mm.	gage	oz/ft.²	g/m²	in.	mm.	in.	mm.
0.148	3.76	9	0.30	92	0.015 to 0.025	0.38 to 0.64	0.006 to 0.010	0.15 to 0.25

STATE OF FLORIDA DEPARTMENT OF TRANSPORTATION
ROAD DESIGN

FENCE TYPE B

	Names	Dates
Designed By		
Drawn By		
Checked By		

Approved By: Jaudi Simmons
State Roadway Design Engineer

F.H.W.A. Approved: 10/06/83

Revision No.	Sheet No.	Index No.
94	1 of 2	452

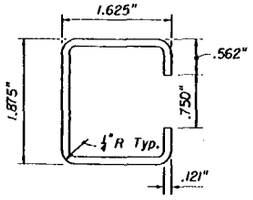

Galv. Wt. Per. Ft. = 2.34# ±5%
Yeild p.s.i. (Min.) 45,000

STANDARD WALL

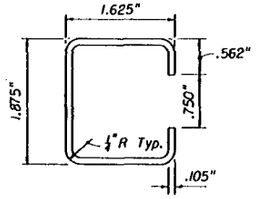

Galv. Wt. Per. Ft. = 1.85# ±5%
Yeild p.s.i. (Min.) 45,000

THIN WALL

OPTIONAL "C" LINE POST FOR TYPE B FENCE

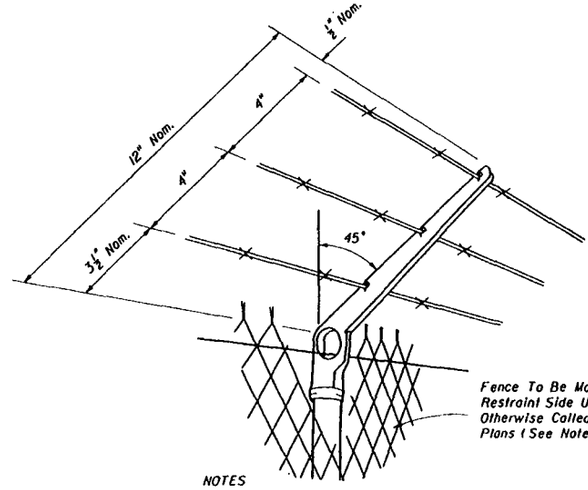

NOTES

Attachments to be used only when called for in the plans.
Attachments to extend in direction of restraint. Unless otherwise called for in plans, direction of restraint will be as follows:

(a.) Outward on limited access right of way line.
(b.) Outward on controlled access right of way line.
(c.) Outward from utilities and hazardous facilities located within highway right of way.
(d.) Outward from lateral ditches, outfalls, retention basins, canals, borrow areas and similar support facilities.
(e.) Inward on pedestrian ways.

The cap-arm shall be designed to provide a drive fit over the top of posts and to exclude moisture in posts with tubular sections.

Attachments to be paid for under the contract unit price for Fencing, Type B (With Barb Wire Attachment) LF.

BARB WIRE ATTACHMENT

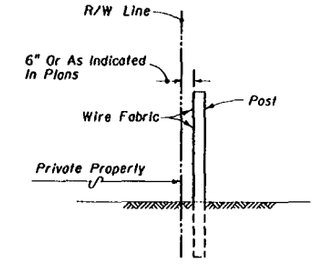

FENCE POSITION AT LOCATIONS WITHOUT FRONTAGE ROADS

(REFER TO DETAIL PLANS FOR FENCE POSITION AT LOCATIONS WITH FRONTAGE ROADS)

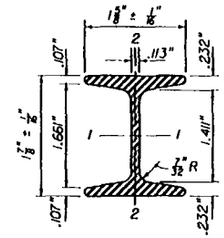

1⅞" x 1⅝" H-BEAM (STEEL)			(ALUM)	
Area = 724 Sq. In.				
Galv. Wt. Per. Ft. = 2.72# ±5%			0.9I# ±5%	
	Axes 1-1	2-2	Axes 1-1	2-2
Moment Of Inertia	.428	.101	.428	.101
Section Modulus	.456	.124	.456	.124
Rad. Of Gyration	.779	.373	.779	.373
Surface Area	.776 SF/Ft		.776 SF/Ft	
Tensile Strength PSI (Min.)	80,000		30,000	
Yielding Point PSI (Min.)	48,000		25,000	

OPTIONAL H-BEAM LINE POST FOR TYPE B FENCE

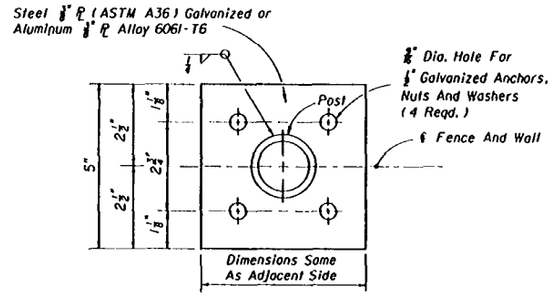

TOP VIEW
FOUR ANCHOR OPTION

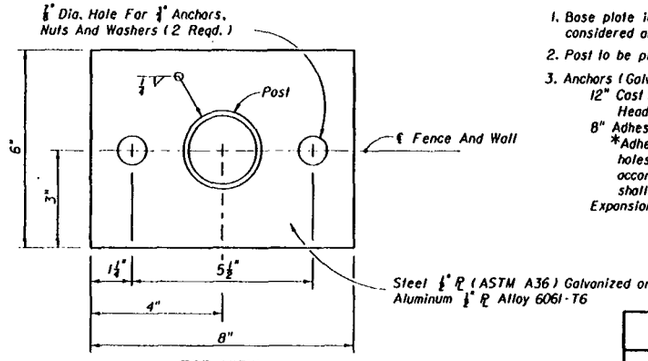

TOP VIEW
TWO ANCHOR OPTION

BASE PLATE AND ANCHOR NOTES:

1. Base plate identical for line, pull, end and corner posts and shall be considered an integral part of the respective posts for basis of payment.
2. Post to be plumbed by grout shim under base plate.
3. Anchors (Galvanized Steel):
   12" Cast In Place, 10½" Embedment:
   Headed Bolts, U-Bolts or Cluster Plates.
   8" Adhesive Anchors, 6" Min. Embedment.*
   *Adhesive anchors shall be headless anchor bolts set in drilled holes with epoxy bonding compound Type I (Class IV) in accordance with the manufacturers specifications; drilled holes shall be ⅛" larger in diameter than the anchor bolt.
   Expansion Bolts Not Permitted.

FENCE MOUNTING ON CONCRETE ENDWALL AND RETAINING WALLS

STATE OF FLORIDA DEPARTMENT OF TRANSPORTATION
ROAD DESIGN

FENCE TYPE B

	Names	Dates
Designed By		
Drawn By		
Checked By		
F.H.W.A. Approved:		

Approved By: Freddie Simmons
State Roadway Design Engineer

Revision No.	Sheet No.	Index No.
94	2 of 2	452

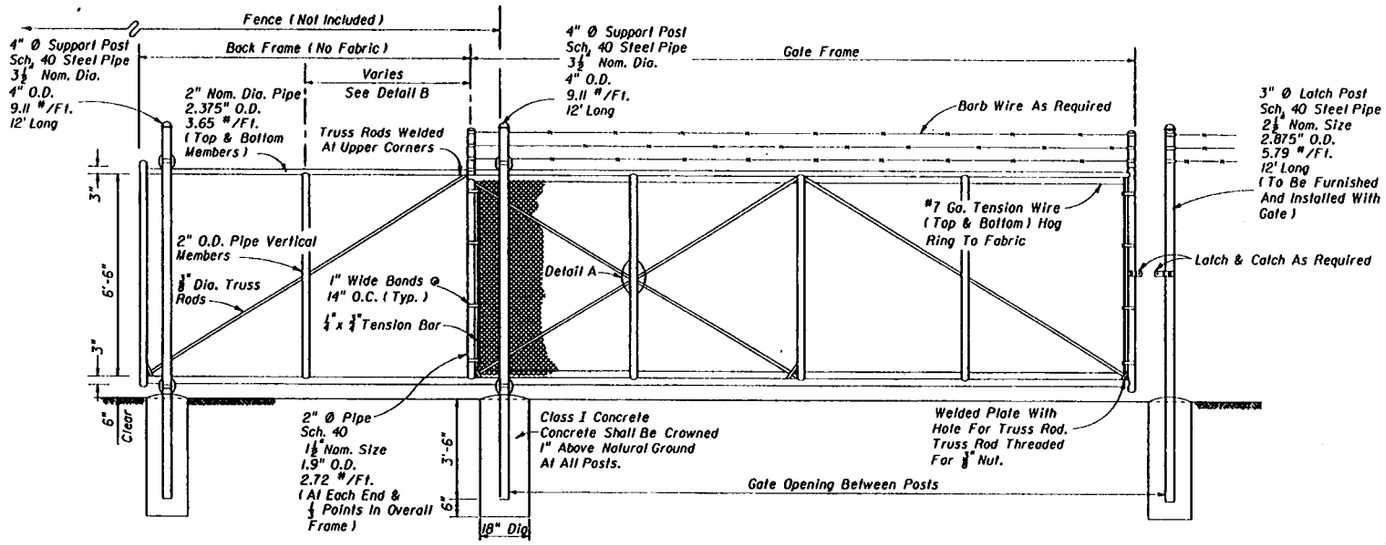

FRONT ELEVATION

GENERAL NOTES

1. The Contractor may substitute any equivalent cantilever slide gate approved by the Engineer.

   Extruded, rolled or formed components that provide equal strength and stability may be used in lieu of the pipe components shown; and, internal rollers may be used in lieu of the external roller units shown.

   Gate components shall meet or exceed the material requirements specified on Index No. 452.

2. Steel gate frame shall be fabricated prior to galvanizing, except that truss rods and truss rod plates may be fabricated following frame galvanizing provided surfaces damaged during welding are galvanized in accordance with Section 24 of AASHTO M36.

3. All fabric shall be knuckled top & bottom selvages.

4. Cost of all gate components shall be included in the contract unit price for Sliding Fence Gate (Cantilever), Each.

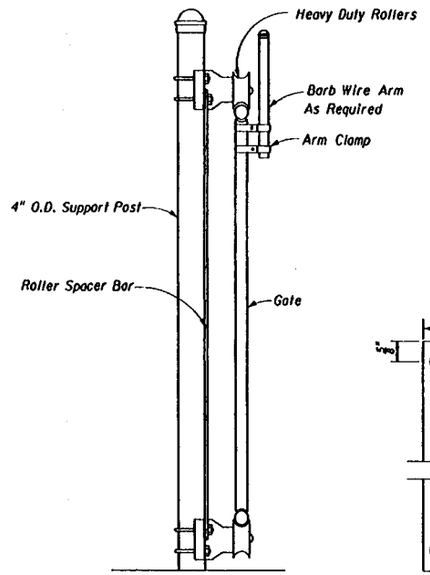

SUPPORT POST DETAIL

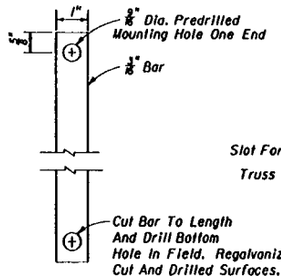

ROLLER SPACER BAR

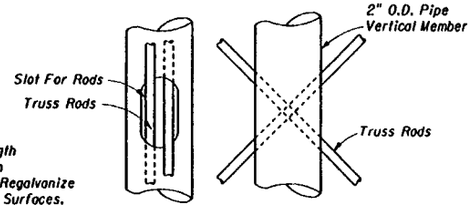

DETAIL A

GATE OPENING	GATE FRAME	BACK FRAME
12'	12'-3"	6'
16'	16'-3"	8'
20'	20'-3"	10'
24'	24'-3"	12'

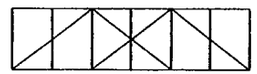

TYPICAL FRAME - 12', 16' & 20' Opening

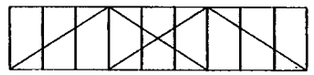

TYPICAL FRAME - 24' Opening

DETAIL B

STATE OF FLORIDA DEPARTMENT OF TRANSPORTATION
ROAD DESIGN

CANTILEVER SLIDE GATE TYPE B FENCE

	Names	Dates
Designed By		
Drawn By	HDD	09/18
Checked By	LMF	09/18
F.H.W.A. Approved:		10/26/18

Approved By: Trudie Simmons
State Roadway Design Engineer

Revision No.	Sheet No.	Index No.
88	1 of 1	453

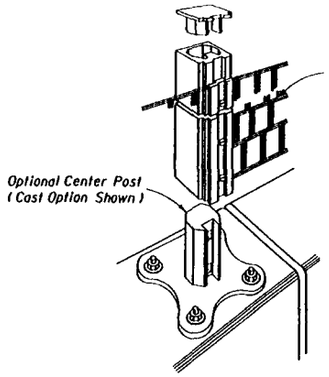

CONCRETE BARRIER WALL MOUNT

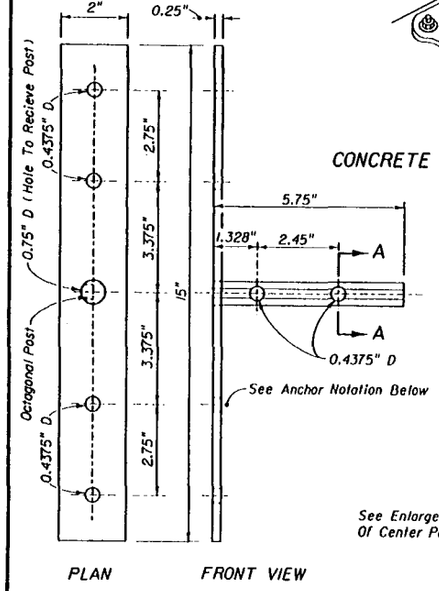

PLAN FRONT VIEW

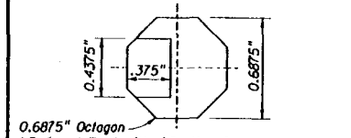

0.6875" Octagon
(Refered To As 'Hex' By Manufacturer/Supplier)
A36 Steel

SECTION AA

Note: Galvanize Completed Assembly In Accordance With ASTM A153

OPTIONAL CENTER POST

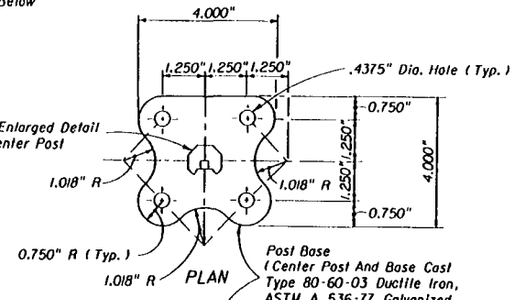

PLAN

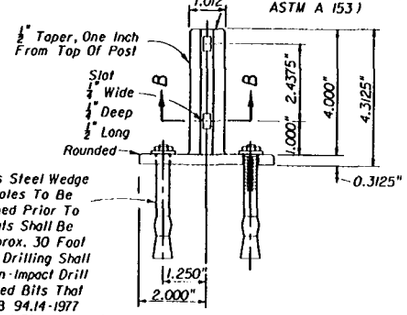

FRONT VIEW

OPTIONAL CENTER POST

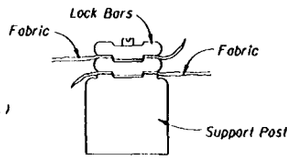

TOP VIEW

GLARE SCREEN SPLICE

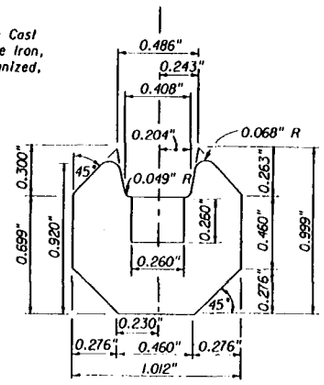

SECTION BB

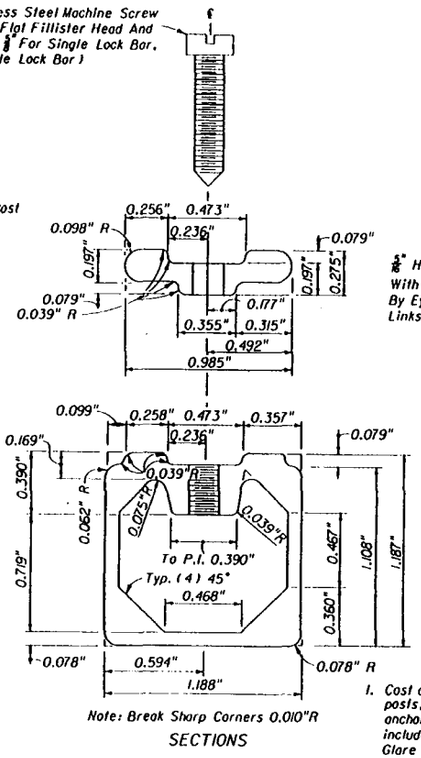

Note: Break Sharp Corners 0.010"R

SECTIONS

Note: Dimensions shown are casting requirements. Allowance has been made for galvanizing casting and fit. Break sharp corners 0.010" R.

SUPPORT POST AND LOCK BAR

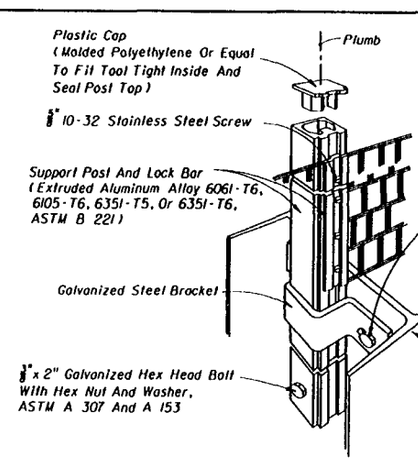

STEEL POST MOUNT

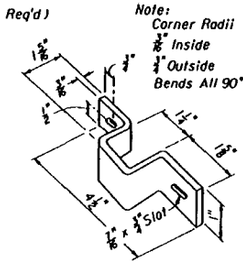

Galvanized Bracket
(Stock A 569 Steel) (ASTM A 153)

MOUNTING BRACKET

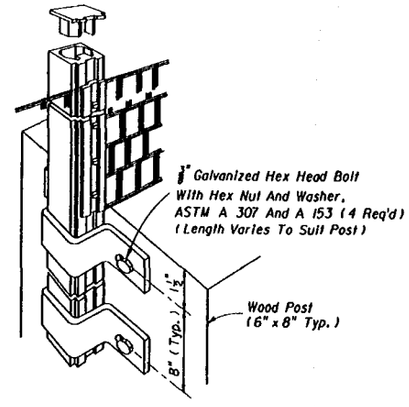

GUARDRAIL WOOD POST MOUNT

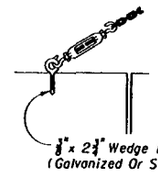

CONCRETE BARRIER WALL

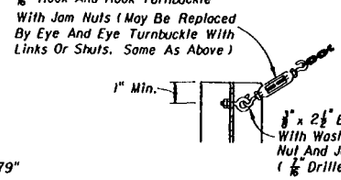

STEEL GUARDRAIL POST

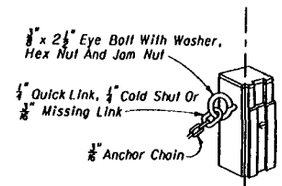

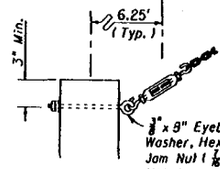

WOOD GUARDRAIL POST

Note:
Chain and accessories shall be galvanized in accordance with section 962-7 of the Standard Specifications. Damaged galvanized areas, including guardrail posts, shall be repaired in accordance with Sections 562 and 971-15 of the Standard Specifications.

CHAIN END ANCHORAGE

GENERAL NOTES

1. Cost of installation of screen, support posts, lock bars, leading and trailing end anchorages and all accessories shall be included in the contract unit price for Glare Screen (Knitted Polyester) LF.

NOTICE
PARTS OF THIS GLARE SCREEN ASSEMBLY ARE PROPRIETARY DESIGNS. ANY INFRINGEMENT ON THE PROPRIETARY RIGHTS OF THE DESIGNER SHALL BE THE SOLE RESPONSIBILITY OF THE USER.

STATE OF FLORIDA DEPARTMENT OF TRANSPORTATION
ROAD DESIGN

GLARE SCREEN
KNITTED POLYESTER

	Names	Dates
Designed By		
Drawn By	NSD	02/80
Checked By	JVC	02/80
F.H.W.A. Approved:		10/01/80

Approved By: Judd Livingston
State Roadway Design Engineer

Revision No.	Sheet No.	Index No.
94	1 of 1	460

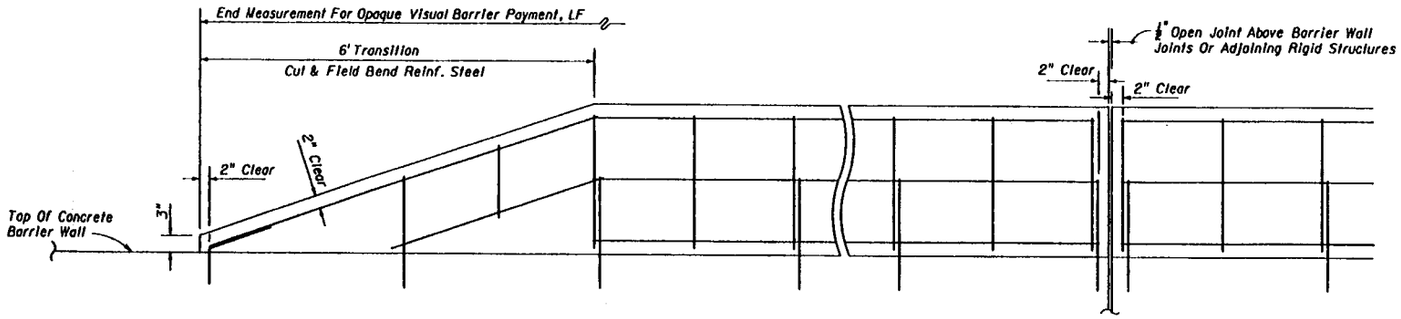

ELEVATION OF REINFORCEMENT AND DOWELING

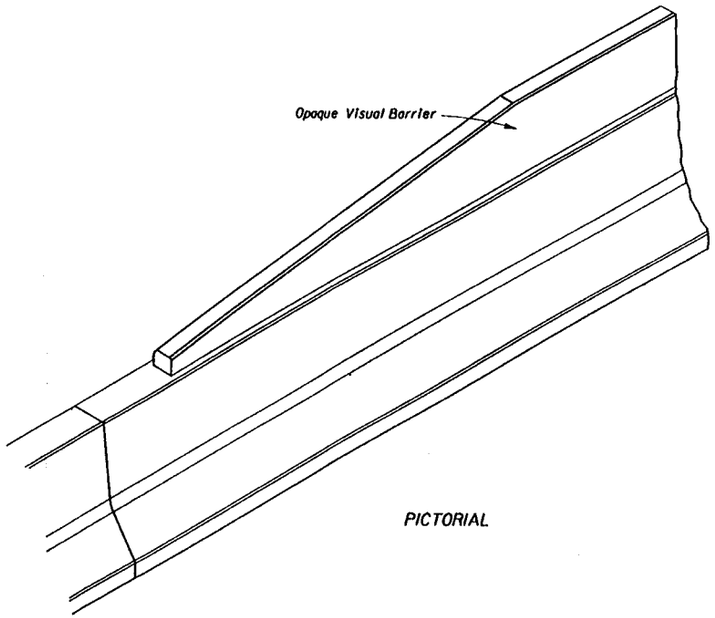

PICTORIAL

ESTIMATED QUANTITIES, LF	
Concrete	0.042 CY
Reinforcing Steel	3.27 Lbs*
*3.38 Lbs. With 2'-2" Dowels	

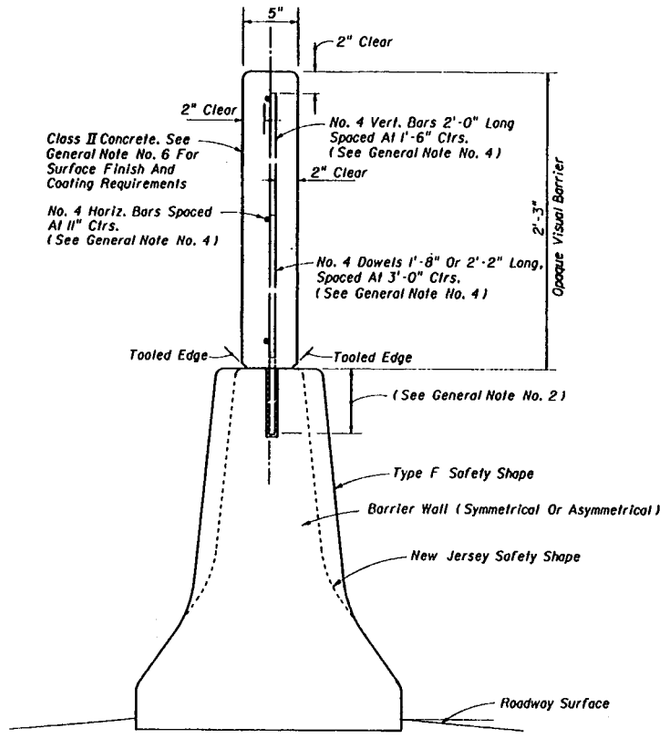

END VIEW

GENERAL NOTES

1. The opaque visual barrier is intended to function as a visual screen, and is not intended to resist vehicle impact loads nor to restrain, contain or redirect vehicles or cargo. The barrier is designed to withstand zone wind loading and strikes by light debris; and, designed to yield to exceptional strikes by vehicles or cargo, and to contain ruptured segments of the screen when yielding to such strikes.

2. When the opaque visual barrier is constructed on an existing barrier wall, dowels shall be 1'-8" in length, embedded 6" into the barrier wall and set with an approved chemical grout. Embedment holes shall be ⅝" diameter, drilled to a depth ¼" below the tip of the dowel unless greater depth is required to accept manufactured grout capsules.

   When the opaque visual barrier is constructed in conjunction with project concrete barrier walls, dowels may be set as described above, in either the drilled or preformed holes; or, placed when the barrier wall is cast. For dowels that are placed when the wall is cast, the dowel shall be 2'-2" in length and embedded to a depth of 12".

3. For both double and single faced concrete barrier walls the opaque visual barrier is to be located in the center of the top of the wall.

   For single faced barrier walls that are constructed around other vertical structure, the opaque visual barrier shall follow the alignments of only one of the walls and be centered atop that wall.

   For dual median barrier walls that follow differential profiles, the opaque visual barrier shall be constructed atop the wall with the higher elevation, unless conditions dictate otherwise. Lateral transitions or end overlaps for opaque visual barriers that alternate between dual walls shall be detailed in the plans.

   For median barrier walls that are divided when connecting to separated bridges, the opaque visual barrier shall be constructed atop the approach side barrier wall, unless differential profiles dictate locating the opaque visual barrier on the departure side barrier wall.

   Opaque visual barriers to be located on capped fills between dual barrier walls shall be detailed in the plans.

4. In lieu of the reinforcement shown the Contractor may substitute welded wire fabric equal to or better than that shown, when approved by the Engineer. Details shall be submitted with requests for substitution.

5. The Contractor may construct contiguous precast concrete panels in lieu of the cast-in-place opaque screen when approved by the Engineer. Panel design and method for anchorage to the barrier wall shall be detailed by shop drawings when requesting the Engineers approval.

   The Contractor may construct the opaque screen monolithically with the barrier wall, however, the screen design shall not be modified so as to cause the wall to be dynamically active from strikes on the screen; see design considerations in Note No. 1 above.

6. Exposed concrete surfaces shall have a Class 3 surface finish in accordance with Section 521 of the Standard Specification, unless other finish called for in the plans. The surfaces shall have a Class 5 Applied Finish Coating in accordance with Section 400 only when called for in the plans.

7. Payment for opaque visual barrier shall be full compensation for concrete, reinforcement, dowels, casting, placement, drilling, grouting, tooling, finishing and work incidental thereto, and shall be paid for under the contract unit price for Opaque Visual Barrier (Concrete) (2'-3" Height), LF.

STATE OF FLORIDA DEPARTMENT OF TRANSPORTATION
ROAD DESIGN

OPAQUE VISUAL BARRIER

	Names	Dates
Designed By	DCB/JYG	9/87
Drawn By	JBW	9/87
Checked By	DCB/JYG	9/87
F.H.W.A. Approved:		10/27/87

Approved By _____
State Roadway Design Engineer

Revision No.	Sheet No.	Index No.
92	1 of 1	461

Remove Overlying Material And Organic Material Within The Limits Shown And Backfill In Accordance With Index No. 505, Unless Otherwise Called For In The Plans Or Directed Otherwise By The District Geotechnical Engineer; The Limits Include Full Median Width When Applied To Divided Facilities.

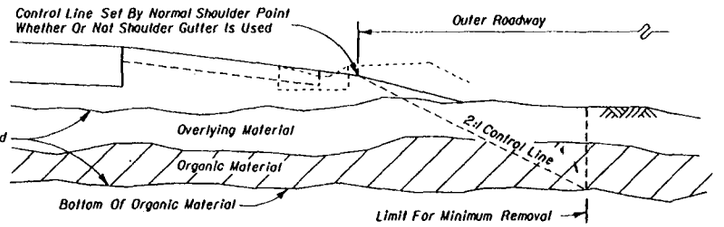

WITH OVERBURDEN - HALF SECTION

Remove Organic Material Within The Limits Shown And Backfill In Accordance With Index No. 505, Unless Otherwise Called For In The Plans Or Directed Otherwise By The District Geotechnical Engineer; The Limits Include Full Median Width When Applied To Divided Facilities.

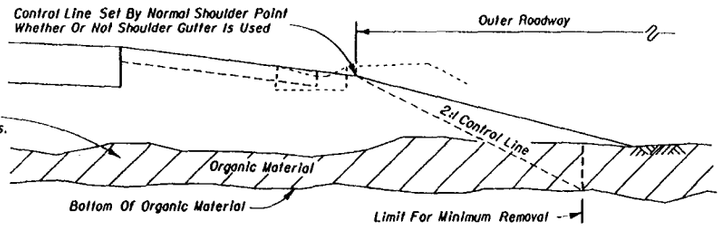

WITHOUT OVERBURDEN - HALF SECTION

IN RURAL CONSTRUCTION

Remove Overlying Material And Organic Material Within The Limits Shown And Backfill In Accordance With Index No. 505, Unless Otherwise Called For In The Plans Or Directed Otherwise By The District Geotechnical Engineer; The Limits Include Full Median Width When Applied To Divided Facilities.

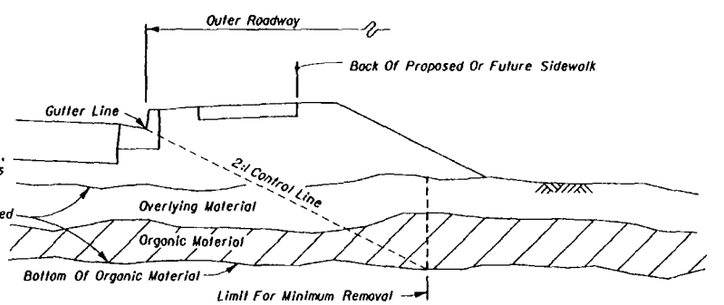

WITH OVERBURDEN - HALF SECTION

Remove Organic Material Within The Limits Shown And Backfill In Accordance With Index No. 505, Unless Otherwise Called For In The Plans Or Directed Otherwise By The District Geotechnical Engineer; The Limits Include Full Median Width When Applied To Divided Facilities.

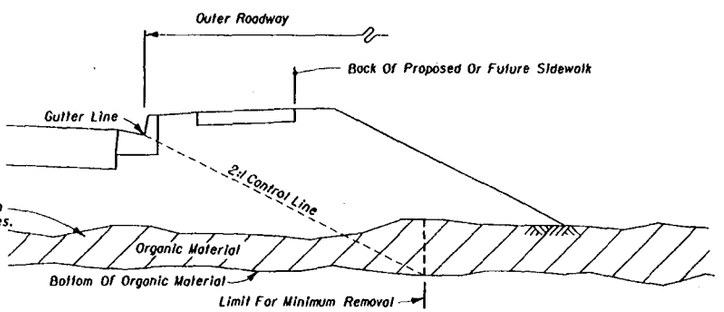

WITHOUT OVERBURDEN - HALF SECTION

IN URBAN CONSTRUCTION

REMOVAL OF ORGANIC MATERIAL

GENERAL NOTES

1. All details shown on this index for removal of organic and plastic materials apply unless otherwise shown on the plans.
2. Utilization of excavated materials shall be in accordance with Index No. 505.
3. Where organic or plastic material is undercut, backfill shall be made of suitable material in accordance with Index No. 505, unless otherwise shown on the plans.
4. The term "Plastic Material" used in this index in conjunction with removal of plastic soil is as defined under soil classifications for Plastic (P) and High Plastic (H) on Index No. 505.
5. The term "Organic Material" as used on this index is defined as any soil which has an average organic content greater than five (5.0) percent, or an individual organic content test result which exceeds seven (7.0) percent. Organic material shall be removed as shown on this index and the plans unless directed otherwise by the District Geotechnical Engineer.

   Average organic content shall be determined from the test results from a minimum of three randomly selected samples from each stratum. Tests shall be performed in accordance with FM 1-T267 on the portion of a sample passing the No. 4 sieve.
6. The normal depth of side ditches shall be 3.5 feet below the shoulder point except in special cases.
7. In municipal areas, where underdrain is to be constructed beneath the proposed pavement, the grade of the underdrain filter material will not extend above the bottom of the stabilized section of the subgrade. Gradation of the filter material shall conform to FDOT specifications. Minimum grade on underdrain pipe shall be 0.2%.
8. See Index No. 506 for miscellaneous earthwork details.

DESIGN NOTES

1. At locations where organic material or other soft soil deposits persists to such depth that removal is impractical, the construction of a geosynthetic foundation over those soils should be considered. The Engineer of Record should request guidance from the District Geotechnical Engineer and solicit geosynthetic foundation designs from geosynthetic manufacturers when pursuing geosynthetic alternates.
2. The designer shall take into consideration the expectancy of roadway widening to the outside, and where widening is anticipated specify in the plans the limits of removal of organic and plastic materials necessary to accommodate anticipated widening.

STATE OF FLORIDA DEPARTMENT OF TRANSPORTATION
ROAD DESIGN

REMOVAL OF ORGANIC AND PLASTIC MATERIAL

	Names	Dates
Designed By	GEOTECH	09/93
Drawn By	HKH	09/93
Checked By	BTD/FLS	09/93
F.H.W.A. Approved:		

Approved By Freddie Simmons
State Roadway Design Engineer

Revision No.	Sheet No.	Index No.
94	1 of 2	500

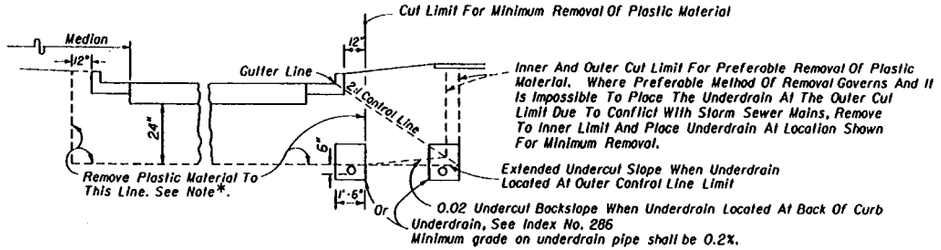

HALF SECTION

NOTES: Refer to roadway cross sections to determine whether minimum or preferable removal is used.

*Where frequency of median breaks indicates that it is impractical to leave plastic material in the median, the designer may elect to indicate total removal of this material. If during construction it becomes apparent, due to normal required construction procedures, that it is impractical to leave the plastic material in the median, total removal of this material shall be approved by the Engineer.

REMOVAL OF PLASTIC MATERIAL AND LOCATION OF UNDERDRAIN IN URBAN CONSTRUCTION

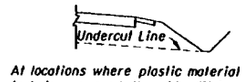

At locations where plastic material is being removed, the side ditches must be at least as deep as the undercut plane.



Where paved side ditches are used in areas of removal of plastic material, the top of the ditch pavement must be no higher than the undercut plane.

MISCELLANEOUS DETAILS

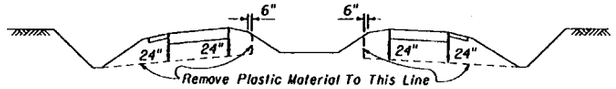

TYPICAL CUT SECTION ON TANGENT

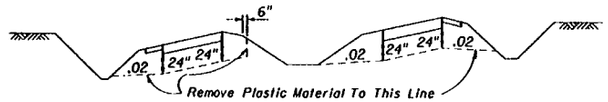

TYPICAL CUT SECTION ON SUPERELEVATION

REMOVAL OF PLASTIC MATERIAL ON INTERSTATE FACILITIES, FREEWAYS, DIVIDED ARTERIALS AND MAJOR COLLECTORS HAVING DEPRESSED MEDIANS

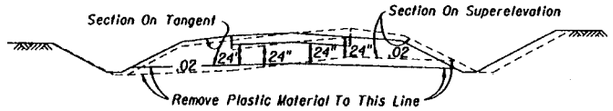

TYPICAL CUT SECTION

Note: When this detail is applied to minor collectors and local facilities, the undercut may be reduced to 18".

REMOVAL OF PLASTIC MATERIAL ON DIVIDED FREEWAYS, ARTERIALS AND MAJOR COLLECTORS HAVING FLUSH MEDIANS, AND, ON UNDIVIDED ARTERIALS AND MAJOR COLLECTORS

REMOVAL OF PLASTIC MATERIAL

Note: For GENERAL NOTES see Sheet 1.

STATE OF FLORIDA DEPARTMENT OF TRANSPORTATION
ROAD DESIGN

REMOVAL OF ORGANIC AND PLASTIC MATERIAL

	Names	Dates
Designed By	KHH/WHL	05/91
Drawn By	HKH	05/91
Checked By	JMG/WHL	05/91
F.H.W.A. Approved:		

Approved By: Freddie Simmons
State Roadway Design Engineer

Revision No.	Sheet No.	Index No.
94	2 of 2	500

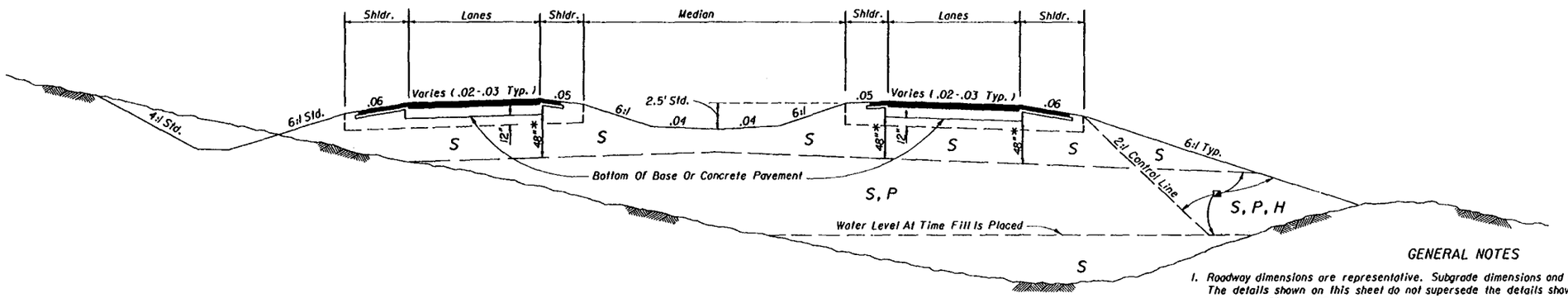

DIVIDED ROADWAYS

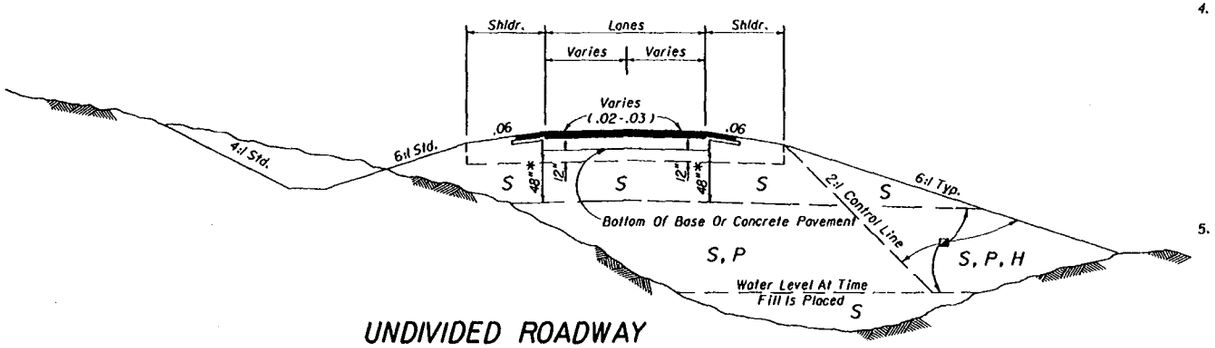

UNDIVIDED ROADWAY

SYMBOL	SOIL	CLASSIFICATION (AASHTO M-145)
S	Select	A-1, A-3, A-2-4 **
P	Plastic	A-2-5, A-2-6, A-2-7, A-4, A-5, A-6, A-7 (ALL WITH LL < 50)
H	High Plastic	A-2-5, A-2-7, A-5 Or A-7 (ALL WITH LL > 50)
M	Muck	A-8

Classification listed left to right in order of preference.

■ See General Notes Nos. 4 & 5 for utilization of soils classified as organic material or muck.

** Certain types of A-2-4 material are likely to retain excess moisture and may be difficult to dry and compact. They should be used in the embankment above the water level existing at time of construction. They may be used in the subgrade portion of the roadbed when approved by the District Geotechnical Engineer.

* For cut sections this dimension may be reduced to 24"; see Index No. 500. For minor collectors and local facilities this dimension may be reduced to 18".

GENERAL NOTES

1. Roadway dimensions are representative. Subgrade dimensions and control lines are standard. The details shown on this sheet do not supersede the details shown in the plans or on Index Nos. 500 or 506.
2. Plastic (P) soils may be placed above the existing water level (at the time of construction) to within 4 feet of the proposed base. It should be placed uniformly in the lower portion of the embankment for some distance along the project rather than full depth for short distances.
3. High Plastic (H) soils excavated within the project limits may be used in embankment construction as indicated on this index. High plastic soils are not to be used for embankment construction when obtained from outside the project limits.
4. Select (S) soils having an average organic content of more than two and one-half (2.5) percent, or having an individual test value which exceeds four (4) percent, shall not be used in the subgrade portion of the roadbed.

   Select (S), Plastic (P), or High plastic (H) soils having an average organic content of more than five (5) percent, or an organic content individual test result which exceeds seven (7) percent, shall not be used in the portion of embankment inside the control line, unless written authorization is provided by the District Geotechnical Engineer; these soils may be used for embankment construction outside the control line, unless restricted by the plans or otherwise specified in the plans, provided they can be compacted sufficiently to sustain a drivable surface for operational vehicles as by the Engineer.

   Average organic content shall be determined from the test results from a minimum of three randomly selected samples from each stratum or stockpile of a particular material. Tests shall be performed in accordance with FM 1-T267 on the portion of a sample passing the No. 4 sieve.
5. Highly organic soils, composed primarily of partially decayed organic matter, often dark brown or black in color with an odor of decay, and sometimes fibrous, shall be designated as muck. Further, any stratum or stockpile of soil which contain pockets of highly organic material may be designated as muck (M).

   Highly Organic Soils shall not be used within the subgrade or embankment portion of the roadbed, with the exception of muck used as a supplement to construct top soil as described in Section 162 of the FDOT Standard Specifications.

DESIGN NOTES

1. The designer shall take into consideration the expectancy of roadway widening to the outside, and where widening is anticipated, specify in the plans the utilization of Select (S), Plastic (P) and /or High Plastic (H) soils classified as organic material, in the embankment outside the control line.

STATE OF FLORIDA DEPARTMENT OF TRANSPORTATION
ROAD DESIGN

EMBANKMENT UTILIZATION

	Names	Dates
Designed By	GEOTECH	09/93
Drawn By	HSD	09/93
Checked By	BTD	09/93
F.H.W.A. Approved:		04/23/74

Approved By: Freddie Simmons
State Roadway Design Engineer

Revision No.	Sheet No.	Index No.
94	1 of 1	505

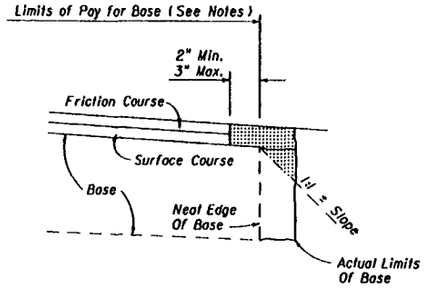

NOTES

1. All base material in the shaded area is excess base to be removed.
2. The cost for removal of excess base material shall be included in the contract unit price for base.
3. Payment for base shall be calculated using normal width.

REMOVAL OF EXCESS BASE MATERIAL

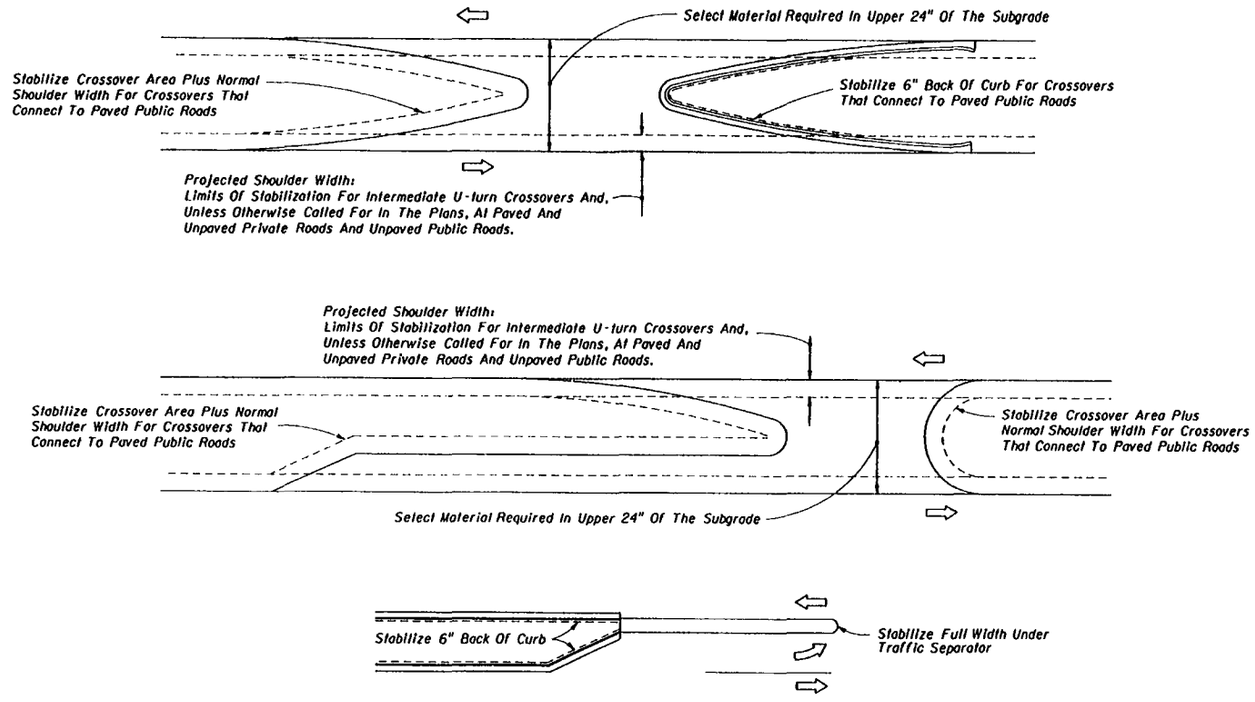

NOTES

1. When the median has curb or curb and gutter, stabilize 6" back of curb.
2. When the median has shoulder with no curb or curb and gutter, stabilize to normal shoulder width.
3. See the details above for stabilizing requirements at crossroads.
4. Stabilize entire area under all paved traffic islands.
5. Stabilize full width under all traffic separators.

MEDIAN STABILIZING DETAILS

STATE OF FLORIDA DEPARTMENT OF TRANSPORTATION
ROAD DESIGN

MISCELLANEOUS EARTHWORK DETAILS

	Names	Dates
Designed By	RL/WHL	05/91
Drawn By	HKH	05/91
Checked By	JVG/WHL	05/91
F.H.W.A. Approved:		

Approved By Freddi Simmons
State Roadway Design Engineer

Revision No.	Sheet No.	Index No.
92	1 of 1	506

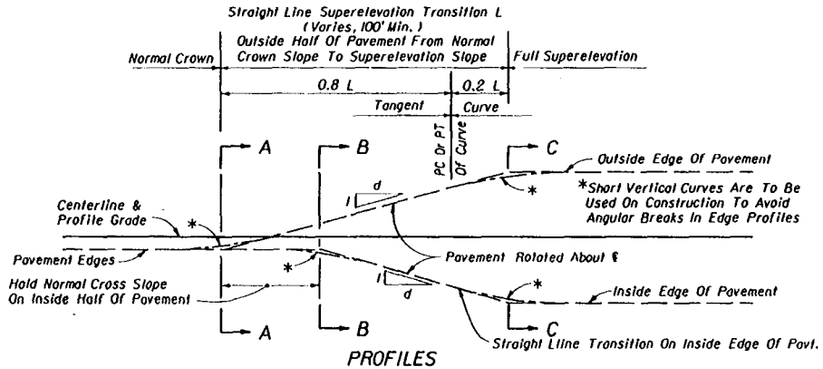

SLOPE RATIOS FOR SUPERELEVATION TRANSITIONS			
SECTION	DESIGN SPEED, MPH		
	45-50	55-60	65-70
	1: d		
2 Lane & 4 Lane	1: 200	1: 225	1: 250
6 Lane	1: 160	1: 180	1: 200
8 Lane	1: 150	1: 170	1: 190

The length of superelevation transition is to be determined by the relative slope between the travel way edge of pavement and the profile grade, except that the minimum length of transition shall be 100 ft.

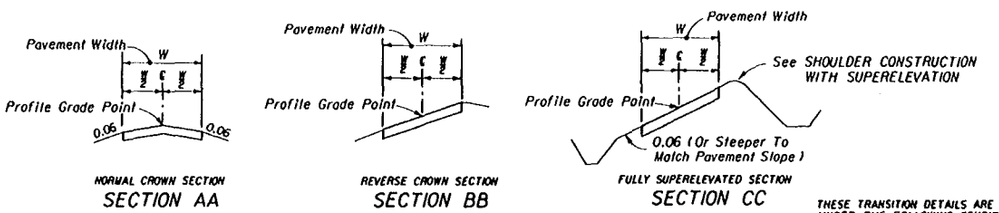

2-LANE, 4-LANE OR 6-LANE PAVEMENT, NO MEDIAN

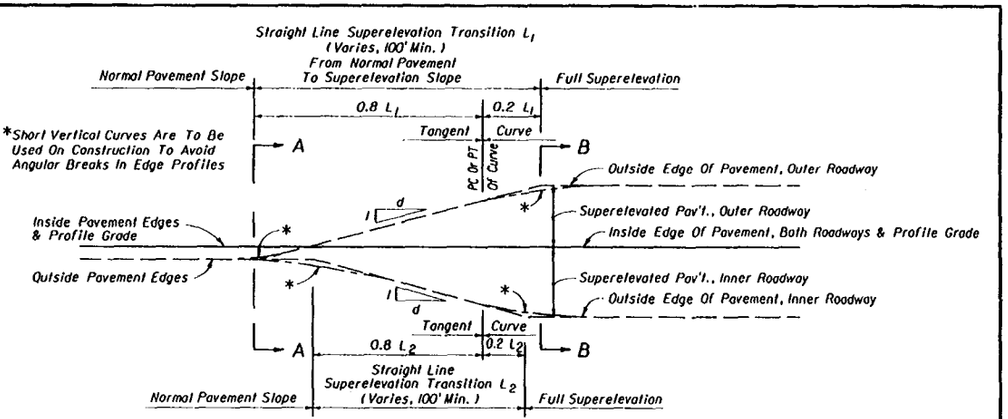

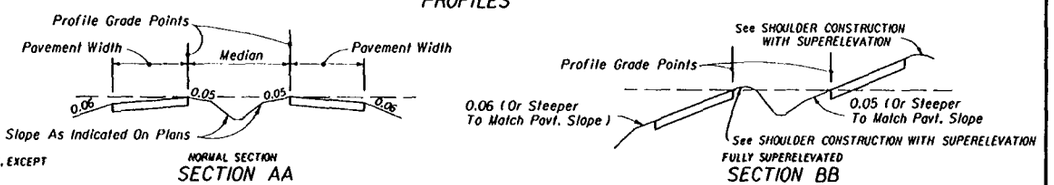

4-LANE OR 6-LANE PAVEMENT WITH MEDIAN

THESE TRANSITION DETAILS ARE TO APPLY IN ALL CASES, EXCEPT UNDER THE FOLLOWING CONDITIONS:

1. Curves of insufficient length.
2. Insufficient tangent length between curves.
3. Deficient transition distance between a curve and other control point(s).
4. At PCC's or PRC's (Runoff rates are applicable).

Transitions for these exceptions are to be as detailed in the plans.

SUPERELEVATION TRANSITIONS

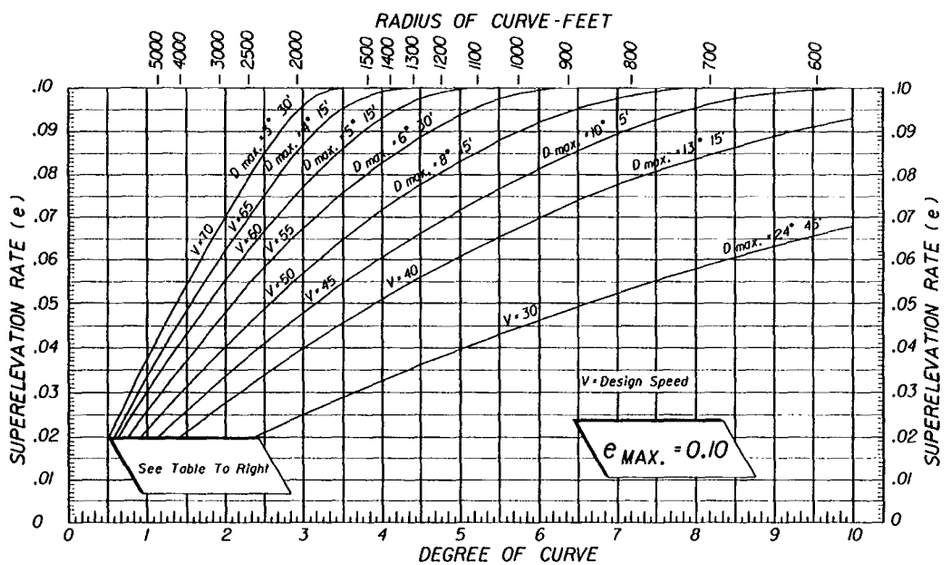

DEGREE OF CURVE (D)	DESIGN SPEED, V MPH						
	30	40	45/50	55	60	65	70
0°15'	NC	NC	NC	NC	NC	NC	NC
0°30'	NC	NC	NC	NC	RC	RC	RC
0°45'	NC	NC	RC	RC	0.023	0.025	0.028
1°00'	NC	NC	0.021	0.025			
1°30'	NC	0.021	SEE DESIGN SUPERELEVATION RATE TO LEFT				
2°00'	RC						

DESIGN SUPERELEVATION RATES FOR RURAL HIGHWAYS, URBAN FREEWAYS AND HIGH SPEED URBAN HIGHWAYS

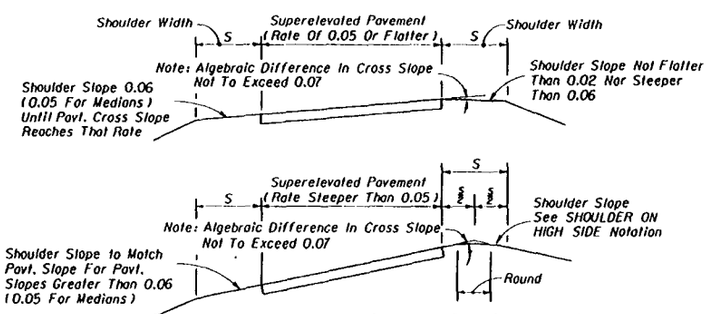

SHOULDER CONSTRUCTION WITH SUPERELEVATION

SHOULDER ON HIGH SIDE A shoulder slope of 0.06 downward from the edge of pavement will be maintained until a 0.07 break in slope of the pavement edge is reached due to superelevation of the pavement. As the pavement superelevation increases, the 0.07 break in slope will be maintained and the shoulder flattened until the shoulder slope reaches the minimum of 0.02 downward from the edge of pavement. Any further increase in pavement superelevation will necessitate sloping the inside half of the shoulder toward the pavement and the outer half outward, both at 0.02.

These slopes will be held with further increase in pavement superelevation until the maximum break of 0.07 at the pavement edge is again reached. This maximum break will then be held and shoulder slopes steepened with additional superelevation.

SHOULDER ON LOW SIDE Maintain 0.06 drop across inside shoulder until pavement cross slope reaches 0.06. For pavement cross slopes greater than 0.06, shoulder to have same slope as pavement.

NOTE These details apply to both paved and grassed shoulders. For median shoulders use 0.05 in lieu of 0.06.

GENERAL NOTES

1. For curves in Urban Highways and high speed Urban Streets areas, see Index No. 511.

STATE OF FLORIDA DEPARTMENT OF TRANSPORTATION
ROAD DESIGN

SUPERELEVATION

	Names	Dates
Designed By	-	-
Drawn By	HFW	5/65
Checked By	LMF	10/74

Approved By Freddie Simmons
State Roadway Design Engineer

F.H.W.A. Approved: 7/1/75

Revision No.	Sheet No.	Index No.
92	1 of 2	510

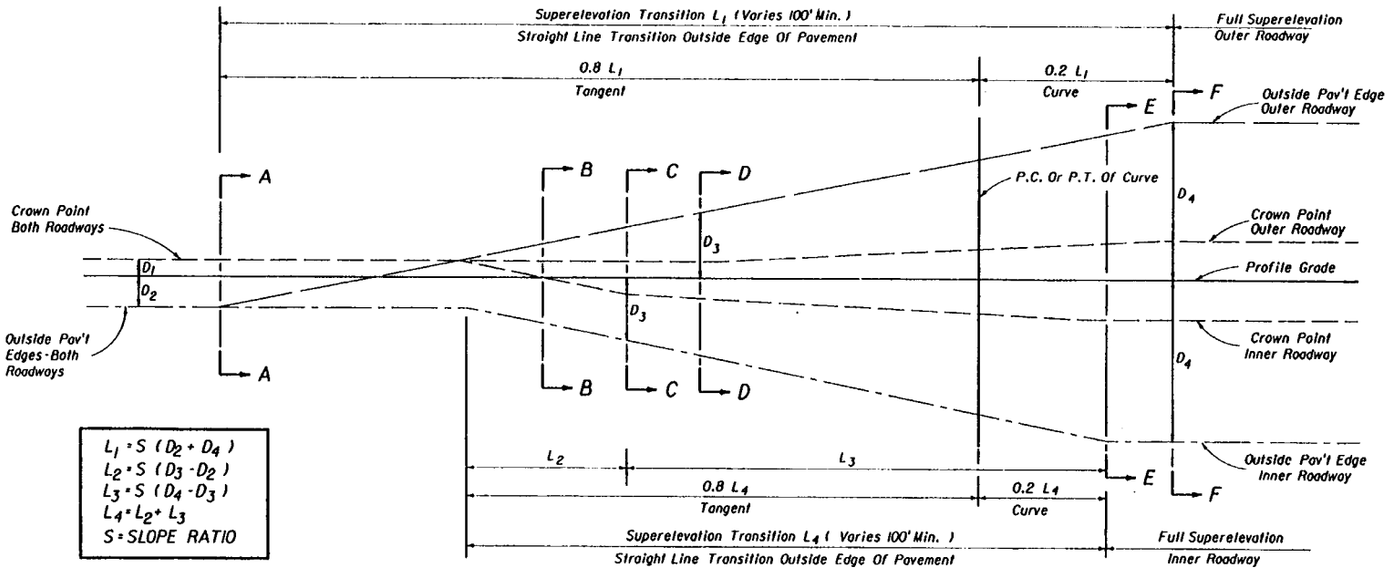

$L_1 = S\,(D_2 + D_4)$
$L_2 = S\,(D_3 - D_2)$
$L_3 = S\,(D_4 - D_3)$
$L_4 = L_2 + L_3$
S = SLOPE RATIO

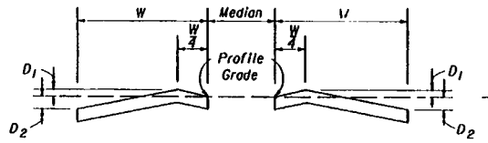

SECTION A-A
NORMAL CROWNED SECTION

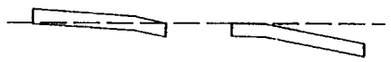

SECTION B-B
SUPERELEVATION SECTION LT. & RT.

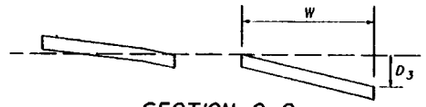

SECTION C-C
SUPERELEVATION SECTION LT.
PLANE INCLINED SECTION RT.

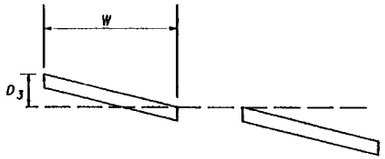

SECTION D-D
PLANE INCLINED SECTION LT.
SUPERELEVATION TRANSITION RT.

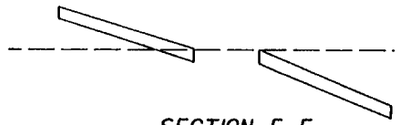

SECTION E-E
SUPERELEVATION TRANSITION LT.
FULL SUPERLEVATION RT.

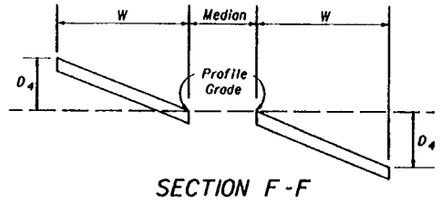

SECTION F-F
FULL SUPERELEVATION LT. & RT.

8-LANE PAVEMENT WITH ONE LANE SLOPED TO MEDIAN

STATE OF FLORIDA DEPARTMENT OF TRANSPORTATION
ROAD DESIGN

SUPERELEVATION

	Names	Dates
Designed By	WAL	08/77
Drawn By	LMF	08/77
Checked By	WAL	08/77
F.H.W.A. Approved:		11/02/77

Approved By: Freddie Simmons
State Roadway Design Engineer

Revision No.	Sheet No.	Index No.
81	2 of 2	510

SUPERELEVATION RATES (e) FOR URBAN HIGHWAYS AND HIGH SPEED URBAN STREETS

$e_{max} = 0.05$

TABULATED VALUES

Degree Of Curve D	Radius R (Ft)	Design Speed (mph) 30	35	40	45	50
2° 00'	2,865	NC	NC	NC	NC	NC
2° 15'	2,546					RC
2° 45'	2,083				NC	
3° 00'	1,910				RC	
3° 45'	1,528			NC		
4° 00'	1,432			RC		
4° 45'	1,206					RC
5° 00'	1,146		NC			0.023
5° 15'	1,091		RC			0.027
5° 30'	1,042					0.030
5° 45'	996					0.035
6° 00'	955				RC	0.040
6° 15'	917				0.022	0.045
6° 30'	881				0.024	0.050
6° 45'	849				0.027	Dmax. =
7° 00'	819	NC			0.030	6° 30'
7° 15'	790	RC			0.033	
7° 30'	764				0.037	
7° 45'	739				0.041	
8° 00'	716			RC	0.045	
8° 15'	694			0.022	0.050	
8°30'	674			0.025	Dmax. =	
8° 45'	655			0.027	8° 15'	
9° 00'	637			0.030		
9° 30'	603			0.034		
10° 00'	573			0.040		
10° 30'	546		RC	0.047		
11° 00'	521		0.023	Dmax. =		
11° 30'	498		0.026	10° 45'		
12° 00'	477		0.030			
13° 00'	441		0.036			
14° 00'	409	RC	0.045			
15° 00'	382	0.023	Dmax. =			
16° 00'	358	0.027	14° 15'			
17° 00'	337	0.032				
18° 00'	318	0.038				
19° 00'	302	0.043				
20° 00'	286	0.050				
		Dmax. = 20° 00'				

NC = Normal Crown

RC = Reverse Crown (+.02 Superelevation)

CHARTED VALUES

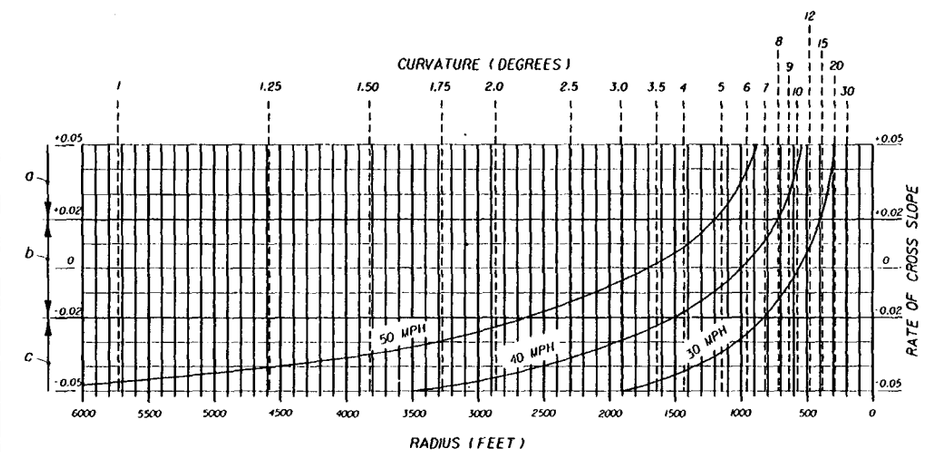

a: When the speed curves and the degree of curve lines intersect above this line, the pavement is to be superelevated (positive slope) at the rates indicated at the lines intersecting points.

b: When the speed curves and the degree of curve lines intersect between these limits, the pavement is to be superelevated at the rate of 0.02 (positive slope).

c: When the speed curves and the degree of curve lines intersect below this line. The pavement is to have normal crown (typically 0.02 and 0.03 downward slopes).

GENERAL NOTES

1. Maximum rate of superelevation for urban highways and high speed urban streets shall be 0.05.
2. Superelevation shall be obtained by rotating the plane successively about the break points of the section until the plane has attained a slope equal to that required by the chart. Should the rotation traverse the entire section and further superelevation be required, the remaining rotation of the plane shall be about the low edge of the inside travel lane.

   Crown is to be removed in the auxiliary lane to the outside of the curve only when the adjoining travel lanes require positive superelevation.
3. When positive superelevation is required, the slope of the gutter on the high side shall be a continuation of the slope of the superelevated pavement.
4. In construction, short vertical curves shall be placed at all angular profile breaks within the limits of the superelevation transition.
5. The variable superelevation transition length "L" shall have a minimum value of 50 feet for design speeds under 40 MPH and 75 feet for design speeds of 40 MPH or greater.
6. Roadway sections having lane arrangements different from those shown, but composed of a series of planes, shall be superelevated in a similar manner.
7. For superelevation of lower speed urban streets, see the FDOT 'Manual Of Uniform Minimum Standards For Design, Construction And Maintenance For Streets And Highways'. For superelevation of curves on rural highways, urban freeways and high speed urban highways, see Index No. 510.

$e_{max} = 0.05$

SUPERELEVATION FOR URBAN HIGHWAYS AND HIGH SPEED URBAN STREETS

STATE OF FLORIDA DEPARTMENT OF TRANSPORTATION
ROAD DESIGN

SUPERELEVATION
URBAN HIGHWAYS AND STREETS

	Name	Date
Designed By	WLB/JVG	66 & 90
Drawn By	CDR/HSD	67 & 90
Checked By	RLO/JVG	67 & 90
F.H.W.A. Approved:		5/20/77

Approved By: Freddie Simmons
State Roadway Design Engineer

Revision No.	Sheet No.	Index No.
94	1 of 3	511

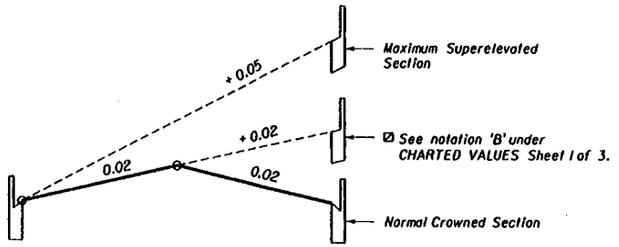

TWO TRAVEL LANES EACH DIRECTION

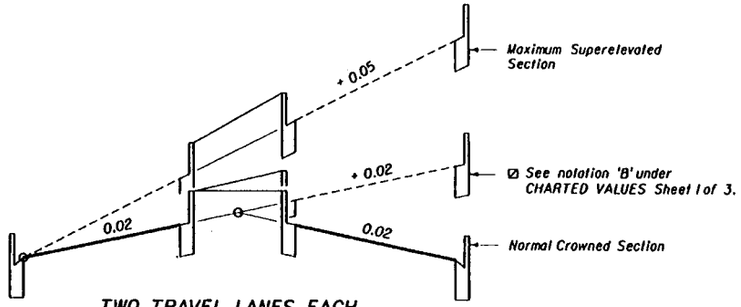

TWO TRAVEL LANES EACH DIRECTION WITH MEDIAN

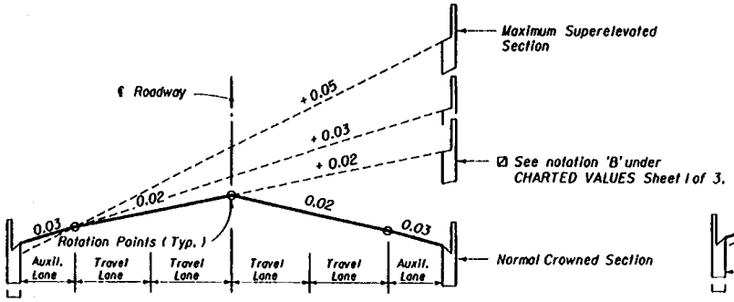

TWO TRAVEL LANES EACH DIRECTION WITH AUXILIARY LANES

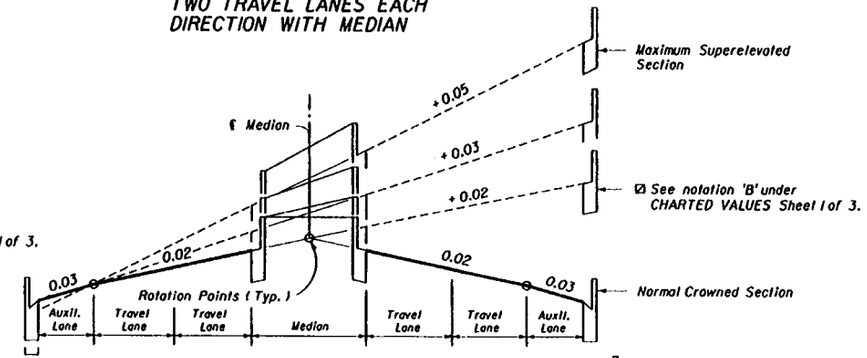

TWO TRAVEL LANES EACH DIRECTION WITH MEDIAN AND AUXILIARY LANES

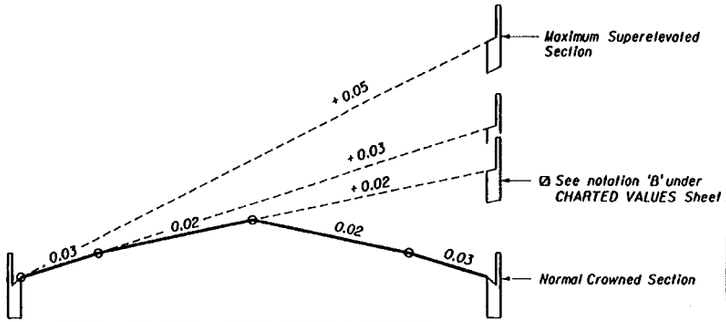

THREE TRAVEL LANES EACH DIRECTION

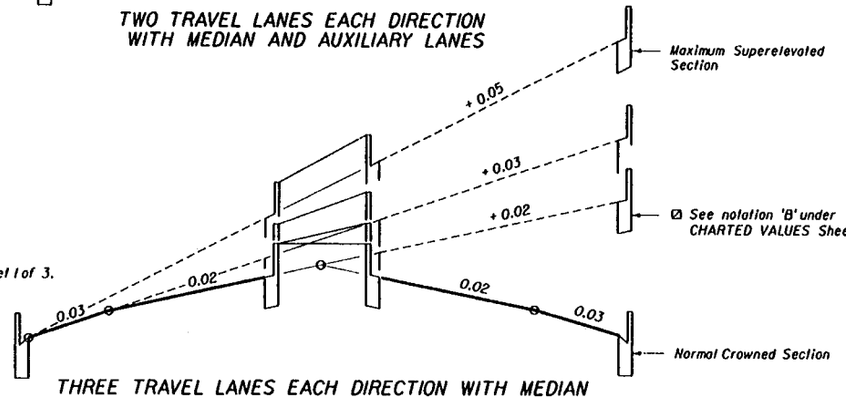

THREE TRAVEL LANES EACH DIRECTION WITH MEDIAN

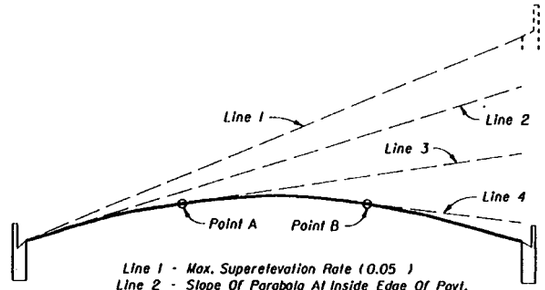

Line 1 - Max. Superelevation Rate (0.05)
Line 2 - Slope Of Parabola At Inside Edge Of Pavt.
Line 3 - Positive Superelevation Rate Less Than Max. Slope Of Parabola.
Line 4 - Adverse Superelevation.

Superelevation rates obtained from the chart or table on Sheet 1 of 3 are also applicable to a parabolic crown section. When this section is used, superelevation is established by rotating a tangent about the arc of the parabolic crown until the desired slope is attained (points A & B on sketch). The normal parabolic crown will be maintained outside the limits of the plane thus formed.

PARABOLIC SECTION

UNDIVIDED FACILITIES

DIVIDED FACILITIES

SUPERELEVATION TRANSITION SECTIONS FOR URBAN HIGHWAYS AND HIGH SPEED URBAN STREETS

STATE OF FLORIDA DEPARTMENT OF TRANSPORTATION
ROAD DESIGN

SUPERELEVATION
URBAN HIGHWAYS AND STREETS

	Names	Dates
Designed By	WLB/MG	66 & 90
Drawn By	CDR/HSD	67 & 90
Checked By	RLO/MG	67 & 90
F.H.W.A. Approved:		5/20/77

Approved By Freddie Simmons
State Roadway Design Engineer

Revision No.	Sheet No.	Index No.
94	2 of 3	511

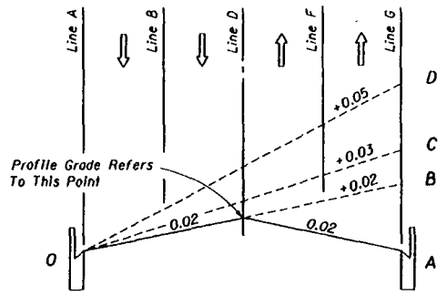

SECTION 0-A to 0-D

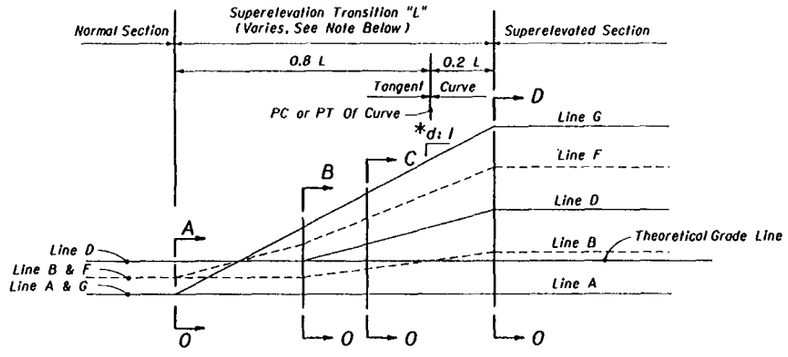

PROFILE

TWO LANES EACH DIRECTION

LINE	DESCRIPTION
A	Inside Travel Lane
B	Inside Lane Line
C	Inside Median Edge Pavement
D	℄ Construction
E	Outside Median Edge Pavement
F	Outside Lane Line
G	Outside Travel Lane

Inside And Outside Are Relative To Curve Center

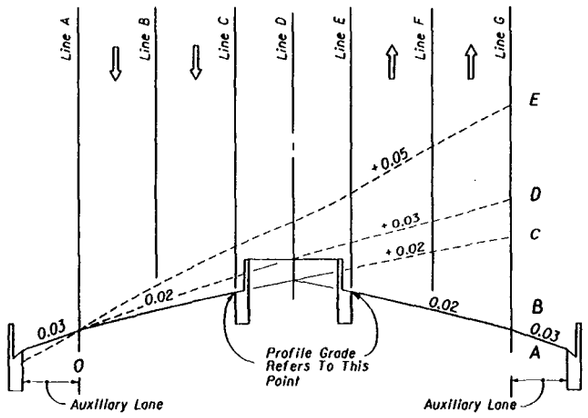

SECTION 0-A to 0-E

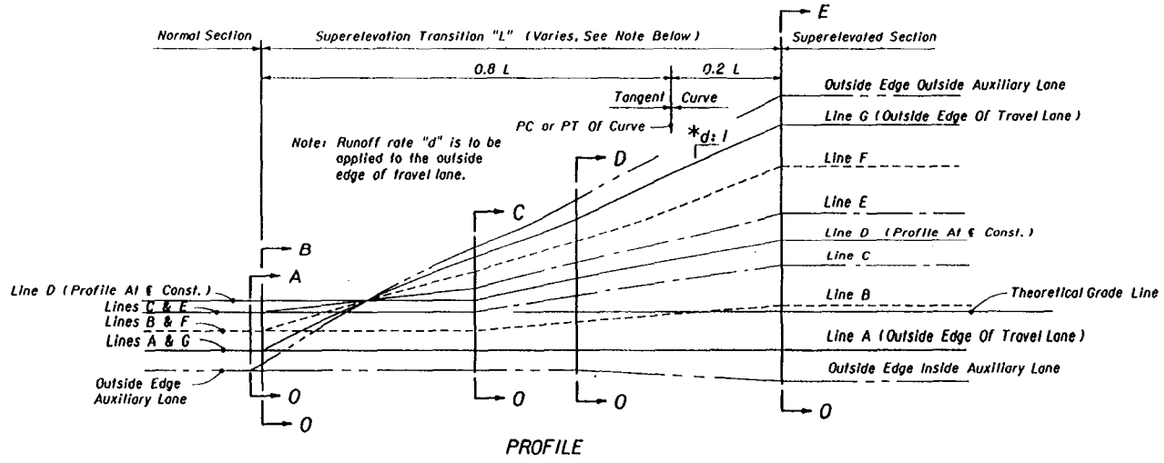

PROFILE

*d (Slope Ratio)	
30 MPH	1: 100
40 MPH	1: 125
45-50 MPH△	1: 150

△ 1: 125 May Be Used For 45 MPH Under Restricted Conditions.

TWO LANES EACH DIRECTION WITH MEDIAN AND AUXILIARY LANE

Note: The sections and profiles shown are examples of superelevation transitions. Similar schemes should be used for roadways having other sections.

EXAMPLE SUPERELEVATION SECTIONS AND PROFILES FOR URBAN HIGHWAYS AND HIGH SPEED URBAN STREETS

STATE OF FLORIDA DEPARTMENT OF TRANSPORTATION
ROAD DESIGN

SUPERELEVATION
URBAN HIGHWAYS AND STREETS

	Names	Dates
Designed By	WLB/JVG	66 & 90
Drawn By	CDR/HSD	67 & 90
Checked By	RLO/JVG	67 & 90
F.H.W.A. Approved		05/20/77

Approved By: Freddie Simmons
State Roadway Design Engineer

Revision No.	Sheet No.	Index No.
94	3 of 3	511

LAYER THICKNESS FOR ASPHALTIC CONCRETE STRUCTURAL COURSES
(Layers Are Listed In Sequence Of Construction)

COURSE THICKNESS (Inches)	LAYER THICKNESS (Inches)																													
	Type S-II With Type S-I Top Layer				Type S-II With Type S-III Top Layer				Type S-I				Type S-I With Type S-III Top Layer				Type S-III				Type S-II 1st Layer With Type S-I 2nd And Top Layer											
	1st	2nd	3rd	4th	1st	2nd	3rd	4th	1st	2nd	3rd	4th	1st	2nd	3rd	4th	1st	2nd	3rd	4th	1st	2nd	3rd	4th	1st	2nd	3rd	4th	1st	2nd	3rd	4th
1																	1															
1½									1½																							
2													1¼	¾																		
2½									1¼	1¼			1½	1																		
3					2	1			1½	1½			2	1																		
3½	2	1½							2	1½			1¼	1¼	1																	
4	2	2							2	2			1½	1½	1																	
4½	2½	2							1½	1½	1½		2	1½	1																	
5					2	2	1														2	1½	1½									
5½	2	2	1½		2½	2	1														2½	1½	1½									
6	2½	2	1½		2½	2½	1														2½	2	1½									

DESIGN NOTES

It is desirable that the top layer of the roadway overlay and the adjacent shoulder structural course be constructed in one pass. The following apply when a five foot or less shoulder meeting the minimum standards is to be constructed in conjunction with an overlay of the roadway:

1. If alternate friction courses are not to be shown on the typical section, use the following:

ROADWAY COURSE THICKNESS Type S		SHOULDER Type S
1.0"	w/ any FC	1.0"
1.5"	w/ any FC	1.5"
2.0"	w/ FC 3	0.75"
2.25*	w/ FC 2	1.0"
2.5" up	w/ any FC	1.0"

*The increased thickness is required to insure a 1.0" thickness of Type S on the shoulder under the open graded friction course and to meet the requirements of the Min/Max criteria of this index.

2. If alternate friction courses are to be shown on the typical section, use one of the following combinations:

ROADWAY COURSE THICKNESS Type S		SHOULDER Type S
1.0"	w/ FC 3	1.0"
Alt. 1.5"	w/ FC 2	1.5"
1.5"	w/ FC 3	1.5"
Alt. 2.0"	w/ FC 2	2.0"
2.0"	w/ FC 3	0.75"
Alt. 2.5"	w/ FC 2	1.25"
2.5" and up	w/ FC 3	1.0"
Alt. (plus 0.5")	w/ FC 2	1.5"

GENERAL NOTES

1. If combinations other than those shown in the table are used, the thickness must be consistent with the following thickness ranges.

Type Mix	Min.	Max.
S-I	1¼"	2"
S-II	2"	2½"
S-III	¾"	1¼"

Multiple layers shall be used when possible. Layer combinations shall be as approved by the Engineer.

2. In addition to the Min.-Max. thickness requirements, the following restrictions are placed on the respective material when used as a structural course:

S-I	May not be used in the 1st layer of courses over 4½" thick.
S-II	May not be used in the final (top) structural layer
S-III	Limited to the final (top) structural layer, one layer only.

3. When quantities are bid as tonnage items, equivalent tonnage layer thickness will be constructed (i.e., 100* = one square yard inch).

4. The designer should consider stage construction for course thicknesses greater than 4½".

5. When construction includes the paving of adjacent shoulders (≤ 5' wide), the layer thickness for the upper pavement layer and shoulder shall be the same and paved in a single pass. See Design Notes.

STATE OF FLORIDA DEPARTMENT OF TRANSPORTATION
ROAD DESIGN

FLEXIBLE PAVEMENT

LAYER THICKNESS FOR STRUCTURAL COURSES

	Names	Dates
Designed By		
Drawn By	WNL	09/85
Checked By	WNL	09/85

Approved By: Bruce Dietrich
State Pavement Design Engineer

F.H.W.A. Approved: —

Revision No. 94 | Sheet No. 1 of 1 | Index No. 513

Base Group & Structural Range	Limerock LBR 100 (.18)	Cemented Coquina LBR 100 (.18)	Shell Rock LBR 100 (.18)	ABC-3 (Min. Marshall Stability 1000) (.30)	Bank Run Shell LBR 100 (.16)	Graded Aggregate Base LBR 100 (.15)	Composite Bases*: ABC-1 And 4" Limerock Subbase LBR 100 (.20) And (.16)	ABC-2 And 4" Limerock Subbase LBR 100 (.25) And (.16)	ABC-3 And 4" Limerock Subbase LBR 100 (.30) And (.16)	ABC-1 And 4" Cemented Coquina Subbase LBR 100 (.20) And (.16)	ABC-2 And 4" Cemented Coquina Subbase LBR 100 (.25) And (.16)	ABC-3 And 4" Cemented Coquina Subbase LBR 100 (.30) And (.16)	ABC-1 And 4" Bank Run Shell Subbase LBR 100 (.20) And (.14)	ABC-2 And 4" Bank Run Shell Subbase LBR 100 (.25) And (.14)	ABC-3 And 4" Bank Run Shell Subbase LBR 100 (.30) And (.14)	ABC-1 And 4" Graded Aggr. Subbase LBR 100 (.20) And (.14)	ABC-2 And 4" Graded Aggr. Subbase LBR 100 (.25) And (.14)	ABC-3 And 4" Graded Aggr. Subbase LBR 100 (.30) And (.14)	RAP Base (TBA)
1 (.58-.62)	△ 001 4"	△ 003 4"	△ 701 4"	△ 007 4"	△ 032 4"	015 4" .60														□ 031 5"
2 (.72-.78)	999 4" .72	043 4" .72	702 4" .72	△ 047 4"	072 4½" .72	055 5" .75														
3 (.86-.94)	998 5" .90	984 5" .90	703 5" .90	△ 087 4"	112 5½" .88	095 6" .90														
4 (1.00-1.10)	985 6" 1.08	123 6" 1.08	704 6" 1.08	△ 127 4"	152 6½" 1.04	135 7" 1.05														
5 (1.15-1.25)	997 6½" 1.17	996 6½" 1.17	705 6½" 1.17	167 4" 1.20	192 7½" 1.20	175 8" 1.20														
6 (1.29-1.41)	201 7½" 1.35	203 7½" 1.35	706 7½" 1.35	207 4½" 1.35	232 8½" 1.36	215 9" 1.35	△ 216 4"			△ 219 4"			222 4" 1.36			225 4" 1.36				
7 (1.44-1.56)	994 8" 1.44	993 8" 1.44	707 8" 1.44	247 5" 1.50	272 9½" 1.52	255 10" 1.50	256 4" 1.44			259 4" 1.44			262 4½" 1.46	263 4" 1.56		265 4½" 1.46	266 4" 1.56			
8 (1.58-1.72)	991 9" 1.62	283 9" 1.62	708 9" 1.62	287 5½" 1.65	312 10½" 1.68	295 11" 1.65	296 5" 1.64	297 4" 1.64		299 5" 1.64	300 4" 1.64		302 5½" 1.66	303 4½" 1.69		305 5½" 1.66	306 4½" 1.69			
9 (1.73-1.87)	990 10" 1.80	989 10" 1.80	709 10" 1.80	327 6" 1.80	352 11" 1.76	335 12" 1.80			338 4" 1.84			341 4" 1.84			344 4" 1.76			347 4" 1.76		
10 (1.88-2.02)	983 10½" 1.89	363 10½" 1.89	710 10½" 1.89	367 6½" 1.95	392 12" 1.92	Ø 375 13" 1.95			378 4½" 1.99			381 4½" 1.99			384 4½" 1.91			387 4½" 1.91		
11 (2.03-2.17)	987 11½" 2.07	403 11½" 2.07	711 11½" 2.07	407 7" 2.10	Ø 432 13" 2.08	Ø 415 14" 2.10			986 5" 2.14			421 5" 2.14			424 5" 2.06			427 5" 2.06		
12 (2.18-2.32)	441 12½" 2.25	443 12½" 2.25	712 12½" 2.25	447 7½" 2.25	Ø 472 14" 2.24				458 5½" 2.29			461 5½" 2.29			464 5½" 2.21			467 5½" 2.21		
13 (2.33-2.47)	Ø 481 13" 2.34	Ø 483 13" 2.34	Ø 713 13" 2.34	487 8" 2.40					498 6" 2.44			501 6" 2.44			504 6" 2.36			507 6" 2.36		
14 (2.48-2.62)	Ø 521 14" 2.52	Ø 523 14" 2.52	Ø 714 14" 2.52	527 8½" 2.55					538 6½" 2.59			541 6½" 2.59			544 6½" 2.51			547 6½" 2.51		
15 (2.63-2.77)				567 9" 2.70					982 7" 2.74			581 7" 2.74			584 7" 2.66			587 7" 2.66		
□ 16 (.60-.61)	△ 981 4"	△ 980 4"	△ 716 4"	△ 606 3"	△ 632 4"	615 4" .60														631 5"

GENERAL NOTES

1. On new construction and complete reconstruction projects where an entirely new base is to be built, the design engineer may specify just the Base Group and any of the unrestricted General Use Optional Bases shown in that Base Group may be used. Note, however, that some thick rock bases are limited to widening which prevents their general use.
2. On any type of widening project, the base options to be used must be specified by the designer and shown in the plans.
3. Where base options are specified in the plans, only those options may be bid and used.
4. The designer may require the use of a single base option, for instance ABC 3 in a high water condition. This will still be bid as Optional Base.
5. The contractor will indicate the basis for his bid by designating the three digit option code on the bid blank.

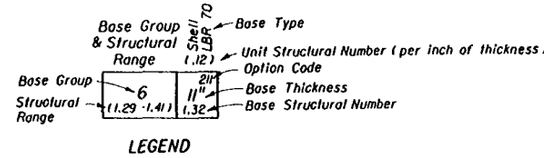

LEGEND

* For composite bases, the construction of both the subbase and ABC will be paid for under the contract unit price for Optional Base. The base thickness shown is ABC. All subbase thicknesses are 4". The base structural number shown is for the composite base.

Ø To be used for widening only, three feet or less.

△ Based on minimum practical thickness.

□ Generally restricted to non-Interstate shoulder base construction.

GENERAL USE OPTIONAL BASE GROUPS AND STRUCTURAL NUMBERS

STATE OF FLORIDA DEPARTMENT OF TRANSPORTATION
ROAD DESIGN

OPTIONAL BASE GROUP AND STRUCTURAL NUMBERS

	Names	Dates
Designed By	DCB	10/79
Drawn By	HSD	10/79
Checked By	KNW	10/79
F.H.W.A. Approved:		

Approved By Bruce Dietrich
State Pavement Design Engineer

Revision No.	Sheet No.	Index No.
94	1 of 2	514

Base Group & Structural Range	Soil Cement (300. PSI) (Plant Mixed) (.15)	Limerock Stabilized LBR 70 (.12)	Sand-Clay LBR 75 (.12)	Shell LBR 70 (.12)	Shell Stabilized LBR 70 (.10)	Soil Cement (300 PSI) (Road Mixed) (.15)	SAHM (Min. Marshall Stability 300) □ (.15)	ABC-1 (Min. Marshall Stability 500) (.20)	ABC-2 (Min. Marshall Stability 750) (.25)	Soil Cement (500 PSI) (Plant Mixed) (.20)	Econocrete (800 PSI) (.22)	Econocrete (1100 PSI) (.25)
1 (.58-.62)	008 4" .60	009 5" .60	010 5" .60	011 5" .60	012 6" .60	△ 013 6"	014 4" .60	△ 005 4"	△ 006 4"	△ 028 4"	△ 029 4"	△ 030 4"
2 (.72-.78)	048 5" .75	049 6" .72	050 6" .72	051 6" .72	052 7½" .75	△ 053 6"	054 5" .75	△ 045 4"	△ 046 4"	068 4" .80	△ 069 4"	△ 070 4"
3 (.86-.94)	088 6" .90	089 7½" .90	090 7½" .90	091 7½" .90	092 9" .90	093 6" .90	094 6" .90	085 4½" .90	△ 086 4"	108 4½" .90	109 4" .88	△ 110 4"
4 (1.00-1.10)	128 7" 1.05	129 9" 1.08	130 9" 1.08	131 9" 1.08	132 10½" 1.05	133 7" 1.05		125 5" 1.00	126 4" 1.00	148 5" 1.00	149 4½" .99	150 4" 1.00
5 (1.15-1.25)	168 8" 1.20	169 10" 1.20	170 10" 1.20	171 10" 1.20	172 12" 1.20	173 8" 1.20		995 6" 1.20	166 5" 1.25	188 5½" 1.10	189 5" 1.10	190 5" 1.25
6 (1.29-1.41)	208 9" 1.35	209 11" 1.32	210 11" 1.32	211 11" 1.32						228 6½" 1.30	229 6" 1.32	230 5½" 1.38
7 (1.44-1.56)	248 10" 1.50	249 12" 1.44	250 12" 1.44	251 12" 1.44						268 7½" 1.50	269 7" 1.54	270 6" 1.50
8 (1.58-1.72)	288 11" 1.65									308 8" 1.60	309 7½" 1.65	310 6½"
9 (1.73-1.87)											349 8" 1.76	350 7" 1.75
10 (1.88-2.02)											389 9" 1.98	390 8" 2.00
11 (2.03-2.17)											429 9½" 2.09	430 8½" 2.13
12 (2.18-2.32)											469 10" 2.20	470 9" 2.25
13 (2.33-2.47)											509 11" 2.42	510 9½" 2.38
14 (2.48-2.62)											549 11½" 2.53	550 10" 2.50
15 (2.63-2.77)											589 12" 2.64	590 11" 2.75
□ 16 (.60-.61)	608 4" .60	609 5" .60	610 5" .60	611 5" .60	612 6" .60	△ 613 6"	614 4" .60	604 3" .60	△ 605 3"	△ 628 4"	△ 629 4"	△ 630 4"

Not Recommended For Design
Year 18 Kip Loads > 1,000,000

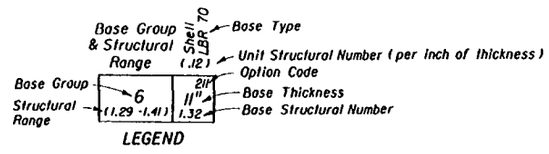

LEGEND

△ Based on minimum practical thickness.

□ Generally restricted to shoulder base construction.

GENERAL NOTES FOR LIMITED USE OPTIONAL BASES

These limited use base materials shall be used only when the specific materials are shown in the plans.

DESIGN NOTES FOR LIMITED USE OPTIONAL BASES

These limited use base options should be called for in the plans only when approved in writing by the District Materials Engineer.

LIMITED USE OPTIONAL BASE GROUPS AND STRUCTURAL NUMBERS

STATE OF FLORIDA DEPARTMENT OF TRANSPORTATION
ROAD DESIGN

OPTIONAL BASE GROUP AND STRUCTURAL NUMBERS

	Names	Dates
Designed By	OCB	10/79
Drawn By	HSD	10/79
Checked By	KHW	10/79
F.H.W.A. Approved:		

Approved By: Bruce Dietrich
State Pavement Design Engineer

Revision No.	Sheet No.	Index No.
94	2 of 2	514

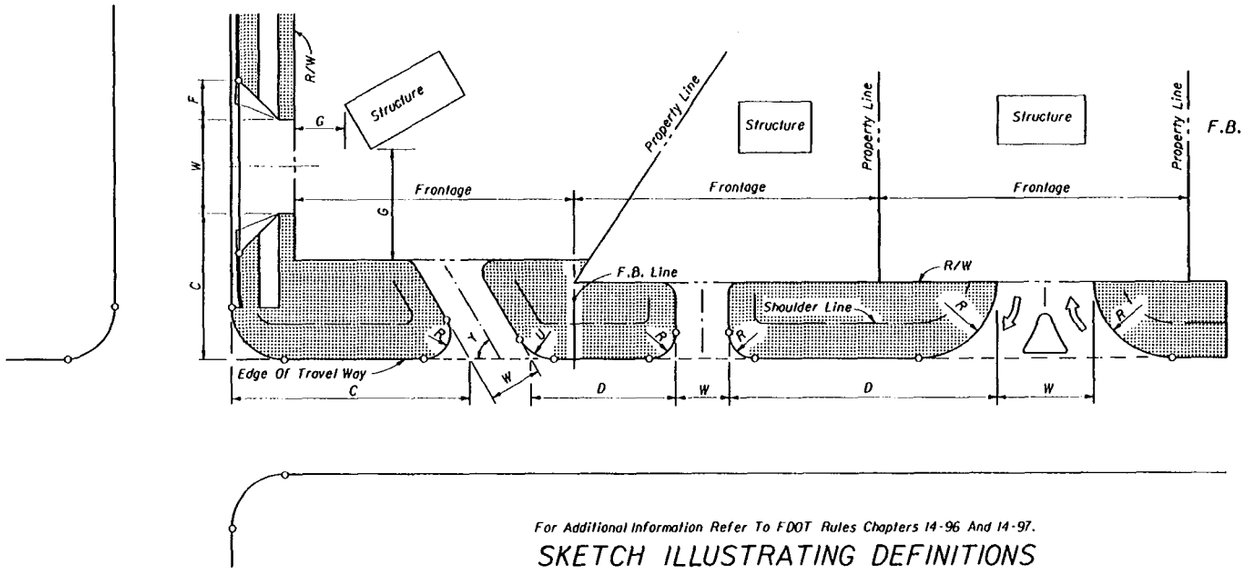

LEGEND

- Return Radius Point Or Flare Point
- Buffer Areas
- F.B. Line — Frontage Boundary Line
- W — Driveway Width
- Y — Driveway Angle
- C — Corner Clearance
- G — Setback
- R — Outside Radius
- U — Inside Radius
- D — Distance Between Connections
- F — Flare

GENERAL NOTES

1. For definitions and descriptions of access connection "Categories" and access "Classifications" of highway segments, and for other detailed information on access to the State Highway System, refer to FDOT Rule Chapter 14-96, "State Highway Connection Permits Administrative Process" and Rule Chapter 14-97, "State Highway System Access Management Classification System And Standards"
2. For this index the term 'turnout' applies to that portion of driveways, roads or streets adjoining the outer roadway. For this index the term 'connection' encompasses a driveway, street or road and their appurtenant islands, separators, transition tapers, auxiliary lanes, travelway flares, drainage pipes and structures, crossovers, sidewalks, curb cut ramps, signing, pavement marking, required signalization, maintenance of traffic or other means of access to or from controlled access facilities. The turnout requirements set forth in this index do not provide complete intersection design, construction or maintenance requirements.
3. The location, positioning, orientation, spacing and number of connections and median openings shall be in conformance with FDOT Rule Chapter 14-97.
4. On Department construction projects all driveways not shown on the plans are to be reconstructed at their existing location in conformance to these standards, or, in conformance to permits issued during the construction project.
5. Driveways shall have sufficient length and size for all vehicular queueing, stacking, maneuvering, standing and parking to be carried out completely beyond the right of way line. Except for vehicles stopping to enter the highway, the turnout areas and drives within the right of way shall be used only for moving vehicles entering or leaving the highway.
6. Connections with expected daily traffic over 4000 vpd are to be constructed as intersecting streets or roads. The design requirement of this index and that of the local government will be used to select appropriate connection widths, radii and intersection design, subject to the approval of the Department.

   For connections with expected daily traffic less than 4000 vpd, the Department will determine if drop curbs or radius returns are required in accordance with existing or planned connections. Where radius returns apply, the design requirements of this index and that of the local government will be used to select appropriate connection widths, radii and intersection design, subject to the approval of the Department.

   For connections that are intended to daily accommodate either multi-unit vehicles or single unit vehicles exceeding 30 feet in length, returns with 50' radii are to be used, unless otherwise called for in the plans or otherwise stipulated by permit. Where large numbers of multi-unit vehicles will use the connection, the connection width and radii are to be increased and auxiliary lanes, tapers, lane flares separators and/or islands constructed, as determined by the Department to be necessary for safe turning movements.
7. Any connection on a highway having a posted or operating speed over 45 mph shall have radial returns. Any connection requiring or having a specified median opening with left turn storage and served directly by that opening shall have radial returns.
8. Where a connection is intended to align with a connection across the highway, the through lanes are to align directly with the corresponding through lanes.
9. For new connections and for connections on all new construction and reconstruction projects, pavement materials and thicknesses shall meet the requirements applicable to either that detailed for "Urban Flared Turnouts", or, that described in "Table 515-1" for connections with radial returns and/or auxiliary lanes.
10. The responsibility for the cost of construction or alteration to an access connection shall be in accordance with FDOT Rule Chapter 14-96.

DESIGN NOTES

1. Prior to the adoption of FDOT Rules Chapters 14-96 and 14-97, connections to the State Highway System were defined and permitted by Classes. Connections have been redfined by Categories under Rule 14-96; and, the term "Class" has been applied to highway segments of the State Highway System as defined under Rule 14-97.

For Additional Information Refer To FDOT Rules Chapters 14-96 And 14-97.

SKETCH ILLUSTRATING DEFINITIONS

ELEMENT DESCRIPTION	URBAN (CURB & GUTTER)			RURAL		
	1-20 Trips/Day or 1-5 Trips/Hour	21-600 Trips/Day or 6-60 Trips/Hour	601-4000 Trips/Day ■ or 61-400 Trips/Hour	1-20 Trips/Day or 1-5 Trips/Hour	21-600 Trips/Day or 6-60 Trips/Hour	601-4000 Trips/Day ■ or 61-400 Trips/Hour
		2-Way □	2-Way □		2-Way □	2-Way □
CONNECTION WIDTH W	12' Min. 24' Max.	24' Min. 36' Max.	24' Min. 36' Max.	12' Min. 24' Max.	24' Min. 36' Max.	24' Min. 36' Max.
FLARE (Drop Curb) F	10' Min.	10' Min.	N/A	N/A	N/A	N/A
RETURNS (Radius) R & U	N/A	Δ	25' Min. 50' Std. 75' Max.	15' Min. 25' Std. 50' Max.	25' Min. 50' Std. 75' Max.	25' Min. 50' Std. (Or 3-Centered Curves)
ANGLE OF DRIVE Y		60°-90°	60°-90°		60°-90°	60°-90°
DIVISIONAL ISLAND (Throat Median)		4'-22' Wide	4'-22' Wide		4'-22' Wide	4'-22' Wide
SETBACK G	12' Min., All categories. See General Note No. 5.					

■ Street or road intersection design, with possible auxiliary lanes and channelization, may be necessary. Intersection design, with possible auxiliary lanes and channelization, should be considered for connections with more than 4000 trips/days.

□ "2-Way" refers to one "In" movement and one "out" movement i.e. not exclusive left or right turn lanes on the connection.

Δ Small radii may be used in lieu of flares as approved by the Department.

DESIGN NOTE: 1-Way connections will be designed to effectively eliminate unpermitted movements.

NOT INTENDED FOR FULL INTERSECTION DESIGN

SUMMARY OF GEOMETRIC REQUIREMENTS FOR TURNOUTS

STATE OF FLORIDA DEPARTMENT OF TRANSPORTATION
ROAD DESIGN

TURNOUTS

	Names	Dates
Designed By	COMM/MG	90/91
Drawn By	MSD	03/91
Checked By	MG	03/91

Approved By _____
State Roadway Design Engineer

Revision No.	Sheet No.	Index No.
94	1 of 6	515

F.H.W.A. Approved:

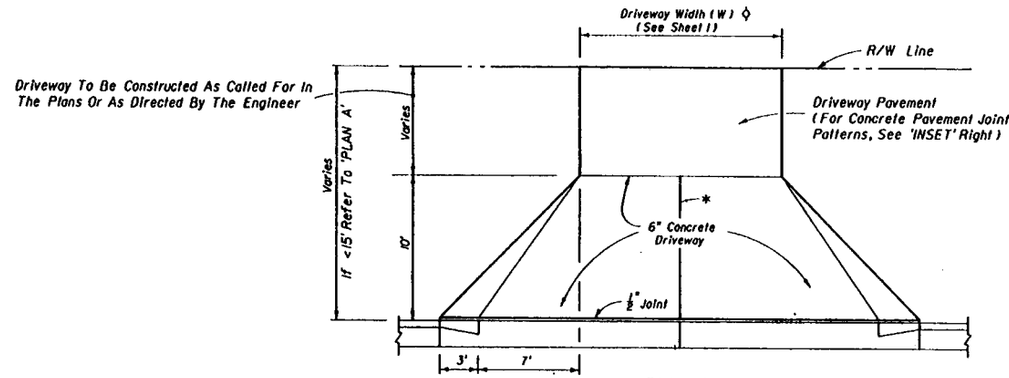

PLAN C

TURNOUT WITHOUT SIDEWALK

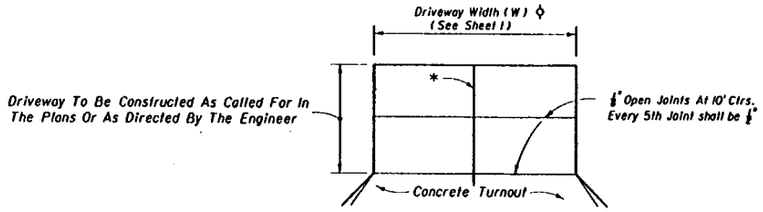

JOINT PATTERN WHEN CONCRETE DRIVE CONSTRUCTED

INSET

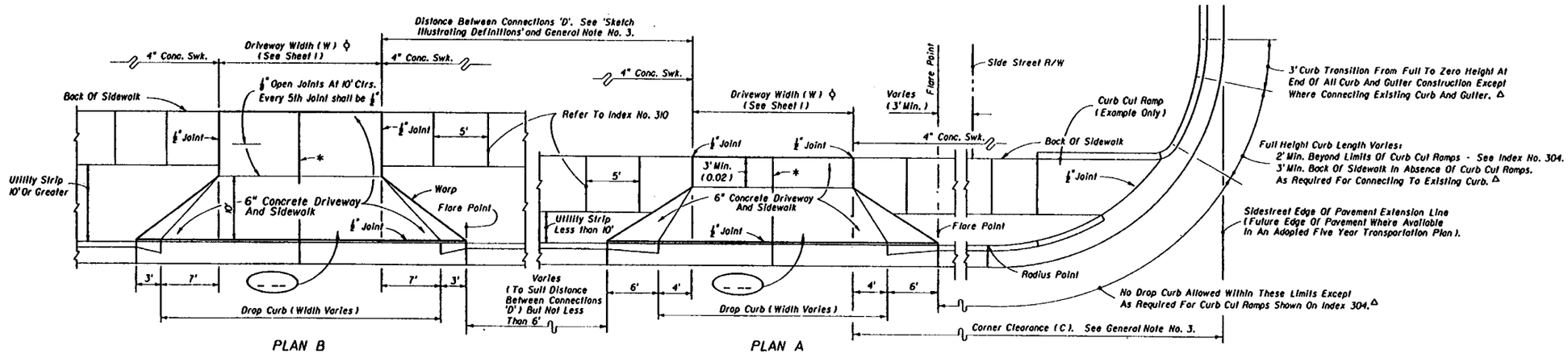

PLAN B

TURNOUT WITH SIDEWALK AND UTILITY STRIP (10' OR GREATER)

PLAN A

TURNOUT WITH SIDEWALK AND UTILITY STRIP (LESS THAN 10')

Footnotes:

All ½" joints shall be constructed with preformed joint filler.

* ⅛" Open joints placed at equal (20' max.) intervals for driveways over 20' wide. Joints in curb and gutter to match joints in driveways.

△ When connecting to sidestreet curb and gutter sections, the no drop curb limits should extend back to the sidestreet radius point. With or without curb and gutter, no driveway should encroach on the corner radius.

◊ Driveways (6" concrete) shall be of a uniform width (W) to the right of way line.

(- - -) Alpha-numeric identification of a flared driveway type specifically called for in the plans, see sheets 3 and 4.

SPECIAL NOTES FOR URBAN FLARED TURNOUTS

1. Driveway 6" concrete pavement and drop curb shall meet the material and construction requirements of Sections 522 and 520 respectively of the FDOT Standard Specifications. The driveway foundation shall meet the requirement of Subarticle 522-4.
2. For details of drop curb and curb cut ramps refer to Indexes Nos. 300 and 304 respectively.
3. Where turnouts are constructed within existing curb and gutter, the existing curb and gutter shall be removed either to the nearest joint beyond the flare point or to the extent that no remaining section is less than 5 feet long; and, drop curb constructed in accordance with Notes Nos. 1 and 2.
4. Cost for preformed joint filler shall be included in the cost for the concrete pavement (concrete sidewalk, 6" thick).
5. For turnouts with radial returns see the requirements under the "Summary Of Geometric Requirements For Turnouts", the "General Notes", the details of "Rural Turnout Construction" and the detail of "Limits Of Clearing & Grubbing, Stabilization And Base At Intersections".
6. Department maintenance of pavement shall extend out to the right of way or 2 feet back of sidewalk, whichever distance is less.
7. The maintenance and operation of highway lighting, traffic signals, associated equipment, and other necessary devices shall be the responsibility of a public agency.
8. All pavement markings on the State highways, including acceleration and deceleration lane markings, and signing installed for the operation of the State highway shall be maintained by the Department.
9. All signing and marking installed for the operation of the connection (such as stop bars and stop signs for the connection) shall be the responsibility of the permittee.
10. Turnouts will be paid for under the contract unit price for Sidewalk Concrete (6" Thick), SY.

DESIGN NOTES FOR URBAN FLARED TURNOUTS

1. Driveways indicated as 'Adverse Applications' are those with slopes that can cause overhang drag for representative standard passenger vehicles under fully loaded conditions; or, those with slopes that can cause drivers who are leaving the roadway to slow or pause to the extent that traffic demand volumes will be impeded.

   Driveways indicated as 'Marginal Applications' are those with slopes that can cause overhang drag for representative standard passenger vehicles under fully loaded conditions when the driveway is located on the low side of fully superelevated roadways.

   Driveways indicated as 'General Applications' are those with slopes that can readily accommodate representative standard passenger vehicles and those and those that can accommodate representative standard trucks, vans, buses and recreational vehicles operating under normal crown and superelevation conditions.
2. The standard flared driveways on this index may not accommodate vehicles with low beds, low undercarriage or low appendage features. Where such vehicles are design vehicles driveways are to have site specific flare designs or Category III designs.
3. When specific flare type driveways are to be constructed, the type shall be designated in the plans using the assigned alpha-numeric designation.

Note: See sheet 1 for 'GENERAL NOTES'

URBAN FLARED TURNOUTS

STATE OF FLORIDA DEPARTMENT OF TRANSPORTATION
ROAD DESIGN

TURNOUTS

	Names	Dates
Designed By	JVG/MKH	09/93
Drawn By	MKH	09/93
Checked By	JVG	09/93
F.H.W.A. Approved:		

Approved By: Freddie Simmons
State Roadway Design Engineer

Revision No.	Sheet No.	Index No.
94	2 of 6	515

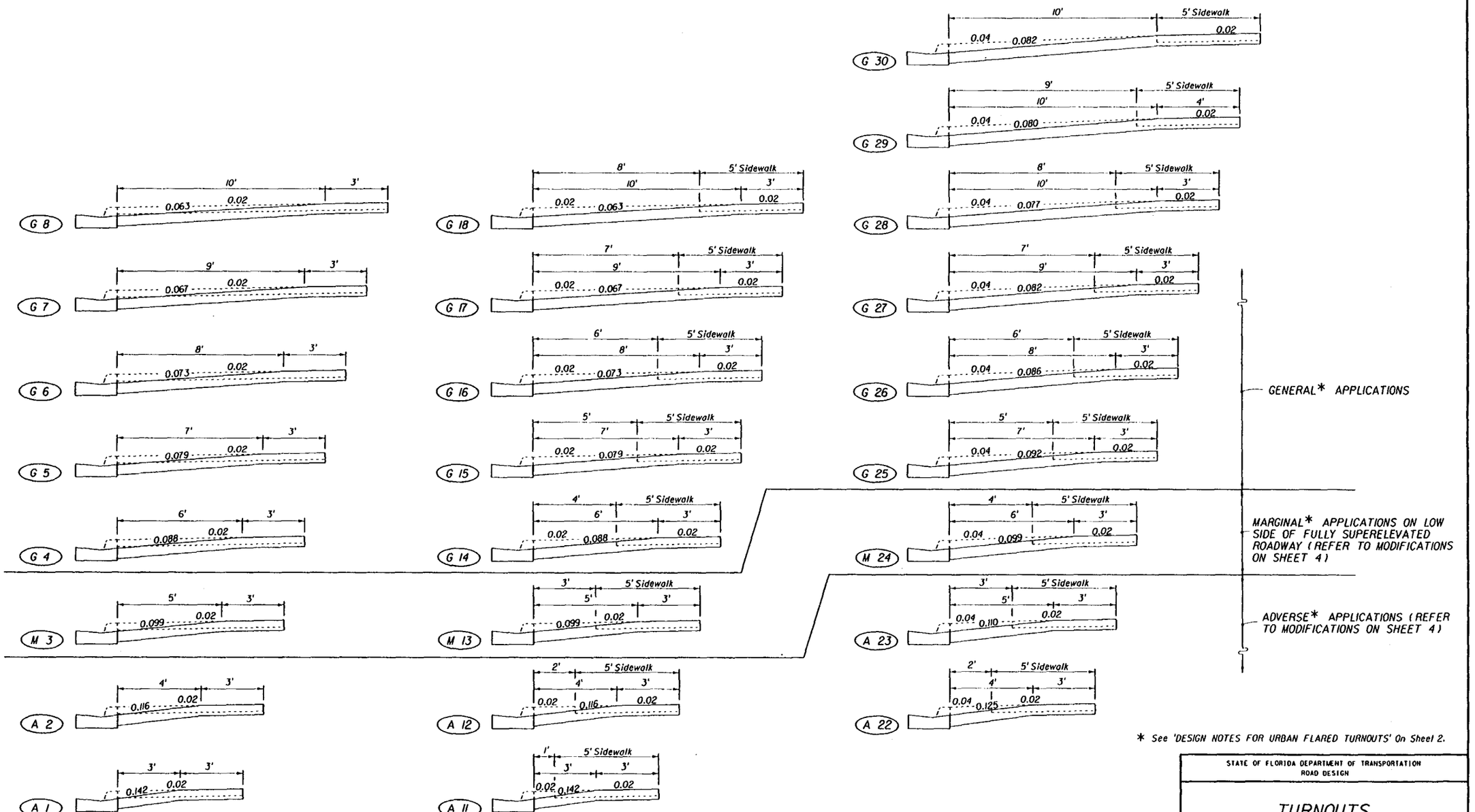

SIDEWALK ADJACENT TO CURB

SIDEWALK WITH UTILITY STRIP ON 0.02 SLOPE

SIDEWALK WITH UTILITY STRIP ON 0.04 SLOPE

* See 'DESIGN NOTES FOR URBAN FLARED TURNOUTS' On Sheet 2.

DRIVEWAY SECTIONS ON CURBED FACILITIES WITH SIDEWALKS

STATE OF FLORIDA DEPARTMENT OF TRANSPORTATION
ROAD DESIGN

TURNOUTS

	Names	Dates
Designed By	JVG/HKH	9/93
Drawn By	HKH	9/93
Checked By	JVG/FLS	9/93
F.H.W.A. Approved:		

Approved By: Freddie Simmons
State Roadway Design Engineer

Revision No.	Sheet No.	Index No.
94	3 of 6	515

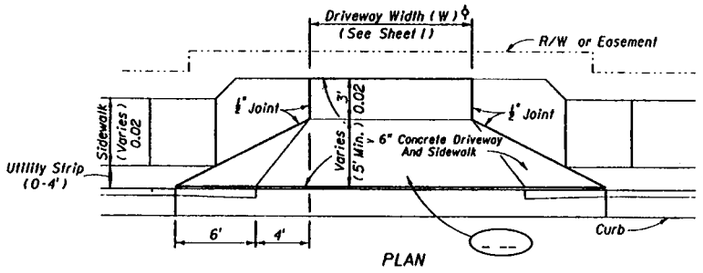

PLAN

MODIFICATIONS OF 'ADVERSE' AND 'MARGINAL' APPLICATIONS

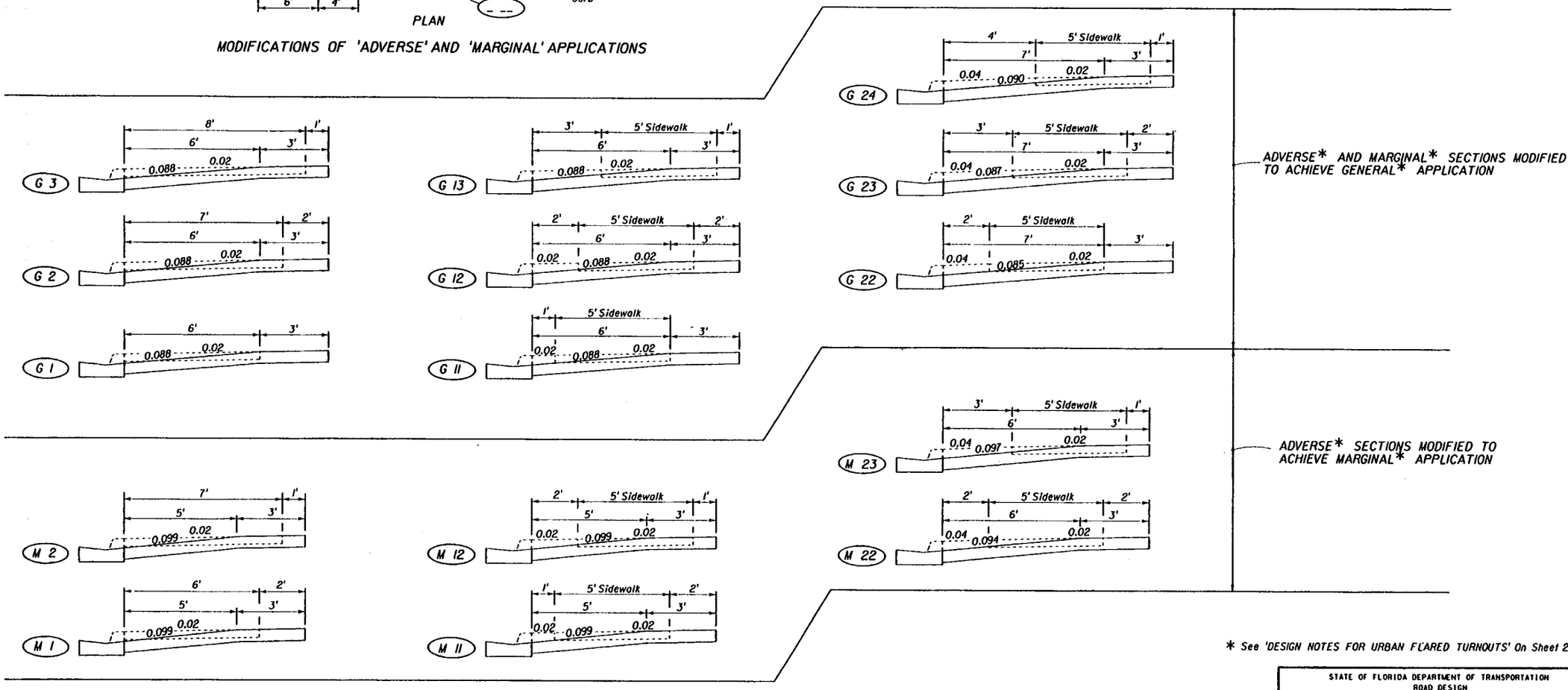

ADVERSE* AND MARGINAL* SECTIONS MODIFIED TO ACHIEVE GENERAL* APPLICATION

ADVERSE* SECTIONS MODIFIED TO ACHIEVE MARGINAL* APPLICATION

* See 'DESIGN NOTES FOR URBAN FLARED TURNOUTS' On Sheet 2.

SIDEWALK ADJACENT TO CURB

SIDEWALK WITH UTILITY STRIP ON 0.02 SLOPE

SIDEWALK WITH UTILITY STRIP ON 0.04 SLOPE

MODIFICATIONS TO ADVERSE AND MARGINAL SECTIONS

STATE OF FLORIDA DEPARTMENT OF TRANSPORTATION
ROAD DESIGN

TURNOUTS

	Names	Dates
Designed By	MG/MKH	9/93
Drawn By	MKH	9/93
Checked By	MG/FLS	9/93
F.H.W.A. Approved:		

Approved By
State Roadway Design Engineer

Revision No.	Sheet No.	Index No.
94	4 of 6	515

Typical Half Section For Low Volume/Residential Connections

Typical Half Section For Higher Volume Connections

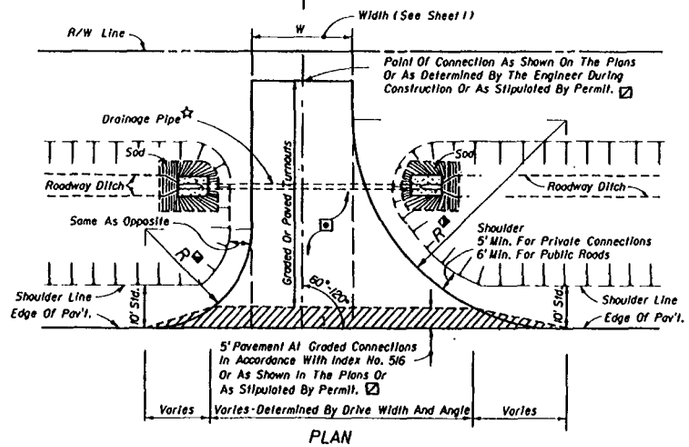

PLAN

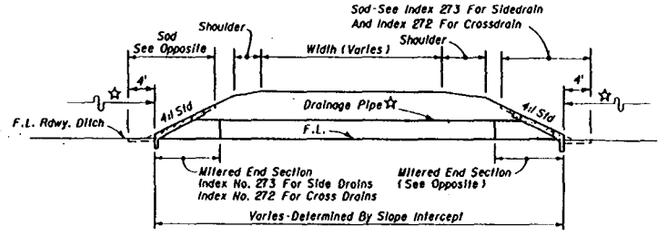

LONGITUDINAL SECTION

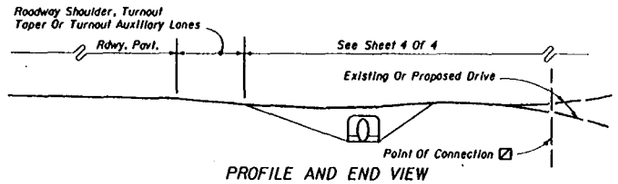

PROFILE AND END VIEW

☆ Drainage pipe size and length shall be that shown on the plans, or as stipulated by permit, or, as determined by the Engineer during construction. The size shall be at least that established by the FDOT District, but not less than 15" diameter or equivalent. For minimum cover over drainage pipe see Index No. 205. Pipe arch or elliptical pipe may be required to obtain necessary cover. At minimal cover applications a modified pavement apron is permitted. See 'PERMISSIBLE PAVEMENT MODIFICATION' Index No. 273. For spacing between adjacent pipe end treatments see Index No. 273.

◉ Stable material may be required for graded turnouts to private property as directed by the Engineer in accordance with Section 102-6 of the Standard Specifications.

☑ The 5' pavement at graded connections is not required where there is paved shoulder 4' or more in width. The 5' pavement requirement may be waived for connections serving one or two homes or field entrances with less than 20 trips per day, or 5 trips per hour as approved by permit or by the Engineer, or when not itemized in the plans.

Paved turnouts are to be constructed for all paved connecting facilities. The connecting point will be determined by the Engineer.

Paved turnouts are to be constructed for all business, commercial, industrial or high volume residential graded connecting facilities. The connecting point shall be 30' from edge of roadway pavement or at R/W line, whichever is less.

Paved turnouts are to be constructed for all connecting facilities over 4000 vehicles per day. The connecting point shall be at the R/W line.

◪ See "Summary Of Geometric Requirements For Turnouts" chart for return radii lengths and supplemental information.

RURAL TURNOUT CONSTRUCTION

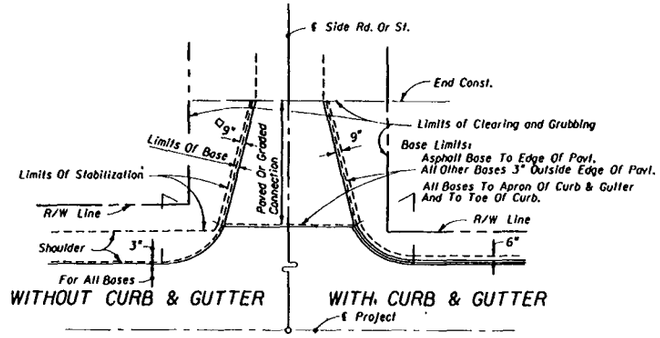

◇ 9" Or Match Exist. Stabilizing (9" Min.)

LIMITS OF CLEARING & GRUBBING, STABILIZING AND BASE AT INTERSECTIONS

MATERIAL TYPES AND THICKNESSES IN DRIVING AREAS FOR RURAL AND URBAN CONNECTIONS

COURSE	MATERIALS ②	THICKNESS (INCHES) ① CONNECTIONS ③	THICKNESS (INCHES) ① ROADWAY ④
Structural	Asphaltic Concrete	2	3
Bases	Limerock (LBR 100)	4	5
	Cemented Coquina (LBR 100)	4	5
	ABC-1 (Marshall 500)	4	4½
	ABC-2 (Marshall 750)	4	4
	ABC-3 (Marshall 1000)	4	4
	Soil-Cement (Plant Mix) (300 psi)	4	6
	Bank Run Shell (LBR 100)	4	5½
	Sand-Clay (LBR 75)	5	7½
	Shell (LBR 70)	5	7½
	Soil-Cement (Road Mix) (300 psi)	6	6
	Graded Aggregate	4	6

① Minimum thickness.

② All materials shall be approved by the Department prior to being placed.

③ Connection structure other than traffic lanes. See Notes 1 and 2 below.

④ Travel way flares (bypass lanes), auxiliary lanes serving more than a single connection, and all median crossovers including their auxiliary lanes and/or transition tapers. See Notes 1 and 2 below.

NOTES

1. The pavement should be structurally adequate to meet the expected traffic loads and should not be less than that shown above, except as approved by the Department for graded connections. Other Department approved pavement equivalences may be used at the discretion of the Engineer. For additional information see Index 514.
2. Auxiliary lanes and their transition tapers shall be the same structure as the abutting roadway pavement or any of the roadway structures tabulated above, whichever is thicker.
3. If an asphalt base course (ABC) is used for a turnout, its thickness may be increased to match the edge of roadway pavement in lieu of a separate structural course. Six (6) inches of Portland cement concrete will be acceptable in lieu of the asphalt base and structural courses. See Notes 4 and 5 below.
4. A structural course is required for flexible pavements when they are used for auxiliary lanes serving more than a single connection.
5. Connections paved with Portland cement concrete shall be Class I concrete at least 6" thick. The Department may require greater thickness when called for in the plans or stipulated by permit. Materials and construction are to conform with FDOT Standard Specifications Sections 346, 350 and 522.
6. The Department may require other pavement criteria where local conditions warrant.

PAVEMENT STRUCTURE FOR TURNOUTS AND AUXILIARY LANES TABLE 515-1

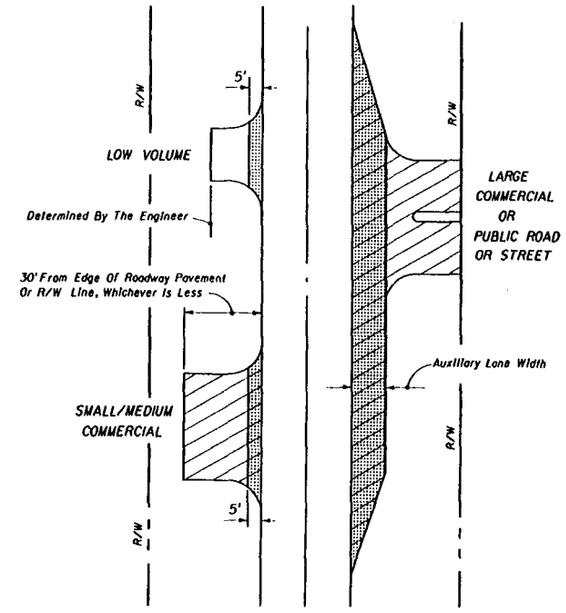

LEGEND

▭ Graded Or Paved

▨ Required Paving

▩ Limits Of Department Maintenance

NOTES

1. Auxiliary lane pavements and crossover pavements shall be maintained by the Department.
2. Department maintenance of turnout pavement shall extend out to 5 feet from edge of the travel way or limits of paved shoulders, and, extend to include auxiliary lanes. The remainder of any turnout paved area on the right of way shall be maintained by the owner or his authorized agent. As a function of routinely reworking shoulders, the Department may grade and shape existing material on non-paved areas beyond the maintained pavement.
3. Control and maintenance of drainage facilities within the right of way shall be solely the responsibility of the Department, unless specified differently by Department permit.
4. The maintenance and operation of highway lighting, traffic signals, associated equipment, and other necessary devices shall be the responsibility of a public agency.
5. All pavement markings on the State highways, including acceleration and deceleration lane markings, and signing installed for the operation of the State highway shall be maintained by the Department.
6. All signing and marking installed for the operation of the connection (such as stop bars and stop signs for the connection) shall be the responsibility of the permittee.

LIMITS OF CONSTRUCTION AND MAINTENANCE FOR RURAL CONNECTIONS

STATE OF FLORIDA DEPARTMENT OF TRANSPORTATION
ROAD DESIGN

TURNOUTS

	Names	Dates
Designed By	COMM/JVC	90/91
Drawn By	MSD	3/91
Checked By	JVC	03/91
F.H.W.A. Approved		

Approved By _____
State Roadway Design Engineer

Revision No.	Sheet No.	Index No.
92	5 of 6	515

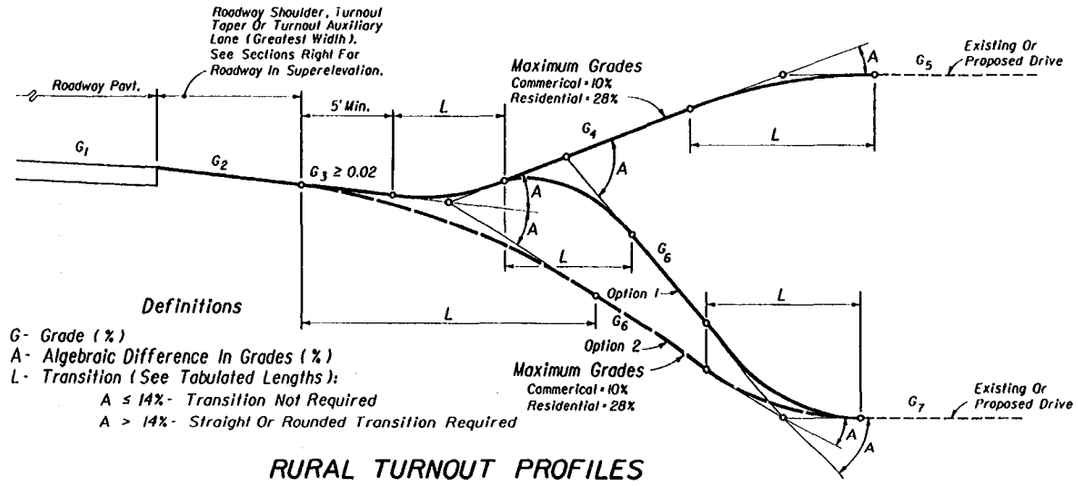

Definitions

G- Grade (%)
A- Algebraic Difference In Grades (%)
L- Transition (See Tabulated Lengths):
A ≤ 14%- Transition Not Required
A > 14%- Straight Or Rounded Transition Required

RURAL TURNOUT PROFILES

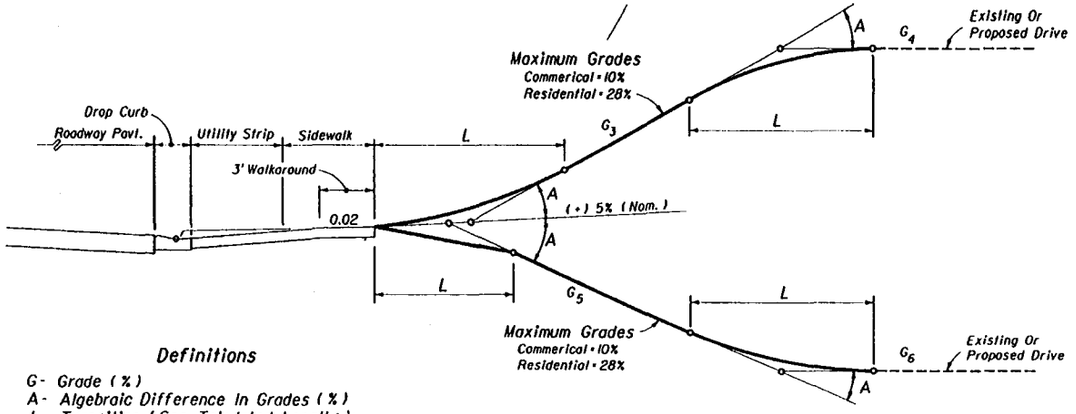

Definitions

G- Grade (%)
A- Algebraic Difference In Grades (%)
L- Transition (See Tabulated Lengths):
A ≤ 14%- Transition Not Required
A > 14%- Straight Or Rounded Transition Required

URBAN TURNOUT PROFILES

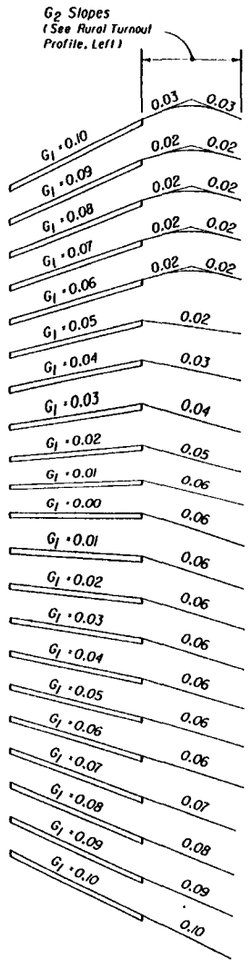

ROADWAY PAVEMENT SLOPES AND SLOPES OF ABUTTING RURAL TURNOUT SURFACES (G_2)

SUPERELEVATION SECTIONS

A	LENGTHS (L) (FT.)							
	CRESTS				SAGS			
	STRAIGHT		ROUNDED		STRAIGHT		ROUNDED	
	Desirable	Minimum	Desirable	Minimum	Desirable	Minimum	Desirable	Minimum
6-13%	3	0	5	0	3	0	5	0
14%	3	0	10	0	3	0	10	0
15%	3	2.5	10	3	5	3	10	5
16%	5	3	10	4	6	4	10	6
17%	6	3.5	10	5	8	5	10	7
18%	6	4	10	6	9	6	10	8
19%	7	4.5	10	7	11	7	12	9
20%	8	5	11	8	12	8	13	10
21%	9	5.5	12	9	13	8.5	14	11
22%	10	6	13	10	14	9	16	12
23%	10	6.5	14	10.5	14	9.5	16	12.5
24%	11	7	15	11	15	10	17	13
25%	12	7.5	15	11.5	16	10.5	18	13.5
26%	12	8	16	12	17	11	18	14
27%	13	8.5	17	12.5	17	11.5	19	14.5
28%	14	9	17	13	18	12	20	15
29%	NA	NA	22	14	NA	NA	21	17
30-31%	NA	NA	23	15	NA	NA	22	18
32-33%	NA	NA	24	16	NA	NA	23	20
34-36%	NA	NA	26	17	NA	NA	25	21
37-38%	NA	NA	27	18	NA	NA	26	22
39-41%	NA	NA	29	19	NA	NA	28	24
42-43%	NA	NA	30	20	NA	NA	29	25
44-46%	NA	NA	32	21	NA	NA	31	26
47-48%	NA	NA	33	22	NA	NA	32	27
49-51%	NA	NA	34	23	NA	NA	34	28
52-54%	NA	NA	36	24	NA	NA	35	30
55-56%	NA	NA	37	25	NA	NA	36	31

Rounded: Either circular, parabolic or spline curvature. The plans or the Engineer may specify a particular type of curvature.
Desirable: Desirable minimum lengths.
Minimum: Absolute minimum lengths.
} Greater lengths than minimum and desirable are recommended where practical for flatter and smoother profile.

RECOMMENDED TURNOUT PROFILE TRANSITION LENGTHS (L) (FT)

PROFILE AND STORMWATER RUNOFF NOTES

1. Turnouts shall neither cause water to flow on or across the roadway pavement, nor cause water ponding or erosion within the State right of way. On all rural turnouts the transition (L) nearest the roadway shall be sloped or crowned to direct stormwater runoff to the roadside ditch. Inlets, flumes or other appropriate runoff control devices shall be constructed when runoff volumes are sufficient to cause erosion of the shoulder. Similar runoff control devices shall be constructed as necessary to properly direct and control the stormwater runoff on urban turnouts.

2. The Option 1 profile is intended for locations where roadway, turnout taper and auxiliary lane stormwater runoff volumes are relatively large. The Option 2 profile is intended for locations where runoff volumes are relatively small and/or where there is no roadside ditch.

TURNOUT PROFILES

STATE OF FLORIDA DEPARTMENT OF TRANSPORTATION
ROAD DESIGN

TURNOUTS

	Names	Dates
Designed By		
Drawn By	HSD	08/82
Checked By	JWG	08/82
F.H.W.A. Approved:		09/23/82

Approved By: Freddie Simmons
State Roadway Design Engineer

Revision No.	Sheet No.	Index No.
94	6 of 6	515

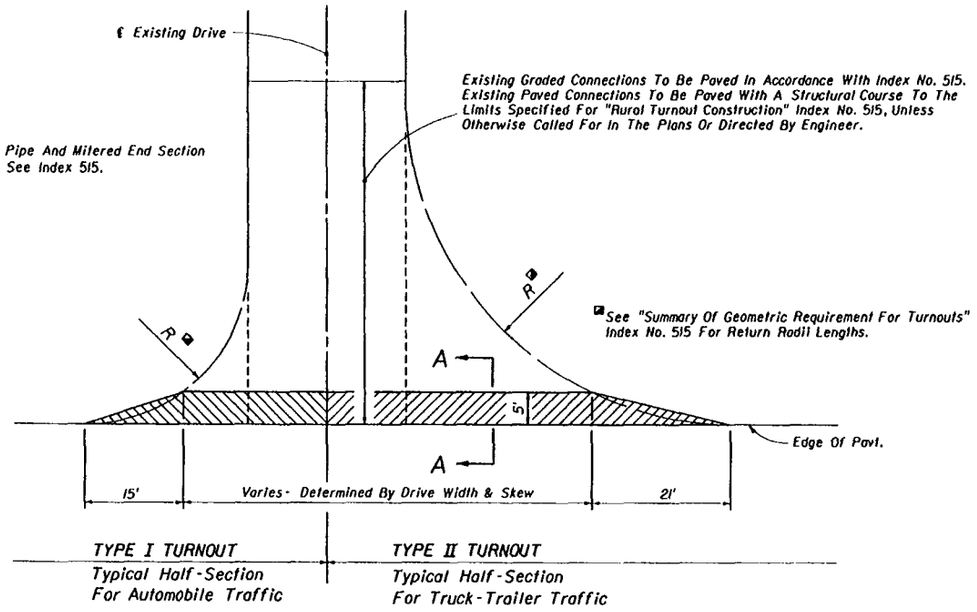

TYPE I TURNOUT
Typical Half-Section
For Automobile Traffic

TYPE II TURNOUT
Typical Half-Section
For Truck-Trailer Traffic

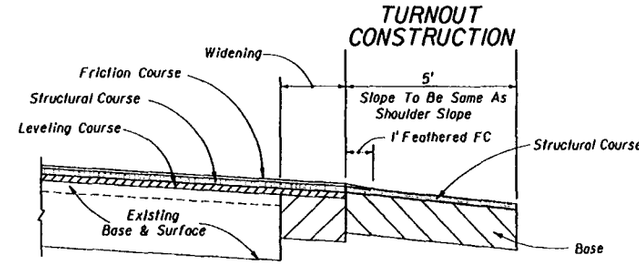

SECTION AA WITH WIDENING

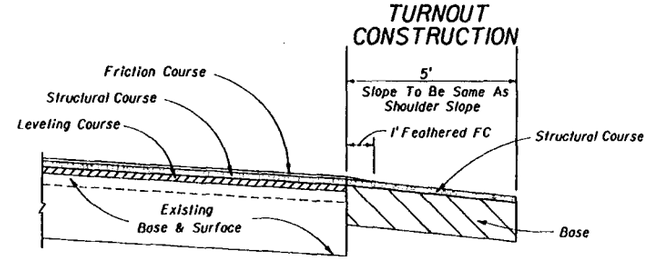

SECTION AA

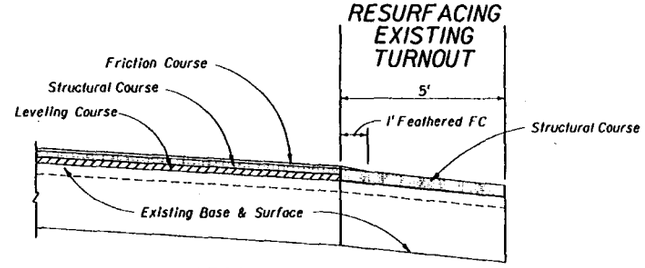

SECTION AA

AREAS FOR ONE 5' DEEP TURNOUT (SY)

Drive Width (Ft.)	Intersection			
	Normal		Skewed	
	Type I	Type II	Type I	Type II
12	26	51	31	60
14	27	52	33	61
16	28	53	34	63
18	29	54	35	64
20	31	55	37	65
22	32	56	38	67
24	33	57	39	68
26	34	58	40	69
28	35	59	42	70
30	36	61	43	72
32	37	62	44	73
34	38	63	46	74
36	39	64	47	76
38	41	65	48	77
40	42	66	49	78
42	43	67	51	79
44	44	68	52	81
46	45	69	53	82
48	46	71	55	83
50	47	72	56	85
52	48	73	57	86
54	49	74	58	87
56	51	75	60	88
58	52	76	61	90
60	53	77	62	91

PAVEMENT STRUCTURE FOR 5' DEEP TURNOUTS

Course	Material	Minimum Thickness
Structural	Asphaltic Concrete	1"
Base	Limerock LBR 100	4"
	Cemented Coquina (LBR 100)	4"
	ABC-1 (Marshall 500)	4"
	ABC-2 (Marshall 750)	4"
	ABC-3 (Marshall 1000)	4"
	Soil Cement (Plant Mix) (300 psi)	4"
	Bank Run Shell (LBR 100)	4"
	Sand-Clay (LBR 75)	5"
	Shell (LBR 70)	5"
	Soil Cement (Road Mix) (300 psi)	6"
	Graded Aggregate	4"

Notes:

1. Turnout structural course to be the same material as roadway leveling or structure course. Structural course not required if asphalt base course and its thickness increased to match edge of roadway pavement.
2. Any Department approved pavement structure equivalence may be used at the discretion of the Engineer.
3. Additional structural strength may be required if heavy truck loads are anticipated.

GENERAL NOTES

1. Turnouts are to be constructed or resurfaced for low volume (single family, duplex, farm, etc.) residential connections as directed by the Engineer.
2. Turnout construction not required for low volume residential connections where roadway shoulders are paved.
3. Connections outside the 5' limit are to be constructed as directed by the Engineer.
4. The contract unit price for Turnout Construction includes the cost for excavation and base.
5. Payment for structural course to be included in roadway resurfacing pay item.
6. Payment for feathering friction course to be included in the unit price for Asphaltic Concrete Friction Course placed on the roadway. Feathered areas will not be included in measured quantities. Feathering not required for FC-2 friction course.
7. For low volume two-lane facilities without a friction course the structural course is replaced by a surface course.

STATE OF FLORIDA DEPARTMENT OF TRANSPORTATION
ROAD DESIGN

TURNOUTS
RESURFACING PROJECTS

	Name	Date
Designed By	DCB	11/77
Drawn By	HKH	11/77
Checked By	JVG	11/77
F.H.W.A. Approved:		09/23/82

Approved By: _____ State Roadway Design Engineer

Revision No.	Sheet No.	Index No.
92	1 of 1	516

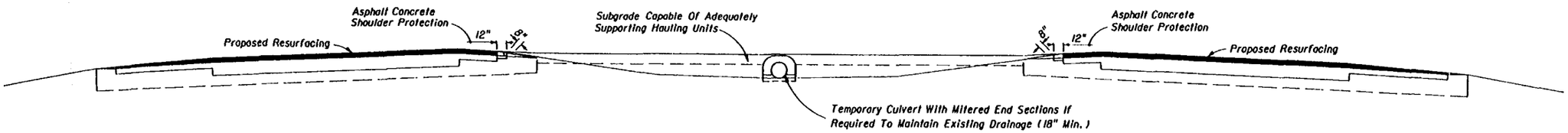

SECTION

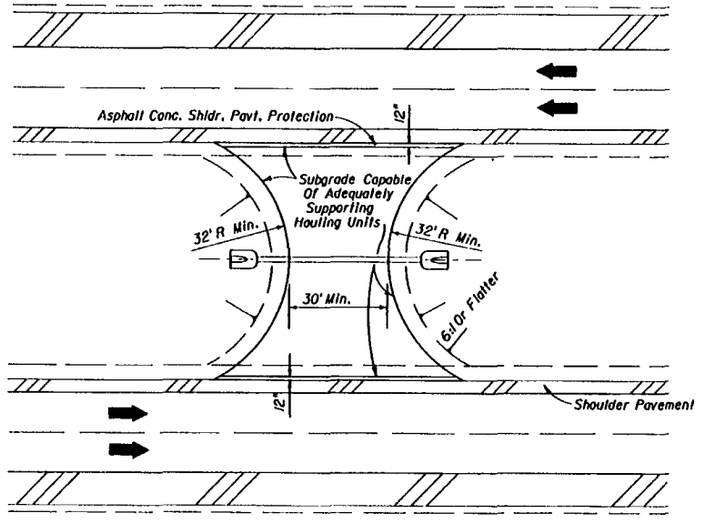

PLAN

NOTES:

1. When a crossover is no longer needed, all temporary construction shall be immediately removed and the area restored to its original condition.
2. Cost of all construction, maintenance, removal and restoration work related to temporary crossovers shall be included in the contract unit price for Maintenance of Traffic, LS.
3. Crossovers to be constructed where sight distance is adequate in both directions as directed by the Engineer.

STATE OF FLORIDA DEPARTMENT OF TRANSPORTATION
ROAD DESIGN

TEMPORARY CROSSOVER CONSTRUCTION DETAILS RURAL

	Names	Dates
Designed By		
Drawn By		
Checked By		
F.H.W.A. Approved:		10/07/80

Approved By: _____
State Roadway Design Engineer

Revision No.	Sheet No.	Index No.
88	1 of 1	517

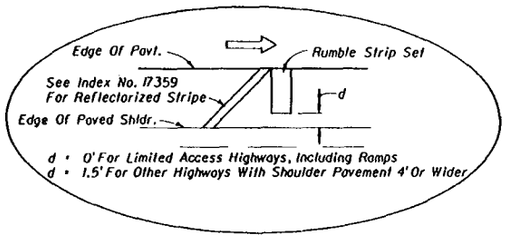

INSET A

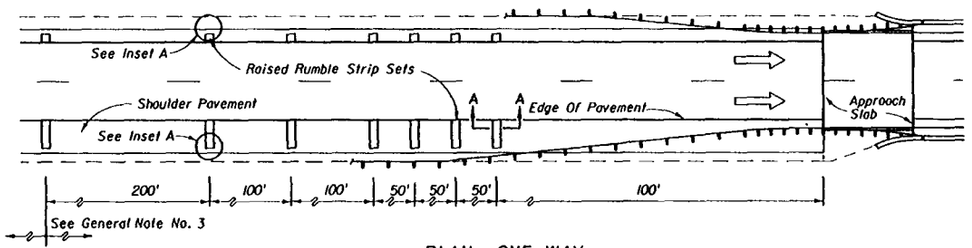

PLAN • ONE-WAY

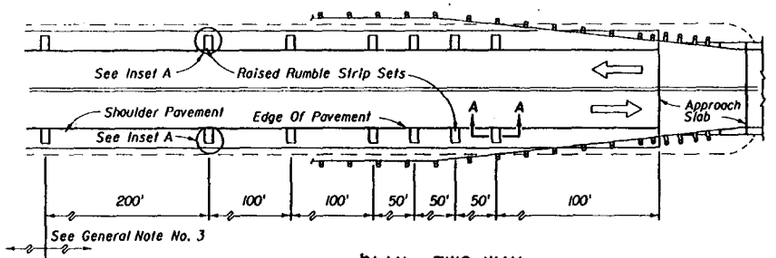

PLAN • TWO-WAY

STRUCTURES WITH LESS THAN FULL WIDTH SHOULDERS

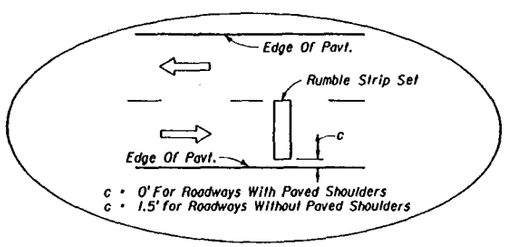

INSET B

Note: Rumble strips may be required for one or more legs of the intersection (one leg shown for spacing information). Rumble strips shall be constructed only on the legs identified in the plans. See General Note No. 1.

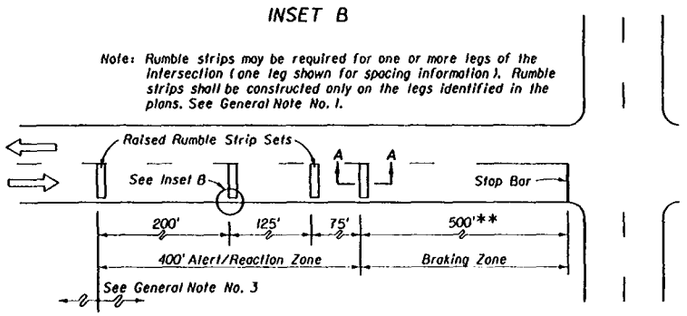

** May be decreased in urban areas with low operating speeds.

PLAN

INTERSECTIONS

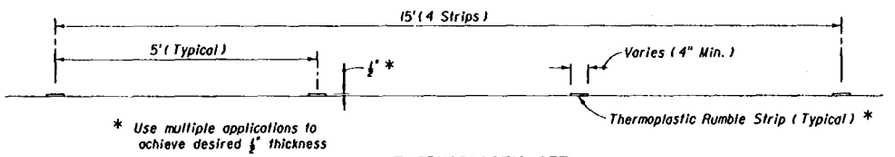

* Use multiple applications to achieve desired ½" thickness

THERMOPLASTIC SET

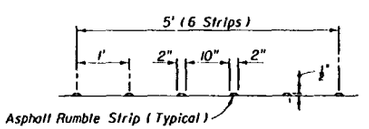

ASPHALT SET

SECTION AA • FOR THERMOPLASTIC AND ASPHALT RUMBLE STRIP SETS

GENERAL NOTES FOR RAISED RUMBLE STRIPS

1. Raised rumble strips shall be constructed at all structures with less than full width shoulders. Raised rumble strips at intersections shall be constructed only when specified in the plans.
2. Raised rumble strips are to be constructed in accordance with Section 546 of the Specifications.
3. When any portion of a curve falls within the limit of rumble strips shown in these details, additional rumble strip sets spaced at 200' centers shall be constructed throughout the remainder of the approaching curve.
4. Raised rumble strips shall be paid for under the contract unit price for Rumble Strips, Per Set. Such price and payment shall be full compensation for all work and materials required.

   Raised rumble strips shall be paid for per set without any adjustment due to width of pavement receiving the strips or length of strips.

RAISED RUMBLE STRIPS

STATE OF FLORIDA DEPARTMENT OF TRANSPORTATION
ROAD DESIGN

RUMBLE STRIPS

	Names	Dates
Designed By	KNW/CAS	10/87
Drawn By	JBW	10/87
Checked By	KNW/JVG	10/87
F.H.W.A. Approved:		

Approved By: Freddie Simmons
State Roadway Design Engineer

Revision No.	Sheet No.	Index No.
94	1 of 2	518

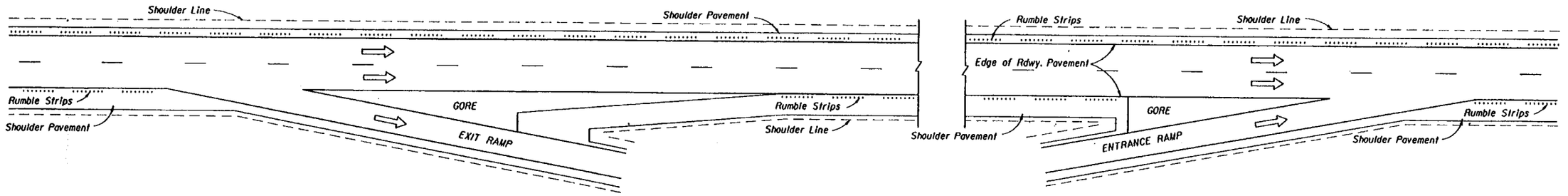

LIMITED ACCESS FACILITIES

SHOULDER GROUND-IN RUMBLE STRIP PLACEMENT

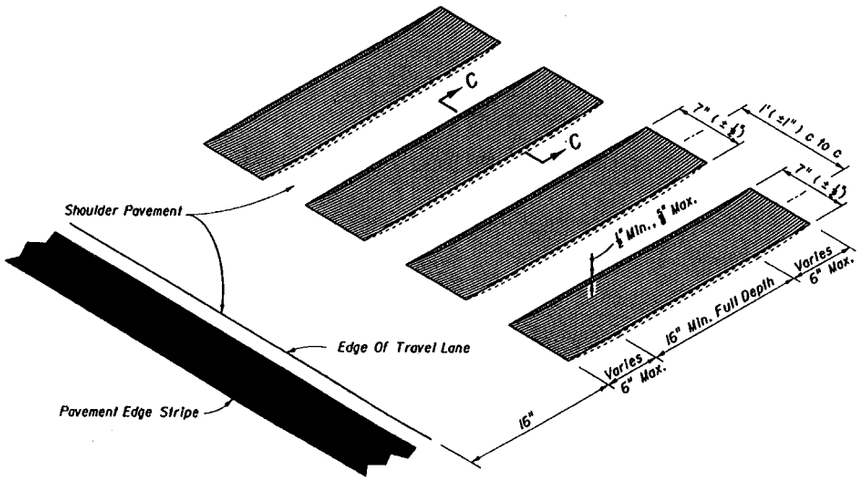

ISOMETRIC - TRANSVERSE CUT

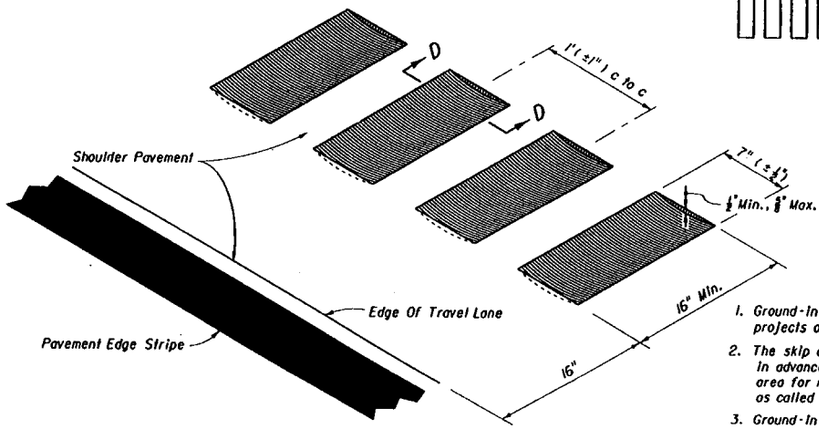

ISOMETRIC - LONGITUDINAL CUT

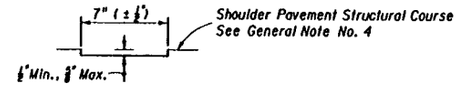

SECTION CC

TRANSVERSE CUT

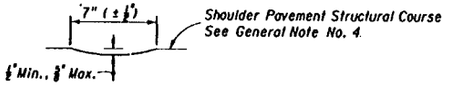

SECTION DD

LONGITUDINAL CUT

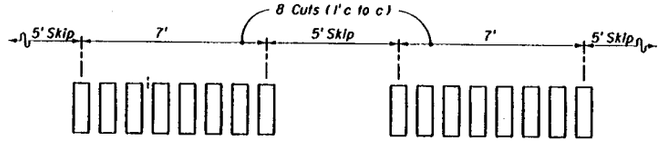

SKIP ARRAY

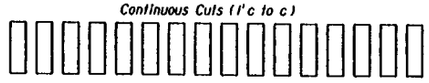

CONTINUOUS ARRAY

ARRAYS

GENERAL NOTES FOR SHOULDER GROUND-IN RUMBLE STRIPS

1. Ground-in rumble strips shall be constructed on freeway and other limited access projects only, and only when called for in the plans.
2. The skip array is the standard array. The continuous array shall be constructed in advance of bridge ends for a distance of 1000', or back to the gore recovery area for mainline interchange bridges, and constructed at other specific locations as called for in the plans.
3. Ground-in rumble strips are to be constructed in accordance with Section 546 of the Specifications.
4. When friction course extends more than one foot (1') beyond the edge of the outer traffic lane, the extended friction course shall be bladed off back to the one foot (1') line, prior to rumble strip grinding.
5. Both arrays shall be paid for under the contract unit price for Rumble Strips (Ground-In), Per Mile. Such price and payment shall be full compensation for all work and materials required.

DESIGN NOTE

1. The rumble strips described on this sheet are intended for use on flexible pavement shoulders. When constructing ground-in rumble strips on existing rigid (concrete) shoulders, no rumble strips shall be located closer than 6" from any pavement joint. When specifying ground-in rumble strips on existing rigid shoulders their location and array shall be detailed in the plans.
2. Other methods and types of applications shall not be used unless approved in writing by the State Roadway Design Engineer. Approval will be considered only with sufficient documented justification for variance from this standard.

LOCATION ALONG SHOULDER (FLEXIBLE PAVEMENT)

SHOULDER GROUND-IN RUMBLE STRIPS

STATE OF FLORIDA DEPARTMENT OF TRANSPORTATION
ROAD DESIGN

RUMBLE STRIPS

	Names	Dates
Designed By	COMM	11/93
Drawn By	HKH	11/93
Checked By	FLS/JMO	11/93
F.H.W.A. Approved:		

Approved By
Freddie Simmons
State Roadway Design Engineer

Revision No.	Sheet No.	Index No.
94	2 of 2	518

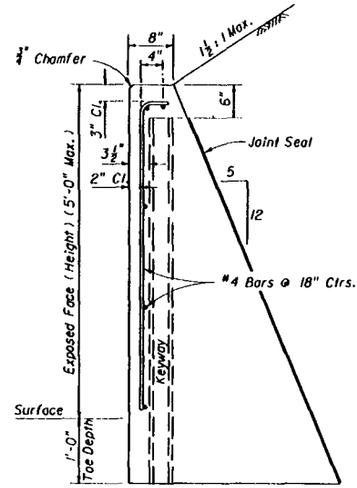

SECTION

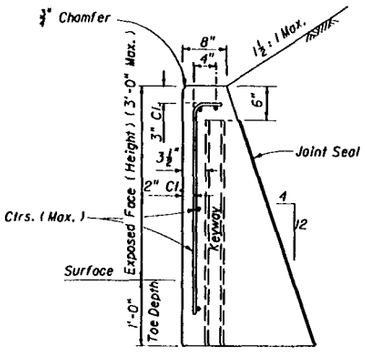

SECTION

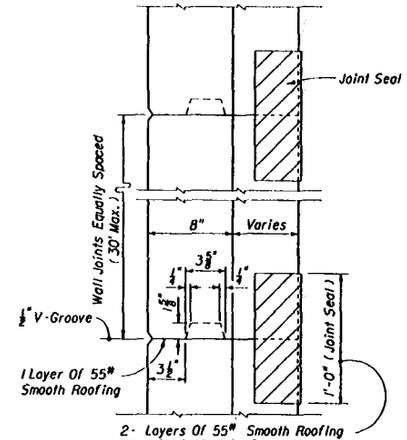

KEY DETAIL (TOP VIEW)

ESTIMATED QUANTITIES FOR WALL		
HEIGHT (EXPOSED FACED)	PER LINEAR FOOT OF WALL	
	CLASS I CONCRETE (CY)	STEEL (LB)
1'	0.07	3
2'	0.13	4
3'	0.20	5
4'	0.32	6
5'	0.43	7

GRAVITY WALL NOTES

1. Gravity walls constructed as extensions of reinforced concrete retaining walls, except walls of proprietary designs, shall have the same face texture and finish as the reinforced concrete retaining wall.
2. Cost of reinforcing steel, face texture, finish and joint seal to be included in the contract unit price for Class I Concrete (Retaining Walls) CY.

GRAVITY WALL

STATE OF FLORIDA DEPARTMENT OF TRANSPORTATION
ROAD DESIGN

ALUMINUM PIPE HANDRAILS, GRAVITY WALLS AND STEPS

	Names	Dates
Designed By		
Drawn By	CDR	02/68
Checked By	RHC	02/68
F.H.W.A. Approved:		03/20/75

Approved By: Freddie Simmons
State Roadway Design Engineer

Revision No.	Sheet No.	Index No.
94	1 of 2	520

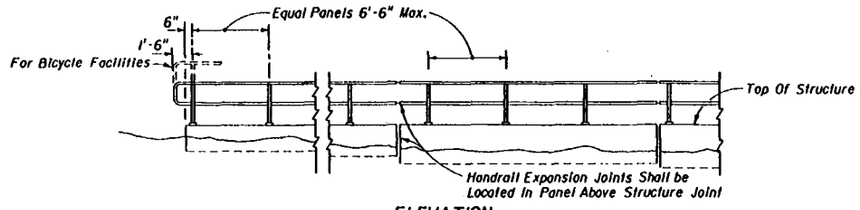

ELEVATION

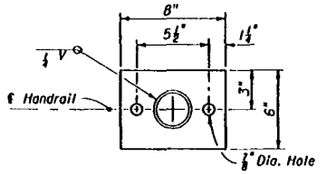

Aluminum ℄ 8" x 6" x ½" Alloy 6061-T6

BASE PLATE

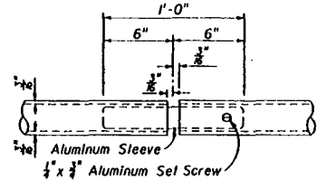

EXPANSION JOINT

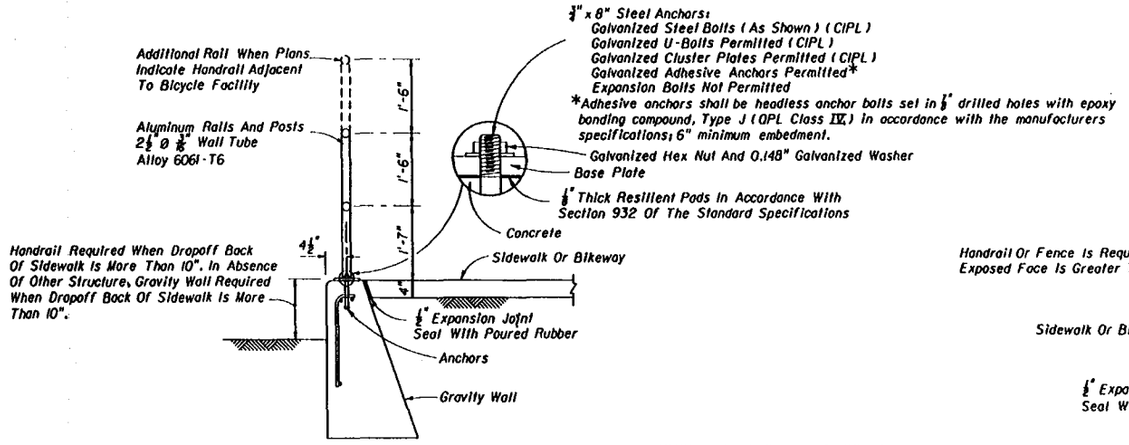

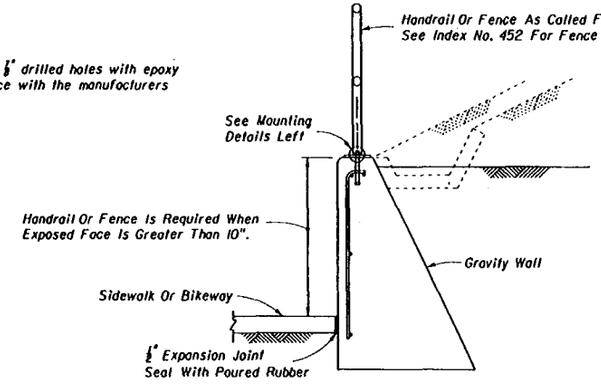

MOUNT ON GRAVITY WALL SHOWN

TYPICAL SECTIONS AT POST

PIPE HANDRAIL NOTES

1. All fixed joints to be either welded all around and ground smooth; or, commercially designed fixed joint systems (soldered, brazed, fused, bonded or shrink fitted) specified on the plans or approved by the Engineer. Mechanical joints other than expansion joints are not permitted unless specified on the plans or approved in writing by the Engineer. Posts shall be connected to base by weld only. Weld filler to be alloy ER5356, ER5556 or ER5183.
2. Anchor bolts shall be in accordance with ASTM A36 or A307. Nuts, washers, and bolts to be hot dip galvanized in conformance with ASTM A153. After the nuts have been tightened, the anchor bolt threads shall be distorted or the nuts and bolts spot welded and coated with zinc compound.
3. Aluminum handrail shall be constructed in accordance with Section 515 of the Standard Specifications. Payment shall be full compensation for furnishing and installing handrail, including mounting hardware, and shall be paid for under the contract unit price for Pipe Handrail (Aluminum), L.F.

ALUMINUM PIPE HANDRAIL

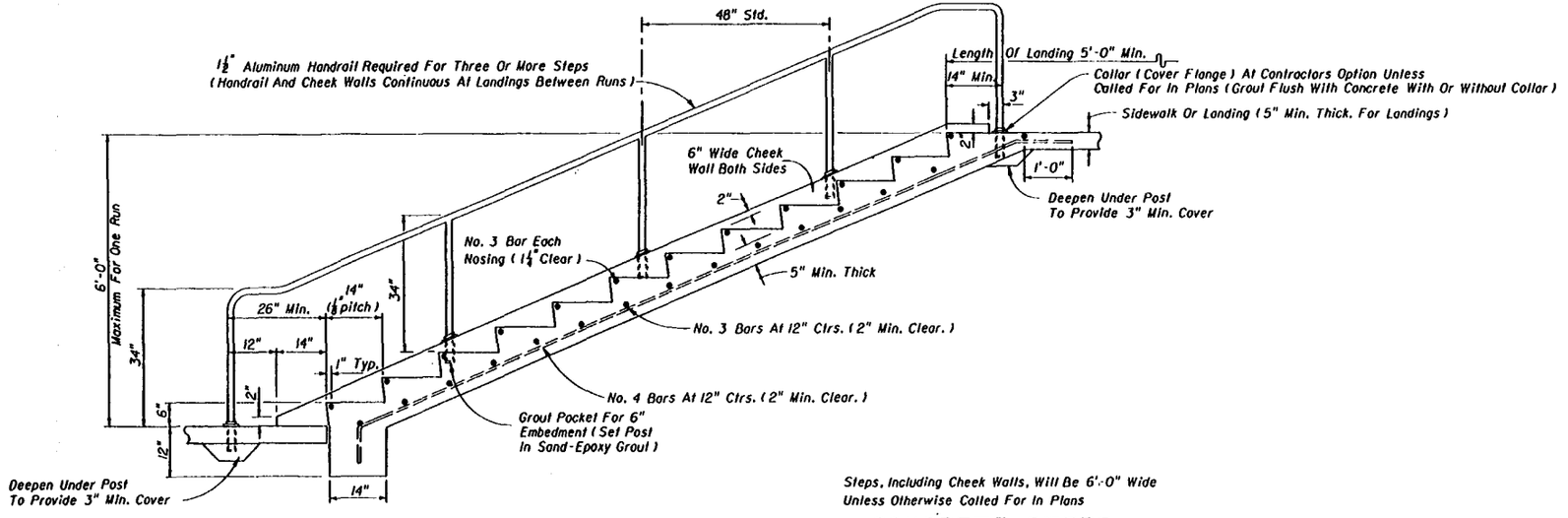

Steps, Including Cheek Walls, Will Be 6'-0" Wide Unless Otherwise Called For In Plans

CONCRETE STEPS

CONCRETE STEPS NOTES

1. 12 risers maximum between landings.
2. Ratio of riser height to tread depth: 2R" + T" = 26" (6" riser and 14" tread shown).
3. For steps parallel to and adjoining walls, delete adjoining cheek wall and mount handrail to wall at height and length shown.
4. Aluminum handrail shall be constructed in accordance with Section 515 of the Standard Specifications. Payment shall be full compensation for furnishing and installing handrail, including mounting hardware, and shall be paid for under the contract unit price for Pipe Handrail (Aluminum), L.F.
5. Cost of concrete steps, landings and cheek walls shall be paid for under the contract unit price for Class I Concrete (Roadway), C.Y. Cost of reinforcing steel shall be paid for under the contract unit price for Reinforcing Steel (Roadway), Lb.

STATE OF FLORIDA DEPARTMENT OF TRANSPORTATION
ROAD DESIGN

ALUMINUM PIPE HANDRAILS, GRAVITY WALLS AND STEPS

	Names	Dates
Designed By		
Drawn By	CDR	02/68
Checked By	RHC	02/68
F.H.W.A. Approved:		03/20/75

Approved By Freddie Simmons
State Roadway Design Engineer

Revision No.	Sheet No.	Index No.
94	2 of 2	520

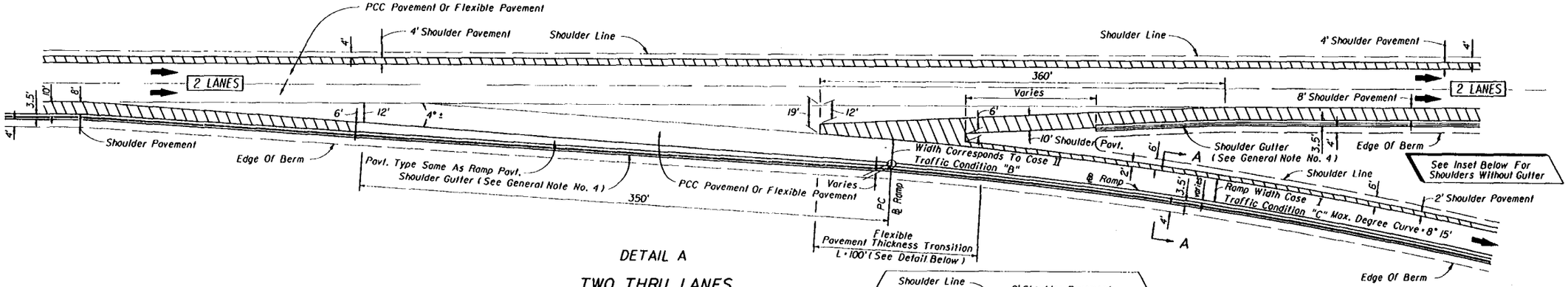

DETAIL A

TWO THRU LANES

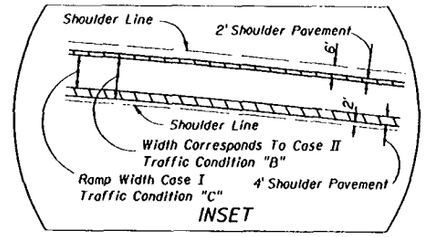

INSET

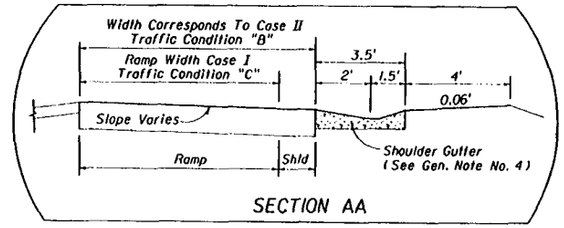

SECTION AA

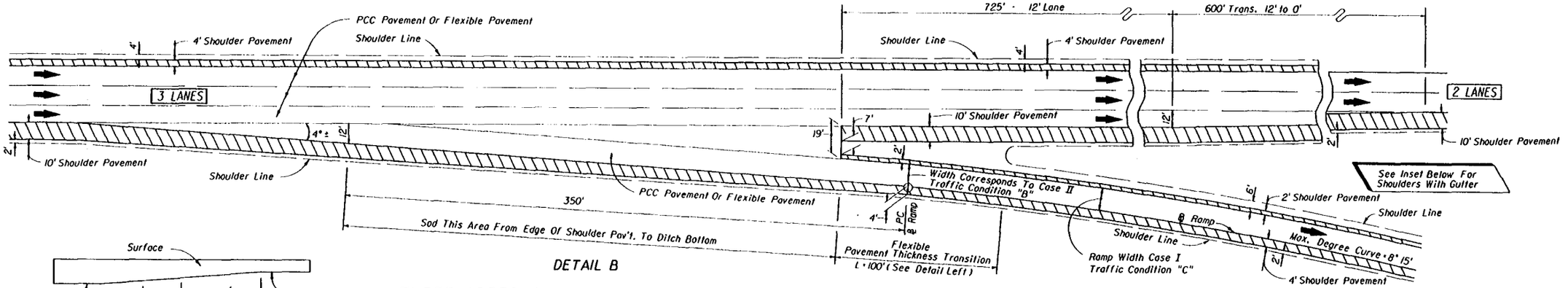

DETAIL B

THREE APPROACH LANES - TWO THRU LANES

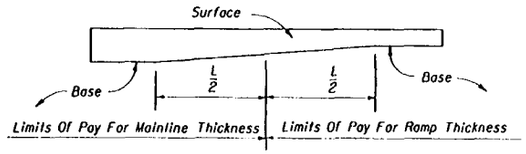

FLEXIBLE PAVEMENT THICKNESS TRANSITION

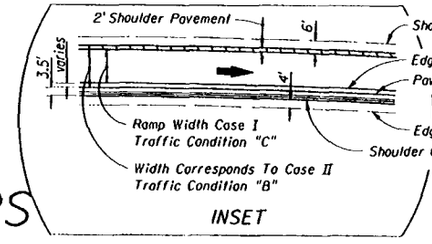

INSET

NOTE: For General Notes See Sheet No. 2

EXIT TERMINALS

SINGLE - LANE RAMPS

STATE OF FLORIDA DEPARTMENT OF TRANSPORTATION
ROAD DESIGN

RAMP TERMINALS

	Names	Dates
Designed By	EHH	01/65
Drawn By	HFW	01/65
Checked By	RLO	06/67
F.H.W.A. Approved:		07/18/75

Approved By: Freddie Simmons
State Roadway Design Engineer

Revision No.	Sheet No.	Index No.
92	1 of 5	525

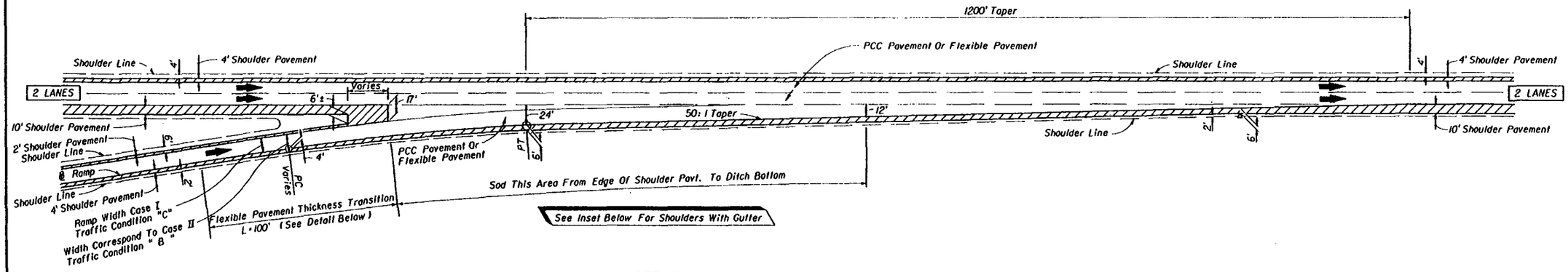

DETAIL C

TWO THRU LANES

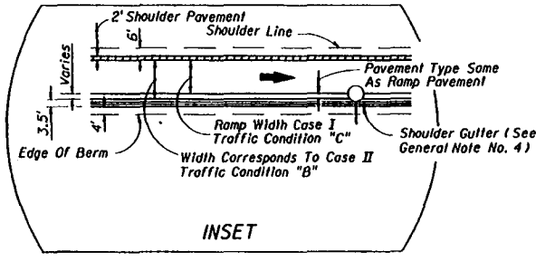

INSET

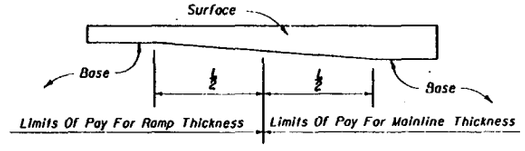

FLEXIBLE PAVEMENT THICKNESS TRANSITION

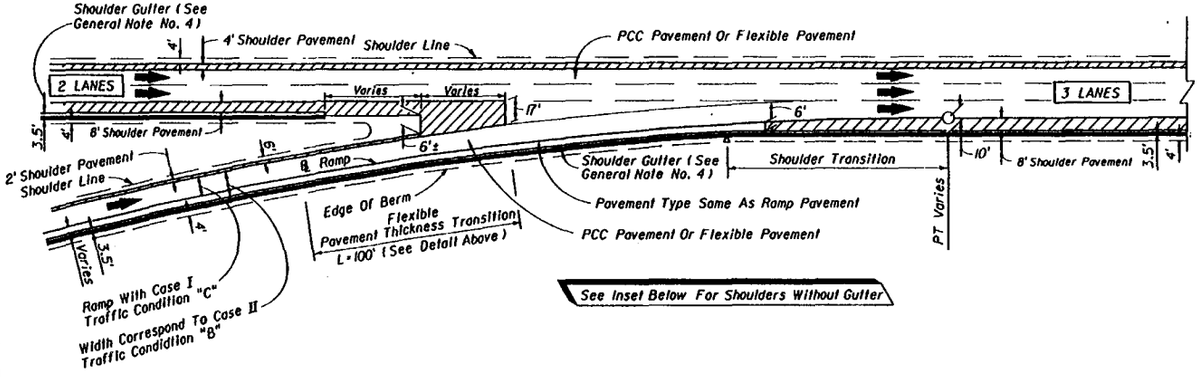

DETAIL D

WITH ADDED LANE

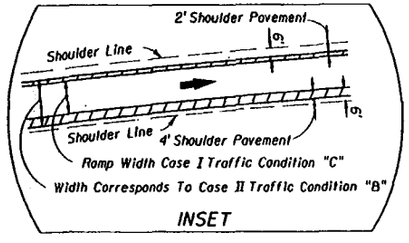

INSET

GENERAL NOTES

1. Exit and entrance terminals as detailed shall not be used on ramps for which a speed of 50 MPH or greater cannot be maintained. For such ramps, parallel deceleration and acceleration lanes shall be used in place of tapers with lengths set according to AASHTO.
2. (a.) PCC Pavement Projects:
   Where shoulder pavement adjacent to shoulder gutter is less than 6' wide, it shall be identical to the adjacent roadway pavement beginning with the tranverse joint nearest the point of 6' width.
   (b.) Flexible Pavement Projects:
   Where shoulder pavement used in conjunction with shoulder gutter is less than 6' uniform width, it shall be identical to the adjacent roadway pavement.
3. For concrete pavement joint details and layouts at entrance and exit ramp terminals see Index No. 305.
4. For shoulder gutter applications refer to the FDOT Drainage Manual.

ENTRANCE TERMINALS

SINGLE-LANE RAMPS

STATE OF FLORIDA DEPARTMENT OF TRANSPORTATION
ROAD DESIGN

RAMP TERMINALS

	Names	Dates
Designed By	EHH	01/65
Drawn By	HFW	01/65
Checked By	RLO	06/67
F.H.W.A. Approved:		07/18/75

Approved By: Freddie Simmons
State Roadway Design Engineer

Revision No.	Sheet No.	Index No.
92	2 of 5	525

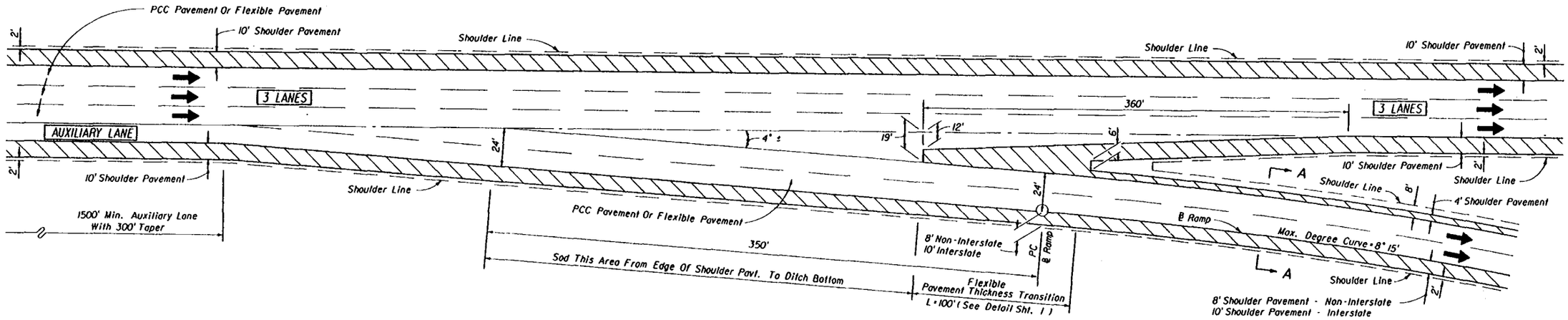

THREE THRU LANES - APPROACH AUXILIARY LANE

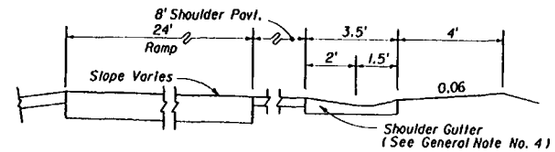

SECTION WHEN SHOULDER GUTTER USED

SECTION AA

EXIT TERMINALS

TWO-LANE RAMPS

STATE OF FLORIDA DEPARTMENT OF TRANSPORTATION
ROAD DESIGN

RAMP TERMINALS

	Names	Dates
Designed By	DCB	07/86
Drawn By	dds	07/86
Checked By	DCB	07/86
F.H.W.A. Approved		11/07/86

Approved By Freddie Simmons
State Roadway Design Engineer

Revision No.	Sheet No.	Index No.
94	3 of 5	525

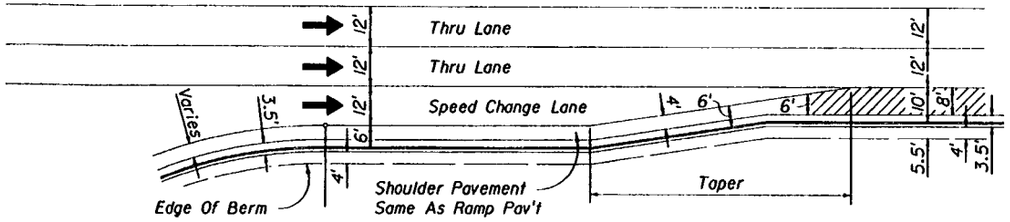

ACCELERATION LANE WITH SHOULDER GUTTER

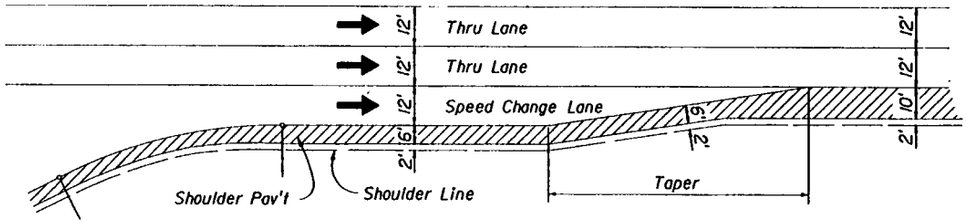

ACCELERATION LANE WITHOUT SHOULDER GUTTER

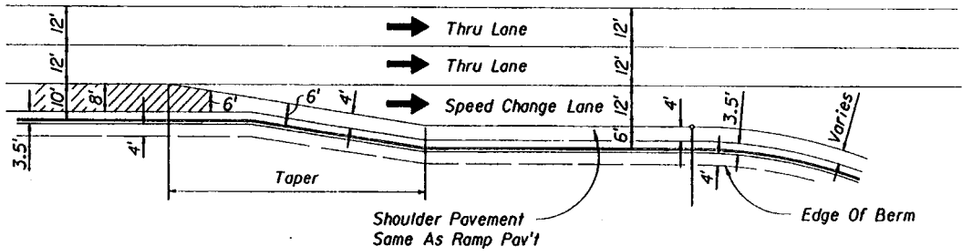

DECELERATION LANE WITH SHOULDER GUTTER

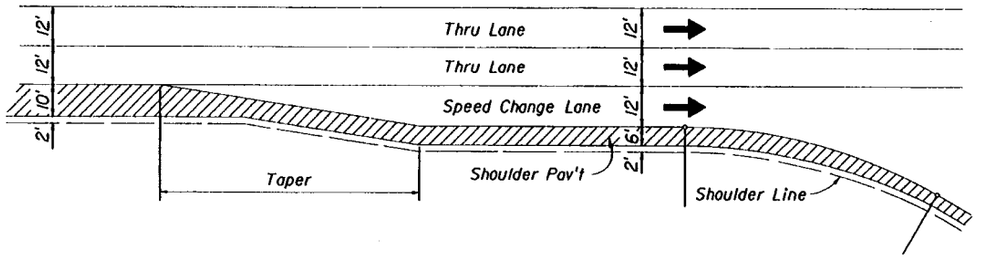

DECELERATION LANE WITHOUT SHOULDER GUTTER

SHOULDER TREATMENT
AT SPEED CHANGE LANES AT EXPRESSWAY RAMP TERMINALS

EXPRESSWAY RAMP TERMINALS

STATE OF FLORIDA DEPARTMENT OF TRANSPORTATION
ROAD DESIGN

RAMP TERMINALS

	Names	Dates
Designed By	EHH	01/65
Drawn By	HFW	01/65
Checked By	RLO	06/67
F.H.W.A. Approved:		07/18/75

Approved By
State Roadway Design Engineer

Revision No.	Sheet No.	Index No.
87	4 of 5	525

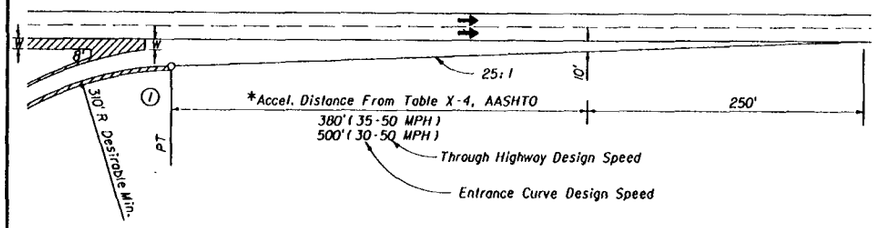

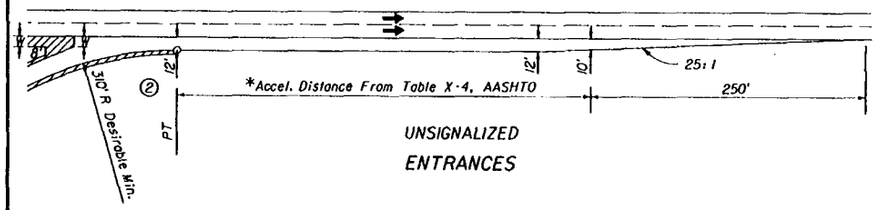

UNSIGNALIZED
ENTRANCES

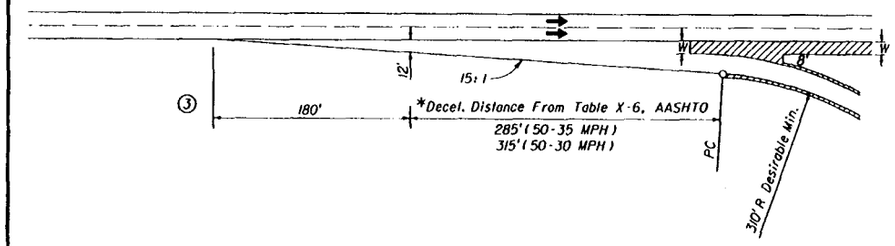

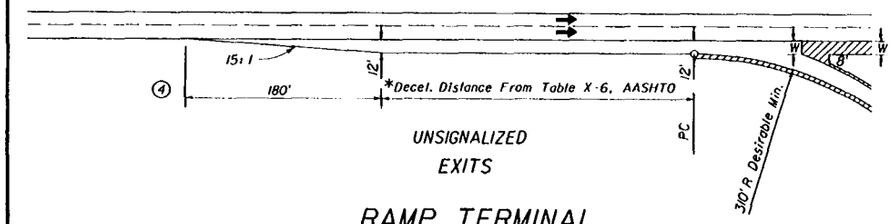

UNSIGNALIZED
EXITS

RAMP TERMINAL

FOOTNOTES:

W Normal shoulder pavement width

* Adjust for grades if greater than 2% (See Table X-5, AASHTO).

(1) Standard cross road entrance terminals. To be used when roadway alignment is tangent and no bridges are located within the merging lane.

(2) Parallel cross road entrance terminals. Recommended when a bridge is located within the merging lane, turning roadway speed is less than 60% of thru roadway speed or for the combinations of horizontal alignment shown elsewhere on this sheet.

(3) Standard cross road exit terminal. To be used when roadway alignment is tangent.

(4) Parallel cross road exit terminals. Recommended when exit is partially hidden over the crest of vertical curve or when turning roadway speed is less than 60% of the thru roadway speed, or for the combinations of horizontal alignment shown elsewhere on this sheet.

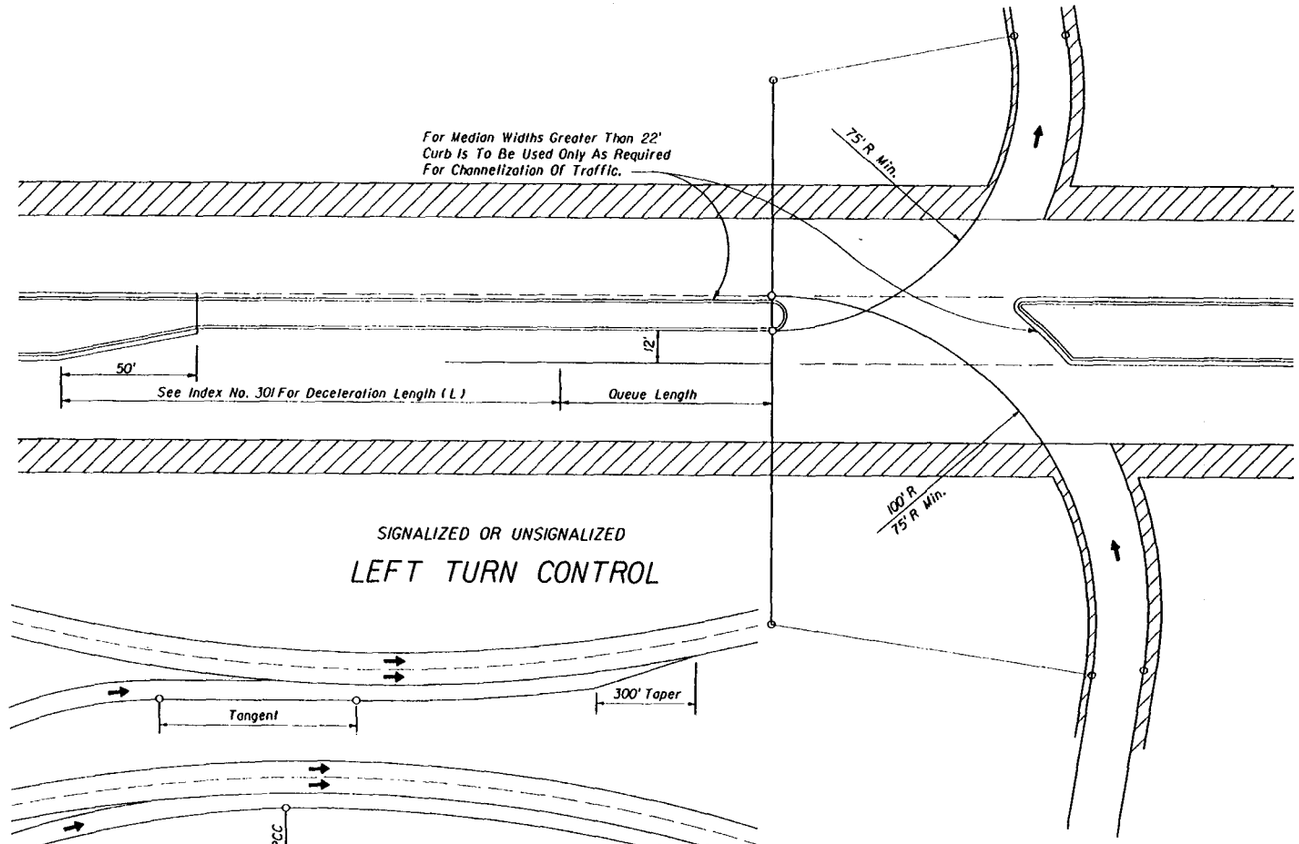

SIGNALIZED OR UNSIGNALIZED

LEFT TURN CONTROL

See Drawing (2) And Footnote 2

UNSIGNALIZED
ENTRANCES

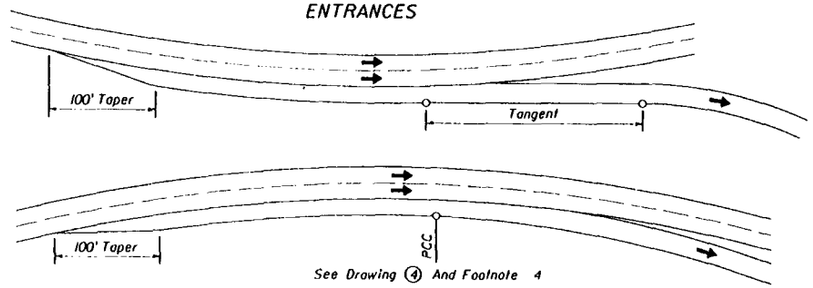

See Drawing (4) And Footnote 4

UNSIGNALIZED
EXITS

NOTE: Entrances and exits on curves should be avoided when possible.

ENTRANCES AND EXITS ON CURVES

CROSSROAD TERMINALS

STATE OF FLORIDA DEPARTMENT OF TRANSPORTATION
ROAD DESIGN

RAMP TERMINALS

	Names	Dates
Designed By	EHH	1/65
Drawn By	HFW	1/65
Checked By	RLO	6/67
F.H.W.A. Approved:		7/25/75

Approved By: Freddie Simmons
State Roadway Design Engineer

Revision No.	Sheet No.	Index No.
94	5 of 5	525

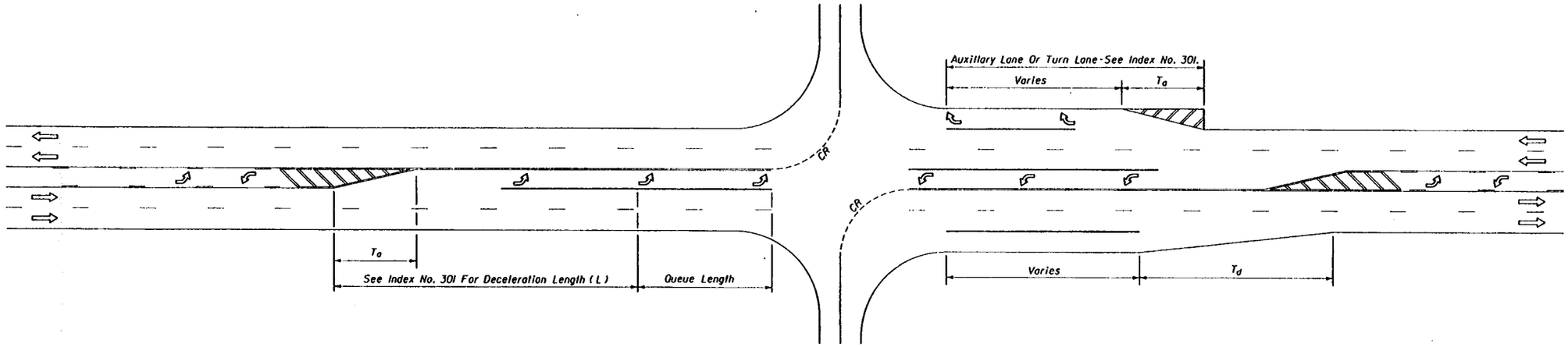

4-LANE UNDIVIDED WITH OPTIONAL LANE

DESIGN SPEED (MPH)	T_a (FEET) ADD LANE	T_d (FEET) LANE DROP
< 30	50' (±4:1)	25:1
30-45		30:1
> 45		40:1

Note: For locations with unrelocatable control points minimum taper rates for lane drop (T_d) will be 20:1.

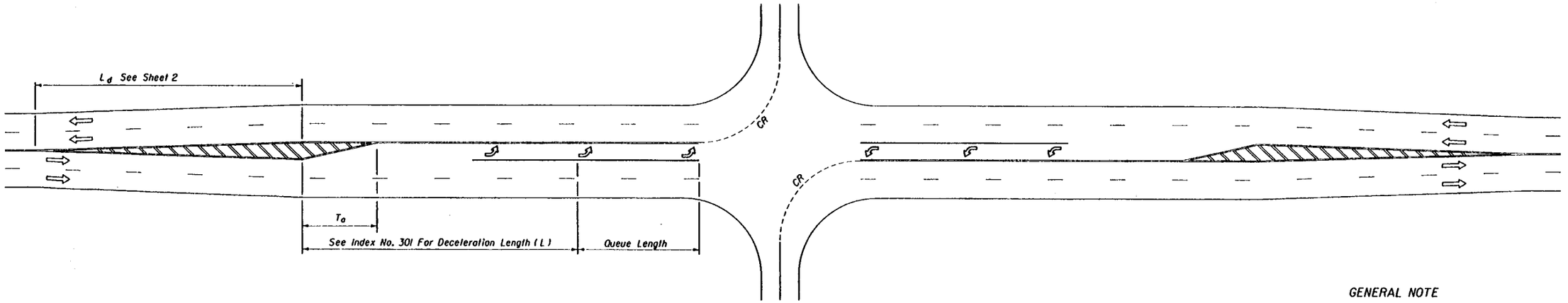

4-LANE UNDIVIDED FLARED - SYMMETRICAL

GENERAL NOTE

For pavement markings refer to Index No. 17346.

INTERSECTION TURNS AND STORAGE

STATE OF FLORIDA DEPARTMENT OF TRANSPORTATION
ROAD DESIGN

ROADWAY TRANSITIONS

	Names	Dates
Designed By	KNW	9/89
Drawn By	JBW	9/89
Checked By	KNW/WG	9/89
F.H.W.A. Approved:		

Approved By Freddie Simmons
State Roadway Design Engineer

Revision No.	Sheet No.	Index No.
94	1 of 8	526

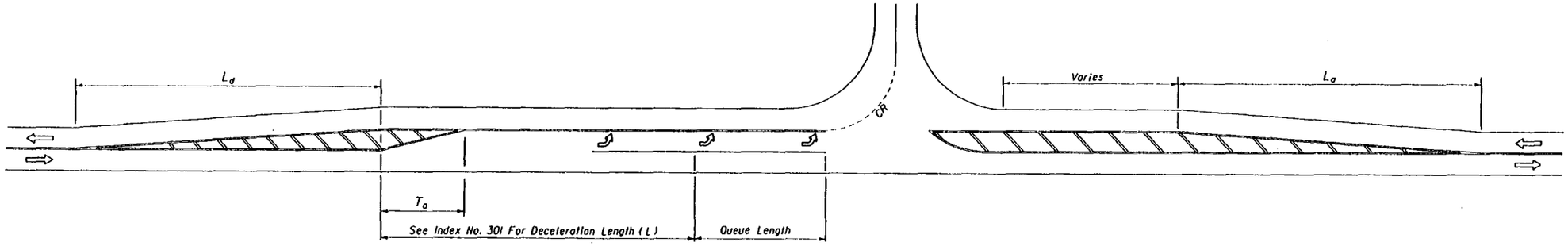

LEFT SIDE WIDENING

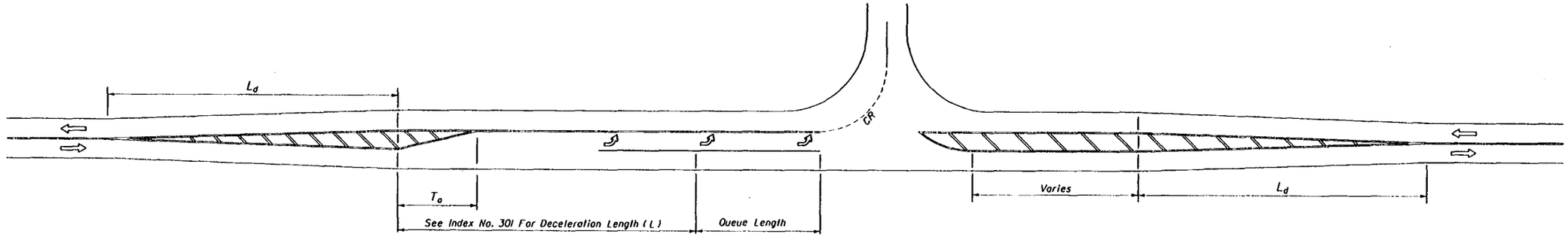

CENTERED WIDENING

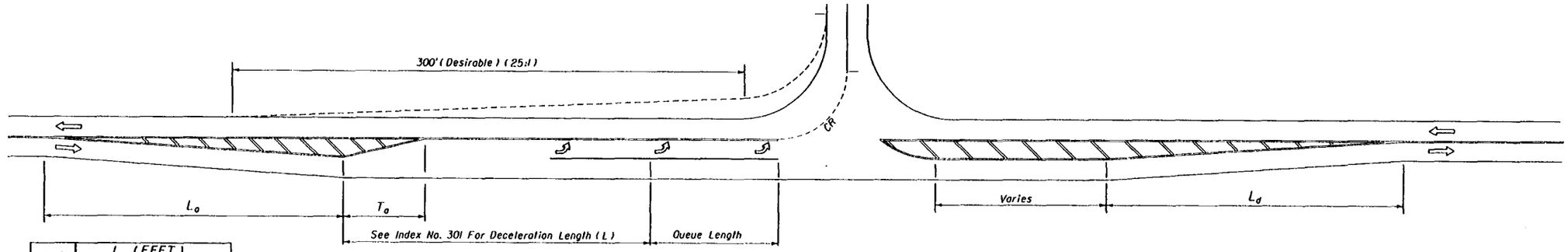

RIGHT SIDE WIDENING

DESIGN SPEED (MPH)	L_a (FEET)	
	STANDARD	MINIMUM UNDER RESTRAINTS
30	180	120
40	320	150
50	500	180
60	720	240

	L_d (FEET)	
30	180	120
40	240	150
50	360	180
60	480	240

FLARED & PAINTED LEFT TURNS FOR 2-LANE 2-WAY ROADWAYS

STATE OF FLORIDA DEPARTMENT OF TRANSPORTATION
ROAD DESIGN

ROADWAY TRANSITIONS

	Names	Dates
Designed By	RER/NG	9/89
Drawn By	JBW	9/89
Checked By	RER/NG	9/89

Approved By Freddie Simmonds
State Roadway Design Engineer

F.H.W.A. Approved:

Revision No.	Sheet No.	Index No.
94	2 of 8	526

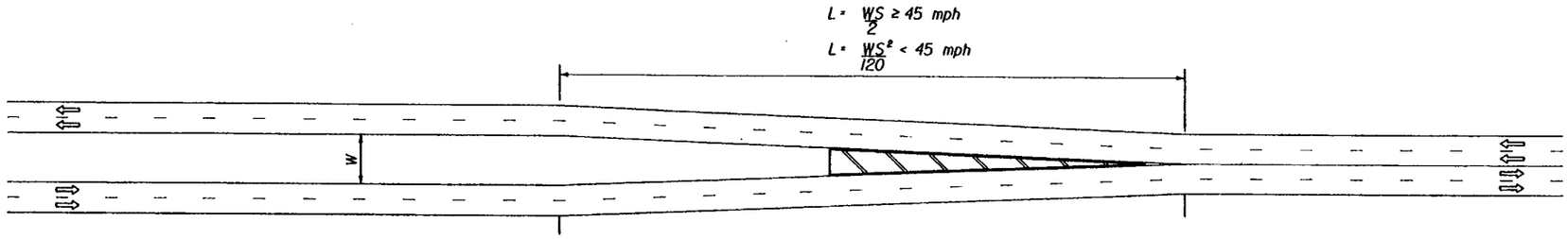

4-LANE DIVIDED TO 4-LANE UNDIVIDED

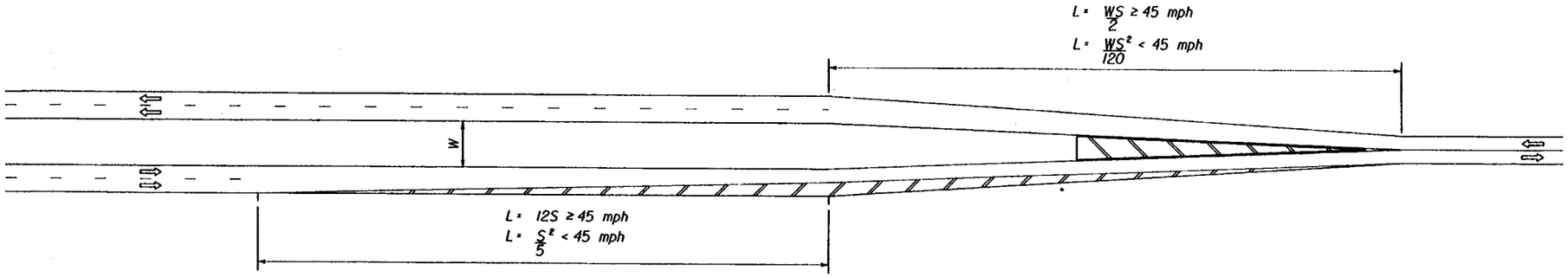

4-LANE DIVIDED TO 2-LANE UNDIVIDED

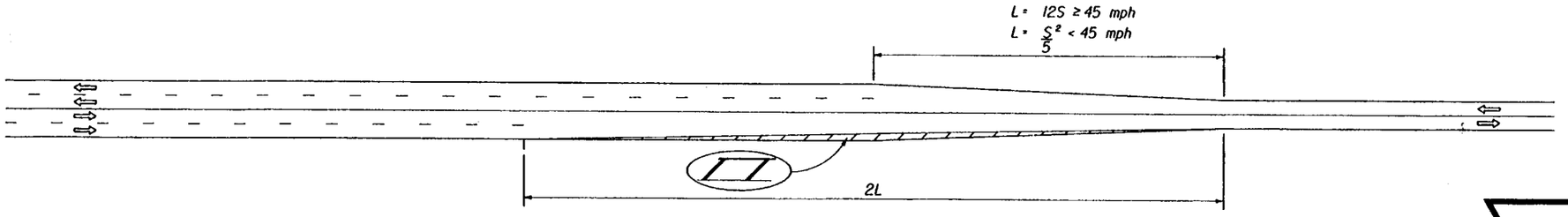

4-LANE UNDIVIDED TO 2-LANE UNDIVIDED

S = Design speed.

LANE DIVERGENCE AND CONVERGENCE FOR CENTERED ROADWAYS

STATE OF FLORIDA DEPARTMENT OF TRANSPORTATION
ROAD DESIGN

ROADWAY TRANSITIONS

	Names	Dates
Designed By	KNW	9/89
Drawn By	JBW	9/89
Checked By	KNW/MD	9/89
F.H.W.A. Approved:		

Approved By _____ State Roadway Design Engineer

Revision No.	Sheet No.	Index No.
90	3 of 8	526

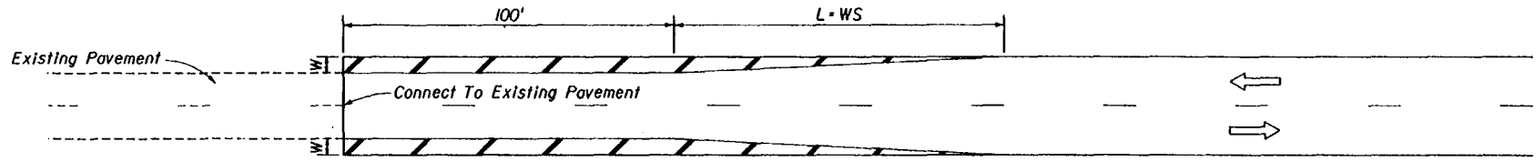

CONNECTING DIFFERENT WIDTH PAVEMENTS

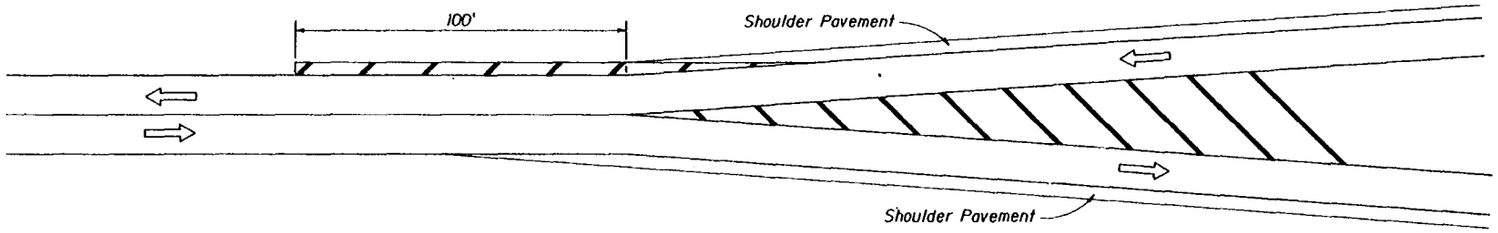

FLARED - PAVED SHOULDERS

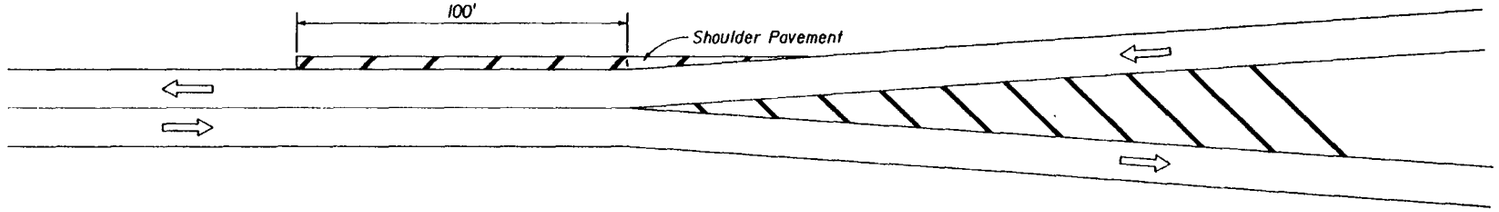

FLARED - UNPAVED SHOULDERS

S = Design speed.

STATE OF FLORIDA DEPARTMENT OF TRANSPORTATION
ROAD DESIGN

ROADWAY TRANSITIONS

	Names	Dates
Designed By	KNM	9/89
Drawn By	JBW	9/89
Checked By	KNM/MG	9/89
F.H.W.A. Approved:		

Approved By _____ State Roadway Design Engineer

Revision No.	Sheet No.	Index No.
90	4 of 8	526

SHOULDER AND PAVEMENT EDGE TREATMENT AT TRANSITIONS AND CONNECTIONS

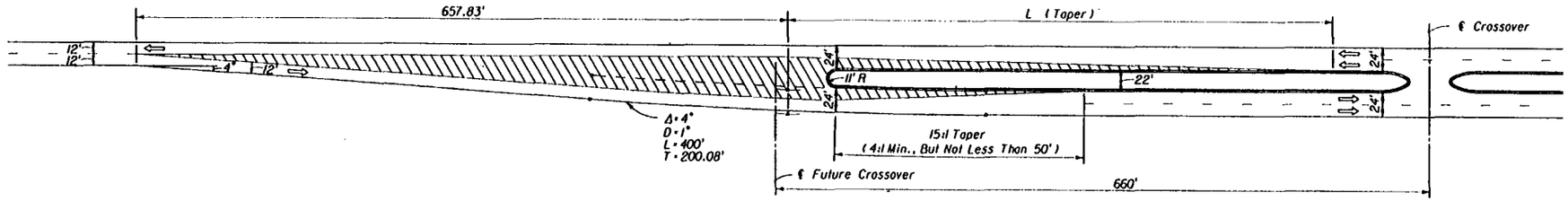

22' MEDIAN

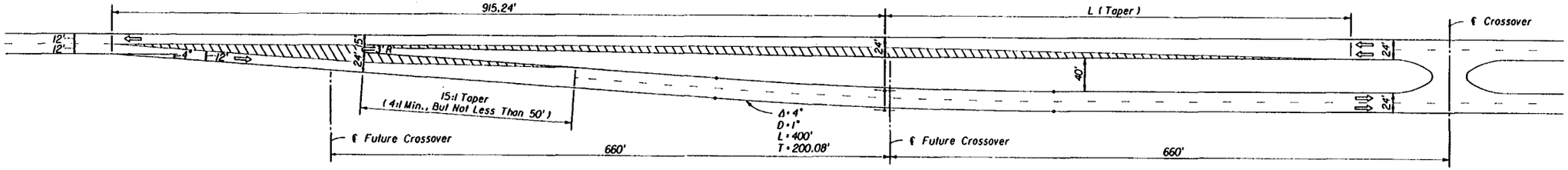

40' MEDIAN

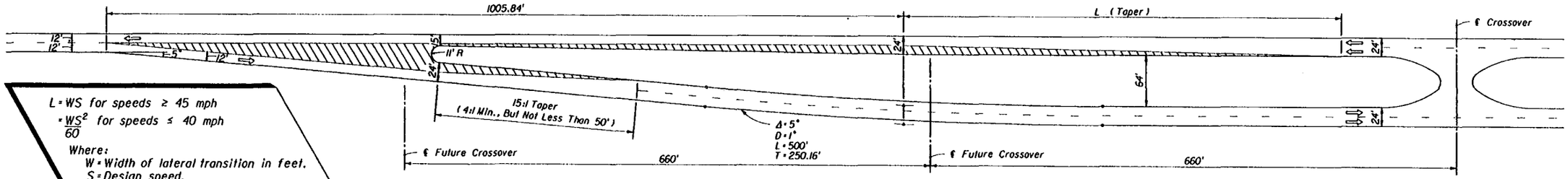

64' MEDIAN

$L = WS$ for speeds $\geq$ 45 mph

$= \frac{WS^2}{60}$ for speeds $\leq$ 40 mph

Where:

W = Width of lateral transition in feet.

S = Design speed.

NOTES FOR SHEETS 5 THRU 8

1. The transition details as represented on these sheets are intended as guidelines only. The transition lengths, curve data, nose radii and offsets are valid only for tangent alignment and the median widths shown.
2. Approach lane departures ($\Delta = 5°$) are suitable for design speeds up to 60 mph. Interior curves ($D = 1°$) are suitable for normal crown for design speeds up to 50 mph. Merging curves ($D \geq 5°$) will require superelevation.
3. The geometrics of these schemes are associated with the standard subsectional spacing for sideroads, but in any case will require modification to accommodate sideroad location, multilane and/or divided sideroads, oblique sideroads, crossover widths, storage and speed change lane requirements, and, other related features.

LEFT ROADWAY CENTERED ON APPROACH ROADWAY

TWO LANE TO FOUR LANE TRANSITION

STATE OF FLORIDA DEPARTMENT OF TRANSPORTATION
ROAD DESIGN

ROADWAY TRANSITIONS

	Names	Dates
Designed By	KNW	9/89
Drawn By	JBW	9/89
Checked By	KNW/JVG	9/89
F.H.W.A. Approved:		

Approved By: Freddie Simmons
State Roadway Design Engineer

Revision No.	Sheet No.	Index No.
90	5 of 8	526

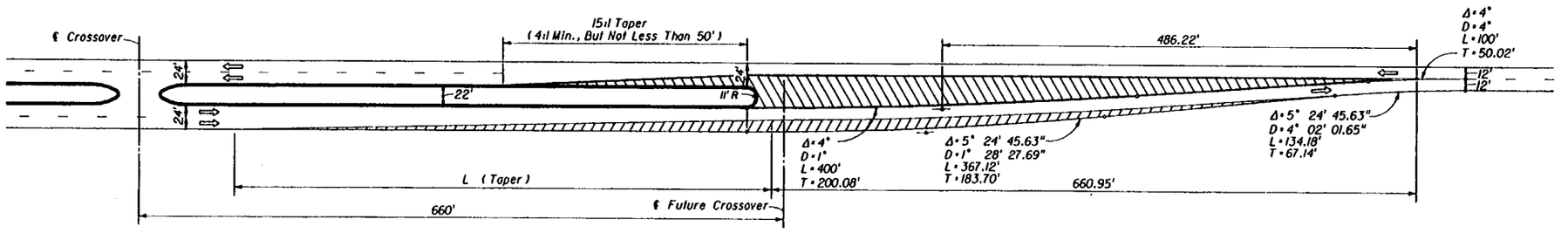

22' MEDIAN

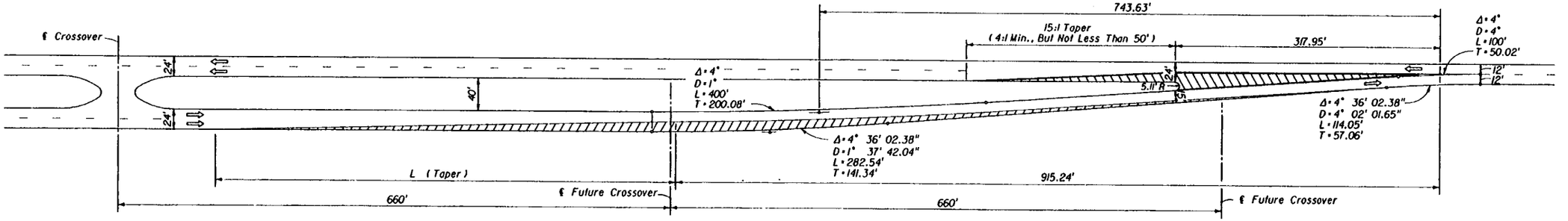

40' MEDIAN

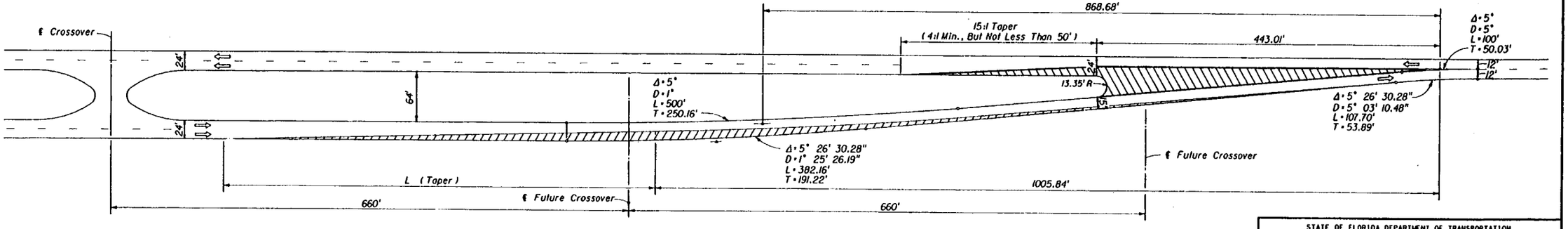

64' MEDIAN

$L = WS$ for speeds $\geq$ 45 mph

$= \frac{WS^2}{60}$ for speeds $\leq$ 40 mph

Where:
W = Width of lateral transition in feet.
S = Design speed.

LEFT ROADWAY CENTERED ON THRU ROADWAY

FOUR LANE TO TWO LANE TRANSITION

STATE OF FLORIDA DEPARTMENT OF TRANSPORTATION
ROAD DESIGN

ROADWAY TRANSITIONS

	Names	Dates
Designed By	KNM	9/89
Drawn By	JBW	9/89
Checked By	KNM/MG	9/89
F.H.W.A. Approved:		

Approved By _____
State Roadway Design Engineer

Revision No.	Sheet No.	Index No.
90	6 of 8	526

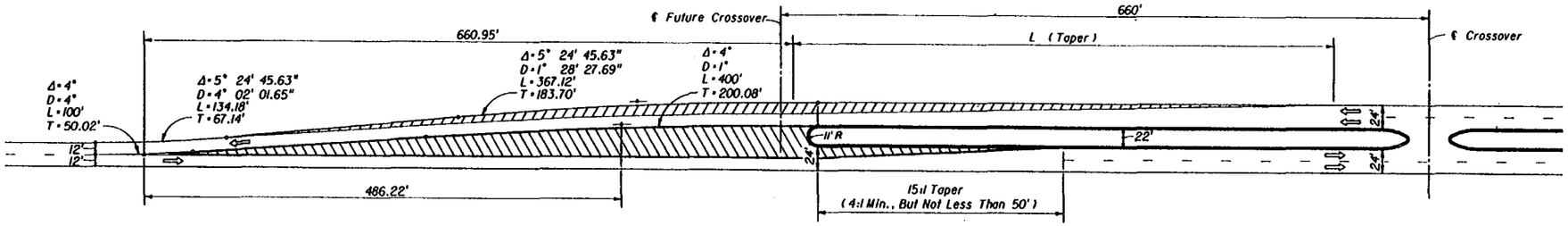

22' MEDIAN

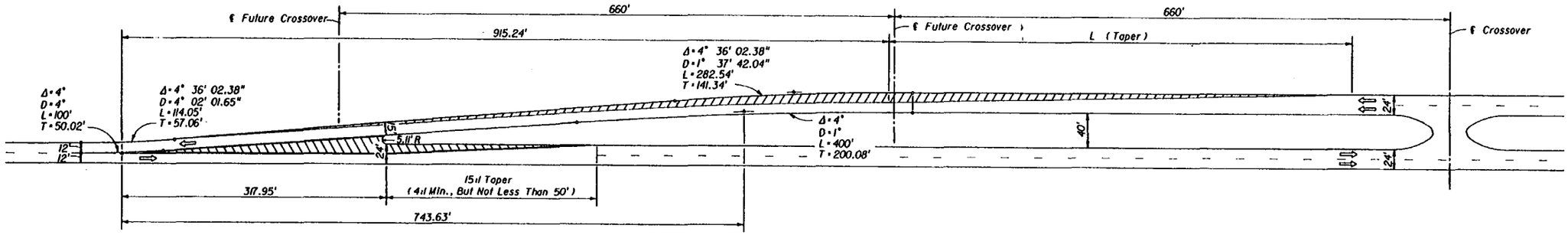

40' MEDIAN

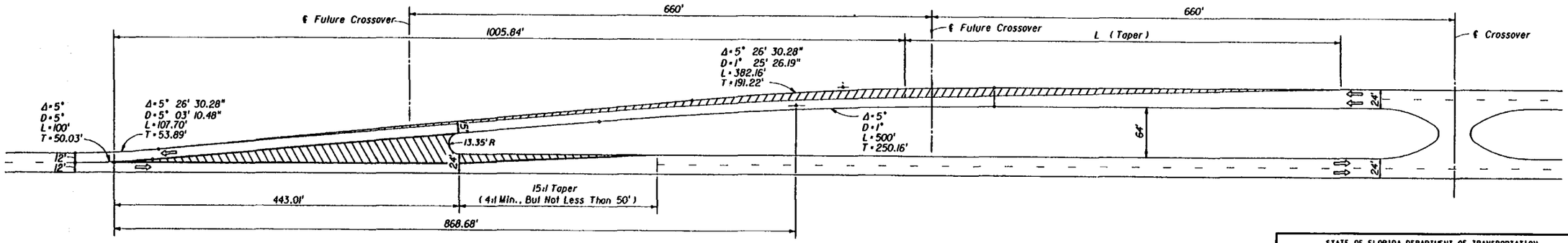

64' MEDIAN

$L = WS$ for speeds $\geq$ 45 mph

$= \frac{WS^2}{60}$ for speeds $\leq$ 40 mph

Where:
W = Width of lateral transition in feet.
S = Design speed.

RIGHT ROADWAY CENTERED ON APPROACH ROADWAY

TWO LANE TO FOUR LANE TRANSITION

STATE OF FLORIDA DEPARTMENT OF TRANSPORTATION
ROAD DESIGN

ROADWAY TRANSITIONS

	Names	Dates
Designed By	KNW	9/89
Drawn By	JBW	9/89
Checked By	KNW/MC	9/89
F.H.W.A. Approved:		

Approved By: Kenneth N. Morris
State Roadway Design Engineer

Revision No.	Sheet No.	Index No.
90	7 of 8	526

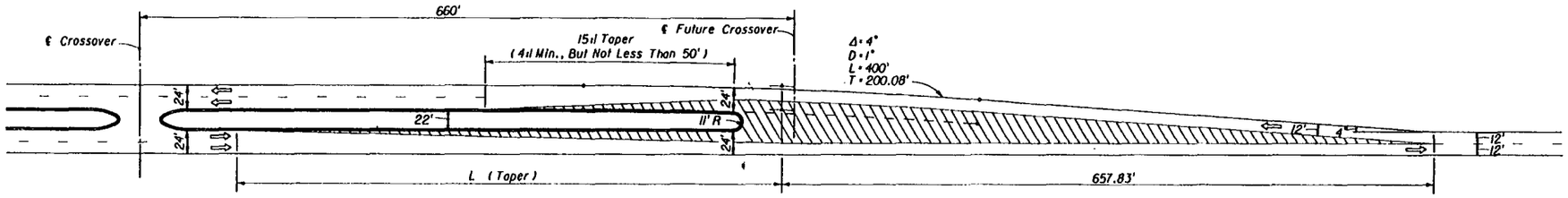

22' MEDIAN

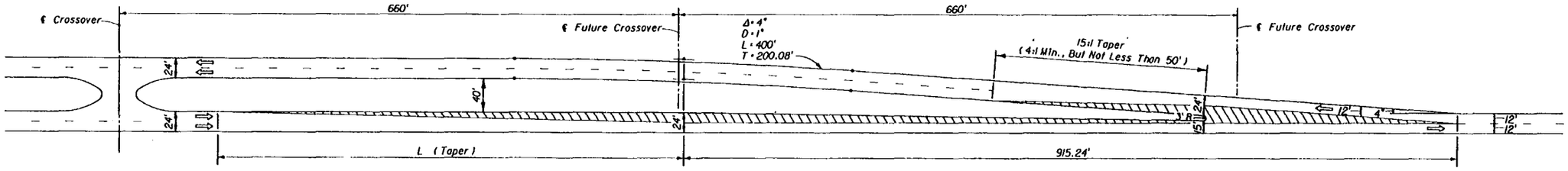

40' MEDIAN

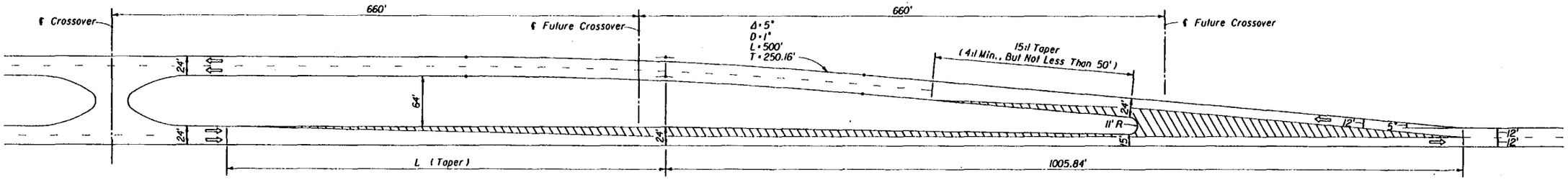

64' MEDIAN

L = WS for speeds ≥ 45 mph

= $\frac{WS^2}{60}$ for speeds ≤ 40 mph

Where:

W = Width of lateral transition in feet.

S = Design speed.

RIGHT ROADWAY CENTERED ON THRU ROADWAY

FOUR LANE TO TWO LANE TRANSITION

STATE OF FLORIDA DEPARTMENT OF TRANSPORTATION
ROAD DESIGN

ROADWAY TRANSITIONS

	Names	Dates
Designed By	KNM	9/89
Drawn By	JBW	9/89
Checked By	KNM/JWG	9/89
F.H.W.A. Approved:		

Approved By _____
State Roadway Design Engineer

Revision No.	Sheet No.	Index No.
90	8 of 8	526

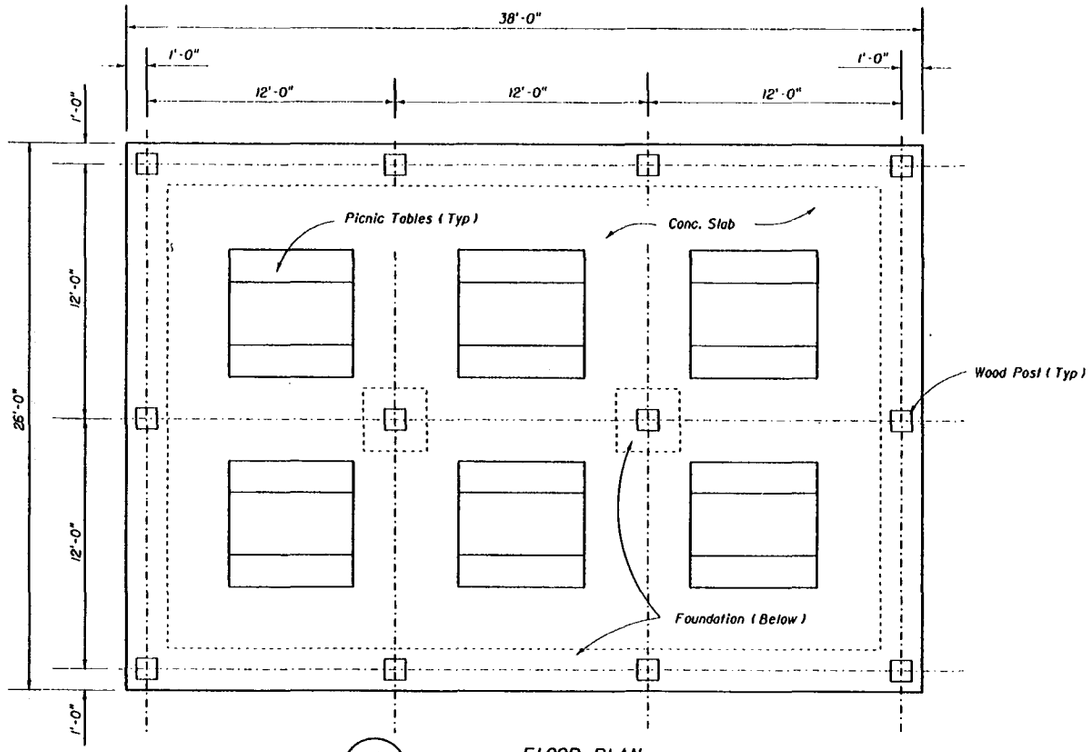

A/1 FLOOR PLAN

LARGE PAVILION

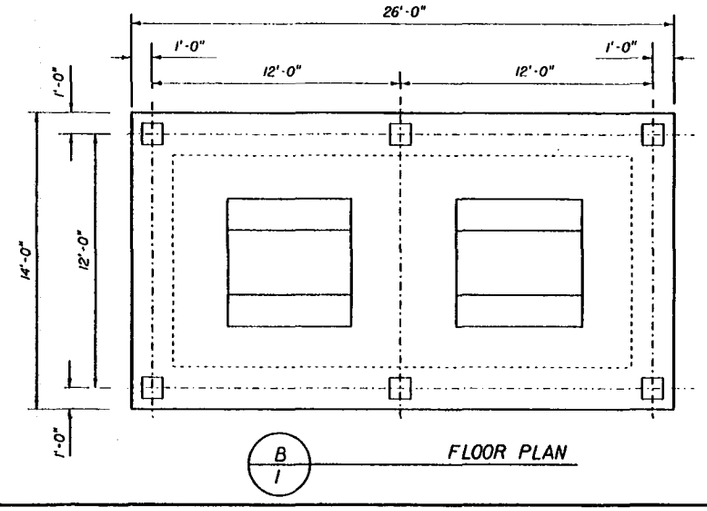

B/1 FLOOR PLAN

SMALL PAVILION

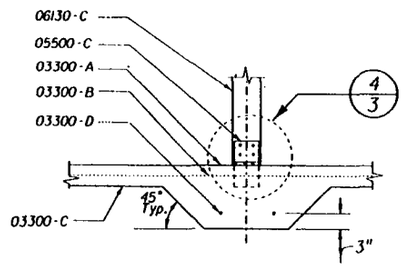

1/1 SECTION

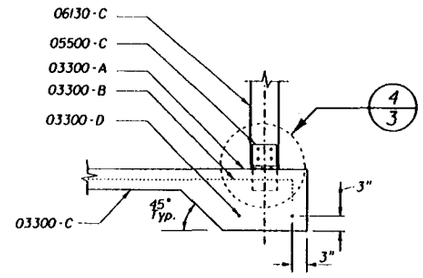

2/1 SECTION

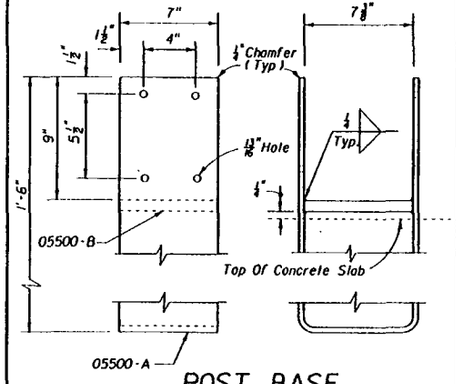

3/1 POST BASE DETAIL

NOTES

Keynotes On Sheet 2.

FLOOR

6" Reinf. Concrete Slab w/WWF6 x 6-WI.4 x WI.4

1'-6"x 1'-6" Drop Footing At Slab Perimeter & Interior Posts.

Harden & Broom Finish Slab Surface.

STRUCTURE

Posts: 8 x 8 PT

Beams: 4 x 6 PT

Framing: 4x PT As Described.

Misc Members: 2x As Described.

ROOF

3" T&G Wood Decking.

30# Asphalt Impregnated Fiberglass Felt Underlayment.

Standing Seam Metal Roof (24 GA Steel Or .032 Alum.) w/ Kynar 500 Finish.

Structure, Decking And Roofing Shall Withstand 130 MPH Wind Load.

BUILDING CODE

Picnic Pavilions Shall Be Constructed According To The Requirements Of The Appropriate Sections Of Applicable "Standard Building Code" or "South Florida Building Code", Current, Adopted Edition.

PICNIC PAVILIONS

STATE OF FLORIDA DEPARTMENT OF TRANSPORTATION
ROAD DESIGN

REST AREA EQUIPMENT

	Names	Dates
Designed By	HDP	6/30/93
Drawn By	HDP	6/30/93
Checked By	DRL	6/30/93
F.H.W.A. Approved:		

Approved By
Administrator Of Specifications

Revision No.	Sheet No.	Index No.
94	1 of 3	530

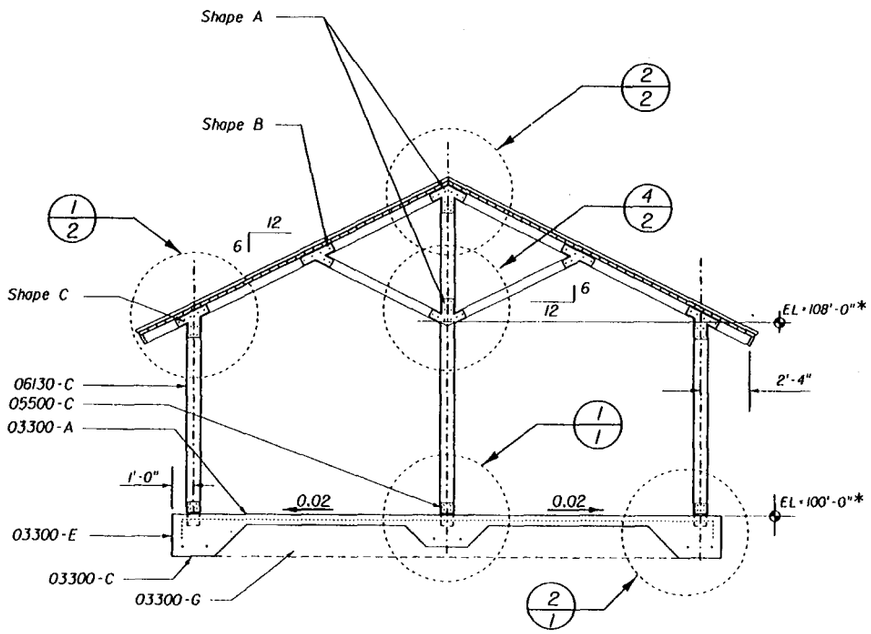

* REFERENCE ELEVATION ONLY

A/2 SECTION

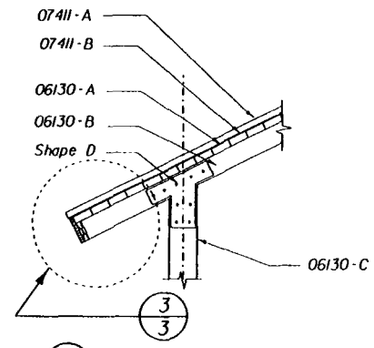

1/2 SECTION

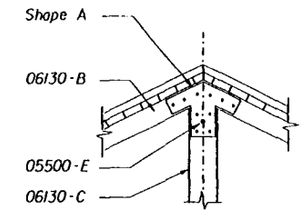

2/2 SECTION

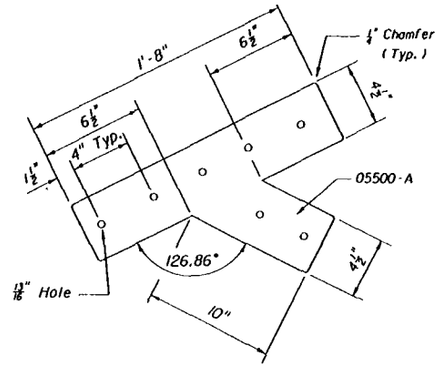

SHAPE B

3/2 DETAIL

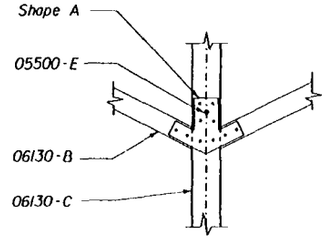

4/2 SECTION

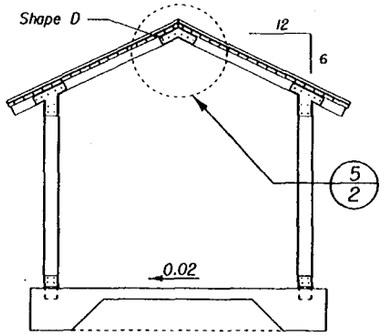

NOTE: DETAILS TO MATCH THOSE OF LARGE PICNIC PAVILION

B/2 SECTION

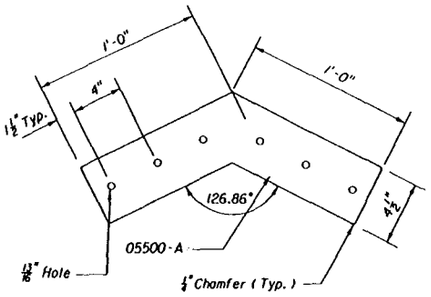

SHAPE D

5/2 DETAIL

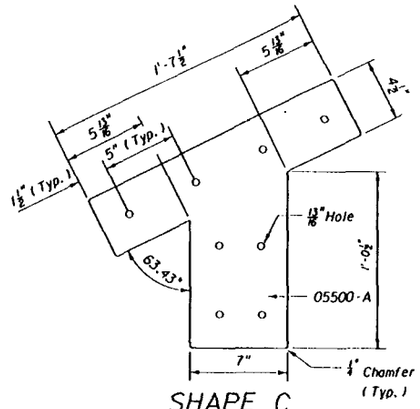

SHAPE C

6/2 DETAIL

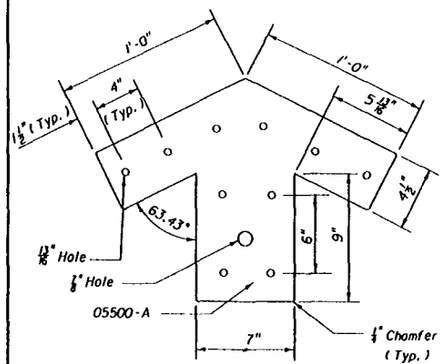

SHAPE A

7/2 DETAIL

KEYNOTES

03300-A	Class II Conc Slab
03300-B	WWF6 x 6-W1.4 x W1.4 @ ℄ Of Slab
03300-C	6 Mil Vapor Barrier
03300-D	2- #5 Ø Cont.
03300-E	24" x 24" Drop Footing
03300-F	1'-6" x 1'-6" Drop Footing
03300-G	6" Min Comp Sand Fill
05500-A	⅜" Galv. Steel Plate
05500-B	½" Galv. Steel Plate
05500-C	Post Base
05500-D	¾" Bolt, Washer & Nut (Typ)
05500-E	⅝" Eyebolt, Washer & Nut For Cross Brace Bars
05500-F	½" Steel Rod w/Turnbuckle
06130-A	3 x 6 T&G Wood Decking
06130-B	4 x 6 PT Wood Frame
06130-C	8 x 8 PT Wood Post
06130-D	2 x 6 PT Wood Fascia
06130-E	1 x 10 PT Wood Fascia
07411-A	Standing Seam Metal Roof
07411-B	30# Asphaltic Fiberglass Felt

PICNIC PAVILIONS

STATE OF FLORIDA DEPARTMENT OF TRANSPORTATION
ROAD DESIGN

REST AREA EQUIPMENT

	Names	Dates
Designed By	HDP	6/30/93
Drawn By	HDP	6/30/93
Checked By	DRL	6/30/93

Approved By D. Richard Lamb
Administrator of Standard Facilities

Revision No.	Sheet No.	Index No.
94	2 of 3	530

F.H.W.A. Approved:

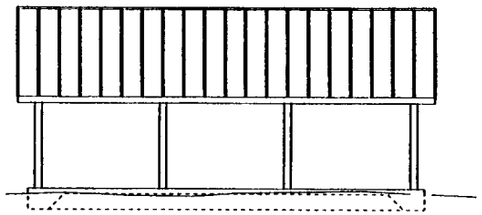

A/3 SIDE ELEVATION

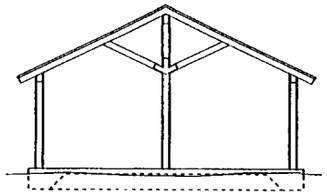

B/3 END ELEVATION

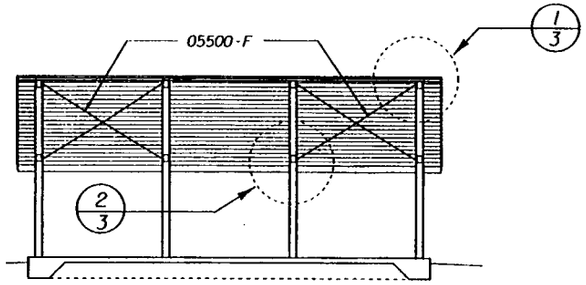

C/3 SECTION

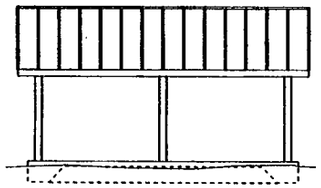

D/3 SIDE ELEVATION

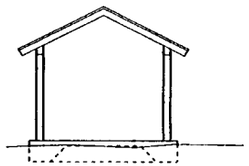

E/3 END ELEVATION

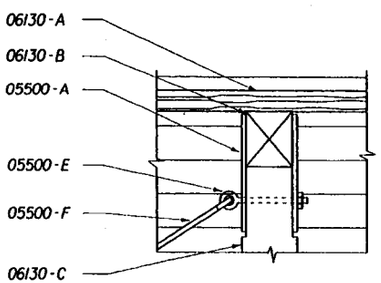

1/3 DETAIL

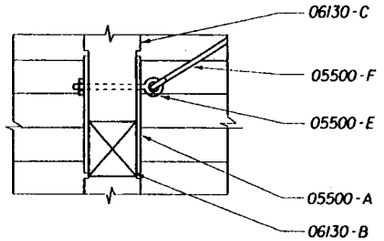

2/3 DETAIL

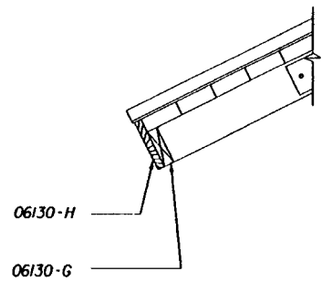

3/3 DETAIL

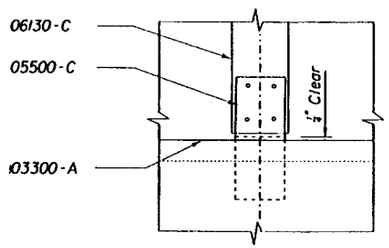

4/3 DETAIL

SPECIFICATIONS

Keynotes On Sheet 2.

CONCRETE

Concrete: FDOT Class II.

Reinforcing Bars: ASTM A-615, Grade 60.

Welded Wire Fabric: ASTM A-185.

Vapor Barrier: Black 6-Mil Polyethylene.

STEEL

Galvanized Steel Plates: ASTM A-446 With G90 Coating

Galvanized Fasteners: High-Strength Bolts And Nuts, ASTM A-325 With G90 Coating.

Galvanized Shapes After Fabrication, Make Field Repairs To Galvanizing With High Zinc Dust Content Paint, Complying With SSPC-Paint-20.

WOOD

Comply With American Institute For Timber Construction AITC 108, "Standard For Heavy Timber Construction."

For Solid Wood Decking, Comply With AITC 112, Standard For Tongue And Groove Heavy Timber Standard."

Species: Douglas Fir, Hem-fir, Or Southern Pine, At Fabricators Option.

Preservative Treatment: Pressure Treat Fabricated Members With Waterborne Solution For Above Ground Use, Complying With AWPA C2.

Wood Decking: Predrill Decking At 30" Centers For Lateral Spiking To Adjacent Units.

PICNIC TABLES

Picnic Tables And Benches Shall Be 6'x6' w/Heavy Galvanized Pipe Frames And Recycled Plastic Wood Seats And Table Tops. All Tables Shall Be Of Walk Thru Design Suitable For Exterior Locations And Shall Be Accessible According To The Requirements Of The Americans With Disabilities Act (ADA) Accessibility Guidelines For Tables And Benches Shall Be Selected From DOT's Qualified Products Lists.

PICNIC PAVILIONS

STATE OF FLORIDA DEPARTMENT OF TRANSPORTATION
ROAD DESIGN

REST AREA EQUIPMENT

	Names	Dates
Designed By	HDP	6/30/93
Drawn By	HDP	6/30/93
Checked By	DRL	6/30/93
F.H.W.A. Approved:		

Approved By
Administrator of Roadway Facilities

Revision No.	Sheet No.	Index No.
94	3 of 3	530

GENERAL NOTES

1. The location and construction of mailboxes shall conform to the rules and regulations of the United States Postal Service as modified by this design standard.

2. Mailboxes will not be permitted on Interstate highways, freeways, or other highways where prohibited by law or regulation.

3. The contractor shall give the Postmaster of the delivery route(s) written notice of project construction 7 days prior to the beginning of work, with Saturdays, Sundays and Holidays excluded.

   The Contractor shall furnish and install one mailbox in accordance with this design standard at each mail patron delivery location and maintain the box throughout the contract period. The Contractor shall apply box numbers to each patron box in accordance with identification specifications of the Domestics Mail Manual of the U. S. Postal Service; where local street names and house numbers are authorized by the Postmaster as a postal address, the Contractor shall inscribe the house number on the box; if the box is located on a different street from the patrons residence, the Contractor shall inscribe the street name and house number on the box.

   The Contractor shall coordinate removal of the patrons existing mailboxes. Immediately after installing the new mailboxes the Contractor must notify each "Mail Delivery Patron" by Certified Mail that removal of the existing mailboxes must be accomplished in 21 days after receipt of notices. Patrons shall have the option of removing their existing mailboxes or leaving the mailboxes in place for removal by the Contractor; removal by the Contractor shall be included in the contract unit price for Mailbox, Each. The Contractor shall dispose of mailboxes and supports in areas provided by him.

   Reuse of existing mailboxes by the Contractor will not be a requirement under any construction project; however where an existing mailbox meets the design requirements of this standard and is structurally and functionally sound, the Contractor at his option may elect to reuse the existing mailbox in lieu of constructing a new mailbox. Any use of existing mailboxes must be approved by the Engineer.

4. Mailboxes shall be metal construction only, in traditional style only, and only in Size 1 as prescribed by the Domestic Mail Manual of the U. S. Postal Service (DMM).

   Mailbox production standards, lists of approved manufacturers and suppliers of mailboxes, design approval and guidance may be obtained by writing to the Rural Delivery Division, Delivery Service Department, Operations Group, USPS Headquarters, Washington, DC 20260.

5. Mailboxes shall be located on the right-hand side of the roadway in the direction of the delivery route, except on one-way roads and streets where they may be placed on the left-hand side.

   Mailboxes on rural highways shall be set with the post at the shoulder point, except for shoulders less than 9' in width the face of the box shall be no closer than 8' from the edge of the driving lane except as noted below.

   Mailboxes on low volume (ADT less than 100 vpd), low speed (40 mph or less) rural highways shall be offset with the face of the box at the shoulder point but not closer than 6'-8" from the edge of the driving lane; however, on these low volume low speed highways where shoulders lack sufficient width to accommodate stopped vehicles, mailboxes shall be offset with the face of the box at the shoulder point but not closer than 2'-8" from the driving lane.

   When a mailbox is installed within the limits of guardrail it should be placed behind the guardrail whenever practical.

   Mailboxes on curbed highways, roads and streets shall be set with the face of the box between 6" and 12" back of the face of curb. If the sidewalk abuts the curb or if an unusual condition exists which makes it difficult or impractical to install or serve boxes at the curb, the Contractor with concurrence of the local postal authority may be permitted to install all mailboxes at the back edge of the sidewalk, where they can be served by the carrier from the sidewalk.

6. Mailboxes shall be set with the bottom of the box between 42" and 48" above the mail stop surface, unless the U.S. Postal Service establishes other height restrictions.

7. No more than two mailboxes may be mounted on a support structure unless the support structure and mailbox arrangements have been shown to be safe by crash testing and approved by the State Design Engineer, Roadways.

   Neighborhood Delivery and Collection Box Units (NDCBU) are a specialized multiple mailbox installation that must be located outside the highway and street clear zones. The location of NDCBUs is the sole responsibility of the Postmaster for the delivery route under consideration.

8. Lightweight newspaper receptacles may be mounted below the mailbox on the side of the support post in conformance with the USPS Domestic Mail Manual. The mail patron shall be responsible for newspaper receptacle installation and maintenance.

9. Wood and steel support posts for both single and double mailbox mountings shall be embedded no more than 24" into the ground.

   Concrete, block, brick, stone or other rigid foundation structure or encasement, either above or below the shoulder groundline, will not be permitted for mailboxes on rural highways. On urban roads and streets where mailbox support posts are set within rigid pavement back of curb, the support posts shall be separated from the pavement by a minimum of 1" of expansion material.

   Support posts shall not be fitted nor installed with surface mount base plates.

10. At driveway entrances mailboxes shall be placed on the far side of the driveway in the direction of the delivery route.

    At intersecting roads mailboxes shall be located 100' or more from the centerline of the intersecting road on the far side in the direction of the delivery route, with the distance increased to 200' when the route volume exceeds 400 vehicles per day.

11. Wood support posts shall be in conformance with the material and dimensional requirements of Section 952 and the treatment requirements of Section 955 of the Standard Specifications.

    Steel support posts shall have an external finish equal to or better than two coats of weather resistant, air dried or baked, paint or enamel. Surfaces(s) shall be cleaned of all loose scale prior to finishing. The Postal Service prefers that posts be painted white, but other colors may be used when approved by the Engineer. When galvanized posts are used painting is not required.

    Mounting brackets, plates, platforms, shelfs and accessory hardware surface finishes are to be suited to support post finish.

12. Mailboxes shall be paid for under the contract unit price for Mailboxes, Each. Payment shall be full compensation for boxes, posts and accessory items essential for installation in accordance with this standard; erection; adjustments to suit construction needs; and, for identification letters and numbers.

    Payment shall be limited to one mailbox per patron address whether the mailbox is new, reused, salvaged, reset or relocated. Payment shall be per mailbox regardless of the number of mailboxes per support or grouping arrangement.

    The above compensation shall include any work and cost incurred by the contractor for removal and disposal of existing mailboxes.

    There shall be no payment participation for NDCBU furnishing, assembly, installation, resetting or relocation.

STATE OF FLORIDA DEPARTMENT OF TRANSPORTATION
ROAD DESIGN

MAILBOXES

	Names	Dates
Designed By		
Drawn By	HSD	7/87
Checked By	JVG/JBW	7/87
F.H.W.A. Approved:		

Approved By _____
State Roadway Design Engineer

Revision No.	Sheet No.	Index No.
92	1 of 3	532

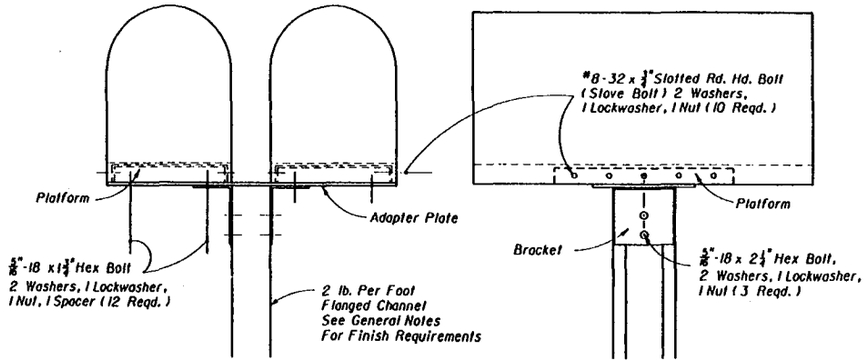

FRONT VIEW

SIDE VIEW

FLANGED CHANNEL

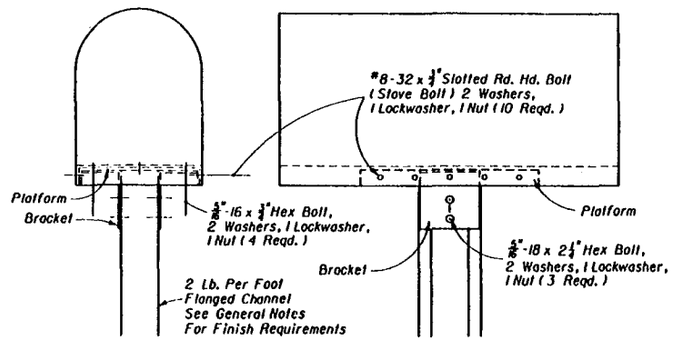

FRONT VIEW

SIDE VIEW

FLANGED CHANNEL

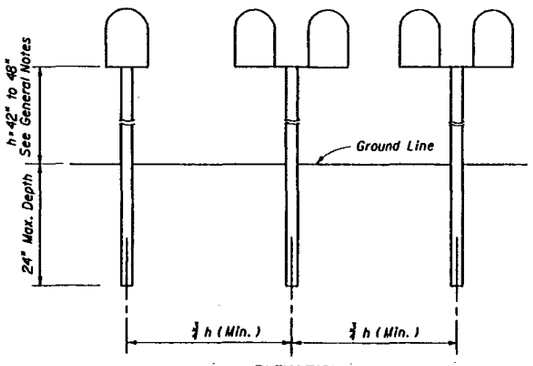

ELEVATION

SINGLE OR COMBINED WOOD, FLANGED CHANNEL OR PIPE POST TYPES SHOWN ON THIS INDEX

POST SPACING

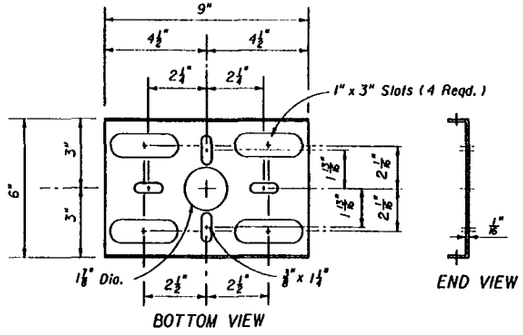

BOTTOM VIEW

END VIEW

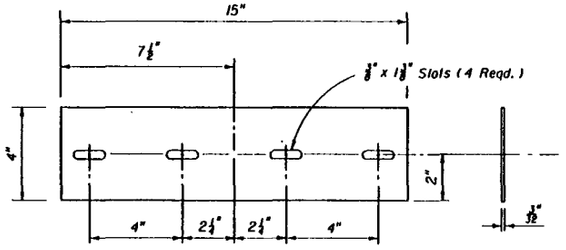

TOP VIEW

END VIEW

STEEL ADAPTER PLATE

Note: See General Notes for finish requirements.

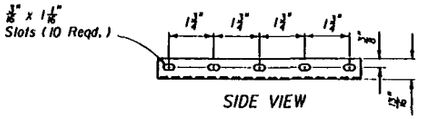

SIDE VIEW

STEEL PLATFORM

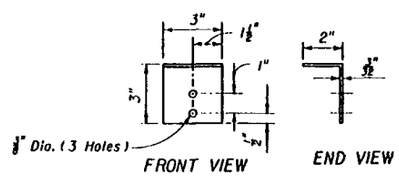

FRONT VIEW

END VIEW

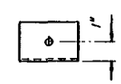

TOP VIEW

STEEL BRACKET

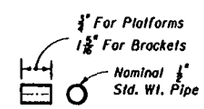

STEEL SPACER

STEEL FLANGED CHANNEL SUPPORT POSTS

STATE OF FLORIDA DEPARTMENT OF TRANSPORTATION
ROAD DESIGN

MAILBOXES

	Names	Dates	Approved By
Designed By			State Roadway Design Engineer
Drawn By	HSD	7/87	
Checked By	JVO/JBW	7/87	
F.H.W.A. Approved:			

Revision No.	Sheet No.	Index No.
90	2 of 3	532

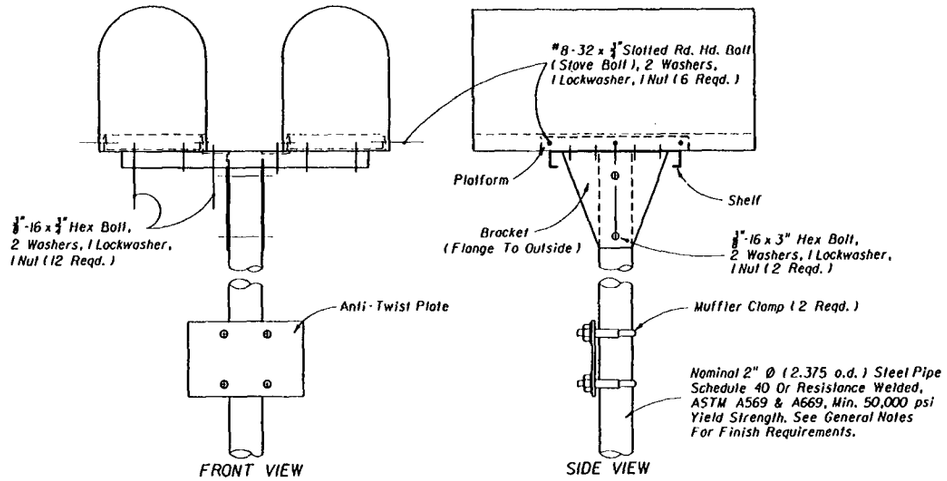

2" Ø PIPE POST

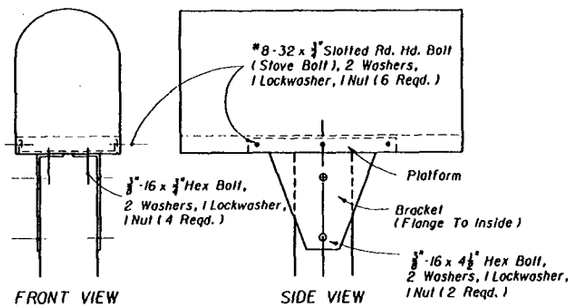

4" X 4" WOOD POST

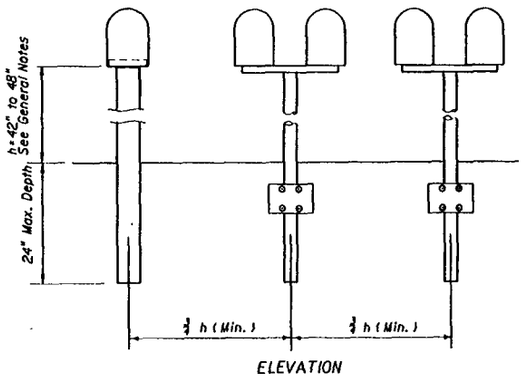

ELEVATION

SINGLE OR COMBINED WOOD, FLANGED CHANNEL OR PIPE POST TYPES SHOWN ON THIS INDEX

POST SPACING

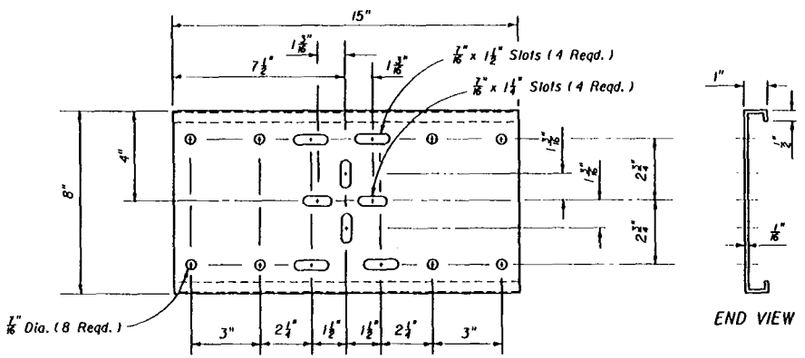

STEEL SHELF

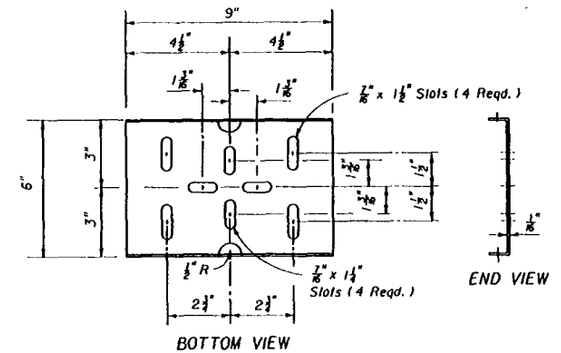

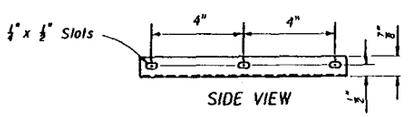

STEEL PLATFORM

Note: See General Notes for finish requirements

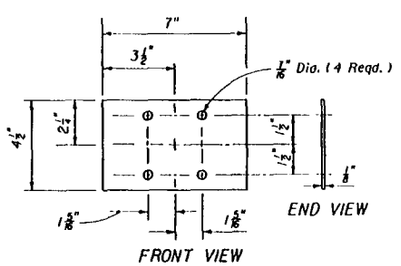

STEEL ANTI-TWIST PLATE

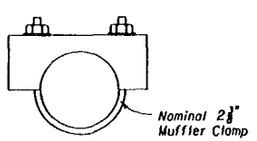

STEEL CLAMP

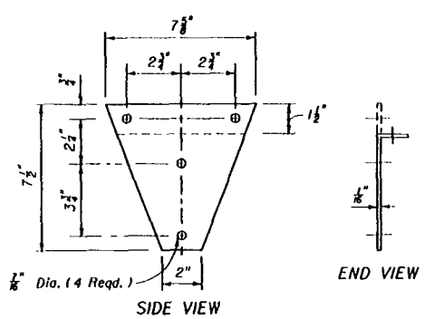

STEEL BRACKET

STEEL PIPE AND WOOD SUPPORT POSTS

STATE OF FLORIDA DEPARTMENT OF TRANSPORTATION
ROAD DESIGN

MAILBOXES

	Names	Dates
Designed By		
Drawn By	HSD	7/87
Checked By	MO/JBW	7/87
F.H.W.A. Approved:		

Approved By _____ State Roadway Design Engineer

Revision No.	Sheet No.	Index No.
90	3 of 3	532

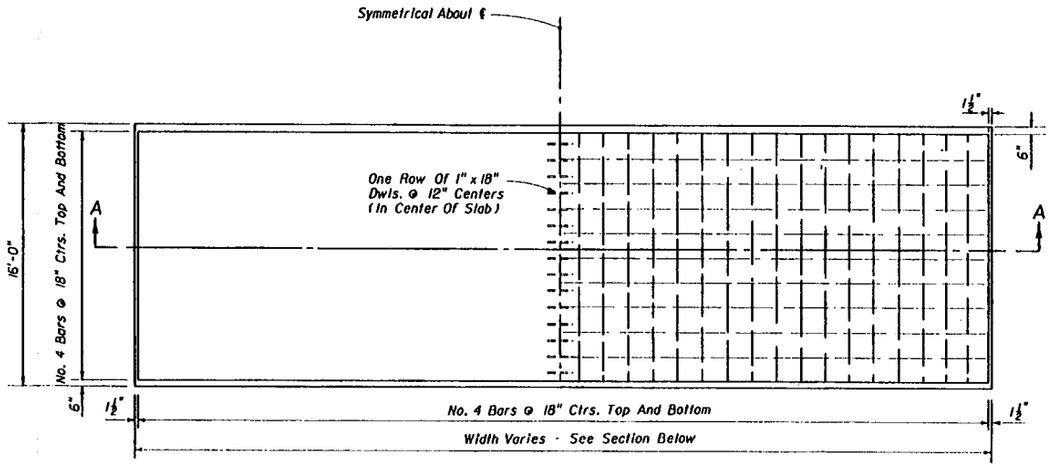

PLAN

Note: Class I concrete is to be used unless otherwise noted in plans or special provisions.

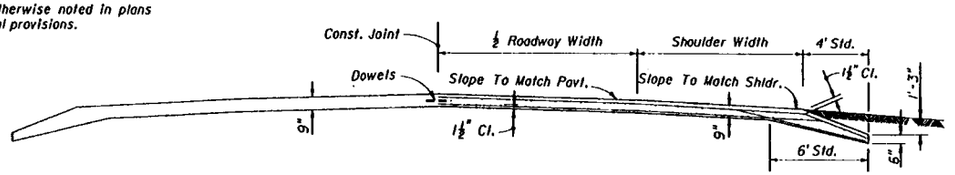

SECTION AA

REINFORCED CONCRETE

TYPE A

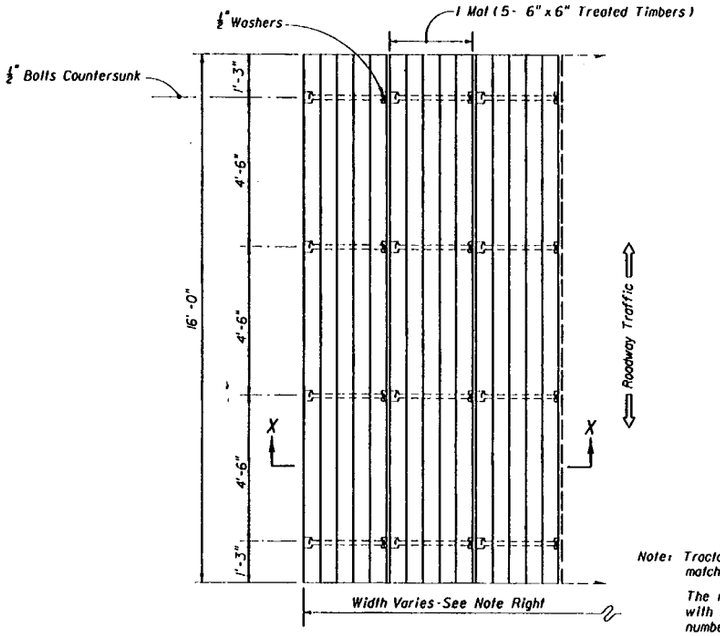

PLAN

Note: Tractor crossing to be constructed to match pavement cross slope.

The number of mats required will vary with the pavement width. A sufficient number of mats will be used so that the overall width of the tractor crossing will be centered on the centerline.

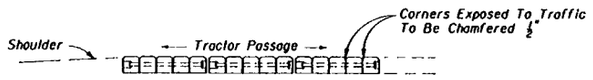

SECTION XX

TREATED TIMBER

TYPE B

STATE OF FLORIDA DEPARTMENT OF TRANSPORTATION
ROAD DESIGN

TRACTOR CROSSINGS

	Names	Dates
Designed By		
Drawn By	LH	01/61
Checked By	COD	01/61
F.H.W.A. Approved:		03/20/75

Approved By Jaddie Simmons
State Roadway Design Engineer

Revision No.	Sheet No.	Index No.
81	1 of 1	535

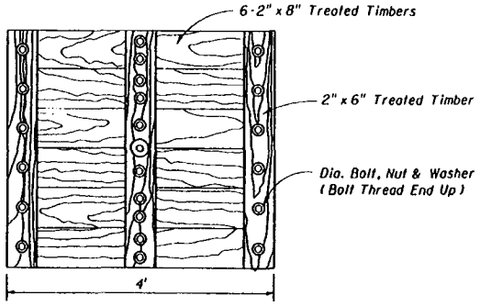

PLAN

TIMBER PLATE

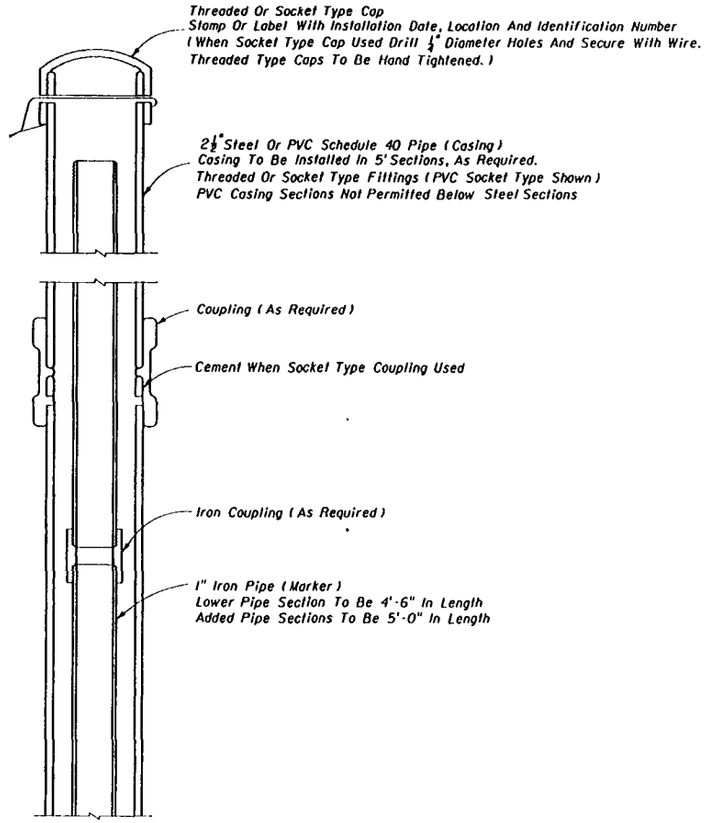

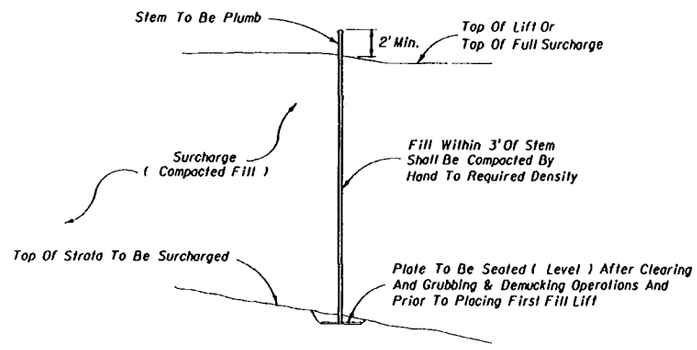

INSTALLATION

NOTES

1. Elevation of the top of each length of marker pipe shall be determined as soon as it is installed and also immediately before the next length of marker pipe is added.
2. Settlement plate locations shall be flagged and protected from construction vehicles and equipment. If settlement plates are disturbed, they shall be replaced in kind.
3. Oakum used to construct seal should not have a mesh covering (plastic or other synthetic material).

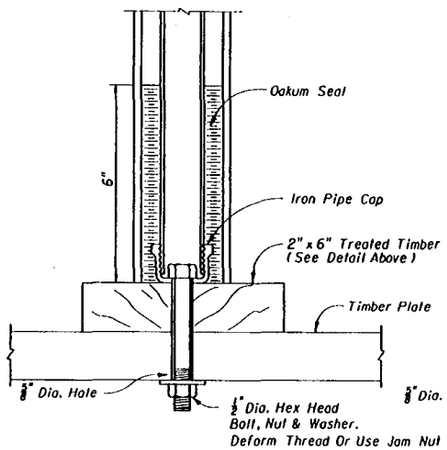

TIMBER PLATE

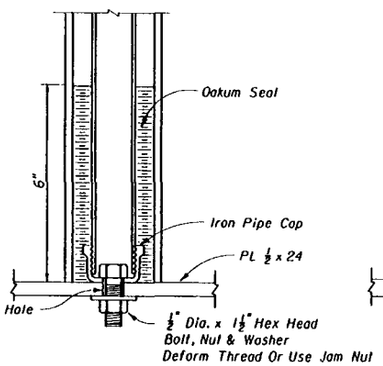

STEEL PLATE

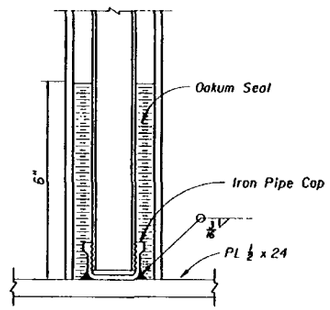

STEEL PLATE

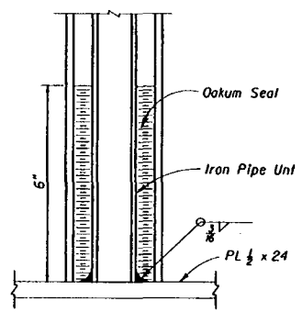

STEEL PLATE

STEM AND PLATE OPTIONS

STATE OF FLORIDA DEPARTMENT OF TRANSPORTATION
ROAD DESIGN

SETTLEMENT PLATE

	Names	Dates
Designed By	JVO	10/79
Drawn By	HSD	10/79
Checked By	JBW	10/79
F.H.W.A. Approved: -		10/07/80

Approved By Freddie Simmons
State Roadway Design Engineer

Revision No.	Sheet No.	Index No.
81	1 of 1	540

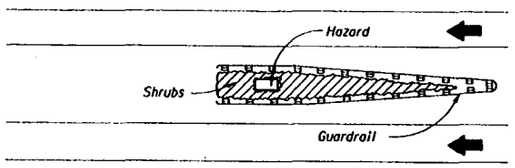

MEDIAN HAZARD - ONE WAY TRAFFIC

DETAIL A

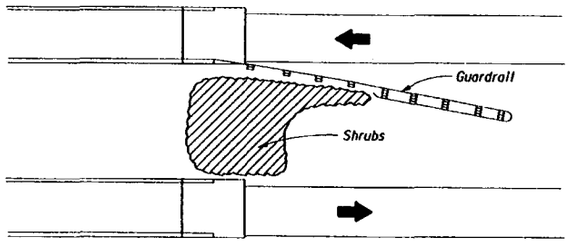

BRIDGE END - WIDE MEDIAN

DETAIL C

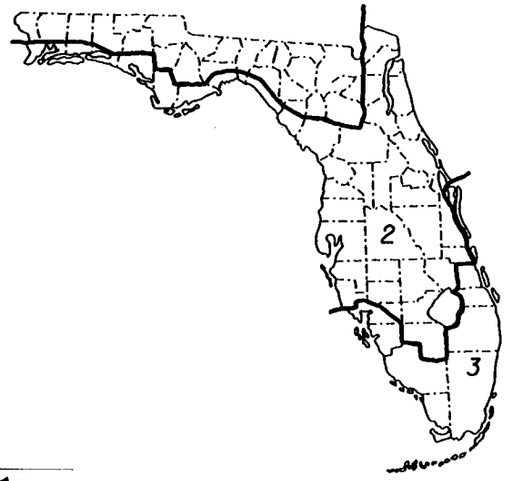

ZONE MAP

ZONE	SHRUB
1.	Wax Myrtle Pampas Grass Primrose Jasmine Russian Olive
2.	Wax Myrtle Pampas Grass Primrose Jasmine Russian Olive Jasmine Simplic Oleander
3.	Pampas Grass Russian Olive Natal Plum Jasmine Simplic Oleander Dwarf Oleander

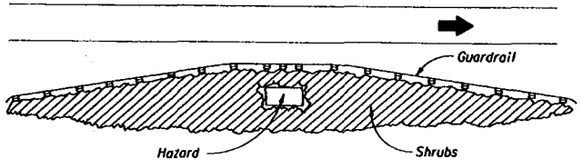

ROADSIDE HAZARD

DETAIL B

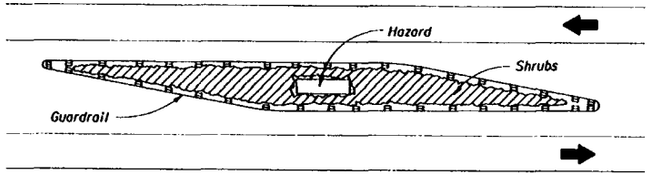

MEDIAN HAZARD - TWO WAY TRAFFIC

DETAIL D

GENERAL NOTES

1. The purpose of shrubs in areas back of guardrail is to eliminate hand maintenance in those areas.
2. Shrubs are to be planted approximately 5' back from guardrail posts and hazards. Narrow plant areas are to have at least one row of shrubs, as directed by the Engineer.
3. Shrubs are to be planted approximately 5' on centers in rows with 5' spacings.
4. Shrubs are to be offset in successive rows to create a zig-zag pattern between any two rows.
5. Shrubs shall be specified in the plans by Landscape Material Master Pay Item List numbers.
6. Only one variety of shrub shall be planted within any given contiguous area and no shrub variety is to be repeated within a distance of one mile.
7. When guardrail paving is constructed in conjunction with shrub planting, soil sterilization shall be in accordance with Section 339 of the Standard Specifications.
8. For line of clear sight limits see Index No. 546.

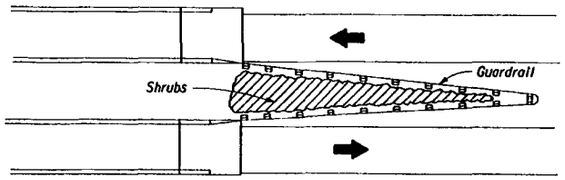

BRIDGE END - NARROW MEDIAN

DETAIL E

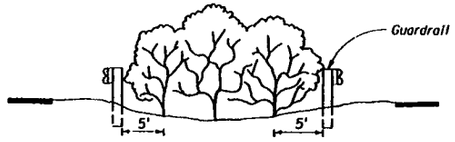

BACK TO BACK GUARDRAIL

SECTIONAL VIEW

STATE OF FLORIDA DEPARTMENT OF TRANSPORTATION
ROAD DESIGN

LANDSCAPING
BACK OF GUARDRAIL APPLICATION

	Names	Dates
Designed By	GLH	
Drawn By		
Checked By		
F.H.W.A. Approved:		

Approved By
State Roadway Design Engineer

Revision No.	Sheet No.	Index No.
90	1 of 1	545

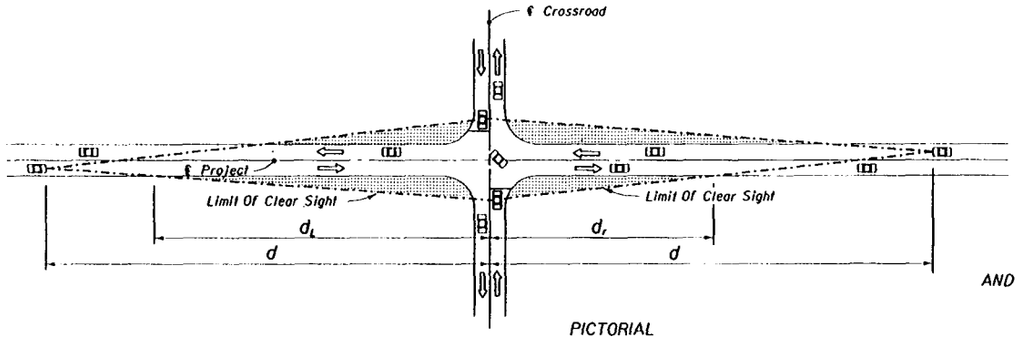

PICTORIAL

2 LANE UNDIVIDED

Design Speed	d	d_L	d_r
30	380	290	200
35	470	370	250
40	580	450	310
45	710	550	380
50	840	650	450
55	990	760	520
60	1150	890	610
65	1350	1040	710
See General Note 2			

SIGHT DISTANCE (d)
AND RELATED DISTANCES (d_L , d_r)
(FEET)

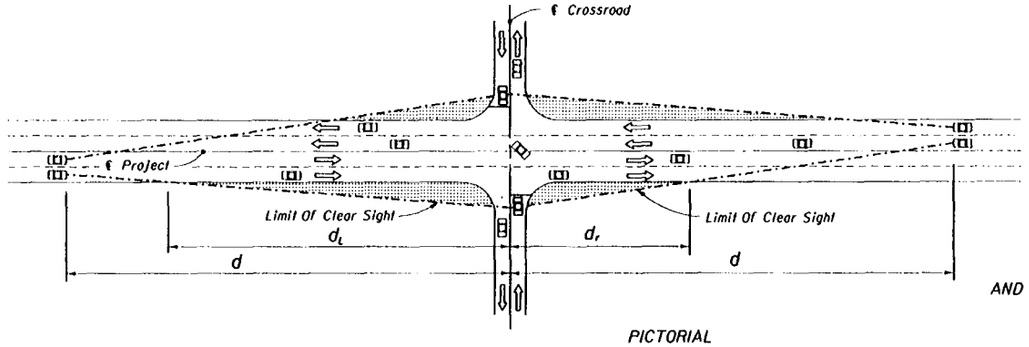

PICTORIAL

MULTILANE UNDIVIDED

Design Speed	d	d_L	d_r
30	380	290	160
35	470	370	190
40	580	450	240
45	710	550	290
50	840	650	340
55	990	760	400
60	1150	890	460
65	1350	1040	540
See General Note 2			

SIGHT DISTANCE (d)
AND RELATED DISTANCES (d_L , d_r)
(FEET)

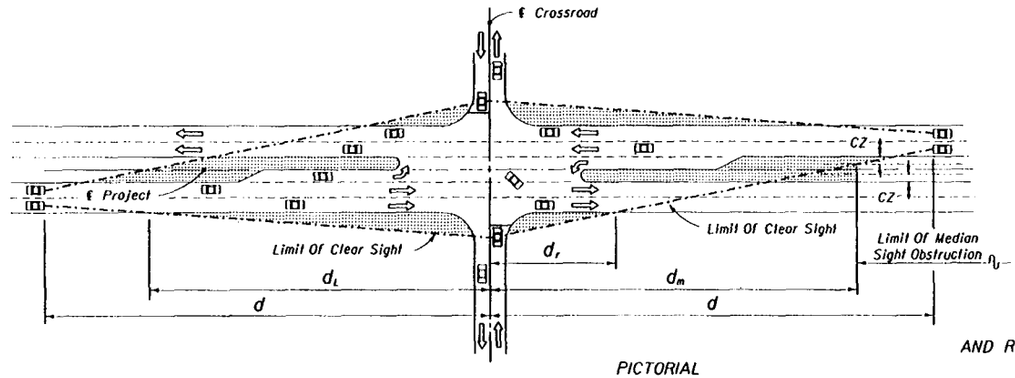

PICTORIAL

MULTILANE DIVIDED

Design Speed	d	d_L	d_r	d_m
30	380	290	120	300
35	470	370	150	370
40	580	450	180	460
45	710	550	220	560
50	840	650	260	670
55	990	760	300	780
60	1150	890	360	910
65	1350	1040	420	1070
See General Note 2				

SIGHT DISTANCE (d)
AND RELATED DISTANCES (d_L , d_r , d_m)
(FEET)

LEGEND

Areas Free Of Sight Obstructions

NOTE: See Sheet 2 of 2 for intersecting roadway origin of clear sight and quadrant corner clips.

GENERAL NOTES

1. Details apply to both rural and urban intersections under stop sign control and flashing beacon control. For full signal controlled intersections see Design Note No. 3 below.
2. Sight distance (d) applies to normal and skewed intersections (intersecting angles between 60° and 120°), and where vertical and/or horizontal curves are present. Sight distance (d) is measured along the major roadway from the center of the intersecting roadway. Distances d_L and d_r are measured from the centerline of the intersecting roadway to a point on the edge of the outer traffic lane on the major roadway. Distance d_m is measured from the centerline of the intersecting roadway to a point on the median clear zone limit for the far side roadway of the major roadway.
3. a. The limits of clear sight define a corridor throughout which a clear sight window must be preserved. See WINDOW DETAIL, Sheet 2 Of 2.
   b. Clear sight must be provided between vehicles at intersection stop locations, and vehicles on the major roadway within dimension 'd'.
   c. Clear sight is provided by a sight line originating 3.50' above the pavement at the drivers eye level and ending 4' above the pavement at the vehicle observed.
4. The corridor defined by the limits of clear sight is a restricted planting area. Drivers of vehicles on the intersecting roadway and vehicles on the major roadway must be able to see each other clearly throughout the limits of 'd'. Plants within the restricted areas are limited to selections as follows:

   Ground Covers - Plant selection of low growing vegetation which at maturity does not attain a height greater than 1' below the sight line datum.

   Trees, Palms Or Other Trunked Plants - Plant selection of a mature trunk diameter 4" or less measured at 6" above the ground. Canopy or high borne foliage shall never be lower than 3' above the sight line datum. These selections shall be spaced no closer than 20'.
5. If, in the Engineers judgement landscaping interferes with the line of sight corridor prescribed by these standards the Engineer may rearrange, relocate or eliminate plantings.
6. Plants shall never obscure signs or signals.

DESIGN NOTES

1. The information shown on this index is intended solely for the purpose of clear sight development and maintenance at intersecting highways, roads and streets, and is not intended to be used to establish geometric design, speed control, signing, marking, lighting or signalization, or to establish roadway and roadside safety except as related to clear sight corridors. An analysis of sight distance shall be performed and documented for all intersections.
2. Details are based on the AASHTO 'A Policy On Geometric Design Of Highways And Streets', Chapter IX, Cases III and IV, and Department practices for channelized median openings (left turns from major roadways).
3. For SIGNALIZED INTERSECTIONS: Due to a variety of standard operational characteristics associated with signal controlled intersections, the sight distances based on Case III procedures should be available to the the driver. Unanticipated vehicle conflicts at signalized intersections, such as violation of the signal right turns on red, malfunction of the signal, or use of the flashing red/yellow mode further substantiate the need for incorporation of Case III sight distances. If the proper sight distances can not be attained, other design features such as "no right-on-red" may be necessary. These decisions shall be included in the analysis. The planting restrictions listed under General Notes above shall also apply to signalized intersections.

STATE OF FLORIDA DEPARTMENT OF TRANSPORTATION
ROAD DESIGN

SIGHT DISTANCE AT INTERSECTIONS

	Names	Dates
Designed By	CDP/KHW	10/89
Drawn By	HSD	10/89
Checked By	MC/KHW	10/89
F.H.W.A. Approved: 6/11/91		

Approved By _____
State Roadway Design Engineer

Revision No.	Sheet No.	Index No.
94	1 of 2	546

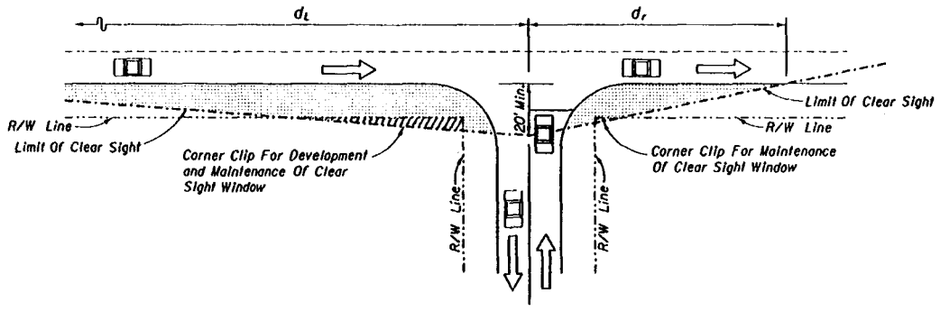

PICTORIAL

ORIGIN OF CLEAR SIGHT LINE
AND PROPERTY CORNER CLIPS

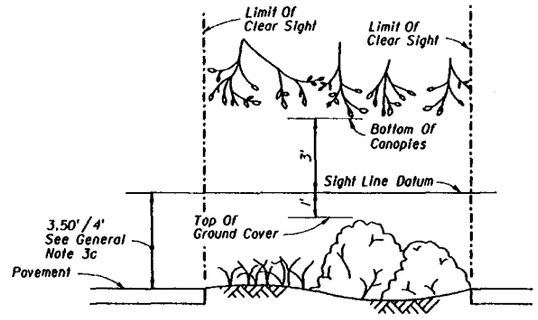

The Intent Of This Standard Is To Provide A Window With Vertical Limits Of Not Less Than 3' Above And 1' Below The Sight Line Datum, And Horizontal Limits Defined By The Limits Of Clear Sight.

PICTORIAL

WINDOW DETAIL

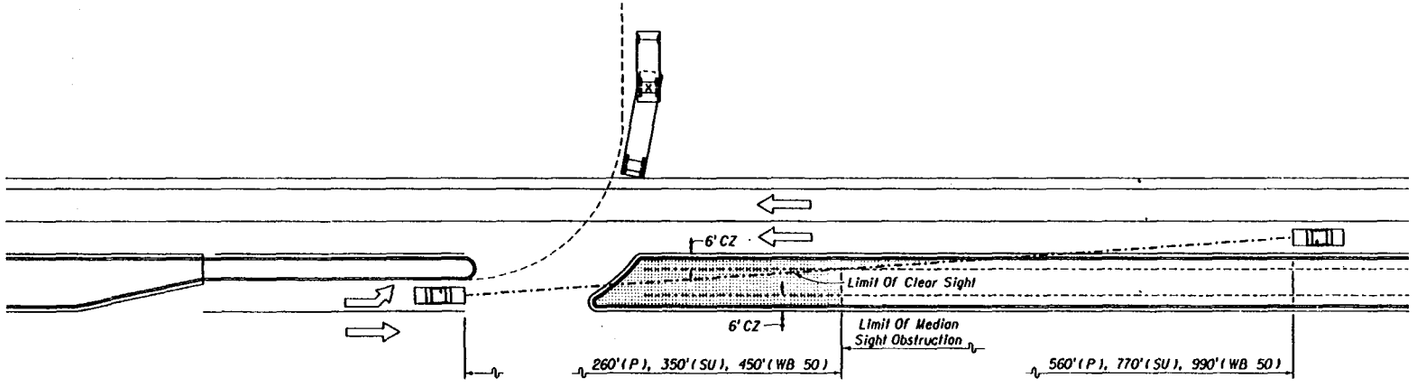

PICTORIAL

CHANNELIZED DIRECTIONAL MEDIAN OPENINGS

LEGEND

Areas Free Of Sight Obstructions

STATE OF FLORIDA DEPARTMENT OF TRANSPORTATION
ROAD DESIGN

SIGHT DISTANCE AT INTERSECTIONS

	Names	Dates
Designed By		93
Drawn By		93
Checked By		93
F.H.W.A. Approved:		

Approved By Freddie Simmons
State Roadway Design Engineer

Revision No.	Sheet No.	Index No.
94	2 of 2	546

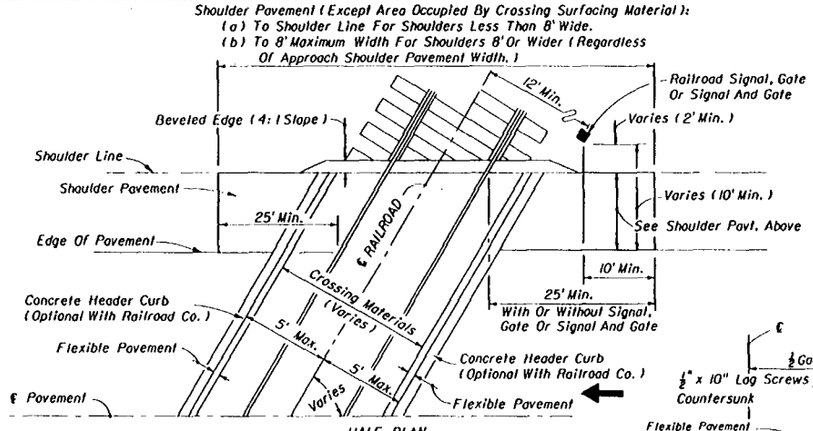

HALF PLAN

RURAL

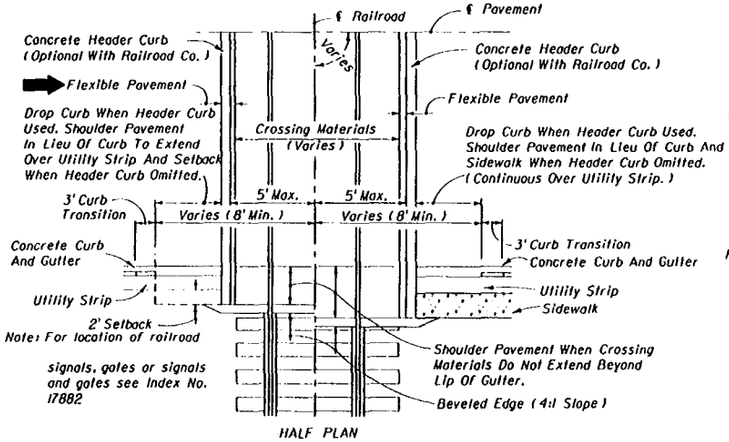

HALF PLAN

MUNICIPAL

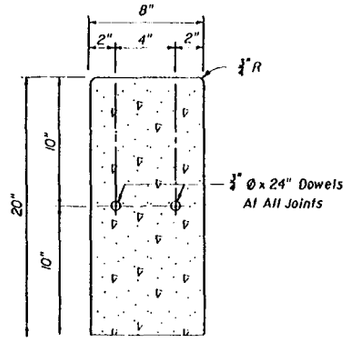

HEADER CURB
(Optional With Railroad Co.)

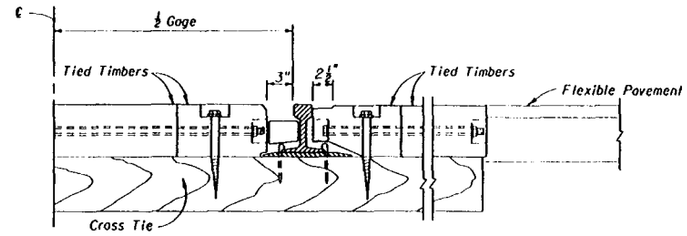

HALF SECTION TYPE D

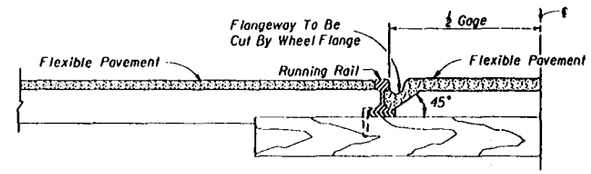

HALF SECTION TYPE E

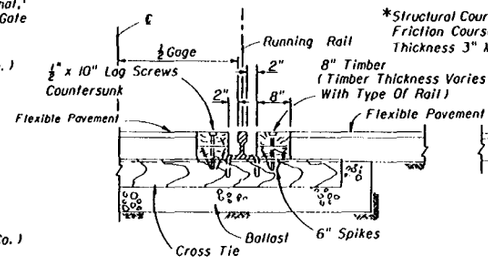

HALF SECTION TYPE G

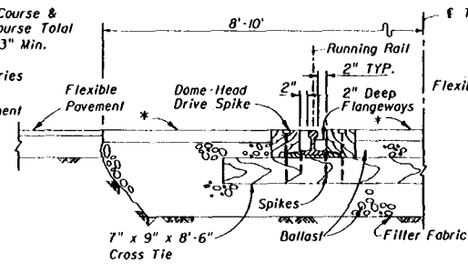

HALF SECTION TYPE G MODIFIED

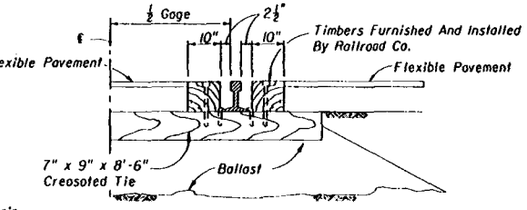

HALF SECTION TYPE H

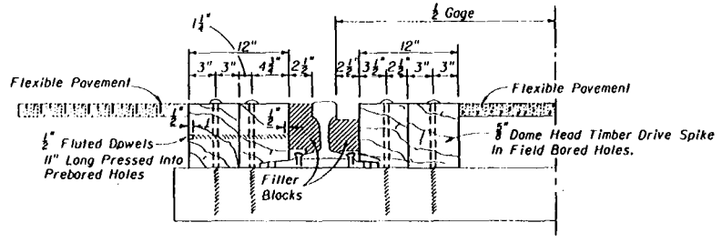

HALF SECTION TYPE L

NOTES

1. The agreement is a contract between the F.D.O.T. and the railroad company.
2. The railroad company may construct header curbs as needed.
3. The Railroad Company will furnish and install all material within 5' of ℄ of tracks, except as specified in the agreement.
4. Gage is standard AREA track gage of 4'-8½" (56½").
5. Unless otherwise requested by the railroad company, the type(s) of crossing(s) used will be as follows:

	TYPE
Apalachicola Northern R.R. Co.	L
Atlanta and St. Andrews Bay Railway Co.	L
Florida East Coast Railway Co.	T-MOD. & G-MOD.
Burlington Northern Railroad	L
CSX Transportation, Inc	L
Norfolk Southern Corporation	
(a) Georgia Southern and Florida Railway Co.	G
(b) Live Oak, Perry and South Georgia Railway Co.	G
(c) St. Johns River Terminal Co.	G
(d) Georgia and Florida Railway Co.	G
(e) Southern Railway System	G

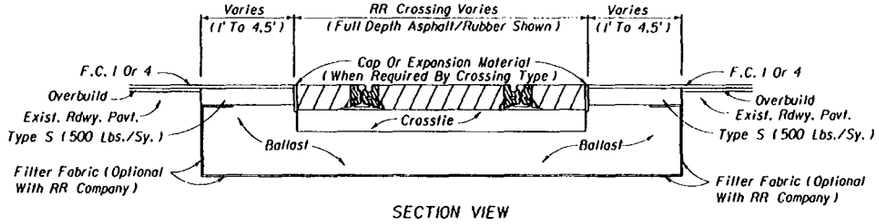

SECTION VIEW

TYPICAL FLEXIBLE PAVEMENT REPLACEMENT AT RR CROSSINGS

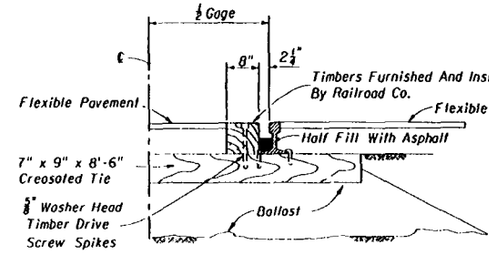

HALF SECTION TYPE S

STATE OF FLORIDA DEPARTMENT OF TRANSPORTATION
ROAD DESIGN

RAILROAD CROSSINGS

	Names	Dates
Designed By		
Drawn By	MW	08/69
Checked By	JRC	08/69
F.H.W.A. Approved:		03/20/75

Approved By Freddie Simmons
State Roadway Design Engineer

Revision No.	Sheet No.	Index No.
94	1 of 5	560

TYPE D, E, G, G-MOD., H, L & S

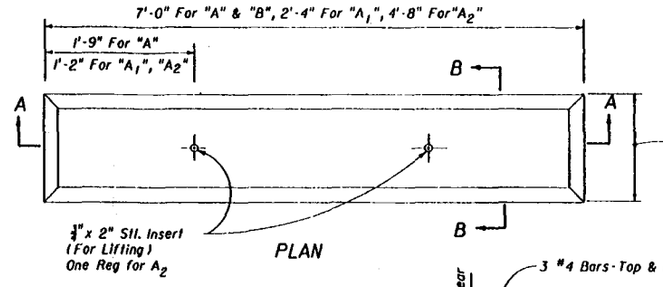

PLAN

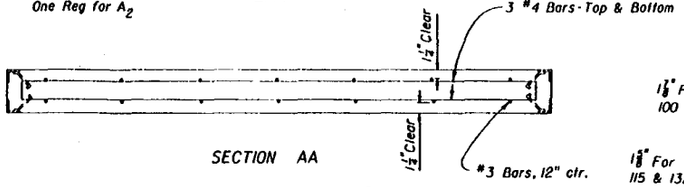

SECTION AA

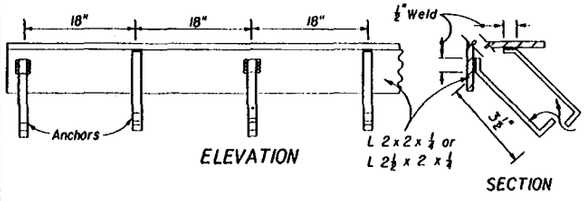

ELEVATION

SECTION

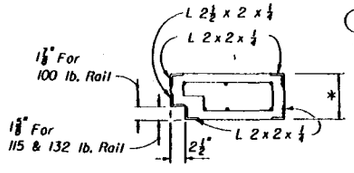

TYPE "A", "A1" & "A2" SLABS

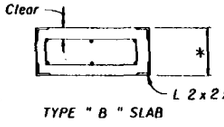

TYPE " B " SLAB

SECTION BB

*SLAB THICKNESS VARIES
5¾" For 100 lb. Rail
6⅜" For 115 lb. Rail
6⅞" For 132 lb. Rail

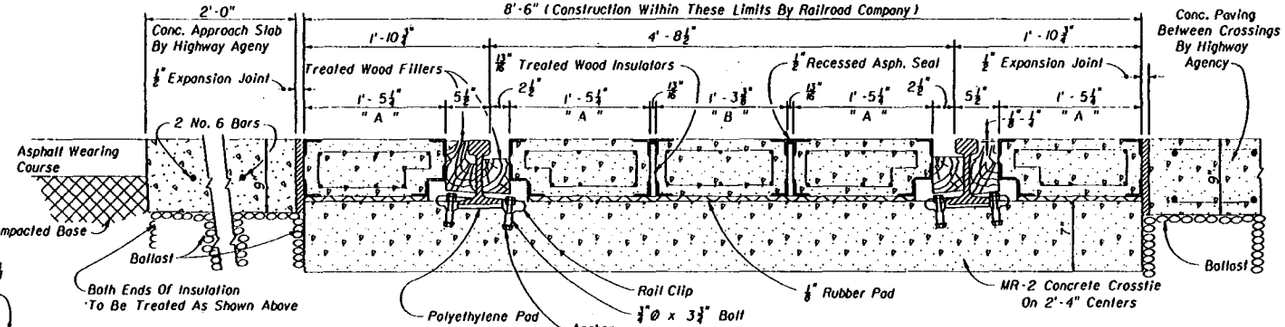

SECTION THRU CROSSING

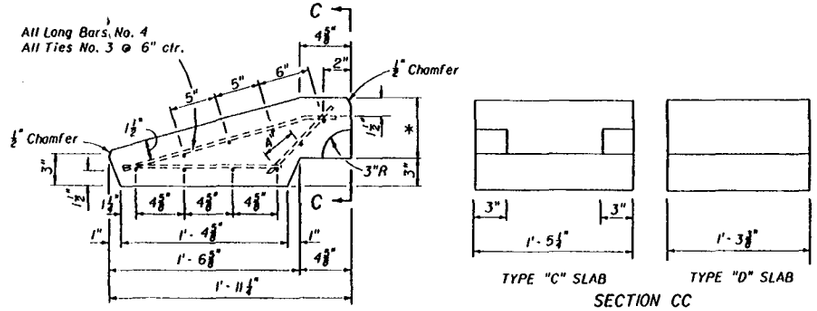

SECTION CC

TYPE " C " & " D " SLAB DETAILS

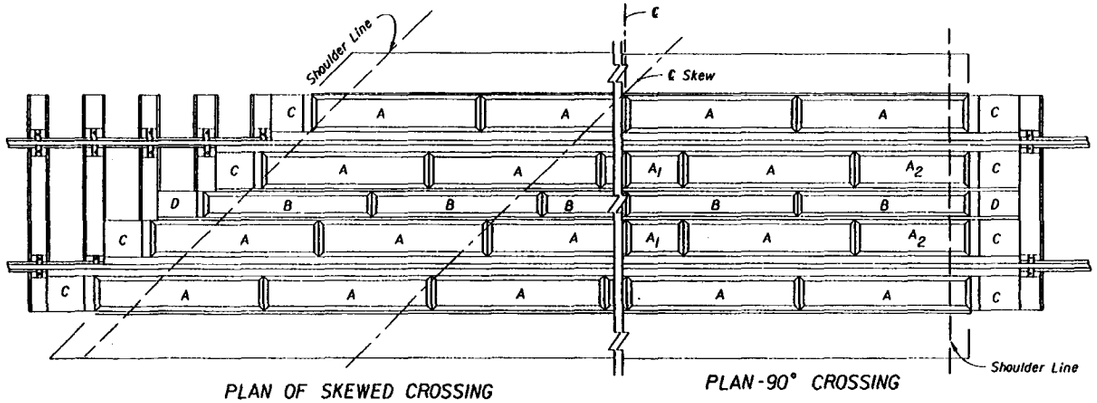

PLAN OF SKEWED CROSSING

PLAN-90° CROSSING

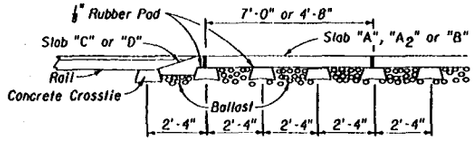

ELEVATION

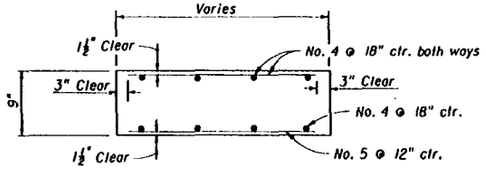

CONCRETE PAVING BETWEEN MULTIPLE CROSSINGS
(Cost Of Reinforcing To Be Included In The Cost Of Concrete, See Note No. 6)

NOTES

1. The furnishing and installing of concrete crossties together with any necessary reballosting, grade adjustment and track alignment shall be done by the Railroad Company without cost to the Contractor or to the Highway Agency.
2. All concrete slabs, rubber pads for tops of ties and wood filler blocks shall be furnished and installed by the Railroad Company.
3. Concrete crossties shall be spaced on 28" centers.
4. Rubber pads shall be installed on concrete ties in field using contact cement.
5. Filler blocks shall be pressure treated pine or clear heart redwood and shall be shaped prior to treatment.
6. Cost of concrete and reinforcing steel necessary for approach slabs and paving between multiple crossings shall be paid for by the Highway Agency under the contract unit price for Cement Concrete Pavement Reinforced, (9"), SY.

STATE OF FLORIDA DEPARTMENT OF TRANSPORTATION
ROAD DESIGN

RAILROAD CROSSINGS

	Names	Dates
Designed By		
Drawn By	HW	08/69
Checked By	JRC	08/69
F.H.W.A. Approved		03/20/75

Approved By Freddie Simmons
State Roadway Design Engineer

Revision No.	Sheet No.	Index No.
83	2 of 5	560

TYPE K

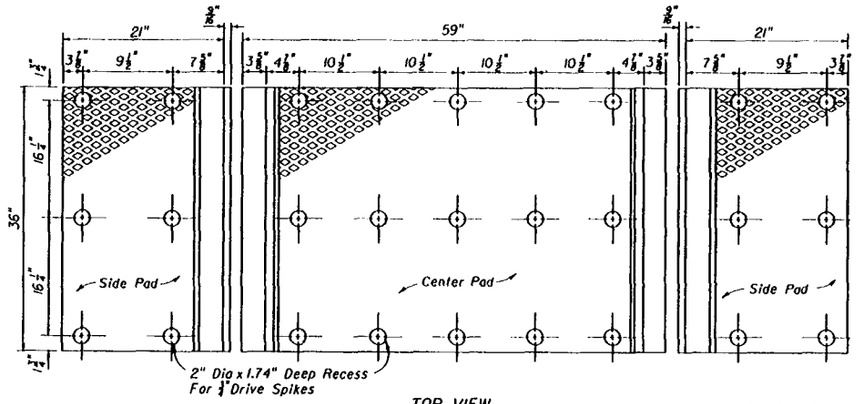

TOP VIEW

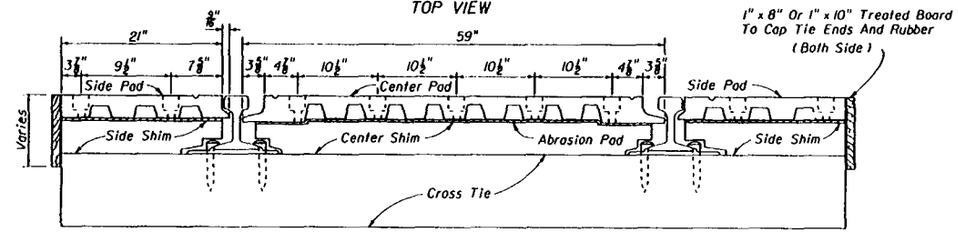

SECTION

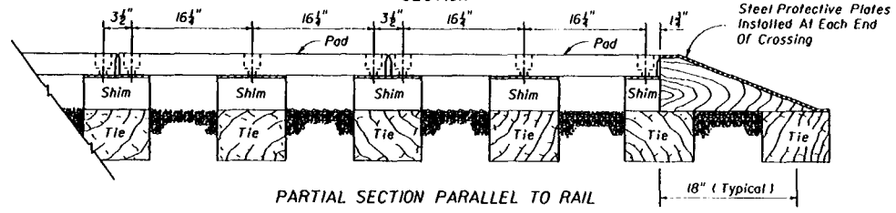

PARTIAL SECTION PARALLEL TO RAIL

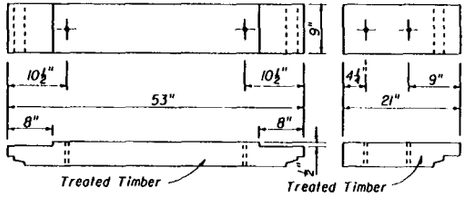

Shim Thickness Varies With Height Of Rail.

CENTER SHIM SIDE SHIM

TYPE R

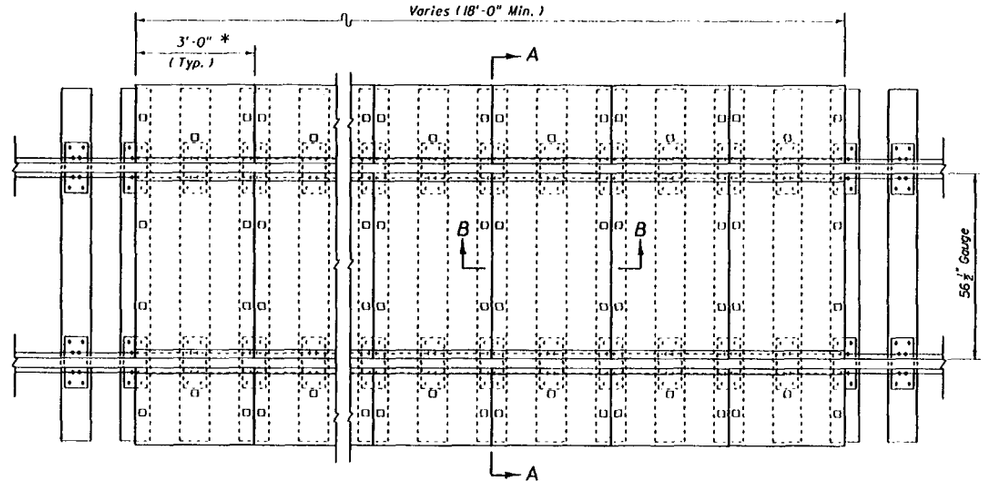

PLAN

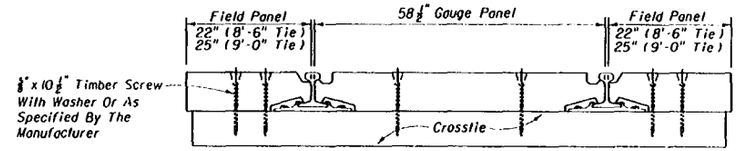

SECTION AA

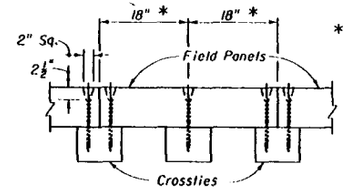

* Or As Specified By The Manufacturer

SECTION BB

HEAVY DUTY - FULL DEPTH RUBBER CROSSING

TYPE R FULL DEPTH

STOP ZONE	
Design Speed	Zone Length Distance From Stop
45 MPH Or Less	250'
50 - 55	350'
60 - 65	500'
70	600'

NOTES

1. The crossings shown on this sheet are NOT to be used for multiple track crossings within zones for an existing or scheduled future vehicular stop. Zone lengths are charted above.
2. Crossings on this sheet may be used for single track crossings within the zones on the chart unless engineering or safety considerations dictate otherwise.
3. Tie spacing is critical, ties shall be spaced in accordance with the manufacturers specifications.
4. Details shown are for straight track installations. Materials are also available for curved track installations.
5. For additional details, materials required and installation procedures refer to the manufacturers specifications.

TYPES R RUBBER & R FULL DEPTH RUBBER

STATE OF FLORIDA DEPARTMENT OF TRANSPORTATION
ROAD DESIGN

RAILROAD CROSSINGS

	Names	Dates
Designed By		
Drawn By	LWF	11/75
Checked By	GSB	11/75
F.H.W.A. Approved:		10/11/78

Approved By Freddie Simmons
State Roadway Design Engineer

Revision No.	Sheet No.	Index No.
94	3 of 5	560

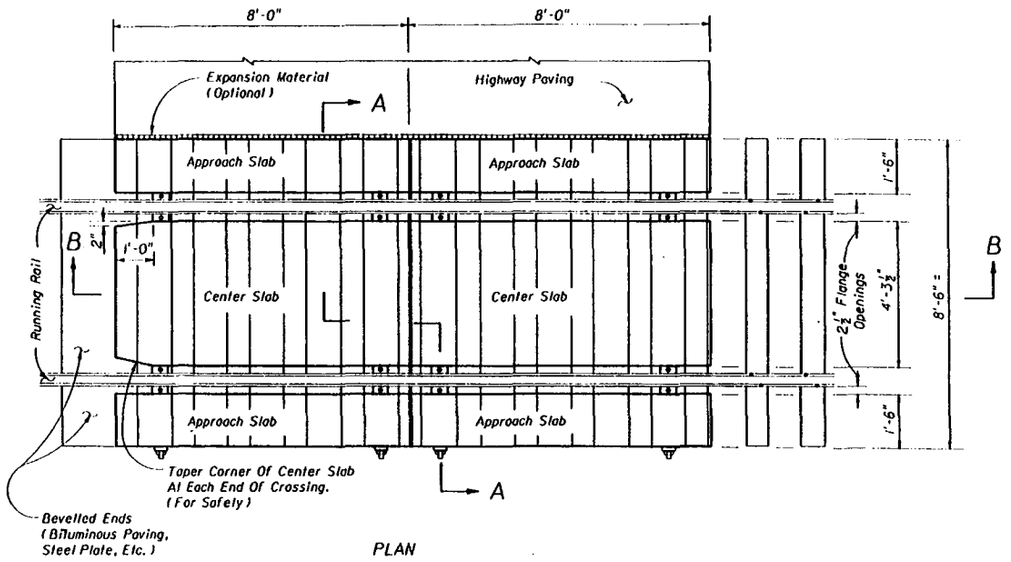

PLAN



SECTION BB

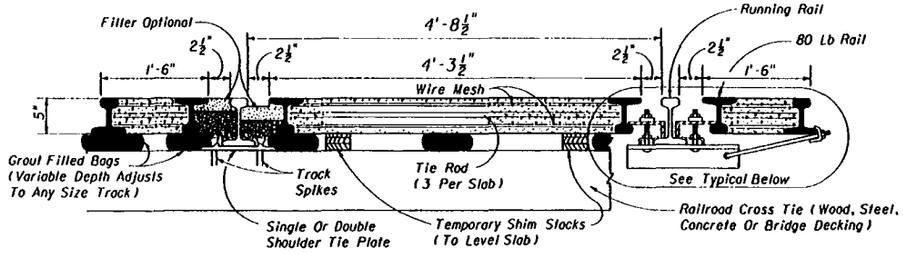

SECTION AA

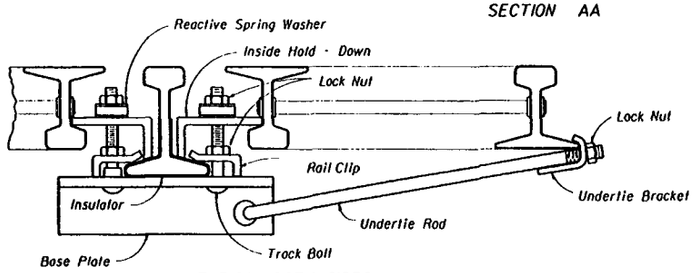

TYPICAL BOTH SIDES

TYPE T

NOTES

1. The reinforced concrete slabs are manufactured in 8'-0" sections, 5" in depth to fit all rail sections 5¼" in height or heavier. Slabs are interchangeable and relocateable.
2. Center slabs are one piece construction allowing for 2½" flange opening, 80 lb. rail is used to encase, armor and reinforce slabs and is held to gage with 3 tie rods per slabs.
3. Slabs are installed by a "flotation" process, supported on non-shrinkable, non-metallic grout positioned on the ties. Slabs can be placed on wood ties, concrete ties, steel ties, bridge decks or any other type of track support. No re-spacing of ties is necessary.
4. Slabs are secured to "running rails" with specially designed hardware. Insulation is to be provided for crossing in signal territory.
5. Curved slabs are fabricated to fit curved track to 22 degrees (262.04' radius). Special slabs are available for diamond crossings, turnouts, multiple tracks, bridge decks and rapid transit systems.
6. For additional details, materials required and installation procedures refer to the manufacturers specifications.
7. All asphalt will be installed in accordance with Index No. 513 and Section 300 of the Standard Specifications.

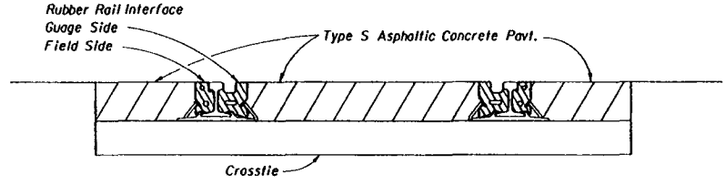

ALTERNATE INTERFACE SECTION VIEW

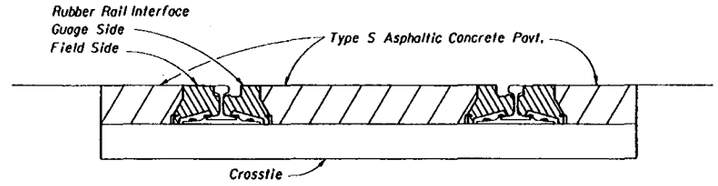

ALTERNATE INTERFACE SECTION VIEW

NOTES

1. Rubber rail interface systems are manufactured to fit various rails from 115# to 136#.
2. The Railroad Company will furnish and install all crossing material except as specified in the agreement.
3. For additional details, methods required and installation procedures refer to the manufacturers specifications.

FULL DEPTH ASPHALT/RUBBER CROSSING
TYPE RS

TYPES T & RS

STATE OF FLORIDA DEPARTMENT OF TRANSPORTATION
ROAD DESIGN

RAILROAD CROSSINGS

	Names	Dates
Designed By		
Drawn By	LWF	02/77
Checked By	GSB	02/77
F.H.W.A. Approved:		05/03/77

Approved By Freddie Simmons
State Roadway Design Engineer

Revision No.	Sheet No.	Index No.
94	4 of 5	560

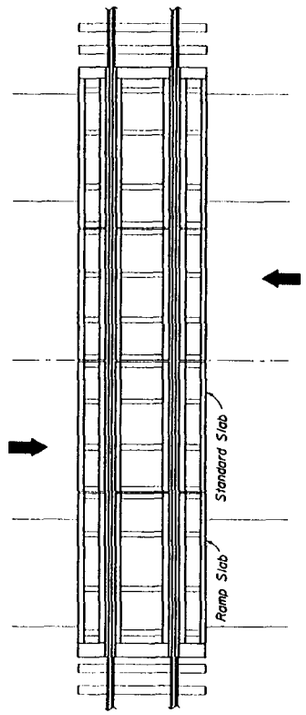

PLAN VIEW

TYPICAL 44' CROSSING

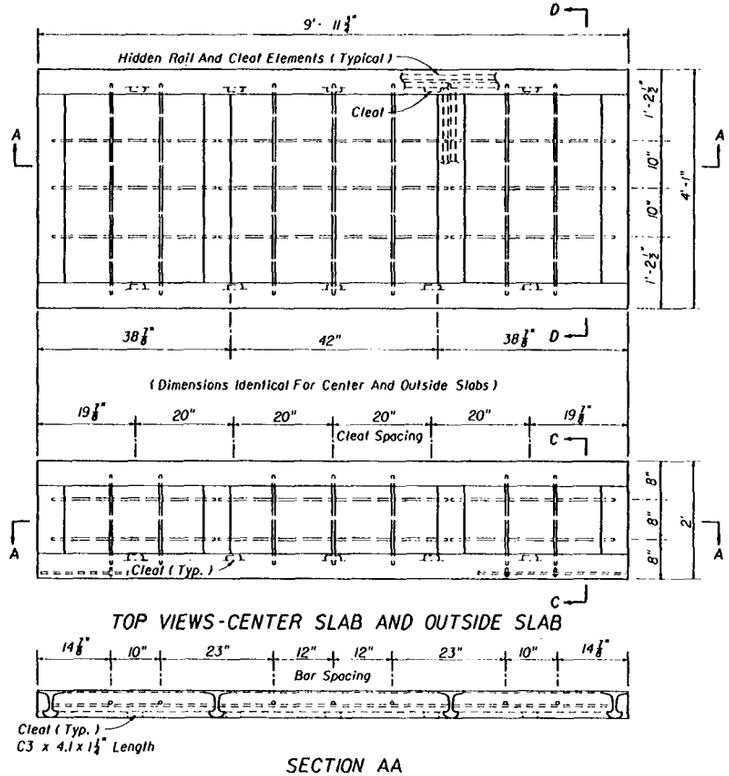

TOP VIEWS-CENTER SLAB AND OUTSIDE SLAB

SECTION AA

STANDARD SLABS (PRECAST CONCRETE)

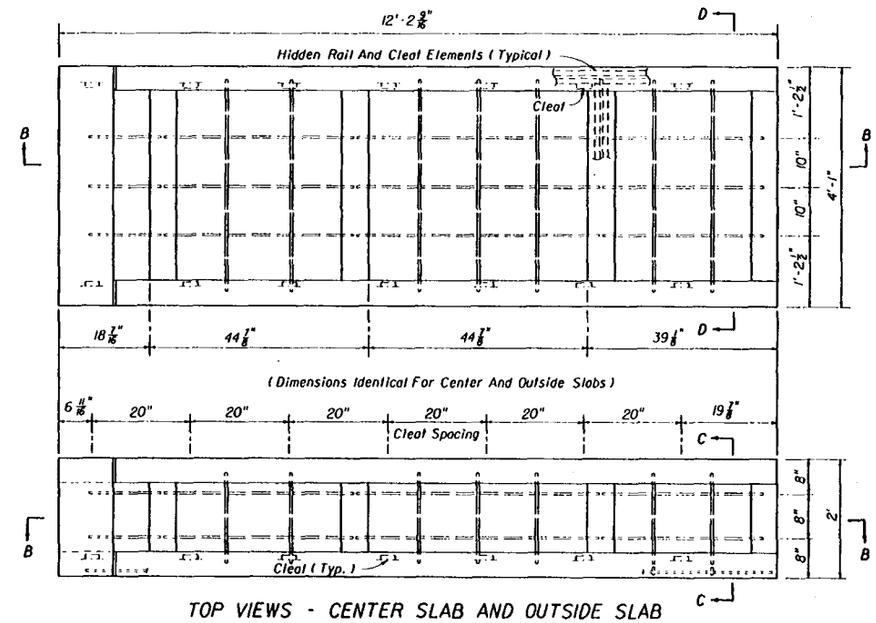

TOP VIEWS - CENTER SLAB AND OUTSIDE SLAB

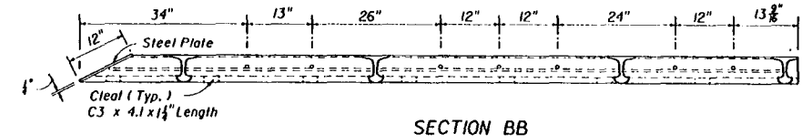

SECTION BB

RAMP SLABS (PRECAST CONCRETE)

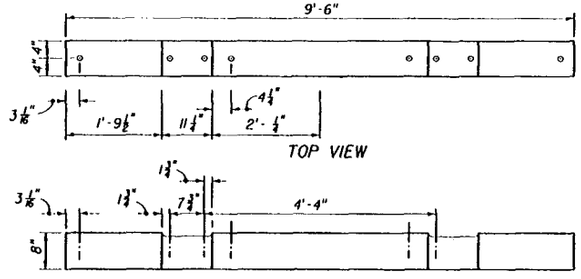

PRECAST CONCRETE (CROSSING TIE)

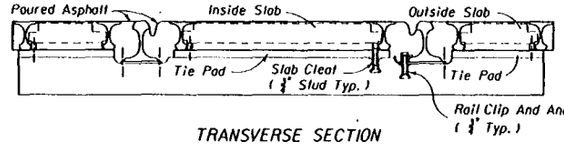

TRANSVERSE SECTION

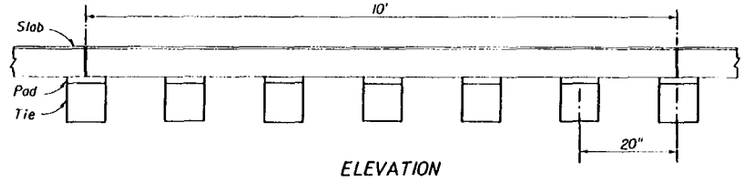

ELEVATION

TIE SPACING

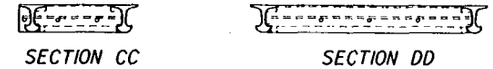

SECTION CC SECTION DD

STANDARD AND RAMP SLAB SECTIONS

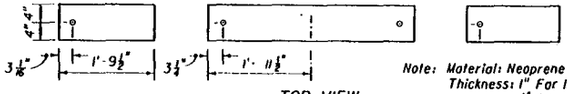

TOP VIEW

TIE PAD

Note: Material: Neoprene
Thickness: 1" For 132# Rail
¼" For 115# Rail

NOTES

1. Slab frames are welded 90 lb. rails.
2. Slab reinforcement all No. 4 bars.

STATE OF FLORIDA DEPARTMENT OF TRANSPORTATION
ROAD DESIGN

RAILROAD CROSSING

	Names	Dates
Designed By		
Drawn By	RWR	9/82
Checked By	WG, JBW	9/82
F.H.W.A. Approved:		9/23/82

Approved By Freddie Simmons
State Roadway Design Engineer

Revision No.	Sheet No.	Index No.
94	5 of 5	560

TYPE T MODIFIED

CONTENTS

Preface
Manual On Uniform Traffic Control Devices
Abbreviations
Symbols
Definitions
Regulatory Speeds In Work Zones
Adjoining And/Or Overlapping Work Zone Signing
Intersecting Road Signing And Signals
Channelizing And Lighting Devices
Dropoffs In Work Zones
Warning Lights
Sight Distance To Delineation Devices
Channelizing And Lighting Device Consistency
Pedestrians And Bicyclist
Nighttime Flagging
Reflectorized Raised Pavement Markers
Sign Covering And Intermittent Work Stoppage Signing
Removing Pavement Markings
Superelevation
Lane Widths
Length Of Construction Sign
End Construction Sign
Detours
Variable Message Signs (VMS)
Above Ground Hazards
Clear Zone Widths
Roadside Barriers
Chart-Dropoffs
Identifications-Channelizing And Lighting Devices
Barrier Wall Transitions
Signing-Commonly Used Signs

PREFACE

All projects and works on highways, roads and streets shall have a traffic control plan. All work shall be executed under the established plan and Department approved procedures. This index contains information specific to the Federal and State guidelines and standards for the preparation of traffic control plans and for the execution of traffic control in work zones, for construction and maintenance operations and utility work on highways, roads and streets.

Index 600 provides Department policy and standards. Changes are only to be made thru Department approved procedures. Indexes 602 thru 651 provide typical application for various situations. Modification can be made to these indexes as long as the changes comply with the M.U.T.C.D. and Department standards.

The sign spacings shown on the indexes are typical (recommended) distances. These distances may be increased or decreased based on field conditions, in order to avoid conflicts or to improve site specific traffic controls.

MANUAL ON UNIFORM TRAFFIC CONTROL DEVICES

The Florida Department of Transportation has adopted the "Manual On Uniform Traffic Control Devices For Streets And Highways" (MUTCD) and subsequent revisions and addendums, as published by the U.S. Department of Transportation, Federal Highway Administration, for mandatory use on the State Maintained Highway System whenever there exists the need for construction, maintenance operations or utility work.

ABBREVIATIONS

Abbreviations assigned to the 600 series Roadway Design Standards and applicable to traffic control plans, unless otherwise identified in the plans, are as follows:

TCP	Traffic control plan(s)
MUTCD	'Manual On Uniform Traffic Control Devices For Streets And Highways'
TCZ	Traffic control through work zones
L	Taper length, buffer length or taper length plus buffer space
W	Width of taper transition in feet, i.e., lateral offset
S	Posted speed or off-peak 85 percentile speed
RPM	Raised reflectorized pavement marker
TMA	Truck mounted attenuator
COMM	Traffic Control Standards Committee

SYMBOLS

The symbols shown are found in the Traffic Control Zone Cell Library (TCZ.cell) on the CADD system.

Symbols assigned to the 600 series Roadway Design Standards and applicable to traffic control plans, unless otherwise identified in the plans, are as follows:

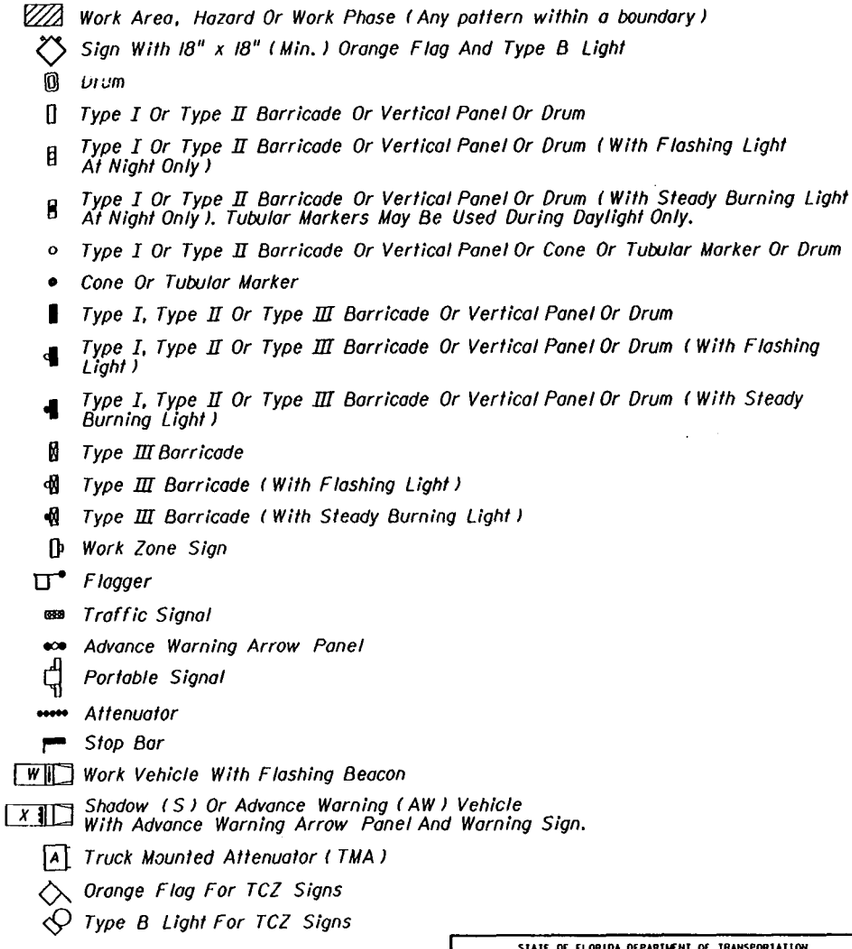

Work Area, Hazard Or Work Phase (Any pattern within a boundary)
Sign With 18" x 18" (Min.) Orange Flag And Type B Light
Drum
Type I Or Type II Barricade Or Vertical Panel Or Drum
Type I Or Type II Barricade Or Vertical Panel Or Drum (With Flashing Light At Night Only)
Type I Or Type II Barricade Or Vertical Panel Or Drum (With Steady Burning Light At Night Only). Tubular Markers May Be Used During Daylight Only.
Type I Or Type II Barricade Or Vertical Panel Or Cone Or Tubular Marker Or Drum
Cone Or Tubular Marker
Type I, Type II Or Type III Barricade Or Vertical Panel Or Drum
Type I, Type II Or Type III Barricade Or Vertical Panel Or Drum (With Flashing Light)
Type I, Type II Or Type III Barricade Or Vertical Panel Or Drum (With Steady Burning Light)
Type III Barricade
Type III Barricade (With Flashing Light)
Type III Barricade (With Steady Burning Light)
Work Zone Sign
Flagger
Traffic Signal
Advance Warning Arrow Panel
Portable Signal
Attenuator
Stop Bar
Work Vehicle With Flashing Beacon
Shadow (S) Or Advance Warning (AW) Vehicle With Advance Warning Arrow Panel And Warning Sign.
Truck Mounted Attenuator (TMA)
Orange Flag For TCZ Signs
Type B Light For TCZ Signs

STATE OF FLORIDA DEPARTMENT OF TRANSPORTATION
ROAD DESIGN

TRAFFIC CONTROL THROUGH WORK ZONES

GENERAL INFORMATION FOR TRAFFIC CONTROL THROUGH WORK ZONES

	Names	Dates
Designed By	COMM	12/87
Drawn By	HSD/JBW	12/87
Checked By	JWG/KHW	12/87
F.H.W.A. Approved:		

Approved By: Clark A. Scott
State Traffic Plans Engineer

Revision No.	Sheet No.	Index No.
94	1 of 10	600

DEFINITIONS

Regulatory Speed (In Work Zones)

The maximum permitted travel speed posted for the work zone as indicated by the regulatory speed limit signs. The work zone speed must be shown or noted in the plans. This speed should be used as a design speed to determine runout lengths, departure rates, flare rates, lengths of need, clear widths, taper lengths, crash cushion requirements, marker spacings, superelevation and other similar features.

Advisory Speed

The maximum recommended travel speed through a curve or a hazardous area.

Travel Way

The intended path for vehicular traffic through or around obstructions in construction, maintenance, utility and other work zones on highways, roads and streets. For traffic control through work zones, travel way includes auxiliary lanes, shoulders and any other permanent or temporary surface intended for the path of vehicular traffic.

Detour

A temporary travel way that branches from the direct or regular route of travel, to bypass a section of the route which is closed or blocked by construction, major maintenance, roadway damage or a traffic emergency and that rejoins the direct or regular route beyond that section.

Above Ground Hazard

An above ground hazard is any object, material or equipment other than traffic control devices that encroaches upon the travelway or that is located within the clear zone which does not meet the Departments safety criteria, i.e., anything that is greater than 4" in height and is firm and unyielding or doesn't meet breakaway requirements.

REGULATORY SPEEDS IN WORK ZONES

Traffic Control Plans (TCPs) for all projects must include specific regulatory speeds for each phase of work. This can either be the posted speed or a reduced speed. The speed shall be noted in the TCPs; this includes indicating the existing speed if no reduction is to be made. Regulatory speeds are to be uniformly established through each phase.

In general, the regulatory speed should be established to route vehicles safely through the workzone as close to normal highway speed as possible. On limited access facilities the posted speed for Work Zones should not be reduced below 55 MPH.
On other facilities the regulatory speed should not be reduced more than 20 MPH below the posted speed and never below the minimum statutory speed for the class of facility. This reduction is to be done in 10 MPH per 500' increments.

Temporary regulatory speed signs shall be removed as soon as the conditions requiring the reduced speed no longer exist. Once the work zone regulatory speeds are removed, the regulatory speed existing prior to construction will automatically go back into effect unless new speed limit signing is provided for in the plans.

On projects with interspaced work activities speed reductions should be located in proximity to those activities which merit a reduced speed, and not "blanketed" for the entire project. At the departure of such activities, the normal highway speed should be posted to give the motorist notice that normal speed can be resumed.

If the existing regulatory speed is to be used, consideration should be given to supplementing the existing signs when the construction work zone is between existing regulatory speed signs. For projects where the reduced speed conditions exist for greater than one mile in rural areas (non-interstate) and on rural or urban interstate, additional regulatory speed signs are to be placed at no more than one mile intervals. Engineering judgement should be used in placement of the additional signs. Locating these signs beyond ramp entrances and beyond major intersections are examples of proper placement. For urban situations (non-interstate), additional speed signs are to be placed at a maximum of 1000' apart.

When field conditions warrant speed reductions greater than those shown in the TCP the contractor may submit to the project engineer for approval by the Department, a signed and sealed study to justify the need for further reducing the posted speed, or, the engineer may request the District Traffic Operations Engineer (DTOE) to investigate the need. It will not be necessary for the DTOE to issue regulations for regulatory speeds in work zones due to the revised provisions of F.S. 316.0745(2) (b). Advisory Speed plates will be used at the option of the field engineer for temporary use while processing a request to change the regulatory speed specified in the plans when deemed necessary. Advisory speed plates cannot be used alone but must be placed below the construction warning sign for which the advisory speed is required.

For additional information refer to the FDOT Roadway Plans Preparation Manual, Volume 1, Chapter 10.

ADJOINING AND/OR OVERLAPPING WORK ZONE SIGNING

Adjoining work zones may not have sufficient spacing for standard placement of signs and other traffic control devices in their advance warning areas or in some cases other areas within their traffic control zones. Where such restraints or conflicts occur or are likely to occur, one of the following methods will be employed to avoid conflicts and prevent conditions that could lead to misunderstanding on the part of the traveling public as to the intended travel way by the traffic control procedure applied:

(a) For scheduled projects the engineer in responsible charge of project design will resolve anticipated work zone conflicts during the development of the project traffic control plan. This may entail revision of plans on preceding projects and coordination of plans on concurrent projects.

(b) Unanticipated conflicts arising between adjoining in progress highway construction projects will be resolved by the Resident Engineer for projects under his residency, and, by the District Construction Engineer for in progress projects under adjoining residencies.

(c) The District Maintenance Engineer will resolve anticipated and occuring conflicts under the following work zone conditions.

1. Within scheduled maintenance operations.
2. Between scheduled maintenance operations, maintenance construction, permitted works and/or in progress highway construction projects.

(d) The Unit Maintenance Engineer will resolve conflicts that occur within routine maintenance works; between routine maintenance work, unscheduled work and/or permitted work; and, between unit controlled maintenance works and highway construction projects.

INTERSECTING ROAD SIGNING AND SIGNALS

Signing for the control of traffic entering and leaving work zones by way of intersecting highways, roads and streets shall be adequate to make drivers aware of work zone conditions. Under no condition will intersecting leg signing be less than a ROAD CONSTRUCTION AHEAD sign, including light and flag, for approaching vehicles and a END CONSTRUCTION sign for departure vehicles.

Existing traffic signal operations that require modification in order to carry out work zone traffic control shall be included in the TCP and be approved by the District Traffic Operations Engineer. The need for temporary signal loops or other methods of actuation shall be determined by the District Traffic Operations Engineer and the designer and included in the TCP.

STATE OF FLORIDA DEPARTMENT OF TRANSPORTATION
ROAD DESIGN

TRAFFIC CONTROL THROUGH WORK ZONES

GENERAL INFORMATION FOR TRAFFIC CONTROL THROUGH WORK ZONES

	Names	Dates
Designed By	CDWW	12/87
Drawn By	HSD/JBW	12/87
Checked By	JVG/RNW	12/87
F.H.W.A. Approved:		

Approved By: Charles A. Scott
State Traffic Plans Engineer

Revision No.	Sheet No.	Index No.
94	2 of 10	600

CHANNELIZING AND LIGHTING DEVICES

Channelizing and lighting devices for work zone traffic control shall be as prescribed in Part VI of the MUTCD, subject to supplemental revision and certification by the office of the State Traffic Engineer.

Primary work zone traffic control devices are shown on Sheet 7 of 10 for the purpose of ready identification. Specifications for the devices are under the authority of the State Traffic Engineer.

DROPOFFS IN WORK ZONES

Acceptable warning and barrier devices for traffic control at dropoffs in work areas are detailed on Sheet 5 of 10. Unless otherwise specified in the plans, the contractor may use any of the barrier types (including optional shoulder treatment) shown in note 3 on sheet 5 of 10. Optional shoulder treatment shall be included under Lump Sum MOT.

WARNING LIGHTS

Warning lights shall be in accordance with Section 6E-5 of the MUTCD except for the application limitations and methods of payment stipulated below:

Flashing

Type A Low Intensity Flashing Warning Lights are to be mounted on barricades, drums, vertical panels or advance warning signs (except as noted below) and are intended to continually warn drivers that they are approaching or proceeding in a hazardous area. Flashing lights shall not be used to delineate the intended path of travel, and not placed with spacings that will form a continuous line to the drivers eye. The Type A light will be used to mark obstructions that are located adjacent to or in the intended travel way. Type A lights shall not be used in conjunction with the first advance warning sign nor the second such sign when used.

Type B High Intensity Flashing Warning Lights shall be mounted on the first advanced warning sign and on the first and second advanced warning sign where two or more signs are used; this applies to all approaches to any work zone.

Steady-Burn

Type C Steady-Burn Lights are to be mounted on barricades, drums, concrete barrier walls or vertical panels and used in combination with those devices to delineate the travel way on lane closures, lane changes, detour curves and other similar conditions. Steady-burn lights are intended to be placed in a line to delineate the traveled way through and around obstructions in the transition, buffer, work and termination areas of the traffic control zone. Their intended purpose is not for warning drivers that they are approaching or proceeding through a hazardous area.

SIGHT DISTANCE TO DELINEATION DEVICES

Transition tapers should be obvious to drivers. If restricted sight distance is a problem (e.g., a sharp vertical or horizontal curve), the taper should begin well in advance of the view obstruction. The beginning of tapers should not be hidden behind curves.

CHANNELIZING AND LIGHTING DEVICE CONSISTENCY

Barricades, vertical panels, cones, tubular markers and drums shall not be intermixed within either the lateral transition or within the tangent alignment.

PEDESTRIANS AND BICYCLISTS

When an existing pedestrian way or bicycle way is located within a traffic control work zone, accommodation must be maintained.

NIGHTTIME FLAGGING

Nighttime flagging will require proper illumination of the flagger. A well lighted flagging station and/or a reflectorized paddle or reflectorized flag, plus a flashlight, lantern or other lighted signal that will display a red warning light shall be used.

Lights, reflectorized paddles, reflectorized flags and reflectorized vests, shirts or jackets approved by the Department must be used to flag traffic at night. The STOP face of paddles shall be reflectorized red with white reflectorized letters and border, and the SLOW face shall be reflectorized orange with black letters and border. Flagger vests, shirts or jackets shall be reflectorized orange.

The flagger must be clearly visible to approaching traffic for a distance sufficient to permit proper response by the motorist to the flagging instructions, and to permit traffic to reduce speed or to stop as required before entering the work site. Flaggers shall be positioned to maintain maximum color contrast between the flaggers reflective garments and equipment and the work area background.

REFLECTORIZED RAISED PAVEMENT MARKERS

Class A or B RPM's shall be installed on the lanelines of transitions, crossovers and detours and on the edgelines of gore areas within the work zone. The spacing shall be 40 feet on tangent sections and 20 feet on transitions, curves and crossovers. It shall be the contractors responsibility to replace damaged or missing RPM's. This cost shall be included in the cost of the temporary RPM's substituted.

SIGN COVERING AND INTERMITTENT WORK STOPPAGE SIGNING

Existing signs that conflict with temporary work zone signing shall be removed or covered as approved by the engineer. Traffic control signs that require covers when no work is being performed in a work area shall be fully covered with a durable opaque sheet material. Plastic film and woven fabrics including burlap will not be permitted. Covering of only the legend or symbol will not be permitted. Reflective coverings will not be permitted. Hinged signs designed to cover when folded and sign blanks will be permitted.

Covers, blanks, hinged panels and intermittent work stoppage shields and plaques are incidental to work operation signs and are not to be paid for separately.

REMOVING PAVEMENT MARKINGS

Existing pavement markings that conflict with temporary work zone delineation shall be removed by any method approved by the Engineer, where operations exceed one daylight period; however, painting over existing pavement markings will not be permitted. Full pavement width overlays of either asphalt concrete Type III, or FC-3 is a positive means to achieve obliteration.

SUPERELEVATION

Horizontal curves constructed in conjunction with work zone traffic control should have the required superelevation applied to the design radii . Under conditions where normal cross slope controls curvature, the minimum radii that can be applied are listed in the table below.

MINIMUM RADII FOR NORMAL CROSS SLOPES	
DETOUR DESIGN SPEED	MINIMUM RADIUS R
MPH	FEET
65	3130
60	2400
55	1840
50	1390
45	1080
40	820
35	610
30	430
Superelevate When Smaller Radii Used	

LANE WIDTHS

Lane widths of through roadways should be maintained through work zone travel ways wherever practical. The minimum widths for work zone travel lanes shall be as follows: 11' for Interstate with at least one 12' lane provided each direction, unless formally excepted by the Federal Highway Administration; 11' for other freeways; and 10' for all other facilities.

LENGTH OF CONSTRUCTION SIGN

The length of construction sign (G20-1) bearing the legend ROAD CONSTRUCTION NEXT___ MILES is required for all projects of more than 2 miles in length. The sign shall be located at begin construction points.

STATE OF FLORIDA DEPARTMENT OF TRANSPORTATION
ROAD DESIGN

TRAFFIC CONTROL THROUGH WORK ZONES

GENERAL INFORMATION FOR
TRAFFIC CONTROL THROUGH WORK ZONES

	Names	Dates
Designed By	CDWH	12/87
Drawn By	HSD/JBW	12/87
Checked By	AVG/KNW	12/87
F.H.W.A. Approved:		

Approved By: [signature]
State Traffic Plans Engineer

Revision No.	Sheet No.	Index No.
94	3 of 10	600

END CONSTRUCTION SIGNS

The END CONSTRUCTION sign (G20-2) should be erected approximately 500 feet beyond the end of a construction or maintenance project, unless other distance called for in the plans. Where other Construction or Maintenance Operations occur within one(1) mile, this sign should be omitted and signing coordinated in accordance with Index 600, ADJOINING AND/OR OVERLAPPING WORK ZONE SIGNING.

DETOURS

Detours can be located either within the direct or regular route boundary or over highways, roads or streets outside the direct or regular route boundary. Engineering judgement should be used to determine when detour signing is required for minor shift to the direct or regular route.

VARIABLE MESSAGE SIGNS (VMS)

The VMS can be used to:

(1) Supplement standard signing in construction/maintenance work zones.
(2) Reinforce static advance warning messages.
(3) Provide motorists with updated guidance information.

The message should be visible and legible at a minimum distance of 900 feet. All messages should be cycled so that two message cycles are displayed to a driver while approaching the sign from 900 feet at 55 mph.

VMS should be placed approx. 500 to 800 ft. in advance of the work zone conflicts or 1½ to 2 miles in advance of complex traffic control schemes which require new and/or unusual traffic maneuvers

If VMS are to be used at night, the intensity of the flashers shall be reduced during darkness when lower intensities are desirable.

For additional information refer to the FDOT Roadway Plans Preparation Manual, Volume 1, Chapter 10.

ROADSIDE BARRIERS

When connecting temporary concrete barrier wall to guardrail the connection shall be made in accordance with Index No. 410.

ABOVE GROUND HAZARD

Above ground hazards (see definitions) are to be considered work areas during working hours and treated with appropriate work zone traffic control procedures. During non-working hours, all objects, materials and equipment that constitute an above ground hazard must be stored/placed outside the travelway and clear zone or be shielded by a barrier or crash cushion.

For above ground hazards within a work zone the clear zone required should be based on the regulatory speed posted during construction.

CONSTRUCTION SIGN SUPPORTS

All post mounted construction signs shall be installed on either round aluminum or steel channel post as specified in the table below.

SUPPORTS FOR MAINTENANCE OF TRAFFIC SIGNS					
SIGN SIZE	SIGN BRACKET	ROUND ALUM.	DEPTH IN GROUND	STEEL CHANNEL	DEPTH IN GROUND
24"X36"	2-I	2.0"XI/8"	2'-0"	2.5# F/M*	3'-0"
48"X48" DIAMOND	2-I & I-II	3.5"X3/16"	3'-4"	**	3'-0"
60"X48"	3-I	3.5"X3/16"	3'-4"	**	3'-0"
24"X30"	2-I	2.0"XI/8"	2'-0"	2.5# F/M*	3'-0"
48"X48"	2-II	3.0"XI/8"	2'-6"	**	3'-0"
60"X24"	3-I	3.0"XI/8"	2'-6"	3.0# F/M*	3'-0"
60"X36"	3-I	3.5"X3/16"	3'-4"	4.0# F/M*	3'-0"

* F/M Indicates Type F or Type M

** Requires two 3.0# steel channel (F/M) at 2'-6" center to center.
All sign brackets shall be Type I. The total number of brackets shall be per post as tabulated, except the "Diamond" sign which shall use two Type I brackets per post.

The 4.0# steel channel shall be installed with approved breakaway bases.

Refer to Design Standard 11860, Sheet 2 of 2 for sign bracket details, and 11865, Sheet 1 of 1 for steel channel details and approved breakaway bases.

CLEAR ZONE WIDTHS

The term 'clear zone' describes the unobstructed relatively flat area, impacted by construction, extending outward from the edge of the travel way. The table below gives clear zone widths in work zones for medians and roadside conditions other than for roadside canals; where roadside canals are present, clear zone widths are to conform with the distances to canals described in Vol. 1, Ch. 4, Sec. 4.2 and Exhibits 1-4-C and 1-4-D of the Plans Preparation Manual.

CLEAR ZONE WIDTHS FOR WORK ZONES	
WORK ZONE SPEED (MPH)	WIDTHS (FEET)
60-70	30
55	24
45-50	18
30-40	14
ALL SPEEDS CURB & GUTTER	4' BEHIND FACE OF CURB

STATE OF FLORIDA DEPARTMENT OF TRANSPORTATION
ROAD DESIGN

TRAFFIC CONTROL THROUGH WORK ZONES

GENERAL INFORMATION FOR
TRAFFIC CONTROL THROUGH WORK ZONES

	Name	Date
Designed By	COWM	12/87
Drawn By	HSD/JBW	12/87
Checked By	JVG/KNW	12/87
F.H.W.A. Approved:		

Approved By: Clark A Scott

Revision No.	Sheet No.	Index No.
94	4 of 10	600

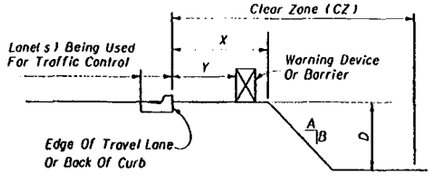

CONDITION I

SHOULDER DROPOFF

1. This condition to be used when excavating adjacent to lane(s) being used for traffic control.
2. Distance X is to be the maximum practical under project conditions.
3. Distance Y should be maximum practical for project conditions. Two(2) feet is desirable.
4. Warning devices or barriers are not to encroach on lane width(s) designated for traffic control.
5. For specific requirements use Chart A or B below, as applicable.

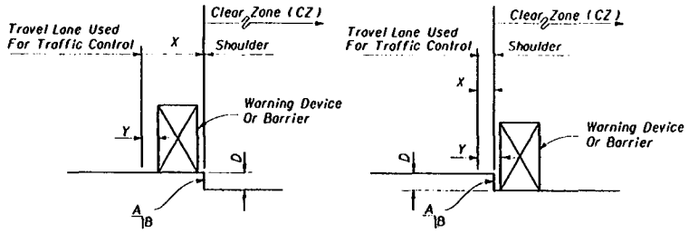

CONDITION II

DROPOFF BETWEEN TRAVEL LANE AND SHOULDER

1. This condition is to be used when resurfacing or milling travel lanes and/or adjacent shoulders.
2. Warning device or barrier must not encroach on lane width(s) designated as minimum for traffic control.
3. X and Y should be maximum practical for project conditions. May be zero.
4. For specific requirements use Chart A below.

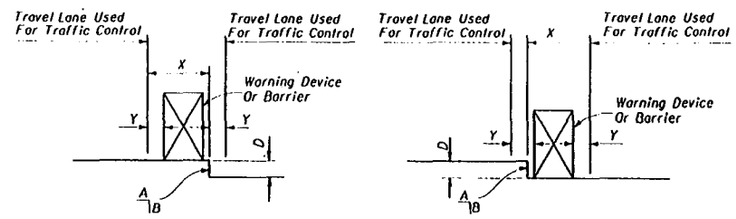

CONDITION III

DROPOFF BETWEEN TRAVEL LANES

1. This condition is to be used for resurfacing or milling travel lanes.
2. Warning device or barrier must not encroach on lane width(s) designated as minimum for traffic control.
3. X and Y should be maximum practical for project conditions. May be zero.
4. Sign W8-9A with UNEVEN PAVEMENT plaque required at intervals of ½ mile maximum throughout this condition.
5. For specific requirements use Chart C below.

CHART A

ALL SPEEDS
NO CURB AND GUTTER

X (Ft.)	D (In.)	A/B	Device Required	
			Active ☑ Work Zone	Inactive ◪ Work Zone
0-4	≤ 2	Any	None	None
0-4	> 2 to ≤ 3	Any	Warning Device(b)	Warning Device(b)
0-4	> 3	Any	Warning Device(b)	Barrier (b)
> 4-10	≤ 3	Any	None	None
> 4-10	> 3 to ≤ 12	Any	Warning Device(b)	Warning Device(b)
> 4-10	> 12	Any	Warning Device(b)	Barrier (b)
> 10-CZ(a)	≤ 12	Any	None	None
> 10-CZ(a)	> 12 to < 24	3:1 Or Flatter	None	None
> 10-CZ(a)	> 12 to < 24	Steeper Than 3:1	Warning Device(b)	Warning Device(b)
> 10-CZ(a)	≥ 24	3:1 Or Flatter	None	None
> 10-CZ(a)	≥ 24	Steeper Than 3:1	Warning Device(b)	Barrier (b)

(a) Clear Zone (CZ) is to be determined per Index No. 600 sheet 4 of 10.

(b) Optional shoulder treatment allowed.

CHART B

45 MPH OR LESS (c,d,e)
CURB AND GUTTER

X (Ft.)	D (In.)	A/B	Device Required	
			Active ☑ Work Zone	Inactive ◪ Work Zone
0-10	≤ 12	Any	None	None
0-10	> 12	Any	Warning Device(f)	Warning Device(f)
> 10	Any	Any	None	None

(c) This chart to be used with Condition I only.

(d) This chart to be used for curb heights ≥ 6". For curb heights < 6" use Chart A.

(e) For requirements of dropoffs behind curb and gutter, when curb and gutter has not been constructed, use Chart A.

(f) Optional shoulder treatment allowed.

CHART C

ALL SPEEDS
CURB AND GUTTER OR NO CURB AND GUTTER

X (Ft.)	D (In.)	A/B	Device Required	
			Active ☑ Work Zone	Inactive ◪ Work Zone
0-CZ	≤ 1½	Any	None	None
0-CZ	> 1½ to ≤ 3	Any	Warning Device(g)	Warning Device(g)
0-CZ	> 3	Any	Warning Device	Barrier

(g) Optional travel lane treatment allowed.

☑ An active work zone is defined as those hours when the contractor's crew, permitted work force or Department forces are performing work operations which affect or relate to dropoffs, either day or night.

◪ An inactive work zone is defined as those periods when the contractor's crew, permitted work force or Department forces have left the work site or are performing tasks which do not affect or relate to dropoffs.

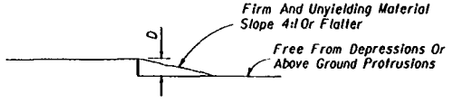

OPTIONAL SHOULDER TREATMENT

1. This optional method may be used in lieu of warning devices or barriers when required by Charts A or B.

NOTES

1. These conditions and treatments can be applied only in work areas that fall within a properly signed work zone.
2. The following are defined as acceptable warning devices:
   For further details, see Part VI of the MUTCD.
   a. Vertical Panel
   b. Type I Or Type II Barricades
   c. Drum
   d. Cone
   e. Tubular Marker
3. Where barrier is specified either of the types below may be used.
   a. Temporary barrier wall installed in accordance with Standard Index No. 415 and Standard Specifications.
   b. Temporary guardrail installed in accordance with the Standard Specifications and Standard Index No. 400. Materials may be new and/or used, but used material must be structurally and functionally sound as determined by the Engineer. End anchorages per Standard Index No. 400 will also be required.
   c. Temporary Curb installed in accordance with standard Index 600.
4. When warning devices are used for a dropoff condition, a minimum number of four devices is required.
5. Warning device spacing shall be as follows:
   A. On Taper
   Maximum spacing between devices (feet) to be equal to the legal posted speed limit (MPH), but not greater than 25 feet for cones or tubular markers or 50 feet for Type I Or Type II barricades, drums or vertical panels.

   B. On Tangents
   Maximum spacing for cones or tubular markers is 25' centers and maximum spacing for Type I or Type II barricades, drums or vertical panels is 50' centers for first 250'; thereafter cones or tubular markers at 50' centers and Type I or Type II barricades, drums or vertical panels at 100' centers.

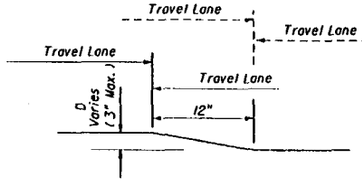

MILLING OR SURFACING

OPTIONAL TRAVEL LANE TREATMENTS

1. This optional method may be used in lieu of warning devices when required by Chart C.
2. Optional treatment allowed only when D is 3" or less.

DROPOFFS IN WORK ZONES

STATE OF FLORIDA DEPARTMENT OF TRANSPORTATION
ROAD DESIGN

TRAFFIC CONTROL THROUGH WORK ZONES

GENERAL INFORMATION FOR
TRAFFIC CONTROL THROUGH WORK ZONES

	Names	Dates
Designed By	CDW/M	12/87
Drawn By	MSD/JBW	12/87
Checked By	JVG/KNW	12/87
F.H.W.A. Approved:		

Approved By: Charles Godsett
State Traffic Plans Engineer

Revision No.	Sheet No.	Index No.
94	5 of 10	600

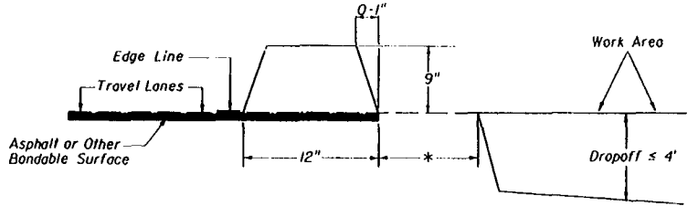

Alternate #1 is a temporary curb (Asphalt or Concrete) which should provide necessary channelization capabilities to protect a low speed motorist from a dropoff condition.

ALT. #1 (NARROW CURB)

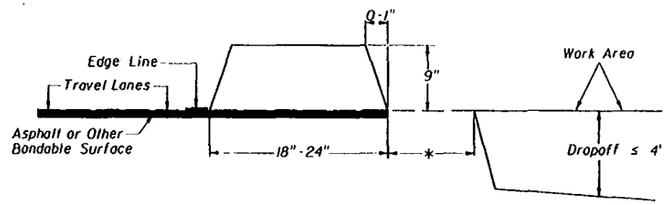

Alternate #2 is a wide temporary curb (Asphalt or Concrete) which should provide somewhat greater visibility/awareness of the barrier curb.

ALT. # 2 (WIDE CURB)

* 12 inches (or more) is desirable in order to enhance/improve stability. However it is recognized that there may be cases where 12 inches (or more) is not feasible or obtainable. In these instances, engineering judgement must be used to balance this offset distance with the depth of dropoff, soil type and etc.

TEMPORARY CURB

1. Application: Temporary curb shall not be used on facilities with posted speeds greater than 45 mph and dropoffs greater than four (4') feet deep. It shall not be used on interstate or limited access facilities.

2. Vertical panels, tubular markers or barricades shall also be used to delineate the work area. These devices could be placed on top of the temporary curb or on the outside (between the curb and the dropoff).

3. Edgelines shall be provided, as well as, painting the face of the curb (white or yellow as appropriate) to further delineate it's presence. The paint shall be in accordance with the traffic striping specifications, including reflective beads.

4. The temporary curb is to be bonded to the existing surface by use of a tack coat, or other methods approved by the engineer. It is important that the curb adhere to the base material in order to provide the strength necessary to redirect errant vehicles.

5. Temporary curb is to be paid for under Lump Sum Maintenance of Traffic (Item 102-1). The designer should include a pay item note to state this fact and to include the estimated number of linear feet to be used. Payment for the curb is to include all materials and work necessary to construct (including painting of the curb), maintain and remove the temporary curb. Traffic striping (lane lines only) and warning devices are to be paid for separately. Any damage to existing pavement caused by the removal of existing curb shall be satisfactorily repaired and the cost of such repairs are to be included in the cost of the temporary curb .

6. The temporary curb is to be constructed of miscellaneous asphalt or class I concrete. The type of material (asphalt or concrete) is up to the contractor, unless otherwise noted by the engineer.

7. The designer must specify, in the plans , which alternate is to be used- alternate 1 or 2. The choice is strictly up to the designer. At this time, there is no preference or guidelines on the use of one versus the other. However, the designer should consider speed, volume, offset space available, dropoff depth, etc. Obviously, increasing the offset between the travel lane and the dropoff will increase safety.

8. If concrete is used to construct the temporary curb, joints must be made every 10 feet in order to control cracking.

9. The designer must also consider drainage needs when using temporary curb. If driveways or other accesses are not frequent enough to allow for water runoff, the designer may need to specify the need for "drainage slots" at an appropriate spacing based on grades, number of lanes , etc. Typically, a drainage slot should be 12 inches wide (a break in the curb) at 50 foot spacings.

10. At openings such as driveways and business accesses, the temporary curb should be transitioned in height from 4 inches up to 9 inches at a 4:1 slope in order to eliminate a potential hazard at the end points.

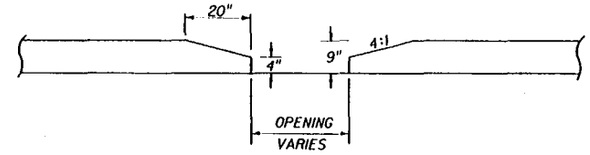

LONGITUDINAL SECTION

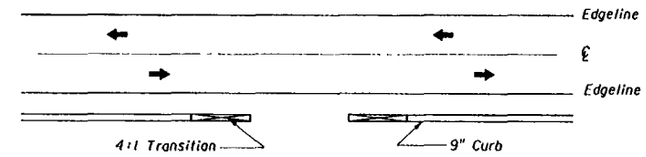

PLAN VIEW

TEMPORARY CURB OPENINGS

STATE OF FLORIDA DEPARTMENT OF TRANSPORTATION
ROAD DESIGN

TRAFFIC CONTROL THROUGH WORK ZONES

GENERAL INFORMATION FOR
TRAFFIC CONTROL THROUGH WORK ZONES

	Names	Dates
Designed By	L.T.B.	
Drawn By		
Checked By		
F.H.W.A. Approved:		

Approved By _____ State Traffic Plans Engineer

Revision No.	Sheet No.	Index No.
94	6 of 10	600

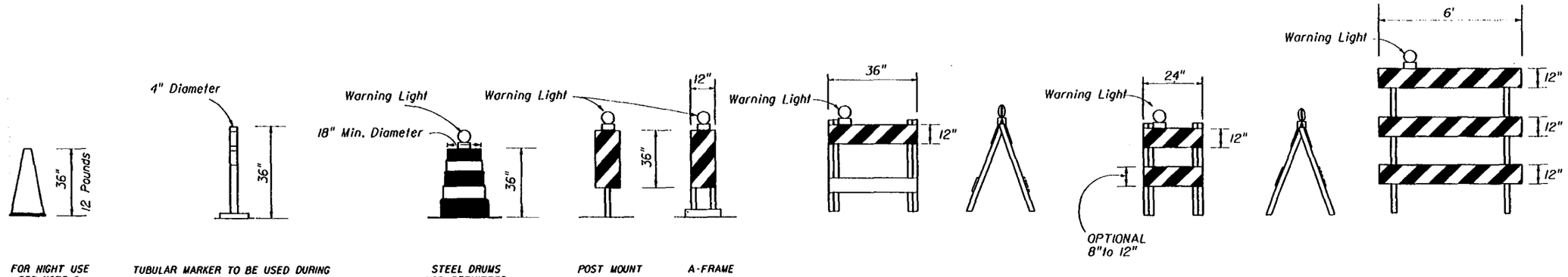

FOR NIGHT USE SEE NOTE 9.

TUBULAR MARKER TO BE USED DURING DAYLIGHT ONLY EXCEPT WHEN USED IN CONJUNCTION WITH TEMPORARY CURB.

STEEL DRUMS NOT PERMITTED

POST MOUNT

A-FRAME

CONES | TUBULAR MARKER | PLASTIC DRUMS | VERTICAL PANEL | TYPE I BARRICADE | TYPE II BARRICADE | TYPE III BARRICADE

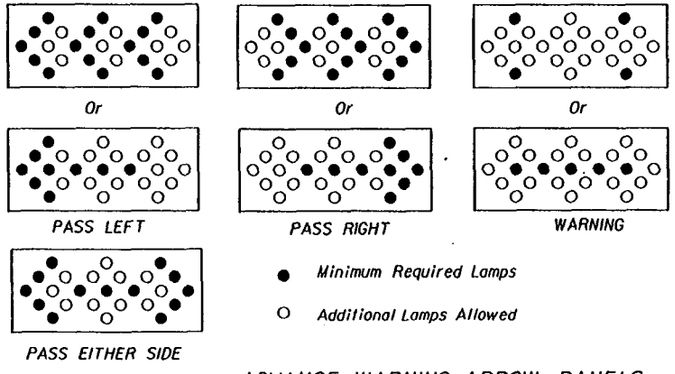

ADVANCE WARNING ARROW PANELS MODES

CHANNELIZING AND LIGHTING DEVICE NOTES

1. Only approved traffic control devices may be used on public highways, roads and streets.
2. The FDOT approval number shall be engraved on the device at a convenient and readily visible location. Where engraving is not practical a water-resistant type label may be used.
3. The details shown on this sheet are for the following purposes: (a) For ease of identification and (b) To provide information that supplements or supercedes that provided by the MUTCD.
4. The Type III Barricade shall have a unit length of 6 feet only. When barricades of greater lengths are required those lengths shall be in multiples of the 6' unit. Signs used in conjunction with Type III Barricades shall be mounted above the Barricade and shall not block the reflective area of the Barricade.
5. During hours of darkness, warning lights shall be used on drums, vertical panels, Type I, Type II, or Type III barricades.
6. Ballast shall not be placed on top rails or any striped rails or higher than 13 inches above the driving surface.
7. For rails less than 3 feet long, 4 inch stripes shall be used.
8. When Advance Warning Arrow Panels are used at night, the intensity of the flashers shall be reduced during darkness when lower intensities are desirable.
9. When used at night, cones shall:
   1. Be used only in active work zones, such as milling and resurfacing or other moving operations where cones can be monitored.
   2. Be 36 inches tall, with a minimum weight of 12 pounds and be reflectorized as per the MUTCD.
   3. Be used only with Department approved reflective collars.

CHANNELIZING AND LIGHTING DEVICES

STATE OF FLORIDA DEPARTMENT OF TRANSPORTATION
ROAD DESIGN

TRAFFIC CONTROL THROUGH WORK ZONES
GENERAL INFORMATION FOR
TRAFFIC CONTROL THROUGH WORK ZONES

	Names	Dates
Designed By	CDW	12/87
Drawn By	HSD	12/87
Checked By	JVG/KNH	12/87
F.H.W.A. Approved:		

Approved By: State Traffic Plans Engineer

Revision No.	Sheet No.	Index No.
94	7 of 10	600

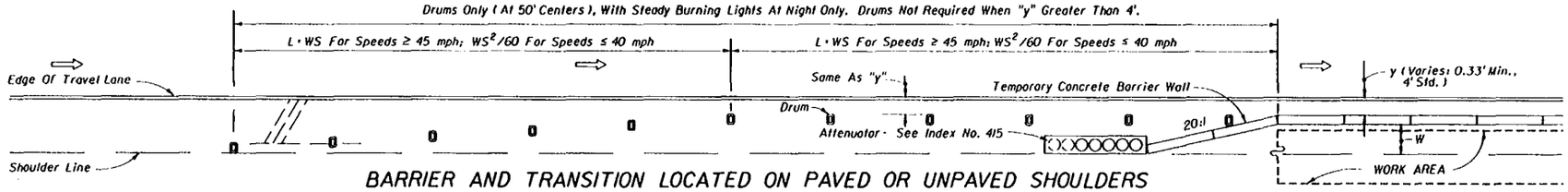

BARRIER AND TRANSITION LOCATED ON PAVED OR UNPAVED SHOULDERS
PLAN SHOWN FOR RIGHT LANE - INVERTED PLAN FOR LEFT LANE

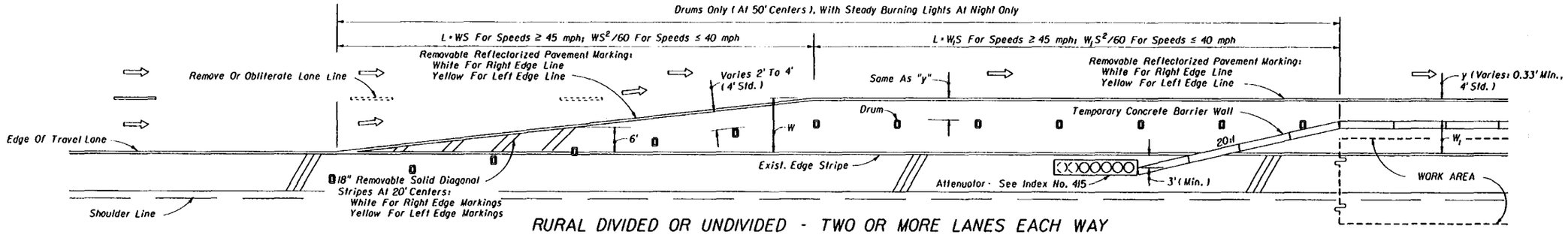

RURAL DIVIDED OR UNDIVIDED - TWO OR MORE LANES EACH WAY
LANE DROP • PLAN SHOWN FOR RIGHT LANE MERGE LEFT - INVERTED PLAN FOR LEFT LANE MERGE RIGHT

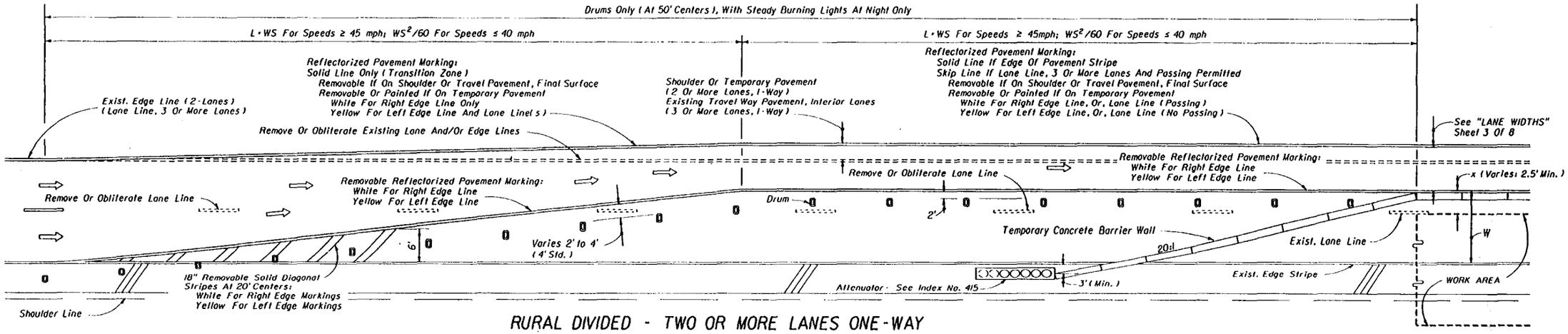

RURAL DIVIDED - TWO OR MORE LANES ONE-WAY
LANE DROP AND LANE SHIFTS - PLAN SHOWN FOR RIGHT LANE MERGE LEFT - INVERTED PLAN FOR LEFT LANE MERGE RIGHT

TRANSITION NOTES

1. Barrier wall within the transition areas shall have reflective markers mounted on the travel side of the wall, 6" below the top and on 12' centers.
2. Arrows denote direction of traffic only and do not reflect pavement markings.
3. For signing information see the Plans, Specifications, MUTCD and other TCZ Standards.

TRANSITIONS FOR TEMPORARY CONCRETE BARRIER WALL ON RURAL FACILITIES

STATE OF FLORIDA DEPARTMENT OF TRANSPORTATION
ROAD DESIGN

TRAFFIC CONTROL THROUGH WORK ZONES

GENERAL INFORMATION FOR
TRAFFIC CONTROL THROUGH WORK ZONES

	Names	Dates
Designed By	JVG	4/89
Drawn By	HSD	4/89
Checked By	JVG/RHV	4/89
F.H.W.A. Approved:		

Approved By: Clark A. Scott
State Traffic Plans Engineer

Revision No.	Sheet No.	Index No.
92	8 of 10	600

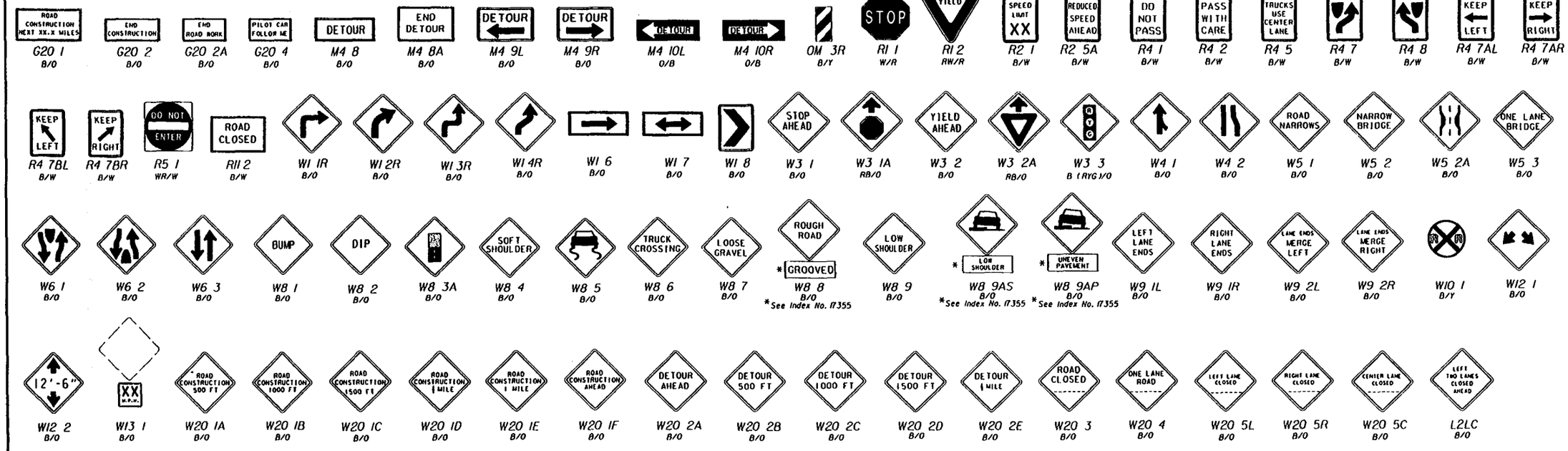

Note:

The sign shields, symbols and messages contained on this sheet are provided for ready reference to those signs used in the development of the 600 series Roadway Design Standards and are commonly used in the development of traffic control plans.

For additional signs and sign detail information refer to the STANDARD HIGHWAY SIGNS MANUAL as specified in the MUTCD. Special signs for traffic control plans will be as approved by the State Traffic Plans Engineer.

The sign codes shown on this sheet are for the purpose of identifying cell names found in the Traffic Control Cell Library (TCZ.Cell) on the CADD system. The STANDARD HIGHWAY SIGNS MANUAL should be referenced for the official sign codes for use in the development of traffic control plans. See Index 17355 for MOT sign details.

COLOR CODES

Legend and/or Symbol / Background

O-Orange (Reflectorized) R-Red (Reflectorized)
B-Black (Non-Reflectorized) Y-Yellow (Reflectorized)
W-White (Reflectorized) G-Green (Reflectorized)

SIGN CODES AND DESCRIPTIONS

G20 1	Length Of Construction Sign
G20 2	End Construction Sign
G20 2A	End Road Work Sign
G20 4	Pilot Car Follow Me Sign
M4 8	Detour Marker
M4 8A	End Detour Sign
M4 9L	Detour Sign Left
M4 9R	Detour Sign Right
M4 10L	Detour Arrow Sign Left
M4 10R	Detour Arrow Sign Right
OM 3R	Type 3 Object Marker
R1 1	Stop Sign
R1 2	Yeild Sign
R2 1	Speed Limit Sign
R2 5A	Reduced Speed Ahead Sign
R4 1	Do Not Pass Sign
R4 2	Pass With Care Sign
R4 5	Trucks Use Center Lane
R4 7	Keep Right Symbol
R4 7AL	Words Keep Left With Arrow
R4 8	Keep Left Symbol
R4 7AR	Words Keep Right With Arrow
R4 7BL	Words Keep Left With Diagonal Arrow
R4 7BR	Words Keep Right With Diagonal Arrow
R5 1	Do Not Enter Sign
R11 2	Road Closed
W1 1R	Turn Sign
W1 2R	Curve Sign
W1 3R	Reverse Curve Sign
W1 4R	Reverse Curve Sign
W1 6	Large Arrow Sign Single
W1 7	Large Arrow Sign Double
W1 8	Chevron Alignment Sign
W3 1	Stop Ahead Word Message
W3 1A	Stop Ahead Symbol
W3 2	Yield Ahead Word Message
W3 2A	Yield Ahead Symbol
W3 3	Signal Ahead Symbol
W4 1	Merge Sign
W4 2	Lane Reduction Transition
W5 1	A Road Narrows Sign
W5 2	Narrow Bridge Words
W5 2A	Narrow Bridge Symbol
W6 1	Divided Highway Road Sign
W6 2	Divided Highway Road Ends
W6 3	Two Way Traffic Sign
W8 1	Bump
W8 2	Dip
W8 3A	Pavement Ends Sign
W8 4	Soft Shoulder
W8 5	Slippery When Wet Sign
W8 6	Truck Crossing
W8 7	Loose Gravel
W8 8	Rough Road With Grooved
W8 9	Low Shoulder
W8 9AS	Low Shoulder Symbol
W8 9AP	Uneven Pavement Symbol
W9 1L	Left Lane Ends
W9 1R	Right Lane Ends
W9 2L	Lane Ends Merge Left
W9 2R	Lane Ends Merge Right
W10 1	Railroad Advance Warn
W12 1	Double Arrow Sign
W12 2	Low Clearance Sign
W13 1	Advisory Speed Plate
W20 1A	Advance Road Const 500 Feet
W20 1B	Advance Road Const 1000 Feet
W20 1C	Advance Road Const 1500 Feet
W20 1D	Advance Road Const Half Mile
W20 1E	Advance Road Const One Mile
W20 1F	Road Construction Ahead
W20 2A	Advance Detour Ahead
W20 2B	Advance Detour 500 Feet
W20 2C	Advance Detour 1000 Feet
W20 2D	Advance Detour 1500 Feet
W20 2E	Advance Detour Half Mile
W20 3	Advance Road Closed
W20 4	Advance One Lane Road
W20 5L	Advance Left Lane Closed
W20 5R	Advance Right Lane Closed
W20 5C	Advance Center Lane Closed
L2LC	Left Two Lanes Closed Ahead
R2LC	Rt Two Lanes Closed Ahead
W20 7	Adv Flagger Ahead Words
W20 7A	Adv Flagger Symbol
W20 7X	Supplemental Plate Flagger
W21 1	Worker Sign
W21 1A	Worker Symbol Sign
W21 4	Road Work Sign
W21 5	Shoulder Work
W21 6	Survey Crew Sign
W22 1	Blasting Zone 1000 Feet
W22 2	Turn Off 2-Way Radio
W22 3	End Blasting Zone
MOT 1	Stay In Your Lane
MOT 2	Double Lane Shift
MOT 3	Triple Lane Shift
MOT 4	Litter Pickup Ahead
MOT 5L	Sidewalk Closed Ahead Right
MOT 5R	Sidewalk Closed Ahead Left
MOT 6R	Pedestrian Walkway Right
MOT 6L	Pedestrian Walkway Left
MOT 7	Pedestrian Crosswalk
MOT 8	Sidewalk Closed Cross Here
MOT 9	Sidewalk Closed

COMMONLY USED WARNING AND REGULATORY SIGNS IN WORK ZONES

STATE OF FLORIDA DEPARTMENT OF TRANSPORTATION
ROAD DESIGN

TRAFFIC CONTROL THROUGH WORK ZONES

GENERAL INFORMATION FOR TRAFFIC CONTROL THROUGH WORK ZONES

	Names	Dates
Designed By		
Drawn By	HSO	12/87
Checked By	JMG/KNM	12/87
F.H.W.A. Approved:		

Approved By: Charles A. Scott
State Traffic Plans Engineer

Revision No.	Sheet No.	Index No.
94	9 of 10	600

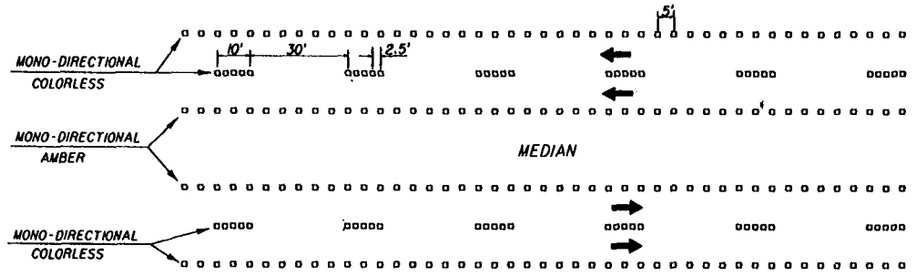

4-LANE DIVIDED

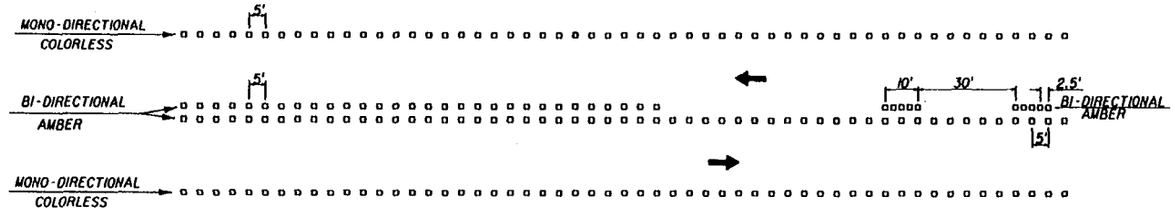

2-LANE NO PASSING

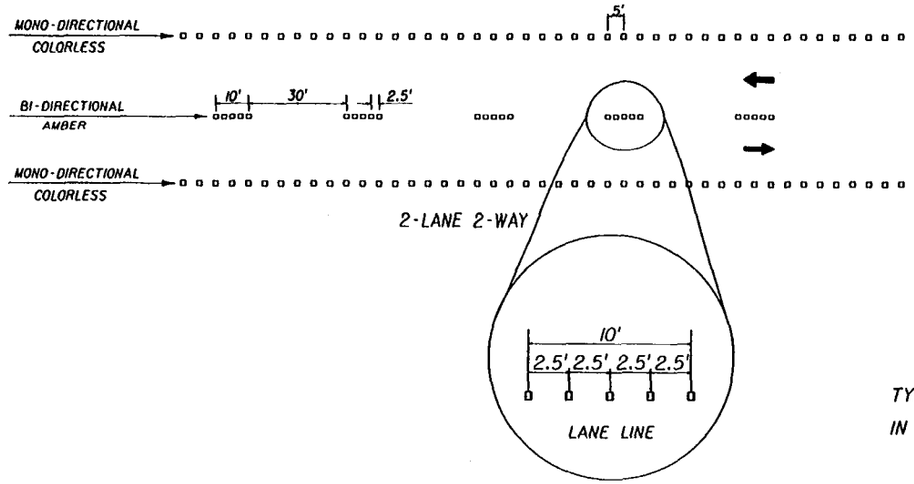

TYPICAL PLACEMENT OF REFLECTIVE PAVEMENT MARKERS
IN LIEU OF TEMPORARY TAPE OR PAINT IN WORK ZONES

REFLECTIVE PAVEMENT MARKERS

CLASS	APPLICATION
A	Permanent Applications In Non-Traffic Areas Or Can Be Used In Work Zone Applications For Traffic And Non-Traffic Areas.
B	Permanent Application In Traffic And Non-Traffic Areas Or Can Be Used In Work Zone Applications For Traffic And Non-Traffic Areas.
D	Work Zone Application Only, For Traffic And Non-Traffic Areas. Maximum spacing 5' center to center.
E	Temporary Work Zone Application Only, Not Exceeding Five (5) Continuous Days, For Traffic And Non-Traffic Areas. Maximum spacing 5' center to center.

NOTES

1. For spacing of CLASS A or B RPM'S to supplement Temporary Tape or Paint, see index 600 sheet 3 of 10.
2. Basic color rule: colorless reflectors replace white lines and amber reflectors replace yellow lines.
3. In work zones, CLASS A,B, or D RPM'S may be used to form lane lines edge lines and temporary gore areas, in lieu of tape or paint however, tape or paint must be used in all transition areas in addition to the RPMs. In short term work zones, where the RPM'S will be used for five (5) days or less, CLASS "E" RPM'S may be used to form lane or edge lines.
4. To provide contrast on Concrete Pavement, and light Asphalt the five (5) colorless RPM'S shall be followed by five Black RPM'S . The spacing between RPM'S shall be 2.5'. Black RPM'S will not be required for contrast with Amber RPM'S.

STATE OF FLORIDA DEPARTMENT OF TRANSPORTATION
ROAD DESIGN

TRAFFIC CONTROL THROUGH WORK ZONES

GENERAL INFORMATION FOR
TRAFFIC CONTROL THROUGH WORK ZONES

	Names	Dates
Designed By	LTB	
Drawn By		
Checked By		

Approved By: Charles Scott
State Traffic Plans Engineer

F.H.W.A. Approved:

Revision No.	Sheet No.	Index No.
94	10 of 10	600

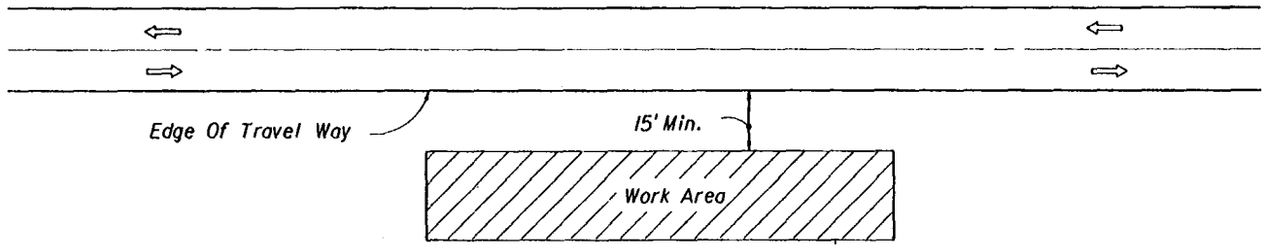

GENERAL NOTES

1. If the work operation requires that two or more work vehicles cross the 15' zone in any one hour, traffic control will be in conformance with Index No. 602.
2. No special signing is required.
3. Arrows denote direction of traffic only and do not reflect pavement markings.
4. When a side road intersects the highway on which work is being performed additional traffic control devices shall be erected in accordance with other applicable TCZ Indexes.
5. For general TCZ requirements and additional information refer to Index No. 600.

TYPICAL APPLICATIONS

Landscaping Work
Utility Work
Fencing Work
Cleaning Drainage Structures
Reworking Ditches

SYMBOLS

Work Area

CONDITIONS

WHERE ANY VEHICLE, EQUIPMENT, WORKERS AND THEIR ACTIVITIES ARE MORE THAN 15' FROM THE EDGE OF PAVEMENT

STATE OF FLORIDA DEPARTMENT OF TRANSPORTATION
ROAD DESIGN

TRAFFIC CONTROL THROUGH WORK ZONES

TWO-LANE, TWO-WAY • RURAL DAY OR NIGHT OPERATIONS

	Names	Dates
Designed By	COMW	12/87
Drawn By	HSD/JBW	12/87
Checked By	JMG/KHW	12/87
F.H.W.A. Approved:		

Approved By: C. Clark Scott
Deputy State Design Engineer, Roadways

Revision No.	Sheet No.	Index No.
88	1 of 1	601

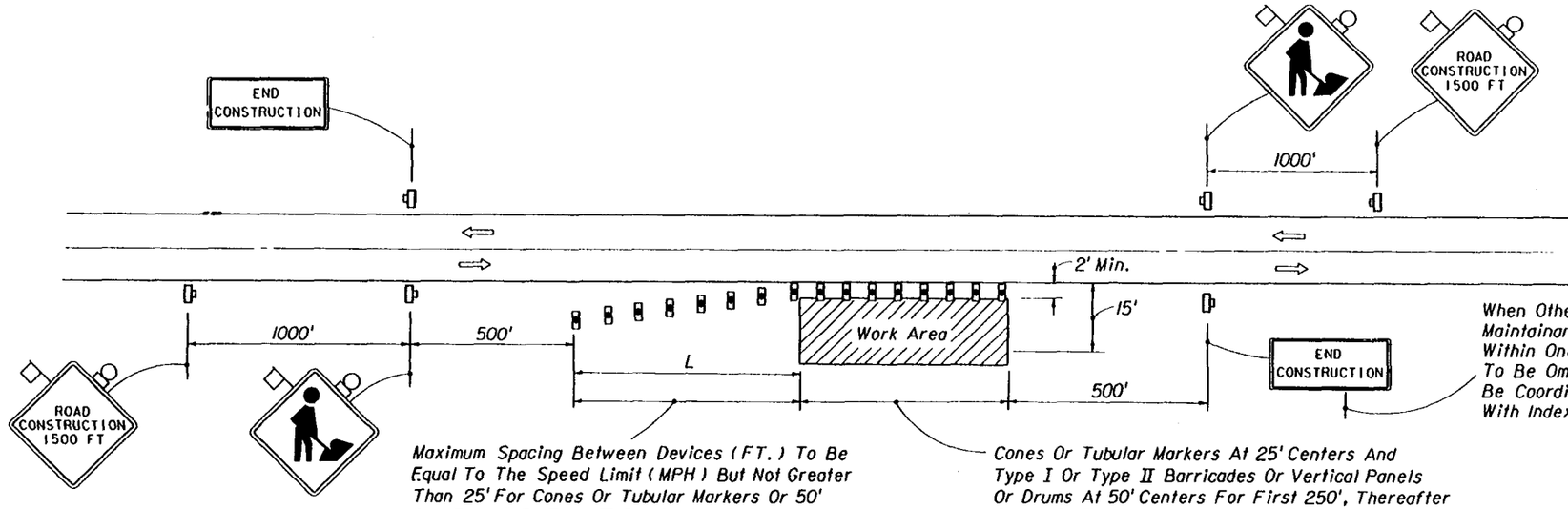

SYMBOLS

- Work Area
- Sign With 18" x 18" (Min.) Orange Flag And Type B Light
- Type I Or Type II Barricade Or Vertical Panel Or Drum (With Steady Burning Light At Night Only). Tubular Markers May Be Used During Daylight Only.
- Work Zone Sign

GENERAL NOTES

1. All vehicles, equipment, workers (except flaggers) and their activities are restricted at all times to one side of the roadway.
2. If the work operation does not exceed 60 minutes, traffic control will be in conformance with Index No. 607.
3. If the work operation encroaches on the through traffic lanes or when four or more work vehicles enter the through traffic lanes in a one hour period a flagger shall be provided and the advanced FLAGGER sign shall be substituted for the WORKERS sign. For location of flaggers and FLAGGER signs see Index No. 603.
4. The first two warning signs shall have a 18" x 18" (min.) orange flag and a Type B light attached and operating at all times.

   Mesh signs may be used for (Daylight Only) operations Type B Lights and Orange Flags are not required.
5. The WORKERS legend sign may be substituted for the symbol sign.
6. All signs shall be post mounted if the closure time exceeds 12 hours.
7. $L\ (min) = \frac{WS}{2}$ for speeds $\geq$ 45 mph

   $= \frac{WS^2}{120}$ for speeds $\leq$ 40 mph

   Where:
   W = Width of shoulder in feet, 8' minimum.
   S = Posted speed limit (MPH).
8. Arrows denote direction of traffic only and do not reflect pavement markings.
9. Longitudinal dimensions are to be adjusted to fit field conditions. See Index No. 600.
10. WORKERS sign to be removed or fully covered when no work is being performed.
11. END CONSTRUCTION signs required only when work exceeds one daylight period.
12. When a side road intersects the highway on which work is being performed additional traffic control devices shall be erected in accordance with other applicable TCZ Indexes.
13. For general TCZ requirements and additional information refer to Index No. 600.

TYPICAL APPLICATIONS

Utility Work
Culvert Extensions
Side Slope Work
Guardrail Work
Landscaping Work
Cleaning Drainage Structures
Reworking Ditches
Sign Installation And Maintenance
Shoulder Repair

CONDITIONS

WHERE ANY VEHICLE, EQUIPMENT, WORKERS OR THEIR ACTIVITIES ENCROACH THE AREA CLOSER THAN 15' BUT NOT CLOSER THAN 2' TO THE EDGE OF PAVEMENT

STATE OF FLORIDA DEPARTMENT OF TRANSPORTATION
ROAD DESIGN

TRAFFIC CONTROL THROUGH WORK ZONES

TWO-LANE, TWO-WAY • RURAL DAY OR NIGHT OPERATIONS

	Names	Dates
Designed By	COMM	12/87
Drawn By	HSO/JBW	12/87
Checked By	JMG/KNM	12/87

Approved By: Charles Hoyt
State Traffic Plans Engineer

F.H.W.A. Approved

Revision No.	Sheet No.	Index No.
94	1 of 1	602

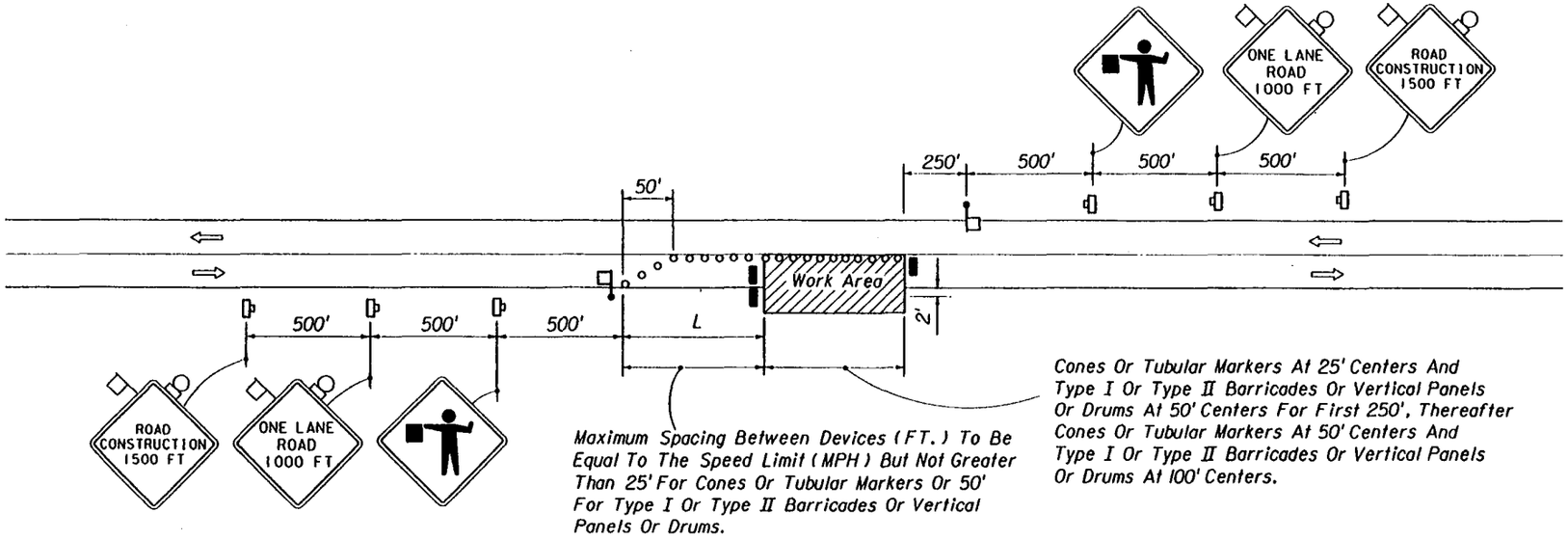

GENERAL NOTES

1. Work operations shall be confined to one traffic lane, leaving the opposite lane open to traffic.
2. All vehicles, equipment, workers (except flaggers), and their activities are restricted at all times to one side of the pavement.
3. If the work operation does not exceed 60 minutes, traffic control will be in conformance with Index No. 607.
4. Additional one-way control may be effected by the following means:
   (1) Flag-carrying vehicle (2) Official vehicle
   (3) Pilot vehicles (4) Traffic signals

   When flaggers are the sole means of one-way control the flaggers shall be in sight of each other or in direct communication at all times.
5. The first two warning signs shall have a 18" x 18" (min.) orange flag and a Type B light attached and operating at all times.
6. Mesh signs may be used for (Daylight Only) operations. Type B Lights and Orange Flags are not required.
7. The FLAGGER legend sign may be substituted for the symbol sign.
8. L (min) = $\frac{WS}{2}$ for speeds ≥ 45 mph

   $\frac{WS^2}{120}$ for speeds ≤ 40 mph

   Where:
   W = Width of lateral transition in feet.
   S = Posted speed limit (MPH).
9. The ONE-LANE ROAD signs are to be fully covered and the FLAGGER signs either removed or fully covered when no work is being performed and the highway is open to two-way traffic.
10. Arrows denote direction of traffic only and do not reflect pavement markings.
11. Longitudinal dimensions are to be adjusted to fit field conditions. See Index No. 600.
12. When a side road intersects the highway on which work is being performed additional traffic control devices shall be erected in accordance with other applicable TCZ Indexes.
13. For general TCZ requirements and additional information, refer to Index No. 600.

SYMBOLS

- Work Area
- Sign With 18" x 18" (Min.) Orange Flag And Type B Light
- Type I, Type II Or Type III Barricade Or Vertical Panel Or Drum
- Type I Or Type II Barricade Or Vertical Panel Or Cone Or Tubular Marker Or Drum
- Work Zone Sign
- Flagger

TYPICAL APPLICATIONS

Pavement Resurfacing
Pavement Repair
Utility Work
Bridge Repair
Guardrail Work

CONDITIONS

WHERE ANY VEHICLE, EQUIPMENT, WORKERS OR THEIR ACTIVITIES ENCROACH THE AREA BETWEEN THE CENTERLINE AND A LINE 2' OUTSIDE THE EDGE OF PAVEMENT

STATE OF FLORIDA DEPARTMENT OF TRANSPORTATION
ROAD DESIGN

TRAFFIC CONTROL THROUGH WORK ZONES

TWO-LANE, TWO-WAY • RURAL OPERATIONS ONE DAYLIGHT PERIOD OR LESS

	Names	Dates
Designed By	COMM	12/87
Drawn By	HSD/JBW	12/87
Checked By	JVG/KNM	12/87

Approved By: Clark A. Scott, State Traffic Plans Engineer

Revision No.	Sheet No.	Index No.
92	1 of 1	603

F.H.W.A. Approved:

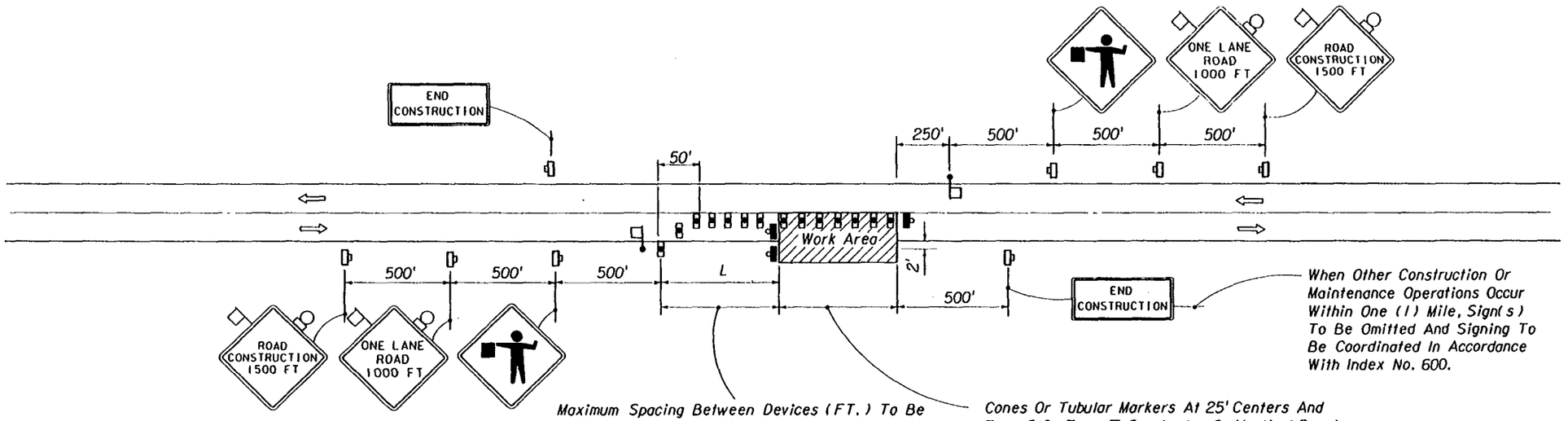

When Other Construction Or Maintenance Operations Occur Within One (1) Mile, Sign(s) To Be Omitted And Signing To Be Coordinated In Accordance With Index No. 600.

Maximum Spacing Between Devices (FT.) To Be Equal To The Speed Limit (MPH) But Not Greater Than 25' For Cones Or Tubular Markers Or 50' For Type I Or Type II Barricades Or Vertical Panels Or Drums.

Cones Or Tubular Markers At 25' Centers And Type I Or Type II Barricades Or Vertical Panels Or Drums At 50' Centers For First 250', Thereafter Cones Or Tubular Markers At 50' Centers And Type I Or Type II Barricades Or Vertical Panels Or Drums At 100' Centers.

SYMBOLS

- Work Area
- Sign With 18" x 18" (Min.) Orange Flag And Type B Light
- Type I Or Type II Barricade Or Vertical Panel Or Drum (With Steady Burning Light At Night Only). Tubular Markers May Be Used During Daylight Only.
- Type I, Type II Or Type III Barricade Or Vertical Panel Or Drum (With Flashing Light)
- Work Zone Sign
- Flagger

GENERAL NOTES

1. Construction operations shall be confined to one traffic lane, leaving the opposite lane open to traffic.
2. All vehicles, equipment, workers, (except flaggers) and their activities are restricted at all times to one side of the pavement.
3. Additional one-way control may be effected by the following means:
   (1) Flag-carrying vehicle (2) Official vehicle
   (3) Pilot vehicles (4) Traffic signals

   When flaggers are the sole means of one-way control the flaggers shall be in sight of each other or in direct communication at all times.
4. The first two warning signs shall have a 18" x 18" (min.) orange flag and a Type B light attached and operating at all times.
5. The FLAGGER legend sign may be substituted for the symbol sign.
6. All signs shall be post mounted if the closure time exceeds 12 hours.
7. L (min): $\frac{WS}{2}$ for speeds ≥ 45 mph
   $\frac{WS^2}{120}$ for speeds ≤ 40 mph

   Where:
   W = Width of lateral transition in feet.
   S = Posted speed limit (MPH).
8. The ONE-LANE ROAD signs are to be fully covered and the FLAGGER signs either removed or fully covered when no work is being performed and the highway is open to two-way traffic.
9. Arrows denote direction of traffic only and do not reflect pavement markings.
10. Longitudinal dimensions are to be adjusted to fit field conditions. See Index No. 600.
11. When a side road intersects the highway on which work is being performed additional traffic control devices shall be erected in accordance with other applicable TCZ Indexes.
12. For general TCZ requirements and additional information refer to Index No. 600.

TYPICAL APPLICATIONS

Pavement Repair
Culvert Construction
Utility Work
Bridge Repair

CONDITIONS

WHERE ANY VEHICLE, EQUIPMENT WORKERS OR THEIR ACTIVITIES ENCROACH THE AREA BETWEEN THE CENTERLINE AND A LINE 2' OUTSIDE THE EDGE OF PAVEMENT

STATE OF FLORIDA DEPARTMENT OF TRANSPORTATION
ROAD DESIGN

TRAFFIC CONTROL THROUGH WORK ZONES

TWO-LANE, TWO-WAY • RURAL NIGHT OPERATIONS OR OPERATIONS EXCEEDING ONE DAYLIGHT PERIOD

	Names	Dates
Designed By	CMW	12/87
Drawn By	HSD/JBW	12/87
Checked By	JVC/RMW	12/87
F.H.W.A. Approved:		

Approved By: Charles A. Scott
State Traffic Plans Engineer

Revision No.	Sheet No.	Index No.
94	1 of 1	604

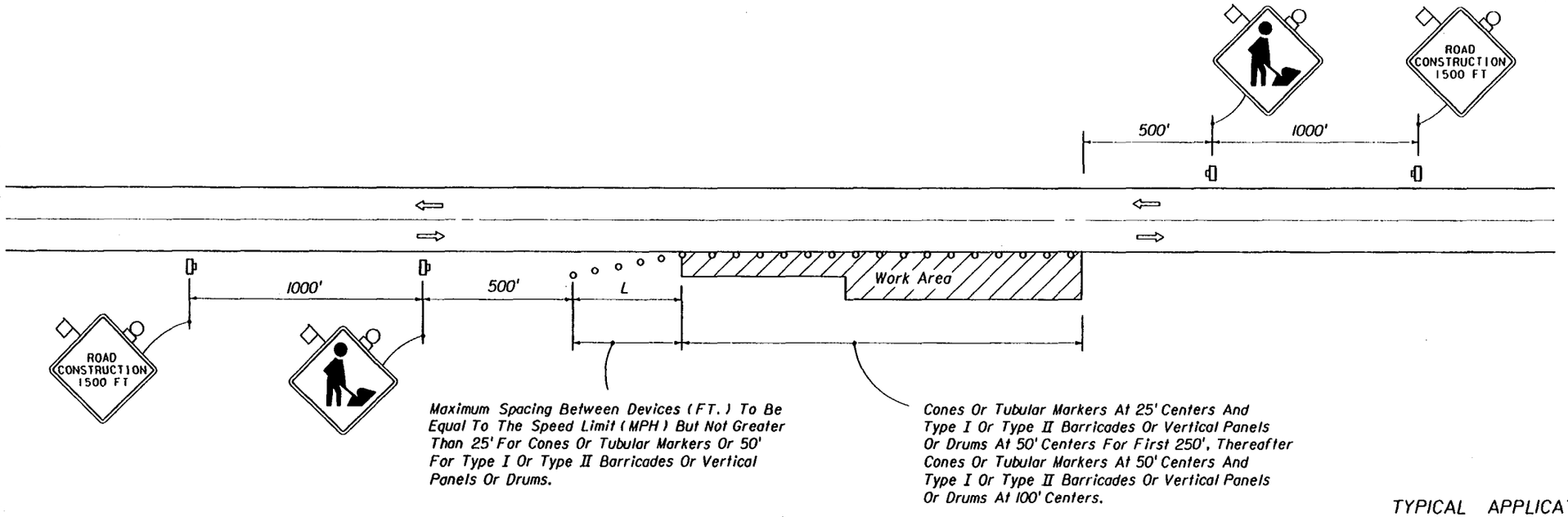

Maximum Spacing Between Devices (FT.) To Be Equal To The Speed Limit (MPH) But Not Greater Than 25' For Cones Or Tubular Markers Or 50' For Type I Or Type II Barricades Or Vertical Panels Or Drums.

Cones Or Tubular Markers At 25' Centers And Type I Or Type II Barricades Or Vertical Panels Or Drums At 50' Centers For First 250', Thereafter Cones Or Tubular Markers At 50' Centers And Type I Or Type II Barricades Or Vertical Panels Or Drums At 100' Centers.

TYPICAL APPLICATIONS

Shoulder And Slope Work
Utility Work
Guardrail Work
Landscape Work
Delineator Installation And Maintenance
* Mowing
* Litter Removal

CONDITIONS

WHERE ANY VEHICLE, EQUIPMENT, WORKERS OR THEIR ACTIVITIES REQUIRE AN INTERMITTENT OR CONTINUOUS MOVING OPERATION ON THE SHOULDER OR SHOULDER AND SLOPES

SYMBOLS

- Work Area
- Sign With 18" x 18" (Min.) Orange Flag And Type B Light
- Type I Or Type II Barricade Or Vertical Panel Or Cone Or Tubular Marker Or Drum
- Work Zone Sign

GENERAL NOTES

1. All vehicles, equipment, workers (except flaggers), and their activities are restricted at all times to one side of the roadway.
2. If the work operation does not exceed 60 minutes, traffic control will be in conformance with Index No. 607.
3. If the work operation encroaches on the through traffic lanes or when four or more work vehicles enter the through traffic lanes in a one hour period flaggers shall be provided and the advanced FLAGGER sign shall be substituted for the WORKERS sign. For location of flaggers and FLAGGER signs see Index No. 603.
4. The first two warning signs shall have a 18" x 18" (min.) orange flag and a Type B light attached and operating at all times.

   Mesh signs may be used for (Daylight Only) operations. Type B Lights and Orange Flags are not required.
5. The WORKERS legend sign may be substituted for the symbol sign.

* 6. Where work activities within 2' of the edge of pavement is incidental (ie Mowing, Litter Removal) the engineer may delete requirements for cones and signs provided a vehicle with flashing warning lights is present.

7. L (min.) = $\frac{WS}{2}$ for speeds ≥ 45 mph
   = $\frac{WS^2}{120}$ for speeds ≤ 40 mph

   Where:
   W = Width of shoulder in feet, 8' minimum.
   S = Posted speed limit (MPH).
8. Arrows denote direction of traffic only and do not reflect pavement markings.
9. Longitudinal dimensions are to be adjusted to fit field conditions. See Index No. 600.
10. When a side road intersects the highway on which work is being performed additional traffic control devices shall be erected in accordance with other applicable TCZ Indexes.
11. For general TCZ requirements and additional information, refer to Index No. 600.

STATE OF FLORIDA DEPARTMENT OF TRANSPORTATION
ROAD DESIGN

TRAFFIC CONTROL THROUGH WORK ZONES

TWO-LANE, TWO-WAY • RURAL MOVING OPERATIONS-DAYLIGHT ONLY

	Name	Date
Designed By	CDWN	12/87
Drawn By	HSD/JBW	12/87
Checked By	JVG/RNW	12/87

Approved By: Charles A. Scott, State Traffic Plans Engineer

F.H.W.A. Approved:

Revision No.	Sheet No.	Index No.
94	1 of 1	605

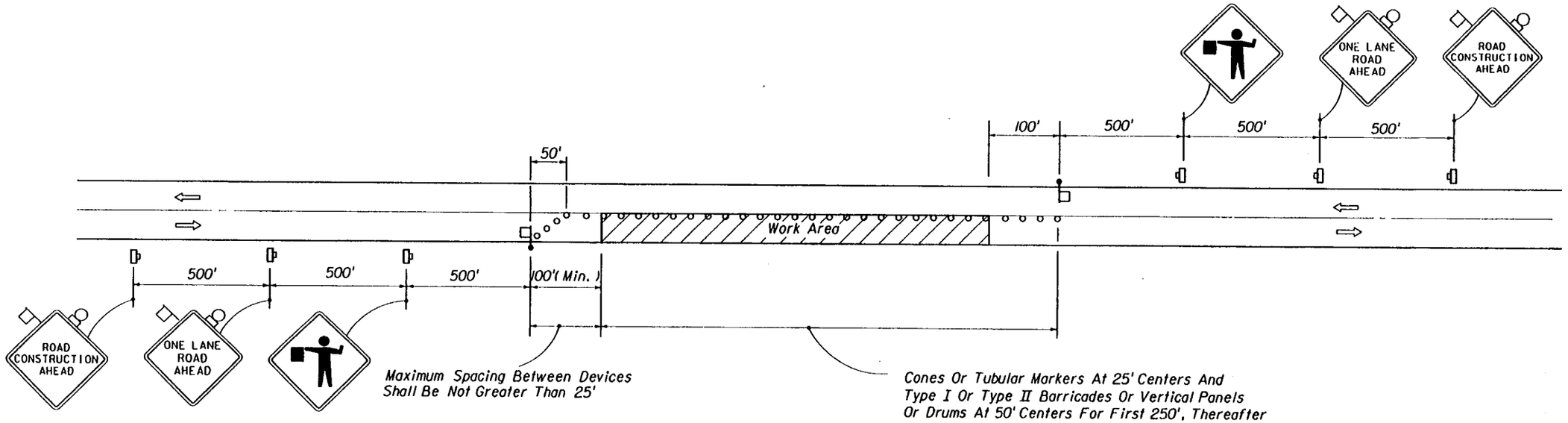

GENERAL NOTES

1. All vehicles, equipment, workers (except flaggers), and their activities are restricted at all times to one side of the pavement.
2. Minimum length of work area is 200 feet. Maximum length to be determined by the Engineer, but in no case to exceed the length of one-half ($\frac{1}{2}$) days operation or two miles whichever is less.
3. If the work operation does not exceed 60 minutes, traffic control will be in conformance with Index No. 607.
4. Additional one-way control may be effected by the following means:
   (1) Flag-carrying vehicle (2) Official vehicle
   (3) Pilot vehicles (4) Traffic signals

   When flaggers are the sole means of one-way control the flaggers shall be in sight of each other or in direct communication at all times.
5. The first two warning signs shall have a 18" x 18" (min.) orange flag and a Type B light attached and operating at all times.
6. Mesh signs may be used for (Daylight Only) operations. Type B Lights and Orange Flags are not required.
7. The FLAGGER legend sign may be substituted for the symbol sign.
8. The ONE LANE ROAD AHEAD and FLAGGER signs are to be removed or fully covered when no work is being performed and the highway is open to two-way traffic.
9. Arrows denote direction of traffic only and do not reflect pavement markings.
10. Longitudinal dimensions are to be adjusted to fit field conditions. See Index No. 600.
11. When a side road intersects the highway on which work is being performed additional traffic control devices shall be erected in accordance with other applicable TCZ Indexes.
12. For general TCZ requirements and additional information, refer to Index No. 600.

SYMBOLS

- Work Area
- Sign With 18" x 18" (Min.) Orange Flag And Type B Light
- Type I Or Type II Barricade Or Vertical Panel Or Cone Or Tubular Marker Or Drum
- Work Zone Sign
- Flagger

TYPICAL APPLICATIONS

Pavement Repair
Pavement Surfacing
Utility Work
Delineator Maintenance
Crack Sealing
Core Boring

CONDITIONS

WHERE ANY VEHICLE, EQUIPMENT, WORKERS OR THEIR ACTIVITIES REQUIRE AN INTERMITTENT OR CONTINUOUS MOVING OPERATION ON THE PAVEMENT WHERE THE AVERAGE SPEED OF MOVEMENT IS LESS THAN FOUR MILES PER HOUR

STATE OF FLORIDA DEPARTMENT OF TRANSPORTATION
ROAD DESIGN

TRAFFIC CONTROL THROUGH WORK ZONES

MOVING OPERATIONS • RURAL TWO-LANE TWO-WAY DAYLIGHT ONLY

	Name	Date
Designed By	CONN	12/87
Drawn By	HSD/JBW	12/87
Checked By	JVG/KNW	12/87
F.H.W.A. Approved:		

Approved By
State Traffic Plans Engineer

Revision No.	Sheet No.	Index No.
92	1 of 1	606

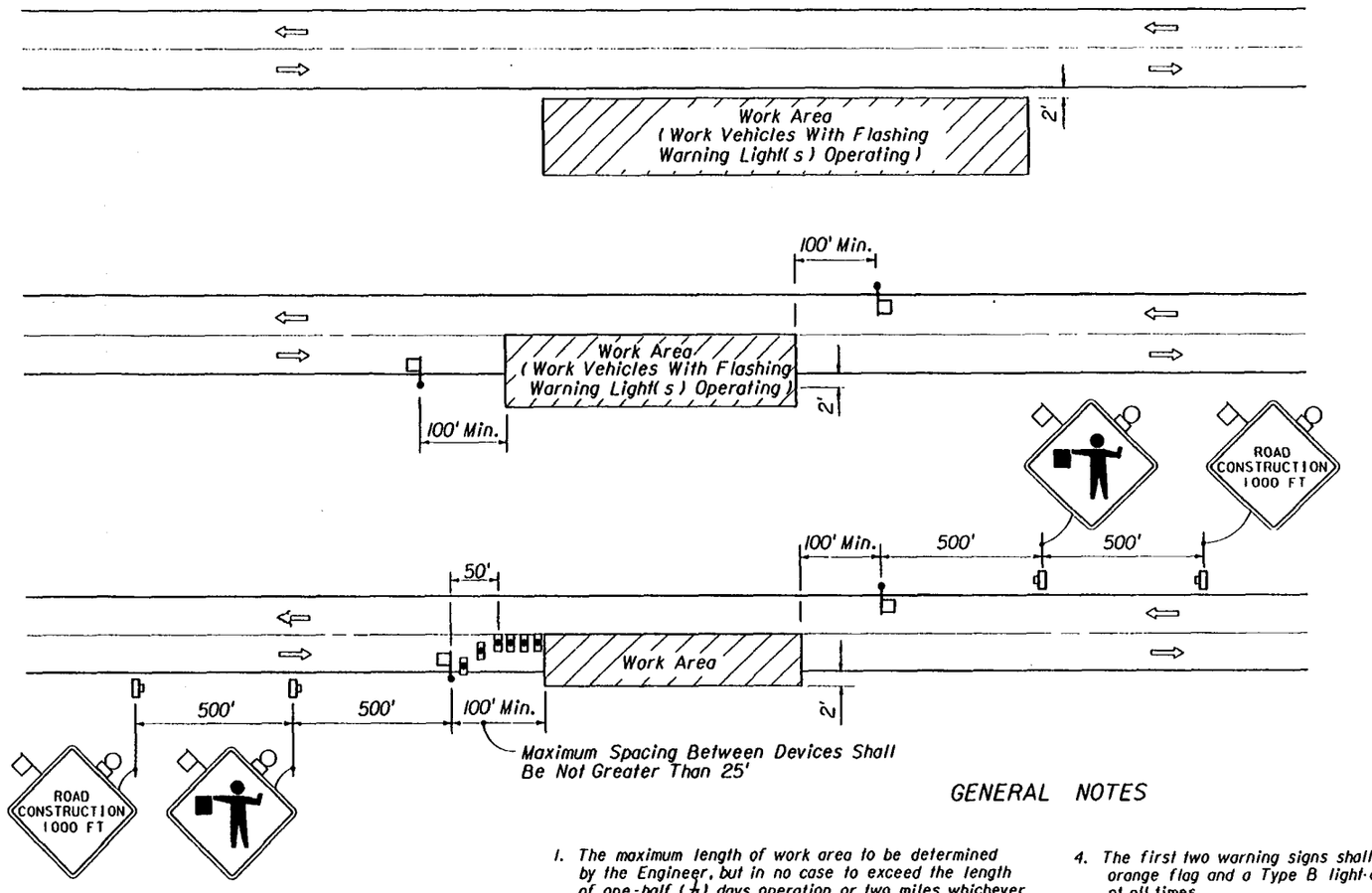

CONDITIONS

FOR ANY OPERATION THAT IS 2' OR MORE OUTSIDE THE EDGE OF THE PAVEMENT FOR A PERIOD OF LESS THAN 60 MINUTES.

CONDITIONS

FOR ANY OPERATION THAT ENCROACHES IN THE AREA BETWEEN THE CENTERLINE AND A LINE 2' OUTSIDE THE EDGE OF THE PAVEMENT FOR A PERIOD OF 15 MINUTES OR LESS

CONDITIONS

FOR ANY OPERATION THAT ENCROACHES IN THE AREA BETWEEN THE CENTERLINE AND A LINE 2' OUTSIDE THE EDGE OF THE PAVEMENT FOR A PERIOD IN EXCESS OF 15 MINUTES BUT LESS THAN 60 MINUTES.

SYMBOLS

- Work Area
- Sign With 18"x 18" (Min.) Orange Flag And Type B Light
- Type I Or Type II Barricade Or Vertical Panel Or Drum (With Steady Burning Light At Night Only) Tubular Markers May Be Used During Daylight Only.
- Work Zone Sign
- Flagger

GENERAL NOTES

1. The maximum length of work area to be determined by the Engineer, but in no case to exceed the length of one-half (½) days operation or two miles whichever is less.
2. All vehicles, equipment, workers (except flaggers) and their activities are restricted at all times to one side of the pavement.
3. Additional one-way control may be effected by the following means:
   (1) Flag-carrying vehicle (2) Official vehicle
   (3) Pilot vehicles (4) Traffic signals

   When flaggers are the sole means of one-way control the flaggers shall be in sight of each other or in direct communication at all times.
4. The first two warning signs shall have an 18"x 18" (min.) orange flag and a Type B light attached and operating at all times.
   Mesh signs may be used for (Daylight Only) operations Type B Lights and Orange Flags are not required.
5. The FLAGGER legend sign may be substituted for the symbol sign.
6. Arrows denote direction of traffic only and do not reflect pavement markings.
7. Longitudinal dimensions are to be adjusted to fit field conditions. See Index No. 600.
8. When a side road intersects the highway on which work is being performed additional traffic control devices shall be erected in accordance with other applicable TCZ Indexes.
9. For general TCZ requirements and additional information refer to Index No. 600.

TYPICAL APPLICATIONS

Marking Patches
Field Patches
String Line
Utility Work
Cleaning Up Debris On Pavement
Pavement Coring And Straight Edging

STATE OF FLORIDA DEPARTMENT OF TRANSPORTATION
ROAD DESIGN

TRAFFIC CONTROL THROUGH WORK ZONES
TWO-LANE TWO-WAY • RURAL SHORTTIME DAY OR NIGHT OPERATIONS

	Names	Dates
Designed By	CONN	12/87
Drawn By	IISD/JBW	12/87
Checked By	JNG/KNM	12/87
F.H.W.A. Approved:		

Approved By: C. Lamb Gorrell
State Traffic Plans Engineer

Revision No.	Sheet No.	Index No.
94	1 of 1	607

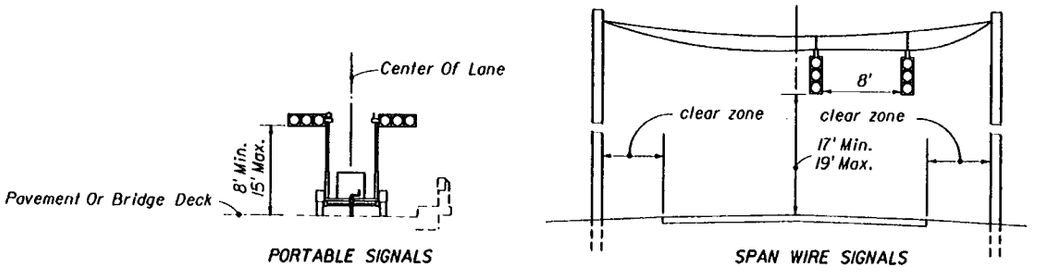

SIGNAL MOUNT DETAILS

GENERAL NOTES

SYMBOLS

- Work Area
- Sign With 18" x 18" (Min.) Orange Flag And Type B Light
- Work Zone Sign
- Traffic Signal
- Type I Or Type II Barricade Or Vertical Panel Or Drum (With Steady Burning Light At Night Only). Tubular Markers May Be Used During Daylight Only.
- Type III Barricade
- Stop Bar
- Flagger
- Portable Signal

1. Work operations shall be confined to one traffic lane, except for haul road crossings, leaving the opposite lane open to traffic.
2. All vehicles, equipment, workers (except flaggers) and their activities are restricted at all times to one side of the pavement, except for haul road crossings.
3. The installation and timing of signals shall be approved by the District Traffic Operations Engineer prior to signals being placed in operation.

   Where sight distance to the signal is limited, the signals may be mounted on span wire at the discretion of the Engineer.

   The maximum distance between portable traffic signals (receiver/controllers) shall be ¼ mile, however, in no case shall the distance exceed the maximum distance at which the remote operator (transmitter) can positively and safely operate both portable signals.
4. Flaggers to supplement the signal operator/flagger shall be used when needed to assure safe movements between traffic and operating equipment, as determined by the Engineer.
5. The first two warning signs shall have a 18" x 18" (min.) orange flag and a Type B light attached and operating at all times.
6. When needed, an additional warning sign may be installed in advance of the ROAD CONSTRUCTION AHEAD sign. The distance between successive signs shall be 500 ft.
7. The SIGNAL AHEAD legend sign may be substituted for the symbol sign.
8. All signs shall be post mounted if the closure time exceeds 12 hours.
9. SIGNAL AHEAD and EQUIPMENT CROSSING AHEAD signs are to be removed or fully covered when no work is being performed and the highway is open to two-way traffic. Type III Barricades shall be in place to block haul road access when the haul road is not in operation and a flagger/signal operator is not on duty, except when the haul road is an existing properly marked road.
10. Arrows denote direction of traffic only and do not reflect pavement markings.
11. Longitudinal dimensions are to be adjusted to fit field conditions. See Index No. 600.
12. When a side road intersects the highway on which work is being performed additional traffic control devices shall be erected in accordance with other applicable TCZ Indexes.
13. For general TCZ requirements and additional information refer to Index No. 600.
14. Span wire signals are to be used only in active work zones, where the contractor can monitor signal operation and maintain traffic with flaggers in the event of a power failure.

TYPICAL APPLICATION

Pavement Repair
Shoulder & Roadside Work
Bridge Work
Box Culvert Work
Drainage Work
Utility Work
Haul Road Crossing

CONDITIONS

WHERE ANY VEHICLE, EQUIPMENT, WORKERS OR THEIR ACTIVITIES WILL ENCROACH ON ONE LANE OR MOMENTARILY ENCROACH ON BOTH LANES OF A TWO-LANE TWO-WAY ROADWAY AND TRAFFIC SIGNALS ARE NEEDED.

STATE OF FLORIDA DEPARTMENT OF TRANSPORTATION
ROAD DESIGN

TRAFFIC CONTROL THROUGH WORK ZONES

TWO-LANE, TWO-WAY LANE CLOSURE BY SIGNAL CONTROL DAY OR NIGHT OPERATIONS

	Names	Dates
Designed By	COMM	12/87
Drawn By	HSD/JBW	12/87
Checked By	JVC/KNM	12/87
F.H.W.A. Approved:		

Approved By Clark A. Scott
State Traffic Plans Engineer

Revision No.	Sheet No.	Index No.
94	1 of 4	608

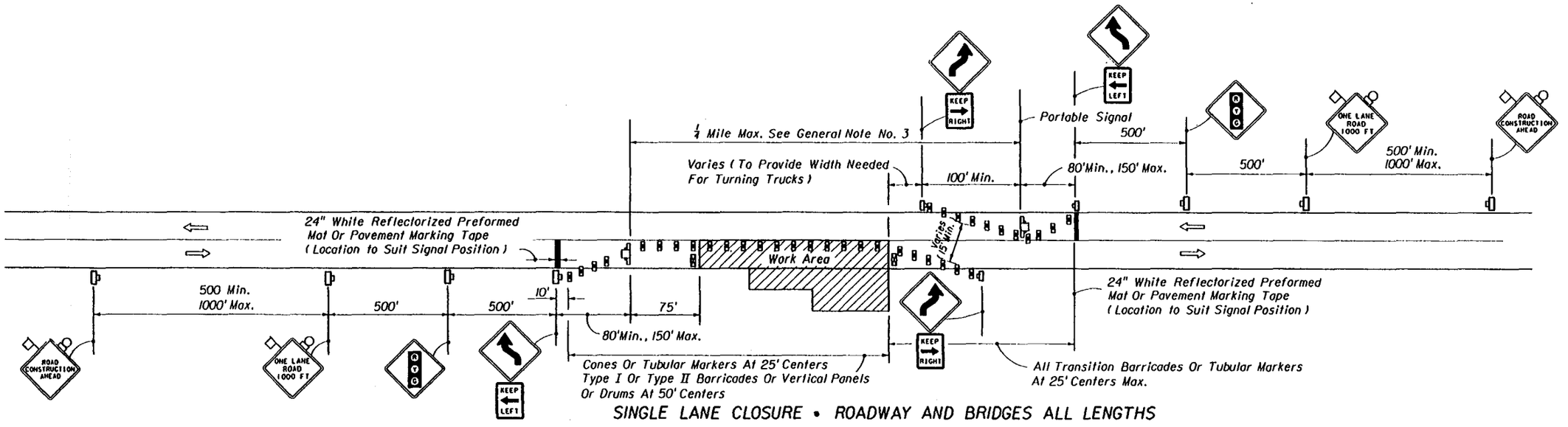

SINGLE LANE CLOSURE • ROADWAY AND BRIDGES ALL LENGTHS

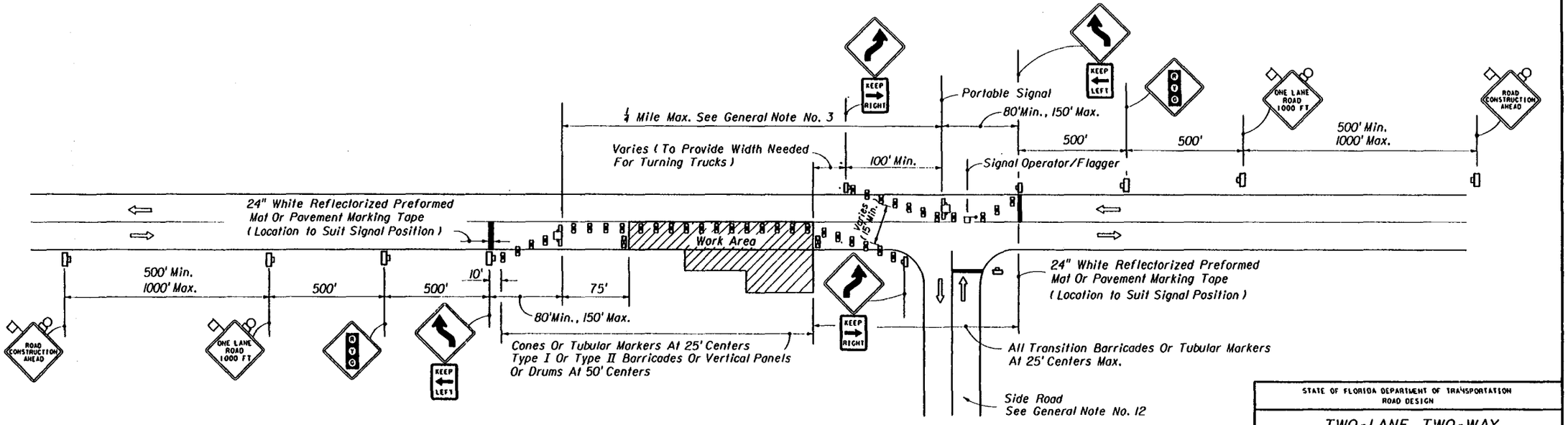

SINGLE LANE CLOSURE • ROADWAY AND BRIDGES ALL LENGTHS

STATE OF FLORIDA DEPARTMENT OF TRANSPORTATION
ROAD DESIGN

TWO-LANE, TWO-WAY LANE CLOSURE BY SIGNAL CONTROL DAY OR NIGHT OPERATIONS

	Names	Dates
Designed By	CDWW	5/89
Drawn By	HSD	5/89
Checked By	JVC/RNW	5/89
F.H.W.A. Approved:		

Approved By: Clark P. Scott, State Traffic Plans Engineer

Revision No.	Sheet No.	Index No.
92	2 of 4	608

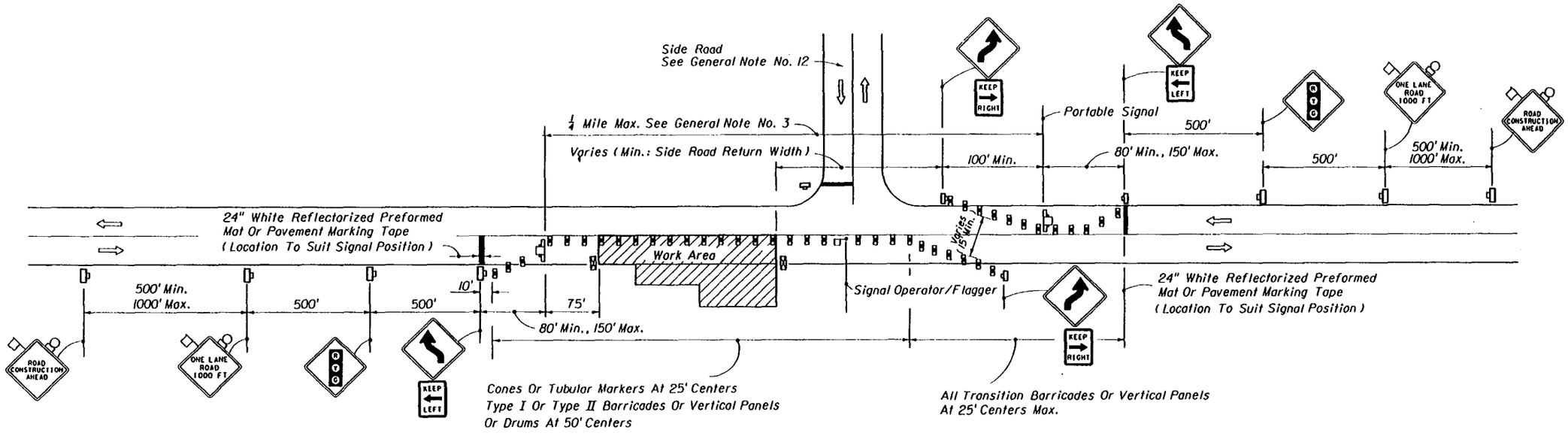

SINGLE LANE CLOSURE • ROADWAY AND BRIDGES ALL LENGTHS

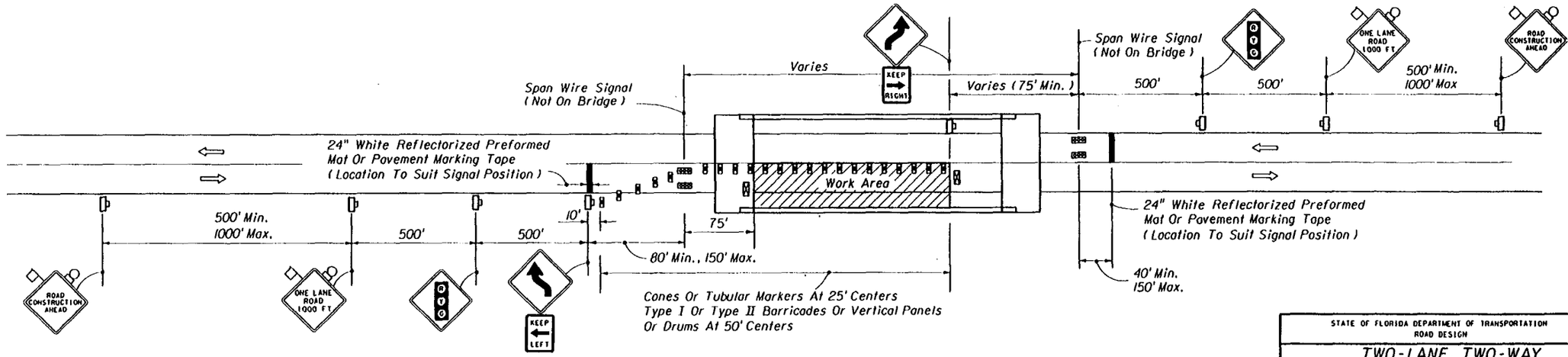

SINGLE LANE CLOSURE • SHORT BRIDGES

STATE OF FLORIDA DEPARTMENT OF TRANSPORTATION
ROAD DESIGN

TWO-LANE, TWO-WAY
LANE CLOSURE BY SIGNAL CONTROL
DAY OR NIGHT OPERATIONS

	Names	Dates
Designed By	CONM	5/89
Drawn By	HSO	5/89
Checked By	JMG/KNM	5/89
F.H.W.A. Approved:		

Approved By: Clarke A Scott
State Traffic Plans Engineer

Revision No.	Sheet No.	Index No.
94	3 of 4	608

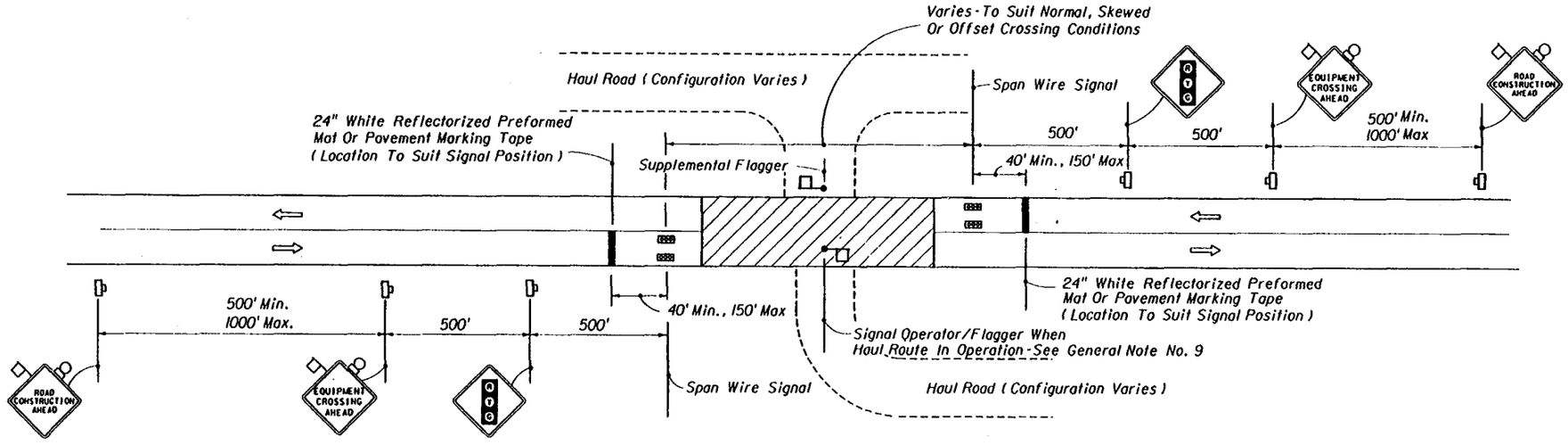

MOMENTARY ROADWAY CLOSURE • HAUL ROUTE CROSSING

STATE OF FLORIDA DEPARTMENT OF TRANSPORTATION
ROAD DESIGN

TWO-LANE, TWO-WAY LANE CLOSURE BY SIGNAL CONTROL DAY OR NIGHT OPERATIONS

	Names	Dates
Designed By	COWM	5/89
Drawn By	HSD	5/89
Checked By	JVG/KHW	5/89
F.H.W.A. Approved:		

Approved By Charles A. Scott
State Roadway Design Engineer

Revision No.	Sheet No.	Index No.
94	4 of 4	608

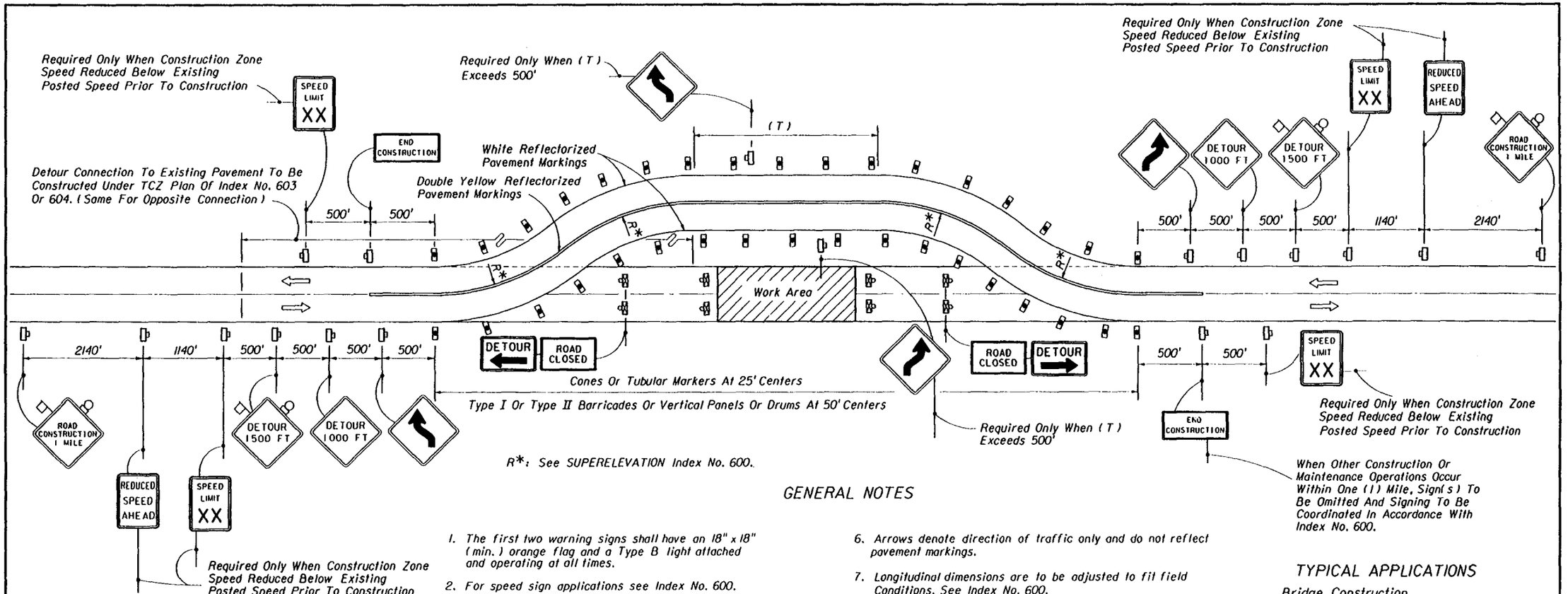

R*: See SUPERELEVATION Index No. 600.

SYMBOLS

- Work Area
- Sign With 18" x 18"(Min.) Orange Flag And Type B Light
- Type I Or Type II Barricade Or Vertical Panel Or Drum (With Steady Burning Light At Night Only). Tubular Markers May Be Used During Daylight Only.
- Type III Barricade (With Flashing Light)
- Work Zone Sign

GENERAL NOTES

1. The first two warning signs shall have an 18" x 18" (min.) orange flag and a Type B light attached and operating at all times.
2. For speed sign applications see Index No. 600.
3. Where the tangent distance (T) exceeds 600 feet, spacing between cones or tubular markers may be increased to 50 feet or spacing between Type I or Type II barricades, or vertical panels or drums may be increased to 100 feet within limits of the tangent, or post mounted delineators at 50 foot centers may be substituted for the barricades, vertical panels or drums.
4. On the existing pavement all existing markings within the realignment which conflict with the revised traffic pattern are to be removed and removable pavement markings used for marking a new centerline and edge lines.
5. Where the tangent distance (T) exceeds 600 feet and no passing or stopping sight distance restrictions exist, the yellow reflectorized markings used to indicate the centerline of the traveled way may be replaced with yellow reflectorized markings in a broken pattern. For raised pavement marker application see Index No. 600 and Index No. 17352.
6. Arrows denote direction of traffic only and do not reflect pavement markings.
7. Longitudinal dimensions are to be adjusted to fit field conditions. See Index No. 600.
8. When a side road intersects the highway on which work is being performed additional traffic control devices shall be erected in accordance with other applicable TCZ Indexes.
9. If temporary structures are required on the detour traffic control will be in conformance with Index No. 650.
10. For general TCZ requirements and additional information refer to Indexes Nos. 600 and 17352.

TYPICAL APPLICATIONS

Bridge Construction
Subgrade Restoration
Culvert Repair Or Construction

CONDITIONS

WHERE ANY VEHICLE, EQUIPMENT, WORKERS OR THEIR ACTIVITIES REQUIRE THE CLOSURE OF BOTH LANES AND A TEMPORARY DETOUR IS CONSTRUCTED

STATE OF FLORIDA DEPARTMENT OF TRANSPORTATION
ROAD DESIGN

TRAFFIC CONTROL THROUGH WORK ZONES

TWO-LANE, TWO-WAY • RURAL TEMPORARY DETOUR DAY OR NIGHT OPERATIONS

	Names	Dates
Designed By	CDW	12/87
Drawn By	HSD/JBW	12/87
Checked By	JVC/KNW	12/87
F.H.W.A. Approved		

Approved By: Clark A. Scott
State Traffic Plans Engineer

Revision No.	Sheet No.	Index No.
94	1 of 1	609

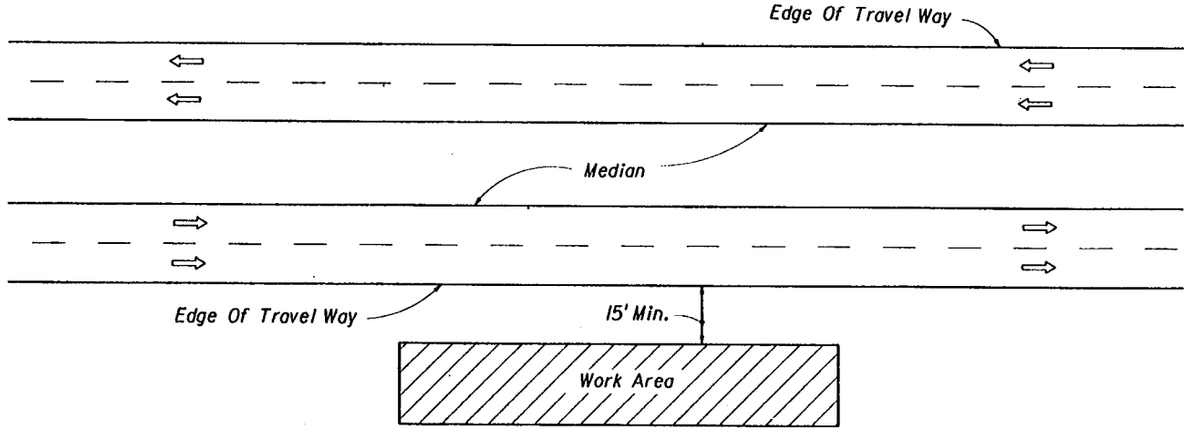

SYMBOLS

Work Area

GENERAL NOTES

1. If the work operation requires that two or more work vehicles cross the 15' zone in any one hour, traffic control will be in conformance with Index No. 602.
2. No special signing is required.
3. This index also applies when work is being performed on a multilane undivided highway.
4. This index also applies to work performed in the median more than 15 ft. from edge of travel way, both roadways.
5. Arrows denote direction of traffic only and do not reflect pavement markings.
6. When a side road intersects the highway on which work is being performed additional traffic control devices shall be erected in accordance with other applicable TCZ Indexes.
7. For general TCZ requirements and additional information refer to Index No. 600.

TYPICAL APPLICATIONS

Landscaping Work
Utility Work
Fencing Work
Cleaning Drainage Structures
Reworking Ditches

CONDITIONS

WHERE ALL VEHICLES, EQUIPMENT, WORKERS AND THEIR ACTIVITIES ARE MORE THAN 15' FROM THE EDGE OF PAVEMENT

STATE OF FLORIDA DEPARTMENT OF TRANSPORTATION
ROAD DESIGN

TRAFFIC CONTROL THROUGH WORK ZONES

MULTILANE DIVIDED OR UNDIVIDED
RURAL • DAY OR NIGHT OPERATIONS

	Names	Dates
Designed By	CDMM	12/87
Drawn By	HSD/JBW	12/87
Checked By	JVC/RMM	12/87
F.H.W.A. Approved:		

Approved By: Clark A. Scott
Deputy State Design Engineer, Roadways

Revision No.	Sheet No.	Index No.
88	1 of 1	610

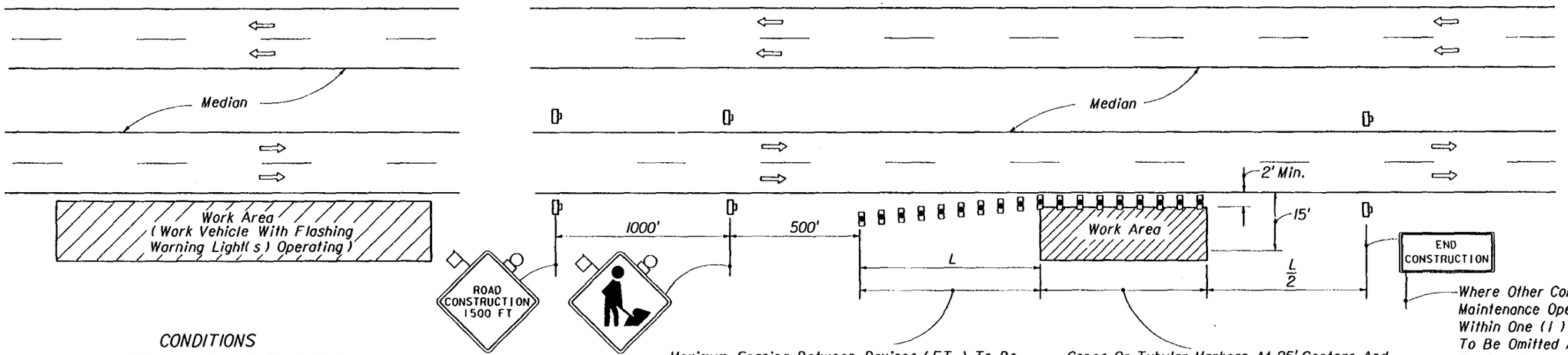

Where Other Construction Or Maintenance Operations Occur Within One (1) Mile, Sign(s) To Be Omitted And Signing To Be Coordinated In Accordance With Index No. 600.

CONDITIONS

WHERE ANY VEHICLE, EQUIPMENT, WORKERS OR THEIR ACTIVITIES ENCROACH THE AREA CLOSER THAN 15' BUT NOT CLOSER THAN 2' TO THE EDGE OF PAVEMENT FOR A PERIOD OF LESS THAN 60 MINUTES

Maximum Spacing Between Devices (FT.) To Be Equal To The Speed Limit (MPH) But Not Greater Than 25' For Cones Or Tubular Markers Or 50' For Type I Or Type II Barricades Or Vertical Panels Or Drums.

Cones Or Tubular Markers At 25' Centers And Type I Or Type II Barricades Or Vertical Panels Or Drums At 50' Centers For First 250', Thereafter Cones Or Tubular Markers At 50' Centers And Type I Or Type II Barricades Or Vertical Panels Or Drums At 100' Centers.

CONDITIONS

WHERE ANY VEHICLE, EQUIPMENT, WORKERS OR THEIR ACTIVITIES ENCROACH THE AREA CLOSER THAN 15' BUT NOT CLOSER THAN 2' TO THE EDGE OF PAVEMENT FOR A PERIOD OF 60 MINUTES OR GREATER

GENERAL NOTES

1. All vehicles, equipment, workers and their activities are restricted at all times to one side of the roadway.
2. If the work operation encroaches on the through traffic lanes or when four or more work vehicles enter the through traffic lanes in a one hour period a flagger shall be provided and a FLAGGER sign shall be substituted for the WORKERS sign. The flagger shall be positioned at the point of vehicle entry or departure from the work area.
3. This TCZ plan also applies to work performed in the median more than 2 feet but less than 15 feet from the edge of either pavement.
4. The first two warning signs, each side, shall have a 18" x 18" (min.) orange flag and a Type B light attached and operating at all times.

   Mesh signs may be used for (Daylight Only) operations Type B Lights and Orange Flags are not required.
5. The WORKERS legend sign may be substituted for the symbol sign.
6. L (min) = $\frac{WS}{2}$ for speeds ≥ 45 mph

   = $\frac{WS^2}{120}$ for speeds ≤ 40 mph

   Where:
   W = Width of lateral transition in feet
   S = Posted speed limit (MPH).
7. Arrows denote direction of traffic only and do not reflect pavement markings.
8. Longitudinal dimensions are to be adjusted to fit field conditions. See Index No. 600.
9. When work is being performed on a multilane undivided roadway the signs normally mounted in the median (as shown) shall be omitted.
10. WORKERS signs to be removed or fully covered when no work is being performed.
11. END CONSTRUCTION signs required only when work exceeds one daylight period.
12. When a side road intersects the highway on which work is being performed additional traffic control devices shall be erected in accordance with other applicable TCZ Indexes.
13. If the work operation does not exceed 15 minutes, signs, barricades, vertical panels, cones, tubular markers, or drums will not be required provided vehicles in the work area have warning light(s) operating.
14. For general TCZ requirements and additional information refer to Index No. 600.

SYMBOLS

- Work Area
- Sign With 18" x 18" (Min.) Orange Flag And Type B Light
- Type I Or Type II Barricade Or Vertical Panel Or Drum (With Steady Burning Light At Night Only). Tubular Markers May Be Used During Daylight Only.
- Work Zone Sign

TYPICAL APPLICATIONS

Utility Work
Culvert Extensions
Side Slope Work
Guardrail Work
Landscaping Work
Cleaning Drainage Structures
Reworking Ditches
Sign Installation And Maintenance
Shoulder Repair

STATE OF FLORIDA DEPARTMENT OF TRANSPORTATION
ROAD DESIGN

TRAFFIC CONTROL THROUGH WORK ZONES

MULTILANE DIVIDED OR UNDIVIDED RURAL • DAY OR NIGHT OPERATIONS

	Names	Dates
Designed By	CDMM	12/87
Drawn By	HSD/JBW	12/87
Checked By	JMC/KNM	12/87

Approved By Clark A. Scott
State Traffic Plans Engineer

F.H.W.A. Approved

Revision No.	Sheet No.	Index No.
94	1 of 1	611

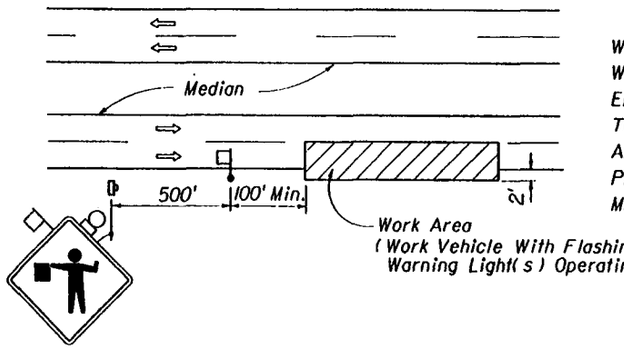

CONDITIONS

WHERE ANY VEHICLE, EQUIPMENT, WORKERS OR THEIR ACTIVITIES ENCROACH ON THE LANE ADJACENT TO EITHER SHOULDER AND THE AREA 2' OUTSIDE THE EDGE OF PAVEMENT FOR A PERIOD OF 15 MINUTES OR LESS

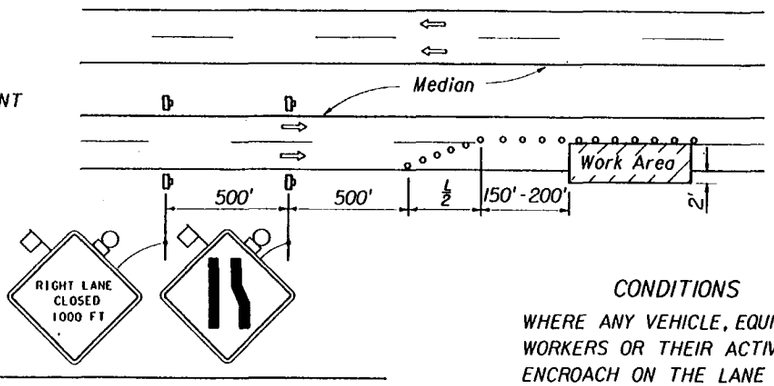

CONDITIONS

WHERE ANY VEHICLE, EQUIPMENT, WORKERS OR THEIR ACTIVITIES ENCROACH ON THE LANE ADJACENT TO EITHER SHOULDER AND THE AREA 2' OUTSIDE THE EDGE OF PAVEMENT FOR A PERIOD OF MORE THAN 15 MINUTES BUT LESS THAN 60 MINUTES

CONDITIONS

WHERE ANY VEHICLE, EQUIPMENT, WORKERS OR THEIR ACTIVITIES ENCROACH ON THE LANE ADJACENT TO EITHER SHOULDER AND THE AREA 2' OUTSIDE THE EDGE OF PAVEMENT FOR A PERIOD OF 60 MINUTES OR GREATER

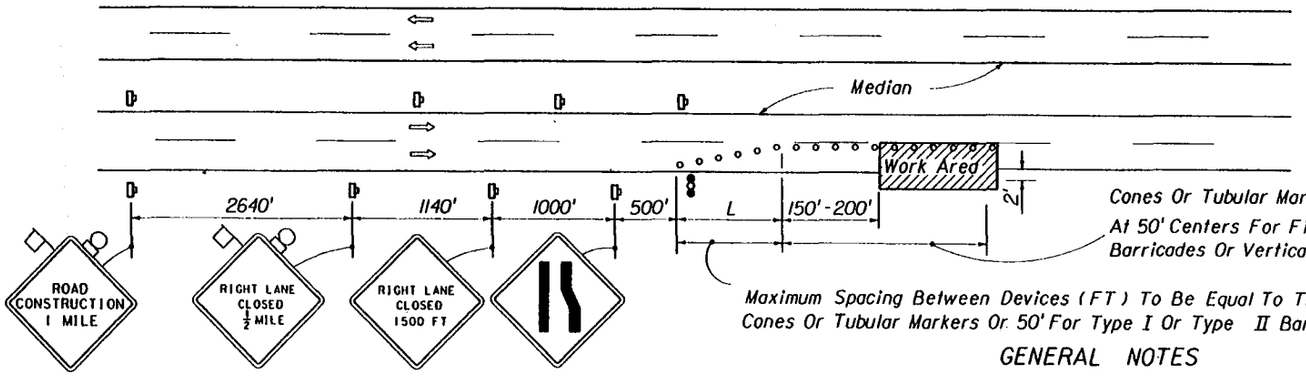

Cones Or Tubular Markers At 25' Centers And Type I Or Type II Barricades Or Vertical Panels Or Drums At 50' Centers For First 250', Thereafter Cones Or Tubular Markers At 50' Centers And Type I Or Type II Barricades Or Vertical Panels Or Drums At 100' Centers.

Maximum Spacing Between Devices (FT) To Be Equal To The Speed Limit (MPH) But Not Greater Than 25' For Cones Or Tubular Markers Or 50' For Type I Or Type II Barricades Or Vertical Panels Or Drums.

SYMBOLS

- Work Area
- Sign With 18"x 18" (Min.) Orange Flag And Type B Light
- Type I Or Type II Barricade Or Vertical Panel Or Cone Or Tubular Marker Or Drum
- Work Zone Sign
- Flagger
- Advance Warning Arrow Panel

GENERAL NOTES

1. Work operations shall be confined to one traffic lane, leaving the adjacent lane open to traffic.
2. All vehicles, equipment, workers, and their activities are restricted at all times to one side of the pavement.
3. The first two warning signs, each side, shall have an 18"x 18" (min.) orange flag and a Type B light attached and operating at all times.
4. Mesh signs may be used for (Daylight Only) operations. Type B Lights and Orange Flags are not required.
5. On undivided highways the median signs as shown are to be omitted.
6. When work is performed in the median lane on divided highways the barricading plan is inverted and left lane closed and lane reduction signs substituted for the right lane closed and lane reduction signs.

   The same applies to undivided highways with the following exceptions: (a) Work shall be confined within one median lane. (b) Additional barricades, cones, or drums shall be placed along the centerline abutting the work area and across the trailing end of the work area.

   When work on undivided highways occurs across the centerline so as to encroach on both median lanes, the inverted plan is applied to the approach of both roadways.
7. The RIGHT (LEFT) LANE CLOSED signs are to be removed or fully covered when no work is being performed and the highway is open to traffic.
8. L (min.) = Length of taper in feet :
   = WS for speeds ≥ 45 mph
   = $\frac{WS^2}{60}$ for speeds ≤ 40 mph

   Where:
   W = Width of lateral transition in feet
   S = Posted speed limit (MPH).
9. Arrows denote direction of traffic only and do not reflect pavement markings.
10. Longitudinal dimensions are to be adjusted to fit field conditions. See Index No. 600.
11. When work is being performed on a multilane undivided roadway the signs normally mounted in the median (as shown) shall be omitted.
12. This TCZ plan does not apply when work is being performed in the middle or inside lane(s) of a six or more lane highway. See Indexes Nos. 616 and 617.
13. When a side road intersects the highway on which work is being performed additional traffic control devices shall be erected in accordance with other applicable TCZ Indexes.
14. For general TCZ requirements and additional information, refer to Index No. 600.

TYPICAL APPLICATIONS

- Pavement Resurfacing
- Pavement Repair
- Utility Work
- Bridge Repair
- Guardrail Work
- Pavement Coring And Straight Edging

STATE OF FLORIDA DEPARTMENT OF TRANSPORTATION
ROAD DESIGN

TRAFFIC CONTROL THROUGH WORK ZONES

MULTILANE, DIVIDED AND UNDIVIDED RURAL • OPERATIONS ONE DAYLIGHT PERIOD OR LESS

	Names	Date
Designed By	CONW	12/87
Drawn By	HSD/JBW	12/87
Checked By	JVG/RNW	12/87
F.H.W.A. Approved:		

Approved By: Clark A. Scott
State Traffic Plans Engineer

Revision No.	Sheet No.	Index No.
94	1 of 1	612

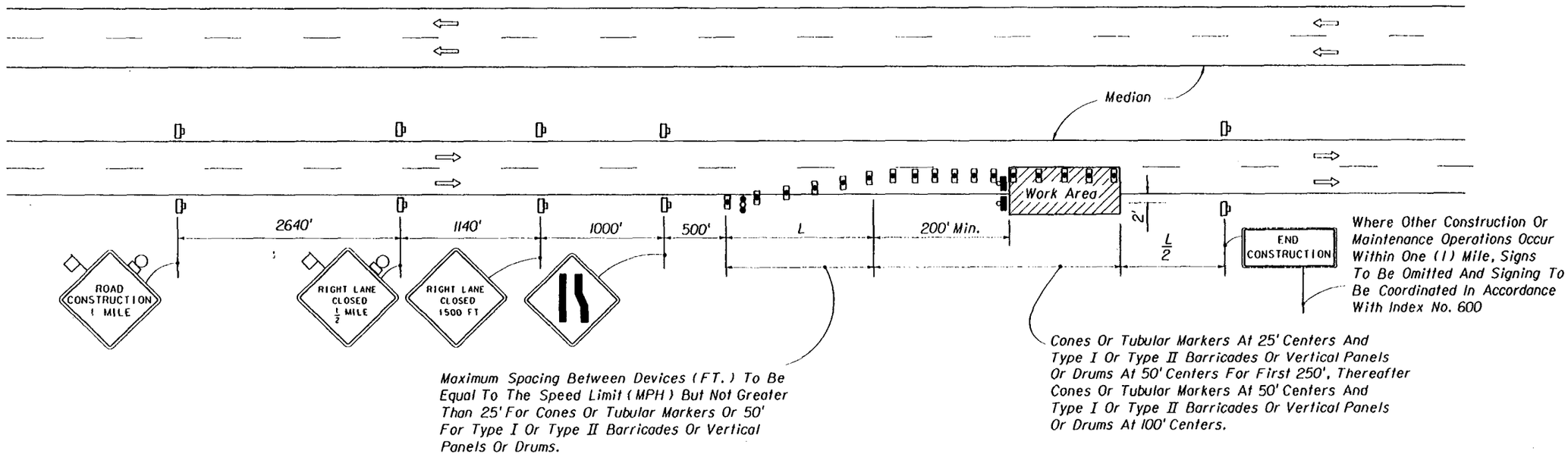

GENERAL NOTES

1. Work operations shall be confined to one traffic lane, leaving the adjacent lane open to traffic.
2. All vehicles, equipment, workers and their activities are restricted at all times to one side of the pavement.
3. The first two warning signs, each side, shall have a 18" x 18" (min.) orange flag and a Type B light attached and operating at all times.
4. All signs shall be post mounted if the closure time exceeds 12 hours.
5. On undivided highways the median signs as shown are to be omitted.
6. When work is performed in the median lane on divided highways the barricading plan is inverted and left lane closed and lane reduction signs substituted for the right lane closed and lane reduction signs.

   The same applies to undivided highways with the following exceptions: (a) Work shall be confined within one median lane. (b) Additional barricades, cones, or drums shall be placed along the centerline abutting the work area and across the trailing end of the work area.

   When work on undivided highways occurs across the centerline so as to encroach on both median lanes, the inverted plan is applied to the approach of both roadways.
7. Signs and traffic control devices are to be modified in accordance with INERMITTENT WORK STOPPAGE details (sheet 2 of 2) when no work is being performed and the highway is open to traffic.
8. L (min.) = Length of taper in feet:
   = WS for speeds ≥ 45 mph
   = $\frac{WS^2}{60}$ for speeds ≤ 40 mph

   Where:
   W = Width of lateral transition in feet
   S = Posted speed limit (MPH).
9. Arrows denote direction of traffic only and do not reflect pavement markings.
10. Longitudinal dimensions are to be adjusted to fit field conditions. See Index No. 600.
11. When work is being performed on a multilane undivided roadway the signs normally mounted in the median (as shown) shall be omitted.
12. When a side road intersects the highway on which work is being performed, additional traffic control devices shall be erected in accordance with other applicable TCZ Indexes.
13. For general TCZ requirements and additional information refer to Index No. 600.

SYMBOLS

- Work Area
- Sign With 18" x 18" (Min.) Orange Flag And Type B Light
- Type I Or Type II Barricade Or Vertical Panel Or Drum (With Steady Burning Light At Night Only). Tubular Markers May Be Used During Daylight Only.
- Type I, Type II Or Type III Barricade Or Vertical Panel Or Drum (With Flashing Light)
- Work Zone Sign
- Advance Warning Arrow Panel

TYPICAL APPLICATIONS

Pavement Resurfacing
Pavement Repair
Utility Work
Bridge Repair
Guardrail Work

CONDITIONS

WHERE ANY VEHICLE, EQUIPMENT, WORKERS OR THEIR ACTIVITIES ENCROACH ON THE LANE ADJACENT TO EITHER SHOULDER AND THE AREA 2' OUTSIDE THE EDGE OF PAVEMENT

STATE OF FLORIDA DEPARTMENT OF TRANSPORTATION
ROAD DESIGN

TRAFFIC CONTROL THROUGH WORK ZONES

MULTILANE, DIVIDED AND UNDIVIDED • RURAL
NIGHT OPERATIONS OR OPERATIONS
EXCEEDING ONE DAYLIGHT PERIOD

	Names	Dates	Approved By
Designed By	COMM	12/87	Clark A. Scott, State Traffic Plans Engineer
Drawn By	HSD/JBW	12/87	
Checked By	JVG/KNM	12/87	Revision No. 94 · Sheet No. 1 of 2 · Index No. 613
F.H.W.A. Approved:			

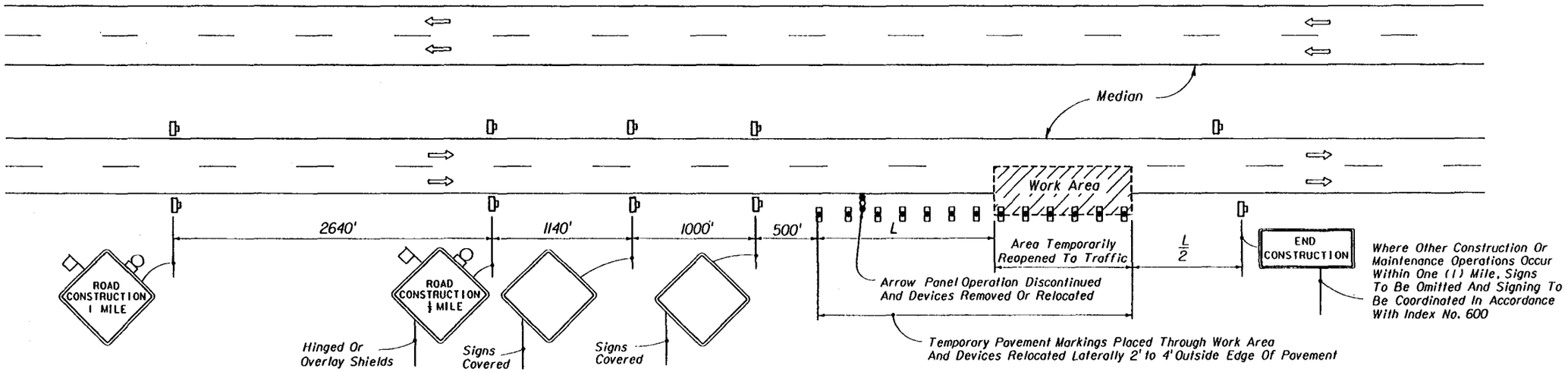

EVEN PAVEMENT

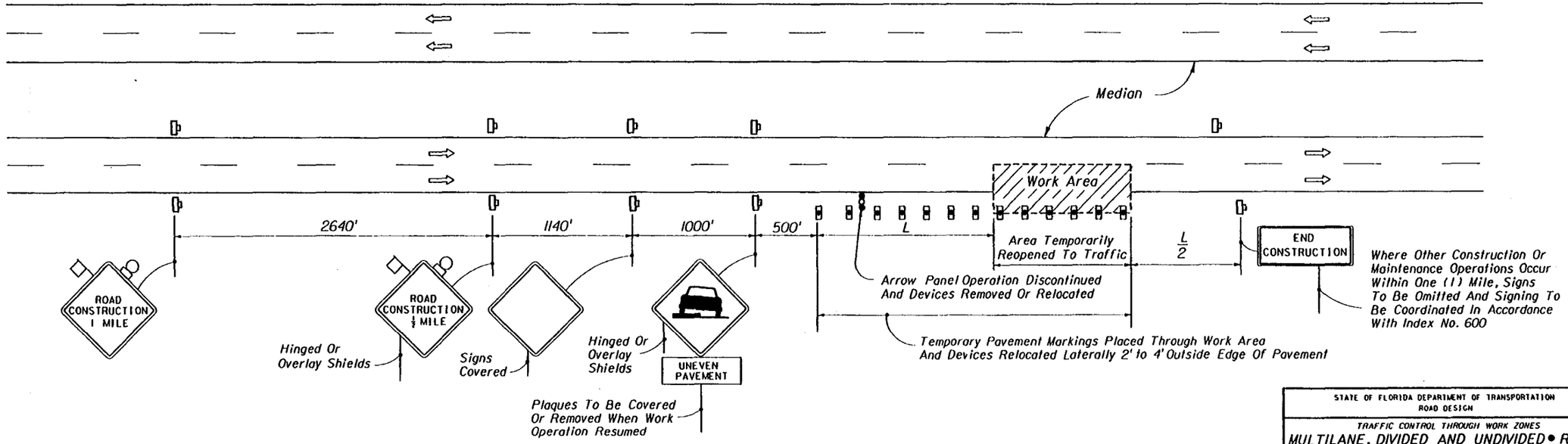

UNEVEN PAVEMENT

INTERMITTENT WORK STOPPAGE • RIGHT LANE REOPENED TO TRAFFIC • DAYTIME OR NIGHTIME

STATE OF FLORIDA DEPARTMENT OF TRANSPORTATION
ROAD DESIGN

TRAFFIC CONTROL THROUGH WORK ZONES

MULTILANE, DIVIDED AND UNDIVIDED • RURAL
NIGHT OPERATIONS OR OPERATIONS
EXCEEDING ONE DAYLIGHT PERIOD

	Names	Dates
Designed By	COWH	12/87
Drawn By	HSD/JBW	12/87
Checked By	JWG/RNW	12/87
F.H.W.A. Approved:		

Approved By: Clark A Scott
State Roadway Design Engineer

Revision No.	Sheet No.	Index No.
90	2 of 2	613

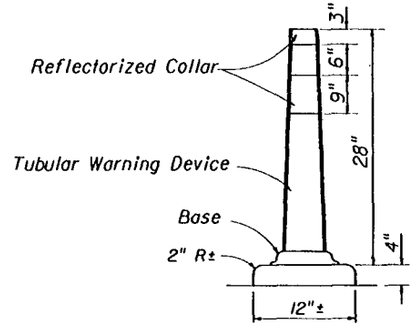

SECTION AA

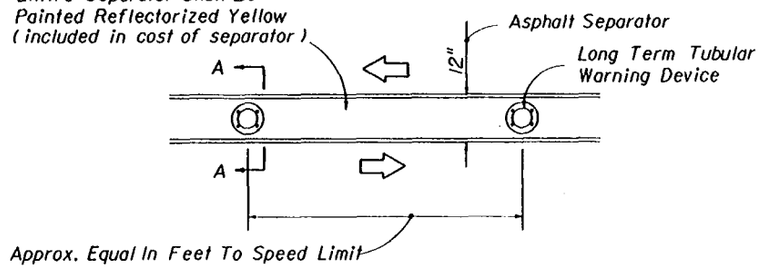

PLAN

Notes: (a) The tubular device is to be made of a flexible material or have a flexible joint at the base such that it will not cause damage to vehicles upon impact and will return to its original shape after being struck by a 5000 pound vehicle at a velocity of 75 ft./sec..

(b) The tubular device shall be orange with two white reflectorized collars.

(c) The Tubular device may be attached by bituminous adhesive or other methods approved by the Engineer.

(d) Reflectorized materials shall have a smooth sealed outer surface which will display the same approximate color day and night.

(e) Twelve inch (12") openings for drainage will be constructed in the separator island every 25' in areas of grades of 1% or less or every 50' in areas of grades over 1% as directed by the Engineer.

DETAIL OF TEMPORARY ASPHALT SEPARATOR

SYMBOLS

- Work Area
- Sign With 18" x 18" (Min.) Orange Flag And Type B Light
- Type I Or Type II Barricade Or Vertical Panel Or Drum (With Steady Burning Light At Night Only). Tubular Markers May Be Used During Daylight Only.
- Work Zone Sign
- Advance Warning Arrow Panel

GENERAL NOTES

1. All vehicles, equipment, workers and their activities are restricted at all times to one side of the highway.
2. The first two warning signs, each side, shall have a 18" x 18" (min) orange flag and a Type B light attached and operating at all times.
3. All signs shall be post mounted.
4. TWO-WAY TRAFFIC sign(s) shall be repeated every one-quarter ($\frac{1}{4}$) mile, in each direction, throughout the tangent distance (T).
5. L (min.) = WS for speeds ≥ 45 mph
   $= \frac{WS^2}{60}$ for speeds ≤ 40 mph
   Where:
   W = Width of lateral transition in feet
   S = Posted speed limit (MPH).
6. Where the tangent distance (T) exceeds 250 feet, spacing between cones or tubular markers may be increased to 50 feet or spacing between Type I or II barricades or vertical panels or drums may be increased to 100 feet within the limits of the tangent, or post mounted delineators at 50 foot centers may be substituted for the barricades, vertical panels, cones, tubular markers or drums.
7. All existing pavement markings within the realignment which conflict with the revised traffic pattern are to be removed and removable pavement marking used for marking new edge lines.
8. Arrows denote direction of traffic only and do not reflect pavement markings.
9. Longitudinal dimensions are to be adjusted to fit field conditions. See Index No. 600.
10. When side roads, cross roads or interchanges are located within the limits for work zone traffic control additional traffic control devices shall be erected in accordance with other applicable TCZ Indexes.
11. For general TCZ requirements and additional information refer to Index No. 600.

APPLICATIONS

Scheme 1: Restricted Construction Limits

Scheme 2: Unrestricted Construction Limits And Light To Moderate Traffic

Scheme 3: Unrestricted Construction Limits And Moderate To Heavy Traffic

Where: Construction Limits Are The Outward Beginning Or Ending Of Lane Reductions

Where: Unless A Specific Scheme Is Called For In The Plans, Scheme Selection Shall Be At The Contractors Option And As Approved By The Engineer

CONDITIONS

WHERE ANY VEHICLE, EQUIPMENT, WORKERS OR THEIR ACTIVITIES REQUIRE THE CLOSURE OF ONE ROADWAY AND THE OPPOSING ROADWAY IS CONVERTED TO TEMPORARY TWO-WAY TRAVEL BY WAY OF CROSSOVERS

STATE OF FLORIDA DEPARTMENT OF TRANSPORTATION
ROAD DESIGN

TRAFFIC CONTROL THROUGH WORK ZONES

MULTILANE DIVIDED • RURAL DAY OR NIGHT OPERATIONS

	Names	Dates
Designed By	COMM	12/87
Drawn By	HSD/JBW	12/87
Checked By	JVC/KNW	12/87
F.H.W.A. Approved:		

Approved By: Charles Scott
State Traffic Plans Engineer

Revision No.	Sheet No.	Index No.
94	1 of 2	614

BUFFER LENGTH (FT)		
Construction Zone Speed MPH	X	Z
60-70	560	630
55	360	510
≤ 50	180	380

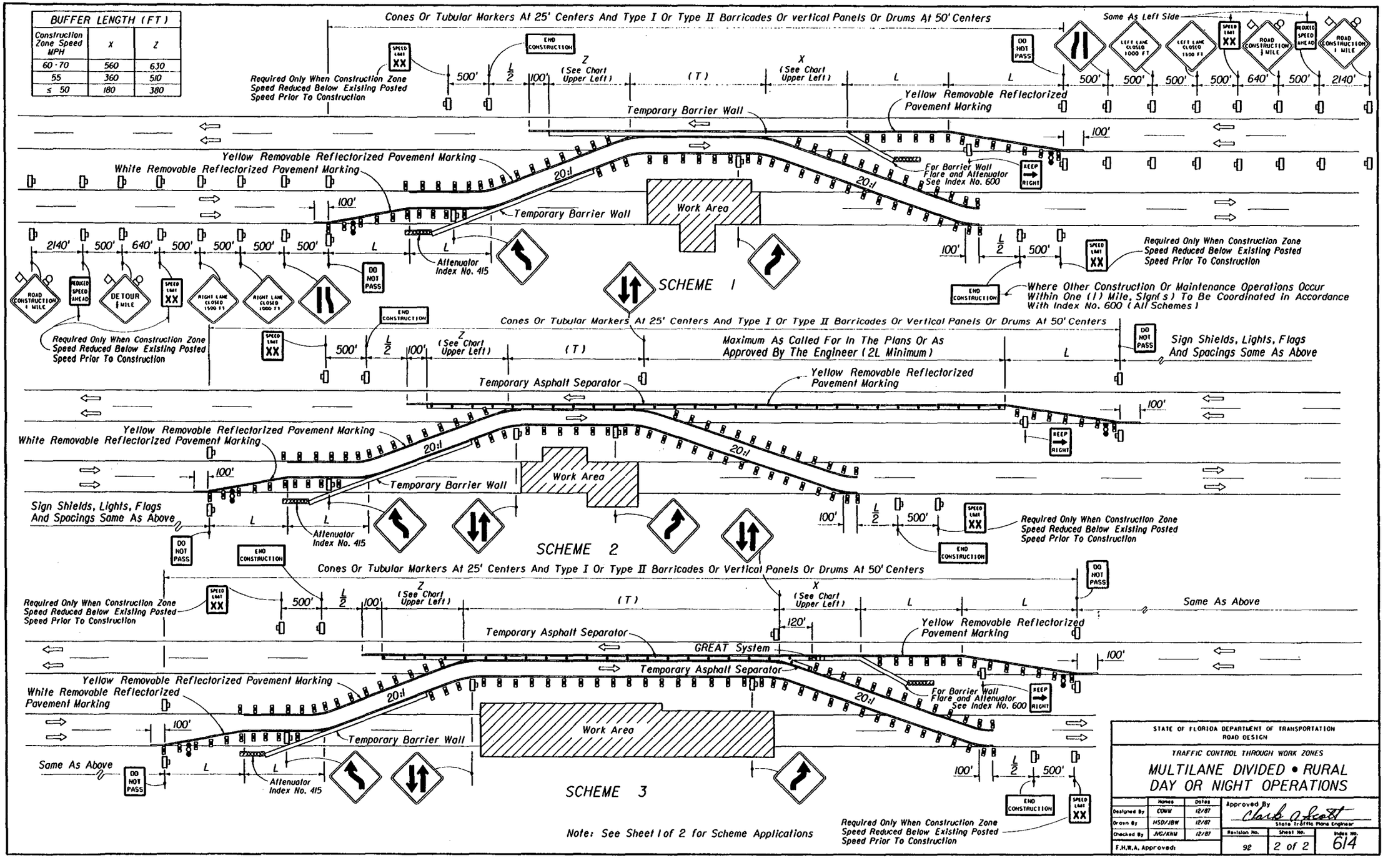

STATE OF FLORIDA DEPARTMENT OF TRANSPORTATION
ROAD DESIGN

TRAFFIC CONTROL THROUGH WORK ZONES

MULTILANE DIVIDED • RURAL DAY OR NIGHT OPERATIONS

	Names	Dates
Designed By	CDWM	12/87
Drawn By	HSD/JBW	12/87
Checked By	JVG/RNW	12/87
F.H.W.A. Approved:		

Approved By Clark A. Scott
State Traffic Plans Engineer

Revision No.	Sheet No.	Index No.
92	2 of 2	614

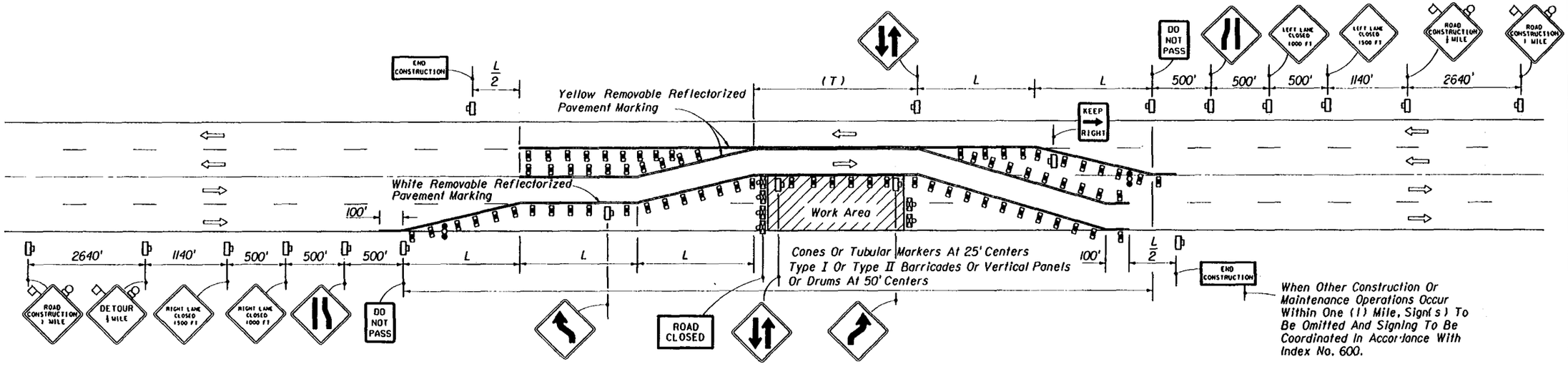

GENERAL NOTES

1. All vehicles, equipment, workers and their activities are restricted at all times to one side of the pavement.
2. The first two warning signs shall have a 18" x 18" (min.) orange flag and a Type B light attached and operating at all times.
3. All signs, except those required in paved areas, shall be post mounted if the closure time exceeds 12 hours.
4. TWO-WAY TRAFFIC signs shall be repeated every one-quarter ($\frac{1}{4}$) mile, in each direction, through the tangent distance (T).
5. L (min.) = WS for speeds ≥ 45 mph
   $= \frac{WS^2}{60}$ for speeds ≤ 40 mph
   Where:
   W = Width of lateral transition in feet.
   S = Posted speed limit (MPH).
6. Where the tangent distance (T) exceeds 250' feet, spacing between cones or tubular markers may be increased to 50 feet or spacing between Type I or Type II barricades or vertical panels or drums may be increased to 100 feet within the limits of the tangent.
7. This index does not apply when work is being performed in the middle lane(s) of a six or more lane highway. Special maintenance of traffic details will be required.
8. Arrows denote direction of traffic only and do not reflect pavement markings.
9. Longitudinal dimensions are to be adjusted to fit field conditions. See Index No. 600.
10. When a side road intersects the highway on which work is being performed additional traffic control devices shall be erected in accordance with other applicable TCZ Indexes.
11. For general TCZ requirements and additional information refer to Index No. 600.

SYMBOLS

- Work Area
- Sign With 18" x 18" (Min.) Orange Flag And Type B Light
- Type I Or Type II Barricade Or Vertical Panel Or Drum (With Steady Burning Light At Night Only). Tubular Markers May Be Used During Daylight Only.
- Type III Barricade (With Flashing Light)
- Work Zone Sign
- Advance Warning Arrow Panel

CONDITIONS

WHERE ANY VEHICLE, EQUIPMENT WORKERS OR THEIR ACTIVITIES REQUIRE THE CLOSURE OF THE LANES IN ONE DIRECTION AND A DETOUR IS PROVIDED BY UTILIZING ONE LANE OF THE OPPOSING TRAFFIC LANES

STATE OF FLORIDA DEPARTMENT OF TRANSPORTATION
ROAD DESIGN

TRAFFIC CONTROL THROUGH WORK ZONES

MULTILANE UNDIVIDED • RURAL
DAY OR NIGHT OPERATIONS

	Names	Dates
Designed By	COMM	12/87
Drawn By	HSD/JBW	12/87
Checked By	JVG/KNM	12/87

Approved By Clark A. Scott
State Traffic Plans Engineer

Revision No.	Sheet No.	Index No.
94	1 of 1	615

F.H.W.A. Approved:

EXISTING POSTED SPEED	PROPOSED WORK ZONE SPEED
MPH	MPH
65	45
55	35 or 45
45	35

REMARKS

The 'Proposed Work Zone Speeds' are recommended speeds for the traffic control plan detailed below; however, where the Engineer deems other speeds are appropriate, the applicable speeds are to be shown on the plans.

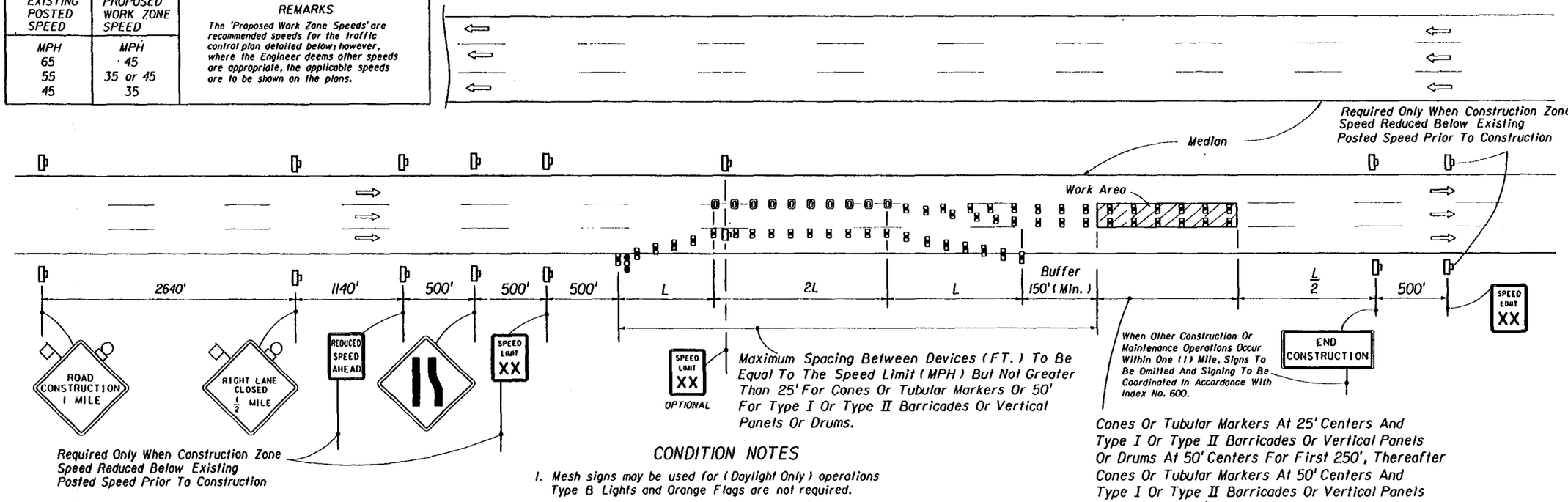

CONDITION NOTES

1. Mesh signs may be used for (Daylight Only) operations Type B Lights and Orange Flags are not required.
2. The RIGHT LANE CLOSED and lane reduction signs are to be removed or fully covered when no work is being performed and the center lane is opened to traffic.
3. For work performed in the outside lane refer to Indexes Nos. 612 and 613.
4. When the lane closure exceeds a continuous 24 hour period all existing pavement markings within the realignment which conflict with the revised traffic pattern are to be removed and removable pavement marking used for marking new edge lines and centerline.

SYMBOLS

- Work Area
- Sign With 18" x 18" (Min.) Orange Flag And Type B Light
- Type I Or Type II Barricade Or Vertical Panel Or Drum (With Steady Burning Light At Night Only). Tubular Markers May Be Used During Daylight Only.
- Work Zone Sign
- Advance Warning Arrow Panel
- Drum

GENERAL NOTES

1. All vehicles, equipment, workers, and their activities are restricted at all times to one side of the highway.
2. The first two warning signs each side shall have a 18" x 18" (min.) orange flag and a Type B light attached and operating at all times.
3. All signs shall be post mounted if closure time exceeds 12 hours.
4. L (min.) = WS for speeds ≥ 45 mph
   = $\frac{WS^2}{60}$ for speeds ≤ 40 mph
   Where:
   W = Width of lateral transition in feet.
   S = Posted speed limit (MPH).
5. Arrows denote direction of traffic only and do not reflect pavement markings.
6. Longitudinal dimensions are to be adjusted to fit field conditions. See Index No. 600.
7. END CONSTRUCTION signs required only when work exceeds one daylight period.
8. When a side road intersects the highway on which work is being performed additional traffic control devices shall be erected in accordance with other applicable TCZ Indexes.
9. For general TCZ requirements and additional information refer to Index No. 600.

TYPICAL APPLICATIONS

Pavement Resurfacing
Pavement Repair

CONDITIONS

WHERE ANY VEHICLE, EQUIPMENT, WORKERS OR THEIR ACTIVITIES ENCROACH ON ANY PORTION OF A CENTER LANE OF A MULTILANE HIGHWAY, AND TWO DRIVING LANES ARE MAINTAINED ON THE TRAVEL WAY.

STATE OF FLORIDA DEPARTMENT OF TRANSPORTATION
ROAD DESIGN

MULTILANE DIVIDED • RURAL

	Names	Dates
Designed By		
Drawn By	HSD/JBW	12/87
Checked By	JVC/KHW	12/87
F.H.W.A. Approved:		

Approved By: Clark A. Scott
State Traffic Plans Engineer

Revision No.	Sheet No.	Index No.
94	1 of 2	616

EXISTING POSTED SPEED	PROPOSED WORK ZONE SPEED
MPH	MPH
65	45
55	35 or 45
45	35

REMARKS

The 'Proposed Work Zone Speeds' are recommended speeds for the traffic control plan detailed below; however, where the Engineer deems other speeds are appropriate, the applicable speeds are to be shown on the plans.

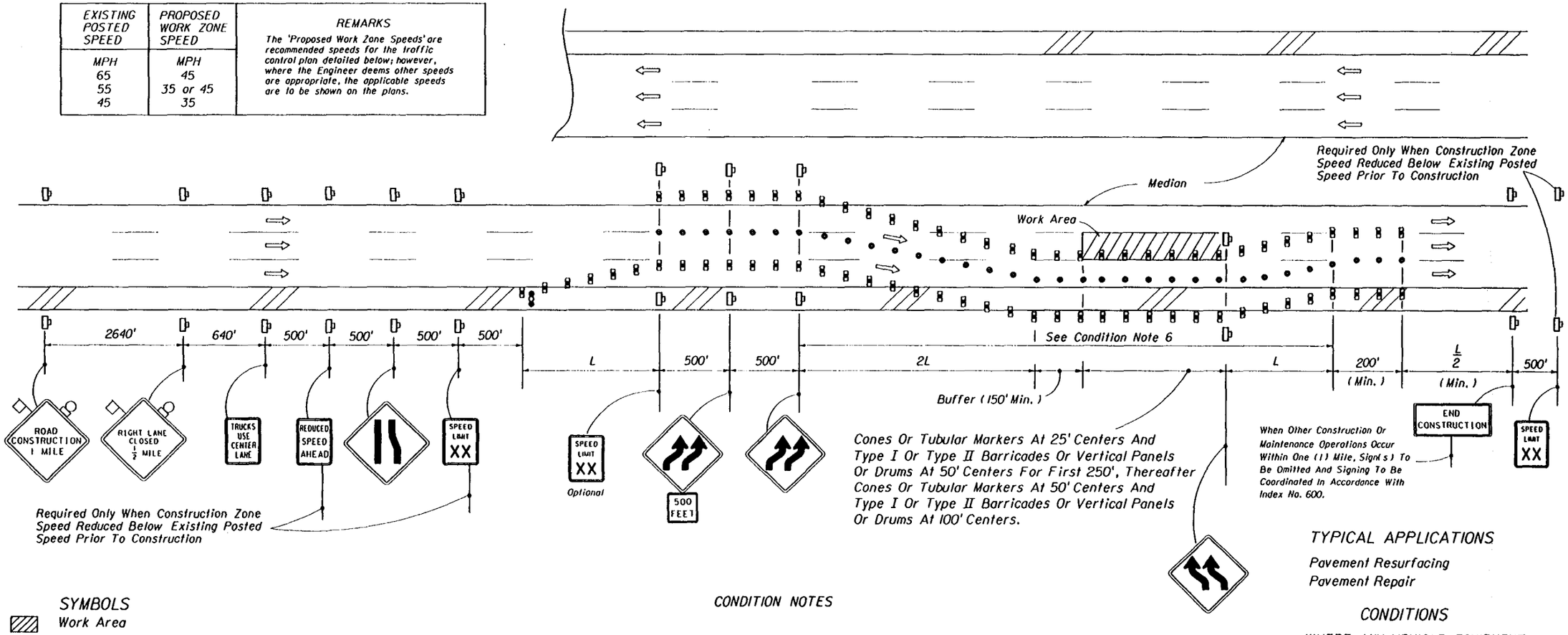

SYMBOLS

- Work Area
- Sign With 18" x 18" (Min.) Orange Flag And Type B Light
- Type I Or Type II Barricade Or Vertical Panel Or Drum (With Steady Burning Light At Night Only). Tubular Markers May Be Used During Daylight Only.
- Work Zone Sign
- Advance Warning Arrow Panel
- Cone Or Tubular marker (Except At Night Use Vertical Panels)

CONDITION NOTES

1. See General Notes, Sheet 1 of 2.
2. Maximum spacing between devices (ft.) to be equal to the speed limit (mph) but not greater than 25' for cones or tubular markers or 50' for Type I or Type II barricades or vertical panels or drums.

   Barricades, vertical panels or drums shall be used to delineate the edge lines of the transition areas (i.e. L and 2L). Beyond the transition area, any of the above noted devices may be used to delineate the edge lines.

   Cones or tubular markers shall be used to delineate the center line. (Except at night use vertical panels)
3. Length of time that traffic is using shoulder should be minimized. For example, remove lane closure and lane shift at night (unless performing nightwork) if practical.
4. The RIGHT LANE CLOSED, lane reduction and reverse curve signs are to be removed or fully covered when no work is being performed and the travel way is open to traffic.
5. When the lane closure exceeds a continuous 24 hour period all existing pavement markings within the realignment which conflict with the revised traffic pattern are to be removed and removable pavement markings used for marking new edge lines and centerlines.
6. For general TCZ requirements and additional information refer to Index No. 600.

TYPICAL APPLICATIONS

Pavement Resurfacing
Pavement Repair

CONDITIONS

WHERE ANY VEHICLE, EQUIPMENT, WORKERS OR THEIR ACTIVITIES ENCROACH ON ANY PORTION OF A CENTER LANE OF A MULTILANE HIGHWAY, AND TWO DRIVING LANES ARE MAINTAINED, AND, THE OUTSIDE SHOULDER PAVEMENT IS TEMPORARILY USED AS A TRAVEL LANE.

STATE OF FLORIDA DEPARTMENT OF TRANSPORTATION
ROAD DESIGN

MULTILANE DIVIDED • RURAL

	Names	Dates
Designed By	COW	6/89
Drawn By	HSD	6/89
Checked By	GAZ	6/89
F.H.W.A. Approved:		

Approved By: Charles A Scott
State Traffic Plans Engineer

Revision No.	Sheet No.	Index No.
94	2 of 2	616

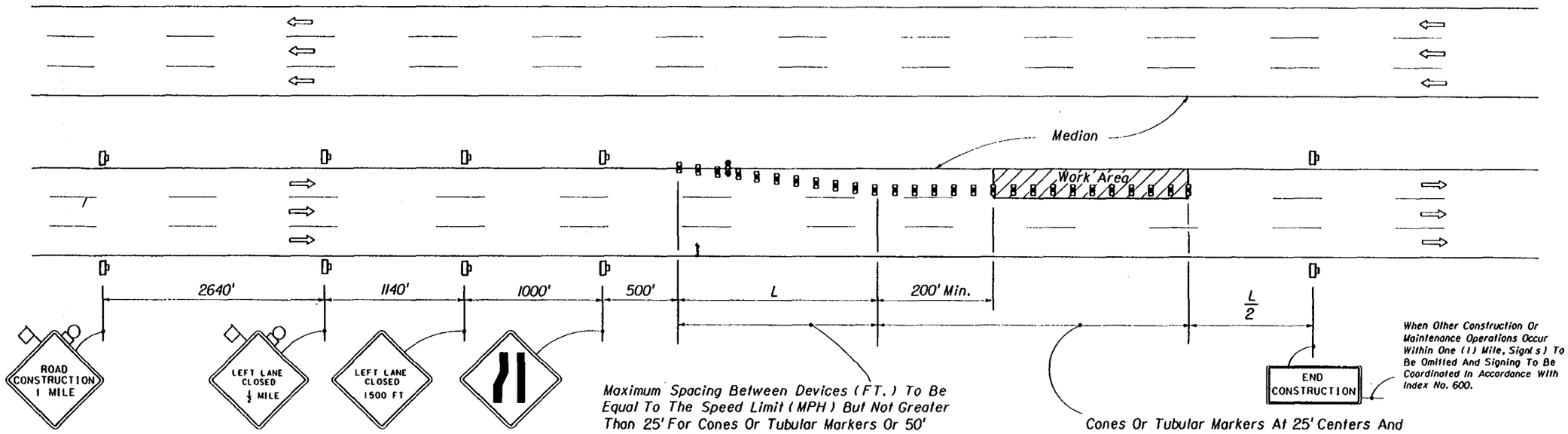

SYMBOLS

- Work Area
- Sign With 18" x 18" (Min.) Orange Flag And Type B Light
- Type I Or Type II Barricade Or Vertical Panel Or Drum (With Steady Burning Light At Night Only). Tubular Markers May Be Used During Daylight Only.
- Work Zone Sign
- Advance Warning Arrow Panel

GENERAL NOTES

1. All vehicles, equipment, workers and their activities are restricted at all times to one side of the highway.
2. The first two warning signs, each side, shall have a 18" x 18" (min.) orange flag and a Type B light attached and operating at all times.
3. Mesh signs may be used for (Daylight Only) operations Type B Lights and Orange Flags are not required.
4. All signs shall be post mounted if closure time exceeds 12 hours.
5. L (min.) = WS for speeds ≥ 45 mph
   = $\frac{WS^2}{60}$ for speeds ≤ 40 mph
   Where:
   W = Width of lateral transition in feet.
   S = Posted speed limit (MPH).
6. The LEFT LANE CLOSED and lane reduction signs are to be removed or fully covered when no work is being performed and the inside lane is open to traffic.
7. Advance warning arrow panels are required for both day and night operation. Either the right flashing arrow or the right sequential arrow modes may be used; the caution mode shall not be used.
8. Arrows denote direction of traffic only and do not reflect pavement marking.
9. Longitudinal dimensions are to be adjusted to fit field conditions. See Index No. 600.
10. When a side road intersects the highway on which work is being performed additional traffic control devices shall be erected in accordance with other applicable TCZ Indexes.
11. For work performed in the outside lane refer to Indexes Nos. 612 and 613.
12. For general TCZ requirements and additional information refer to Index No. 600.

CONDITIONS

WHERE ANY VEHICLE, EQUIPMENT, WORKERS OR THEIR ACTIVITIES WILL ENCROACH ON ANY PORTION OF THE INSIDE LANE OF A MULTILANE HIGHWAY

STATE OF FLORIDA DEPARTMENT OF TRANSPORTATION
ROAD DESIGN

TRAFFIC CONTROL THROUGH WORK ZONES

MULTILANE DIVIDED • RURAL

	Names	Dates
Designed By	COMM	12/87
Drawn By	HSD/JBW	12/87
Checked By	JVG/KNM	12/87
F.H.W.A. Approved:		

Approved By: Charles A. Scott
State Traffic Plans Engineer

Revision No.	Sheet No.	Index No.
94	1 of 1	617

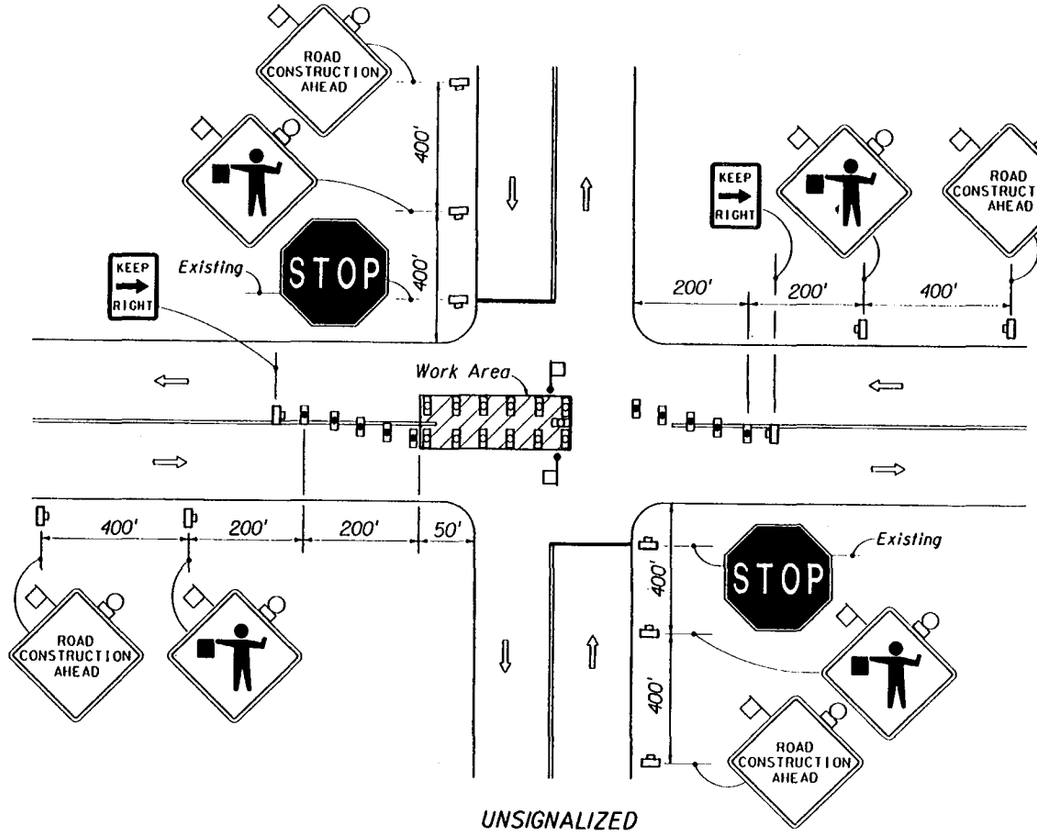

UNSIGNALIZED

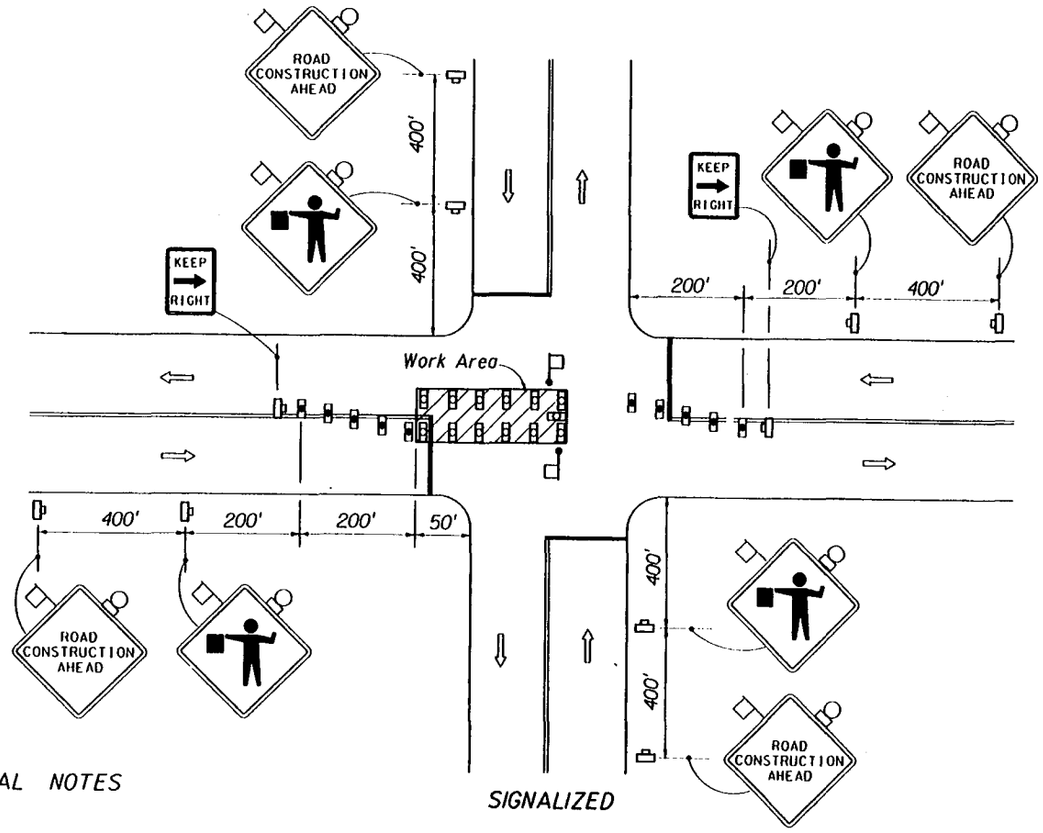

SIGNALIZED

SYMBOLS

- Work Area
- Sign With 18" x 18" (Min.) Orange Flag And Type B Light
- Type I Or Type II Barricade Or Vertical Panel Or Drum (With Steady Burning Light At Night Only). Tubular Markers May Be Used During Daylight Only.
- Type I Or Type II Barricade Or Vertical Panel Or Drum (with Flashing Light At Night Only)
- Work Zone Sign
- Flagger
- Stop Bar

GENERAL NOTES

1. All vehicles, equipment, workers(except flaggers) and their activities are forbidden in lane and intersection areas reserved for traffic.
2. The first two warning signs shall have a 18" x 18" (min) orange flag and a Type B light attached and operating at all times.

   Mesh signs may be used for (Daylight Only) operations Type B Lights and Orange Flags are not required.
3. The FLAGGER legend sign may be substituted for the symbol sign.
4. All signs shall be post mounted if closure time exceeds 12 hours.
5. When vehicles in a parking zone block the line of sight to TCZ signs or when TCZ signs encroach on a normal pedestrian walkway, the signs shall be post mounted and located in accordance with Index No. 17302.
6. Flaggers shall be located where they can control more than one direction of traffic.

   Flaggers shall be in sight of each other or in direct communication at all times.
7. Maximum spacing between barricades, vertical panels, cones, tubular markers and drums shall be not greater than 25'.
8. Arrows denote direction of traffic only and do not reflect pavement markings.
9. Longitudinal dimensions are to be adjusted to fit field conditions. See Index No. 600.
10. Temporary signal phasing modifications are to be approved by the District Traffic Operations Engineer prior to the beginning of work.
11. Work performed for a period of 60 minutes or less is to be conducted in accordance with Index No. 607.
12. For general TCZ requirements and additional information refer to index No. 600.

TYPICAL APPLICATIONS

Utility Work

Pavement Repair

CONDITIONS

WHERE ANY VEHICLE, EQUIPMENT, WORKERS OR THEIR ACTIVITIES ENCROACH ON THE PAVEMENT REQUIRING THE CLOSURE OF A PORTION OF ONE OR MORE TRAFFIC LANES IN AN INTERSECTION FOR A PERIOD OF MORE THAN 60 MINUTES

STATE OF FLORIDA DEPARTMENT OF TRANSPORTATION
ROAD DESIGN

TRAFFIC CONTROL THROUGH WORK ZONES

TWO-LANE, TWO-WAY • URBAN DAY OR NIGHT OPERATIONS

	Names	Dates
Designed By	COWN	12/87
Drawn By	HSD/JBW	12/87
Checked By	JMG/RNW	12/87
F.H.W.A. Approved:		

Approved By: Charles A. Scott
State Traffic Plans Engineer

Revision No.	Sheet No.	Index No.
94	1 of 1	620

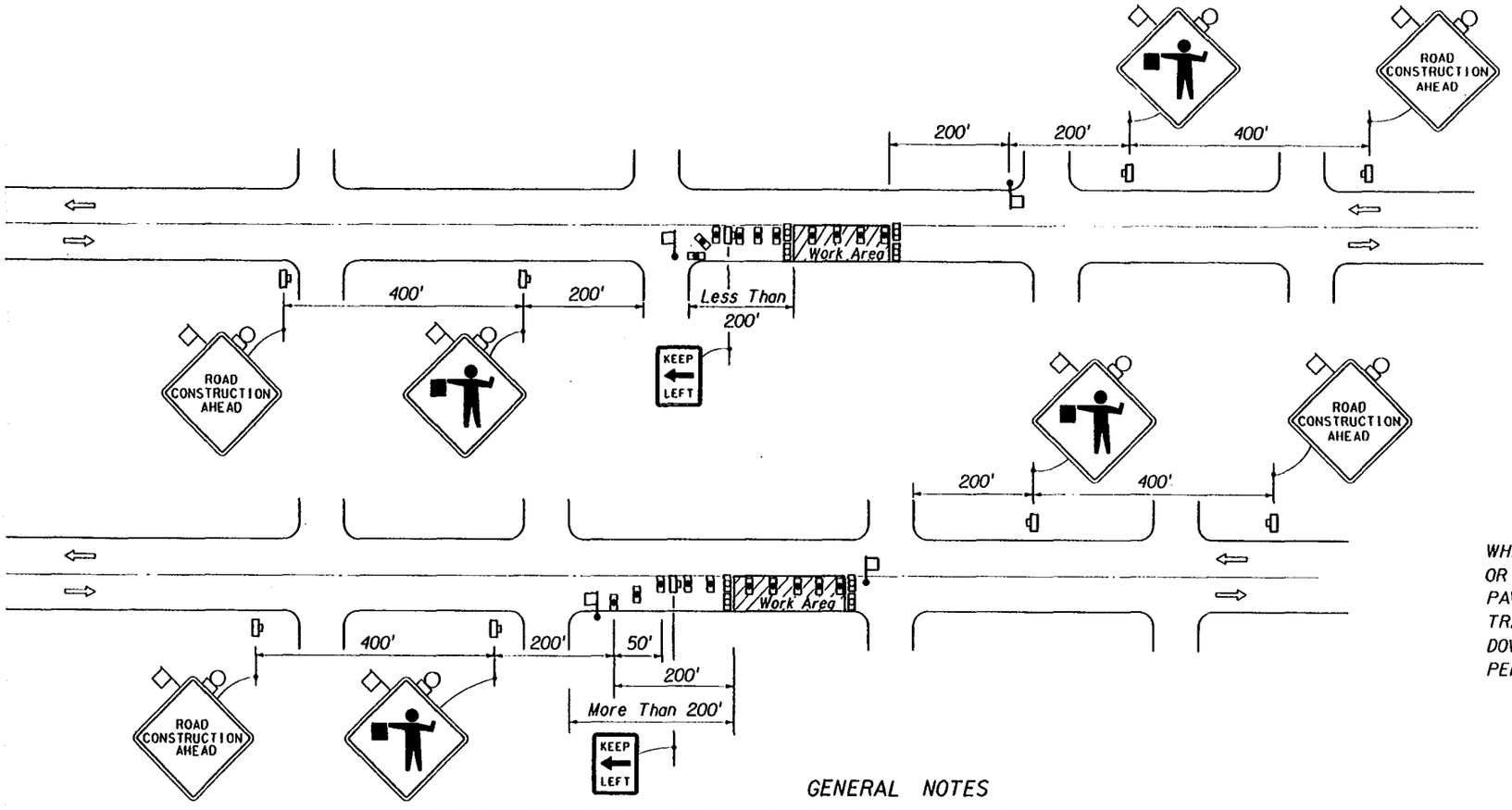

CONDITIONS

WHERE ANY VEHICLE, EQUIPMENT, WORKERS OR THEIR ACTIVITIES ENCROACH ON THE PAVEMENT REQUIRING THE CLOSURE OF ONE TRAFFIC LANE, FOR WORK AREA LESS THAN 200' DOWNSTREAM FROM INTERSECTION, FOR A PERIOD OF MORE THAN 60 MINUTES.

CONDITIONS

WHERE ANY VEHICLE, EQUIPMENT, WORKERS OR THEIR ACTIVITIES ENCROACH ON THE PAVEMENT REQUIRING THE CLOSURE OF ONE TRAFFIC LANE, FOR WORK AREA 200' OR MORE DOWNSTREAM FROM INTERSECTION, FOR A PERIOD OF MORE THAN 60 MINUTES.

SYMBOLS

- Work Area
- Sign With 18" x 18" (Min.) Orange Flag And Type B Light
- Type I Or Type II Barricade Or Vertical Panel Or Drum (With Steady Burning Light At Night Only). Tubular Markers May Be Used During Daylight Only.
- Type I Or Type II Barricade Or Vertical Panel Or Drum (with Flashing Light At Night Only)
- Work Zone Sign
- Flagger

GENERAL NOTES

1. Work operations shall be confined to one travel lane, leaving the opposing travel lane open to traffic.
2. All vehicles, equipment, workers (except flaggers) and their activities are restricted at all times to one side of the pavement.
3. For work operations of 60 minutes or less see Index No. 607
4. When vehicles in a parking zone block the line of sight to TCZ signs or when TCZ signs encroach on a normal pedestrian walkway, the signs shall be post mounted and located in accordance with Index No. 17302.
5. If work area is confined to an outside auxiliary lane the work area shall be barricaded and the FLAGGER signs replaced by ROAD CONSTRUCTION AHEAD signs. Flaggers are not required.
6. Flaggers shall be in sight of each other or in direct communication at all times.
7. The ROAD CONSTRUCTION AHEAD and FLAGGER signs shall have a 18" x 18" (min.) orange flag and a Type B light attached and operating at all times.

   Mesh signs may be used for (Daylight Only) operations Type B Lights and Orange Flags are not required.
8. The FLAGGER legend sign may be substituted for the symbol sign.
9. All signs shall be post mounted if the closure time exceeds 12 hours.
10. The maximum spacing between devices shall be not greater than 25'.
11. Arrows denote direction of traffic only and do not reflect pavement markings.
12. Longitudinal dimensions are to be adjusted to fit field conditions See Index No. 600.
13. For general TCZ requirements and additional information refer to Index No. 600.

TYPICAL APPLICATIONS

Utility Work
Pavement Repair
Structure Adjustments

STATE OF FLORIDA DEPARTMENT OF TRANSPORTATION
ROAD DESIGN

TRAFFIC CONTROL THROUGH WORK ZONES

TWO-LANE, TWO-WAY • URBAN DAY OR NIGHT OPERATIONS

	Names	Dates
Designed By	COWH	12/87
Drawn By	HSD/JBW	12/87
Checked By	JVG/KNW	12/87
F.H.W.A. Approved:		

Approved By: Charles Scott
State Traffic Plans Engineer

Revision No.	Sheet No.	Index No.
94	1 of 1	621

SYMBOLS

- Work Area
- Sign With 18" x 18" (Min.) Orange Flag And Type B Light
- Type I Or Type II Barricade Or Vertical Panel Or Drum (With Steady Burning Light At Night Only). Tubular Markers May Be Used During Daylight Only.
- Type I Or Type II Barricade Or Vertical Panel Or Drum (with Flashing Light At Night Only)
- Work Zone Sign
- Stop Bar
- Advance Warning Arrow Panel

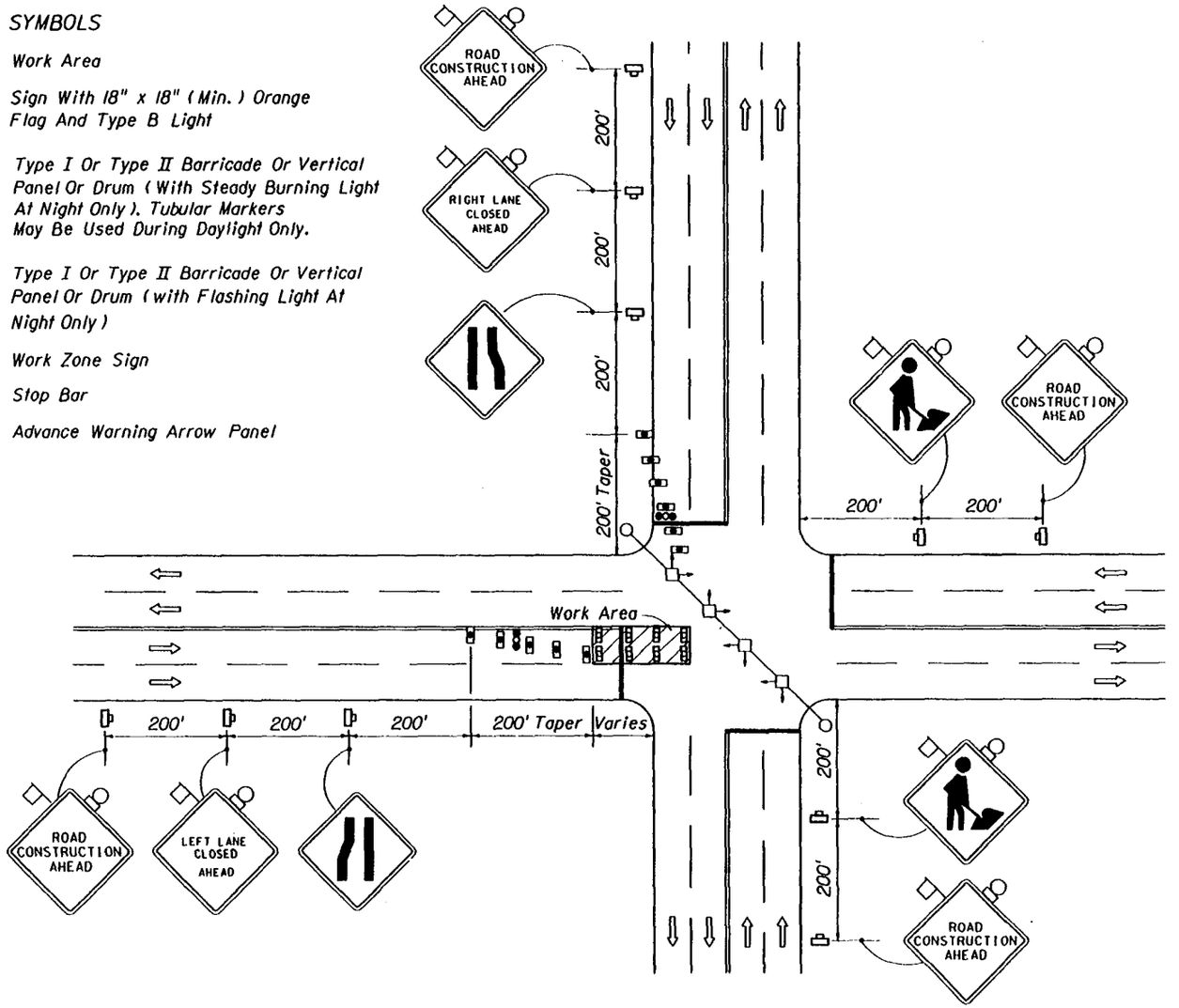

SIGNALIZED

GENERAL NOTES

1. All vehicles, equipment, workers (except flaggers) and their activities are forbidden in lane and intersection areas reserved for traffic.
2. For work operations of 60 minutes or less see Index No. 607.
3. The first two warning signs shall have a 18" x 18" (min.) orange flag and a Type B light attached and operating at all times.

   Mesh signs may be used for (Daylight Only) operations Type B Lights and Orange Flags are not required.
4. All signs shall be post mounted if closure time exceeds 12 hours.
5. The WORKERS legend sign may be substituted for the symbol sign.
6. Dual signs are required for divided roadways.
7. Arrows denote direction of traffic only and do not reflect pavement markings.
8. Maximum spacing between barricades, vertical panels, cones, tubular markers and drums shall be not greater than 25'.
9. Temporary signal phasing modifications are to be approved by the District Traffic Operations Engineer prior to the beginning of work.
10. Work performed for a period of 60 minutes or less is to be conducted in accordance with Index No. 607 or emergency condition procedures as described in Index No. 600, whichever applies.
11. Longitudinal dimensions are to be adjusted to fit field conditions. See Index No. 600.
12. For general TCZ requirements and additional information refer to Index No. 600.

TYPICAL APPLICATIONS

Utility Work
Pavement Repair
Structure Adjustments

CONDITIONS

WHERE ANY VEHICLE, EQUIPMENT, WORKERS OR THEIR ACTIVITIES ENCROACH ON THE PAVEMENT REQUIRING THE CLOSURE OF AT LEAST ONE MEDIAN TRAFFIC LANE FOR A PERIOD OF MORE THAN 60 MINUTES

STATE OF FLORIDA DEPARTMENT OF TRANSPORTATION
ROAD DESIGN

TRAFFIC CONTROL THROUGH WORK ZONES

MULTILANE, TWO-WAY • URBAN DIVIDED OR UNDIVIDED DAY OR NIGHT OPERATION

	Names	Dates
Designed By	CONN	12/87
Drawn By	HSD/JBW	12/87
Checked By	JVD/KNW	12/87

Approved By: Charles Scott
State Traffic Plans Engineer

F.H.W.A. Approved:

Revision No.	Sheet No.	Index No.
94	1 of 1	622

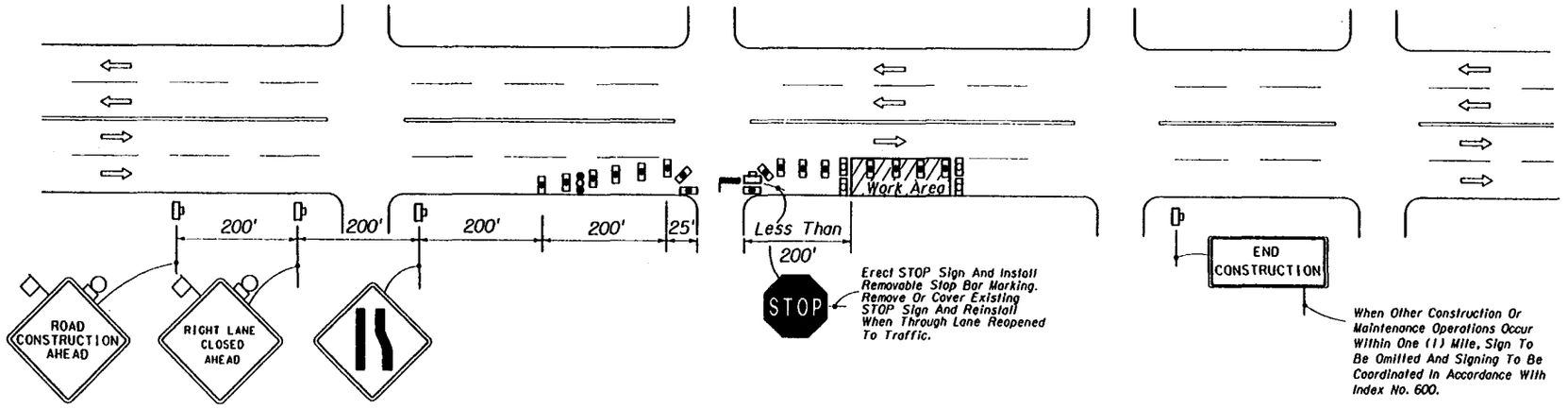

CONDITIONS

WHERE ANY VEHICLE, EQUIPMENT, WORKERS OR THEIR ACTIVITIES ENCROACH ON THE PAVEMENT REQUIRING THE CLOSURE OF THE OUTSIDE TRAVEL LANE, AND/OR ADJOINING AUXILIARY LANE, FOR WORK AREA LESS THAN 200' FROM INTERSECTION, FOR A PERIOD OF MORE THAN 60 MINUTES.

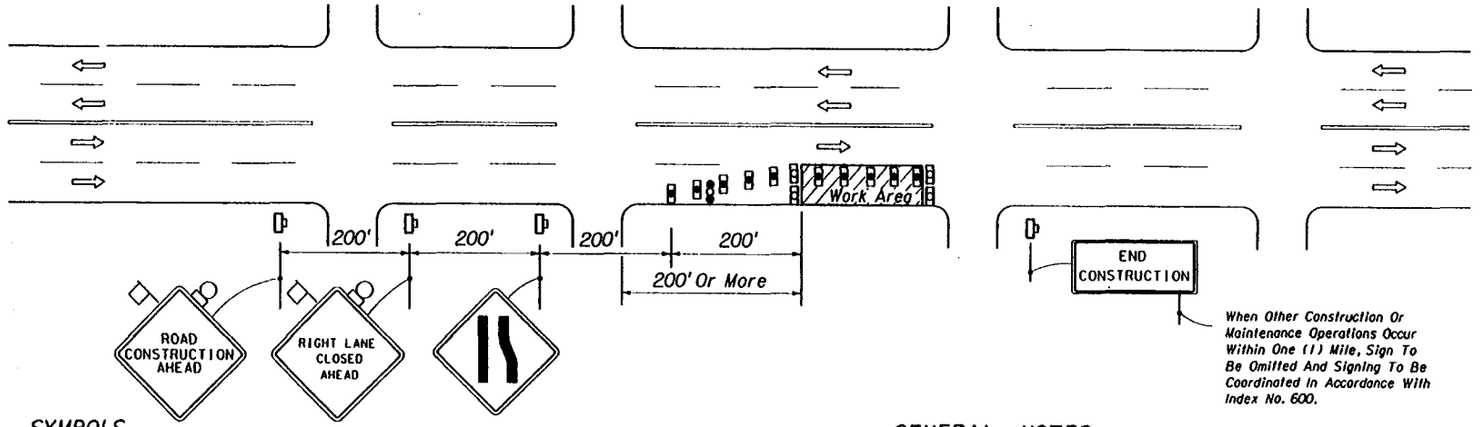

CONDITIONS

WHERE ANY VEHICLE, EQUIPMENT, WORKERS OR THEIR ACTIVITIES ENCROACH ON THE PAVEMENT REQUIRING THE CLOSURE OF THE OUTSIDE TRAVEL LANE AND/OR ADJOINING AUXILIARY LANE, FOR WORK AREA 200' OR MORE FROM INTERSECTION, FOR A PERIOD OF MORE THAN 60 MINUTES.

SYMBOLS

- Work Area
- Sign With 18" x 18" (Min.) Orange Flag And Type B Light
- Type I Or Type II Barricade Or Vertical Panel Or Drum (With Steady Burning Light At Night Only). Tubular Markers May Be Used During Daylight Only.
- Type I Or Type II Barricade Or Vertical Panel Or Drum (with Flashing Light At Night Only)
- Work Zone Sign
- Advance Warning Arrow Panel
- Stop Bar

GENERAL NOTES

1. All vehicles, equipment, workers (except flaggers) and their activities are restricted at all times to one side of the roadway.
2. Work operations shall be confined to either one lane or lane combinations as follows:
   (a) Outside travel lane (b) Outside auxiliary lane
   (c) Outside travel lane and adjoining auxiliary lane
   (d) Inside travel lane$^{\Delta}$ (e) Inside auxiliary lane$^{\Delta}$
   (f) Inside travel lane and adjoining auxiliary lane$^{\Delta}$
   $^{\Delta}$ See Sheet 2 Of 2

   If the work area is confined to an auxiliary lane the work area shall be barricaded and the RIGHT (LEFT) LANE CLOSED AHEAD signs replaced by ROAD CONSTRUCTION AHEAD signs, and the merge symbol signs eliminated.
3. For work operations of 60 minutes or less see Index No. 612.
4. When vehicles in a parking zone block the line of sight to TCZ signs or when TCZ signs encroach on a normal pedestrian walkway, the signs shall be post mounted and located in accordance with Index No. 17302.
5. The first two warning signs shall have a 18" x 18" (min.) orange flag and a Type B light attached and operating at all times.

   Mesh signs may be used for (Daylight Only) operations Type B Lights and Orange Flags are not required.
6. All signs shall be post mounted if the closure times exceeds 12 hours.
7. Dual signs are required for divided roadways.

(Continued)

TYPICAL APPLICATIONS

Utility Work
Pavement Repairs
Structure Adjustments

STATE OF FLORIDA DEPARTMENT OF TRANSPORTATION
ROAD DESIGN

TRAFFIC CONTROL THROUGH WORK ZONES

MULTILANE, TWO-WAY • URBAN DIVIDED OR UNDIVIDED DAY OR NIGHT OPERATIONS

	Names	Dates
Designed By	CDMM	12/87
Drawn By	HSD/JBW	12/87
Checked By	JVG/RHW	12/87
F.H.W.A. Approved:		

Approved By: Clark A. Scott
State Traffic Plans Engineer

Revision No.	Sheet No.	Index No.
94	1 of 2	623

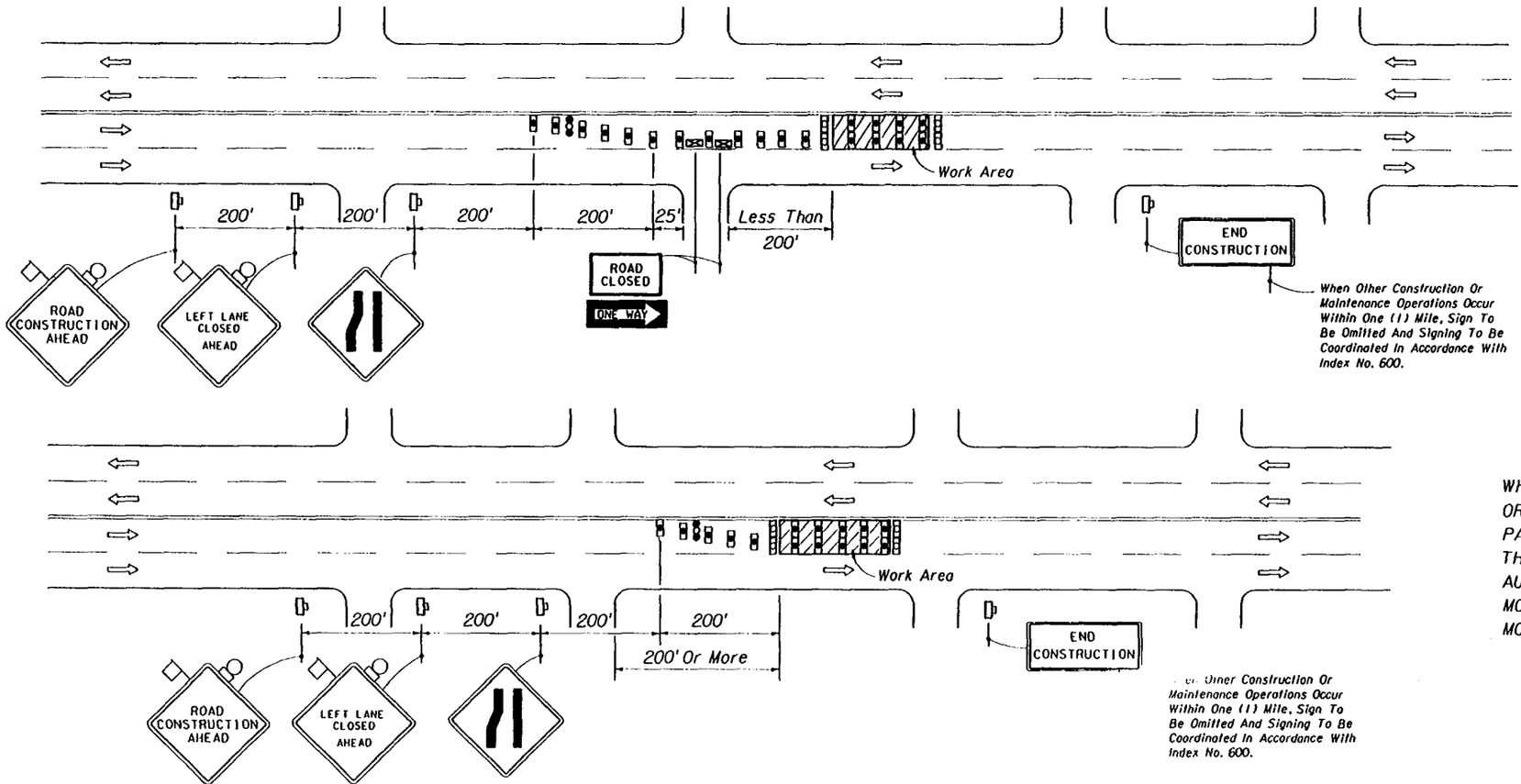

CONDITIONS

WHERE ANY VEHICLE, EQUIPMENT, WORKERS OR THEIR ACTIVITIES ENCROACH ON THE PAVEMENT REQUIRING THE CLOSURE OF THE INSIDE TRAVEL LANE AND/OR ADJOINING AUXILIARY LANE, FOR WORK AREA LESS THAN 200' FROM INTERSECTION, FOR A PERIOD OF MORE THAN 60 MINUTES.

CONDITIONS

WHERE ANY VEHICLE, EQUIPMENT, WORKERS OR THEIR ACTIVITIES ENCROACH ON THE PAVEMENT REQUIRING THE CLOSURE OF THE INSIDE TRAVEL LANE AND/OR ADJOINING AUXILIARY LANE, FOR WORK AREA 200' OR MORE FROM INTERSECTION, FOR A PERIOD OF MORE THAN 60 MINUTES.

SYMBOLS

- Work Area
- Sign With 18" x 18" (Min.) Orange Flag And Type B Light
- Type I Or Type II Barricade Or Vertical Panel Or Drum (With Steady Burning Light At Night Only). Tubular Markers May Be Used During Daylight Only.
- Type I Or Type II Barricade Or Vertical Panel Or Drum (with Flashing Light At Night Only)
- Type III Barricade
- Work Zone Sign
- Advance Warning Arrow Panel

GENERAL NOTES (CONT.)

8. The maximum spacing between devices (ft.) within lateral transitions shall be equal to the speed limit (MPH) but no greater than 25' for cones or tubular markers or 50' for Type I or Type II barricades or vertical panels or drums.
   Spacing for devices parallel to the travel lanes shall be 25' centers for cones or tubular markers and 50' centers for Type I or Type II barricades or vertical panels or drums for 250', thereafter cones or tubular markers at 50' centers and type I or Type II barricades or vertical panels or drums at 100' centers.
9. Arrows denote direction of traffic only and do not reflect pavement markings.
10. Longitudinal dimensions are to be adjusted to fit field conditions. See Index No. 600.
11. For general TCZ requirements and additional information refer to Index No. 600.

TYPICAL APPLICATIONS

Utility Work
Pavement Repairs
Structure Adjustments

STATE OF FLORIDA DEPARTMENT OF TRANSPORTATION
ROAD DESIGN

TRAFFIC CONTROL THROUGH WORK ZONES

MULTILANE, TWO-WAY • URBAN DIVIDED OR UNDIVIDED DAY OR NIGHT OPERATIONS

	Names	Dates
Designed By	COMM	12/87
Drawn By	MSD/JBW	12/87
Checked By	JVC/KNM	12/87

Approved By: Charles A. Scott, State Traffic Plans Engineer

F.H.W.A. Approved:

Revision No.	Sheet No.	Index No.
94	2 of 2	623

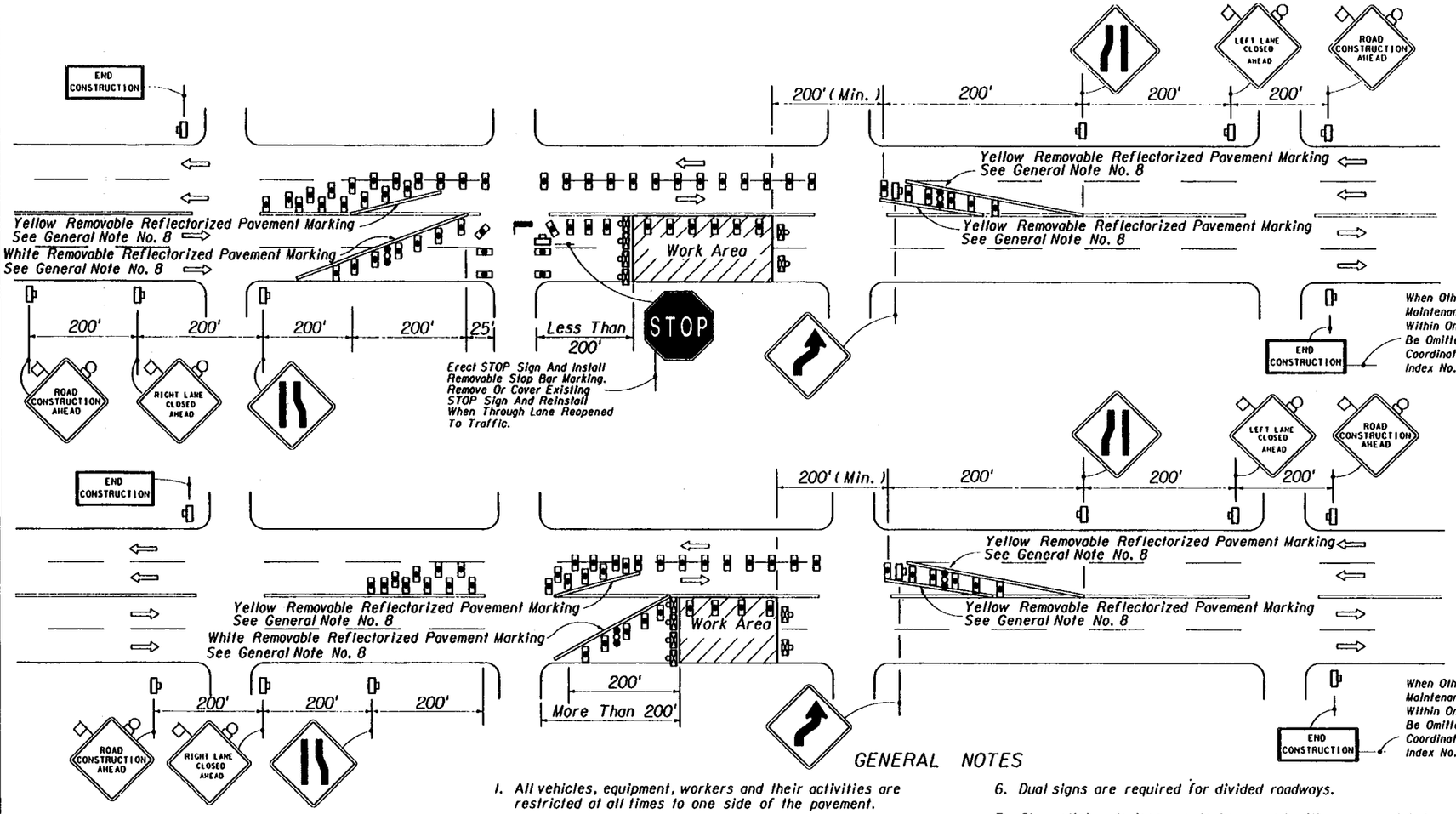

CONDITIONS

WHERE ANY VEHICLE, EQUIPMENT, WORKERS OR THEIR ACTIVITIES ENCROACH ON THE PAVEMENT REQUIRING THE CLOSURE OF TRAFFIC LANES IN ONE DIRECTION AND THE USE OF ONE OPPOSING TRAFFIC LANE TO MAINTAIN TWO-WAY TRAFFIC, FOR WORK AREA LESS THAN 200' FROM INTERSECTION, FOR A PERIOD OF MORE THAN 60 MINUTES.

When Other Construction Or Maintenance Operations Occur Within One (1) Mile, Sign To Be Omitted And Signing To Be Coordinated In Accordance With Index No. 600.

CONDITIONS

WHERE ANY VEHICLE, EQUIPMENT, WORKERS OR THEIR ACTIVITIES ENCROACH ON THE PAVEMENT REQUIRING THE CLOSURE OF TRAFFIC LANES IN ONE DIRECTION AND THE USE OF ONE OPPOSING TRAFFIC LANE TO MAINTAIN TWO-WAY TRAFFIC, FOR WORK AREA 200' OR MORE FROM INTERSECTION, FOR A PERIOD OF MORE THAN 60 MINUTES.

When Other Construction Or Maintenance Operations Occur Within One (1) Mile, Sign To Be Omitted And Signing To Be Coordinated In Accordance With Index No. 600.

SYMBOLS

- Work Area
- Sign With 18" x 18" (Min.) Orange Flag And Type B Light
- Type I Or Type II Barricade Or Vertical Panel Or Drum (With Steady Burning Light At Night Only). Tubular Markers May Be Used During Daylight Only.
- Type III Barricade (With Flashing Light)
- Work Zone Sign
- Advance Warning Arrow Panel
- Stop Bar

GENERAL NOTES

1. All vehicles, equipment, workers and their activities are restricted at all times to one side of the pavement.
2. For work operations of 60 minutes of less (daylight only) see Index No. 607.
3. When vehicles in a parking zone block the line of sight to TCZ signs or when TCZ signs encroach on a normal pedestrian walkway, the signs shall be post mounted and located in accordance with Index No. 17302.
4. The first two warning signs shall have a 18" x 18" (min.) orange flag and a Type B light attached and operating at all times.

   Mesh signs may be used for (Daylight Only) operations Type B Lights and Orange Flags are not required.
5. All signs shall be post mounted if the closure time exceeds 12 hours.
6. Dual signs are required for divided roadways.
7. Channelizing devices are to be spaced with cones or tubular markers at 25' centers and Type I or Type II barricades or vertical panels or drums at 50' centers, except in tangent work areas spacing may be increased to 50' centers for cones or tubular markers and 100' for barricades or vertical panels or drums after the first 250' when approved by the Engineer.
8. Removable reflectorized pavement markings shall be used when closure time exceeds one daylight period.
9. Arrows denote direction of traffic only and do not reflect pavement markings.
10. Longitudinal dimensions are to be adjusted to fit field conditions. See Index No. 600.
11. For general TCZ requirements and additional information refer to Index No. 600.

TYPICAL APPLICATIONS

Utility Work
Pavement Repair
Structure Adjustments

STATE OF FLORIDA DEPARTMENT OF TRANSPORTATION
ROAD DESIGN

TRAFFIC CONTROL THROUGH WORK ZONES

MULTILANE DIVIDED WITH TRAVERSABLE MEDIAN OR UNDIVIDED • URBAN DAY OR NIGHT OPERATIONS

	Names	Dates
Designed By	CWM	12/87
Drawn By	HSD/JBW	12/87
Checked By	JMG/KNW	12/87
F.H.W.A. Approved:		

Approved By: Charles A. Scott
State Traffic Plans Engineer

Revision No.	Sheet No.	Index No.
94	1 of 1	624

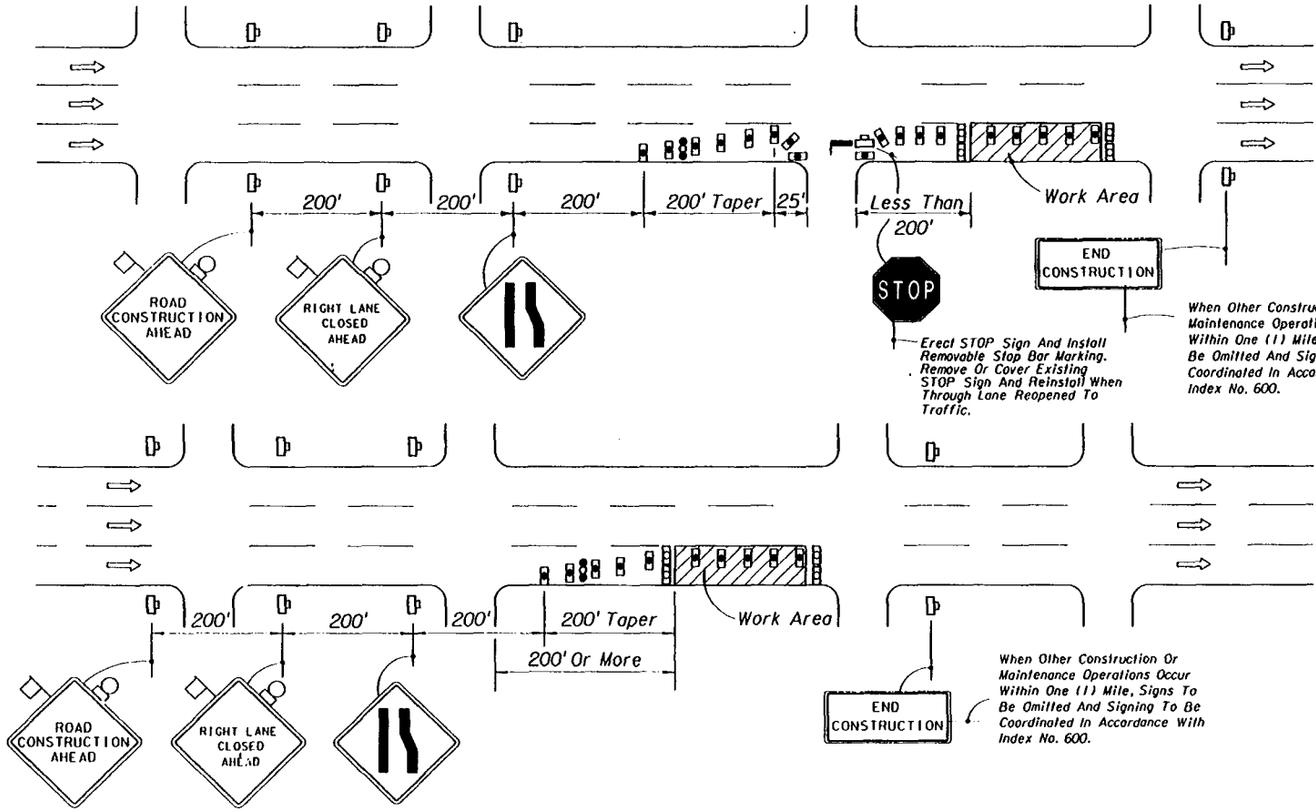

CONDITIONS

WHERE ANY VEHICLE, EQUIPMENT, WORKERS OR THEIR ACTIVITIES ENCROACH ON THE PAVEMENT REQUIRING THE CLOSURE OF EITHER THE OUTSIDE OR THE MEDIAN TRAVEL LANE AND/OR ADJOINING AUXILIARY LANE, FOR WORK AREA LESS THAN 200' FROM INTERSECTION, FOR A PERIOD OF MORE THAN 60 MINUTES.

CONDITIONS

WHERE ANY VEHICLE, EQUIPMENT, WORKERS OR THEIR ACTIVITIES ENCROACH ON THE PAVEMENT REQUIRING THE CLOSURE OF EITHER THE OUTSIDE OR THE MEDIAN TRAVEL LANE AND/OR ADJOINING AUXILIARY LANE, FOR WORK AREA 200' OR MORE FROM INTERSECTION, FOR A PERIOD OF MORE THAN 60 MINUTES.

SYMBOLS

- Work Area
- Sign With 18" x 18" (Min.) Orange Flag And Type B Light
- Type I Or Type II Barricade Or Vertical Panel Or Drum (With Steady Burning Light At Night Only). Tubular Markers May Be Used During Daylight Only.
- Type I Or Type II Barricade Or Vertical Panel Or Drum (with Flashing Light At Night Only)
- Work Zone Sign
- Advance Warning Arrow Panel
- Stop Bar

GENERAL NOTES

1. All vehicles, equipment, workers and their activities are restricted at all times to one side of the pavement.

2. Work operations shall be confined to either one lane or a combination of lanes as follows:
   (a) Outside travel lane (b) Outside auxiliary lane
   (c) Outside travel lane and adjoining auxiliary lane
   (d) Outside travel lane and adjoining center lane
   (e) Outside travel lane and adjoining auxiliary and center lanes
   (f) Median travel lane$^{\Delta}$ (g) Median auxiliary lane$^{\Delta}$
   (h) Median travel lane and adjoining auxiliary lane$^{\Delta}$
   (i) Median travel lane and adjoining center lane$^{\Delta}$
   (j) Median travel lane and adjoining auxiliary and center lanes$^{\Delta}$
   $^{\Delta}$See Sheet 2 Of 2

   If the work area is confined to an auxiliary lane the work area shall be barricaded and the RIGHT LANE CLOSED AHEAD signs replaced by ROAD CONSTRUCTION AHEAD signs and the merge left symbol signs eliminated.

3. For work operations, that require a single lane closure only, of 60 minutes or less see Index No. 612.

4. When vehicles in a parking zone block the line of sight to TCZ signs or when TCZ signs encroach on a normal pedestrian walkway, the signs shall be post mounted and located in accordance with Index No. 17302.

5. When work is performed in the median lane or the median and adjoining center lanes the barricading plans are inverted and LEFT LANE CLOSED AHEAD and merge right symbol signs shall be substituted for the RIGHT LANE CLOSED AHEAD and merge left symbol signs.

   If work is confined to the median auxiliary lane the work area shall be barricaded and the LEFT LANE CLOSED AHEAD signs replaced by ROAD CONSTRUCTION AHEAD signs and the merge right symbol signs eliminated.

6. The first two warning signs, each side, shall have a 18" x 18" (min.) orange flag and a Type B light attached and operating at all times.

   Mesh signs may be used for (Daylight Only) operations Type B Lights and Orange Flags are not required.

(Continued)

TYPICAL APPLICATIONS

Utility Work
Pavement Repair
Structure Adjustments

STATE OF FLORIDA DEPARTMENT OF TRANSPORTATION
ROAD DESIGN

TRAFFIC CONTROL THROUGH WORK ZONES

MULTILANE ONE-WAY OR MULTILANE DIVIDED WITH NON-TRAVERSABLE MEDIAN • URBAN DAY OR NIGHT OPERATIONS

	Names	Dates
Designed By	CDMM	12/87
Drawn By	HSD/JBW	12/87
Checked By	JVC/KNW	12/87

Approved By: Clarke Scott
State Traffic Plans Engineer

F.H.W.A. Approved:

Revision No.	Sheet No.	Index No.
94	1 of 2	625

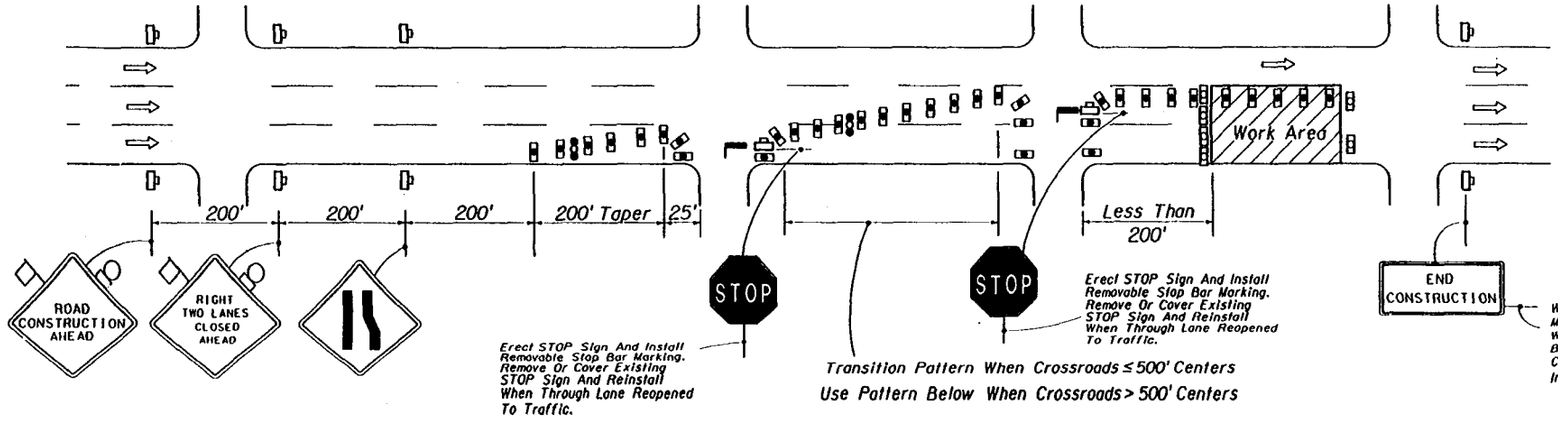

Transition Pattern When Crossroads ≤ 500' Centers
Use Pattern Below When Crossroads > 500' Centers

CONDITIONS

WHERE ANY VEHICLE, EQUIPMENT, WORKERS OR THEIR ACTIVITIES ENCROACH ON THE PAVEMENT REQUIRING THE CLOSURE OF EITHER THE OUTSIDE AND CENTER TRAVEL LANES OR THE MEDIAN AND CENTER TRAVEL LANES, WITH OR WITHOUT CLOSURE OF ADJOINING AUXILIARY LANES, FOR WORK AREA LESS THAN 200' FROM INTERSECTION, FOR A PERIOD OF MORE THAN 60 MINUTES.

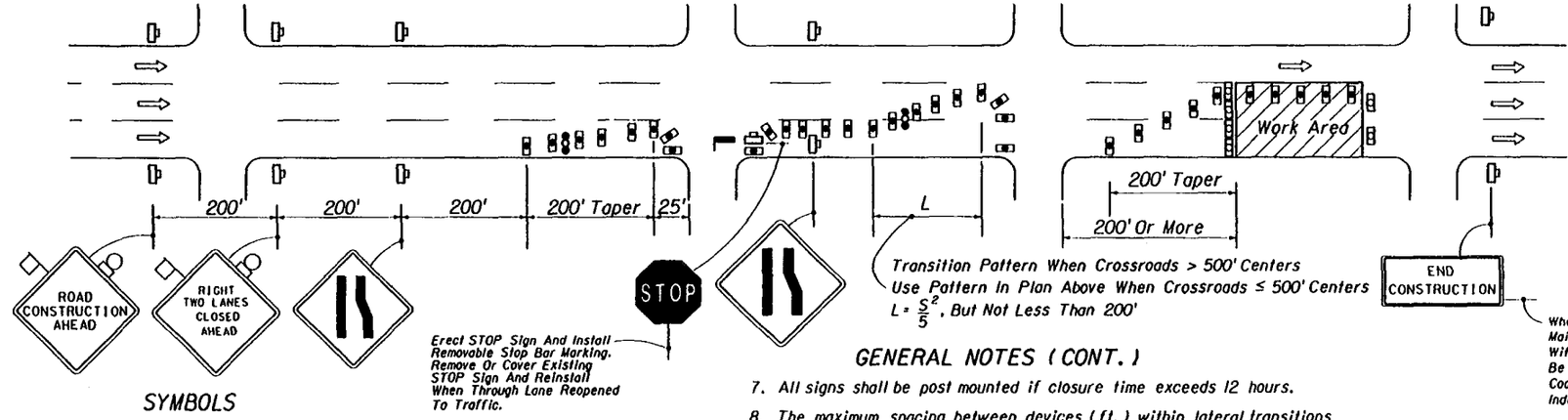

Transition Pattern When Crossroads > 500' Centers
Use Pattern In Plan Above When Crossroads ≤ 500' Centers
$L = \frac{S^2}{5}$, But Not Less Than 200'

CONDITIONS

WHERE ANY VEHICLE, EQUIPMENT, WORKERS OR THEIR ACTIVITIES ENCROACH ON THE PAVEMENT REQUIRING THE CLOSURE OF EITHER THE OUTSIDE AND CENTER TRAVEL LANES OR THE MEDIAN AND CENTER TRAVEL LANES, WITH OR WITHOUT CLOSURE OF ADJOINING AUXILIARY LANES, FOR WORK AREA 200' OR MORE FROM INTERSECTION, FOR A PERIOD OF MORE THAN 60 MINUTES.

SYMBOLS

- Work Area
- Sign With 18" x 18" (Min.) Orange Flag And Type B Light
- Type I Or Type II Barricade Or Vertical Panel Or Drum (With Steady Burning Light At Night Only). Tubular Markers May Be Used During Daylight Only.
- Type I Or Type II Barricade Or Vertical Panel Or Drum (with Flashing Light At Night Only)
- Work Zone Sign
- Advance Warning Arrow Panel
- Stop Bar

GENERAL NOTES (CONT.)

7. All signs shall be post mounted if closure time exceeds 12 hours.
8. The maximum spacing between devices (ft.) within lateral transitions shall be equal to the speed limit (MPH) but no greater than 25' for cones or tubular markers or 50' for Type I or Type II barricades or vertical panels or drums.
   Spacing for devices parallel to the travel lanes shall be 25' centers for cones or tubular markers and 50' centers for Type I or Type II barricades or vertical panels or drums for 250', thereafter cones or tubular markers at 50' centers and type I or Type II barricades or vertical panels or drums at 100' centers.
9. Arrows denote direction of traffic only and do not reflect pavement markings.
10. Longitudinal dimensions are to be adjusted to fit field conditions. See Index No. 600.
11. For general TCZ requirements and additional information refer to Index No. 600.

TYPICAL APPLICATIONS

Utility Work
Pavement Repair
Structure Adjustments

STATE OF FLORIDA DEPARTMENT OF TRANSPORTATION
ROAD DESIGN

TRAFFIC CONTROL THROUGH WORK ZONES

MULTILANE ONE-WAY OR MULTILANE DIVIDED WITH NON-TRAVERSABLE MEDIAN • URBAN DAY OR NIGHT OPERATIONS

	Names	Dates
Designed By	CONW	12/87
Drawn By	HSD/JBW	12/87
Checked By	JVG/RNW	12/87
F.H.W.A. Approved:		

Approved By: Clark A. Scott
State Traffic Plans Engineer

Revision No.	Sheet No.	Index No.
94	2 of 2	625

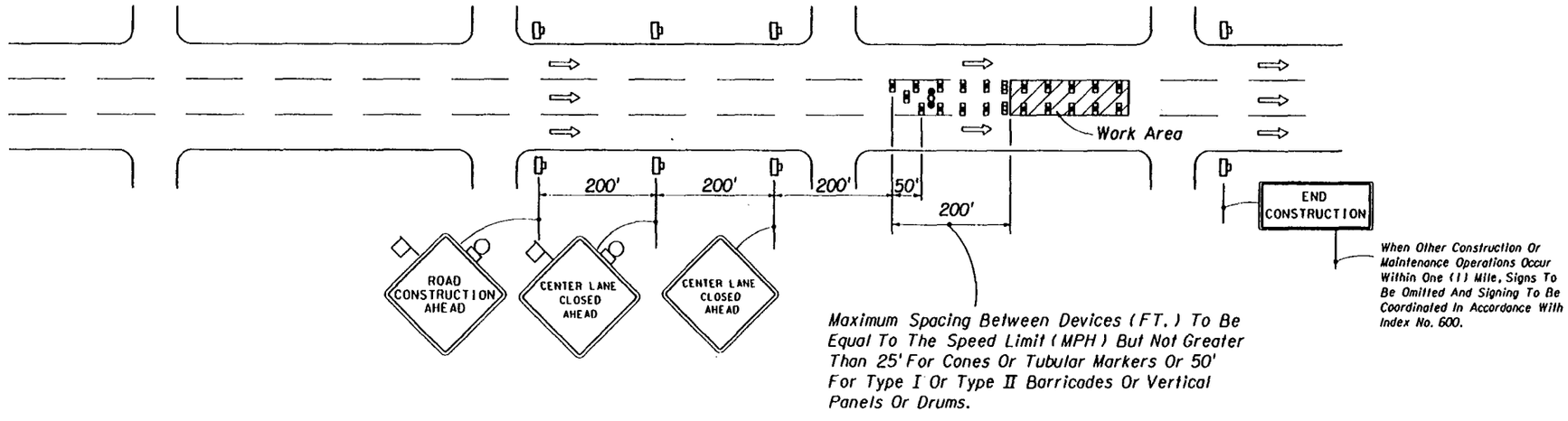

SYMBOLS

- Work Area
- Sign With 18" x 18" (Min.) Orange Flag And Type B Light
- Type I Or Type II Barricade Or Vertical Panel Or Drum (With Steady Burning Light At Night Only). Tubular Markers May Be Used During Daylight Only.
- Type I Or Type II Barricade Or Vertical Panel Or Drum (with Flashing Light At Night Only)
- Work Zone Sign
- Advance Warning Arrow Panel

GENERAL NOTES

1. All vehicles, equipment, workers and their activities are prohibited at all times from the lane areas reserved for traffic.
2. Work operations shall be confined to one center travel lane, leaving the adjacent travel lanes open to traffic.
3. For work operations of 60 minutes or less see Index No. 612
4. When vehicles in a parking zone block the line of sight to TCZ signs or when TCZ signs encroach on a normal pedestrian walkway, the signs shall be post mounted and located in accordance with Index No. 17302.
5. The first two warning signs, each side, shall have a 18" x 18" (min.) orange flag and a Type B light attached and operating at all times.

   Mesh signs may be used for (Daylight Only) operations Type B Lights and Orange Flags are not required.
6. All signs shall be post mounted if the closure time exceeds 12 hours.
7. Advance warning arrow panel is required for both day and night operations.
8. Channelizing devices are to be spaced with cones or tubular markers at 25' centers Type I or Type II barricades or vertical panels or drums at 50' centers for the first 250', thereafter cones or tubular markers at 50' centers and Type I or Type II barricades or vertical panels or drums at 100' centers.
9. Arrows denote direction of traffic only and do not reflect pavement markings.
10. Longitudinal dimensions are to be adjusted to fit field conditions. See Index No. 600.
11. For general TCZ requirements and additional information refer to Index No. 600.

TYPICAL APPLICATIONS

Utility Work
Pavement Repair
Structure Adjustments

CONDITIONS

WHERE ANY VEHICLE, EQUIPMENT, WORKERS OR THEIR ACTIVITIES ENCROACH ON THE PAVEMENT REQUIRING THE CLOSURE OF THE CENTER LANE.

STATE OF FLORIDA DEPARTMENT OF TRANSPORTATION
ROAD DESIGN

TRAFFIC CONTROL THROUGH WORK ZONES
MULTILANE ONE-WAY OR MULTILANE DIVIDED WITH NON-TRAVERSABLE MEDIAN • URBAN DAY OR NIGHT OPERATIONS

	Names	Dates
Designed By	COMM	12/87
Drawn By	HSD/JBW	12/87
Checked By	JVG/KHM	12/87

Approved By Clark A. Scott
State Traffic Plans Engineer

Revision No.	Sheet No.	Index No.
94	1 of 1	626

F.H.W.A. Approved:

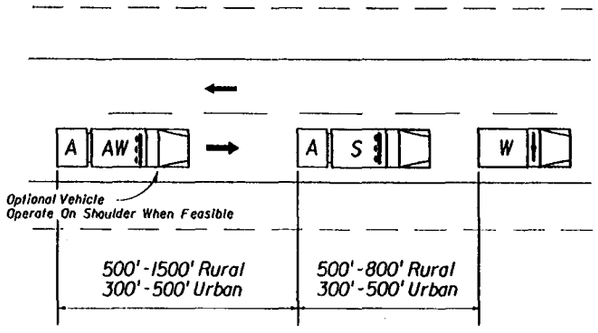

MODE • WARNING

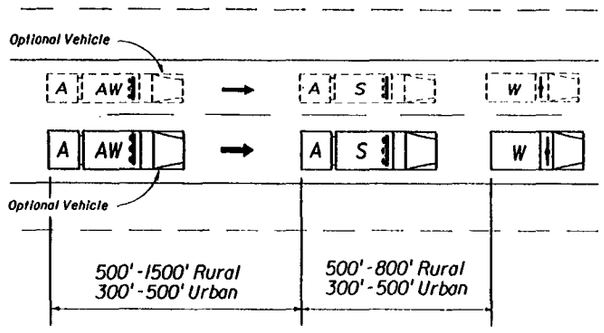

MODE • PASS LEFT RIGHT

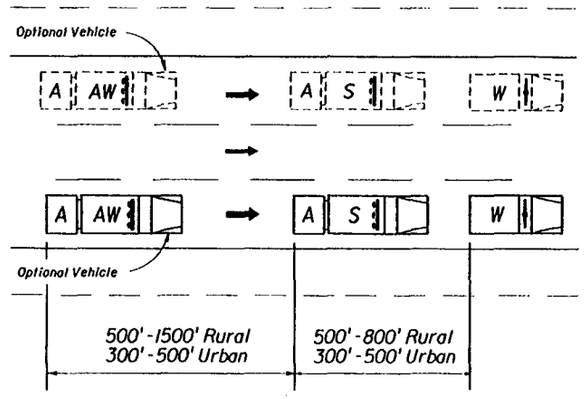

MODE • PASS LEFT RIGHT

MOVING OPERATIONS

GENERAL NOTES

1. These illustrations are representative of general conditions. Conditions differing from those shown shall be treated as directed by the Engineer.
2. The intensity of light and the position of panels shall be as specified in Index No. 600.
3. The Advance Warning Vehicle (Optional) may be used at the direction of the Engineer. If an Advance Warning Vehicle is operated within the travel way, an approved Truck Mounted Attenuator will be required on the Advance Warning Vehicle but not required on the Shadow Vehicle. The Advance Warning Arrow Panel and Warning Sign are required on both the Advance Warning and Shadow Vehicles.
4. For general TCZ requirements and additional information refer to Index No. 600.
5. If the work vehicle speed exceeds the minimum legal speed limit on limited access facilities and one half the posted speed limit on other facilities the engineer in charge may delete requirements for shadow vehicle and attenuators. The work vehicle will be required to have an advance warning arrow panel and warning sign.

TYPICAL APPLICATIONS

Striping
RPM Placement
Vegetation Control

CONDITIONS

MOVING OPERATION

SYMBOLS

- W — Work Vehicle With Flashing Beacon
- X — Shadow (S) Or Advance Warning (AW) Vehicle With Advance Warning Arrow Panel And Warning Sign.
- A — Truck Mounted Attenuator (TMA)
- ➡ — Lane Identification And Direction Of Traffic

STATE OF FLORIDA DEPARTMENT OF TRANSPORTATION
ROAD DESIGN

TRAFFIC CONTROL THROUGH WORK ZONES

MOVING OPERATIONS

	Names	Dates
Designed By	CDWM	12/87
Drawn By	HSD/JBW	12/87
Checked By	JKO/KHM	12/87
F.H.W.A. Approved:		

Approved By: Charles Scott
State Traffic Plans Engineer

Revision No.	Sheet No.	Index No.
92	1 of 1	627

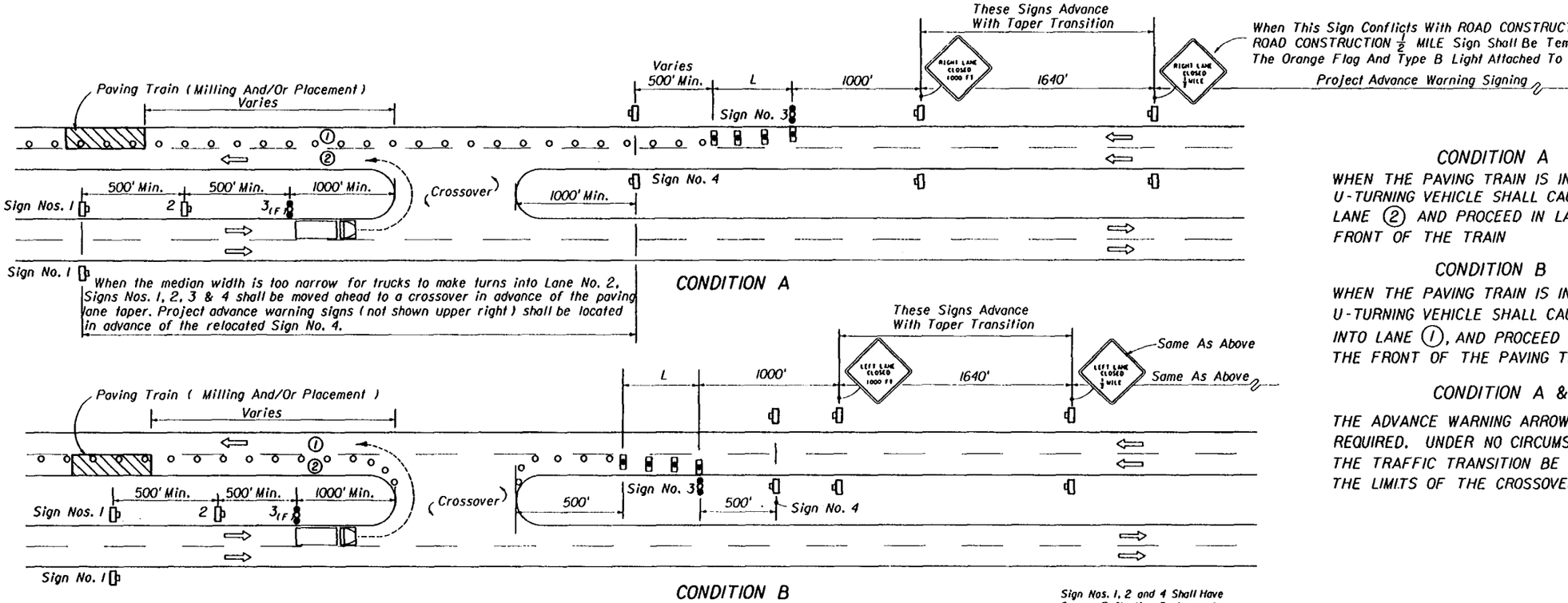

CONDITION A

WHEN THE PAVING TRAIN IS IN LANE (1) THE U-TURNING VEHICLE SHALL CAUTIOUSLY TURN INTO LANE (2) AND PROCEED IN LANE (2) TO THE FRONT OF THE TRAIN

CONDITION B

WHEN THE PAVING TRAIN IS IN LANE (2) THE U-TURNING VEHICLE SHALL CAUTIOUSLY TURN INTO LANE (1), AND PROCEED IN LANE (1) TO THE FRONT OF THE PAVING TRAIN

CONDITION A & B

THE ADVANCE WARNING ARROW PANELS ARE REQUIRED. UNDER NO CIRCUMSTANCES WILL THE TRAFFIC TRANSITION BE LOCATED WITHIN THE LIMITS OF THE CROSSOVER

SYMBOLS

- Work Area
- Type I Or Type II Barricade Or Vertical Panel Or Drum (With Steady Burning Light At Night Only). Tubular Markers May Be Used During Daylight Only.
- Type I Or Type II Barricade Or Vertical Panel Or Cone Or Tubular Marker Or Drum
- Work Zone Sign
- Advance Warning Arrow Panel
- Work Vehicle
- (X) Lane Number

TRAFFIC TRANSITION AREA UPSTREAM FROM CROSSOVER

CASE I

GENERAL NOTES

1. When crossovers do not exist, the contractor will consrtuct temporary crossovers in accordance with Index No. 517.
2. L = Length of taper in feet:
   = WS for speeds ≥ 45 mph
   = $\frac{WS^2}{60}$ for speeds ≤ 40 mph
   Where:
   W = Width of lateral transition in feet.
   S = Posted speed limit (MPH).
3. The maximum spacing between devices (ft.) within the lateral transitions shall be equal to the speed limit (MPH) but not greater than 25' for cones or tubular markers or 50' for Type I or Type II barricades or vertical panels or drums.

   Spacing for devices parallel to the travel lanes shall be 25' centers for cones or tubular markers and 50' for Type I or Type II barricades or vertical panels or drums.
4. Arrows denote direction of traffic only and do not reflect pavement markings.

Sign Nos. 1, 2 and 4 Shall Have Orange Reflective Backgrounds With 6" Series D Black Opaque Legends And 1" Black Opaque Borders. Orange flags and Type B lights are required.

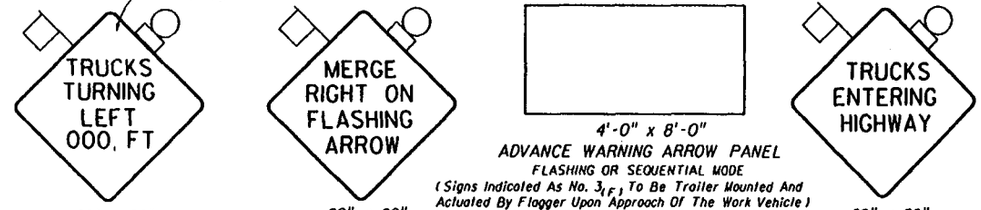

60" x 60" SIGN NO. 1

60" x 60" SIGN NO. 2

ADVANCE WARNING ARROW PANEL
FLASHING OR SEQUENTIAL MODE
(Signs Indicated As No. 3(F) To Be Trailer Mounted And Actuated By Flagger Upon Approach Of The Work Vehicle)
See Index No. 600 For Advance Warning Arrow Panel Details.
SIGN NO. 3

60" x 60" SIGN NO. 4

STATE OF FLORIDA DEPARTMENT OF TRANSPORTATION
ROAD DESIGN

TRAFFIC CONTROL THROUGH WORK ZONES

TEMPORARY CROSSOVER FOR PAVING TRAIN OPERATIONS • RURAL

	Names	Dates
Designed By		
Drawn By	HSD/KBW	12/87
Checked By	JHG/KAW	12/87
F.H.W.A. Approved:		

Approved By Clark A Scott
State Traffic Plans Engineer

Revision No. 94 | Sheet No. 1 of 2 | Index No. 630

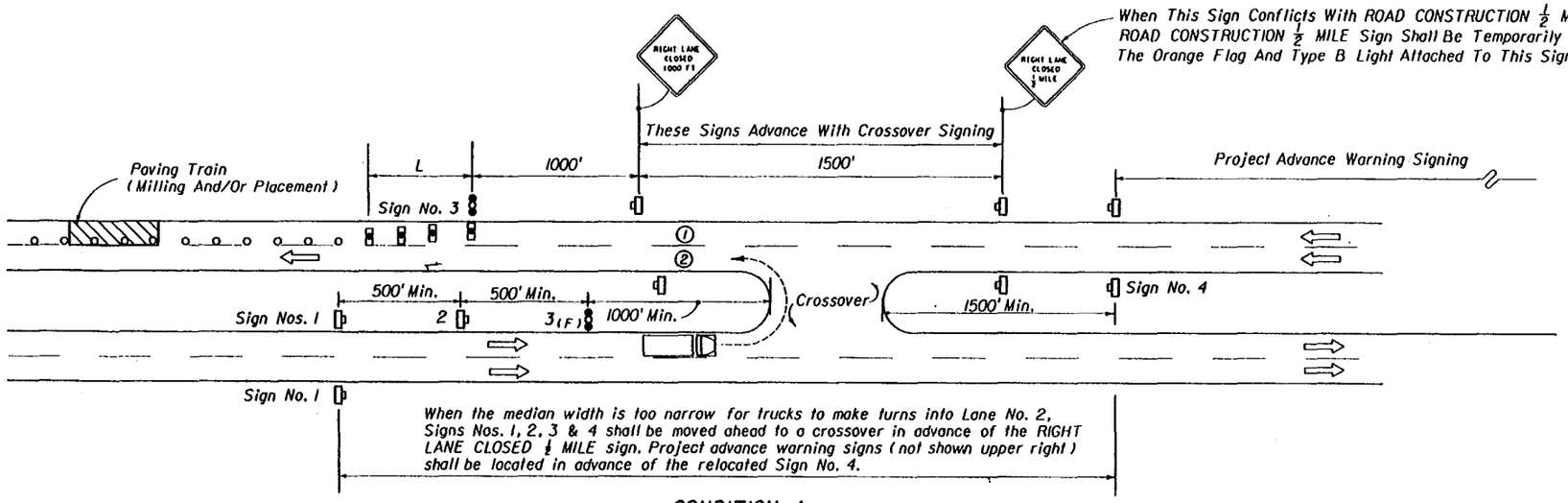

CONDITION A

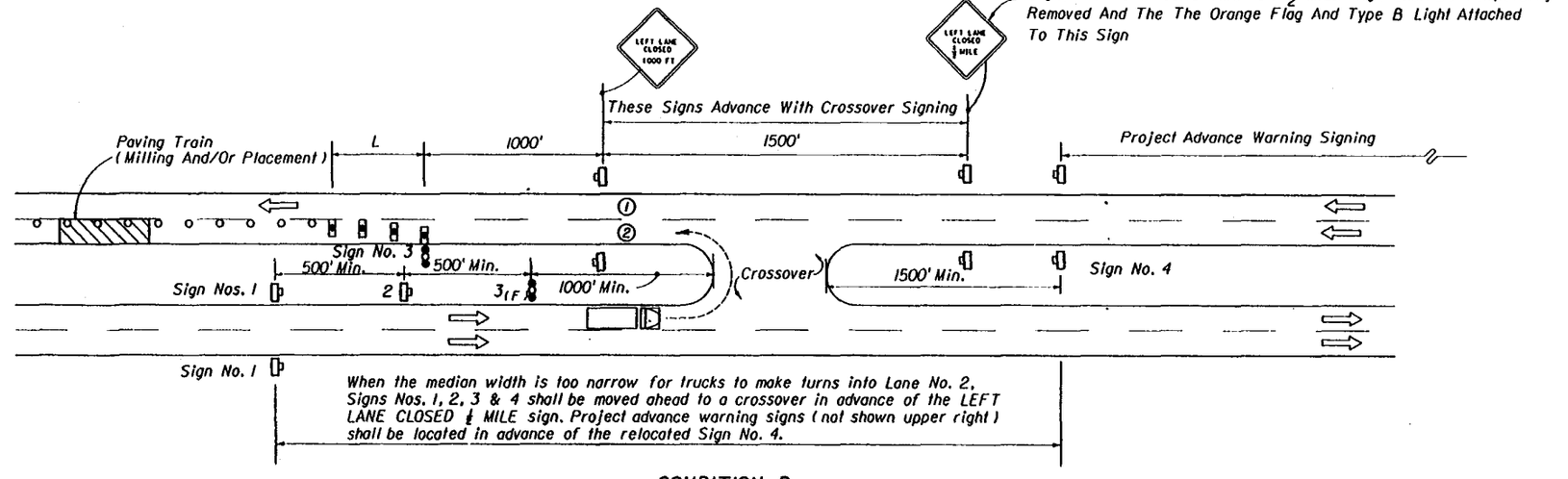

CONDITION B

TRAFFIC TRANSITION AREA DOWNSTREAM FROM CROSSOVER

CASE II

Note: See Sheet 1 of 2 For General Notes, Sign No. Details, And Conditions.

CONDITION A

WHEN THE PAVING TRAIN IS IN LANE (1) THE U-TURNING VEHICLE SHALL CAUTIOUSLY TURN INTO LANE (2) AND PROCEED IN LANE (2) TO THE FRONT OF THE TRAIN

CONDITION B

WHEN THE PAVING TRAIN IS IN LANE (2) THE U-TURNING VEHICLE SHALL TURN INTO LANE (2), CAUTIOUSLY MERGE INTO LANE (1) AND PROCEED TO THE FRONT OF THE PAVING TRAIN

CONDITION A & B

THE ADVANCE WARNING ARROW PANEL IS REQUIRED. UNDER NO CIRCUMSTANCES WILL THE TRAFFIC TRANSITION BE LOCATED WITHIN THE LIMITS OF THE CROSSOVER

STATE OF FLORIDA DEPARTMENT OF TRANSPORTATION
ROAD DESIGN

TRAFFIC CONTROL THROUGH WORK ZONES

TEMPORARY CROSSOVER FOR PAVING TRAIN OPERATIONS • RURAL

	Names	Dates
Designed By		
Drawn By	MSD/JBW	12/87
Checked By	MG/RHW	12/87
F.H.W.A. Approved:		

Approved By: Deputy State Design Engineer, Roadways

Revision No.	Sheet No.	Index No.
88	2 of 2	630

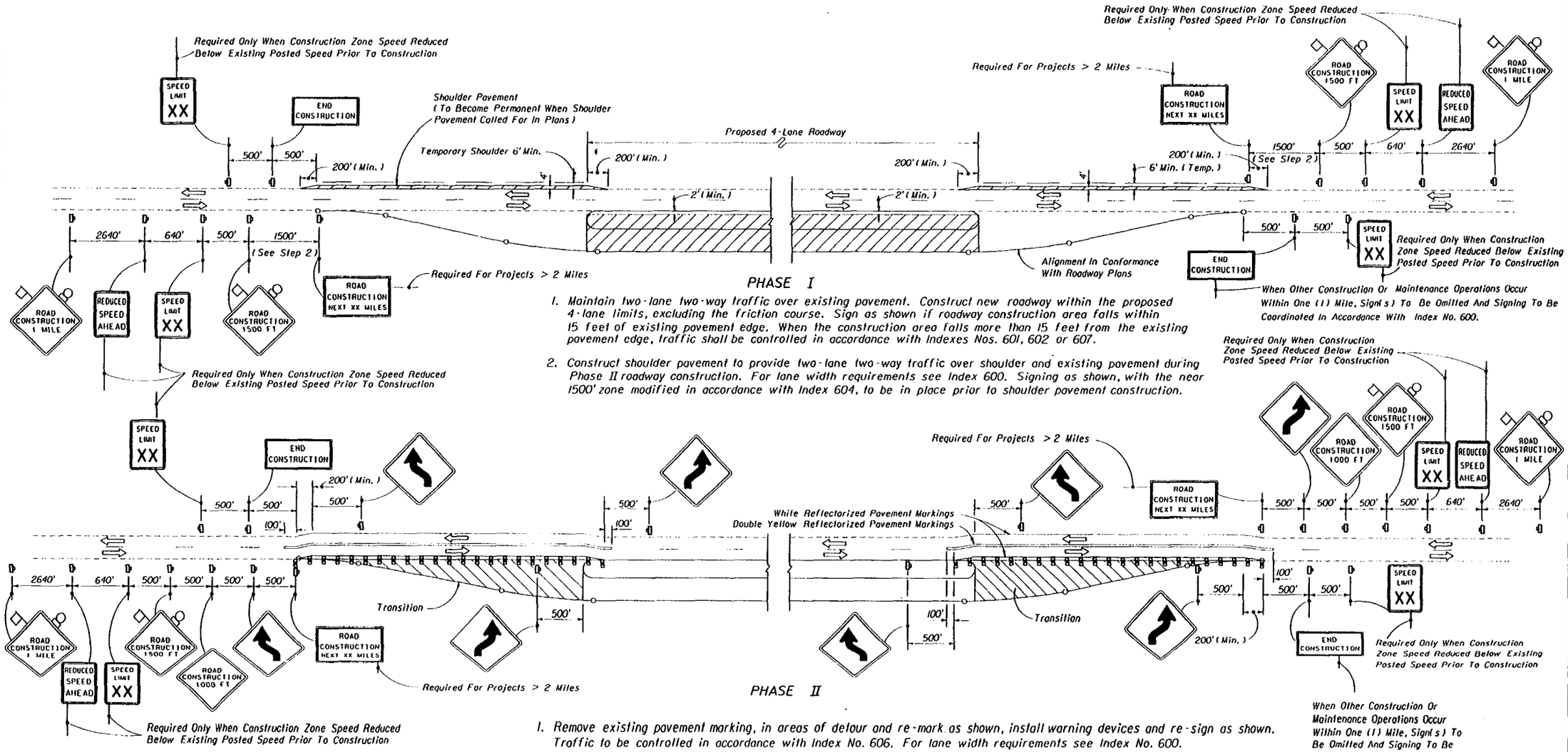

STATE OF FLORIDA DEPARTMENT OF TRANSPORTATION
ROAD DESIGN

TRAFFIC CONTROL THROUGH WORK ZONES

CONVERTING TWO LANES TO FOUR LANES DIVIDED • RURAL

	Names	Dates
Designed By	KHW	
Drawn By	HSD	
Checked By	JVC	
F.H.W.A. Approval:		5/5/80

Approved By: Clark A. Scott
State Traffic Plans Engineer

Revision No.	Sheet No.	Index No.
94	1 of 2	640

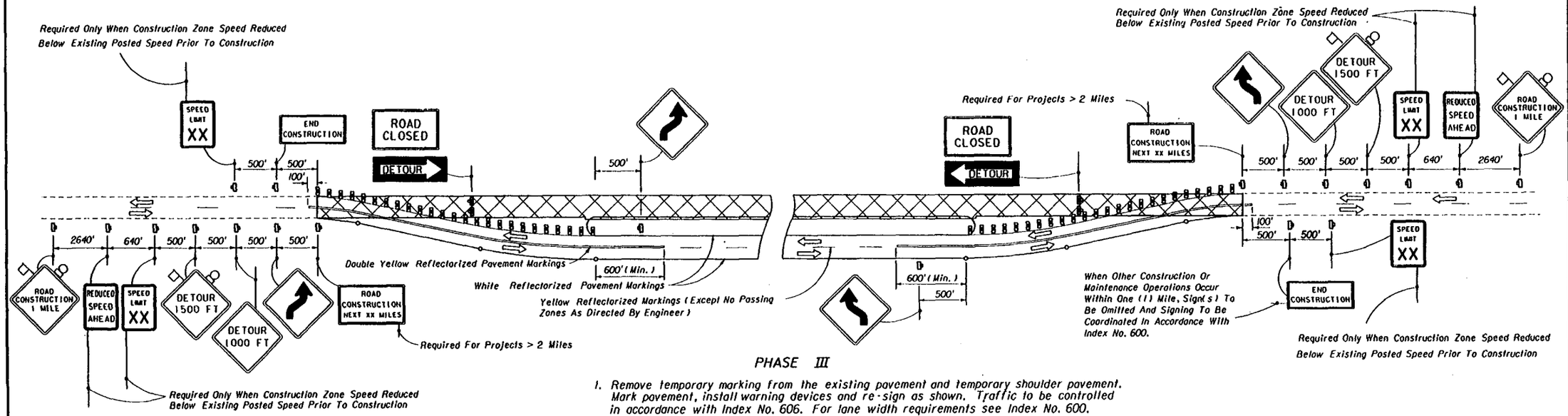

PHASE III

1. Remove temporary marking from the existing pavement and temporary shoulder pavement. Mark pavement, install warning devices and re-sign as shown. Traffic to be controlled in accordance with Index No. 606. For lane width requirements see Index No. 600.
2. Route through traffic to newly constructed roadway.
3. Resurface or reconstruct existing pavement including required shoulder pavement and friction course.

PHASE IV

1. Reroute through traffic as shown in Phase II. Signing to be as shown in Phase II.
2. Construct friction course over pavement constructed in Phases I and II

GENERAL NOTES

1. The first two warning signs shall have a 18" x 18" (min.) orange flag and a Type B light attached and operating at all times.
2. Existing signs and pavement markings that conflict with construction signing and marking shall be obliterated or removed.
3. Lane widths for maintenance of two-way traffic should desirably be equal to lane widths of the existing facility, but lanes shall be not less than 10 feet in width. When one-lane one-way operations are necessary, a minimum width of 12 feet shall be maintained and traffic controlled in accordance with Indexes Nos. 603, 604, 606 and 607. Minimum width for the temporary shoulders is 6 feet.
4. The maximum spacing between warning devices within lateral transitions (FT) to be equal to the speed limit (MPH) but not greater than 25' for cones or tubular markers or 50' for Type I or Type II barricades or vertical panels or drums.
   The maximum spacing between warning devices used for delineation between the travel way and construction area to be 25' for cones or tubular markers and 50' for Type I or Type II barricades or vertical panels or drums.
5. Barricading shall be in conformance with 'Protection Requirement For Dropoffs ' Index No. 600.
6. For speed sign applications see Index No. 600.
7. For reflectorized raised pavement marker application see Index no 600 and Index no 17352.
8. Additional barricades, signing, lighting or other traffic controls shall be provided for limited work areas in accordance with other applicable TCZ Indexes.
9. Arrows denote direction of traffic only and do not reflect pavement markings.
10. Longitudinal dimensions are to be adjusted to fit field conditions. See Index No. 600.
11. When a side road intersects the highway on which work is being performed additional traffic control devices shall be erected in accordance with other applicable TCZ Indexes.
12. Provisions approved by the Engineer shall be made for the removal of storm water from the roadway(s) during construction.
13. For general TCZ requirements and additional information refer to Index No. 600.

SYMBOLS

- Sign With 18" x 18" (Min.) Orange Flag And Type B Light
- Type I Or Type II Barricade Or Vertical Panel Or Drum (With Steady Burning Light At Night Only). Tubular Markers May Be Used During Daylight Only.
- Type III Barricade (With Flashing Light)
- Work Zone Sign

LEGEND

- Phase I
- Phase II
- Phase III

STATE OF FLORIDA DEPARTMENT OF TRANSPORTATION
ROAD DESIGN

TRAFFIC CONTROL THROUGH WORK ZONES

CONVERTING TWO LANES TO FOUR LANES DIVIDED • RURAL

	Names	Dates
Designed By	RNW	
Drawn By	HSO	
Checked By	JVG	
F.H.W.A. Approved:		05/05/80

Approved By
State Traffic Plans Engineer

Revision No.	Sheet No.	Index No.
94	2 of 2	640

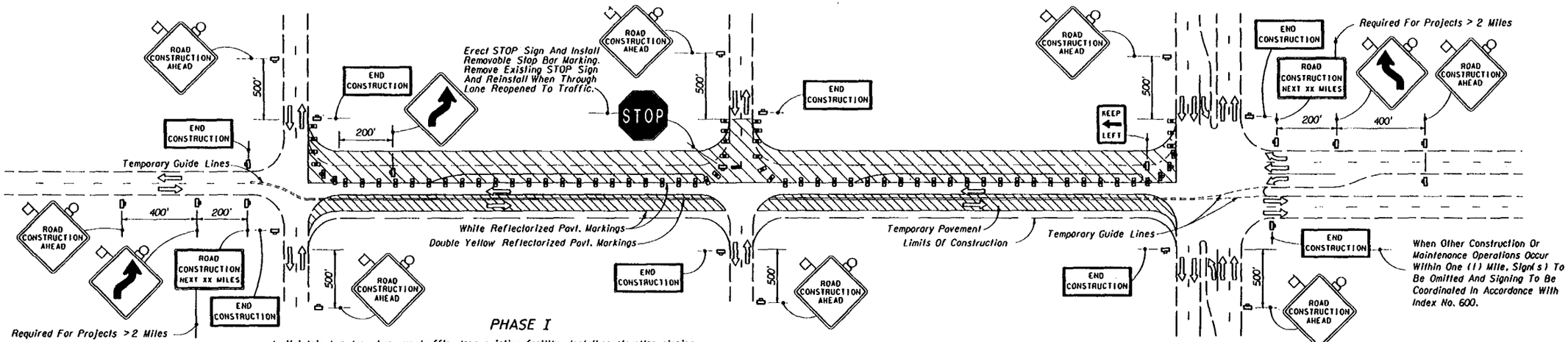

PHASE I

1. Maintain two-lane two-way traffic along existing facility. Install construction signing.
2. Remark existing pavement to facilitate temporary pavement construction. For lane width requirements see Index No. 600.
3. Construct temporary pavement of sufficient width to accommodate two-lane two-way traffic on the temporary pavement and a portion of the existing pavement during Phase I roadway construction. When two-lane two-way traffic can not be maintained during temporary pavement construction one-lane operations shall be maintained in accordance with Index No. 621. Channelizing devices shall be in conformance with 'Dropoffs in Work Zones' of Index No. 600.
4. Mark the pavement in accordance with the Phase I diagram. Reroute through traffic to the temporary pavement and a portion of the existing pavement. For lane width requirements see Index No. 600.
5. Construct two lanes of the proposed roadway, excluding the friction course. Side street traffic to be maintained. Through and cross traffic to be controlled in accordance with Indexes Nos. 620,621 and 622. Barricading shall be in conformance with 'Dropoffs in Work Zones', Index No. 600. When work extends through an intersection, temporarily reroute the cross traffic to other cross streets. When rerouting is not possible, provide one-lane access (minimum) for two-lane two-way cross streets and one-lane access (minimum) each direction for four-lane two-way cross streets, in accordance with Indexes Nos. 620, 621 and 622.

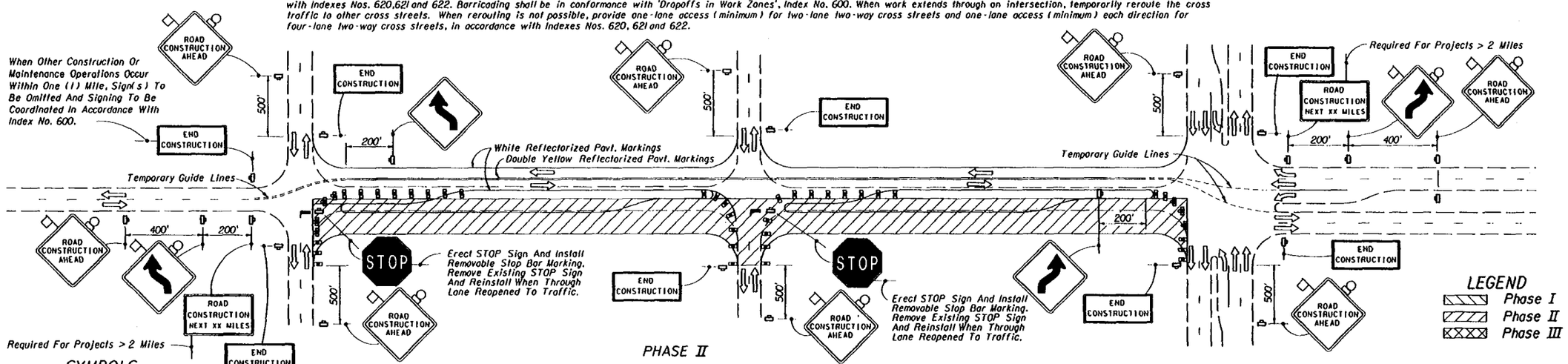

PHASE II

1. Sign and mark Phase I pavement in accordance with the Phase II diagram. For lane width requirements see Index No. 600.
2. Reroute through traffic to Phase I pavement.
3. Complete all Phase II construction, including the friction course. Side street traffic to be maintained. Through and cross traffic to be controlled in accordance with Indexes Nos. 620, 621 and 622. Channelizing devices shall be in conformance with 'Dropoffs in Work Zones' of Index No. 600. When work extends through an intersection, temporarily reroute cross traffic to other cross streets. When rerouting is not possible, provide one-lane access (minimum) for two-lane two-way cross streets and one-lane access (minimum) each direction for four-lane two-way cross streets, in accordance with Indexes Nos. 620, 621 and 622.

SYMBOLS

- Sign With 18" x 18" (Min.) Orange Flag And Type B Light
- Type I Or Type II Barricade Or Vertical Panel Or Drum (With Steady Burning Light At Night Only). Tubular Markers May Be Used During Daylight Only.
- Type III Barricade (With Flashing Light)
- Work Zone Sign
- Stop Bar

See Sheet 2 of 2 for General Notes.

STATE OF FLORIDA DEPARTMENT OF TRANSPORTATION
ROAD DESIGN

TRAFFIC CONTROL THROUGH WORK ZONES

CONVERTING TWO LANES TO FOUR LANES DIVIDED • URBAN

	Names	Dates
Designed By	KHH	08/79
Drawn By	SHH	08/79
Checked By	JVG	08/79
F.H.W.A. Approved:		05/05/80

Approved By: Clark A. Scott, State Traffic Plans Engineer

Revision No.	Sheet No.	Index No.
94	1 of 2	641

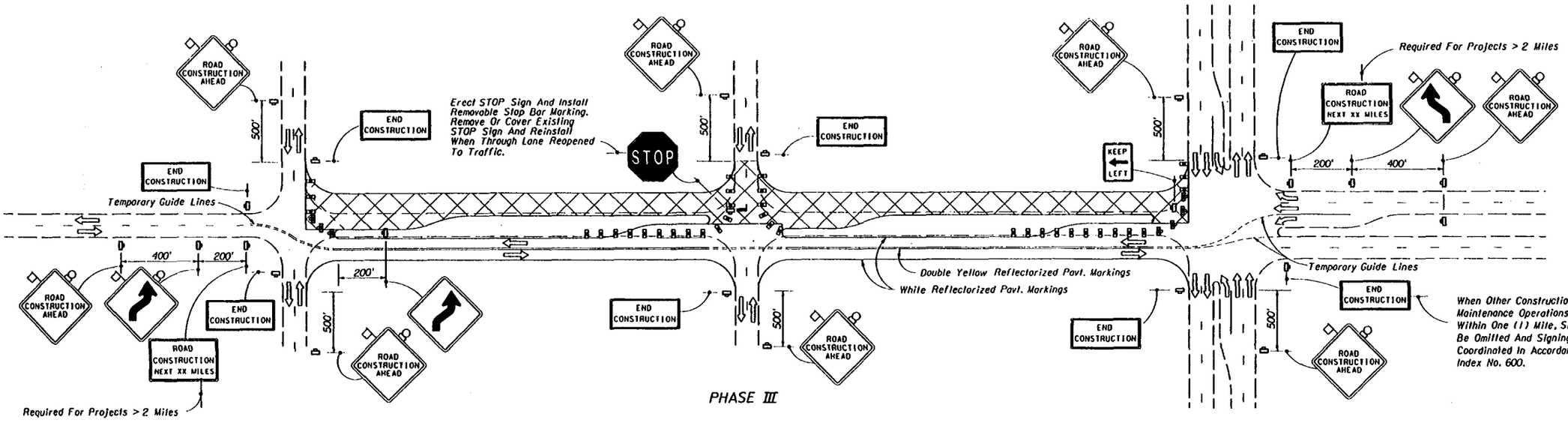

PHASE III

1. Sign and mark Phase II pavement in accordance with the Phase III diagram.
2. Reroute through traffic to Phase II pavement.
3. Construct friction course over Phase I pavement. Side street traffic to be maintained. Through and cross traffic to be controlled in accordance with Indexes Nos. 620, 621 or 622. When work extends through an intersection, temporarily reroute cross traffic to other cross streets. When rerouting is not possible, provide one-lane access (minimum) for two-lane two-way cross streets and one-lane access (minimum) each direction for four-lane two-way cross streets.

GENERAL NOTES

1. All signing, pavement marking, barricades and warning lights necessary for maintenance of traffic shall conform to Index No. 600.
2. The first two warning signs shall have a 18" x 18" (min.) orange flag and a Type B light attached and operating at all times.
3. Lane widths for maintenance of two-way traffic should desirably be equal to lane widths of the existing facility, but lanes shall not be less than 10 feet in width. When one-lane one-way operations are necessary, a minimum width of 12 feet should be maintained and traffic controlled in accordance with Indexes Nos. 620, 621 or 622.
4. At signalized intersections, signals shall be directed or relocated as required to the center of relocated lanes.
5. For reflectorized raised pavment marker application see index No. 600 and index No. 17352.
6. Additional barricades, signing, lighting or other traffic controls for limited work areas shall be provided in accordance with other applicable TCZ indexes as conditions warrant in each phase.
7. Provisions approved by the Engineer shall be made for the removal of storm water from the roadway(s) during construction.
8. Arrows denote direction of traffic only and do not reflect pavement markings.
9. Longitudinal dimensions are to be adjusted to fit field conditions. See Index No. 600.
10. For general TCZ requirements and additional information refer to Index No. 600.

SYMBOLS

- Sign With 18" x 18" (Min.) Orange Flag And Type B Light
- Type I Or Type II Barricade Or Vertical Panel Or Drum (With Steady Burning Light At Night Only). Tubular Markers May Be Used During Daylight Only.
- Type III Barricade (With Flashing Light)
- Work Zone Sign
- Stop Bar

LEGEND

- Phase I
- Phase II
- Phase III

STATE OF FLORIDA DEPARTMENT OF TRANSPORTATION
ROAD DESIGN

TRAFFIC CONTROL THROUGH WORK ZONES

CONVERTING TWO LANES TO FOUR LANES DIVIDED • URBAN

	Names	Dates
Designed By	KHW	08/79
Drawn By	SHW	08/79
Checked By	JVG	08/79
F.H.W.A. Approved:		5/5/80

Approved By Clark A. Scott
State Traffic Plans Engineer

Revision No.	Sheet No.	Index No.
94	2 of 2	641

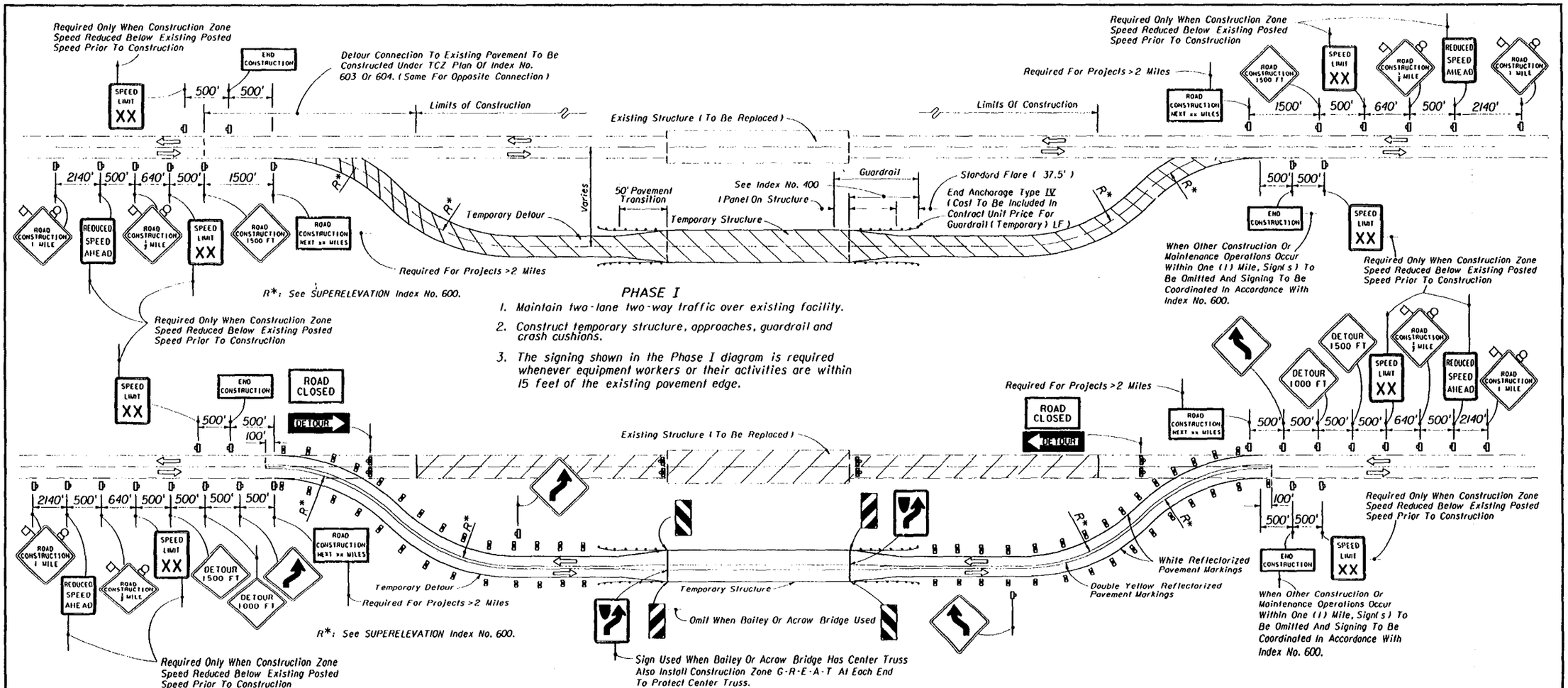

SYMBOLS

- Sign With 18" x 18" (Min.) Orange Flag And Type B Light
- Type I Or Type II Barricade Or Vertical Panel Or Drum (With Steady Burning Light At Night Only). Tubular Markers May Be Used During Daylight Only.
- Type III Barricade (With Flashing Light)
- Work Zone Sign

PHASE II

1. Re-sign and mark as shown in Phase II plan.
2. Reroute traffic to detour and maintain two-way traffic on detour. Install Type III barricades.
3. Construct proposed structure and reconstruct or resurface existing approaches.

PHASE III (See Sheet 2 of 2)

GENERAL NOTES (See Sheet 2 of 2)

LEGEND

Phase I

Phase II

STATE OF FLORIDA DEPARTMENT OF TRANSPORTATION
ROAD DESIGN

TRAFFIC CONTROL THROUGH WORK ZONES

TWO-LANE, TWO-WAY • RURAL STRUCTURE REPLACEMENT

	Names	Dates
Designed By	KNH	08/19
Drawn By	SHM	08/19
Checked By	JVG	08/19
F.H.W.A. Approved		09/11/19

Approved By: Clark A. Scott
State Traffic Plans Engineer

Revision No.	Sheet No.	Index No.
94	1 of 2	650

PHASE III

1. Reroute traffic to existing alignment and maintain two-way traffic.
2. Remove all temporary construction items.

GENERAL NOTES

1. All signing, pavement marking, barricades and warning lights necessary for maintenance of traffic shall conform to Index No. 600.
2. The first two warning signs shall have a 18" x 18" (min.) orange flag and a Type B light attached and operating at all times.
3. For speed sign applications see Index No. 600.
4. For lane width requirements see Index No. 600. When one-way one-lane operations are necessary, a minimum width of 12 feet shall be maintained and traffic controlled in accordance with Indexes Nos. 603, 604, 606, 607 or 608. Minimum width for the detour shoulders is 6 feet.
5. Method of attaching temporary guardrail to the detour structure to be approved by the Engineer.
6. Provisions approved by the Engineer shall be made for the removal of storm water from the roadway(s) during construction.
7. Temporary crash cushions shall be the inertial type in accordance with Index No. 415 or others as called for in the plans.
8. Arrows denote direction of traffic only and do not reflect pavement markings.
9. Longitudinal dimensions are to be adjusted to fit field conditions. See Index No. 600.
10. Where the temporary structure is not required the detour may be constructed in accordance with Index No. 609, unless otherwise stipulated in the plans.
11. For reflective raised pavment marker application see Index No. 600 and Index No. 17352.
12. For general TCZ requirements and additional information refer to Index No. 600.

STATE OF FLORIDA DEPARTMENT OF TRANSPORTATION
ROAD DESIGN

TRAFFIC CONTROL THROUGH WORK ZONES

TWO-LANE, TWO-WAY • RURAL STRUCTURE REPLACEMENT

	Names	Dates
Designed By	KHH	08/79
Drawn By	SHH	08/79
Checked By	JVG	08/87
F.H.W.A. Approved:		

Approved By C. Clark Scott
State Traffic Plans Engineer

Revision No.	Sheet No.	Index No.
92	2 of 2	650

BUFFER LENGTH (FT)		
Construction Zone Speed MPH	X	Z
60-70	540	550
55	350	430
≤ 50	170	300

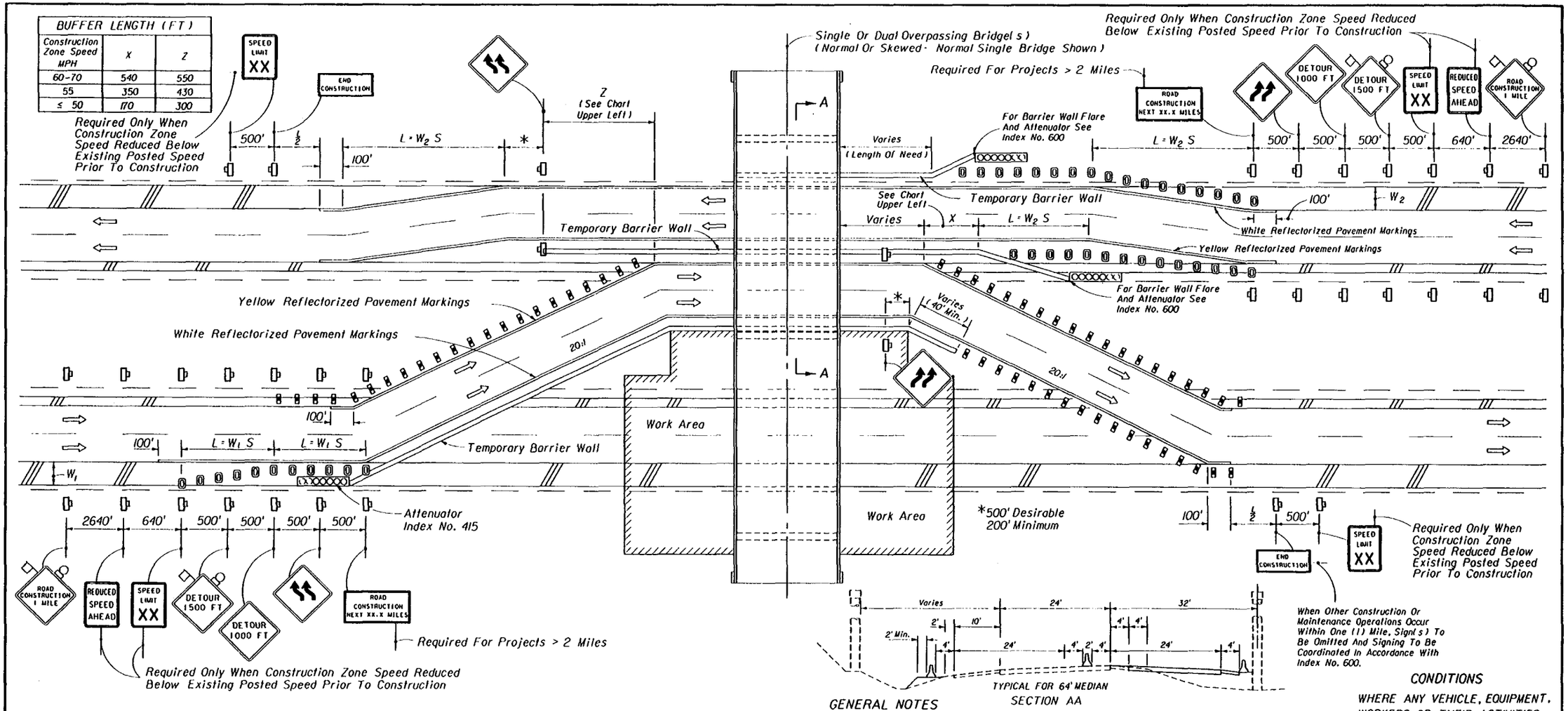

SYMBOLS

- Work Area
- Sign With 18" x 18" (Min.) Orange Flag And Type B Light
- Type I Or Type II Barricade Or Vertical Panel Or Drum (With Steady Burning Light At Night Only). Tubular Markers May Be Used During Daylight Only.
- Work Zone Sign
- Drum

GENERAL NOTES

1. All vehicles, equipment, workers and their activities are restricted at all times to one side of the highway.
2. The first two warning signs, each side, shall have a 18" x 18" (min.) orange flag and a Type B light attached and operating at all times.
3. All signs shall be post mounted.
4. S = Posted speed limit (MPH).
5. The maximum spacing between warning devices within lateral transitions (Ft) to be equal to the speed limit (MPH) but not greater than 25' for cones or tubular markers or 50' for Type I or Type II barricades or vertical panels or drums. Barricades, vertical panels, cones, tubular markers and drums shall not be intermixed in lateral transition.
6. For speed sign applications see Index No. 600.
7. All existing pavement markings within the realignment which conflict with the revised traffic pattern are to be removed and new pavement markings used for marking edge lines and lane lines.
8. Arrows denote direction of traffic only and do not reflect pavement markings.
9. Longitudinal dimensions are to be adjusted to fit field conditions. See Index No. 600.
10. When side roads, cross roads or interchanges are located within the limits for work zone traffic control additional traffic control devices shall be erected in accordance with other applicable TCZ Indexes.
11. For general TCZ requirements and additional information refer to Index No. 600.

CONDITIONS

WHERE ANY VEHICLE, EQUIPMENT, WORKERS OR THEIR ACTIVITIES REQUIRE THE CLOSURE OF ONE ROADWAY AND THE OPPOSING ROADWAY IS CONVERTED TO TEMPORARY TWO-WAY TRAVEL BY WAY OF CROSSOVERS

STATE OF FLORIDA DEPARTMENT OF TRANSPORTATION
ROAD DESIGN

MULTILANE DIVIDED MAINTENANCE AND CONSTRUCTION

	Names	Dates
Designed By	JMG/JBW	10/89
Drawn By	HSD/JBW	10/89
Checked By	JMG/RNW	10/89

Approved By: C. Clark Scott
State Traffic Plans Engineer

F.H.W.A. Approved:

Revision No.	Sheet No.	Index No.
94	1 of 2	651

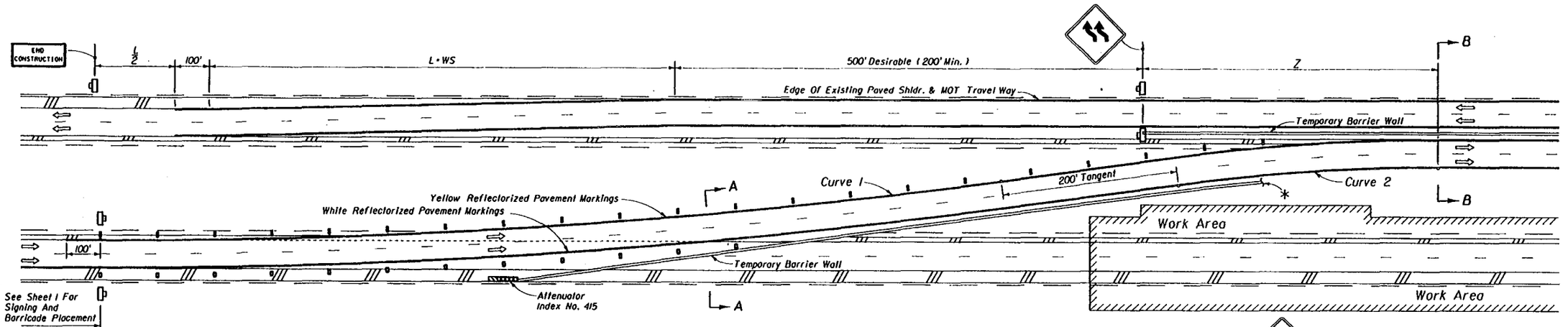

APPROACH END

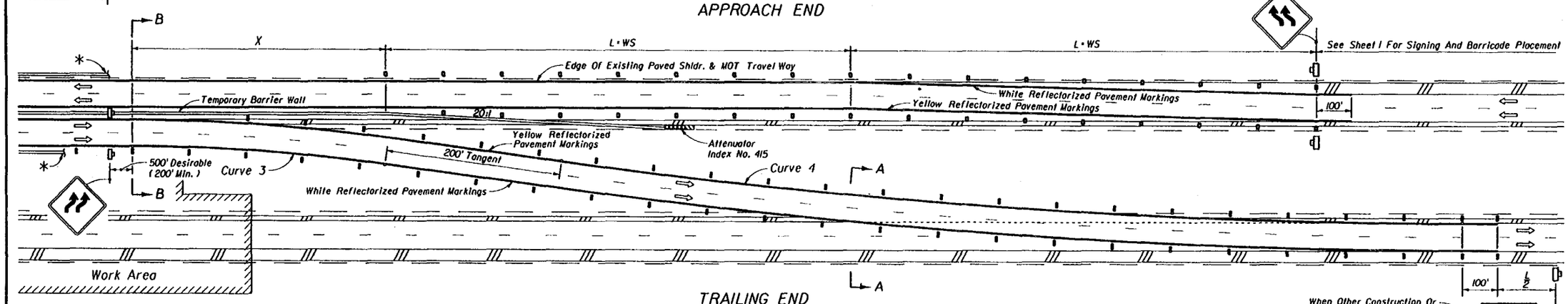

TRAILING END

CURVILINEAR ALIGNMENT CROSSOVER

* Length of barrier wall needed for protection of work area and/or other hazards to be shown in the plans. For complimentary information on barrier walls and work area see Sheet 1. See Index No. 600 for clear zone requirements.

When Other Construction Or Maintenance Operations Occur Within One (1) Mile, Sign(s) To Be Omitted And Signing To Be Coordinated In Accordance With Index No. 600.

BUFFER LENGTH (FT)				
Construction Zone Speed	64' Median		88' Median	
MPH	X	Z	X	Z
70	607	588	582	545
65	581	562	552	514
60	562	543	531	492
55	337	369	330	350
50	201	286	200	276
45	115	164	115	163
40	104	149	104	148
35	91	134	91	132
30	78	118	78	115

MINIMUM RADII FOR NORMAL CROSS SLOPES		
Construction Zone Speed	Minimum Radius (Ft.) R	
MPH	Curves 1 & 4	Curves 2 & 3
70	22,918 (0° 15')	4,584 (1° 15')
65	22,918 (0° 15')	3,820 (1° 30')
60	22,918 (0° 15')	3,274 (1° 45')
55	11,459 (0° 30')	2,546 (2° 15')
50	11,459 (0° 30')	2,292 (2° 30')
45	1,080 (5° 18')	700 (8° 11')
40	830 (6° 54')	550 (10° 25')
35	620 (9° 14')	410 (13° 58')
30	450 (12° 44')	285 (20° 06')

NOTE: Detours with speeds of 50 mph or greater are considered high speed facilities; curvature and superelevation criteria for open highway conditions apply.

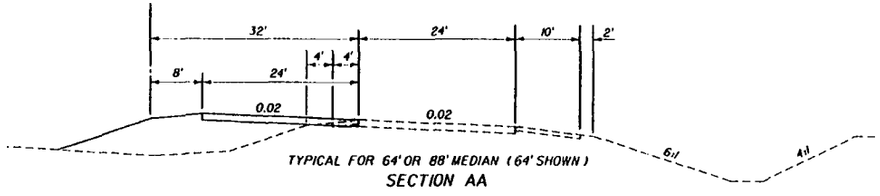

TYPICAL FOR 64' OR 88' MEDIAN (64' SHOWN)

SECTION AA

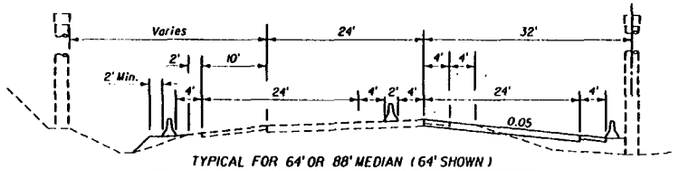

TYPICAL FOR 64' OR 88' MEDIAN (64' SHOWN)
(WITH OR WITHOUT OVERPASSING ROADWAY-OVERPASSING SHOWN)

SECTION BB

STATE OF FLORIDA DEPARTMENT OF TRANSPORTATION
ROAD DESIGN

MULTILANE DIVIDED MAINTENANCE AND CONSTRUCTION

	Name	Date
Designed By		
Drawn By	JBW	
Checked By	JVG	
F.H.W.A. Approved:		

Approved By: Clark A. Scott
State Traffic Plans Engineer

Revision No.	Sheet No.	Index No.
92	2 of 2	651

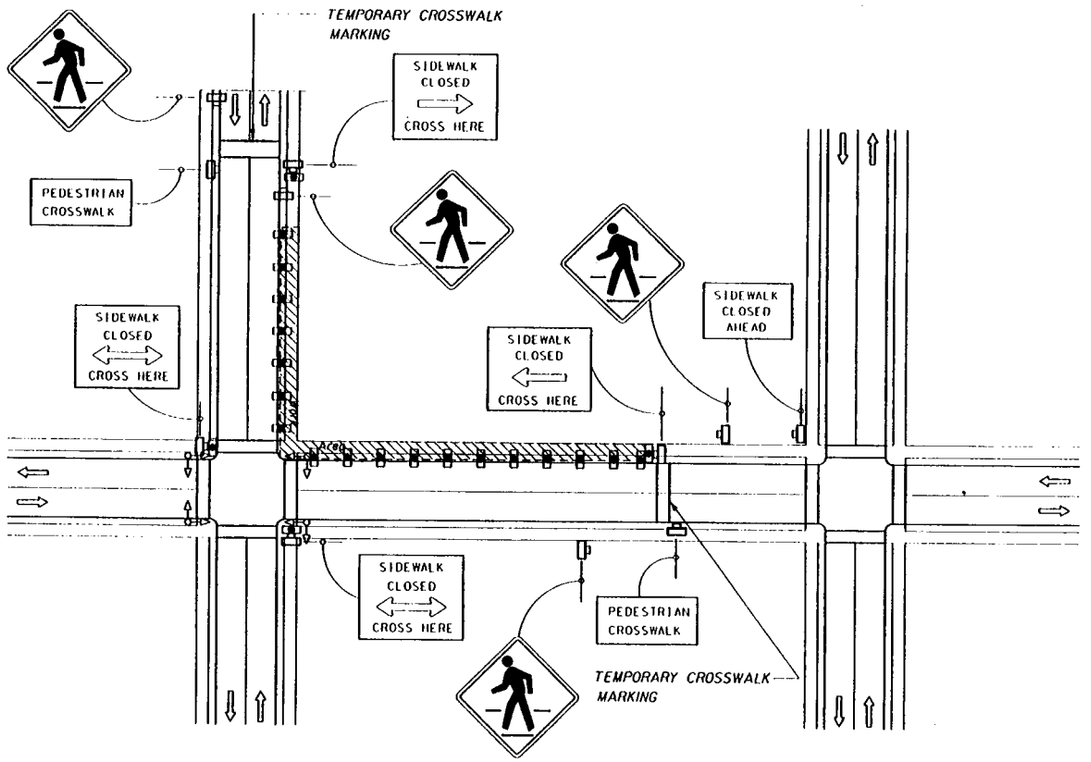

CORNER SIDEWALK CLOSURE
WITH TEMPORARY CROSSWALKS

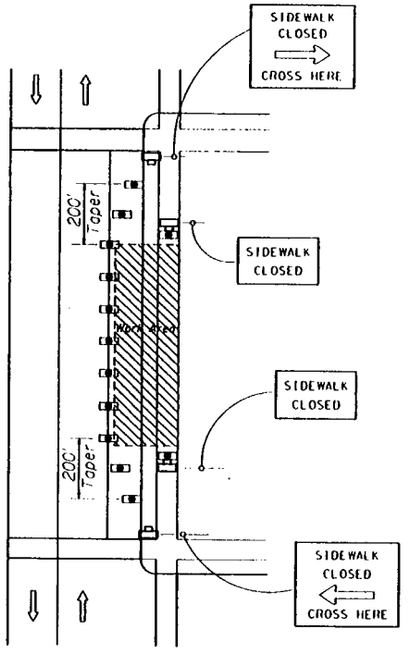

MID-BLOCK SIDEWALK
CLOSURE

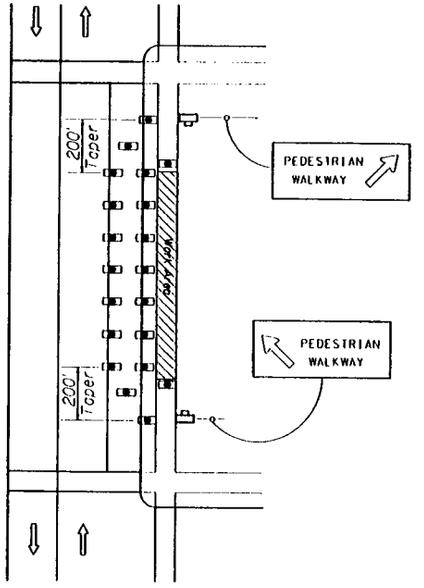

MID-BLOCK SIDEWALK CLOSURE
WITH TEMPORARY WALKWAY

SYMBOLS

Work Area

Type I Or Type II Barricade Or Vertical Panel Or Drum (With Steady Burning Light At Night Only). Tubular Markers May Be Used During Daylight Only.

Work Zone Sign

GENERAL NOTES

1. Arrows denote direction of traffic only and do not reflect pavement markings.
2. Only the signs controlling pedestrian flows are shown. Other work zone signs will be needed to control traffic on the streets.
3. For spacing of traffic control devices and general TCZ requirements refer to index no. 600. Maximum spacing between barricades, vertical panels, drums or tubular markers shall not be greater than 25 ft.
4. Street lighting should be considered.
5. For nightime closures use type A flashing warning lights on barricades supporting signs and closing sidewalks. use type C steady-burn lights on channelizing devices seperating the work area from vehicular traffic.
6. Pedestrian traffic signal display controlling closed crosswalks shall be covered or deactivated.
7. Temporary walkways shall be a minimum of 4 ft. wide and kept free of any obstructions and hazards such as holes, debris, mud, construction equipment, stored materials and etc.
8. Post Mounted Signs located near or adjacent to a sidewalk shall have a 7 ft. minimum clearance from the bottom of sign to the sidewalk.
9. When construction activities involve sidewalks on both sides of the street, efforts should be made to to stage the construction so that both sidewalks are not out of service at the same time.
10. In the event that sidewalks on both sides of the street are closed, then pedestrians shall be guided around the construction zone.

TYPICAL APPLICATIONS

Sidewalk Repair
Pavement Widening
Utility Work

CONDITIONS

WHERE ANY VEHICLE, EQUIPMENT WORKERS OR THEIR ACTIVITIES ENCROACH ON THE SIDEWALK FOR A PERIOD OF MORE THAN 60 MINUTES

STATE OF FLORIDA DEPARTMENT OF TRANSPORTATION
ROAD DESIGN

PEDESTRIAN CONTROL FOR CLOSURE OF SIDEWALKS

	Names	Dates
Designed By	LTB	7/93
Drawn By	LTB	7/93
Checked By	LDJ	7/93
F.H.W.A. Approved:		

Approved By Clark A. Scott

Revision No.	Sheet No.	Index No.
94	1 of 1	660

DESIGN CRITERIA RELATED TO HIGHWAY SAFETY

September 1991

TYPE OF FACILITY	RURAL & URBAN FREEWAYS AND RURAL ARTERIALS & COLLECTORS: DESIGN SPEED OF 45 MPH OR GREATER AND PROJECTED ADT (20 YR) OF 1500 OR GREATER	RURAL ARTERIALS & COLLECTORS: DESIGN SPEED OF 45 MPH OR GREATER AND PROJECTED ADT (20 YR) LESS THAN 1500	RURAL COLLECTORS: DESIGN SPEED OF 40 MPH OR LESS AND RURAL LOCALS-ALL SPEEDS	URBAN ARTERIALS & COLLECTORS: DESIGN SPEEDS OF 30-50 MPH (WITHOUT CURB AND GUTTER)	URBAN ARTERIALS & COLLECTORS: DESIGN SPEED OF 45 MPH OR LESS (CURB AND GUTTER)
EMBANKMENT SLOPE	Fill Ht. 0'-5' 6:1 5'-10' 6:1 to edge of CZ & 4:1 10'-20' 6:1 to edge of CZ & 3:1 > 20' 2:1 (with guardrail) R/W cost must be considered in urban areas in using these slopes.	Fill Ht. 0'-5' 6:1 except where R/W is insufficient then 6:1 to edge of CZ & 3:1 will be permitted. 5'-20' 6:1 to edge of CZ & 3:1 except where R/W is insufficient then 2:1 with guardrail will be permitted.	Fill Ht. 0'-5' 6:1 except where R/W is insufficient then 6:1 to edge of CZ & 3:1 will be permitted. 5'-20' 6:1 to edge of CZ & 3:1 except where R/W is insufficient then 2:1 with guardrail will be permitted.	Fill Ht. 0'-5' 6:1 except where R/W is insufficient then 6:1 to edge of CZ & 3:1 will be permitted. 5'-20' 6:1 to edge of CZ & 3:1 except where R/W is insufficient then 2:1 with guardrail will be permitted.	2:1 or to suit property owner, not flatter than 6:1. R/W cost must be considered for high fill sections in urban areas.
CLEAR WIDTHS FOR BRIDGES ⑩	Freeways, divided arterials & collectors (4 or more lanes): Travel lanes plus 10' Rt. and 6' Lt., 10' Lt. for 6 or more lanes. Undivided arterials & collectors: Travel lanes plus approach shoulder width.	Travel lanes plus approach shoulder widths.	Travel lanes plus approach shoulder widths.	Divided: Travel lanes plus approach shoulder width Rt. and 6' Lt. unless full median section is carried across structure. Undivided: Travel lanes plus approach shoulder widths.	Full section (face to face of curb) plus sidewalk. When concrete barrier wall is placed in front of sidewalk a minimum clearance of 2.5' is required between the travel lane, wide curb lane or bicycle lane and the toe of the barrier wall.
BACKSLOPES	4:1 (Normal)	4:1 where R/W permits or 3:1.	4:1 where R/W permits or 3:1.	4:1 where R/W permits or 3:1.	2:1 or to suit property owner, not flatter than 6:1.
CLEAR ZONE (CZ) ①②③⑨	Standard: Design Speed MPH / Travel Lanes / Auxil. Lanes & Ramps 60-70 / 36' / 24' 55 / 30' / 18' 45-50 / 24' / 14'	Standard: Design Speed MPH / Travel Lanes / Auxil. Lanes & Ramps 60-70 / 30' / 18' 55 / 24' / 14' 45-50 / 20' / 14'	16' standard; 10' minimum from edge of both travel and auxiliary lanes.	Standard: Design Speed MPH / Travel Lanes / Auxil. Lanes & Ramps 50 / 24' / 14' 45 / 24' ⑤⑦ / 14' 30-40 / 18' ⑦ / 10' ⑦	4' from face of outside curb. Ø 6' from edge of median traffic lane. Bridge piers normally will be 16' min. from edge of travel lane. *
GUARDRAIL LOCATION	Shoulder width plus 2' to face of guardrail (at shoulder line when shoulder width is 12'). May be desirable to locate on frontslope; see Detail K, Index No. 400.	Shoulder width plus 2' to face of guardrail (8' min.). May be desirable to locate on frontslope; see Detail K, Index No. 400.	Shoulder width plus 2' to face of guardrail (8' min.). May be desirable to locate on frontslope; see Detail K, Index No. 400.	Shoulder width plus 2' to face of guardrail (8' min.).	Normally flush with face of curb.
SIGNS	Outside clear zone and not generally in median. All supports within clear zone shall be frangible or breakaway unless shielded by barrier that is justified for other reasons. Overhead sign structures located in the clear zone shall be shielded.	Outside clear zone. All supports in clear zone shall be frangible or breakaway unless shielded by barrier that is justified for other reasons. Overhead sign structures located in the clear zone shall be shielded.	Outside clear zone. All supports in clear zone shall be frangible or breakaway unless shielded by barrier that is justified for other reasons. Overhead sign structures located in the clear zone shall be shielded.	Outside clear zone. All supports in clear zone shall be frangible or breakaway unless shielded by barrier that is justified for other reasons. Overhead sign structures located in the clear zone shall be shielded.	2' min. from face of curb to inside edge of sign panel. Sign placement shall not block sidewalk.
LIGHT POLES	Not generally in median except when shielded by barrier. Outside clear zone or frangible base 20' from edge of travel lane and 14' min. from edge of auxiliary lane or behind approved barrier that is justified for other reasons.	Outside clear zone for both frangible and non-frangible bases if clear zone 20' or less. Desirably at 20' from edge of thru lane and 14' from edge of auxiliary lane or behind approved barrier that is justified for other reasons. Frangible bases may be placed at 20' from thru lane and 14' from auxiliary lane for clear zones greater than 20'.	Outside clear zone or behind approved barrier that is justified for other reasons.	Outside clear zone or behind approved barrier that is justified for other reasons. Frangible bases may be placed at 20' from thru lane and 14' from auxiliary lane for clear zones greater than 20'.	4' min. from face of outside curb. Ø 6' min. from edge of median traffic lane.
UTILITY POLES, FIRE HYDRANTS, ETC.	Not in median. Not within R/W of the main travel way of freeways. For other facilities outside the clear zone. Normally 6.5' inside R/W when beyond clear zone otherwise as close as practical to R/W line. ☒	Outside clear zone. Normally 6.5' inside R/W when beyond clear zone otherwise as close as practical to R/W line. ☒	Outside clear zone. Not in median. Normally 6.5' inside R/W when beyond clear zone otherwise as close as practical to R/W line. ☒	Outside clear zone. Not in median. Normally 6.5' inside R/W when beyond clear zone otherwise as close as practical to R/W line.	Not in median. 4' min. from face of outside curb. Ø
RAILROAD CROSSING DEVICES	Not on freeways. 10' min. from edge of travel lane or 6' min. from edge of auxiliary lane to near edge of device. No guardrail. ☆	10' min. from edge of travel lane or 6' min. from edge of auxiliary lane to near edge of device. No guardrail. ☆	Minimum from edge of travel lane to near edge of device: Greater than 45 mph -10' 35-45 mph -8' 30 mph or less -6' Minimum for auxiliary lanes -6' No guardrail ☆	Minimum from edge of travel lane to near edge of device: Greater than 45 mph -10' 35-45 mph -8' 30 mph or less -6' Minimum for auxiliary lanes -6' No guardrail ◇ ☆	2.5' min. from face of curb to near edge of device.
MEDIAN WIDTHS	Freeways 60' min. -60 mph and over (40' min. when lanes added in median) 40' min. -under 60 mph Other divided highways 40' min. -55 mph and over 22' min. -under 55 mph		22' Min.	19.5' min. - 45-50 mph 15.5' min. - 40 mph or less (greater widths desirable) For reconstruction projects the min. painted median width with provision for left turn is 10' (greater widths desirable)	19.5' min. - 45 mph 15.5' min. - 40 mph or less (greater widths desirable) For reconstruction projects the min. painted median width with provision for left turn is 10' (greater widths desirable)
TREES △ Existing Or Expected Dia. ≥ 4" Measured 6" Above The Ground	Outside clear zone. Standard criteria required for Freeways. +	Outside clear zone.	Outside clear zone.	Outside clear zone.	4' min. from face of outside curb. 6' min. from edge of median traffic lane.

Design speed to be established using realistic anticipated operating speed.

Preferred ditch cross sections are shown on pages 3-9 and 3-10 of the "Roadside Design Guide", 1988.

Consideration should be given to maintaining greater than the above specified clearances and/or flatter slopes where feasible and practical.

Values shown above shall be used on all new construction and on reconstruction projects to the extent that economic and environmental considerations and R/W limitations will allow. For definitions of new construction and reconstruction see "Manual Of Uniform Minimum Standards For Design, Construction And Maintenance For Streets And Highways". The values shown do not apply to RRR projects.

Driving lane is any traffic lane, travel or auxiliary.

An auxiliary lane is the portion of the roadway adjoining the traveled way for parking, speed changes, turning, storage for turning, weaving, truck climbing or for other purposes supplementary to through traffic movement.

Traveled way (Travel lanes) is the portion of the roadway for the movement of vehicles, exclusive of shoulders and auxiliary lanes.

Ø On projects where the 4 foot minimum offset cannot be reasonably obtained and other alternatives are deemed impractical, the minimum may be reduced to 2.5'.

* At locations where immediately adjacent development such as buildings, etc. provide less clearance, bridge piers can be placed to provide clearance less than 16'. Adequate sight distance for crossing maneuvers at intersections should be provided.

△ Offsets shown are for existing or newly planted trees. If existing trees are close to but less than the minimum offset indicated, other factors should be considered to determine adequacy of offset, i.e. ADT; operating speed; accident history; size, age and type of tree; protection by a barrier; etc. Newly planted trees may be placed behind barriers that are provided for other reasons. The minimum setback distance from the back of concrete barriers, walls, abutments or other rigid obstructions is 4' for newly planted trees. For W-beam guardrail the minimum setback is 6' from the face of the rail for newly planted trees. Offsets shown apply to both outside and median for divided highways unless otherwise noted. When trees are placed in the median adequate sight distance at intersections, turnouts and median openings, etc. shall be maintained.

☐ Vacant

◇ For divided facilities with curbed medians and undivided facilities utilizing curbed separations at crossings, 2.5' from face of curb to near edge of signal device in accordance with Traffic Design Standards Index No. 17882.

\+ When offset established, care shall be taken to avoid blocking sight distance to roadside signs.

☆ Not less than 2' from edge of any shoulder pavement.

☒ Avoid encroachment on adjacent private property. The 6.5' offset is to eliminate aerial encroachment.

Clear Zone Footnotes:

① Standard values are to be used for all new construction projects. These values may be reduced only where individually justified to mitigate critical social, economic, and environmental impacts or to lessen excessive right-of-way costs. Standard values are also to be used for reconstruction projects; however values down to AASHTO minimum may be used where individually justified due to critical social, economic and environmental impacts and/or excessive right-of-way costs or when existing roadside obstacles are not considered hazardous as evidenced by field review and by accident history or accident potential.

② Where accident history indicates need, or where specific site investigation shows definitive accident potential, clear zones for rural and urban facilities (without curb) should be adjusted on the outside of horizontal curves in accordance with Table 1 (Sht. 2 of 2).

③ The use of barriers or other safety treatment is to be considered if clear zone requirements are not provided.

④ Vacant

⑤ May be reduced to low speed condition criteria (30-40 mph) if conditions more nearly approach those for low speed.

⑥ Vacant

⑦ 6' from edge of inside traffic lane where median curb used.

⑧ Vacant

⑨ When a frontslope steeper than 4:1 encroaches into the clear zone, a clear runout area is to be provided at the bottom of the slope in accordance with Fig. 3.2 of the "Roadside Design Guide", 1988.

⑩ See "Structures Design Guidelines", Chapter 2, for further details.

STATE OF FLORIDA DEPARTMENT OF TRANSPORTATION
ROAD DESIGN

DESIGN CRITERIA RELATED TO HIGHWAY SAFETY

	Names	Dates
Designed By		
Drawn By	HSD	06/81
Checked By	JVG	06/81
F.H.W.A. Approved:		2/5/88

Approved By: Freddie Simmons (signature), State Roadway Design Engineer

Revision No.	Sheet No.	Index No.
92	1 of 2	700

TABLE I

CLEAR ZONE OF CURVED ALIGNMENT (CZ_c), FEET

Design Speed (Vmph) And Clear Zone (CZ, Feet)

D	30			35			40			45			50			55				60				65				70			
Tangent	10	16	18	10	16	18	10	16	18	14	20	24	14	20	24	14	18	24	30	18	24	30	36	18	24	30	36	18	24	30	36
0°15'	10	16	18	10	16	18	10	16	18	14	20	24	14	20	24	14	18	25	31	18	25	31	37	19	25	31	37	19	25	31	37
0°30'	10	16	18	10	16	18	10	16	18	14	21	25	14	21	25	15	19	25	31	19	25	31	38	19	25	32	38	19	26	32	38
0°45'	10	16	18	10	16	18	10	16	19	15	21	25	15	21	25	15	19	25	32	19	26	32	39	20	26	33	39	20	26	33	40
1°00'	10	16	18	10	16	19	10	17	19	15	21	25	15	21	26	15	20	26	32	20	27	33	40	20	27	34	40	21	28	34	41
1°30'	10	16	18	10	17	19	11	17	19	15	21	26	15	22	26	16	20	27	33	21	27	34	41	21	28	35	42	22	29	36	43
2°00'	10	17	19	11	17	19	11	17	19	15	22	26	16	23	27	16	21	28	35	21	29	36	43	22	29	37	44	23	30	38	46
2°30'	11	17	19	11	17	20	11	17	20	16	22	27	17	24	28	17	21	29	36	22	30	37	44	23	31	38	46	24	32	40	48
3°00'	11	17	19	11	17	20	11	18	20	16	23	28	17	24	29	17	22	30	37	23	31	38	46	24	32	40	48	25	34	42	50
3°30	11	17	19	11	18	20	11	18	20	16	23	28	18	25	30	18	23	30	38	24	32	40	48	25	33	42	50	26	35	44	53
4°00'	11	17	20	11	18	20	12	18	21	17	24	29	18	25	30	18	23	31	39	25	33	41	49	26	35	43	52				
4°15'																								26	35	44	53				
5°00'	11	18	20	11	18	21	12	19	21	17	25	30	18	26	31	19	25	33	41	26	35	44	52								
5°15'																				27	36	44	53								
6°00'	11	18	20	12	19	21	12	20	22	18	26	31	19	27	33	20	26	35	43												
6°30'																21	27	36	44												
7°00'	12	18	21	12	19	22	13	20	23	19	27	32	20	28	34																
8°00'	12	19	21	12	20	22	13	21	23	19	28	33	21	30	36																
8°15'													21	30	36																
9°00'	12	19	21	13	20	23	13	21	24	20	29	34																			
10°00'	12	19	22	13	20	23	14	22	25	21	29	35																			
10°15'										21	30	35																			
11°00'	12	20	22	13	21	24	14	22	25																						
12°00'	13	20	23	14	21	24	15	23	26																						
13°00'	13	20	23	14	22	25	15	24	27																						
13°15'							15	24	27																						
14°00'	13	21	23	14	22	25																									
16°00'	13	21	24	14	22	25																									
17°45'				15	24	27																									
18°00'	14	22	25																												
20°00'	14	22	25																												
22°00'	14	23	26																												
24°00'	15	24	27																												
24°45'	15	24	27																												

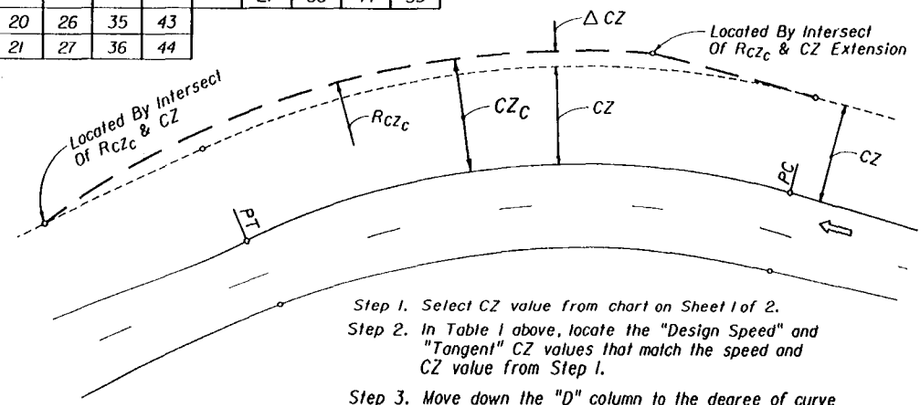

Step 1. Select CZ value from chart on Sheet 1 of 2.

Step 2. In Table I above, locate the "Design Speed" and "Tangent" CZ values that match the speed and CZ value from Step 1.

Step 3. Move down the "D" column to the degree of curve under consideration, then across the table to the column found under Step 2, to find the CZ_c value.

CZ_c

STATE OF FLORIDA DEPARTMENT OF TRANSPORTATION
ROAD DESIGN

DESIGN CRITERIA RELATED TO HIGHWAY SAFETY

	Names	Dates
Designed By	COMM	
Drawn By	HSD	1/88
Checked By	JVG	1/88
F.H.W.A. Approved:		2/5/88

Approved By Freddie Simmons
State Roadway Design Engineer

Revision No.	Sheet No.	Index No.
94	2 of 2	700

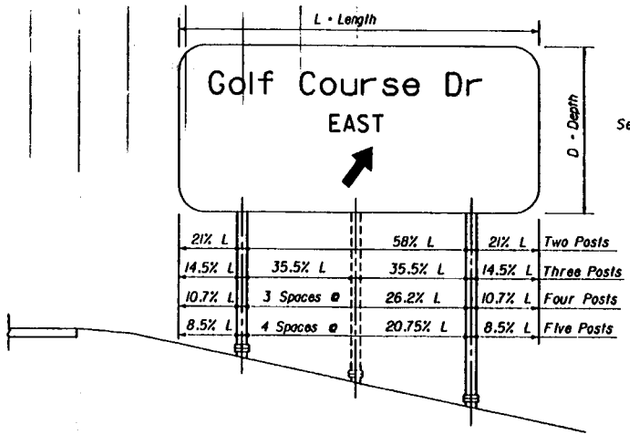

TYPICAL ELEVATION

(For Notes And Dimensions Not Shown, See Plans)

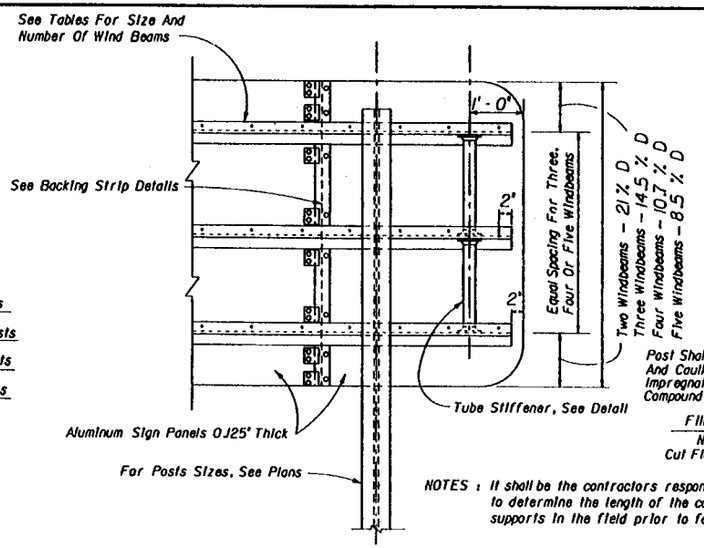

NOTES : It shall be the contractors responsibility to determine the length of the column supports in the field prior to fabrication.

PARTIAL REAR ELEVATION

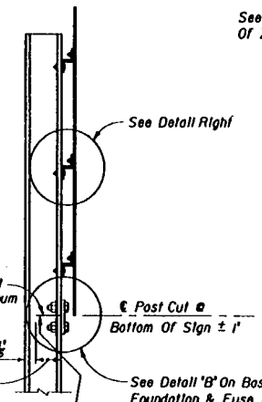

NOTE: As on alternate to this saw cut the contractor may fabricate the column from two pieces providing at this location the fuse plate and the additional hinge plate detailed on sheet 2 of 4.

SIDE VIEW

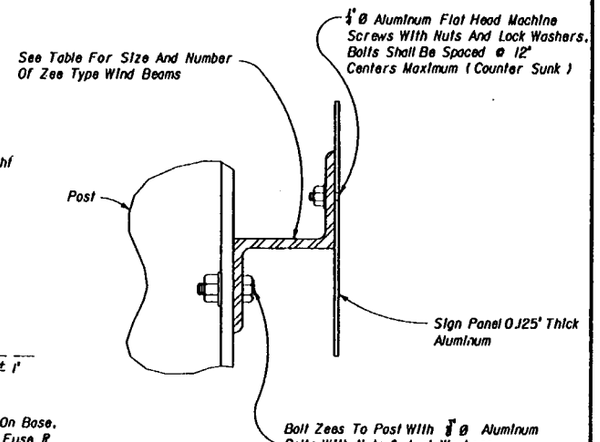

Z TYPE WIND BEAM

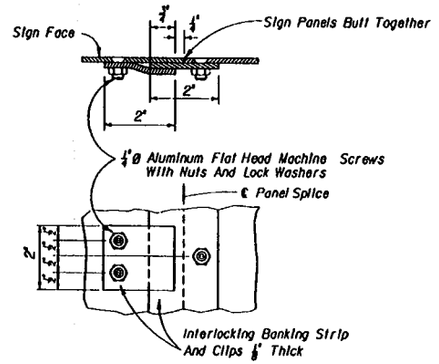

BACKING STRIP DETAIL

(Maximum Spacing Of Clips 12")

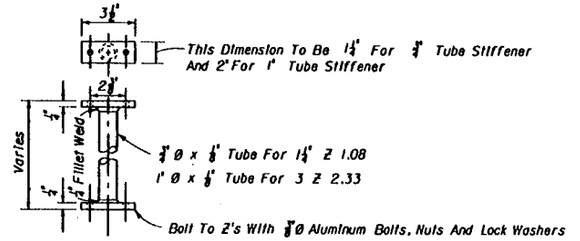

STIFFENER DETAIL

NUMBER OF WIND BEAMS FOR GIVEN DEPTH & WIND					
WIND	NO. BEAMS	MAX DEPTH	WIND	NO. BEAMS	MAX DEPTH
60	2	10'-3"	80	2	8'-3"
60	3	14'-9"	80	3	11'-9"
60	4	20'-0"	80	4	15'-9"
60	5	25'-3"	80	5	20'-0"
70	2	9'-0"	90	2	7'-3"
70	3	13'-0"	90	3	10'-6"
70	4	17'-6"	90	4	14'-3"
70	5	22'-3"	90	5	18'-0"

SIZE OF WIND BEAMS				
SIZE OF ZEE	LENGTH OF SIGN FOR 2 POSTS	LENGTH OF SIGN FOR 3 POSTS	LENGTH OF SIGN FOR 4 POSTS	LENGTH OF SIGN FOR 5 POSTS
1 1/2" Z 1.08	0'-14'-0"	14'-1"-20'-0"	20'-1"-27'-0"	27'-1"-35'-0"
3 Z 2.33	14'-1"-27'-0"	20'-1"-38'-0"	27'-1"-51'-6"	35'-1"-65'-0"
3 Z 3.38	OVER 27'-0"	OVER 38'-0"	OVER 51'-6"	OVER 65'-0"

WIND LOADING CHART BY ZONES

The Following Values For Various Sections Of The Interstate Are In general Agreement With The Isotach Map And Are Appropriate For Use In The Design Of Sign Structures.

ZONE NO. 1
(60 m.p.h.)

Alachua, Bradford, Baker, Bay, Calhoun, Clay, Columbia, Escambia, Gadsden, Gilchrist, Hamilton, Holmes, Jackson, Jefferson, Lafayette, Lake, Leon, Liberty, Madison, Marion, Okaloosa, Putnam, Santa Rosa, Sumter, Suwannee, Union, Walton And Washington Counties.

ZONE NO. 2
(70 m.p.h.)

Citrus, Desoto, Dixie, Duval, Flagler, Franklin, Glades, Gulf, Hardee, Hendry, Hernando, Highlands, Hillsborough, Levy, Nassau, Okeechobee, Orange, Osceola, Pasco, Pinellas, Polk, Seminole, St. Johns, Taylor And Wakulla Counties.

ZONE NO. 3
(80 m.p.h.)

Brevard, Charlotte, Collier, Indian River, Lee, Manatee, Martin, Palm Beach, Sarasota, St. Lucie And Volusia Counties.

ZONE NO. 4
(90 m.p.h.)

Broward, Dade And Monroe Counties.

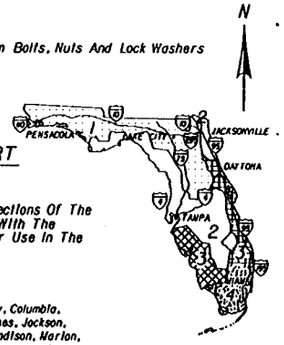

GENERAL NOTES

DESIGN SPECIFICATION: Standard specification for structural supports for highway signs, luminaries and traffic signals. A.A.S.H.O. Latest edition.

SHEET AND PLATES: Material used shall meet the requirements of Aluminum Association Alloy 6061-T6 and A.S.T.M. Specification B-209. Sheets are to be degreased, etched, neutralized and treated with Alodine 1200, Iridite 14-2, Bondrite 721, or equal. No stenciling permitted on sheets.

MATERIALS: All aluminum materials shall meet the requirements of the Aluminum Association Alloy 6061-T6 and also the following A.S.T.M. Specifications for the following: Sheets and Plates B209; Extruded Tube, Bars, Rods & Shapes B221 and Standard Structural Shapes B308.

WELDING RODS: Aluminum Association Alloy No. 5556 Filler Wire.

TOLERANCE: All above materials shall be keeping with the A.S.T.M. Specifications governing.

STEEL BOLTS, NUTS & WASHERS: All steel bolts, nuts and washers shall meet the requirements of the ASTM A235 and shall have an electroplated zinc coating type LS applied in accordance with Standard Specifications 962-7.

ALTERNATE MATERIAL: Material used for sheet and plate shall also meet the requirements of Aluminum Assoc. Alloy 5154-H38 and A.S.T.M. Specifications B209. Material used for Extruded Bars, Rods, Shapes and Tubes shall also meet the requirements of Aluminum Assoc. Alloy 6351-T5 and A.S.T.M. Specification B221.

BASE CONNECTION: High Strength Bolts in the base connection shall be tightened only to the torque shown in the table. Overtightened base connections will not be accepted.

ALUMINUM BOLTS, NUTS & LOCKWASHERS: Aluminum bolts shall meet the requirements of Aluminum Association Alloy 2024-T4 Or 6061-T6 (A.S.T.M. Spec. B-211). The bolts shall have an Anodic Coating of at least 0.0002" thick and be Chromate Sealed Lock Washers shall Meet the requirements of Aluminum Association Alloy 7075-T6 (A.S.T.M. Specification B-221). Nuts shall meet the requirements of Aluminum Association Alloy 6262-T9 Or 6061-T6.

SIGN FACE: All sign face corners shall be rounded. See Sign Layout Sheet.

MATERIAL STRESSES: All allowable stresses are in accordance with the standard specifications for structural supports for highway signs, luminaires and traffic signals. A.A.S.H.O. Latest edition for all materials shown in the plans.

DESIGN WIND LOAD: See Wind Loading Chart By Zones for wind in miles per hour on flat sign area. The allowable working stress shall be increased by 40% for combination dead load and wind load.

SHOP DRAWINGS: When ground signs supports are fabricated in accordance with these plans no shop drawings are required. In the event the column length exceeds 2ft. above the length as shown in the plans, shop drawings will be required for those signs only for approval. However, shop drawings for sign panels, messages, lettering and quantities shall be submitted to traffic plans for approval.

FABRICATOR NOTE IMPORTANT

All Stiffened Base Plate Flanges and Fuse Plates shall be bolted to posts using high strength bolts. Bolts shall be tightened in the shop following a method approved by the engineer. Tightening shall be to such a degree so as to obtain the following minimum residual tension in each bolt:

HIGH STRENGTH BOLTS (A-325) MINIMUM RESIDUAL TENSION

BOLT SIZE	TENSION
3/4"	19,200 Lbs.
7/8"	28,400 Lbs.
1"	36,050 Lbs.
1"	47,250 Lbs.
1 1/8"	56,450 Lbs.
1 1/4"	71,700 Lbs.

ALUMINUM

STATE OF FLORIDA DEPARTMENT OF TRANSPORTATION
STRUCTURES DESIGN

STANDARD ROADSIDE SIGN BREAK-AWAY PANEL DETAIL

	Names	Dates
Designed By	HHJ	01/67
Drawn By		
Checked By	CWB	01/67
F.H.W.A. Approved:		

Approved By

Revision No. | Sheet No. 1 of 4 | Index No. 9535

An Alternate Cast Base Of Alloy 356 And T6 Temper May Be Submitted For Consideration In Lieu Of The Fabricated Base For Approval By The Engineer.

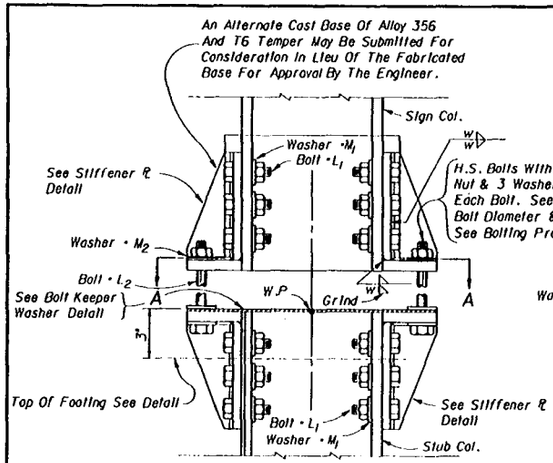

SIGN COL. & STUB COL. ELEVATION
WF SHAPES

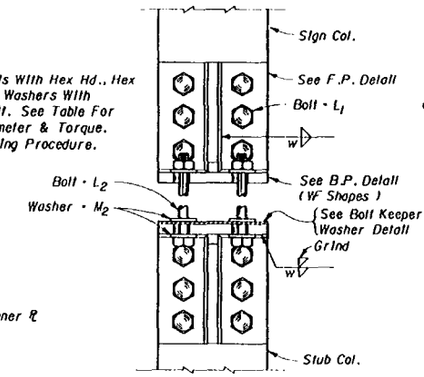

SIGN COL & STUB COL.
SIDE ELEVATION

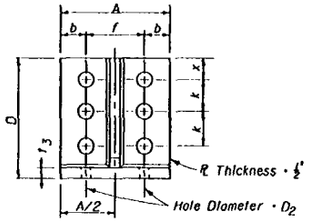

FLANGE PLATE DETAIL

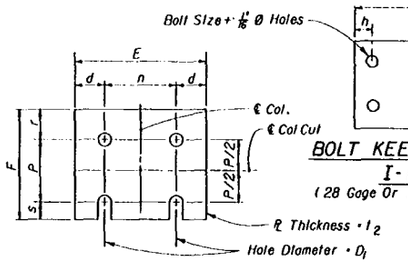

FUSE PLATE DETAIL

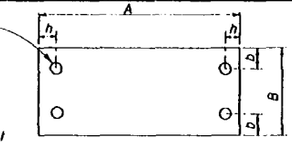

BOLT KEEPER WASHER DETAIL
I-BEAM SHAPES
(28 Gage Or .0149" Thick Aluminum 6061-T6)

NOTE: Sections shown are for installation on right shoulder and in gore. Plate slot bevels are opposite hand from that shown for installations in the median.

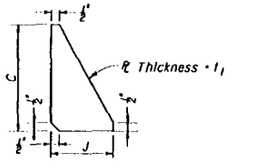

STIFFENER PLATE DETAIL

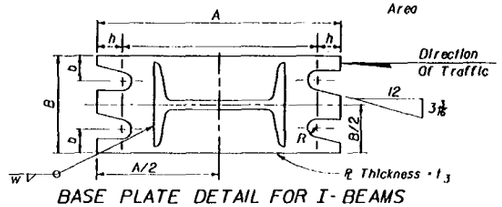

BASE PLATE DETAIL FOR I-BEAMS

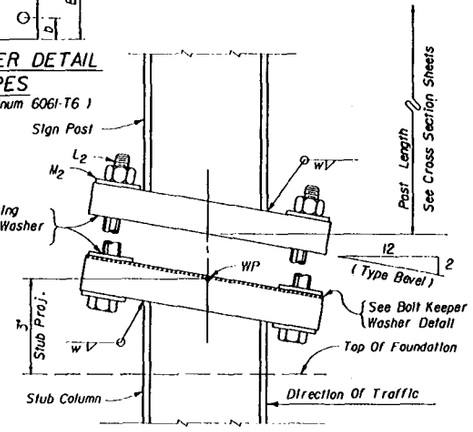

SIGN COL. & STUB COL. ELEVATION
I-BEAM SHAPES

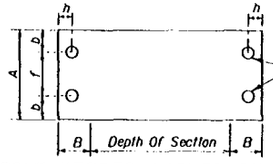

BOLT KEEPER WASHER DETAIL
WF SHAPES
(20 Gage Or .040" Thick Aluminum 6061-T6)

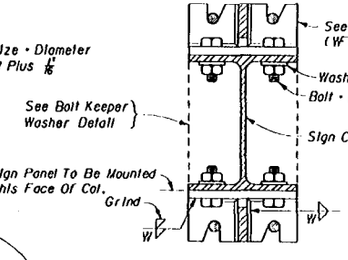

SECTION AA

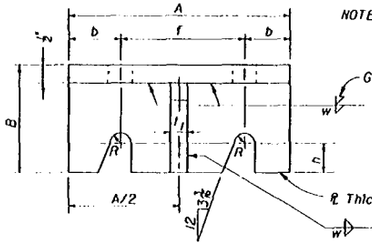

BASE PLATE DETAIL
FOR WF SHAPES

NOTE: Two Separate Beams Are Indicated As Required For Alternate Detail. For The Typical Detail A Sawcut Is Required. Extent Of This Sawcut Is Shown On The Side View Detail On Sheet 1 Of 4, Index No. 9535

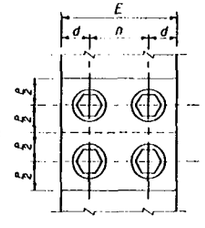

HINGE PLATE DETAIL

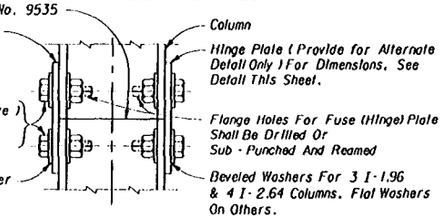

DETAIL "B" FUSE & HINGE PLATE
(See Fabricator Note On Sheet Drawing No. 3 of 4 Index No. 9535)

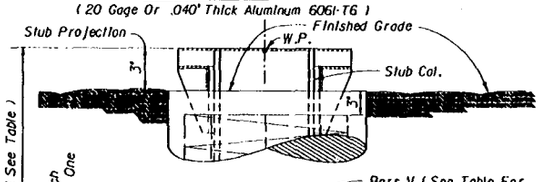

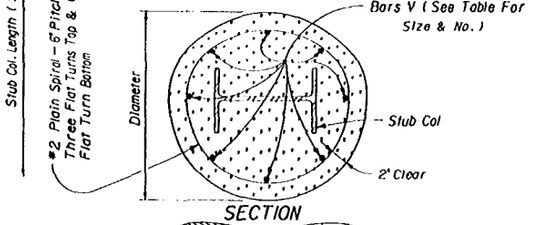

SECTION

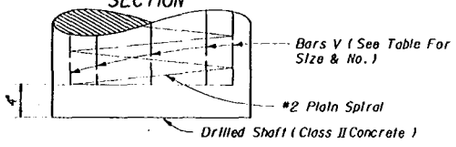

FOUNDATION DETAIL

NOTE: To prevent galvanic corrosion, reinforcing steel shall not be in contact with the aluminum stud column.

BASE CONNECTION DATA TABLE

DIMENSION / SECTION	A	B	C	D	J	L	BOLT SIZE & TORQUE(L_2)	M_1	M_2	D_2	R	x	b	f	h	k	t_1	t_3	w
3 I	1.96	1'-$\frac{1}{4}$"	3"						1"		$\frac{5}{8}$"		1"		$\frac{1}{2}$"			1"	$\frac{5}{16}$"
4 I	2.64	1'-$\frac{1}{4}$"	3"						1"		$\frac{5}{8}$"		1"		$\frac{1}{2}$"			1"	$\frac{5}{16}$"
6 WF	4.16	4"	3$\frac{1}{2}$"	5"	5$\frac{1}{2}$"	2$\frac{1}{2}$"	1" Ø - 345 ft-lbs	1$\frac{1}{2}$"	1$\frac{1}{2}$"	$\frac{3}{4}$"	$\frac{5}{8}$"	1"	3"	2$\frac{1}{2}$"	1$\frac{1}{2}$"	1$\frac{1}{8}$"	1$\frac{1}{2}$"	1$\frac{1}{2}$"	$\frac{5}{16}$"
8 W	5.90	5$\frac{1}{2}$"	3$\frac{1}{2}$"	5"	5$\frac{1}{2}$"	2$\frac{1}{2}$"	1" Ø	1$\frac{1}{2}$"	1$\frac{1}{2}$"	$\frac{3}{4}$"	$\frac{5}{8}$"	1"	3"	2$\frac{1}{2}$"	1$\frac{1}{2}$"	1$\frac{1}{8}$"	1$\frac{1}{2}$"	1$\frac{1}{2}$"	$\frac{5}{16}$"
8 WF	8.32	6$\frac{1}{2}$"	3$\frac{1}{2}$"	6$\frac{1}{2}$"	7$\frac{1}{4}$"	2$\frac{1}{2}$"	1" Ø	1$\frac{1}{2}$"	1$\frac{1}{2}$"	$\frac{3}{4}$"	1$\frac{1}{8}$"	1$\frac{1}{2}$"	3$\frac{1}{2}$"	2"	1$\frac{1}{2}$"	1$\frac{1}{8}$"	1$\frac{1}{2}$"	1$\frac{1}{2}$"	$\frac{5}{16}$"
10 WF	11.41	8"	3$\frac{1}{2}$"	8"	8$\frac{1}{2}$"	2$\frac{1}{2}$"	1" Ø - 554 ft-lbs	2"	1$\frac{1}{2}$"	$\frac{7}{8}$"	1$\frac{1}{2}$"	2$\frac{1}{2}$"	3$\frac{1}{2}$"	3"	2$\frac{1}{2}$"	1$\frac{1}{8}$"	1$\frac{1}{2}$"	1$\frac{1}{2}$"	$\frac{5}{16}$"
12 WF	13.84	8"	3$\frac{1}{2}$"	8$\frac{1}{2}$"	9$\frac{1}{4}$"	3"	1" Ø - 640 ft-lbs	2$\frac{1}{2}$"	1$\frac{1}{2}$"	1"	1$\frac{1}{2}$"	2$\frac{1}{2}$"	4"	3$\frac{1}{2}$"	2$\frac{1}{2}$"	1$\frac{1}{8}$"	1$\frac{1}{2}$"	1$\frac{1}{2}$"	$\frac{5}{16}$"
12 WF	18.34	10"	3$\frac{1}{2}$"	10"	10$\frac{1}{2}$"	3$\frac{1}{2}$"	1" Ø - 640 ft-lbs	2$\frac{1}{2}$"	2"	1$\frac{1}{8}$"	1$\frac{1}{2}$"	2$\frac{1}{2}$"	5$\frac{1}{2}$"	4"	1"	3$\frac{1}{4}$"	1$\frac{1}{2}$"	1$\frac{1}{2}$"	$\frac{5}{16}$"

FUSE (HINGE) PLATE DATA TABLE

BOLT SIZE	E	P	D_1	d	n	r	s	t_2
$\frac{3}{4}$"	3"	1$\frac{1}{4}$"	$\frac{3}{4}$"	$\frac{3}{4}$"	1$\frac{1}{4}$"	$\frac{3}{4}$"	$\frac{3}{4}$"	$\frac{3}{4}$"
$\frac{3}{4}$"	3"	1$\frac{1}{4}$"	$\frac{3}{4}$"	$\frac{3}{4}$"	1$\frac{1}{4}$"	$\frac{3}{4}$"	$\frac{3}{4}$"	$\frac{3}{4}$"
$\frac{3}{4}$"	4"	1$\frac{1}{2}$"	$\frac{3}{4}$"	$\frac{3}{4}$"	2$\frac{1}{2}$"	1"	$\frac{3}{4}$"	$\frac{3}{4}$"
$\frac{3}{4}$"	5$\frac{1}{2}$"	2"	$\frac{3}{4}$"	$\frac{3}{4}$"	3$\frac{1}{2}$"	1$\frac{1}{2}$"	$\frac{3}{4}$"	$\frac{3}{4}$"
$\frac{3}{4}$"	6$\frac{1}{2}$"	2$\frac{1}{2}$"	1"	$\frac{3}{4}$"	3$\frac{1}{2}$"	1$\frac{1}{2}$"	1"	$\frac{3}{4}$"
1"	7"	2$\frac{1}{2}$"	1$\frac{1}{4}$"	1"	3$\frac{1}{2}$"	1$\frac{1}{2}$"	1$\frac{1}{4}$"	1"
1$\frac{1}{4}$"	8"	3"	1$\frac{1}{4}$"	1$\frac{1}{4}$"	4"	2"	1$\frac{1}{4}$"	1"
1$\frac{1}{4}$"	9"	3$\frac{1}{2}$"	1$\frac{1}{2}$"	1$\frac{1}{4}$"	5$\frac{1}{2}$"	2$\frac{1}{2}$"	1$\frac{1}{4}$"	1"

FOUNDATION DATA TABLE

DIA.	DEPTH	STUB LENGTH	REINFORCING BARS "V"
1'-6"	1'-6"	1'-6"	8 - #4
1'-6"	1'-6"	1'-6"	8 - #4
2'-0"	2'-3"	2'-0"	8 - #4
2'-0"	3'-3"	2'-6"	8 - #5
2'-0"	4'-6"	2'-6"	8 - #7
2'-0"	6'-3"	3'-0"	8 - #10
2'-0"	8'-0"	3'-6"	9 - #11
2'-0"	10'-9"	4'-0"	15 - #11

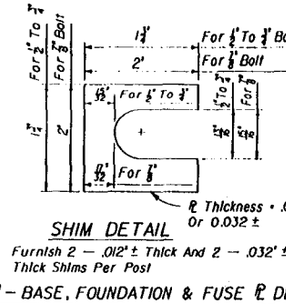

SHIM DETAIL

Furnish 2 — .012" ± Thick And 2 — .032" ± Thick Shims Per Post

PROCEDURE FOR ASSEMBLY OF BASE CONNECTION: FOR BOLTS L_2

1. Assemble post to stub with bolts and with one flat washer on each bolt between plates.
2. Shim as required to plumb post (See Shim Detail).
3. Tighten all bolts the maximum possible with 12' to 15' wrench to bed washers and shims and to clean bolt threads then loosen each bolt in turn and retighten in a Systematic order to the prescribed torque (See Table).
4. Burr threads at junction with nut using a center punch to prevent nut loosening.

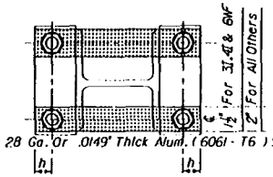

ALTERNATE BOLT KEEPER WASHER DETAIL FOR I-BEAM AND WF SHAPES

ALUMINUM – BASE, FOUNDATION & FUSE ℄ DETAILS

STATE OF FLORIDA DEPARTMENT OF TRANSPORTATION
STRUCTURES DESIGN

STANDARD ROADSIDE SIGN BREAK-AWAY POST DETAILS

	Names	Dates
Designed By		
Drawn By	H.M.J.	01/67
Checked By	C.W.B.	01/67
F.H.W.A. Approved:		

Approved By

Revision No.	Sheet No.	Index No.
	2 of 4	9535

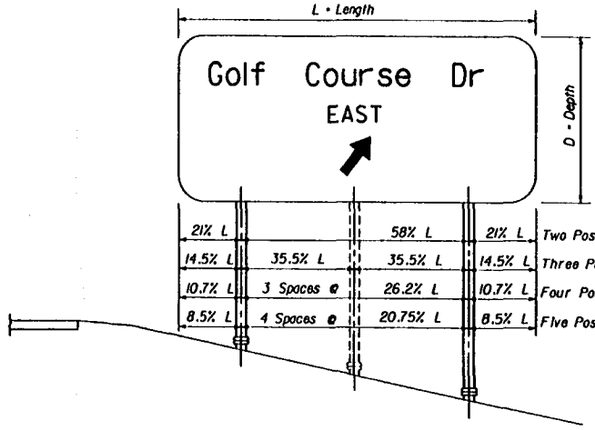

TYPICAL ELEVATION
(For Notes And Dimensions Not Shown, See Plans)

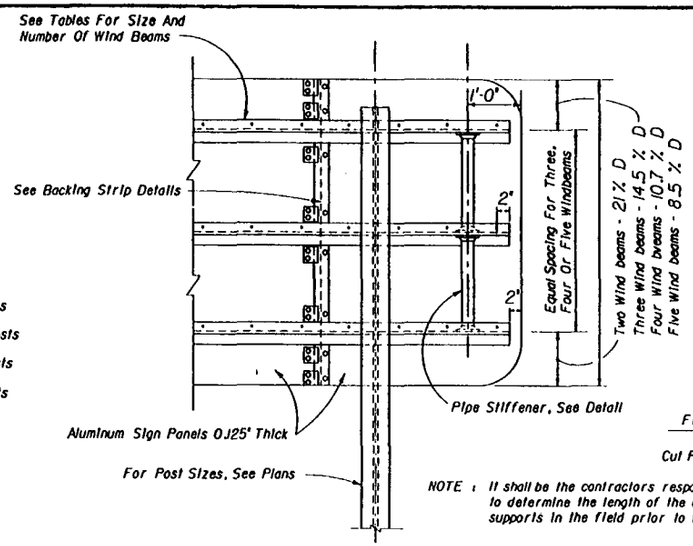

NOTE : It shall be the contractors responsibility to determine the length of the column supports in the field prior to fabrication.

PARTIAL REAR ELEVATION

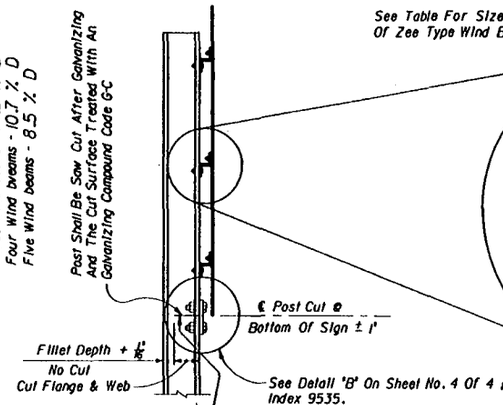

NOTE: As an alternate to this saw cut the contractor may fabricate the column from two pieces providing at this location the fuse plate and the additional hinge plate detailed on sheet 4 of 4.

SIDE VIEW

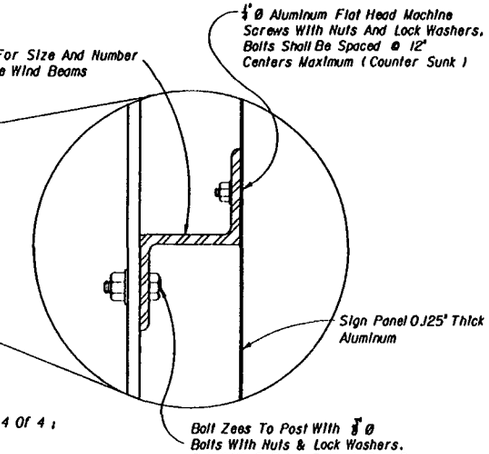

Z TYPE WIND BEAM

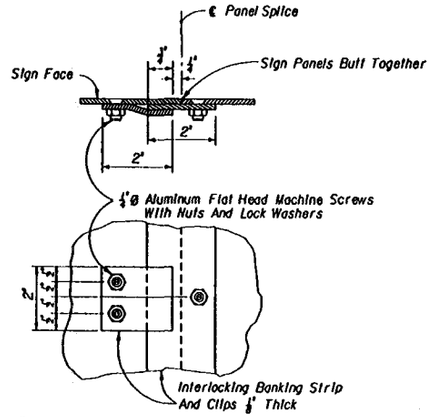

BACKING STRIP DETAIL
(Maximum Spacing Of Clips 12")

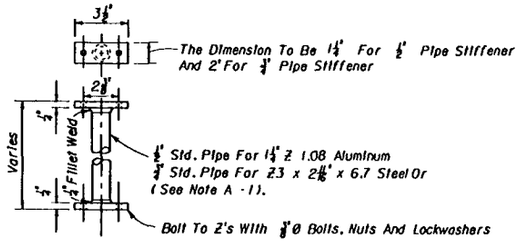

STIFFENER DETAIL

NUMBER OF WIND BEAMS FOR GIVEN DEPTH & WIND					
WIND	NO. BEAMS	MAX DEPTH	WIND	NO. BEAMS	MAX DEPTH
60	2	10' - 3"	80	2	8' - 3"
60	3	14' - 9"	80	3	11' - 9"
60	4	20' - 0"	80	4	15' - 9"
60	5	25' - 3"	80	5	20' - 0"
70	2	9' - 0"	90	2	7' - 3"
70	3	13' - 0"	90	3	10' - 6"
70	4	17' - 6"	90	4	14' - 3"
70	5	22' - 3"	90	5	18' - 0"

* NOTE: Aluminum Zee - No steel equivalent available.

SIZE OF WIND BEAMS				
SIZE OF ZEE	LENGTH OF SIGN FOR 2 POSTS	LENGTH OF SIGN FOR 3 POSTS	LENGTH OF SIGN FOR 4 POSTS	LENGTH OF SIGN FOR 5 POSTS
* 1 3/8" Z 1.08	0' - 14' - 0"	14' - 1" - 20' - 0"	20' - 1" - 27' - 0"	27' - 1" - 35' - 0"
Z 3 x 2 5/8" x 6.7	14' - 1" - 27' - 0"	20' - 1" - 38' - 0"	27' - 1" - 51' - 6"	35' - 1" - 65' - 0"
Z 3 x 2 5/8" x 9.8	OVER 27' - 0"	OVER 38' - 0"	OVER 51' - 6"	OVER 65' - 0"

WIND LOADING CHART BY ZONES

The Following Values For Various Sections Of The Interstate Are In General Agreement With The Isotach Map And Are Appropriate For Use In The Design Of Sign Structures.

ZONE NO. 1
(60 m.p.h.)
Alachua, Bradford, Baker, Bay, Calhoun, Clay, Columbia, Escambia, Gadsden, Gilchrist, Hamilton, Holmes, Jackson, Jefferson, Lafayette, Lake, Leon, Liberty, Madison, Marion, Okaloosa, Putnam, Santa Rosa, Sumter, Suwannee, Union, Walton And Washington Counties.

ZONE NO. 2
(70 m.p.h.)
Citrus, Desoto, Dixie, Duval, Flagler, Franklin, Glades, Gulf, Hardee, Hendry, Hernando, Highlands, Hillsborough, Levy, Nassau, Okeechobee, Orange, Osceola, Pasco, Pinellas, Polk, Seminole, St. Johns, Taylor And Wakulla Counties.

ZONE NO. 3
(80 m.p.h.)
Brevard, Charlotte, Collier, Indian River, Lee, Manatee, Martin, Palm Beach, Sarasota, St. Lucie And Volusia Counties.

ZONE NO. 4
(90 m.p.h.)
Broward, Dade And Monroe Counties.

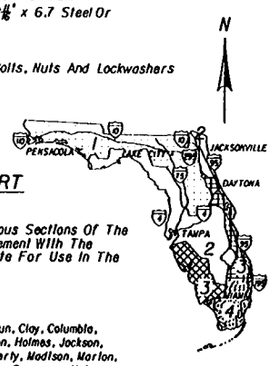

GENERAL NOTES

DESIGN SPECIFICATION: Standard specification for structural supports for highway signs, luminaries and traffic signals. A.A.S.H.O. latest edition - Welding - latest edition of A.W.S. structural welding code, latest A.A.S.H.T.O. standard specifications for welding of structural steel highway bridges and F.L.A. D.O.T. standard specifications with supplement.

DESIGN LOADS: See wind loading chart by zones for wind in miles per hour on flat sign area. The allowable working stress shall be increased by 40% for combination dead load and wind load.

STRUCTURAL STEEL: All structural steel shall meet the requirements of A.S.T.M. A-36

STEEL BOLTS, NUTS AND LOCK WASHERS: Steel bolts, nuts and lock washers shall meet the following A.S.T.M. requirements ; high strength bolts, nuts and washers A.S.T.M. A-325 ; all other steel bolts, nuts and washers, A.S.T.M. A-307.

GALVANIZING OR METALIZING: All steel shapes, angles, tees, plates, A.S.T.M. A307 bolts, nuts and washers shall be hot dip galvanized or metalized after fabrication, hot dip galvanizing shall be in accordance with the requirements of A.S.T.M. A-123 and/or A-153.

SIGN PANELS: The material used shall meet the requirements of the Aluminum Association Alloy, 6061-T6 and A.S.T.M. Specification B209. The sheets are to degreased, etched, neutralized and treated with alodine 1200, iridite 14-2, bonderite 721, or equal. No stenciling permitted on sheets.

ALUMINUM BOLTS, NUTS & LOCKWASHERS: Aluminum bolts shall meet the requirements of Aluminum Association Alloy 2024-T4 Or 6061-T6 (A.S.T.M. Spec. B-211). The bolts shall have an Anodic Coating of at least 0.0002" thick and be Chromate Sealed Lock Washers shall meet the requirements of Aluminum Association Alloy 7075-T6 (A.S.T.M. Specification B-221). Nuts shall meet the requirements of Aluminum Association Alloy 6262-T9 Or 6061-T6.

TOLERANCE: All above materials shall be keeping with the A.S.T.M. Specifications governing.

MATERIAL STRESSES: All allowable stresses are in accordance with the standard specifications for structural supports for highway signs, luminaires and traffic signals. A.A.S.H.O. latest edition for all materials shown in the plans.

SHOP DRAWINGS: See shop drawing note sheet 1 of 4, 9535.

BASE CONNECTION: High Strength Bolts in the base connection shall be tightened only to the torque shown in the table. Overtightened base connections will not be accepted.

FRICTION FUSE PLATE: Notched steel fuse plates shall conform to the requirements of A.S.T.M. Specification A-36. All holes shall be drilled. All plate cuts shall, preferably, be saw cuts; however, flame cutting will be permitted provided all edges are ground. Metal projecting beyond the plane of the plate face will not be tolerated.

SIGN FACE: All sign face corners shall be rounded. See sign layout sheet.

ALUMINUM MATERIALS: All aluminum materials other than bolts, nuts and lock washers shall meet the requirements of the Aluminum Association Alloy 6061-T6 and also the following A.S.T.M. specifications for the following; Sheet and Plates B209; Extruded Tube, Bars, Rod and Shapes B221 and Standard Structural Shapes B308.

HIGH STRENGTH BOLTS : (A.S.T.M. A325) Shall have an electroplated zinc coating type LS applied in accordance with Standard Specifications 962-7.

FABRICATOR NOTE: IMPORTANT
All friction type bolts shall be tightened in the shop following a method approved by the engineer. Tightening shall be to such a degree as to obtain the following minimum residual tension in each bolt, (see table below).

NOTE A-1 At the contractors option, aluminum zees and stiffener may be used in lieu of structural steel zees and stiffeners. See drawing No. 1 of 4, Index No. 9535 for aluminum zee and stiffener.

HIGH STRENGTH BOLTS (A-325) MINIMUM RESIDUAL TENSION

BOLT SIZE	TENSION
5/8"	19,200 Lbs.
3/4"	28,400 Lbs.
1"	47,250 Lbs.
1 1/8"	56,450 Lbs.
1 1/4"	71,700 Lbs.
1 3/8"	85,450 Lbs.

STEEL

STATE OF FLORIDA DEPARTMENT OF TRANSPORTATION
STRUCTURES DESIGN

STANDARD ROADSIDE SIGN BREAK-AWAY PANEL DETAIL

	Names	Dates
Designed By	HHH	01/67
Drawn By		
Checked By	CWB	01/67
F.H.W.A. Approved:		

Approved By

Revision No. | Sheet No. 3 of 4 | Index No. 9535

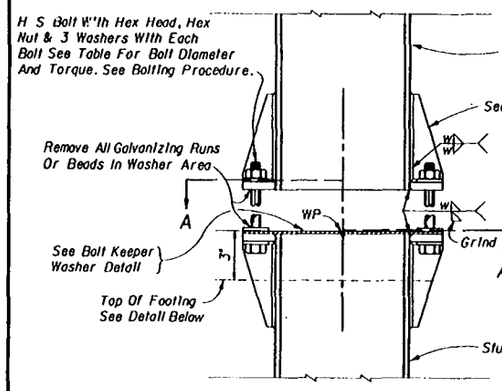

SIGN COL & STUB COL ELEVATION
WF SHAPES

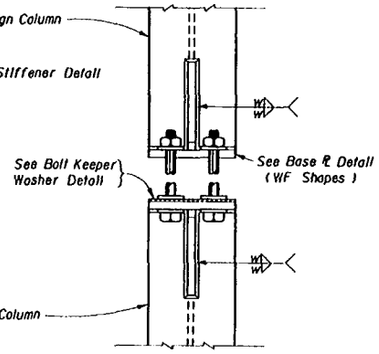

SIGN COL & STUB COL ELEVATION
WF SHAPES

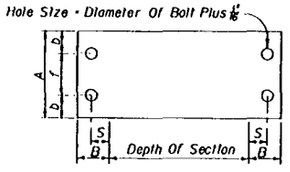

BOLT KEEPER WASHER DETAIL
(20 Gage Or .040" Thick Aluminum 6061 - T6)

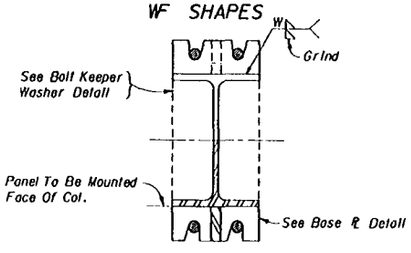

SECTION AA

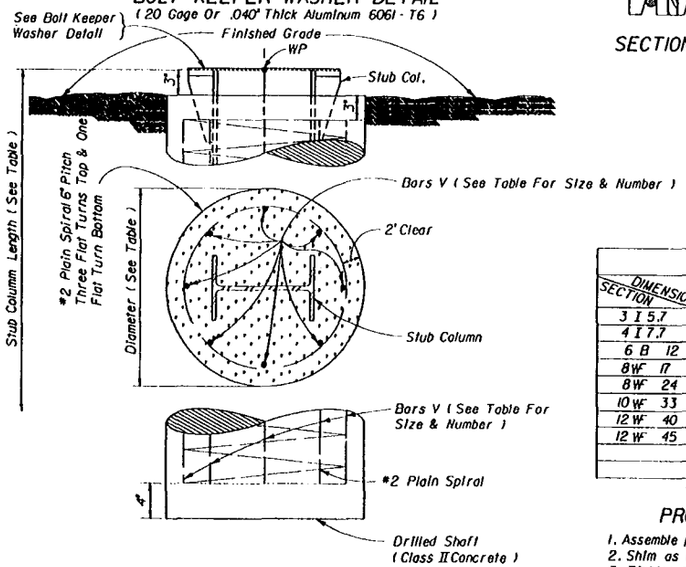

FOUNDATION DETAIL

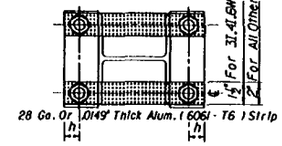

ALTERNATE BOLT KEEPER WASHER DETAIL FOR I-BEAM AND WF SHAPES

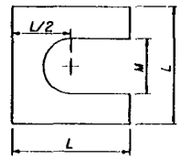

SHIM DETAIL

Furnish 2 – .012"± Thick &
2 – .032"± Thick Shims Per Column

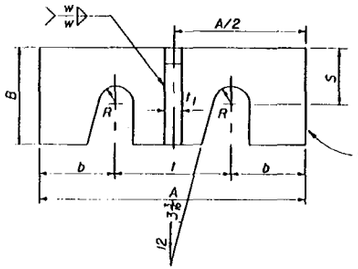

BASE PLATE DETAIL
WF SHAPES

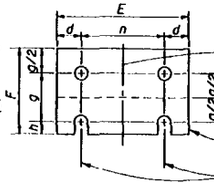

FUSE PLATE DETAIL

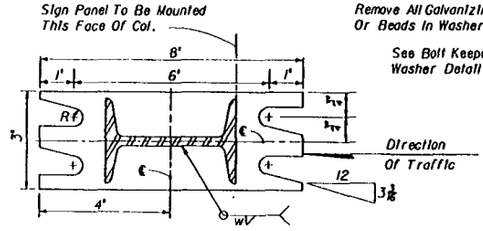

BASE PLATE I BEAMS

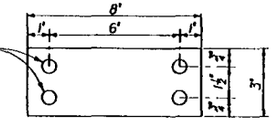

BOLT KEEPER WASHER DETAIL
I-BEAM SHAPES
(28 Gage Or .0149" Thick Aluminum 6061 - T6)

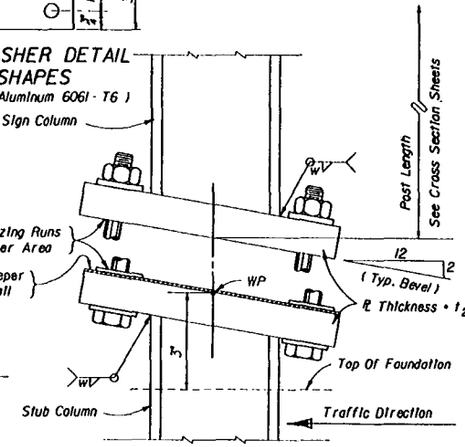

SIGN COL & STUB COL ELEVATION
I-BEAM SHAPES

NOTE: Two Seperate Beams are Indicated as Required for Alternate Detail. For the Typical Detail a Sawcut is Required. Extent of this Sawcut is Shown on the Side View Detail on Sheet 3 of 4, Index No. 9535

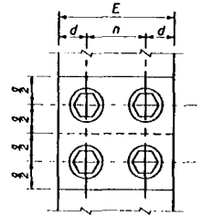

HINGE PLATE DETAIL

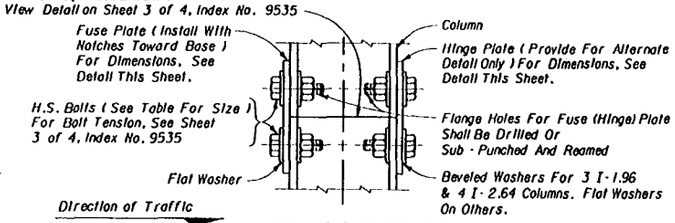

DETAIL 'B' FUSE & HINGE PLATE
(See Fabricator Note On Sheet Drawing No. 3 of 4 Index No. 9535)

NOTE:
Sections shown are for installation on right shoulder and in gore. Plate slot bevels are opposite hand from that shown for installations in the median.

DIMENSION / SECTION	BASE CONNECTION DATA												FUSE (HINGE) PLATE DATA									FOUNDATION DATA				SHIM	
	A	B	C	D	Bolt Size & Torque	R	b	f	s	t_1	t_2	W	E	n	d	g	h	k	t_3	Bolt Size	Dia.	Depth	Stub Length	Reinf. Bars V	L	M
3 I 5.7					1" – 345 kip	6"				1'	1"	1"	3'	1 1/2"	3"	2 1/2"	3"	6"	1"	3"	1' - 6'	1' - 6'	1' - 6'	8 – #4	1 1/8"	1 1/8"
4 I 7.7					1" – 345 kip	6"				1'	1"	1"	3 1/2"	1 1/2"	3"	2 1/2"	3"	6"	1"	3"	1' - 6'	2' - 0"	2' - 0"	8 – #4	1 1/8"	1 1/8"
6 B 12	4'	2'	4'	2'	1" – 345 kip	6"	3"	2 1/2"	1 1/2"	1"	1"	1"	4'	2 1/2"	3"	2 1/2"	3"	6"	1"	3"	2' - 0"	2' - 9"	2' - 3"	8 – #5	1 1/8"	1 1/8"
8 WF 17	5 1/2"	2'	5 1/2"	2'	1" – 345 kip	6"	4"	2 1/2"	1 1/2"	1"	1"	1"	5 1/2"	2 1/2"	3"	2 1/2"	3"	6"	1"	3"	2' - 0"	4' - 0"	2' - 9"	8 – #7	1 1/8"	1 1/8"
8 WF 24	6 1/2"	2 1/2"	6 1/2"	2 1/2"	1" – 554 kip	6"	4"	3 1/2"	1 1/2"	1"	1"	1"	6 1/2"	3 1/2"	1 1/2"	3 1/2"	1 1/2"	1 1/2"	1"	1"	2' - 0"	5' - 6"	3' - 3"	8 – #9	1 1/2"	1 1/2"
10 WF 33	8"	2 1/2"	8"	2 1/2"	1" – 640 kip	6"	4 1/2"	5 1/2"	1 1/2"	1"	1"	1"	8"	4 1/2"	1 1/2"	4"	4 1/2"	1 1/2"	1 1/2"	1 1/2"	2' - 0"	7' - 9"	3' - 9"	9 – #11	2"	1 1/2"
12 WF 40	8"	2 1/2"	8"	2 1/2"	1' – 735 kip	6"	4 1/2"	5 1/2"	1 1/2"	1"	1"	1"	8"	4"	2"	4 1/2"	4 1/2"	1 1/2"	1 1/2"	1 1/2"	2' - 0"	10' - 0"	4' - 6"	14 – #11	2 1/2"	1 1/2"
12 WF 45	8"	3"	8"	3"	1' – 735 kip	6"	4 1/2"	5 1/2"	1 1/2"	1"	1"	1"	8"	4"	2"	4 1/2"	4 1/2"	1 1/2"	1"	1 1/2"	2' - 0"	10' - 0"	4' - 6"	14 – #11	2 1/2"	1 1/2"

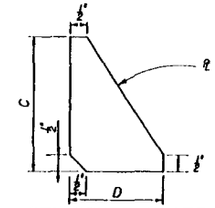

STIFFENER PLATE DETAIL

PROCEDURE FOR ASSEMBLY OF BASE CONNECTION

1. Assemble post to stub with bolts and with one flat washer on each end bolt between plates.
2. Shim as required to plumb post (see shim detail).
3. Tighten all bolts the maximum possible with 12' to 15' wrench to bed washers and shims and to clean bolt threads then loosen each bolt in turn and retighten in a systematic order to the prescribed torque (see table).
4. Burr threads at junction with nut using a center punch to prevent nut loosening.

STEEL – BASE, FOUNDATION & FUSE ℄ DETAILS

STATE OF FLORIDA DEPARTMENT OF TRANSPORTATION
STRUCTURES DESIGN

STANDARD ROADSIDE SIGN BREAK-AWAY POST DETAILS

	Names	Dates
Designed By		
Drawn By	HHJ	01/67
Checked By	CWB	01/67
F.H.W.A. Approved:		

Approved By

Revision No.

Sheet No. 4 of 4

Index No. 9535

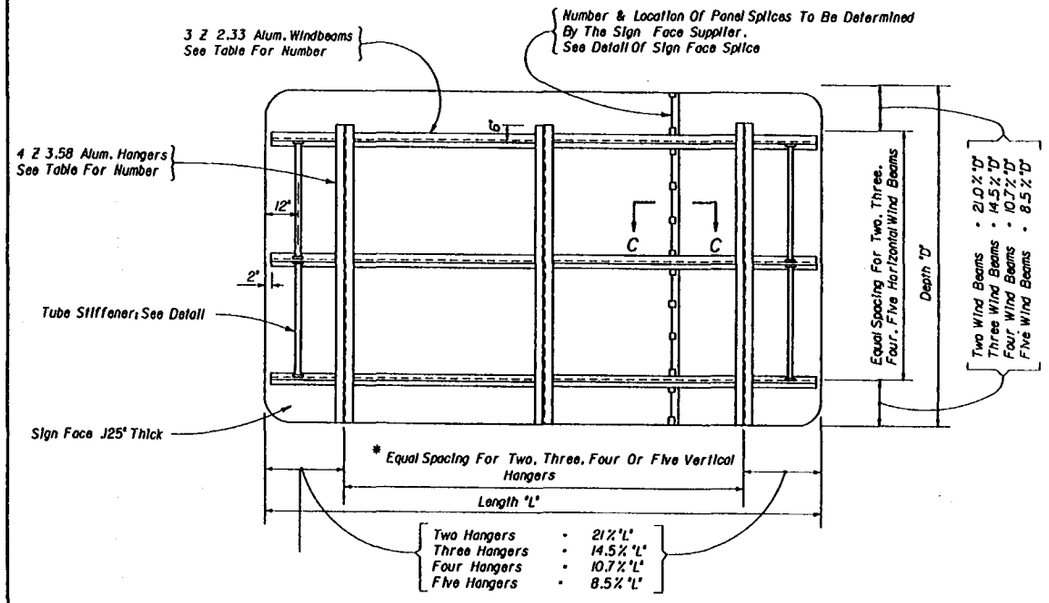

TYPICAL SIGN FACE ELEVATION FOR O.H. TRUSS

* Note: Spacing of vertical hangers may be varied slightly or as necessary to clear the truss struts and diagonals at panel points.

Number Of 3 Z 2.33 Horizontal Wind Beams For Sign Depth And Wind			Number Of 4 Z 3.58 Vertical Hanger Beams For Sign Length			
Wind M.P.H.	NO. BEAMS	MAX. DEPTH	2 HANGERS SIGN LENGTH	3 HANGERS SIGN LENGTH	4 HANGERS SIGN LENGTH	5 HANGERS SIGN LENGTH
110	2	7'-3"	0-15'-0"	15'-1"-30'-0"	30'-1"-45'-0"	
110	3	10'-6"	0-15'-0"	15'-1"-30'-0"	30'-1"-45'-0"	
110	4	14'-3"	0-13'-0"	13'-1"-18'-3"	18'-4"-24'-9"	24'-10"-31'-4"
110	5	18'-0"	0-13'-0"	13'-1"-18'-3"	18'-4"-24'-9"	24'-10"-31'-4"
100	2	8'-3"	0-15'-0"	15'-1"-30'-0"	30'-1"-45'-0"	
100	3	11'-9"	0-15'-0"	15'-1"-22'-3"	22'-4"-30'-0"	30'-1"-38'-0"
100	4	15'-9"	0-15'-0"	15'-1"-22'-3"	22'-4"-30'-0"	30'-1"-38'-0"
100	5	20'-0"	0-11'-7"	11'-8"-16'-4"	16'-5"-22'-2"	22'-3"-28'-0"
90	2	9'-0"	0-15'-0"	15'-1"-30'-0"	30'-1"-45'-0"	
90	3	13'-0"	0-15'-0"	15'-1"-27'-3"	27'-4"-37'-0"	
90	4	17'-6"	0-15'-0"	15'-1"-27'-3"	27'-4"-37'-0"	
90	5	22'-6"	0-14'-3"	14'-4"-20'-0"	20'-1"-27'-0"	27'-1"-34'-3"
80	2	10'-3"	0-15'-0"	15'-1"-30'-0"	30'-1"-45'-0"	
80	3	14'-9"	0-15'-0"	15'-1"-30'-0"	30'-1"-45'-0"	
80	4	20'-0"	0-15'-0"	15'-1"-25'-9"	25'-10"-34'-10"	

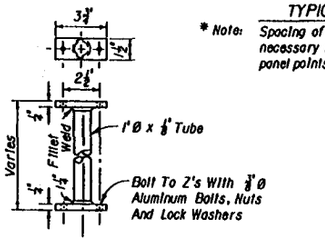

STIFFENER DETAIL

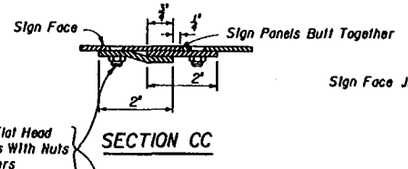

SECTION CC

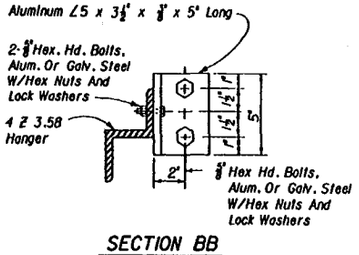

SECTION BB

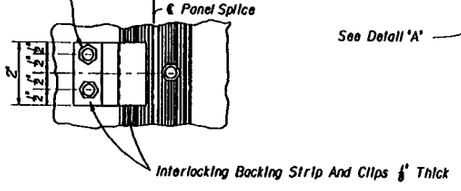

SIGN FACE SPLICE
(MAX. SPACING OF CLIPS 12")

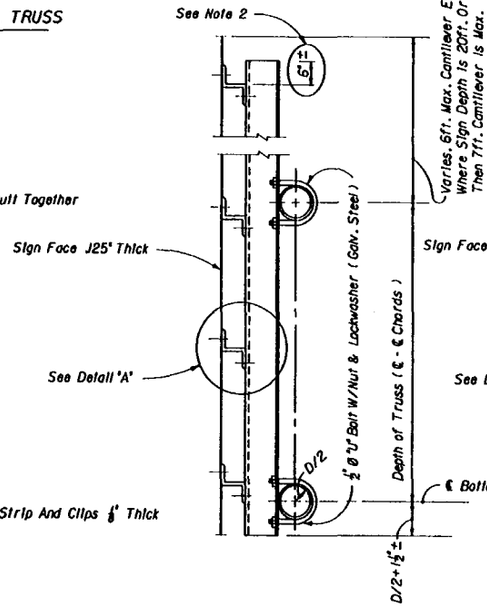

TYPICAL DETAIL OF SIGN & TRUSS CONNECTION FOR ROUND CHORD MEMBERS

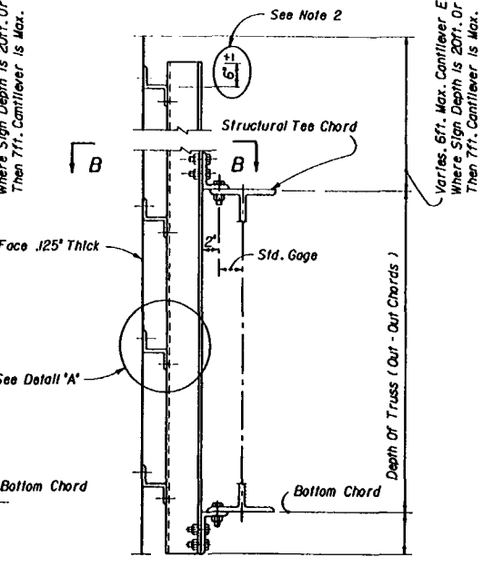

TYPICAL DETAIL OF SIGN & TRUSS CONNECTION FOR ROLLED STRUCTURAL SHAPES

(LIGHTING NOT SHOWN)

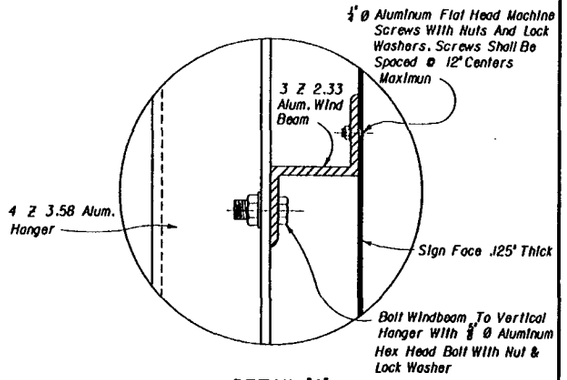

DETAIL "A"

(SHOWING ATTACHMENT OF SIGN FACE PANEL TO VERTICAL HANGER SUPPORTS)

GENERAL NOTES

(1) For "General Notes" covering Material Specifications; see Sheets 1 Of 4 And 3 Of 4, Index 9535

(2) This dimension has to be adjusted for porcelain enamineted sign panel.

DETAILS OF SIGN FACE & TRUSS CONNECTION

STATE OF FLORIDA DEPARTMENT OF TRANSPORTATION
STRUCTURES DESIGN

FOR ALUMINUM & STEEL OVERHEAD SIGN STRUCTURES

	Names	Dates	Approved By
Designed By	C.W.B.	05/12	
Drawn By			
Checked By	A.J.H.	05/12	
F.H.W.A. Approved:		Revision No.	Sheet No. 1 of 1
			Index No. 11037

Sign Identification Number	SIGN PROFILE · SIZE	SQ.FT.	TYPE OF SIGN BRACKET WIND ZONE 60	70	80	90
	BID ITEM NO.700 · 1 · 1 YIELD					
1	24 x 24	1.7	2 · I	2 · I	2 · I	2 · I
2	30 x 30	2.7	2 · I	2 · I	2 · I	2 · I
3	36 x 36	3.9	2 · I	2 · I	2 · I	2 · I
4	48 x 48	6.9	1-II & 1-I	1-II & 1-I	1-II & 1-I	1-II & 1-I
5	60 x 60		DO NOT USE SINGLE COLUMN			
	BID ITEM NO.700 · 1 · 2 RAILROAD					
6	36" Ø	7.1	2 · I	2 · I	2 · I	2 · I
7	48" Ø	12.6	2 · II	2 · II	2 · II	2 · II
	BID ITEM NO.700 · 1 · 3 STOP					
8	18 x 18	1.9	2 · I	2 · I	2 · I	2 · I
9	24 x 24	3.3	2 · I	2 · I	2 · I	2 · I
10	30 x 30	5.2	2 · I	2 · I	2 · I	2 · I
11	36 x 36	7.5	2 · I	2 · I	2 · I	2 · I
12	48 x 48	13.3	2 · II	2 · II	2 · II	2 · II
	BID ITEM NO.700 · 1 · 4 RT. MARKER SINGLE					
13	12 x 24 24 x 24	5.4	1 · I 2 · I	1 · I 2 · I	1 · I 2 · I	1 · I 2 · I
14	15 x 30 24 x 24	6.5	1 · I 2 · I	1 · I 2 · I	1 · I 2 · I	1 · I 2 · I
15	12 x 24 24 x 30	6.3	1 · I 2 · I	1 · I 2 · I	1 · I 2 · I	1 · I 2 · I
16	15 x 30 24 x 30	7.4	1 · I 2 · I	1 · I 2 · I	1 · I 2 · I	1 · I 2 · I
17	15 x 30 36 x 36	10.8	1 · I 2 · I	1 · I 2 · I	1 · I 2 · I	1 · I 2 · I
18	15 x 30 36 x 45	12.6	1 · I 2 · I	1 · I 2 · I	1 · I 2 · II	1 · I 2 · II
19	15 x 30 48 x 48	16.7	1 · I 2 · II	1 · I 2 · II	1 · I 2 · II	1 · I 2 · II
20	15 x 30 48 x 60		1 · I DO NOT USE SINGLE COLUMN 2 · II	1 · I 2 · II	1 · I 2 · II	1 · I 2 · II
21	12 x 24 24 x 24 15 x 21	7.6	1 · I 2 · I 1 · I	1 · I 2 · I 1 · I	1 · I 2 · I 1 · I	1 · I 2 · I 1 · I
22	15 x 30 24 x 24 15 x 21	8.7	1 · I 2 · I 1 · I	1 · I 2 · I 1 · I	1 · I 2 · I 1 · I	1 · I 2 · I 1 · I
23	12 x 24 24 x 30 15 x 21	8.5	1 · I 2 · I 1 · I	1 · I 2 · I 1 · I	1 · I 2 · I 1 · I	1 · I 2 · I 1 · I
24	15 x 30 24 x 30 15 x 21	9.6	1 · I 2 · I 1 · I	1 · I 2 · I 1 · I	1 · I 2 · I 1 · I	1 · I 2 · I 1 · I
25	12 x 24 24 x 24	6.0	1 · I 2 · I	1 · I 2 · I	1 · I 2 · I	1 · I 2 · I
26	24 x 24 15 x 21	6.2	2 · I 1 · I	2 · I 1 · I	2 · I 1 · I	2 · I 1 · I
27	15 x 30 24 x 24	7.1	1 · I 2 · I	1 · I 2 · I	1 · I 2 · I	1 · I 2 · I
28	12 x 24 24 x 30	7.0	1 · I 2 · I	1 · I 2 · I	1 · I 2 · I	1 · I 2 · I
29	24 x 30 15 x 21	7.2	2 · I 1 · I	2 · I 1 · I	2 · I 1 · I	2 · I 1 · I
30	15 x 30 24 x 30	8.1	1 · I 2 · I	1 · I 2 · I	1 · I 2 · I	1 · I 2 · I
31	15 x 21 36 x 30	9.7	1 · I 2 · I	1 · I 2 · I	1 · I 2 · I	1 · I 2 · I
32	15 x 30 36 x 30	10.6	1 · I 2 · I	1 · I 2 · I	1 · I 2 · I	1 · I 2 · I
33	12 x 24 24 x 24 15 x 21	8.2	1 · I 2 · I 1 · I	1 · I 2 · I 1 · I	1 · I 2 · I 1 · I	1 · I 2 · I 1 · I
34	15 x 30 24 x 24 15 x 21	9.3	1 · I 2 · I 1 · I	1 · I 2 · I 1 · I	1 · I 2 · I 1 · I	1 · I 2 · I 1 · I
35	12 x 24 24 x 30 15 x 21	9.2	1 · I 2 · I 1 · I	1 · I 2 · I 1 · I	1 · I 2 · I 1 · I	1 · I 2 · I 1 · I
36	15 x 30 24 x 30 15 x 21	10.3	1 · I 2 · I 1 · I	1 · I 2 · I 1 · I	1 · I 2 · I 1 · I	1 · I 2 · I 1 · I
	BID ITEM NO.700 · 1 · 5 RT. MARKER DOUBLE					
37	12 x 24, 12 x 24 24 x 24, 24 x 24 15 x 21	13.6	1 · II 2 · II 1 · I	1 · II 2 · II 1 · I	1 · II 2 · II 1 · I	1 · II 2 · II 1 · I
38	12 x 24, 12 x 24 24 x 24, 24 x 24 15 x 21, 15 x 21	15.2	1 · II 2 · II 1 · II	1 · II 2 · II 1 · II	1 · II 2 · II 1 · II	1 · II 2 · II 1 · II
39	12 x 24, 12 x 24 24 x 24, 24 x 24 15 x 21, 15 x 21	16.4	1 · II 2 · II 1 · II	1 · II 2 · II 1 · II	1 · II 2 · II 1 · II	1 · II 2 · II 1 · II
40	15 X 30, 15 X 30 24 x 30, 24 x 15 x 21, 15 x 21		1 · II DO NOT USE SINGLE COLUMN 1 · II	1 · II 1 · II	1 · II 1 · II	1 · II 1 · II
41	12 x 24, 12 x 24 12 x 24, 12 x 24 24 x 24, 24 x 24 15 x 21, 15 x 21	20.4	1 · II 1 · II 2 · II 1 · II	1 · II 1 · II 2 · II 1 · II	1 · II 1 · II 2 · II 1 · II	1 · II 1 · II 2 · II 1 · II
42	15 x 21 24 x 24 12 x 24, 12 x 24 24 x 24, 24 x 24 15 x 21, 15 x 21	22.6	1 · I 2 · I 1 · II 2 · II 1 · II	1 · I 2 · I 1 · II 2 · II 1 · II	1 · I 2 · I 1 · II 2 · II 1 · II	1 · I 2 · I 1 · II 2 · II 1 · II
43	12 x 24 24 x 30 15 x 21 12 x 24, 12 x 24 24 x 24, 24 x 24 15 x 21, 15 x 21	25.6	1 · I DO NOT USE SINGLE COLUMN 1 · I 1 · II 2 · II 1 · II	1 · I 1 · I 1 · II 2 · II 1 · II	1 · I 1 · I 1 · II 2 · II 1 · II	1 · I 1 · I 1 · II 2 · II 1 · II
	BID ITEM NO.700 · 1 · 10, 3 SQ. FT. OR LESS					
44	18 X 12	1.5	1 · I	1 · I	1 · I	1 · I
45	12 x 36	3.0	1 · I	1 · I	1 · I	1 · I
46	18 x 24	3.0	2 · I	2 · I	2 · I	2 · I
47	24 x 18	3.0	2 · I	2 · I	2 · I	2 · I
48	18 x 18 9 x 12	3.0	2 · I 1 · I	2 · I 1 · I	2 · I 1 · I	2 · I 1 · I
	BID ITEM NO.700 · 1 · 11, 3 + TO 4 SQ. FT.					
49	18 x 30	3.8	2 · I	2 · I	2 · I	2 · I
50	30 x 40	3.9	2 · I	2 · I	2 · I	2 · I
51	24 x 24	4.0	2 · I	2 · I	2 · I	2 · I
52	24 x 24	4.0	2 · I	2 · I	2 · I	2 · I
	BID ITEM NO.700 · 1 · 12, 4 + TO 5 SQ. FT.					
53	18 x 36	4.5	2 · I	2 · I	2 · I	2 · I
54	30 x 30	4.7	2 · I	2 · I	2 · I	2 · I
55	30 x 24	5.0	2 · I	2 · I	2 · I	2 · I
	BID ITEM NO.700 · 1 · 13, 5 + TO 6 SQ. FT.					
56	36 x 48	5.6	2 · II	2 · II	2 · II	2 · II
57	24 x 36	6.0	2 · I	2 · I	2 · I	2 · I
58	36 x 24	6.0	2 · I	2 · I	2 · I	2 · I
	BID ITEM NO.700 · 1 · 14, 6 + TO 6.25 SQ. FT.					
59	30 x 30	6.3	2 · I	2 · I	2 · I	2 · I
60	30 x 30	6.3	2 · I	2 · I	2 · I	3 · I
	BID ITEM NO.700 · 1 · 15, 6.25 + TO 9 SQ. FT.					
61	36 X 36	6.75	2 · I	2 · I	2 · I	2 · I
62	30 x 36	7.5	2 · I	2 · I	2 · I	2 · I
63	36 x 30	7.5	2 · I	2 · I	2 · I	2 · I
64	24 x 48	8.0	2 · II	2 · II	2 · II	2 · II
65	12 x 36 30 x 30	8.2	1 · I 2 · I	1 · I 2 · I	1 · I 2 · I	1 · I 2 · I
66	30 x 42	8.8	2 · I	2 · I	2 · I	2 · II
67	36 x 36	9.0	2 · I	2 · I	2 · I	2 · I
68	36 x 36	9.0	2-I & 1-II	2-I & 1-II	2-I & 1-II	2-I & 1-II
	BID ITEM NO.700 · 1 · 16, 9 + TO 12 SQ. FT.					
69	12 x 36 30 x 30	9.3	1 · I 2 · I	1 · I 2 · I	1 · I 2 · I	1 · I 2 · I
70	30 x 30 18 x 24	9.3	2 · I 2 · I	2 · I 2 · I	2 · I 2 · I	3 · I 2 · I
71	48 x 64		DO NOT USE SINGLE COLUMN			
72	30 x 48	10.0	2 · II	2 · II	2 · II	2 · II
73	12 x 36 36 x 36	10.5	1 · I 2 · I	1 · I 2 · I	1 · I 2 · I	1 · I 2 · I
74	30 x 54 (2 · 6 x 4 · 0)		DO NOT USE SINGLE COLUMN			
75	36 x 48 (3 · 0 x 4 · 0)	12.0	2 · II	2 · II	2 · II	2 · II
76	48 x 36 (4 · 0 x 3 · 0)	12.0	2 · I	2 · I	2 · I	2 · I
77	36 x 36 18 x 24	12.0	2-I & 1-II 2 · I	2-I & 1-II 2 · I	2-I & 1-II 2 · I	2-I & 1-II 2 · I
78	48 x 48	12.0	1-I & 1-II	1-I & 1-II	1-I & 1-II	1-I & 1-II
	BID ITEM NO.700 · 1 · 17, 12 + TO 16 SQ. FT.					
79	30 x 60 (2 · 6 x 5 · 0)		DO NOT USE SINGLE COLUMN			
80	48 x 48 (4 · 0 x 4 · 0)	16.0	2 · II	2 · II	2 · II	2 · II
81	48 x 48 (4 · 0 x 4 · 0)	16.0	2 · I & 1 · II	2 · I & 1 · II	2 · I & 1 · II	2 · I & 1 · II
	BID ITEM NO.700 · 1 · 18, 16 + TO 20 SQ. FT.					
82	30 x 78 (2 · 6 x 6 · 0)		DO NOT USE SINGLE COLUMN			
83	30 x 84 (2 · 6 x 7 · 0)		DO NOT USE SINGLE COLUMN			
84	48 x 54 (4 · 0 x 4 · 0)		DO NOT USE SINGLE COLUMN			
85	42 x 66 (3 · 6 x 5 · 0)		DO NOT USE SINGLE COLUMN			
86	60 x 48 (5 · 0 x 4 · 0)	20.0	3 · II	3 · II	3 · II	3 · II
87	66 x 48 (5 · 6 x 4 · 0)	22.0	3 · II	3 · II	3 · II	3 · II
88	60 x 72 (5 · 0 x 6 · 0)	30.0	DO NOT USE SINGLE COLUMN			
89	96 x 48 (8 · 0 x 4 · 0)	32.0	DO NOT USE SINGLE COLUMN			
	BID ITEM NO.700 · 1 · 20 DESTINATION, 1 · LINE					
90	24 x 78 (2 · 0 x 6 · 6)	13.0	DO NOT USE SINGLE COLUMN			
	BID ITEM NO.700 · 1 · 21 DESTINATION, 2 · LINE					
91	36 x 78 (3 · 0 x 6 · 6)	19.5	DO NOT USE SINGLE COLUMN			

GENERAL NOTES

GENERAL SPECIFICATIONS: Florida Department of Transportation Standard Specifications for Road and Bridge Construction (1991) and Supplements thereto.

DESIGN SPECIFICATIONS: Standard Specifications for Structural Supports for Highway Signs, Luminaries and Traffic Signals AASHTO 1985.

ALUMINUM: Except as noted below, Aluminum Materials shall meet the requirements of Aluminum Association Alloy 6061-T6 (ASTM B209, B221, or B308)

1. Sign Brackets ..... Alloy 6063-T6 (ASTM B221)
2. Permitted Alternate for Sheets and Plates .. Alloy 5154-H38 (ASTM B209)

CONCRETE: All concrete shall be Class II (Special), the specified compressive strength at 28 days (f'c) shall be 3,000 psi min.

SIGN PANELS: Sign Panels shall be 0.08 inches min. thick Aluminum Plate with all corners rounded. See Sign Layout Sheet. Panels are to be degreased, etched, neutralized and treated with Alodine 1200, Iridine 14-2, Bonderite 721 or equal. No stenciling permitted on panels.

ALUMINUM BOLTS, NUTS & LOCKWASHERS: Aluminum bolts shall meet the requirements of Aluminum Association Alloy 2024-T4 or 6061-T6 (ASTM B211). The Bolts shall have an Anodic Coating of at least 0.0002 inches thick and be Chromate sealed. Lockwashers shall meet the requirements of Aluminum Association Alloy 7075-T6 (ASTM B221). Nuts shall meet the requirements of Aluminum Association Alloy 6262-T9 or 6061-T6.

STAINLESS STEEL BOLTS, NUTS, AND LOCKWASHERS: Stainless Steel Bolts, Nuts and Lockwashers conforming to AISI A316 may be provided in lieu of Aluminum Bolts, Nuts and Washers.

U-BOLTS, NUTS & LOCKWASHERS: U-Bolts, Nuts and Lockwashers shall meet the requirements of ASTM A-307 and shall be galvanized in accordance with ASTM A153.

INSTALLING FRANGIBLE COLUMN SUPPORTS: Columns (Posts) may be installed by driving the columns in accordance with Index Nos. 11861 thru 11865, or as an alternate method the contractor may set the columns (posts) to the depth indicated in preformed holes backfilled with suitable material tamped in layers not thicker than 6" to provide adequate compaction.

SHOP DRAWINGS: When Type "C" ground sign supports are furnished and fabricated in accordance with these plans, shop drawings will NOT be required for approval by the Engineer.

HOW TO USE THIS TABLE: Select the appropriate Sign Profile and Size to determine the Sign Identification Number. If the exact Sign Size of all Components are not listed, select the appropriate profile and larger Component Sizes. This table also gives the Quantity and Type of Sign Brackets required for each Sign for each Wind Zone. Where the Sign Size is given as a Vertical and Horizontal Dimension, the Vertical Dimension (Depth) is given first and the Horizontal Dimension (Length) is given last. For Column Sizes, Heights and Footings see appropriate Wind Zone or Height · 14' Max.) sheets titled "Column Sizes, Column Heights and Footings" Index Numbers 11861 thru 11865. No Slip or Field Splice is allowed in Sign Panels. All Panels shall be furnished in one piece.

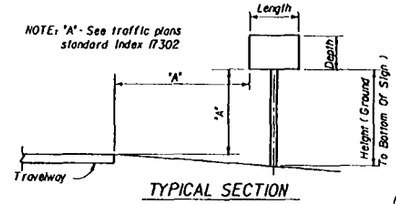

TYPICAL SECTION

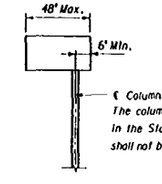

CANTILEVER SIGN

Note: All cantilever sign installations shall comply with standard index 17302. The sign shall be supported by an aluminum round column with concrete footing and breakaway support. All sign brackets shall be Type II.

WIND LOADING

ZONE NO. 1 (160 M.P.H.)

Alachua, Bradford, Baker, Bay, Calhoun, Columbia, Escambia, Gadsden, Gilchrist, Hamilton, Holmes, Jackson, Jefferson, Lafayette, Lake, Leon, Liberty, Madison, Marion, Okaloosa, Putnam, Santa Rosa, Sumter, Suwannee, Union, Walton, and Washington Counties.

ZONE NO. 2 (170 M.P.H.)

Citrus, De Soto, Dixie, Duval, Flagler, Franklin, Glades, Gulf, Hardee, Hendry, Hernando, Highlands, Hillsborough, Levy, Nassau, Okeechobee, Orange, Osceola, Pasco, Pinellas, Polk, Seminole, St. Johns, Taylor and Volusia Counties.

ZONE NO. 3 (180 M.P.H.)

Brevard, Charlotte, Collier, Indian River, Lee, Manatee, Martin, Palm Beach, Sarasota, St. Lucie and Volusia Counties.

ZONE NO. 4 (190 M.P.H.)

Brevard, Dade and Monroe Counties.

STATE OF FLORIDA DEPARTMENT OF TRANSPORTATION
STRUCTURES DESIGN

TYPE "C" SINGLE COLUMN GROUND SIGNS

	Names	Dates
Designed By	CK	03-96
Drawn By		
Checked By	CWB	03-96
F.H.W.A. Approved:		

Approved By

Revision No.	Sheet No.	Index No.
92	1 of 2	11860

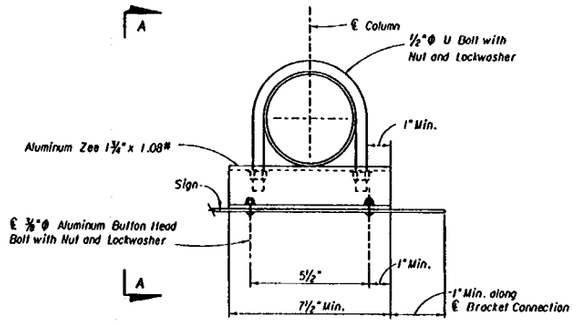

TYPE I BRACKET

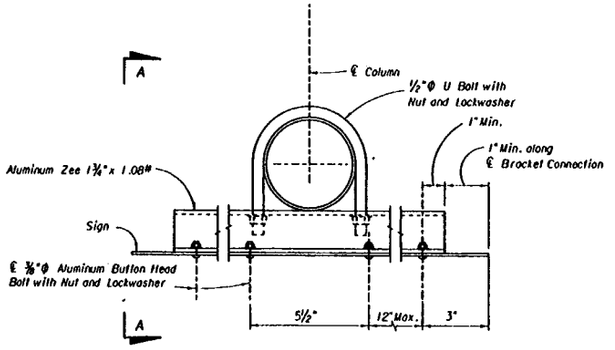

TYPE II BRACKET
(SINGLE SIGN)

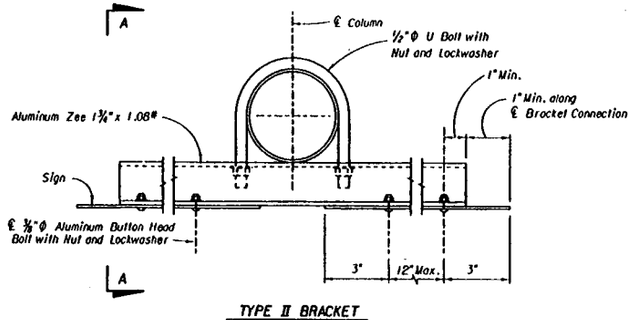

TYPE II BRACKET
(DOUBLE SIGNS)

NOTE: 5/16"Ø Stainless Steel Hex Head Bolts with Flat Washer under Head and Lockwasher under Nut may be used in lieu of ⅜"Ø Aluminum Button Head Bolts.

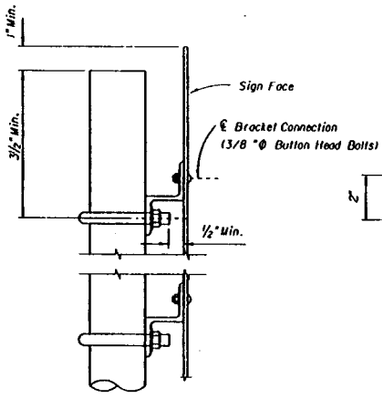

VIEW A-A

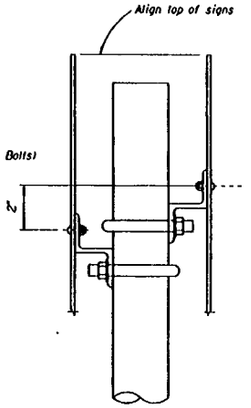

NOTE: Use profile of largest sign and height to bottom of largest sign to determine column size.

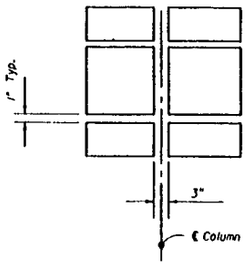

SIGN CLEARANCE

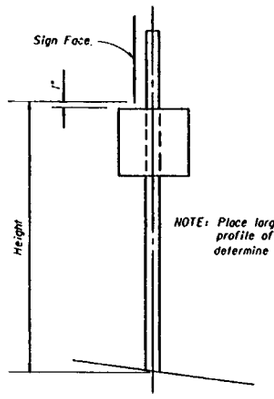

NOTE: Place largest sign on top, use profile of largest sign to determine column size.

SIGNS AT 90°

SIGNS BACK-TO-BACK

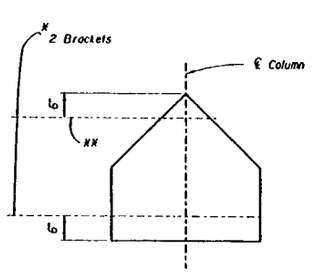

SCHOOL

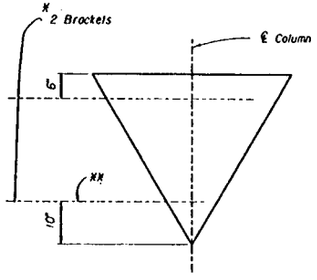

YIELD

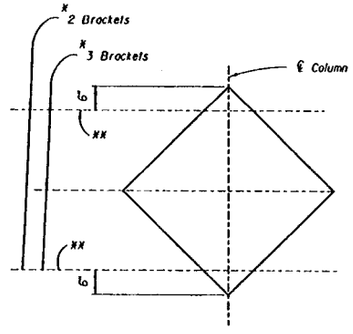

DIAMOND

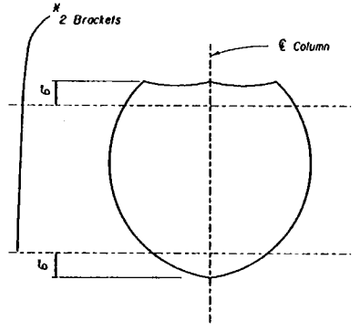

SHIELD

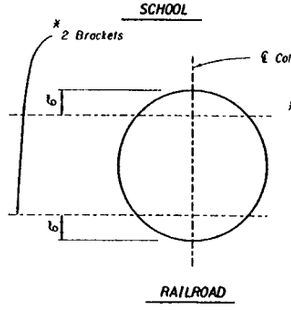

RAILROAD

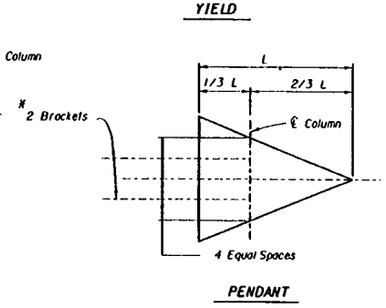

PENDANT

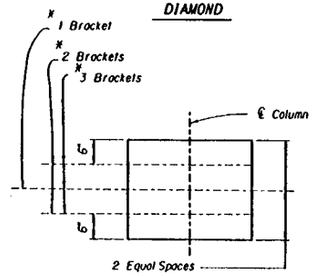

RECTANGLE

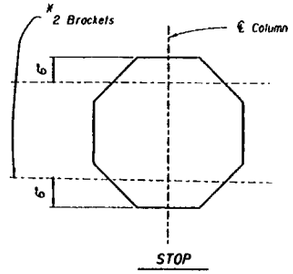

STOP

BRACKET LOCATIONS
(SEE VIEW A-A)

* NOTE: The above Bracket locations apply at the ℄ of Bracket-Sign Connection (⅜"Ø Button Head Bolts). See View A-A. The locations also apply at Double Signs configurations. When installing back-to-back signs the topmost bracket location of one of the signs will require adjustment as shown on the above detail.

** NOTE: Use Type I Bracket at the apex location (always).

STATE OF FLORIDA DEPARTMENT OF TRANSPORTATION
STRUCTURES DESIGN

TYPE "C" SINGLE COLUMN GROUND SIGNS

	Names	Dates
Designed By	AJG	9-91
Drawn By	WEH	9-91
Checked By	TJB	9-91
F.H.W.A. Approved:		

Approved By

Revision No.	Sheet No.	Index No.
92	2 of 2	11860

COL. SIZE	2 x 1/8	2 1/2 x 1/8	3 x 1/8	3 1/2 x 3/16	4 x 3/16	4 x 1/4	4 1/2 x 1/4	5 x 1/4	5 1/2 x 1/4	6 x 1/4	6 1/2 x 1/4
FOOTING	0x2-0	0x2-3	0x2-6	1-6x2-6	1-6x2-6	1-6x2-6	1-6x2-6	1-6x2-9	1-6x3-0	1-6x3-3	2-0x3-0
Sign Identification Number	HEIGHT (FT.)										
1			14'— 25								
2			14'— 22	22'— 25							
3			13'— 21	21'— 25							
4	To 6	6'— 11	11'— 13	13'— 23	23'— 25						
5											
6			9'— 13	13'— 23	23'— 25						
7		To 6	6'— 10	10'— 16	16'— 21	21'— 25					
8		14'— 20	20'— 25								
9			14'— 22	22'— 25							
10			12'— 17	17'— 25							
11			9'— 13	13'— 23	23'— 25						
12			To 8	8'— 14	14'— 18	18'— 23	23'— 25				
13			12'— 17	17'— 25							
14			11'— 16	16'— 25							
15			10'— 14	14'— 24	24'— 25						
16			9'— 14	14'— 23	23'— 25						
17		To 7	7'— 10	10'— 17	17'— 21	21'— 25					
18			To 9	9'— 14	14'— 19	19'— 23	23'— 25				
19			To 7	7'— 12	12'— 16	16'— 20	20'— 25				
20											
21			6'— 12	12'— 19	19'— 25						
22		To 7	7'— 11	11'— 17	17'— 22	22'— 25					
23			6'— 12	12'— 19	19'— 25						
24		To 7	7'— 11	11'— 17	17'— 22	22'— 25					
25			11'— 15	15'— 25							
26			9'— 14	14'— 23	23'— 25						
27			9'— 14	14'— 23	23'— 25						
28			9'— 13	13'— 23	23'— 25						
29			8'— 13	13'— 22	22'— 25						
30			8'— 13	13'— 22	22'— 25						
31			6'— 12	12'— 19	19'— 23	23'— 25					
32			6'— 11	11'— 18	18'— 22	22'— 25					
33			7'— 12	12'— 20	20'— 25						
34			6'— 11	11'— 18	18'— 23	23'— 25					
35			7'— 12	12'— 20	20'— 25						
36			6'— 11	11'— 18	18'— 23	23'— 25					
37			To 7	7'— 13	13'— 17	17'— 21	21'— 25				
38			To 6	6'— 12	12'— 16	16'— 20	20'— 24	24'— 25			
39			To 6	6'— 12	12'— 15	15'— 18	18'— 23	23'— 25			
40											
41				To 10	10'— 12	12'— 14	14'— 18	18'— 23	23'— 25		
42				To 9	9'— 11	11'— 13	13'— 18	18'— 22	22'— 25		
43											
44		14'— 23	23'— 25								
45			14'— 22	22'— 25							
46			14'— 22	22'— 25							
47			14'— 22	22'— 25							
48			14'— 21	21'— 25							
49			14'— 20	20'— 25							
50	To 13	13'— 16	16'— 20	20'— 25							
51			14'— 20	20'— 25							
52			13'— 14	14'— 25							

COL. SIZE	2 x 1/8	2 1/2 x 1/8	3 x 1/8	3 1/2 x 3/16	4 x 3/16	4 x 1/4	4 1/2 x 1/4	5 x 1/4	5 1/2 x 1/4
FOOTING	0x2-0	0x2-3	0x2-6	1-6x2-6	1-6x2-6	1-6x2-6	1-6x2-6	1-6x2-9	1-6x3-0
Sign Identification Number	HEIGHT (FT.)								
53			13'— 18	18'— 25					
54			12'— 17	17'— 25					
55			12'— 17	17'— 25					
56	To 8	8'— 13	13'— 15	15'— 25					
57			10'— 15	15'— 25					
58			11'— 15	15'— 25					
59			10'— 15	15'— 25					
60			10'— 14	14'— 24	24'— 25				
61			8'— 13	13'— 22	22'— 25				
62			8'— 13	13'— 22	22'— 25				
63			9'— 13	13'— 23	23'— 25				
64	To 6	6'— 10	10'— 14	14'— 21	21'— 25				
65			8'— 13	13'— 22	22'— 25				
66		To 9	9'— 13	13'— 20	20'— 25				
67			7'— 13	13'— 20	20'— 25				
68			7'— 12	12'— 21	21'— 25				
69			7'— 13	13'— 19	19'— 25				
70			6'— 11	11'— 18	18'— 23	23'— 25			
71									
72		To 8	8'— 12	12'— 18	18'— 23	23'— 25			
73			6'— 11	11'— 18	18'— 22	22'— 25			
74									
75		To 6	6'— 10	10'— 16	16'— 20	20'— 24	24'— 25		
76		To 6	6'— 10	10'— 16	16'— 21	21'— 25			
77			To 9	9'— 15	15'— 20	20'— 25			
78		To 6	6'— 10	10'— 16	16'— 20	20'— 24	24'— 25		
79									
80			To 7	7'— 13	13'— 16	16'— 20	20'— 25		
81			To 6	6'— 12	12'— 15	15'— 19	19'— 24	24'— 25	
82									
83									
84									
85									
86				To 12	12'— 13	13'— 17	17'— 21	21'— 25	
87				To 10	10'— 12	12'— 15	15'— 19	19'— 24	24'— 25
88									
89									
90									
91									

NOTES

1. Work this Standard with Standard Index Numbers 11860 and 11865.
2. To determine column (post) size and footing requirements use the required Sign Identification Number and Sign Height (ft). Designs for Heights (ft) lower than those listed in the "Table" are included in Standard Index Number 11865.
3. Single Column Installations are not allowed for heights (ft) exceeding the maximum height shown in the "Table", and for sign profiles (Sign Identification Numbers) without any design tabulated. In this event, the sign(s) will have to be supported by multiple columns (posts) featuring breakaway devices. See Standard Index Number 9535.
4. The Column (Post) material shall be aluminum. The size is given as outside diameter times wall thickness. Columns (posts) larger than 3 x 1/8 are non-frangible and shall be installed with breakaway supports and will have concrete footings and slip bases.
5. The footing size is given as outside diameter times depth.
   a) Frangible supports - Footings for Frangible Supports do not require concrete. The Column (post) shall be driven into the ground to the depth indicated.
   b) Breakaway Supports - Footings for Breakaway Supports require concrete. The column support shall be set in a concrete footing, sized as shown in the table. The first dimension indicates the diameter and the second dimension the depth into the ground. In areas where the ground is to be considered as undisturbed earth, road material, or properly compacted fill.
6. SLIP BASE NOTES :
   a) The Inside Diameter (I.D.) of the sleeve shall be no more than 1/16" larger than the Outside Diameter (O.D.) of the Column.
   b) The sleeve bolts shall be 1/2" ø with locknuts. The bolts shall be galvanized steel (ASTM A-307) or Aluminum Association Alloy 2024-T4 or 6061-T6 (ASTM B-211).
   c) The base bolts, nuts and washers shall be high strength ASTM A-325 and shall have an electroplated zinc coating SC3, Type II applied in accordance with ASTM B633.
   d) An alternate cast base of aluminum alloy 356 and T6 temper in lieu of the fabricated base may be submitted for approval by the Engineer. If a cast base is used the stub will be the same as the column and will be bolted to the casting.
   e) Assemble the slip base connection in the following manner :

      Connect column to sleeve using two (2) 1/2" ø machine bolts.

      Assemble top base plate to stub base plate using high strength bolts with three (3) hardened washers per bolt. One (1) washer per bolt and two (2) bolt keeper plates go between the base plates.

      Use shim stock as required to plumb the column.

      Tighten all bolts the maximum possible with a 12" to 15" wrench to bed the washers and shims and to clear the bolt threads. Loosen each bolt one (1) turn and retighten to the prescribed torque (see table). Bolts shall be tightened with properly calibrated wrenches under the supervision of the project engineer.

      Burr threads at junction with nut using a center punch to prevent nut loosening.

   f) Use galvanized steel shims to obtain a tight fit between the column face and the sleeve. Place shims in all quadrants between the 1/2" ø sleeve bolts. The shim length shall be one (1") shorter than the height of the sleeve.

SLIP BASE DETAILS

Note: Unless noted otherwise, all dimensions are in inches.

Column Size	Sleeve I.D. (Max)	Sleeve Wall "T"	Sleeve Height	Weld "W"	Base Plate LxLxT	Radius "R"	Base Bolt Size	Base Bolt FT - lbs	Torque Inch - lbs	Hole Size "A"
3 1/2 x 3/16	3 5/16	1/8	6	1/8	8 x 8 x 1/4	11/32	3/8 ø x 3	29	345	11/16
4 x 3/16	4 1/16	1/8	6	1/8	8 x 8 x 1/4	11/32	3/8 ø x 3	29	345	11/16
4 x 1/8	4 1/16	1/8	6	1/8	8 x 8 x 1/4	11/32	3/8 ø x 3	29	345	11/16
4 1/2 x 1/8	4 5/16	1/8	6	1/8	8 x 8 x 1/8	11/32	3/8 ø x 3 1/2	29	345	11/16
5 x 1/4	5 1/16	1/8	7	1/8	8 x 8 x 1/8	11/32	3/8 ø x 3 1/2	29	345	11/16
5 1/2 x 1/4	5 5/16	1/8	7	11/16	8 1/2 x 8 1/2 x 1/8	13/32	3/8 ø x 3 1/2	46	554	13/16
6 x 1/4	6 1/16	1/8	8	11/16	9 x 9 x 1	13/32	3/8 ø x 3 1/2	46	554	13/16
6 1/2 x 1/4	6 5/16	1/8	8	1/4	9 1/2 x 9 1/2 x 1	13/32	3/8 ø x 3 1/2	46	554	13/16
7 x 1/4	7 1/16	1/8	9	1/4	10 x 10 x 1	13/32	3/8 ø x 3 1/2	46	554	13/16
7 1/2 x 1/4	7 5/16	1/8	9	1/4	10 1/2 x 10 1/2 x 1	13/32	3/8 ø x 3 1/2	53	640	13/16
8 x 1/4	8 1/16	1/8	10	1/4	11 x 11 x 1	13/32	3/8 ø x 3 1/2	53	640	13/16

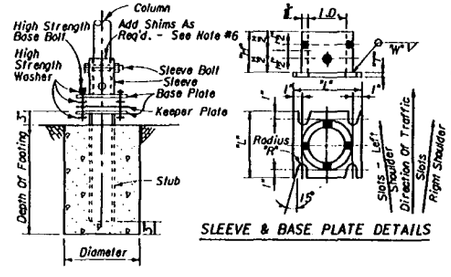

BASE DETAIL

SLEEVE & BASE PLATE DETAILS

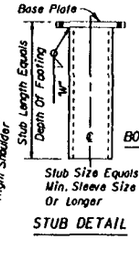

STUB DETAIL

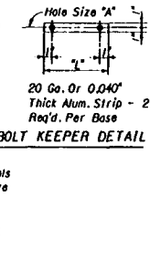

BOLT KEEPER DETAIL

COLUMN SIZE , COLUMN HEIGHT & COLUMN FOOTINGS

STATE OF FLORIDA DEPARTMENT OF TRANSPORTATION
STRUCTURES DESIGN

SINGLE COLUMN GROUND SIGNS

60 M.P.H. WIND LOADING

	Names	Dates
Designed By	TJB	7-89
Drawn By	JSP	7-89
Checked By	AJC	9-89

Approved By

F.H.W.A. Approved

Revision No. 92 | Sheet No. 1 of 1 | Index No. 11861

COL. SIZE	2 x 3/16	2 1/2 x 3/16	3 x 3/16	3 1/2 x 3/16	4 x 3/16	4 x 1/4	4 1/2 x 1/4	5 x 1/4	5 1/2 x 1/4	6 x 1/4	6 1/2 x 1/4
FOOTING	0x2-0	0x2-3	0x2-6	1-6x2-6	1-6x2-6	1-6x2-6	1-6x2-6	1-6x2-9	1-6x3-0	1-6x3-3	2-0x3-0
Sign Identification Number	HEIGHT (FT.)										
1			14'— 19	19'— 25'							
2			14'— 18	18'— 25							
3			13'— 16	16'— 25							
4		To 8	8'— 11	11'— 18	18'— 22	22'— 25					
5											
6			9'— 12	12'— 18	18'— 22	22'— 25					
7			7'— 13	13'— 15	15'— 19	19'— 25					
8		14'— 16	16'— 20	20'— 25							
9			14'— 18	18'— 25							
10			12'— 13	13'— 22	22'— 25						
11			9'— 12	12'— 18	18'— 22	22'— 25					
12			To 6	6'— 13	13'— 14	14'— 17	17'— 21	21'— 25			
13			12'— 13	13'— 22	22'— 25						
14			11'— 13	13'— 21	21'— 25						
15			10'— 13	13'— 19	19'— 23	23'— 25					
16			9'— 12	12'— 18	18'— 22	22'— 25					
17			To 7	7'— 12	12'— 16	16'— 20	20'— 24	24'— 25			
18			To 6	6'— 12	12'— 14	14'— 17	17'— 22	22'— 25			
19				To 11	11'— 12	12'— 15	15'— 19	19'— 23	23'— 25		
20											
21			6'— 9	9'— 14	14'— 18	18'— 22	22'— 25				
22			To 7	7'— 13	13'— 17	17'— 21	21'— 25				
23			6'— 9	9'— 14	14'— 18	18'— 22	22'— 25				
24			To 7	7'— 13	13'— 17	17'— 21	21'— 25				
25			11'— 13	13'— 20	20'— 25						
26			9'— 12	12'— 18	18'— 22	22'— 25					
27			9'— 12	12'— 18	18'— 22	22'— 25					
28			9'— 12	12'— 18	18'— 22	22'— 25					
29			8'— 11	11'— 17	17'— 21	21'— 25					
30			8'— 11	11'— 17	17'— 21	21'— 25					
31			6'— 8	8'— 14	14'— 18	18'— 22	22'— 25				
32			6'— 8	8'— 13	13'— 17	17'— 21	21'— 25				
33			7'— 9	9'— 15	15'— 19	19'— 23	23'— 25				
34			6'— 8	8'— 14	14'— 17	17'— 22	22'— 25				
35			7'— 9	9'— 15	15'— 19	19'— 23	23'— 25				
36			6'— 8	8'— 14	14'— 17	17'— 22	22'— 25				
37				To 11	11'— 12	12'— 16	16'— 20	20'— 24	24'— 25		
38				To 10	10'— 12	12'— 14	14'— 18	18'— 22	22'— 25		
39				To 9	9'— 12	12'— 13	13'— 17	17'— 21	21'— 25		
40											
41				To 6	6'— 9	9'— 12	12'— 13	13'— 17	17'— 20	20'— 24	24'— 25
42				To 6	6'— 9	9'— 11	11'— 12	12'— 16	16'— 20	20'— 24	24'— 25
43											
44		14'— 19	19'— 23	23'— 25							
45			14'— 18	18'— 25							
46			14'— 18	18'— 25							
47			14'— 18	18'— 25							
48			14'— 17	17'— 25							
49			14'— 16	16'— 25							
50	To 9	9'— 13	13'— 16	16'— 25							
51			14'— 16	16'— 25							
52			13'— 15	15'— 24	24'— 25						

COL. SIZE	2 x 3/16	2 1/2 x 3/16	3 x 3/16	3 1/2 x 3/16	4 x 3/16	4 x 1/4	4 1/2 x 1/4	5 x 1/4	5 1/2 x 1/4	6 x 1/4
FOOTING	0x2-0	0x2-3	0x2-6	1-6x2-6	1-6x2-6	1-6x2-6	1-6x2-6	1-6x2-9	1-6x3-0	1-6x3-3
Sign Identification Number	HEIGHT (FT.)									
53			13'— 14	14'—23	23'— 25					
54			12'— 14	14'— 22	22'— 25					
55			12'— 13	13'— 22	22'— 25					
56	To 6	6'— 10	10'— 13	13'— 20	20'— 25					
57			10'— 13	13'— 20	20'— 25					
58			11'— 13	13'— 20	20'— 25					
59			10'— 13	13'— 20	20'— 25					
60			10'— 13	13'— 19	19'— 23	23'— 25				
61			8'— 11	11'— 17	17'— 21	21'— 25				
62			8'— 11	11'— 17	17'— 21	21'— 25				
63			9'— 12	12'— 18	18'— 22	22'— 25				
64		To 7	7'— 11	11'— 16	16'— 20	20'— 25				
65			8'— 11	11'— 17	17'— 21	21'— 25				
66		To 6	6'— 10	10'— 15	15'— 19	19'— 23	23'— 25			
67			7'— 10	10'— 15	15'— 19	19'— 24	24'— 25			
68			7'— 10	10'— 16	16'— 20	20'— 24	24'— 25			
69			7'— 9	9'— 15	15'— 19	19'— 23	23'— 25			
70			6'— 8	8'— 14	14'— 17	17'— 22	22'— 25			
71										
72			To 9	9'—14	14'— 18	18'— 21	21'— 25			
73			6'— 8	8'— 13	13'— 17	17'— 21	21'— 25			
74										
75			To 7	7'— 13	13'— 15	15'— 19	19'— 23	23'— 25		
76			To 7	7'— 13	13'— 15	15'— 19	19'— 24	24'— 25		
77			To 6	6'— 12	12'— 15	15'— 19	19'— 23	23'— 25		
78			To 7	7'— 13	13'— 15	15'— 19	19'— 23	23'— 25		
79										
80				To 11	11'—13	13'— 15	15'— 19	19'— 23	23'— 25	
81				To 10	10'— 12	12'— 14	14'— 18	18'— 22	22'— 25	
82										
83										
84										
85										
86				To 8	8'— 11	11'— 12	12'— 16	16'— 19	19'— 23	23'— 25
87				To 7	7'— 10	10'— 12	12'— 14	14'— 18	18'— 21	21'— 25
88										
89										
90										
91										

NOTES

1. Work this Standard with Standard Index Numbers 11860 and 11865.
2. To determine column (post) size and footing requirements use the required Sign Identification Number and Sign Height (ft). Designs for Heights (ft) lower than those listed in the "Table" are included in Standard Index Number 11865.
3. Single Column Installations are not allowed for heights (ft) exceeding the maximum height shown in the "Table", and for sign profiles (Sign Identification Numbers) without any design tabulated. In this event, the signs will have to be supported by multiple columns (posts) featuring breakaway devices. See Standard Index Number 9535.
4. The Column (Post) material shall be aluminum. The size is given as outside diameter times wall thickness. Columns (posts) larger than 3 x 1/8" are non-Frangible and shall be installed with breakaway supports and will have concrete footings and slip bases.
5. The footing size is given as outside diameter times depth.
   a) Frangible supports : Footings for Frangible Supports do not require concrete. The Column (post) shall be driven into the ground to the depth indicated.
   b) Breakaway Supports : Footings for Breakaway Supports require concrete. The column support shall be set in a concrete footing, sized as shown in the table. The first dimension indicates the diameter and the second dimension the depth into the ground. In all cases the ground is to be considered as undisturbed earth, road material, or properly compacted fill.
6. SLIP BASE NOTES :
   a) The Inside Diameter (I.D.) of the sleeve shall be no more than 1/8" larger than the Outside Diameter (O.D.) of the Column.
   b) The sleeve bolts shall be 1/2" Ø with locknuts. The bolts shall be galvanized steel (ASTM A-307) or Aluminum Association Alloy 2024-T4 or 6061-T6 (ASTM B-211).
   c) The base bolts, nuts and washers shall be high strength ASTM A-325 and shall have an electroplated zinc coating SC3, Type II applied in accordance with ASTM B633.
   d) An alternate cast base of aluminum alloy 356 and T6 temper in lieu of the fabricated base may be submitted for approval by the Engineer. If a cast base is used the stub will be the same as the column and will be bolted to the casting.
   e) Assemble the slip base connection in the following manner :

      Connect column to sleeve using two (2) 1/2" Ø machine bolts.

      Assemble top base plate to stub base plate using high strength bolts with three (3) hardened washers per bolt. One (1) washer per bolt and two (2) bolt keeper plates go between the base plates.

      Use shim stock as required to plumb the column.

      Tighten all bolts the maximum possible with a 12" to 15" wrench to bed the washers and shims and to clear the bolt threads. Loosen each bolt one (1) turn and retighten to the prescribed torque (see table). Bolts shall be tightened with properly calibrated wrenches under the supervision of the project engineer.

      Burr threads at junction with nut using a center punch to prevent nut loosening.

   f) Use galvanized steel shims to obtain a tight fit between the column face and the sleeve. Place shims in all quadrants between the 1/2" Ø sleeve bolts. The shim length shall be one (1") shorter than the height of the sleeve.

SLIP BASE DETAILS

Note: Unless noted otherwise, all dimensions are in inches.

Column Size	Sleeve I.D. (Max)	Sleeve Wall "T"	Sleeve Height	Weld "W"	Base Plate LxLxT	Radius "R"	Base Bolt Size	Base Bolt FT - lbs	Torque Inch - lbs	Hole Size "A"
3 1/2 x 3/16	3 7/16	1/4	6	3/8	8 x 8 x 3/4	4 1/2	3/4 Ø x 3	29	345	11/16
4 x 3/16	4 1/16	1/4	6	3/8	8 x 8 x 3/4	4 1/2	3/4 Ø x 3	29	345	11/16
4 x 1/4	4 1/16	1/4	6	3/8	8 x 8 x 3/4	4 1/2	3/4 Ø x 3	29	345	11/16
4 1/2 x 1/4	4 9/16	1/4	6	3/8	8 x 8 x 1	4 1/2	3/4 Ø x 3 1/2	29	345	11/16
5 x 1/4	5 1/16	1/4	7	3/8	8 x 8 x 1	4 1/2	3/4 Ø x 3 1/2	29	345	11/16
5 1/2 x 1/4	5 9/16	1/4	7	7/16	8 1/2 x 8 1/2 x 1	4 1/2	3/4 Ø x 3 1/2	46	554	13/16
6 x 1/4	6 1/16	1/4	8	7/16	9 x 9 x 1	4 1/2	3/4 Ø x 3 1/2	46	554	13/16
6 1/2 x 1/4	6 9/16	1/4	8	7/16	9 1/2 x 9 1/2 x 1	4 1/2	3/4 Ø x 3 1/2	46	554	13/16
7 x 1/4	7 1/16	1/4	9	7/16	10 x 10 x 1	4 1/2	3/4 Ø x 3 1/2	46	554	13/16
7 1/2 x 1/4	7 9/16	1/4	9	7/16	10 1/2 x 10 1/2 x 1	4 1/2	3/4 Ø x 3 1/2	53	640	13/16
8 x 1/4	8 1/16	1/4	10	7/16	11 x 11 x 1	4 1/2	3/4 Ø x 3 1/2	53	640	13/16

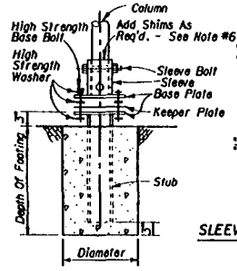

BASE DETAIL

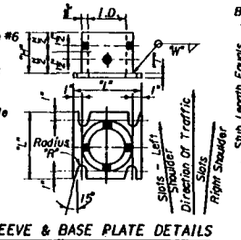

SLEEVE & BASE PLATE DETAILS

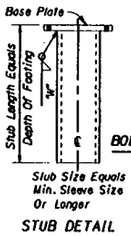

STUB DETAIL

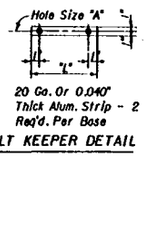

BOLT KEEPER DETAIL

COLUMN SIZE , COLUMN HEIGHT & COLUMN FOOTINGS

STATE OF FLORIDA DEPARTMENT OF TRANSPORTATION
STRUCTURES DESIGN

SINGLE COLUMN GROUND SIGNS

70 M.P.H. WIND LOADING

	Names	Dates
Designed By	TJB	7-89
Drawn By	JSP	7-89
Checked By	AJG	9-89
F.H.W.A. Approved:		

Approved By

Revision No.	Sheet No.	Index No.
92	1 of 1	11862

COL. SIZE	2 x 1/4	2 1/2 x 1/8	3 x 1/8	3 1/2 x 3/16	4 x 3/16	4 x 1/4	4 1/2 x 1/4	5 x 1/4	5 1/2 x 1/4	6 x 1/4	6 1/2 x 1/4	7 x 1/4
FOOTING	0x2-0	0x2-3	0x2-6	1-6x2-6	1-6x2-6	1-6x2-6	1-6x2-6	1-6x2-9	1-6x3-0	1-6x3-3	2-0x3-0	2-0x3-4
Sign Identification Number	HEIGHT (FT.)											
1			14'-16	16'-25								
2			14'-15	15'-23	23'-25							
3				13'-21	21'-25							
4			To 9	9'-14	14'-18	18'-21	21'-25					
5												
6				9'-14	14'-17	17'-21	21'-25					
7				To 11	11'-13	13'-15	15'-19	19'-23	23'-25			
8			14'-17	17'-25								
9			14'-15	15'-23	23'-25							
10			12'-14	14'-18	18'-22	22'-25						
11				9'-14	14'-17	17'-21	21'-25					
12				To 9	9'-13	13'-14	14'-17	17'-20	20'-24	24'-25		
13				12'-18	18'-21	21'-25						
14				11'-17	17'-20	20'-24	24'-25					
15				10'-15	15'-19	19'-23	23'-25					
16				9'-15	15'-18	18'-22	22'-25					
17				To 11	11'-12	12'-16	16'-19	19'-23	23'-25			
18				To 8	8'-11	11'-12	12'-15	15'-19	19'-23	23'-25		
19				To 8	8'-11	11'-12	12'-15	15'-19	19'-23	23'-25		
20												
21				6'-12	12'-14	14'-18	18'-22	22'-25				
22				To 12	12'-13	13'-16	16'-20	20'-24	24'-25			
23				6'-12	12'-14	14'-18	18'-22	22'-25				
24				To 12	12'-13	13'-16	16'-20	20'-24	24'-25			
25				11'-16	16'-20	20'-24	24'-25					
26				9'-15	15'-18	18'-22	22'-25					
27				9'-15	15'-18	18'-22	22'-25					
28				9'-14	14'-17	17'-21	21'-25					
29				8'-14	14'-17	17'-21	21'-25					
30				8'-13	13'-17	17'-20	20'-24	24'-25				
31				6'-13	13'-14	14'-17	17'-21	21'-25				
32				6'-12	12'-13	13'-17	17'-20	20'-24	24'-25			
33				7'-12	12'-15	15'-19	19'-22	22'-25				
34				6'-12	12'-14	14'-17	17'-21	21'-25				
35				7'-12	12'-15	15'-19	19'-22	22'-25				
36				6'-12	12'-14	14'-17	17'-21	21'-25				
37				To 8	8'-11	11'-12	12'-15	15'-19	19'-23	23'-25		
38				To 7	7'-10	10'-13	13'-16	16'-20	20'-24	24'-25		
39				To 7	7'-10	10'-12	12'-13	13'-16	16'-20	20'-24	24'-25	
40												
41					To 7	7'- 9	9'-12	12'-13	13'-16	16'-19	19'-23	23'-25
42					To 6	6'- 8	8'-11	11'-12	12'-15	15'-18	18'-22	22'-25
43												
44		14'-16	16'-19	19'-25								
45			14'-15	15'-22	22'-25							
46			14'-15	15'-22	22'-25							
47			14'-15	15'-23	23'-25							
48				14'-22	22'-25							
49				14'-21	21'-25							
50	To 7	7'-11	11'-13	13'-21	21'-25							
51				14'-20	20'-25							
52				13'-20	20'-25							

COL. SIZE	2 1/2 x 1/8	3 x 1/8	3 1/2 x 3/16	4 x 3/16	4 x 1/4	4 1/2 x 1/4	5 x 1/4	5 1/2 x 1/4	6 x 1/4	6 1/2 x 1/4	7 x 1/4
FOOTING	0x2-3	0x2-6	1-6x2-6	1-6x2-6	1-6x2-6	1-6x2-6	1-6x2-9	1-6x3-0	1-6x3-3	2-0x3-0	2-0x3-4
Sign Identification Number	HEIGHT (FT.)										
53			13'-19	19'-22	22'-25						
54			12'-18	18'-21	21'-25						
55			12'-18	18' 22	22'-25						
56	To 7	7'-11	11'-16	16'-20	20'-24	24'-25					
57			10'-16	16'-19	19'-23	23'-25					
58			11'-16	16'-20	20'-24	24'-25					
59			10'-16	16'-20	20'-23	23'-25					
60			10'-15	15'-19	19'-23	23'-25					
61			8'-13	13'-17	17'-21	21'-24	24'-25				
62			8'-13	13'-17	17'-21	21'-24	24'-25				
63			9'-14	14'-17	17'-21	21'-25					
64		To 8	8'-14	14'-16	16'-20	20'-24	24'-25				
65			8'-13	13'-16	16'-20	20'-24	24'-25				
66		To 7	7'-13	13'-15	15'-19	19'-23	23'-25				
67			7'-13	13'-15	15'-19	19'-23	23'-25				
68			7'-12	12'-16	16'-19	19'-23	23'-25				
69			7'-12	12'-15	15'-18	18'-22	22'-25				
70			6'-12	12'-14	14'-17	17'-21	21'-25				
71											
72		To 6	6'-13	13'-14	14'-17	17'-21	21'-25				
73			6'-12	12'-13	13'-17	17'-20	20'-24	24'-25			
74											
75			To 11	11'-13	13'-15	15'-18	18'-22	22'-25			
76			To 11	11'-13	13'-15	15'-19	19'-23	23'-25			
77			To 10	10'-12	12'-14	14'-18	18'-22	22'-25			
78			To 11	11'-13	13'-15	15'-18	18'-22	22'-25			
79											
80			To 8	8'-11	11'-13	13'-15	15'-18	18'-22	22'-25		
81			To 7	7'-10	10'-12	12'-14	14'-17	17'-21	21'-25		
82											
83											
84											
85											
86			To 6	6'-8	8'-11	11'-12	12'-15	15'-18	18'-22	22'-25	
87				To 7	7'-10	10'-12	12'-13	13'-17	17'-20	20'-24	24'-25
88											
89											
90											
91											

NOTES

1. Work this Standard with Standard Index Numbers 11860 and 11865.
2. To determine column (post) size and footing requirements use the required Sign Identification Number and Sign Height (ft). Designs for Heights (ft) lower than those listed in the "Table" are included in Standard Index Number 11865.
3. Single Column installations are not allowed for heights (ft) exceeding the maximum height shown in the "Table", and for sign profiles (Sign Identification Numbers) without any design tabulated. In this event, the signs will have to be supported by multiple columns (posts) featuring breakaway devices. See Standard Index Number 9535.
4. The Column (Post) material shall be aluminum. The size is given as outside diameter (lines) wall thickness. Columns (posts) larger than 3 x 1/8 are non-frangible and shall be installed with breakaway supports and will have concrete footings and slip bases.
5. The footing size is given as outside diameter (lines) depth.
   a) Frangible supports : Footings for Frangible Supports do not require concrete. The Column (post) shall be driven into the ground to the depth indicated.
   b) Breakaway Supports : Footings for Breakaway Supports require concrete. The column support shall be set in a concrete footing, sized as shown in the table. The first dimension indicates the diameter and the second dimension the depth into the ground. In all cases the ground is to be considered as undisturbed earth, road material, or properly compacted fill.
6. SLIP BASE NOTES :
   a) The Inside Diameter (I.D.) of the sleeve shall be no more than 1/16" larger than the Outside Diameter (O.D.) of the Column.
   b) The sleeve bolts shall be 1/2" ø with locknuts. The bolts shall be galvanized steel (ASTM A-307) or Aluminum Association Alloy 2024-T4 or 6061-T6 (ASTM B-211).
   c) The base bolts, nuts and washers shall be high strength ASTM A-325 and shall have an electroplated zinc coating SC3, Type II applied in accordance with ASTM B633.
   d) An alternate cast base of aluminum alloy 356 and T6 temper in lieu of the fabricated base may be submitted for approval by the Engineer. If a cast base is used the stub will be the same as the column and will be bolted to the casting.
   e) Assemble the slip base connection in the following manner :

      Connect column to sleeve using two (2) 1/2" ø machine bolts.

      Assemble top base plate to stub base plate using high strength bolts with three (3) hardened washers per bolt. One (1) washer per bolt and two (2) bolt keeper plates go between the base plates.

      Use shim stock as required to plumb the column.

      Tighten all bolts the maximum possible with a 12" to 15" wrench to bed the washers and shims and to clear the bolt threads. Loosen each bolt one (1) turn and retighten to the prescribed torque (see table). Bolts shall be tightened with properly calibrated wrenches under the supervision of the project engineer.

      Burr threads at junction with nut using a center punch to prevent nut loosening.

   f) Use galvanized steel shims to obtain a tight fit between the column face and the sleeve. Place shims in all quadrants between the 1/2" ø sleeve bolts. The shim length shall be one (1") shorter than the height of the sleeve.

SLIP BASE DETAILS

Note: Unless noted otherwise, all dimensions are in inches.

Column Size	Sleeve I.D. (Max)	Sleeve Wall "T"	Sleeve Height	Weld "W"	Base Plate LxLxT	Radius "R"	Base Bolt Size	Base Bolt FT - lbs	Torque Inch - lbs	Hole Size "A"
3 1/2 x 3/16	3 3/16	1/8	6	1/8	8 x 8 x 1/4	1 1/2	1/2 ø x 3	29	345	11/16
4 x 3/16	4 1/16	1/8	6	1/8	8 x 8 x 1/4	1 1/2	1/2 ø x 3	29	345	11/16
4 x 1/4	4 1/16	1/8	6	1/8	8 x 8 x 1/4	1 1/2	1/2 ø x 3	29	345	11/16
4 1/2 x 1/4	4 5/16	1/8	6	1/8	8 x 8 x 1/4	1 1/2	1/2 ø x 3 1/2	29	345	11/16
5 x 1/4	5 1/16	1/8	7	1/8	8 x 8 x 1/4	1 1/2	1/2 ø x 3 1/2	29	345	11/16
5 1/2 x 1/8	5 3/16	1/8	7	11/16	8 1/2 x 8 1/2 x 3/8	1 1/2	1/2 ø x 3 1/2	46	554	13/16
6 x 1/4	6 1/16	1/8	8	11/16	9 x 9 x 1	1 1/2	1/2 ø x 3 1/2	46	554	13/16
6 1/2 x 1/4	6 5/16	1/8	8	1/4	9 1/2 x 9 1/2 x 1	1 1/2	1/2 ø x 3 1/2	46	554	13/16
7 x 1/4	7 1/16	1/8	9	1/4	10 x 10 x 1	1 1/2	1/2 ø x 3 1/2	46	554	13/16
7 1/2 x 1/4	7 5/16	1/8	9	1/4	10 1/2 x 10 1/2 x 1	1 1/2	1/2 ø x 3 1/2	53	640	13/16
8 x 1/4	8 1/16	1/8	10	1/4	11 x 11 x 1	1 1/2	1/2 ø x 3 1/2	53	640	13/16

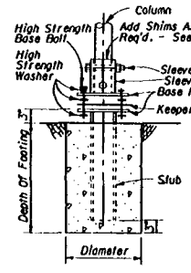

BASE DETAIL

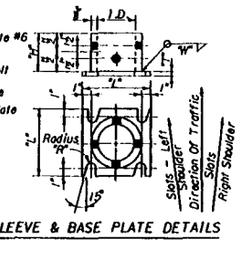

SLEEVE & BASE PLATE DETAILS

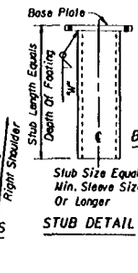

STUB DETAIL

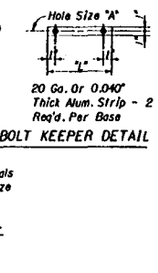

BOLT KEEPER DETAIL

80 M.P.H. WIND LOADING

COLUMN SIZE , COLUMN HEIGHT & COLUMN FOOTINGS

STATE OF FLORIDA DEPARTMENT OF TRANSPORTATION
STRUCTURES DESIGN

SINGLE COLUMN GROUND SIGNS

	Names	Dates
Designed By	TJB	7-89
Drawn By	JSP	7-89
Checked By	AJG	9-89
F.H.W.A. Approved:		

Approved By

Revision No.	Sheet No.	Index No.
92	1 of 1	11863

COL. SIZE	3 x 3/16	3 1/2 x 3/16	4 x 3/16	4 x 1/4	4 1/2 x 1/4	5 x 1/4	5 1/2 x 1/4	6 x 1/4	6 1/2 x 1/4	7 x 1/4	7 1/2 x 1/4
FOOTING	0x2-6	1-6x2-6	1-6x2-6	1-6x2-6	1-6x2-6	1-6x2-9	1-6x3-0	1-6x3-3	2-0x3-0	2-0x3-4	2-0x3-6
Sign Identification Number	HEIGHT (FT.)										
53		13'—16	16'—19	19'—22	22'—25						
54		12'—15	15'—18	18'—21	21'—25						
55		12'—15	15'—18	18'—22	22'—25						
56	To 8	8'—13	13'—17	17'—20	20'—24	24'—25					
57		10'—14	14'—16	16'—20	20'—23	23'—25					
58		11'—13	13'—17	17'—20	20'—24	24'—25					
59		10'—13	13'—16	16'—20	20'—23	23'—25					
60		10'—13	13'—16	16'—19	19'—23	23'—25					
61		8'—13	13'—14	14'—17	17'—21	21'—25					
62		8'—13	13'—14	14'—17	17'—21	21'—25					
63		9'—13	13'—14	14'—18	18'—21	21'—25					
64	To 6	6'—12	12'—14	14'—16	16'—20	20'—24	24'—25				
65		8'—12	12'—13	13'—17	17'—20	20'—24	24'—25				
66		To 11	11'—13	13'—15	15'—19	19'—23	23'—25				
67		7'—11	11'—13	13'—16	16'—19	19'—23	23'—25				
68		7'—12	12'—13	13'—16	16'—19	19'—24	24'—25				
69		7'—11	11'—13	13'—15	15'—18	18'—22	22'—25				
70		6'—10	10'—12	12'—14	14'—17	17'—21	21'—25				
71											
72		To 10	10'—13	13'—14	14'—17	17'—21	21'—25				
73		6'— 9	9'— 12	12'—13	13'—17	17'—21	21'—25				
74											
75		To 8	8'—11	11'—13	13'—15	15'—18	18'—22	22'—25			
76		To 8	8'—11	11'—13	13'—15	15'—19	19'—23	23'—25			
77		To 8	8'—11	11'—12	12'—15	15'—18	18'—22	22'—25			
78		To 8	8'—11	11'—13	13'—15	15'—18	18'—22	22'—25			
79											
80		To 6	6'—8	8'—11	11'—13	13'—15	15'—18	18'—22	22'—25		
81			To 8	8'—10	10'—12	12'—14	14'—17	17'—21	21'—25		
82											
83											
84											
85											
86		To 6	6'—8	8'—11	11'—12	12'—15	15'—18	18'—21	21'—25		
87			To 7	7'—10	10'—12	12'—13	13'—16	16'—19	19'—23	23'—25	
88											
89											
90											
91											

	3 x 1/4	3 1/2 x 1/4	4 x 1/4	5 x 1/4	6 x 1/4	7 x 1/4	8 x 1/4
	1-6x3-3	2-0x3-0	2-0x3-4	2-0x3-6	2-0x4-0		
8	14'—15	15'— 21	21'—25				
9		14'— 19	19'— 23	23'—25			
10		12'— 15	15'— 18	18'—22	22'—25		
11		9'— 13	13'— 14	14'— 18	18'— 21	21'— 25	
12		To 7	7'— 10	10'— 13	13'— 14	14'— 17	17'— 20	20'— 24	24'—25
13		12'— 14	14'— 18	18'— 21	21'— 25		
14		11'— 14	14'— 17	17'— 20	20'— 24	24'— 25	
15		10'— 13	13'— 16	16'— 19	19'— 23	23'— 25	
16		9'— 13	13'— 15	15'— 18	18'— 22	22'— 25	
17		To 9	9'— 12	12'— 13	13'— 16	16'— 20	20'— 24	24'—25	
18		To 7	7'— 10	10'— 12	12'— 14	14'— 17	17'— 21	21'—25	
19		To 6	6'— 8	8'— 11	'— 12	12'— 15	15'— 18	18'—22	22'—25	
20									
21		6'— 10	10'— 12	12'— 14	14'— 18	18'— 22	22'— 25		
22		To 9	9'— 12	12'— 13	13'— 17	17'— 20	20'— 24	24'—25	
23		6'— 10	10'— 12	12'— 14	14'— 18	18'— 22	22'— 25		
24		To 9	9'— 12	12'— 13	13'— 17	17'— 20	20'— 24	24'—25	
25		11'— 13	13'— 17	17'— 20	20'— 24	24'— 25		
26		9'— 13	13'— 15	15'— 18	18'— 22	22'— 25		
27		9'— 13	13'— 15	15'— 18	18'— 22	22'— 25		
28		9'— 13	13'— 14	14'— 18	18'— 21	21'— 25		
29		8'— 13	13'— 14	14'— 17	17'— 21	21'— 25		
30		8'— 12	12'— 13	13'— 17	17'— 20	20'— 24	24'— 25	
31		6'— 10	10'— 13	13'— 14	14'— 18	18'— 21	21'— 25	
32		6'— 9	9'— 12	12'— 13	13'— 17	17'— 21	21'— 25	
33		7'— 11	11'— 12	12'— 15	15'— 19	19'— 23	23'— 25	
34		6'— 10	10'— 12	12'— 14	14'— 17	17'— 21	21'— 25	
35		7'— 11	11'— 12	12'— 15	15'— 19	19'— 23	23'— 25	
36		6'— 10	10'— 12	12'— 14	14'— 17	17'— 21	21'— 25	
37		To 6	6'— 9	9'— 11	11'— 12	12'— 15	15'— 19	19'— 23	23'— 25	
38			To 8	8'— 12	12'— 13	13'— 16	16'— 20	20'— 24	24'— 25	
39			To 7	7'— 10	10'— 12	12'— 13	13'— 16	16'— 20	20'— 23	23'— 25	
40											
41				To 7	7'— 9	9'— 12	12'— 13	13'— 15	15'— 18	18'— 22	22'— 25
42				To 6	6'— 9	9'— 11	11'— 12	12'— 14	14'— 17	17'— 21	21'— 24	24'— 25
43											
44	14'— 17	17'— 24	24'— 25								
45		14'— 19	19'— 22	22'— 25							
46		14'— 19	19'— 22	22'— 25							
47		14'— 19	19'— 23	23'— 25							
48		14'— 19	19'— 22	22'— 25							
49		14'— 17	17'— 21	21'— 24	24'— 25						
50	To 9	9'— 12	12'— 18	18'— 21	21'— 24	24'— 25					
51			14'— 17	17'— 20	20'— 24	24'— 25					
52			14'— 17	17'— 20	20'— 24	24'— 25					

SLIP BASE DETAILS

Note: Unless noted otherwise, all dimensions are in inches.

Column Size	Sleeve I.D. (Max)	Sleeve Wall "T"	Sleeve Height	Weld "W"	Base Plate LxLxT	Radius "R"	Base Bolt Size	Base Bolt Torque FT - lbs	Base Bolt Torque Inch - lbs	Hole Size "A"
3 1/2 x 3/16	3 3/16	1/8	6	5/8	8 x 8 x 1/4	11/32	3/8 Ø x 3	29	345	11/16
4 x 3/16	4 1/16	1/8	6	5/8	8 x 8 x 1/4	11/32	3/8 Ø x 3	29	345	11/16
4 x 1/4	4 1/16	1/8	6	3/8	8 x 8 x 3/8	11/32	3/8 Ø x 3	29	345	11/16
4 1/2 x 1/4	4 5/16	1/8	6	3/8	8 x 8 x 3/8	11/32	3/8 Ø x 3 1/2	29	345	11/16
5 x 1/4	5 1/16	1/8	7	3/8	8 x 8 x 3/8	11/32	3/8 Ø x 3 1/2	29	345	11/16
5 1/2 x 1/4	5 5/16	1/8	7	11/16	8 1/2 x 8 1/2 x 3/8	13/32	3/8 Ø x 3 1/2	46	554	13/16
6 x 1/4	6 1/16	1/8	8	11/16	9 x 9 x 1	13/32	3/8 Ø x 3 1/2	46	554	13/16
6 1/2 x 1/4	6 5/16	1/8	8	3/4	9 1/2 x 9 1/2 x 1	13/32	3/8 Ø x 3 1/2	46	554	13/16
7 x 1/4	7 1/16	1/8	9	3/4	10 x 10 x 1	13/32	3/8 Ø x 3 1/2	46	554	13/16
7 1/2 x 1/4	7 5/16	1/8	9	3/4	10 1/2 x 10 1/2 x 1	13/32	5/8 Ø x 3 3/4	53	640	13/16
8 x 1/4	8 1/16	1/8	10	3/4	11 x 11 x 1	13/32	5/8 Ø x 3 3/4	53	640	13/16

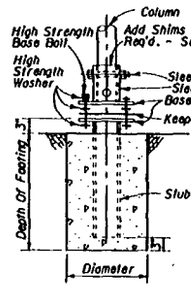

BASE DETAIL

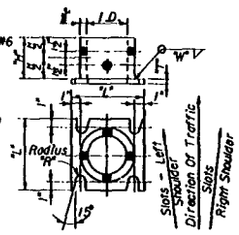

SLEEVE & BASE PLATE DETAILS

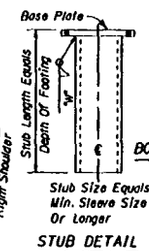

STUB DETAIL

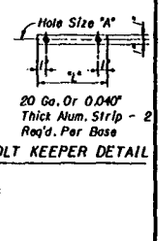

BOLT KEEPER DETAIL

NOTES

1. Work this Standard with Standard Index Numbers 11860 and 11865.
2. To determine column (post) size and footing requirements use the required Sign Identification Number and Sign Height (H). Designs for Heights (H) lower than those listed in the "Table" are included in Standard Index Number 11865.
3. Single Column installations are not allowed for heights (H) exceeding the maximum height shown in the "Table", and for sign profiles (Sign Identification Numbers) without any design tabulated. In this event, the sign(s) will have to be supported by multiple columns (posts) featuring breakaway devices. See Standard Index Number 9535.
4. The Column (Post) material shall be aluminum. The size is given as outside diameter times wall thickness. Columns (posts) larger than 3 x 1/4 are non-frangible and shall be installed with breakaway supports and will have concrete footings and slip bases.
5. The footing size is given as outside diameter times depth.
   a) Frangible supports : Footings for Frangible Supports do not require concrete. The Column (post) shall be driven into the ground to the depth indicated.
   b) Breakaway Supports : Footings for Breakaway Supports require concrete. The column support shall be set in a concrete footing, sized as shown in the table. The first dimension indicates the diameter and the second dimension the depth into the ground. In all cases the ground is to be considered as undisturbed earth, road material, or properly compacted fill.
6. SLIP BASE NOTES :
   a) The Inside Diameter (I.D.) of the sleeve shall be no more than 1/16" larger than the Outside Diameter (O.D.) of the Column.
   b) The sleeve bolts shall be 1/2" Ø with locknuts. The bolts shall be galvanized steel (ASTM A-307) or Aluminum Association Alloy 2024-T4 or 6061-T6 (ASTM B-211).
   c) The base bolts, nuts and washers shall be high strength ASTM A-325 and shall have an electroplated zinc coating SC3, Type II applied in accordance with ASTM B633.
   d) An alternate cast base of aluminum alloy 356 and T6 temper in lieu of the fabricated base may be submitted for approval by the Engineer. If a cast base is used the stub will be the same as the column and will be bolted to the casting.
   e) Assemble the slip base connection in the following manner :

      Connect column to sleeve using two (2) 1/2" Ø machine bolts.

      Assemble top base plate to stub base plate using high strength bolts with three (3) hardened washers per bolt. One (1) washer per bolt and two (2) bolt keeper plates go between the base plates.

      Use shim stock as required to plumb the column.

      Tighten all bolts the maximum possible with a 12" to 15" wrench to bed the washers and shims and to clear the bolt threads. Loosen each bolt one (1) turn and retighten to the prescribed torque (see table). Bolts shall be tightened with properly calibrated wrenches under the supervision of the project engineer.

      Burr threads at junction with nut using a center punch to prevent nut loosening.

   f) Use galvanized steel shims to obtain a tight fit between the column face and the sleeve. Place shims in all quadrants between the 1/2" Ø sleeve bolts. The shim length shall be one (1") shorter than the height of the sleeve.

90 M.P.H. WIND LOADING

COLUMN SIZE , COLUMN HEIGHT & COLUMN FOOTINGS

STATE OF FLORIDA DEPARTMENT OF TRANSPORTATION
STRUCTURES DESIGN

SINGLE COLUMN GROUND SIGNS

	Names	Dates
Designed By	TJB	7-89
Drawn By	JSP	7-89
Checked By	AJG	9-89
F.H.W.A. Approved:		

Approved By

Revision No.	Sheet No.	Index No.
92	1 of 1	11864

COL. SIZE	2 x 1/8	2 x 1/8	2 1/2 x 1/8	2 1/2 x 1/8	3 x 1/8			#
FOOTING	0x2-0	0x2-0	0x2-3	0x2-3	0x2-6			#
COL. SIZE	2.5#/FT.	3.0#/FT.	4.0#/FT.	N/A	N/A			#
FOOTING	0X3-0	0X3-0	0X3-0	N/A	N/A			#

Sign Identification Number	HEIGHT (FT.)							
1	To 8	8'-10	10'-13	——	13'-14			
2	To 7	7'-8	8'-12	12'-13	13'-14			
3	To 6	6'-7	7'-11	——	11'-13			
4								
5								
6			To 6	——	6'-9			
7								
8	To 9	9'-10	10'-13	13'-14				
9	To 7	7'-8	8'-12	12'-13	13'-14			
10			To 9	8'-9	9'-12			
11			To 6	——	6'-9			
12								
13			To 8	——	8'-12			
14			To 7	——	7'-11			
15			To 7	——	7'-10			
16			To 6	——	6'-9			
17								
18								
19								
20								
21					To 6			
22								
23					To 6			
24								
25			To 7	——	7'-11			
26			To 6	——	6'-9			
27			To 6	——	6'-9			
28			To 6	——	6'-9			
29					To 8			
30					To 8			
31					To 6			
32					To 6			
33					To 7			
34					To 6			
35					To 7			
36					To 6			
37								
38								
39								
40								
41								
42								
43								
44	To 9	9'-10	10'-13	13'-14				
45	To 7	7'-9	9'-12	12'-13	13'-14			
46	To 7	7'-9	9'-12	12'-13	13'-14			

COL. SIZE	2 x 1/8	2 x 1/8	2 1/2 x 1/8	2 1/2 x 1/8	3 x 1/8			#	ALUMINUM ROUND POST
FOOTING	0x2-0	0x2-0	0x2-3	0x2-3	0x2-6			#	
COL. SIZE	2.5#/FT	3.0#/FT	4.0#/FT	N/A	N/A			#	STEEL FLANGED CHANNEL POST
FOOTING	0X3-0	0X3-0	0X3-0	N/A	N/A			#	

Sign Identification Number	HEIGHT (FT.)							
47	To 7	7'-9	9'-12	12'-13	13'-14			
48	To 7	7'-8	8'-12	——	12'-14			
49	To 6	6'-7	7'-11	——	11'-14			
50								
51	To 6	6'-7	7'-11	——	11'-14			
52		To 6	6'-10	——	10'-13			
53		To 6	6'-10	——	10'-13			
54			To 9	——	9'-12			
55			To 9	——	9'-12			
56								
57			To 7	——	7'-10			
58			To 7	——	7'-11			
59			To 7	——	7'-10			
60			To 7	——	7'-10			
61			To 6	——	6'-8			
62			To 6	——	6'-8			
63			To 6	——	6'-9			
64								
65					To 8			
66								
67					To 7			
68					To 7			
69					To 7			
70					To 6			
71								
72								
73					To 6'			
74								
75								
76								
77								
78								
79								
80								
81								
82								
83								
84								
85								
86								
87								
88								
89								
90								
91								

For definition of Column (Post) size and footing size see Standard Index No. 11863. Column size and installation depth (footing) are based on 80 MPH wind loading; however, the designs included in this Standard 11865 are valid for implementation in the entire State of Florida.

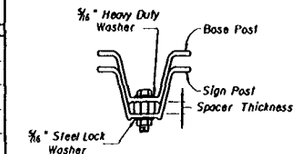

SECTION THROUGH SPLICE

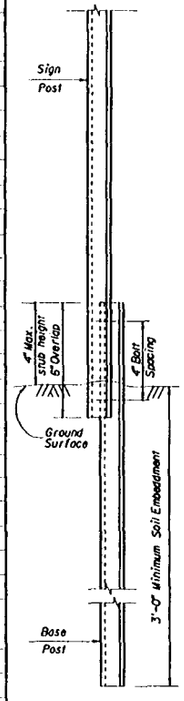

DETAIL "C"
(Approved Frangible Installation)

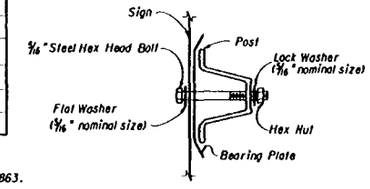

SIGN ATTACHMENT DETAIL

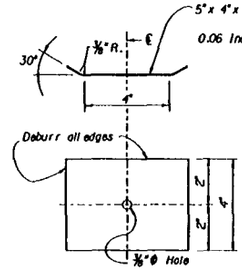

BEARING PLATE DETAIL

HEIGHT = 14' MAX (ALL WIND ZONES)

NOTES

1. Work this Standard with Standard Index Numbers 11860 thru 11864.
2. Specifications for Aluminum materials, Sign Panel Details, etc. are given on the above Standard Index Numbers.
3. This Standard provides designs for single driven post sign installations for use at any location in the State of Florida. The designs adhere to the following limitations:
   a. Mounting Height = 14' Max.
   b. Sign(s) Area = 25 Ft. Sq. Max.
   c. Width: Single Sign = 36" Max.
      Multiple Signs = 48" Max. (See Detail 'A')
   d. Driven Post only.
4. Designs for installations exceeding the above limits or needing concrete footings are not included in this Standard.
5. Posts shall be installed plumb.
6. Obtain Sign Bracket requirements from INDEX No. 11860. Use 80 M.P.H. Wind Zone. See Detail "B". If Steel Flanged Channel Posts are used, 2 - 5/16" Ø Bolts are required for each Type I Bracket.
7. Steel for Flanged Channel Posts shall conform with ASTM A499 Grade 60, or ASTM A576 Grade 1080.
8. Bolts, nuts and washers shall conform to ASTM A307. See Detail "C" for splice requirements.
9. All steel posts, plates, and hardware shall be galvanized per ASTM A123 or ASTM A153.
10. Steel Flanged Channel Posts weighing 4.0 lbs. per foot are non-frangible and shall be installed with approved breakaway bases. See Detail "C".
11. Steel Flanged Channel Posts weighing 2.5 and 3.0 lbs. per foot, and all Aluminum Round Posts included in this standard are frangible and do not require breakaway bases. However, the Contractor may mount frangible posts on approved breakaway bases.
12. SHOP DRAWINGS: If the Contractor proposes to utilize sign panel connections and/or breakaway devices not shown in this standard or on the above referenced standards, the Contractor shall submit details of the connections and/or devices for approval.

SPLICE NOTES
(See Detail "C")

Material Specifications:
Bolts - ASTM A354 Grade BD or SAE J429 Grade 8, 5/16" 18 UNC x 2" long.
Nuts - ASTM A563 Grade DH or SAE J995 Grade 8.
Washers & Spacers - Heavy Duty, Steel ASTM A307, or A36.

Splice Requirements:
Base and Sign Posts shall be same size & type.
Splice shall be six inches in length, fastened with two bolts four inches apart, with washers and spacer, as shown. Bolts shall be wrench-tightened sufficiently to clamp splice assembly tightly together.

Spacer thickness shall be as follows:

Post Size (#/ft.)	Type M post (Spacer Thickness)	Type F Post (Spacer Thickness)
2 1/2	5/16"	5/8"**
3	5/8"**	5/8"**
4	5/8"**	5/8"**

** May use two 5/16" Spacers

The base post shall be installed to leave only a 4-inch stub height above ground.

All splice components and post shall be galvanized per ASTM A123 or A153. Fasteners may be mechanically galvanized to ASTM B695 Class 50.

APPROVED STEEL FLANGED CHANNEL POSTS

Lb./Ft.#	Type	A(in.)	B(in.)	C(in.)	Sx(in.³)
2.50	F	1.562	3.125	1.250	.310
2.50	M	1.500	3.063	1.281	.313
3.00	F	1.750	3.500	1.625	.430
3.00	M	1.875	3.500	1.313	.447
4.00	F	1.750	3.500	1.671	.560
4.00	M	1.938	3.500	1.313	.625

± 3 1/2%

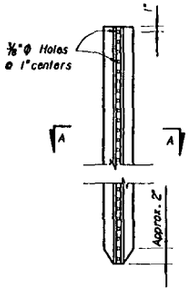

ELEVATION

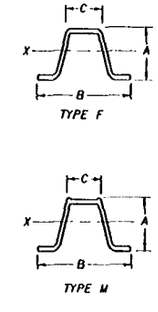

SECTION A-A

FLANGED CHANNEL POST DETAILS

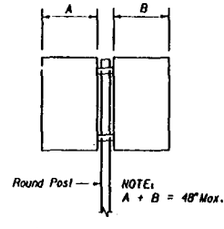

DETAIL "A"

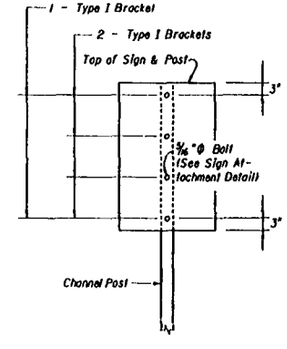

DETAIL "B"
(See Note No. 6)

COLUMN SIZE, COLUMN HEIGHT & COLUMN FOOTINGS

STATE OF FLORIDA DEPARTMENT OF TRANSPORTATION
STRUCTURES DESIGN

SINGLE COLUMN GROUND SIGNS

	Names	Dates
Designed By	TJB	7-89
Drawn By	JSP	7-89
Checked By	AJG	9-89
F.H.W.A. Approved:		

Approved By

Revision No.	Sheet No.	Index No.
92	1 of 1	11865

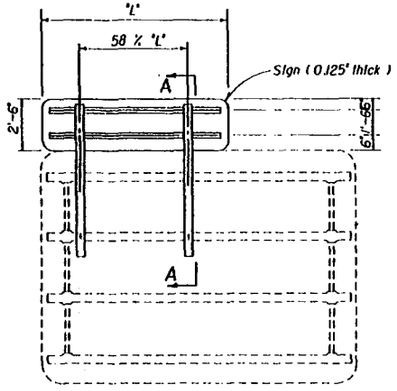

ELEVATION

Mounting of Exit Numbering Panels To Highway Signs

NOTE : Exit numbering panel shall be located to the right side for right exit and to the left for left exit.

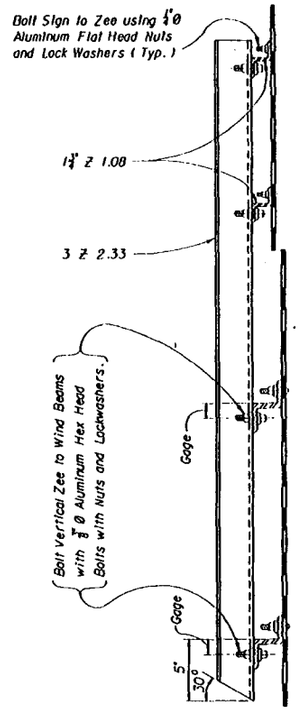

SECTION A-A

GENERAL NOTES

DESIGN SPECIFICATION : Standard specifications for structural supports for highway signs, luminaries and traffic signals, A.A.S.H.T.O., 1985.

SHEETS AND PLATES : Material used shall meet the requirements of Aluminum Association Alloy 6061-T6 and ASTM Specification B - 209. Sheets are to be degreased, etched, neutralized and treated with Alodine 1200 Iridite 14 - 2, Bonderite 721, or equal. No stenciling permitted on sheets.

MATERIALS : All aluminum materials shall meet the requirements of the Aluminum Association Alloy 6061 - T6 and also the following ASTM specifications for the following : Sheet and Plates B - 209 ; Extruded Shapes B - 221 and Standard Structural Shapes B - 308.

ALUMINUM BOLTS, NUTS & LOCKWASHERS : Aluminum bolts shall meet the requirements of the Aluminum Association Alloy 2024 - T4 or 6061 - T6 (ASTM spec. B - 211). The bolts shall have an anodic coating of at least 0.0002" thick and be chromate sealed. Lockwashers shall meet the requirement of Aluminum Association Alloy 7075 - T6 (ASTM specification B - 221). Nuts shall meet the requirement of Aluminum Association Alloy 6262 - T9 or 6061 - T6.

SIGN FACE : All sign face corners shall be rounded. See sign layout sheet for dimension 'L' and sign face details.

MATERIAL STRESSES : All allowable stresses are in accordance with standard specifications for structural supports for highway signs, luminaries and traffic signals, A.A.S.H.T.O., 1985, for all materials shown in the plans.

FOR MOUNTING DETAILS REFER TO DRAWING NO. 1 OF 1, INDEX 11037.

STATE OF FLORIDA DEPARTMENT OF TRANSPORTATION
STRUCTURES DESIGN

DETAIL FOR MOUNTING EXIT NUMBERING PANELS TO HIGHWAY SIGNS

	Names	Dates
Designed By	CR/CWB	01/82
Drawn By		
Checked By	CR	01/82
F.H.W.A. Approved:		

Approved By Bellman

Revision No.	Sheet No.	Index No.
	1 of 1	13417

CASE I

For use on Freeway and Expressway systems for signs on mainline.

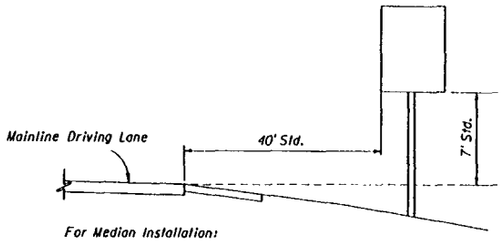

For Median Installation:
If Median Width Does Not Allow Std. Offset From Both Roadways, Center Sign In Median.

CASE II

For Use In All Rural Roads And On Freeway And Expressway Ramps.

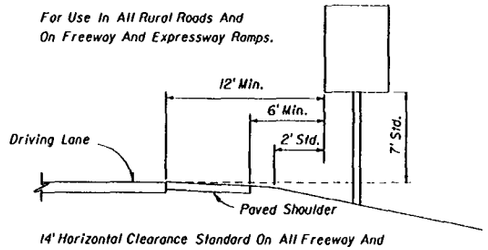

14' Horizontal Clearance Standard On All Freeway And Expressway Ramps
For sections without paved shoulder the 6' Min does not apply.

CASE III

For Use On All Roads With Signs Mounted Behind Side Walk.

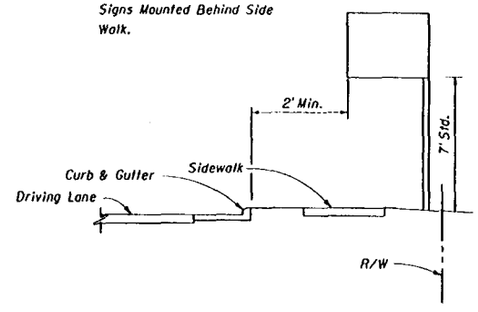

CASE IV (Merge Sign)

For Use On All Rural, Freeway And Expressway Systems.

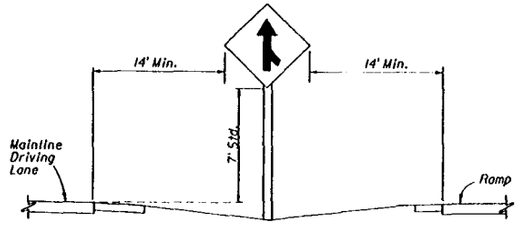

CASE V

For Use In Business Or Residential Areas Only.

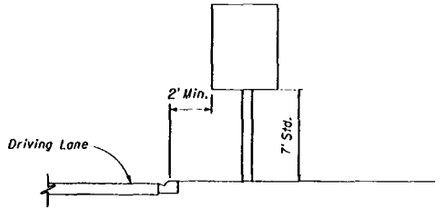

CASE VI

For Use On All Roadways With Signs Behind Guardrail.

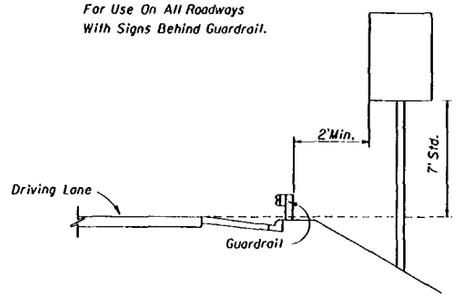

CASE VII (REST AREA & EXIT GORE SIGNS)

For Use On All Freeway And Expressway Systems

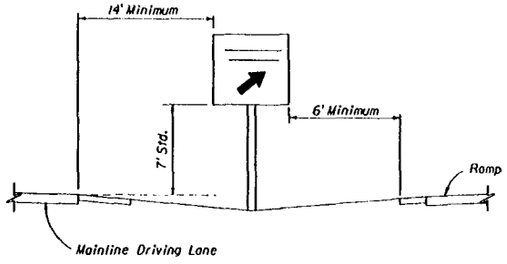

CASE VIII

Sign On Island

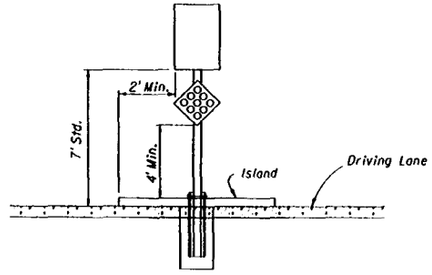

Center Sign Column On Island

CASE IX (MILE POST MARKER)

For More Information Refer To Part 2D-46 Of The Manual On Uniform Traffic Control Devices

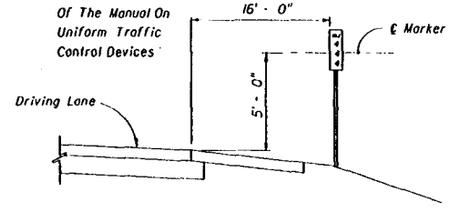

GENERAL NOTES:

1. The typical sections shown hereon serve as a guide for locating the traffic signs required under various roadside conditions. For size and details of sign construction and footing, refer to the appropriate standard index drawing for roadside sign.
2. It shall be the CONTRACTORS respon - sibility to verify the length of sign supports in the field prior to fabrication.
3. Roadside signs shall be installed at an angle of 1 to 4 degrees away from the traffic flow(see illustration). Shoulder mounted signs shall be rotated counterclockwise and median mounted signs rotated clockwise. Signs on curves shall be mounted as noted above from the perpendicular to the motorists line of sight.

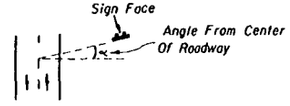

4. The setback for stop and yield signs may be reduced to 3' minimum from the driving lane if required for visibility in business or residential sections with no curb and speeds of 30 MPH or less.
5. The mounting heights are measured from the bottom of the sign panel to a horizontal line extended from the edge of the driving lane. If the standard heights cannot be met, the minimum heights are as follows:

Expressway & Freeway Systems	7'
Other Roadway Systems	
Rural	5'
Urban (including residential with parking and/or pedestrian activity)	7'

If a secondary sign is mounted below the major sign,the major sign shall be of least 8' and the secondary sign at least 5' for expressway & freeway systems and for other systems the height to the secondary sign shall be at least 4' for rural and 6' for urban sections.

6. Sign supports should never be placed in ditches where erosion might affect the proper operation of the breakaway feature. It is also possible that a vehicle entering the ditch might be guided into the support.

STATE OF FLORIDA DEPARTMENT OF TRANSPORTATION
TRAFFIC DESIGN

TYPICAL SECTIONS FOR PLACEMENT OF SINGLE & MULTI-COLUMN SIGNS

	Names	Dates
Designed By	G.W.	03-75
Drawn By		
Checked By		

Approved By Charles A. Scott
State Traffic Plans Engineer

Revision No.	Sheet No.	Index No.
94	1 of 1	17302

F.H.W.A. Approved:

4 - LANE DIVIDED INSTALLATION

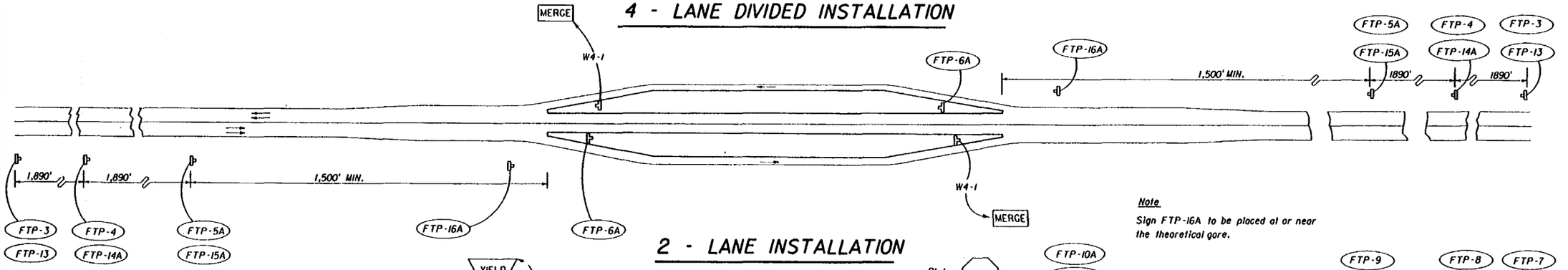

Note

Sign FTP-16A to be placed at or near the theoretical gore.

2 - LANE INSTALLATION

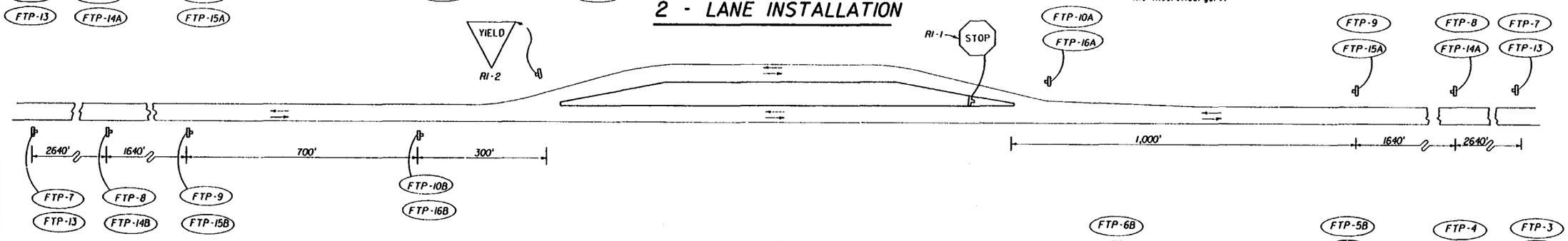

MEDIAN INSTALLATION

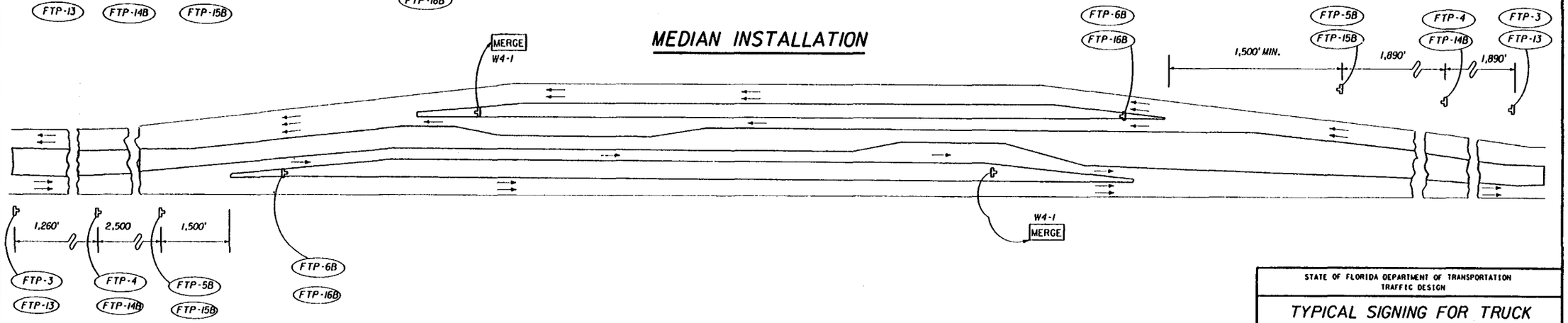

STATE OF FLORIDA DEPARTMENT OF TRANSPORTATION
TRAFFIC DESIGN

TYPICAL SIGNING FOR TRUCK WEIGH AND INSPECTION STATIONS

	Names	Dates
Designed By	W.F.W.	01/75
Drawn By		
Checked By	K.R.	01/75
F.H.W.A. Approved:		

Approved By: C. Clark Scott
State Traffic Plans Engineer

Revision No.	Sheet No.	Index No.
94	1 of 1	17328

Approach Speed (MPH)	Distance A
25 To 35	200 Ft.
36 To 45	350 Ft.
46 To 55	500 Ft.

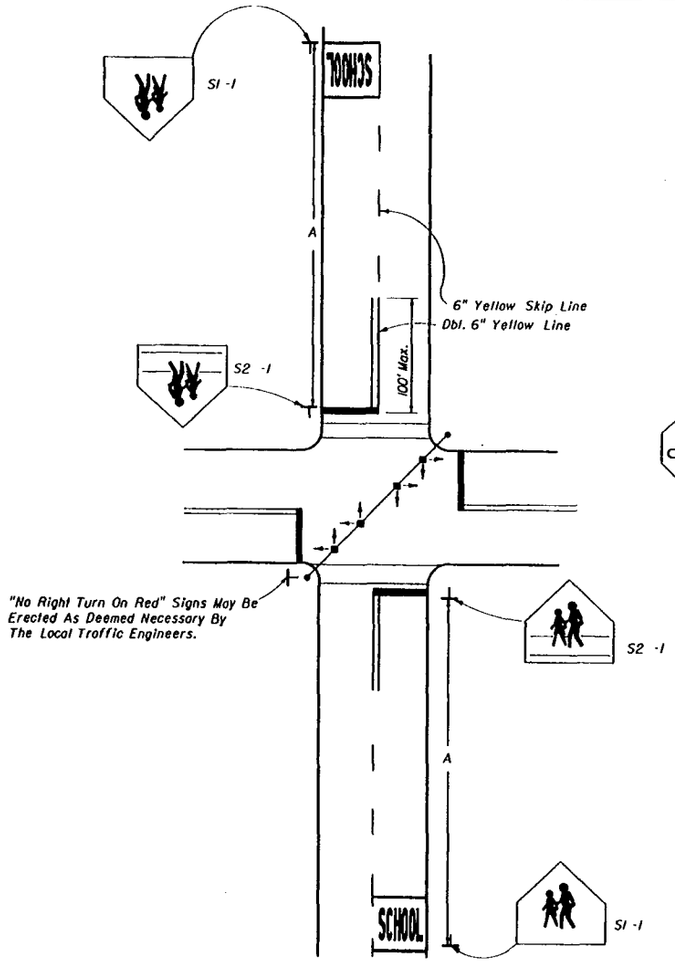

1. TRAFFIC CONTROL DEVICES FOR A SCHOOL CROSS-WALK AT A SIGNALIZED INTERSECTION

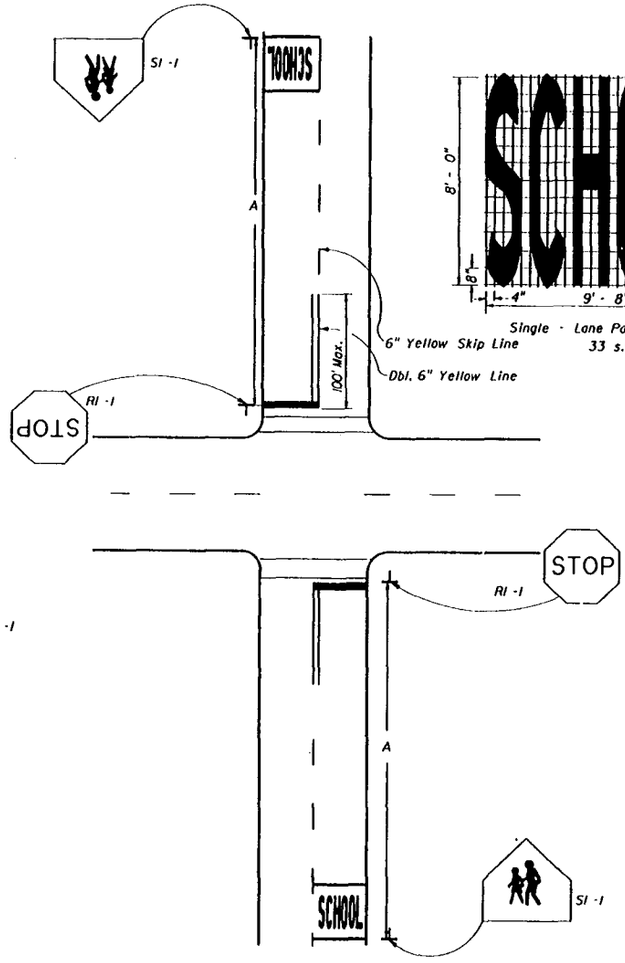

2. TRAFFIC CONTROL DEVICES FOR A SCHOOL CROSS-WALK AT A STOP CONTROLLED INTERSECTION

Note:
Special speed restrictions are not normally applicable to these two cases.

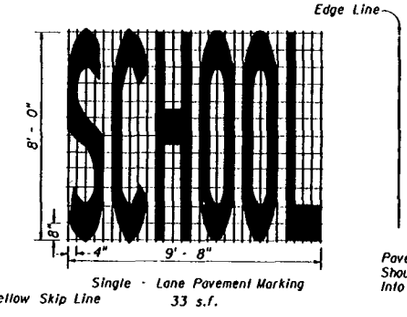

Single - Lane Pavement Marking
33 s.f.

PAVEMENT MARKINGS

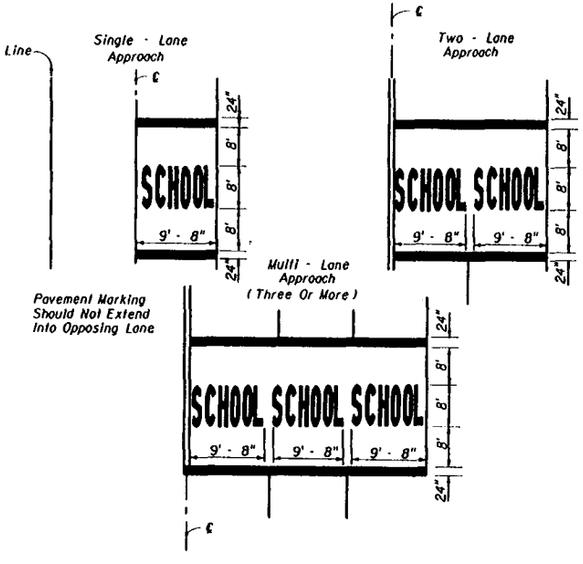

Notes

Signs shall be erected in accordance with Index No 17302.

When computing pavement messages quantities do not include transverse lines.

All school signs shall be reflective.

School cross-walk width shall be 6' min. 10' std. without curb cut ramps 10' min. with curb cut ramps. See Index 17358.

For signalized intersections or mid-block signalized crossings where flashing beacon speed limit signs (post mounted or overhead) are installed, the minimum distance from the speed limit sign to the stop line shall be 100 feet. The sign shall not block the view of the signal.

STATE OF FLORIDA DEPARTMENT OF TRANSPORTATION
TRAFFIC DESIGN

SCHOOL SIGNS & MARKINGS

	Names	Dates
Designed By	CEJ	07/76
Drawn By		
Checked By	KR	07/76

Approved By Clark A. Scott
State Traffic Plans Engineer

Revision No.	Sheet No.	Index No.
94	1 of 6	17344

F.H.W.A. Approved:

3. TRAFFIC CONTROL DEVICES WITH FLASHING BEACON FOR REDUCED SPEED ZONE AT A SCHOOL CROSS-WALK
(2 LANES - 2 WAY TRAFFIC)
(MIDBLOCK OR ON THRU STREET AT AN INTERSECTION)

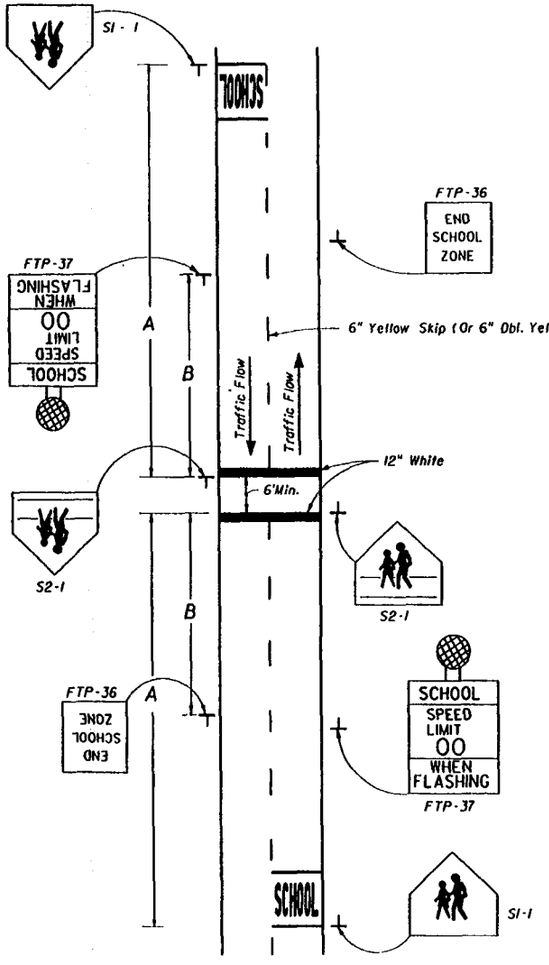

4. TRAFFIC CONTROL DEVICES FOR A REDUCED SPEED ZONE AT A SCHOOL CROSS-WALK (NO FLASHING BEACON)
(2 LANES - 2 WAY TRAFFIC)
(MIDBLOCK OR ON THRU STREET AT AN INTERSECTION)

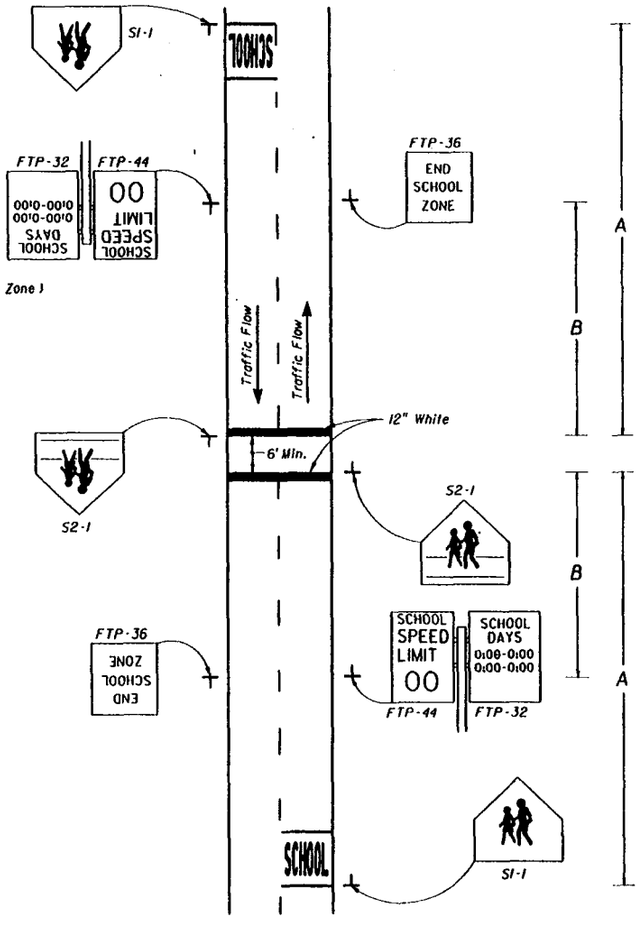

5. TRAFFIC CONTROL DEVICES FOR A REDUCED SPEED ZONE AT A SCHOOL CROSS-WALK WITH OVERHEAD FLASHING BEACON SPEED LIMIT SIGNS
(4 LANES UNDIVIDED - 2 WAY TRAFFIC)
(MIDBLOCK OR ON THRU STREET AT AN INTERSECTION)

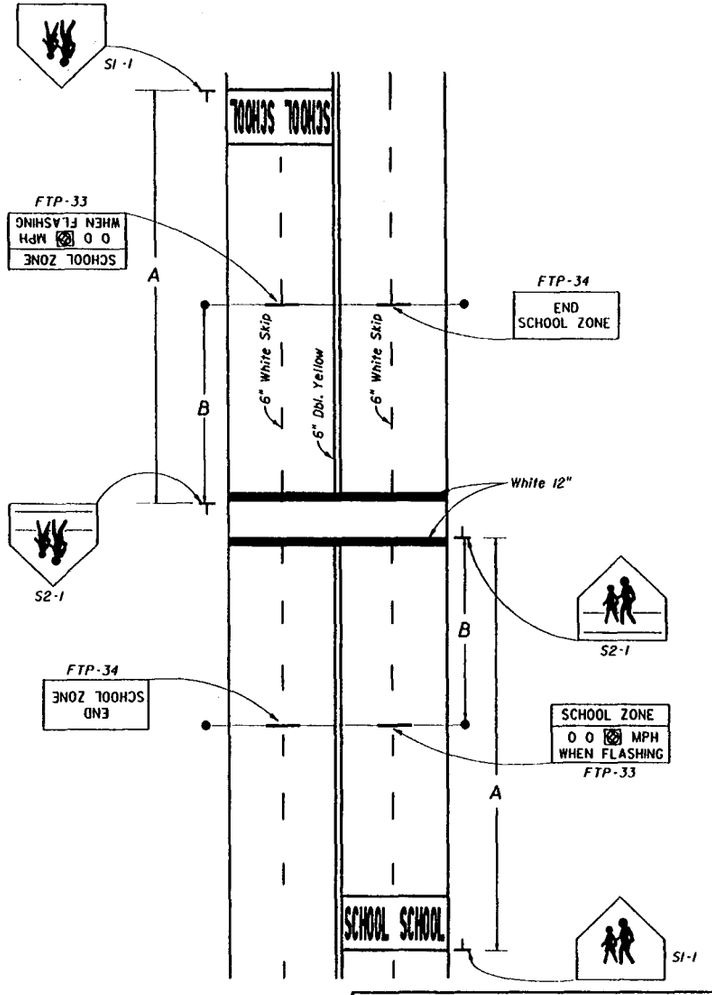

APPROACH SPEED MPH	SUGGESTED DISTANCE IN FEET	
	A	B
25 To 35	200	50
36 To 45	350	65
46 To 55	500	80

School cross-walk width shall be 6' min.
10'-std. without curb cut ramps.
10' min. with curb cut ramps.
See Index 17358

STATE OF FLORIDA DEPARTMENT OF TRANSPORTATION
TRAFFIC DESIGN

SCHOOL SIGNS & MARKINGS

	Names	Dates
Designed By	CEJ	76
Drawn By		
Checked By	KR	76
F.H.W.A. Approved:		

Approved By: Charles A. Scott
State Traffic Plans Engineer

Revision No.	Sheet No.	Index No.
92	2 of 6	17344

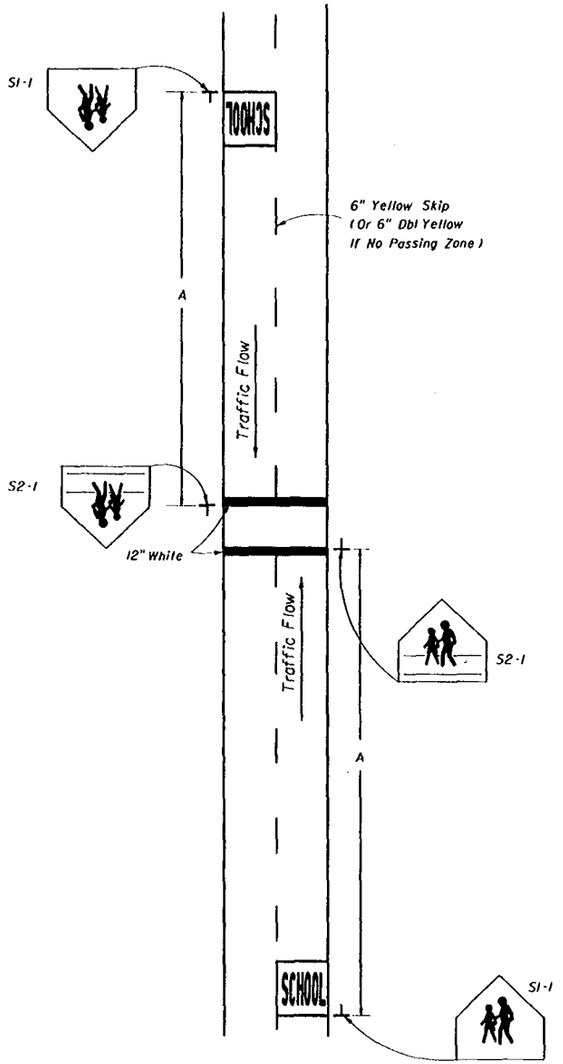

6. TRAFFIC CONTROL DEVICES FOR A SCHOOL CROSS-WALK
WITHOUT A SPEED REDUCTION
(2 LANES - 2 WAY TRAFFIC)

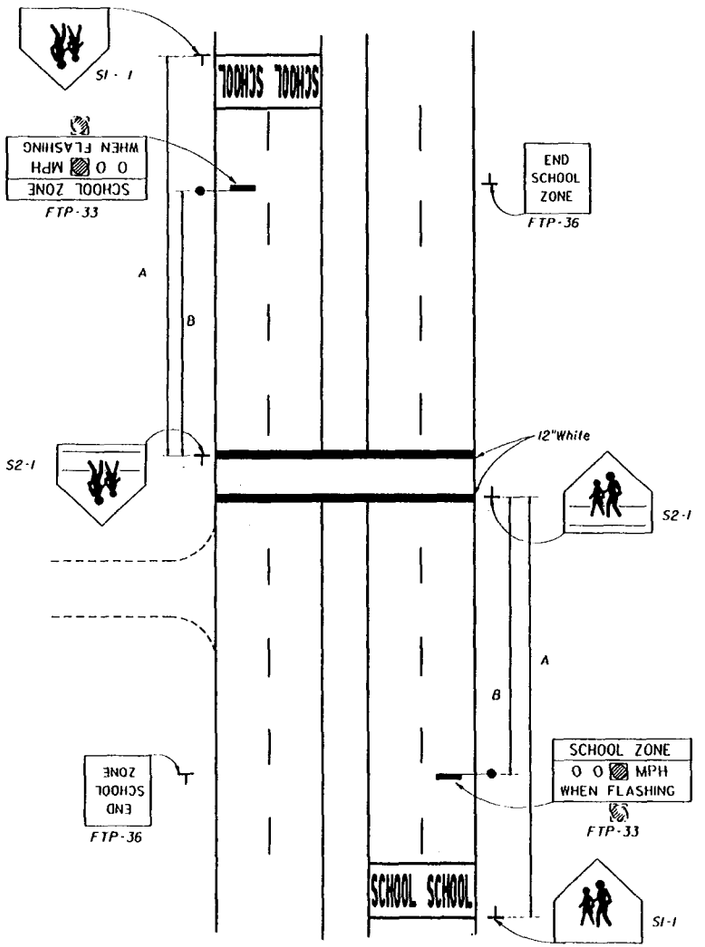

7. TRAFFIC CONTROL DEVICES FOR A REDUCED SPEED ZONE AT A SCHOOL CROSS-WALK
WITH OVERHEAD FLASHING BEACON SPEED LIMIT SIGNS
(4 LANES DIVIDED - 2 WAY TRAFFIC)

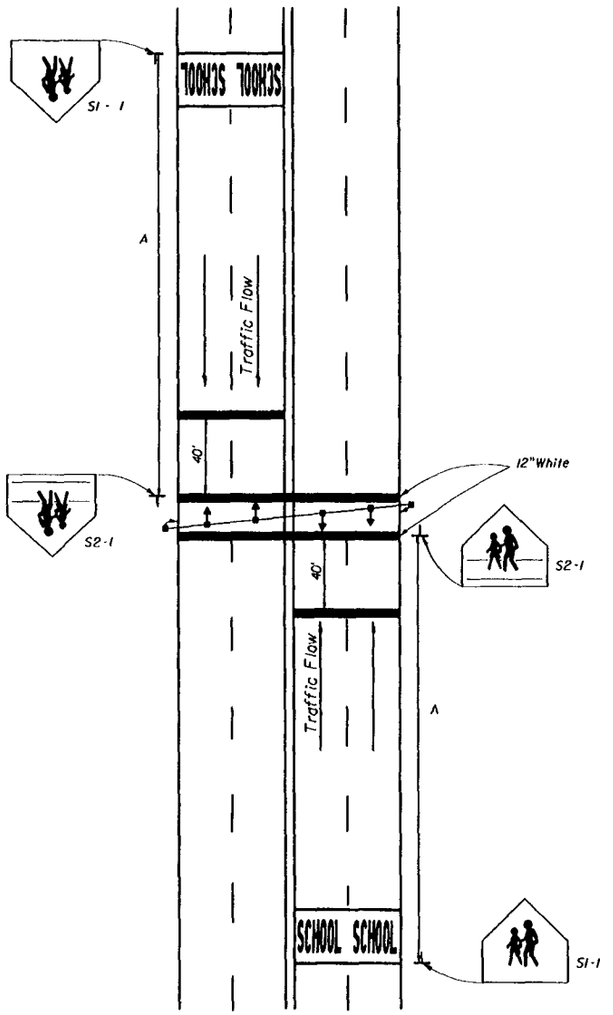

8. TRAFFIC CONTROL DEVICES FOR SIGNALIZED MIDBLOCK
SCHOOL CROSS-WALK

Approach Speed MPH	Suggested Distance In Feet A	B
25 To 35	200	50
36 To 45	350	65
46 To 55	500	80

School cross-walk width shall be 6' min.
10' std. without curb cut ramps.
10' min. with curb cut ramps.
See index 17358

STATE OF FLORIDA DEPARTMENT OF TRANSPORTATION
TRAFFIC DESIGN

SCHOOL SIGNS & MARKINGS

	Names	Dates
Designed By	CEJ	07/76
Drawn By		
Checked By	KR	07/76

Approved By Clark A. Scott
State Traffic Plans Engineer

Revision No.	Sheet No.	Index No.
92	3 of 6	17344

F.H.W.A. Approved:

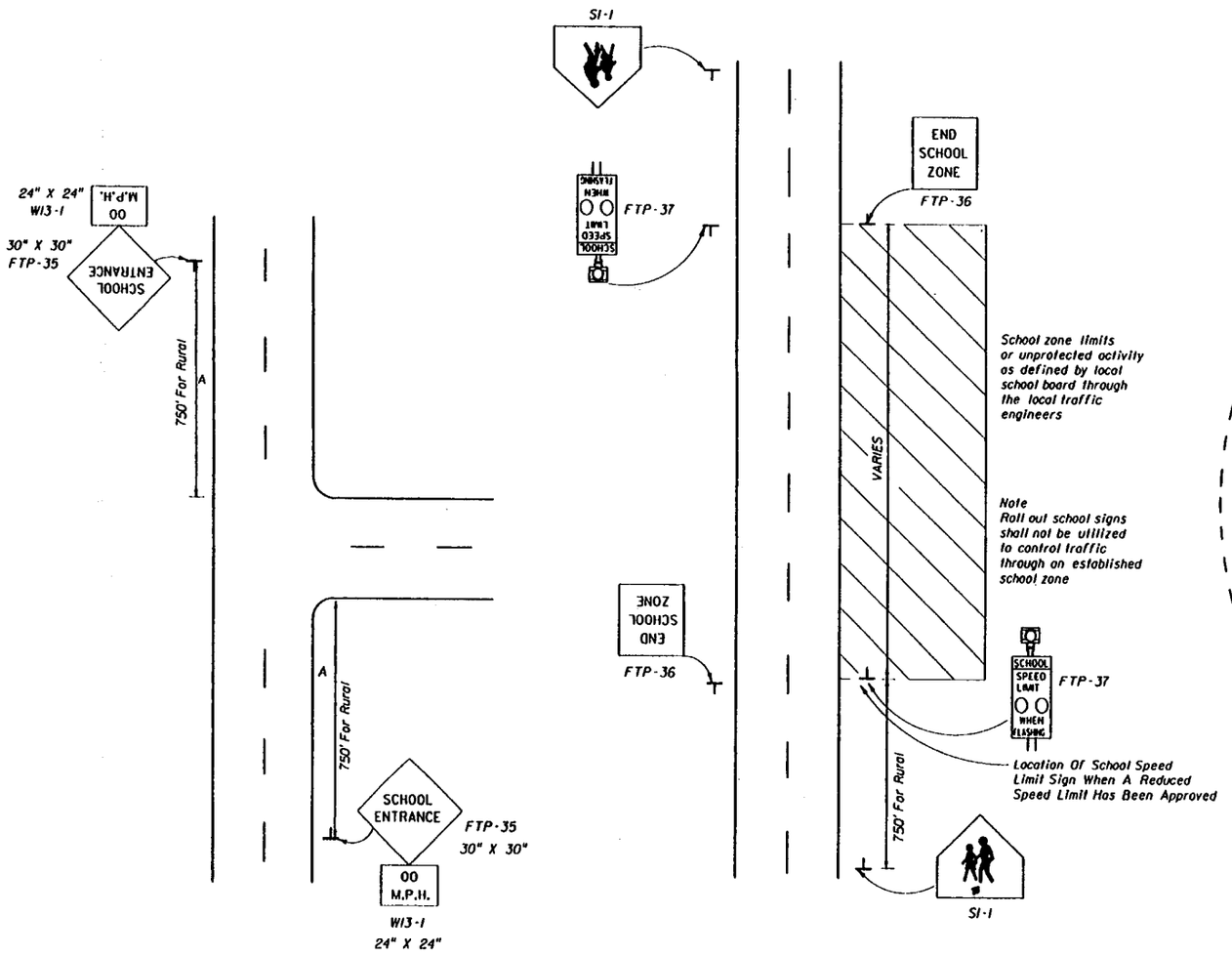

9. TRAFFIC CONTROL DEVICES AT SCHOOL ENTRANCES WHERE THERE ARE LITTLE OR NO WALKING STUDENTS

These signs are intended for use only at those few locations where the school entrance is not evident to the motorist, and must be approved in advance by the responsible traffic engineering authority.

10. TRAFFIC CONTROL DEVICES FOR A TYPICAL SCHOOL ZONE FRONTING THE SCHOOL PROPERTY

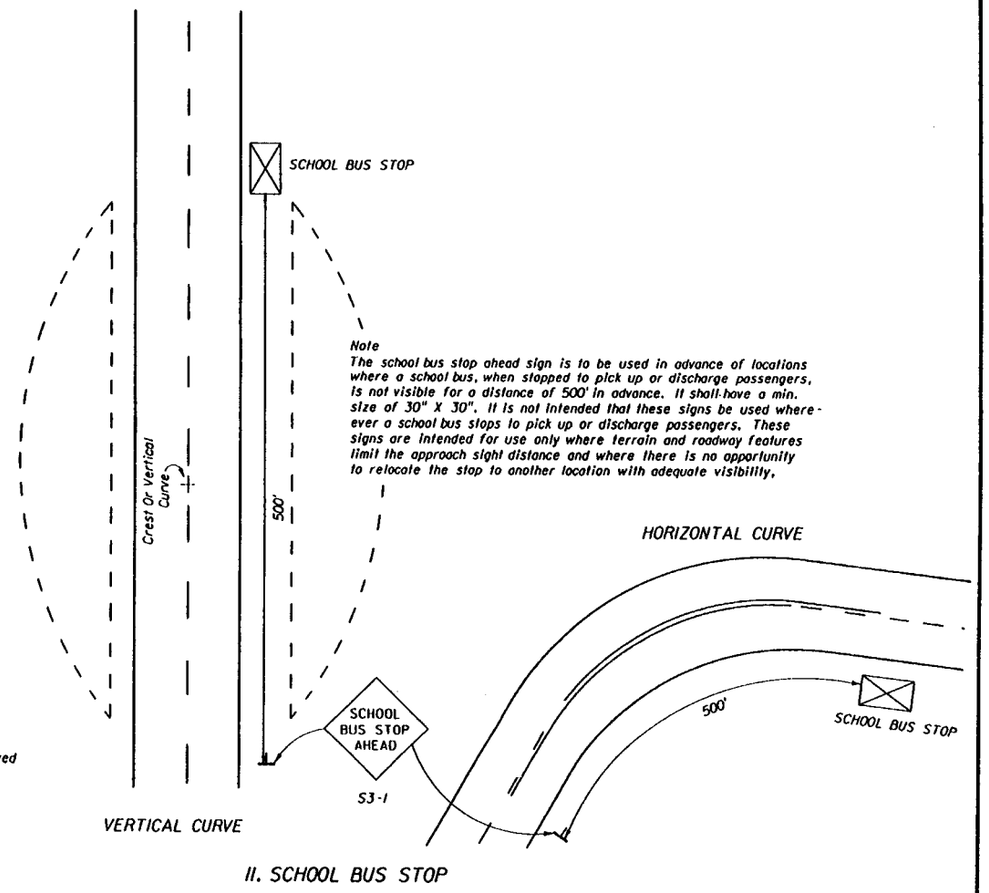

11. SCHOOL BUS STOP

STATE OF FLORIDA DEPARTMENT OF TRANSPORTATION
TRAFFIC DESIGN

SCHOOL SIGNS & MARKINGS

	Names	Dates
Designed By	CEJ	07/16
Drawn By		
Checked By	KR	07/16
F.H.W.A. Approved:		

Approved By: Clark A. Scott
State Traffic Plans Engineer

Revision No.	Sheet No.	Index No.
90	4 of 6	17344

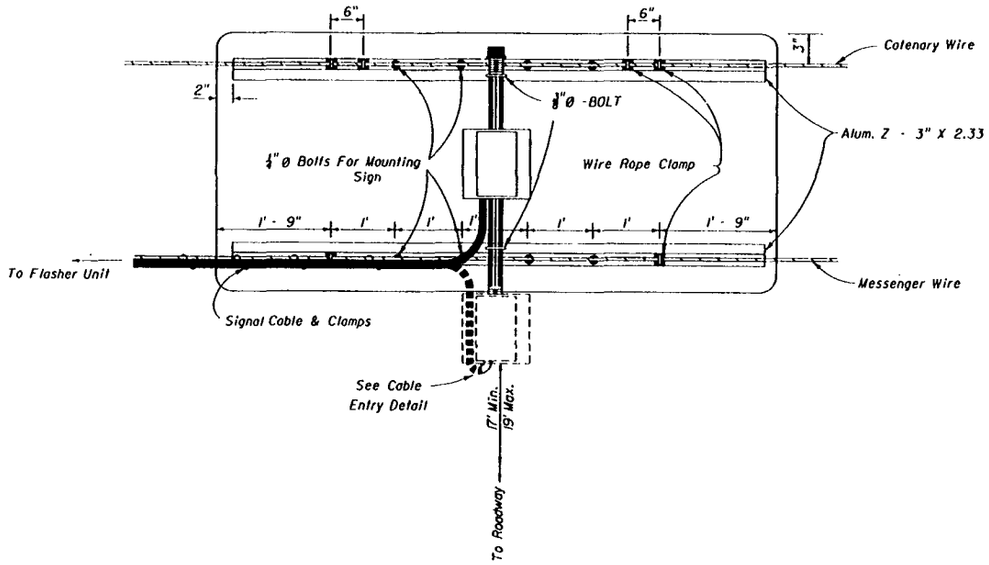

REAR VIEW

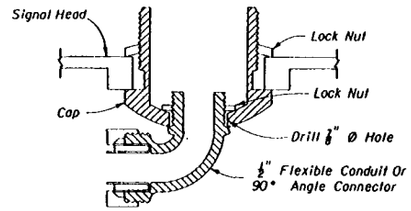

CABLE ENTRY DETAIL

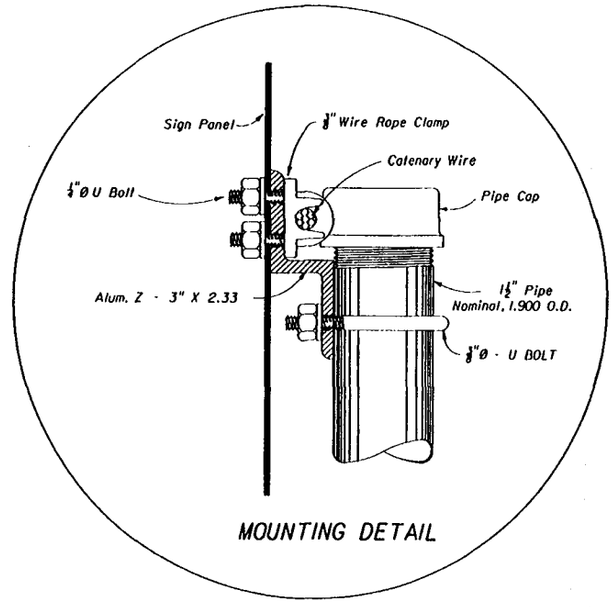

MOUNTING DETAIL

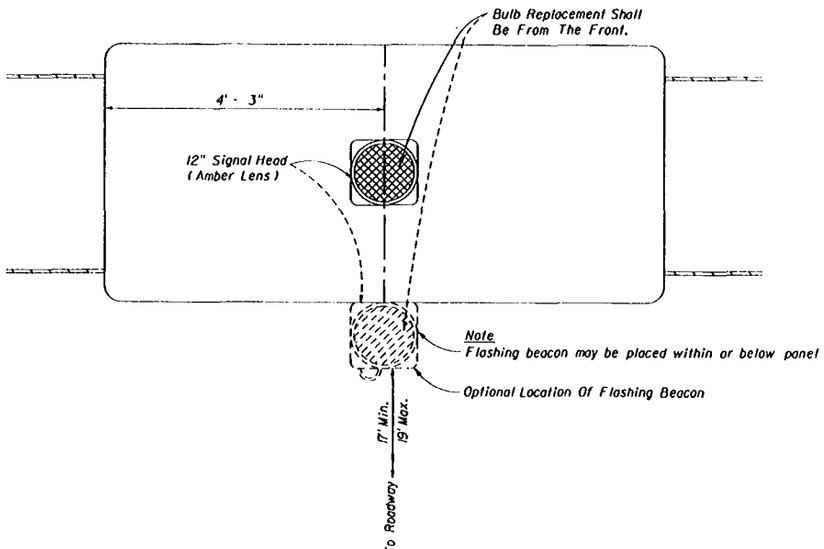

FRONT VIEW

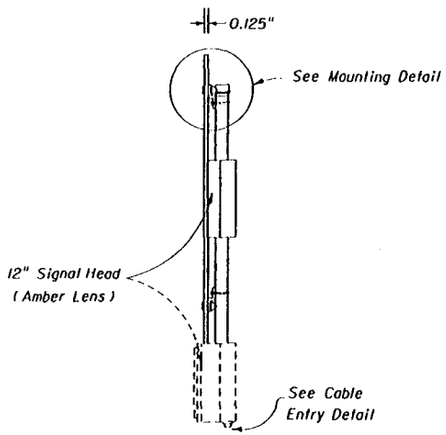

SIDE VIEW

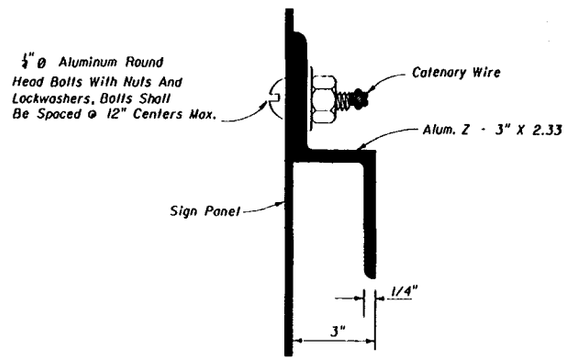

Z SECTION DETAIL

Flasher unit and cabinet to be placed on the strain pole supporting overhead sign assembly or on service pole. The flasher unit not to overhang private property or sidewalk.

STATE OF FLORIDA DEPARTMENT OF TRANSPORTATION
TRAFFIC DESIGN

SCHOOL SIGNS & MARKINGS

	Names	Dates
Designed By		
Drawn By	CEJ	07/76
Checked By	RR	07/76
F.H.W.A. Approved:		

Approved By C. Clark Scott
State Traffic Plans Engineer

Revision No.	Sheet No.	Index No.
90	5 of 6	17344

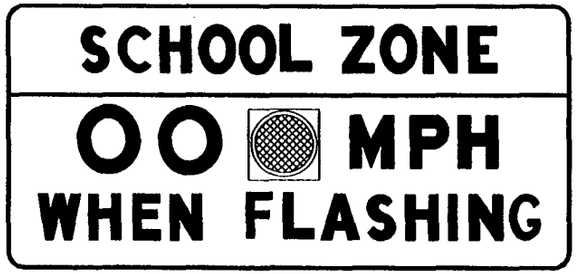

OVERHEAD STANDARD

* Flashing Beacon May Be Placed Within Or Below Panel

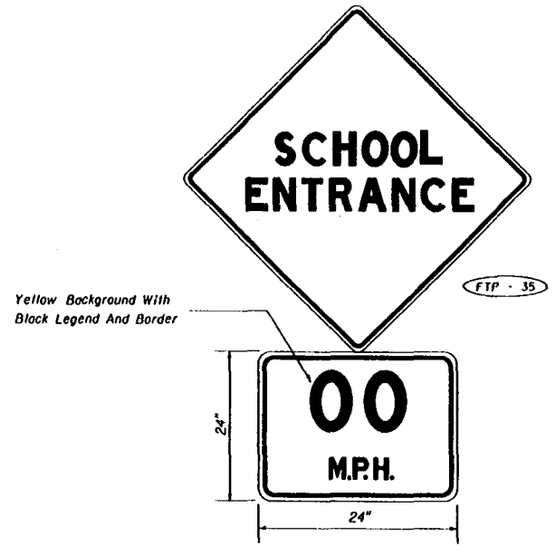

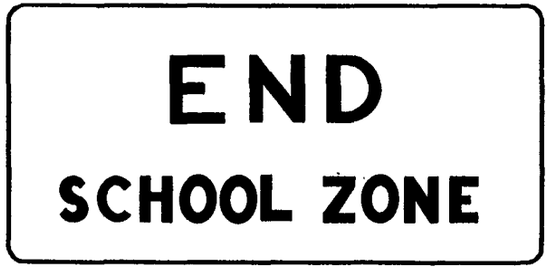

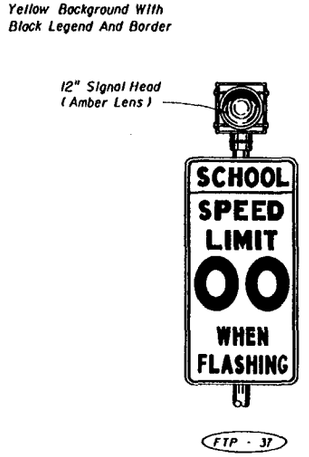

Ground Mount Standard

Note:
Existing ground mount school speed limit signs utilizing a single 8" min. size beacon or two 6" min. size beacons inside the sign border are considered meeting the standard. However, replacement or upgrading of these school speed limit signs shall conform to the above standard. Numericol speed limit displayed shall be established by appropriate regulatory authorities.

Notes:

1. *Standard size signs should be used whenever possible. Minimum sizes may be used only on low volume, low speed (less than 35 m.p.h.) streets. Special sizes should be used on expressway facilities where special emphasis is needed.*
2. *The value of the actual school zone speed limit shall be determined by the District Traffic Operations Engineer in cooperation with local school superintendents. In no case shall it be less than the 15 m.p.h. min. as set by law.*
3. *See Index 17355 for sign details.*

SPEED LIMIT ASSEMBLY

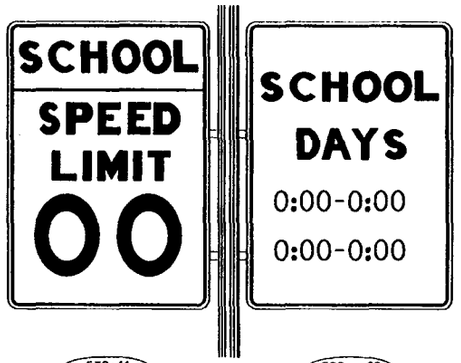



STATE OF FLORIDA DEPARTMENT OF TRANSPORTATION
TRAFFIC DESIGN

SCHOOL SIGNS & MARKINGS

	Names	Dates
Designed By	CEJ	07/76
Drawn By		
Checked By	KR	07/76
F.H.W.A. Approved:		

Approved By: C. Clark Scott
State Traffic Plans Engineer

Revision No.	Sheet No.	Index No.
94	6 of 6	17344

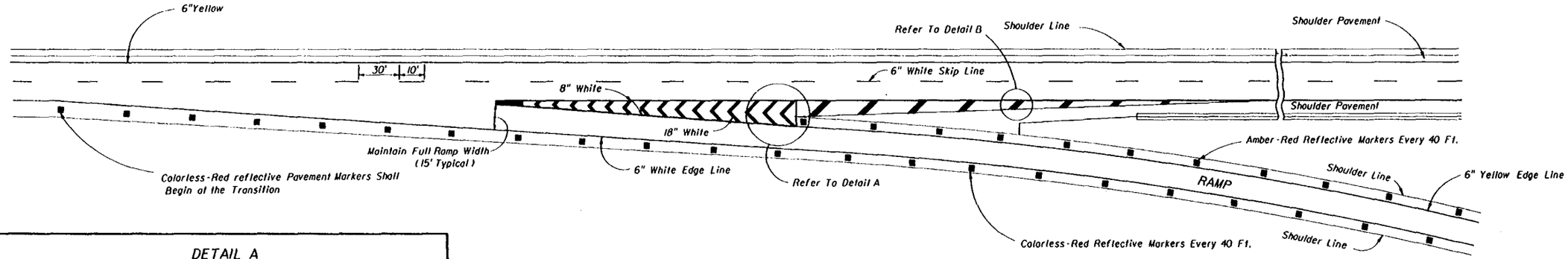

DETAIL A

For RPM Location Refer To Index 17352.

Direction Of Travel

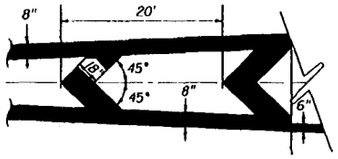

Note:
Reflective pavement markers are installed adjacent to the edge line.

NORMAL TAPERED EXIT

(TWO THRU LANES)

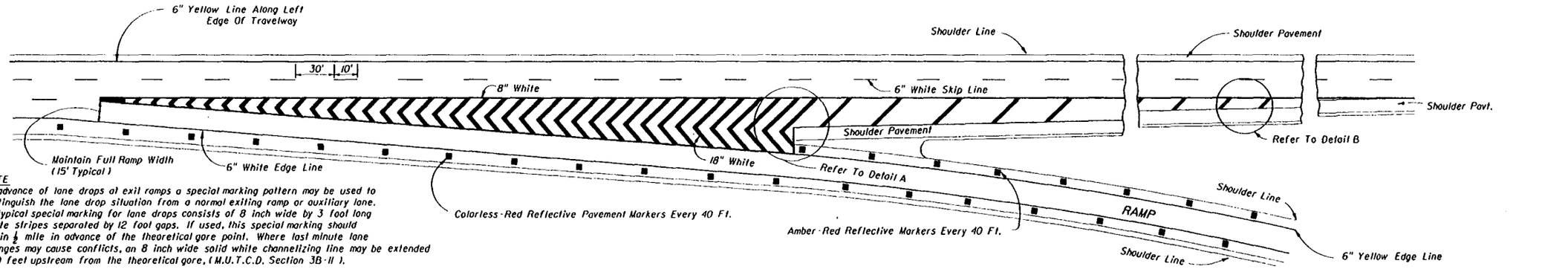

NOTE
In advance of lane drops at exit ramps a special marking pattern may be used to distinguish the lane drop situation from a normal exiting ramp or auxiliary lane. A typical special marking for lane drops consists of 8 inch wide by 3 foot long white stripes separated by 12 foot gaps. If used, this special marking should begin ½ mile in advance of the theoretical gore point. Where last minute lane changes may cause conflicts, an 8 inch wide solid white channelizing line may be extended 300 feet upstream from the theoretical gore, (M.U.T.C.D. Section 3B-11).

DETAIL B

"S"	30	35	40	45	50	55
"X"	20'	20'	40'	40'	60'	60'

Passenger Car, Daytime, Posted Speeds Or 85th Percentile (Use Higher Value)

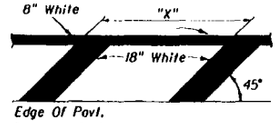

NORMAL TAPERED EXIT ONLY

(TWO THRU LANES - THREE APPROACH LANES)

STATE OF FLORIDA DEPARTMENT OF TRANSPORTATION
TRAFFIC DESIGN

INTERCHANGE MARKINGS

	Names	Dates
Designed By	PB	78
Drawn By	PB	78
Checked By	RR	78

Approved By Clark A. Scott
State Traffic Ops Engineer

F.H.W.A. Approved:

Revision No.	Sheet No.	Index No.
92	1 of 4	17345

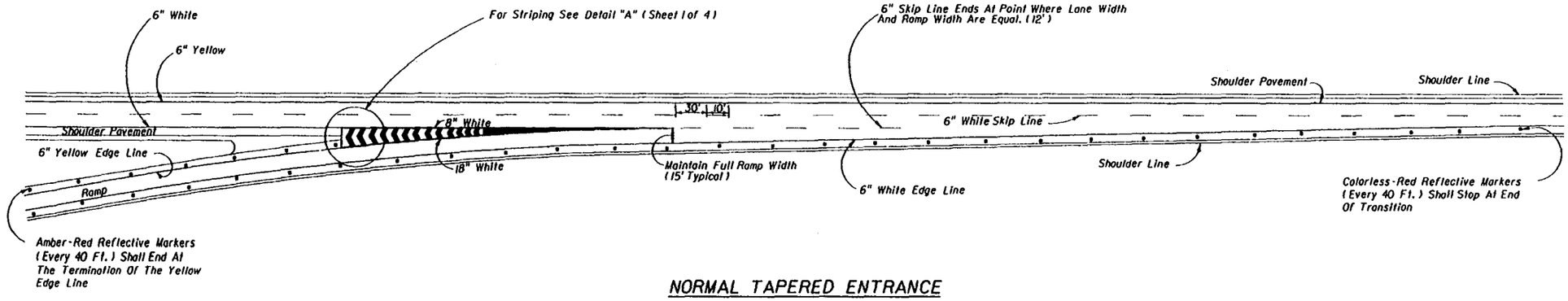

NORMAL TAPERED ENTRANCE

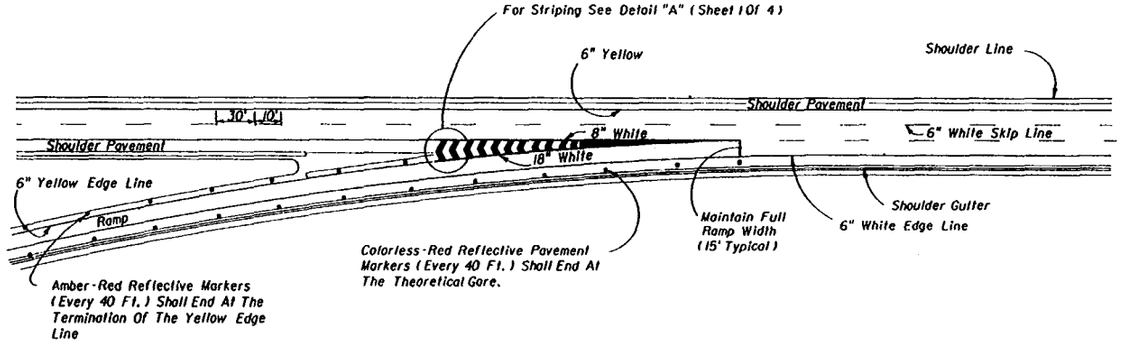

NORMAL TAPERED ENTRANCE WITH ADDED LANE

STATE OF FLORIDA DEPARTMENT OF TRANSPORTATION
TRAFFIC DESIGN

INTERCHANGE MARKINGS

	Names	Dates
Designed By	MC	87
Drawn By	MC	87
Checked By	KA	87
F.H.W.A. Approved:		

Approved By _____
State Traffic Plans Engineer

Revision No.	Sheet No.	Index No.
94	2 of 4	17345

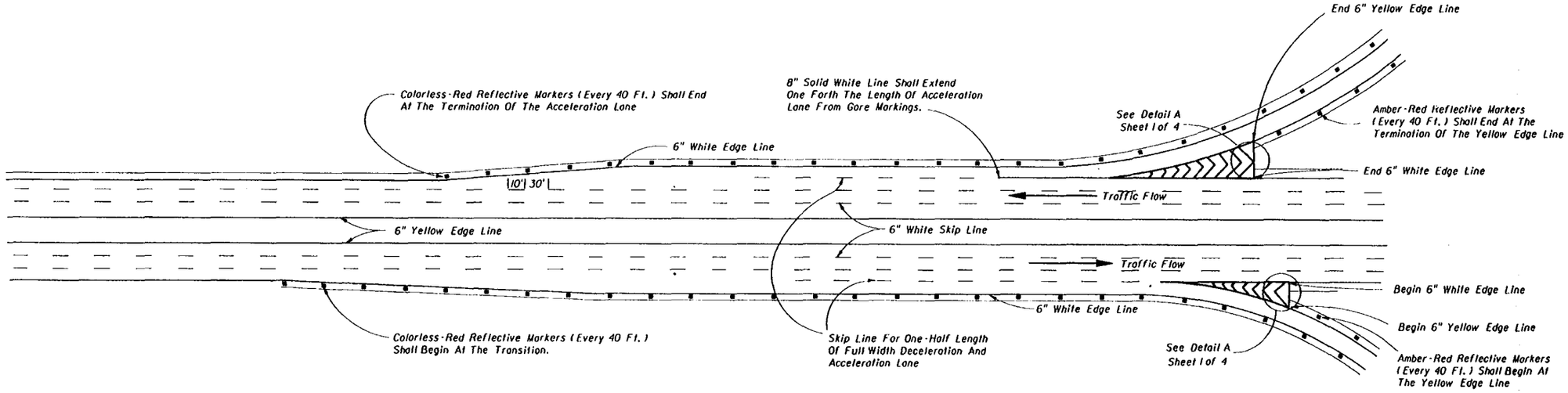

PARALLEL ACCELERATION AND DECELERATION LANE

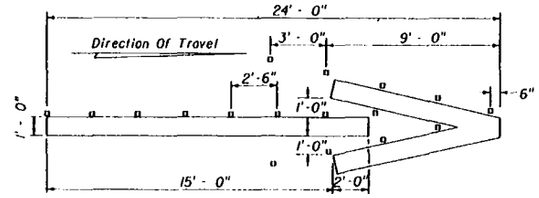

White Arrow With Colorless-Red Reflective Markers

WRONG WAY ARROW

STATE OF FLORIDA DEPARTMENT OF TRANSPORTATION
TRAFFIC DESIGN

INTERCHANGE MARKINGS

	Name	Date
Designed By	W.R.B.	73
Drawn By	W.R.B.	73
Checked By	K.R.	73
F.H.W.A. Approved:		

Approved By Clarke Scott
State Traffic Plans Engineer

Revision No.	Sheet No.	Index No.
92	3 of 4	17345

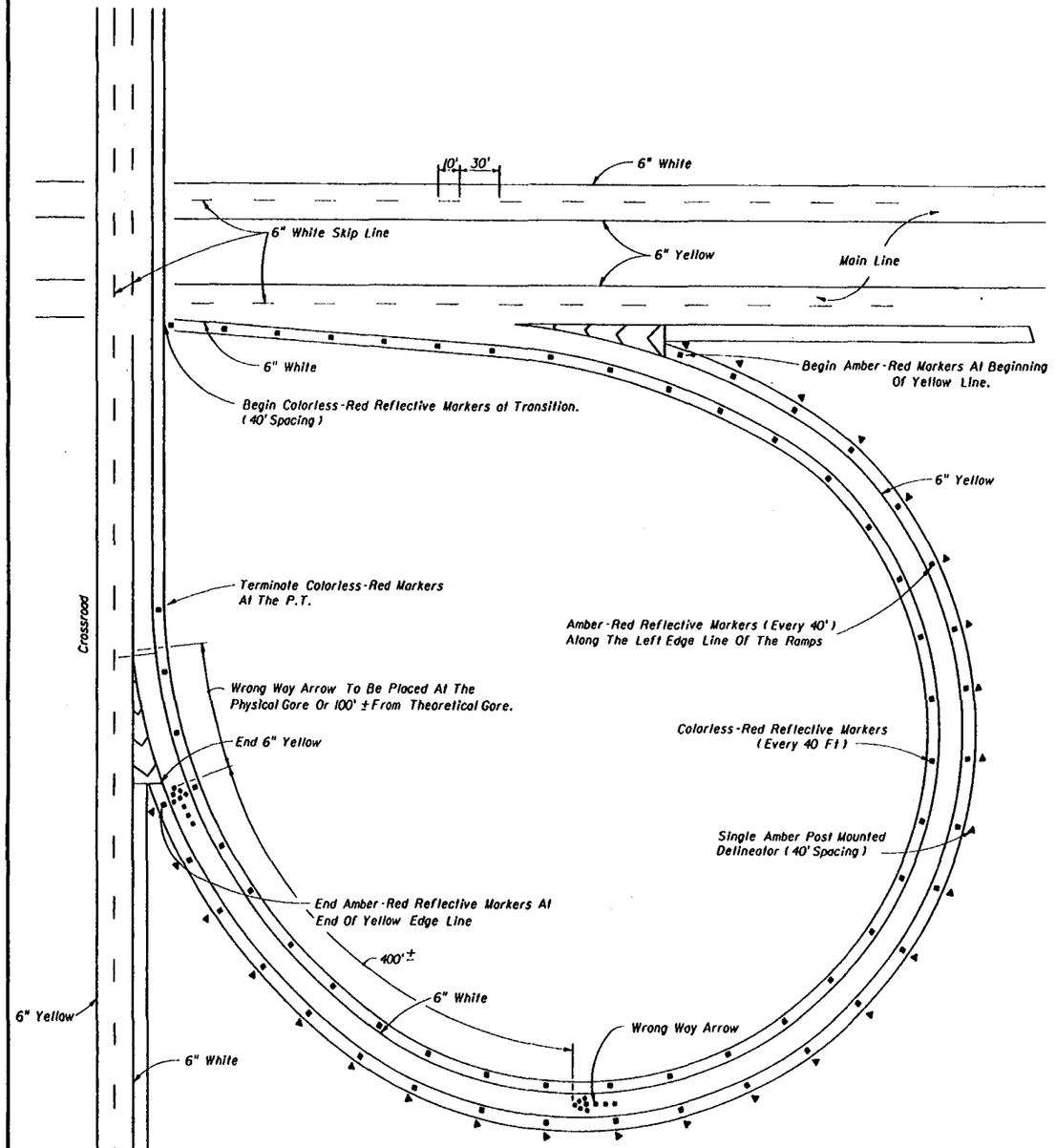

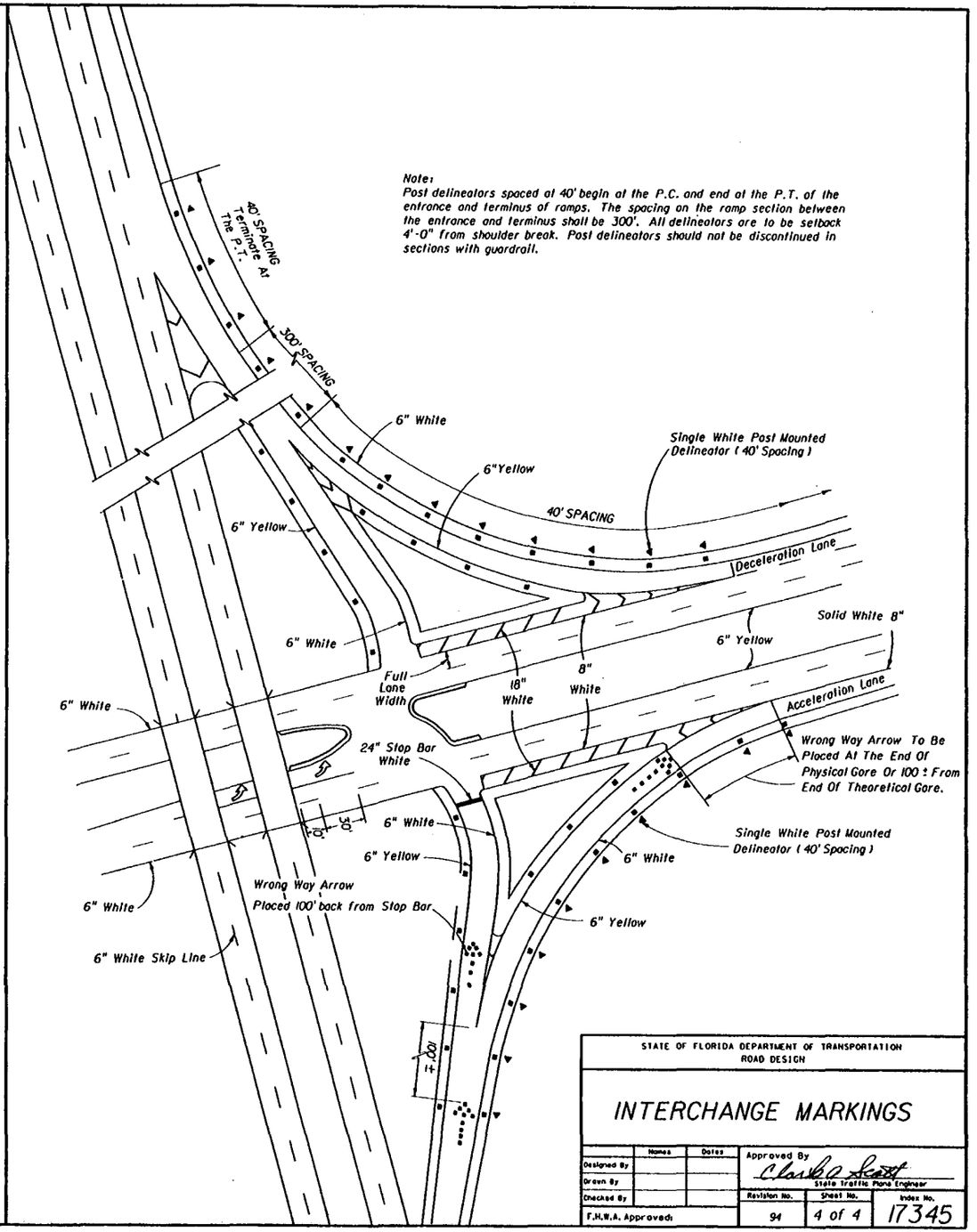

STATE OF FLORIDA DEPARTMENT OF TRANSPORTATION
ROAD DESIGN

INTERCHANGE MARKINGS

	Names	Dates
Designed By		
Drawn By		
Checked By		
F.H.W.A. Approved:		

Approved By Clarke Scott
State Traffic Plans Engineer

Revision No.	Sheet No.	Index No.
94	4 of 4	17345

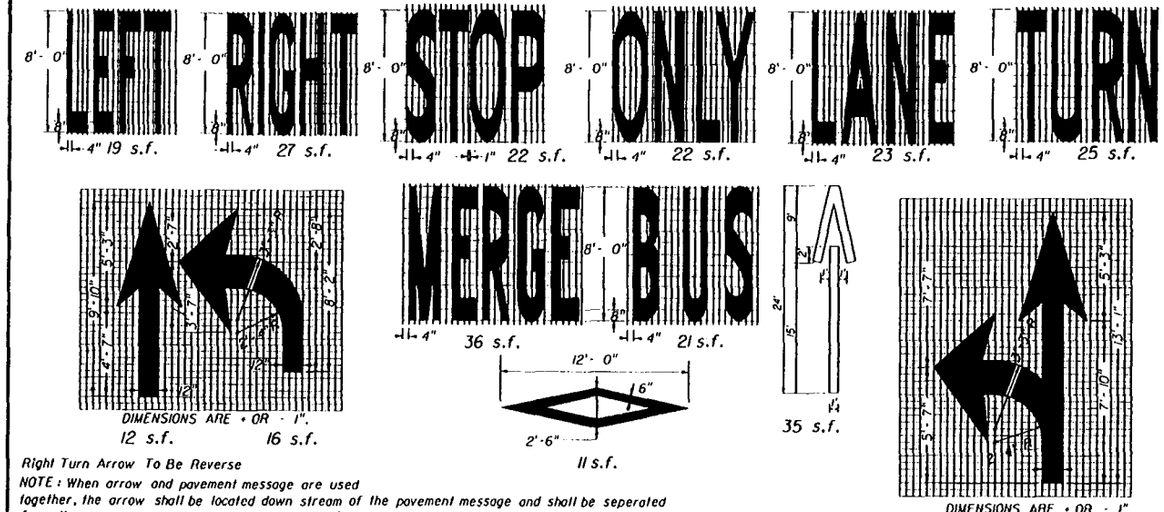

Right Turn Arrow To Be Reverse

NOTE : When arrow and pavement message are used together, the arrow shall be located down stream of the pavement message and shall be seperated from the pavement message by a distance of 25' (Base of the arrow to the base of the message).

PAVEMENT ARROW AND MESSAGE DETAILS

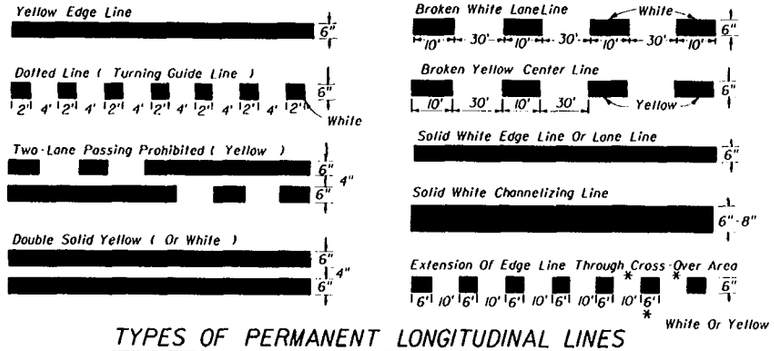

TYPES OF PERMANENT LONGITUDINAL LINES

BASIC COLOR RULE

White lines separate flows in the same direction
Yellow lines separate flows in the opposite direction
Yellow dotted lines may be used in special cases

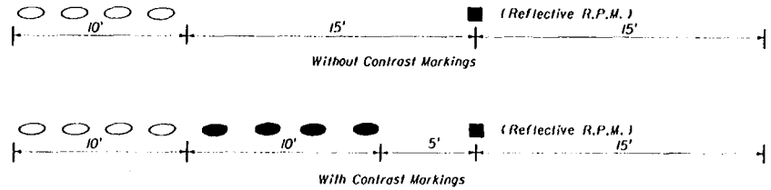

NOTE: Ceramic Markers should not be installed unless specifically called for in the plans. Use is limited to high volume sections with ADT's greater than 50,000 where lane changing is to be discouraged or other areas where channelization is required.

NON-REFLECTIVE CERAMIC PAVEMENT MARKER PLACEMENT

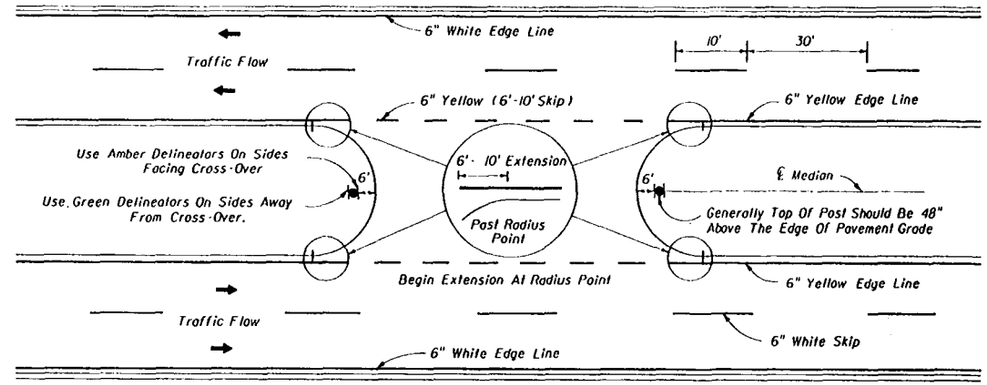

PAVEMENT MARKINGS AND DELINEATORS FOR MEDIAN CROSS-OVER

NOTE:

When markings are applied to median noses they shall be yellow in color.

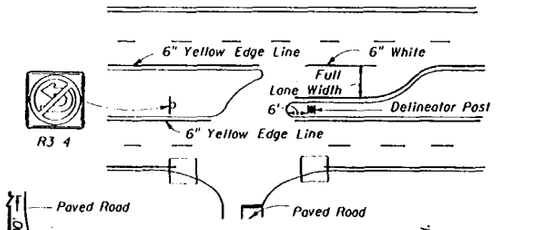

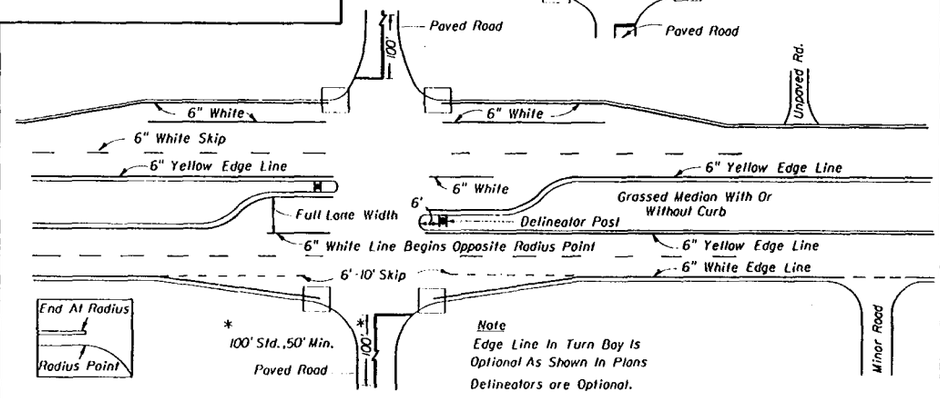

PAVEMENT MARKINGS FOR INTERSECTIONS WITH MAJOR AND MINOR ROADS

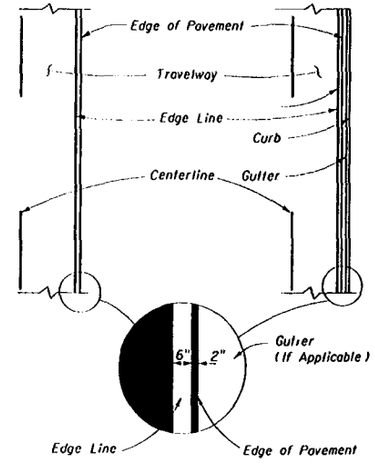

PLACEMENT OF EDGE LINES

STATE OF FLORIDA DEPARTMENT OF TRANSPORTATION
TRAFFIC DESIGN

SPECIAL MARKING AREAS

	Names	Dates
Designed By	S.W.R.	08/16/18
Drawn By		
Checked By	K.R.	08/16/18

Approved By: Clark A. Scott
State Traffic Plans Engineer

Revision No.	Sheet No.	Index No.
94	1 of 9	17346

F.H.W.A. Approved:

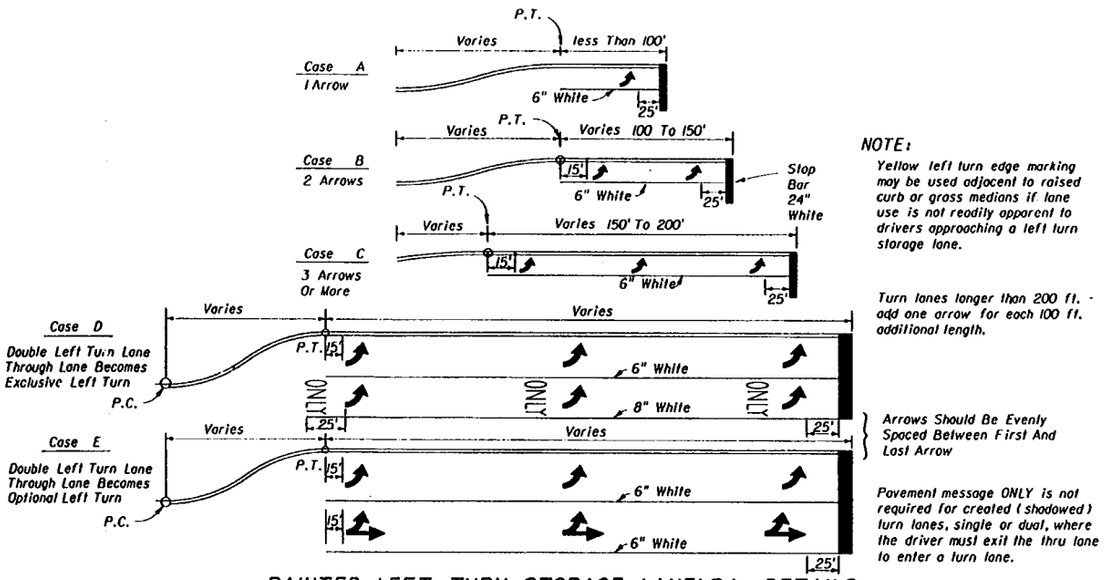

NOTE:

Yellow left turn edge marking may be used adjacent to raised curb or gross medians if lane use is not readily apparent to drivers approaching a left turn storage lane.

Turn lanes longer than 200 ft. - add one arrow for each 100 ft. additional length.

Arrows Should Be Evenly Spaced Between First And Last Arrow

Pavement message ONLY is not required for created (shadowed) turn lanes, single or dual, where the driver must exit the thru lane to enter a turn lane.

PAINTED LEFT TURN STORAGE LANE(S) DETAILS

FOR STOP CONTROLLED OR SIGNALIZED INTERSECTIONS

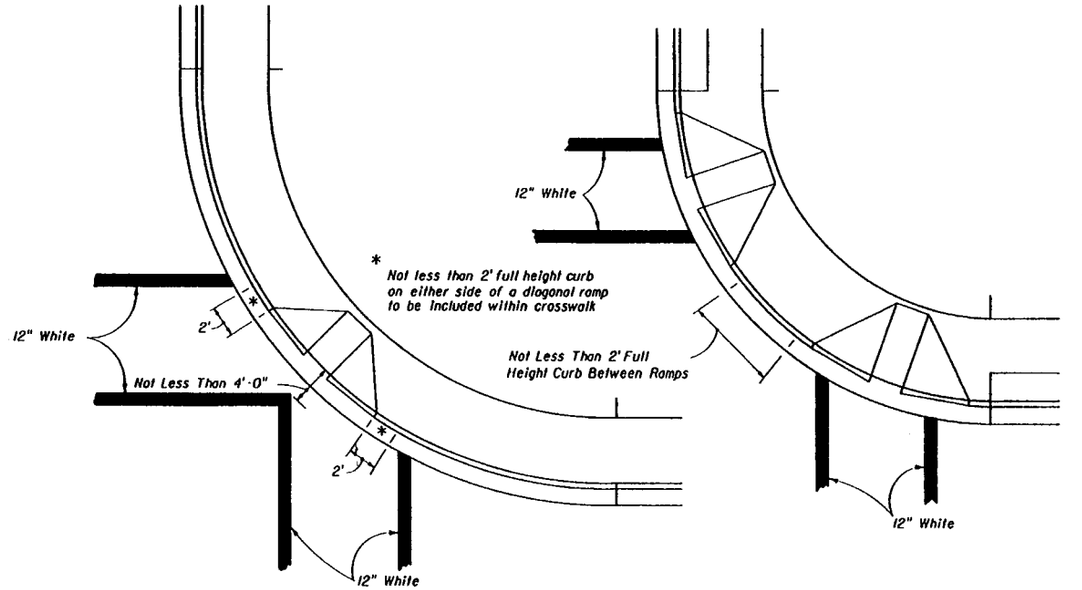

TYPICAL CROSSWALK MARKINGS FOR CURB CUT RAMPS

REFER TO INDEX NO. 17346 SHEET 9 OF 9.

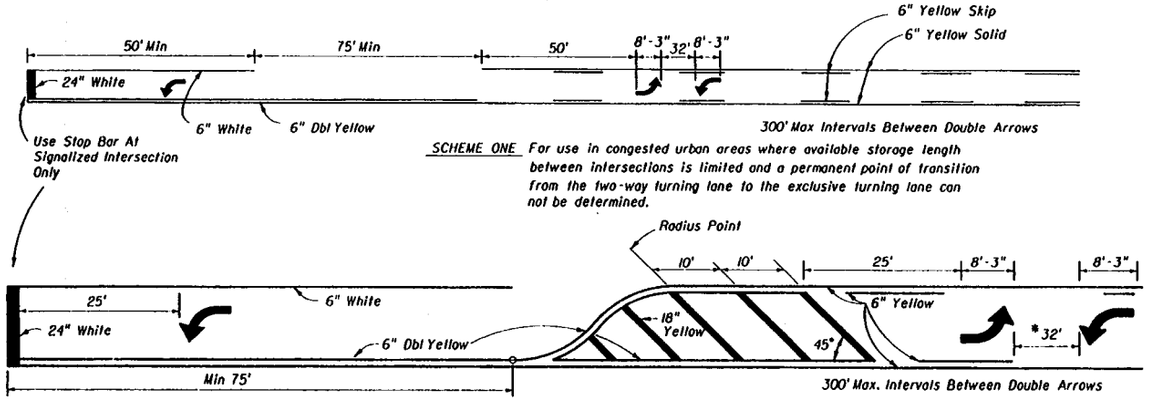

SCHEME ONE For use in congested urban areas where available storage length between intersections is limited and a permanent point of transition from the two-way turning lane to the exclusive turning lane can not be determined.

SCHEME TWO

For use in rural & suburban areas where an adequate storage lane length can be specifically determined.

* Typical spacing reference page 3B-6 in the M.U.T.C.D.

TWO WAY LEFT TURN LANE

(WITH SINGLE LANE LEFT TURN CHANNELIZATION)

STATE OF FLORIDA DEPARTMENT OF TRANSPORTATION
TRAFFIC DESIGN

SPECIAL MARKING AREAS

	Names	Dates
Designed By	TL	76
Drawn By	TL	76
Checked By	KR	76
F.H.W.A. Approved:		

Approved By C. Lamb Scott
State Traffic Plans Engineer

Revision No.	Sheet No.	Index No.
94	2 of 9	17346

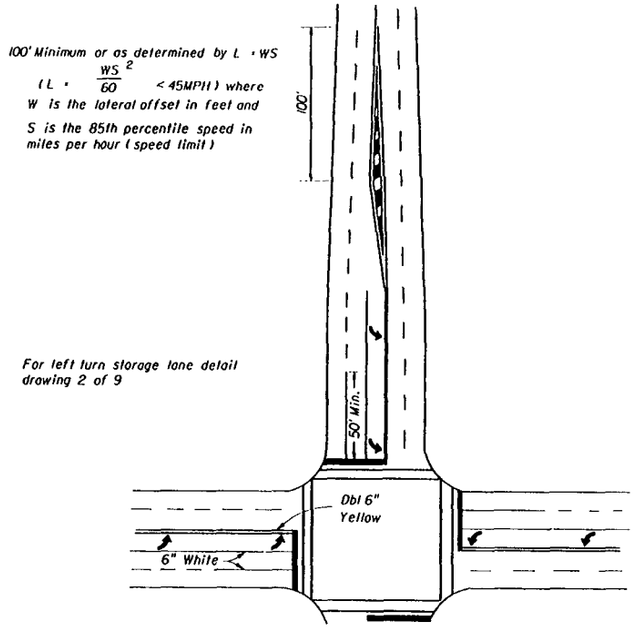

TYPICAL INTERSECTION 2 THRU LANES PLUS LEFT TURN LANE, WITH CROSS-WALK

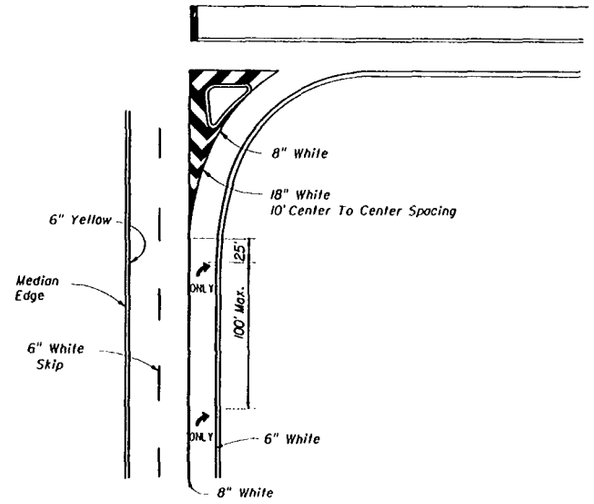

RIGHT TURN LANE DROP AND ISLAND DETAILS
LEFT TURN LANE DROP IS MIRROR IMAGE

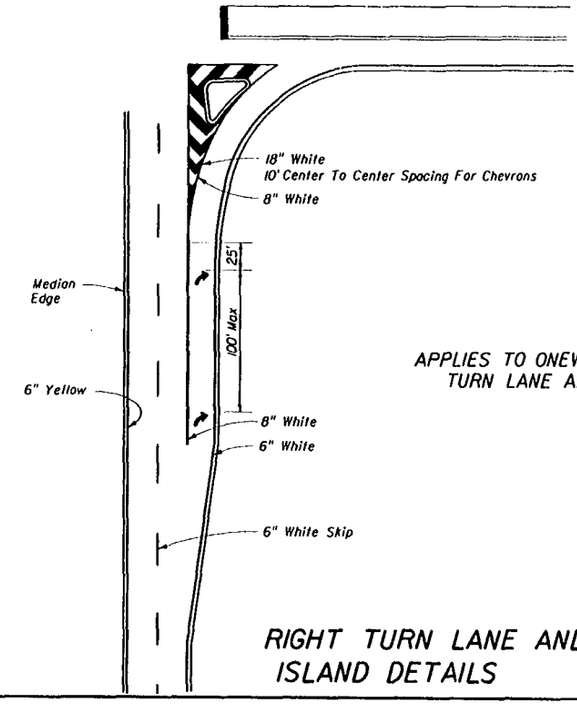

APPLIES TO ONEWAY LEFT TURN LANE ALSO

RIGHT TURN LANE AND ISLAND DETAILS

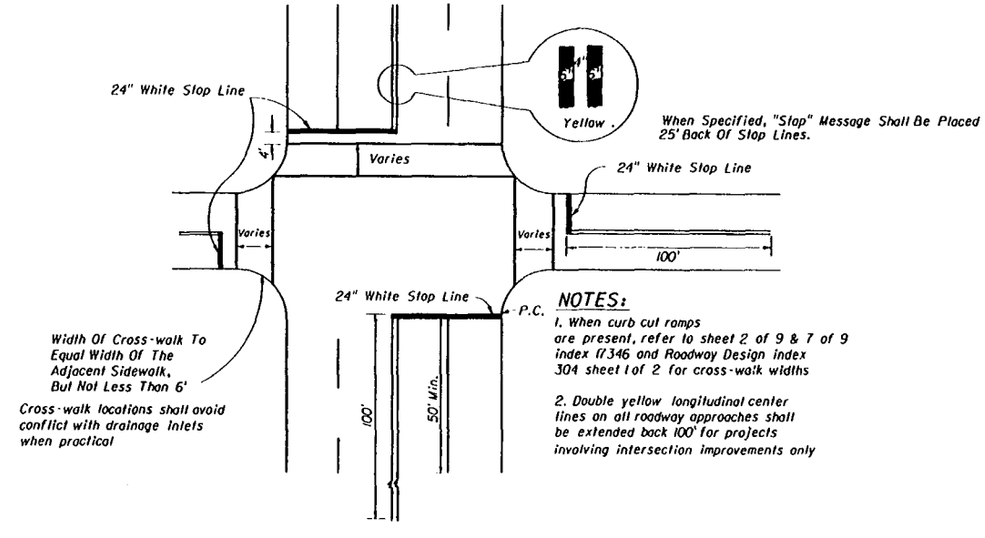

NOTES:

1. When curb cut ramps are present, refer to sheet 2 of 9 & 7 of 9 index 17346 and Roadway Design index 304 sheet 1 of 2 for cross-walk widths

2. Double yellow longitudinal center lines on all roadway approaches shall be extended back 100' for projects involving intersection improvements only

STOP BARS, CROSS-WALKS AND DOUBLE CENTER LINE DETAILS

STATE OF FLORIDA DEPARTMENT OF TRANSPORTATION
TRAFFIC DESIGN

SPECIAL MARKING AREAS

	Names	Dates
Designed By	TL	76
Drawn By	TL	76
Checked By	KR	76

Approved By: Clark A. Scott
State Traffic Plans Engineer

F.H.W.A. Approved:

Revision No.	Sheet No.	Index No.
94	3 of 9	17346

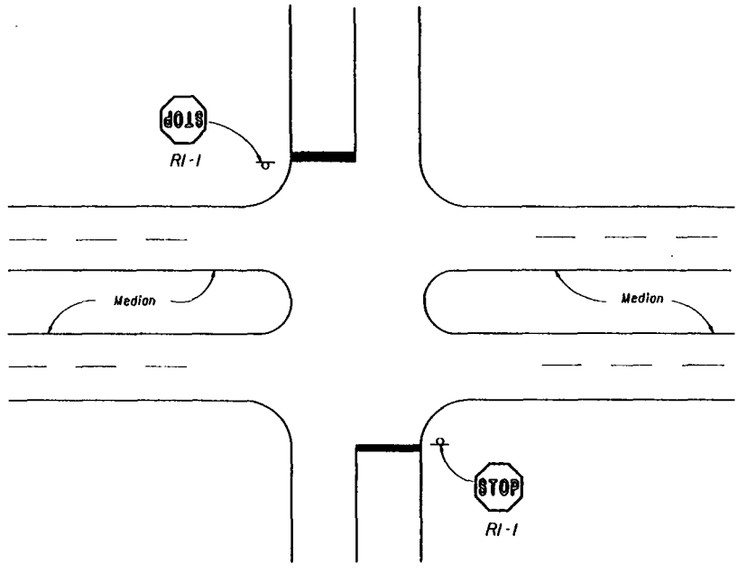

FIGURE 1

MEDIAN WIDTHS UNDER 30 FEET

ONE-WAY SIGNS ON DIVIDED HIGHWAY INTERSECTIONS

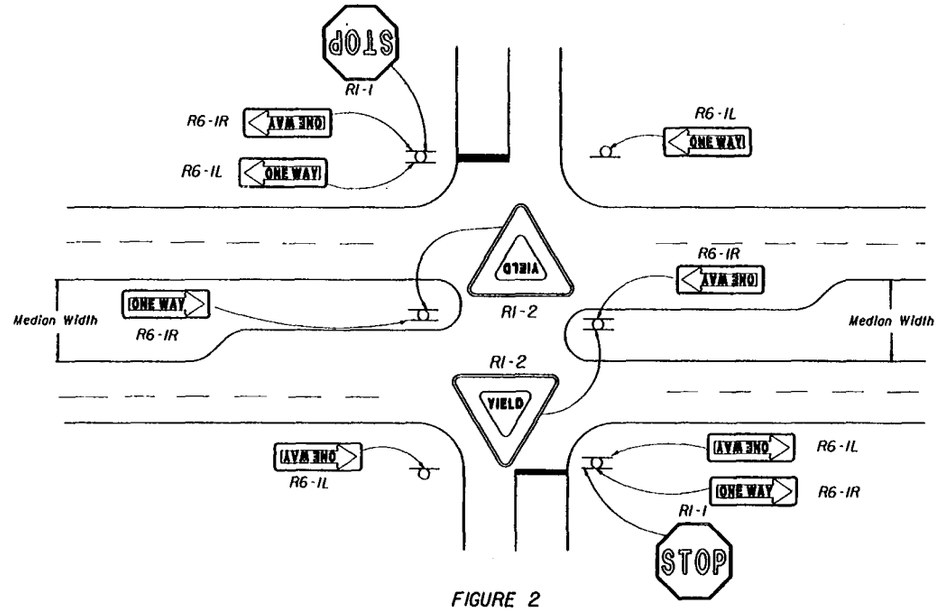

FIGURE 2

MEDIAN WIDTHS 30 FEET AND GREATER

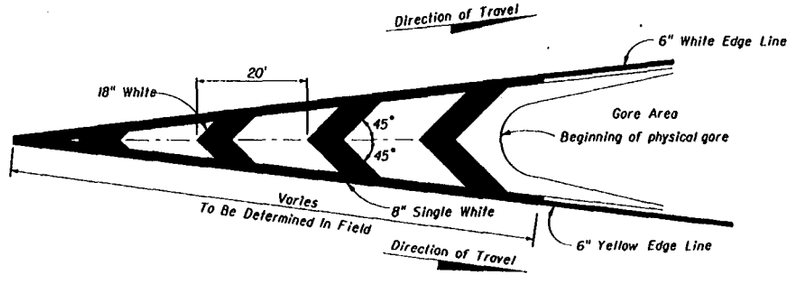

PAVEMENT MARKINGS FOR TRAFFIC CHANNELIZATION AT GORE

(TRAFFIC FLOWS IN SAME DIRECTION)

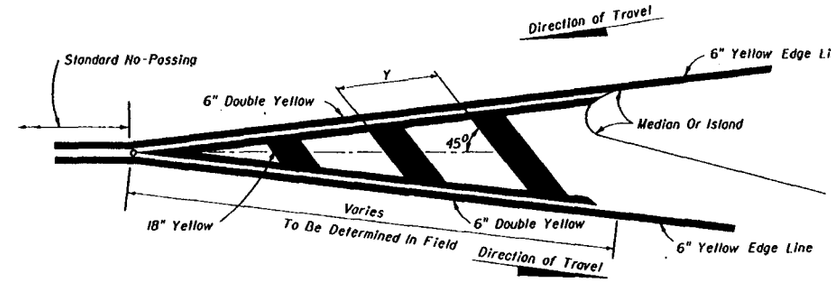

POSTED (DAY) SPEED LIMIT M.P.H.	"Y" FT.
30 OR LESS	10
35	20
40	20
45	30
50 OR MORE	40

PAVEMENT MARKING FOR TRAFFIC SEPARATION

(TRAFFIC FLOWS IN OPPOSITE DIRECTION)

STATE OF FLORIDA DEPARTMENT OF TRANSPORTATION
TRAFFIC DESIGN

SPECIAL MARKING AREAS

	Names	Dates
Designed By	SWA	78
Drawn By	SWA	78
Checked By	KR	78
F.H.W.A. Approved:		

Approved By Charles A. Scott
State Traffic Plans Engineer

Revision No.	Sheet No.	Index No.
92	4 of 9	17346

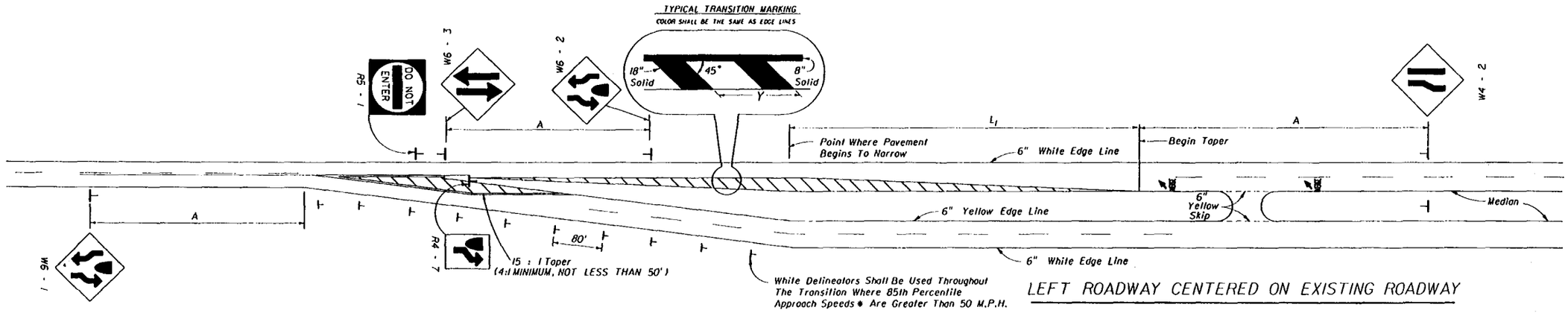

LEFT ROADWAY CENTERED ON EXISTING ROADWAY

TRANSITION DISTANCE L_1							
S / W	8	9	10	11	12	13	14
30	120	135	150	165	180	195	210
35	165	185	205	225	245	265	285
40	215	240	270	295	320	350	375
45	360	405	450	495	540	585	630
50	400	450	500	550	600	650	700
55	440	495	550	605	660	715	770
60	480	540	600	660	720	780	840
65	520	585	650	715	780	845	910

$L_1 = WS$

$(L_1 = \frac{WS^2}{60} < 45\ MPH)$

* Passenger car, daytime, posted speeds or 85th. percentile (Use higher value)

** Lateral offset

SPEED * (M.P.H.)	"A" (FT.)
55	700
50	625
45	550
40	475
30	325

* Passenger car, daytime posted speeds or 85th percentile (Use Higher Value)

POSTED (DAY) SPEED LIMIT M.P.H.	"Y" Ft.
30 OR LESS	10
35	20
40	20
45	30
50 OR MORE	40

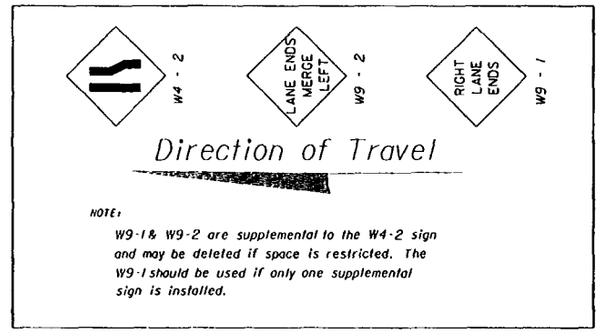

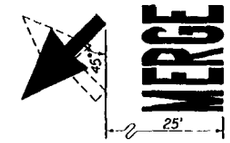

PAVEMENT MARKING DETAIL

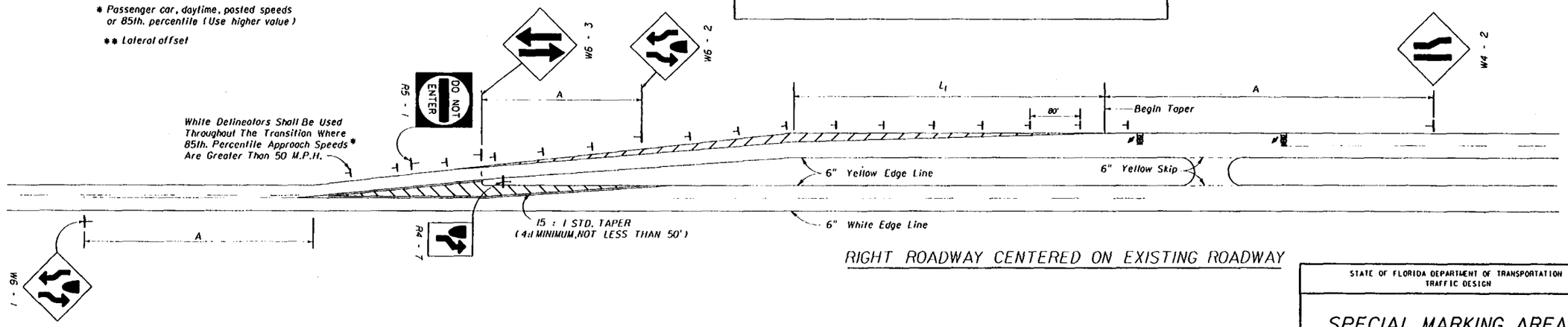

RIGHT ROADWAY CENTERED ON EXISTING ROADWAY

SCHEMES FOR TRANSITION - 2 LANE / 4 LANE ROADWAY

STATE OF FLORIDA DEPARTMENT OF TRANSPORTATION
TRAFFIC DESIGN

SPECIAL MARKING AREAS

	Names	Dates
Designed By	S.W.R.	78
Drawn By	S.W.R.	78
Checked By	K.R.	78
F.H.W.A. Approved:		

Approved By Clark Scott
State Traffic Ops Engineer

Revision No.	Sheet No.	Index No.
94	5 of 9	17346

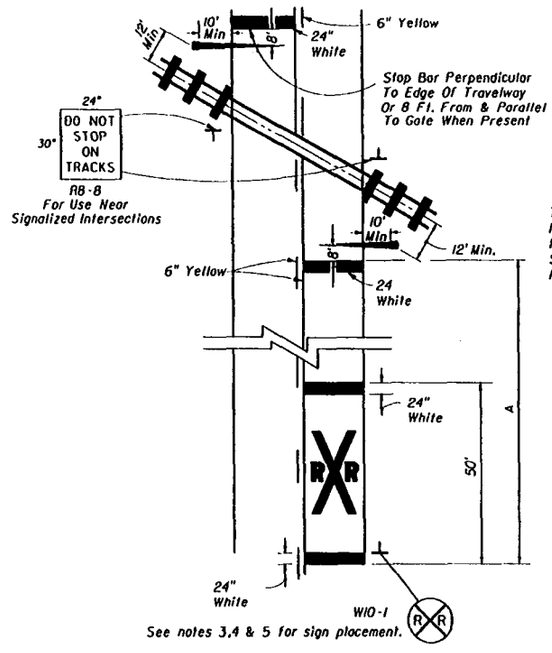

The Railroad Traffic Control Device Is To be Located A Minimum Of 12' From The Railroad Centerline. See Standard Index 17882 For Protection Devices.

RAILROAD CROSSING AT 2-LANE ROADWAY

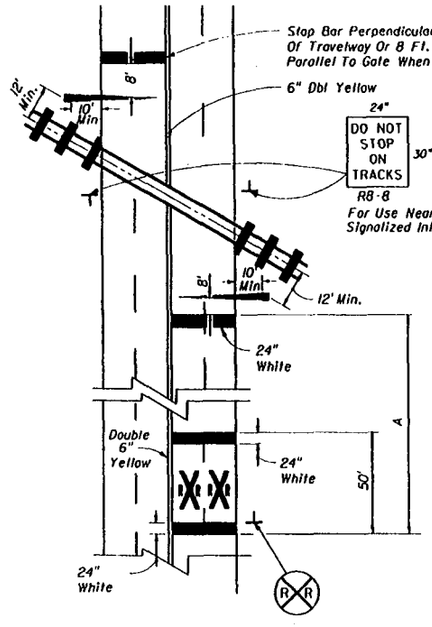

The Railroad Traffic Control Device Is To be Located A Minimum Of 12' From The Railroad Centerline. See Standard Index 17882 For Protection Devices.

RAILROAD CROSSING AT 4-LANE ROADWAY

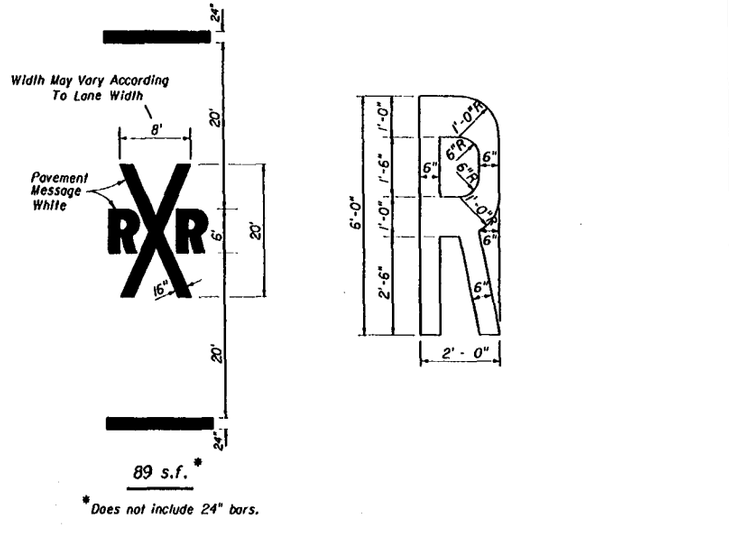

*Does not include 24" bars.

TYPICAL PAVEMENT MARKINGS FOR R/R CROSSING

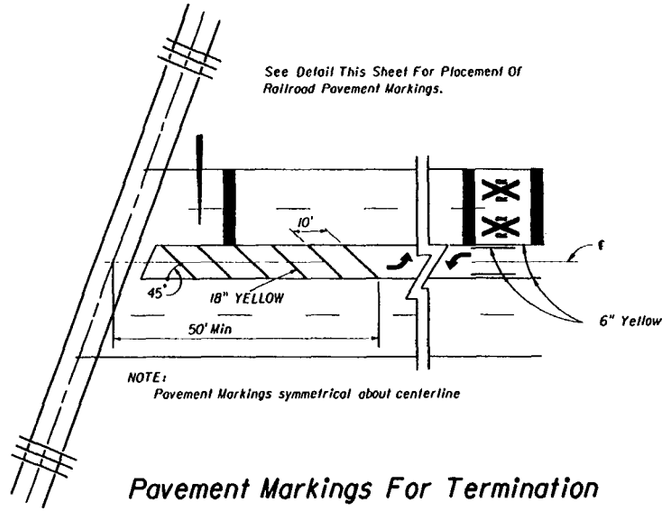

NOTE:
Pavement Markings symmetrical about centerline

Pavement Markings For Termination Of Two Way Left Turn At R/R Crossings.

NOTES:

1. When computing pavement messages, quantities do not include transverse lines.
2. When dynamic devices are not present or are to be installed, the crossbuck shall be located at the future location of the RR gate or signal and gate in accordance with Index 17882.
3. Placement of sign W10-1 in a residential or business district, where low speeds are prevalent, the W10-1 sign may be placed a minimum distance of 100 feet from the crossing. Where street intersections occur between the R R pavement message and the tracks an additional W10-1 sign & additional pavement message should be used.
4. Recommended location for FTP-38 or FTP 38B sign, 100ft. urban & 300ft. rural in advanced of the crossing.
5. A portion of the pavement marking symbol should be directly opposite the W10-1 sign.

SPEED MPH	A In Ft
60	550
55	450
50	375
45	300
40	225
35	150
30	100
Urban	50 Min

STATE OF FLORIDA DEPARTMENT OF TRANSPORTATION
TRAFFIC DESIGN

SPECIAL MARKING AREAS

	Names	Dates
Designed By	TL	76
Drawn By	TL	76
Checked By	RR	76

Approved By: Clark A. Scott
State Traffic Plans Engineer

F.H.W.A. Approved:

Revision No.	Sheet No.	Index No.
94	6 of 9	17346

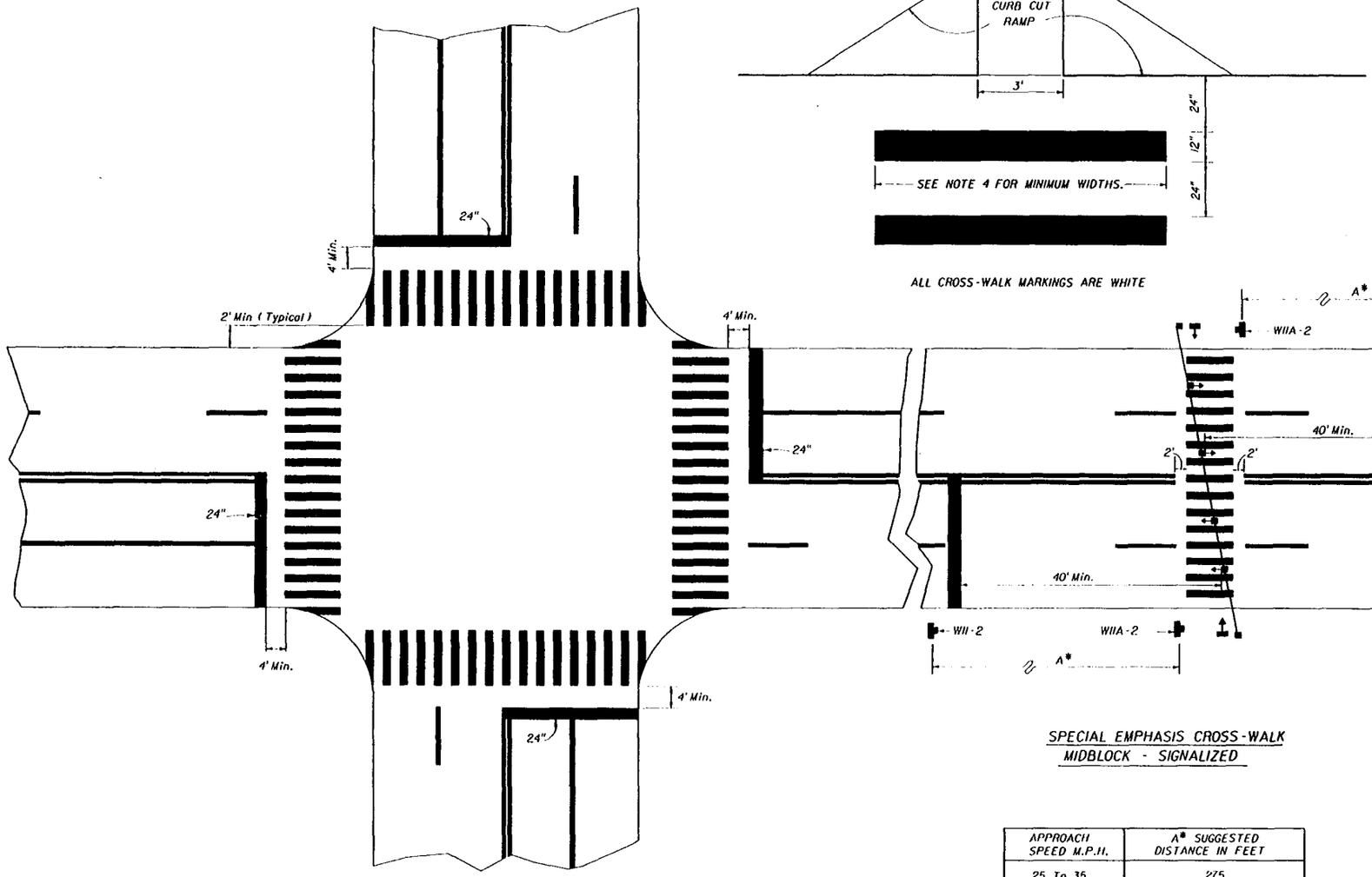

SPECIAL EMPHASIS CROSS-WALK
SIGNALIZED OR STOP SIGN CONTROLLED INTERSECTION

ALL CROSS-WALK MARKINGS ARE WHITE

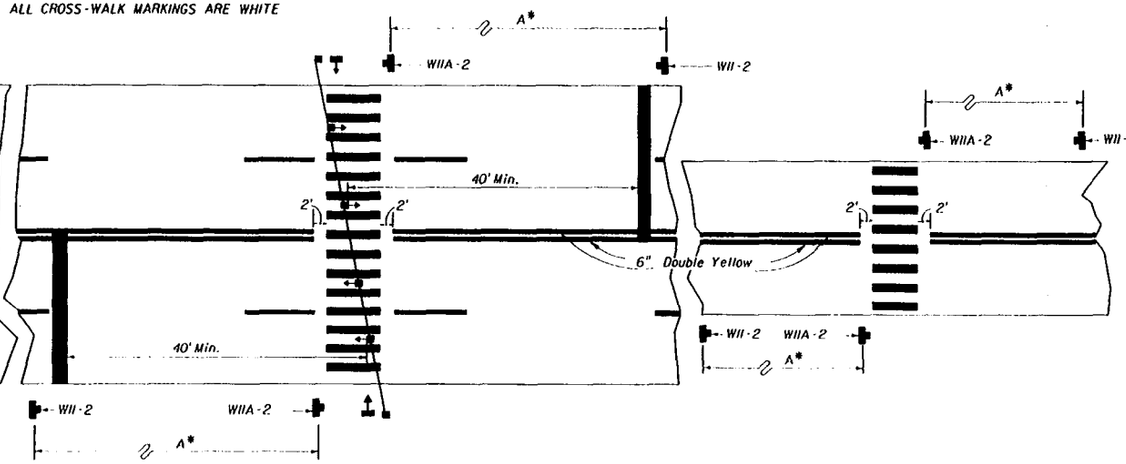

SPECIAL EMPHASIS CROSS-WALK
MIDBLOCK - SIGNALIZED

SPECIAL EMPHASIS CROSS-WALK
TWO LANE - NONSIGNALIZED

APPROACH SPEED M.P.H.	A* SUGGESTED DISTANCE IN FEET
25 To 35	275
36 To 45	350
46 To 55	500

-GENERAL NOTES-

1. For traffic and pedestrian signal installation, see Standard Indexes 17721 through 17890.
2. For handicap curb cut, See Roadway Design Standard Indexes 304 sheets 1 of 2 and 2 of 2.
3. For pavement marking and sign installation, see Traffic Design Standard Indexes 9535 through 17356.
4. Cross-walk minimum widths:
   Intersection Cross-walk 6'
   Mid Block Cross-walk 10'

STATE OF FLORIDA DEPARTMENT OF TRANSPORTATION
TRAFFIC DESIGN

SPECIAL MARKINGS

	Names	Dates
Designed By	WC	83
Drawn By	WC	83
Checked By	KR	83
F.H.W.A. Approved:		

Approved By: Claude Scott
State Traffic Plans Engineer

Revision No.	Sheet No.	Index No.
92	7 of 9	17346

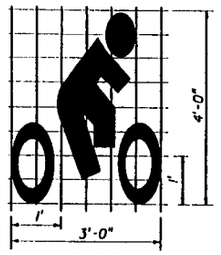

3.9 S.F.

Recommended spacing of diamond symbol: Immediately after intersections and major driveways and at a maximum spacing of 600 feet for urban sections and one-quarter mile for rural sections.

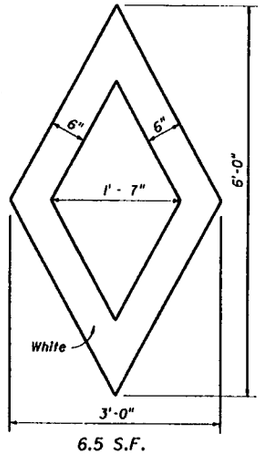

6.5 S.F.

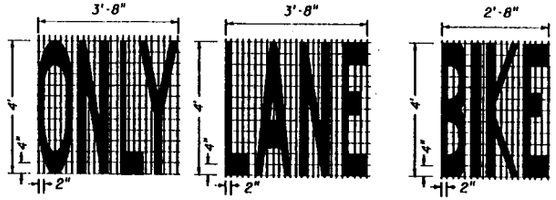

11 S.F. 11 S.F. 11.3 S.F.

PAVEMENT MESSAGE DETAILS

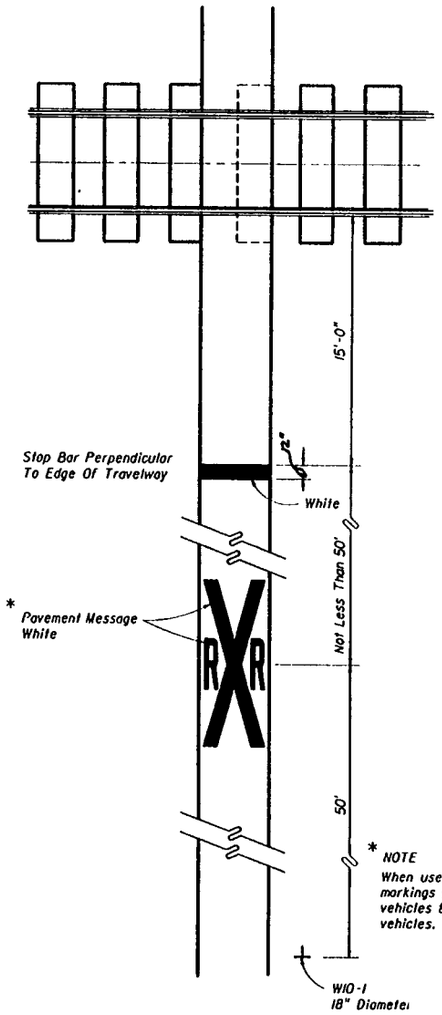

* NOTE
When used on a bike lane (adjacent to vehicle lane) markings shall be placed adjacent to markings for vehicles & WIO-1 sign shall be sized and placed for vehicles.

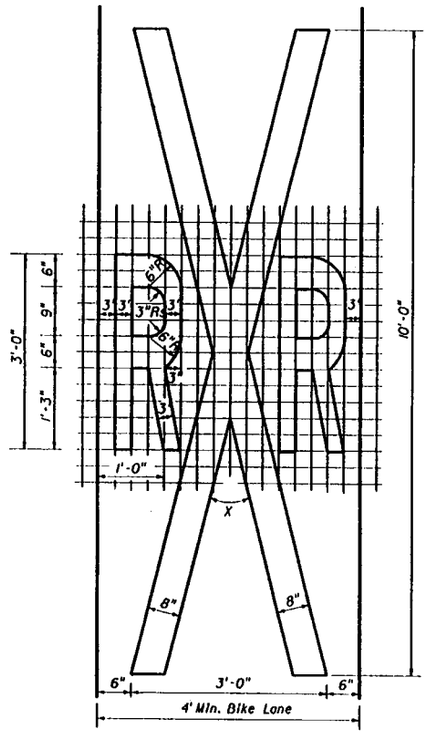

For wider bike lane, increase angle "X"

STATE OF FLORIDA DEPARTMENT OF TRANSPORTATION
TRAFFIC DESIGN

SPECIAL MARKING AREAS (BICYCLE)

	Names	Dates
Designed By	RICK	08/84
Drawn By	RICK	08/84
Checked By	K.R.	08/84
F.H.W.A. Approved:		

Approved By: Clark A. Scott
State Traffic Plans Engineer

Revision No.	Sheet No.	Index No.
94	8 of 9	17346

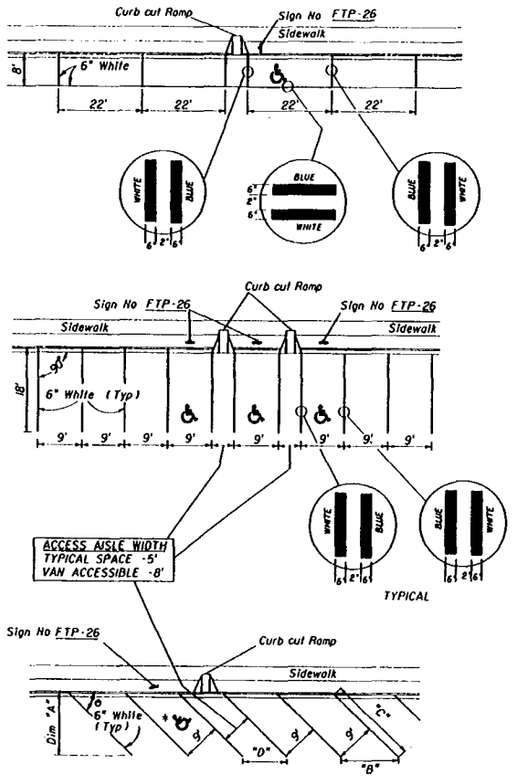

* FOR HANDICAPPED MARKINGS - SEE ABOVE

△°	"DIMENSIONS" "A"	"B"	"C"
45°	19'-1"	12'-9"	27'-0"
60°	20'-1"	10'-5"	23'-2"

DIMENSION "D" AISLE WIDTH	5'	8'
45°	7'-0"	11'-4"
60°	5'-9"	9'-3"

NOTES:

1. An Access Aisle is required for each handicapped space when angle parking is used.
2. For Van Accessable Spaces Sign No. FTP-25 and the R7-8a supplemental panel replaces Sign No. FTP-26.
3. Criteria for pavement markings only, not curb cut ramp locations. For ramp locations refer to plans.
4. Blue pavement markings shall be tinted to match shade 15180 of Federal Standards 595a.

PAVEMENT MARKING FOR CURB CUT RAMPS IN REST AREAS

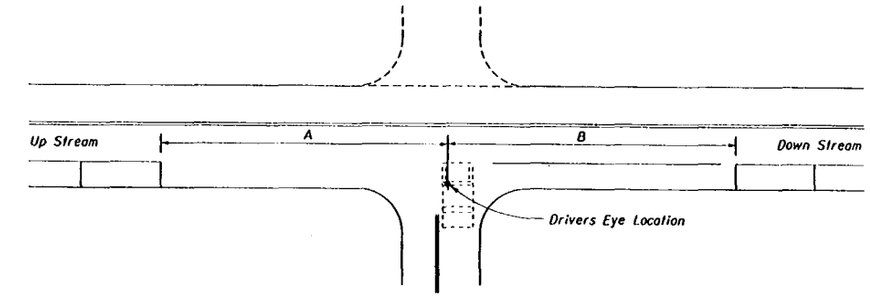

SPEED MPH	UP STREAM (A)	DOWN STREAM (B) 2 LANE	4 LANE
0-30	85'	60'	45'
35	100'	70'	50'

MINIMUM PARKING RESTRICTION (FT.) FOR NON-SIGNALIZED INTERSECTION

NOTES

1. Distances measured longitudinally along the street from driver location of entering vehicle to end of parking restriction.
2. Distances applicable to intersecting street, major driveways and other driveways to the extent practical.
3. For non-signalized intersections, the values above shall be compared with the values for signalized intersections and the maximum restrictions implemented. These restrictions apply to both handicapped and non-handicapped parking.

MINIMUM PARKING RESTRICTION FOR NON-SIGNALIZED INTERSECTIONS

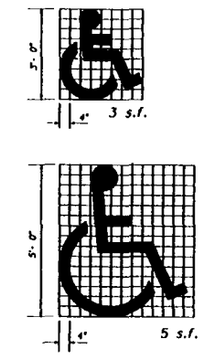

△ USE OF PAVEMENT SYMBOL IN HANDICAPPED PARKING SPACES IS OPTIONAL, WHEN USED THE SYMBOL SHALL BE 3 OR 5 FT. HIGH AND WHITE IN COLOR.

HANDICAPPED PAVEMENT SYMBOL

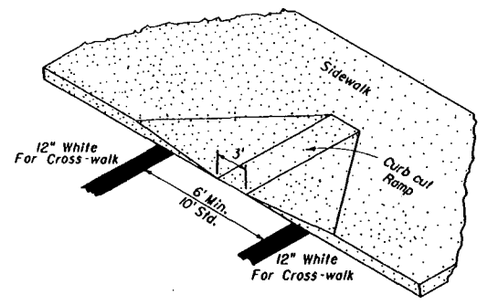

TYPICAL MARKINGS FOR CROSS-WALKS

REFER TO INDEX NO. 17346 2 OF 8

GENERAL NOTES (Signalized & Non-signalized)

1. For entrances to a one-way street, the downstream restriction may be reduced to 20 feet.
2. Parking shall not be allowed within 20 feet of a crosswalk.
3. All parking lane markings shall be 6" white.
4. Parking lane lines shall be broken at driveways.
5. Refer to Chapter 316, Fla. statutes, for laws governing parking spaces.
6. Where curb and gutter is used, the gutter pan width may be included as part of the minimum width of parking lane, but desirably the lane width should be in addition to that of the gutter pan.

TYPE I

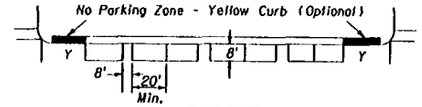

TYPE II

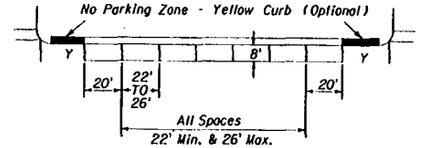

TYPE III

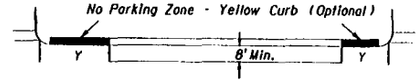

SPEED LIMIT MPH	SIGNALIZED INTERSECTIONS	
0 - 30	30'	DISTANCE FROM CURB RADIUS (Y)
35	50'	

PARKING RESTRICTION (FT.) FOR SIGNALIZED INTERSECTION

NOTES:

1. Parking restrictions measured from curb radius point.
2. Restrictions for handicapped parking are the same as those applied to non-signalized intersections.

MINIMUM PARKING RESTRICTION FOR SIGNALIZED INTERSECTION

STATE OF FLORIDA DEPARTMENT OF TRANSPORTATION
ROAD DESIGN

SPECIAL MARKING AREAS (PARKING)

	Names	Dates
Designed By	M.C.	08/86
Drawn By	M.C.	08/86
Checked By	K.R.	08/86

Approved By: Clarke A. Hall
State Traffic Plans Engineer

F.H.W.A. Approved:

Revision No.	Sheet No.	Index No.
94	9 of 9	17346

Aluminum Post: $\frac{3}{8}$" ø Aluminum Button Head Bolt with Nut and Lockwasher or $\frac{3}{8}$" ø Stainless Steel Hex Head Bolt with Flat Washer under Head and Lockwasher under Nut.

Channel Post: Provide Attachement in Accordance with the "Sign Attachment Detail" on Index No. 11865.

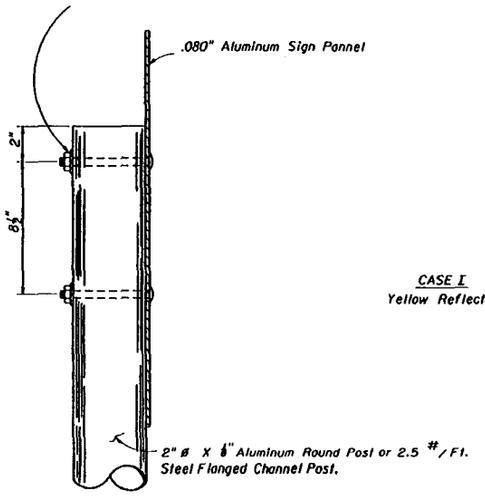

CASE I
Yellow Reflectors

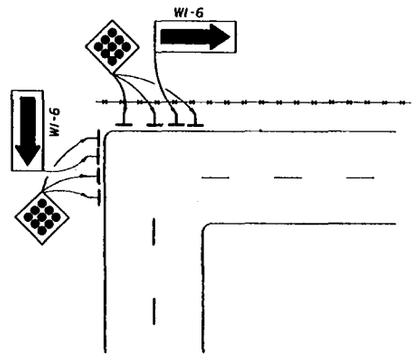

CASE I ... Object Markers (Type I) shall have a Yellow Reflective Background, and Yellow Reflective Buttons.

CASE II ... End of Road Markers shall have a Red Reflective Background, and Red Reflective Buttons.
Payment shall be under Pay Item for Type I Object Marker.

NOTE: For pavement marking see Index no. 17346
No guardrail is required unless special field conditions require its use

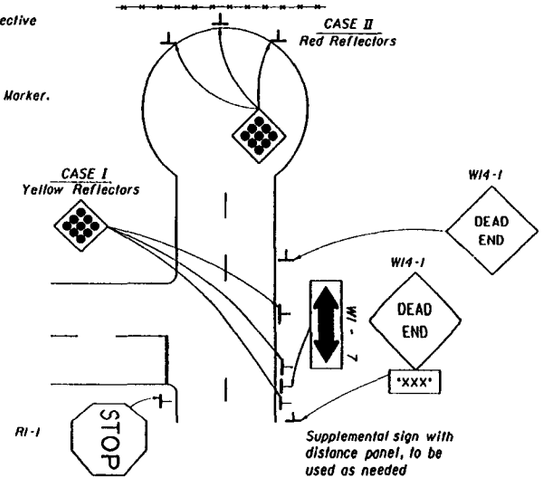

Supplemental sign with distance panel, to be used as needed

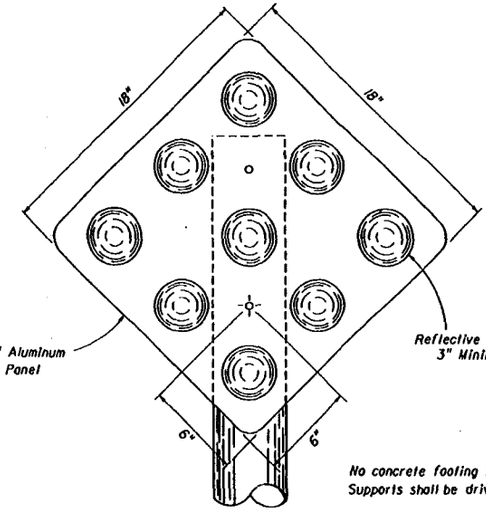

.080" Aluminum Sign Panel

Reflective Buttons Shall Have A 3" Minimum Diameter

No concrete footing is required for delineator supports. Supports shall be driven 3' into the ground.

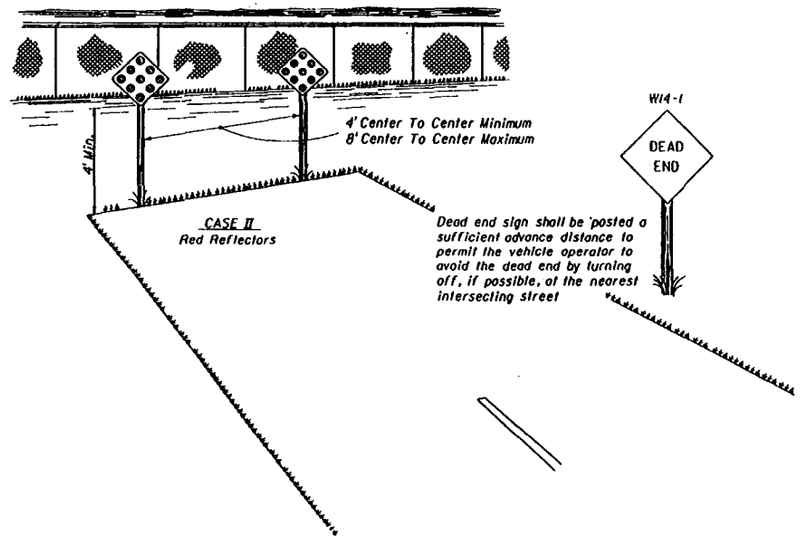

Dead end sign shall be posted a sufficient advance distance to permit the vehicle operator to avoid the dead end by turning off, if possible, at the nearest intersecting street

NOTES:

1. THIS INDEX APPLICABLE TO RESIDENTIAL AND MINOR STREETS ONLY MAJOR STREETS TO BE EVALUATED ON A CASE BY CASE BASIS.
2. "T"-INTERSECTION - TWO-WAY ARROWS AND REFLECTORS ARE OPTIONAL. THE NEED SHOULD BE BASED ON A REVIEW OF EACH LOCATION.
3. FOR ADDITIONAL DETAILS ON ALUMINUM ROUND POST, STEEL FLANGED CHANNEL POST, SIGN PANNEL MATERIAL AND BOLTS, NUTS AND WASHERS SEE INDEX NOS. 11860 AND 11865.
4. CASE I INSTALLATION - THE ARROW PANELS AND OBJECT MARKERS SHALL BE LOCATED APPROXIMATELY 20 FEET, BUT NOT LESS THAN 12 FEET FROM THE EDGE OF THE TRAVEL LANE.

STATE OF FLORIDA DEPARTMENT OF TRANSPORTATION
TRAFFIC DESIGN

TRAFFIC CONTROLS FOR STREET TERMINATIONS

	Names	Dates
Designed By		
Drawn By	GW	11/74
Checked By	RR	11/74
F.H.W.A. Approved:		

Approved By: Charles A. Scott
State Traffic Plans Engineer

Revision No.	Sheet No.	Index No.
94	1 of 1	17349

** Note:

Two assemblies are required; one for each side of the ramp, showing those services in each particular direction from the ramp terminal.

Ramp mounted signs shall be installed to avoid conflict with existing signs and in no case should they be placed within 100' of another sign.

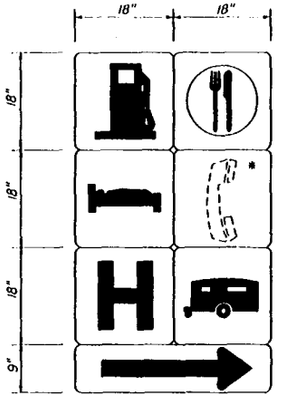

DETAIL "D"

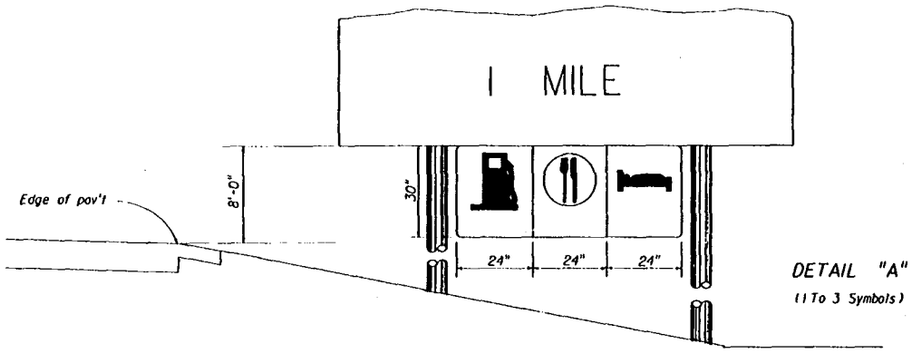

DETAIL "A"
(1 To 3 Symbols)

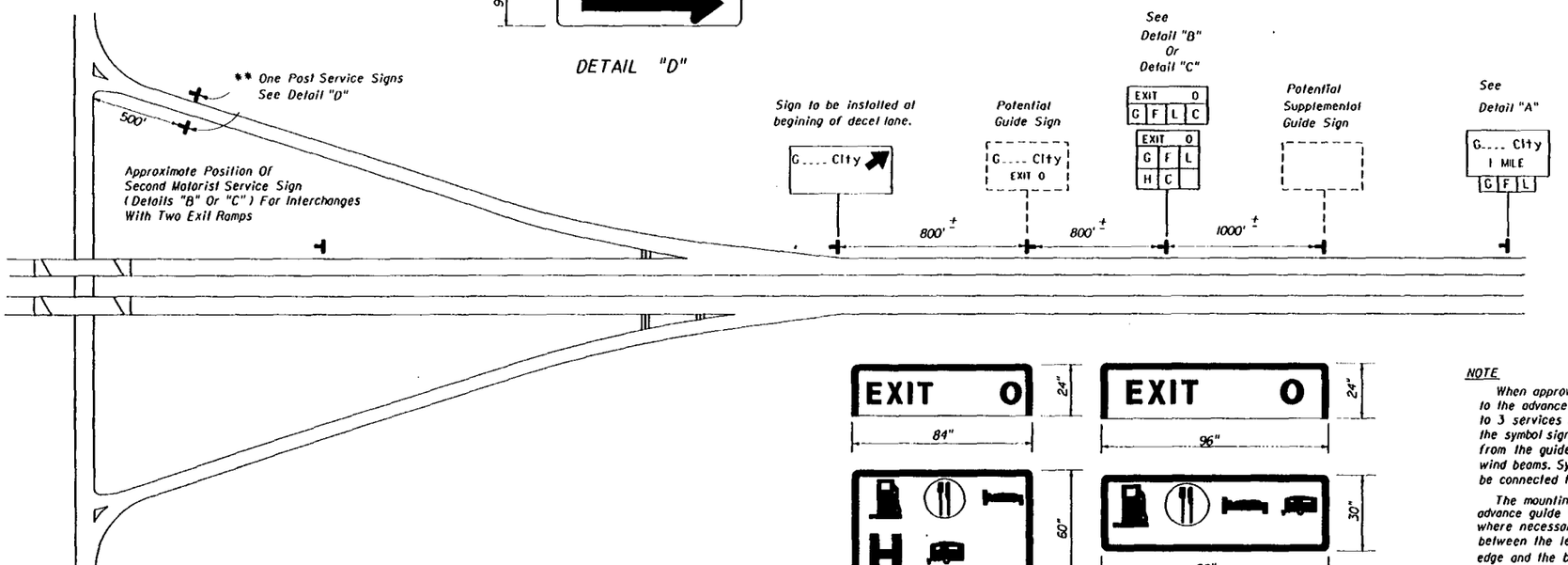

DETAIL "B"
(4 To 6 Symbols)

DETAIL "C"
(4 Symbols)

NOTE

When approved for attachment to the advance guide signs, up to 3 services may be used for an exit, the symbol signs shall be suspended from the guide sign panel or existing wind beams. Symbol signs are not to be connected to existing sign posts.

The mounting height of the advance guide sign shall be increased, where necessary, to provide 8 feet between the level of the pavement edge and the bottom of the guide sign, prior to mounting the supplementary panel.

GENERAL NOTES

1 - Only those services meeting criteria established by the Department and approved by the State Traffic Operations Engineer for each interchange shall be shown. Symbol signs for motorist services shall always appear in the following order reading from left to right and top to bottom: Gas, Food, Lodging, Phone *, Hospital, Camping.

* The phone symbol shall not be shown whenever any Gas, Food, Lodging or Camping symbol appears.

2 - Symbols shall appear consecutively on the sign with no positions left blank or reserved for intermediate symbols not currently approved for a particular interchange.

3 - All motorist service signs to have White Reflective Legend and Border with Blue Reflective Background.

4 - Full size drawings of symbol signs are available from Traffic Plans and Standards, Dept. Of Transportation, Tallahassee , Fla.

5 - For mounting details see Index 9535 for Type "A" breakaway or Index 11860 for Type "C" Frangible.

STATE OF FLORIDA DEPARTMENT OF TRANSPORTATION
TRAFFIC DESIGN

SIGNING FOR MOTORIST SERVICES

	Name	Date
Designed By	W.B.	03/16
Drawn By		
Checked By	K.R.	03/16
F.H.W.A. Approved:		09/27/16

Approved By: Claude A. Scott
State Traffic Plans Engineer

Revision No.	Sheet No.	Index No.
94	1 of 1	17350A

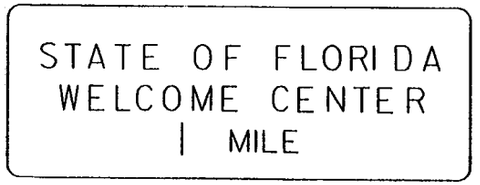

Sign No. FTP-17

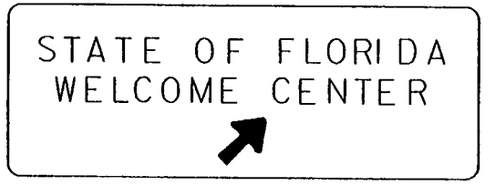

Sign No. FTP-18

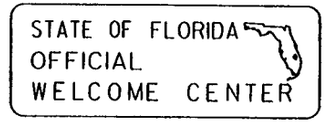

Sign No. FTP-19



Sign No. FTP-20

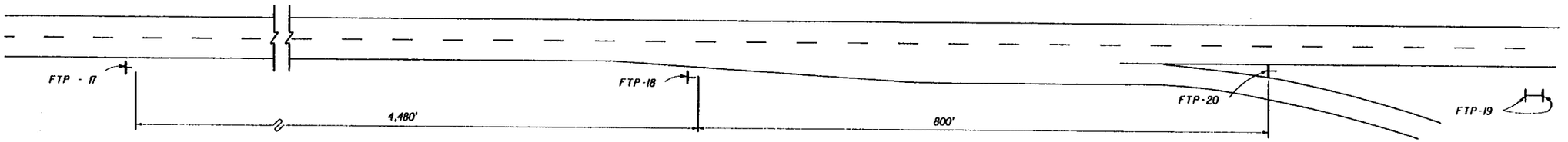

Note : Roadway not drawn to scale
Distances shown are appropriate for adequate driver communication but may be altered slightly if field conditions require.

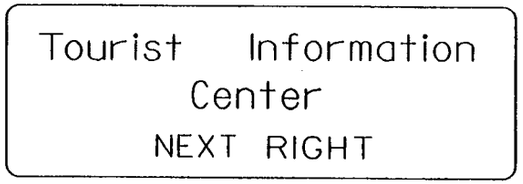

Sign No. FTP-21

Note: Sign FTP-21 shall be used as a supplemental guide sign at interchanges which have a Tourist Information Center approved for such signing (locate half-way between normal guide signs)

Notes :

(1) Signs and sign structures shall be erected in accordance with the details shown on Index 9535.

(2) Sign FTP-19 shall be located on the Welcome Center grounds in proximity to the building and as far from the main line roadways as possible (2 signs back to back).

(3) Sign FTP-17, 18, 19 shall be located on limited access highways only.

(4) Detail of Florida symbol is available on request from Traffic Plans & Standards Office of D.O.T.

(5) All legend to be Series E.

(6) (Sign No. FTP - 19 To Be Paid For By The Dept. Of Tourism)

(7) See Index 17355 for sign details.

STATE OF FLORIDA DEPARTMENT OF TRANSPORTATION
TRAFFIC DESIGN

WELCOME CENTER SIGNING FOR LIMITED ACCESS HIGHWAYS

	Names	Dates
Designed By		
Drawn By	W.B.	06/75
Checked By	K.R.	06/75
F.H.W.A. Approved:		

Approved By Clark A. Scott
State Traffic Plans Engineer

Revision No.	Sheet No.	Index No.
94	1 of 2	17351

STATE OF FLORIDA
WELCOME CENTER
1 MILE

SIGN NO. FTP-22A

STATE OF FLORIDA
OFFICIAL
WELCOME CENTER

SIGN NO. FTP-19

½ MILE

SIGN NO. FTP-22B



SIGN NO. FTP-23

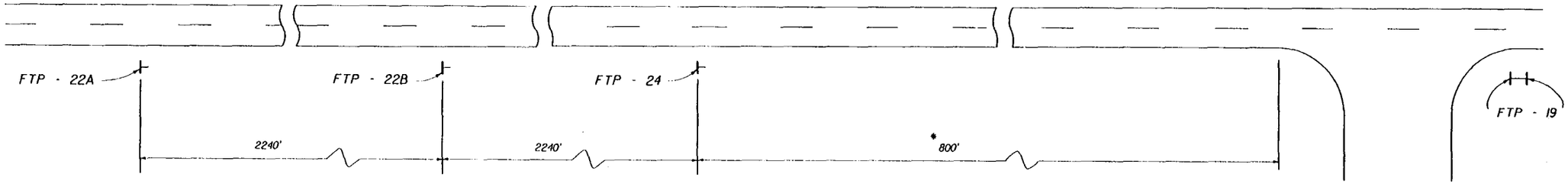

Note :
One sign FTP-22A or 22B should be used depending on speed, roadside development & geometric conditions.

NOTE :
Roadway not drawn to scale

*800' Maximum For Rural Conditions
50' Minimum For Congested Areas

Notes .

(1) Signs and sign structures shall be erected in accordance with the details shown on Index 9535.

(2) Sign FTP-19 shall be located on the Welcome Center grounds in proximity to the building and as far from the Main Line Roadway as possible (2 signs back to back)

(3) Detail of Florida symbol is available on request from Traffic Plans & Standards Office of D.O.T.

(4) All legend to be Series E.

(5) (SIGN NO. FTP-19 TO BE PAID FOR BY THE DEPT. OF TOURISM).

STATE OF FLORIDA DEPARTMENT OF TRANSPORTATION
TRAFFIC DESIGN

WELCOME CENTER SIGNING FOR PRIMARY HIGHWAYS

	Names	Dates
Designed By		
Drawn By		
Checked By		
F.H.W.A. Approved:		

Approved By: Clark A. Scott
State Traffic Plans Engineer

Revision No.	Sheet No.	Index No.
94	2 of 2	17351

Alternating Skip Line

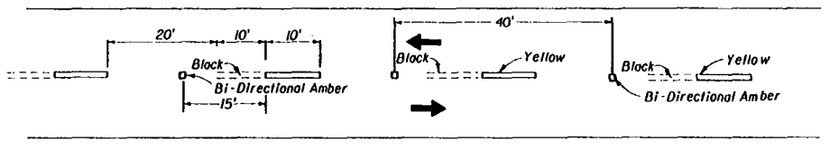

Skip Line

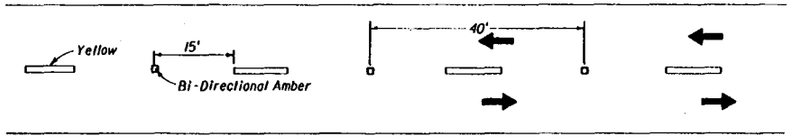

Solid Line With Alternating Skip

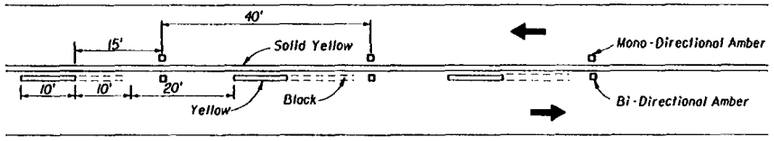

Double Solid Line

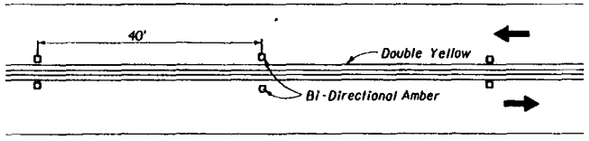

Solid Line With Skip

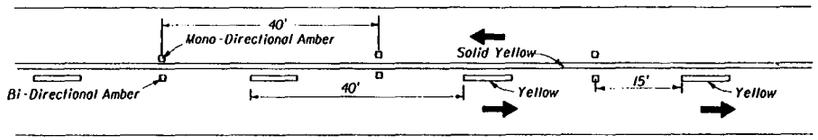

Skip Line With Two Way Left Turn Lane

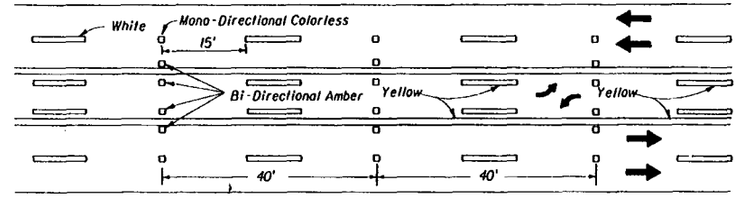

Alternating Skip Line With Two Way Left Turn Lane

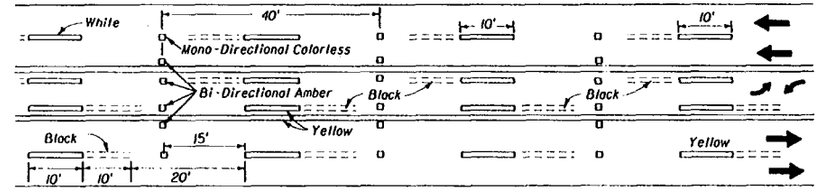

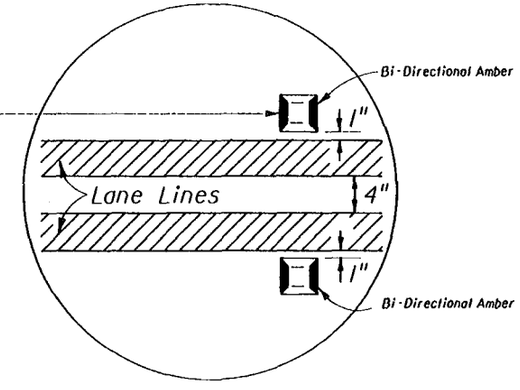

1. Reflective Pavement Markers shall be spaced at 40 feet on all skip lane lines and skip center lines. This spacing may be reduced to 20 feet if specifically called for in the plans.
2. The spacing on solid lines and solid/skip combination lines shall be 40 feet.
3. All R.P.M.s shall be offset 1" from solid lines.
4. These spacings may be reduced if required for sharp curves.
5. All R.P.M.s shall be class "B".

STATE OF FLORIDA DEPARTMENT OF TRANSPORTATION
ROAD DESIGN

TYPICAL PLACEMENT OF REFLECTIVE PAVEMENT MARKERS

	Names	Dates
Designed By	WC	10/87
Drawn By	WC	10/87
Checked By	KR	10/87
F.H.W.A. Approved:		

Approved By: Charles A. Scott
State Traffic Plans Engineer

Revision No.	Sheet No.	Index No.
92	1 of 2	17352

NOTE

Raised pavement markers shall be set one (1) inch outside of line.

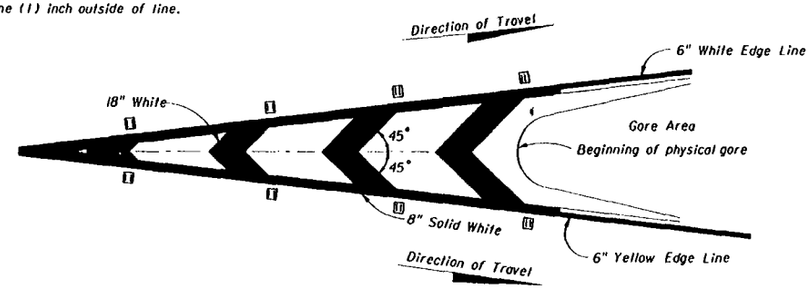

RPM PLACEMENT FOR TRAFFIC CHANNELIZATION AT GORE
(TRAFFIC FLOWS IN SAME DIRECTION)

NOTE

Raised pavement markers (Bi-Directional Red and Colorless) should be used in all gores of this type

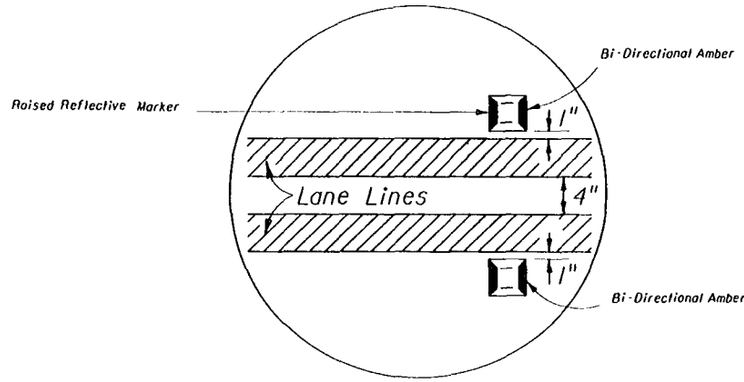

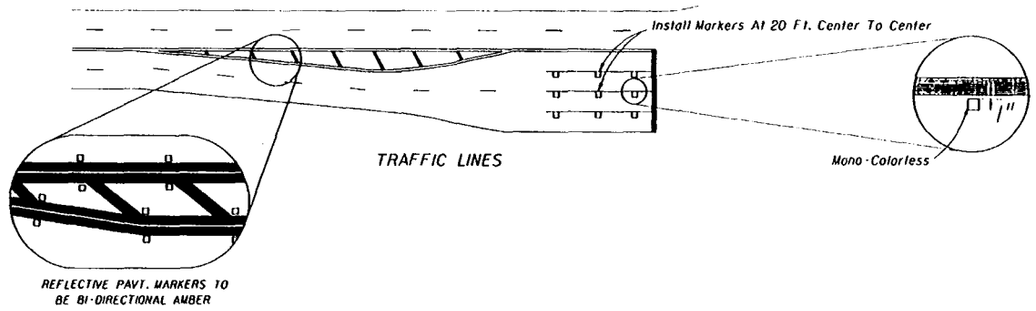

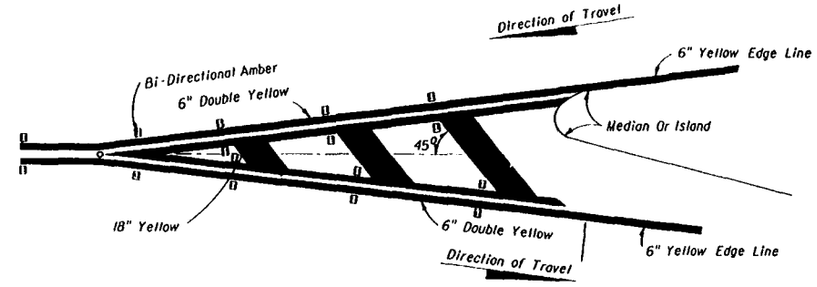

RPM PLACEMENT FOR TRAFFIC SEPARATION
(TRAFFIC FLOWS IN OPPOSITE DIRECTION)

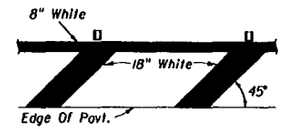

PLACEMENT OF RPMS ON SHOULDER MARKINGS

Shoulder Markings For Left Side Of Roadway Shall Be Yellow.

For Placement Of RPMS On Ramps See Index 17345.

STATE OF FLORIDA DEPARTMENT OF TRANSPORTATION
TRAFFIC DESIGN

TYPICAL PLACEMENT OF REFLECTIVE PAVEMENT MARKERS

	Names	Dates
Designed By	G.W.	10/75
Drawn By		
Checked By	K.R.	10/75
F.H.W.A. Approved:		

Approved By Charles A. Scott
State Traffic Plans Engineer

Revision No.	Sheet No.	Index No.
92	2 of 2	17352

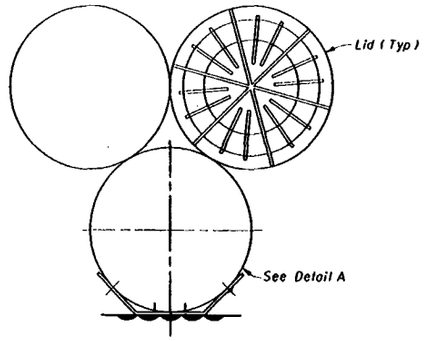

COST FOR OBJECT MARKER TO BE INCIDENTAL TO THE COST OF ATTENUATOR SYSTEMS.

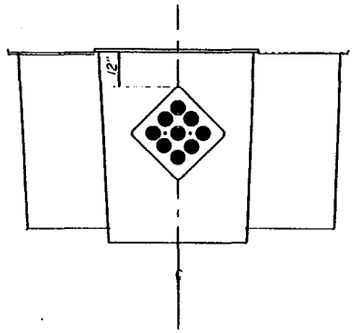

PLACEMENT OF OBJECT MARKER

ENERGITE SYSTEM

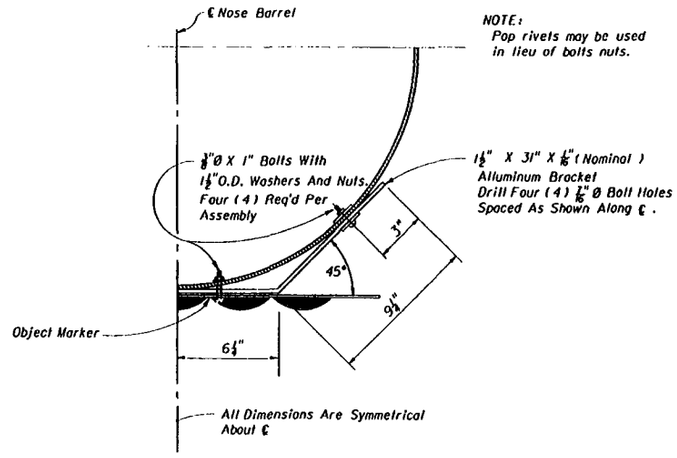

DETAIL A

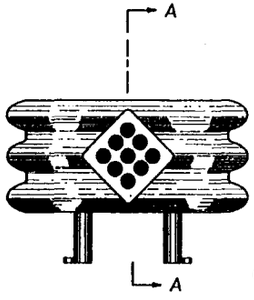

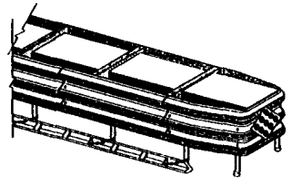

COST FOR OBJECT MARKER TO BE INCIDENTAL TO THE COST OF ATTENUATOR SYSTEMS.

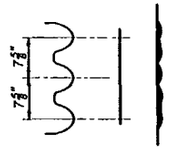

SECTION AA

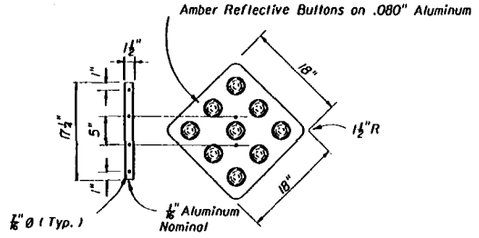

BRACKET AND OBJECT MARKER DETAIL

G-R-E-A-T SYSTEM

COST FOR OBJECT MARKER TO BE INCIDENTAL TO THE COST OF ATTENUATOR SYSTEMS.

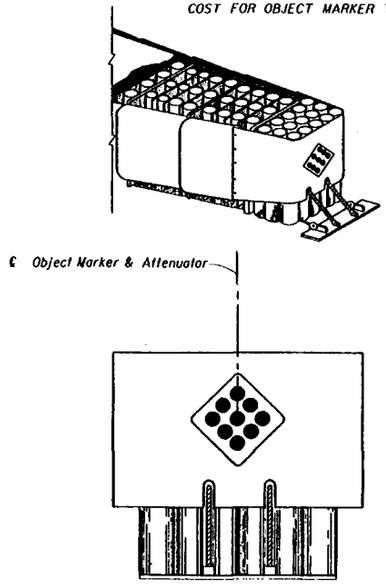

HI - DRO SYSTEM

STATE OF FLORIDA DEPARTMENT OF TRANSPORTATION
TRAFFIC DESIGN

MARKINGS FOR ATTENUATION SYSTEMS

	Names	Dates
Designed By		
Drawn By	R.G.L.	09/81
Checked By		
F.H.W.A. Approved:		

Approved By: Charles A. Scott
State Traffic Plans Engineer

Revision No.	Sheet No.	Index No.
94	1 of 1	17353

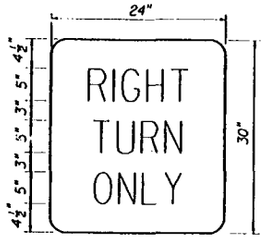

Series C Letters.

FTP - 1

2'-0" x 2'-6"

2" Border - 3" Radii

Color

Background White

Legend & Border Black

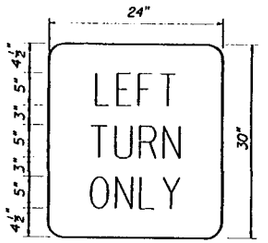

Series C Letters.

FTP - 2

2'-0" x 2'-6"

2" Border - 3" Radii

Color

Background White

Legend & Border Black

FREEWAY USE

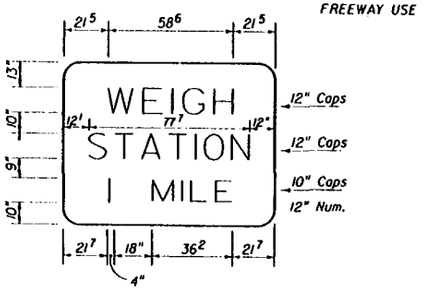

Series E Letters.

FTP - 3

8'-6" x 6'-6"

2" Border - 9" Radii

Color

Background Green

Legend & Border White

Dimensions shown in inches and eighths.

FREEWAY USE

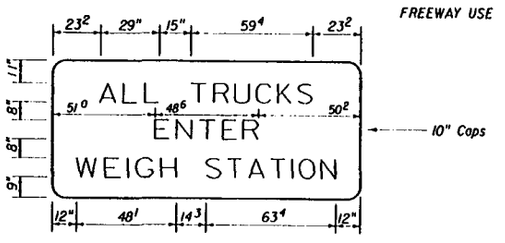

Series E Letters.

FTP - 4

12'-6" x 5'-6"

2" Border - 9" Radii

Color

Background White

Legend & Border Black

Dimensions shown in inches and eighths.

FREEWAY USE

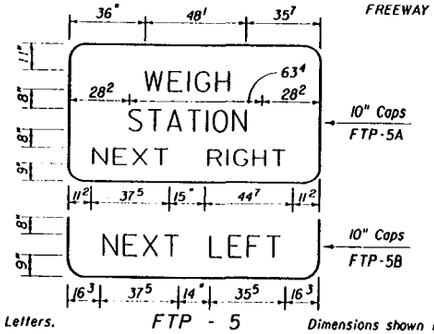

Series E Letters.

FTP - 5

10'-0" x 5'-6"

2" Border - 9" Radii

Color

Background Green

Legend & Border White

Dimensions shown in inches and eighths.

FREEWAY USE

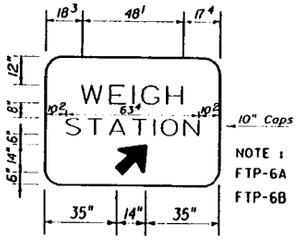

Series E Letters.

FTP - 6

7'-0" x 5'-6"

2" Border - 6" Radii

Color

Background Green

Legend & Border White

Dimensions shown in inches and eighths.

OTHER THAN FREEWAY USE

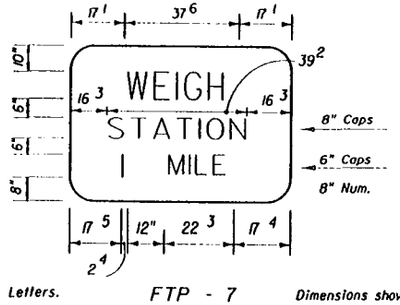

Series E Letters.

FTP - 7

6'-0" x 4'-6"

2" Border - 6" Radii

Color

Background Green

Legend & Border White

Dimensions shown in inches and eighths.

OTHER THAN FREEWAY USE

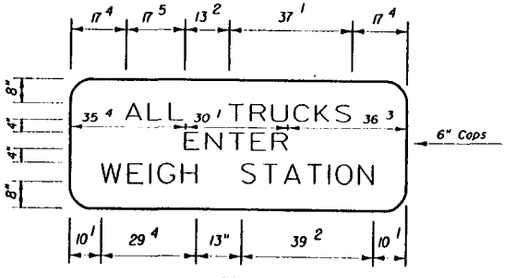

Series E Letters.

FTP - 8

8'-6" x 3'-6"

2" Border - 6" Radii

Color

Background White

Legend & Border Black

Dimensions shown in inches and eighths.

OTHER THAN FREEWAY USE

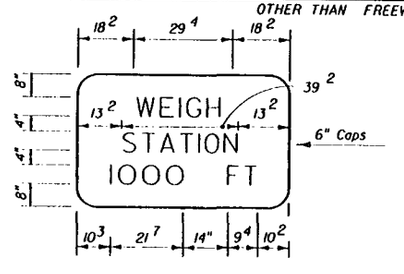

Series E Letters.

FTP - 9

5'-6" x 3'-6"

2" Border - 6" Radii

Color

Background Green

Legend & Border White

Dimensions shown in inches and eighths.

OTHER THAN FREEWAY USE

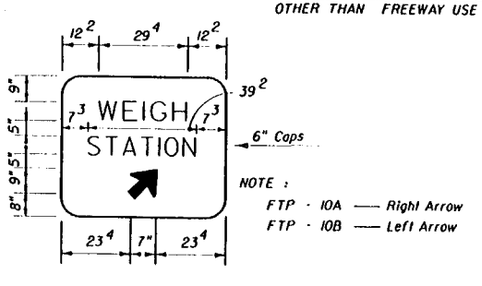

FTP - 10

4'-6" x 4'-0"

2" Border - 6" Radii

Color

Background Green

Legend & Border White

Dimensions shown in inches and eighths.

FREEWAY USE

Note

FTP-11 to be used with 5A, 5B, 15A & 15B.

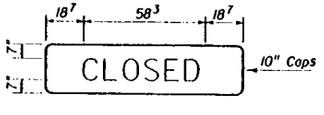

Series E Letters.

FTP - 11

8'-0" x 2'-0"

2" Border - 3" Radii

Color

Background Green

Legend & Border White

Dimensions shown in inches and eighths.

Note

FTP-12 to be used with FTP-9

OTHER THAN FREEWAY USE

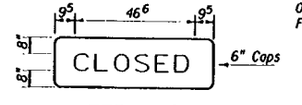

FTP - 12

5'-6" x 2'-0"

2" Border - 3" Radii

Color

Background Green

Legend & Border White

Dimensions shown in inches and eighths.

STATE OF FLORIDA DEPARTMENT OF TRANSPORTATION
ROAD DESIGN

SPECIAL SIGN DETAILS

	Names	Dates
Designed By	LW	6/93
Drawn By	LW	6/93
Checked By	TPS	6/93

Approved By Charles Scott

Revision No.	Sheet No.	Index No.
94	1 of 8	17355

F.H.W.A. Approved:

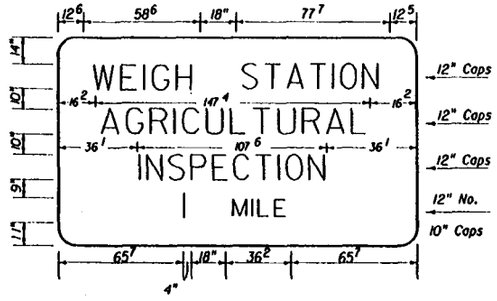

Series E Letters.

FTP - 13

15' - 0" x 8' - 6"

2" Border - 9" Radii.

Color

Background Green

Legend & Border White

Dimensions shown in inches and eighths.

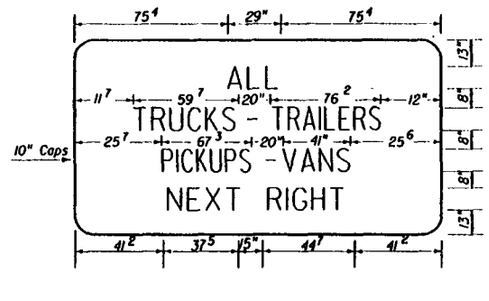

Series E Letters.

On Interstate Station Delete, Pickups-Vans, and reduce Sign height accordingly.

FTP - 14A

15'- 0" x 7'- 6"

2" Border - 9" Radii

Color

Background White

Legend & Border Black

Dimensions shown in inches and eighths.

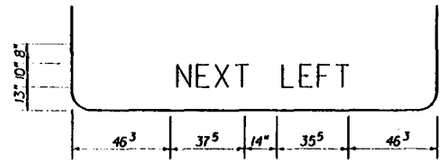

Series E Letters.

FTP - 14B

15' - 0" x 7' - 6"

2" Border - 9" Radii

Color

Background White

Legend & Border Black

Dimensions shown in inches and eighths.

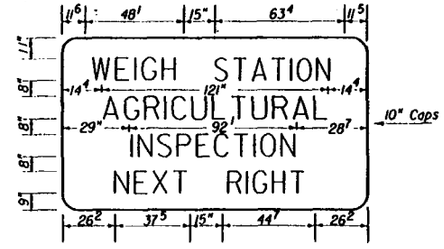

Series E Letters.

FTP - 15A

12' - 6" x 7' - 0"

2" Border - 9" Radii

Color

Background Green

Legend & Border White

Dimensions shown in inches and eighths.

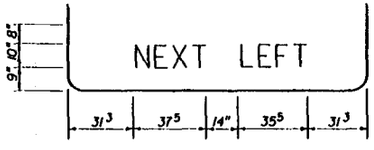

Series E Letters.

FTP - 15B

12' - 6" x 7' - 0"

2" Border - 9" Radii

Color

Background Green

Legend & Border White

Dimensions shown in inches and eighths.

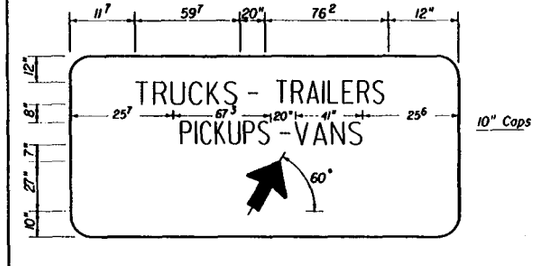

Series E Letters.

NOTE :

FTP-16A - Right Arrow.

FTP-16B - Left Arrow

FTP - 16

15' - 0" x 7' - 0"

2" Border - 9" Radii

Color

Background Green

Legend & Border White

Dimensions shown in inches and eighths.

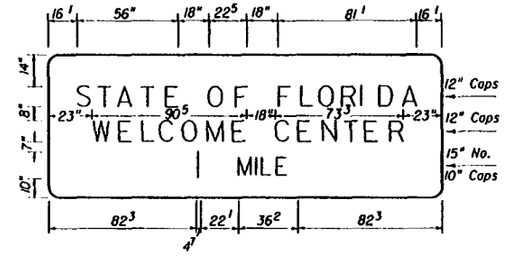

Series E Letters.

FTP - 17

6' - 6" x 19' - 0"

3" Border - 9" Radii

Color

Background Blue

Legend & Border White

Dimensions shown in inches and eighths.

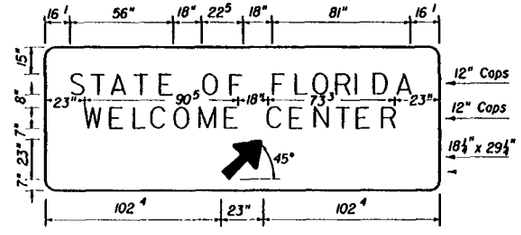

Series E Letters.

FTP - 18

7' - 0" x 19' - 0"

3" Border - 9" Radii

Color

Background Blue

Legend & Border White

Dimensions shown in inches and eighths.

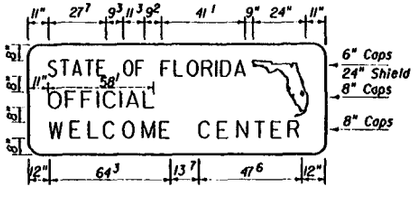

Series E Letters.

FTP - 19

4' - 6" x 12' - 6"

2" Border - 9" Radii

Color

Background Blue

Legend & Border White

Dimensions shown in inches and eighths.

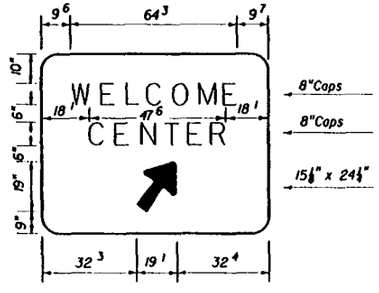

Series E Letters.

FTP - 20

5' - 6" x 7' - 0"

2" Border - 9" Radii

Color

Background Blue

Legend & Border White

Dimensions shown in inches and eighths.

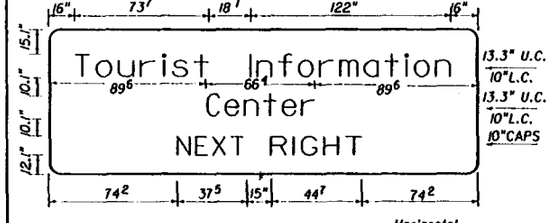

Series E Letters.

FTP - 21

7' - 0" x 20' - 6"

3" Border - 9" Radii

Color

Background Blue

Legend & Border White

Horizontal Dimensions shown in inches and eighths.

STATE OF FLORIDA DEPARTMENT OF TRANSPORTATION
ROAD DESIGN

SPECIAL SIGN DETAILS

	Names	Dates
Designed By	LW	6/93
Drawn By	LW	6/93
Checked By	TPS	6/93

F.H.W.A. Approved:

Approved By Charles Scott

Revision No.	Sheet No.	Index No.
94	2 of 8	17355

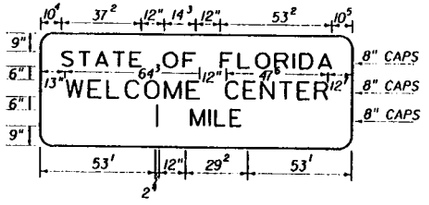

Series E Letters.

FTP - 22A

4'-6" x 12'-6"

2" Border - 9" Radii

Color

Background Blue

Legend & Border White

Dimensions shown in inches and eighths.

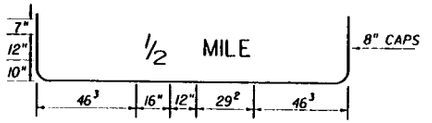

Series E Letters.

FTP - 22B

5'-0" x 12'-6"

2" Border - 9" Radii

Color

Background Blue

Legend & Border White

Dimensions shown in inches and eighths.

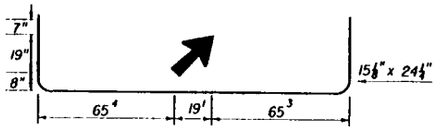

Series E Letters.

FTP - 23

5'-6" x 12'-6"

2" Border - 9" Radii

Color

Background Blue

Legend & Border White

Dimensions shown in inches and eighths.

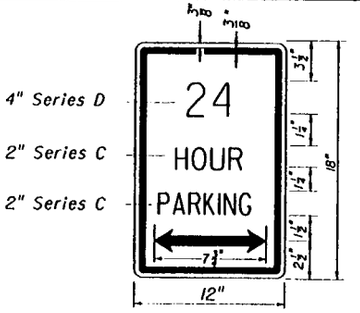

FTP - 24

1'-0" x 1'-6"

⅜" Border - 1½" Radii

Color

Background White

Legend & Border Green

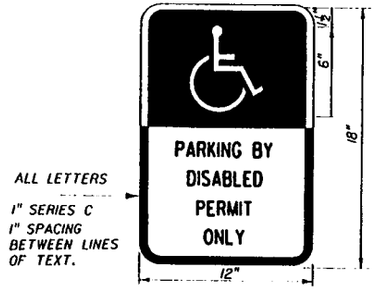

FTP - 25

1'-6" x 1'-0"

½" Border - 1½" Radii

Color	Top	Bottom
Background	Blue	White
Legend & Border	White	Black

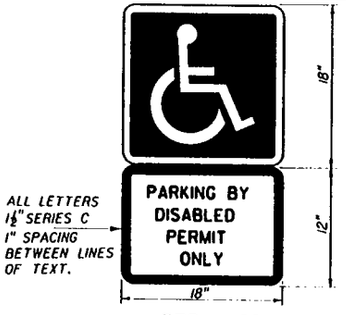

FTP - 26

2'-6" x 1'-6"

½" Border - 1½" Radii

Color	Top	Bottom
Background	Blue	White
Legend & Border	White	Black

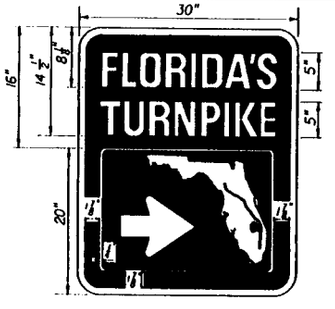

FTP - 27

2'-6" x 3'

1" Border - 3" Radii

Color

Background Green

Legend & Border White

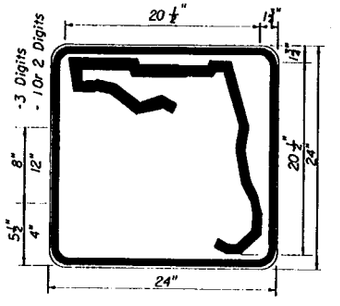

FTP - 28

2'-0" X 2'-0"

⅜" Border - 1.5" Radii

Color

Background White

Legend & Border Green

See Sheet 4 of 8 For Additional Details

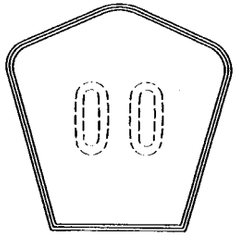

FTP - 29

Color

Background Blue

Legend & Border Yellow

SEE SHEET 4 OF 8 FOR DETAILS.

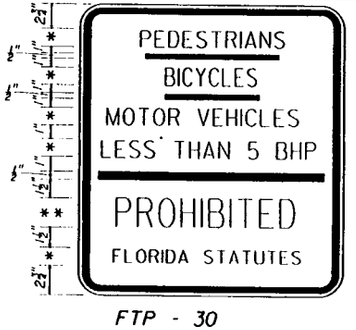

* 2" Series C

** 4" Series C

FTP - 30

2'-6" X 2'-0"

2" Border - 3" Radii

Color

Background White

Legend & Border Green

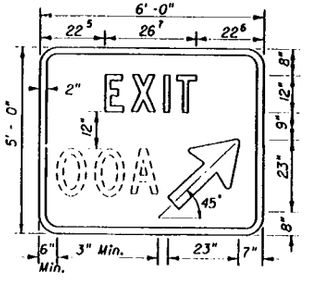

Series C Letters.

FTP - 31

5'x 6'

2" Border - 6" Radii

Color

Background Green

Legend & Border White

Dimensions shown in inches and eighths.

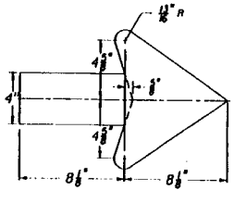

ARROW DETAIL FOR SIGN FTP-27

STATE OF FLORIDA DEPARTMENT OF TRANSPORTATION
ROAD DESIGN

SPECIAL SIGN DETAILS

	Names	Dates
Designed By	LW	6/93
Drawn By	LW	6/93
Checked By	TPS	6/93

Approved By Charles A. Scott

Revision No.	Sheet No.	Index No.
94	3 of 8	17355

F.H.W.A. Approved:

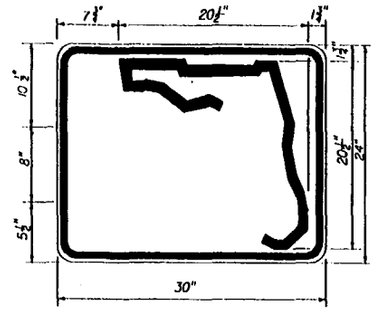

4 DIGITS

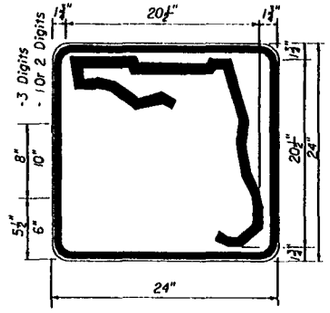

UP TO 3 DIGITS

NUMERAL SIZE

DIGITS	NUMERAL SIZE	SERIES	PANEL SIZE
1-2	10"	D	24"X 24"
3	8"	C	24"X 30"
4	8"	C	24"X 30"

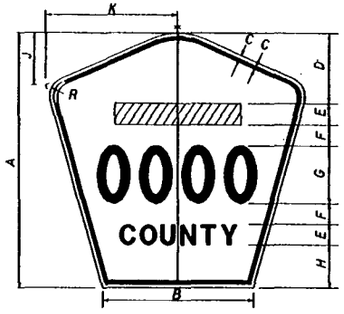

Notes :

1. All Legend Series "D".
2. Color: Yellow Legend and Border On Blue Background.
3. When used on a guide sign, marker must be overlayed on a rectangular Yellow Background as shown in chart. **

INDEPENDENT USE OTHER THAN FREEWAY

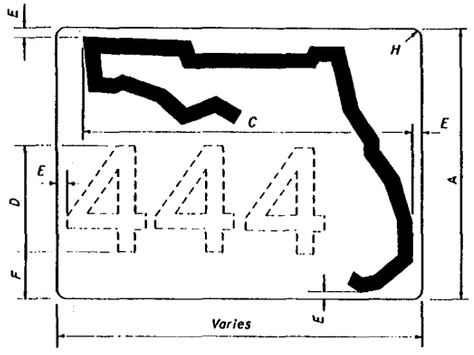

3 OR MORE DIGITS

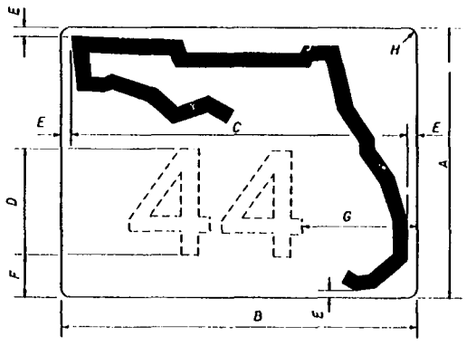

1 OR 2 DIGITS

SIGN	DIMENSIONS												**
	A	B	C	D	E	F	G	H	J	K	R	S	
1 & 2 DIGIT POST MOUNTED	24"	14 3/16"	3/8"	5"	2"	2"	8"	3"	5 1/8"	12 7/16"	12 11/16"	5 5/16"	
3 DIGIT POST MOUNTED	30"	17 3/4"	1/2"	7 1/4"	2 1/2"	2 1/2"	8"	4 3/4"	6 1/2"	15 1/2"	3 3/8"	6 5/8"	
4 DIGIT POST MOUNTED	36"	21 1/4"	1/2"	10"	3"	3"	8"	6"	7 1/2"	18 1/2"	4 1/4"	7 1/2"	
2 DIGIT OVERHEAD	36"	21 1/4"	1/2"	8"	3"	3"	12"	4"	7 1/2"	18 1/2"	4 1/4"	7 1/2"	** 40"x 41"
3 DIGIT OVERHEAD	36"	28 1/2"	3/4"	8"	3"	3"	12"	4"	8"	20	4 1/4"	8 1/4"	** 40"x 44"
4 DIGIT OVERHEAD	42"	33 1/2"	3/4"	11"	3"	3"	12"	7"	10 1/2"	24	4 1/4"	8 1/2"	** 42"x 52"

COUNTY ROUTE MARKER DETAIL

FTP - 29

	A	B	C	D	E	F	G	H
24"	24"		26"	12"	1"	2 3/4"	10"	1 1/2"
30"	30"	38"	36"	12"	1"	5"	11"	1 1/2"
36"	36"	45"	41"	15"	2"	7"	12"	2"

GUIDE SIGN USE

Notes: 1. Florida marker shall have Black Legend with White Background.

2. Stroke width of State outline to be 1" for independent use and 1 1/4" for Guide Sign.

FLORIDA ROUTE MARKER

FTP - 28

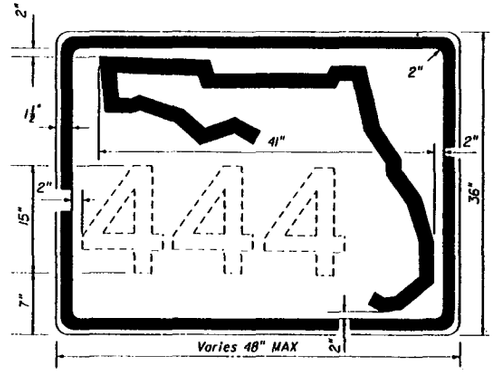

3 OR MORE DIGITS

INDEPENDENT USE FOR FREEWAY

STATE OF FLORIDA DEPARTMENT OF TRANSPORTATION
ROAD DESIGN

SPECIAL SIGN DETAILS

	Names	Dates
Designed By	LW	6/93
Drawn By	LW	6/93
Checked By	TPS	6/93
F.H.W.A. Approved:		

Approved By: Charles A. Scott

Revision No.	Sheet No.	Index No.
94	4 of 8	17355

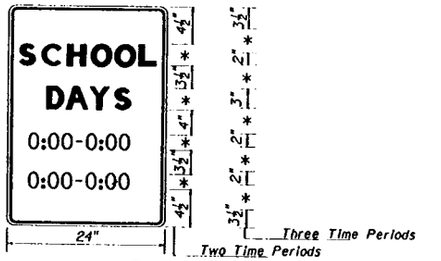

FTP - 32
2'-0" x 3'-0"
3/8" Border 1 1/2" Radii
Color
Background White
Legend & Border Black

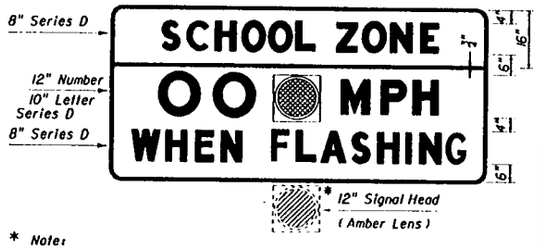

* Note:
Flashing beacon may be placed within or below panel.

FTP - 33
4'-0" x 8'-6"
1 1/4" Border 2 1/4" Radii
Color Top Bottom
Background Yellow White
Legend & Border Black Black

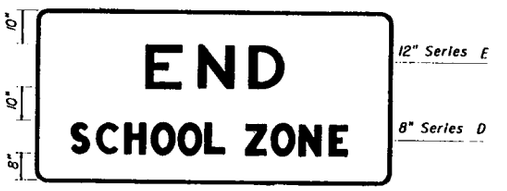

FTP - 34
4'-0" x 8'-6"
1 1/4" Border 2 1/4" Radii
Color
Background White
Legend & Border Black

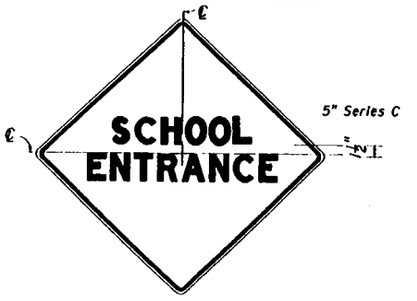

FTP - 35
2'-6" x 2'-6"
3/8" Border 1 1/2" Radii
Color
Background Yellow
Legend & Border Black

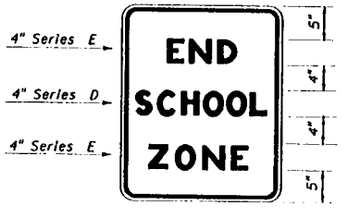

FTP - 36
2'-6" x 2'-0"
3/8" Border 1 1/2" Radii
Color
Background White
Legend & Border Black

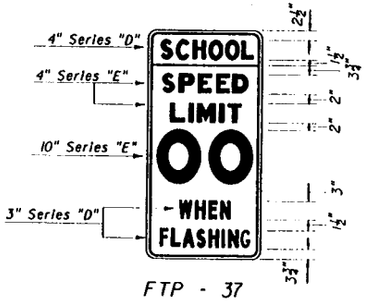

FTP - 37
4'-0" x 2'-0"
3/8" Border 3 Radii
Color Top Bottom
Background Yellow White
Legend & Border Black Black

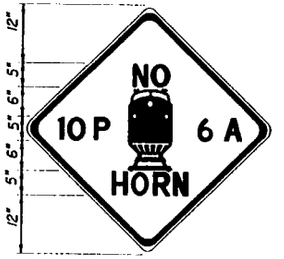

Series C Letters

FTP - 38
3'-0" x 3'-0"
1/2" Border 1 1/2" Radii
Color
Background Yellow
Legend & Border Black

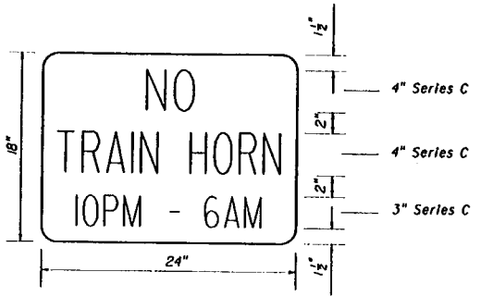

FTP - 38A
1'-6" x 2'-0"
1/2" Border 1 1/2" Radii
Color
Background Yellow
Legend & Border Black



FTP - 38B
3'-0" x 3'-0"
1/2" Border 1 1/2" Radii
Color
Background Yellow
Legend & Border Black



Remove the two crosswalk stripes for advance warning sign.

FTP - 39
3'-0" x 3'-0"
1/2" Border 1 1/2" Radii
Color
Background Yellow
Legend & Border Black

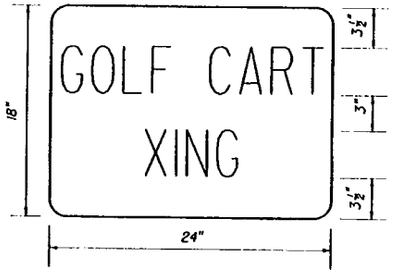

FTP - 39A All Letters 4" Series C
1'-6" x 2'-0"
1/2" Border 1 1/2" Radii
Color
Background Yellow
Legend & Border Black

STATE OF FLORIDA DEPARTMENT OF TRANSPORTATION
ROAD DESIGN

SPECIAL SIGN DETAILS

	Names	Dates
Designed By	LW	6/93
Drawn By	LW	6/93
Checked By	TPS	6/93
F.H.W.A. Approved:		

Approved By: Clark A. Scott

Revision No.	Sheet No.	Index No.
94	5 of 8	17355



FTP - 40

3'-0" x 3'-0"

½" Border 1½" Radii

Color

Background Yellow

Legend & Border Black

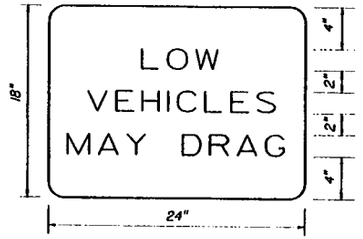

2" Series C Letters

FTP - 40A

1'-6" x 2'-0"

½" Border 1½" Radii

Color

Background Yellow

Legend & Border Black

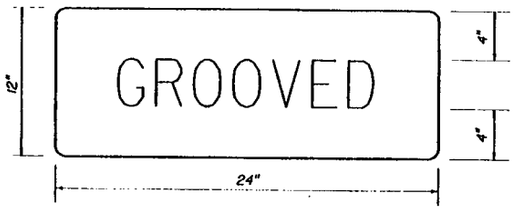

4" Series C Letters

FTP - 41

1'-0" x 2'-0"

½" Border 1½" Radii

Color

Background Yellow

Legend & Border Black

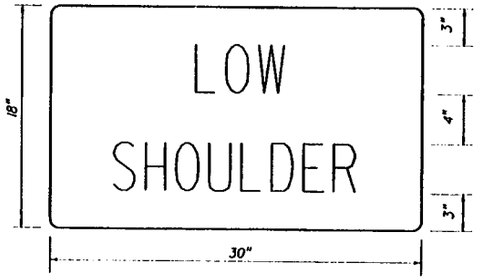

4" Series C Letters

FTP - 42

1'-6" x 2'-6"

½" Border 1½" Radii

Color

Background Yellow

Legend & Border Black

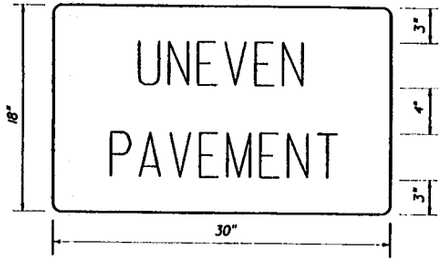

All Letters 4" Series C

FTP - 43

1'-6" x 2'-6"

½" Border 1½" Radii

Color

Background Yellow

Legend & Border Black

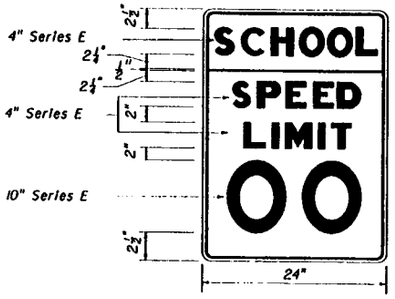

FTP - 44

3'-0" x 2'-0"

⅜" Border 1½" Radii

Color	Top	Bottom
Background	Yellow	White
Legend & Border	Black	Black

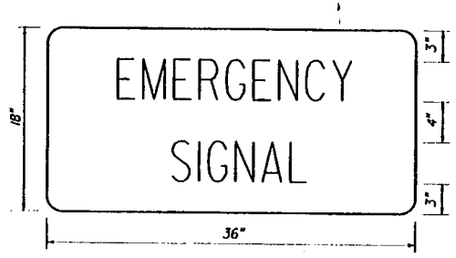

4" Series D Letters

FTP - 45

1'-6" x 3'-0"

½" Border 3" Radii

Color

Background White

Legend & Border Black

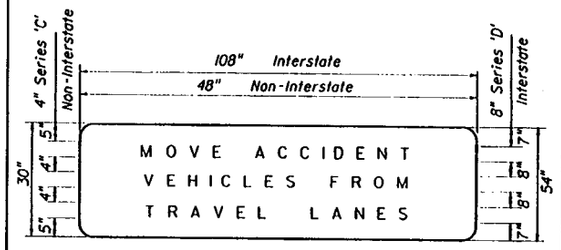

FTP - 46

⅜" Border 6" Radii

Color

Background White

Legend & Border Black

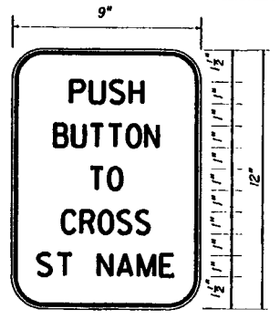

Series D Letters

FTP - 47

1'-0" x 0'-9"

½" Border 1½" Radii

Color

Background White

Legend & Border Black

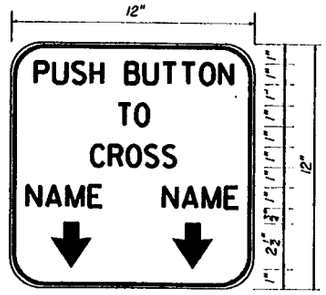

Series D Letters

FTP - 48

1'-0" x 1'-0"

½" Border 1½" Radii

Color

Background White

Legend & Border Black

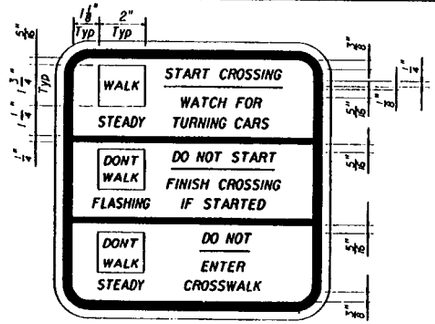

Series C Letters

FTP - 49

1'-0" x 1'-0"

⅜" Border 1½" Radii

Color

Background White

Legend & Border Black

Notes for FTP 49:

1. Text for FTP 49 shall be ½" except (WALK) and (DONT WALK) which will be ⅝".
2. Spacing between lines of legend shall be ⅝" except as noted.
3. Underbar spacing as detailed.

STATE OF FLORIDA DEPARTMENT OF TRANSPORTATION
ROAD DESIGN

SPECIAL SIGN DETAILS

	Names	Dates
Designed By	LW	6/93
Drawn By	LW	6/93
Checked By	TPS	6/93
F.H.W.A. Approved:		

Approved By Clark A. Scott

Revision No.	Sheet No.	Index No.
94	6 of 8	17355

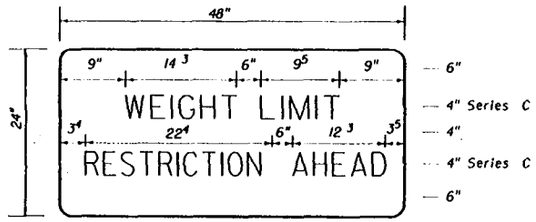

Dimensions are shown in Inches and Eighths.

FTP - 50

2'-0" X 4'-0"

3/4" Border 4" Radii

Color
Background Yellow
Legend & Border Black

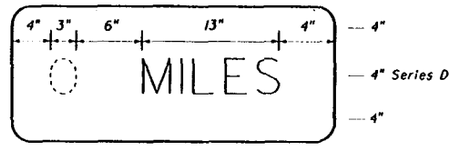

Dimensions are shown in Inches and Eighths.

FTP - 51

1'-0" x 2'-6"

3/4" Border 4" Radii

Color
Background White
Legend & Border Black

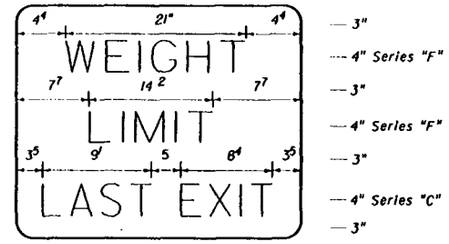

Dimensions are shown in Inches and Eighths.

FTP - 52

2'-0" x 2'-6"

3/4" Border 4" Radii

Color
Background White
Legend & Border Black

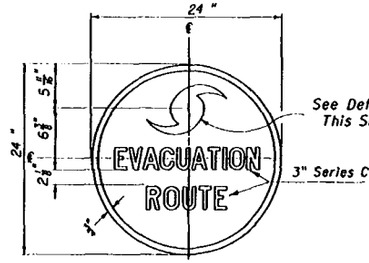

FTP - 53

2'-0" x 2'-0"

Color
Background Blue
Legend & Border White

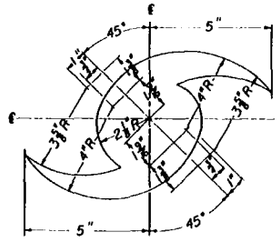

DETAIL 'A' for FTP - 53

Color
Legend & Border White

STATE OF FLORIDA DEPARTMENT OF TRANSPORTATION
ROAD DESIGN

SPECIAL SIGN DETAILS

	Name	Date
Designed By	EW	6/93
Drawn By	EW	6/93
Checked By	TPS	6/93

Approved By: Charles A. Scott

F.H.W.A. Approved:

Revision No.	Sheet No.	Index No.
94	7 of 8	17355

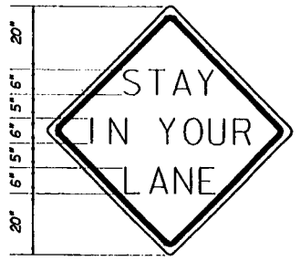

Series C Letters

MOT - 1

4'-0" x 4'-0"

1" Border 3" Radii

Color
Background Orange
Legend & Border Black

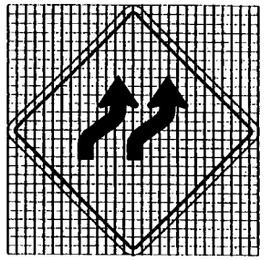

GRID • 2" X 2"

MOT - 2

4'-0" x 4'-0"

1" Border 3" Radii

Color
Background Orange
Legend & Border Black

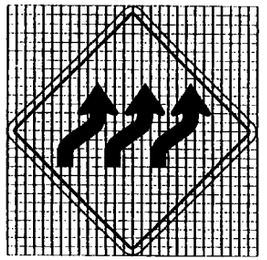

GRID • 2" X 2"

MOT -3

4'-0" x 4'-0"

1" Border 3" Radii

Color
Background Orange
Legend & Border Black



Series C Letters

MOT - 4

4'-0" x 4'-0"

1" Border 3" Radii

Color
Background Orange
Legend & Border Black

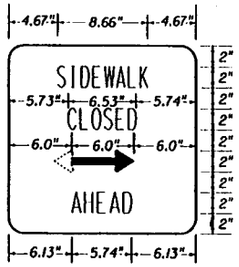

Series B Letters

MOT -5

1'-6" x 1'-6"

¾" Border 1½" Radii

Color
Background Orange
Legend & Border Black

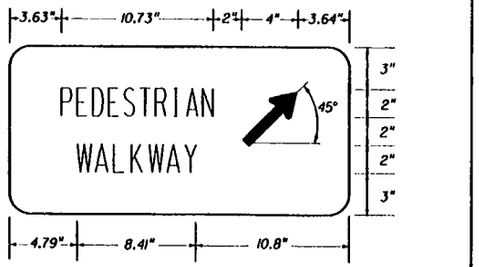

Series B Letters

MOT -6

For MOT-6L shift arrow to left side of sign.

1'-0" x 2'-0"

¾" Border 1½" Radii

Color
Background Orange
Legend & Border Black

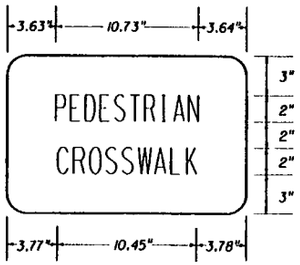

Series B Letters

MOT - 7

1'-0" x 1'-6"

¾" Border - 1½" Radii

Color
Background Orange
Legend & Border Black

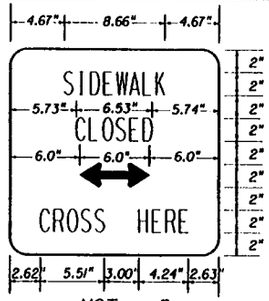

Series B Letters

MOT - 8

1'-6" x 1'-6"

¾" Border - 1½" Radii

Color
Background Orange
Legend & Border Black

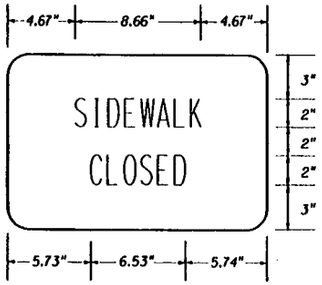

Series B Letters

MOT -9

1'-0" x 1'-6"

¾" Border - 1½" Radii

Color
Background Orange
Legend & Border Black

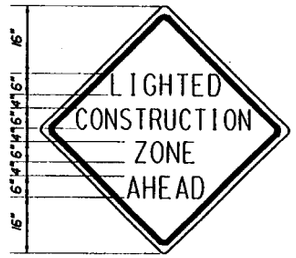

Series C Letters

MOT -10

4'-0" x 4'-0"

¾" Border - 3" Radii

Color
Background Orange
Legend & Border Black

STATE OF FLORIDA DEPARTMENT OF TRANSPORTATION
ROAD DESIGN

SPECIAL SIGN DETAILS

	Names	Dates
Designed By	LW	6/93
Drawn By	LW	6/93
Checked By	TPS	6/93
F.H.W.A. Approved:		

Approved By C. Mark A. Scott

Revision No.	Sheet No.	Index No.
94	8 of 8	17355

Notes :
1. Bottom edge of signs shall be approximately at the same elevation.
2. Span wire installations that support only signs should be provided with a minimum panel weight of 7 PSF.
3. Type B & C attachments with one hanger shall have wind beams for signs wider than 3½ feet. The beams shall extend to within 6" of the sign edge.
4. Type B & C attachments for signs 4 feet and wider shall have 2 hangers. Signs 7 feet and wider shall have wind beams that extend to within 6" of the sign edge.
5. Type D attachments shall be for signs 3½ feet wide or less.
6. Sign panels shall meet the requirements of Index 9535.
7. Refer to section 634 of the Standard Specifications For Road And Bridge Construction.
8. All bolts, nuts, and washers shall be passivated stainless steel, AISI 300 series, commercial grade, type 316.

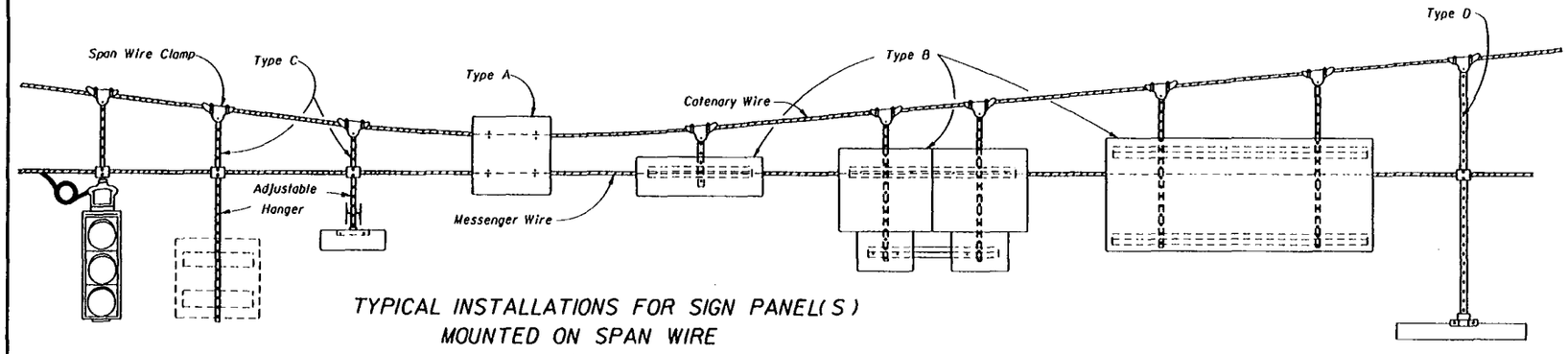

TYPICAL INSTALLATIONS FOR SIGN PANEL(S) MOUNTED ON SPAN WIRE

DETAIL OF SIGN CLAMP

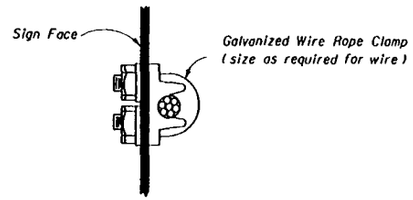

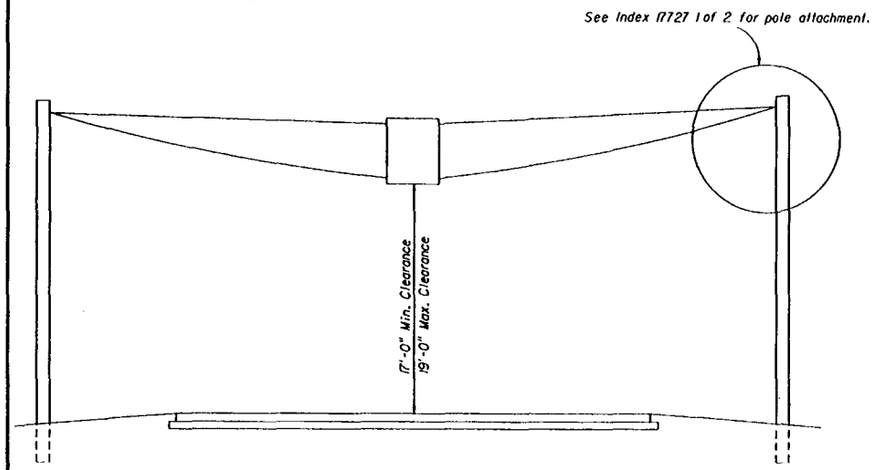

TYPICAL SPAN WIRE INSTALLATION

DETAIL OF OPPOSING SIGNS SPAN WIRE MOUNTED

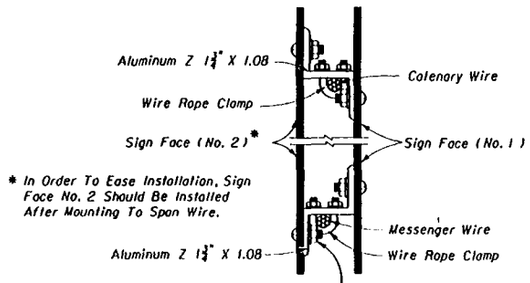

* In Order To Ease Installation, Sign Face No. 2 Should Be Installed After Mounting To Span Wire.

¼" Ø Stainless steel round head bolts with nuts and lock washers. Bolts shall be spaced on 12" centers max.

The overlapped connection of adjustable hangers shall use a minimum of 2 bolts with a minimum spacing between bolts of 2".

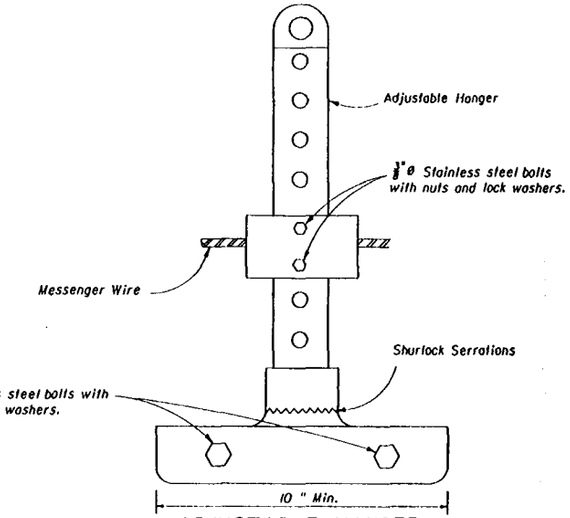

ADJUSTABLE HANGER FOR SIGN MOUNTING

STATE OF FLORIDA DEPARTMENT OF TRANSPORTATION
ROAD DESIGN

SPAN WIRE MOUNTED SIGN DETAILS SINGLE POINT ATTACHMENT

	Names	Dates
Designed By		
Drawn By		
Checked By		
F.H.W.A. Approved:		

Approved By C. Louis A. Scott
State Traffic Plans Engineer

Revision No.	Sheet No.	Index No.
94	1 of 2	17356

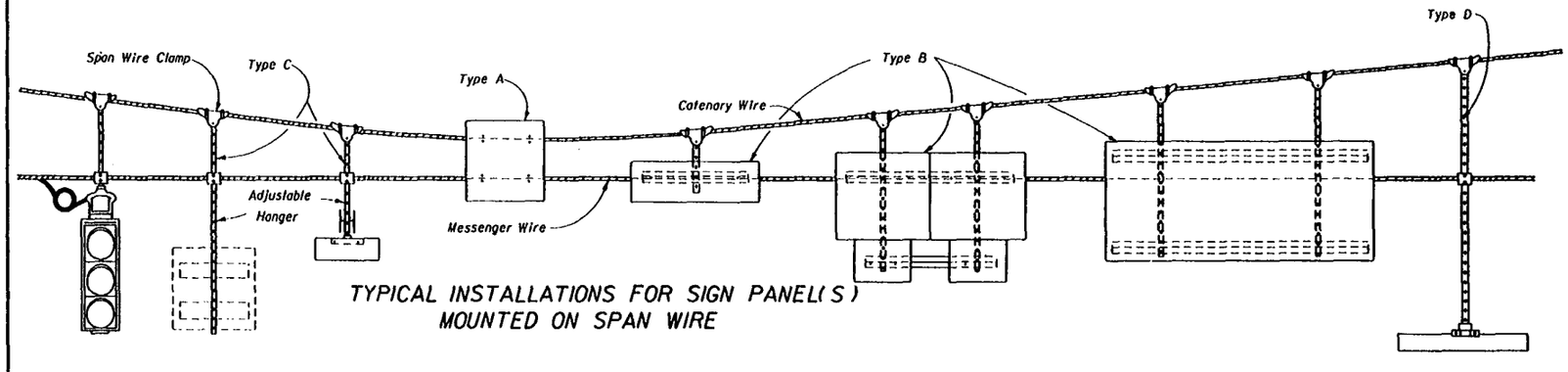

TYPICAL INSTALLATIONS FOR SIGN PANEL(S) MOUNTED ON SPAN WIRE

Notes :
1. Bottom edge of signs shall be approximately at the same elevation.
2. Type B & C attachments with one hanger shall have wind beams for signs wider than 3½ feet. The beams shall extend to within 6" of the sign edge.
3. Type B & C attachments for signs 4 feet and wider shall have 2 hangers. Signs 7 feet and wider shall have wind beams that extend to within 6" of the sign edge.
4. Type D attachments shall be for signs 3½ feet wide or less.
5. Sign panels shall meet the requirements of Index 9535.
6. Refer to section 634 of the Standard Specifications For Road And Bridge Construction.
7. All bolts, nuts, and washers shall be passivated stainless steel, AISI 300 series, commercial grade, type 316.

DETAIL OF SIGN CLAMP

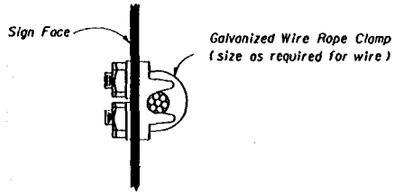

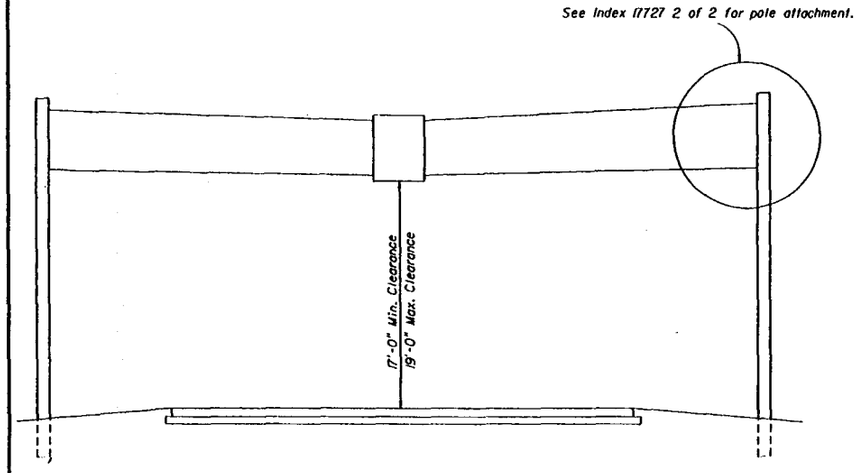

TYPICAL SPAN WIRE INSTALLATION

DETAIL OF OPPOSING SIGNS SPAN WIRE MOUNTED

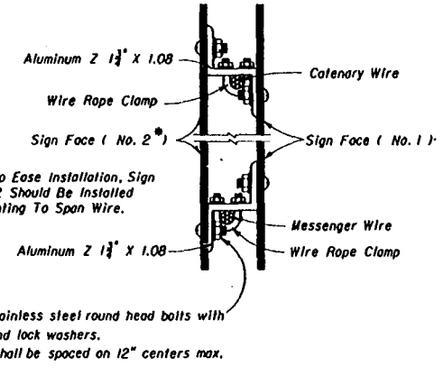

* In Order To Ease Installation, Sign Face No. 2 Should Be Installed After Mounting To Span Wire.

¼" ø Stainless steel round head bolts with nuts and lock washers.
Bolts shall be spaced on 12" centers max.

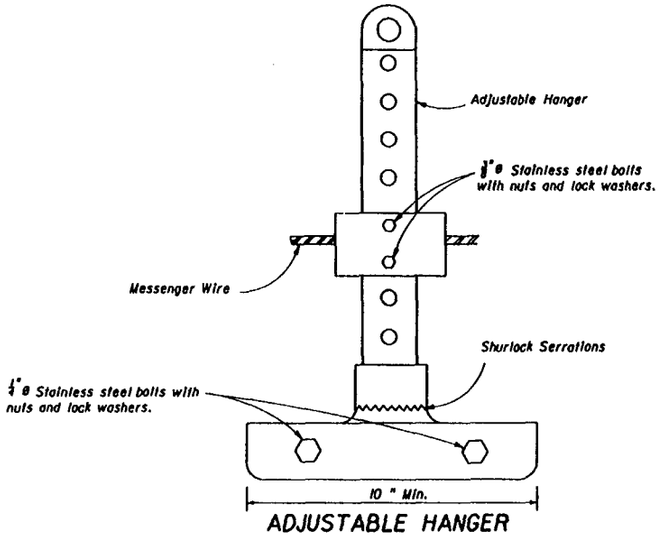

ADJUSTABLE HANGER FOR SIGN MOUNTING

STATE OF FLORIDA DEPARTMENT OF TRANSPORTATION
ROAD DESIGN

SPAN WIRE MOUNTED SIGN DETAILS TWO POINT ATTACHMENT

	Names	Dates
Designed By		
Drawn By		
Checked By		
F.H.W.A. Approved		

Approved By Charles A. Scott
State Traffic Engineer

Revision No.	Sheet No.	Index No.
94	2 of 2	17356

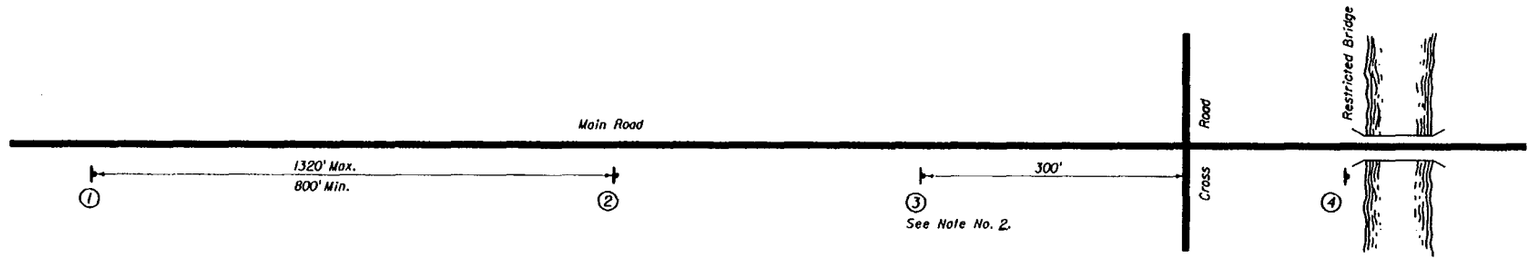

SIGN LOCATIONS TYPICAL

①

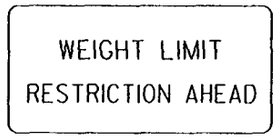

FTP - 50

②

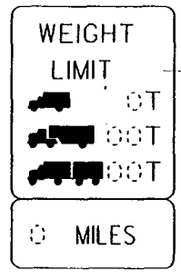

R12-5 (30" X 36")

FTP -51

③

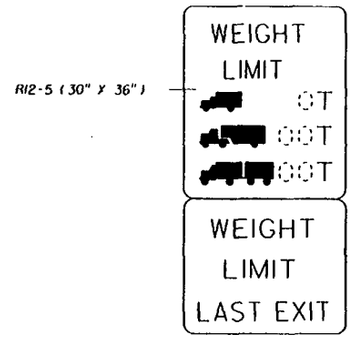

R12-5 (30" X 36")

FTP - 52

④

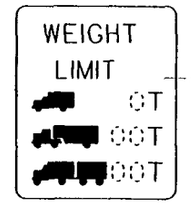

R12-5 (30" X 36")

NOTE:

1. See Standard Highway Signs dated 1979 for sign R12-5 detail.
2. Sign location No. 3 may require some field adjustment.
3. Signs FTP-50, FTP-51 & FTP-52 shall have a 1/2" edge and 3/4" border with a 4" radius.
4. The Cross Road is the last detour around the restricted bridge.
5. Sign location No. 2 should be established from the Cross Road the following approximate distances; Interstate - 1 mile; Non-interstate -1/2 mile
6. For Interstate application, contact Traffic Plans & Standards - Tallahassee for sign sizes.
7. See Index 17355 for sign details.

STATE OF FLORIDA DEPARTMENT OF TRANSPORTATION
ROAD DESIGN

BRIDGE WEIGHT RESTRICTIONS

	Names	Dates
Designed By	M.C.	08/86
Drawn By	M.C.	08/86
Checked By	K.R.	08/86
F.H.W.A. Approved:		

Approved By
Clark A. Scott
State Traffic Plans Engineer

Revision No.	Sheet No.	Index No.
94	1 of 1	17357

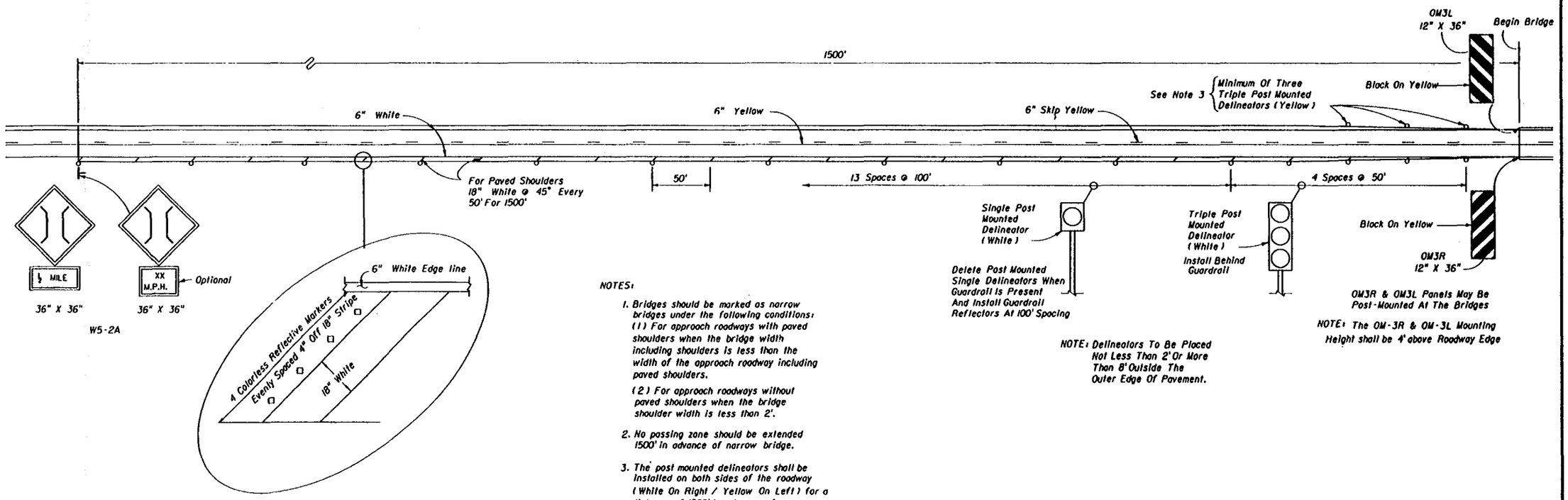

NOTES:

1. Bridges should be marked as narrow bridges under the following conditions:
   (1) For approach roadways with paved shoulders when the bridge width including shoulders is less than the width of the approach roadway including paved shoulders.
   (2) For approach roadways without paved shoulders when the bridge shoulder width is less than 2'.
2. No passing zone should be extended 1500' in advance of narrow bridge.
3. The post mounted delineators shall be installed on both sides of the roadway (White On Right / Yellow On Left) for a distance of 1500' in advance of a narrow bridge if the bridge or the approach is on a curve.
4. Delineators on both sides of roadway shall face traffic approaching bridge.

STATE OF FLORIDA DEPARTMENT OF TRANSPORTATION
ROAD DESIGN

RURAL NARROW BRIDGE TREATMENT

	Names	Dates
Designed By	R. LEE	9/86
Drawn By	R. LEE	9/86
Checked By	RANSON	9/86
F.H.W.A. Approved:		

Approved By: Clark A Scott
State Traffic Plans Engineer

Revision No.	Sheet No.	Index No.
92	1 of 1	17359

JOINT USE POLES

1. The Luminaire And Arm Shall Be Grounded
2. The Surge Protector And Fuses Shall Be Installed And Located In A Lockable Nema 3R Box (Sized By The Contractor) Attached To The Side Of The Pole

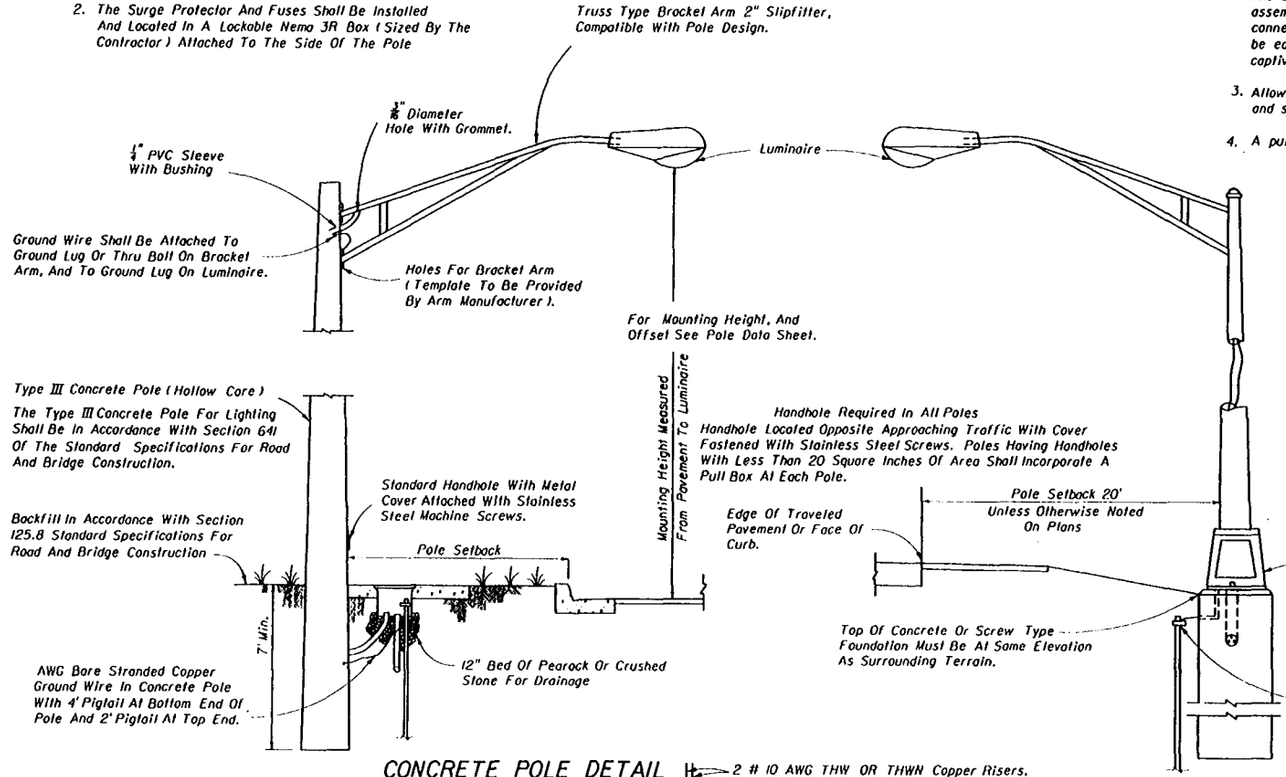

CONCRETE POLE DETAIL

Notes :

1. Luminaire shall be supplied with a magnetic regulator type ballast.
2. The ballast shall be mounted on a hinged door or panel. The unit shall swing open to provide access to the ballast assembly by release of captive screws. The electrical connector shall be a quick disconnect plug. The unit shall be easily removed from the luminaire after release of the captive screws and quick disconnect plug.
3. Allow enough slack in wires to permit fuse holders, surge protectors, and splices to be handled one foot outside pole or pull box.
4. A pull box shall be installed at each concrete pole location.
5. All mounting heights are ± 2½' ft. unless otherwise noted in plans.
6. At All Pull Boxes And Pole Bases, Ends Of Conduit Shall Be Sealed In Accordance With Section 630 Of The Standard Specifications For Road And Bridge Construction.

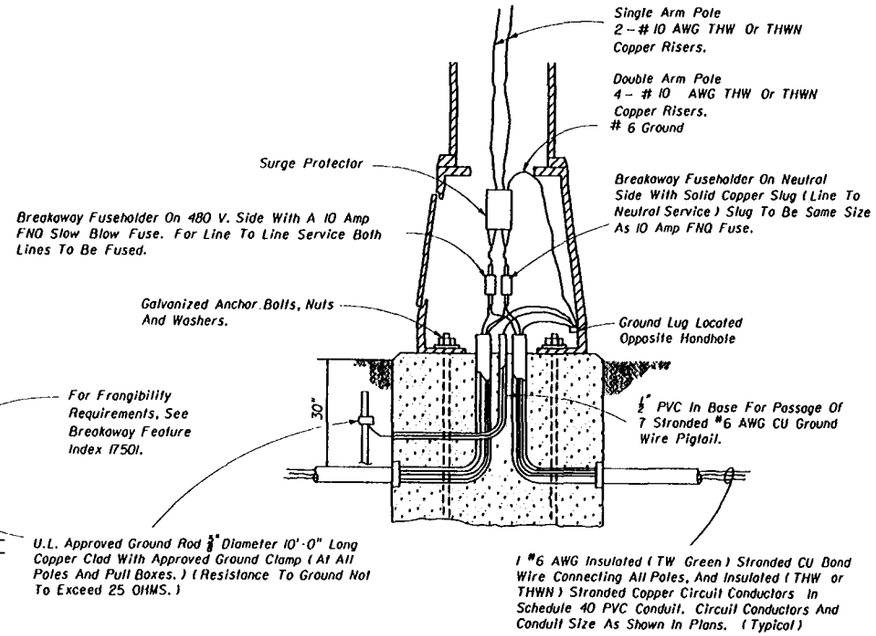

METAL POLE WIRING DETAIL

SURGE PROTECTOR SPECIFICATIONS

1. The unit shall withstand a surge current up to 20,000 Amps, and repetitive surges of 200 Amps for a minimum of 10,000 occurences.
2. The unit shall respond in less than 50 nanoseconds and within this time have a peak clamping voltage better than 1,100 Vrms.
3. The maximum allowable voltage that can pass continuously through the hot leg of the protector must be less than 550 Vrms.
4. The current drain shall be less than 100 microamps.
5. The unit shall be insulated 600 V. to ground and shall be weatherproof.
6. The unit shall not allow holdover current or conduction to ground after the surge ends.
7. Protection shall be achieved for both the 480 V. and neutral conductors with the surges being passed to ground and NOT to neutral.
8. There shall be no discharge lag in the protection of the 480 V. conductor over the neutral conductor.
9. Underwriters laboratory approval not required.

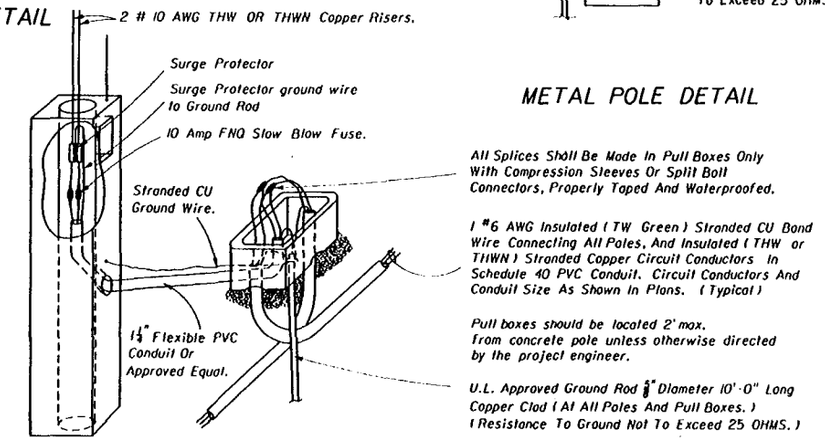

CONCRETE POLE WIRING DETAIL

METAL POLE DETAIL

STATE OF FLORIDA DEPARTMENT OF TRANSPORTATION
TRAFFIC DESIGN

CONVENTIONAL POLE DETAILS

	Names	Dates
Designed By	G.R.	08/18
Drawn By		
Checked By		
F.H.W.A. Approved:		

Approved By Charles Hatt
State Traffic Plans Engineer

Revision No.	Sheet No.	Index No.
94	1 of 1	17500

1) Ground rods shall have a resistance to ground not to exceed 25 ohms. Where the resistance is not as low as 25 ohms, two or more ground rods connected in parallel shall be used. Contractor shall have necessary test equipment (current calibration certificate required) at final inspection to insure acceptability of grounding system. Total grounding system not to exceed 10 ohms.

2) The contractor shall be responsibile for contacting all utility companies prior to any underground work. The utility company will locate and identify their facilities.

3) Contractor shall determine the service required date for the power company transformer installation at the pre-construction conference.

4) The power company reserves the right to install the riser, switch gear and weatherhead on power compnay poles at the expense of the contractor. Contact the power company for cost or for authorization for an alternate procedure.

5) Any damaged portions of galvanized steel poles and bracket arms shall be painted in accordance with section 562 of the Standard Specifications.

6) Poles and bracket arms shall be designed in accordance with the design criteria, as indicated in the plans and using the applicable equations found in "Standard Specifications For Structural Supports For Highway Signs, Luminaires And Traffic Signals" published by A.A.S.H.T.O. dated 1985. The calculations shall be based on the actual projected area of the luminaire or 3.0 square feet whichever is greater.

7) The luminaire manufacturer shall place a permanent tag on the luminaire housing on which is imprinted the following information : Wattage, ballast type, lamp shown on design plans, lamp setting (position in luminaire), IES light distribution with this lamp in the position specified, input voltage and power factor. Luminaire photometric submittals required.

8) Before final acceptance, contractor shall provide 2 sets of full size as built plans to the maintaining agency.

9) Conduit routing shall be pole to pole, maintaining pole setback distance from edge of pavement. Any cable routing in locations where guardrail is proposed shall be 2' - 0" in front of the standard guardrail position.

10) Pole positions and conduit routing may be adjusted, as approved by the Engineer, to prevent conflicts with utility and drainage structures not indicated, and prevent guardrail post conflict with underground lighting circuits.

11) Where guardrail is constructed, the poles shall be placed a minimum of 4' behind the face of the guardrail.

12) Pole foundation installations shall be backfilled to the top of the foundation compacted to a firm, stable condition approximately equal to that of the adjacent soil. The fill shall conform to existing grade and be fully sodded.

13) The wires at the pole handhole and pullboxes shall be looped up in the pole and pullboxes with sufficient length to completely remove connectors to the outside of handhole and pullboxes to make connectors accessible for changing fuses and trouble shooting the system.

14) Neutral wires to have white insulation. Do not use white or green insulated wires for ungrounded conductors.

15) Unless otherwise specified, all cable shall be single conductor, 98 percent conductivity stranded copper, with THW or THWN insulation.

16) All splices shall be made in pullboxes or the pole base. No splices shall be made inside the conduit.

17) All exposed or surfaced mounted conduit shall be rigid or intermediate metal. These exposed runs of conduit shall be provided with either expansion joints or flexible metal conduit sections adequate to take care of vibrations and thermal expansions. All metal conduit shall be grounded. Steel conduit shall be hot dipped galvanized.

18) All conduit that will remain empty as spares shall be mandrel tested, cleaned inside and both ends capped. Leave the corrosion resistant pull/drag wire and place duct markers, or pullboxes to mark the location of the ends of the conduits.

19) Pull boxes shall be located at ends of conduit crossing roadways, and as necessary for the completion of the project.

20) These plans represent minimum acceptable criteria. The inspection per these drawings represent the minimum base of acceptance.

21) All material, unless otherwise specified, shall be underwriters laboratory approved.

22) Pull boxes shall meet the requirements of section 635 "Standard Specifications For Road And Bridge Construction" and CRT-635-01 "Evaluation Criteria for Traffic Control Devices".

BREAKAWAY FEATURE

All conventional mounting height poles shall be mounted on a frangible metal base or system of breakaway couplings. If couplings are used, one coupling shall be provided for each anchor bolt connection. The only continuous connection of the pole to the foundation at each anchor bolt shall be provided by the couplings. The area between the top of the pole foundation and the base of the pole including the couplings shall be enclosed with a non-structural aluminum skirt.

If a frangible metal base is used, it shall be one piece and be designed to breakaway without the aid of any slipping or sliding surfaces.

"The design of the breakaway feature shall be in accordance with the breakaway performance requirements of the 'Standard Specifications for Structural Supports for Highway Signs, Luminaires and Traffic Signals'. A. A. S. H. T. O. , Copyright 1985. The contractor (supplier) shall submit copies of test reports as evidence the breakaway feature meets the above specifications and calculations to verify the design will meet the A. A. S. H. T. O. wind loading specified in the contract plans. No poles are to be installed prior to approval of submittal data."

Poles Behind Bridge Rail Or Barrier Wall Mounted, Shall Be Non-Frangible.

STATE OF FLORIDA DEPARTMENT OF TRANSPORTATION
TRAFFIC DESIGN

HIGHWAY LIGHTING GENERAL NOTES

	Names	Dates	Approved By
Designed By	G.K.	04/25/78	Clark A. Scott, State Traffic Plans Engineer
Drawn By			
Checked By			
F.H.W.A. Approved:			

Revision No.	Sheet No.	Index No.
94	1 of 1	17501

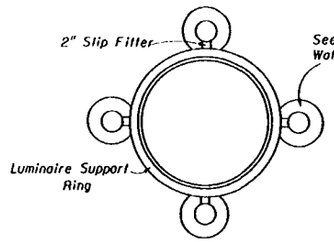



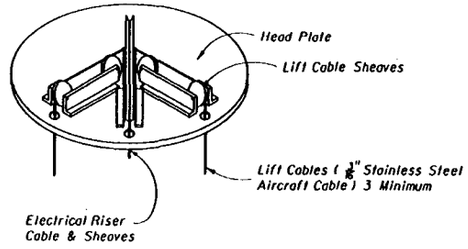

SCHEMATIC OF REMOTE AUXILIARY POWER UNIT

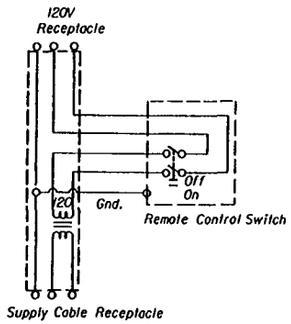

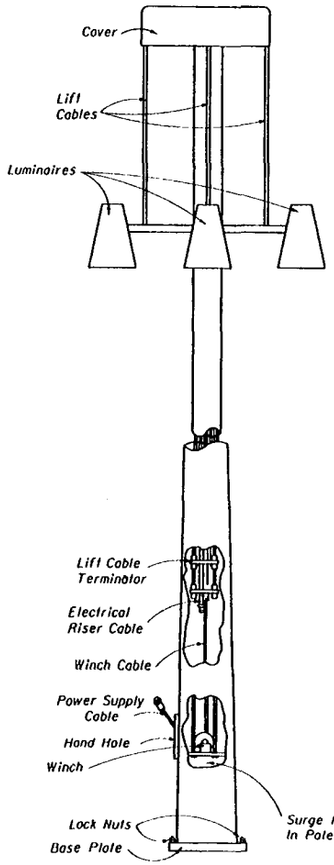

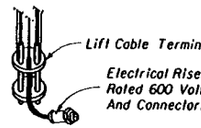

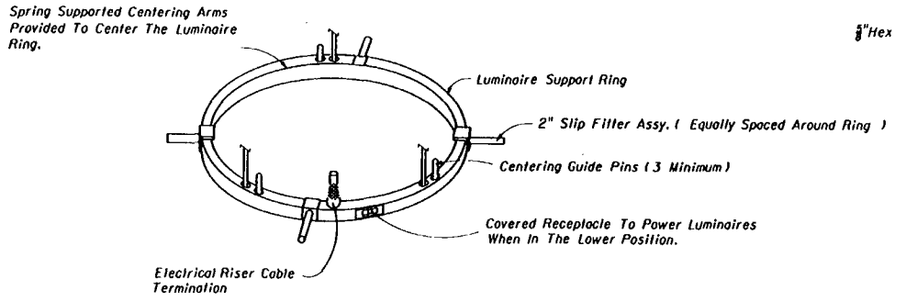

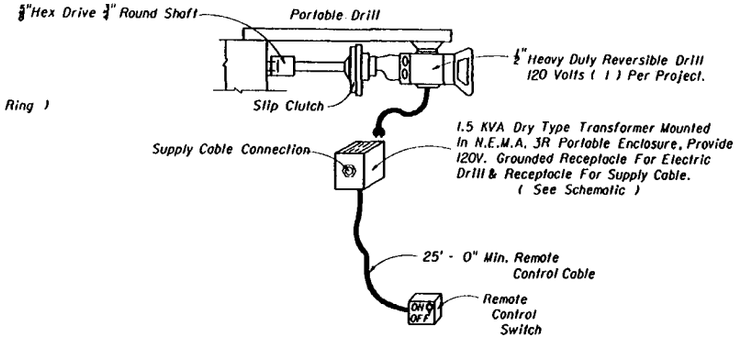

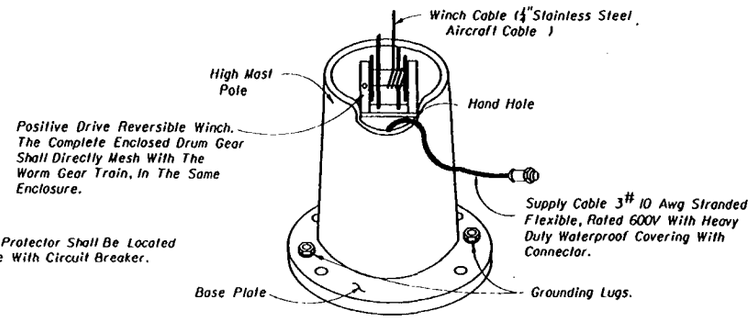

STATE OF FLORIDA DEPARTMENT OF TRANSPORTATION
TRAFFIC DESIGN

HIGHMAST LIGHTING DETAILS

	Names	Dates
Designed By		
Drawn By		
Checked By		
F.H.W.A. Approved:		

Approved By: C. Clarke Scott

Revision No.	Sheet No.	Index No.
84	1 of 3	17502

LUMINAIRE SPECIFICATIONS

The reflector with its aluminum cover shall be firmly attached to a cast ring. This ring shall have keyhole slots in its upper surface such that the reflector/refractor assembly may be readily attached to, or detached from, the luminaire bracket entry and lamp support assembly without completely removing the support bolts.

Each luminaire shall contain an integral auto-regulator type ballast connected for 480 volts input ± 10% and a power factor of more than 90 %. The luminaire ballast shall be enclosed within an aluminum housing which integrally attaches to the luminaire bracket entry and lamp support assembly. It shall be readily removable without removing the luminaire from the bracket arm.

The luminaire shall be attached to the bracket arm by means of a bracket entry and lamp support assembly. The assembly shall include a side entry slipfitter designed for two (2) inch pipe with provision for 3° adjustment for leveling the luminaire. An enclosed terminal block shall be included such that all electrical connections shall be protected from exposure to weather.

All electrical connections shall be made waterproof or be made inside a weather resistant enclosure. All luminaires shall be ANSI/IES light distribution as indicated in plans. Each luminaire shall be labeled with a permanent label which states the type of lamp, voltage input, power input, power factor, ballast type, socket position, ANSI/IES light distibution, and such other catalog information that a complete replacement can be readily ordered.

The contractors attention is directed to those plan sheets detailing the mounting of luminaires at the pole top. Particular attention is directed to alignment of luminaire light distributions. Special attention must be exercised in the physical alignment of these luminaires to insure that the approved photometric layout is physically produced at each lighting standard in the field. A marking shall be placed on the external face of the refractor to implement visual inspection of alignment. The marking shall correspond to the 0° axis of the refractor.

FOOTING

The high mast foundations shall be constructed in accordance with the details shown in the plans.

Anchor bolts per manufacturers Specifications. Submittals shall be supplied to the engineer of record prior to purchase.

One leveling nut, one hold-down nut, and one locking/jam nut shall be supplied per anchor bolt. All small metal parts, (nuts, screws, washers, etc.) Shall be rustproofed either by galvanizing per ASTM A143 or by the nature of the material used in their fabrication.

LOWERING SYSTEM SPECIFICATIONS

The lowering system shall consist of the following:

A. Head frame and cover
B. Luminaire ring
C. Cables
D. Winch
E. Portable power unit (1 per project)

The head frame unit shall rigidly mate the top of the pole to the head frame platform. The platform with its associated sheaves, etc. shall be covered and raintight. The head frame structure shall be zinc coated steel, attached to the pole by means of a steel slipfitter. Head frame shall encompass six five (5) inch nominal steel cable sheaves grooved to the exact cable diameter, for 180° cable bearing surface. The sheave shall be zinc electroplated to ASTM 164 and dipped in yellow chromate for corrosion resistance. Bearings and cable keepers shall have permanent lubrication. Three (3) stainless steel 7 x 19 aircraft cables of $\frac{1}{8}$" inch or greater diameter shall be provided.

The power riser cable shall be attached to the luminaire ring with a waterproof connector capable of withstanding the pull of the weight of the power riser cable. Where the wire ropes are required to bend over sheaves or over the winch drum, the maximum working stress in the outer fibers of wire rope shall not exceed one fifth ($\frac{1}{5}$) the wire rope manufacturer's rated ultimate stress.

Drum design shall cause level wind of wire rope. The power cord shall travel on sheave (s) or a combination of rollers providing a radius for the cord of six (6) inches or larger. Each end of the sheave (s) or rollers shall have a keeper to prevent the cable from jumping out of the roller track.

The head frame shall also include three (3) latching devices to support the luminaire ring assembly when the lowering device is not in operation. The latches shall be actuated by alternate raising and lowering of the hoisting cables. Locking of luminaire ring shall be signaled by indicators visible from ground. All moving parts of the latch mechanism shall be serviceable from the ground. Each of the three latches shall be strong enough, by itself, to support twice the weight of the ring and all the luminaires. Latching mechanisms which depend primarily upon spring operation or contain dissimilar metals are not acceptable. The latching mechanism shall not require adjustment after the original installation.

The luminaire ring shall be constructed of a minimum of 6" x 2" x 7 gauge hot dipped galvanized ASTM 386 Class "B" steel channel with the appropriate number of two (2) inch steel pipe mounting arms. The luminaire ring shall be prewired with Type "W" or specially reinforced Type "SO" power cable with suitable conductor quantity and size for proper operation and Type "ST" distribution wiring with insulation suitable for at least 105°C. All power cables should be attached to the aluminum weathertight wiring chamber with weathertight cable connectors. A 600 volt terminal block, completely prewired shall be included in the weathertight wiring chamber. A weather-tight twistlock power inlet shall be provided on the luminaire ring to allow testing of the luminaire while in the lowered position. The power inlet shall face away from the pole for easy access.

The ultimate support of the luminaire ring shall not be dependent upon the lowering and raising cables.

The system shall be provided with circuit-breaker switches and twistlock disconnects in the pole base. Raising speed of luminaire ring shall be a minimum of twelve (12) feet per minute.

The winch shall be a reversible worm gear self locking type with an integral friction drag brake to prevent freespooling. The winch shall be designated for hand operation or for operation by means of a $\frac{1}{2}$" heavy duty reversing electric drill motor, remote controlled to enable the operator to stand twenty five (25) ft. from the pole. Stainless Steel 7 x 19 aircraft cables of $\frac{1}{8}$ inch or greater diameter equal to MIL-W-5424 shall be supplied on the winch. The winch shall be provided with keepers above the drum to force the cable away from the ends of the drum for spooling. The drum shall have a wire guard to prevent the cable from coming off.

The winch shall be mounted in such a way that the cable terminator and the riser cable connector may be reached and worked on by a person with his arm through the handhole.

Roller contact spring-loaded centering arms shall be provided to center the luminaire ring while ascending or descending the pole. The rollers for the centering arm shall be made of a water resistant non-marking composition material. All shafts and washers shall be #304 stainless steel. The spring-loading mechanism shall consist of an oil-tempered steel compression spring over an aluminum rod. The rollers shall be in contact with the pole at all times.

POLE SPECIFICATIONS

The pole shaft may be jointed or single piece, polygon or round, high strength steel having a minimum yield strength of 50 ksi. All material shall be single thickness steel plate with no laminations. Steel shall be as specified.

All poles shall be equipped with a reinforced handhole approximately 1.0' above the base plate. The handhole shall be ten (10) inches wide by twenty (20) inches high minimum.

All poles and hardware will be adequately packed to assure protection to the finish during shipping and handling, poles shall not be shipped pre-assembled.

Drawings shall be provided with the equipment which show assembly sequence, lift point, and recommended erection procedure. A permanent decal or card shall be fixed on the inside of the handhole cover which describes the sequence for lowering the luminaires and the cautions.

The proportioning of weld details and the operation of welding shall be in accordance with the current edition of the AASHTO Standard Specifications for Welding of Structural Steel Highway Bridges, and The Referenced American Welding Society Structural Welding Code.

Shop drill two (2) $\frac{3}{4}$" diameter holes 180 degrees apart through total thickness of base plate. Tap top of hole for $\frac{3}{4}$" x $\frac{3}{4}$" IINC stainless steel hexhead bolt.

Finished poles shall have a protective coating of hot galvanizing applied in accordance with ASTM A123.

Note : It is the responsibility of the contractor to coordinate the anchor bolt design with foundation design.

STATE OF FLORIDA DEPARTMENT OF TRANSPORTATION
TRAFFIC DESIGN

HIGHMAST LIGHTING DETAILS

	Names	Dates
Designed By	G.K.	08/18
Drawn By		
Checked By		

Approved By: Chad A. Scott
State Traffic Signal Engineer

F.H.W.A. Approved

Revision No.	Sheet No.	Index No.
92	2 of 3	17502

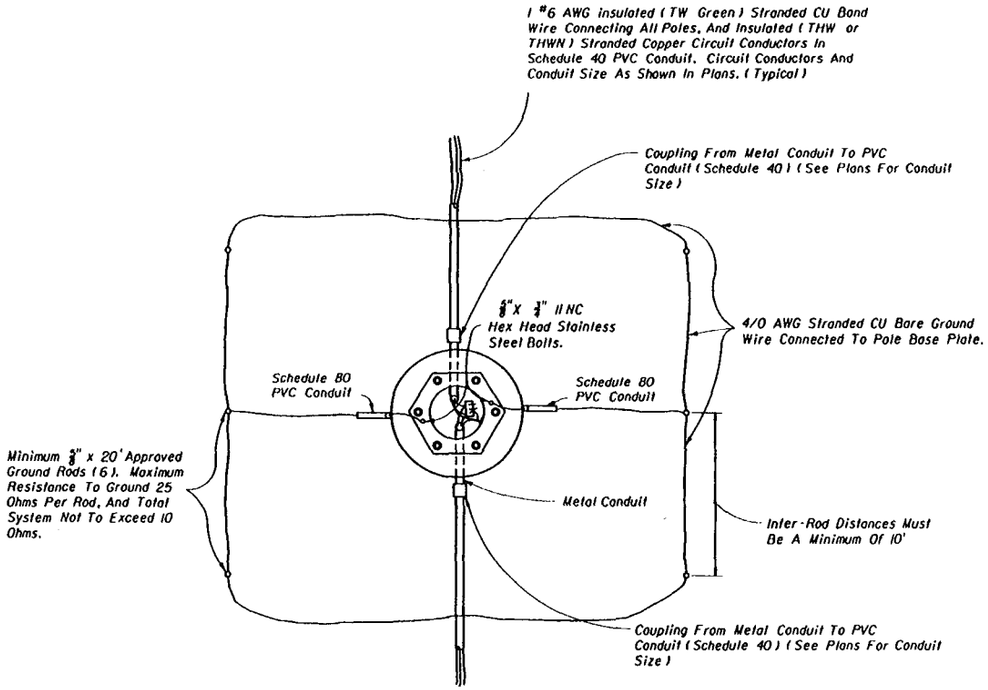

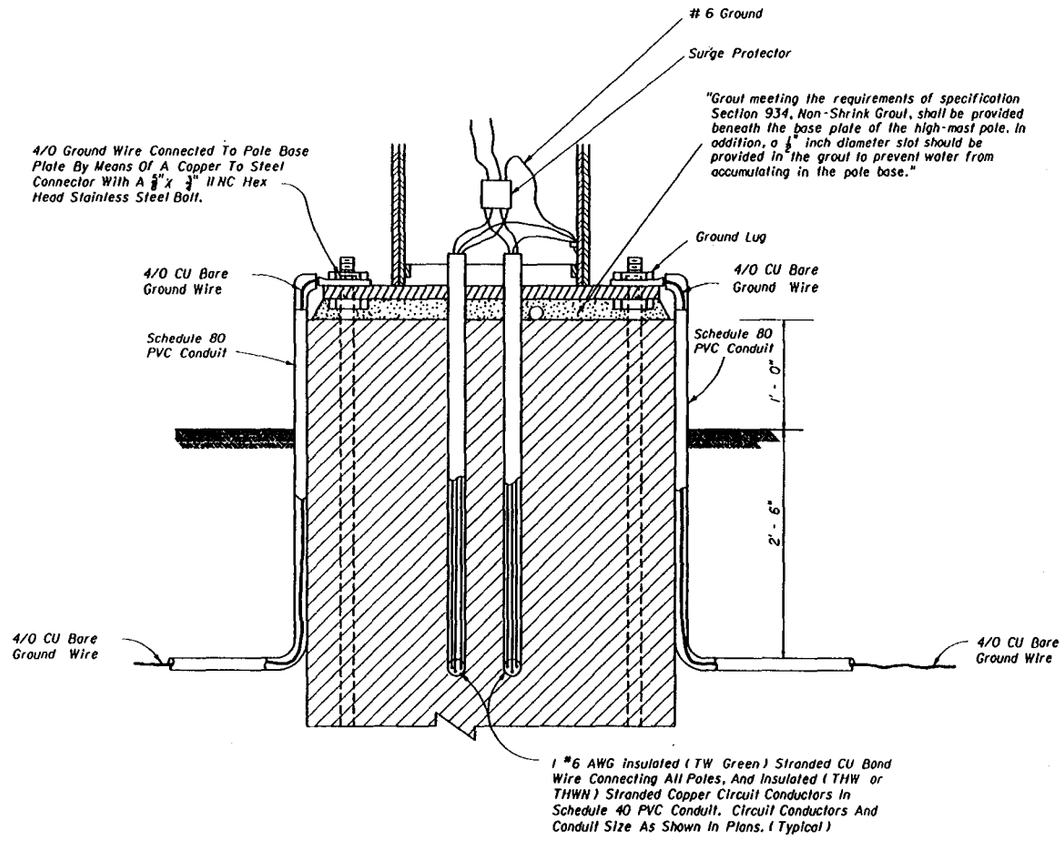

Notes:

(1) At All Pull Boxes And Pole Bases, Ends Of Conduit Shall Be Sealed In Accordance With Section 630 Of The Standard Specifications For Road And Bridge Construction.

(2) 1 #6 AWG insulated (TW Green) Stranded CU Bond Wire Connecting All Poles, And Insulated (THW or THWN) Stranded Copper Circuit Conductors In Schedule 40 PVC Conduit. Circuit Conductors And Conduit Size As Shown In Plans. (Typical)

STATE OF FLORIDA DEPARTMENT OF TRANSPORTATION
TRAFFIC DESIGN

HIGHMAST LIGHTING DETAILS

	Names	Dates
Designed By	G.K.	08/18
Drawn By		
Checked By		
F.H.W.A. Approved:		

Approved By Charles A. Scott
State Traffic Plans Engineer

Revision No.	Sheet No.	Index No.
94	3 of 3	17502

Foundations apply only to slopes of 4:1 or flatter.

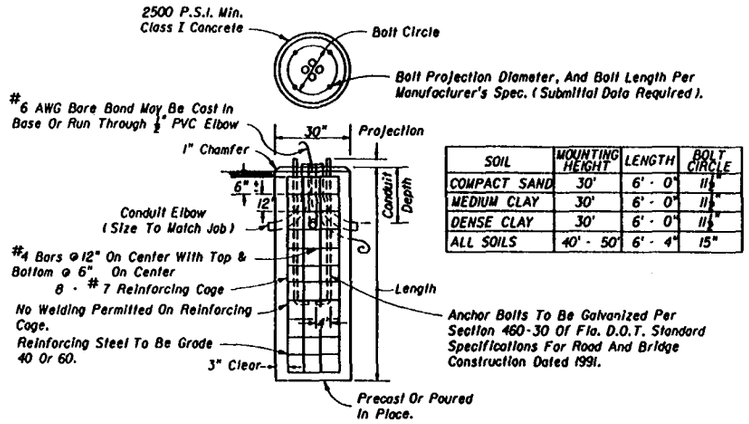

SOIL	MOUNTING HEIGHT	LENGTH	BOLT CIRCLE
COMPACT SAND	30'	6' - 0"	11½"
MEDIUM CLAY	30'	6' - 0"	11½"
DENSE CLAY	30'	6' - 0"	11½"
ALL SOILS	40' - 50'	6' - 4"	15"

METAL POLE CONCRETE FOUNDATION DETAIL

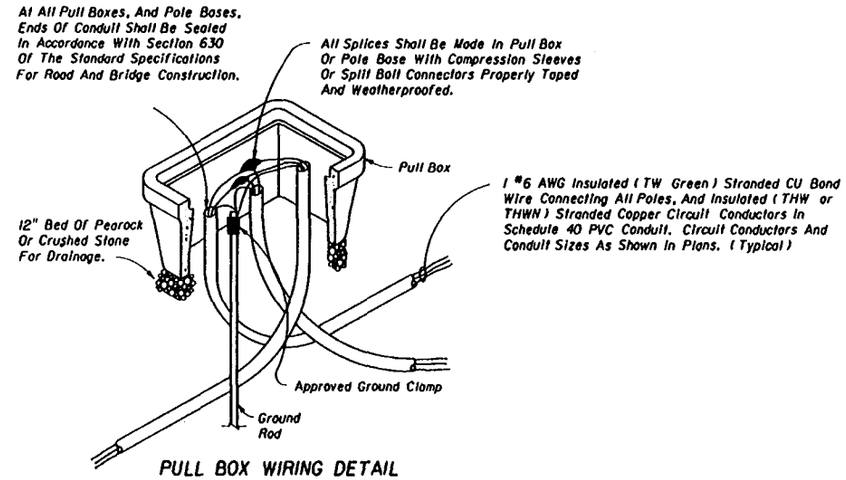

PULL BOX WIRING DETAIL

STATE OF FLORIDA DEPARTMENT OF TRANSPORTATION
TRAFFIC DESIGN

ROADWAY LIGHTING DETAILS

	Names	Dates
Designed By	G.K.	08/78
Drawn By		
Checked By		

Approved By: Clarke Scott
State Traffic Plans Engineer

F.H.W.A. Approved:

Revision No.	Sheet No.	Index No.
94	1 of 1	17503

NOTE :
It Shall Be The Contractors Responsibility To Provide a Complete Service Assembly As Per The Plans And Service Specifications. The Service Installation Shall Meet The Requirements Of The National Electric Code And Applicable Local Codes. Shop Drawings Are Not Required For Service Equipment, Unless Noted In The Plans.

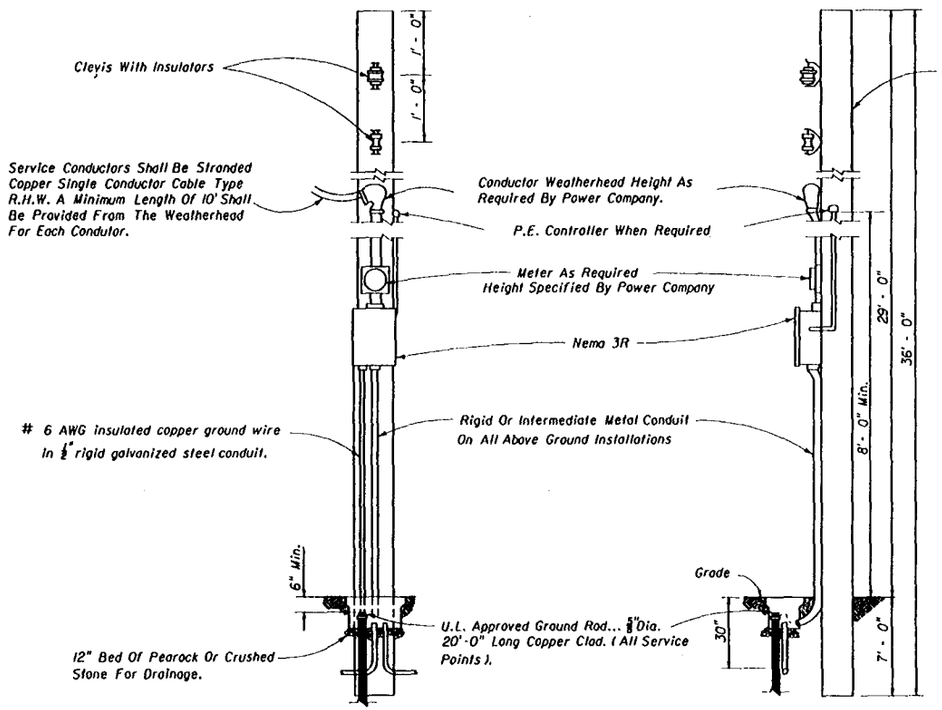

DETAIL "A"

AERIAL FEED

Notes:

1. Photo electric control as required.
2. All neutral wires to have white insulation, do not use white or green insulated wires for ungrounded conductors.
3. A pull box is required at each service point.

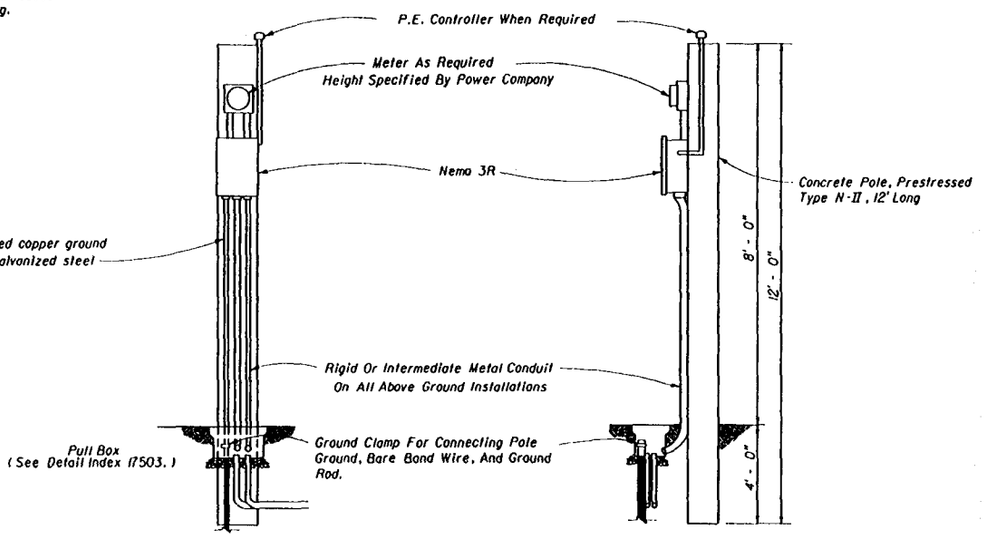

DETAIL "B"

UNDERGROUND FEED

SERVICE SPECIFICATIONS

1. The enclosure shall be NEMA 3R, pole mounted, rain-tight.
2. The enclosure door shall be lockable by padlock and four keys provided to the maintaining agency. The door shall have a minimum of three hinges and be latchable. No screws to be used to attach door.
3. 480 V minimum rating bolt-in type breakers shall be used.
4. Busbar to be copper coated and have a minimum rating of 100 amps. When main breaker exceeds 100 amps busbar to match breaker amperage.
5. Locate contactor, transformer, and H.O.A. switch inside enclosure. The enclosure to be sized to accomodate as many breakers as called for and all other service equipment.
6. The Enclosure to be rigidly attached to the pole face.
7. A 600 V lightning protector shall be wired inside the enclosure.
8. A main breaker is required in all service panels with 2 or more feeder breakers.
9. All service equipment shall be U.L. approved.

STATE OF FLORIDA DEPARTMENT OF TRANSPORTATION
TRAFFIC DESIGN

SERVICE POINT DETAILS

	Names	Dates
Designed By	G.K.	8-78
Drawn By		
Checked By		

Approved By
State Traffic Plans Engineer

F.H.W.A. Approved:

Revision No.	Sheet No.	Index No.
94	1 of 1	17504

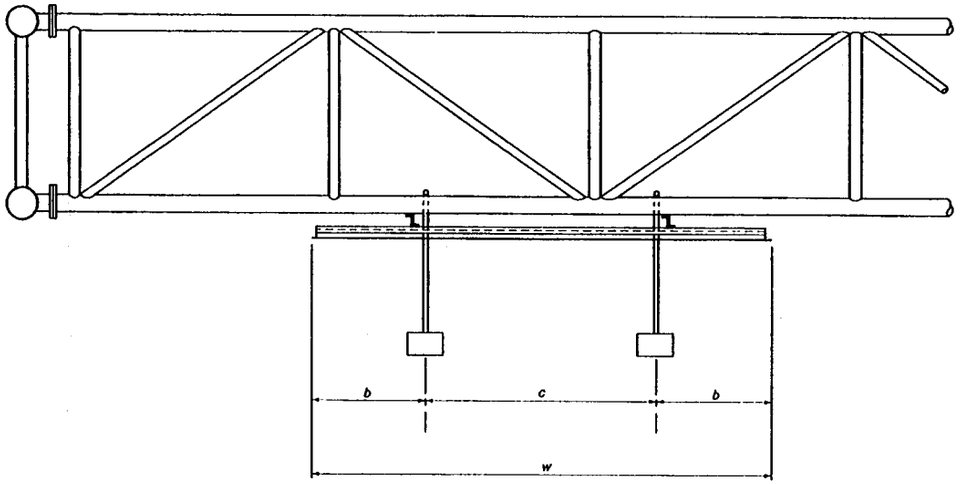

WIDTH OF SIGN FACE	10'-0" Or LESS	10'-1" To 21'-0"	21'-1" To 32'-0"	32'-1" To 43'-0"
NUMBER OF FIXTURES	ONE	TWO	THREE	FOUR
EQUATIONS FOR PLACING FIXTURES ALONG SIGN WIDTH	W = 2b	W = 2b+c	W = 2b+2c	W = 2b+3c
	c = 0	c = 2.2b	c = 2.2b	c = 2.2b

PLACEMENT OF SIGN LIGHTS

1- Luminaire shall be mounted so that the lamp center is 4' - 0" in front of the sign face.
2- Luminaire shall be mounted so that the back of the fixture is placed 1' - 0" below the bottom edge of the sign face.
3- Luminaires from manufacturers who recommended that their fixture be tilted shall be mounted on a bracket which provides this recommended tilt.
4- Photometric data for mercury vapor luminaire proposed for sign lighting shall be submitted for approval to the Lighting Engineer, Florida Department Of Transportation.

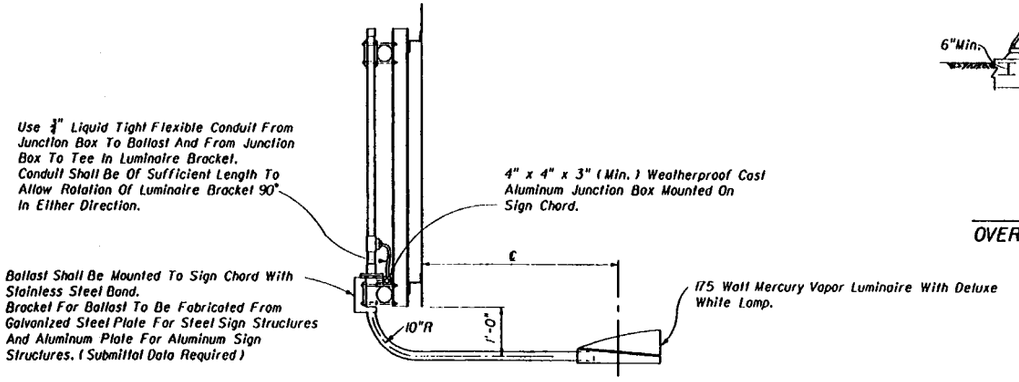

SIGN LIGHTING INSTALLATION

The roadway lighting contractor shall provide a means for sign service entry into a pole base or a pull-box installed in the lighting circuit, and loop 2' of lighting circuit conductors for connection by sign contractor.

The sign contractor shall furnish and install Luminaires, Nema 3R Enclosure, 30 Amp Breaker, Conduit, Conductors, and all other electrical equipment necessary for connection to roadway lighting circuit as provided by the roadway lighting contractor.

When roadway lighting circuits are not available the designer shall include pay item numbers in the plans to Furnish and Install Conduit, Conductor, Pull-Box, and Service Point Equipment.

Compression type connectors properly taped and waterproof shall be used.

See Roadway Lighting Plans for sign service locations.

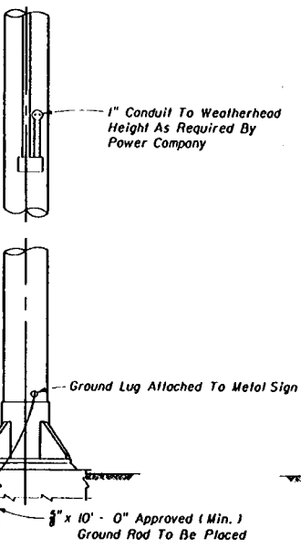

PLAN
OVERHEAD POWER SUPPLY

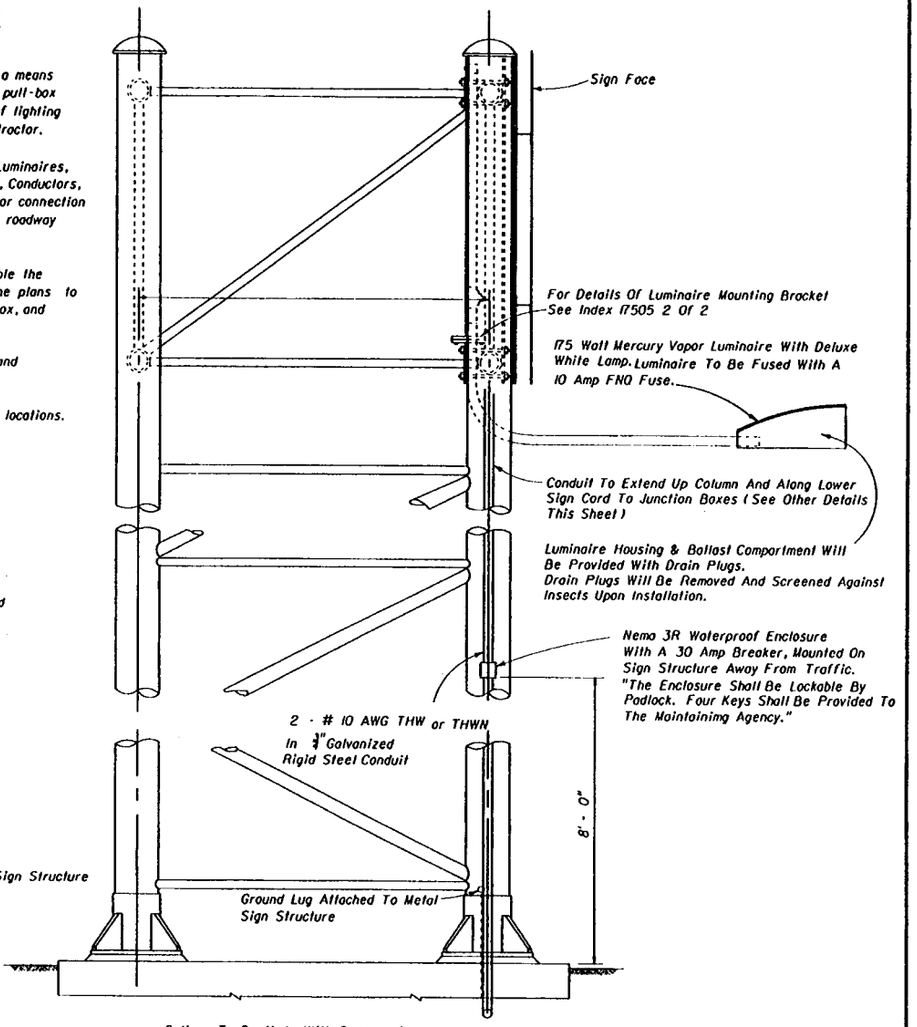

STATE OF FLORIDA DEPARTMENT OF TRANSPORTATION
TRAFFIC DESIGN

EXTERNAL LIGHTING FOR SIGN (MERCURY VAPOR)

	Names	Dates
Designed By		
Drawn By		
Checked By		

Approved By: Clark A Scott
State Traffic Engineer

F.H.W.A. Approved:

Revision No.	Sheet No.	Index No.
92	1 of 2	17505

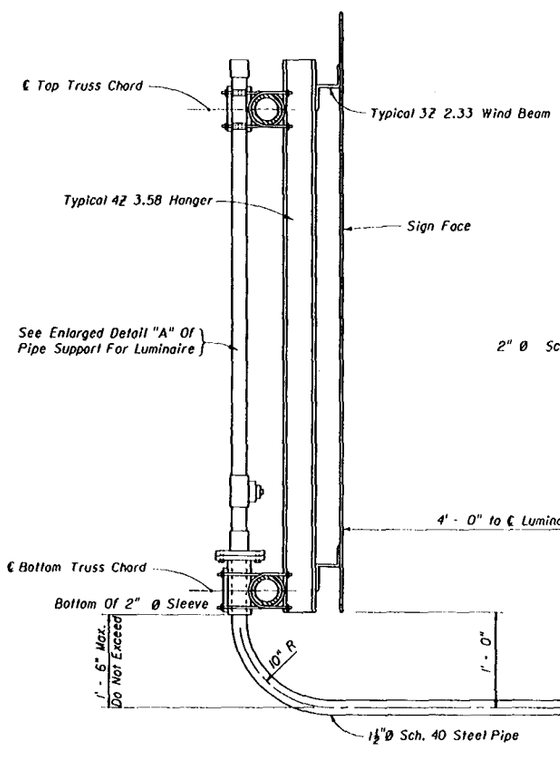

SECTION THROUGH SIGN SUPPORT AT LUMINAIRE

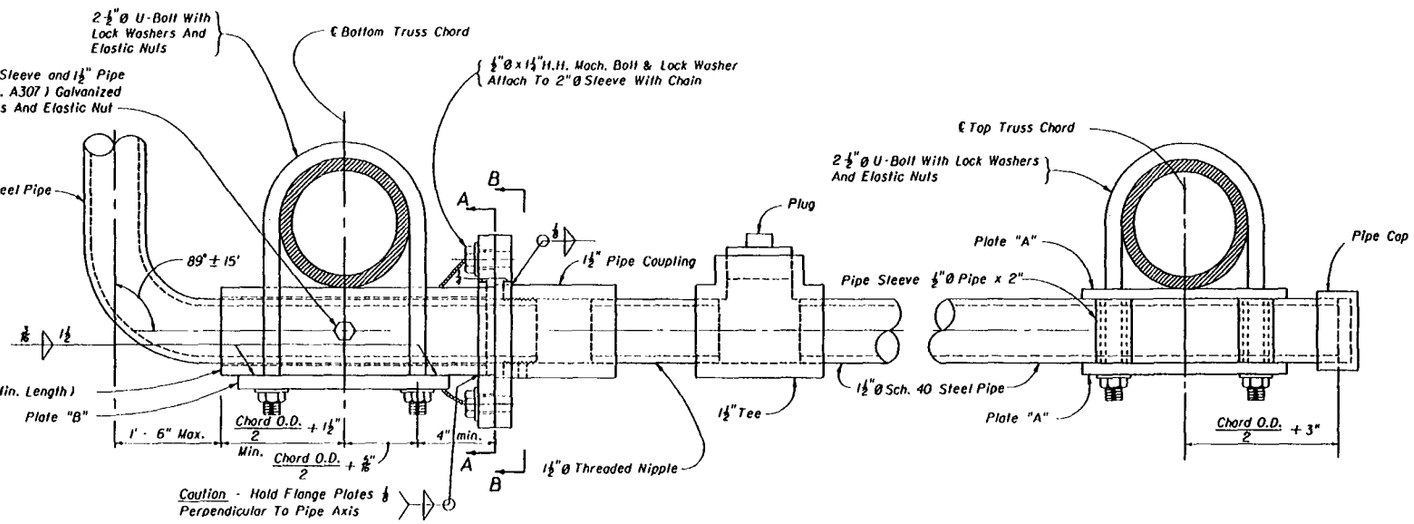

DETAIL "A"

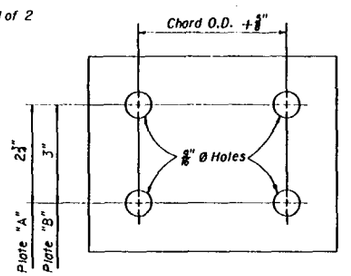

Plate "A" Chord O.D. + 2½" x ¼" x 4½"
Plate "B" Chord O.D. + 2½" x ⅜" x 5"

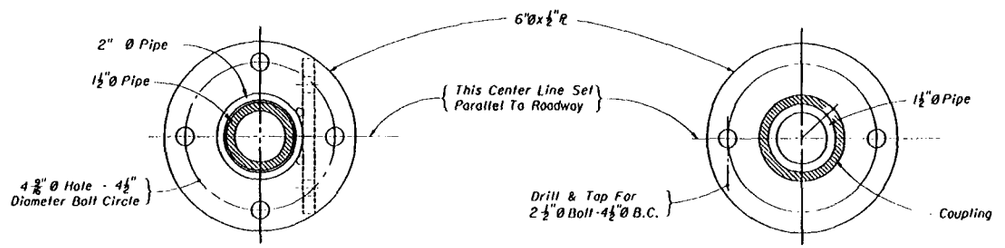

SECTION AA

SECTION BB

NOTES

1- Dimension "A" to be established from type and make of luminaire to be purchased and used on the project.

2- The center lines of both flange plates and the 1½" Ø pipe luminaire support arm are to be set parallel to the roadway before the set screw is seated.

3- Minor adjustments in the horizontal location of the luminaire support arm along the bottom chord of the truss will be allowed so that the flange plates will clear the truss web members.

4- All steel pipe shall meet the strength requirements of ASTM Specification A53 Grade "A" or Grade "B". Steel plates shall meet the requirements of A36 and bolts, nuts and washers shall meet the requirements of ASTM A307.

5- All items shall be hot dip galvanized after fabrication in accordance with the requirements of ASTM A123 and /or A153.

6- Luminaire support arm shall be free to rotate in a clockwise or counter clockwise direction. When service or maintenance is required for sign face or vertical face of truss; Support arm shall be capable of being locked in a position 90° from parallel to the roadway for unobstructed working clearance.

STATE OF FLORIDA DEPARTMENT OF TRANSPORTATION
TRAFFIC DESIGN

EXTERNAL LIGHTING FOR SIGNS (MERCURY VAPOR)

	Names	Dates
Designed By	CK	
Drawn By		
Checked By	CWB	
F.H.W.A. Approved:		

Approved By Charles Catt

Revision No.	Sheet No.	Index No.
88	2 of 2	17505

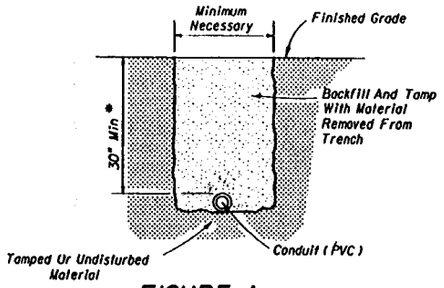

FIGURE A

FOR USE IN AREAS NOT EXPOSED TO VEHICULAR TRAFFIC AND UNDER DRIVEWAYS

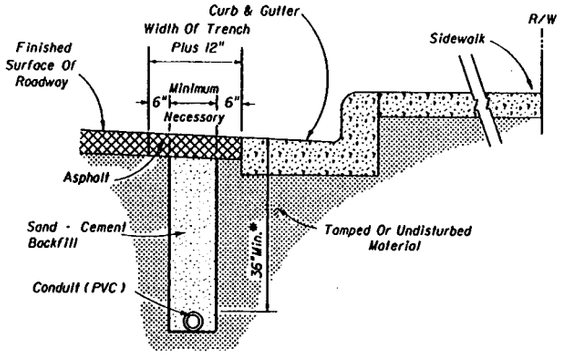

FIGURE B

FOR USE IN ASPHALT ROADWAY ADJACENT TO GUTTER WHEN PLACEMENT OUTSIDE OF THE PAVEMENT IS NOT FEASIBLE.

Note

1. Trench not to be open more than 250' at a time when construction area is subject to vehicular of pedestrion traffic.
2. Asphalt to be sawcut and removed to leave neat lines on both sides of the 12" pavement cut.
3. See note 3 figure C.

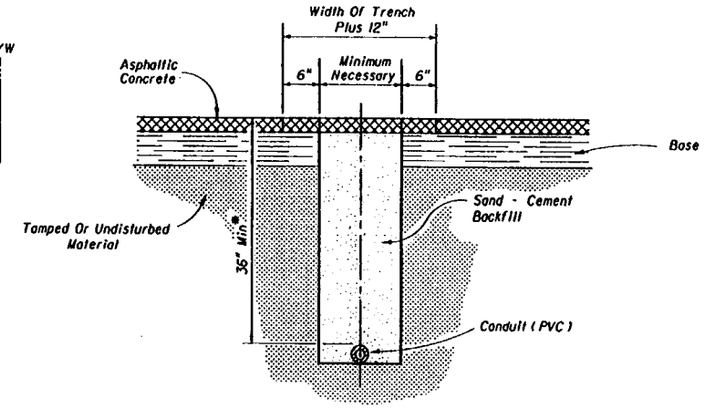

FIGURE C

FOR USE IN INSTALLING CONDUIT UNDER EXISTING ASPHALT PAVEMENT NOT ADJACENT TO GUTTER WHEN JACKING IS NOT FEASIBLE

Note:

1. Rigid conduit must be used when jacking under existing pavement at 3 ft. minimum depth.
2. Asphalt to be sawcut at the edges of the trench.
3. The removal and replacement of the additional pavement width (6") will not be required when the trench can be constructed without disturbing the asphalt surface on either side.

* May be adjusted in field due to field conditions upon approval of project engineer.

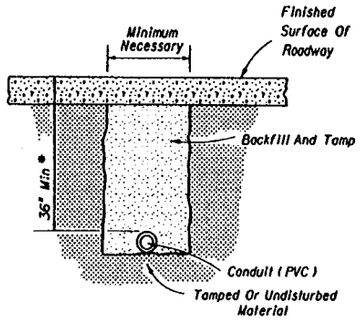

FIGURE D

FOR USE INSTALLING CONDUIT UNDER A NEW ROADWAY PRIOR TO INSTALLATION OF CURBS, BASE AND PAVEMENT

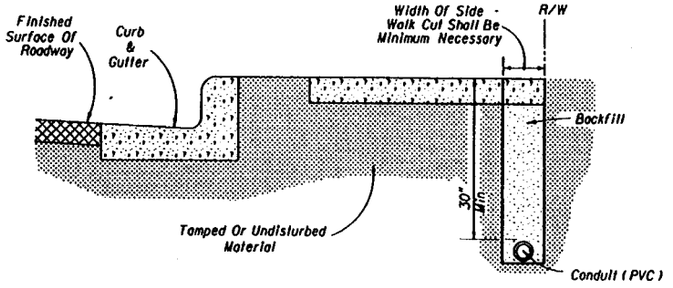

FIGURE E

FOR USE IN INSTALLING CONDUIT UNDER SIDEWALK

Note:

1. Sidewalk patches to match existing joints.
2. Entire sidewalk slab must be replaced when specified in the plans.
3. Backfill and tamp with material from trench except at driveways. At driveways, backfill a length of trench within the driveway entirely with Class I concrete.

STATE OF FLORIDA DEPARTMENT OF TRANSPORTATION
TRAFFIC DESIGN

CONDUIT INSTALLATION DETAILS

	Names	Dates
Designed By	CG	02/75
Drawn By		
Checked By	RK	02/75
F.H.W.A. Approved:		

Approved By: Charles Scott

Revision No.	Sheet No.	Index No.
84	1 of 2	17721

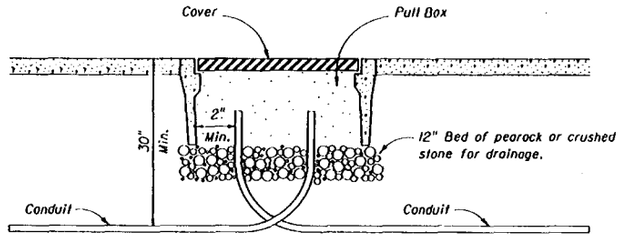

FIGURE A

PULL BOX ENTRY OF CONDUIT UNDER SIDEWALKS

Note:
Ends of conduit shall be sealed in accordance with section 630 of the Standard Specifications for Road and Bridge Construction.

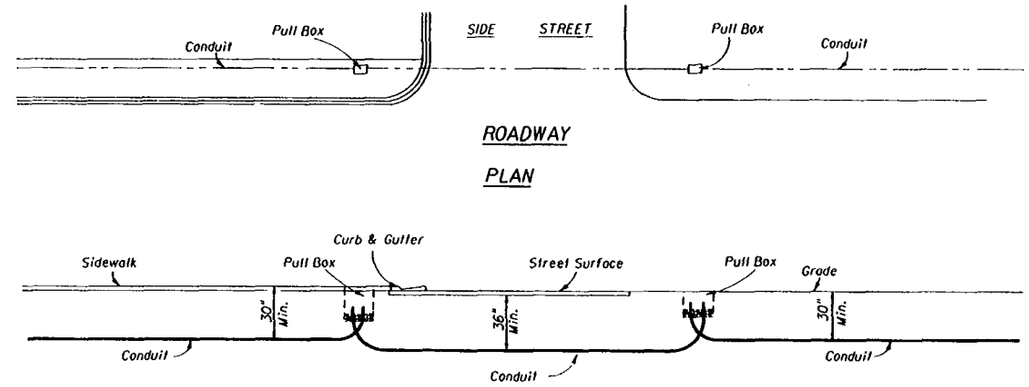

FIGURE B

Note:
One run of conduit (between pull boxes) shall not contain more than 360° of bend including pull box bends.

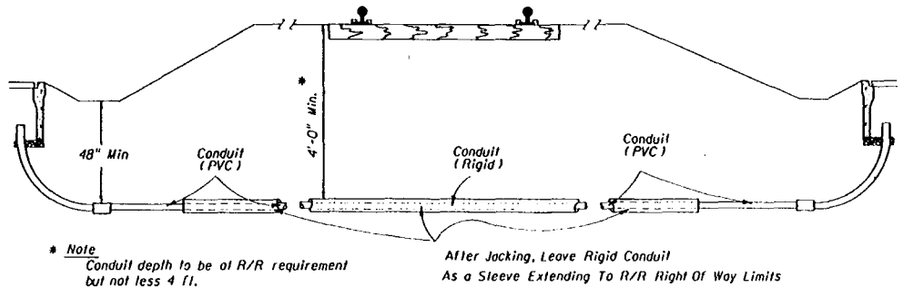

FOR USE UNDER RAILROADS

FIGURE C

STATE OF FLORIDA DEPARTMENT OF TRANSPORTATION
TRAFFIC DESIGN

CONDUIT INSTALLATIONS DETAILS

	Names	Dates
Designed By		
Drawn By		
Checked By		

Approved By: Clark A. Scott, State Traffic Plans Engineer

F.H.W.A. Approved:

Revision No.	Sheet No.	Index No.
94	2 of 2	17721

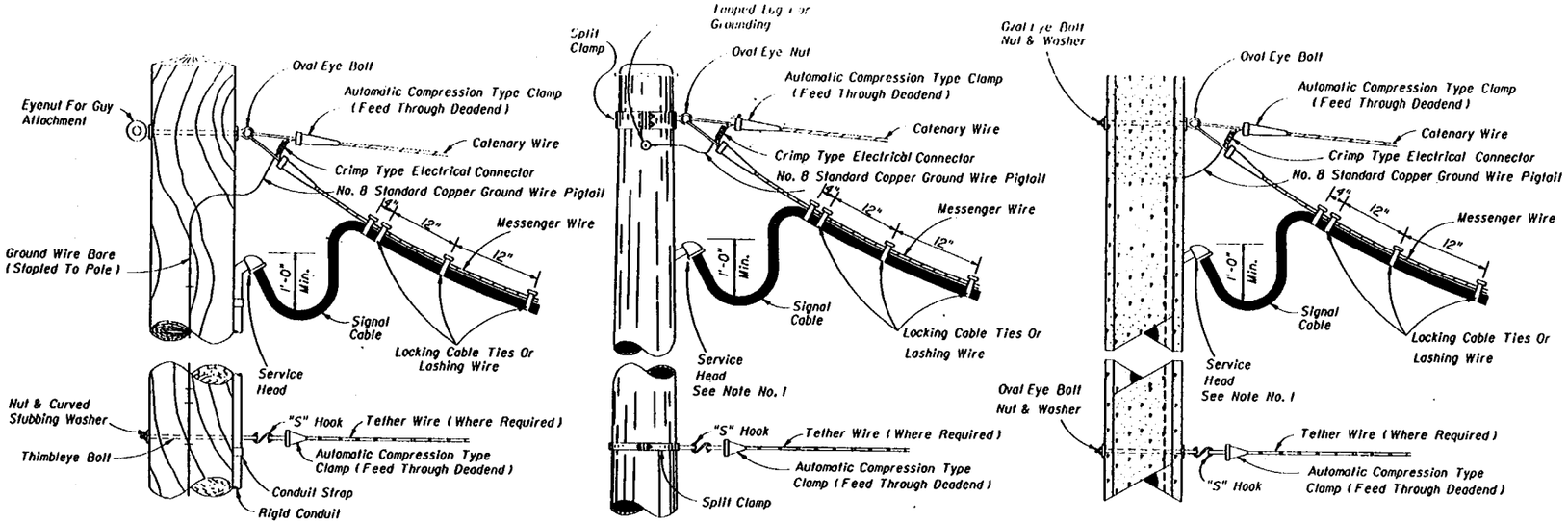

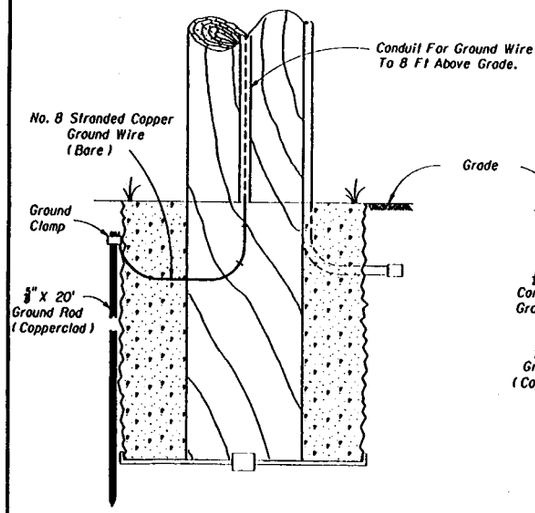

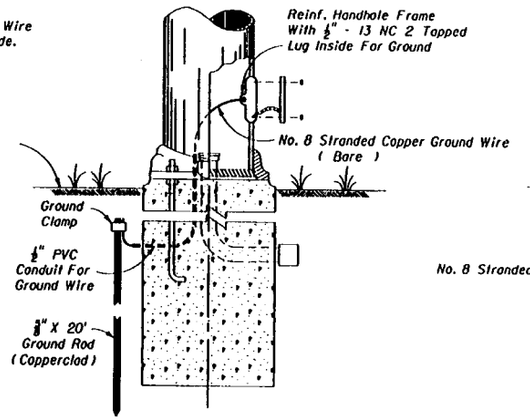

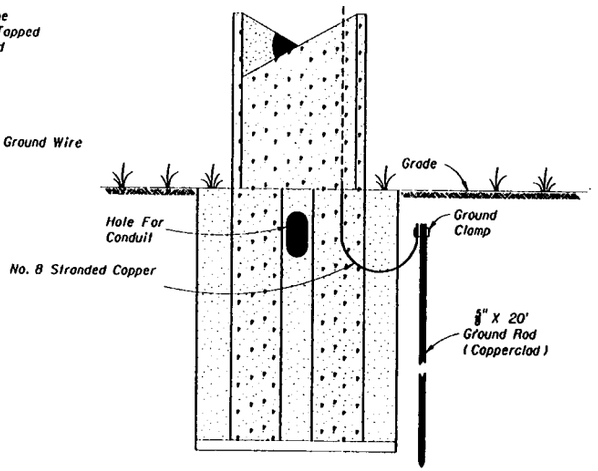

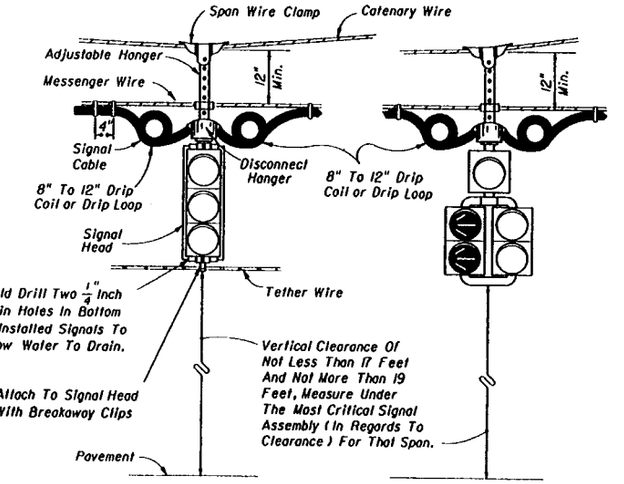

Notes:

1. With the approval of the resident engineer, the service head hole for joint use poles may be drilled by the utility company at an angle of 90° but not less than 45° to the face of the pole.
2. Lashing wire should normally be used for distances of 12' feet or greater.
3. The overlapped connection of adjustable hangers shall use a minimum of 2 bolts with a minimum spacing between bolts of 2".

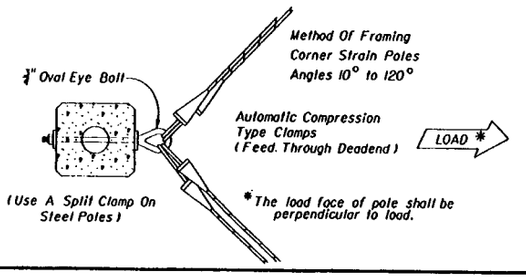

STATE OF FLORIDA DEPARTMENT OF TRANSPORTATION
TRAFFIC DESIGN

SIGNAL CABLE & SPAN WIRE INSTALLATION DETAILS SINGLE POINT ATTACHMENT

	Names	Dates
Designed By		
Drawn By		
Checked By		
F.H.W.A. Approved:		

Approved By: Clark A. Scott
State Traffic Plans Engineer

Revision No.	Sheet No.	Index No.
92	1 of 2	17727

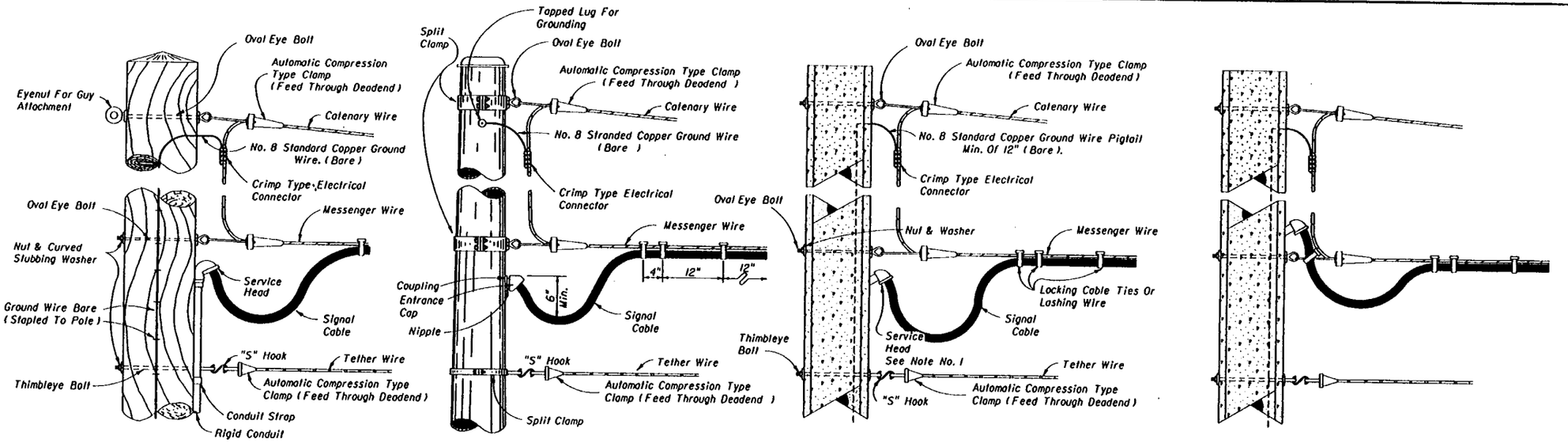

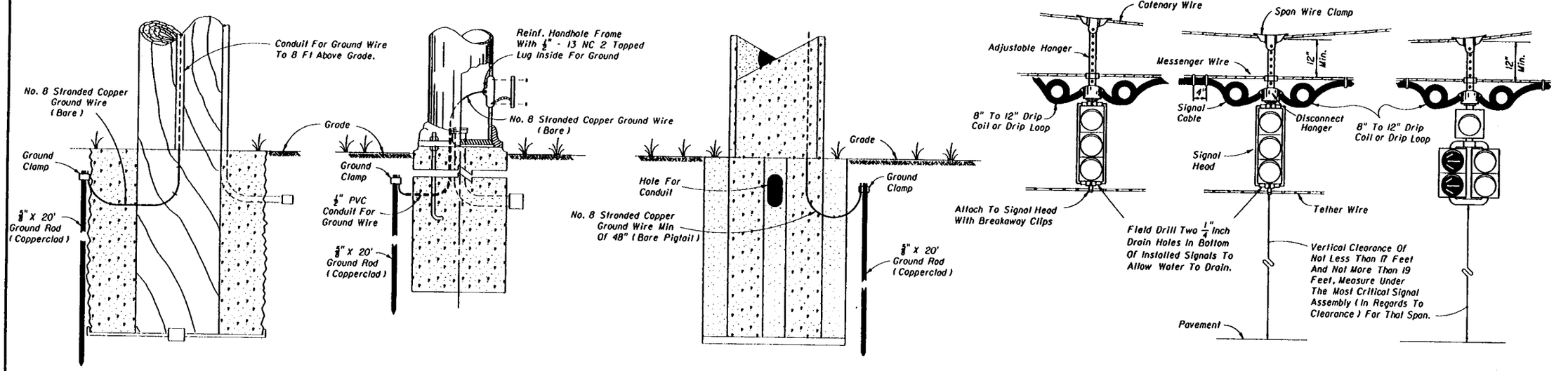

Notes:

1. The service head hole for joint use poles may be drilled by the utility company at an angle of 90° but not less than 45° to the face of the pole.
2. Lashing wire should normally be used for distances of 12' feet or greater.
3. The overlapped connection of adjustable hangers shall use a minimum of 2 bolts with a minimum spacing between bolts of 2".

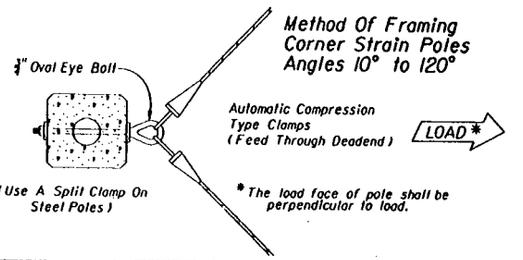

Method Of Framing Corner Strain Poles Angles 10° to 120°

STATE OF FLORIDA DEPARTMENT OF TRANSPORTATION
TRAFFIC DESIGN

SIGNAL CABLE & SPAN WIRE INSTALLATION DETAILS
TWO POINT ATTACHMENT

	Names	Dates
Designed By		
Drawn By		
Checked By		

Approved By: Charles A. Scott
State Traffic Plans Engineer

F.H.W.A. Approved:

Revision No.	Sheet No.	Index No.
92	2 of 2	17727

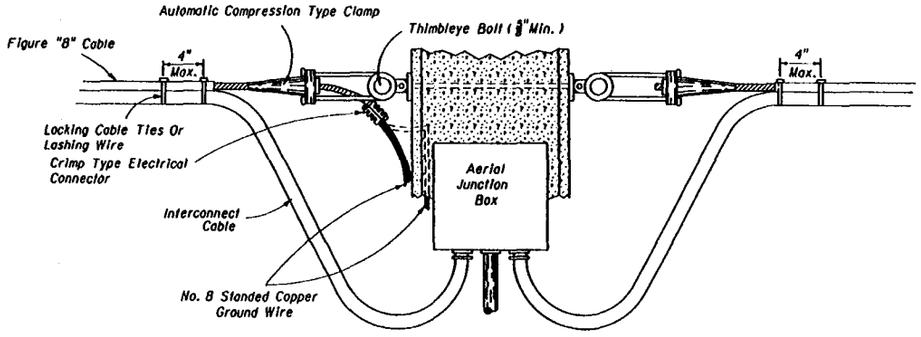

FIGURE A

CABLE DROP AND TERMINATION DETAIL
AERIAL INTERCONNECT FIGURE "8"

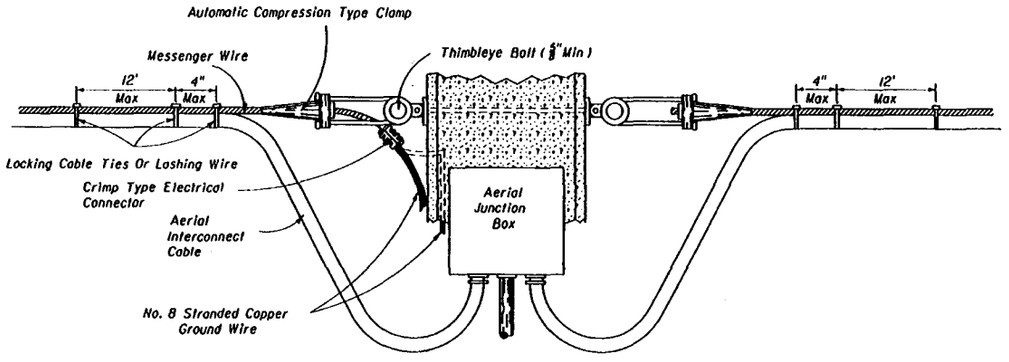

FIGURE B

CABLE DROP AND TERMINATION DETAIL
AERIAL INTERCONNECT MESSENGER WIRE WITH CLAMPS

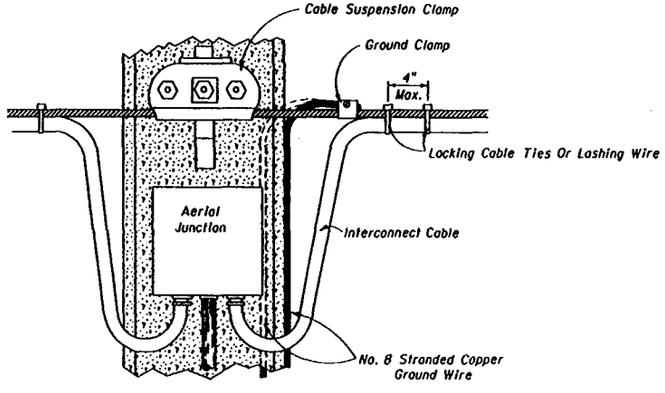

FIGURE C

CABLE DROP DETAIL
AERIAL INTERCONNECT MESSENGER WIRE WITH CLAMPS

Notes:

1. The messenger wire of the interconnect cables shall be grounded to the copper ground wire of the pole or to the external wire extending down the pole.
2. When utilizing the external ground wire to the pole, a piece of ½" rigid conduit shall extend up the pole externally to a point eight (8) feet above finish grade to protect the ground wire connecting the messenger wire to the ground rod.
3. Locking cable ties or lashing wire when used shall be placed no further than one (1) foot apart except at the point of cable drop or terminations where one (1) shall be placed at the point where the cables separate from the messenger wire and another placed four (4) inches (max) from that tie. When using figure "8" interconnect cable only the locking cable ties shall be used.
4. If accessible the internal ground wire of the support pole may be used to ground the messenger wire.
5. Lashing wire should normally be used for distances of 12 feet or greater.

STATE OF FLORIDA DEPARTMENT OF TRANSPORTATION
TRAFFIC DESIGN

AERIAL INTERCONNECT

	Names	Dates
Designed By		
Drawn By		
Checked By		
F.H.W.A. Approved:		

Approved By: Clark A. Scott

Revision No.	Sheet No.	Index No.
84	1 of 1	17733

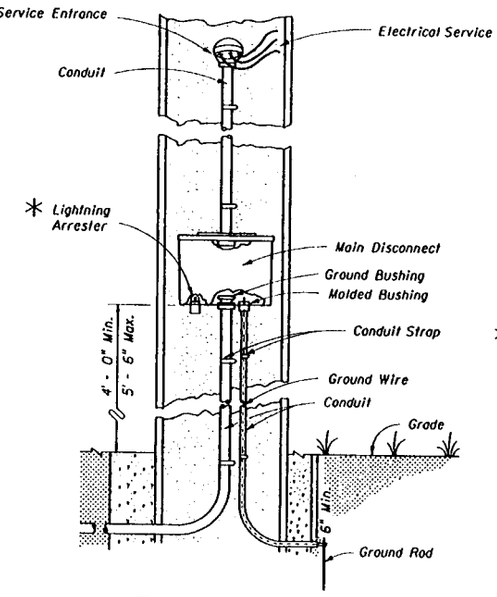

FIGURE A
AERIAL FEED
(NO METER USED)

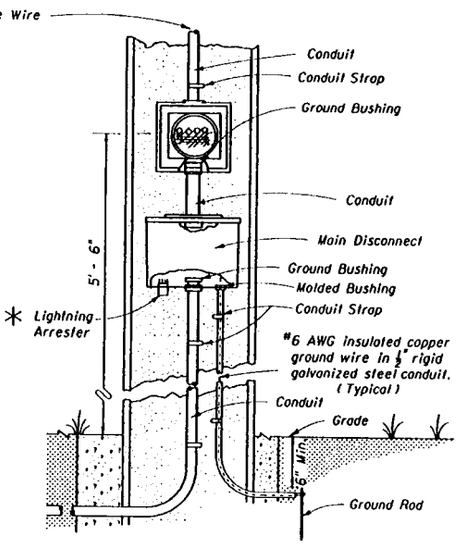

FIGURE B
AERIAL FEED
(METER USED)

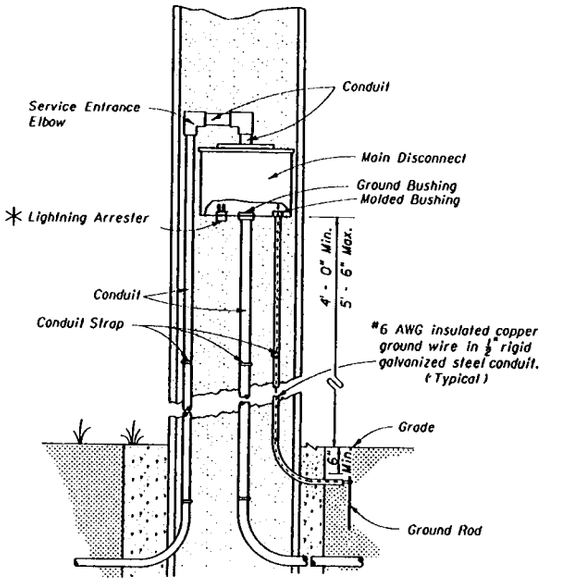

FIGURE C
UNDERGROUND FEED
(NO METER USED)

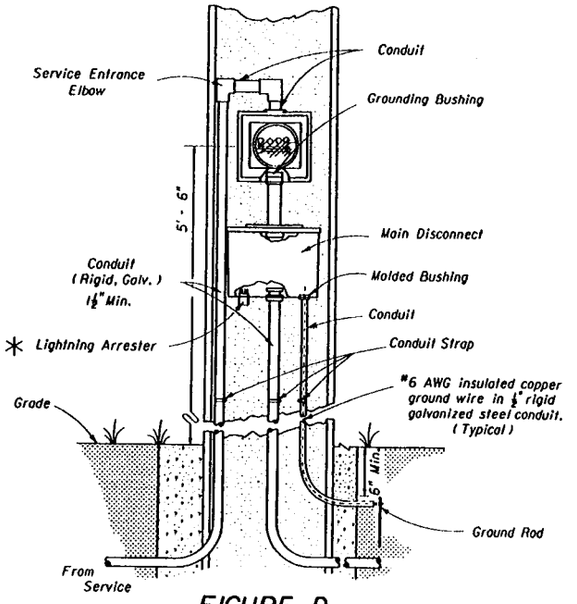

FIGURE D
TYPE "B" UNDERGROUND FEED
(METER USED)

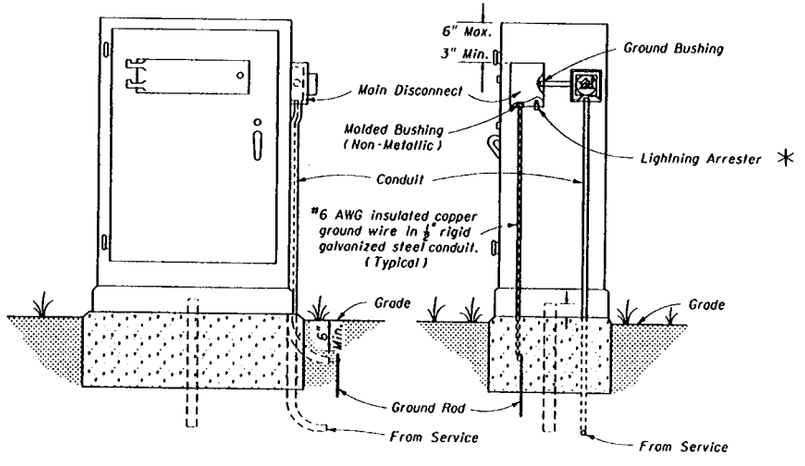

FIGURE E
UNDERGROUND CABINET MOUNTED
(METER USED)

NOTES:

1. * The lightning arrester can be located on the side or bottom of the main disconnect enclosure at the Contractors Option.

2. Liquidtight flexible conduit is approved for use from the electrical disconnect to the cabinet when both are installed on the same pole.

STATE OF FLORIDA DEPARTMENT OF TRANSPORTATION
TRAFFIC DESIGN

ELECTRIC POWER SERVICE

	Names	Dates
Designed By		
Drawn By	Mick	09/80
Checked By	J.R.M.	

Approved By: Charles Scott
State Traffic Plans Engineer

F.H.W.A. Approved:

Revision No.	Sheet No.	Index No.
94	1 of 1	17736

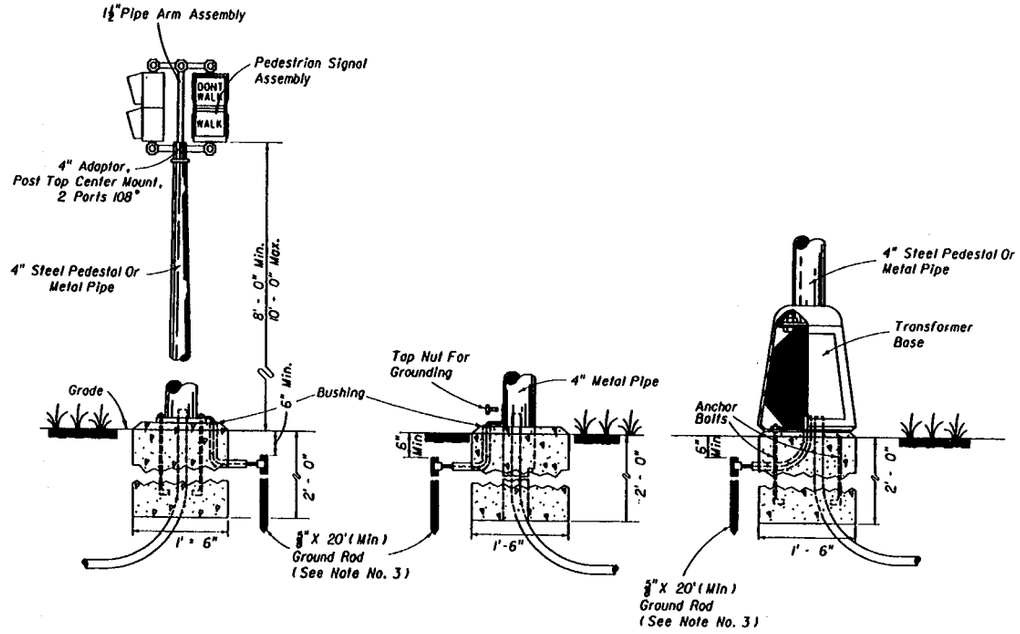

FIGURE A

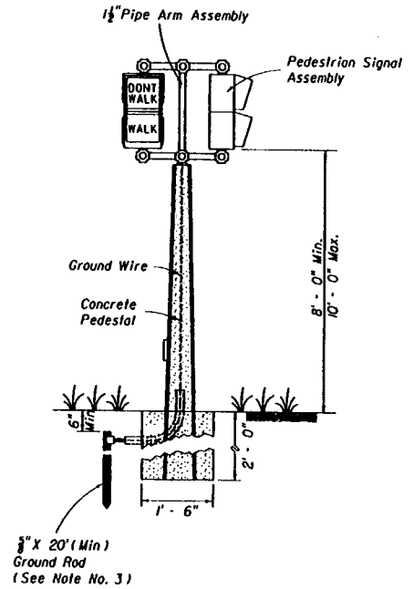

FIGURE B

Notes:

1. As an option, the contractor will be allowed to install pedestrian signals on concrete poles and pedestals with the use of lead anchors (two bolts same size per hub.) in lieu of the standard steel bands.
2. Holes drilled or punched in metal poles or pedestals shall be thoroughly reamed, cleaned of all burrs and covered with two (2) coats of zinc rich paint. As specified in the standard specifications for road and bridge, constructions. Grommets or bushings shall be installed in holes.
3. Grounding to be in accordance with section 620 of the standard specifications.

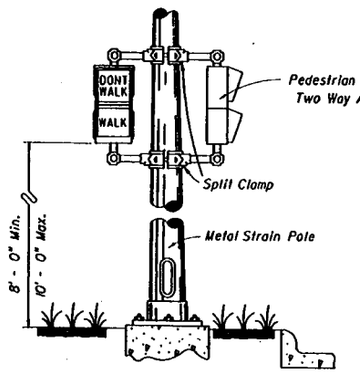

FIGURE C

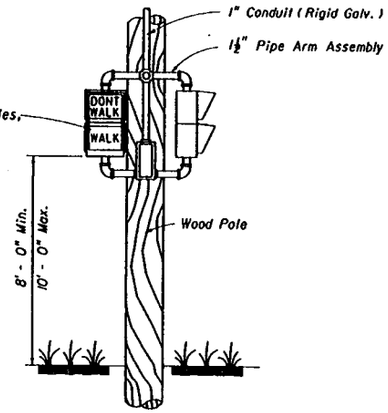

FIGURE D

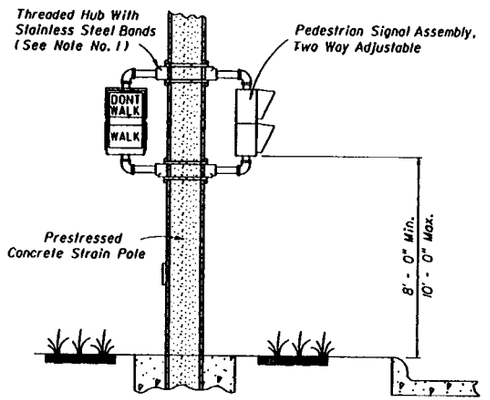

FIGURE E

STATE OF FLORIDA DEPARTMENT OF TRANSPORTATION
TRAFFIC DESIGN

PEDESTRIAN CONTROL SIGNAL INSTALLATION DETAIL

	Names	Dates
Designed By		
Drawn By	Mick	09/80
Checked By		
F.H.W.A. Approved:		

Approved By: Charles Scott

Revision No.	Sheet No.	Index No.
80	1 of 1	17764

DETAILS FOR SPLICING LOOP WIRE TO LEAD-IN WIRE

STEP 1

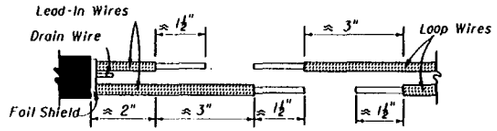

Strip Loop And Lead-In Cable Conductors. If Heat Shrinkable Silicone Lined, Cross Linked Polyethylene Insulating Tubing Is To Be Used, Slip Tubing Over Lead-In Cable And Individual Conductors.

STEP 2

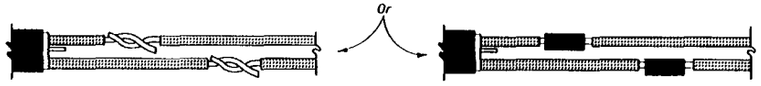

Twist The Bare Conductors Together.

Crimp The Bare Conductors Together With An Uninsulated Butt Connector.

STEP 3



Solder Each Splice Using Resin-Core Solder.

Solder Each Splice Using Resin-Core Solder.

STEP 4



Wrap Each Splice With Silicone Tape. Half Lap Starting At Center Of Splice And Proceeding To The Right (Or Left) ≈ ¾" Past End Of Splice, Then Proceeding To The Left (Or Right) ≈ ¾" Past Other End Of Splice And Returning To Center. Wrap Each Splice, With An All Weather Heavy Duty Electrical Tape In The Same Manner ≈ ¾" Past Each End Of Silicone Tape.

Slide Heat Shrinkable Tubing Over Splices. The Tubing Shall Cover ≈ 1" Of Conductor Insulation At Each End Of Splice. Heat Tubing As Specified By Manufacturer

STEP 5

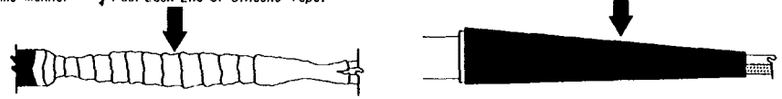

Half Lap The Two Splices Together With An All Weather Heavy Duty Electrical Tape ≈ 1" Past The End Of The Lead-In Cable Outside Cover And ≈ 1" Past Farther Most Wrap Of Step 4.

Slide Outer Heat Shrinkable Tubing Over Entire Splice Area. The Tubing Shall Cover ≈ 1½" Of The Lead-In Cable Outside Cover And ≈ 1" Of The Loop Conductor Insulation.

TWISTED PAIR AND LOOP LEAD-IN INSTALLATION WITH CURB & GUTTER

ALTERNATIVE 1

Drill A Hole Through The Curb At The Point Which The Required Saw-Cut Depth Is Obtained Just Prior To Cutting The Top Inside Edge Of The Curb. Slide A Section Of Flexible Conduit At Least 6" Into The Hole From The Back Side Of The Curb But Not Within 2" Of The Top Of The Hole. The Conduit Shall Fit Snug Within The Drilled Hole. Fill The Top Of The Hole With Loop Sealant To The Level Of The Curb Surface. A Nonmetallic Material Should Be Used To Prevent Excessive Loop Sealant From Entering The Flexible Conduit.

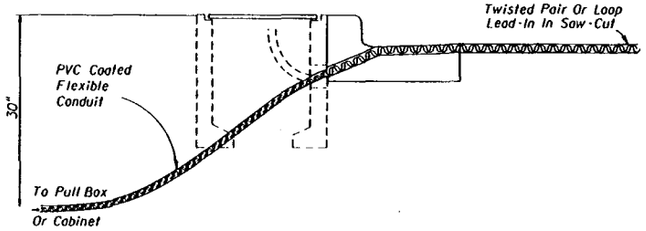

ALTERNATIVE 2

Drill A Hole ½" To 1" Larger In Diameter Than The Rigid Conduit To Be Used Through The Roadway Asphalt (Or Concrete) Surface And Base At An Appropriate Angle To Intercept The Trench Or Pull Box Hole. Place A Predetermined Length Of Rigid Conduit In The Hole And Drive The Conduit Into The Trench Or Hole. Install A Molded Bushing (Nonmetallic) On The Roadway End Of The Rigid, Conduit. The Top Of The Rigid Conduit Shall Be Approximately 2" Below The Roadway Surface. Fill The Hole With Loop Sealant To The Level Of The Roadway Surface. A Nonmetallic Material Should Be Used To Prevent Excessive Loop Sealant From Entering The Rigid Conduit.

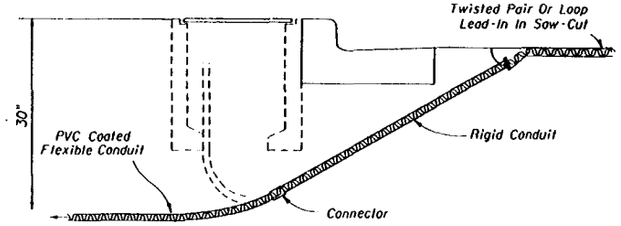

Note
Other alternatives may be approved by the State Traffic Operations Engineer.

TWISTED PAIR AND LOOP LEAD-IN INSTALLATION WITHOUT CURB & GUTTER

Cut A Slot In The Edge Of The Roadway Of Sufficient Size And Depth To Snugly Place The End Of The Flexible Conduit. The End Of The Conduit Shall Be At Least 6" Into The Roadway And ≈ 2" Below The Top Of The Roadway Surface. The Departure Angle Of The Conduit From The Roadway Shall Be 30° To 45°.

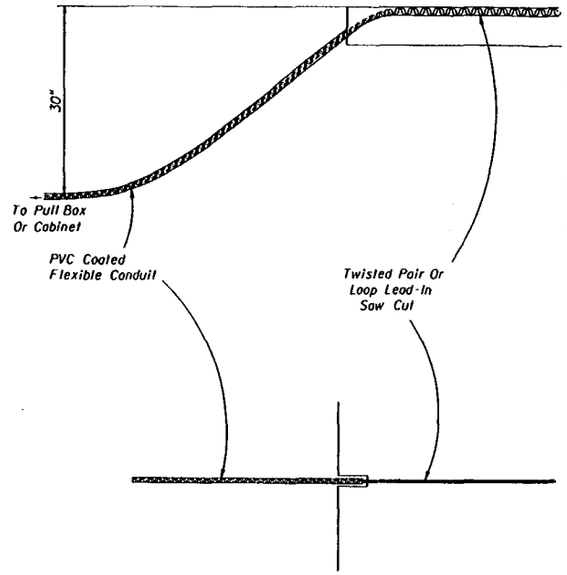

Note
Other alternatives may be approved by the State Traffic Operations Engineer.

GENERAL NOTES

1. If the loop lead-in is 75' or less from the edge of the loop to the detector or controller cabinet, continue the twisted pair to the cabinet. If the loop lead-in is greater than 75', continue the twisted pair to the specified pull box, splice to shielded lead-in wire and continue to the detector or controller cabinet.
2. The depth of all saw-cuts (except across expansion joints) shall not exceed 2.00 inches nor be less than 1.75 inches with 2.00 inches being standard. The width of all saw-cuts shall be sufficient to allow unforced placement of loop wires or lead-in cables into the saw-cut.
3. On resurfacing or new roadway construction projects, the loops and lead-in cables may be installed in the asphalt structural course prior to the placement of the final asphalt wearing course provided that the loop wire is not installed greater than two inches below the final wearing surface. In order to protect the wire during construction, the loops and lead-in cables shall be placed in a saw-cut deep enough (.50 to .75 inch below the surface of the structural course) to allow the final wearing course to be laid over the loops.
4. A nonmetallic hold down material shall be used to secure loop wires and lead-ins to the bottom of saw-cuts. Hold down material shall be placed at approximately one foot intervals around loops and two foot intervals on lead-ins.
5. The minimum distance between the twisted pairs of loop lead-in wire is 6" from the loop to one foot from the pavement edge or curb.
6. Splice Connections in pull boxes may be made with U.L. listed, watertight, insulated connectors in lieu of the details above. The lead-in cable insulation shall be sealed using electrical tape or heat shrinkable tubing (refer to step 5 above). The seal shall extend approximately 1" either side of the lead-in cable outer cover.

STATE OF FLORIDA DEPARTMENT OF TRANSPORTATION
TRAFFIC DESIGN

VEHICLE LOOP INSTALLATION DETAILS

	Names	Dates
Designed By		
Drawn By		
Checked By		
F.H.W.A. Approved:		

Approved By: Clark A Scott
State Traffic Plans Engineer

Revision No.	Sheet No.	Index No.
94	1 of 2	17781

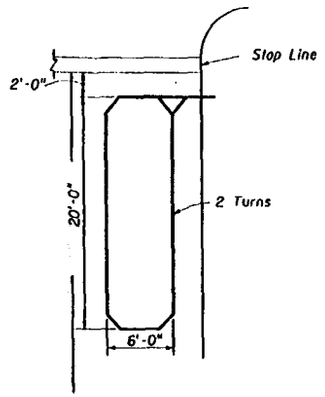

TYPE A

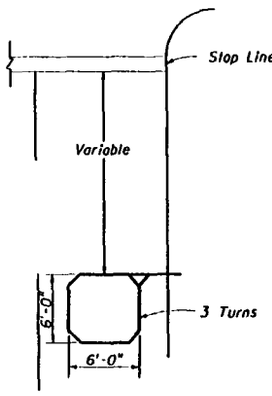

TYPE B

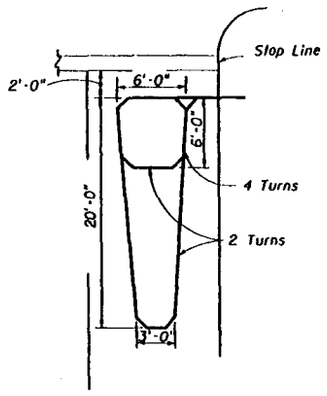

TYPE C

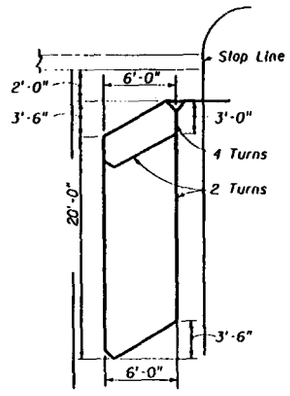

TYPE D

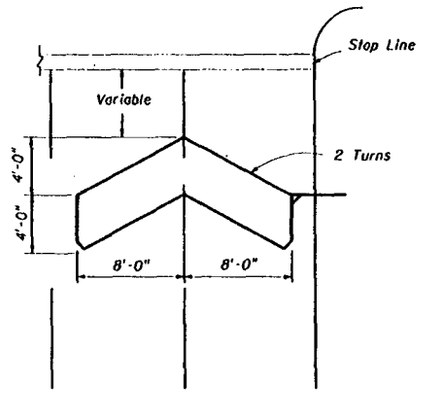

TYPE E

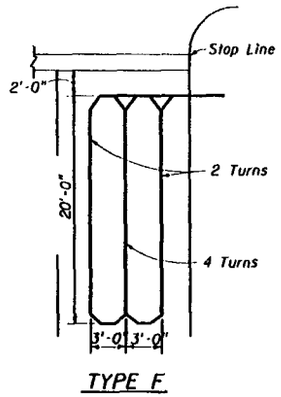

TYPE F

Note: Loop conductors must follow saw-cut to bottom forming slock section at joint.

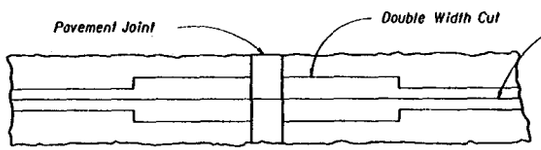

PLAN

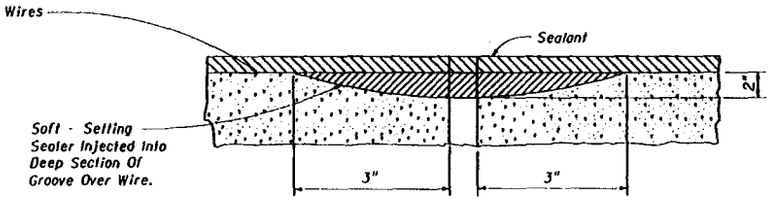

VERTICAL SECTION

CONCRETE PAVEMENT EXPANSION JOINTS

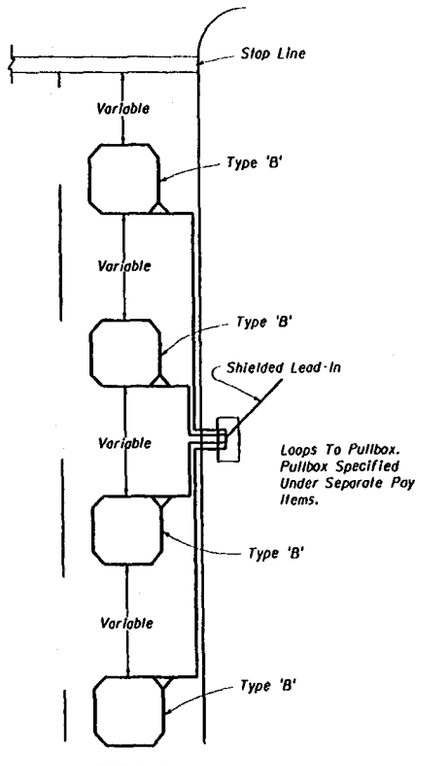

TYPE G

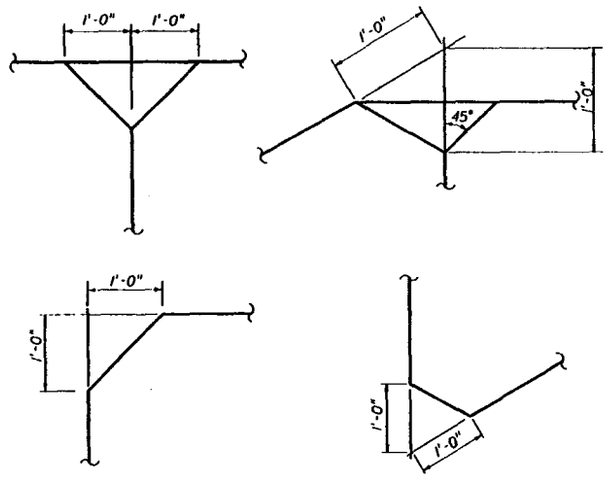

LOOP CORNER AND LEAD-IN DETAILS

Notes:

1. The "number of turns" indicated at the specified point on the loop refers to the number of passes of loop wires which are placed in the saw-cut forming the complete loop.
2. Loop types or details not drawn to scale.
3. Loop Types are centered in a single lane except Type E which is centered on two lanes.
4. The number of individual loops in the Type G loop may vary up to a maximum of four (4).
5. Lead-in may be connected to either end of loop.
6. The leading edge of loop Types A,C,D,& F may extend past the stop line a maximum of 10 feet. The length of these loops may be extended to a maximum of 60 feet. Each intersection should be individually designed and if the modifications noted above is required it must be noted or detailed in the plans.
7. Loop lead-in wires should not be installed in the same pull box with signal power cable.

STATE OF FLORIDA DEPARTMENT OF TRANSPORTATION
TRAFFIC DESIGN

VEHICLE LOOP INSTALLATION DETAILS

	Names	Dates
Designed By		
Drawn By		
Checked By		
F.H.W.A. Approved:		

Approved By C. Clark A. Scott
State Traffic Plans Engineer

Revision No.	Sheet No.	Index No.
94	2 of 2	17781

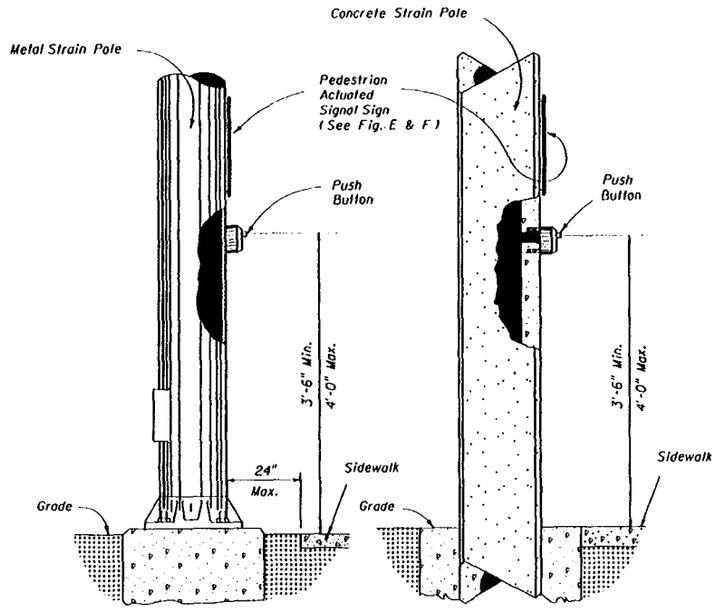

FIGURE A
POLE MOUNTED
DETECTOR STATION

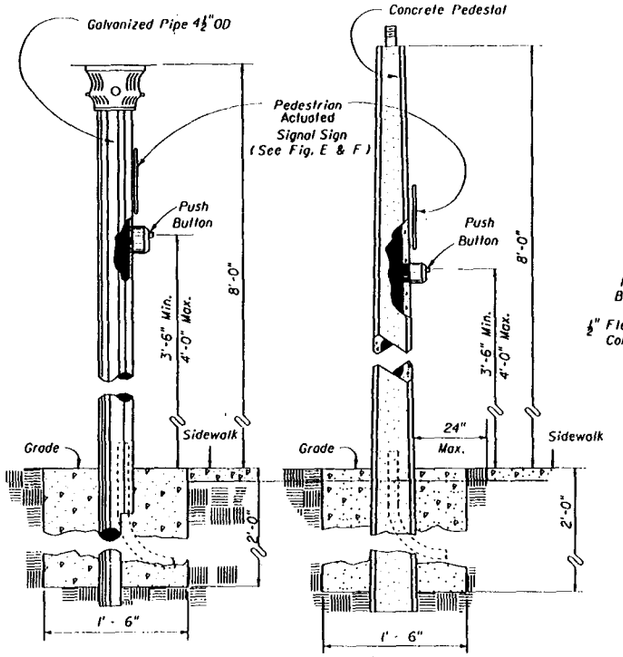

FIGURE B
PEDESTAL STATION
DETECTOR STATION

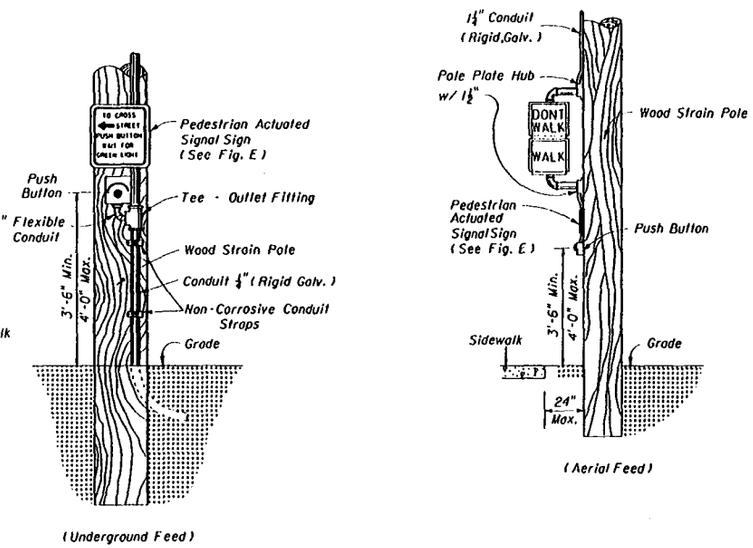

FIGURE C
WOOD POLE MOUNTED
DETECTOR STATION

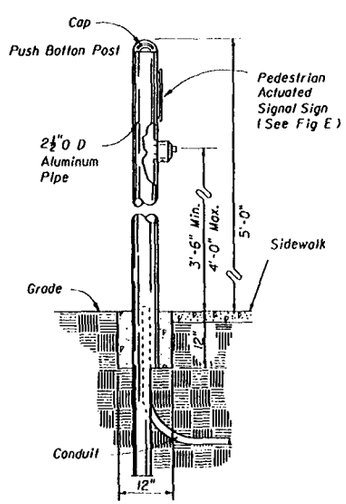

FIGURE D
POST DETECTOR STATION
DETECTOR STATION

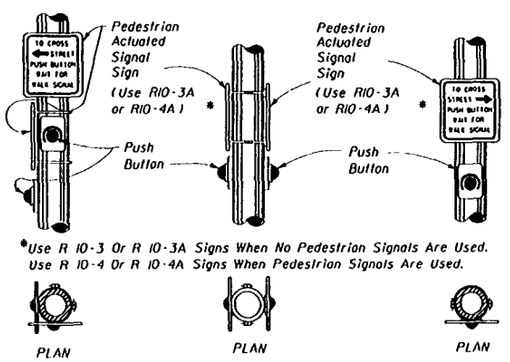

*Use R 10-3 Or R 10-3A Signs When No Pedestrian Signals Are Used.
Use R 10-4 Or R 10-4A Signs When Pedestrian Signals Are Used.

FIGURE E

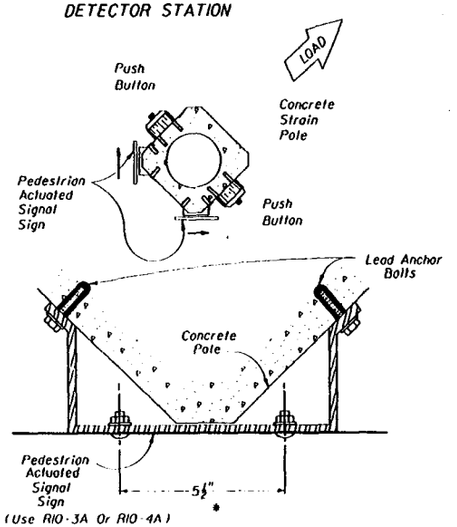

FIGURE F

Notes

1 Signs (R10-3A & R10-4A) shall be mounted above detectors, explaining their purpose and use.

2 The positioning of pedestrian push button should clearly indicate which cross-walk signal is actuated by each push button.

3 Push buttons and signs are to be mounted in accordance with Standard Specifications.

4 Ground to be in accordance with section B620 of Standard Specifications.

STATE OF FLORIDA DEPARTMENT OF TRANSPORTATION
TRAFFIC DESIGN

PEDESTRIAN DETECTOR ASSEMBLY INSTALLATION DETAILS

	Names	Dates
Designed By	J.M.C.	
Drawn By		
Checked By		

Approved By Clark A. Scott
State Traffic Plans Engineer

Revision No.	Sheet No.	Index No.
90	1 of 2	17784

F.H.W.A. Approved:

o:\cliffiles\17784s01.dgn

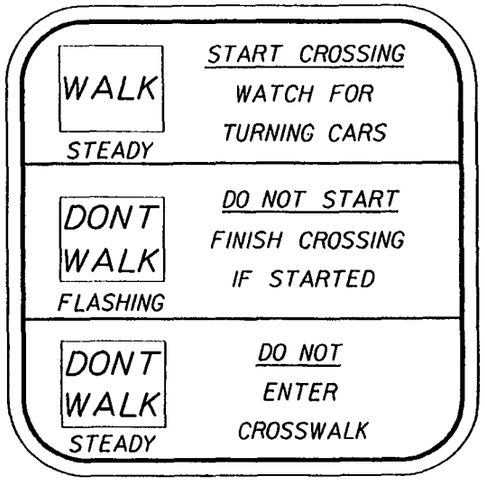

FTP-49

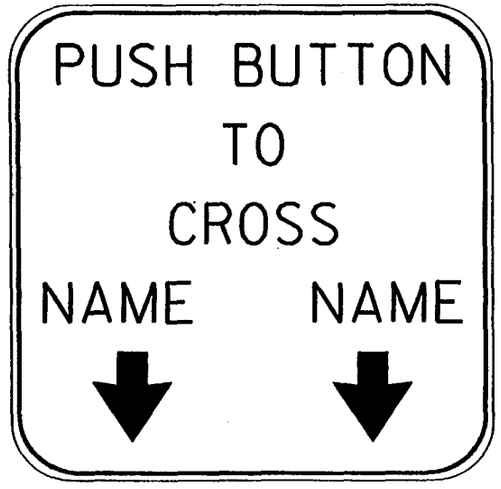

FTP-48

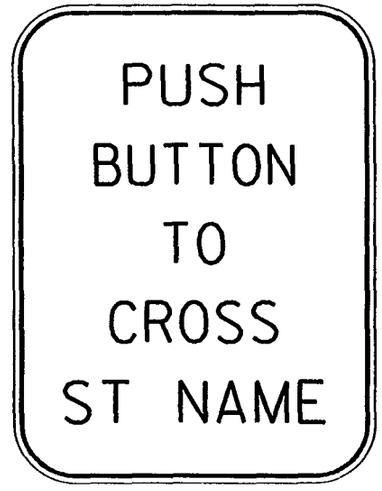

FTP-47

WHITE BACKGROUND WITH BLACK LEGEND AND BORDER
WALK PLAQUE - WHITE LEGEND ON BLACK BACKGROUND
DONT WALK PLAQUE - ORANGE LEGEND ON BLACK BACKGROUND
THE INTERNATIONAL SYMBOLS MAY BE USED FOR WALK AND DONT WALK.

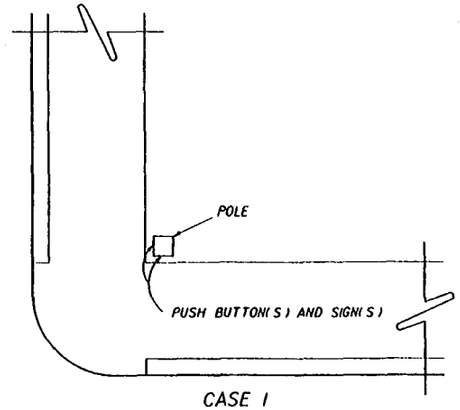

CASE I
POLE PARALLEL TO CURBLINE
ALTERNATE TO FIGURE F

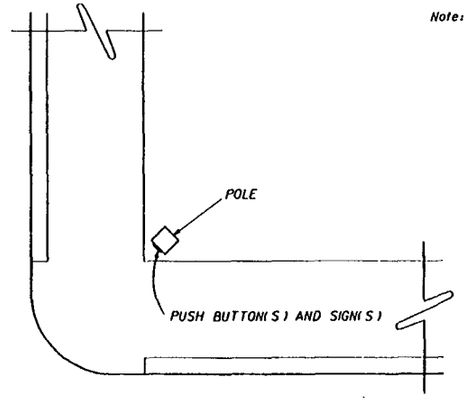

CASE II
POLE DIAGONAL TO CURBLINE

Note:
1. See Index 17355 for sign details.

STATE OF FLORIDA DEPARTMENT OF TRANSPORTATION
TRAFFIC DESIGN

PEDESTRIAN DETECTOR ASSEMBLY INSTALLATION DETAILS

	Names	Dates	
Designed By	J.M.C.		Approved By Charles A. Scott, State Traffic Plans Engineer
Drawn By			
Checked By			Revision No. 94 · Sheet No. 2 of 2 · Index No. 17784
F.H.W.A. Approved:			

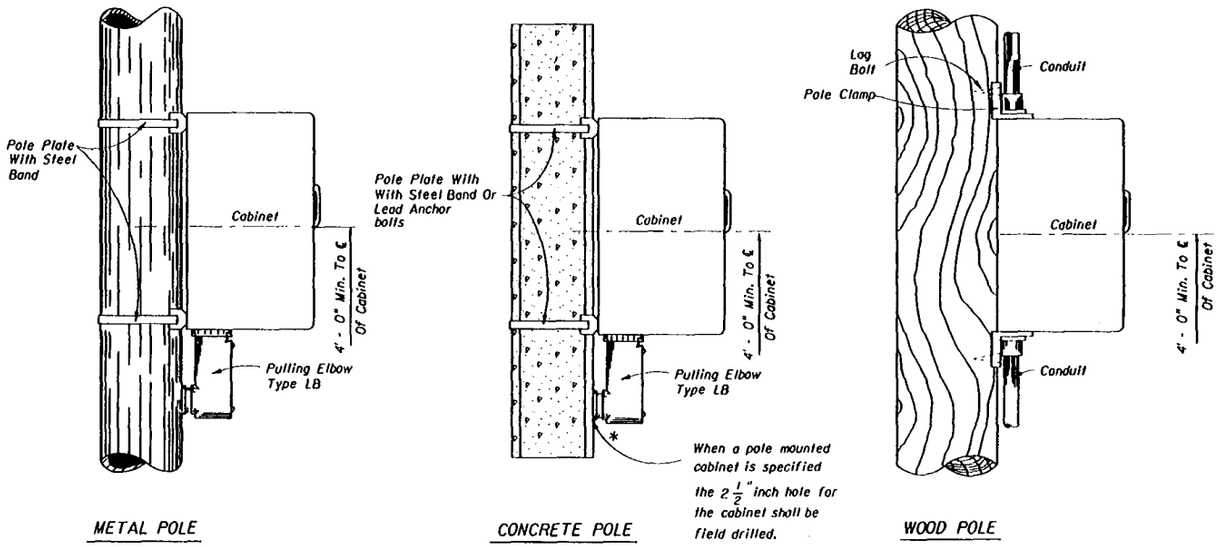

METAL POLE

CONCRETE POLE

WOOD POLE

Liquidtight flexible conduit is approved for use from the electrical disconnect to the cabinet when both are installed on the same pole.

POLE MOUNTED CABINET

* If holes for cabinet mounting require relocation, original holes shall be filled in with concrete or covered with a non corrosive cover plate.

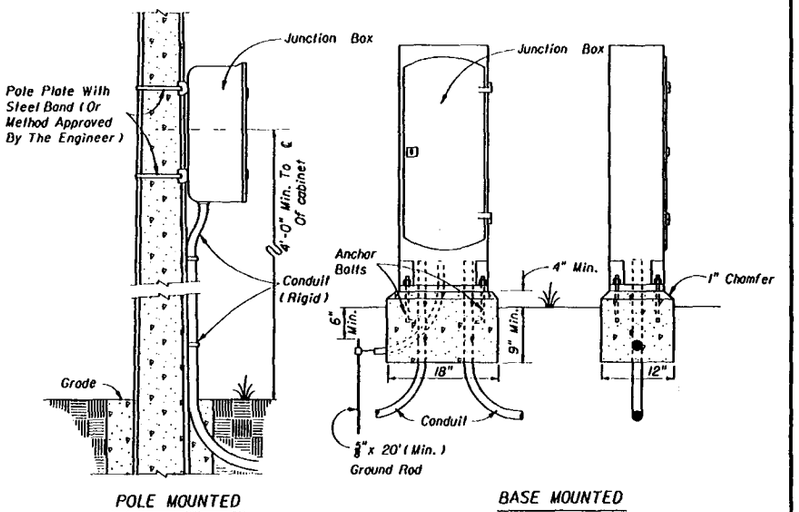

POLE MOUNTED

BASE MOUNTED

INTERCONNECT JUNCTION BOX

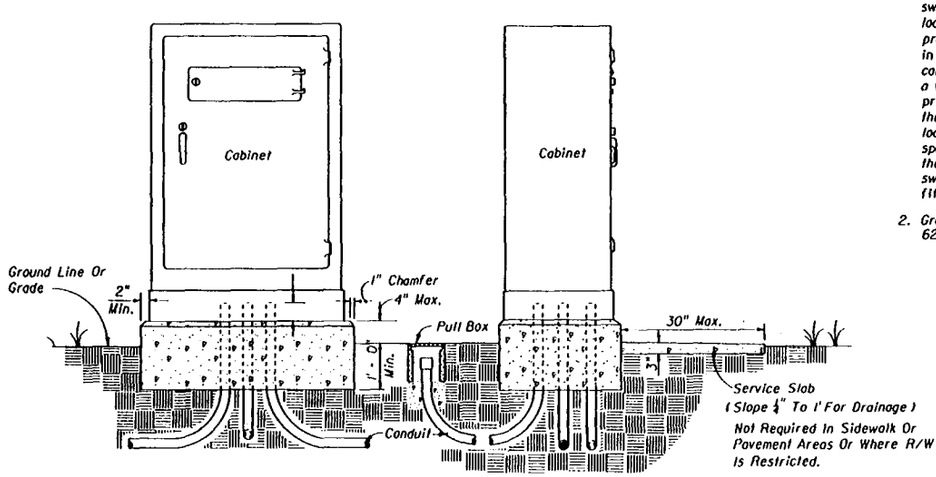

BASE MOUNTED CABINET

Notes:

1. The number, size and orientation of conduit sweep will vary according to site condition or locations. Two spare 2" PVC conduits shall be provided in all bases. The spares shall exit in the direction of the center rear of the cabinet base, into a pull box and capped with a weather tight fitting. If obstructions prevent the spare conduit from exiting to the rear, or the rear of the cabinet is located on the R/W line, a side exit of the spare conduits will have to be approved by the project engineer. All spare conduit sweeps shall be capped with a weather proof fitting.
2. Grounding to be in accordance with section 620 of the Standard Specifications.

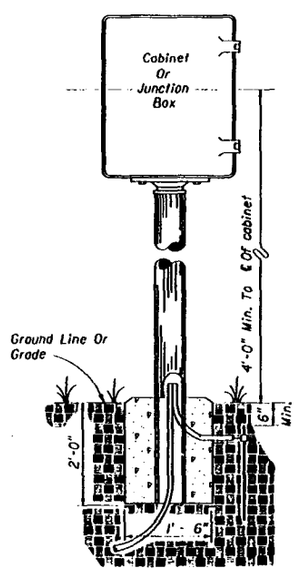

PEDESTAL MOUNTED

STATE OF FLORIDA DEPARTMENT OF TRANSPORTATION
TRAFFIC DESIGN

CABINET INSTALLATION DETAIL

	Names	Dates
Designed By	MICK	09/17/80
Drawn By	MICK	08/24/81
Checked By		

Approved By C. Scott
State Traffic Plans Engineer

F.H.W.A. Approved

Revision No.	Sheet No.	Index No.
92	1 of 1	17841

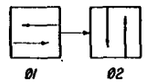

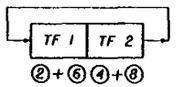

SOP 1

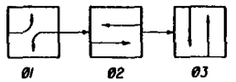

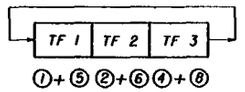

SOP 2

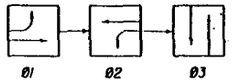

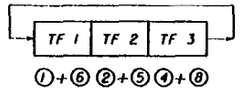

SOP 3

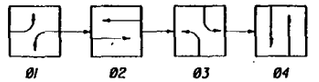

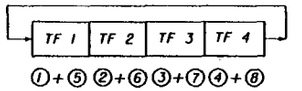

SOP 4

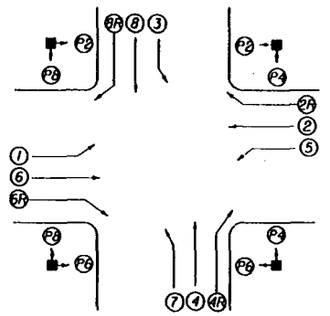

SIGNALIZED INTERSECTION

Vehicle movements & signal head number assignments are not directionally oriented but shall maintain their relative orientation about the intersection (I.E. movements 7 and 4 are always to the right of movements 1 and 6 etc.)

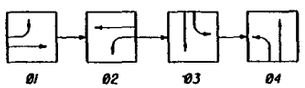

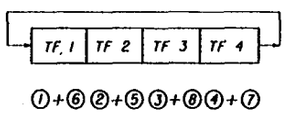

SOP 5



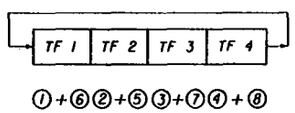

SOP 6

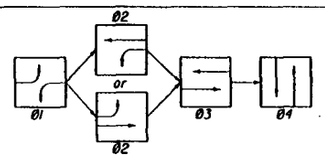

SOP 7

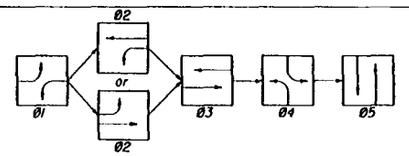

SOP 8

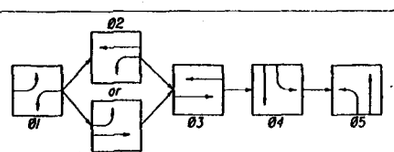

SOP 9

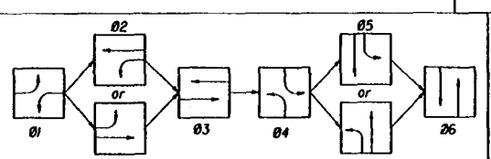

SOP 10

SIGNAL CLEARANCE TABLE

(Blank Indicates No Clearance Required)

From / To		R	R	G	G	G*	⇧	WALK	DONT WALK
SIGNAL INDICATIONS	R			Y	Y	Y	Y		
	R			Y	Y	Y	Y		
	G				Y	Y			
	G								
	G*								
	⇧								
	WALK								
	DONT WALK							Flash DONT WALK	

* *Clearance Indication When Yellow Arrow is Used.*

LEGEND

- (X) Vehicle Movement Number
- (PX) Pedestrian Movement Number
- TF X Timing Function Number
- ØX Phase Number
- Green Arrow (Left or Right)
- Red Arrow
- Yellow Arrow

STATE OF FLORIDA DEPARTMENT OF TRANSPORTATION
ROAD DESIGN

STANDARD SIGNAL OPERATING PLANS

	Names	Dates
Designed By		
Drawn By	J.W.C.	04/26/19
Checked By	J.W.J	
F.H.W.A. Approved:		

Approved By: Clark a Scott

Revision No.	Sheet No.	Index No.
80	1 of 2	17870

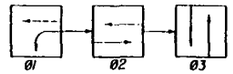

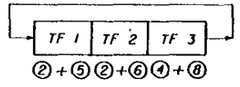

SOP 11

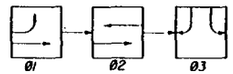

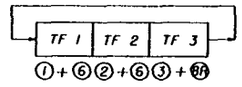

SOP 12

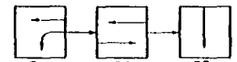

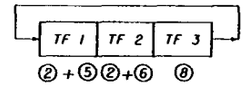

SOP 13
(ONE-WAY STREET INTERSECTION)

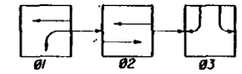

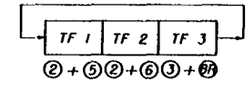

SOP 14
(DIAMOND INTERCHANGE OPERATION)

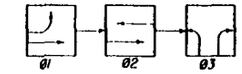

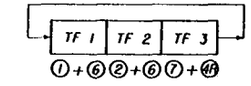

SOP 15
(DIAMOND INTERCHANGE OPERATION)

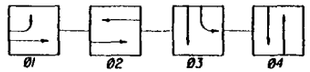

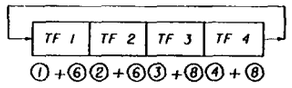

SOP 16

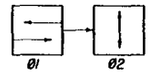

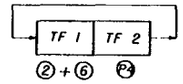

SOP 17
(MID-BLOCK)

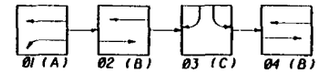

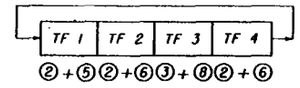

NOTE:
Only Ø2 Or Ø4 Used, Not Both To Obtain ABC, Or ACB Operation.

SOP 18
(DIAMOND INTERCHANGE OPERATIONS)

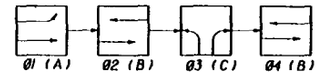

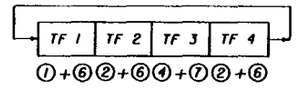

NOTE:
Only Ø2 Or Ø4 Used, Not Both To Obtain ABC, Or ACB Operation.

SOP 19
(DIAMOND INTERCHANGE OPERATIONS)

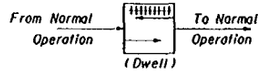

POP 1



POP 2

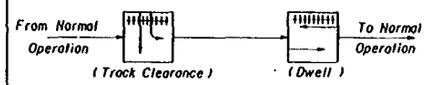

POP 3

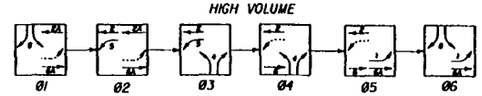

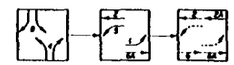

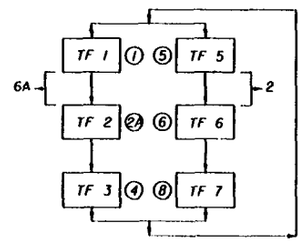

SOP 20
(DIAMOND INTERCHANGE OPERATIONS)

STATE OF FLORIDA DEPARTMENT OF TRANSPORTATION
ROAD DESIGN

STANDARD SIGNAL OPERATING PLANS

	Names	Dates
Designed By		
Drawn By	J.W.C.	09/28/79
Checked By	J.W.J	
F.H.W.A. Approved		

Approved By
State Traffic Plans Engineer

Revision No.	Sheet No.	Index No.
94	2 of 2	17870

PASSIVE STATE
(TRAIN CIRCUIT NOT ACTUATED)

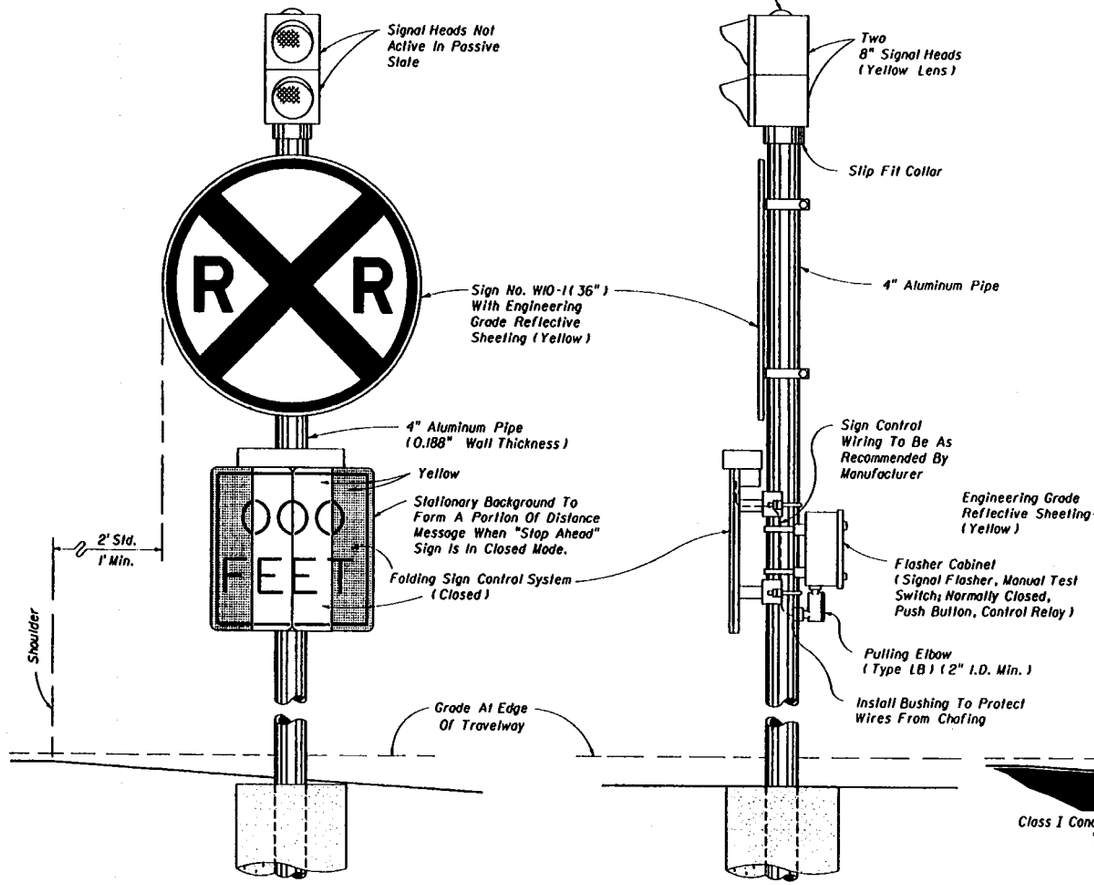

FRONT VIEW

SIDE VIEW

ACTIVE STATE
(TRAIN CIRCUIT ACTUATED)

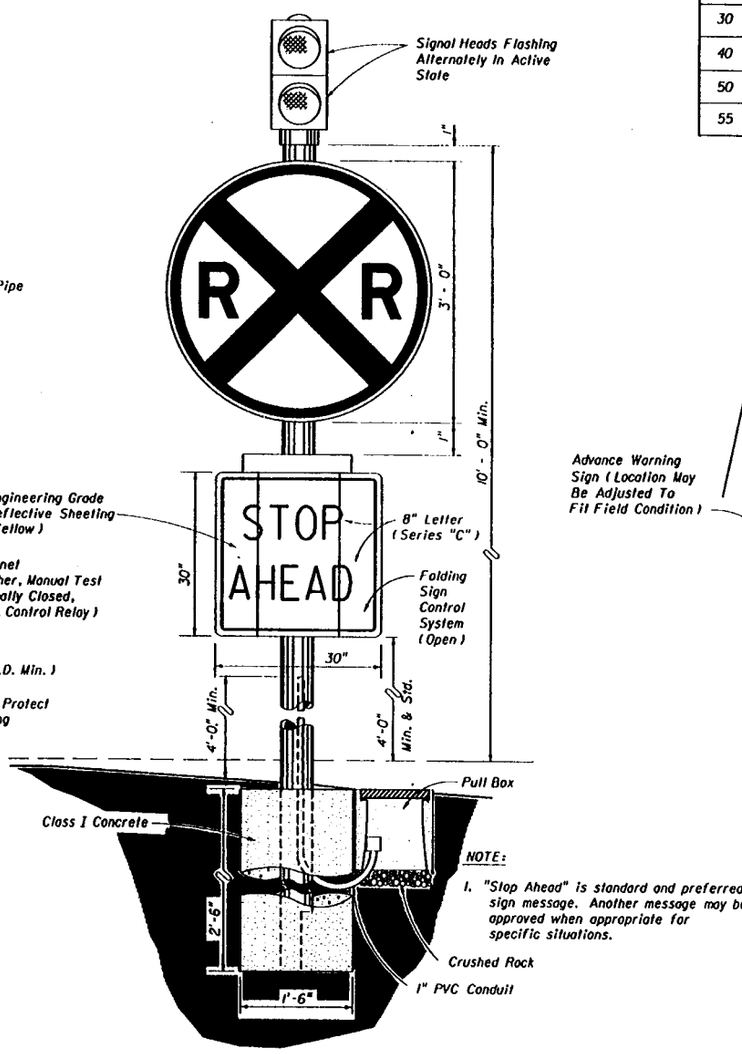

FRONT VIEW

NOTE:

1. "Stop Ahead" is standard and preferred sign message. Another message may be approved when appropriate for specific situations.

LOCATION OF THE ADVANCE WARNING SIGN

SPEED M.P.H.	DISTANCE FEET
30	200
40	275
50	350
55	425

The Distance Is Measured Along Right Edge Of Pavement From R/R Stop Bar To Sign Advance Warning Sign.

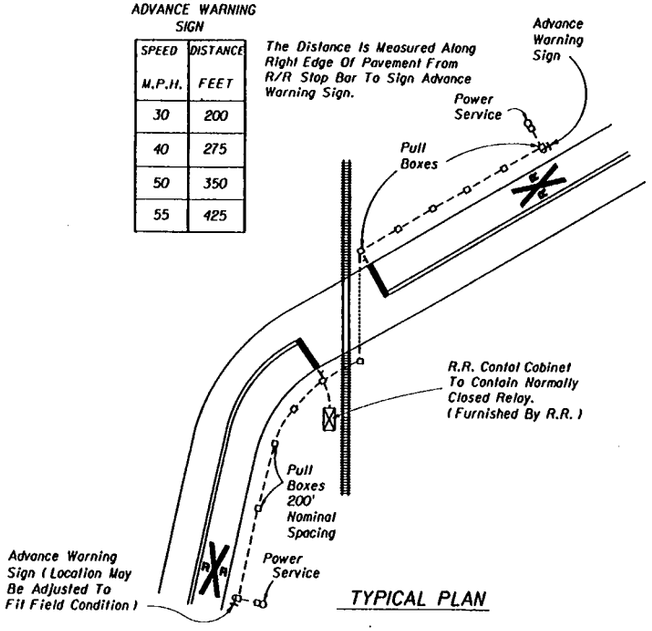

TYPICAL PLAN

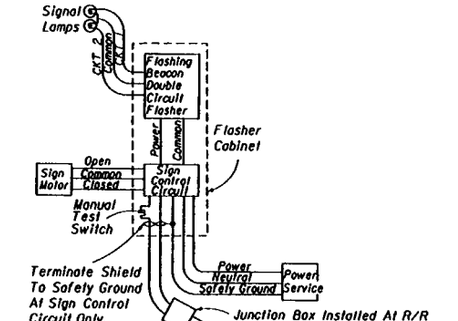

NOTE:
Conduit and cable from the normally closed relay of R/R controller cabinet to the junction box shall be furnish & installed by R/R.

FUNCTIONAL BLOCK DIAGRAM

STATE OF FLORIDA DEPARTMENT OF TRANSPORTATION
TRAFFIC DESIGN

ADVANCE WARNING FOR R.R. CROSSING

	Names	Dates
Designed By	CG	12/12/75
Drawn By		
Checked By		12/12/75
F.H.W.A. Approved:		

Approved By: Clark A Scott

Revision No.	Sheet No.	Index No.
76	1 of 1	17881

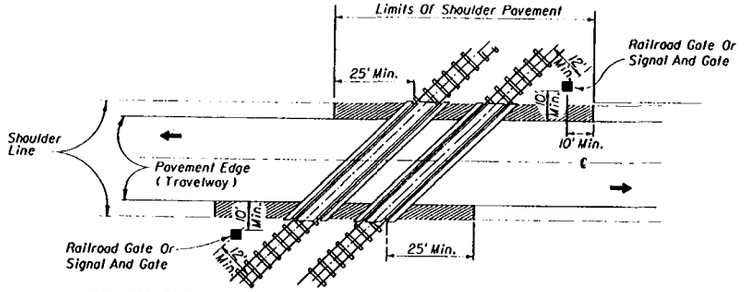

TRACK CLEARANCE FOR ACUTE OR RIGHT ANGLE CROSSINGS

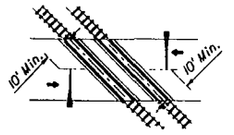

Typical Location Plan For Gate Or Flashing Signal With Gate When Tracks Are At Obtuse Angle.

Note :
It is intended that the full shoulder width of the existing roadway be paved, where an existing shoulder is substantially substandard for the facility involved, the shoulder width should be upgraded to meet current standards.

SIGNAL PLACEMENT AT RAILROAD CROSSING
(2 - LANE DESIGN)

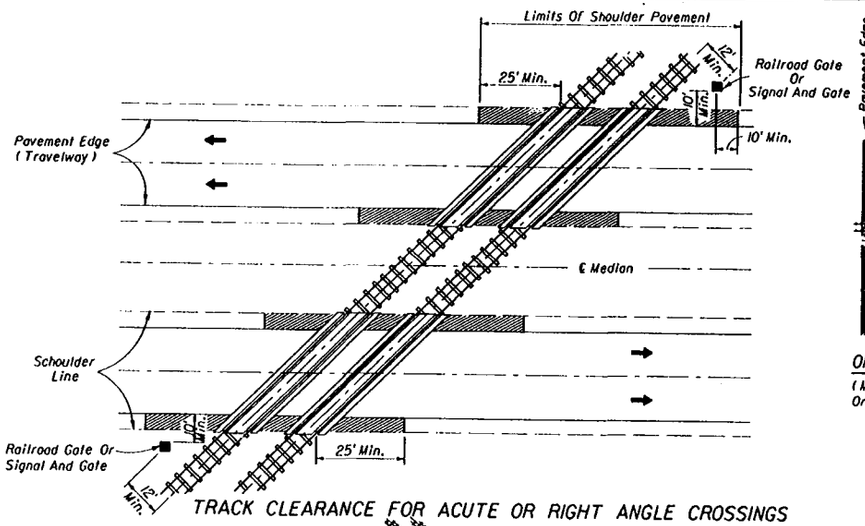

TRACK CLEARANCE FOR ACUTE OR RIGHT ANGLE CROSSINGS

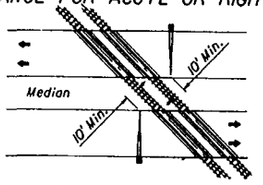

Typical Location Plan For Gate Or Flashing Signal With Gate When Tracks Are At Obtuse Angle.

SIGNAL PLACEMENT AT RAILROAD CROSSING
(4 - LANE DESIGN)

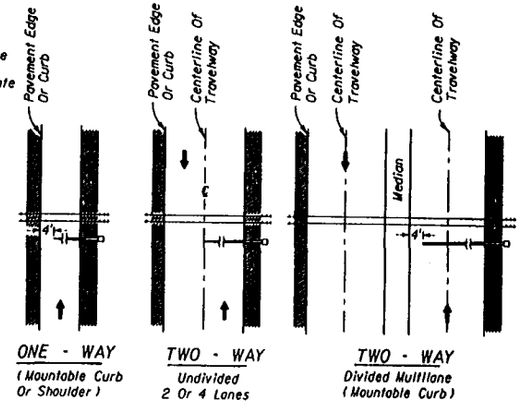

Note :
Arrows denote direction of travel not lane indication

FIGURE I
Gate Length Requirements
See Note 6 Sheet 3

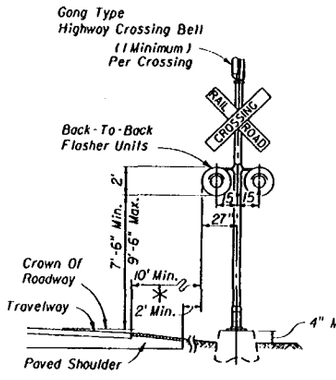

TYPE I

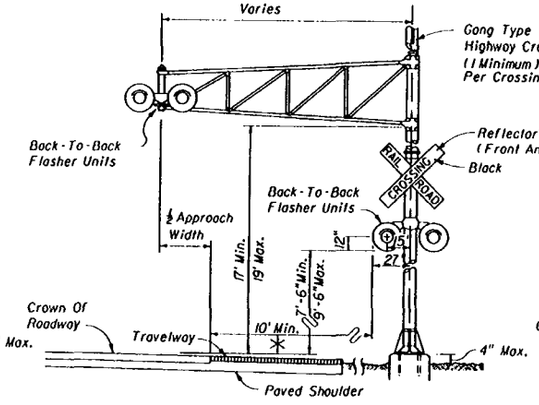

TYPE II

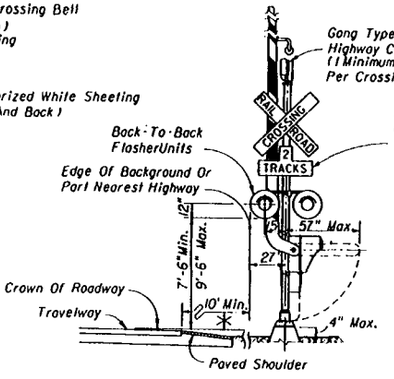

TYPE III

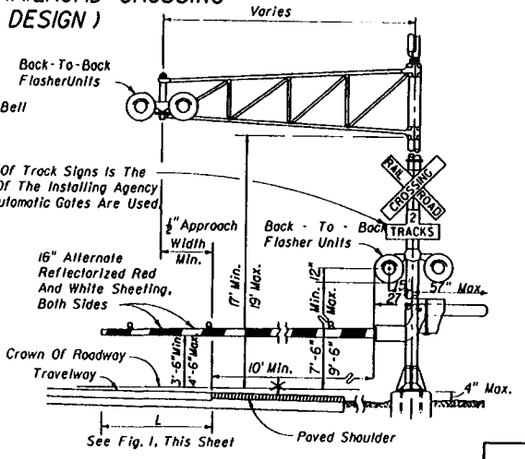

TYPE IV

* Desireable minimum - where field conditions dictate absolute minimum may be as per Index 700.

Note :
Two separate foundations may be required (one for signals, one for gate), depending on type of equipment used.

General Notes

1. No guardrail is proposed for signals; however, some form of impact attenuation device may be specified for certain locations.
2. Advance flasher to be installed when and if called for in plans or specifications.
3. Top of foundation shall be no greater than 4" above finished shoulder grade.
4. Type of traffic control device
   - I Flashing signals
   - II Flashing signals with cantilever
   - III Flashing signals with gate
   - IV Flashing signals with cantilever & gate
   - V Gate
5. Class of traffic control devices
   - I Flashing signals - one track
   - II Flashing signals - multiple tracks
   - III Flashing signals and gates - one track
   - IV Flashing signals and gates - multiple tracks

STATE OF FLORIDA DEPARTMENT OF TRANSPORTATION
TRAFFIC DESIGN

RAILROAD GRADE CROSSING TRAFFIC CONTROL DEVICES

	Names	Dates
Designed By	CG	04/08/16
Drawn By		
Checked By	RM	04/08/16
F.H.W.A. Approved:		

Approved By _____ State Traffic Plans Engineer

Revision No.	Sheet No.	Index No.
94	1 of 4	17882

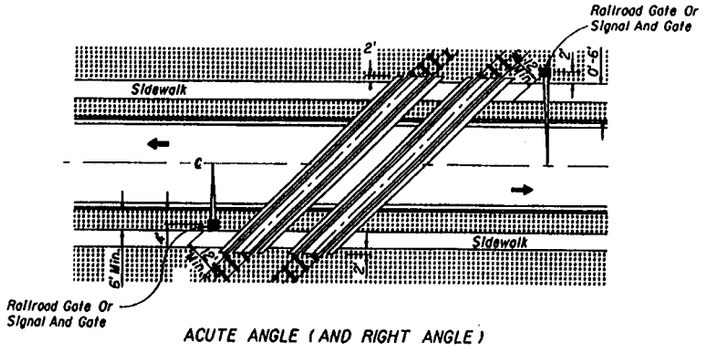

ACUTE ANGLE (AND RIGHT ANGLE)

SIGNAL PLACEMENT AT RAILROAD CROSSING (2 LANES, CURB & GUTTER)

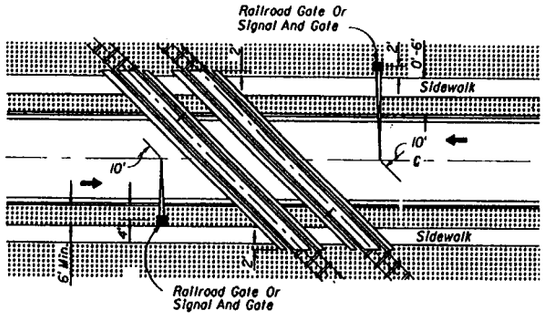

OBTUSE ANGLE

SIGNAL PLACEMENT AT RAILROAD CROSSING (2 LANES, CURB & GUTTER)

GENERAL NOTES

1. The location of flashing signals and stop lines shall be established based on future (or present) installation of gate with appropriate track clearances.
2. Where plans call for railroad traffic control devices to be installed in curbed medians, the minimum median width shall be 12.5 feet.
3. Location of railroad traffic control device is based on the distance available between face of curb & sidewalk.
   0' to 6' - Locate device outside sidewalk.
   Over 6' - Locate device between face of curb and sidewalk.
4. Stop line to be perpendicular to edge of roadway, approx. 15' from nearest rail, or 8' from and parallel to gate when present.

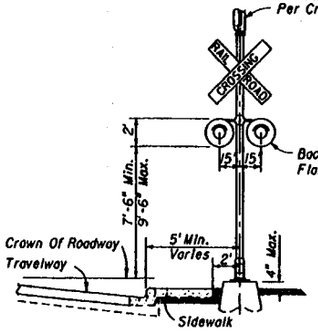

TYPE I

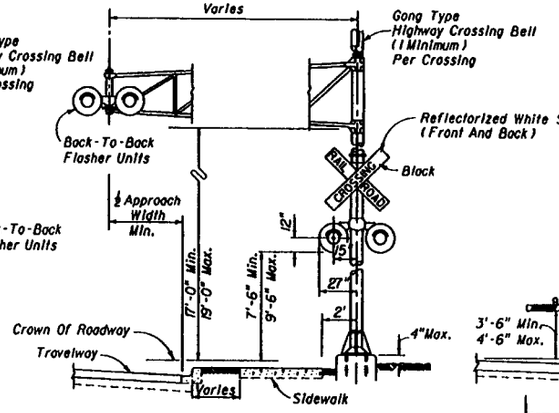

TYPE II

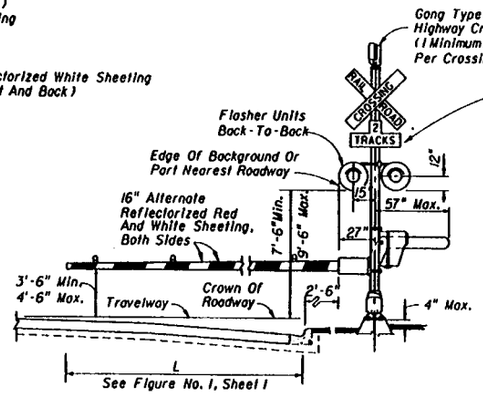

TYPE III

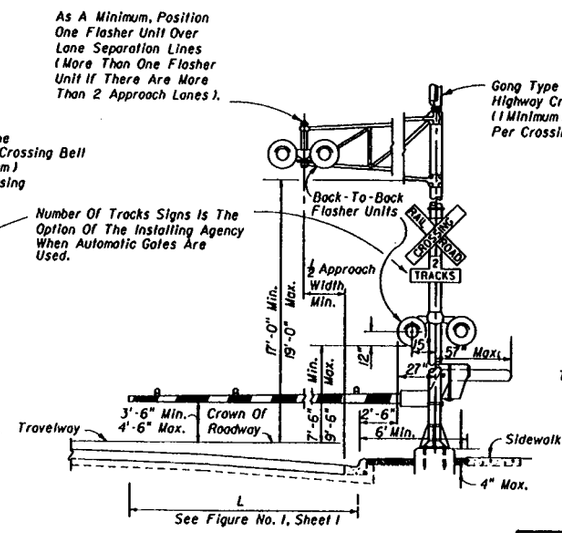

TYPE IV

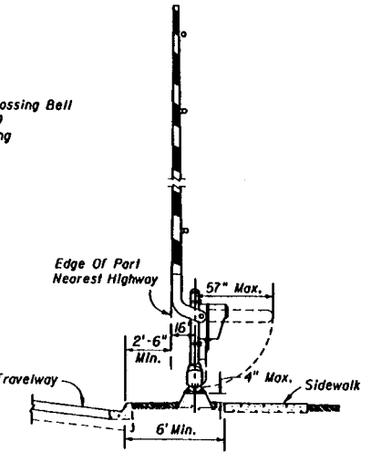

TYPE V

STATE OF FLORIDA DEPARTMENT OF TRANSPORTATION
TRAFFIC DESIGN

RAILROAD GRADE CROSSING TRAFFIC CONTROL DEVICES

	Names	Dates
Designed By	CG	04/08/16
Drawn By		
Checked By	RW	04/08/16
F.H.W.A. Approved:		

Approved By: Clark A. Scott

Revision No.	Sheet No.	Index No.
94	2 of 4	17882

RAILROAD CROSSING AT TWO (2) - LANE ROADWAY

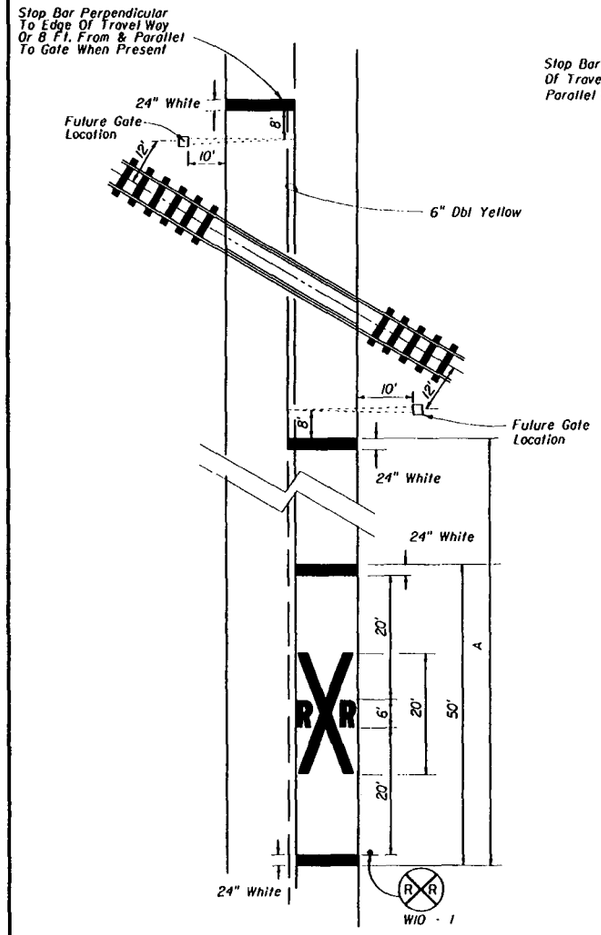

RAILROAD CROSSING AT MUTI-LANE ROADWAY

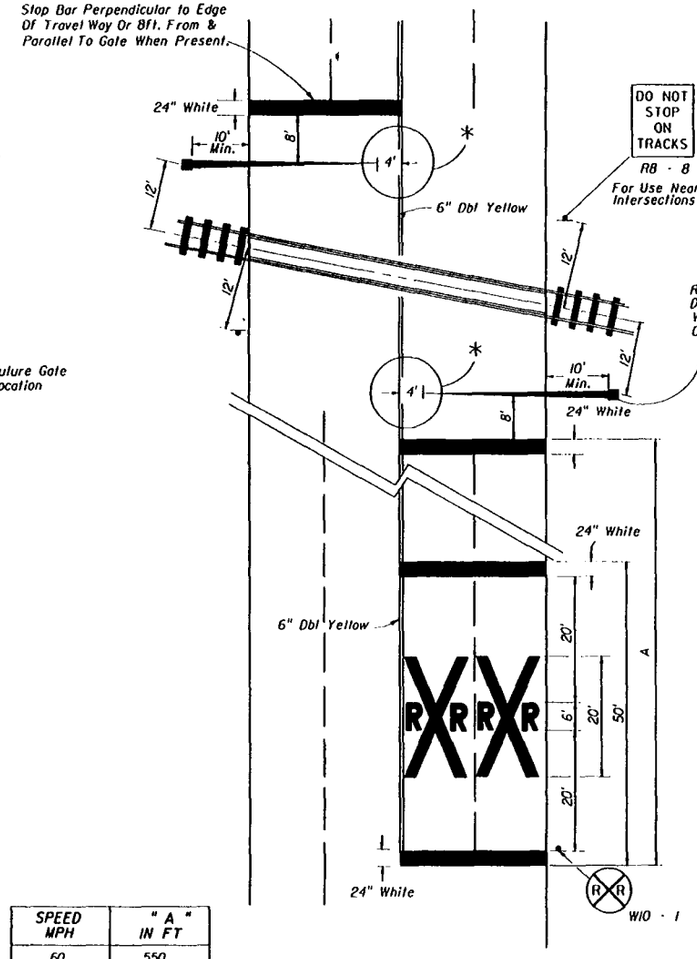

RELATIVE LOCATION OF CROSSING TRAFFIC CONTROL DEVICES

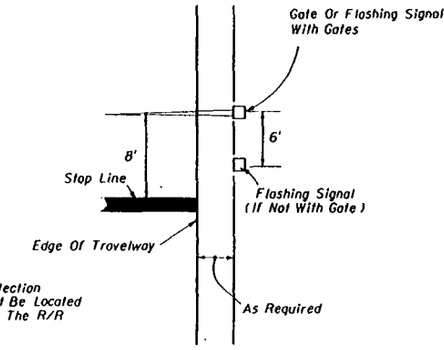

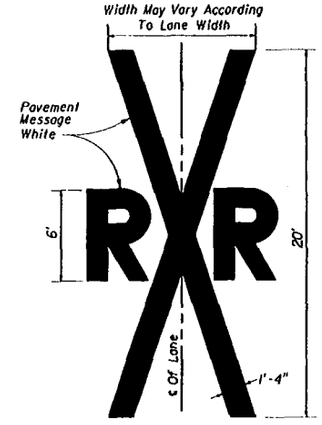

SPEED MPH	" A " IN FT
60	550
55	450
50	375
45	300
40	225
35	150
30	100
URBAN	50 MIN.

NOTES:

1. When computing pavement message, quantities do not include transverse lines.
2. Placement of sign W10-1 in a residential or business district, where low speeds are prevalent, the W10-1 sign may be placed a minimum distance of 100 feet from the crossing. Where street intersection occur between the R R pavement message and the tracks an additional W10-1 sign and additional pavement message should be used
3. Recommended location for sign FTP-38, 100 ft. Urban & 300 ft. Rural in advance of the crossing.
4. A portion of the pavement markings symbol should be directly opposite the W10-1 sign.
5. Recommended location for FTP-38 A or B signs, 100' urban and 300' rural. See index 17355 for sign details.

* 6. Gate Length Requirements

For two-way undivided sections:
The gate should extend to within 1' of the center line. On multilane approaches the maximum gate length may not reach to within 1' of the center line. For those cases, the distance from the gate to the center line shall be a maximum of 4'.

For one-way or divided sections:
The gate shall be of sufficient length such that the distance from the gate tip to the inside edge of pavement is a maximum of 4'.

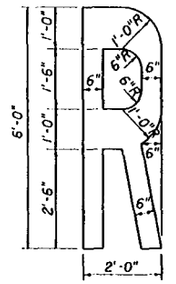

STATE OF FLORIDA DEPARTMENT OF TRANSPORTATION
TRAFFIC DESIGN

RAILROAD GRADE CROSSING TRAFFIC CONTROL DEVICES

	Names	Dates
Designed By	J.W.C.	10/26/77
Drawn By		
Checked By		
F.H.W.A. Approved:		

Approved By: Clark A. Scott
State Traffic Plans Engineer

Revision No.	Sheet No.	Index No.
92	3 of 4	17882

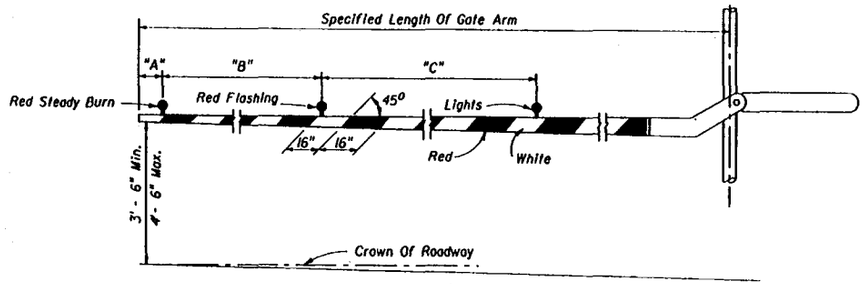

RAILROAD GATE ARM LIGHT SPACING

Specified Length Of Gate Arm	Dimension "A"	Dimension "B"	Dimension "C"
14 Ft.	6"	36"	5' - 0"
15 Ft.	18"	36"	5' - 0"
16 - 17 Ft.	24"	36"	5' - 0"
18 - 19 Ft.	28"	41"	5' - 0"
20 - 23 Ft.	28"	4' - 0"	5' - 0"
24 - 28 Ft.	28"	5' - 0"	5' - 0"
29 - 31 Ft.	36"	6' - 0"	6' - 0"
32 - 34 Ft.	36"	7' - 6"	7' - 0"
35 - 37 Ft.	36"	9' - 0"	9' - 0"
38 And Over	36"	10' - 0"	10' - 0"

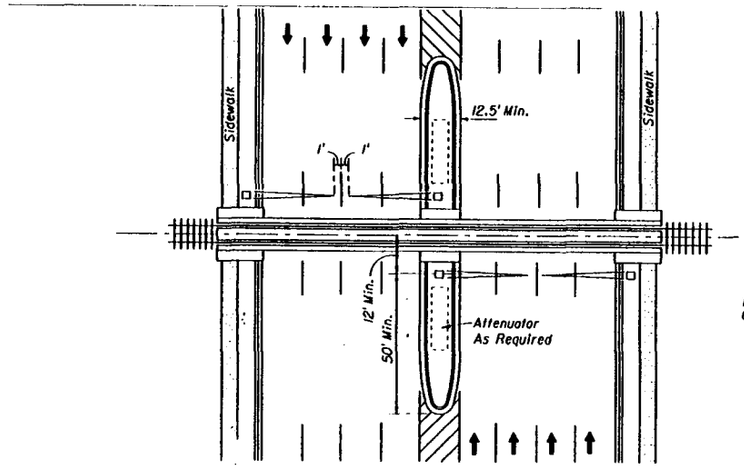

PLAN

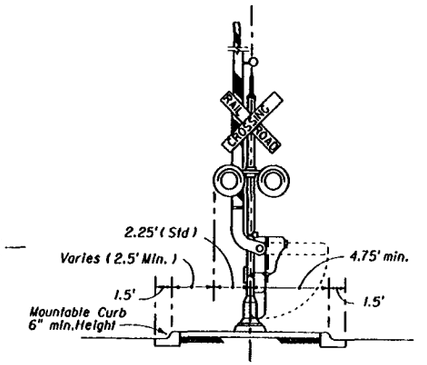

MEDIAN SECTION AT SIGNAL GATES

NOTE :

For additional information see the "Manual On Uniform Traffic Control Devices", Part VIII; The "Traffic Control Devices Handbook", Part VIII; and AASHTO "A Policy On Geometric Design Of Streets And Highways", 1984.

MEDIAN SIGNAL GATES FOR MULTI LANE UNDIVIDED URBAN SECTIONS

(FOUR OR MORE DRIVING LANES IN ONE DIRECTION, 45 MPH OR LESS)

STATE OF FLORIDA DEPARTMENT OF TRANSPORTATION
TRAFFIC DESIGN

RAILROAD GRADE CROSSING TRAFFIC CONTROL DEVICES

	Names	Dates
Designed By	JG	10/15/85
Drawn By	JG	10/15/85
Checked By		
F.H.W.A. Approved:		

Approved By: C. Louis Scott

Revision No.	Sheet No.	Index No.
88	4 of 4	17882

TYPICAL BRIDGE MOUNTS

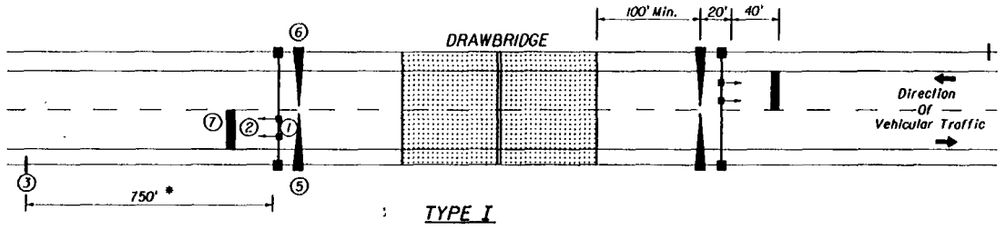

TYPE I

TO BE USED WHERE BRIDGE OPERATORS ARE FULL TIME OR A DAILY BASIS

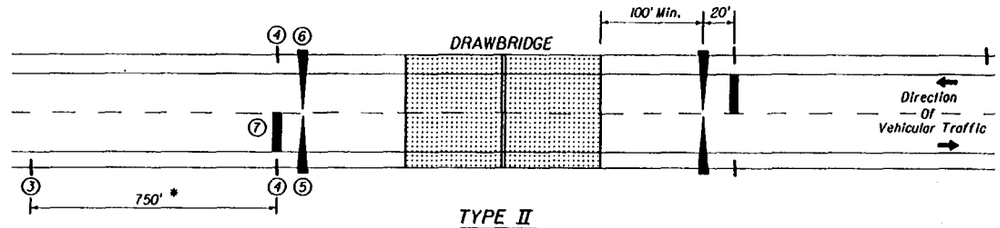

TYPE II

TO BE USED WHERE TYPE I IS NOT APPLICABLE (USUALLY WHEN THE BRIDGE OPERATOR IS "ON CALL")

* Field conditions may require adjustment of this standard distance.

SEQUENCE CHART

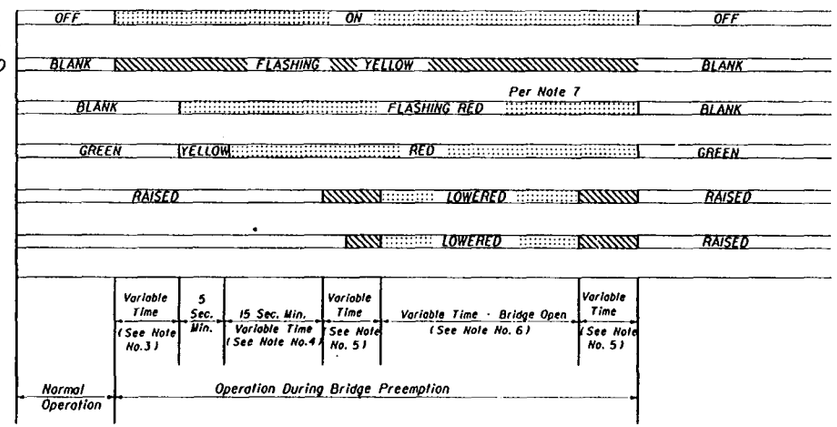

LEGEND

GATES
- (1) TRAFFIC SIGNALS — Mast Arm Mounted (Off Bridge)
- (2) DRAWBRIDGE SIGN — Monotube Support Mounted (On Bridge)
- (3) DRAWBRIDGE AHEAD SIGN — Ground Mounted
- (4) STOP HERE ON RED SIGN — Ground Mounted
- (5) ENTRANCE GATE
- (6) EXIT GATE
- (7) 24" THERMOPLASTIC STOP BAR

NOTES:

1. A bypass switch shall be installed to override each timing interval in case of a malfunction.
2. "STOP HERE ON RED" is omitted in Type I operation and "TRAFFIC SIGNALS" are omitted in Type II operation.
3. The time between beginning of flashing yellow on "Drawbridge Ahead" sign and the clearance of traffic signal to red, or beginning of flashing red should not be less than the travel time of a passenger car, from the sign location to the stop line, traveling at the 85 percentile approach speed.
4. Beginning of operation of drawbridge gates shall not be less than 15 seconds after steady red or 20 seconds after flashing red (Actual time may be determined by the bridge tender.)
5. Time of gate lowering and raising is dependent upon gate type.
6. Time of bridge opening is determined by the bridge tender.
7. Each gate shall be operated by a separate switch.
8. On each approach (Type II), all four red signals shall be on the same two circuit flasher, with the two top signals on one circuit, and the two bottom signals on the alternately flashing circuit.
9. A drawbridge ahead sign is required for both types of signal operation. However a flashing beacon shall be added to the sign when physical conditions prevent a driver traveling at the 85% approach speed from having continuous view of at least one signal indication for approximately 10 seconds.
10. Requirements on gate installation are contained in Section 4E-14 through 4E-17 of the Manual on Uniform Traffic Control Devices.

STATE OF FLORIDA DEPARTMENT OF TRANSPORTATION
TRAFFIC DESIGN

TRAFFIC CONTROL DEVICES FOR MOVABLE SPAN BRIDGE SIGNALS

	Names	Dates
Designed By	CC	04/07/75
Drawn By	RK	04/07/75
Checked By		
F.H.W.A. Approved:		

Approved By Charles Scott

Revision No.	Sheet No.	Index No.
83	1 of 3	17890

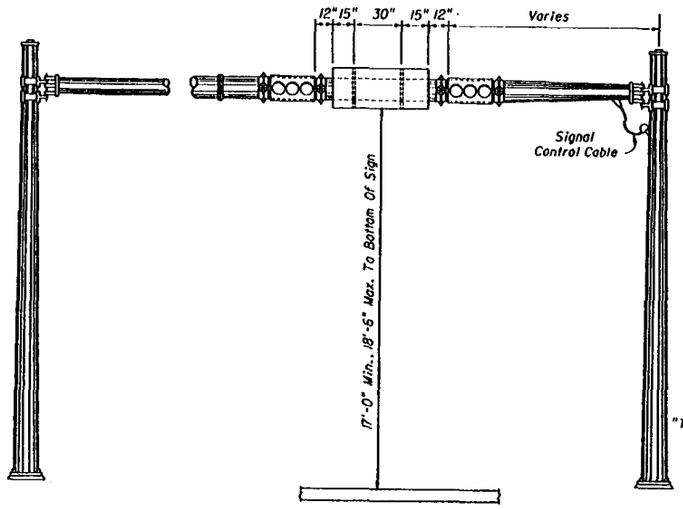

FIGURE - A

MONOTUBE SUPPORT MOUNTING

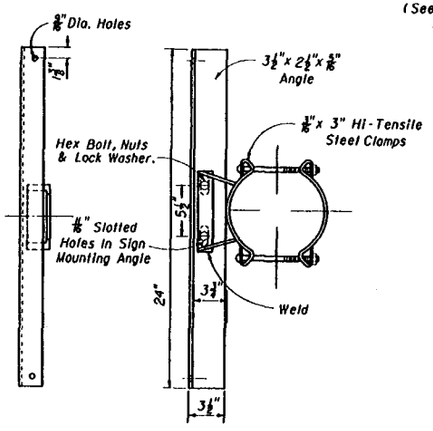

SIGN PANEL MOUNTING ASSEMBLY

FIGURE - B

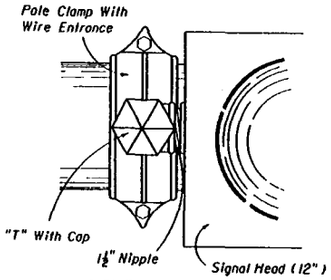

FIGURE - C

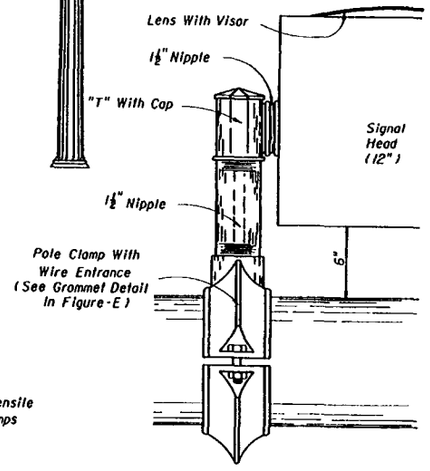

FIGURE - D

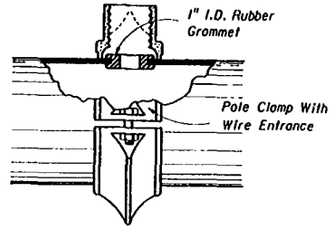

FIGURE - E

SIGNAL HEAD MOUNTING ASSEMBLY

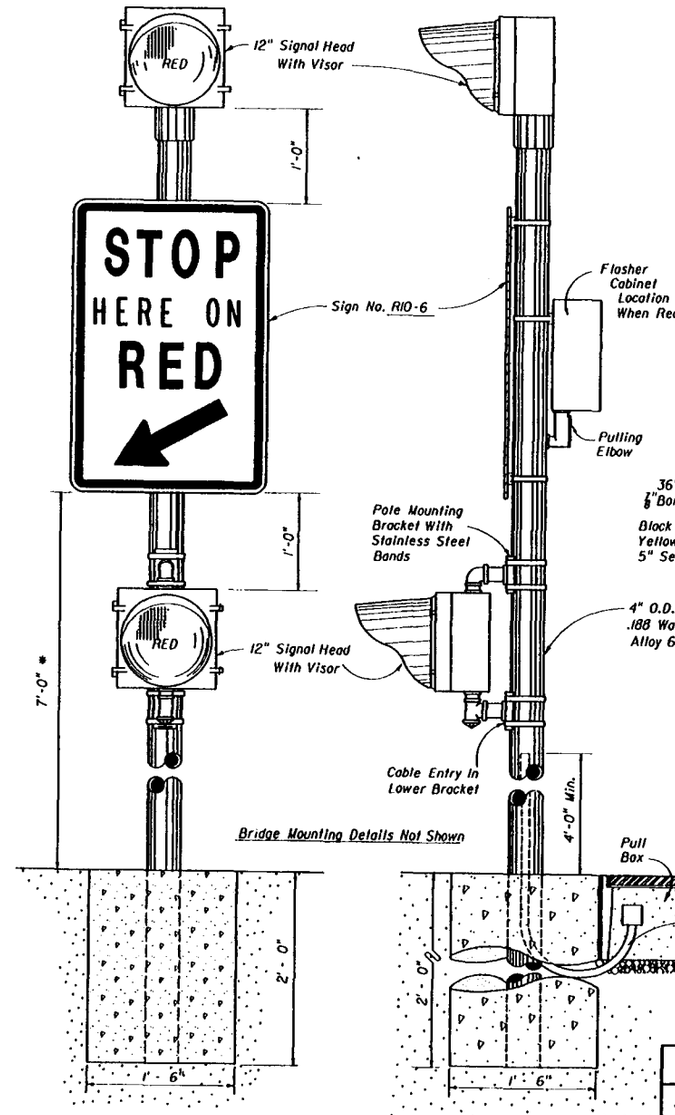

FIGURE - F

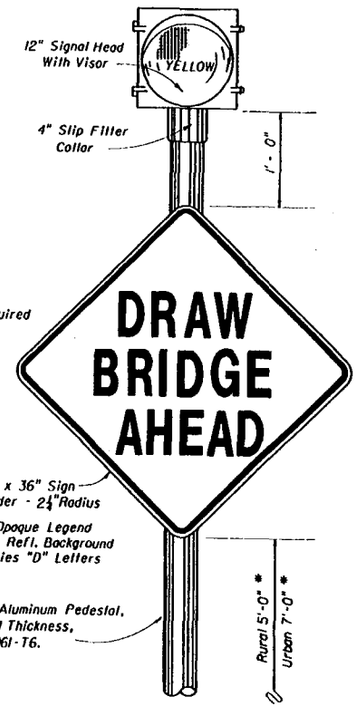

FIGURE - G

* Measured from the bottom of the sign to the near edge of the pavement. Horizontal distance between edge of the pavement and inside edge of sign will vary with condition at job site.

STATE OF FLORIDA DEPARTMENT OF TRANSPORTATION
TRAFFIC DESIGN

TRAFFIC CONTROL DEVICES FOR MOVABLE SPAN BRIDGE SIGNALS

	Names	Dates
Designed By	CG	04-07-75
Drawn By		
Checked By	RK	04-07-75
F.H.W.A. Approved:		

Approved By: Clarke Scott

Revision No.	Sheet No.	Index No.
80	2 of 3	17890

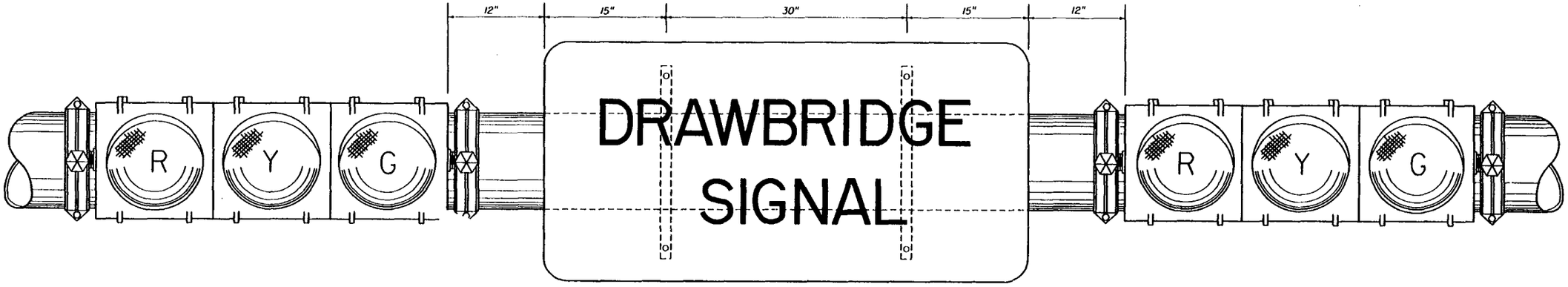

2' - 6" x 5' - 0"
2" Border - 4" Radius
6" Series "D" Letters

BLACK OPAQUE LEGEND AND BORDER ON REFLECTORIZED YELLOW BACKGROUND

TO BE USED WITH TYPE I OPERATION, AS SHOWN ON PREVIOUS SHEET

MONOTUBE SUPPORT MOUNTING

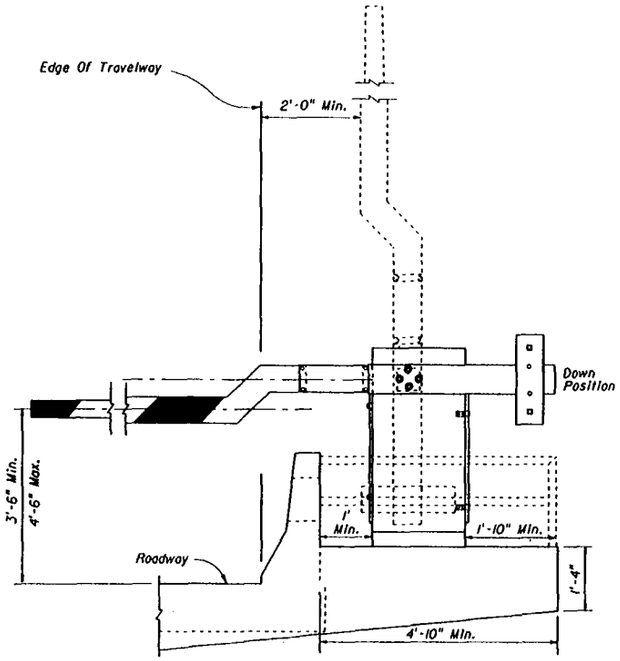

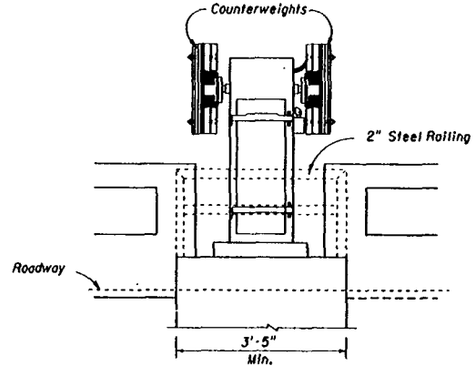

GATE & ARM DETAIL

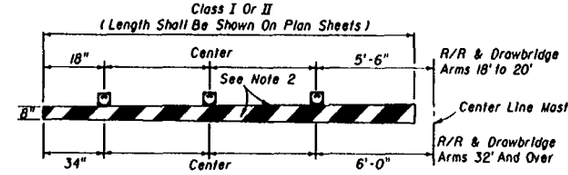

Note :
1. 12 volt flashing red light shall be mounted atop gate arm and shall operate in the flashing mode only when gate arm is in the lower position or in the process of being lowered. The number of lights shall vary accordingly to length of the gate arm.
2. 16" alternate diagonal fully reflectorized red and white stripes.

TYPICAL LAMP PLACEMENT

STATE OF FLORIDA DEPARTMENT OF TRANSPORTATION
TRAFFIC DESIGN

TRAFFIC CONTROL DEVICES FOR MOVABLE SPAN BRIDGE SIGNALS

	Names	Dates
Designed By	J.W.C.	
Drawn By		
Checked By		
F.H.W.A. Approved:		

Approved By C. Clark O. Scott

Revision No.	Sheet No.	Index No.
79	3 of 3	17890