FLORIDA DEPARTMENT OF TRANSPORTATION

STRUCTURES DESIGN OFFICE

STANDARD DRAWINGS

1992 EDITION

Mon Nov 9 13:55:32 1992 STIK120.230\COVER.DGN

FLORIDA DEPARTMENT OF TRANSPORTATION

STRUCTURES DESIGN OFFICE

STANDARDS
1992

TABLE OF CONTENTS

INDEX NO.	*TITLE*
I-001	PREFACE
BEAMS	
I-099	PRESTRESSED BEAM INSTRUCTIONS
100	TYPICAL NOTES AND DETAILS FOR AASHTO TYPE II, III AND IV PRESTRESSED BEAMS
101	TYPICAL NOTES AND DETAILS FOR AASHTO TYPE V, AND VI PRESTRESSED BEAMS
S-102	AASHTO TYPE II BEAMS
S-103	AASHTO TYPE III BEAMS
S-104	AASHTO TYPE IV BEAMS
S-105	AASHTO TYPE V BEAMS
S-106	AASHTO TYPE VI BEAMS
110	TYPICAL NOTES AND DETAILS FOR FLORIDA BULB-T 54, 63, AND 72 PRESTRESSED BEAMS
S-111	FLORIDA BULB-T 54 BEAMS
S-112	FLORIDA BULB-T 63 BEAMS
S-113	FLORIDA BULB-T 72 BEAMS
I-120	FLORIDA DOUBLE-TEE GENERAL INSTRUCTIONS
I-121	FLORIDA DOUBLE-TEE BRIDGE SECTIONS
I-122	FLORIDA DOUBLE-TEE TABULATED STRAND PATTERNS
123	FLORIDA DOUBLE-TEE MISCELLANEOUS NOTES AND DETAILS (2 SHEETS)
124	FDT18 TYPICAL SECTION
125	FDT24 TYPICAL SECTION
126	FDT30 TYPICAL SECTION
127	FLORIDA DOUBLE-TEE PLAN, JOINT AND DIAPHRAGM
S-128	FDT18 TABLE OF VARIABLES AND STRAND PATTERNS
S-129	FDT24 TABLE OF VARIABLES AND STRAND PATTERNS
S-130	FDT30 TABLE OF VARIABLES AND STRAND PATTERNS
BEARINGS	
200	COMPOSITE NEOPRENE BEARING PADS
DETOUR BRIDGES	
S-300	TIMBER BENTS FOR ACROW BRIDGE (ONE & TWO LANE SINGLE-SINGLE EXTRA WIDE)
S-301	TIMBER BENTS FOR ACROW BRIDGE (TWO LANE DOUBLE SINGLE DOUBLE WIDE)
S-310	TIMBER BENTS FOR BAILEY BRIDGE (ONE LANE SINGLE-SINGLE) (TYPE M-1 OR M-2)
S-311	TIMBER BENTS FOR BAILEY BRIDGE (TWO LANES SINGLE-SINGLE) (TYPE M-1 OR M-2)
JOINTS	
* 400	EXPANSION JOINTS
LIGHTING	
500	LIGHT POLE PILASTER
510	NAVIGATION LIGHT SYSTEM DETAILS (2 SHEETS)
PILES	
600	12", 14", 18", 20", 24" AND 30" PRESTRESSED CONCRETE PILES (2 SHEETS)
* 610	10" CONCRETE SHEET PILES

INDEX NO.	*TITLE*
RAILINGS	
700	TRAFFIC RAILING BARRIER
710	TRAFFIC RAILING (SIDEWALK TYPE AND BICYCLE TYPE)
720	PEDESTRIAN/BICYCLE RAILING
RETAINING WALLS	
800	CANTILEVER RETAINING WALLS, GENERAL NOTES AND DETAILS
801	CASE I (2.0 KIPS/SQ. FT. MAX. BEARING PRESSURE) 6 FT. TO 20 FT. HEIGHT
802	CASE I (3.0 KIPS/SQ. FT. MAX. BEARING PRESSURE) 6 FT. TO 30 FT. HEIGHT
803	CASE I (4.0 KIPS/SQ. FT. MAX. BEARING PRESSURE) 6 FT. TO 30 FT. HEIGHT
804	CASE I (5.0 KIPS/SQ. FT. MAX. BEARING PRESSURE) 6 FT. TO 30 FT. HEIGHT
805	CASE I (6.0 KIPS/SQ. FT. MAX. BEARING PRESSURE) 6 FT. TO 30 FT. HEIGHT
806	CASE II (2.0 KIPS/SQ. FT. MAX. BEARING PRESSURE) 6 FT. TO 20 FT. HEIGHT
807	CASE II (3.0 KIPS/SQ. FT. MAX. BEARING PRESSURE) 6 FT. TO 30 FT. HEIGHT
808	CASE II (4.0 KIPS/SQ. FT. MAX. BEARING PRESSURE) 6 FT. TO 30 FT. HEIGHT
809	CASE II (5.0 & 6.0 KIPS/SQ. FT. MAX. BEARING PRESSURE) 6 FT. TO 30 FT. HEIGHT
810	CASE III (2.0 KIPS/SQ. FT. MAX. BEARING PRESSURE) 6 FT. TO 15 FT. HEIGHT
811	CASE III (2.5 KIPS/SQ. FT. MAX. BEARING PRESSURE) 6 FT. TO 20 FT. HEIGHT
812	CASE III (3.0 KIPS/SQ. FT. MAX. BEARING PRESSURE) 6 FT. TO 25 FT. HEIGHT
813	CASE III (3.5 KIPS/SQ. FT. MAX. BEARING PRESSURE) 6 FT. TO 30 FT. HEIGHT
814	CASE III (4.0 KIPS/SQ. FT. MAX. BEARING PRESSURE) 6 FT. TO 30 FT. HEIGHT
815	CASE III (4.5 KIPS/SQ. FT. MAX. BEARING PRESSURE) 6 FT. TO 30 FT. HEIGHT
816	CASE III (5.0 KIPS/SQ. FT. MAX. BEARING PRESSURE) 6 FT. TO 30 FT. HEIGHT
817	CASE III (5.5 KIPS/SQ. FT. MAX. BEARING PRESSURE) 6 FT. TO 30 FT. HEIGHT
818	CASE III (6.0 KIPS/SQ. FT. MAX. BEARING PRESSURE) 6 FT. TO 30 FT. HEIGHT
819	CASE IV (3.0 KIPS/SQ. FT. MAX. BEARING PRESSURE) 6 FT. TO 15 FT. HEIGHT
820	CASE IV (4.0 KIPS/SQ. FT. MAX. BEARING PRESSURE) 6 FT. TO 19 FT. HEIGHT
821	CASE IV (5.0 KIPS/SQ. FT. MAX. BEARING PRESSURE) 6 FT. TO 23 FT. HEIGHT
822	CASE IV (6.0 KIPS/SQ. FT. MAX. BEARING PRESSURE) 6 FT. TO 26 FT. HEIGHT
MISCELLANEOUS	
900	APPROACH SLABS
* 1200	FENDER SYSTEMS
1300	STANDARD BAR BENDING DETAILS
2001	CANTILEVER SIGN STRUCTURE (NOTES, CAMBER, ISOMETRIC VIEW)
2002	CANTILEVER SIGN STRUCTURE (CONNECTION DETAILS)
2003	CANTILEVER SIGN STRUCTURE (TRUSS ELEVATION)
S-2004	TABLES OF SIGN STRUCTURE VARIABLES
2011	SPAN SIGN STRUCTURE (NOTES,CAMBER, ISOMETRIC VIEW)
2012	SPAN SIGN STRUCTURE (CONNECTION DETAILS)
2013	SPAN SIGN STRUCTURE (TRUSS ELEVATION)
S-2014	TABLES OF SIGN STRUCTURE VARIABLES

NOTES:

1. An Index Number beginning with a prefix letter S, i.e. S-102, is used to designate a Semi-Standard sheet.
2. An Index Number beginning with a prefix letter I, i.e. I-122, is used to designate a sheet providing instructions
3. An asterisk (*) adjacent to an Index Number designates a drawing not yet available at time of printing.
4. Comments and or questions concerning these Standards shall be directed (preferably in writing) to: Angelo J. Garcia.

RECYCLED PAPER

MON NOV 9 14:11:02 1992 STN\120.230\INDEX.DGN

FED. ROAD DIV. NO.	STATE	PROJECT NO.	FISCAL YEAR	SHEET NO.
3	FLA.			

FLORIDA DEPARTMENT OF TRANSPORTATION

STRUCTURES DESIGN OFFICE

PREFACE

The "Drawings" in this document were produced with the use of Computer Aided Design and Drafting equipment, and depict common structural components or elements suitable for standardization. Whenever possible, the drawings were developed to full completion and are ready for insertion in the Contract Documents. These fully developed drawings are referred to as "Standard Drawings" and are easily recognized by referring to their Index Numbers, which in this case, consist of numerical symbols only.

Besides the above fully developed "Standard Drawings", this document also contains two (2) other types of drawings. The first type provides incomplete standard details, and/or a table of variables, that should be completed by the designer prior to inclusion of the drawing in the Contract Documents. These incomplete drawings are referred to as "Semi-Standard Drawings", and their Index Numbers are preceded by the letter "S".

The second type of drawings are furnished to provide information about the "Standard Drawings", and/or instruction for completing the "Semi-Standard Drawings". These drawings should not be included in the Contract Documents, and their Index Numbers are preceded by the letter "I".

The Engineer of Record (EOR) for a "Standard Drawing" is already shown in the portion of the title block which has been executed. He/She will continue to be the EOR for as long as the drawing(s) remain unaltered. The designer shall complete the remaining portion of the title block. Completion of the title block is not deemed to be a drawing alteration.

The Engineer of Record for a "Semi-Standard Drawing is the Professional Engineer responsible for the completion of the drawing. The title block should be fully executed by the above professional Engineer.

In the event that a designer decides to alter the content of a "Standard Drawing" to suit a particular design, the designer may proceed as follows:

1. Produce a new project specific drawing using the "Standard Drawing" as a guide, or

2. Delete the name of the EOR and the Index Number, and modify the details/notes in the "Standard Drawing" as required. In this event, the "Standard Drawing" ceases to be a standard and the engineer responsible for the modifications to the "Standard Drawing" becomes the EOR for the modified drawing.. or

3. If the required modifications are minor, show the modifications on a separate sheet(s). In this case cross-reference notes shall be provided on the "Standard Drawing" and on the sheet(s) that shows the modifications, and "MOD." (Modified) shall be added to the Index Number.

It should be clearly understood that if modifications to the "Standard Drawings" are required, the work shall be performed under the direct supervision of a Professional Engineer, who will be responsible for the altered design.

The number indicates the year. If the letter "R" is added, the drawing issued the previous year was revised.

REVISIONS

Date	By	Description	Date	By	Description
			92R		

	Names	Dates
Drawn by		
Checked by		
Designed by		
Checked by		
Approved by	AJG	

ENGINEER OF RECORD:

LOGO:

SEAL:

FLORIDA DEPARTMENT OF TRANSPORTATION
STRUCTURES DESIGN OFFICE

ROAD NO.	COUNTY	PROJECT NO.

SHEET TITLE: PREFACE

PROJECT NAME:

Drawing No. 1 of 1

Index No. I-001

Mon Nov 9 14:13:18 1992 ST1:(120,230)PREFACE.DGN

FED. ROAD DIV. NO.	STATE	PROJECT NO.	FISCAL YEAR	SHEET NO.
3	FLA.			

INSTRUCTIONAL NOTES

GENERAL:

The Standard Drawings for prestressed beams depict details and notes that are fully developed. These drawings are ready for inclusion in the contract documents after completing the portion of the title block that provides specific project information.

The Semi-Standard Drawings contain generic details and notes, and require the completion of the Table of Beam Variables and the Strand Patterns and Debonding Schedule detail.

When completed, the Semi-Standard Drawing(s) shall be included in the plans in conjunction with the appropriate Standard Drawing(s). Do not include duplicate Standard Drawings in the same set of bridge drawings.

Standard Drawings and properly completed Semi-Standard Drawings shall provide sufficient information to permit beam fabrication without the necessity of a shop drawings submittal.

The drawings shall be matched as follows:

Standard Index No.	Semi-Standard Index No.
100 ----------	S-102, S-103 and/or S-104
101 ----------	S-105 and/or S-106
110 ----------	S-111, S-112 and/or S-113

EXAMPLE:

The following example shows the data required for completion of a "Semi-Standard" drawing, in this case an AASHTO Type III Beam (Index No. S-103).

The example assumes a three span bridge designed for the following conditions:

Live Load: HS-20
Additional Live Load: 5% (HS-20): (NO DIAPHRAGMS)
Future Wearing Surface: Design includes allowance for 15 PSF.
Stay-in-Place Metal Forms: Design includes allowance for 20 PSF non-composite dead load over the projected plan area of the forms for the unit weight of metal forms and concrete required to fill the form flutes.
Environment (Superstructure): Slightly Aggressive

Bridge Characteristics:
Length: 185 ft.
Width: 43'-1" (out-to-out)
Clear Roadway: 40 ft.
Superstructure: Three simple spans of prestressed concrete beams with 8-inch composite deck slab
Spans: 55'-0", 75'-0", 55'-0"
Sidewalk: None
Horizontal Alignment: Straight
Vertical Alignment: +2.00% Grade
Skew Angle: 15 degrees (Right)

Beam Design:
Beam: Type III
Spacing: 9.25', 55' Span (5 Beams)
7.40', 75' Span (6 Beams)
Design Span Length: 53.21' (Spans 1 & 3); 73.27' (Span 2)
Dead Load on Composite Section:
55 ft. Span: 228 PLF
75 ft. Span: 206 PLF
Dead Load on Non-Composite Section:
55 ft. Span: 158 PLF
75 ft. Span: 121 PLF
Bonded Strand Transfer and Development Multiplier = 1.60
Working Load Concrete Tension Factor = (-)6.0
(Maximum Tension at Design Load)

Additional Instructions: The 6" spacing for stirrup bars "K" shall extend to approximately L/4. The length of Bars "A" shall be 10 ft. or 0.15L whichever is larger.

OTHER CONSIDERATIONS: When the actual number of beams or strand patterns exceed those that can be accommodated on a single semi-standard sheet, use additional semi-standard sheets or provide a new drawing showing an expanded "Table of Beam Variables" and any required additional strand patterns. If special conditions require dimensions or details not covered in the Table as provided, add additional columns to the Table as required.

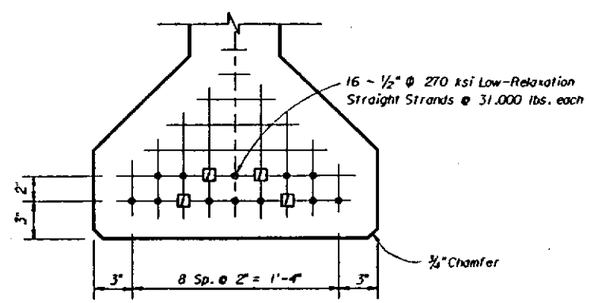

TYPE ①

1 - Debond 6'-0" from ends of beam

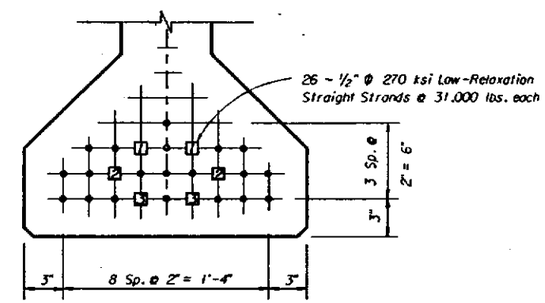

TYPE ②

1 - Debond 22'-0" from ends of beam
2 - Debond 10'-6" from ends of beam
3 - Debond 3'-6" from ends of beam

STRAND PATTERNS AND DEBONDING SCHEDULE

NOTE: ☐ - Indicates referenced pair of strands to be debonded the length shown which is measured from each end of the beam.

TABLE OF BEAM VARIABLES																											REINFORCING STEEL			
BEAM ID.	CONCRETE PROPERTIES			STND PTRN TYPE	PLAN VIEW CASE	END ELEV COND.	BRG. PLATE CASE	END OF BEAM AND BEARING DIMENSIONS **				BEAM DIMENSIONS *			NUMBER OF SPACES FOR STIRRUP BARS K						DIAPHRAGM INSERT LOCATIONS*					A	K	N	
	CLASS	STRENGTHS REL. (f'ci)	28-DAY (f'c)					ANGLE Ø	DIM F	DIM J	DIM K	DIM L	DIM R	DIM V	S1	S2	S3	S4	S5	S6	DIM X1	DIM X2	DIM Y	NS/FS (8) #1	#2	LENGTH*	NO. REQ'D	LENGTH*	
101 to 105	III	4,000	5,000	①	3	2	-	75°00'00"	7/8"	5 1/2"	10"	54'-3 1/8"	5/16"	11 1/16"	26	-	8	-	6	1	-	-	-	-	-	10'-0"	91	54'-8"	
201 to 206	III	4,000	5,000	②	3	2	-	75°00'00"	7/8"	5 1/2"	10"	74'-3 1/2"	5/16"	11 1/4"	34	-	12	-	9	1	-	-	-	-	-	10'-0"	121	74'-8"	
301 to 305	III	4,000	5,000	①	3	2	-	75°00'00"	7/8"	5 1/2"	10"	54'-3 1/8"	5/16"	11 1/16"	26	-	8	-	6	1	-	-	-	-	-	10'-0"	91	54'-8"	

REVISIONS					
Date	By	Description	Date	By	Description
			92R		

	Names	Dates
Drawn by	JSP	8-92
Checked by	CBH	8-92
Designed by	AJG	8-92
Checked by	CBH	8-92
Approved by	REN	

ENGINEER OF RECORD:
STRUCTURES DESIGN OFFICE
CENTRAL OFFICE
605 Suwannee Street, MS 33
Tallahassee, Florida 32399-0450

LOGO:

SEAL:

FLORIDA DEPARTMENT OF TRANSPORTATION
STRUCTURES DESIGN OFFICE

ROAD NO.	COUNTY	PROJECT NO.

SHEET TITLE: PRESTRESSED BEAM INSTRUCTIONS

PROJECT NAME:

Drawing No. 1 of 1

Index No. I-099

FED. ROAD DIV. NO.	STATE	PROJECT NO.	FISCAL YEAR	SHEET NO.
3	FLA.			

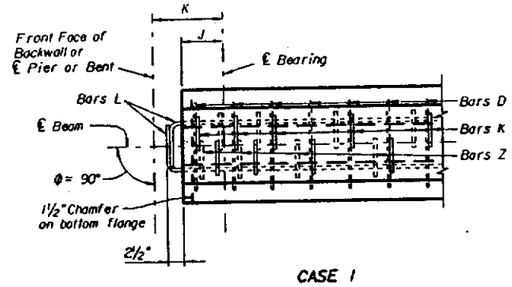

CASE 1

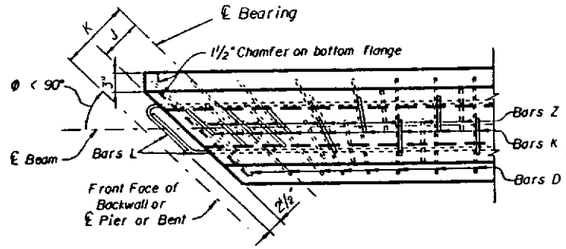

CASE 2
(See Note)

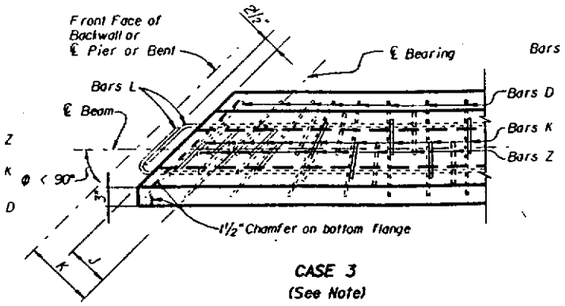

CASE 3
(See Note)

PLAN ENDS OF BEAMS

Note: For both Plan Views Case 2 and Case 3, the first Bar Z and the first two Bars K shall be placed parallel to the skewed end of the Beam. The remainder of the Bars Z & K shall be placed so as to transition from an axis parallel to the skewed end to an axis perpendicular to the centerline of the beam. Bars D in the bottom flange shall be rotated along with Bars Z & K. Bar spacing may be adjusted to miss welded studs for bearing plates. See also "End Elevations of Beams", this sheet.

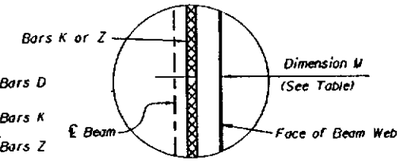

SECTION THRU BEAM WEB
(Showing Cover on Stirrups)

TABLE OF DIMENSIONS M	
BEAM TYPE	DIMENSION M
II	2"
III	2½"
IV	3"

BEAM NOTES

MORTAR LEAKAGE: Any mortar leakage that occurs and stains resulting from leakage shall be removed so that beams have a uniform appearance.

STRANDS: At the option of the Contractor, other types, sizes and/or configurations of strands may be used in lieu of the stranding shown on these sheets. Calculations shall be submitted showing the substitution meets the following requirements:

1. The strands meet all the requirements of ASTM-A416 for the grade of strands proposed.
2. The net compressive stress in the concrete due to prestressing acting alone, after all losses, is at least as large as that provided by the stranding shown on these sheets.
3. The ultimate strength of the structure with the proposed stranding is at least equal to the ultimate strength of the original design.
4. The proposed stranding complies in all respects with the Department's Structures Design Guidelines.

FINISH: The top surface of the beam shall be rough floated and then scrubbed transversely with a coarse wire brush to remove all laitance and to produce a roughened surface for bonding. All beams shall receive a Class 3 surface finish.

SUBMITTALS: The Specifications stipulate the conditions for which Shop Drawings are not required. If each and every condition can not be met, then a formal Shop Drawing submittal is required. Supplemental reinforcing provided by the Contractor to facilitate fabrication of prestressed beams do not require Shop Drawings.

STRAND DETENSIONING: Strand detensioning shall be based upon the following priority, from first to last:

1. Top dormant strands (Bars N)
2. Fully bonded strands
3. Partially debonded (shielded) strands

FORMS AND PALLETS: All beams shall be cast on concrete based pallets and in metal forms.

HANDLING: In the handling of beams, they must be maintained in an upright position at all times and must be picked up from points located a maximum distance of 3 ft. from the ends of the beam.

STORAGE AND TRANSPORTATION: Beams shall be stored on adequate dunnage and supported during transit within 18" from ends of beam.

STRAND EXTENSION: All strands shall extend 2½" beyond ends of beams.

CONCRETE: Refer to Table of Beam Variables on the individual beam sheets for the class of concrete, 28-day strength (f'c) and cylinder strength at transfer of the tensioning load (f'ci).

REINFORCING STEEL: All reinforcing steel shall be Grade 60.

BEARING PADS: The cost of installing bearing pads shall be included in the contract unit price of prestressed beams. The composite neoprene pads may or may not be furnished to the contractor by FDOT. See the General Notes for the bridge, or the Bid Item Notes, for additional information regarding who the pads provider will be.

MISCELLANEOUS: Bearing plates, anchor bolts, nuts and washers shall be hot dip galvanized in accordance with requirements of A.S.T.M. Specification A123 or A153. Bearing plates shall conform to A.S.T.M. Specification A709, Grade 36. Anchor bolts shall conform to A709, Grade 36 or A307. The cost of bearing plates, anchor bolts, nuts, washers, premoulded expansion material at bearings and inserts for diaphragm tie bars shall be included in the contract unit prices for prestressed beams.

NOTES: Work this sheet with individual beam sheets, Type II, III and IV only.

See "TABLE OF BEAM VARIABLES" on individual beam sheets for angle "Ø"s and dimensions "J", "K", "L" and "P".

For beams with vertically bevelled ends, such as conditions 2 & 3, the first Bar K shall be placed parallel to the end bevel. Adjacent Bars Z and K shall be placed so as to transition from an axis parallel to the end bevel to a vertical axis. The spacing of Bars K and Z shown shall apply along the top flange of the beam and the spacing along the bottom of the beam shall be adjusted by not more than ½ inch (±) until the vertical position is attained.

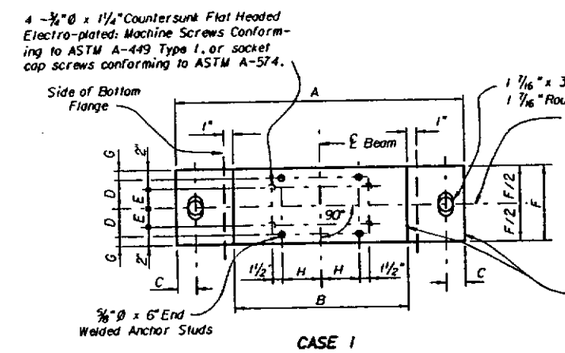

CASE 1

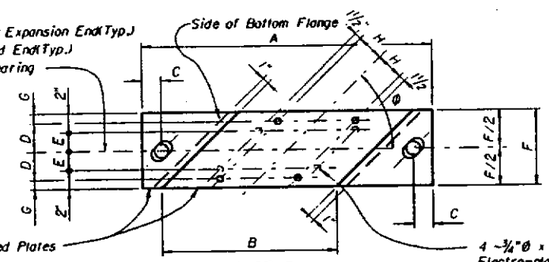

CASE 2

BEARING PLATE DETAILS

NOTE: Bearing Plates required on Beams only as scheduled in the Table of Beam Variables.

4 -¾"Ø x 1¼"Countersunk Flat Headed Electro-plated; Machine Screws Conforming to ASTM A-449 Type 1, or socket cap screws conforming to ASTM A-574.

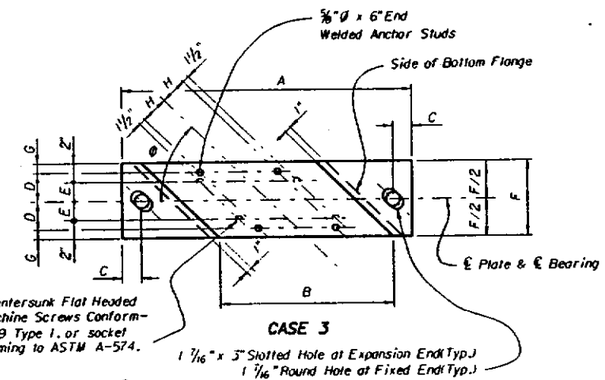

CASE 3

TABLE OF BEARING PLATE DIMENSIONS								
BEAM TYPE	DIMENSIONS (INCHES)							
	A	B	C	D	E	F	G	H
II	6 / B+2C+(6/SIN Ø)	16/SIN Ø	2+0.781(COS Ø)	3	2½	9	1½	3
III		20/SIN Ø			2	8	1	5
IV		24/SIN Ø			3	10	2	7

NOTE: All bearing plate dimensions are measured along the bottom of the beam.

NOTE: Insert shall be 1"Ø, zinc-electroplated, ferrule wing nut, UNC threads, 1/0 minimum gage wire, not more than 4" in depth and shall have a minimum ultimate tensile strength of 11,400 lbs. in 4,000 p.s.i. concrete.

NOTE: If inserts are needed on both sides (faces) of beam webs an assembly as long as the thickness of the beam web, consisting of two (2) Ferrule inserts attached by two (2) or more struts may be utilized. The connecting struts shall have a minimum ultimate tensile strength of 22,800 lbs.

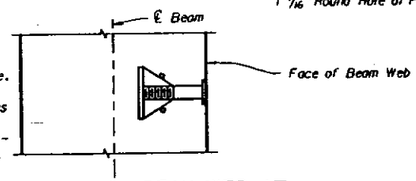

SECTION THRU BEAM WEB AT INSERT FOR DIAPHRAGM REINFORCING
(When Intermediate Diaphragms are Required)

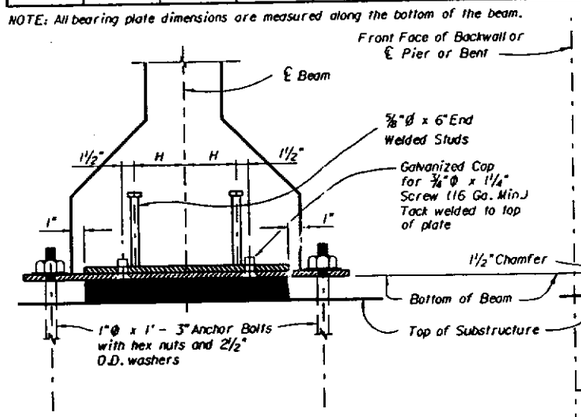

END ELEVATION-SECTION OF BEARING ASSEMBLY
(Perpendicular to ℄ Beam)

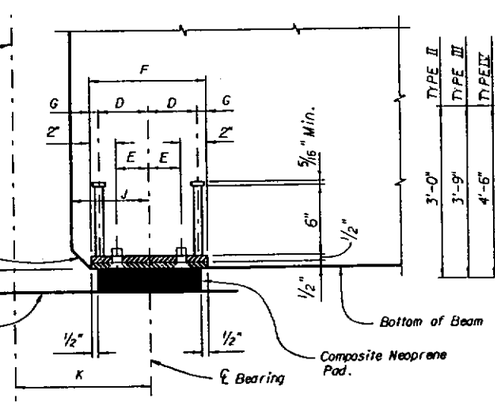

SIDE ELEVATION-SECTION OF BEARING ASSEMBLY
(Perpendicular To ℄ Bearing)

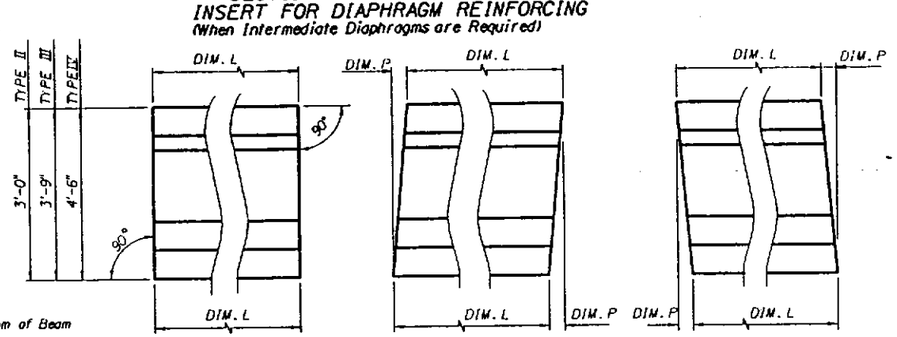

CONDITION 1
(P = 0'-0")

CONDITION 2

CONDITION 3

END ELEVATIONS OF BEAMS
(Showing Vertical Bevel of Beam End)

REVISIONS					
Date	By	Description	Date	By	Description
			92R		

	Names	Dates
Drawn by	WEH	1-89
Checked by	DCP	1-89
Designed by	DCP	1-89
Checked by	WEH	1-89
Approved by	REN	

ENGINEER OF RECORD:
STRUCTURES DESIGN OFFICE
CENTRAL OFFICE
605 Suwannee Street, MS 33
Tallahassee, Florida 32399-0450

LOGO:

SEAL:

FLORIDA DEPARTMENT OF TRANSPORTATION
STRUCTURES DESIGN OFFICE

ROAD NO.	COUNTY	PROJECT NO.

SHEET TITLE:
TYPICAL NOTES AND DETAILS FOR AASHTO TYPE II, III AND IV PRESTRESSED BEAMS

PROJECT NAME:

Drawing No. 1 of 1

Index No. 100

ST1:E120.2301100.DGN

Mon Nov 9 11:00:13 1992

FED. ROAD DIV. NO.	STATE	PROJECT NO.	FISCAL YEAR	SHEET NO.
3	FLA.			

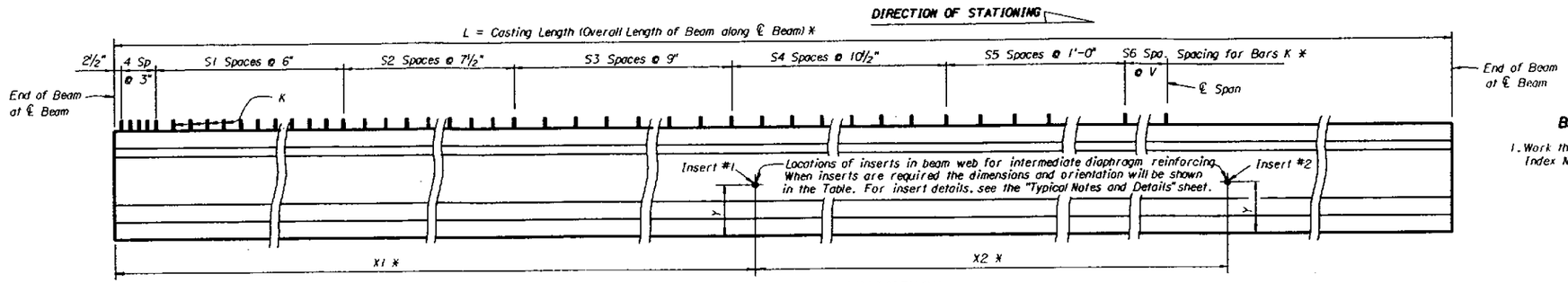

ELEVATION

NOTE: Dimension R has been included in the lengths (L) of beams to compensate for elastic and time-dependent shortening effects.

* Note: All longitudinal beam dimensions shown on this sheet with a single asterisk (*) are measured along the top of the beam at the centerline of beam.

** Note: End of beam bearing dimensions "S" and "K" are measured along the bottom of the beam.

BEAM NOTES

1. Work this sheet with Standard Index No. 100.

BILL OF REINFORCING STEEL FOR ONE BEAM ONLY

MARK	SIZE	NO. REQUIRED	LENGTH (1)
A	5	4	See Table
D (2)(6)	3	20	Varies(4'-2" Min.)
K (2)	4	See Table	4'-3"
L (3)(4)	4	18	3'-11"
N (5)	3/8"ϕ Strand	2	See Table
Z (2)	4		3'-7"

BENDING DIAGRAMS (1)

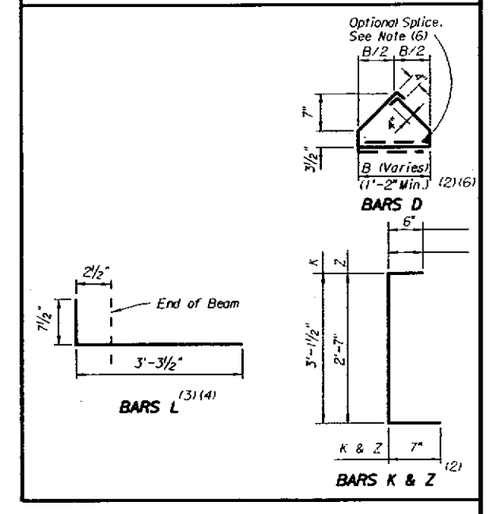

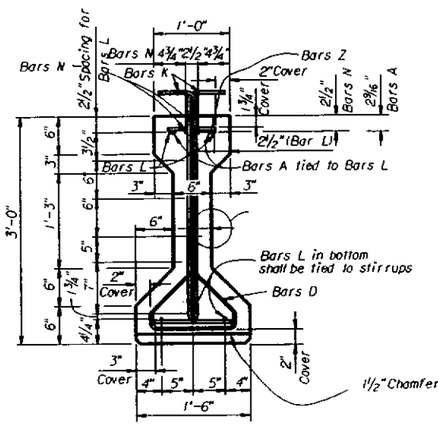

VIEW B-B

(With strands omitted, see Table for reference to strand pattern.)

NOTE: Place Bars K and Z one (1) each space (alternate).

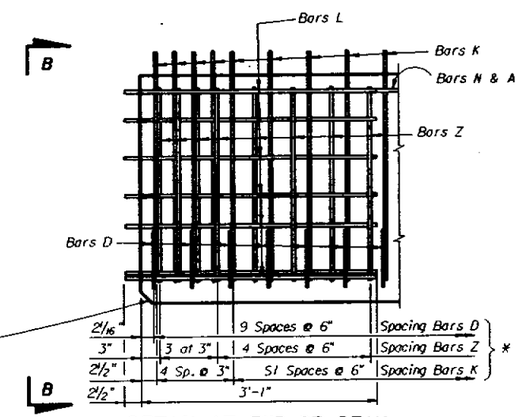

DETAIL AT END OF BEAM

NOTE: Stirrups shall be placed and tied to the top of the fully bonded prestressing strands in the bottom row.

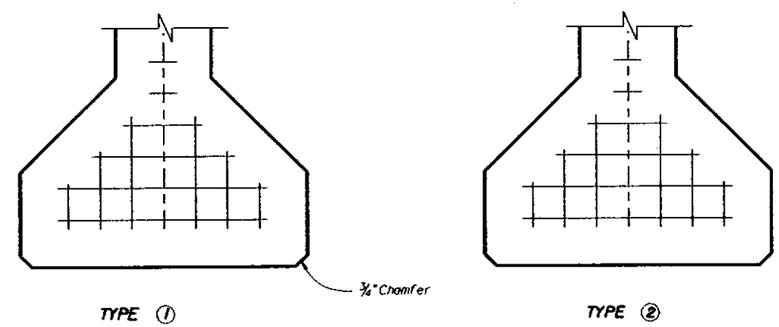

STRAND PATTERNS AND DEBONDING SCHEDULE

NOTE: ○ -Indicates fully bonded strands.

□ -Indicates referenced pair of strands to be debonded the length shown which is measured from the end of the beam. *

NOTES:

(1) All bar dimensions are out-to-out.

(2) Bars D, K, and Z shall be bent around pins having the following diameters for respective sizes:

Bar Size	Pin Diameters
#3	1"
#4	2"

(3) Bars L shall be bent prior to the beam leaving the prestressing yard. For treatment of bars L at skewed beam ends, see "Plan Ends of Beams".

(4) Caution should be used with Bars L in the ends of exterior beams to assure that the bent portion of the bar is properly oriented so that the bar will be embedded in the diaphragm concrete.

(5) Bars N shall be either ASTM A416, Grade 250 or 270, seven-wire strands 3/8" diameter or larger, stressed to 10,000 pounds each.

(6) The minimum Dimension B and length of Bars D shown apply to one-piece Bars D placed perpendicular to the centerline of the beam. Dimension B and the length of Bars D for beams with skewed ends vary with the skew (See "Plan Ends of Beams").
At the Contractor's option, Bars D may be fabricated either as a two-piece bar with a 1'-2" lap splice of the bottom legs or may be welded wire fabric, one or two-piece, provided the wire size and spacing furnishes the same steel area as the No. 3 Bars shown.

(7) (NS) means Near Side and (FS) means Far Side, both referring to which face of the beam web is to receive the insert for the dimensioned location. (NS) and (FS) are referenced to the DIRECTION OF STATIONING shown.

TABLE OF BEAM VARIABLES

BEAM ID.	CONCRETE PROPERTIES: CLASS	STRENGTHS: REL. (f'ci)	28-DAY (f'c)	STND PTRN TYPE	PLAN VIEW CASE	END ELEV COND.	BRG. PLATE CASE	END OF BEAM AND BEARING DIMENSIONS **: ANGLE θ	DIM P	DIM J	DIM K	BEAM DIMENSIONS *: DIM L	DIM R	DIM V	NUMBER OF SPACES FOR STIRRUP BARS K: S1	S2	S3	S4	S5	S6	DIAPHRAGM INSERT LOCATIONS*: DIM X1	DIM X2	DIM Y	NS/FS (8): #1	#2	REINFORCING STEEL: A LENGTH*	K NO. REQ'D	N LENGTH*	

REVISIONS: Date	By	Description	Date	By	Description
			92R		

	Names	Dates
Drawn by		
Checked by		
Designed by		
Checked by		
Approved by		

ENGINEER OF RECORD:

LOGO:

SEAL:

FLORIDA DEPARTMENT OF TRANSPORTATION
STRUCTURES DESIGN OFFICE

ROAD NO.	COUNTY	PROJECT NO.

SHEET TITLE: AASHTO TYPE II BEAMS

PROJECT NAME:

Drawing No. 1 of 1

Index No. S-102

STI:L120.23015102.DGN
Mon Nov 9 14:16:41 1992

FED. ROAD DIV. NO.	STATE	PROJECT NO.	FISCAL YEAR	SHEET NO.
3	FLA.			

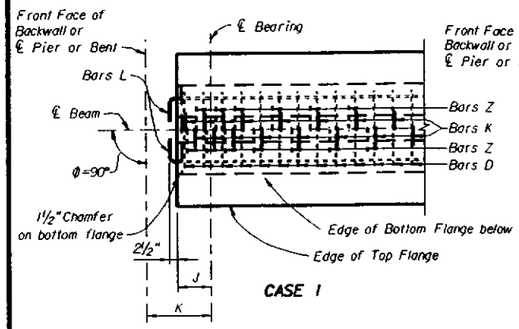

CASE 1

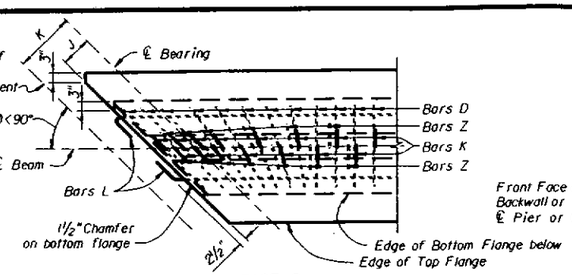

CASE 2
(See Note)

PLAN ENDS OF BEAMS
(Bars W in top flange omitted for clarity.)

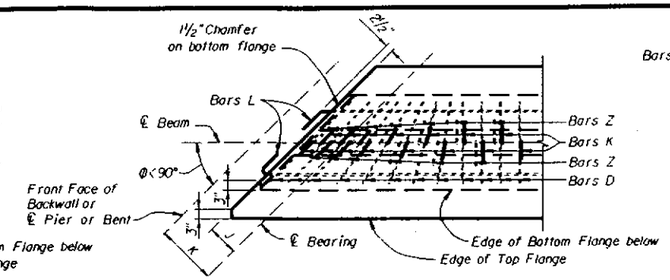

CASE 3
(See Note)

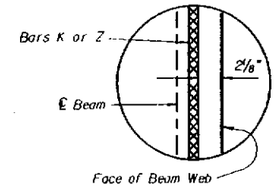

SECTION THRU BEAM WEB
(Showing Cover on Stirrups)

Note: For both Plan Views Case 2 and Case 3, the first Bar Z and the first two Bars K shall be placed parallel to the skewed end of the Beam. The remainder of the Bars Z & K shall be placed so as to transition from an axis parallel to the skewed end to an axis perpendicular to the centerline of the beam. Bars D in the bottom flange shall be rotated along with Bars Z & K. Bar spacing may be adjusted to miss welded studs for bearing plates. See also "End Elevations of Beams", this sheet.

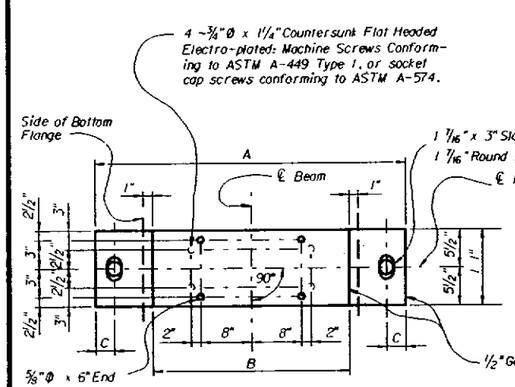

CASE 1

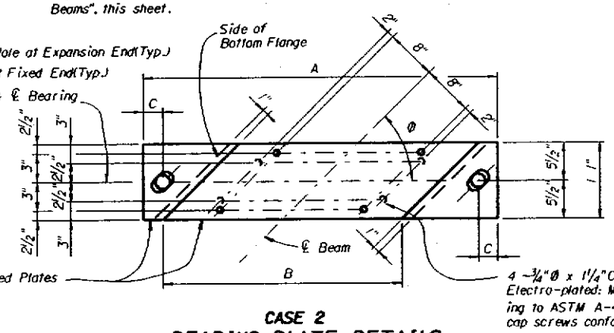

CASE 2

BEARING PLATE DETAILS

NOTE: Bearing Plates required on Beams only as scheduled in the Table of Beam Variables.

NOTE: Insert shall be 1"Φ, zinc-electroplated, ferrule wing nut, UNC threads, 1/0 minimum gage wire, not more than 4" in depth and shall have a minimum ultimate tensile strength of 11,400 lbs. in 4,000 p.s.i. concrete.

NOTE: If inserts are needed on both sides (faces) of beam webs an assembly as long as the thickness of the beam web, consisting of two (2) ferrule inserts attached by two (2) or more struts may be utilized. The connecting struts shall have a minimum ultimate tensile strength of 22,800 lbs.

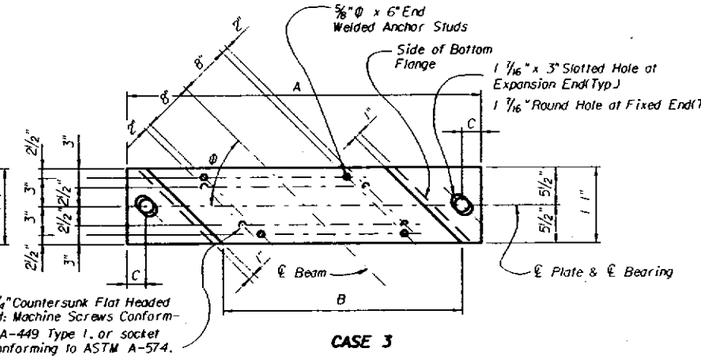

CASE 3

TABLE OF BEARING PLATE DIMENSIONS			
BEAM TYPE	DIMENSIONS (INCHES)		
	A	B	C
V or VI	$B+2C+\left(\frac{6}{\sin\Phi}\right)$	26/SIN Φ	2+0.781(COSΦ)

NOTE: All bearing plate dimensions are measured along the bottom of the beam.

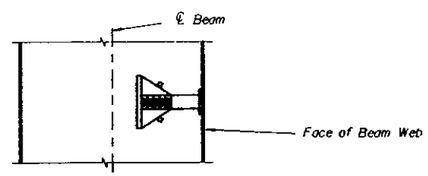

SECTION THRU BEAM WEB AT INSERT FOR DIAPHRAGM REINFORCING
(When Intermediate Diaphragms are Required)

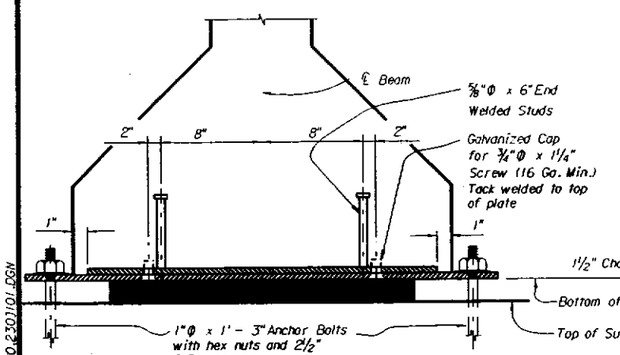

END ELEVATION-SECTION OF BEARING ASSEMBLY
(Perpendicular To L Beam)

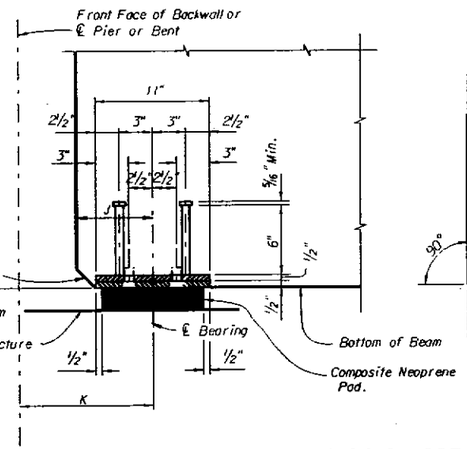

SIDE ELEVATION-SECTION OF BEARING ASSEMBLY
(Perpendicular To ℄ Bearing)

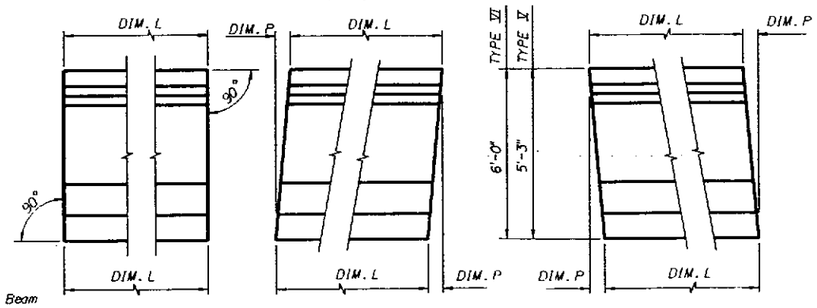

CONDITION 1 (P = 0'-0")

CONDITION 2

CONDITION 3

END ELEVATIONS OF BEAMS
(Showing Vertical Bevel of Beam End)

BEAM NOTES

MORTAR LEAKAGE: Any mortar leakage that occurs and stains resulting from leakage shall be removed so that beams have a uniform appearance.

STRANDS: At the option of the Contractor, other types, sizes and/or configurations of strands may be used in lieu of the stranding shown on these sheets. Calculations shall be submitted showing the substitution meets the following requirements:

1. The strands meet all the requirements of ASTM-A416 for the grade of strands proposed.
2. The net compressive stress in the concrete due to prestressing acting alone, after all losses, is at least as large as that provided by the stranding shown on these sheets.
3. The ultimate strength of the structure with the proposed stranding is at least equal to the ultimate strength of the original design.
4. The proposed stranding complies in all respects with the Department's Structures Design Guidelines.

FINISH: The top surface of the beam shall be rough floated and then scrubbed transversely with a coarse wire brush to remove all laitance and to produce a roughened surface for bonding. All beams shall receive a Class 3 surface finish.

SUBMITTALS: The Specifications stipulate the conditions for which Shop Drawings are not required. If each and every condition can not be met, then a formal Shop Drawing submittal is required. Supplemental reinforcing provided by the Contractor to facilitate fabrication of prestressed beams do not require Shop Drawings.

STRAND DETENSIONING: Strand detensioning shall be based upon the following priority, from first to last:

1. Top dormant strands (Bars N)
2. Fully bonded strands
3. Partially debonded (shielded) strands

FORMS AND PALLETS: All beams shall be cast on concrete based pallets and in metal forms.

HANDLING: In the handling of beams, they must be maintained in an upright position at all times and must be picked up from points located a maximum distance of 3 ft. from the ends of the beam.

STORAGE AND TRANSPORTATION: Beams shall be stored on adequate dunnage and supported during transit within 18" from ends of beam.

STRAND EXTENSION: All strands shall extend 2½" beyond ends of beams.

CONCRETE: Refer to Table of Beam Variables on the individual beam sheets for the class of concrete, 28-day strength (f'c) and cylinder strength at transfer of the tensioning load (f'ci).

REINFORCING STEEL: All reinforcing steel shall be Grade 60.

BEARING PADS: The cost of installing bearing pads shall be included in the contract unit price of prestressed beams. The composite neoprene pads may or may not be furnished to the contractor by FDOT. See the General Notes for the bridge, or the Bid Item Notes, for additional information regarding who the pads provider will be.

MISCELLANEOUS: Bearing plates, anchor bolts, nuts and washers shall be hot dip galvanized in accordance with requirements of A.S.T.M. Specification A123 or A153. Bearing plates shall conform to A.S.T.M. Specification A709, Grade 36. Anchor bolts shall conform to A.S.T.M. A709, Grade 36 or A307. The cost of bearing plates, anchor bolts, nuts, washers, premoulded expansion material at bearings and inserts for diaphragm tie bars shall be included in the contract unit prices for prestressed beams.

NOTES: Work this sheet with individual beam sheets. Type V and VI only.

See "TABLE OF BEAM VARIABLES" on individual beam sheets for angle "Φ"s and dimensions "J", "K", "L" and "P".

For beams with vertically beveled ends, such as conditions 2 & 3, the first Bar K shall be placed parallel to the end bevel. Adjacent Bars Z and K shall be placed so as to transition from an axis parallel to the end bevel to a vertical axis. The spacing of Bars K and Z shown shall apply along the top flange of the beam and the spacing along the bottom of the beam shall be adjusted by not more than ½ inch (±) until the vertical position is attained.

REVISIONS					
Date	By	Description	Date	By	Description
			92R		

	Names	Dates
Drawn by	WEH	1-89
Checked by	DCP	1-89
Designed by	DCP	1-89
Checked by	WEH	1-89
Approved by	REN	

ENGINEER OF RECORD: STRUCTURES DESIGN OFFICE, CENTRAL OFFICE, 605 Suwannee Street, MS 33, Tallahassee, Florida 32399-0450

LOGO:

SEAL:

FLORIDA DEPARTMENT OF TRANSPORTATION
STRUCTURES DESIGN OFFICE

ROAD NO.	COUNTY	PROJECT NO.

SHEET TITLE: TYPICAL NOTES AND DETAILS FOR AASHTO TYPE V AND VI PRESTRESSED BEAMS

PROJECT NAME:

Drawing No. 1 of 1

Index No. 101

ST1:E120.230101.DGN
Mon Nov 9 11:03:48 1992

FED. ROAD DIV. NO.	STATE	PROJECT NO.	FISCAL YEAR	SHEET NO.
3	FLA.			

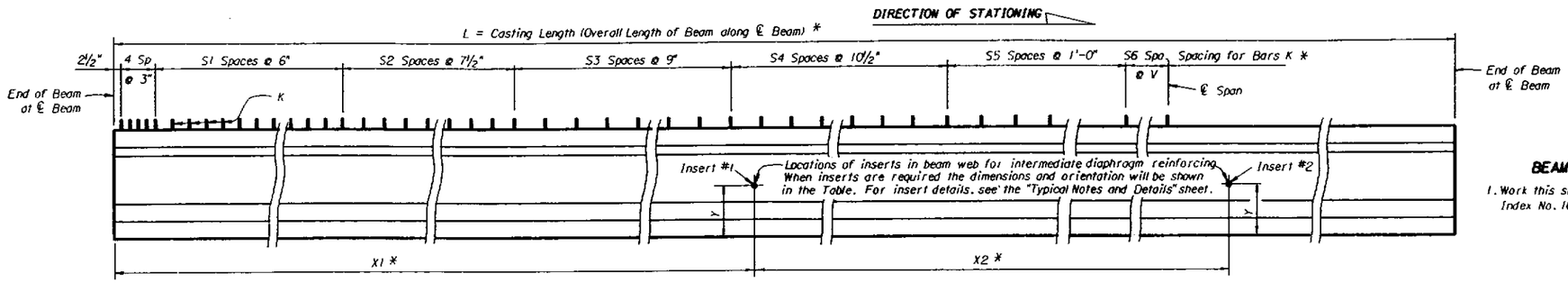

NOTE: Dimension R has been included in the lengths (L) of beams to compensate for elastic and time-dependent shortening effects.

ELEVATION

* Note: All longitudinal beam dimensions shown on this sheet with a single asterisk (*) are measured along the top of the beam at the centerline of beam.

** Note: End of beam bearing dimensions "J" and "K" are measured along the bottom of the beam.

BEAM NOTES

1. Work this sheet with Standard Index No. 100.

BILL OF REINFORCING STEEL FOR ONE BEAM ONLY

MARK	SIZE	NO. REQUIRED	LENGTH (1)
A	5	4	See Table
D (2)(6)	3	24	Varies(4'-11" Min.)
K (2)	4	See Table	5'-2"
L (3)(4)	4	18	4'-8"
N (5)	⅜"Φ Strand	2	See Table
Z (2)	4	18	4'-9"

BENDING DIAGRAMS(1)

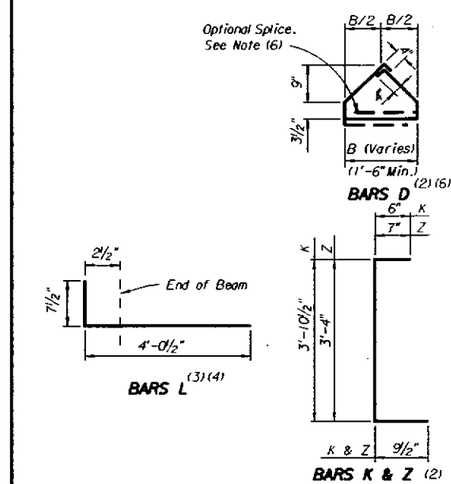

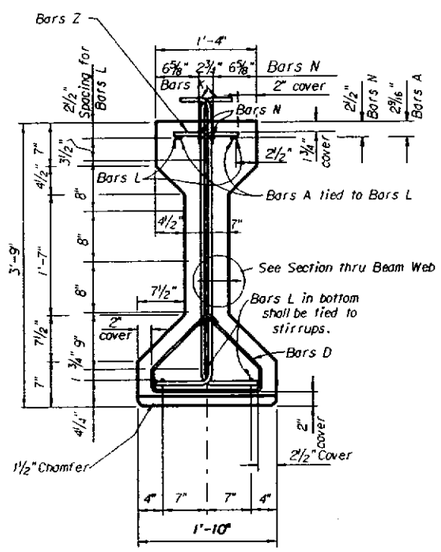

VIEW B-B

(With strands omitted, see Table for reference to strand pattern.)

NOTE: Place Bars K and Z one (1) each space (alternate).

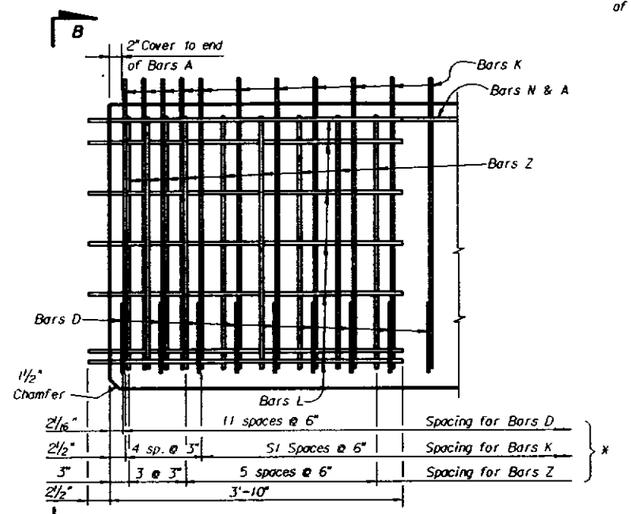

DETAIL AT END OF BEAM

NOTE: Stirrups shall be placed and tied to the top of the fully bonded prestressing strands in the bottom row.

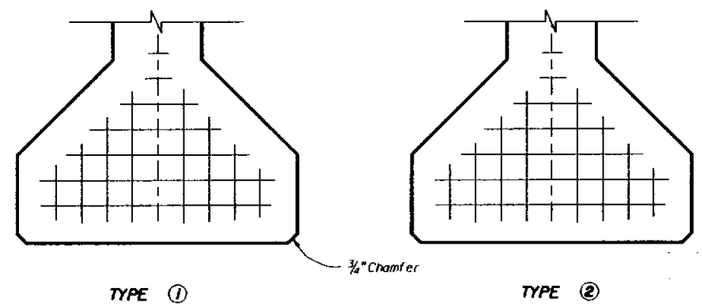

STRAND PATTERNS AND DEBONDING SCHEDULE

NOTE: ○ -Indicates fully bonded strands.

□ -Indicates referenced pair of strands to be debonded the length shown which is measured from the end of the beam. *

NOTES:

(1) All bar dimensions are out-to-out.

(2) Bars D, K, and Z shall be bent around pins having the following diameters for respective sizes:

Bar Size	Pin Diameters
#3	1"
#4	2"

(3) Bars L shall be bent prior to the beam leaving the prestressing yard. For treatment of bars L at skewed beam ends, see "Plan Ends of Beams".

(4) Caution should be used with Bars L in the ends of exterior beams to assure that the bent portion of the bar is properly oriented so that the bar will be embedded in the diaphragm concrete.

(5) Bars N shall be either ASTM A416, Grade 250 or 270, seven-wire strands ⅜"diameter or larger, stressed to 10,000 pounds each.

(6) The minimum Dimension B and length of Bars D shown apply to one-piece Bars D placed perpendicular to the centerline of the beam. Dimension B and the length of Bars D for beams with skewed ends vary with the skew (See "Plan Ends of Beams").
At the Contractor's option, Bars D may be fabricated either as a two-piece bar with a 1'-2" lap splice of the bottom legs or may be welded wire fabric, one or two-piece, provided the wire size and spacing furnishes the same steel area as the No. 3 Bars shown.

(7) (NS) means Near Side and (FS) means Far Side, both referring to which face of the beam web is to receive the insert for the dimensioned location. (NS) and (FS) are referenced to the DIRECTION OF STATIONING shown.

TABLE OF BEAM VARIABLES

BEAM ID.	CONCRETE PROPERTIES: CLASS	STRENGTHS: REL. (f'ci)	STRENGTHS: 28-DAY (f'c)	STND PTRN TYPE	PLAN VIEW CASE	END ELEV COND.	BRG. PLATE CASE	END OF BEAM AND BEARING DIMENSIONS **: ANGLE Ø	DIM P	DIM J	DIM K	BEAM DIMENSIONS *: DIM L	DIM R	DIM V	NUMBER OF SPACES FOR STIRRUP BARS K: S1	S2	S3	S4	S5	S6	DIAPHRAGM INSERT LOCATIONS*: DIM X1	DIM X2	DIM Y	NS/FS (8): #1	#2	REINFORCING STEEL: A LENGTH*	K NO. REQ'D	N LENGTH*

REVISIONS: Date	By	Description	Date	By	Description
			92R		

	Names	Dates
Drawn by		
Checked by		
Designed by		
Checked by		
Approved by		

ENGINEER OF RECORD:

LOGO:

SEAL:

FLORIDA DEPARTMENT OF TRANSPORTATION
STRUCTURES DESIGN OFFICE

ROAD NO.	COUNTY	PROJECT NO.

SHEET TITLE: AASHTO TYPE III BEAMS

PROJECT NAME:

Drawing No. 1 of 1

Index No. S-103

STI:£120.230\S103.DGN
Mon Nov 9 14:9:58 1992

FED. ROAD DIV. NO.	STATE	PROJECT NO.	FISCAL YEAR	SHEET NO.
3	FLA.			

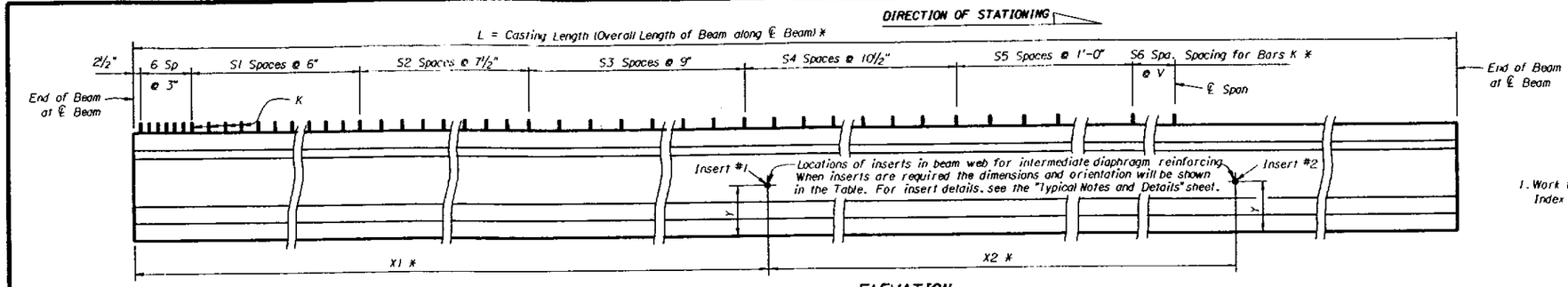

ELEVATION

NOTE: Dimension R has been included in the lengths (L) of beams to compensate for elastic and time-dependent shortening effects.

* Note: All longitudinal beam dimensions shown on this sheet with a single asterisk (*) are measured along the top of the beam at the centerline of beam.

** Note: End of beam bearing dimensions "J" and "K" are measured along the bottom of the beam.

BEAM NOTES

1. Work this sheet with the Standard Index No. 100.

BILL OF REINFORCING STEEL FOR ONE BEAM ONLY

MARK	SIZE	NO. REQUIRED	LENGTH (1)
A	5	8	See Table
D (2)(6)	3	28	Varies(6'-1" Min.)
K (2)	4	See Table	6'-1"
L (3)(4)	4	18	5'-5"
N (5)	⅜"Ø Strand	4	See Table
Z (2)	4	24	5'-9"

BENDING DIAGRAMS (1)

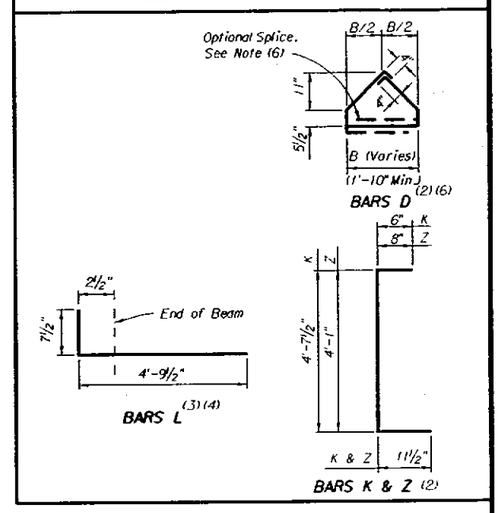

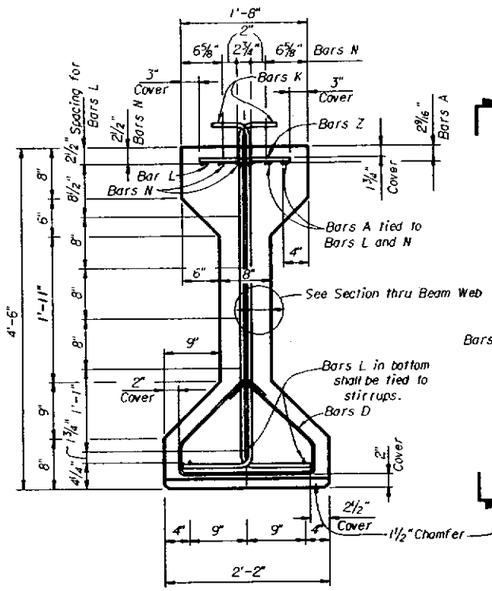

VIEW B-B

(With strands omitted, see Table for reference to strand pattern.)

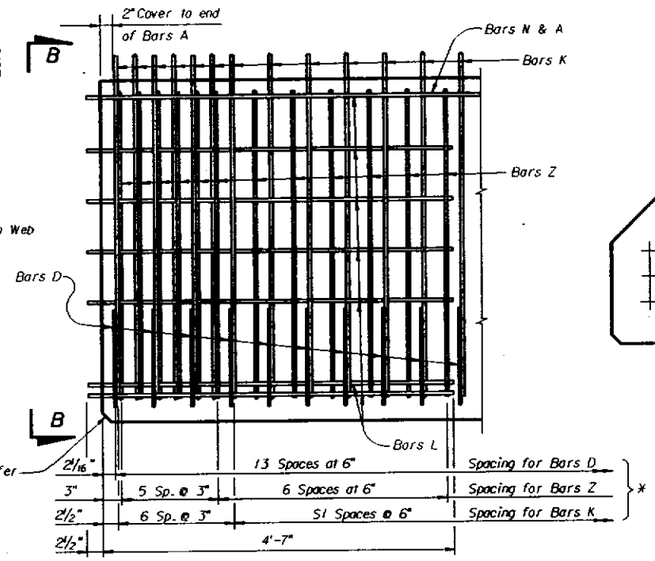

DETAIL AT END OF BEAM

NOTE: Stirrups shall be placed and tied to the top of the fully bonded prestressing strands in the bottom row.

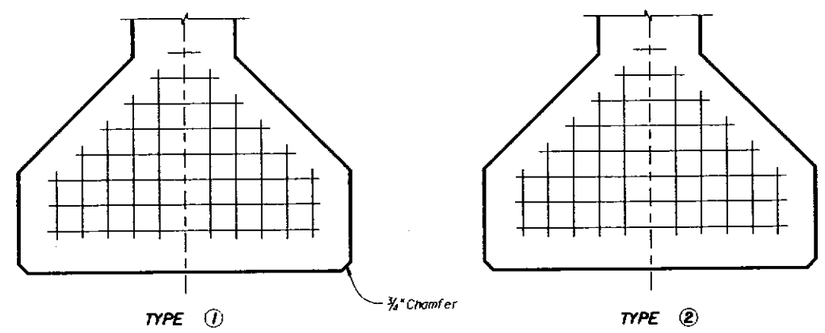

STRAND PATTERNS AND DEBONDING SCHEDULE

NOTE: ○ - Indicates fully bonded strands.

□ - Indicates referenced pair of strands to be debonded the length shown which is measured from the end of the beam. *

NOTE: Place Bars K and Z one (1) each space (alternate).

NOTES:

(1) All bar dimensions are out-to-out.

(2) Bars D, K, and Z shall be bent around pins having the following diameters for respective sizes:

Bar Size	Pin Diameters
#3	1"
#4	2"

(3) Bars L shall be bent prior to the beam leaving the prestressing yard. For treatment of bars L at skewed beam ends, see "Plan Ends of Beams".

(4) Caution should be used with Bars L in the ends of exterior beams to assure that the bent portion of the bar is properly oriented so that the bar will be embedded in the diaphragm concrete.

(5) Bars N shall be either ASTM A416, Grade 250 or 270, seven-wire strands ⅜" diameter or larger, stressed to 10,000 pounds each.

(6) The minimum Dimension B and length of Bars D shown apply to one-piece Bars D placed perpendicular to the centerline of the beam. Dimension B and the length of Bars D for beams with skewed ends vary with the skew (See "Plan Ends of Beams").
At the Contractor's option, Bars D may be fabricated either as a two-piece bar with a 1'-2" lap splice of the bottom legs or may be welded wire fabric, one or two-piece, provided the wire size and spacing furnishes the same steel area as the No. 3 Bars shown.

(7) (NS) means Near Side and (FS) means Far Side, both referring to which face of the beam web is to receive the insert for the dimensioned location. (NS) and (FS) are referenced to the DIRECTION OF STATIONING shown.

TABLE OF BEAM VARIABLES

BEAM ID.	CONCRETE PROPERTIES: CLASS	STRENGTHS: REL. (f'ci)	STRENGTHS: 28-DAY (f'c)	STND PTRN TYPE	PLAN VIEW CASE	END ELEV COND.	BRG. PLATE CASE	END OF BEAM AND BEARING DIMENSIONS **: ANGLE Ø	DIM P	DIM J	DIM K	BEAM DIMENSIONS *: DIM L	DIM R	DIM V	NUMBER OF SPACES FOR STIRRUP BARS K: S1	S2	S3	S4	S5	S6	DIAPHRAGM INSERT LOCATIONS*: DIM X1	DIM X2	DIM Y	WS/FS (8): #1	#2	REINFORCING STEEL: A LENGTH*	K NO. REQ'D	N LENGTH*

REVISIONS

Date	By	Description	Date	By	Description
			92R		

	Names	Dates
Drawn by		
Checked by		
Designed by		
Checked by		
Approved by		

ENGINEER OF RECORD:

LOGO:

SEAL:

FLORIDA DEPARTMENT OF TRANSPORTATION
STRUCTURES DESIGN OFFICE

ROAD NO.	COUNTY	PROJECT NO.

SHEET TITLE: AASHTO TYPE IV BEAMS

PROJECT NAME:

Drawing No. 1 of 1

Index No. S-104

STR:120.230S104.DGN

Mon Nov 9 14:22:57 1992

FED. ROAD DIV. NO.	STATE	PROJECT NO.	FISCAL YEAR	SHEET NO.
3	FLA.			

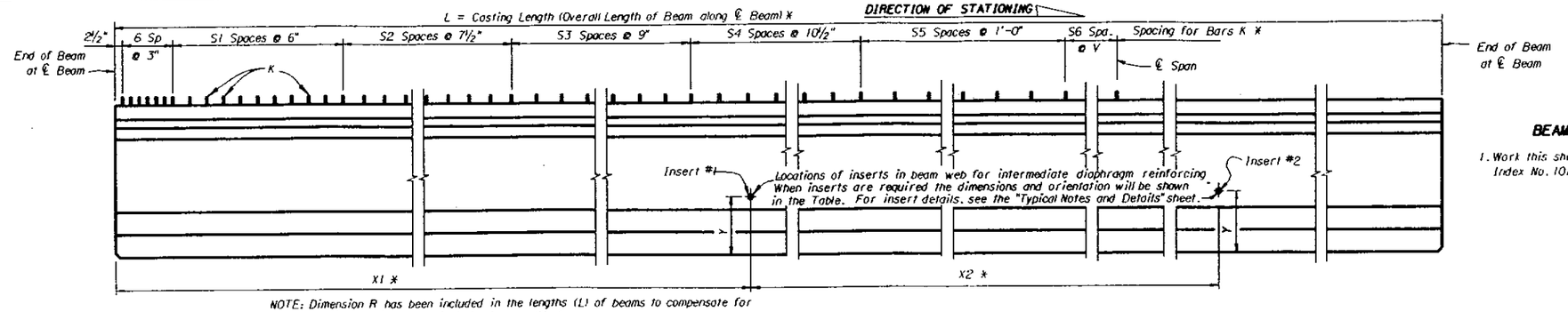

NOTE: Dimension R has been included in the lengths (L) of beams to compensate for elastic and time-dependent shortening effects.

ELEVATION

BEAM NOTES

1. Work this sheet with Standard Index No. 101.

BILL OF REINFORCING STEEL FOR ONE BEAM ONLY

MARK	SIZE	NO. REQUIRED	LENGTH (1)
A	5	8	See Table
D (2)(6)	3	34	Varies 6'-8" Min.
K (2)	4	See Table	7'-0"
L (3)(4)	4	22	6'-3"
M	4	See Table	3'-2"
N (5)	⅞"Ø Strand	4	See Table
Z (2)	4	26	6'-8"

BENDING DIAGRAMS (1)

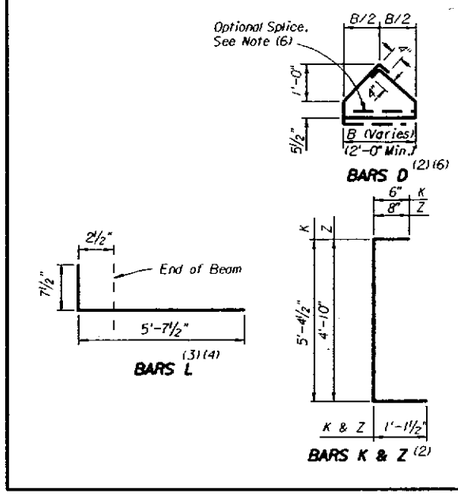

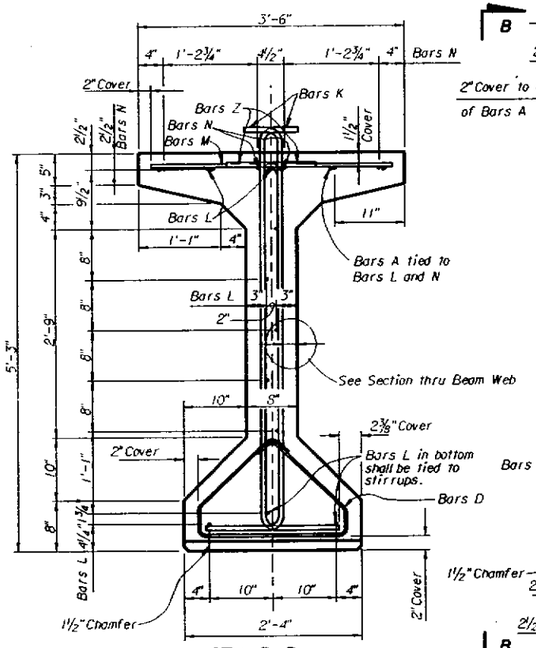

VIEW B-B

(With strands omitted, see Table for reference to strand pattern)

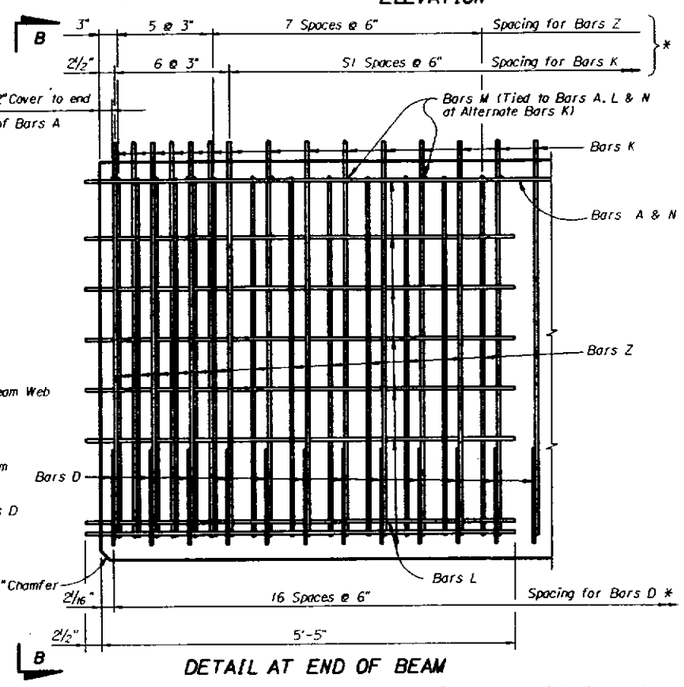

DETAIL AT END OF BEAM

NOTE: Stirrups shall be placed and tied to the top of the fully bonded prestressing strands in the bottom row.

* Note: All longitudinal beam dimensions shown on this sheet with a single asterisk (*) are measured along the top of the beam at the centerline of beam.

** Note: End of beam bearing dimensions "J" and "K" are measured along the bottom of the beam.

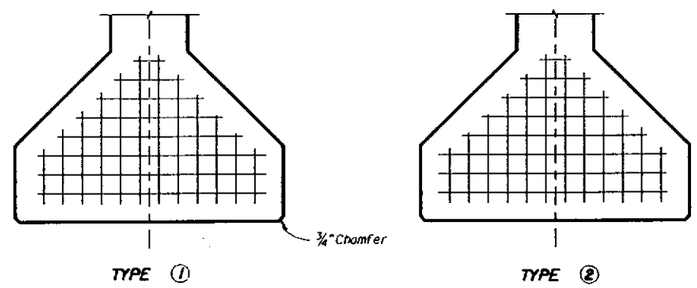

STRAND PATTERNS AND DEBONDING SCHEDULE

NOTE: ○ - Indicates fully bonded strands.

□ - Indicates referenced pair of strands to be debonded the length shown which is measured from the end of the beam. *

NOTE: Place Bars K and Z one (1) each space (alternate).

NOTES:

(1) All bar dimensions are out-to-out.

(2) Bars D, K, and Z shall be bent around pins having the following diameters for respective sizes:

Bar Size	Pin Diameters
#3	1"
#4	2"

(3) Bars L shall be bent prior to the beam leaving the prestressing yard. For treatment of bars L at skewed beam ends, see "Plan Ends of Beams".

(4) Caution should be used with Bars L in the ends of exterior beams to assure that the bent portion of the bar is properly oriented so that the bar will be embedded in the diaphragm concrete.

(5) Bars N shall be either ASTM A416, Grade 250 or 270, seven-wire strands ⅞" diameter or larger, stressed to 10,000 pounds each.

(6) The minimum Dimension B and length of Bars D shown apply to one-piece Bars D placed perpendicular to the centerline of the beam. Dimension B and the length of Bars D for beams with skewed ends vary with the skew (See "Plan Ends of Beams").
At the Contractor's option, Bars D may be fabricated either as a two-piece bar with a 1'-2" lap splice of the bottom legs or may be welded wire fabric, one or two-piece, provided the wire size and spacing furnishes the same steel area as the No. 3 Bars shown.

(7) (NS) means Near Side and (FS) means Far Side, both referring to which face of the beam web is to receive the insert for the dimensioned location. (NS) and (FS) are referenced to the DIRECTION OF STATIONING shown.

TABLE OF BEAM VARIABLES

BEAM ID.	CONCRETE PROPERTIES: CLASS	STRENGTHS: REL. (f'ci)	STRENGTHS: 28-DAY (f'c)	STND PTRN TYPE	PLAN VIEW CASE	END ELEV COND.	BRG. PLATE CASE	END OF BEAM AND BEARING DIMENSIONS **: ANGLE Ø	DIM P	DIM J	DIM K	BEAM DIMENSIONS *: DIM L	DIM R	DIM V	NUMBER OF SPACES FOR STIRRUP BARS K: S1	S2	S3	S4	S5	S6	DIAPHRAGM INSERT LOCATIONS *: DIM X1	DIM X2	DIM Y	NS/FS (8) #1	#2	REINFORCING STEEL: A LENGTH*	K NO. REQ'D	M NO. REQ'D	N LENGTH*

REVISIONS: Date	By	Description	Date	By	Description

	Names	Dates
Drawn by		
Checked by		
Designed by		
Checked by		
Approved by		

ENGINEER OF RECORD:

LOGO:

SEAL:

FLORIDA DEPARTMENT OF TRANSPORTATION
STRUCTURES DESIGN OFFICE

ROAD NO.	COUNTY	PROJECT NO.

SHEET TITLE: AASHTO TYPE V BEAMS

PROJECT NAME:

Drawing No. 1 of 1

Index No. S-105

Mon Nov 9 14:24:37 1992 ST:\E120.230\S105.DGN

FED. ROAD DIV. NO.	STATE	PROJECT NO.	FISCAL YEAR	SHEET NO.
3	FLA.			

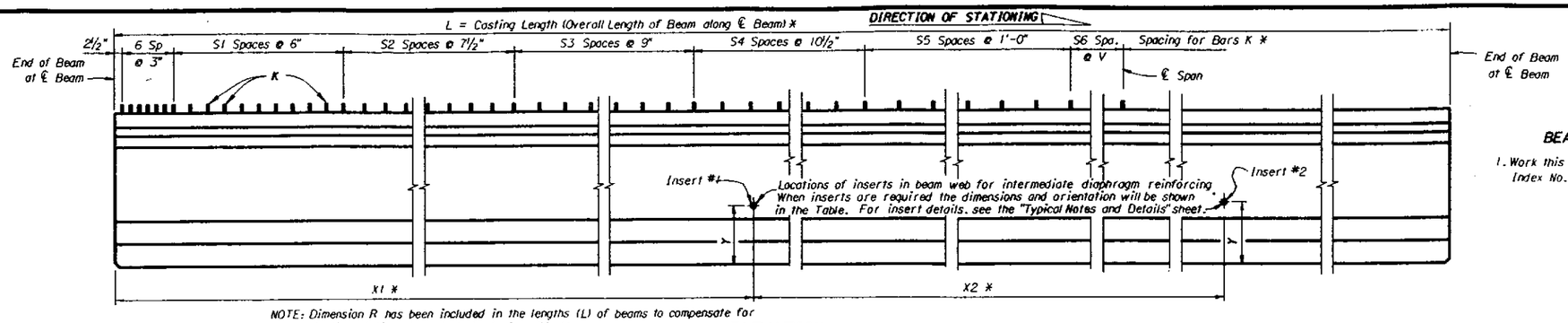

NOTE: Dimension R has been included in the lengths (L) of beams to compensate for elastic and time-dependent shortening effects.

ELEVATION

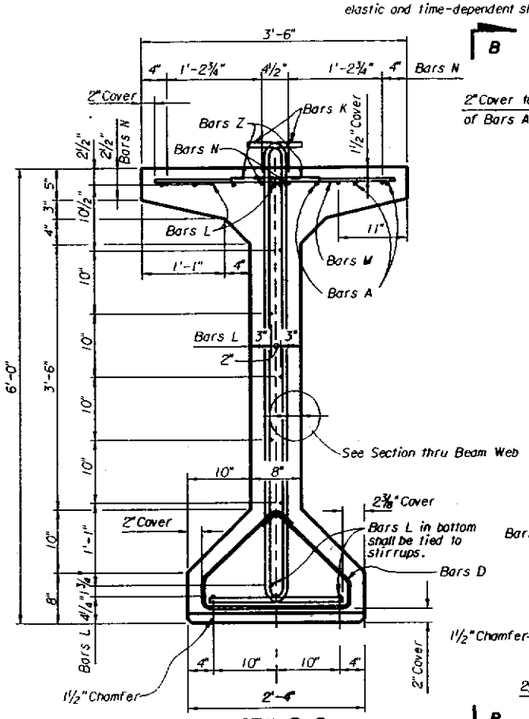

VIEW B-B

(With strands omitted, see Table for reference to strand pattern)

NOTE: Place Bars K and Z one (1) each space (alternate).

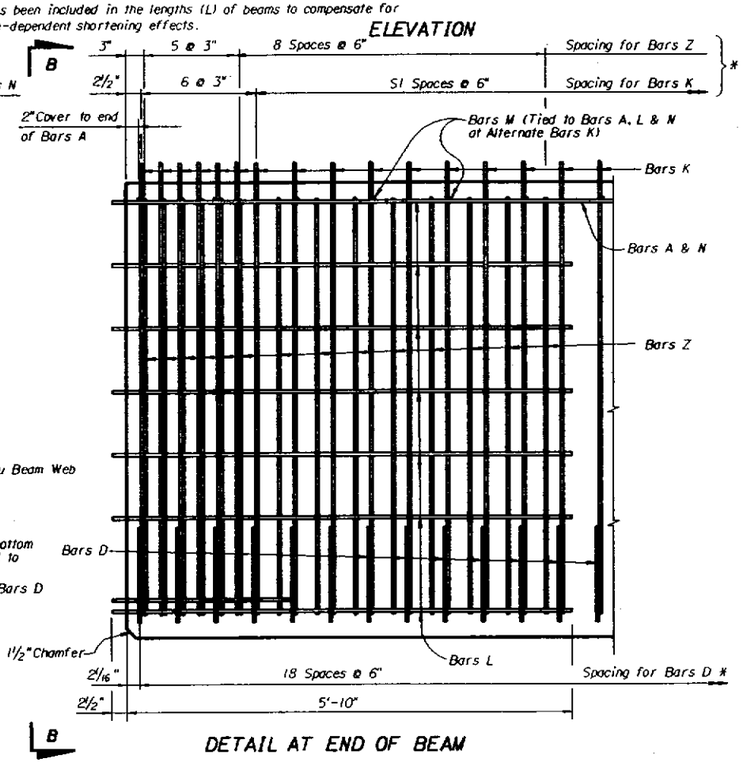

DETAIL AT END OF BEAM

NOTE: Stirrups shall be placed and tied to the top of the fully bonded prestressing strands in the bottom row.

* Note: All longitudinal beam dimensions shown on this sheet with a single asterisk (*) are measured along the top of the beam at the centerline of beam.

** Note: End of beam bearing dimensions "J" and "K" are measured along the bottom of the beam.

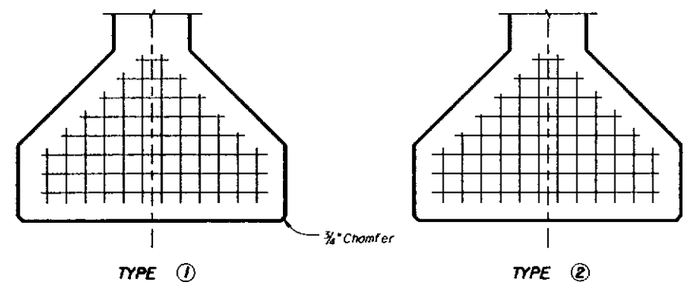

STRAND PATTERNS AND DEBONDING SCHEDULE

NOTE: ○ - Indicates fully bonded strands.

□ - Indicates referenced pair of strands to be debonded the length shown which is measured from the end of the beam. *

BEAM NOTES

1. Work this sheet with Standard Index No. 101.

BILL OF REINFORCING STEEL FOR ONE BEAM ONLY

MARK	SIZE	NO. REQUIRED	LENGTH (1)
A	5	12	See Table
D (2)(6)	3	38	Varies 6'-8" Min.
K (2)	4	See Table	7'-9"
L (3)(4)	4	22	6'-8"
M	4	See Table	3'-2"
N (5)	⅜" Φ Strand	4	See Table
Z (2)	4	28	7'-5"

BENDING DIAGRAMS (1)

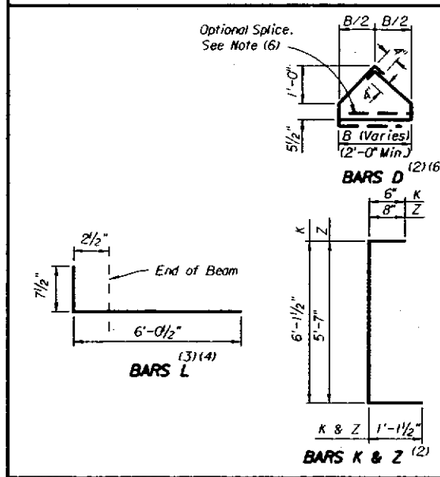

TABLE OF BEAM VARIABLES

BEAM ID.	CONCRETE PROPERTIES: CLASS	STRENGTHS: REL. (f'ci)	STRENGTHS: 28-DAY (f'c)	STND PTRN TYPE	PLAN VIEW CASE	END ELEV COND.	BRG. PLATE CASE	END OF BEAM AND BEARING DIMENSIONS **: ANGLE Ø	DIM P	DIM J	DIM K	BEAM DIMENSIONS *: DIM L	DIM R	DIM V	NUMBER OF SPACES FOR STIRRUP BARS K: S1	S2	S3	S4	S5	S6	DIAPHRAGM INSERT LOCATIONS*: DIM X1	DIM X2	DIM Y	NS/FS (7): #1	#2	REINFORCING STEEL: A LENGTH*	K NO. REQ'D	M NO. REQ'D	N LENGTH*

NOTE: Place Bars K and Z one (1) each space (alternate).

NOTES:

(1) All bar dimensions are out-to-out.

(2) Bars D, K, and Z shall be bent around pins having the following diameters for respective sizes:

Bar Size	Pin Diameters
#3	1"
#4	2"

(3) Bars L shall be bent prior to the beam leaving the prestressing yard. For treatment of bars L at skewed beam ends, see "Plan Ends of Beams".

(4) Caution should be used with Bars L in the ends of exterior beams to assure that the bent portion of the bar is properly oriented so that the bar will be embedded in the diaphragm concrete.

(5) Bars N shall be either ASTM A416, Grade 250 or 270, seven-wire strands ⅜" diameter or larger, stressed to 10,000 pounds each.

(6) The minimum Dimension B and length of Bars D shown apply to one-piece Bars D placed perpendicular to the centerline of the beam. Dimension B and the length of Bars D for beams with skewed ends vary with the skew (See "Plan Ends of Beams").
At the Contractor's option, Bars D may be fabricated either as a two-piece bar with a 1'-2" lap splice of the bottom legs or may be welded wire fabric, one or two-piece, provided the wire size and spacing furnishes the same steel area as the No. 3 Bars shown.

(7) (NS) means Near Side and (FS) means Far Side, both referring to which face of the beam web is to receive the insert for the dimensioned location. (NS) and (FS) are referenced to the DIRECTION OF STATIONING shown.

REVISIONS					
Date	By	Description	Date	By	Description
			92R		

	Names	Dates
Drawn by		
Checked by		
Designed by		
Checked by		
Approved by		

ENGINEER OF RECORD:

LOGO:

SEAL:

FLORIDA DEPARTMENT OF TRANSPORTATION
STRUCTURES DESIGN OFFICE

ROAD NO.	COUNTY	PROJECT NO.

SHEET TITLE: AASHTO TYPE VI BEAMS

PROJECT NAME:

Drawing No. 1 of 1

Index No. S-106

Mon Nov 9 14:28:25 1992 STI:E:\20.23015\06.DGN

FED. ROAD DIV. NO.	STATE	PROJECT NO.	FISCAL YEAR	SHEET NO.
3	FLA.			

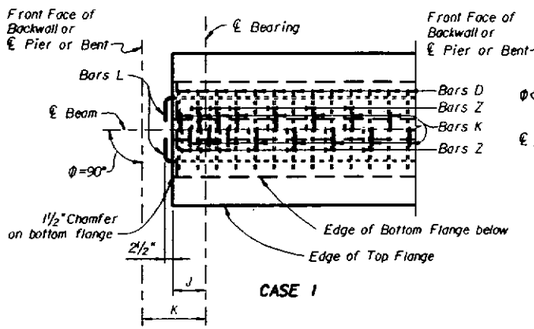

CASE 1

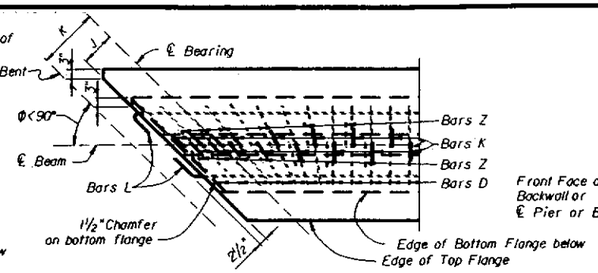

CASE 2
(See Note)

PLAN ENDS OF BEAMS
(Bars N in top flange omitted for clarity.)

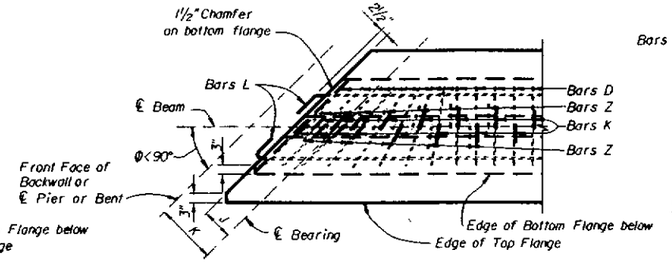

CASE 3
(See Note)

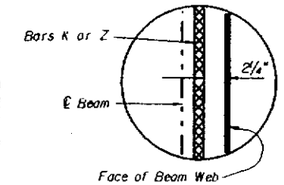

SECTION THRU BEAM WEB
(Showing Cover on Stirrups)

Note: For both Plan Views Case 2 and Case 3, the first Bar Z and the first two Bars K shall be placed parallel to the skewed end of the Beam. The remainder of the Bars Z & K shall be placed so as to transition from an axis parallel to the skewed end to an axis perpendicular to the centerline of the beam. Bars D in the bottom flange shall be rotated along with Bars Z & K. Bar spacing may be adjusted to miss welded studs for bearing plates. See also "End Elevations of Beams", this sheet.

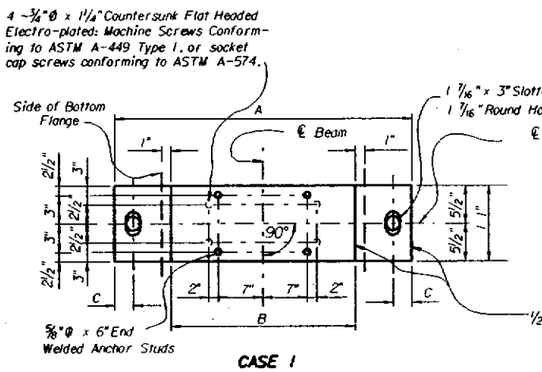

CASE 1

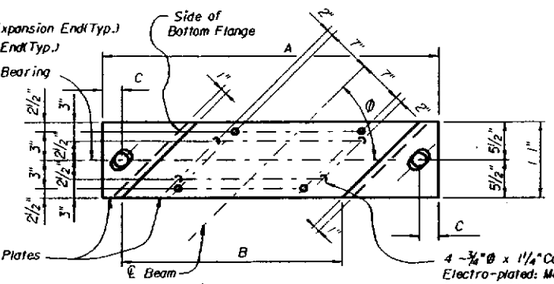

CASE 2

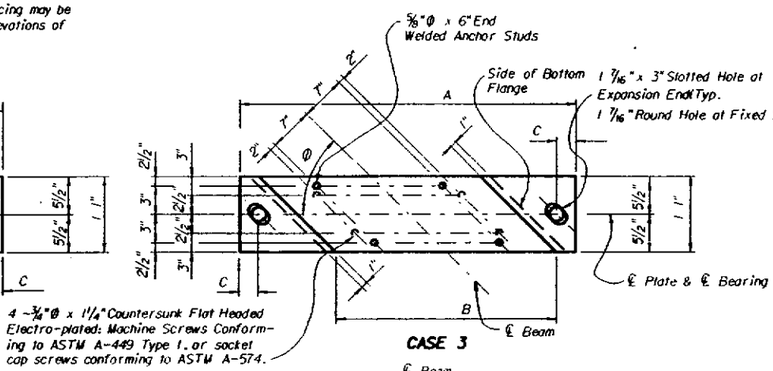

CASE 3

4 -¾"Φ x 1¼"Countersunk Flat Headed Electro-plated: Machine Screws Conforming to ASTM A-449 Type 1, or socket cap screws conforming to ASTM A-574.

BEARING PLATE DETAILS

NOTE: Bearing Plates required on Beams only as scheduled in the Table of Beam Variables.

NOTE: Insert shall be 1"Φ, zinc-electroplated, ferrule wing nut, UNC threads, 1/0 minimum gage wire, not more than 4" in depth and shall have a minimum ultimate tensile strength of 11,400 lbs. in 4,000 p.s.i. concrete.

NOTE: If inserts are needed on both sides (faces) of beam webs on assembly as long as the thickness of the beam web, consisting of two (2) ferrule inserts attached by two (2) or more struts may be utilized. The connecting struts shall have a minimum ultimate tensile strength of 22,800 lbs.

TABLE OF BEARING PLATE DIMENSIONS			
BEAM TYPE	DIMENSIONS (INCHES)		
	A	B	C
FBT54 FBT63 FBT72	$B+2C+\left(\frac{6}{\sin\Phi}\right)$	$26/\sin\Phi$	$2+0.781(\cos\Phi)$

NOTE: All bearing plate dimensions are measured along the bottom of the beam.

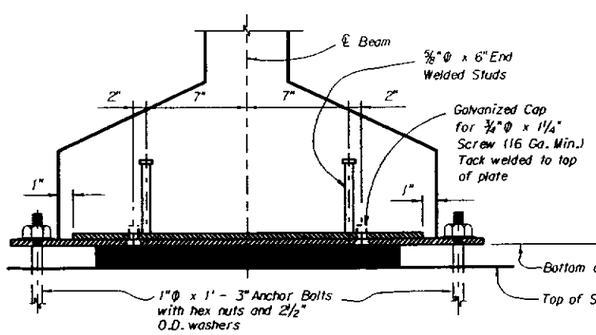

END ELEVATION-SECTION OF BEARING ASSEMBLY
(Perpendicular to ℄ Beam)

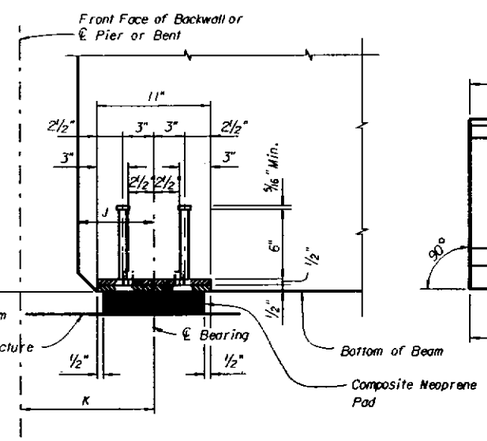

SIDE ELEVATION-SECTION OF BEARING ASSEMBLY
(Perpendicular To ℄ Bearing)

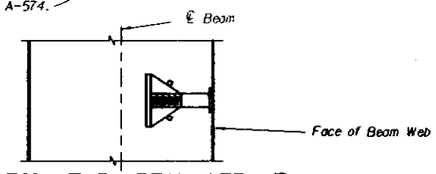

SECTION THRU BEAM WEB AT INSERT FOR DIAPHRAGM REINFORCING
(When Intermediate Diaphragms are Required)

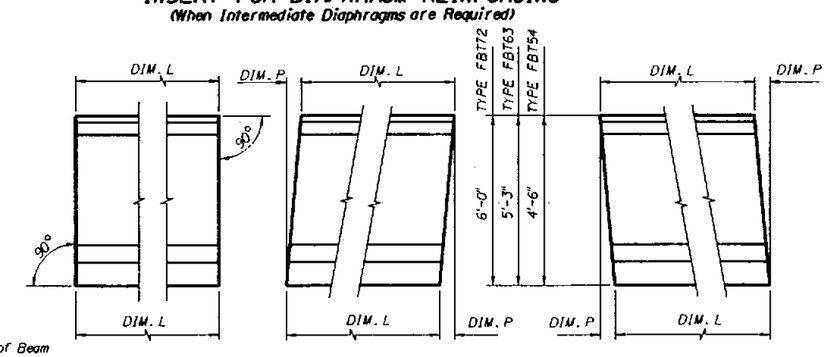

CONDITION 1 (P = 0'-0")
CONDITION 2
CONDITION 3

END ELEVATIONS OF BEAMS
(Showing Vertical Bevel of Beam End)

BEAM NOTES

MORTAR LEAKAGE: Any mortar leakage that occurs and stains resulting from leakage shall be removed so that beams have a uniform appearance.

STRANDS: At the option of the Contractor, other types, sizes and/or configurations of strands may be used in lieu of the stranding shown on these sheets. Calculations shall be submitted showing the substitution meets the following requirements:
1. The strands meet all the requirements of ASTM-A416 for the grade
2. The net compressive stress in the concrete due to prestressing acting alone, after all losses, is at least as large as that provided by the stranding shown on these sheets.
3. The ultimate strength of the structure with the proposed stranding is at least equal to the ultimate strength of the original design.
4. The proposed stranding complies in all respects with the Department's Structures Design Guidelines.

FINISH: The top surface of the beam shall be rough floated and then scrubbed transversely with a coarse wire brush to remove all laitance and to produce a roughened surface for bonding. All beams shall receive a Class 3 surface finish.

SUBMITTALS: The Specifications stipulate the conditions for which Shop Drawings are not required. If each and every condition can not be met, then a formal Shop Drawing submittal is required. Supplemental reinforcing provided by the Contractor to facilitate fabrication of prestressed beams do not require Shop Drawings.

STRAND DETENSIONING: Strand detensioning shall be based upon the following priority, from first to last:
1. Top dormant strands (Bars N)
2. Fully bonded strands
3. Partially debonded (shielded) strands

FORMS AND PALLETS: All beams shall be cast on concrete based pallets and in metal forms.

HANDLING: In the handling of beams, they must be maintained in an upright position at all times and must be picked up from points located a maximum distance of 3 ft. from the ends of the beam.

STORAGE AND TRANSPORTATION: Beams shall be stored on adequate dunnage and supported during transit within 18" from ends of beam.

STRAND EXTENSION: All strands shall extend 2½" beyond ends of beams.

CONCRETE: Refer to Table of Beam Variables on the individual beam sheets for the class of concrete, 28-day strength (f'c) and cylinder strength at transfer of the tensioning load (f'ci).

REINFORCING STEEL: All reinforcing steel shall be Grade 60.

BEARING PADS: The cost of installing bearing pads shall be included in the contract unit price of prestressed beams. The composite neoprene pads may or may not be furnished to the contractor by FDOT. See the General Notes for the bridge, or the Bid Item Notes, for additional information regarding who the pads provider will be.

MISCELLANEOUS: Bearing plates, anchor bolts, nuts and washers shall be hot dip galvanized in accordance with requirements of A.S.T.M. Specification A123 or A153. Bearing plates shall conform to A.S.T.M. Specification A709, Grade 36. Anchor bolts shall conform to A.S.T.M. A709, Grade 36 or to A307. The cost of bearing plates, anchor bolts, nuts, washers, premoulded expansion material at bearings and inserts for diaphragm tie bars shall be included in the contract unit prices for prestressed beams.

NOTES: Work this sheet with individual beam sheets. Bulb-T 54, 63 & 72.

See "TABLE OF BEAM VARIABLES" on individual beam sheets for angle "Φ"s and dimensions "J", "K", "L" and "P".

For beams with vertically bevelled ends, such as conditions 2 & 3, the first Bar K shall be placed parallel to the end bevel. Adjacent Bars Z and K shall be placed so as to transition from an axis parallel to the end bevel to a vertical axis. The spacing of Bars K and Z shown shall apply along the top flange of the beam and the spacing along the bottom of the beam shall be adjusted by not more than ½ inch (±) until the vertical position is attained.

REVISIONS					
Date	By	Description	Date	By	Description
			92R		

	Names	Dates
Drawn by	WEH	1-89
Checked by	DCP	1-89
Designed by	DCP	1-89
Checked by	WEH	1-89
Approved by	REN	

ENGINEER OF RECORD:
LOGO:
SEAL:

FLORIDA DEPARTMENT OF TRANSPORTATION
STRUCTURES DESIGN OFFICE

ROAD NO.	COUNTY	PROJECT NO.

SHEET TITLE: TYPICAL NOTES AND DETAILS FOR FLORIDA BULB-T 54, 63 & 72 PRESTRESSED BEAMS

PROJECT NAME:

Drawing No. 1 of 1

Index No. 110

Mon Nov 9 11:08:41 1992 ST:\C120.230110.DGN

FED. ROAD DIV. NO.	STATE	PROJECT NO.	FISCAL YEAR	SHEET NO.
3	FLA.			

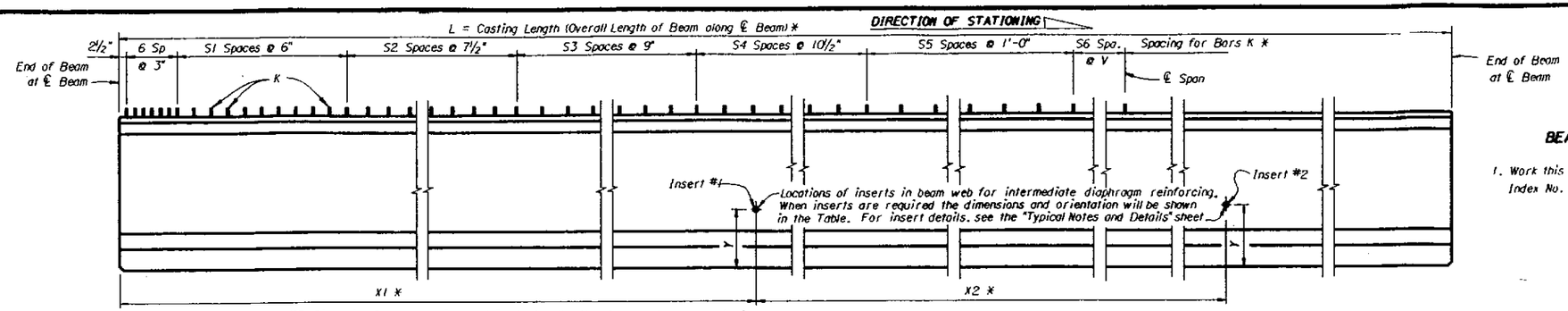

NOTE: Dimension R has been included in the lengths (L) of beams to compensate for elastic and time-dependent shortening effects.

ELEVATION

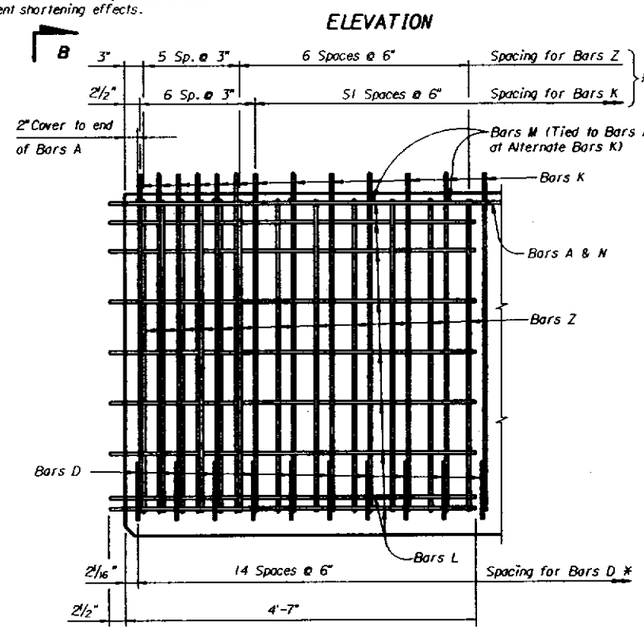

DETAIL AT END OF BEAM

NOTE: Stirrups shall be placed and tied to the top of the fully bonded prestressing strands in the bottom row.

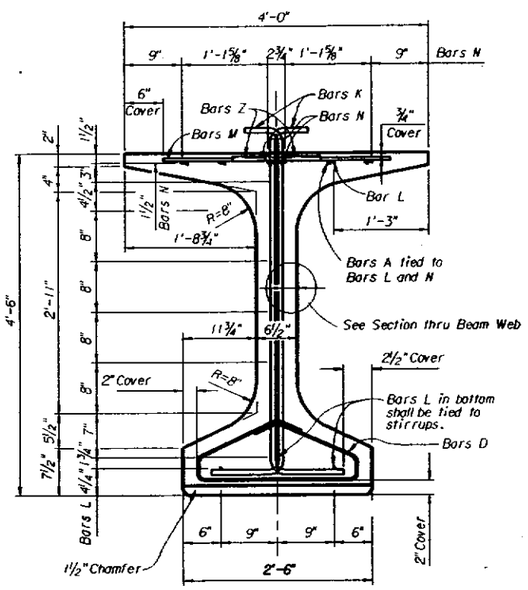

VIEW B-B

(With strands omitted, see Table for reference to strand pattern)

NOTE: Place Bars K and Z one (1) each space (alternate).

* Note: All longitudinal beam dimensions shown on this sheet with a single asterisk (*) are measured along the top of the beam at the centerline of beam.

** Note: End of beam bearing dimensions "J" and "K" are measured along the bottom of the beam.

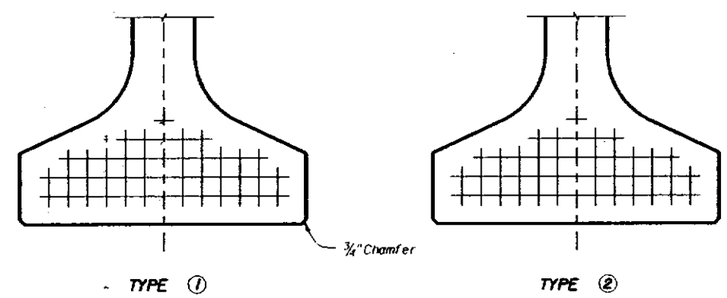

STRAND PATTERNS AND DEBONDING SCHEDULE

NOTE: ○ - Indicates fully bonded strands.

□ - Indicates referenced pair of strands to be debonded the length shown which is measured from the end of the beam. *

BEAM NOTES

1. Work this sheet with Standard Index No. 110.

BILL OF REINFORCING STEEL FOR ONE BEAM ONLY

MARK	SIZE	NO. REQUIRED	LENGTH (1)
A	5	8	See Table
D (2)(6)	3	30	Varies 5'-11" Min.
K (2)	4	See Table	6'-3"
L (3)(4)	4	22	5'-5"
M	4	See Table	3'-0"
N (5)	⅜"Φ Strand	4	See Table
Z (2)	4	24	6'-0"

BENDING DIAGRAMS (1)

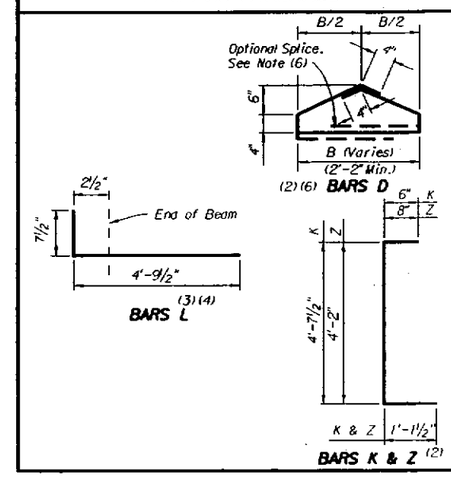

TABLE OF BEAM VARIABLES

BEAM ID.	CONCRETE PROPERTIES CLASS	STRENGTHS REL. (f'ci)	STRENGTHS 28-DAY (f'c)	STND PTRN TYPE	PLAN VIEW CASE	END ELEV COND.	BRG. PLATE CASE	END OF BEAM AND BEARING DIMENSIONS ** ANGLE Ø	DIM P	DIM J	DIM K	BEAM DIMENSIONS * DIM L	DIM R	DIM V	NUMBER OF SPACES FOR STIRRUP BARS K S1	S2	S3	S4	S5	S6	DIAPHRAGM INSERT LOCATIONS* DIM X1	DIM X2	DIM Y	INS/FS (8) #1	#2	REINFORCING STEEL A LENGTH*	K NO. REQ'D	M NO. REQ'D	N LENGTH*

BENDING DIAGRAMS

(1) All bar dimensions are out-to-out.

(2) Bars D, K, and Z shall be bent around pins having the following diameters for respective sizes:

Bar Size	Pin Diameters
#3	1"
#4	2"

(3) Bars L shall be bent prior to the beam leaving the prestressing yard. For treatment of bars L at skewed beam ends, see "Plan Ends of Beams".

(4) Caution should be used with Bars L in the ends of exterior beams to assure that the bent portion of the bar is properly oriented so that the bar will be embedded in the diaphragm concrete.

(5) Bars N shall be either ASTM A416, Grade 250 or 270, seven-wire strands ⅜" diameter or larger, stressed to 10,000 pounds each.

(6) The minimum Dimension B and length of Bars D shown apply to one-piece Bars D placed perpendicular to the centerline of the beam. Dimension B and the length of Bars D for beams with skewed ends vary with the skew (See "Plan Ends of Beams").
At the Contractor's option, Bars D may be fabricated either as a two-piece bar with a 1'-2" lap splice of the bottom legs or may be welded wire fabric, one or two-piece, provided the wire size and spacing furnishes the same steel area as the No. 3 Bars shown.

(7) (NS) means Near Side and (FS) means Far Side, both referring to which face of the beam web is to receive the insert for the dimensioned location. (NS) and (FS) are referenced to the DIRECTION OF STATIONING shown.

REVISIONS					
Date	By	Description	Date	By	Description
			92R		

	Names	Dates
Drawn by		
Checked by		
Designed by		
Checked by		
Approved by		

ENGINEER OF RECORD:

LOGO:

SEAL:

FLORIDA DEPARTMENT OF TRANSPORTATION
STRUCTURES DESIGN OFFICE

ROAD NO.	COUNTY	PROJECT NO.

SHEET TITLE: FLORIDA BULB-T 54 BEAMS

PROJECT NAME:

Drawing No. 1 of 1

Index No. S-111

STI:E120.23015111.DGN

Wed, Nov. 9, 14:31:11 1992

FED. ROAD DIV. NO.	STATE	PROJECT NO.	FISCAL YEAR	SHEET NO.
3	FLA.			

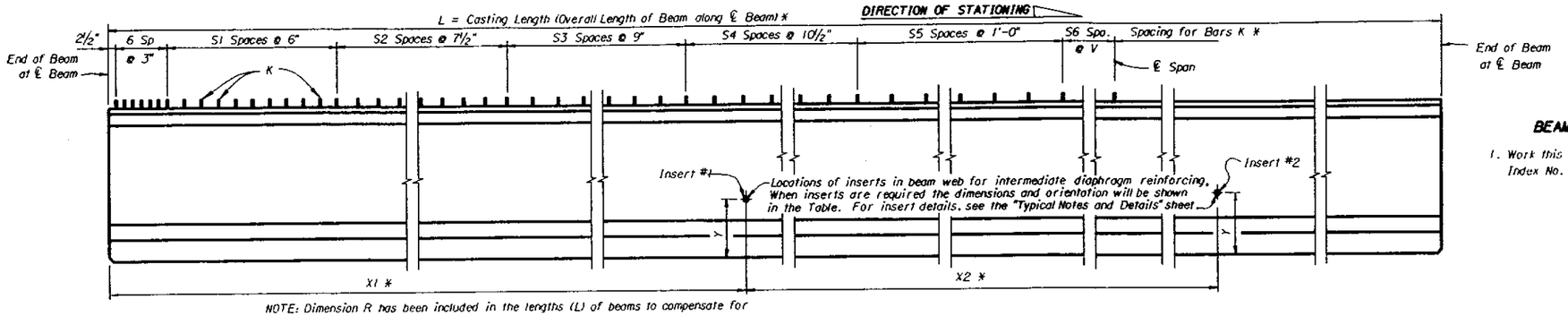

NOTE: Dimension R has been included in the lengths (L) of beams to compensate for elastic and time-dependent shortening effects.

ELEVATION

BEAM NOTES

1. Work this sheet with Standard Index No. 110.

BILL OF REINFORCING STEEL FOR ONE BEAM ONLY			
MARK	SIZE	NO. REQUIRED	LENGTH (1)
A	5	8	See Table
D (2)(6)	3	34	Varies 5'-11" Min
K (2)	4	See Table	7'-0"
L (3)(4)	4	22	6'-3"
M	4	See Table	3'-0"
N (5)	⅞" Φ Strand	4	See Table
Z (2)	4	26	6'-9"

BENDING DIAGRAMS (1)

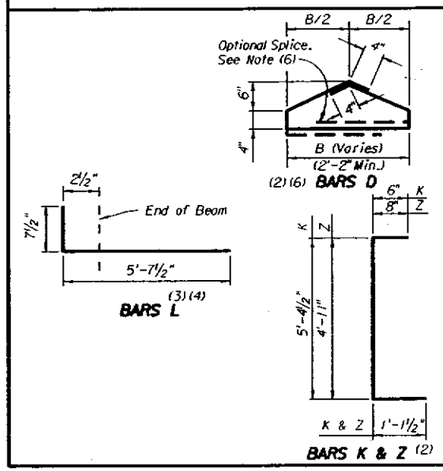

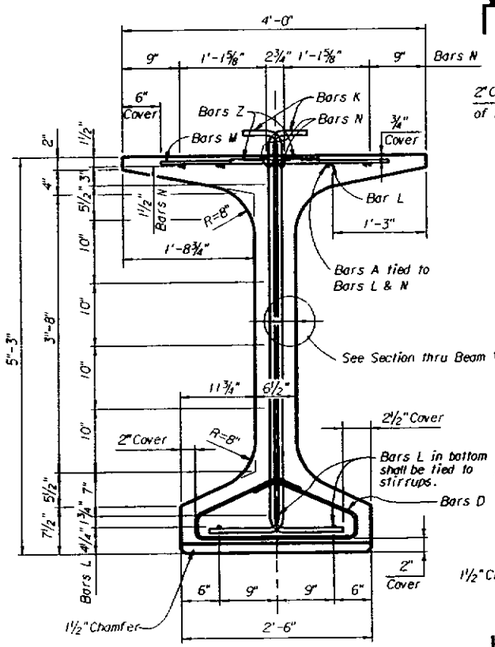

VIEW B-B

(With strands omitted, see Table for reference to strand pattern)

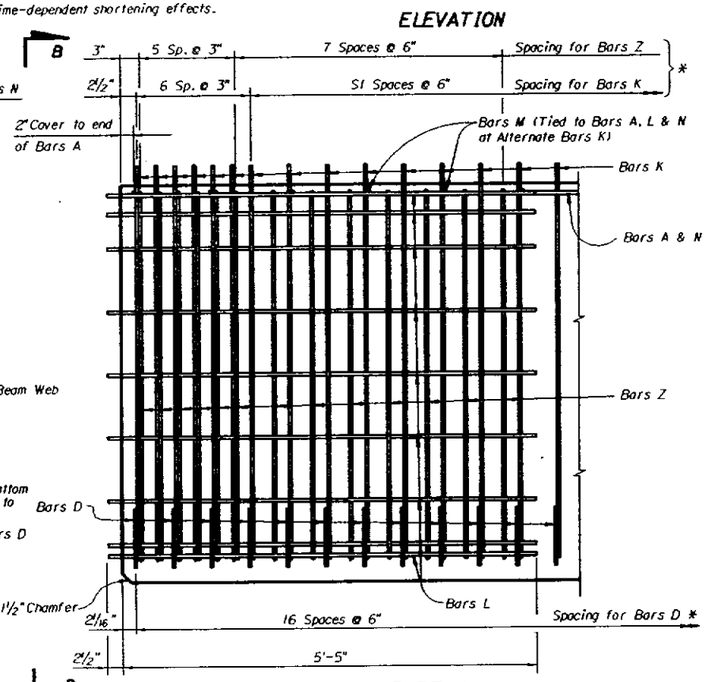

DETAIL AT END OF BEAM

NOTE: Stirrups shall be placed and tied to the top of the fully bonded prestressing strands in the bottom row.

* Note: All longitudinal beam dimensions shown on this sheet with a single asterisk (*) are measured along the top of the beam at the centerline of beam.

** Note: End of beam bearing dimensions "J" and "K" are measured along the bottom of the beam.

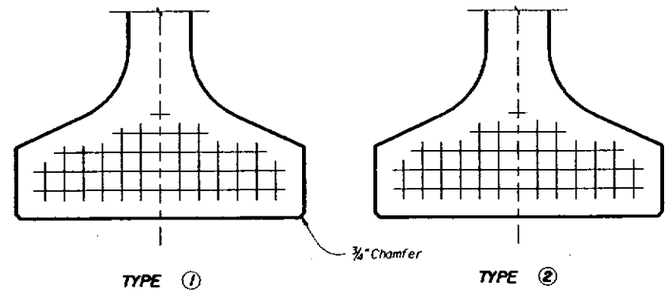

STRAND PATTERNS AND DEBONDING SCHEDULE

NOTE: ○ - Indicates fully bonded strands.

□ - Indicates referenced pair of strands to be debonded the length shown which is measured from the end of the beam. *

NOTE: Place Bars K and Z one (1) each space (alternate).

TABLE OF BEAM VARIABLES																														REINFORCING STEEL			
BEAM ID.	CONCRETE PROPERTIES			STND PTRN TYPE	PLAN VIEW CASE	END ELEV COND.	BRG. PLATE CASE	END OF BEAM AND BEARING DIMENSIONS **				BEAM DIMENSIONS *			NUMBER OF SPACES FOR STIRRUP BARS K						DIAPHRAGM INSERT LOCATIONS*					A	K	M	N	
	CLASS	STRENGTHS REL. (f'ci)	STRENGTHS 28-DAY (f'c)					ANGLE Ø	DIM P	DIM J	DIM K	DIM L	DIM R	DIM V	S1	S2	S3	S4	S5	S6	DIM X1	DIM X2	DIM Y	NS/FS (8) #1	NS/FS (8) #2	LENGTH*	NO. REQ'D	NO. REQ'D	LENGTH*	

NOTES:

(1) All bar dimensions are out-to-out.

(2) Bars D, K, and Z shall be bent around pins having the following diameters for respective sizes:

Bar Size	Pin Diameters
#3	1"
#4	2"

(3) Bars L shall be bent prior to the beam leaving the prestressing yard. For treatment of bars L at skewed beam ends, see "Plan Ends of Beams".

(4) Caution should be used with Bars L in the ends of exterior beams to assure that the bent portion of the bar is properly oriented so that the bar will be embedded in the diaphragm concrete.

(5) Bars N shall be either ASTM A416, Grade 250 or 270, seven-wire strands ⅞" diameter or larger, stressed to 10,000 pounds each.

(6) The minimum Dimension B and length of Bars D shown apply to one-piece Bars D placed perpendicular to the centerline of the beam. Dimension B and the length of Bars D for beams with skewed ends vary with the skew (See "Plan Ends of Beams").
At the Contractor's option, Bars D may be fabricated either as a two-piece bar with a 1'-2" lap splice of the bottom legs or may be welded wire fabric, one or two-piece, provided the wire size and spacing furnishes the same steel area as the No. 3 Bars shown.

(7) (NS) means Near Side and (FS) means Far Side, both referring to which face of the beam web is to receive the insert for the dimensioned location. (NS) and (FS) are referenced to the DIRECTION OF STATIONING shown.

REVISIONS					
Date	By	Description	Date	By	Description
			92R		

	Names	Dates
Drawn by		
Checked by		
Designed by		
Checked by		
Approved by		

ENGINEER OF RECORD:

LOGO:

SEAL:

FLORIDA DEPARTMENT OF TRANSPORTATION
STRUCTURES DESIGN OFFICE

ROAD NO.	COUNTY	PROJECT NO.

SHEET TITLE: FLORIDA BULB-T 63 BEAMS

PROJECT NAME:

Drawing No. 1 of 1

Index No. S-112

Mon Nov 9 14:34:00 1992 ST:\120.230\S112.DGN

FED. ROAD DIV. NO.	STATE	PROJECT NO.	FISCAL YEAR	SHEET NO.
3	FLA.			

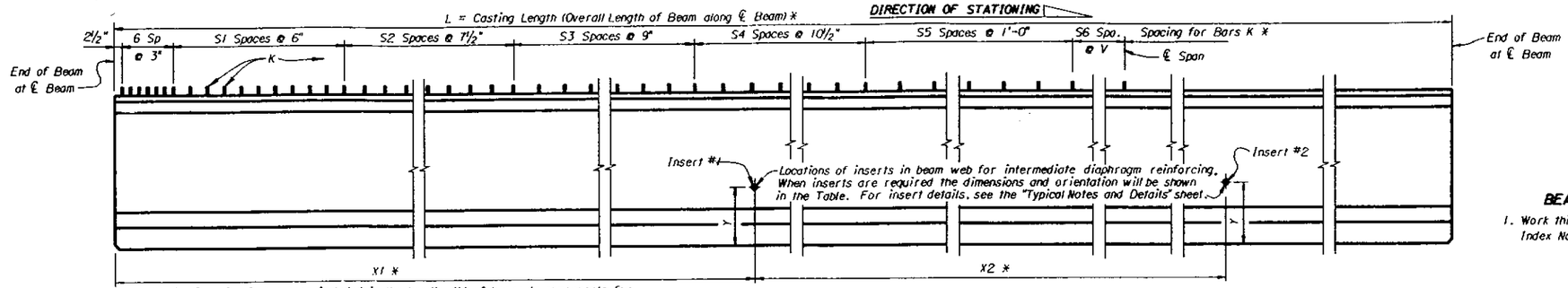

NOTE: Dimension R has been included in the lengths (L) of beams to compensate for elastic and time-dependent shortening effects.

ELEVATION

BEAM NOTES

1. Work this sheet with Standard Index No. 110.

BILL OF REINFORCING STEEL FOR ONE BEAM ONLY

MARK	SIZE	NO. REQUIRED	LENGTH (1)
A	5	8	See Table
D (2)(6)	3	38	Varies 5'-11" Min
K (2)	4	See Table	7'-9"
L (3)(4)	4	22	6'-8"
M	4	See Table	3'-0"
N (5)	⅜"Φ Strand	4	See Table
Z (2)	4	28	7'-6"

BENDING DIAGRAMS (1)

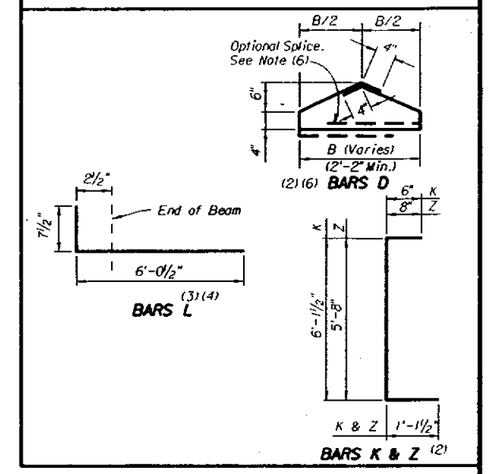

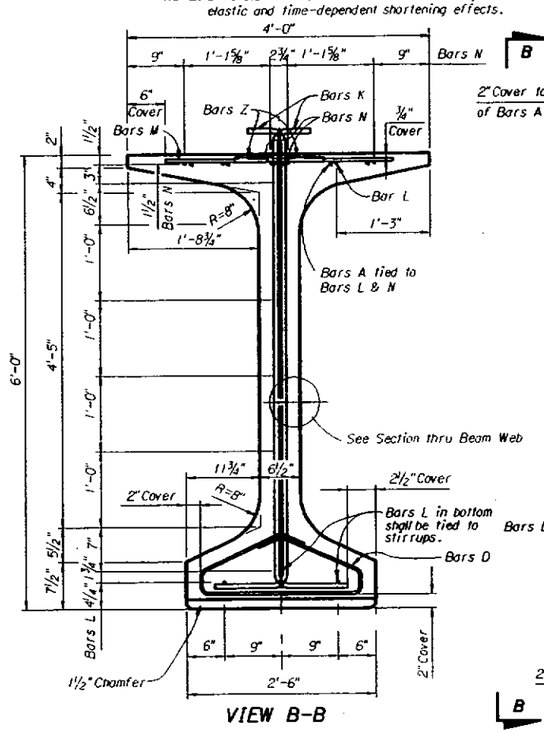

VIEW B-B

(With strands omitted, see Table for reference to strand pattern)

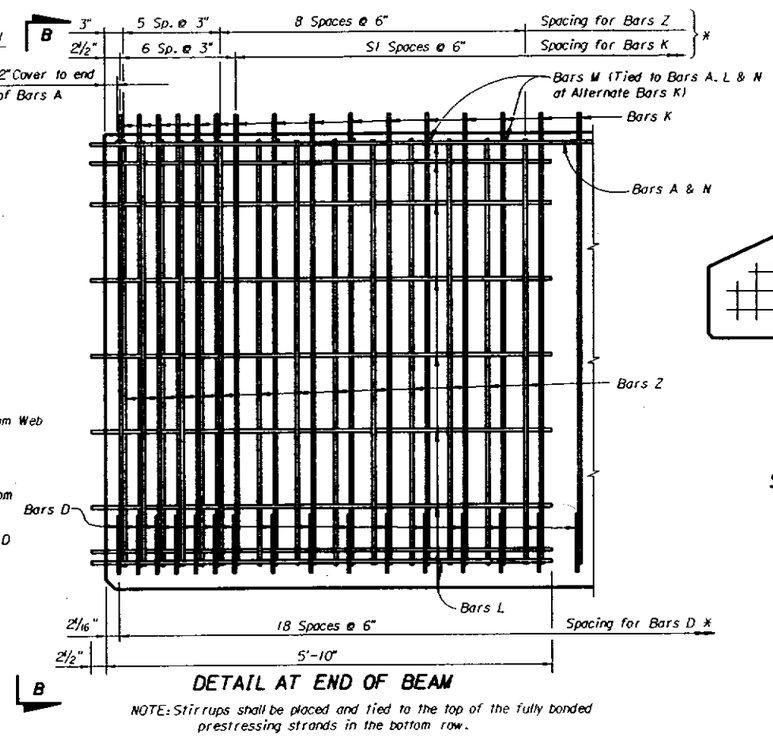

DETAIL AT END OF BEAM

NOTE: Stirrups shall be placed and tied to the top of the fully bonded prestressing strands in the bottom row.

* Note: All longitudinal beam dimensions shown on this sheet with a single asterisk (*) are measured along the top of the beam at the centerline of beam.

** Note: End of beam bearing dimensions "J" and "K" are measured along the bottom of the beam.

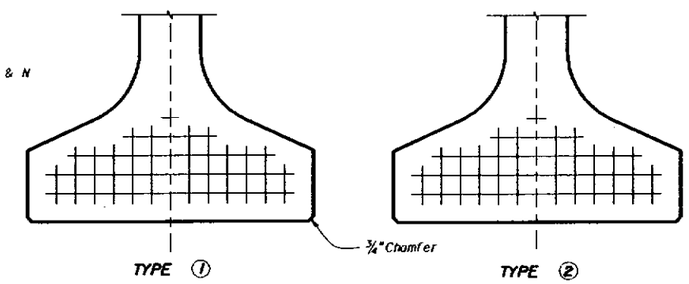

NOTE: Place Bars K and Z one (1) each space (alternate).

TABLE OF BEAM VARIABLES

BEAM ID.	CONCRETE PROPERTIES: CLASS	STRENGTHS: REL. (f'ci)	STRENGTHS: 28-DAY (f'c)	STND PTRN TYPE	PLAN VIEW CASE	END ELEV COND.	BRG. PLATE CASE	END OF BEAM AND BEARING DIMENSIONS **: ANGLE Θ	DIM P	DIM J	DIM K	BEAM DIMENSIONS *: DIM L	DIM R	DIM V	NUMBER OF SPACES FOR STIRRUP BARS K: S1	S2	S3	S4	S5	S6	DIAPHRAGM INSERT LOCATIONS*: DIM X1	DIM X2	DIM Y	NS/FS (8): #1	#2	REINFORCING STEEL: A LENGTH*	K NO. REQ'D	M NO. REQ'D	N LENGTH*	

STRAND PATTERNS AND DEBONDING SCHEDULE

NOTE: ○ - Indicates fully bonded strands.

□ - Indicates referenced pair of strands to be debonded the length shown which is measured from the end of the beam. *

NOTES:

(1) All bar dimensions are out-to-out.

(2) Bars D, K, and Z shall be bent around pins having the following diameters for respective sizes:

Bar Size	Pin Diameters
#3	1"
#4	2"

(3) Bars L shall be bent prior to the beam leaving the prestressing yard. For treatment of bars L at skewed beam ends, see "Plan Ends of Beams".

(4) Caution should be used with Bars L in the ends of exterior beams to assure that the bent portion of the bar is properly oriented so that the bar will be embedded in the diaphragm concrete.

(5) Bars N shall be either ASTM A416, Grade 250 or 270, seven-wire strands ⅜" diameter or larger, stressed to 10,000 pounds each.

(6) The minimum Dimension B and length of Bars D shown apply to one-piece Bars D placed perpendicular to the centerline of the beam. Dimension B and the length of Bars D for beams with skewed ends vary with the skew (See "Plan Ends of Beams").
At the Contractor's option, Bars D may be fabricated either as a two-piece bar with a 1'-2" lap splice of the bottom legs or may be welded wire fabric, one or two-piece, provided the wire size and spacing furnishes the same steel area as the No. 3 Bars shown.

(7) (NS) means Near Side and (FS) means Far Side, both referring to which face of the beam web is to receive the insert for the dimensioned location. (NS) and (FS) are referenced to the DIRECTION OF STATIONING shown.

REVISIONS					
Date	By	Description	Date	By	Description
			92R		

	Names	Dates
Drawn by		
Checked by		
Designed by		
Checked by		
Approved by		

ENGINEER OF RECORD:

LOGO:

SEAL:

FLORIDA DEPARTMENT OF TRANSPORTATION
STRUCTURES DESIGN OFFICE

ROAD NO.	COUNTY	PROJECT NO.

SHEET TITLE: FLORIDA BULB-T 72 BEAMS

PROJECT NAME:

Drawing No. 1 of 1

Index No. S-113

ST1:(120,230)S113.DGN

MON NOV 9 14:36:59 1992

FED. ROAD DIV. NO.	STATE	PROJECT NO.	FISCAL YEAR	SHEET NO.
3	FLA.			

FLORIDA DOUBLE - TEE

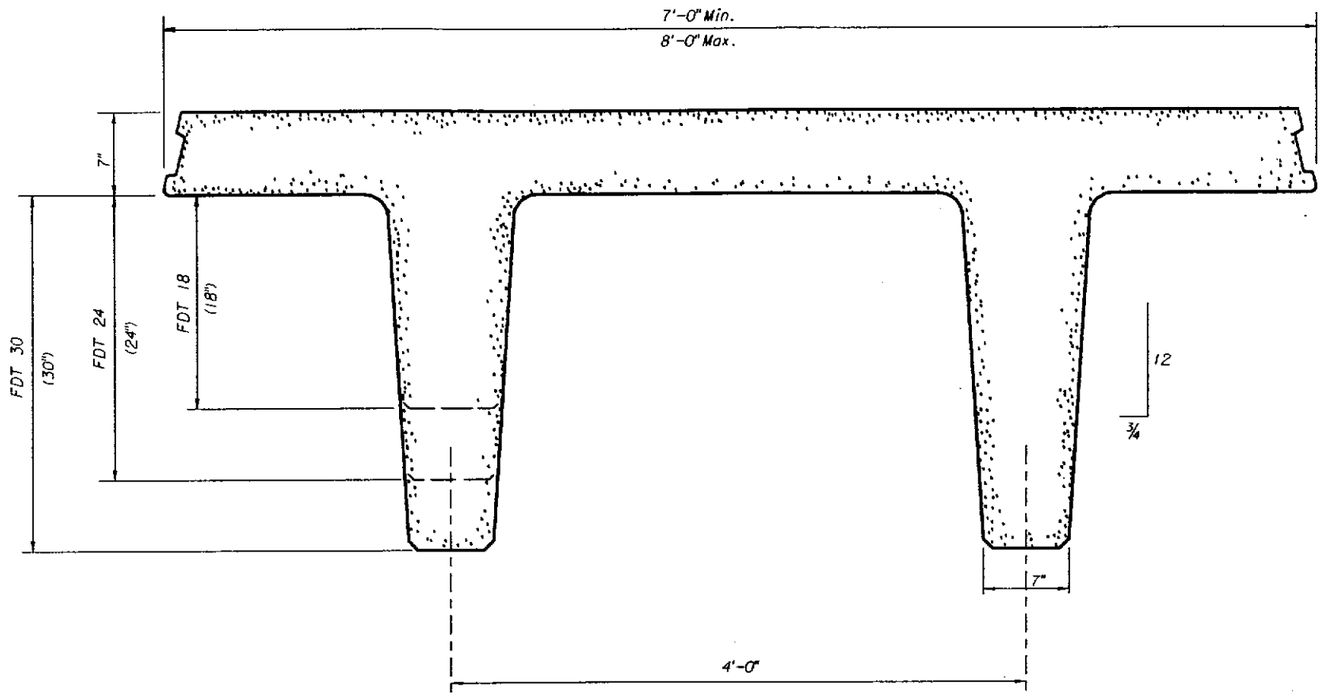

LIST OF DRAWINGS

Index No.	
I-120	Florida Double-Tee General Instructions
I-121	Florida Double-Tee Bridge Sections
I-122	Florida Double-Tee Tabulated Strand Patterns
123	Florida Double-Tee Notes and Miscellaneous Details (2 Sheets)
124	FDT18 Typical Section
125	FDT24 Typical Section
126	FDT30 Typical Section
127	Florida Double-Tee Plan, Joint and Diaphragm
S-128	FDT18 Table of Variables and Strand Patterns
S-129	FDT24 Table of Variables and Strand Patterns
S-130	FDT30 Table of Variables and Strand Patterns

DOUBLE TEE GENERAL INSTRUCTIONS

This FDOT Standard is intended for use in preparing construction plans for bridges on straight alignment and skew angles 30° or less. The standard is also limited to simply supported spans, over water or railroad tracks.

Three different cross-sections are provided, the Florida Double Tee 30, (FDT30), the FDT24, and the FDT18. The numerical portion of the alphanumerical designation corresponds to the depth of the stem in inches.

Fabricators may acquire a set of forms for the FDT30 beam, and utilize these to fabricate the other sections by blocking out the lower portion of the stems.

The detailed seven (7) inch slab thickness provides one half (0.5) inch for grinding to improve the riding quality of the bridge. However, the designs are based on a six and one half (6.5) inch thick structural flange.

The designs include an allowance for fifteen (15) pounds per square foot for future surfacing.

The width of the flange may vary between seven (7) and eight (8) feet and the normal seven (7) inch thickness may be increased to accommodate a bridge crown (crowned beam).

Only 1/2" Ø low-relaxation strands and concrete with a 28-day compressive strength of 5,000 psi are used. Strand Patterns are tabulated for Span lengths (℄ to ℄ bearing) ranging between thirty (30) and sixty-one (61) feet.

The Designs provided are applicable for all Environmental Classifications. Some Details, such as Concrete Class and Protective Treatment of Strands at the end of the Stem depend on the Environment. Therefore, the Designer shall include in the General Notes for the Bridge the Environmental Classification and call for all applicable dependent requirements.

Three types of drawings are included: Instructional Drawings, Semi-standard Drawings, and the Standard Drawings. The Instructional Drawings are provided to assist designers in preparing the contract drawings. These drawings help explain how the Semi-standard Drawings should be completed, provide required design information, and list the Standard Drawings that should be included in the contract set.

In most applications, the drawings provided in this standard (and other standards) when supplemented by a Plan view of the superstructure and a typical section thru the bridge should suffice in defining the bridge superstructure. In all cases, however, the designer is responsible for providing additional drawings necessary to complete the superstructure drawings, and for designing and detailing substructure units and other bridge components.

INSTRUCTIONAL DRAWINGS:

The Instructional Drawings show the three (3) double tee cross-sections, typical bridge sections, strand pattern designs, and provide general instructions.

STANDARD DRAWINGS:

The Standard Drawings are complete except for the title blocks. Only the applicable FDT standard drawings shall be included in the contract drawings. The Standard Drawings provide Double-Tee Notes, Construction Notes, Neoprene Pad details and general standard details for the beams.

SEMI-STANDARD DRAWINGS:

The Semi-standard Drawings are incomplete drawings. These drawings must be completed by the designer to suit the particular design. A Table of Beam Variables is provided in the Semi-standard Drawings. The designer shall complete the Table by providing all applicable information. The designer shall obtain strand patterns from the Instructional Drawings and show the patterns in the strand pattern grids provided.

DOUBLE TEE DESIGN EXAMPLE:

As a design example a single span bridge is designed using the instructional drawings, standard drawings and semi-standard drawings. The following information is provided for the bridge:

Begin Bridge: Sta. 00+00.00
End Bridge: Sta. 00+60.00
Cross Slope: 0.02
Skew Angle: 0 degrees (Ø = 90°)
Bridge Width: 40'-0" clear roadway
Sidewalks: none

From this information, the design span length is :
(60'-2(6.5+1.5)/12) = 58.67 ft (℄ - ℄ bearings). Instructional Drawing I-122 shows that a FDT30 with twenty-eight (28) strands is required. The strand patterns should be drawn on Semi-standard Drawing S-130. The strand pattern Case 2 applies. The strand patterns Types 1 and 2 also apply. The strand pattern at the end should be drawn in the section, for Type 1, and the pattern between holds downs (center) should be drawn in the section of the stem for Type 2. The total number of strands required, in this case 28, should be written within the circles.

The Bridge Plans shall include the following drawings:
Index No. 123, 126, 127, & S-130

The Table of Variables should be filled as follows:
Since Bridge Width (o-o) = 40 + 2(18.5/12) = 43'-1"
The Number of beams required = 43.08/8 = 6, and
W = (43.0833/6) = 7.18'

Note: Neglect the 1/4 inch width at the bottom of longitudinal joints. Clear roadway width and overall superstructure width should be denoted as 40'-0"± and 43'-1"±, respectively.

A = (7.18 - 4) 0.5 = 1.59'
L = 60 - 0.25 = 59.75'
[L - 2(1.75)] / 4.5 = 13; THEREFORE.
N1 = 14
S1 = [L - 2(1.75)] / 13 = 4.327'
(L - 2.333) 12 / 8 = 87; THEREFORE.
N2 = 88
S2 = (L - 2.333) 12 / 87 = 8 "

TABLE OF VARIABLES

SPAN NO.	BEAM TYPE	NO. OF BEAMS	Ø	DIMENSIONS						POST-TENSIONING DUCT DATA		CONCRETE DATA (PSI)		# REINF. STEEL DATA		STRAND PATTERN		
				A	D1	L	W	X	Y	N1	S1	f'c	f'ci	N2	S2	CASE	TYPE # # END	TYPE # # CENTER
1	2	4	90°	1'-7 1/16"	1'-0"	59'-9"	7'-2 1/8"	——	——	14	4'-4"	5000	4100	——	——	2	1	2
1	4	2	90°	1'-7 1/16"	1'-0"	59'-9"	7'-2 1/8"	——	——	14	4'-4"	5000	4100	88	8"±	2	1	2

REVISIONS					
Date	By	Description	Date	By	Description
			92R		

	Names	Dates
Drawn by	DCP	6-90
Checked by	AJG	6-90
Designed by	AJG	6-90
Checked by	TJB	6-90
Approved by	AJG	

ENGINEER OF RECORD:

LOGO:

SEAL:

FLORIDA DEPARTMENT OF TRANSPORTATION
STRUCTURES DESIGN OFFICE

ROAD NO.	COUNTY	PROJECT NO.

SHEET TITLE: FLORIDA DOUBLE-TEE GENERAL INSTRUCTIONS

PROJECT NAME:

Drawing No. 1 of 1

Index No. I-120

Mon Nov 9 13:58:54 1992 ST1:C120.230\I120.DGN

FED. ROAD DIV. NO.	STATE	PROJECT NO.	FISCAL YEAR	SHEET NO.
3	FLA.			

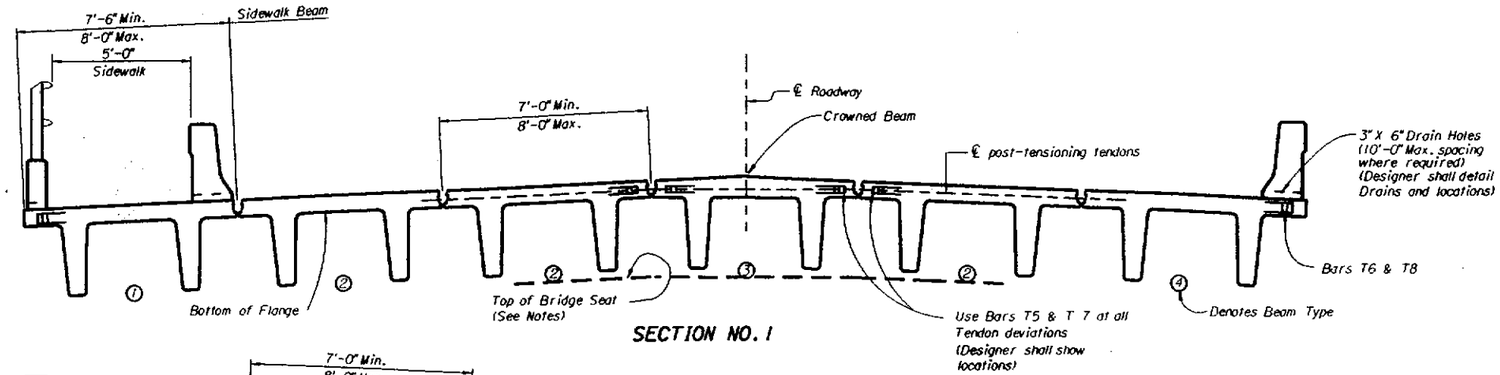

SECTION NO. 1

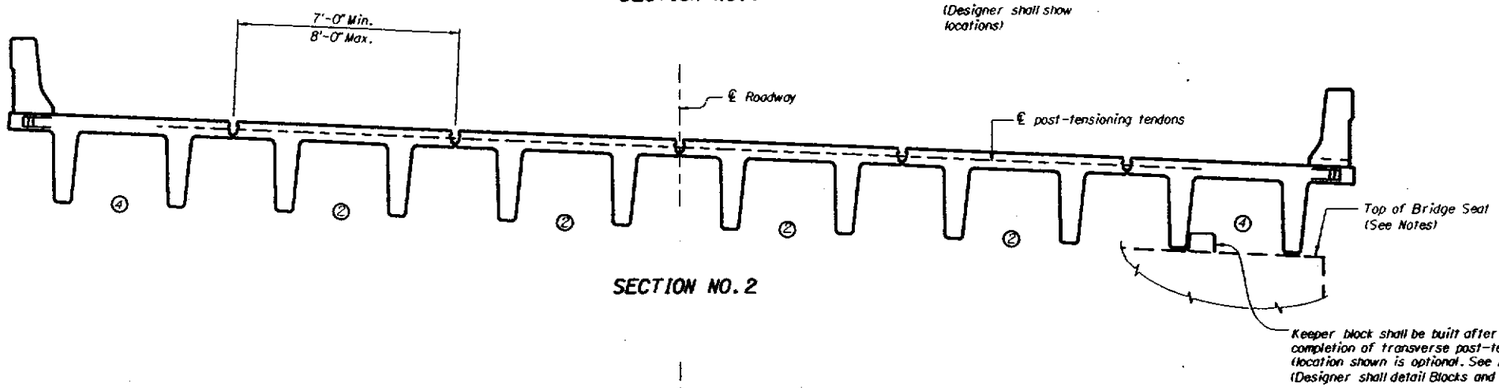

SECTION NO. 2

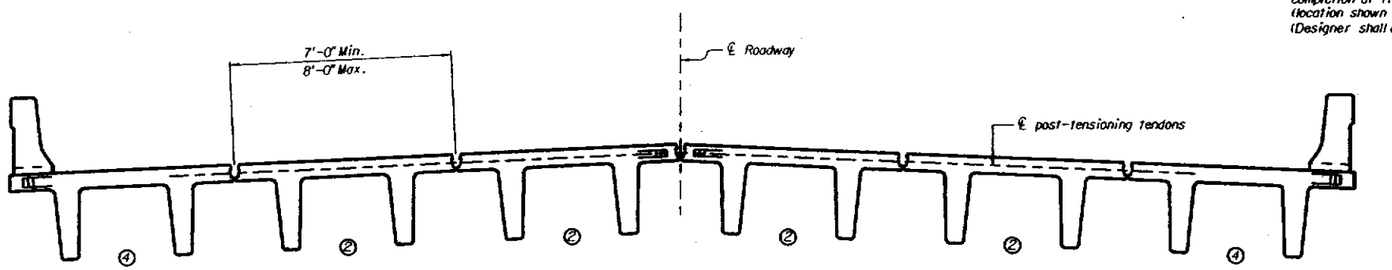

SECTION NO. 3

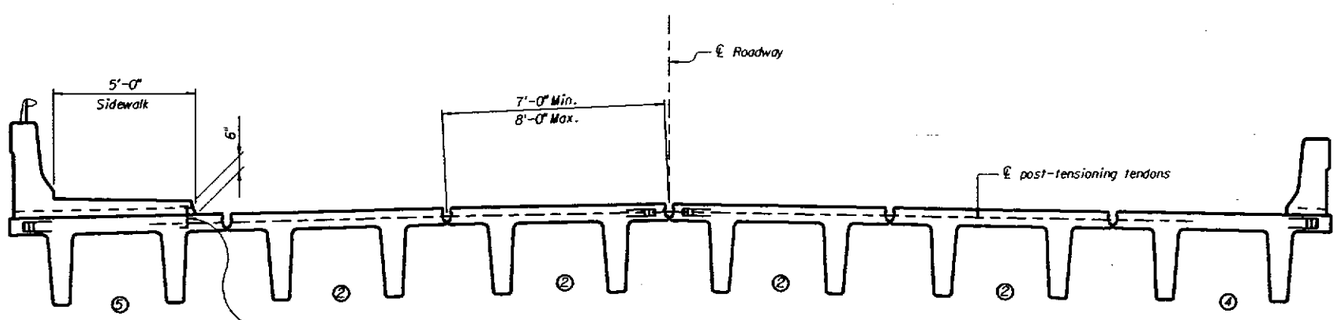

SECTION NO. 4

BRIDGE SECTIONS

NOTES

The bridge sections depicted on this sheet show several possible applications of double tee beams.

SECTION NO. 1: shows a non-symmetrical bridge section with crowned and sidewalk beams. These beams require additional detailing. The width of the sidewalk beam is sized to accommodate traffic railing reinforcement.

SECTION NO. 2: represents a symmetrical bridge section with constant cross slope.

SECTION NO. 3: represents a symmetrical crowned bridge section. The section shown uses an even number of beams. If the number of beams is odd, a crowned beam is required similar to that shown in Section No. 1.

SECTION NO. 4: represents a variation of SECTION NO. 1. In this case, the sidewalk is raised above the traffic riding surface.

Normally, the cross slope of bridge seat is parallel to the bottom of the beam flange.

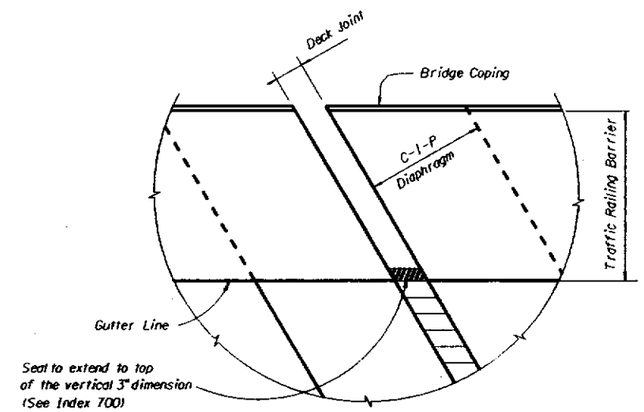

PART PLAN
DETAIL 'B'

Note: Detail 'B' shows Traffic Railing Barrier treatment at a skewed Intermediate Bent. Parapets for pedestrian rails and raised sidewalks shall be treated similarly. The skewed joint is also applicable at End Bents. This treatment is intended only for Double-Tee construction.

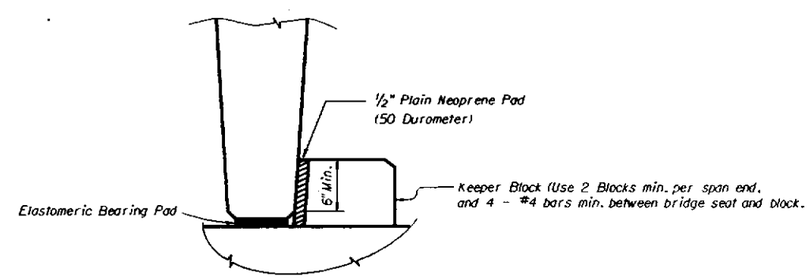

DETAIL 'A'

REVISIONS					
Date	By	Description	Date	By	Description
			92R		

	Names	Dates
Drawn by	WEH	6-90
Checked by	AJG	6-90
Designed by	TJB	6-90
Checked by	AJG	6-90
Approved by	AJG	

ENGINEER OF RECORD:
STRUCTURES DESIGN OFFICE
CENTRAL OFFICE
605 Suwannee Street, MS 33
Tallahassee, Florida 32399-0450

LOGO:

SEAL:

FLORIDA DEPARTMENT OF TRANSPORTATION
STRUCTURES DESIGN OFFICE

ROAD NO.	COUNTY	PROJECT NO.

SHEET TITLE: FLORIDA DOUBLE-TEE BRIDGE SECTIONS

PROJECT NAME:

Drawing No. 1 of 1

Index No. I-121

ST1412023011121.DGN

Mon Nov 9 14:02:11 1992

FED. ROAD DIV. NO.	STATE	PROJECT NO.	FISCAL YEAR	SHEET NO.
3	FLA.			

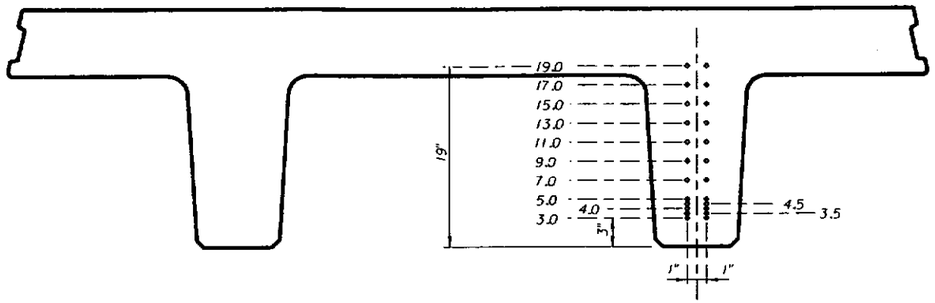

FDT 18

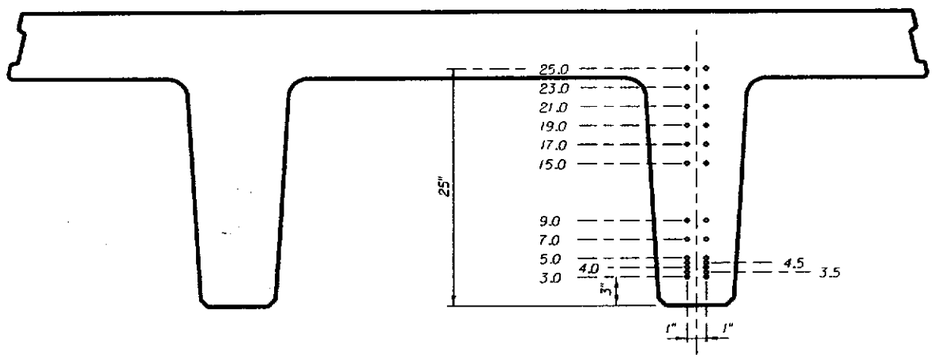

FDT 24

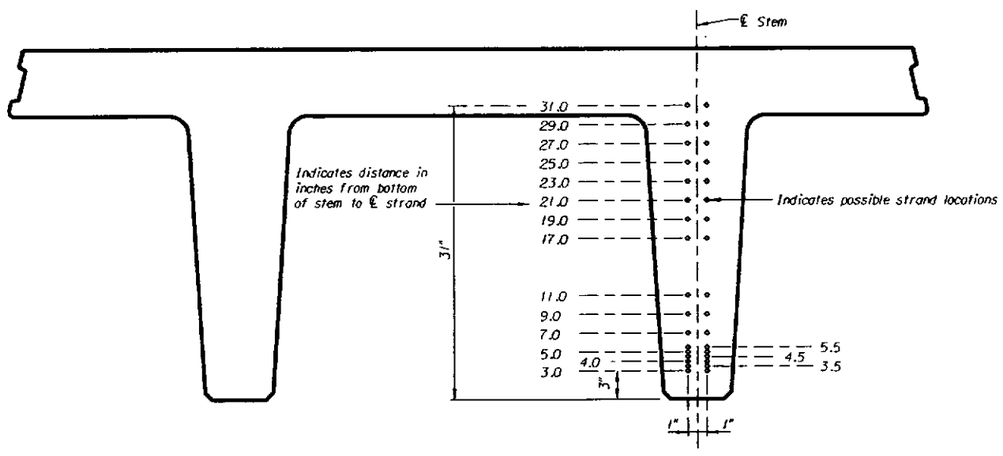

FDT 30

PERMITTED STRAND LOCATIONS

BEAM	℄ TO ℄ BEARINGS	NO. OF ½"Ø LO-LAX STRANDS	CONCRETE * STRENGTH (psi) f'c	f'ci	STRAND LOCATION 3.0	3.5	4.0	4.5	5.0	5.5	7.0	9.0	11.0	13.0	15.0	17.0	19.0	21.0	23.0	25.0	27.0	29.0	31.0	PATTERN LOCATION
FDT 18	30' -34'	20	5000	4000	4				4		4	4					4							END
					4				4		4	4					4							CENTER
	34'±37'	20	5000	4000	4									4	4	4	4							END
					4	4	4	4									4							CENTER
	37'±-39'	24	5000	4100	4								4	4	4	4	4							END
					4	4	4	4						4			4							CENTER
	39'±-40'	24	5000	4200	4								4	4	4	4	4							END
					4	4	4	4				4					4							CENTER
FDT 24	30' -35'	16	5000	4000	4				4		4									4				END
					4				4		4									4				CENTER
	35'±-41'	20	5000	4000	4				4		4	4								4				END
					4				4		4	4								4				CENTER
	41'±-43'	24	5000	4000	4				4		4	4				4				4				END
					4				4		4	4				4				4				CENTER
	43'±-48'	24	5000	4000	4											4	4	4	4	4				END
					4	4	4	4	4											4				CENTER
	48'±-50'	28	5000	4100	4										4	4	4	4	4	4				END
					4	4	4	4	4							4				4				CENTER
FDT 30	30' -40'	16	5000	4000	4				4		4												4	END
					4				4		4												4	CENTER
	40'±-46'	20	5000	4000	4				4		4	4											4	END
					4				4		4	4											4	CENTER
	46'±-51'	24	5000	4000	4				4		4	4	4										4	END
					4				4		4	4	4										4	CENTER
	51'±-54'	24	5000	4000	4														4	4	4	4	4	END
					4	4	4	4	4														4	CENTER
	54'±-59'	28	5000	4100	4													4	4	4	4	4	4	END
					4	4	4	4	4	4													4	CENTER
	59'±-61'	32	5000	4200	4												4	4	4	4	4	4	4	END
					4	4	4	4	4			4				4							4	CENTER

* NOTE: Design is based on f'c = 5000 psi min.; if the environment is moderately agressive or extremely aggressive use f'c = 5500 psi in the "TABLE OF VARIABLES".

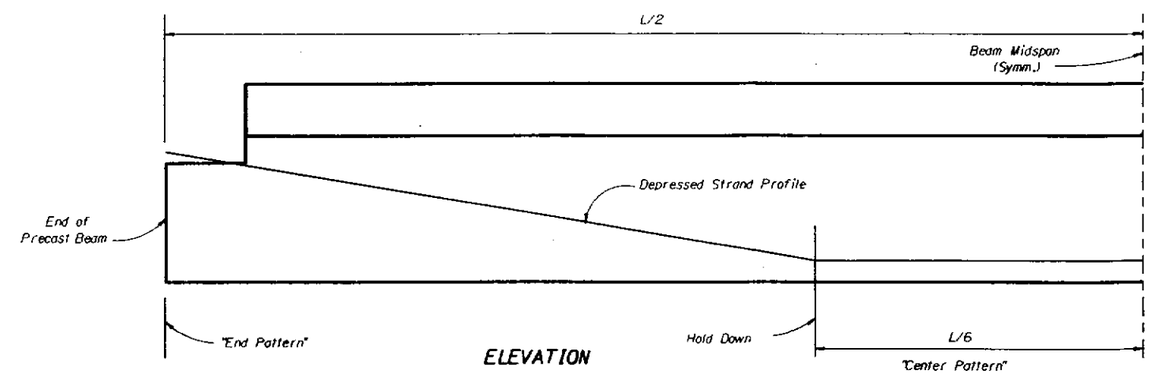

ELEVATION

PATTERN LOCATION

REVISIONS					
Date	By	Description	Date	By	Description
			92R		

	Names	Dates
Drawn by	WEH	6-90
Checked by	AJG	6-90
Designed by	TJB	6-90
Checked by	AJG	6-90
Approved by	AJG	

ENGINEER OF RECORD:
STRUCTURES DESIGN OFFICE
CENTRAL OFFICE
605 Suwannee Street, MS 33
Tallahassee, Florida 32399-0450

LOGO:

SEAL:

FLORIDA DEPARTMENT OF TRANSPORTATION
STRUCTURES DESIGN OFFICE

ROAD NO.	COUNTY	PROJECT NO.

SHEET TITLE: FLORIDA DOUBLE-TEE TABULATED STRAND PATTERNS

PROJECT NAME:

Drawing No. 1 of 1

Index No. I-122

Mon Nov 9 14:04:49 1992 ST1#120.23011122.DGN

FED. ROAD DIV. NO.	STATE	PROJECT NO.	FISCAL YEAR	SHEET NO.
3	FLA.			

DOUBLE-TEE NOTES

General Specifications: Florida Department of Transportation Standard Specifications for Road and Bridge Construction current edition with approved Supplements thereto.

Design Specifications: American Association of State Highway and Transportation Officials (AASHTO) Standard Specifications for Highway Bridges, 1989. FDOT Structures Design Guidelines.

Design Loads:
Live Load: HS20-44 Modified for Military loading as required.
Self weight: Based on 150 pcf
Superimposed Dead Load: 140 lbs/L.F.
Future wearing surface: 120 lbs/L.F.
Live Load Distribution of Axle Loads:

Span	Factor
30' - 41'	0.70
41'(+) - 51'	0.69
51'(+) - 61'	0.68

Concrete Class: See General Notes
Environment: See General Notes

Material Properties:
Concrete Strength: Precast Double Tees f'c = See General Notes
C-I-P Diaphragms f'c = See General Notes
Reinforcing Steel: ASTM A-615, Grade 60.
Welded Wire Fabric: ASTM A-185 and ASTM A-497.
Prestressing Strands: 1/2" ϕ ASTM A-416, Grade 270, Low Relax.

Strand Detensioning: Detensioning shall be performed after the concrete has reached the required release strength f'ci (See Table of Variables.). The strands shall be detensioned in a sequence that keeps the maximum eccentricity about the vertical axis of the stem to one (1) strand, and the difference between the number of strands between stems to a maximum of two (2). The transfer of stresses shall be done in accordance with the specifications.

Strand Cutting: If the Environment of the Superstructure is classified as Slightly Aggressive Environment, the strands below Diaphragm Blockout shall be cut flush with the Concrete Surface of the Stem, and the exposed Stem surface shall be coated with an approved Epoxy Mortar 1/8 inch thick to prevent Strand corrosion.

If the Environment is classified as Moderately Aggressive Environment or Extremely Aggressive Environment, use a 1 inch deep recess around Strand or Strand group. The Strands shall be cut flush with the bottom of the formed recess and immediately after cutting Strands, the recess shall be filled with an approved Mortar under pressure. After the Mortar has cured, the exposed Stem surface shall be coated with an approved Epoxy Mortar 1/8 inch thick.

Bars for Barrier or Railing: The spacing of the bars may be adjusted to clear the post-tensioning blockouts. However, the number of bars shall not be reduced. The Contractor shall show the proposed spacing for the bars on the shop drawings. Bars 5P (in the barrier) shall be tied to Bars 5V.

Camber: Camber is the amount of rise that occurs at midspan of the beam due to the prestressing force. The camber will increase due to creep during storage unless precautions are taken. Therefore, the contractor shall avoid the development of additional differential camber between beams, for any span, during storage by loading or other approved methods.

Surface Finish: The tops of all precast units shall be finished smooth by floating and brooming. All other surfaces of the beam shall receive a Class 3 Surface Finish. The edges of the top surface of the units shall be finished by use of a small radius tool.

Mortar Leakage: Any mortar leakage that occurs and stains resulting from leakage shall be removed so that all beams have a uniform appearance.

Forms and Pallets: All beams shall be cast on concrete based pallets and in metal forms.

Handling: Prestressed beams must be maintained in an upright position. They must be picked up from points located between two (2) and three (3) feet from the ends.

Storage and Transportation: All beams must be stored on adequate dunnage. The beams must be supported no closer than 6 inches to the end nor further than 18 inches from the end.

Marking: Each beam shall be marked showing bridge number, casting date, and identification letters and numbers. Markings shall be made on the face of the stem near the end, so located that the marking will be exposed after the end diaphragms have been cast. Outside beams shall be marked on an inside face of the stem. All markings shall be stencilled and clearly legible.

Shim Plates: Shim plates for bearings shall be hot dip galvanized in accordance with requirements of A.S.T.M. A-123. The contractor shall have an adequate number of shim plates available at the job site for use if required.

Diaphragm: The diaphragms shall be cast-in-place after the transverse post-tensioning has been completed. The cost of materials and labor required for the construction of diaphragms shall be included in the cost of concrete and reinforcing steel for the superstructure.

Neoprene Bearing Pad: Composite Neoprene Bearing Pads shall be provided in accordance with details in this standard and the Department's specifications. The pads are considered to be incidental to the cost of the precast double tee beams; therefore, no separate payment will be made.

Post-Tensioning: The work and materials required for post-tensioning shall conform to the special provisions. This work is considered to be incidental to the cost of the precast double tee beams; therefore, no separate payment will be made.

Each tendon shall consist of three (3), 1/2 inch diameter Low Relaxation Strands conforming to ASTM A-416, Grade 270.

The post-tensioning design assumptions are as follows:
anchor set = 0.375 in.
friction coefficient = 0.0 k/ft
wobble coefficient = 0.0002 k/ft.

The jacking force required before anchor set is 30.99 kips for each strand.

Ducts, couples, transitions (trumpets) shall be fabricated from virgin high density polyethylene. The ducts shall be flat corrugated ducts in accordance with the plans. During casting of the beams, the ducts shall be held in proper alignment by a rigid mandrel sufficient to prevent displacement. Ducts shall have a grouting vent at each anchorage. Duct splices shall be watertight.

Exterior blockouts shall be filled with an approved non-shrink, non-metallic grout after completion of the post-tensioning operation. Prior to grouting blockouts, all concrete surfaces in contact with the grout shall be roughened, and the metallic anchorage devices and strands shall be cleaned to the satisfaction of the engineer; and immediately before grouting, the blockout concrete surfaces and anchorage devices shall be coated with an approved bonding compound.

Shop Drawings: Shop drawings for double tee beams shall show a complete detensioning schedule so as to minimize tension in the concrete during release of the strands. Detailed concrete stresses during each stressing operation of detensioning shall be submitted with the Shop Drawings. Shop Drawings shall show complete details of the beams including reinforcing steel. The contractor shall also include in the shop drawings the post-tensioning information required by the special provisions.

Payment: The cost of Double Tee Beams shall be paid for at the unit price per linear foot and shall include all materials required for the fabrication of the precast beams as well as erection of the beams. The unit price shall also include the cost of all incidental materials and work such as: neoprene bearing pads, shim plates, transverse post-tensioning (including hardware), and grouting. Payment shall be made on the quantity complete in place and accepted. Grinding of the top surface, if needed, to provide a smooth riding surface is also considered to be incidental work. Final pay lengths shall be the plan quantity which is based on the casting lengths (Ls) of the beams.
Pay Item numbers are as follows:
450-1-118 Prestressed Beam (Florida Double-Tee Beam) (FDT18)
450-1-124 Prestressed Beam (Florida Double-Tee Beam) (FDT24)
450-1-130 Prestressed Beam (Florida Double-Tee Beam) (FDT30)

CONSTRUCTION NOTES

Each double tee beam is designed to bear equally on four bearing pads. Shimming and/or grinding under one or more pads may be necessary to obtain proper bearing. The contractor shall adhere to the following installation sequence during erection of the beams:

1. Mark theoretical pad locations (outlines) on the bridge seats for the centermost beam. Place pads on the marked locations and erect this beam first. Pad locations shall be adjusted if necessary, to center the pads under stems.

   Determine the need for shims and grinding by performing the following tests:
   a) Check the bearings. If contact between stem and pad is not apparent, shimming at the low bearing and/or grinding at the adjacent high bearing is required. Grinding of the concrete bridge seat shall be limited to 3/8 inch maximum.

   b) If there is contact between stem and pad but the sealing ribs around the pad perimeter (top and bottom) are not compressed by at least 1/4 inch total, insert a shim plate between the low bridge seat and the pad. As an option, the contractor may grind the adjacent high bearing in accordance with a) above.

2. Check carefully the location (position, alignment, etc.) of the erected beam before proceeding with the erection of the other beams.

3. Erect adjacent beams by repeating steps 1 and 2 above. Post-tensioning ducts must line up and pads must be centered under stems.

4. After erection of all beams, a final check of their positions shall be done prior to proceeding with additional work.

5. Insert backer rods in keyways between beams.

6. Join post-tensioning ducts as detailed in the plans. The couplers at the joints shall be securely wrapped with duct tape to prevent grout penetration into the ducts during grouting of the keyways. DO NOT install P.T. strands at this time.

7. Place a longitudinal #4 Bar in each keyway as shown in the plans, and fill the longitudinal keyways with approved non-shrink, non-metallic grout. The Contractor shall include with the shop drawings a letter from the grout manufacturer certifying that the proposed grout is proper for its intended use. The letter shall also include recommendations for surface preparation and for mixing, placing and curing of the grout.

   The precast concrete surfaces shall be prepared, and the grout shall be mixed, placed and cured in strict adherence to the manufacturer's recommendations. However, the total curing period shall be at least 72 hours.

   Post-tensioning may start after grout has cured at least 48 hours and reached a minimum strength of 4000 psi.

   The grouted keyways shall not be disturbed by vehicular traffic or heavy construction activities prior to completion of post-tensioning and total curing.

8. Install tendons in the ducts. Each tendon shall consist of three (3) seven-wire 1/2 inch diameter strands. The strands shall meet the requirements of ASTM A-416, Grade 270 and have low relaxation properties. The ends of the strands shall be "color coded" to insure same position at both anchorage plates.

   Post-tension the midspan or the two (2) centermost tendons first. Then every other tendon on both sides in a sequence that keeps the maximum eccentricity about midspan to one (1) tendon. Then post-tension the previously skipped tendons beginning with the two (2) centermost (near midspan) on both sides in a sequence that keeps the maximum eccentricity about midspan to one (1) tendon, until all tendons are stressed.

   If the tendon's path is straight end to end (uncrowned bridge section) and the bridge is not skewed in excess of 15°, the tendons may be stressed from either end.

   If the tendon's path is not straight end to end and/or the bridge is skewed in excess of 15°, the strands shall be stressed from one end, alternating bridge sides, so that every other tendon is stressed from the same side of the bridge.

9. Grout ducts and fill anchorage blockouts with approved non-shrink, non-metallic grout. The grouted tendons shall not be disturbed by vehicular traffic or heavy loads for a period of at least 72 hours.

10. Construct end diaphragms.

11. Remove lifting devices. Any metal shall be removed to one (1) inch below the surface and the hole in the concrete shall be grouted flush. The Grout used for the patch shall be an approved non-shrink, non-metallic grout. The color of the grout shall match the color of the adjacent concrete surface.

12. Check riding surface in accordance with the specifications and grind areas not in compliance. Depths of grinding shall be limited to 1/2 inch maximum.

13. Construct all superimposed superstructure items such as barriers, sidewalks, etc.

14. Provide deck grooving in accordance with Section 400-15.

15. Construct transverse deck joints at span ends in accordance with the details.

Note: Steel Shim Plates shall conform to ASTM A36 and shall be hot dip galvanized.

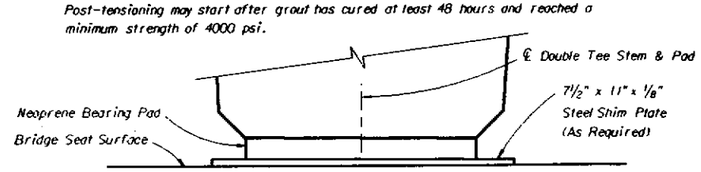

END ELEVATION
(FDT30 Stem Shown)

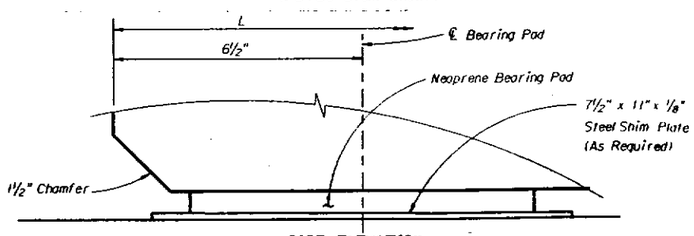

SIDE ELEVATION

TYPICAL INSTALLATION
(FDT18, FDT24 & FDT30)

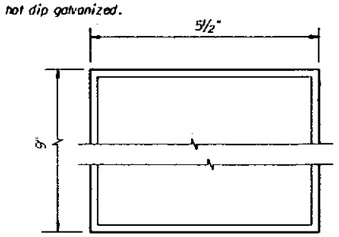

PLAN

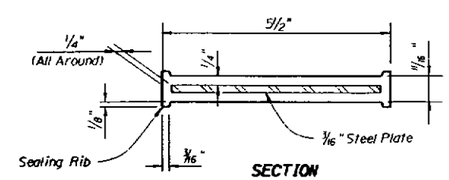

SECTION

NEOPRENE PAD DETAILS
(FDT18, FDT24 & FDT30)

NOTE: Neoprene in all Bearing Pads shall have a Grade 60 hardness. Steel Plates shall conform to AASHTO Designation M251.

REVISIONS					
Date	By	Description	Date	By	Description
			92R		

	Names	Dates
Drawn by	DCP/JSP	6-90
Checked by	AJG	6-90
Designed by	AJG	6-90
Checked by	TJB	6-90
Approved by	AJG	

ENGINEER OF RECORD:
STRUCTURES DESIGN OFFICE
CENTRAL OFFICE
605 Suwannee Street, MS 33
Tallahassee, Florida 32399-0450

LOGO:

SEAL:

FLORIDA DEPARTMENT OF TRANSPORTATION
STRUCTURES DESIGN OFFICE

ROAD NO.	COUNTY	PROJECT NO.

SHEET TITLE: FLORIDA DOUBLE-TEE NOTES AND MISCELLANEOUS DETAILS

PROJECT NAME:

Drawing No. 1 of 2

Index No. 123

STR(120,230)123.DGN

MON NOV 9 11:28:24 1992

FED. ROAD DIV. NO.	STATE	PROJECT NO.	FISCAL YEAR	SHEET NO.
3	FLA.			

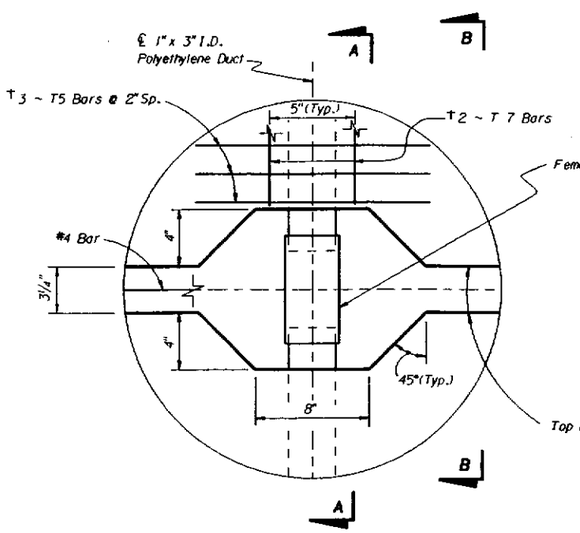

(Non-Skewed)

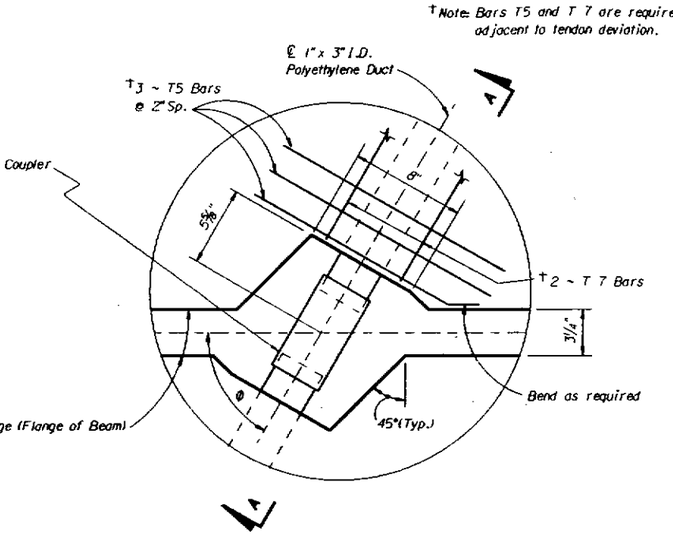

(Skewed)

INTERIOR BLOCKOUTS

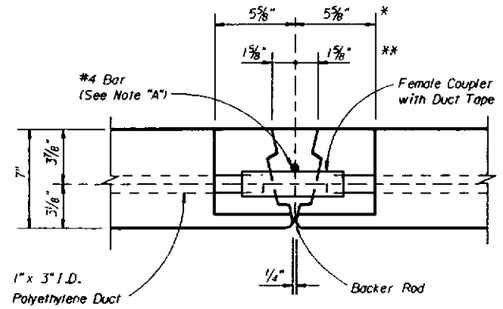

SECTION A-A
(See also Detail D)

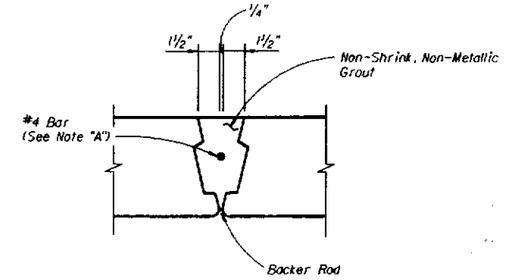

SECTION B-B

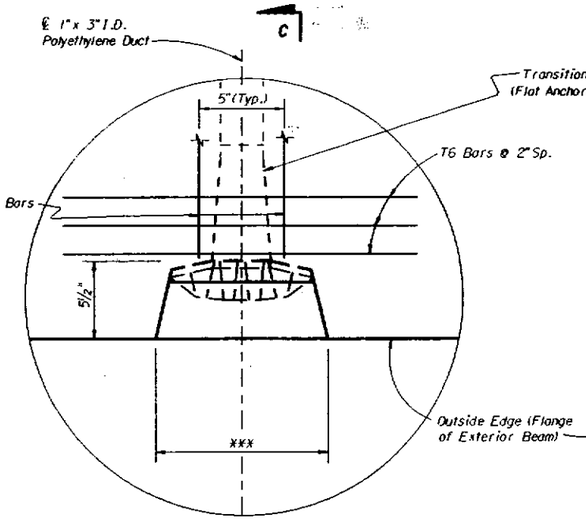

(Non-Skewed)

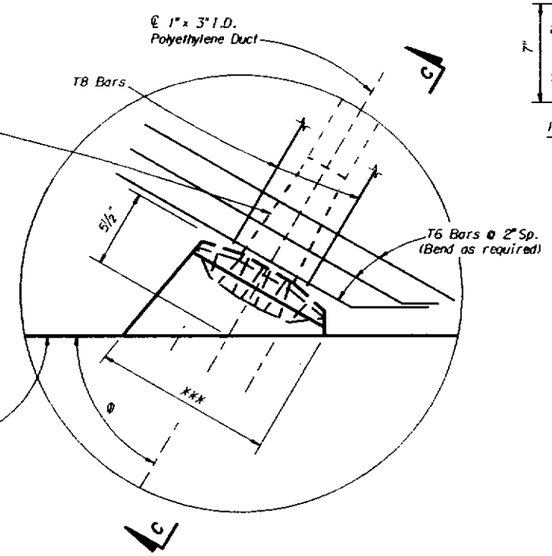

(Skewed)

EXTERIOR BLOCKOUTS

PARTIAL PLAN SHOWING BLOCKOUT DETAILS FOR POST-TENSIONING

(Note: Blockout the top 6" of the flange only.)

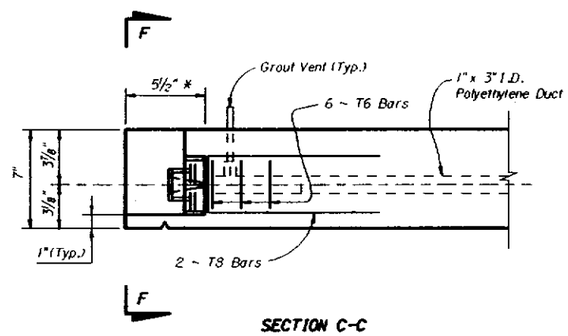

SECTION C-C

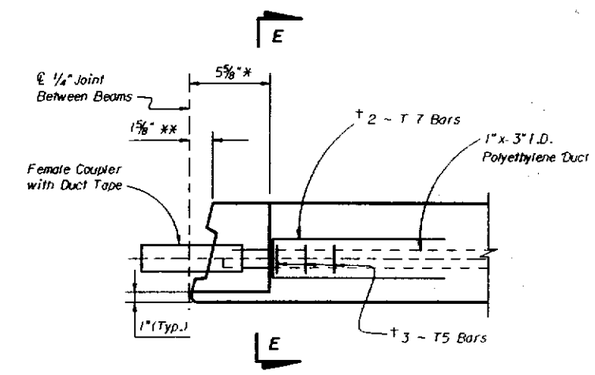

DETAIL D

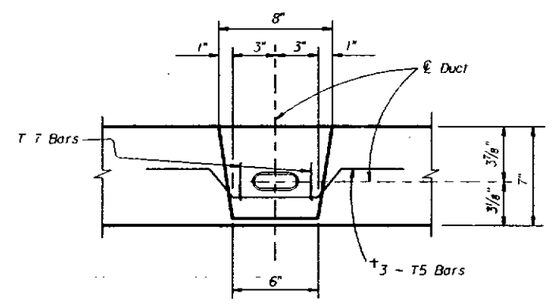

SECTION E-E

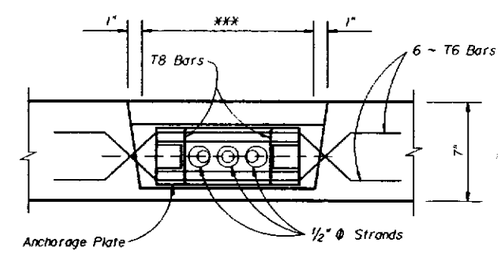

VIEW F-F

NOTE "A": Place one full length #4 Bar along ℄ Keyway. The bar shall be securely tied to the ducts. Lap 12" min. at splice.

* Along ℄ Duct at skewed blockouts.
** Perpendicular to Flange.
*** Dimensions to suit Anchorage device.

REVISIONS					
Date	By	Description	Date	By	Description
			92R		

	Names	Dates
Drawn by	DCP/JSP	6-90
Checked by	AJG	6-90
Designed by	AJG	6-90
Checked by	TJB	6-90
Approved by	AJG	

ENGINEER OF RECORD: STRUCTURES DESIGN OFFICE
CENTRAL OFFICE
605 Suwannee Street, MS 33
Tallahassee, Florida 32399-0450

LOGO:

SEAL:

FLORIDA DEPARTMENT OF TRANSPORTATION
STRUCTURES DESIGN OFFICE

ROAD NO.	COUNTY	PROJECT NO.

SHEET TITLE: FLORIDA DOUBLE-TEE NOTES AND MISCELLANEOUS DETAILS

PROJECT NAME:

Drawing No. 2 of 2

Index No. 123

ST:fl120.230\123.DGN

Mon Nov 9 11:30:39 1992

FED. ROAD DIV. NO.	STATE	PROJECT NO.	FISCAL YEAR	SHEET NO.
3	FLA.			

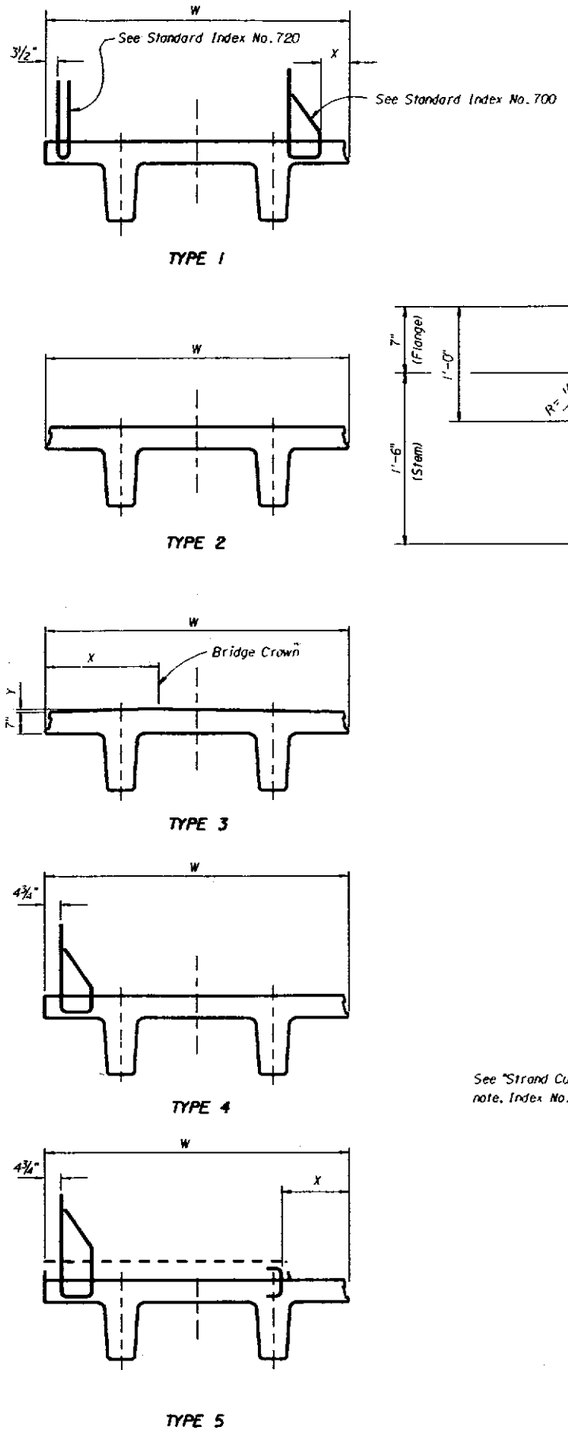

NOTE: Reinforcement for Barrier Transition shall be provided in accordance with NOTE 'A' of Standard Index No. 700.

NOTE: For Dimensions "A", "L", "W", "X" & "Y", and Strand Pattern, see FDT18 Table of Variables & Strand Patterns Sheet.

* Adjust outermost spacing to suit "W", i. e.: Spacing (ft.) = ½(W−6).

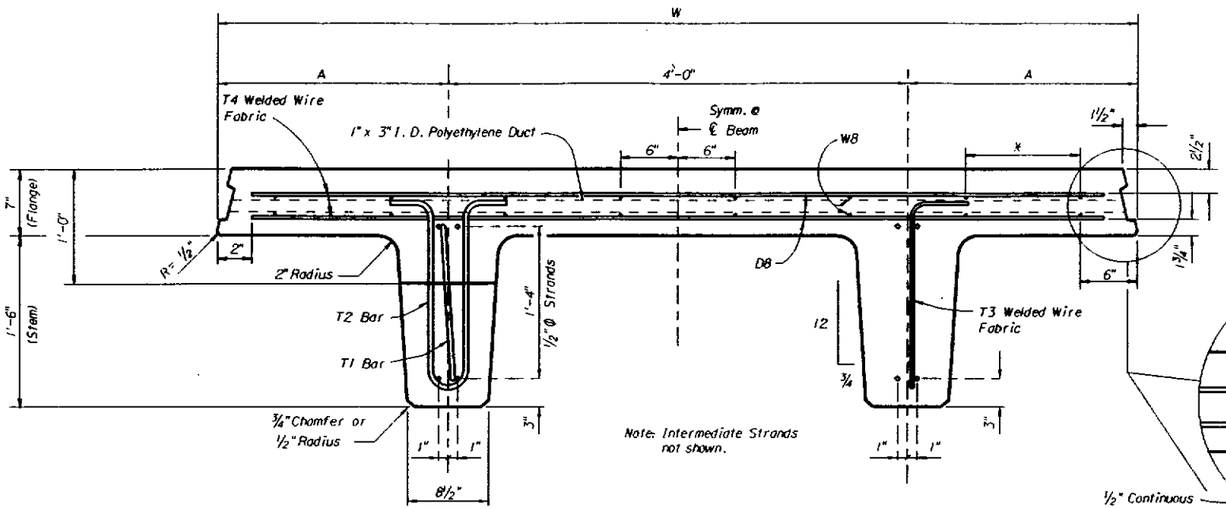

HALF SECTION A-A

HALF SECTION B-B

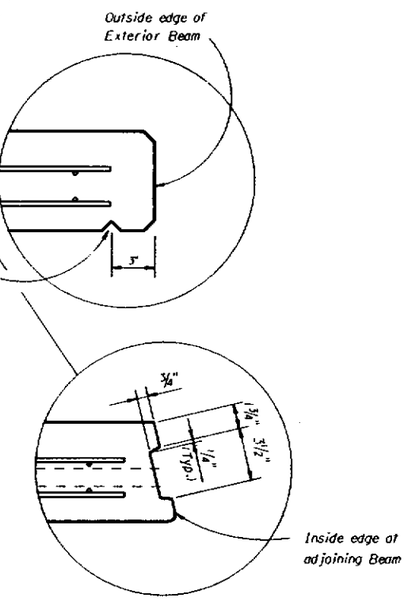

** Blockout concrete to accept C. I. P. Diaphragm. See Index 127 for orientation of the horizontal 1'-0" dimension.

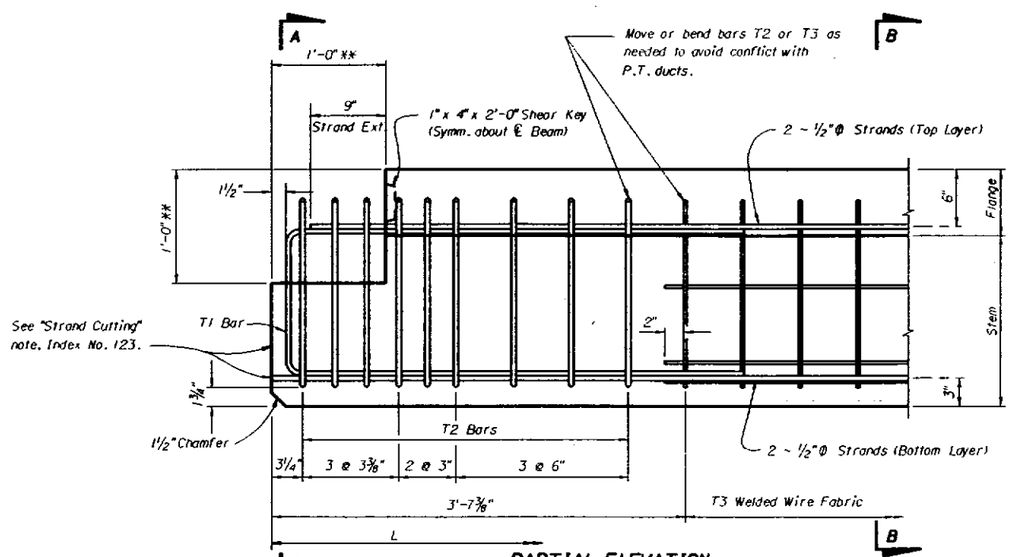

PARTIAL ELEVATION

(Flange Reinforcing and P.T. Ducts not shown)

(Intermediate Strands not shown)

BENDING DIAGRAM

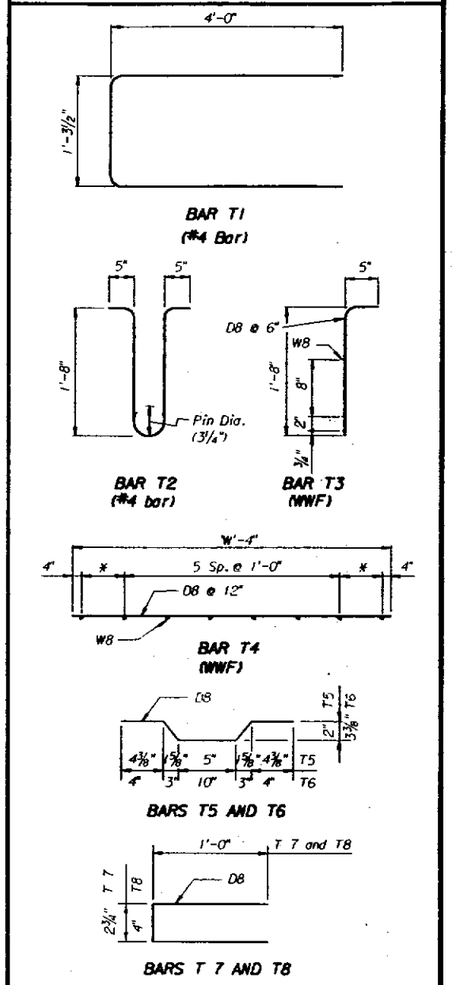

NOTES:

All bar bends shall be made with a 2" diameter pin unless otherwise noted.
Refer to General Notes for epoxy steel requirements.

The Welded Wire Fabric (T4) shall consist of eight (8) longitudinal W8 wires welded to transverse D8 wires spaced at twelve (12) inches. The W8 wires shall be spaced as shown above and their length, in the finished beam, shall be equal to the length of the precast flange plus one (1) foot. Sufficient material to include splices shall be provided. Splices, if needed, shall be 14" Minimum.

The longitudinal W8 wires for the welded wire fabric (T3) do not require splicing.

W8 wires shall comform to ASTM A185.
D8 wires shall conform to ASTM A497.

Six (6) Bars 'T6' and two (2) Bars 'T8' are required at each P/T anchorage location.

Three (3) Bars 'T5' and two (2) Bars 'T 7' are required at each P/T duct location where the tendon's path deviates from a straight course.

Four (4) Bars 'T1' are required per Beam.
Thirty-six (36) Bars 'T2' are required per Beam.

REVISIONS					
Date	By	Description	Date	By	Description
			92R		

	Names	Dates
Drawn by	DCP	6-90
Checked by	AJG	6-90
Designed by	TJB	6-90
Checked by	AJG	6-90
Approved by	AJG	

ENGINEER OF RECORD:
STRUCTURES DESIGN OFFICE
CENTRAL OFFICE
605 Suwannee Street, MS 33
Tallahassee, Florida 32399-0450

LOGO:

SEAL:

FLORIDA DEPARTMENT OF TRANSPORTATION
STRUCTURES DESIGN OFFICE

ROAD NO.	COUNTY	PROJECT NO.

SHEET TITLE:
FDT 18
TYPICAL SECTION

PROJECT NAME:

Drawing No. 1 of 1

Index No. 124

ST1:120.230)124.DGN
Mon Nov 9 11:44:38 1992

FED. ROAD DIV. NO.	STATE	PROJECT NO.	FISCAL YEAR	SHEET NO.
3	FLA.			

NOTE: For dimensions "A", "L", "W", "X" & "Y", and Strand Patterns, see FDT24 Table of Variables & Strand Patterns Sheet.

* Adjust outermost spacing to suit "W", i.e.: Spacing (ft.) = ½(W-6).

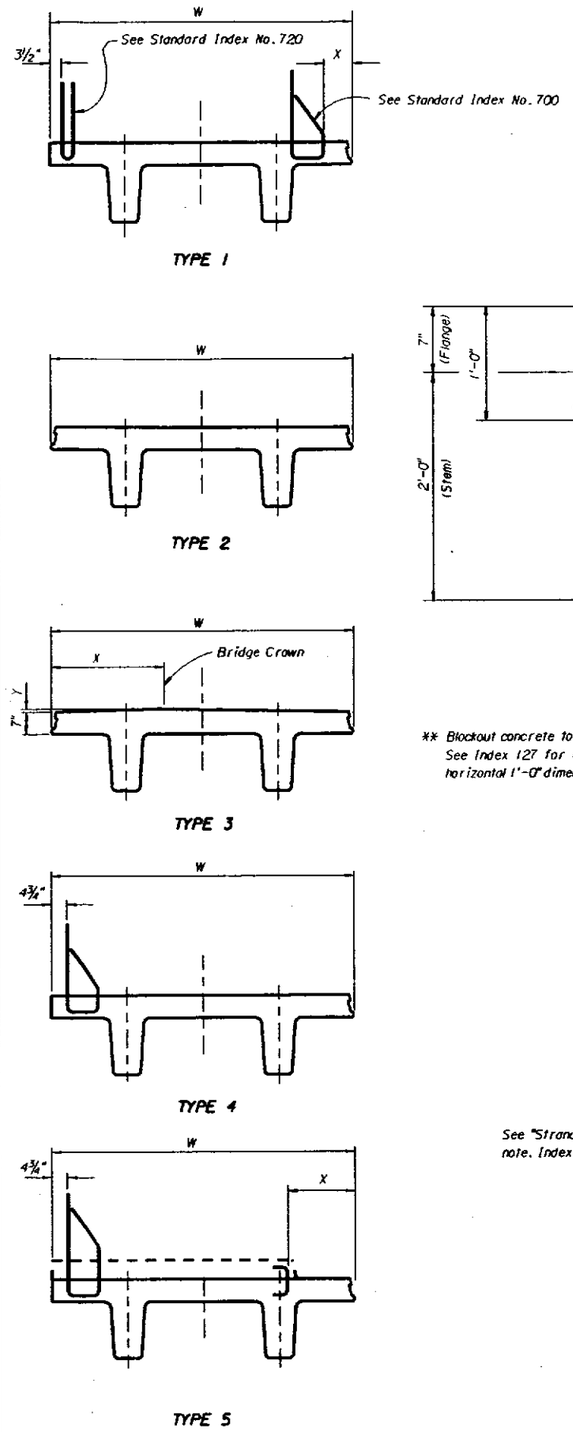

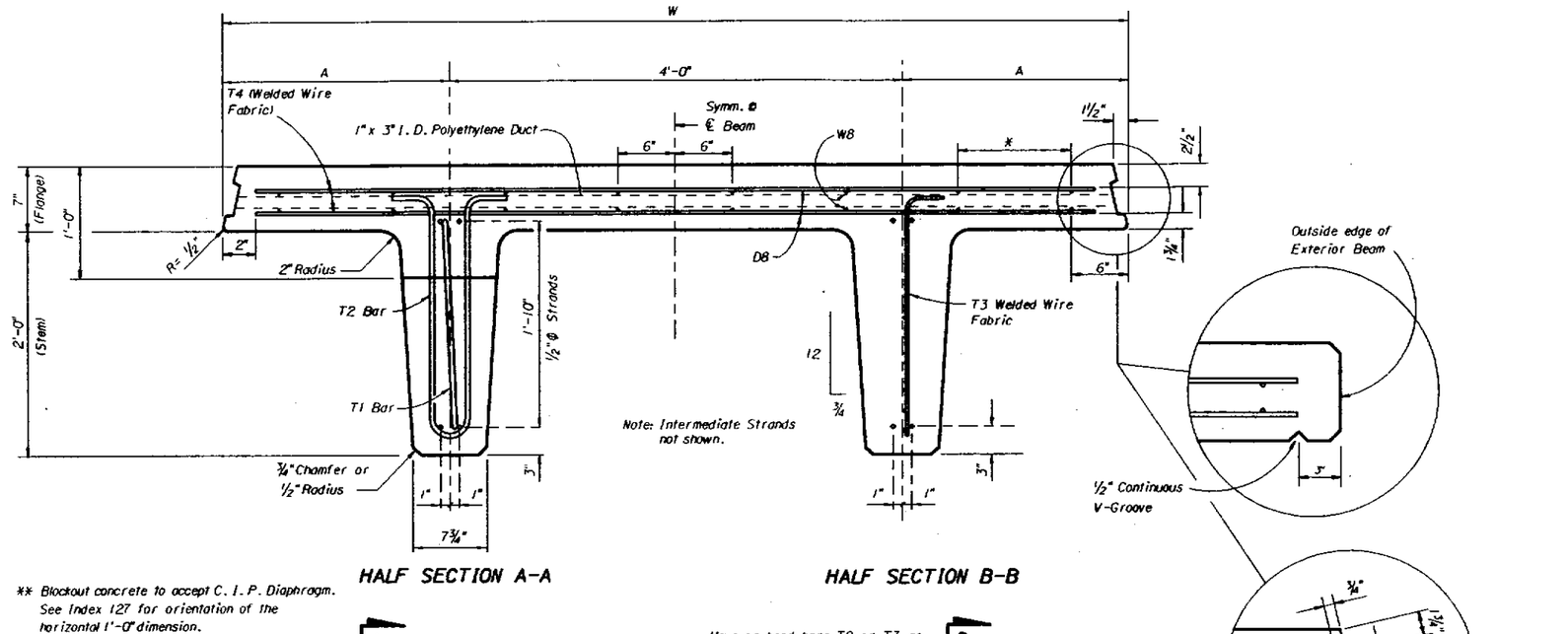

HALF SECTION A-A

HALF SECTION B-B

** Blockout concrete to accept C.I.P. Diaphragm. See Index 127 for orientation of the horizontal 1'-0" dimension.

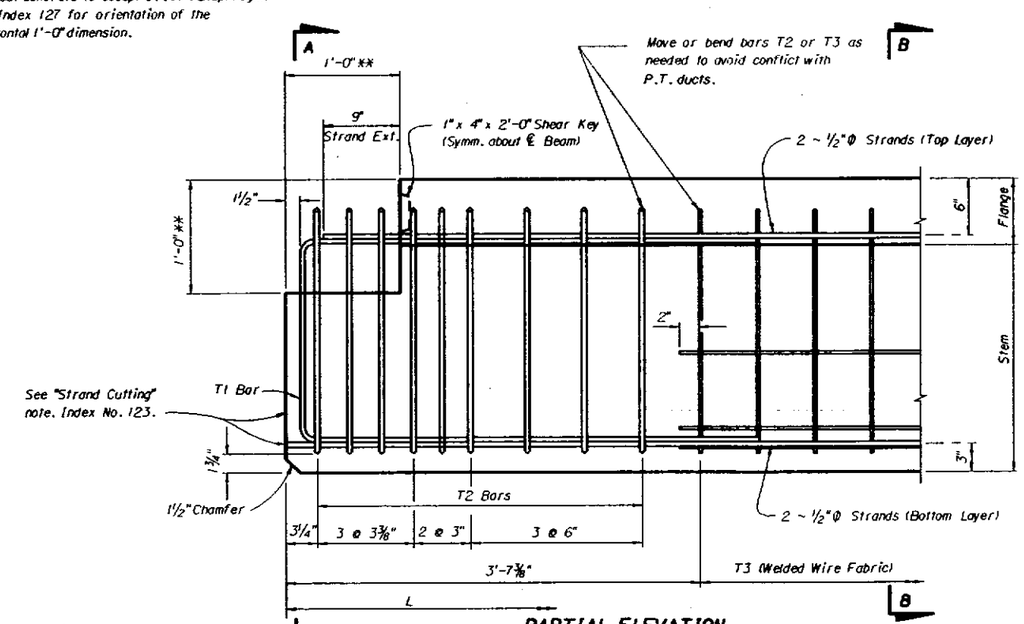

PARTIAL ELEVATION

(Flange Reinforcing and P.T. Ducts not shown)

(Intermediate Strands not shown)

BENDING DIAGRAM

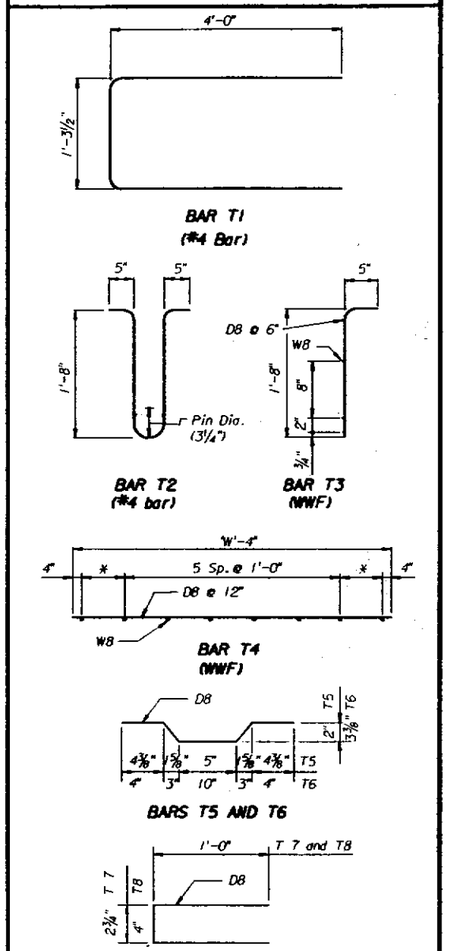

NOTES:

All bar bends shall be made with a 2" diameter pin unless otherwise noted.
Refer to General Notes for epoxy steel requirements.

The Welded Wire Fabric (T4) shall consist of eight (8) longitudinal W8 wires welded to transverse D8 wires spaced at twelve (12) inches. The W8 wires shall be spaced as shown above and their length, in the finished beam, shall be equal to the length of the precast flange plus one (1) foot. Sufficient material to include splices shall be provided. Splices, if needed, shall be 14" Minimum.

The longitudinal W8 wires for the welded wire fabric (T3) do not require splicing.

W8 wires shall comform to ASTM A185.
D8 wires shall conform to ASTM A497.

Six (6) Bars 'T6' and two (2) Bars 'T8' are required at each P/T anchorage location.
Three (3) Bars 'T5' and two (2) Bars 'T 7' are required at each P/T duct location where the tendon's path deviates from a straight course.

Four (4) Bars 'T1' are required per Beam.
Thirty-six (36) Bars 'T2' are required per Beam.

REVISIONS					
Date	By	Description	Date	By	Description
			92R		

	Names	Dates
Drawn by	DCP	6-90
Checked by	AJG	6-90
Designed by	TJB	6-90
Checked by	AJG	6-90
Approved by	AJG	

ENGINEER OF RECORD:
STRUCTURES DESIGN OFFICE
CENTRAL OFFICE
605 Suwannee Street, MS 33
Tallahassee, Florida 32399-0450

LOGO:

SEAL:

FLORIDA DEPARTMENT OF TRANSPORTATION
STRUCTURES DESIGN OFFICE

ROAD NO.	COUNTY	PROJECT NO.

SHEET TITLE: FDT 24 TYPICAL SECTION

PROJECT NAME:

Drawing No. 1 of 1

Index No. 125

Mon Nov 9 11:51:26 1992 ST1:(120:230)125.DGN

FED. ROAD DIV. NO.	STATE	PROJECT NO.	FISCAL YEAR	SHEET NO.
3	FLA.			

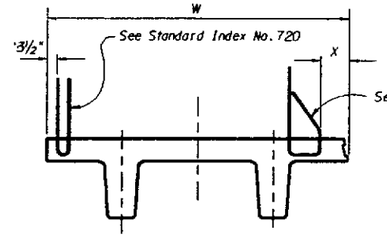

TYPE 1

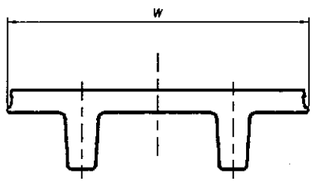

TYPE 2

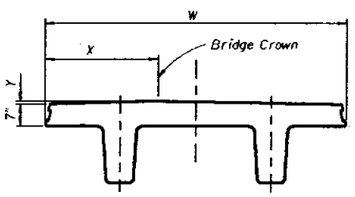

TYPE 3

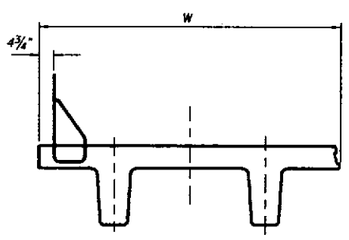

TYPE 4

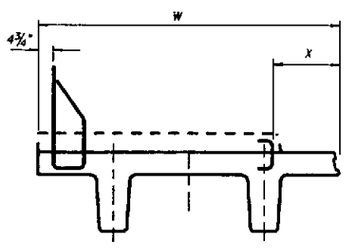

TYPE 5

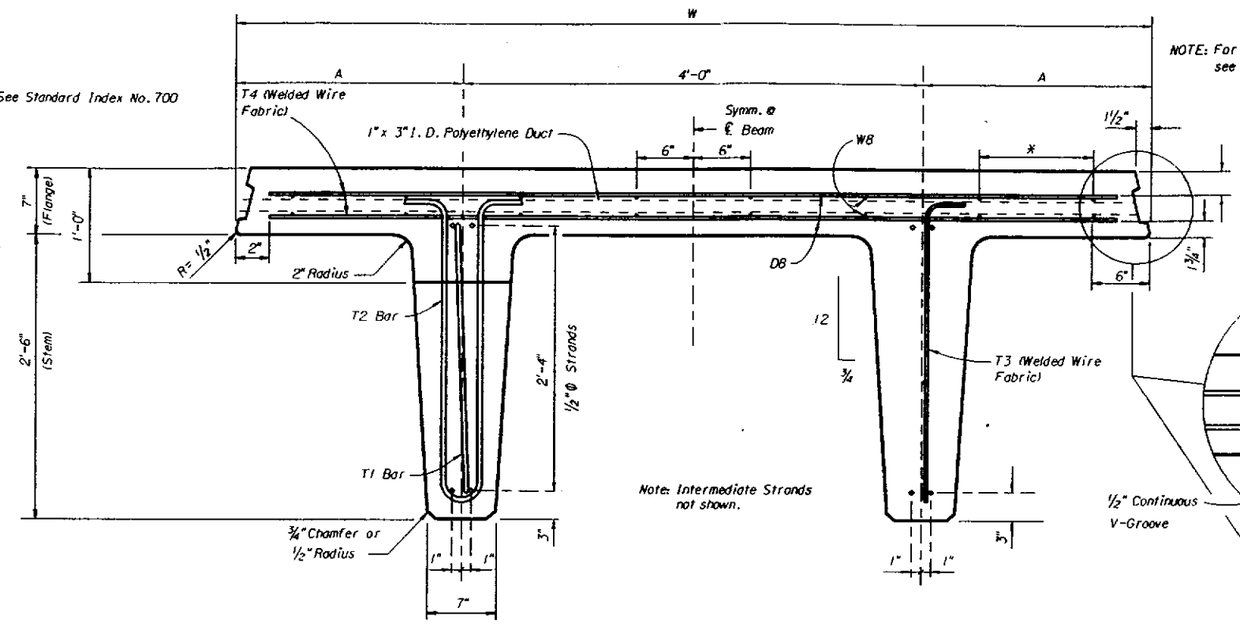

HALF SECTION A-A

HALF SECTION B-B

Note: Intermediate Strands not shown.

* Adjust outermost spacing to suit "W", i.e.: Spacing (ft.) = ½(W-6).

NOTE: For dimensions "A", "L", "W", "X" & "Y", and Strand Patterns, see FDT30 Table of Variables & Strand Patterns Sheet.

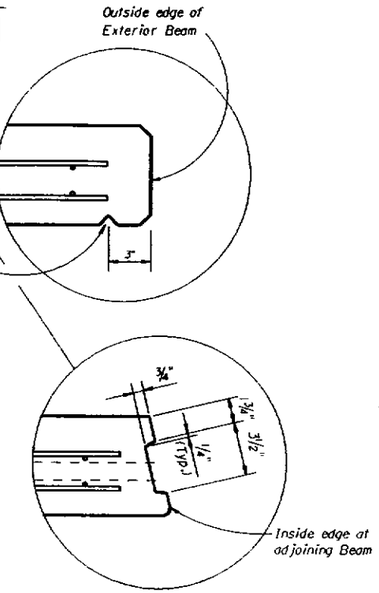

** Blockout concrete to accept C. I. P. Diaphragm. See Index 127 for orientation of the horizontal 1'-0" dimension.

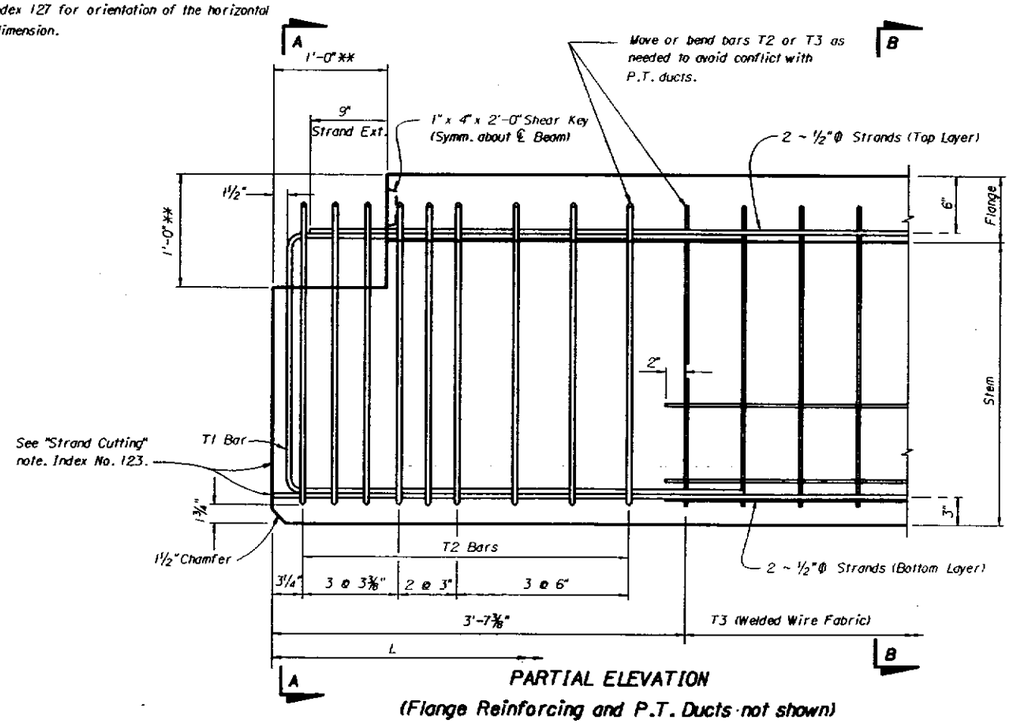

PARTIAL ELEVATION

(Flange Reinforcing and P.T. Ducts not shown)

(Intermediate Strands not shown)

BENDING DIAGRAM

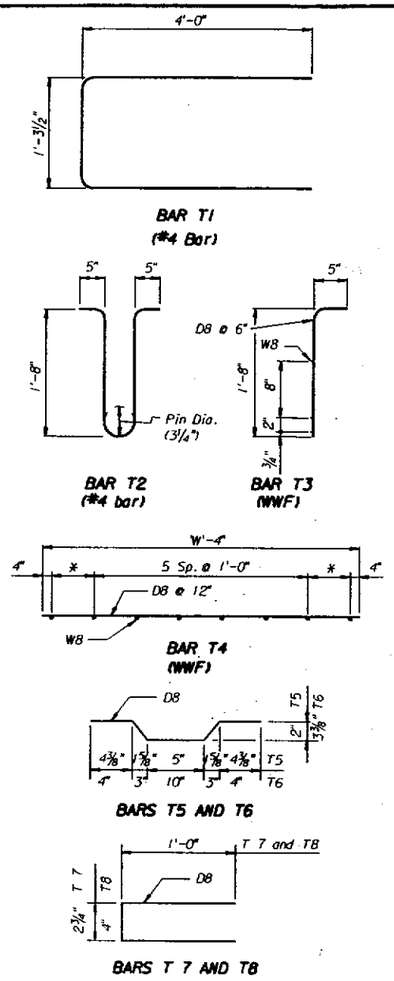

NOTES:

All bar bends shall be made with a 2" diameter pin unless otherwise noted.
Refer to General Notes for epoxy steel requirements.

The Welded Wire Fabric (T4) shall consist of eight (8) longitudinal W8 wires welded to transverse D8 wires spaced at twelve (12) inches. The W8 wires shall be spaced as shown above and their length, in the finished beam, shall be equal to the length of the precast flange plus one (1) foot. Sufficient material to include splices shall be provided. Splices, if needed, shall be 14" Minimum.

The longitudinal W8 wires for the welded wire fabric (T3) do not require splicing.

W8 wires shall comform to ASTM A185.
D8 wires shall conform to ASTM A497.

Six (6) Bars 'T6' and two (2) Bars 'T8' are required at each P/T anchorage location.
Three (3) Bars 'T5' and two (2) Bars 'T 7' are required at each P/T duct location where the tendon's path deviates from a straight course.

Four (4) Bars 'T1' are required per Beam.
Thirty-six (36) Bars 'T2' are required per Beam.

REVISIONS					
Date	By	Description	Date	By	Description
			92R		

	Names	Dates
Drawn by	DCP	6-90
Checked by	AJG	6-90
Designed by	TJB	6-90
Checked by	AJG	6-90
Approved by	AJG	

ENGINEER OF RECORD:
STRUCTURES DESIGN OFFICE
CENTRAL OFFICE
605 Suwannee Street, MS 33
Tallahassee, Florida 32399-0450

LOGO:

SEAL:

FLORIDA DEPARTMENT OF TRANSPORTATION
STRUCTURES DESIGN OFFICE

ROAD NO.	COUNTY	PROJECT NO.

SHEET TITLE: FDT 30 TYPICAL SECTION

PROJECT NAME:

Drawing No. 1 of 1

Index No. 126

STR:(120,230)126.DGN

Mon Nov 9 11:53:53 1992

FED. ROAD DIV. NO.	STATE	PROJECT NO.	FISCAL YEAR	SHEET NO.
3	FLA.			

NOTE: For variable dimensions, angles, & numbers, see "Table of Variables and Strand Patterns" Sheet.

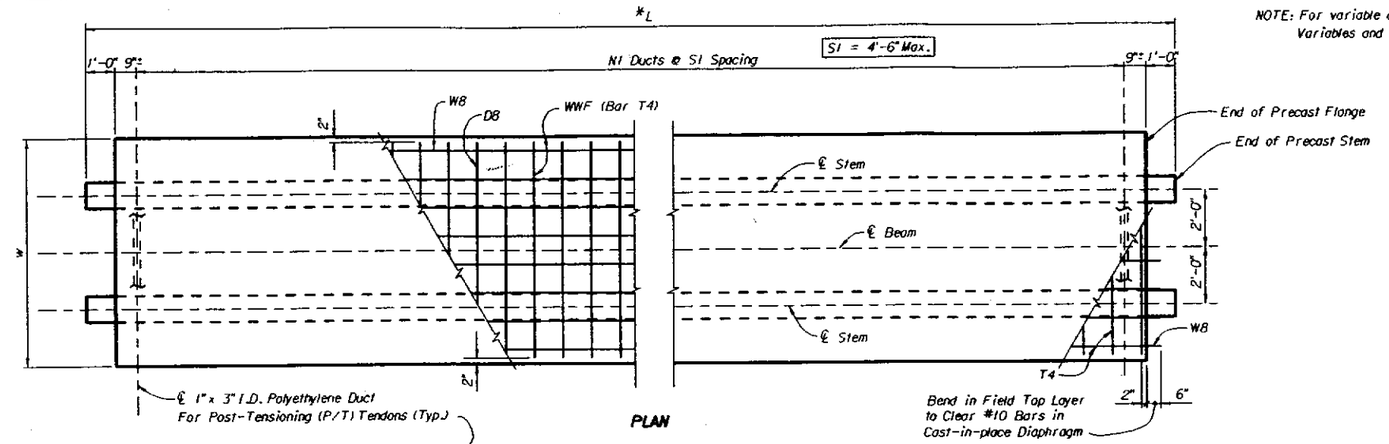

PLAN

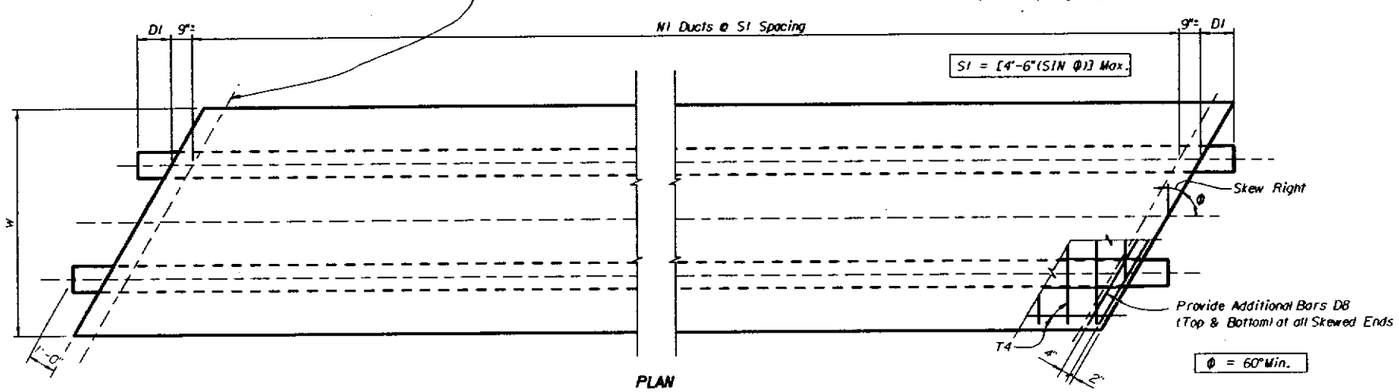

PLAN

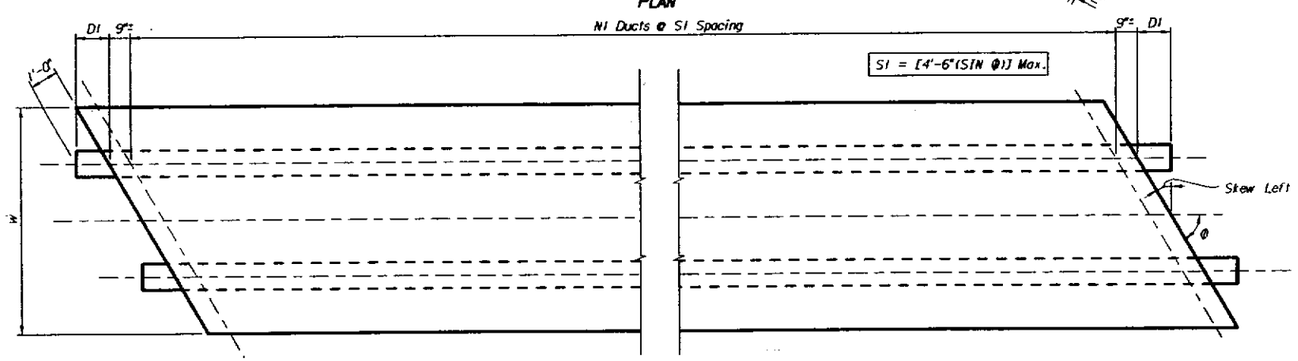

PLAN

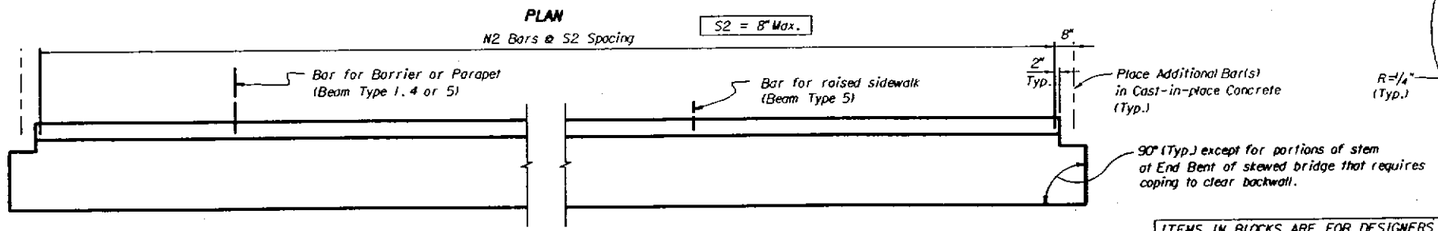

ELEVATION
(Bar data applies at Exterior Beam)

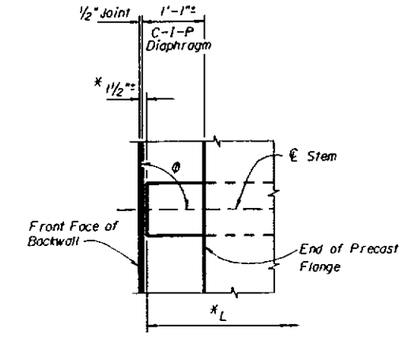

STRAIGHT CROSSING

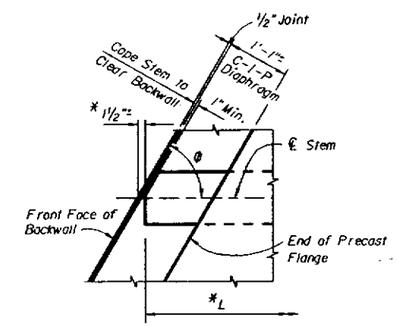

SKEWED CROSSING

PART PLAN AT END BENT

*Dimension applies along bottom of Stem.
L = (Front Face to Front Face of Backwall) - 3"
L = (Front Face of Backwall to ℄ Int. Bent) - 3"
L = (℄ to ℄ Intermediate Bent) - 3"

** ℄ Joint may not coincide with ℄ Bent.

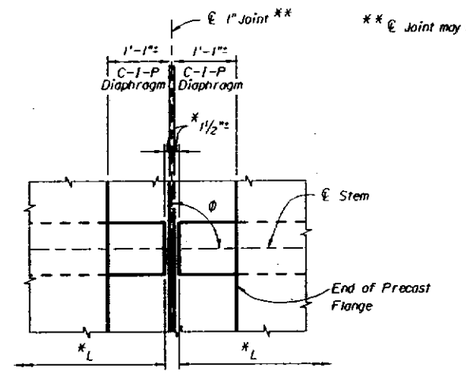

STRAIGHT CROSSING

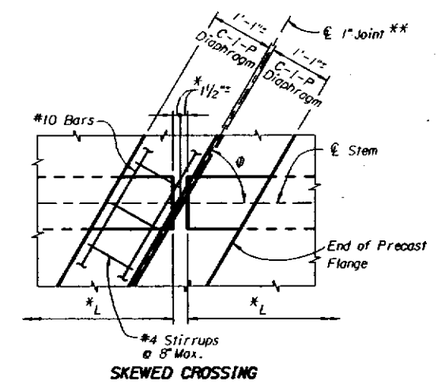

SKEWED CROSSING

PART PLAN AT INTERMEDIATE BENT

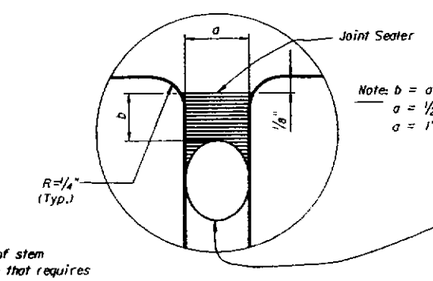

DETAIL A

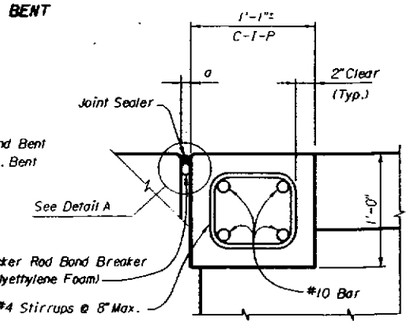

SECTION THRU C-I-P DIAPHRAGM
(Reinforcement in Precast Beam not shown)

ITEMS IN BLOCKS ARE FOR DESIGNERS INFORMATION

Include Quantities in Plans Prepared by Designer.

REVISIONS					
Date	By	Description	Date	By	Description
			92R		

	Names	Dates
Drawn by	DCP	6-90
Checked by	AJG	6-90
Designed by	TJB	6-90
Checked by	AJG	6-90
Approved by	AJG	

ENGINEER OF RECORD:
STRUCTURES DESIGN OFFICE
CENTRAL OFFICE
605 Suwannee Street, MS 33
Tallahassee, Florida 32399-0450

LOGO:

SEAL:

FLORIDA DEPARTMENT OF TRANSPORTATION
STRUCTURES DESIGN OFFICE

ROAD NO.	COUNTY	PROJECT NO.

SHEET TITLE: FLORIDA DOUBLE-TEE PLAN, JOINT AND DIAPHRAGM

PROJECT NAME:

Drawing No. 1 of 1

Index No. 127

Mon Nov 9 11:56:16 1992 ST:L120.230127.DGN

FED. ROAD DIV. NO.	STATE	PROJECT NO.	FISCAL YEAR	SHEET NO.
3	FLA.			

TABLE OF VARIABLES

SPAN NO.	BEAM TYPE	NO. OF BEAMS	Φ	DIMENSIONS						POST-TENSIONING DUCT DATA		CONCRETE DATA (PSI)		* REINF. STEEL DATA		STRAND PATTERN		
																CASE	TYPE **	
				A	D1	L	W	X	Y	N1	S1	f'c	f'c1	N2	S2		END	CENTER

* NOTE: Reinf. Steel Data refers to reinforcement for superimposed cast-in-place elements such as Barriers, etc.

** NOTE: Strand Pattern Type at "End" applies at the extreme end of the beam. The pattern at the "Center" applies between hold down points.

NOTE: All strands shall be ½" Φ Low Relaxation Strands conforming to ASTM A416, Grade 270. Dimension "L" applies along bottom of Stem. This dimension requires no correction for elastic and time-dependent shortening effects; however, at End Bents of skewed bridges the stem end may require coping to clear backwall. See Index 127.

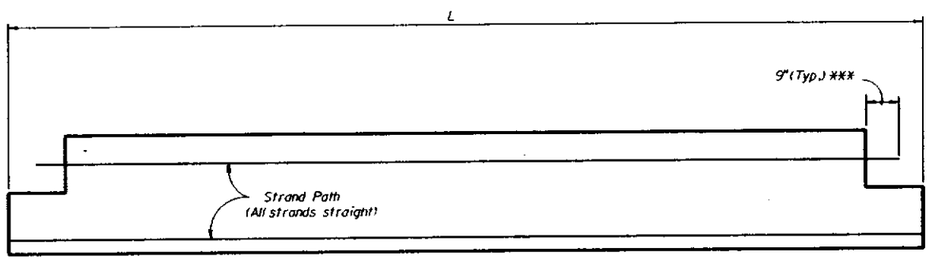

*** Strands terminating within Diaphragm blockout

CASE 1

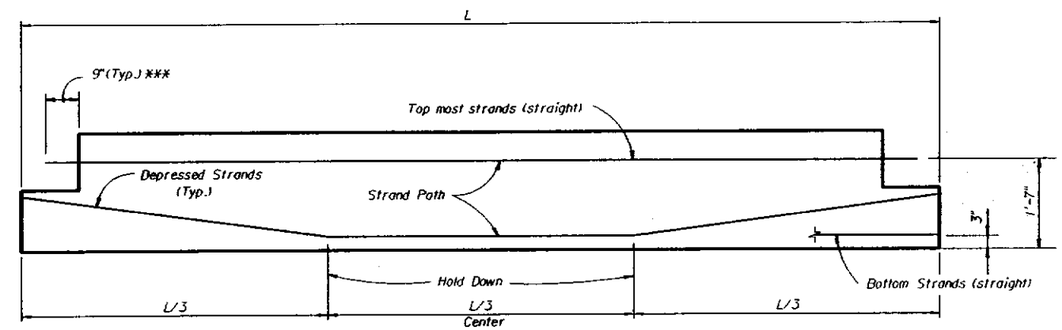

CASE 2

STRAND PATTERN CASE
(Side Elevation)

Note to Designer: Show all strands and dimensions within stem, and total number of strands within circle. Also, erase all strand locations (+'s) not used, and this note after completing this drawing.

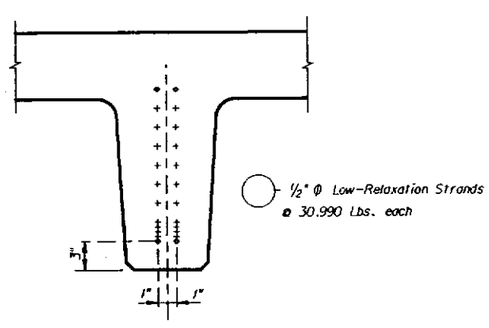

TYPE 1

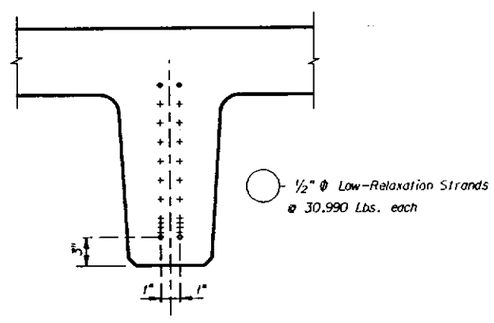

TYPE 2

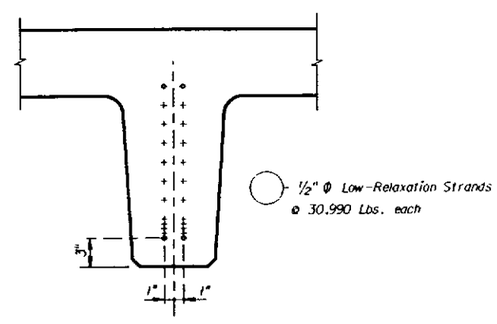

TYPE 3

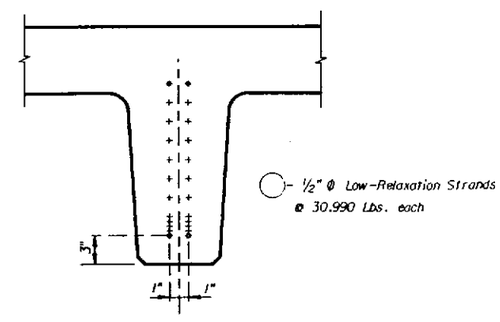

TYPE 4

STRAND PATTERN TYPE

REVISIONS					
Date	By	Description	Date	By	Description
			92R		

	Names	Dates
Drawn by		
Checked by		
Designed by		
Checked by		
Approved by		

ENGINEER OF RECORD:

LOGO:

SEAL:

FLORIDA DEPARTMENT OF TRANSPORTATION
STRUCTURES DESIGN OFFICE

ROAD NO.	COUNTY	PROJECT NO.

SHEET TITLE: FDT18 TABLE OF VARIABLES AND STRAND PATTERNS

PROJECT NAME:

Drawing No. 1 of 1

Index No. S-128

STILL20.230TS128.DGN Mon Nov 9 14:39:14 1992

FED. ROAD DIV. NO.	STATE	PROJECT NO.	FISCAL YEAR	SHEET NO.
3	FLA.			

TABLE OF VARIABLES

SPAN NO.	BEAM TYPE	NO. OF BEAMS	Ø	DIMENSIONS						POST-TENSIONING DUCT DATA		CONCRETE DATA (PSI)		* REINF. STEEL DATA		STRAND PATTERN		
																CASE	TYPE **	
				A	D1	L	W	X	Y	N1	S1	f'c	f'ci	N2	S2		END	CENTER

* NOTE: Reinf. Steel Data refers to reinforcement for superimposed cast-in-place elements such as Barriers, etc.

** NOTE: Strand Pattern Type at "End" applies at the extreme end of the beam. The pattern at the "Center" applies between hold down points.

NOTE: All strands shall be ½" Ø Low Relaxation Strands conforming to ASTM A416, Grade 270. Dimension "L" applies along bottom of Stem. This dimension requires no correction for elastic and time-dependent shortening effects; however, at End Bents of skewed bridges the stem end may require coping to clear backwall. See Index 127.

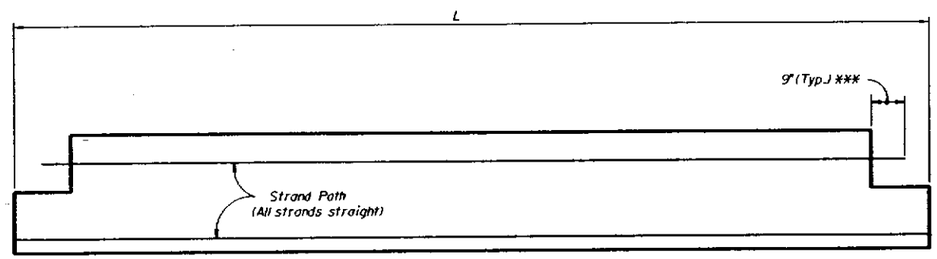

*** Strands terminating within Diaphragm blockout

CASE 1

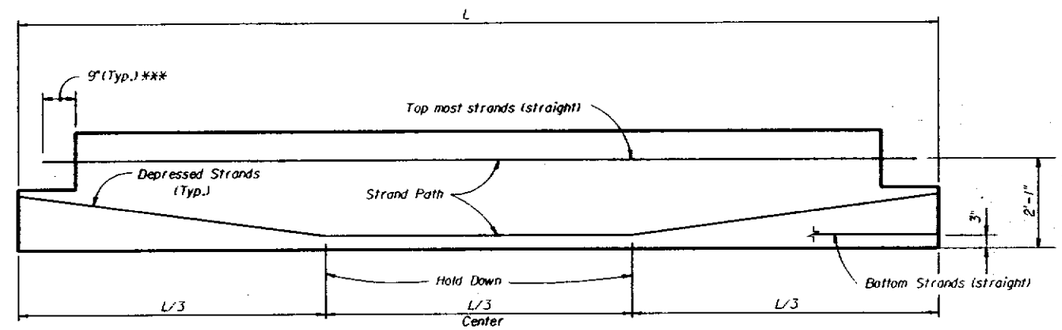

CASE 2

STRAND PATTERN CASE
(Side Elevation)

Note to Designer: Show all strands and dimensions within stem, and total number of strands within circle. Also, erase all strand locations (+'s) not used, and this note after completing this drawing.

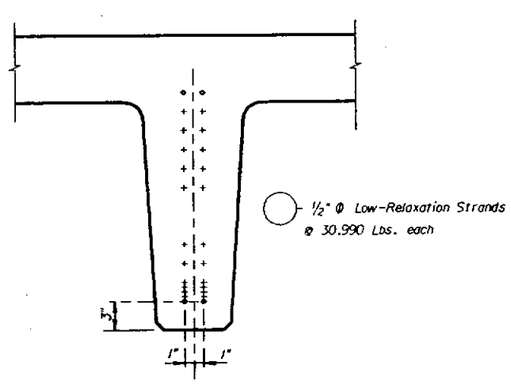

TYPE 1

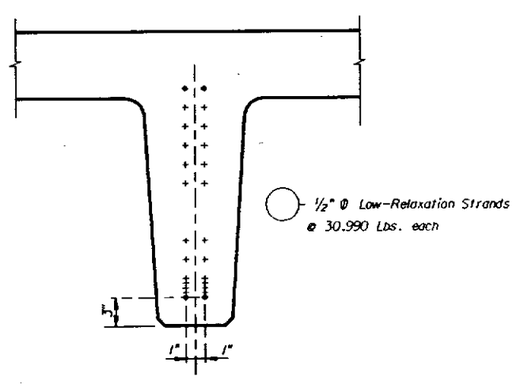

TYPE 2

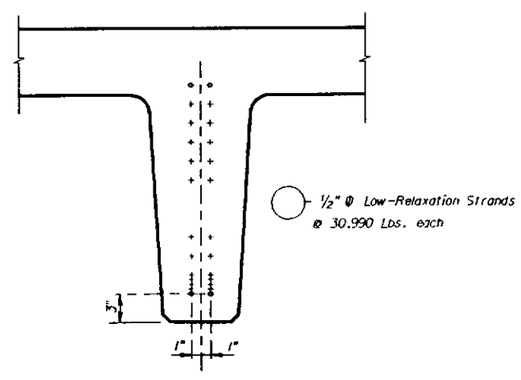

TYPE 3

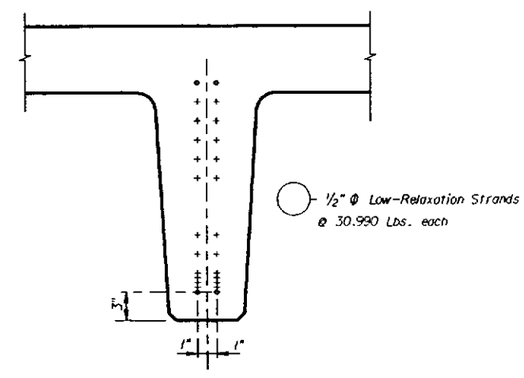

TYPE 4

STRAND PATTERN TYPE

REVISIONS					
Date	By	Description	Date	By	Description
			92R		

	Names	Dates
Drawn by		
Checked by		
Designed by		
Checked by		
Approved by		

ENGINEER OF RECORD:

LOGO:

SEAL:

FLORIDA DEPARTMENT OF TRANSPORTATION
STRUCTURES DESIGN OFFICE

ROAD NO.	COUNTY	PROJECT NO.

SHEET TITLE: FDT 24 TABLE OF VARIABLES AND STRAND PATTERNS

PROJECT NAME:

Drawing No. 1 of 1

Index No. S-129

Mon Nov 9 14:41:18 1992 ST1:(120,230)S129.DGN

FED. ROAD DIV. NO.	STATE	PROJECT NO.	FISCAL YEAR	SHEET NO.
3	FLA.			

TABLE OF VARIABLES

SPAN NO.	BEAM TYPE	NO. OF BEAMS	Ø	DIMENSIONS						POST-TENSIONING DUCT DATA		CONCRETE DATA (PSI)		* REINF. STEEL DATA		STRAND PATTERN		
																CASE	TYPE **	
				A	D1	L	W	X	Y	N1	S1	f'c	f'ci	N2	S2		END	CENTER

* NOTE: Reinf. Steel Data refers to reinforcement for superimposed cast-in-place elements such as Barriers, etc.

** NOTE: Strand Pattern Type at "End" applies at the extreme end of the beam. The pattern at the "Center" applies between hold down points.

NOTE: All strands shall be ½" Ø Low Relaxation Strands conforming to ASTM A416, Grade 270. Dimension "L" applies along bottom of Stem. This dimension requires no correction for elastic and time-dependent shortening effects; however, at End Bents of skewed bridges the stem end may require coping to clear backwall. See Index 127.

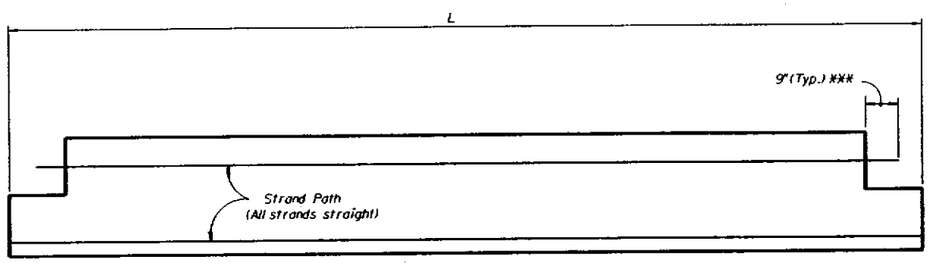

*** Strands terminating within Diaphragm blockout

CASE 1

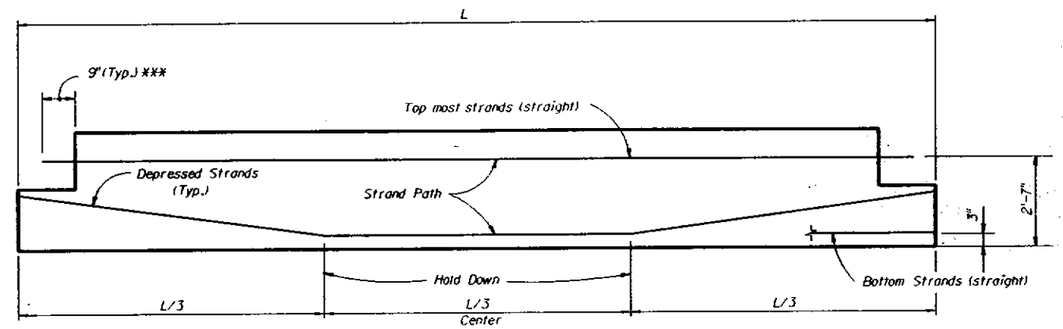

CASE 2

STRAND PATTERN CASE
(Side Elevation)

Note to Designer: Show all strands and dimensions within stem, and total number of strands within circle. Also, erase all strand locations (+'s) not used, and this note after completing this drawing.

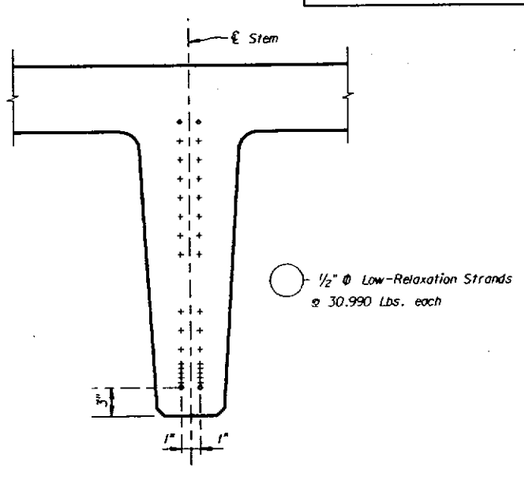

TYPE 1

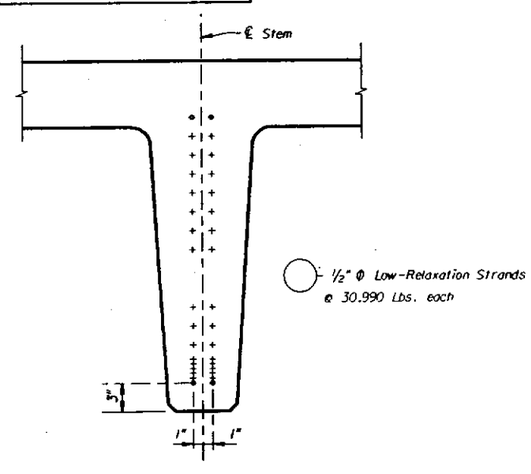

TYPE 2

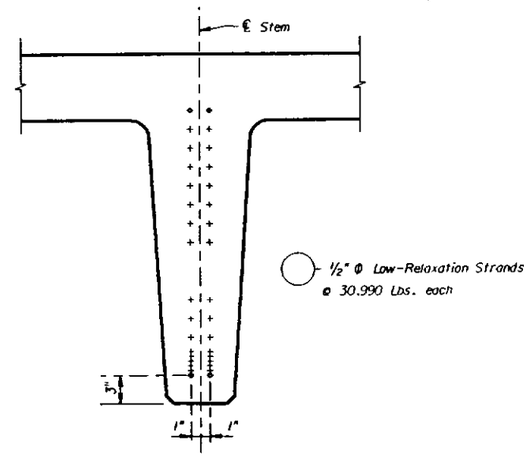

TYPE 3

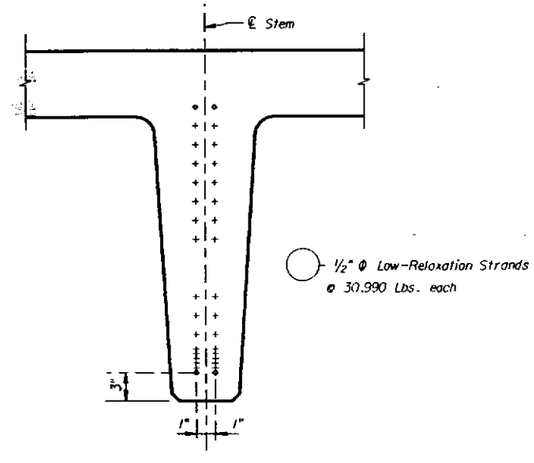

TYPE 4

STRAND PATTERN TYPE

REVISIONS					
Date	By	Description	Date	By	Description
			92R		

	Names	Dates
Drawn by		
Checked by		
Designed by		
Checked by		
Approved by		

ENGINEER OF RECORD:

LOGO:

SEAL:

FLORIDA DEPARTMENT OF TRANSPORTATION
STRUCTURES DESIGN OFFICE

ROAD NO.	COUNTY	PROJECT NO.

SHEET TITLE: FDT 30
TABLE OF VARIABLES AND STRAND PATTERNS

PROJECT NAME:

Drawing No. 1 of 1

Index No. S-130

ST14120.23035130.DGN

Mon Nov 9 14:46:49 1992

FED. ROAD DIV. NO.	STATE	PROJECT NO.	FISCAL YEAR	SHEET NO.
3	FLA.			

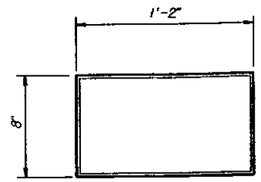

PLAN

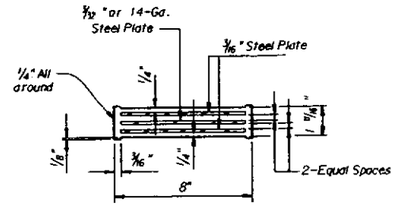

TYPICAL SECTION

COMPOSITE PAD
TYPE II

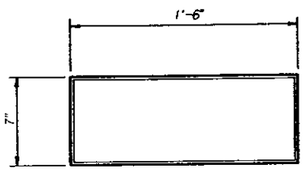

PLAN

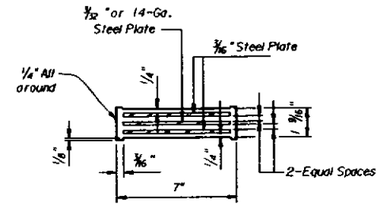

TYPICAL SECTION

COMPOSITE PAD
TYPE III

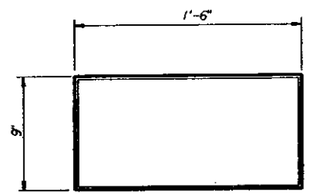

PLAN

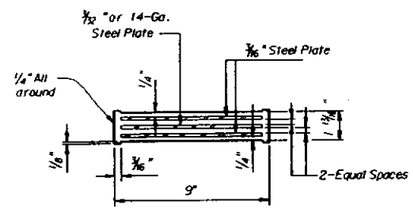

TYPICAL SECTION

COMPOSITE PAD
TYPE IV

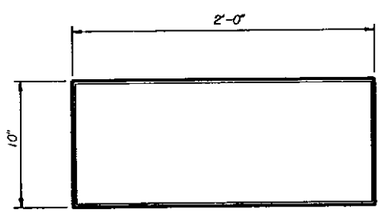

PLAN

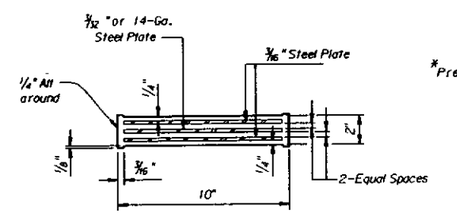

TYPICAL SECTION

COMPOSITE PAD
TYPE V

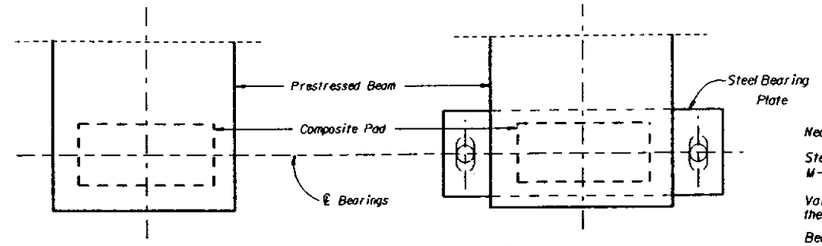

STRAIGHT BRIDGE

STRAIGHT BRIDGE
(With Bearing Pl)

PART PLAN

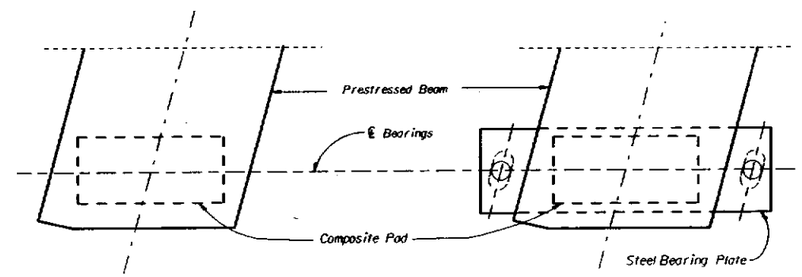

SKEWED BRIDGE

SKEWED BRIDGE
(With Bearing Pl)

PART PLAN

BEARING PAD NOTES

Neoprene in all Bearing Pads shall have a Grade 50 durometer hardness.

Steel Plates in composite pads shall conform to AASHTO Specifications M-251.

Variations in pad dimensions will be allowed provided revised pads will meet the current specifications and are approved by the Engineer.

Bearing seat shall be finished parallel to the bottom of Beam.

For Bearing Plate requirements and details, see Beam Sheets.

NOTE TO DESIGNER: Utilization of the standard composite neoprene bearing pads shown on this sheet shall be limited to applications that do not exceed the following values:

PAD TYPE	MAX. REACTION (DL + LL)	MAX. SHEAR DEFLECTION (Δ's)
II	90 Kips	0.60"
III	115 Kips	0.55"
IV	130 Kips	0.67"
V	192 Kips	0.75"

Prestressed Beam applications shall be as follows:

PAD TYPE	BEAM TYPE
II	Type II AASHTO Shape
III	Type III AASHTO Shape
IV	Type IV AASHTO Shape
V	Type V & VI AASHTO Shapes & Florida Bulb-T Shapes

NOTE: The above Maximum Reaction Limitations apply to Prestressed Concrete Beam applications. These Standard Composite Pads may also be utilized as Bearings for other types of beams such as Structural Steel Beams; however, in this event the Designer shall verify that the Design meets the requirements of the AASHTO Specifications.

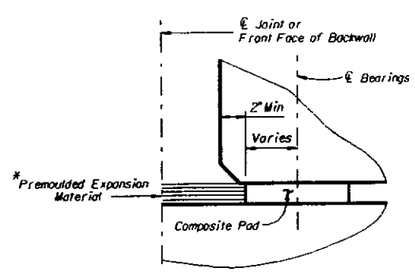

TYPICAL PAD DETAIL

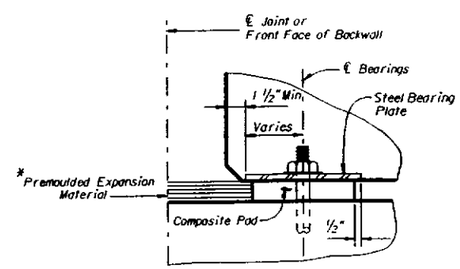

TYPICAL PAD DETAIL
(With Bearing Pl)

PART ELEVATION

* Premoulded Expansion Material is required for Cast-in-Place Beam Extension.

REVISIONS					
Date	By	Description	Date	By	Description
			92		

	Names	Dates
Drawn by	HRF	11-85
Checked by	RDS	1-86
Designed by	BR	2-89
Checked by	TJB	2-89
Approved by	AJG	

ENGINEER OF RECORD:

LOGO:

SEAL:

FLORIDA DEPARTMENT OF TRANSPORTATION
STRUCTURES DESIGN OFFICE

ROAD NO.	COUNTY	PROJECT NO.

SHEET TITLE: COMPOSITE NEOPRENE BEARING PADS

PROJECT NAME:

Drawing No. 1 of 1

Index No. 200

Mon Nov 9 12:12:15 1992 ST1K120.230120D.DGN

FED. ROAD DIV. NO.	STATE	PROJECT NO.	FISCAL YEAR	SHEET NO.
3	FLA.			

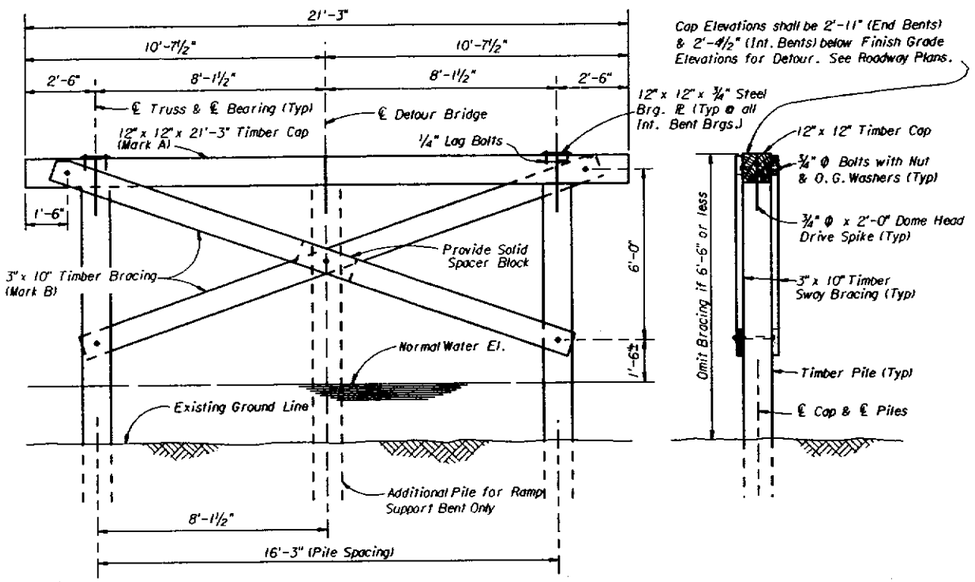

SINGLE BRIDGE

END VIEW

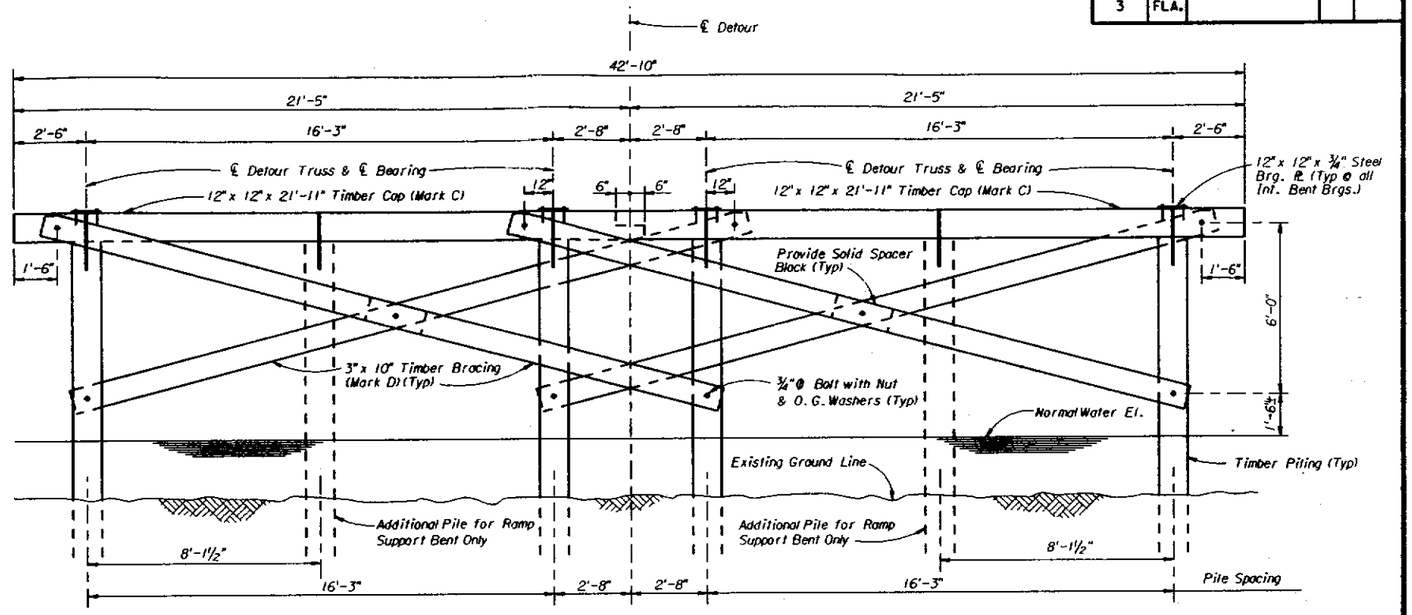

DUAL BRIDGE

NOTE: 3 Piles are required for Ramp Support Bents for Single Bridge.
6 Piles are required for Ramp Support Bents for Dual Bridge.

TIMBER PILE BENT ELEVATIONS

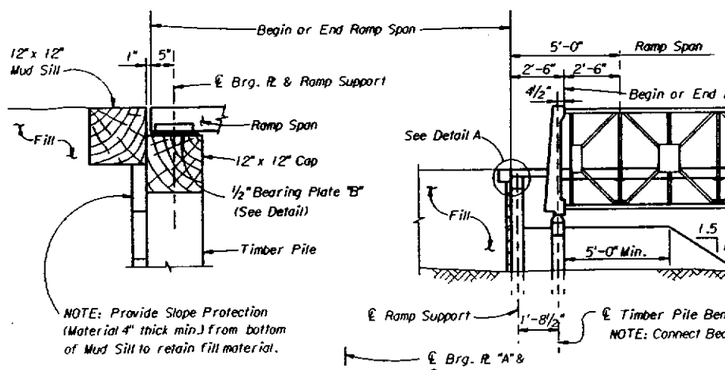

DETAIL A

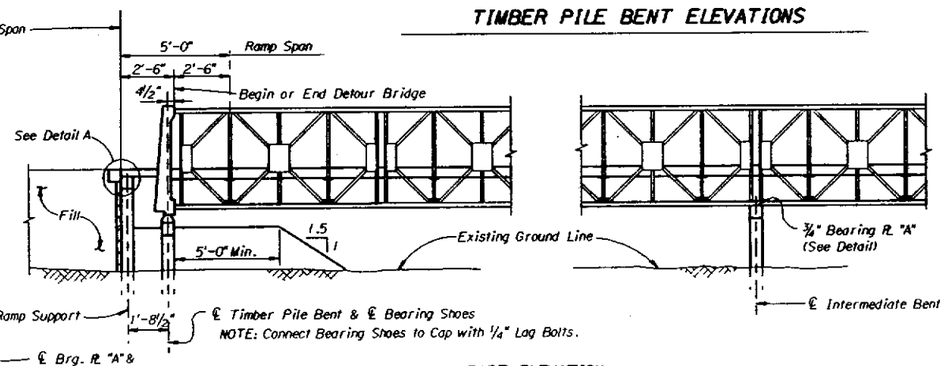

PART ELEVATION

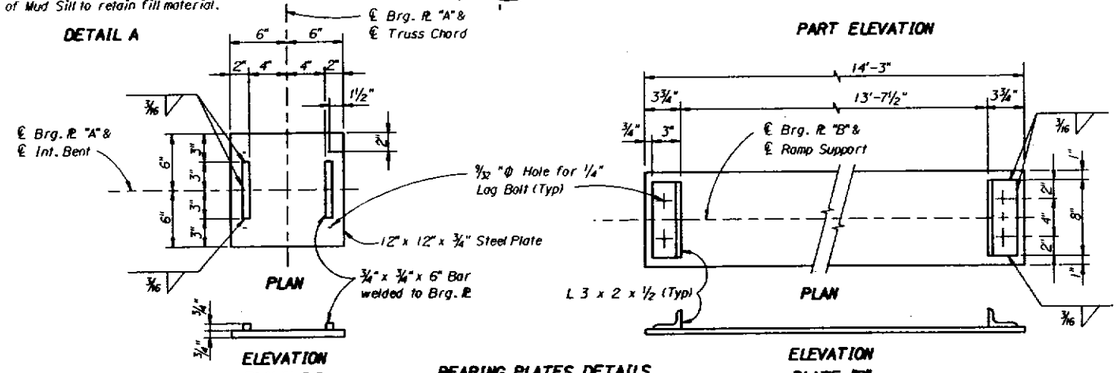

BEARING PLATES DETAILS

NOTE: Contractor shall provide all Bearing Plates ("A" & "B")

BILL OF STRUCTURAL TIMBER *

SINGLE BRIDGE							DUAL BRIDGE						
LOCATION	MARK	SIZE	LENGTH	NO. REQ'D.	F.B.M.	TOTAL F.B.M.	LOCATION	MARK	SIZE	LENGTH	NO. REQ'D.	F.B.M.	TOTAL F.B.M.
BENT WITH BRACING	A	12" x 12"	21'-3"	1	255	351	BENT WITH BRACING	C	12" x 12"	21'-11"	2	526	768
	B	3" x 10"	19'-3"	2	96			D	3" x 10"	24'-3"	4	242	
BENT WITHOUT BRACING	A	12" x 12"	21'-3"	1	255	255	BENT WITHOUT BRACING	C	12" x 12"	21'-11"	2	526	526
RAMP SUPPORT	A	12" x 12"	21'-3"	1	255	255	RAMP SUPPORT	C	12" x 12"	21'-11"	2	526	526

*Bill of Structural Timber is for One Bent or One Ramp Support only.

Contractor shall also provide Mud Sill and Slope Protection Material as indicated in Detail A.

Note to Designer : This semi-standard drawing shall not be utilized if timber piling longer than 50' are required, unless authorized by the District Structures Engineer. Erase this note after completing this semi-standard drawing.

ACROW BRIDGE NOTES

DESIGN LOAD FOR PILES: 20 Tons.

LOADING: H20-44.

STRUCTURAL TIMBER: Timber Piles & Structural Timber may be treated or untreated at the option of the Contractor.

SPAN LENGTH: 30'-0" maximum.

PAYMENT: See Roadway Plans for payment of Detour.

ERECTION: The Contractor shall erect the Detour Bridge in accordance with the Specifications, these plans, and the Acrow Panel Bridge Technical Handbook.

AVAILABILITY: Acrow Panel Bridge components will be available at the Orlando D. O. T. Structural Aluminum Shop. Steel grid bridge flooring will be furnished.

REVISIONS					
Date	By	Description	Date	By	Description
			92R		

	Names	Dates
Drawn by		
Checked by		
Designed by		
Checked by		
Approved by		

ENGINEER OF RECORD:

LOGO:

SEAL:

FLORIDA DEPARTMENT OF TRANSPORTATION
STRUCTURES DESIGN OFFICE

ROAD NO.	COUNTY	PROJECT NO.

SHEET TITLE: TIMBER BENTS FOR ACROW BRIDGE ONE & TWO LANE SINGLE SINGLE EXTRA WIDE

PROJECT NAME:

Drawing No. 1 of 1

Index No. S-300

Mon Nov 9 14:54:49 1992 STI:L120.23015300.DGN

FED. ROAD DIV. NO.	STATE	PROJECT NO.	FISCAL YEAR	SHEET NO.
3	FLA.			

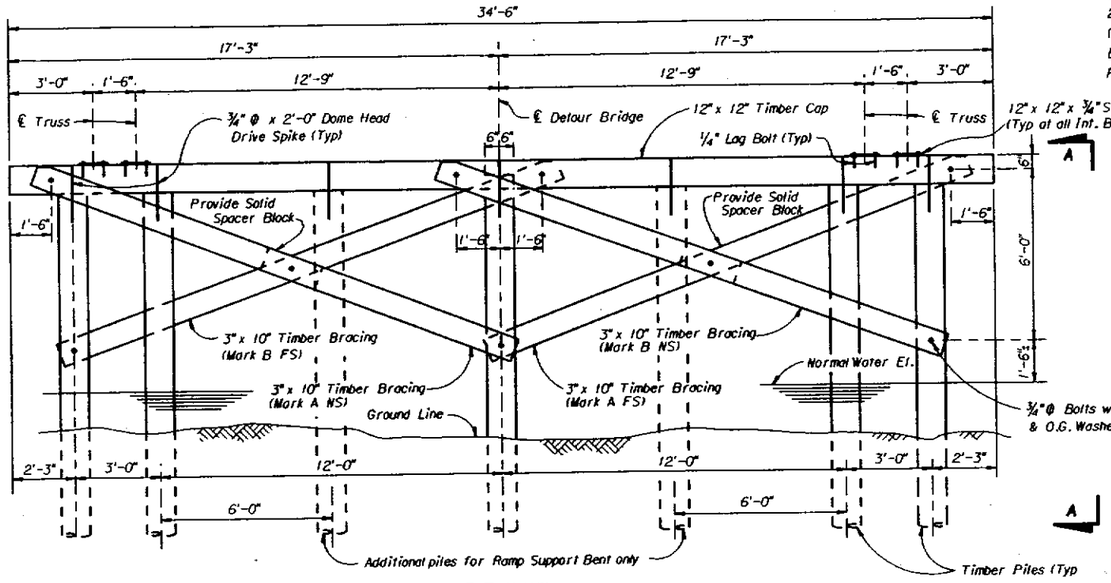

ELEVATION (TIMBER PILE BENT)

Cap elevations are approximately 2'-8⅞" (at End Bents) and 2'-4½" (at Int. Bent) below Finish Grade Elevations of detour bridge. See Roadway plans.

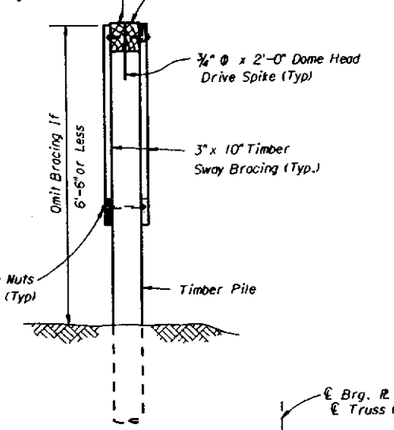

VIEW A-A

BILL OF STRUCTURAL TIMBER *

ITEM	SIZE	LENGTH	NO. REQ'D. RAMP SUP.	NO. REQ'D. END BENT	NO. REQ'D. INT. BENT	F.B.M. RAMP SUP.	F.B.M. END BENT	F.B.M. INT. BENT	CUTTING DIMENSIONS
Cap	12" x 12"	17'-9"	4	2	2	852	426	426	16'-9" (12" x 12")
Mark A * *	3" x 10"	18'-0"	—	—	2	—	—	90	18'-0" Field cut as required (10")
Mark B * *	3" x 10"	18'-6"	—	—	2	—	—	93	18'-6" Field cut as required (10")
Mark C	4" x 8"	18'-0"	12	—	—	576	—	—	18'-0" (8")
Spacer Blocks * *	10" x 12"	2'-0"	—	—	2	—	—	40	2'-0" (12")
				TOTAL		1,428	426	649	

* Quantities shown are for one Timber Bent only.

* * No bracing required at Bents No. —

NOTE: 7 Piles are required for Ramp Support Bents.

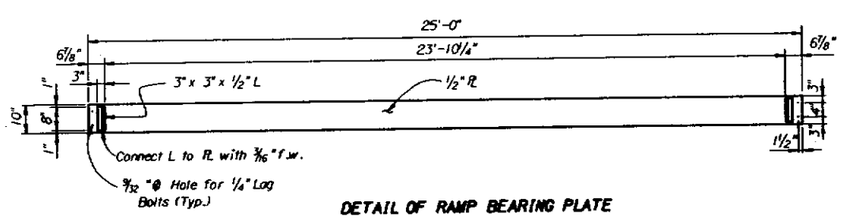

DETAIL OF RAMP BEARING PLATE

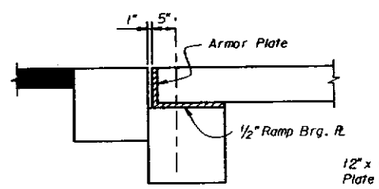

DETAIL OF END RAMP

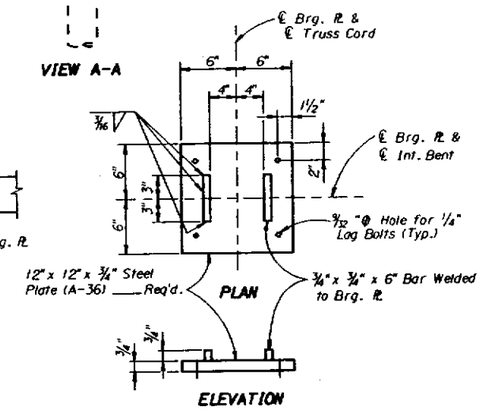

BEARING PLATE DETAIL

NOTE: Contractor shall provides all Bearing Plates.

Note to Designer : This semi-standard drawing shall not be utilized if timber piling longer than 50' are required. unless authorized by the District Structures Engineer. Erase this note after completing this semi-standard drawing.

ACROW BRIDGE NOTES

DESIGN LOAD FOR PILES: 20 Tons.

LOADING: H20-44.

STRUCTURAL TIMBER: Timber Piles and Structural Timber may be Treated or Untreated at the option of the Contractor.

SPAN LENGTH: 30'-0" maximum.

PAYMENT: See Roadway Plans for Payment of Detour Bridge.

ERECTION: The Contractor shall erect the Detour Bridge in accordance with the Specifications. these plans and the Acrow Panel Bridge Technical Handbook.

AVAILABILITY: Acrow Panel Bridge components will be available at the Orlando D.O.T. Structural Aluminum Shop. Steel Grid Bridge Flooring will be furnished.

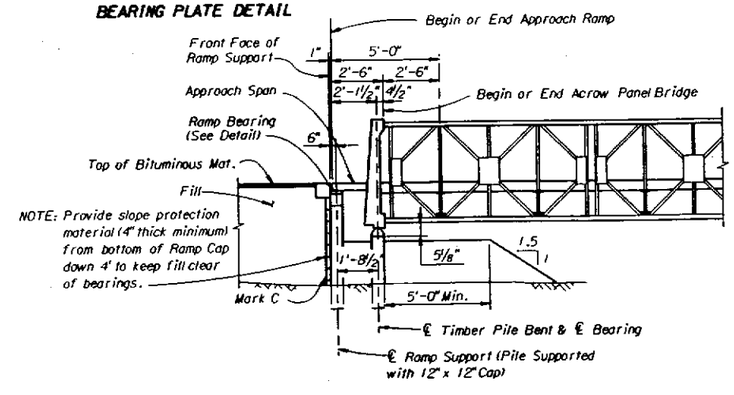

DETAIL AT BEGIN OR END BRIDGE

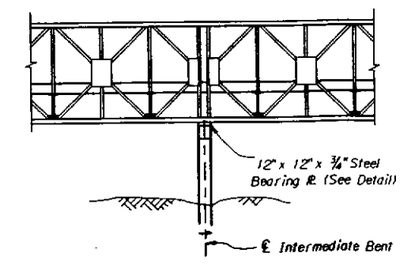

DETAIL AT INTERMEDIATE SUPPORT

REVISIONS					
Date	By	Description	Date	By	Description
			92R		

	Names	Dates
Drawn by		
Checked by		
Designed by		
Checked by		
Approved by		

ENGINEER OF RECORD:

LOGO:

SEAL:

FLORIDA DEPARTMENT OF TRANSPORTATION
STRUCTURES DESIGN OFFICE

ROAD NO.	COUNTY	PROJECT NO.

SHEET TITLE: TIMBER BENTS FOR ACROW BRIDGE TWO LANE DOUBLE SINGLE DOUBLE WIDE

PROJECT NAME:

Drawing No. 1 of 1

Index No. S-301

Mon Nov 9 14:56:03 1992 STI:(120,23015301.DGN

FED. ROAD DIV. NO.	STATE	PROJECT NO.	FISCAL YEAR	SHEET NO.
3	FLA.			

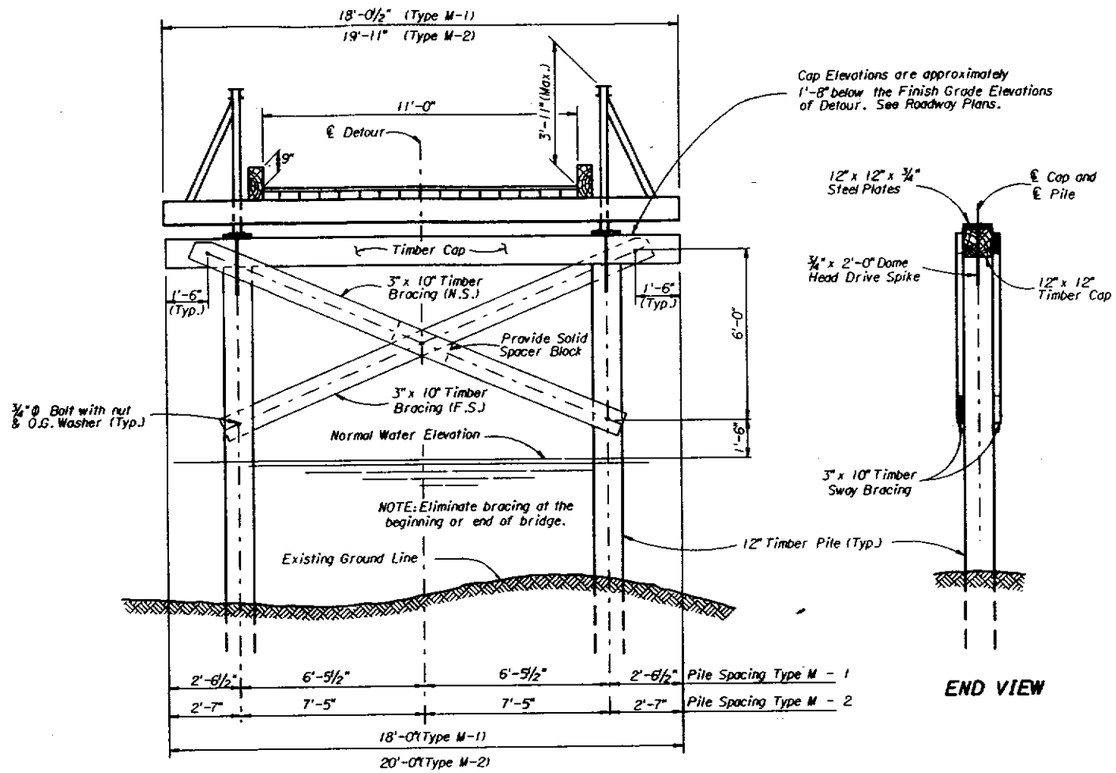

Typical Section

END VIEW

LIST OF STRUCTURAL TIMBER

ITEM	SIZE	LENGTH M-1	LENGTH M-2	No. REQ'D	F.B.M. M-1	F.B.M. M-2	CUTTING DIAGRAMS
CAP	12" x 12"	18'-0"	20'-0"	1	216	240	LENGTH 12"
SWAY BRACING	3" x 10"	16'-0"	18'-0"	2	80	90	LENGTH Field cut as req'd. 10"
SPACER BLOCK	10" x 12"	2'-0"	2'-0"	1	20	20	2'-0" 12"
				TOTAL	316	350	

NOTE: Quantities are for one bent only.

GENERAL NOTES

DESIGN LOAD FOR PILES: 20 TONS

LOADING: HS20-44

STRUCTURAL TIMBER: Timber piles and structural timber may be treated or untreated at the option of the contractor.

SPAN LENGTH: 30'-0" Maximum

PAYMENT: See Roadway Plans for payment of detour.

ERECTION: The contractor shall erect the detour bridge in accordance with the specifications, these plans, and the "Bailey Uniflote Handbook". Steel grid bridge flooring will be furnished in lieu of Bailey Bridge flooring. Steel grid bridge flooring shall be brought into full contact with each transom and then securely fastened at each transom. The Engineer shall approve final assembly of Bailey Bridge components prior to placing traffic on the Bailey Bridge.

AVAILABILITY: Contractor shall pickup and return all Bailey Bridge components at the FDOT maintenance yard located in Defuniak Springs, Florida.

DAMAGE: Contractor shall be responsible for damage to the Bailey Bridge components which occurs while in his possession. FDOT inspection of the Bailey Bridge components for damage will be upon return of the Bailey Bridge components to the FDOT maintenance yard.

DETOUR BRIDGE TYPE: The contractor shall be responsible for contacting the District Structures Engineer prior to driving piles or purchasing timber to determine if a Type M-1 or a Type M-2 Bailey Bridge will be furnished for this project.

WIDE LOAD SIGNS: Contractor shall place wide load sign "Maximum Width Load 11'-0" at each end of the detour Bridge and at approaching intersections. Payment shall be included in the Contract Bid Price for detour. Contractor shall contact F.D.O.T. Road Use Permits Engineer in writing, informing him of the begining and ending dates the detour will be in use. This information should be addressed to: Roads Use Permits Engineer, Florida Department of Transportation, Mail Station 62, 605 Suwannee Street, Tallahassee, Florida - 32399-0450.

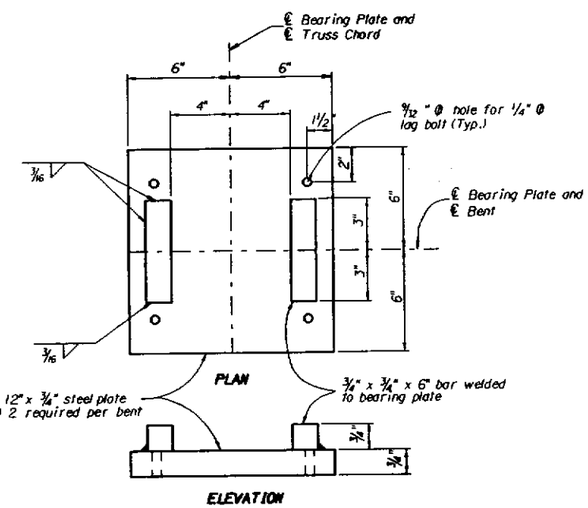

ELEVATION

BEARING PLATE DETAILS

NOTE: Contractor shall provide all Bearing Plates.

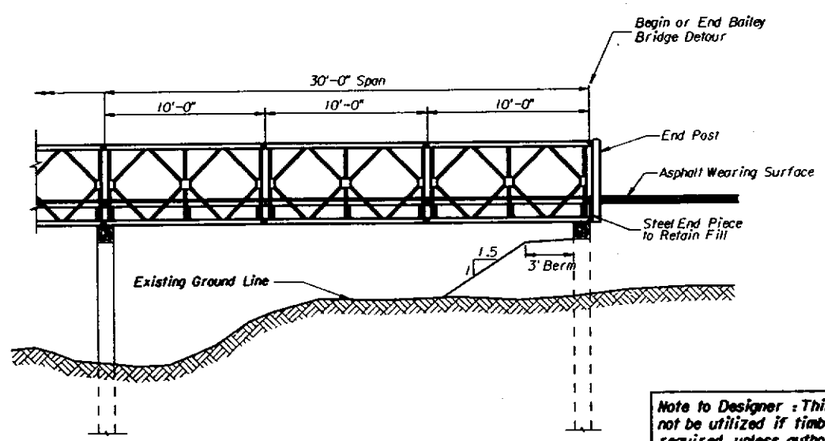

TYPICAL PROFILE VIEW

(One 30' Span)

Note to Designer : This semi-standard drawing shall not be utilized if timber piling longer than 50' are required, unless authorized by the District Structures Engineer. Erase this note after completing this semi-standard drawing.

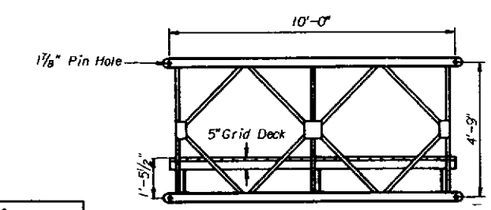

TYPICAL PROFILE VIEW

(One 10' Unit)

REVISIONS					
Date	By	Description	Date	By	Description
			92R		

	Names	Dates
Drawn by		
Checked by		
Designed by		
Checked by		
Approved by		

ENGINEER OF RECORD:

LOGO:

SEAL:

FLORIDA DEPARTMENT OF TRANSPORTATION
STRUCTURES DESIGN OFFICE

ROAD NO.	COUNTY	PROJECT NO.

SHEET TITLE: TIMBER BENTS FOR BAILEY BRIDGE ONE LANE SINGLE-SINGLE (TYPE M-1 OR M-2)

PROJECT NAME:

Drawing No. 1 of 1

Index No. S-310

Mon Nov 9 14:58:13 1992 ST14C120 230TS310.DGN

FED. ROAD DIV. NO.	STATE	PROJECT NO.	FISCAL YEAR	SHEET NO.
3	FLA.			

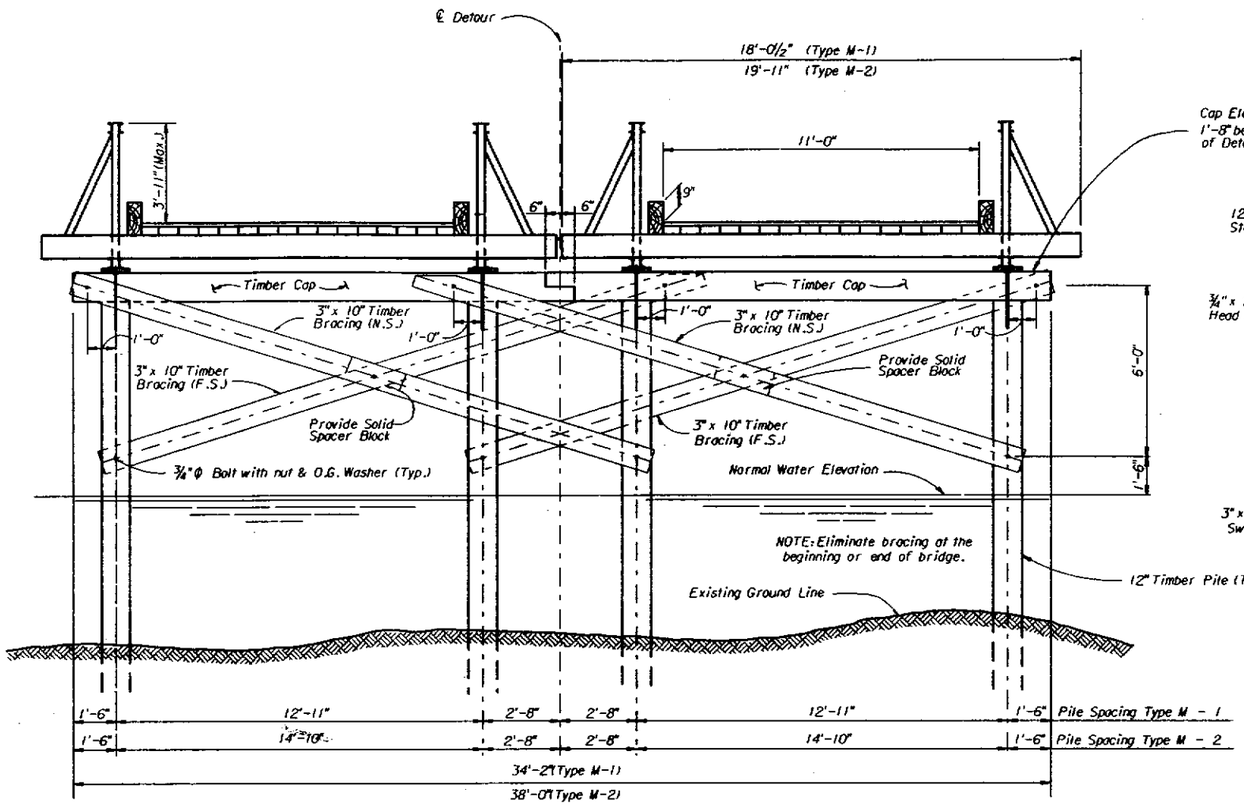

Typical Section

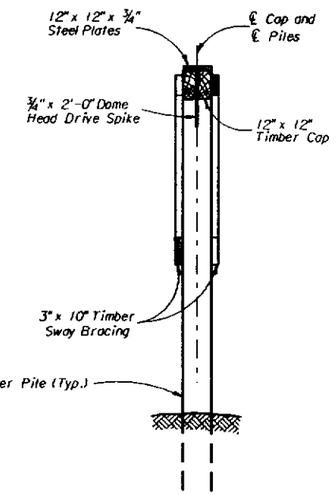

END VIEW

LIST OF STRUCTURAL TIMBER

ITEM	SIZE	LENGTH M-1	LENGTH M-2	No. REQ'D	F.B.M. M-1	F.B.M. M-2	CUTTING DIAGRAMS
CAP	12" x 12"	17'-7"	19'-6"	2	422	468	LENGTH 12" 12" 6"
SWAY BRACING	3" x 10"	22'-1"	24'-0"	4	222	240	LENGTH Field cut as req'd. 10"
SPACER BLOCK	10" x 12"	2'-0"	2'-0"	2	40	40	2'-0" 12"
				TOTAL	684	748	

NOTE: Quantities are for one bent only.

GENERAL NOTES

DESIGN LOAD FOR PILES: 20 TONS

LOADING: HS20-44

STRUCTURAL TIMBER: Timber piles and structural timber may be treated or untreated at the option of the contractor.

SPAN LENGTH: 30'-0" Maximum

PAYMENT: See Roadway Plans for payment of detour.

ERECTION: The contractor shall erect the detour bridge in accordance with the specifications, these plans, and the "Bailey Uniflote Handbook". Steel grid bridge flooring will be furnished in lieu of Bailey Bridge flooring. Steel grid bridge flooring shall be brought into full contact with each transom and then securely fastened at each transom. The Engineer shall approve final assembly of Bailey Bridge components prior to placing traffic on the Bailey Bridge.

AVAILABILITY: Contractor shall pickup and return all Bailey Bridge components at the FDOT maintenance yard located in Defuniak Springs, Florida.

DAMAGE: Contractor shall be responsible for damage to the Bailey Bridge components which occurs while in his possession. FDOT inspection of the Bailey Bridge components for damage will be upon return of the Bailey Bridge components to the FDOT maintenance yard.

DETOUR BRIDGE TYPE: The contractor shall be responsible for contacting the District Structures Engineer prior to driving piles or purchasing timber to determine if a Type M-1 or a Type M-2 Bailey Bridge will be furnished for this project.

WIDE LOAD SIGNS: Contractor shall place wide load sign "Maximum Width Load 11'-0" at each end of the detour Bridge and at approaching intersections. Payment shall be included in the Contract Bid Price for detour. Contractor shall contact F.D.O.T. Road Use Permits Engineer in writing, informing him of the begining and ending dates the detour will be in use. This information should be addressed to: Roads Use Permits Engineer, Florida Department of Transportation, Mail Station 62, 605 Suwannee Street, Tallahassee, Florida 32399-0450.

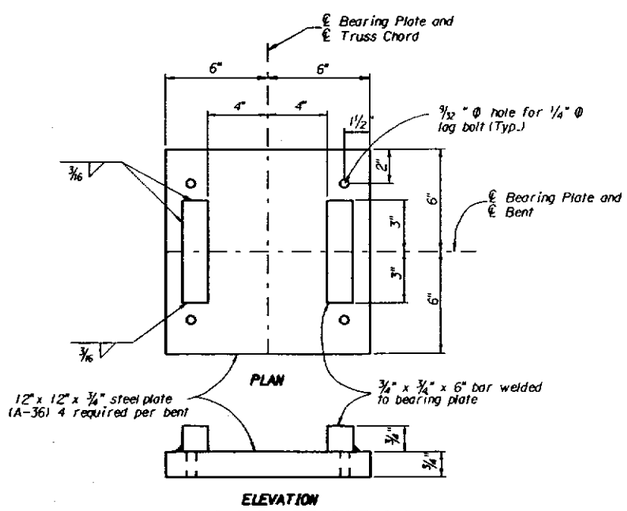

ELEVATION

BEARING PLATE DETAILS

NOTE: Contractor shall provide all Bearing Plates.

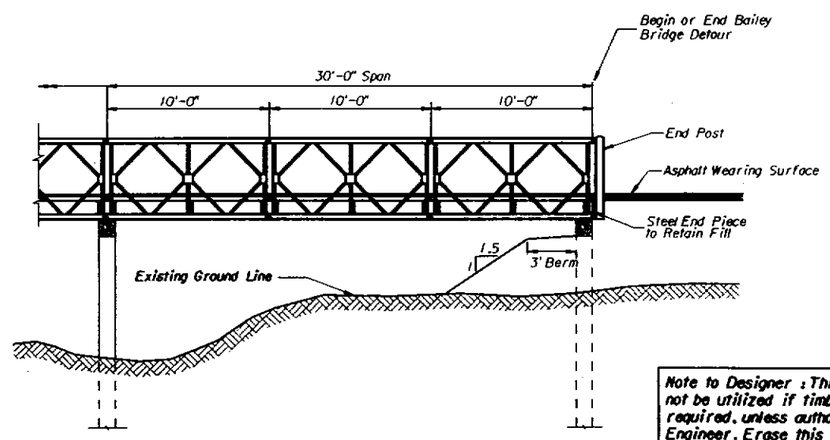

TYPICAL PROFILE VIEW

(One 30' Span)

Note to Designer: This semi-standard drawing shall not be utilized if timber piling longer than 50' are required, unless authorized by the District Structures Engineer. Erase this note after completing this semi-standard drawing.

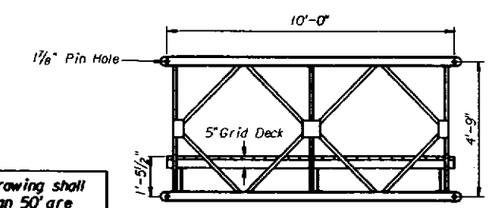

TYPICAL PROFILE VIEW

(One 10' Unit)

REVISIONS					
Date	By	Description	Date	By	Description
			92R		

	Names	Dates
Drawn by		
Checked by		
Designed by		
Checked by		
Approved by		

ENGINEER OF RECORD:

LOGO:

SEAL:

FLORIDA DEPARTMENT OF TRANSPORTATION
STRUCTURES DESIGN OFFICE

ROAD NO.	COUNTY	PROJECT NO.

SHEET TITLE: TIMBER BENTS FOR BAILEY BRIDGE TWO LANES SINGLE-SINGLE (TYPE M-1 OR M-2)

PROJECT NAME:

Drawing No. 1 of 1

Index No. S-311

Mon Nov 9 14:59:25 1992 ST14120.230153II.DGN

FED. ROAD DIV. NO.	STATE	PROJECT NO.	FISCAL YEAR	SHEET NO.
3	FLA.			

* Note: Slip Forming Method of Construction is not allowed within the shown limits.

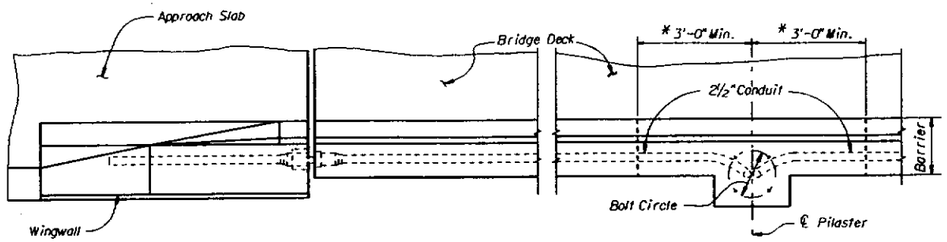

PLAN

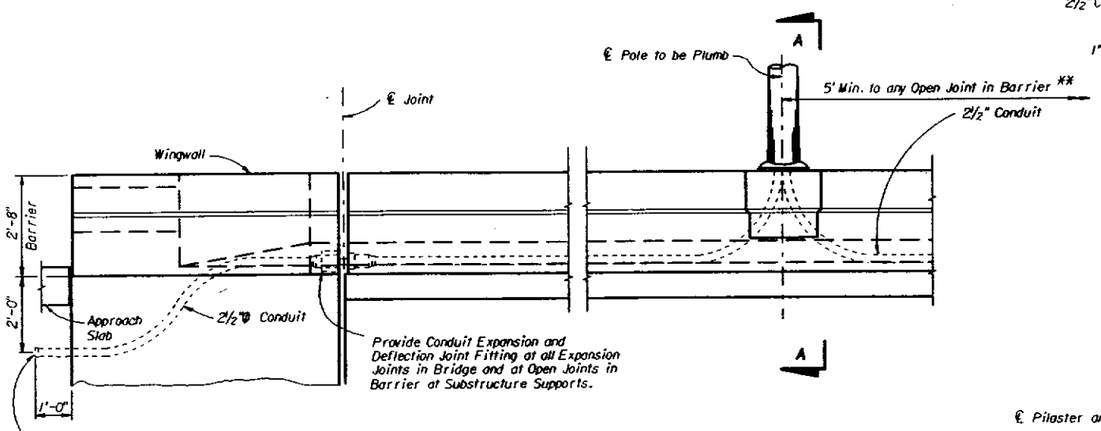

ELEVATION

** Note to Designer: Preferably the Light Standard shall be located as close as possible to a Substructure Support to minimize vibration due to Traffic.

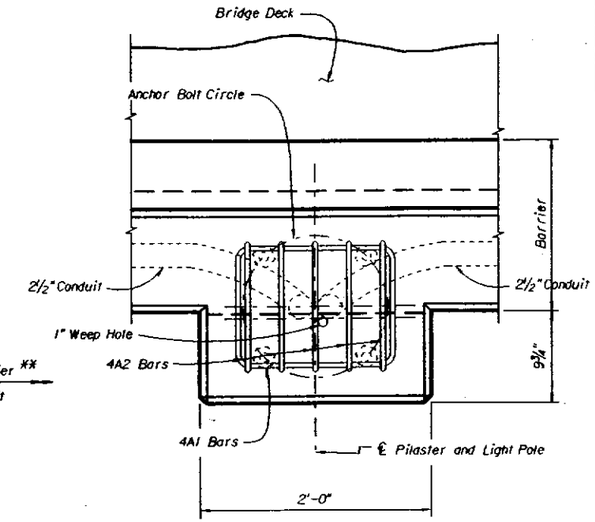

PILASTER PLAN VIEW

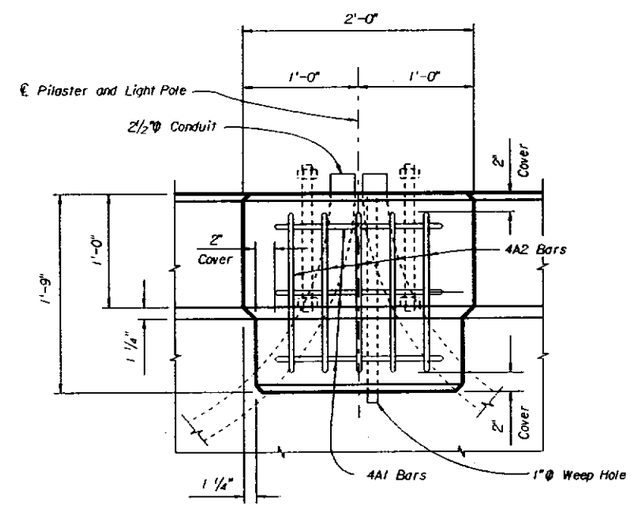

VIEW B-B

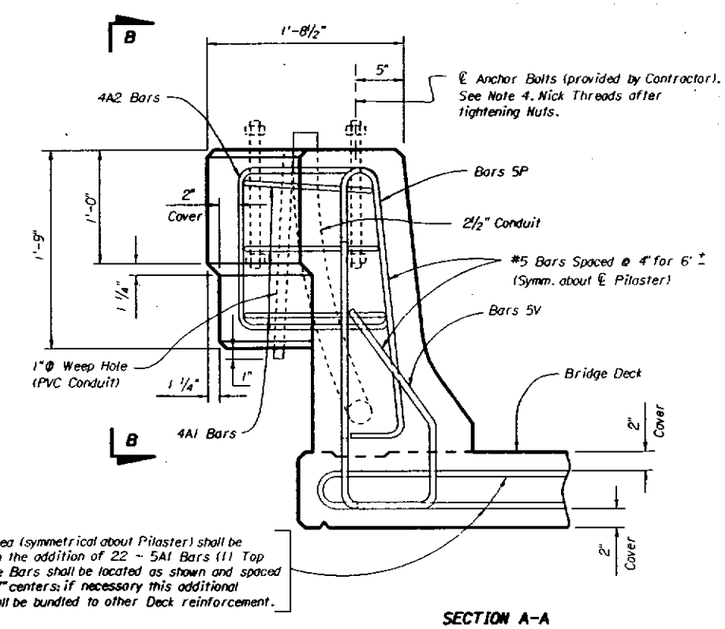

The Deck Slab area (symmetrical about Pilaster) shall be strengthened with the addition of 22 - 5A1 Bars (11 Top & 11 Bottom). The Bars shall be located as shown and spaced at Approximately 7" centers; if necessary this additional reinforcement shall be bundled to other Deck reinforcement.

SECTION A-A
(Longitudinal Reinforcement not shown)

*BILL OF REINFORCING STEEL

MARK	SIZE	NO. REQ'D	LENGTH	BENDING
4A1	4	3	6'-0"	See Diagram
4A2	4	5	6'-1"	" "
5A1	5	22	4'-7"	" "
5P	5	10 Additional		
5V	5	10 Additional		

* Quantities and Bill of Reinforcing Steel are for one Pilaster. For Details of Bar 5P and 5V. See Traffic Railing Barrier Sheet.

***QUANTITY**
Concrete Required : 0.10 C.Y.
Steel Required : 248.76 Lbs.

BAR BENDING DIAGRAMS

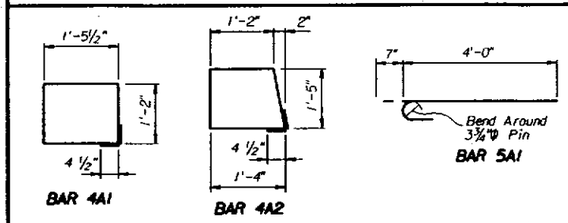

NOTES

1. Additional Concrete and Reinforcing Steel required for the Construction of the Pilaster shall meet the same requirements as that of the Traffic Railing.
2. Top of Pilaster shall be finished to a truly level area.
3. Light Pole Pilaster and adjacent Traffic Rail Barrier and Superstructure Slab area shown on this sheet, are designed to resist Working Loads (in any direction) from the Light Pole applied at the top of the Pilaster as follows:

Longitudinal Moment	=	30,000	Ft. Pounds
Transverse Moment	=	6,000	Ft. Pounds
Longitudinal Shear	=	1,000	Pounds
Transverse Shear	=	200	Pounds
Torsion	=	3,000	Ft. Pounds
Axial	=	400	Pounds

If the Light Pole provided applies Loads that are in excess of those shown above, the Contractor shall redesign the Pilaster and submit his Design to the Department for Review. The Contractor's Redesign shall be Prepared, Signed and Sealed by a Professional Engineer Registered in the State of Florida, and Qualified to perform the work.

4. The Contractor is responsible for providing Anchor Bolts that Effectively transmit the Light Pole Loads to the Pilaster and that fit the Reinforcing cage. Calculations Signed and Sealed by a Professional Engineer Registered in the State of Florida shall be submited by the Contractor to the Department for Review and Approval showing that these Requirements have been met prior to Construction.
5. All Conduits shall be Rigid Galvanized Steel or Schedule 40 P.V.C.
6. Ends of Conduits shall be sealed in accordance with Article 630-3.4.
7. The Cost of Anchor Bolts shall be included in the Bid Price for Light Poles.
8. PAYMENT: The Cost of all Labor, Concrete and Reinforcing Steel required for the Construction of the Pilasters and all Conduits, Expansion Couplings, and Miscellaneous hardware required for completion of the Electrical Installation within the limits shown on this sheet, shall be included in the Contractor's Bid Price for the Traffic Railing Barrier.

REVISIONS					
Date	By	Description	Date	By	Description
			92R		

	Names	Dates
Drawn by	DCP/JSP	3-89
Checked by	AJG	3-89
Designed by	TJB	3-89
Checked by	AJG	3-89
Approved by	AJG	

ENGINEER OF RECORD:
STRUCTURES DESIGN OFFICE
CENTRAL OFFICE
605 Suwannee Street, MS 33
Tallahassee, Florida 32399-0450

LOGO:

SEAL:

FLORIDA DEPARTMENT OF TRANSPORTATION
STRUCTURES DESIGN OFFICE

ROAD NO.	COUNTY	PROJECT NO.

SHEET TITLE: LIGHT POLE PILASTER

PROJECT NAME:

Drawing No. 1 of 1

Index No. 500

Mon Nov 9 12:29:52 1992 ST1:L20.2301500.DGN

FED. ROAD DIV. NO.	STATE	PROJECT NO.	FISCAL YEAR	SHEET NO.
3	FLA.			

NOTE: See Fender System Drawings & Control House Drawings for their actual configuration & location.

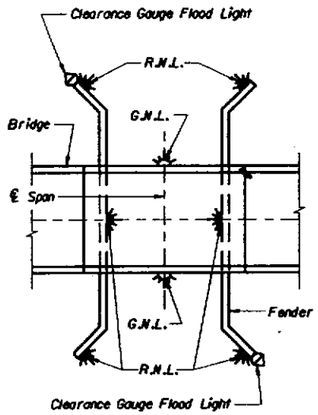

FIXED SINGLE BRIDGE NAVIGATION LIGHT SYSTEM

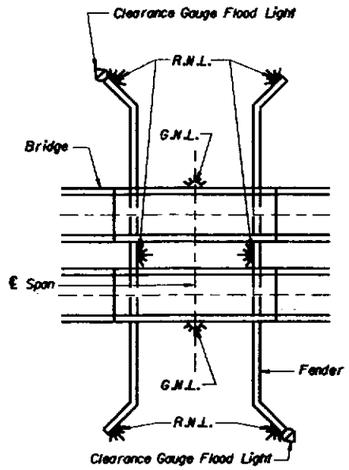

FIXED DUAL BRIDGE NAVIGATION LIGHT SYSTEM

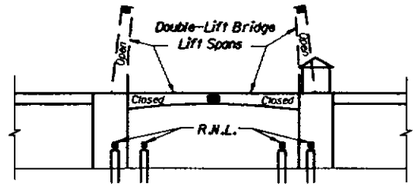

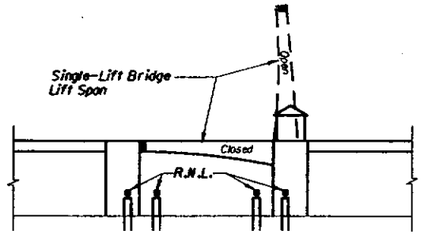

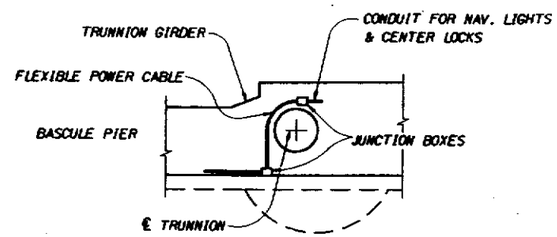

BASCULE BRIDGE FLEXIBLE CABLE ARRANGEMENT

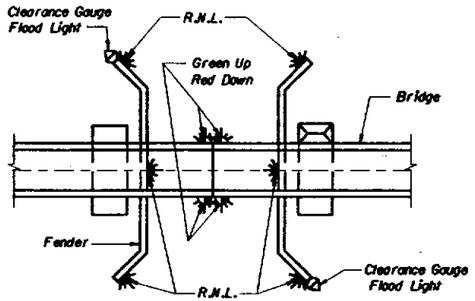

TYPICAL BASCULE BRIDGE NAVIGATION LIGHT SYSTEM DOUBLE LEAF

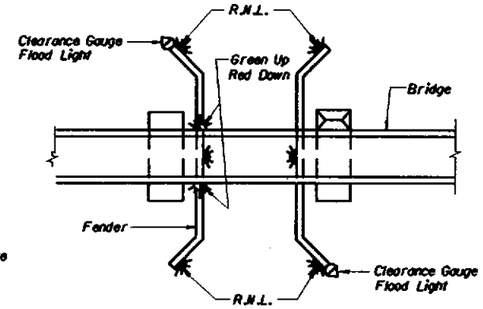

TYPICAL BASCULE BRIDGE NAVIGATION LIGHT SYSTEM SINGLE LEAF

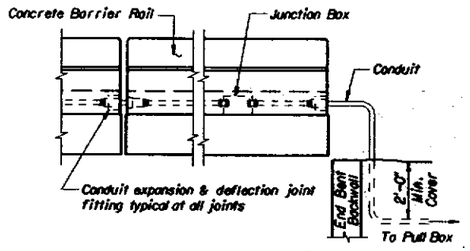

CONDUIT IN BARRIER RAIL

NOTE: The navigation light system shall have its own electrical system, independent from other lighting systems.

NOTES FOR BASCULE BRIDGES

RED NAVIGATION LIGHT: 180°. 120 volt. 60 watt. minimum 155 mm fresnel lens. vandal proof. Luminous intensity for horizontal beam 30 candela (min.). Vertical divergence at 15 CD intensity. 6° maximum. Shall be equipped with a dual lamp and transfer relay option and bulbs rated minimum 32,000 hours extended life @ 110 volts. Lantern shall be mounted on a stainless steel post including fittings with a total height of 24" above fender.

RED/GREEN CHANNEL LIGHT: Red 180° lens. Green 180° lens. 120 volt. 60 watt. minimum 155 mm fresnel lens. Luminous intensity for horizontal beam 30 candela (min.). Vertical divergence at 15 CD intensity. 6° maximum. Shall be equipped with a dual lamp and transfer relay option and bulbs rated minimum 32,000 hours extended life @ 110 volts. Equip with a pivot mount and retrieval chain so that the base can be mounted outside of bridge barrier and lantern can be serviced by reaching over the barrier from inside. Hanger stem shall be long enough so that lantern does not extend below the bottom of the girder.

CLEARANCE GAUGE LIGHT: Angle of illumination 15° to 30° depending on fixture contour. Ballast with high power factor using a 35 watt high pressure sodium lamp. Enclosure to be NEMA 3R cast aluminum housing with epoxy finish enamel. Voltage shall be 110 volts. 60 Hz.

Navigation Light system shall comply with the latest edition of the Code of Federal Regulations. Navigation and Navigable Waters. CFR 33 Part 118. Bridge Lighting and Other Signals.

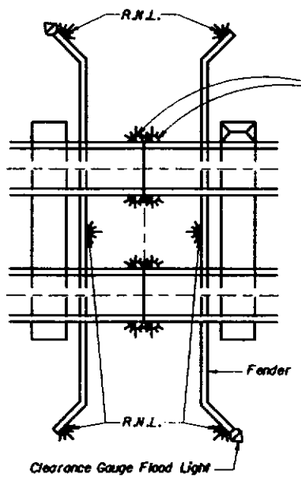

TYPICAL BASCULE BRIDGE NAVIGATION LIGHT SYSTEM DOUBLE LEAF - PARALLEL STRUCTURES

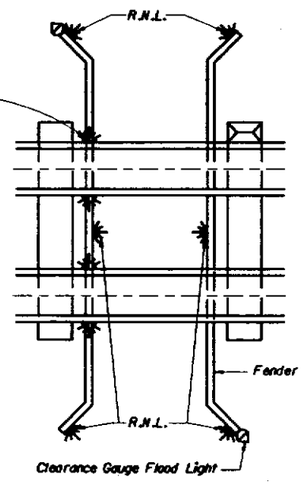

TYPICAL BASCULE BRIDGE NAVIGATION LIGHT SYSTEM SINGLE LEAF - PARALLEL STRUCTURES

REVISIONS					
Date	By	Description	Date	By	Description
			92		

	Names	Dates
Drawn by	JSP	10-92
Checked by	AFR	10-92
Designed by	—	—
Checked by	—	—
Approved by	AFR	

ENGINEER OF RECORD:

LOGO:

SEAL:

FLORIDA DEPARTMENT OF TRANSPORTATION
STRUCTURES DESIGN OFFICE

ROAD NO.	COUNTY	PROJECT NO.

SHEET TITLE: NAVIGATION LIGHT SYSTEM DETAILS

PROJECT NAME:

Drawing No. 1 of 2

Index No. 510

Mon Nov 9 12:31:17 1992 ST1-510-230510.DGN

FED. ROAD DIV. NO.	STATE	PROJECT NO.	FISCAL YEAR	SHEET NO.
3	FLA.			

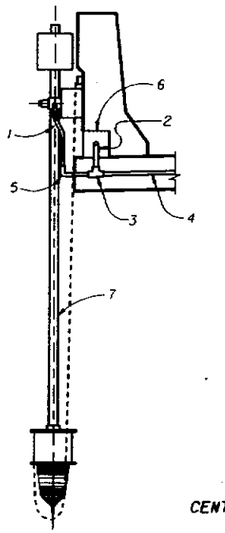

All Components Required as Shown Below

1. 3 ~ No. 12 THWN with weatherproof bushings.
2. 1" Sch. 40 PVC conduit. 6 ~ No. 12 THWN.
3. 1" Sch. 40 PVC 'T'.
4. Extend ¾" Type A PVC conduit, 2 ~ No. 12 THWNN conductors. 1 ~ No. 12 THWN ground thru embedded ¾" PVC conduit to opposite channel light.
5. Type LFT conduit (PVC).
6. 6" x 6" x 12" PVC junction box. Connect channel lights to conductor from service point. Provide 18" surplus conductors from service point. as auxiliary supply. insulate & seal ends.
7. Stainless steel 2" pipe shall extend at least 9" below lowest point on bridge superstructure.

CENTER CHANNEL MARKER NAVIGATION LIGHT FOR FIXED BRIDGES

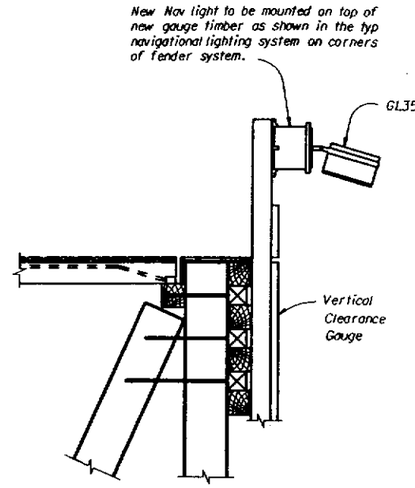

GAUGE LIGHT

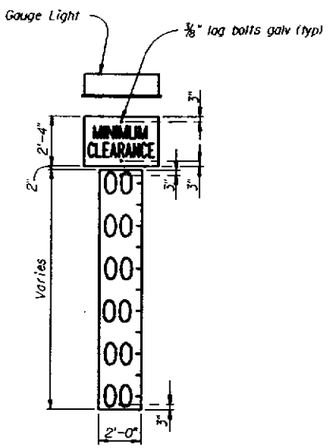

CLEARANCE GAUGE DETAILS

Numbered clearance gauge to be furnished by the Dept. of Transportation. Contractor shall verify in field that the clearance of the bridge agrees with readings of target. If not, the target will be reset.

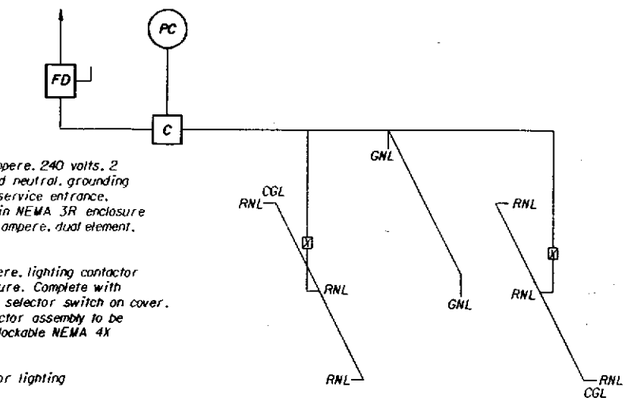

FD Heavy duty, 30 ampere, 240 volts, 2 pole, 3 wire, solid neutral, grounding kit, suitable for service entrance, fused disconnect in NEMA 3R enclosure complete with 30 ampere, dual element, time delay fuses.

C Two pole, 30 ampere, lighting contactor in NEMA 1 enclosure. Complete with HAND-OFF-AUTO selector switch on cover. The lighting contactor assembly to be installed in a padlockable NEMA 4X enclosure.

PC Photocell control for lighting contactor.

RNL Red Navigation Light

GNL Green Navigation Light

CGL Clearance Gauge Light

X Step down transformer. (Use if voltage is over 120 volts, at no time shall there be more than 120 volts on the fender.)

TYPICAL LAYOUT OF NAVIGATION LIGHTS FOR FIXED BRIDGES

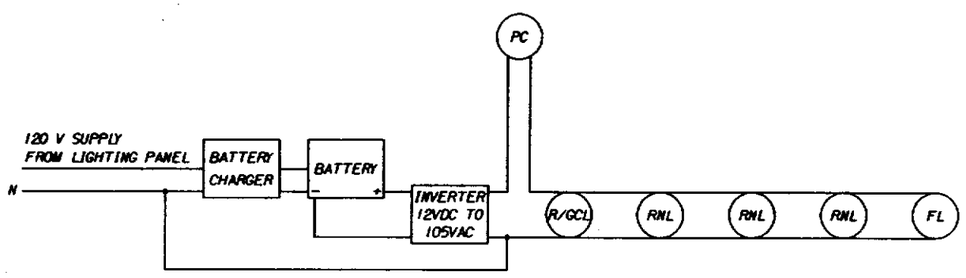

1. OUTPUT VOLTAGE SHALL BE ADJUSTABLE BETWEEN 100 & 115 VOLTS.
2. BATTERY SHALL BE SIZED FOR 12 HOURS OF FULL CONTINUOUS LOAD.
3. INVERTER SHALL BE SIZED FOR 2 TIMES THE CALCULATED LOAD.
4. BATTERY CHARGER SHALL BE RATED TO FULLY RECHARGE BATTERIES IN 12 HOURS.
5. EQUIP EACH NAV. LIGHT CIRCUIT WITH A LAMP-OUT INDICATOR.

R/GCL - RED/GREEN CHANNEL LIGHT
RNL - RED NAVIGATION LIGHT
FL - CLEARANCE GAUGE FLOODLIGHT
PC - PHOTOCELL

TYPICAL LAYOUT OF NAVIGATION LIGHTS FOR BASCULE BRIDGE

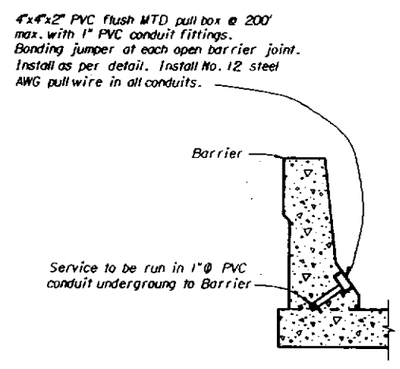

TYPICAL BARRIER INSTALLATION

NOTES FOR FIXED BRIDGES

1. Install No. 12 AWG galvanized pullwire in each conduit
2. PVC buried in concrete to exit under bridge near navigation light mount
3. All wire to be No. 12 AWG, CU, THWN or equivalent.
4. All conduits to be PVC UV treated unless otherwise noted or not permitted by local code.
5. All straps to be PVC coated steel and lag screws cadmium plated.
6. Contractor shall obtain direction from the Engineer before fastening anchors into bridge structure.
7. For runs to 500 ft distant, use No. 10 wire . From 500 to 1000 ft distant, use No. 8
8. Approved vandal proof fixture must be used

RED NAVIGATION LIGHT: 180°, 120 volt, 60 watt, minimum 155 mm fresnel lens, vandal proof. Luminous intensity for horizontal beam 30 candela (min.). Vertical divergence at 15 CD intensity, 6° maximum. Shall be equipped with a dual lamp and transfer relay option and bulbs rated minimum 32,000 hours extended life @ 110 volts. Lantern shall be mounted on a stainless steel post including fittings with a total height of 24" above fender. For bridges without fenders, fixture shall be fabricated and mounted in same manner as GREEN NAVIGATION LIGHT at equal height.

GREEN NAVIGATION LIGHT: 360°, 120 volt, 60 watt, minimum 155 mm fresnel lens. Luminous intensity for horizontal beam 30 candela (min.). Vertical divergence at 15 CD intensity, 6° maximum. Shall be equipped with a dual lamp and transfer relay option and bulbs rated minimum 32,000 hours extended life @ 110 volts. Equip with a pivot mount and retrieval chain so that the base can be mounted outside of bridge barrier and lantern can be serviced by reaching over the barrier from inside. Hanger, stem shall be long enough so that lantern can be seen from either channel direction when the lantern is in the lowered position. Lantern shall be latchable in the down position.

CLEARANCE GAUGE LIGHT: Angle of illumination 15° to 30° depending on fixture contour. Ballast with high power factor using a 35 watt high pressure sodium lamp. Enclosure to be NEMA 3R cast aluminum housing with epoxy finish enamel. Voltage shall be 110 volts, 60 Hz.

Navigation Light system shall comply with the latest edition of the Code of Federal Regulations, Navigation and Navigable Waters, CFR 33 Part 118, Bridge Lighting and Other Signals.

REVISIONS					
Date	By	Description	Date	By	Description
			92		

	Names	Dates
Drawn by	JSP	10-92
Checked by	AFR	10-92
Designed by	—	—
Checked by	—	—
Approved by	AFR	

ENGINEER OF RECORD:

LOGO:

SEAL:

FLORIDA DEPARTMENT OF TRANSPORTATION
STRUCTURES DESIGN OFFICE

ROAD NO.	COUNTY	PROJECT NO.

SHEET TITLE: NAVIGATION LIGHT SYSTEM DETAILS

PROJECT NAME:

Drawing No. 2 of 2

Index No. 510

ST:4:120:230:510.DGN

Mon Nov 9 12:34:13 1992

FED. ROAD DIV. NO.	STATE	PROJECT NO.	FISCAL YEAR	SHEET NO.
3	FLA.			

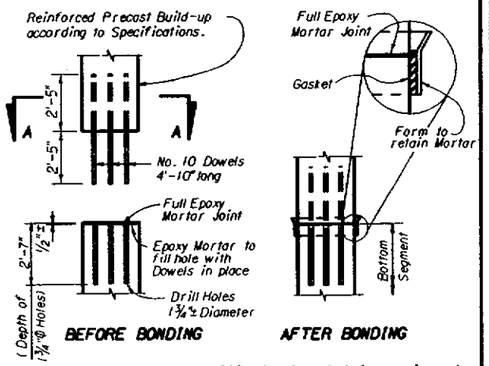

NOTE: Dowels shown for 24" Pile. See Sect. A-A for spacing and number of Dowels for each Pile.

REINFORCED PRECAST SPLICES
(Extensions 2' Min. but less than 5') (Not Drivable)

TABLE OF BONDED SPLICE DATA		
Drivable Splice	Min. Splice Length	No. 10 Dowel Length
YES	10'-0"	7'-5"
NO *	5'-0"	4'-10"

* For Splices less than 5'-0" (not Drivable), use the Reinforced Precast Splice.

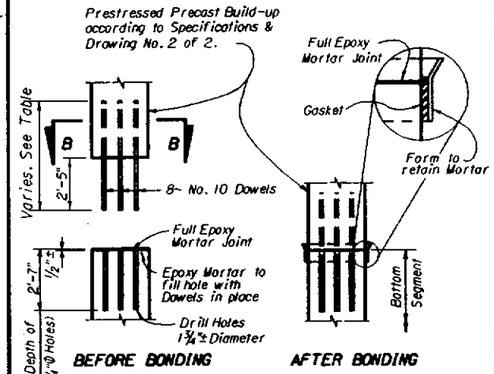

NOTE: Dowels shown for 24" Pile. See SECTION B-B for spacing & Number of Dowels for each Pile.

PRESTRESSED PRECAST SPLICES
(Extensions 5' or longer)

DETAILS FOR REINFORCED PRECAST & PRESTRESSED PRECAST PILE SPLICES

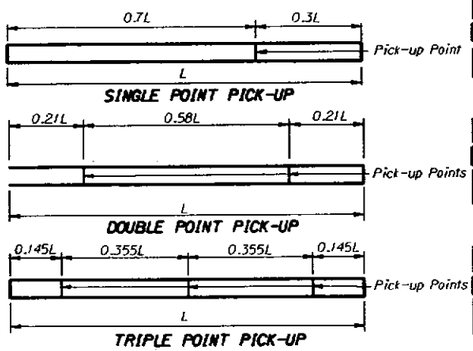

PILE PICK-UP DETAILS

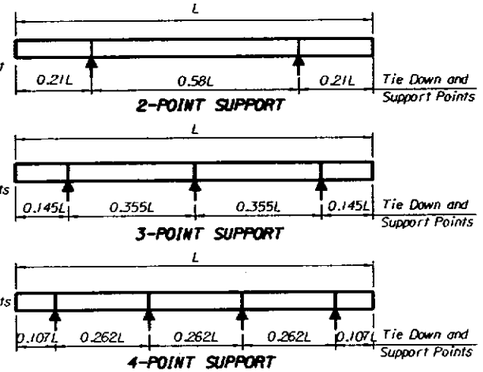

STORAGE AND TRANSPORTATION SUPPORT DETAILS

PILE SIZE	MAX. LENGTH "L" FOR PICK-UP		
	SINGLE POINT	DOUBLE POINT	TRIPLE POINT
12"	50'	70'	L > 70'
14"	55'	75'	L > 75'
18"	60'	90'	L > 90'
20"	65'	95'	L > 95'
24"	70'	100'	L > 100'
30"	90'	125'	L > 125'

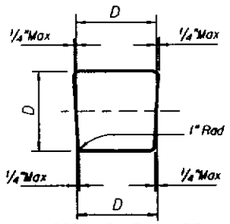

TYPICAL PILE SHAPE FOR MOLD FORMS

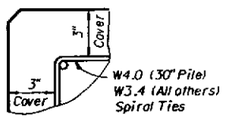

TYPICAL DETAIL SHOWING COVER DIMENSION

* For actual prestressing strand pattern, see Drawing 2 of 2.

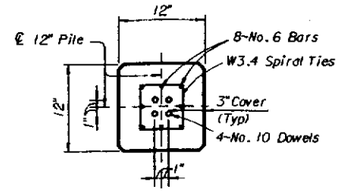

SECTION A-A
(See Reinf. Precast Splice Detail)

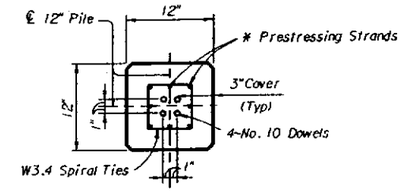

SECTION B-B
(See Prstr. Precast Splice Detail)

12" PILE

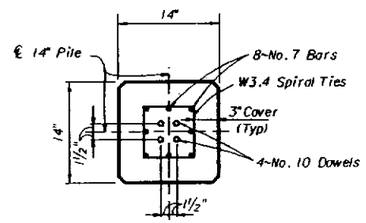

SECTION A-A
(See Reinf. Precast Splice Detail)

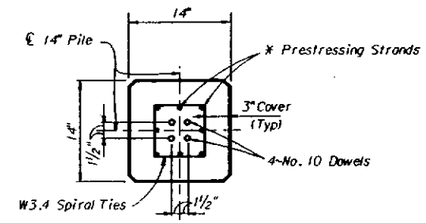

SECTION B-B
(See Prstr. Precast Splice Detail)

14" PILE

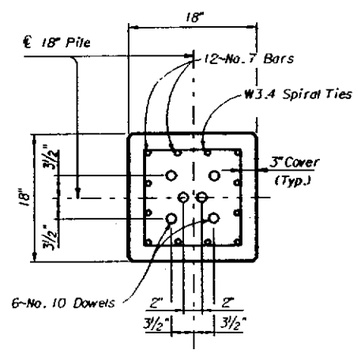

SECTION A-A
(See Reinf. Precast Splice Detail)

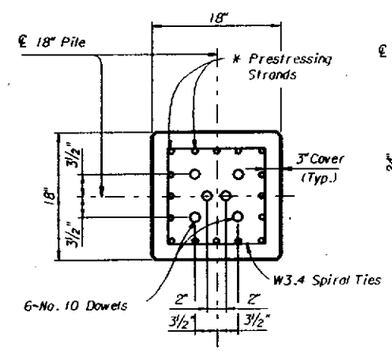

SECTION B-B
(See Prstr. Precast Splice Detail)

18" PILE

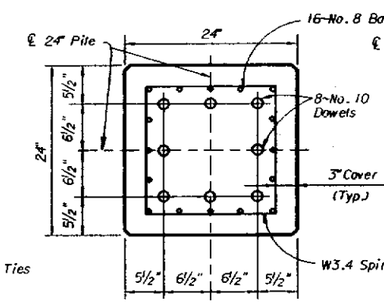

SECTION A-A
(See Reinf. Precast Splice Detail)

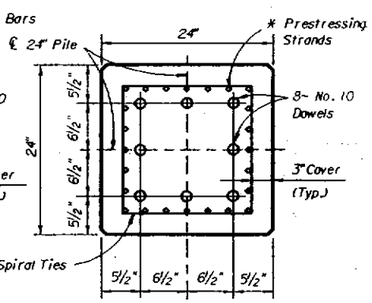

SECTION B-B
(See Prstr. Precast Splice Detail)

24" PILE

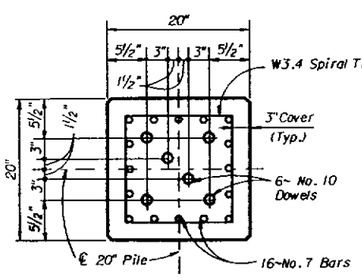

SECTION A-A
(See Reinf. Precast Splice Detail)

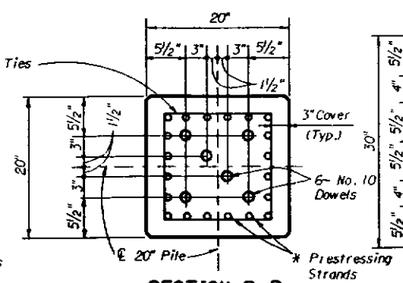

SECTION B-B
(See Prstr. Precast Splice Detail)

20" PILE

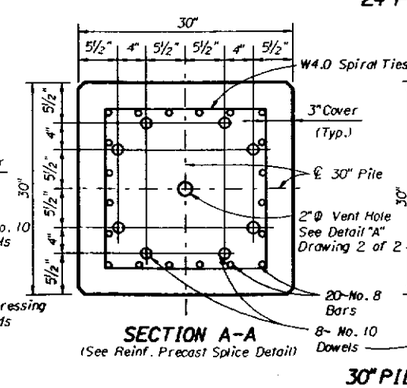

SECTION A-A
(See Reinf. Precast Splice Detail)

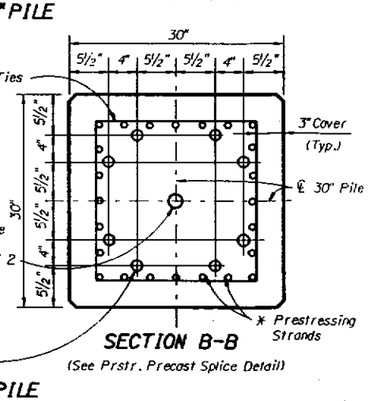

SECTION B-B
(See Prstr. Precast Splice Detail)

30" PILE

PILE NOTES

SPIRAL TIES: Each wrap of spirals shall be tied to at least two corner strands or bars. One turn required for spiral splices. Spirals shall be manufactured from cold-drawn steel wire meeting the requirements of ASTM A 82.

PILE CUT OFF: Piles required to be cut off shall be sawcut at the pile cut off elevation shown on the plans with an abrasive saw. Unless otherwise noted on the plans, the cut shall be made to the depth into the pile necessary to cleanly cut through the prestressing strands.

CONCRETE CLASS: Concrete for all piles shall be Class V (Special). Class V (Special) Concrete shall conform to all requirements for Class V Concrete except for the 28-day strength as noted below.

CONCRETE STRENGTH: The cylinder strength shall be 6,000 p.s.i. minimum at 28 days and 4,000 p.s.i. minimum at transfer of the Prestressing Force.

SPLICED PILES: Piles may be spliced in accordance with Section 455-5.12 of the standard specifications. Precast buildups shall be prestressed or reinforced according to pile details for the "head" section of the pile shown on this Standard. Drivable spliced piles may be driven after splice is two days old.

PICK-UP POINTS: Piles shall be marked at the pick-up points to indicate proper points for attaching handling lines.

STORAGE AND TRANSPORTATION: Piles shall be supported on adequate dunnage both in the precasting yard and at the jobsite and shall be supported and tied down during transit in accordance with the following schedule:

Type Pickup Required by Pile Length	Type Storage and Transportation Support Detail
Single or Double	2, 3 or 4 Point Support
Triple	3 or 4 Point Support

REINFORCING STEEL: All Reinforcing Steel except spiral ties shall be Grade 60.

STRAND NOMENCLATURE:
S.R. = Stress Relieved Strand
L.R.S. = Low-Relaxation Strand

REVISIONS					
Date	By	Description	Date	By	Description
			92R		

	Names	Dates
Drawn by	TGA	1-91
Checked by	AJG	5-91
Designed by		
Checked by		
Approved by	NICHOLS/AJG	

ENGINEER OF RECORD:

LOGO:

SEAL:

FLORIDA DEPARTMENT OF TRANSPORTATION
STRUCTURES DESIGN OFFICE

ROAD NO.	COUNTY	PROJECT NO.

SHEET TITLE: 12", 14", 18", 20", 24", AND 30" PRESTRESSED CONCRETE PILES

PROJECT NAME:

Drawing No. 1 of 2

Index No. 600

ST1:E120.230T600SH1.DGN
Mon Nov 9 12:42:09 1992

FED. ROAD DIV. NO.	STATE	PROJECT NO.	FISCAL YEAR	SHEET NO.
3	FLA.			

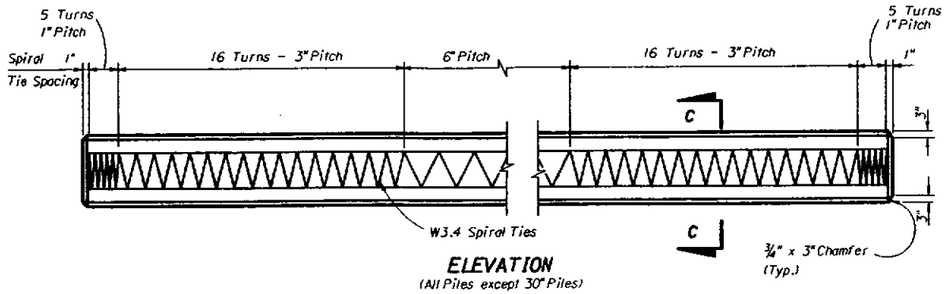

ELEVATION
(All Piles except 30" Piles)

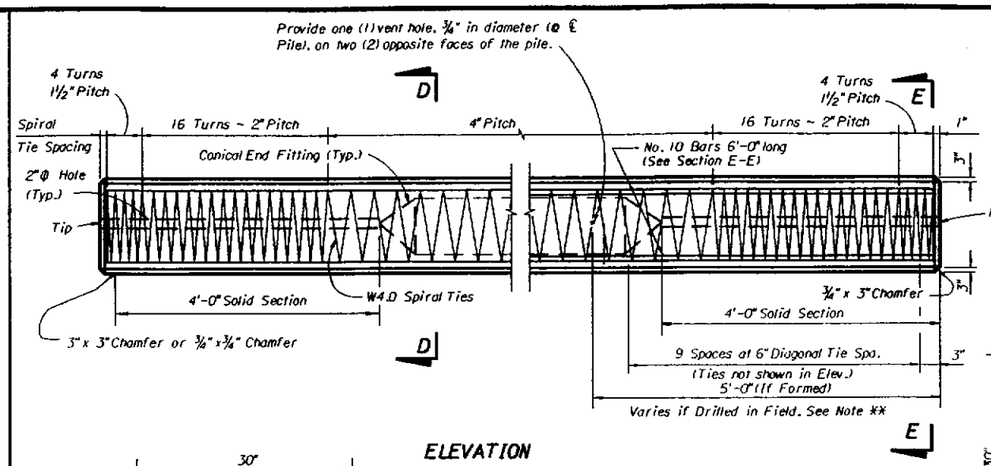

ELEVATION
(30" Piles)

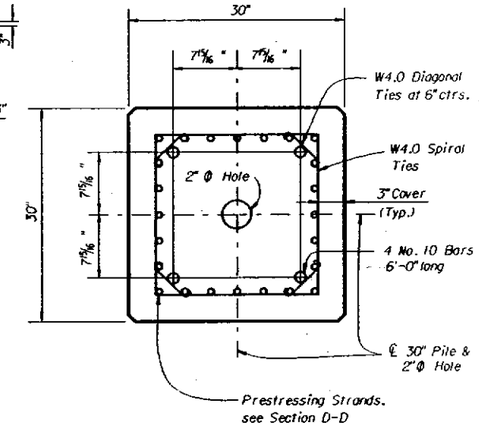

SECTION E-E
30" PILE

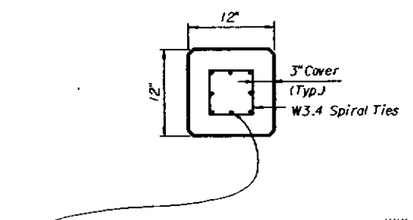

ALTERNATE STRAND PATTERN ***

8 ~ 7/16"Φ L.R.S.-As = 0.115in.² - 270K at 21.700# ea.
8 ~ ½"Φ S.R.-As = 0.144in.² - 250K at 24.100# ea.
12 ~ ⅜"Φ L.R.S.-As = 0.085in.² - 270K at 14.800# ea.
12 ~ ⅜"Φ S.R.-As = 0.085in.² - 270K at 15.600# ea.

SECTION C-C
12" PILE

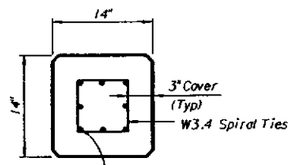

ALTERNATE STRAND PATTERN ***

8 ~ ½"Φ (Spec.)L.R.S. - As=0.167 in.²-270K at 30.000# ea.
8 ~ ½"Φ (Spec.)S.R. - As=0.167 in.²-270K at 31.570# ea.
8 ~ ½"Φ L.R.S.- As=0.153 in.²-270K at 29.500# ea.
12 ~ 7/16"Φ S.R. - As=0.115 in.²-270K at 21.200# ea.
12 ~ ½"Φ S.R.- As=0.144 in.²-250K at 22.600# ea.
16 ~ ⅜"Φ S.R. - As=0.085 in.²-270K at 16.070# ea.

SECTION C-C
14" PILE

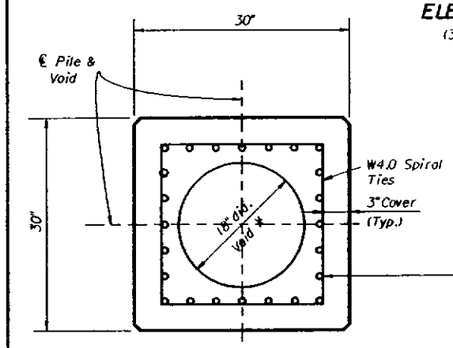

* Omit Void at Ends, see Elevation View

SECTION D-D
30" PILE

ALTERNATE STRAND PATTERN ***

20 ~ 9/16"Φ (Spec.)L.R.S. -As = 0.196 in.² - 270K at 38.600# ea.
20 ~ 9/16"Φ L.R.S. -As = 0.192 in.² - 270K at 38.880# ea.
24 ~ ½"Φ (Spec.)L.R.S. -As = 0.167 in.² - 270K at 32.300# ea.
24 ~ 9/16"Φ S.R. -As = 0.192 in.² - 270K at 35.000# ea.
24 ~ 9/16"Φ (Spec.)S.R. -As = 0.196 in.² - 270K at 35.200# ea.
28 ~ ½"Φ L.R.S. -As = 0.153 in.² - 270K at 28.100# ea.
28 ~ ½"Φ (Spec.)S.R. -As = 0.167 in.² - 270K at 30.200# ea.

2"Φ Hole thru solid portion of Pile. See Note **

DETAIL "A"

** NOTE:
The 18"Φ Void in the pile shall be positively vented to water or air after the final pile installation. If the ¾"Φ vents are included in the pile cut-off section, two (2) new holes, ¾" in diameter, shall be drilled on two (2) opposite faces of the pile below the bottom of substructure elevation. If the pile void can not be vented directly to water or air, then venting shall be provided by the use of a 1"Φ P.V.C. conduit through the 2"Φ hole(s) or the the 18"Φ void to the outside. This might involve venting through a substructure cap or column. Voids between segments of spliced piles shall be connected by 2"Φ hole(s). See Detail "A".

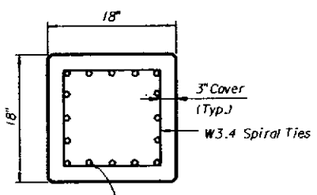

ALTERNATE STRAND PATTERN ***

12 ~ ½"Φ (Spec.) L.R.S. -As = 0.167 in.² - 270K at 32.400# ea.
12 ~ 9/16"Φ S.R. -As = 0.192 in.² -270K at 35.100# ea.
16 ~ ½"Φ S.R. -As = 0.153 in.² -270K at 26.800# ea.
20 ~ 7/16"Φ L.R.S.-As = 0.115 in.² -270K at 20.000# ea.
20 ~ 7/16"Φ S.R.-As = 0.115 in.² -270K at 21.100# ea.
24 ~ ⅜"Φ L.R.S.-As = 0.085 in.² -270K at 16.300# ea.

SECTION C-C
18" PILE

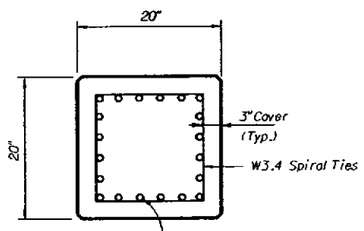

ALTERNATE STRAND PATTERN ***

16 ~ ½"Φ L.R.S. -As = 0.153 in.² -270K at 30.000# ea.
16 ~ ½" Φ (Spec.) S.R. -As = 0.167 in.² -270K at 31.570# ea.
20 ~ ½"Φ S.R. -As = 0.153 in.² -270K at 26.500# ea.
24 ~ 7/16"Φ L.R.S.-As = 0.115 in.² -270K at 20.500# ea.
24 ~ 7/16"Φ S.R.-As = 0.115 in.² -270K at 21.740# ea.

SECTION C-C
20" PILE

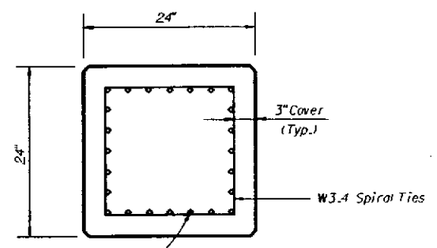

ALTERNATE STRAND PATTERN ***

20 ~ ½"Φ (Spec.)L.R.S. -As = 0.167 in.² - 270K at 33.820# ea.
20 ~ 9/16"Φ S.R. -As = 0.192 in.² - 270K at 36.290# ea.
20 ~ 9/16"Φ (Spec.)S.R. -As = 0.196 in.² - 270K at 37.050# ea.
24 ~ ½"Φ L.R.S. -As = 0.153 in.² - 270K at 29.000# ea.
24 ~ ½"Φ (Spec.)S.R. -As = 0.167 in.² - 270K at 31.570# ea.

SECTION C-C
24" PILE

*** NOTE:
Any of the given Alternate Strand Patterns may be utilized. The strands shall be located as follows: place one strand at each corner and place the remaining strands equally spaced between the corner strands.
The Total strand pattern shall be concentric with the nominal concrete section of the pile.

REVISIONS					
Date	By	Description	Date	By	Description
			92R		

	Names	Dates
Drawn by	TGA	1-91
Checked by	AJG	5-91
Designed by		
Checked by		
Approved by	NICHOLS/AJG	

ENGINEER OF RECORD:
STRUCTURES DESIGN OFFICE
CENTRAL OFFICE
605 Suwannee Street, MS 33
Tallahassee, Florida 32399-0450

LOGO:

SEAL:

FLORIDA DEPARTMENT OF TRANSPORTATION
STRUCTURES DESIGN OFFICE

ROAD NO.	COUNTY	PROJECT NO.

SHEET TITLE:
12", 14", 18", 20", 24", AND 30" PRESTRESSED CONCRETE PILES

PROJECT NAME:

Drawing No. 2 of 2

Index No. 600

MON Nov 9 12:47:47 1992 ST1K120.230\600SH2.DGN

FED. ROAD DIV. NO.	STATE	PROJECT NO.	FISCAL YEAR	SHEET NO.
3	FLA.			

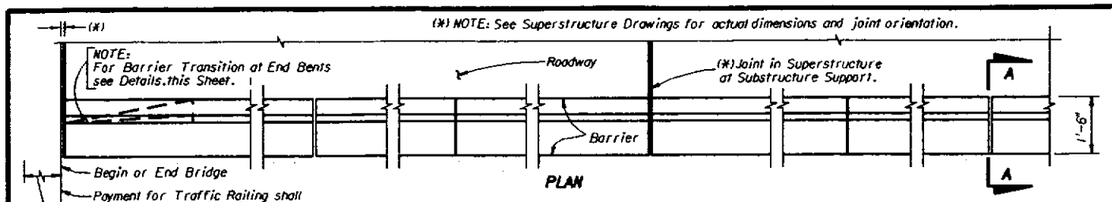

PLAN

** NOTE: ¾" Open Joints shall be provided at:
1 - Substructure supports where superstructure slab is continuous.
2 - Midspan where span length exceeds 90 feet.
3 - Intermediate locations (equally spaced) between midspan and substructure support where span length exceeds 180 feet.

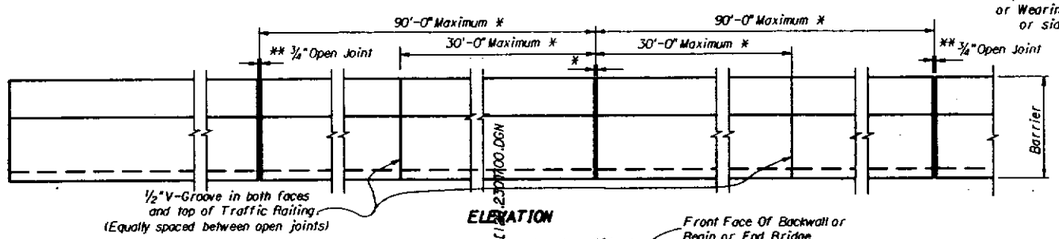

ELEVATION

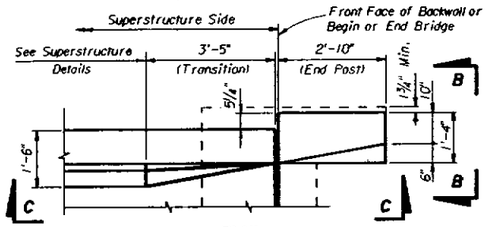

PLAN
(See Note 'A')

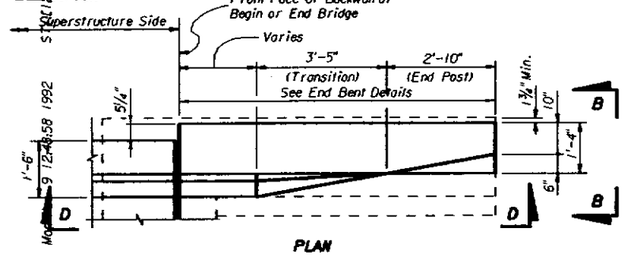

PLAN
(See Note 'B')

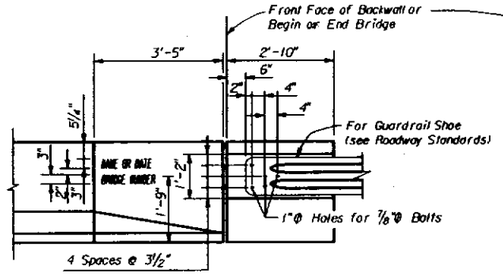

VIEW C-C

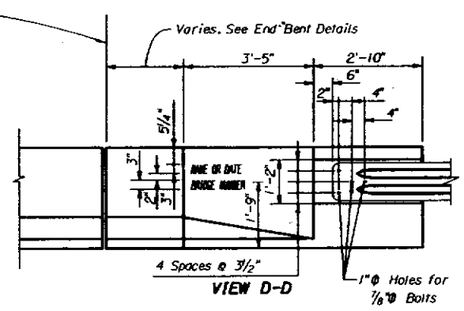

VIEW D-D

NOTE 'A':
If Barrier Transition is required and the Superstructure Depth (thickness) is 25 inches or less, the Transition shall be provided on the Superstructure side. To accommodate the Transition on the Superstructure the Reinforcement (Bars 5V, 5P & 4S) will need adjusting. The 1'-2" portion of Bars 5V shall be bent to fit and the horizontal 10" portion along the bottom shall be cut at the center.

NOTE 'B':
If Barrier Transition is required and the Superstructure Depth (thickness) exceeds 25 inches, the Barrier Transition shall be provided on the End Bent side.

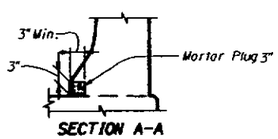

SECTION A-A

NOTE: When open joint in Barrier is not coincident with joint in the superstructure, the lower 3" portion of the open joint shall be plugged by filling with mortar in accordance with Article 400-15.1.

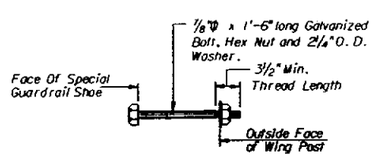

BOLT DETAIL

NOTE: The Cost of Bolts is to be included in the Contract Unit Price for Guardrail

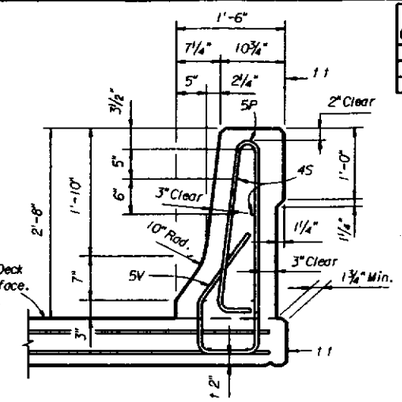

TYPICAL SECTION THRU TRAFFIC RAILING

t For Slabs 8" thick or less. If Slab is thicker than 8" or Barrier is located on a Retaining Wall, embed Bar 5V 6".

t t Where Barriers of adjacent bridges are to be built back to back, the outside vertical plane of the Barrier and Slab may coincide if so shown on the Superstructure Plans.

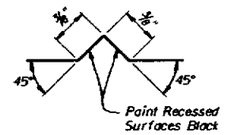

SECTION THRU RECESSED 'V' GROOVE TO FORM INSCRIBED LETTERS AND FIGURES

ROADWAY CROSS-SLOPE	LOW GUTTER Φ1	LOW GUTTER Φ2	HIGH GUTTER Φ1	HIGH GUTTER Φ2
0.00 to 0.02	90°	90°	90°	90°
0.02* to 0.06	93°	87°	87°	93°
0.06* to 0.10	96°	84°	84°	96°

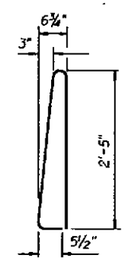

BAR 5P

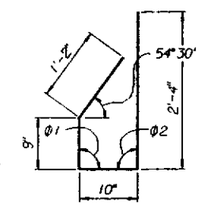

BAR 5V

BENDING DIAGRAMS

BAR BENDING NOTES

1. All bar dimensions in the bending diagrams are out to out.
2. Bars 5P and 5V shall be bent around a pin diameter = 2½".
3. The 9" and the 2'-4" vertical dimensions shown for bar 5V are based on a bridge slab 8" thick or greater and without raised sidewalk or wearing surface. If the slab thickness is less than 8" decrease these dimensions by an amount equal to the difference in the thicknesses; and if a wearing surface or a raised sidewalk is to be provided, increase the dimensions by an amount equal to the wearing surface thickness or sidewalk thickness.
4. Reinforcement for Barrier on Retaining Wall shall be the same as detailed above for an 8" slab with Φ1 = Φ2 = 90°.

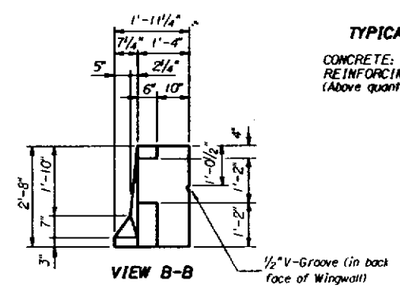

VIEW B-B

TYPICAL TRAFFIC RAILING QUANTITIES

CONCRETE: 0.1030 C.Y. per linear foot.
REINFORCING STEEL: 20.49 lbs. per linear foot.
(Above quantities are based on 8" slab and 0.02 '/' cross-slope)

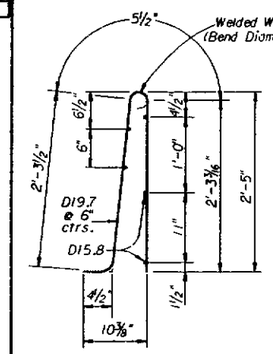

WELDED WIRE FABRIC

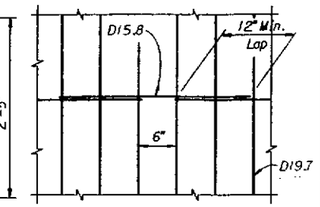

SPLICE DETAIL
(Between WWF Sections)

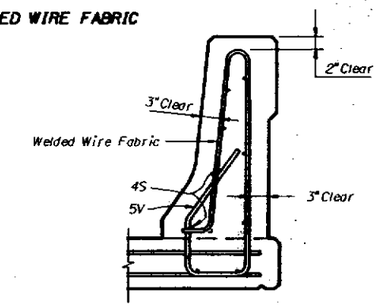

ALTERNATE REINFORCING DETAILS

The Contractor may utilize Welded Wire Fabric in lieu of all Bars 5P and Four (4) of the Bars 4S. Welded Wire Fabric shall conform to ASTM A497.

REINFORCING STEEL NOTES

Place longitudinal steel in bottom of slab as shown above to facilitate tying bars 5V. Do not add reinforcing steel for tie purposes.

All vertical reinforcing steel in Traffic Railing shall be No. 5 Bars spaced at 8" c.c. and all longitudinal reinforcing steel shall be No. 4 Bars. At all open joints all reinforcing shall have 2" minimum cover. At all construction joints Bars 4S may be continuous or spliced. All splices in Bars 4S shall be 1'-4" minimum.

TRAFFIC RAILING NOTES

CONCRETE AND REINFORCING STEEL: See General Notes.

PAYMENT: Traffic Railing on Bridges shall be paid for per linear foot (Item No. 400-148-1), which shall include all Concrete and Reinforcing Steel. Traffic Railing shall be measured along the centerline of the top surface of the concrete barrier.

MARKERS: Markers recording the elevation shall be placed on top of the Traffic Railing at End Bents. On bridges longer than 100 ft., one marker shall be placed at each end of the bridge. On bridges 100 ft. or less, one marker shall be placed at one end of the bridge only. Markers are to be furnished by the Florida Department of Transportation and installed by the Contractor. The cost of installing the markers shall be included in the Contract Unit Price for Traffic Railing (Barrier).

TRAFFIC RAIL CONSTRUCTION: The contractor may construct the railing by the use of stationary removable forms or by the use of slip forms without altering the rail dimensions shown above.

SUPERELEVATED BRIDGES: At the option of the Contractor, Traffic Railing and End Bent Wing Posts on superelevated bridges, may be constructed perpendicular to the roadway surface. The cost of modifications shall be at the Contractor's expense.

BOLTS: Bolts, Nuts, and Washers shall be hot dip galvanized in accordance with A.S.T.M. A-153.

RETAINING WALL: If the Barrier is to be provided on a retaining wall, the Barrier Section shall be as shown above. Other details such as transition for guardrail attachment, maximum spacing of ¾" open joint and ½" V-Groove shall also apply. See Wall Plans for Payment.

NAME AND BRIDGE NUMBER: The Name and Bridge Number to be placed on the Traffic Railing shall be seen on the driver's right when approaching bridge. The date is to be placed on the driver's left when approaching the bridge. The date shall be the year the bridge is constructed. Black plastic letters and figures 3" in height, as approved by the Engineer, may be used in lieu of letters and figures formed by ⅜" V-Grooves. V-Grooves shall be formed by preformed letters and figures.

REVISIONS					
Date	By	Description	Date	By	Description
			92R		

	Names	Dates
Drawn by	WEH	2-89
Checked by	AJG	2-89
Designed by	—	—
Checked by	—	—
Approved by	AJG	

ENGINEER OF RECORD:
STRUCTURES DESIGN OFFICE
605 Suwannee Street, MS 33
Tallahassee, Florida 32399-0450

LOGO:

SEAL:

FLORIDA DEPARTMENT OF TRANSPORTATION
STRUCTURES DESIGN OFFICE

ROAD NO.	COUNTY	PROJECT NO.

SHEET TITLE: TRAFFIC RAILING BARRIER

PROJECT NAME:

Drawing No. 1 of 1

Index No. 700

Mon Nov 9 12:49:58 1992 STI-L120.230\700.DGN

FED. ROAD DIST. NO.	STATE	PROJECT NO.	FISCAL YEAR	SHEET NO.
3	FLA.			

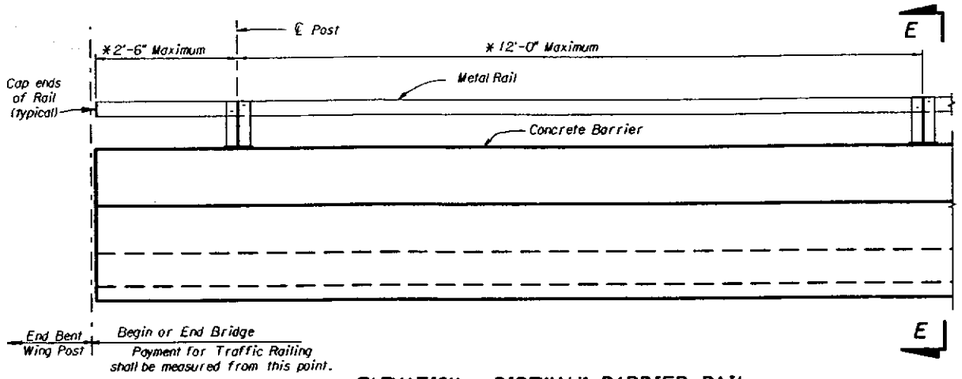

ELEVATION ~ SIDEWALK BARRIER RAIL

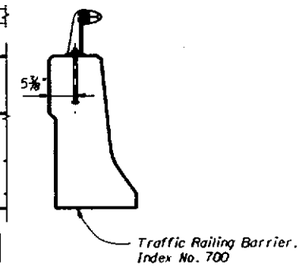

SECTION E-E

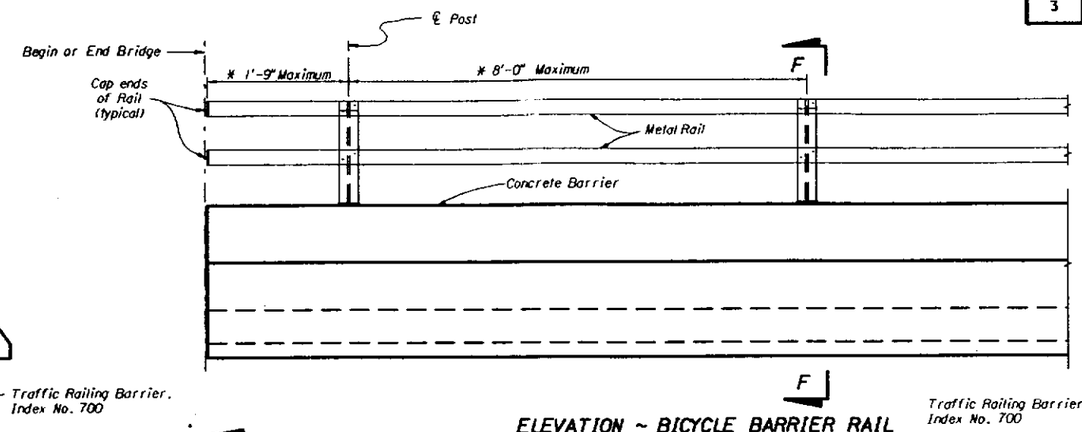

ELEVATION ~ BICYCLE BARRIER RAIL

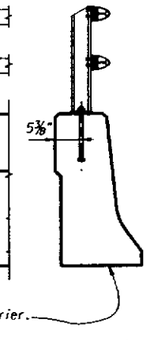

SECTION F-F

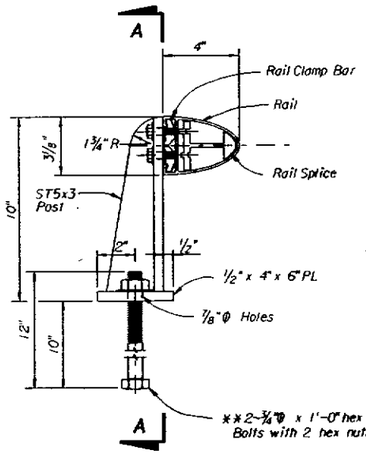

SECTION THRU RAIL

SIDEWALK BARRIER RAIL

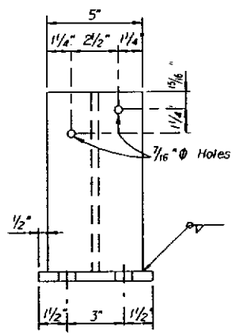

SECTION A-A

** NOTE: After nuts have been tightened the threads shall be nicked to prevent removal of nuts.

* NOTE: See Superstructure Drawing for actual dimensions.

NOTE: Rail shall be continuous over a minimum of three posts before splicing.

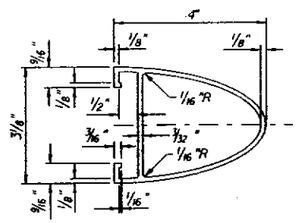

RAIL

NOTE "A" ~ Rough cut ends and edges of aluminum rails shall be ground or filed smooth to remove all sharp edges, nicks or burrs that would be injurious to the human touch.

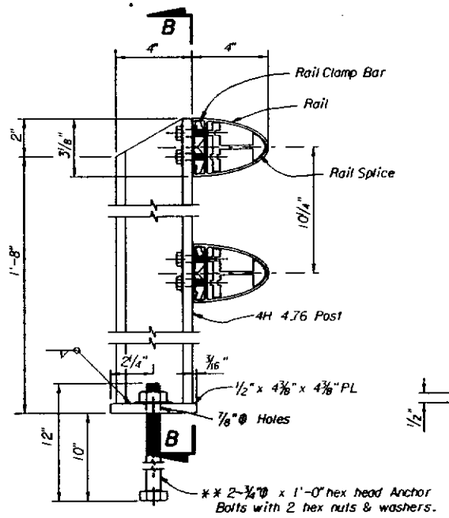

SECTION THRU RAIL

BICYCLE BARRIER RAIL

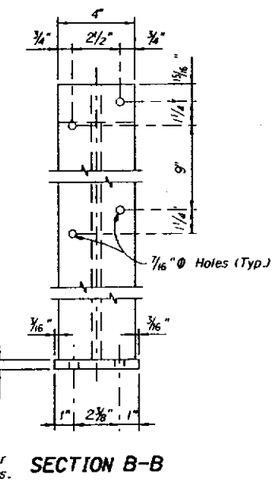

SECTION B-B

NOTES

TRAFFIC RAILING BARRIER: For details of Traffic Railing Barrier, See Index 700 .

PAYMENT: Traffic Railing (Sidewalk Barrier Type) shall be paid for per linear foot Item No. 400-148-2 and Traffic Railing (Bicycle Barrier Type) shall be paid for per linear foot Item No. 400-148-3. These items shall include all Metal Rail, Concrete and Reinforcing Steel. Railing shall be measured along the centerline of the top surface of the concrete barrier.

SPECIFICATIONS FOR METAL RAIL

POST: Fabricated wrought aluminum: A.S.T.M. B221, alloy 6061-T6 or alloy 6351-T5 with welding using filler wire 4043.

RAIL AND RAIL SPLICE: Aluminum: A.S.T.M. B221, alloy 6061-T6 or alloy 6351-T5.

RAIL CLAMP BAR: Aluminum: A.S.T.M. B221, alloy 6061-T6 or alloy 6351-T5.

ANCHOR BOLTS: Anchor bolts shall be in accordance with A.S.T.M. A-36 or A-307. Anchor bolts, Nuts and washers shall be hot-dip galvanized in accordance with A.S.T.M. designation A-153.

RAIL END CAP: A.S.T.M. B-26 sand cast aluminum alloy, SG 70A-F(Aluminum Association alloy designation A-356-F).

RAIL INSTALLATION: Rail Post shall be normal to Profile Grade. Post shall be seated on 1/8" resilent pads in accordance with Article 932-2.1. The dimension shall be the same as the post base. Rail expansion joint shall occur in the panel between posts on either side of Bridge expansion joint. Rail expansion joint shall be similar to rail splice with provision for movement equal to 1.5 times the bridge joint opening.

SHOP DRAWINGS: Complete details and description of materials of the proposed metal rail shall be submitted by the contractor for the Engineer's approval prior to fabrication.

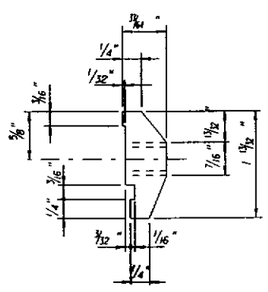

VIEW C-C

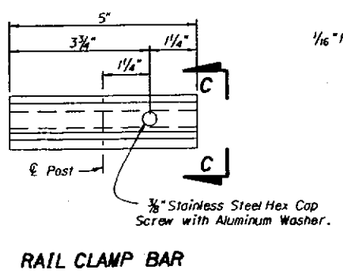

RAIL CLAMP BAR

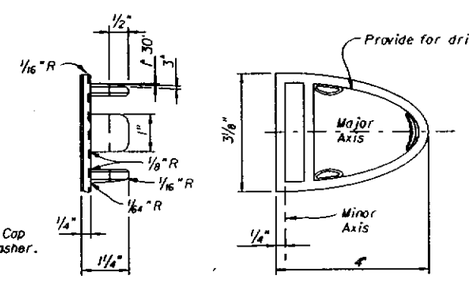

RAIL END CAP

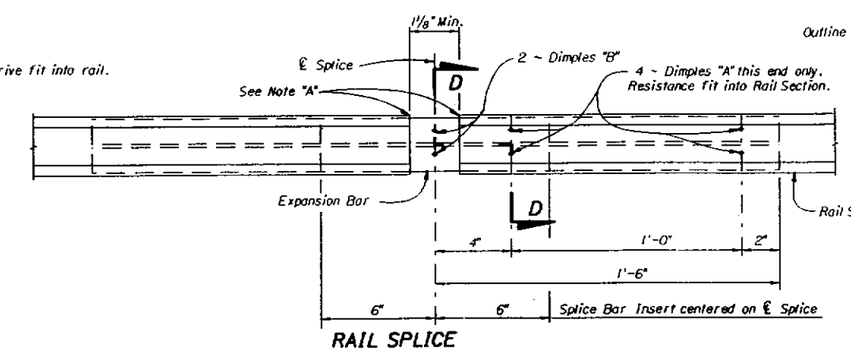

RAIL SPLICE

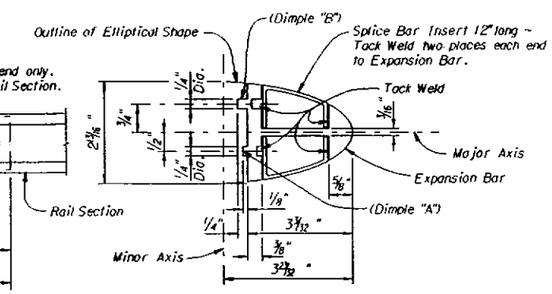

SECTION D-D

RAIL COMPONENTS

REVISIONS						
Date	By	Description	Date	By	Description
			92R		

	Names	Dates
Drawn by	WEH	2-89
Checked by	AJG	2-89
Designed by	—	—
Checked by	—	—
Approved by	AJG	

ENGINEER OF RECORD:
STRUCTURES DESIGN OFFICE
CENTRAL OFFICE
605 Suwannee Street, MS 33
Tallahassee, Florida 32399-0450

LOGO:

SEAL:

FLORIDA DEPARTMENT OF TRANSPORTATION
STRUCTURES DESIGN OFFICE

ROAD NO.	COUNTY	PROJECT NO.

SHEET TITLE: TRAFFIC RAILING (SIDEWALK TYPE AND BICYCLE TYPE)

PROJECT NAME:

Drawing No. 1 of 1

Index No. 710

STI:L120.230T10.DGN

Mon Nov 9 12:52:41 1992

FED. ROAD DIV. NO.	STATE	PROJECT NO.	FISCAL YEAR	SHEET NO.
3	FLA.			

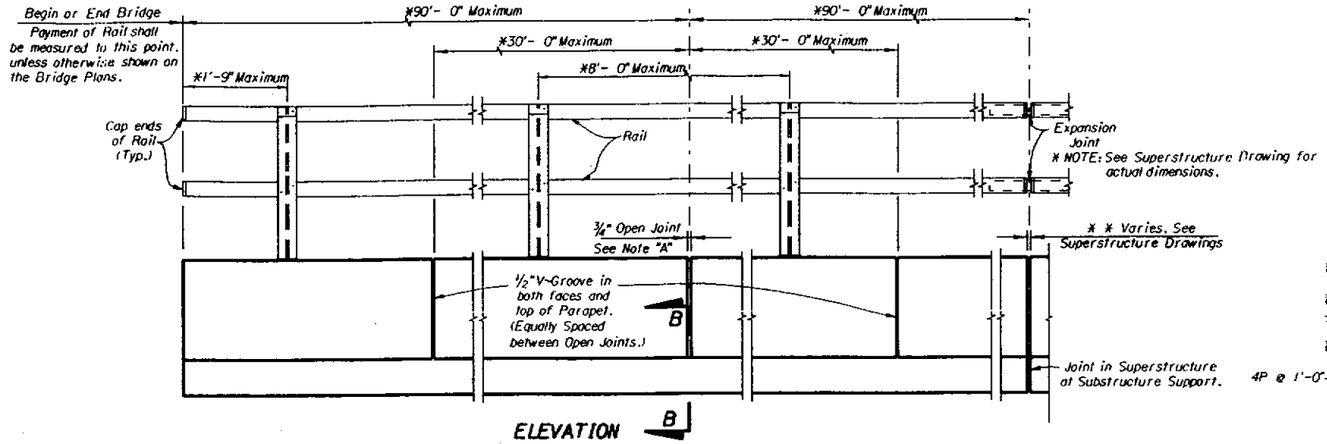

ELEVATION B

Note "A": 3/4" Open Joints shall be provided at:
1. Substructure Supports where Superstructure Slab is continuous.
2. Mid-Span where Span length exceeds 90 feet.
3. Intermediate locations (equally spaced) between Mid-Span and Superstructure Support where Span length exceeds 180 feet.
4. Locations Coinciding with joints for the Traffic Railing Barrier.

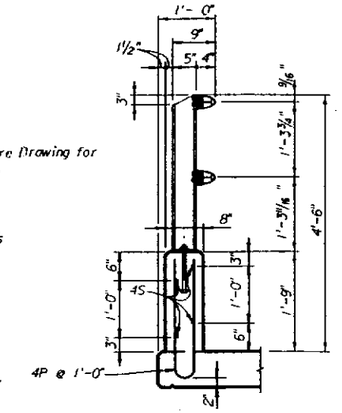

TYPICAL SECTION THRU PARAPET AND RAIL

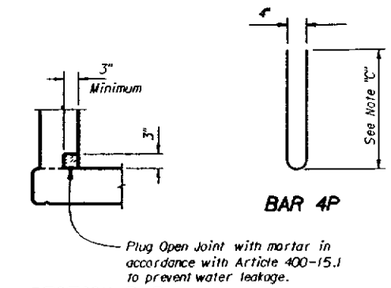

SECTION B-B

BAR 4P

Note "C": Designer shall fully detail reinforcement in Parapet and include concrete and reinforcing in the Superstructure quantities.

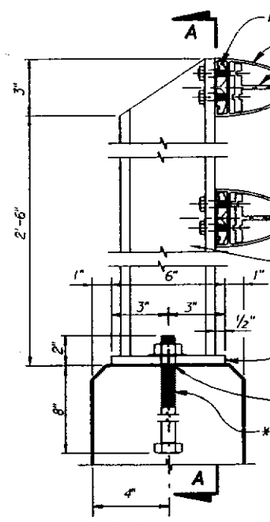

SECTION THRU RAIL

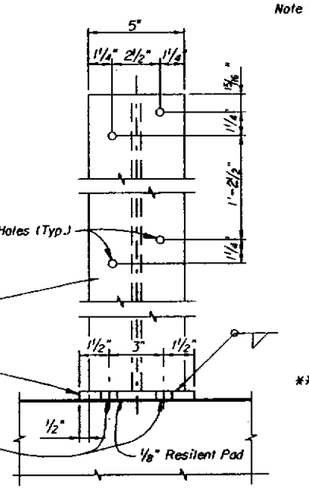

SECTION A-A

** NOTE: After nuts have been tightened the threads shall be nicked to prevent removal of nuts.

NOTE: Rail shall be continuous over a minimum of three posts before splicing.

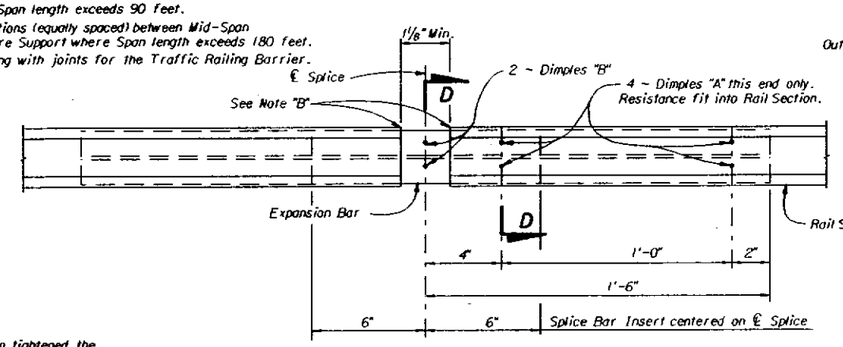

RAIL SPLICE

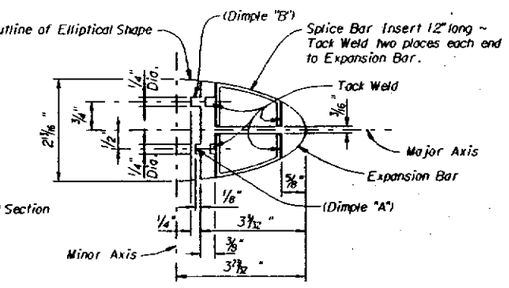

SECTION D-D

RAIL COMPONENTS

NOTES

PAYMENT: The cost of all materials in Parapet shall be included in Concrete (Superstructure) and Reinforcing Steel (Superstructure). Aluminum Rail shall be paid for per linear foot and shall be measured along the centerline of the top surface of the rail. Payment includes Anchor Bolts, Nuts, Resilient Pads, and all incidental materials and labor required to complete the installation. Payment for the rail shall be made under Item No. 400-5-3.

SPECIFICATIONS FOR BRIDGE RAIL

POST: Fabricated wrought aluminum; A.S.T.M. B221, alloy 6061-T6 or alloy 6351-T5 with welding using filler wire 4043.
RAIL & RAIL SPLICE: Aluminum; A.S.T.M. B221, alloy 6061-T6 or alloy 6351-T-5.
RAIL CLAMP BAR: Aluminum; A.S.T.M. B221, alloy 6061-T6 or alloy 6351-T5.
ANCHOR BOLTS: Anchor Bolts shall be in accordance with A.S.T.M. A-36 or A-307. Anchor Bolts, nuts and washers shall be hot-dip galvanized in accordance with A.S.T.M. Designation A-153.
RAIL END CAP: A.S.T.M.B-26 sand cast aluminum alloy, SG 70A-F (Aluminum Association alloy designation A-356-F).
RAIL INSTALLATION: Rail Post shall be normal to Profile Grade. Posts shall be seated on 1/8" thick resilent pads in accordance with Article 932-2.1. The dimension shall be the same as the post base.
Rail expansion joints shall occur in the panel between posts on either side of Bridge expansion joints. Rail expansion joints shall be similar to rail splices with provision for movement equal to 1 1/2 times the bridge joint opening.
SHOP DRAWINGS: Complete details and description of materials of the proposed bridge rail shall be submitted by the contractor for the Engineer's approval prior to fabrication.

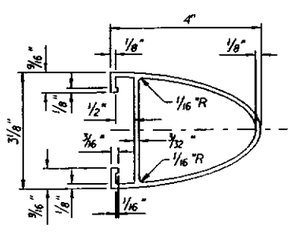

RAIL

NOTE "B" ~ Rough cut ends and edges of aluminum rails shall be ground or filed smooth to remove all sharp edges, nicks or burrs that would be injurious to the human touch.

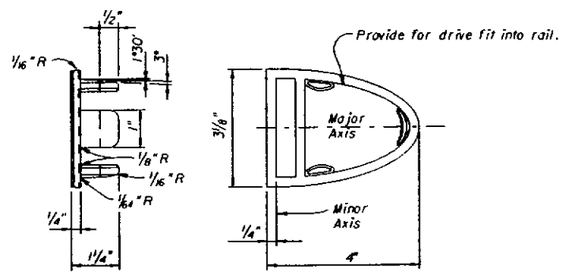

RAIL END CAP

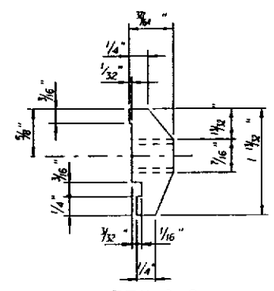

VIEW C-C

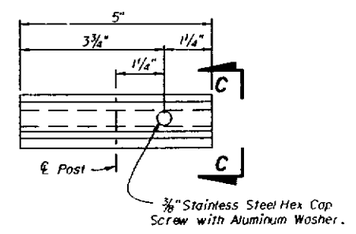

RAIL CLAMP BAR

REVISIONS					
Date	By	Description	Date	By	Description
			92R		

	Names	Dates
Drawn by	LFC	12-85
Checked by	RDS	1-86
Designed by	—	—
Checked by	—	—
Approved by	AJG	

ENGINEER OF RECORD: STRUCTURES DESIGN OFFICE, CENTRAL OFFICE, 605 Suwannee Street, MS 33, Tallahassee, Florida 32399-0450

LOGO:

SEAL:

FLORIDA DEPARTMENT OF TRANSPORTATION
STRUCTURES DESIGN OFFICE

ROAD NO.	COUNTY	PROJECT NO.

SHEET TITLE: PEDESTRIAN/BICYCLE RAILING

PROJECT NAME:

Drawing No. 1 of 1

Index No. 720

Mon. Nov. 9 12:53:52 1992 ST1:(120,230)T20.DGN

FED. ROAD DIV. NO.	STATE	PROJECT NO.	FISCAL YEAR	SHEET NO.
3	FLA.			

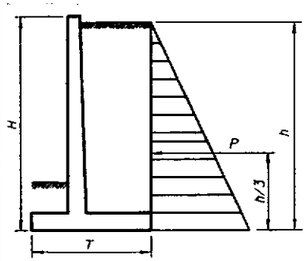

CASE I

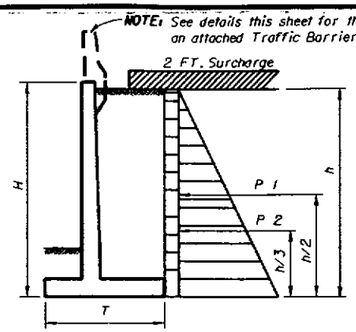

CASE II

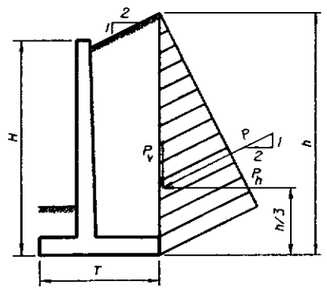

CASE III

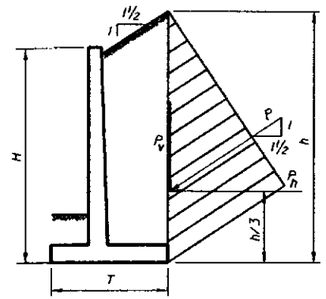

CASE IV

NOTES

GENERAL SPECIFICATIONS: Florida Department of Transportation Standard Specifications for Road and Bridge Construction. Current Edition with Approved Supplements thereto.

DESIGN SPECIFICATIONS: American Association of State Highway and Transportation Officials (AASHTO) Standard Specifications for Highway Bridges. Current Edition with Approved Revisions thereto.

MATERIAL STRESSES: All allowable stresses are in accordance with current AASHTO Standard Specifications for all the materials shown in the plans.

MAXIMUM CONCRETE STRESSES: (fc = Maximum Working Stress: f'c = Minimum 28 Day Compressive Strength)
Class II Concrete (Retaining Walls) fc = 1360 psi (f'c = 3400 psi)
Class IV Concrete (Retaining Walls) fc = 2200 psi (f'c = 5500psi)

CLASS OF CONCRETE: Retaining walls in a non-corrosive (slightly aggressive) environment shall use Class II Concrete . Retaining walls in a non-corrosive (moderately aggressive) environment shall use Class IV Concrete. Retaining walls in a corrosive (extremely aggressive) environment shall use Class IV concrete.

REINFORCING STEEL: All reinforcing steel shall be Grade 60 (fs = 24000 psi).

ENVIRONMENT: These plans apply to cast-in-place retaining walls located in all environments.

SURFACE FINISH: A Class 5 Applied Finish Coating shall be applied to the top of the wall and the exposed face above the ground line.

RUSTICATION: Alternate Architectural treatments may be substituted for the Striated Pattern as Approved by the Engineer.

PAYMENT: Retaining walls in a non-corrosive (slightly aggressive) environment shall be paid for at the Contract Unit Price for Class II Concrete (Retaining Walls) (Cu. Yd.) Item No. 400-2-11 and Reinforcing Steel (Retaining Wall) (lbs) Item No. 415-1-3.

Retaining walls in a non-corrosive (moderately aggressive) environment shall be paid for at the Contract Unit Price for Class IV Concrete (Retaining Walls) (Cu. Yd.) Item No. 400-4-11 and Reinforcing Steel (Retaining Wall) (lbs) Item No. 415-1-3.

Retaining walls in a corrosive (extremely aggressive) environment shall be paid for at the Contract Unit Price for Class IV Concrete (Retaining Walls) (Cu. Yd.) Item No. 400-4-11 and Reinforcing Steel (Retaining Wall) (lbs) Item No. 415-1-3.

TRAFFIC RAILING BARRIER: For Details see Index No. 700. When Barrier is used with Case II Walls, the Barrier Concrete and Reinforcing Steel shall be included in the Bid Item Quantities for Concrete Retaining Walls.

QUANTITIES: Concrete and Reinforcing Steel Quantities shall be based upon the average height (H) of each 25'-0" Unit interpolating between the "PER 25' UNIT" quantities shown on the appropriate case sheet. Quantities for units less than 25'-0" in length shall be computed as the length of the average unit times the "PER LIN. FT" quantity for the average height (H) of the partial unit, interpolating between the quantities shown as applicable. Additional Quantities, see Details "A" and "B", shall be computed and included in the Wall Quantities.

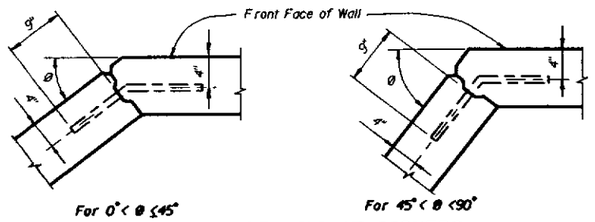

TYPICAL JOINT DETAILS AT CORNERS

NOTE: See "Construction Joint Detail" For Notes and Details not shown

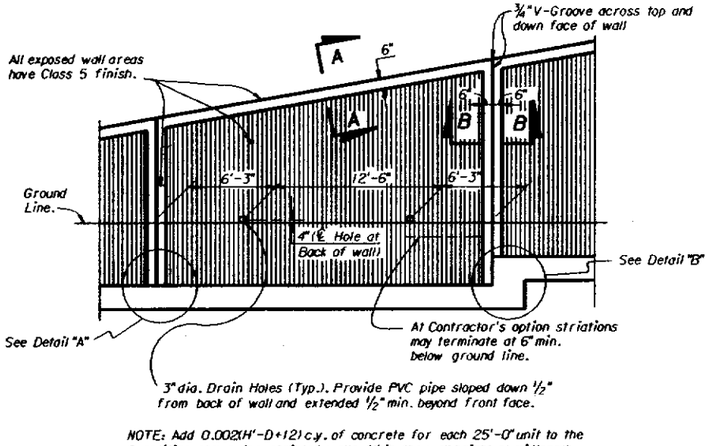

NOTE: Add 0.002(H'-D+12) c.y. of concrete for each 25'-0" unit to the Quantities shown for striated walls. H' is the wall height at midlength of a 25'-0" unit.

ELEVATION OF STRIATED WALL

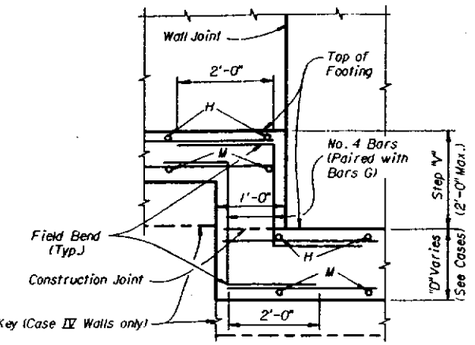

DETAIL "B"

NOTE: Quantities for Footing Step are not included in wall Quantities.

Quantities per Step
Concrete (C.Y.) = (0.037)(V)(T)
Steel (LBS.) = (0.891)(T + 1.5)(V + 5.0)
NOTE: V & T in feet

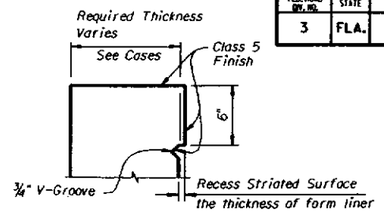

SECTION A-A

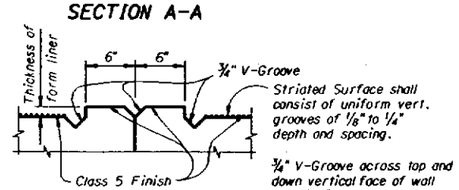

SECTION B-B

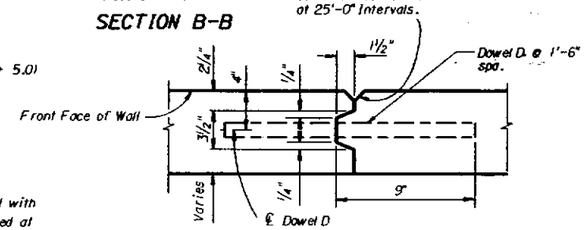

CONSTRUCTION JOINT DETAIL

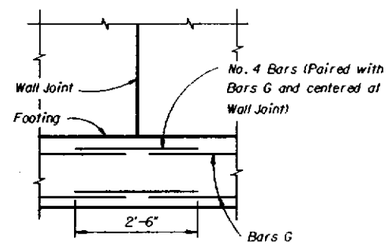

DETAIL "A"

NOTE: Quantities for the above additional No. 4 Bars are not included in the tabulated quantities shown in Index 801 thru 822.

The required additional quantities at each Wall Joint shall be calculated as follows:
Steel (LBS) = 1.67 (No. Bars G)

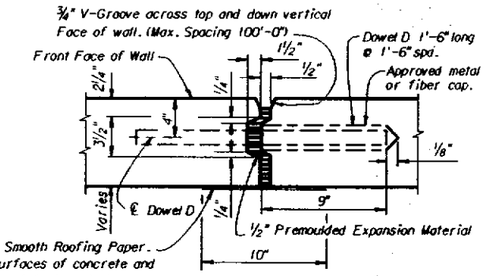

EXPANSION JOINT DETAIL

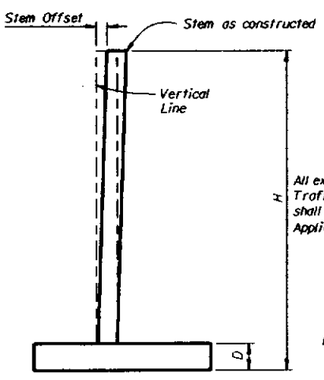

STEM OFFSET VALUES

STEM OFFSET
(H-D) < 12: Offset = 1/16 (H-D)
(H-D) > 12: Offset = 1/8 (H-D-6)

Note: Offset in inches
Maximum Offset = 2½"
H & D in feet.

BENDING DIAGRAM

#5 BARS N

NOTE: All bar dimensions are out to out.

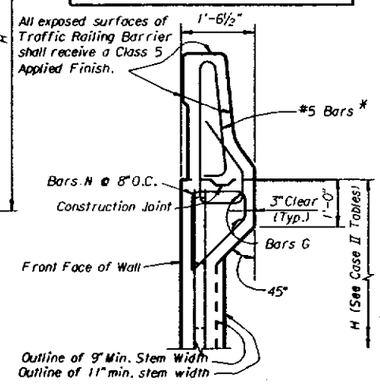

BARRIER DETAIL AT TOP OF CASE II WALL

* NOTE: See Sheet 1 of 1 Index 700 for Bars.

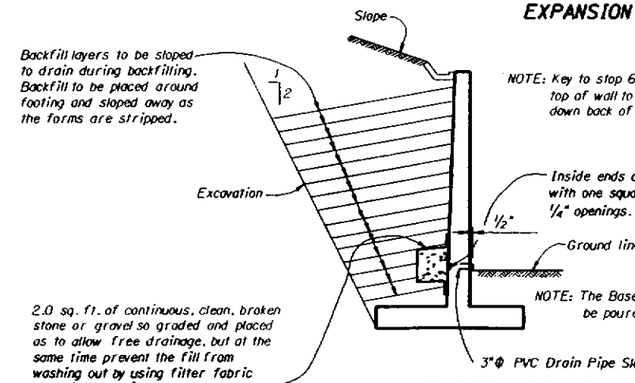

NOTE: Key to stop 6" from top of wall. Joint across top of wall to be a straight line. Extend V-Groove down back of wall to 6" min. below ground.

Inside ends of weep holes shall be covered with one square foot of galvanized mesh with ¼" openings.

NOTE: The Base and Front Face of the Footing shall be poured against undisturbed material.

TYPICAL BACKFILL DETAIL

NOTE: Lug at top of Wall requires an additional 0.98 and 0.72 c.y. of Concrete for each 25'-0" Unit of Case II Wall for 9" and 11" minimum stem widths, respectively; and an additional 218 lbs. of Reinforcing Steel per 25'-0" Unit of Case II Wall for the 38 - No. 5 Bars N and 2 - No. 4 Bars G shown.

NOTE: Where Concrete Gutter is Required, Gutter shall be constructed according to Roadway Standards (Index 280 sheet 2 of 4). Payments shall be made under Item No. 524-1-1 Concrete Ditch Pavement (3" thick) per Sq. Yd. For limits of Concrete Gutter see Roadway Plans.

REVISIONS					
Date	By	Description	Date	By	Description
			92R		

	Names	Dates
Drawn by	M.J.	3/87
Checked by	M.P.	3/87
Designed by	W.E.H.	9/81
Checked by	T.D.H.	9/81
Approved by	A.G.M.	

ENGINEER OF RECORD:
STRUCTURES DESIGN OFFICE
CENTRAL OFFICE
605 Suwannee Street, MS 33
Tallahassee, Florida 32399-0450

LOGO:

SEAL:

FLORIDA DEPARTMENT OF TRANSPORTATION
STRUCTURES DESIGN OFFICE

ROAD NO.	COUNTY	PROJECT NO.

SHEET TITLE: CANTILEVER RETAINING WALLS GENERAL NOTES AND DETAILS

PROJECT NAME:

Drawing No. 1 of 1

Index No. 800

Mon Nov 9 12:58:14 1992 STIK120.2301800.DGN

FED. ROAD DIV. NO.	STATE	PROJECT NO.	FISCAL YEAR	SHEET NO.
3	FLA.			

RETAINING WALL DATA

REINFORCING STEEL SCHEDULE

WALL DIMENSIONS				BARS A			BARS D*			BARS F			BARS G			BARS H				BARS J						BARS K						BARS L						BARS M				H
H	B	D	T	SIZE	NO.	LENGTH	SIZE	NO.	LENGTH	SIZE	NO.	LENGTH	SIZE	NO.	LENGTH	SIZE	NO.	SPACING	LENGTH	SIZE	NO.	SPACING	a	b	LENGTH	SIZE	NO.	SPACING	a	b	LENGTH	SIZE	NO.	SPACING	a	b	LENGTH	SIZE	NO.	C	LENGTH	
6	8"	11"	3'-1"				6	4	1'-6"	4	17	4'-7"	4	14	24'-6"	4	18	1'-5"	2'-7"	4	25	1'-0"	5'-5"	1'-1"	6'-6"													4	17	1'-11"	4'-1"	6
7	10"	11"	3'-6"				6	5	1'-6"	4	17	5'-7"	4	16	24'-6"	4	18	1'-5"	3'-0"	4	25	1'-0"	6'-5"	1'-3"	7'-8"													4	17	2'-2"	4'-4"	7
8	1'-0"	11"	4'-0"				6	5	1'-6"	4	17	6'-7"	4	18	24'-6"	4	18	1'-5"	3'-6"	4	25	1'-0"	7'-5"	1'-6"	8'-11"													4	17	2'-6"	4'-8"	8
9	1'-2"	11"	4'-6"				6	6	1'-6"	4	17	7'-7"	4	20	24'-6"	4	19	1'-4"	4'-0"	4	28	11"	8'-5"	1'-8"	10'-1"													4	17	2'-10"	5'-0"	9
10	1'-3"	11"	5'-2"				6	7	1'-6"	4	17	8'-7"	4	22	24'-6"	4	28	11"	4'-8"	4	28	11"	9'-5"	1'-9"	11'-2"													4	17	3'-5"	5'-7"	10
11	1'-6"	11"	5'-11"				6	7	1'-6"	4	17	9'-7"	4	24	24'-6"	4	43	7"	5'-5"	4	30	10"	10'-5"	2'-1"	12'-6"													4	17	3'-11"	6'-1"	11
12	1'-9"	1'-0"	6'-9"				6	8	1'-6"	4	17	10'-6"	4	26	24'-6"	4	38	8"	6'-3"	4	38	8"	11'-5"	2'-4"	13'-9"													4	17	4'-6"	6'-8"	12
13	2'-0"	1'-0"	7'-8"				6	9	1'-6"	4	17	11'-6"	4	28	24'-6"	4	50	6"	7'-2"	4	38	8"	12'-5"	2'-9"	15'-2"													4	17	5'-2"	7'-4"	13
14	2'-3"	1'-0"	8'-8"				6	9	1'-6"	4	17	12'-6"	4	30	24'-6"	4	60	5"	8'-2"	4	50	6"	13'-5"	3'-1"	16'-6"													4	17	5'-11"	8'-1"	14
15	2'-6"	1'-0"	9'-7"	5	19	13'-6"	6	10	1'-6"	4	17	13'-6"	4	34	24'-6"	5	50	6"	9'-1"	5	19	1'-4"	3'-8"	3'-4"	7'-0"	5	18	1'-4"	10'-9"	3'-4"	14'-1"											4	17	6'-7"	8'-9"	15
16	2'-10"	1'-0"	10'-8"	5	17	14'-6"	6	10	1'-6"	4	17	14'-6"	4	38	24'-6"	6	43	7"	10'-2"	5	17	1'-6"	2'-10"	3'-8"	6'-6"	5	16	1'-6"	5'-2"	3'-8"	8'-10"	5	16	1'-6"	14'-9"	3'-8"	18'-5"	4	17	7'-4"	9'-6"	16
17	3'-1"	1'-2"	11'-11"	5	19	15'-4"	6	11	1'-6"	4	17	15'-4"	4	40	24'-6"	6	43	7"	11'-5"	5	19	1'-4"	3'-0"	4'-0"	7'-0"	5	18	1'-4"	5'-8"	4'-0"	9'-8"	5	18	1'-4"	13'-11"	4'-0"	17'-11"	4	17	8'-4"	10'-6"	17
18	3'-6"	1'-2"	12'-9"	5	17	16'-4"	6	12	1'-6"	4	17	16'-4"	4	42	24'-6"	6	50	6"	12'-3"	6	17	1'-6"	4'-4"	4'-5"	8'-9"	6	16	1'-6"	5'-11"	4'-5"	10'-4"	6	16	1'-6"	14'-11"	4'-5"	19'-4"	4	17	8'-9"	10'-11"	18
19	3'-10"	1'-2"	14'-0"	5	19	17'-4"	6	12	1'-6"	4	17	17'-4"	4	44	24'-6"	6	60	5"	13'-6"	6	19	1'-4"	3'-5"	4'-10"	8'-3"	6	18	1'-4"	6'-4"	4'-10"	11'-2"	6	18	1'-4"	15'-4"	4'-10"	20'-2"	4	17	9'-8"	11'-10"	19
20	4'-2"	1'-2"	15'-0"	6	17	18'-4"	6	13	1'-6"	4	17	18'-4"	4	46	24'-6"	7	43	7"	14'-6"	7	17	1'-6"	3'-5"	5'-2"	8'-7"	6	16	1'-6"	6'-4"	5'-2"	11'-6"	6	16	1'-6"	16'-4"	5'-2"	21'-6"	4	17	10'-4"	12'-6"	20

QUANTITIES

H	CONCRETE / 25' UNIT	STEEL / 25' UNIT	CONCRETE PER LIN.FT.	STEEL PER LIN.FT.
	CY.	LBS.	CY.	LBS.
6	6.52	478	0.26	19
7	7.73	549	0.31	21
8	9.04	624	0.36	24
9	10.38	723	0.42	28
10	11.89	832	0.48	33
11	13.50	995	0.54	39
12	15.64	1150	0.63	46
13	19.37	1316	0.77	52
14	21.50	1628	0.86	65
15	23.59	1975	0.94	79
16	25.86	2402	1.03	96
17	29.94	2670	1.20	106
18	32.16	3169	1.29	126
19	34.86	3721	1.39	148
20	37.32	3966	1.49	158

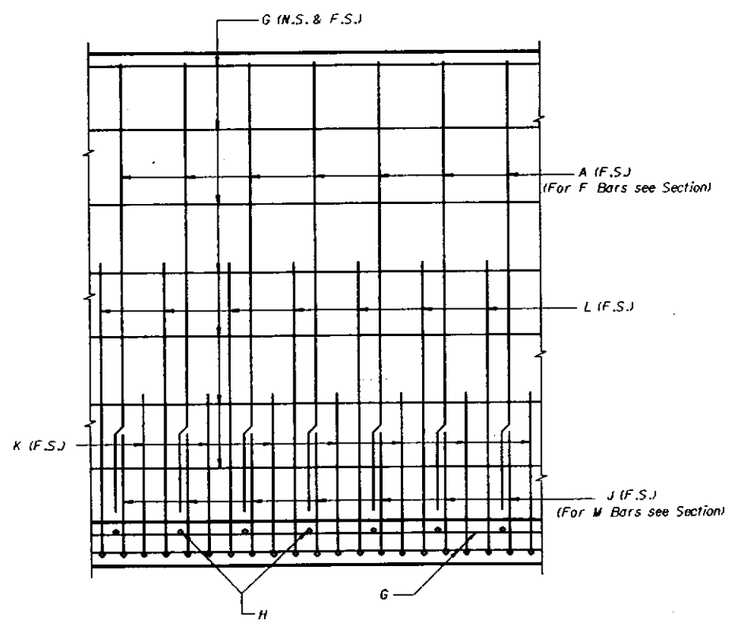

VIEW A-A

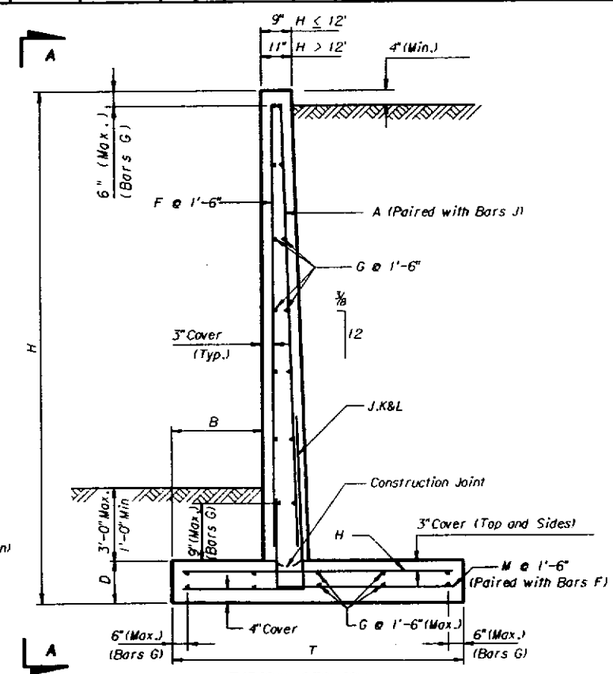

TYPICAL SECTION

NOTE:
To accommodate the Variable Height of a wall Unit, vertical Bars may be field cut to fit and the number of horizontal Bars G required by the highest wall dimension within a 25' Unit shall be equally spaced at each end of the Unit.

BENDING DIAGRAM

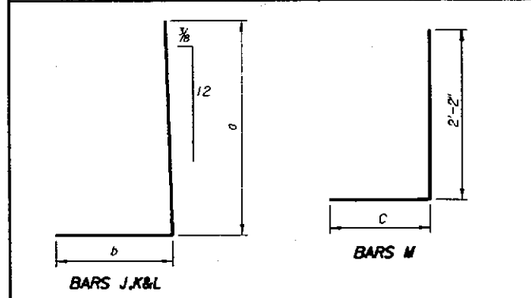

NOTE: All bar dimensions are out to out.

NOTE: Bars M are paired with Bars F and Bars A are paired with Bars J. Bars F and M are No. 4 Bars. Bars J are as shown.

* NOTE: For placement details for Bars D see Standard Index No. 800.

Note: Work this Drawing with Standard Index No. 800.

REVISIONS					
Date	By	Description	Date	By	Description
			92		

	Names	Dates
Drawn by	M.J.	3/87
Checked by	M.P.	3/87
Designed by	C.W.	6/85
Checked by	R.N.	6/85
Approved by	A.G.M.	

ENGINEER OF RECORD:
STRUCTURES DESIGN OFFICE
CENTRAL OFFICE
605 Suwannee Street, MS 33
Tallahassee, Florida 32399-0450

LOGO:

SEAL:

FLORIDA DEPARTMENT OF TRANSPORTATION
STRUCTURES DESIGN OFFICE

ROAD NO.	COUNTY	PROJECT NO.

SHEET TITLE:
CASE I (2.0 KIPS/SQ.FT. MAX. BEARING PRESSURE)
6 FT. TO 20 FT. HEIGHT

PROJECT NAME:

Drawing No. 1 of 1

Index No. 801

ST1:(120.230)801.DGN
Mon Nov 9 13:00:14 1992

FED. ROAD DIV. NO.	STATE	PROJECT NO.	FISCAL YEAR	SHEET NO.
3	FLA.			

RETAINING WALL DATA

WALL DIMENSIONS / REINFORCING STEEL SCHEDULE

H	B	D	T	BARS A SIZE	BARS A NO.	BARS A LENGTH	BARS D* SIZE	BARS D* NO.	BARS D* LENGTH	BARS F SIZE	BARS F NO.	BARS F LENGTH	BARS G SIZE	BARS G NO.	BARS G LENGTH
6	8"	11"	3'-1"				6	4	1'-6"	4	17	4'-7"	4	14	24'-6"
7	10"	11"	3'-6"				6	5	1'-6"	4	17	5'-7"	4	16	24'-6"
8	1'-0"	11"	4'-0"				6	5	1'-6"	4	17	6'-7"	4	18	24'-6"
9	1'-2"	11"	4'-6"				6	6	1'-6"	4	17	7'-7"	4	20	24'-6"
10	1'-3"	11"	4'-11"				6	7	1'-6"	4	17	8'-7"	4	22	24'-6"
11	1'-4"	11"	5'-6"				6	7	1'-6"	4	17	9'-7"	4	24	24'-6"
12	1'-6"	1'-0"	5'-11"				6	8	1'-6"	4	17	10'-6"	4	26	24'-6"
13	1'-7"	1'-0"	6'-3"				6	9	1'-6"	4	17	11'-6"	4	28	24'-6"
14	1'-9"	1'-0"	6'-10"				6	9	1'-6"	4	17	12'-6"	4	30	24'-6"
15	1'-10"	1'-0"	7'-4"	5	19	13'-6"	6	10	1'-6"	4	17	13'-6"	4	32	24'-6"
16	2'-1"	1'-0"	8'-2"	5	17	14'-6"	6	10	1'-6"	4	17	14'-6"	4	32	24'-6"
17	2'-3"	1'-2"	9'-0"	5	19	15'-4"	6	11	1'-6"	4	17	15'-4"	4	34	24'-6"
18	2'-7"	1'-2"	9'-8"	5	17	16'-4"	6	12	1'-6"	4	17	16'-4"	4	38	24'-6"
19	2'-9"	1'-2"	10'-7"	5	19	17'-4"	6	12	1'-6"	4	17	17'-4"	4	40	24'-6"
20	3'-1"	1'-2"	11'-5"	6	17	18'-4"	6	13	1'-6"	4	17	18'-4"	4	42	24'-6"
21	3'-4"	1'-5"	12'-4"	6	17	19'-1"	6	14	1'-6"	4	17	19'-1"	4	46	24'-6"
22	3'-7"	1'-5"	13'-9"	6	19	20'-1"	6	14	1'-6"	4	17	20'-1"	4	48	24'-6"
23	3'-10"	1'-5"	14'-2"	6	17	21'-1"	6	15	1'-6"	4	17	21'-1"	4	50	24'-6"
24	4'-2"	1'-5"	15'-0"	6	19	22'-1"	6	16	1'-6"	4	17	22'-1"	4	54	24'-6"
25	4'-5"	1'-5"	16'-4"	6	17	23'-1"	6	16	1'-6"	4	17	23'-1"	4	56	24'-6"
26	4'-11"	1'-8"	17'-1"	6	19	23'-10"	6	17	1'-6"	4	17	23'-10"	4	58	24'-6"
27	5'-3"	1'-8"	18'-0"	6	17	24'-10"	6	18	1'-6"	4	17	24'-10"	4	62	24'-6"
28	5'-7"	1'-8"	18'-9"	7	19	25'-10"	6	18	1'-6"	4	17	25'-10"	4	62	24'-6"
29	6'-0"	1'-8"	19'-6"	8	17	26'-10"	6	19	1'-6"	4	17	26'-10"	4	66	24'-6"
30	6'-5"	1'-8"	20'-3"	8	19	27'-10"	6	20	1'-6"	4	17	27'-10"	4	68	24'-6"

H	BARS H SIZE	BARS H NO.	BARS H SPACING	BARS H LENGTH	BARS J SIZE	BARS J NO.	BARS J SPACING	BARS J a	BARS J b	BARS J LENGTH
6	4	18	1'-5"	2'-7"	4	25	1'-0"	5'-5"	1'-1"	6'-6"
7	4	18	1'-5"	3'-0"	4	25	1'-0"	6'-5"	1'-3"	7'-8"
8	4	18	1'-5"	3'-6"	4	25	1'-0"	7'-5"	1'-6"	8'-11"
9	4	19	1'-4"	4'-0"	4	28	11"	8'-5"	1'-8"	10'-1"
10	4	28	11"	4'-5"	4	28	11"	9'-5"	1'-9"	11'-2"
11	4	43	7"	5'-0"	4	30	10"	10'-5"	1'-11"	12'-4"
12	4	38	8"	5'-5"	4	38	8"	11'-5"	2'-1"	13'-6"
13	4	50	6"	5'-9"	4	38	8"	12'-5"	2'-4"	14'-9"
14	4	60	5"	6'-4"	4	50	6"	13'-5"	2'-7"	16'-0"
15	5	50	6"	6'-10"	5	19	1'-4"	3'-8"	2'-8"	6'-4"
16	6	43	7"	7'-8"	5	17	1'-6"	2'-10"	2'-11"	5'-9"
17	6	43	7"	8'-6"	5	19	1'-4"	3'-0"	3'-2"	6'-2"
18	6	50	6"	9'-2"	6	17	1'-6"	4'-4"	3'-6"	7'-10"
19	7	43	7"	10'-1"	6	19	1'-4"	3'-5"	3'-9"	7'-2"
20	7	50	6"	10'-11"	7	17	1'-6"	3'-5"	4'-1"	7'-6"
21	7	43	7"	11'-10"	7	17	1'-6"	5'-2"	4'-4"	9'-6"
22	7	50	6"	13'-3"	7	19	1'-4"	4'-7"	4'-8"	9'-3"
23	8	43	7"	13'-8"	8	17	1'-6"	5'-10"	4'-11"	10'-9"
24	8	50	6"	14'-6"	8	19	1'-4"	5'-10"	5'-3"	11'-1"
25	9	50	6"	15'-10"	9	17	1'-6"	6'-11"	5'-7"	12'-6"
26	9	43	7"	16'-7"	9	19	1'-4"	7'-5"	6'-1"	13'-6"
27	9	43	7"	17'-6"	10	17	1'-6"	7'-11"	6'-6"	14'-5"
28	9	50	6"	18'-3"	10	19	1'-4"	8'-5"	6'-10"	15'-3"
29	9	60	5"	19'-0"	11	17	1'-6"	8'-11"	7'-3"	16'-2"
30	10	43	7"	19'-9"	11	19	1'-4"	9'-5"	7'-9"	17'-2"

H	BARS K SIZE	BARS K NO.	BARS K SPACING	BARS K a	BARS K b	BARS K LENGTH	BARS L SIZE	BARS L NO.	BARS L SPACING	BARS L a	BARS L b	BARS L LENGTH
6												
7												
8												
9												
10												
11												
12												
13												
14												
15	5	18	1'-4"	10'-9"	2'-8"	13'-5"						
16	5	16	1'-6"	5'-2"	2'-11"	8'-1"	5	16	1'-6"	14'-9"	2'-11"	17'-8"
17	5	18	1'-4"	5'-8"	3'-2"	8'-10"	5	18	1'-4"	13'-11"	3'-2"	17'-1"
18	6	16	1'-6"	5'-11"	3'-6"	9'-5"	6	16	1'-6"	14'-11"	3'-6"	18'-5"
19	6	18	1'-4"	6'-4"	3'-9"	10'-1"	6	18	1'-4"	15'-4"	3'-9"	19'-1"
20	7	16	1'-6"	6'-4"	4'-1"	10'-5"	7	16	1'-6"	16'-4"	4'-1"	20'-5"
21	7	16	1'-6"	7'-2"	4'-4"	11'-6"	7	16	1'-6"	17'-2"	4'-4"	15'-6"
22	7	18	1'-4"	8'-2"	4'-8"	12'-10"	7	18	1'-4"	12'-2"	4'-8"	16'-10"
23	8	16	1'-6"	8'-10"	4'-11"	13'-9"	8	16	1'-6"	13'-2"	4'-11"	18'-1"
24	8	18	1'-4"	9'-10"	5'-3"	15'-1"	8	18	1'-4"	14'-2"	5'-3"	19'-5"
25	9	16	1'-6"	10'-6"	5'-7"	16'-1"	9	16	1'-6"	17'-6"	5'-7"	23'-1"
26	9	18	1'-4"	11'-4"	6'-1"	17'-5"	9	18	1'-4"	18'-3"	6'-1"	24'-4"
27	10	16	1'-6"	11'-9"	6'-6"	18'-3"	10	16	1'-6"	18'-9"	6'-6"	25'-3"
28	10	18	1'-4"	12'-3"	6'-10"	19'-1"	10	18	1'-4"	19'-9"	6'-10"	26'-7"
29	11	16	1'-6"	12'-9"	7'-3"	20'-0"	11	16	1'-6"	20'-9"	7'-3"	28'-0"
30	11	18	1'-4"	13'-0"	7'-9"	20'-9"	11	18	1'-4"	21'-9"	7'-9"	29'-6"

H	BARS M SIZE	BARS M NO.	BARS M C	BARS M LENGTH	H
6	4	17	1'-11"	4'-1"	6
7	4	17	2'-2"	4'-4"	7
8	4	17	2'-6"	4'-8"	8
9	4	17	2'-10"	5'-0"	9
10	4	17	3'-2"	5'-4"	10
11	4	17	3'-8"	5'-10"	11
12	4	17	3'-11"	6'-1"	12
13	4	17	4'-2"	6'-4"	13
14	4	17	4'-7"	6'-9"	14
15	4	17	5'-0"	7'-2"	15
16	4	17	5'-7"	7'-9"	16
17	4	17	6'-3"	8'-5"	17
18	4	17	6'-7"	8'-9"	18
19	4	17	7'-4"	9'-6"	19
20	4	17	7'-10"	10'-0"	20
21	4	17	8'-6"	10'-8"	21
22	4	17	9'-8"	11'-10"	22
23	4	17	9'-10"	12'-0"	23
24	4	17	10'-4"	12'-6"	24
25	4	17	11'-5"	13'-7"	25
26	4	17	11'-8"	13'-10"	26
27	4	17	12'-3"	14'-5"	27
28	4	17	12'-8"	14'-10"	28
29	4	17	13'-0"	15'-2"	29
30	4	17	13'-4"	15'-6"	30

QUANTITIES

H	CONCRETE / 25' UNIT C.Y.	STEEL / 25' UNIT LBS.	CONCRETE PER LIN.FT. C.Y.	STEEL PER LIN.FT. LBS.
6	6.52	476	0.26	19
7	7.73	549	0.31	21
8	9.04	624	0.36	24
9	10.38	723	0.42	28
10	11.67	825	0.47	33
11	13.14	974	0.53	38
12	14.87	1112	0.59	44
13	18.06	1247	0.72	49
14	19.81	1518	0.79	60
15	21.51	1782	0.86	71
16	23.55	2082	0.94	83
17	26.79	2312	1.07	92
18	28.83	2780	1.15	111
19	31.17	3209	1.25	128
20	33.45	3891	1.34	155
21	38.35	3862	1.53	154
22	41.64	4557	1.67	182
23	43.64	5183	1.75	207
24	46.22	6082	1.85	243
25	49.49	7503	1.98	300
26	55.58	7952	2.22	318
27	58.56	8743	2.34	349
28	61.32	10406	2.45	416
29	64.10	12234	2.56	489
30	66.91	13254	2.68	530

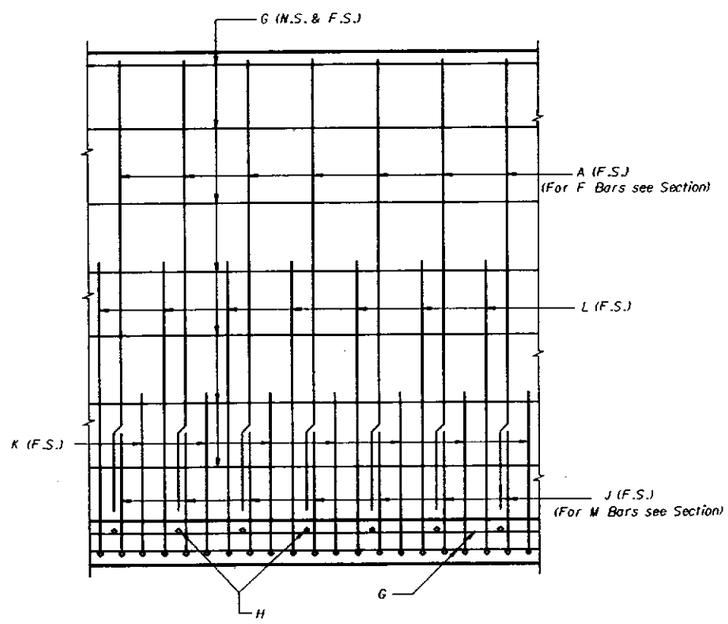

VIEW A-A

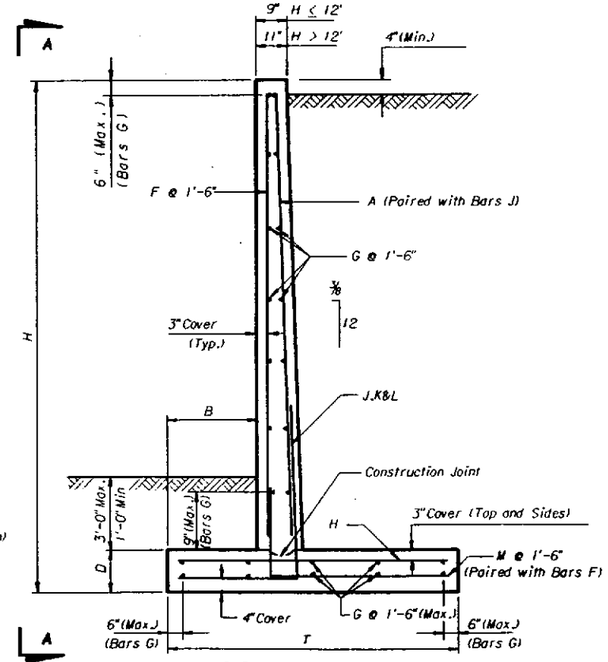

TYPICAL SECTION

NOTE:
To accommodate the Variable Height of a wall Unit, vertical Bars may be field cut to fit and the number of horizontal Bars G required by the highest wall dimension within a 25' Unit shall be equally spaced at each end of the Unit.

BENDING DIAGRAM

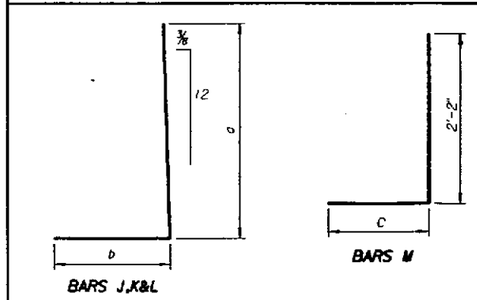

NOTE: All bar dimensions are out to out.

NOTE: Bars M are paired with Bars F and Bars A are paired with Bars J. Bars F and M are No. 4 Bars. Bars J are as shown.

* NOTE: For placement details for Bars D see Standard Index No. 800.

Note: Work this Drawing with Standard Index No. 800.

REVISIONS					
Date	By	Description	Date	By	Description
			92		

	Names	Dates
Drawn by	M.I.	3/87
Checked by	M.P.	3/87
Designed by		
Checked by		
Approved by	A.G.M.	

ENGINEER OF RECORD:
STRUCTURES DESIGN OFFICE
CENTRAL OFFICE
605 Suwannee Street, MS 33
Tallahassee, Florida 32399-0450

LOGO:

SEAL:

FLORIDA DEPARTMENT OF TRANSPORTATION
STRUCTURES DESIGN OFFICE

ROAD NO.	COUNTY	PROJECT NO.

SHEET TITLE:
CASE I (3.0 KIPS/SQ. FT. MAX. BEARING PRESSURE)
6 FT. TO 30 FT. HEIGHT

PROJECT NAME:

Drawing No. 1 of 1

Index No. 802

Mon Nov 9 13:02:17 1992 ST:s(120.2303802.DGN

FED. ROAD DIV. NO.	STATE	PROJECT NO.	FISCAL YEAR	SHEET NO.
3	FLA.			

RETAINING WALL DATA

WALL DIMENSIONS / REINFORCING STEEL SCHEDULE

H	B	D	T	BARS A SIZE	BARS A NO.	BARS A LENGTH	BARS D* SIZE	BARS D* NO.	BARS D* LENGTH	BARS F SIZE	BARS F NO.	BARS F LENGTH	BARS G SIZE	BARS G NO.	BARS G LENGTH	BARS H SIZE	BARS H NO.	BARS H SPACING	BARS H LENGTH
6	8"	11"	3'-1"				6	4	1'-6"	4	17	4'-7"	4	14	24'-6"	4	18	1'-5"	2'-7"
7	10"	11"	3'-6"				6	5	1'-6"	4	17	5'-7"	4	16	24'-6"	4	18	1'-5"	3'-0"
8	1'-0"	11"	4'-0"				6	5	1'-6"	4	17	6'-7"	4	18	24'-6"	4	18	1'-5"	3'-6"
9	1'-2"	11"	4'-6"				6	6	1'-6"	4	17	7'-7"	4	20	24'-6"	4	19	1'-4"	4'-0"
10	1'-3"	11"	4'-11"				6	7	1'-6"	4	17	8'-7"	4	22	24'-6"	4	28	11"	4'-5"
11	1'-4"	11"	5'-6"				6	7	1'-6"	4	17	9'-7"	4	24	24'-6"	4	43	7"	5'-0"
12	1'-6"	1'-0"	5'-11"				6	8	1'-6"	4	17	10'-6"	4	26	24'-6"	4	38	8"	5'-5"
13	1'-7"	1'-0"	6'-3"				6	9	1'-6"	4	17	11'-6"	4	28	24'-6"	4	50	6"	5'-9"
14	1'-9"	1'-0"	6'-10"				6	9	1'-6"	4	17	12'-6"	4	30	24'-6"	4	60	5"	6'-4"
15	1'-10"	1'-0"	7'-4"	5	19	13'-6"	6	10	1'-6"	4	17	13'-6"	4	32	24'-6"	5	50	6"	6'-10"
16	2'-0"	1'-0"	7'-8"	5	17	14'-6"	6	10	1'-6"	4	17	14'-6"	4	32	24'-6"	6	43	7"	7'-2"
17	2'-0"	1'-2"	8'-2"	5	19	15'-4"	6	11	1'-6"	4	17	15'-4"	4	36	24'-6"	6	43	7"	7'-8"
18	2'-3"	1'-2"	8'-9"	5	17	16'-4"	6	12	1'-6"	4	17	16'-4"	4	38	24'-6"	6	50	6"	8'-3"
19	2'-4"	1'-2"	9'-2"	5	19	17'-4"	6	12	1'-6"	4	17	17'-4"	4	38	24'-6"	7	43	7"	8'-8"
20	2'-6"	1'-2"	9'-8"	6	17	18'-4"	6	13	1'-6"	4	17	18'-4"	4	42	24'-6"	7	43	7"	9'-2"
21	2'-8"	1'-5"	10'-4"	6	17	19'-1"	6	14	1'-6"	4	17	19'-1"	4	44	24'-6"	7	43	7"	9'-10"
22	2'-11"	1'-5"	11'-0"	6	19	20'-1"	6	14	1'-6"	4	17	20'-1"	4	44	24'-6"	7	50	6"	10'-6"
23	3'-1"	1'-5"	11'-10"	6	17	21'-1"	6	15	1'-6"	4	17	21'-1"	4	48	24'-6"	8	50	6"	11'-4"
24	3'-5"	1'-5"	12'-7"	6	19	22'-1"	6	16	1'-6"	4	17	22'-1"	4	50	24'-6"	8	50	6"	12'-1"
25	3'-7"	1'-5"	13'-6"	6	17	23'-1"	6	16	1'-6"	4	17	23'-1"	4	52	24'-6"	9	50	6"	13'-0"
26	4'-0"	1'-8"	14'-2"	6	19	23'-10"	6	17	1'-6"	4	17	23'-10"	4	54	24'-6"	9	43	7"	13'-8"
27	4'-3"	1'-8"	15'-0"	6	17	24'-10"	6	18	1'-6"	4	17	24'-10"	4	58	24'-6"	9	50	6"	14'-6"
28	4'-7"	1'-8"	15'-9"	7	19	25'-10"	6	18	1'-6"	4	17	25'-10"	4	58	24'-6"	9	50	6"	15'-3"
29	4'-11"	1'-8"	16'-5"	8	17	26'-10"	6	19	1'-6"	4	17	26'-10"	4	62	24'-6"	9	60	5"	15'-11"
30	5'-4"	1'-8"	17'-2"	8	19	27'-10"	6	20	1'-6"	4	17	27'-10"	4	64	24'-6"	10	50	6"	16'-8"

H	BARS J SIZE	BARS J NO.	BARS J SPACING	BARS J a	BARS J b	BARS J LENGTH	BARS K SIZE	BARS K NO.	BARS K SPACING	BARS K a	BARS K b	BARS K LENGTH	BARS L SIZE	BARS L NO.	BARS L SPACING	BARS L a	BARS L b	BARS L LENGTH	BARS M SIZE	BARS M NO.	BARS M C	BARS M LENGTH	H
6	4	25	1'-0"	5'-5"	1'-1"	6'-6"													4	17	1'-11"	4'-1"	6
7	4	25	1'-0"	6'-5"	1'-3"	7'-8"													4	17	2'-2"	4'-4"	7
8	4	25	1'-0"	7'-5"	1'-6"	8'-11"													4	17	2'-6"	4'-8"	8
9	4	28	11"	8'-5"	1'-8"	10'-1"													4	17	2'-10"	5'-0"	9
10	4	28	11"	9'-5"	1'-9"	11'-2"													4	17	3'-2"	5'-4"	10
11	4	30	10"	10'-5"	1'-11"	12'-4"													4	17	3'-8"	5'-10"	11
12	4	38	8"	11'-5"	2'-1"	13'-6"													4	17	3'-11"	6'-1"	12
13	4	38	8"	12'-5"	2'-4"	14'-9"													4	17	4'-2"	6'-4"	13
14	4	50	6"	13'-5"	2'-7"	16'-0"													4	17	4'-7"	6'-9"	14
15	5	19	1'-4"	3'-8"	2'-8"	6'-4"	5	18	1'-4"	10'-9"	2'-7"	13'-4"							4	17	5'-0"	7'-2"	15
16	5	17	1'-6"	2'-10"	3'-0"	5'-10"	5	16	1'-6"	5'-2"	2'-10"	8'-0"	5	16	1'-6"	14'-9"	2'-10"	17'-7"	4	17	5'-2"	7'-4"	16
17	5	19	1'-4"	3'-0"	2'-11"	5'-11"	5	18	1'-4"	5'-8"	2'-11"	8'-7"	5	18	1'-4"	13'-11"	2'-11"	16'-10"	4	17	5'-8"	7'-10"	17
18	6	17	1'-6"	4'-4"	3'-2"	7'-6"	6	16	1'-6"	5'-11"	3'-2"	9'-1"	6	16	1'-6"	14'-11"	3'-2"	18'-1"	4	17	6'-0"	8'-2"	18
19	6	19	1'-4"	3'-5"	3'-4"	6'-9"	6	18	1'-4"	6'-4"	3'-4"	9'-8"	6	18	1'-4"	15'-4"	3'-4"	18'-8"	4	17	6'-4"	8'-6"	19
20	7	17	1'-6"	3'-5"	3'-6"	6'-11"	7	16	1'-6"	6'-4"	3'-6"	9'-10"	7	16	1'-6"	16'-4"	3'-6"	19'-10"	4	17	6'-8"	8'-10"	20
21	7	17	1'-6"	5'-2"	3'-8"	8'-10"	7	16	1'-6"	7'-2"	3'-8"	10'-10"	7	16	1'-6"	11'-2"	3'-8"	14'-10"	4	17	7'-2"	9'-4"	21
22	7	19	1'-4"	4'-7"	4'-0"	8'-7"	7	18	1'-4"	8'-2"	4'-0"	12'-2"	7	18	1'-4"	12'-2"	4'-0"	16'-2"	4	17	7'-7"	9'-9"	22
23	8	17	1'-6"	5'-10"	4'-2"	10'-0"	8	16	1'-6"	8'-10"	4'-2"	13'-0"	8	16	1'-6"	13'-2"	4'-2"	17'-4"	4	17	8'-3"	10'-5"	23
24	8	19	1'-4"	5'-10"	4'-6"	10'-4"	8	18	1'-4"	9'-10"	4'-6"	14'-4"	8	18	1'-4"	14'-2"	4'-6"	18'-8"	4	17	8'-8"	10'-10"	24
25	9	17	1'-6"	6'-11"	4'-9"	11'-8"	9	16	1'-6"	10'-6"	4'-9"	15'-3"	9	16	1'-6"	17'-6"	4'-9"	22'-3"	4	17	9'-5"	11'-7"	25
26	9	19	1'-4"	7'-5"	5'-2"	12'-7"	9	18	1'-4"	11'-4"	5'-2"	16'-6"	9	18	1'-4"	18'-3"	5'-2"	23'-5"	4	17	9'-8"	11'-10"	26
27	10	17	1'-6"	7'-11"	5'-6"	13'-5"	10	16	1'-6"	11'-9"	5'-6"	17'-3"	10	16	1'-6"	18'-9"	5'-6"	24'-3"	4	17	10'-3"	12'-5"	27
28	10	19	1'-4"	8'-5"	5'-10"	14'-3"	10	18	1'-4"	12'-3"	5'-10"	18'-1"	10	18	1'-4"	19'-9"	5'-10"	25'-7"	4	17	10'-8"	12'-10"	28
29	11	17	1'-6"	8'-11"	6'-2"	15'-1"	11	16	1'-6"	12'-9"	6'-2"	18'-11"	11	16	1'-6"	20'-9"	6'-2"	26'-11"	4	17	11'-0"	13'-2"	29
30	11	19	1'-4"	9'-5"	6'-8"	16'-1"	11	18	1'-4"	13'-0"	6'-8"	19'-8"	11	18	1'-4"	21'-9"	6'-8"	28'-5"	4	17	11'-4"	13'-6"	30

QUANTITIES

H	CONCRETE / 25' UNIT C.Y.	STEEL / 25' UNIT LBS.	CONCRETE PER LIN.FT C.Y.	STEEL PER LIN.FT. LBS.
6	6.52	476	0.26	19
7	7.73	549	0.31	21
8	9.04	624	0.36	24
9	10.38	723	0.42	28
10	11.67	825	0.47	33
11	13.14	974	0.53	38
12	14.87	1112	0.59	44
13	18.06	1247	0.72	49
14	19.81	1518	0.79	60
15	21.51	1780	0.86	71
16	23.09	2044	0.92	81
17	25.89	2270	1.04	90
18	27.84	2680	1.11	107
19	29.64	3006	1.19	120
20	31.56	3509	1.26	140
21	35.72	3572	1.43	142
22	38.03	4112	1.52	164
23	40.58	4978	1.62	199
24	43.05	5581	1.72	223
25	45.77	6794	1.83	271
26	51.08	7266	2.04	290
27	53.94	8350	2.16	334
28	56.69	9571	2.27	382
29	59.34	11235	2.37	449
30	62.15	12781	2.49	511

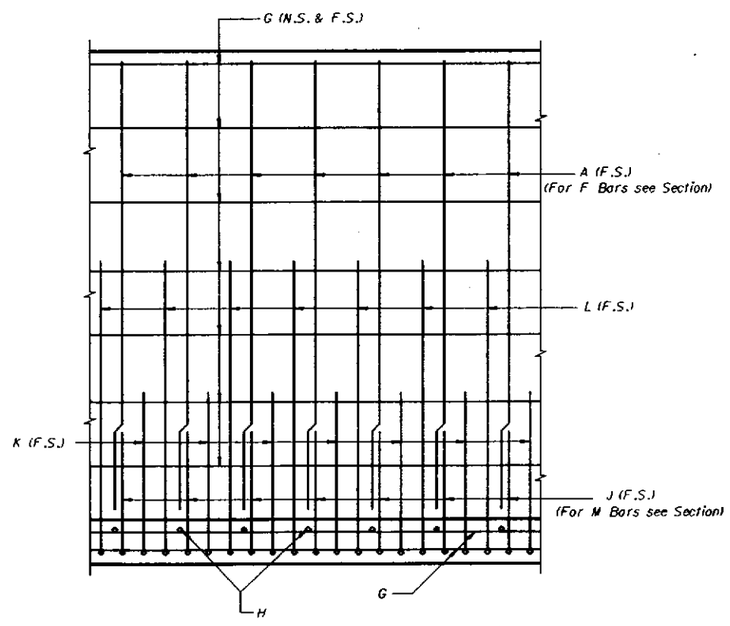

VIEW A-A

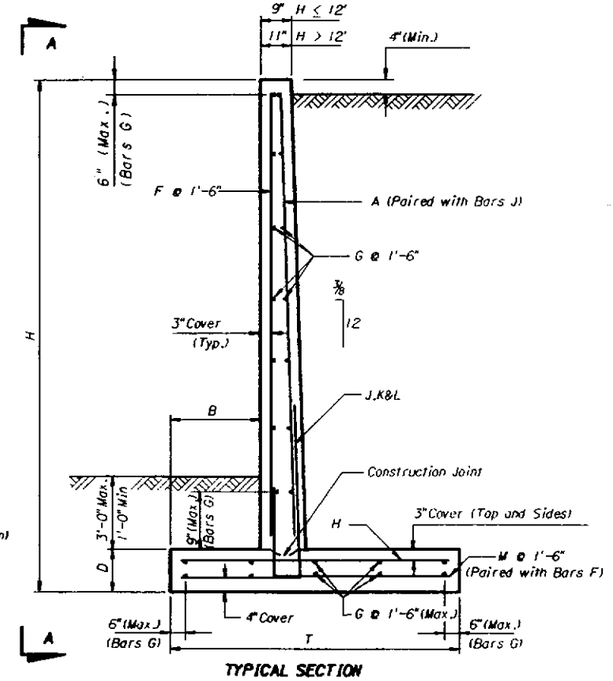

TYPICAL SECTION

NOTE:
To accommodate the Variable Height of a wall Unit, vertical Bars may be field cut to fit and the number of horizontal Bars G required by the highest wall dimension within a 25' Unit shall be equally spaced at each end of the Unit.

BENDING DIAGRAM

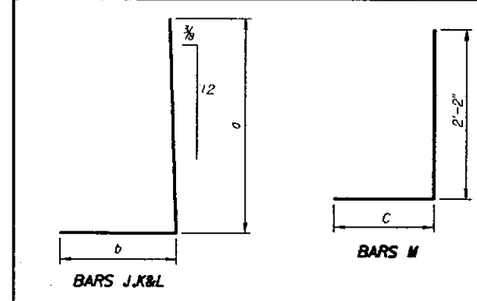

NOTE: All bar dimensions are out to out.

NOTE: Bars M are paired with Bars F and Bars A are paired with Bars J. Bars F and M are No. 4 Bars. Bars J are as shown.

* NOTE: For placement details for Bars D see Standard Index No. 800.

Note: Work this Drawing with Standard Index No. 800.

REVISIONS					
Date	By	Description	Date	By	Description
			92		

	Names	Dates
Drawn by	M.J.	3/87
Checked by	M.P.	3/87
Designed by		
Checked by		
Approved by	A.G.M.	

ENGINEER OF RECORD:
STRUCTURES DESIGN OFFICE
CENTRAL OFFICE
605 Suwannee Street, MS 33
Tallahassee, Florida 32399-0450

LOGO:

SEAL:

FLORIDA DEPARTMENT OF TRANSPORTATION
STRUCTURES DESIGN OFFICE

ROAD NO.	COUNTY	PROJECT NO.

SHEET TITLE: CASE I (4.0 KIPS/SQ. FT. MAX. BEARING PRESSURE) 6 FT. TO 30 FT. HEIGHT

PROJECT NAME:

Drawing No. 1 of 1

Index No. 803

STI4120.R301803.DGN

Mon Nov 9 13:04:20 1992

FED. ROAD DIV. NO.	STATE	PROJECT NO.	FISCAL YEAR	SHEET NO.
3	FLA.			

RETAINING WALL DATA

WALL DIMENSIONS / REINFORCING STEEL SCHEDULE

H	B	D	T	BARS A SIZE	BARS A NO.	BARS A LENGTH	BARS D* SIZE	BARS D* NO.	BARS D* LENGTH	BARS F SIZE	BARS F NO.	BARS F LENGTH	BARS G SIZE	BARS G NO.	BARS G LENGTH
6	8"	11"	3'-1"				6	4	1'-6"	4	17	4'-7"	4	14	24'-6"
7	10"	11"	3'-6"				6	5	1'-6"	4	17	5'-7"	4	16	24'-6"
8	1'-0"	11"	4'-0"				6	5	1'-6"	4	17	6'-7"	4	18	24'-6"
9	1'-2"	11"	4'-6"				6	6	1'-6"	4	17	7'-7"	4	20	24'-6"
10	1'-3"	11"	4'-11"				6	7	1'-6"	4	17	8'-7"	4	22	24'-6"
11	1'-4"	11"	5'-6"				6	7	1'-6"	4	17	9'-7"	4	24	24'-6"
12	1'-6"	1'-0"	5'-11"				6	8	1'-6"	4	17	10'-6"	4	26	24'-6"
13	1'-7"	1'-0"	6'-3"				6	9	1'-6"	4	17	11'-6"	4	28	24'-6"
14	1'-9"	1'-0"	6'-10"				6	9	1'-6"	4	17	12'-6"	4	30	24'-6"
15	1'-10"	1'-0"	7'-4"	5	19	13'-6"	6	10	1'-6"	4	17	13'-6"	4	32	24'-6"
16	2'-0"	1'-0"	7'-8"	5	17	14'-6"	6	10	1'-6"	4	17	14'-6"	4	32	24'-6"
17	2'-0"	1'-2"	8'-2"	5	19	15'-4"	6	11	1'-6"	4	17	15'-4"	4	36	24'-6"
18	2'-3"	1'-2"	8'-9"	5	17	16'-4"	6	12	1'-6"	4	17	16'-4"	4	38	24'-6"
19	2'-4"	1'-2"	9'-2"	5	19	17'-4"	6	12	1'-6"	4	17	17'-4"	4	38	24'-6"
20	2'-6"	1'-2"	9'-8"	6	17	18'-4"	6	13	1'-6"	4	17	18'-4"	4	42	24'-6"
21	2'-7"	1'-5"	10'-1"	6	17	19'-1"	6	14	1'-6"	4	17	19'-1"	4	44	24'-6"
22	2'-10"	1'-5"	10'-7"	6	19	20'-1"	6	14	1'-6"	4	17	20'-1"	4	44	24'-6"
23	2'-10"	1'-5"	11'-0"	6	17	21'-1"	6	15	1'-6"	4	17	21'-1"	4	46	24'-6"
24	3'-1"	1'-5"	11'-6"	6	19	22'-1"	6	16	1'-6"	4	17	22'-1"	4	50	24'-6"
25	3'-1"	1'-5"	12'-0"	6	17	23'-1"	6	16	1'-6"	4	17	23'-1"	4	50	24'-6"
26	3'-5"	1'-8"	12'-6"	6	19	23'-10"	6	17	1'-6"	4	17	23'-10"	4	52	24'-6"
27	3'-8"	1'-8"	13'-2"	6	17	24'-10"	6	18	1'-6"	4	17	24'-10"	4	56	24'-6"
28	4'-0"	1'-8"	13'-9"	7	19	25'-10"	6	18	1'-6"	4	17	25'-10"	4	56	24'-6"
29	4'-3"	1'-8"	14'-5"	8	17	26'-10"	6	19	1'-6"	4	17	26'-10"	4	60	24'-6"
30	4'-8"	1'-8"	15'-1"	8	19	27'-10"	6	20	1'-6"	4	17	27'-10"	4	62	24'-6"

H	BARS H SIZE	BARS H NO.	BARS H SPACING	BARS H LENGTH	BARS J SIZE	BARS J NO.	BARS J SPACING	BARS J a	BARS J b	BARS J LENGTH
6	4	18	1'-5"	2'-7"	4	25	1'-0"	5'-5"	1'-1"	6'-6"
7	4	18	1'-5"	3'-0"	4	25	1'-0"	6'-5"	1'-3"	7'-8"
8	4	18	1'-5"	3'-6"	4	25	1'-0"	7'-5"	1'-6"	8'-11"
9	4	19	1'-4"	4'-0"	4	28	11"	8'-5"	1'-8"	10'-1"
10	4	28	11"	4'-5"	4	28	11"	9'-5"	1'-9"	11'-2"
11	4	43	7"	5'-0"	4	30	10"	10'-5"	1'-11"	12'-4"
12	4	38	8"	5'-5"	4	38	8"	11'-5"	2'-1"	13'-6"
13	4	50	6"	5'-9"	4	38	8"	12'-5"	2'-4"	14'-9"
14	4	60	5"	6'-4"	4	50	6"	13'-5"	2'-7"	16'-0"
15	5	50	6"	6'-10"	5	19	1'-4"	3'-8"	2'-8"	6'-4"
16	6	43	7"	7'-2"	5	17	1'-6"	2'-10"	2'-10"	5'-8"
17	6	43	7"	7'-8"	5	19	1'-4"	3'-0"	2'-11"	5'-11"
18	6	50	6"	8'-3"	6	17	1'-6"	4'-4"	3'-2"	7'-6"
19	7	43	7"	8'-8"	6	19	1'-4"	3'-5"	3'-4"	6'-9"
20	7	43	7"	9'-2"	7	17	1'-6"	3'-5"	3'-6"	6'-11"
21	7	43	7"	9'-7"	7	17	1'-6"	5'-2"	3'-7"	8'-9"
22	7	50	6"	10'-1"	7	19	1'-4"	4'-7"	3'-11"	8'-6"
23	8	50	6"	10'-6"	8	17	1'-6"	5'-10"	3'-11"	9'-9"
24	8	50	6"	11'-0"	8	19	1'-4"	5'-10"	4'-2"	10'-0"
25	9	50	6"	11'-6"	9	17	1'-6"	6'-11"	4'-3"	11'-2"
26	9	43	7"	12'-0"	9	19	1'-4"	7'-5"	4'-7"	12'-0"
27	9	50	6"	12'-8"	10	17	1'-6"	7'-11"	4'-11"	12'-10"
28	9	50	6"	13'-3"	10	19	1'-4"	8'-5"	5'-3"	13'-8"
29	10	50	6"	13'-11"	11	17	1'-6"	8'-11"	5'-6"	14'-5"
30	10	50	6"	14'-7"	11	19	1'-4"	9'-5"	6'-0"	15'-5"

H	BARS K SIZE	BARS K NO.	BARS K SPACING	BARS K a	BARS K b	BARS K LENGTH	BARS L SIZE	BARS L NO.	BARS L SPACING	BARS L a	BARS L b	BARS L LENGTH
6												
7												
8												
9												
10												
11												
12												
13												
14												
15												
16	5	16	1'-6"	5'-2"	2'-10"	8'-0"	5	16	1'-6"	14'-9"	2'-10"	17'-7"
17	5	18	1'-4"	5'-8"	2'-11"	8'-7"	5	18	1'-4"	13'-11"	2'-11"	16'-10"
18	6	16	1'-6"	5'-11"	3'-2"	9'-1"	6	16	1'-6"	14'-11"	3'-2"	18'-1"
19	6	18	1'-4"	6'-4"	3'-4"	9'-8"	6	18	1'-4"	15'-4"	3'-4"	18'-8"
20	7	16	1'-6"	6'-4"	3'-6"	9'-10"	7	16	1'-6"	16'-4"	3'-6"	19'-10"
21	7	16	1'-6"	7'-2"	3'-7"	10'-9"	7	16	1'-6"	11'-2"	3'-7"	14'-9"
22	7	18	1'-4"	8'-2"	3'-11"	12'-1"	8	18	1'-4"	12'-2"	3'-11"	16'-1"
23	8	16	1'-6"	8'-10"	3'-11"	12'-9"	8	16	1'-6"	13'-2"	3'-11"	17'-1"
24	8	18	1'-4"	9'-10"	4'-2"	14'-0"	8	18	1'-4"	14'-2"	4'-2"	18'-4"
25	9	16	1'-6"	10'-6"	4'-3"	14'-9"	9	16	1'-6"	17'-6"	4'-3"	21'-9"
26	9	18	1'-4"	11'-4"	4'-7"	15'-11"	9	18	1'-4"	18'-3"	4'-7"	22'-10"
27	10	16	1'-6"	11'-9"	4'-11"	16'-8"	10	16	1'-6"	18'-9"	4'-11"	23'-8"
28	10	18	1'-4"	12'-3"	5'-3"	17'-6"	10	18	1'-4"	19'-9"	5'-3"	25'-0"
29	11	16	1'-6"	12'-9"	5'-6"	18'-3"	11	16	1'-6"	20'-9"	5'-6"	26'-3"
30	11	18	1'-4"	13'-0"	6'-0"	19'-0"	11	18	1'-4"	21'-9"	6'-0"	27'-9"

H	BARS M SIZE	BARS M NO.	BARS M C	BARS M LENGTH	H
6	4	17	1'-11"	4'-1"	6
7	4	17	2'-2"	4'-4"	7
8	4	17	2'-6"	4'-8"	8
9	4	17	2'-10"	5'-0"	9
10	4	17	3'-2"	5'-4"	10
11	4	17	3'-8"	5'-10"	11
12	4	17	3'-11"	6'-1"	12
13	4	17	4'-2"	6'-4"	13
14	4	17	4'-7"	6'-9"	14
15	4	17	5'-0"	7'-2"	15
16	4	17	5'-2"	7'-4"	16
17	4	17	5'-8"	7'-10"	17
18	4	17	6'-0"	8'-2"	18
19	4	17	6'-4"	8'-6"	19
20	4	17	6'-8"	8'-10"	20
21	4	17	7'-0"	9'-2"	21
22	4	17	7'-3"	9'-5"	22
23	4	17	7'-8"	9'-10"	23
24	4	17	7'-11"	10'-1"	24
25	4	17	8'-5"	10'-7"	25
26	4	17	8'-7"	10'-9"	26
27	4	17	9'-0"	11'-2"	27
28	4	17	9'-3"	11'-5"	28
29	4	17	9'-8"	11'-10"	29
30	4	17	9'-11"	12'-1"	30

QUANTITIES

H	CONCRETE / 25' UNIT C.Y.	STEEL / 25' UNIT LBS.	CONCRETE PER LIN.FT. C.Y.	STEEL PER LIN.FT. LBS.
6	6.52	476	0.26	19
7	7.73	549	0.31	21
8	9.04	624	0.36	24
9	10.38	723	0.42	28
10	11.67	825	0.47	33
11	13.14	977	0.53	39
12	14.87	1112	0.59	44
13	18.06	1247	0.72	49
14	19.81	1518	0.79	60
15	21.51	1780	0.86	71
16	23.09	2041	0.92	81
17	25.89	2270	1.04	90
18	27.84	2680	1.11	107
19	29.64	3006	1.19	120
20	31.56	3509	1.26	140
21	35.40	3540	1.42	141
22	37.48	4237	1.50	169
23	39.49	4794	1.58	191
24	41.63	5379	1.67	215
25	43.80	6412	1.75	256
26	48.51	6863	1.94	274
27	51.11	7868	2.04	314
28	53.60	9044	2.14	361
29	56.26	10760	2.25	430
30	58.94	12089	2.36	483

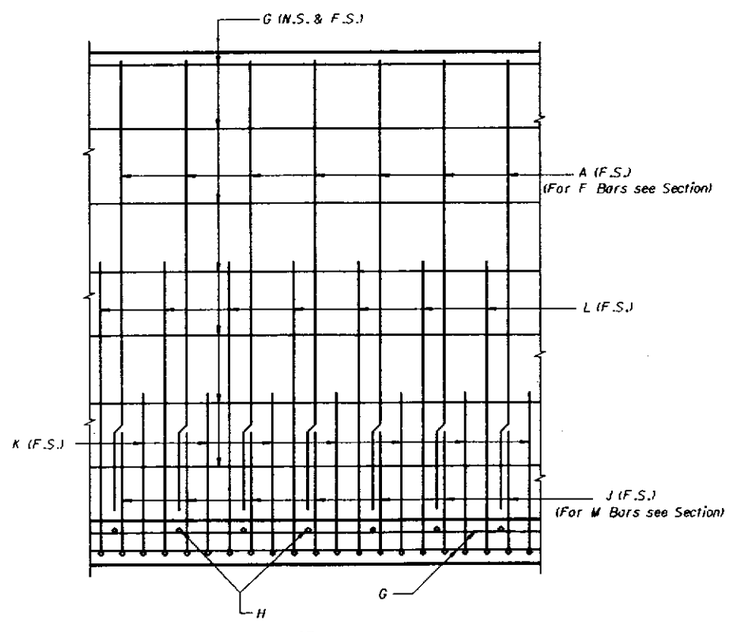

VIEW A-A

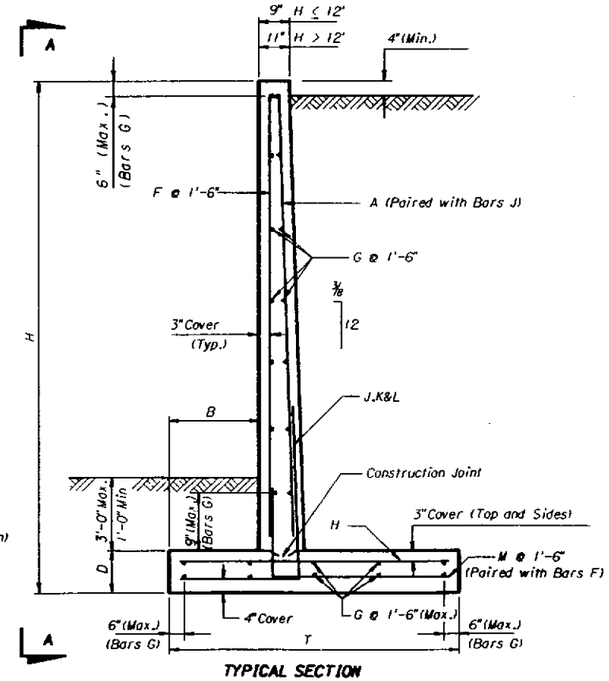

TYPICAL SECTION

NOTE:
To accommodate the Variable Height of a wall Unit, vertical Bars may be field cut to fit and the number of horizontal Bars G required by the highest wall dimension within a 25' Unit shall be equally spaced at each end of the Unit.

BENDING DIAGRAM

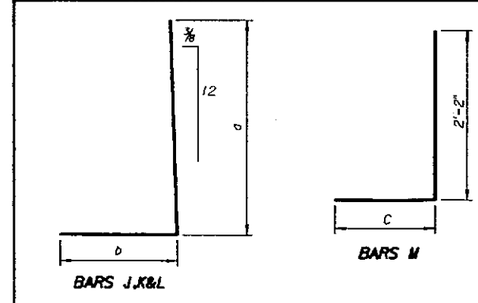

NOTE: All bar dimensions are out to out.

NOTE: Bars M are paired with Bars F and Bars A are paired with Bars J. Bars F and M are No. 4 Bars. Bars J are as shown.

* NOTE: For placement details for Bars D see Standard Index No. 800.

Note: Work this Drawing with Standard Index No. 800.

REVISIONS					
Date	By	Description	Date	By	Description
			92		

	Names	Dates
Drawn by	M.I.	3/87
Checked by	M.P.	3/87
Designed by		
Checked by		
Approved by	A.G.M.	

ENGINEER OF RECORD:
STRUCTURES DESIGN OFFICE
CENTRAL OFFICE
605 Suwannee Street, MS 33
Tallahassee, Florida 32399-0450

LOGO:

SEAL:

FLORIDA DEPARTMENT OF TRANSPORTATION
STRUCTURES DESIGN OFFICE

ROAD NO.	COUNTY	PROJECT NO.

SHEET TITLE: CASE 1 (5.0 KIPS/SQ. FT. MAX. BEARING PRESSURE) 6 FT. TO 30 FT. HEIGHT

PROJECT NAME:

Drawing No. 1 of 1

Index No. 804

Mon Nov 9 13:06:23 1992 ST:4(120,230)804.DGN

FED. ROAD DIV. NO.	STATE	PROJECT NO.	FISCAL YEAR	SHEET NO.
3	FLA.			

RETAINING WALL DATA

WALL DIMENSIONS / REINFORCING STEEL SCHEDULE

H	B	D	T	BARS A SIZE	BARS A NO.	BARS A LENGTH	BARS D* SIZE	BARS D* NO.	BARS D* LENGTH	BARS F SIZE	BARS F NO.	BARS F LENGTH	BARS G SIZE	BARS G NO.	BARS G LENGTH	BARS H SIZE	BARS H NO.	BARS H SPACING	BARS H LENGTH
6	8"	11"	3'-1"				6	4	1'-6"	4	17	4'-7"	4	14	24'-6"	4	18	1'-5"	2'-7"
7	10"	11"	3'-6"				6	5	1'-6"	4	17	5'-7"	4	16	24'-6"	4	18	1'-5"	3'-0"
8	1'-0"	11"	4'-0"				6	5	1'-6"	4	17	6'-7"	4	18	24'-6"	4	18	1'-5"	3'-6"
9	1'-2"	11"	4'-6"				6	6	1'-6"	4	17	7'-7"	4	20	24'-6"	4	19	1'-4"	4'-0"
10	1'-3"	11"	4'-11"				6	7	1'-6"	4	17	8'-7"	4	22	24'-6"	4	28	11"	4'-5"
11	1'-4"	11"	5'-6"				6	7	1'-6"	4	17	9'-7"	4	24	24'-6"	4	43	7"	5'-0"
12	1'-6"	1'-0"	5'-11"				6	8	1'-6"	4	17	10'-6"	4	26	24'-6"	4	38	8"	5'-5"
13	1'-7"	1'-0"	6'-3"				6	9	1'-6"	4	17	11'-6"	4	28	24'-6"	4	50	6"	5'-9"
14	1'-9"	1'-0"	6'-10"				6	9	1'-6"	4	17	12'-6"	4	30	24'-6"	4	60	5"	6'-4"
15	1'-10"	1'-0"	7'-4"	5	19	13'-6"	6	10	1'-6"	4	17	13'-6"	4	32	24'-6"	5	50	6"	6'-10"
16	2'-0"	1'-0"	7'-8"	5	17	14'-6"	6	10	1'-6"	4	17	14'-6"	4	32	24'-6"	6	43	7"	7'-2"
17	2'-0"	1'-2"	8'-2"	5	19	15'-4"	6	11	1'-6"	4	17	15'-4"	4	36	24'-6"	6	43	7"	7'-8"
18	2'-3"	1'-2"	8'-9"	5	17	16'-4"	6	12	1'-6"	4	17	16'-4"	4	38	24'-6"	6	50	6"	8'-3"
19	2'-4"	1'-2"	9'-2"	5	19	17'-4"	6	12	1'-6"	4	17	17'-4"	4	38	24'-6"	7	43	7"	8'-8"
20	2'-6"	1'-2"	9'-8"	6	17	18'-4"	6	13	1'-6"	4	17	18'-4"	4	42	24'-6"	7	43	7"	9'-2"
21	2'-7"	1'-5"	10'-1"	6	17	19'-1"	6	14	1'-6"	4	17	19'-1"	4	44	24'-6"	7	43	7"	9'-7"
22	2'-10"	1'-5"	10'-7"	6	19	20'-1"	6	14	1'-6"	4	17	20'-1"	4	44	24'-6"	7	50	6"	10'-1"
23	2'-10"	1'-5"	11'-0"	6	17	21'-1"	6	15	1'-6"	4	17	21'-1"	4	46	24'-6"	8	50	6"	10'-6"
24	3'-1"	1'-5"	11'-6"	6	19	22'-1"	6	16	1'-6"	4	17	22'-1"	4	50	24'-6"	8	50	6"	11'-0"
25	3'-1"	1'-5"	12'-0"	6	17	23'-1"	6	16	1'-6"	4	17	23'-1"	4	50	24'-6"	9	50	6"	11'-6"
26	3'-5"	1'-8"	12'-6"	6	19	23'-10"	6	17	1'-6"	4	17	23'-10"	4	52	24'-6"	9	43	7"	12'-0"
27	3'-7"	1'-8"	12'-11"	6	17	24'-10"	6	18	1'-6"	4	17	24'-10"	4	56	24'-6"	9	50	6"	12'-5"
28	3'-10"	1'-8"	13'-5"	7	19	25'-10"	6	18	1'-6"	4	17	25'-10"	4	56	24'-6"	9	50	6"	12'-11"
29	4'-1"	1'-8"	13'-9"	8	17	26'-10"	6	19	1'-6"	4	17	26'-10"	4	58	24'-6"	10	50	6"	13'-3"
30	4'-5"	1'-8"	14'-6"	8	19	27'-10"	6	20	1'-6"	4	17	27'-10"	4	62	24'-6"	10	50	6"	14'-0"

H	BARS J SIZE	BARS J NO.	BARS J SPACING	BARS J a	BARS J b	BARS J LENGTH	BARS K SIZE	BARS K NO.	BARS K SPACING	BARS K a	BARS K b	BARS K LENGTH	BARS L SIZE	BARS L NO.	BARS L SPACING	BARS L a	BARS L b	BARS L LENGTH	BARS M SIZE	BARS M NO.	BARS M C	BARS M LENGTH	H
6	4	26	1'-0"	5'-5"	1'-1"	6'-6"													4	17	1'-11"	4'-1"	6
7	4	26	1'-0"	6'-5"	1'-3"	7'-8"													4	17	2'-2"	4'-4"	7
8	4	26	1'-0"	7'-5"	1'-6"	8'-11"													4	17	2'-6"	4'-8"	8
9	4	28	11"	8'-5"	1'-8"	10'-1"													4	17	2'-10"	5'-0"	9
10	4	28	11"	9'-5"	1'-9"	11'-2"													4	17	3'-2"	5'-4"	10
11	4	30	10"	10'-5"	1'-11"	12'-4"													4	17	3'-8"	5'-10"	11
12	4	38	8"	11'-5"	2'-1"	13'-6"													4	17	3'-11"	6'-1"	12
13	4	38	8"	12'-5"	2'-4"	14'-9"													4	17	4'-2"	6'-4"	13
14	4	50	6"	13'-5"	2'-7"	16'-0"													4	17	4'-7"	6'-9"	14
15	5	19	1'-4"	2'-10"	2'-8"	5'-6"	5	18	1'-4"	10'-9"	2'-7"	13'-4"							4	17	5'-0"	7'-2"	15
16	5	17	1'-6"	2'-10"	2'-10"	5'-8"	5	16	1'-6"	5'-2"	2'-10"	8'-0"	5	16	1'-6"	14'-9"	2'-10"	17'-7"	4	17	5'-2"	7'-4"	16
17	5	19	1'-4"	3'-0"	2'-11"	5'-11"	5	18	1'-4"	5'-8"	2'-11"	8'-7"	5	18	1'-4"	13'-11"	2'-11"	16'-10"	4	17	5'-8"	7'-10"	17
18	6	17	1'-6"	4'-4"	3'-2"	7'-6"	6	16	1'-6"	5'-11"	3'-2"	9'-1"	6	16	1'-6"	14'-11"	3'-2"	18'-1"	4	17	6'-0"	8'-2"	18
19	6	19	1'-4"	3'-5"	3'-4"	6'-9"	6	18	1'-4"	6'-4"	3'-4"	9'-8"	6	18	1'-4"	15'-4"	3'-4"	18'-8"	4	17	6'-4"	8'-6"	19
20	7	17	1'-6"	3'-5"	3'-6"	6'-11"	7	16	1'-6"	6'-4"	3'-6"	9'-10"	7	16	1'-6"	16'-4"	3'-6"	19'-10"	4	17	6'-8"	8'-10"	20
21	7	17	1'-6"	5'-2"	3'-7"	8'-9"	7	16	1'-6"	7'-2"	3'-7"	10'-9"	7	16	1'-6"	11'-2"	3'-7"	14'-9"	4	17	7'-0"	9'-2"	21
22	7	19	1'-4"	4'-7"	3'-11"	8'-6"	7	18	1'-4"	8'-2"	3'-11"	12'-1"	7	18	1'-4"	12'-2"	3'-11"	16'-1"	4	17	7'-3"	9'-5"	22
23	8	17	1'-6"	5'-10"	3'-11"	9'-9"	8	16	1'-6"	8'-10"	3'-11"	12'-9"	8	16	1'-6"	13'-2"	3'-11"	17'-1"	4	17	7'-8"	9'-10"	23
24	8	19	1'-4"	5'-10"	4'-2"	10'-0"	8	18	1'-4"	9'-10"	4'-2"	14'-0"	8	18	1'-4"	14'-2"	4'-2"	18'-4"	4	17	7'-11"	10'-1"	24
25	9	17	1'-6"	6'-11"	4'-3"	11'-2"	9	16	1'-6"	10'-6"	4'-3"	14'-9"	9	16	1'-6"	17'-6"	4'-3"	21'-9"	4	17	8'-5"	10'-7"	25
26	9	19	1'-4"	7'-5"	4'-7"	12'-0"	9	18	1'-4"	11'-4"	4'-7"	15'-11"	9	18	1'-4"	18'-3"	4'-7"	22'-10"	4	17	8'-7"	10'-9"	26
27	10	17	1'-6"	7'-11"	4'-10"	12'-9"	10	16	1'-6"	11'-9"	4'-10"	16'-7"	10	16	1'-6"	18'-9"	4'-10"	23'-7"	4	17	8'-10"	11'-0"	27
28	10	19	1'-4"	8'-5"	5'-1"	13'-6"	10	18	1'-4"	12'-3"	5'-1"	17'-4"	10	18	1'-4"	20'-3"	5'-1"	25'-4"	4	17	9'-1"	11'-3"	28
29	11	17	1'-6"	8'-11"	5'-4"	14'-3"	11	16	1'-6"	12'-9"	5'-4"	18'-1"	11	16	1'-6"	20'-9"	5'-4"	26'-1"	4	17	9'-2"	11'-4"	29
30	11	19	1'-4"	9'-5"	5'-9"	15'-2"	11	18	1'-4"	13'-0"	5'-9"	18'-9"	11	18	1'-4"	21'-9"	5'-9"	27'-6"	4	17	9'-7"	11'-9"	30

QUANTITIES

H	CONCRETE / 25' UNIT C.Y.	STEEL / 25' UNIT LBS.	CONCRETE PER LIN.FT. C.Y.	STEEL PER LIN.FT. LBS.
6	6.52	480	0.26	19
7	7.73	554	0.31	22
8	9.04	630	0.36	25
9	10.38	723	0.42	28
10	11.67	825	0.47	33
11	13.14	974	0.53	38
12	14.87	1112	0.59	44
13	18.06	1247	0.72	49
14	19.81	1518	0.79	60
15	21.51	1780	0.86	71
16	23.09	2041	0.92	81
17	25.89	2270	1.04	90
18	27.84	2680	1.11	107
19	29.64	3006	1.19	120
20	31.56	3509	1.26	140
21	35.40	3540	1.42	141
22	37.48	4056	1.50	162
23	39.49	4794	1.58	191
24	41.63	5379	1.67	215
25	43.80	6412	1.75	256
26	48.51	6863	1.94	274
27	50.72	7806	2.03	312
28	53.09	8985	2.12	359
29	55.23	10535	2.21	421
30	58.04	11887	2.32	475

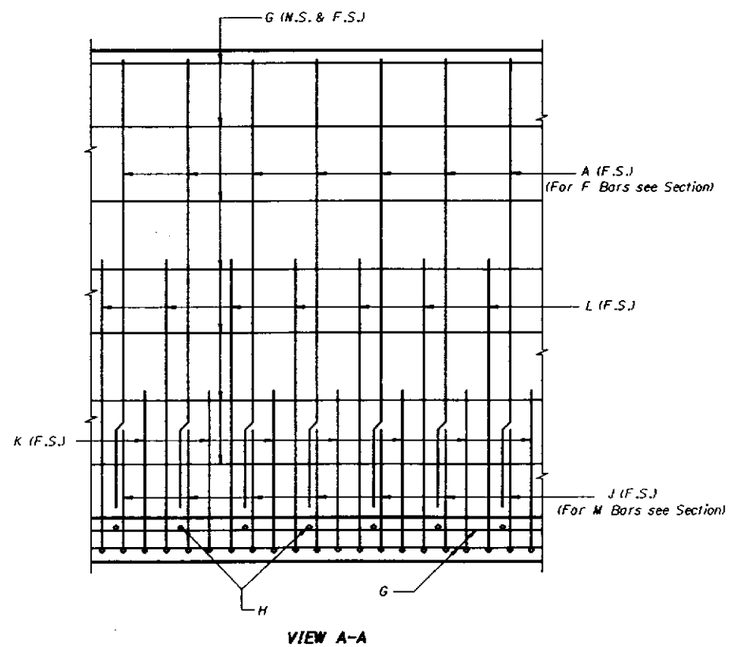

VIEW A-A

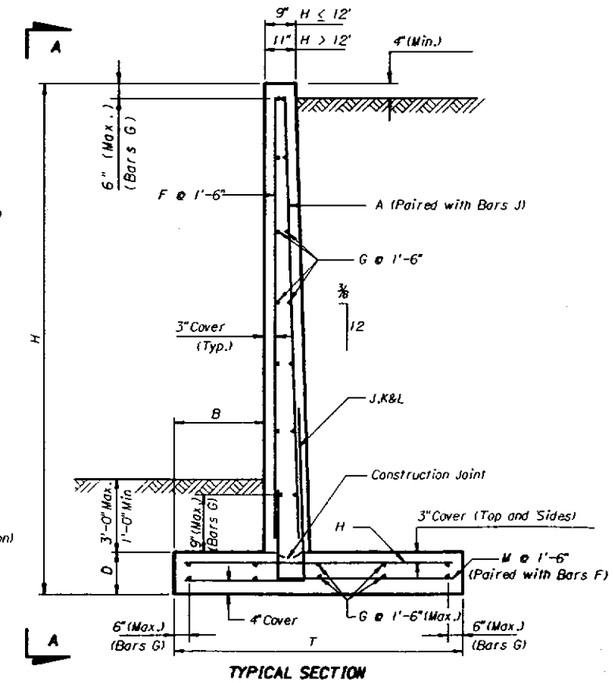

TYPICAL SECTION

NOTE:
To accommodate the Variable Height of a wall Unit, vertical Bars may be field cut to fit and the number of horizontal Bars G required by the highest wall dimension within a 25' Unit shall be equally spaced at each end of the Unit.

BENDING DIAGRAM

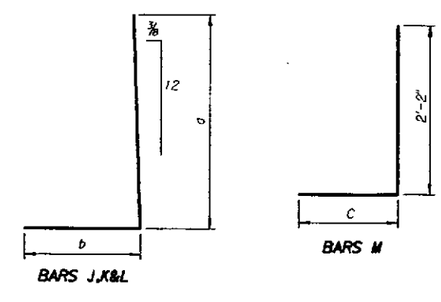

NOTE: All bar dimensions are out to out.

NOTE: Bars M are paired with Bars F and Bars A are paired with Bars J. Bars F and M are No. 4 Bars. Bars J are as shown.

* NOTE: For placement details for Bars D see Standard Index No. 800.

Note: Work this Drawing with Standard Index No. 800.

REVISIONS					
Date	By	Description	Date	By	Description
			92		

	Names	Dates
Drawn by	M.I.	3/87
Checked by	M.P.	3/87
Designed by		
Checked by		
Approved by	A.G.M.	

ENGINEER OF RECORD:
STRUCTURES DESIGN OFFICE
CENTRAL OFFICE
605 Suwannee Street, MS 33
Tallahassee, Florida 32399-0450

LOGO:

SEAL:

FLORIDA DEPARTMENT OF TRANSPORTATION
STRUCTURES DESIGN OFFICE

ROAD NO.	COUNTY	PROJECT NO.

SHEET TITLE:
CASE I (6.0 KIPS/SQ. FT. MAX. BEARING PRESSURE)
6 FT. TO 30 FT. HEIGHT

PROJECT NAME:

Drawing No.

Index No. 805

STK(120.2301805.DGN
Mon Nov 9 13:08:26 1992

FED. ROAD DIV. NO.	STATE	PROJECT NO.	FISCAL YEAR	SHEET NO.
3	FLA.			

RETAINING WALL DATA

REINFORCING STEEL SCHEDULE

WALL DIMENSIONS				BARS A			BARS D*			BARS F			BARS G			BARS H				BARS J						BARS K						BARS L						BARS M				H
H	B	D	T	SIZE	NO.	LENGTH	SIZE	NO.	LENGTH	SIZE	NO.	LENGTH	SIZE	NO.	LENGTH	SIZE	NO.	SPACING	LENGTH	SIZE	NO.	SPACING	a	b	LENGTH	SIZE	NO.	SPACING	a	b	LENGTH	SIZE	NO.	SPACING	a	b	LENGTH	SIZE	NO.	C	LENGTH	
6	1'-1"	11"	4'-3"				6	4	1'-6"	4	17	4'-7"	4	16	24'-6"	4	18	1'-5"	3'-9"	5	28	11"	5'-5"	1'-6"	6'-11"													4	17	2'-8"	4'-10"	6
7	1'-2"	11"	4'-10"				6	5	1'-6"	4	17	5'-7"	4	18	24'-6"	4	19	1'-4"	4'-4"	5	30	10"	6'-5"	1'-7"	8'-0"													4	17	3'-2"	5'-4"	7
8	1'-4"	11"	5'-3"				6	5	1'-6"	4	17	6'-7"	4	20	24'-6"	4	28	11"	4'-9"	5	34	9"	7'-5"	1'-9"	9'-2"													4	17	3'-5"	5'-7"	8
9	1'-7"	11"	5'-9"				6	6	1'-6"	4	17	7'-7"	4	22	24'-6"	4	34	9"	5'-3"	5	34	9"	8'-5"	2'-1"	10'-6"													4	17	3'-8"	5'-10"	9
10	1'-8"	11"	6'-4"				6	7	1'-6"	4	17	8'-7"	4	24	24'-6"	4	50	6"	5'-10"	5	38	8"	9'-5"	2'-2"	11'-7"													4	17	4'-2"	6'-4"	10
11	1'-10"	11"	7'-2"				6	7	1'-6"	4	17	9'-7"	4	26	24'-6"	5	43	7"	6'-8"	5	43	7"	10'-5"	2'-5"	12'-10"													4	17	4'-10"	7'-0"	11
12	2'-2"	1'-0"	8'-2"				6	8	1'-6"	4	17	10'-6"	4	30	24'-6"	5	38	8"	7'-8"	5	23	1'-1"	11'-5"	2'-9"	14'-2"	5	22	1'-1"	9'-8"	2'-9"	12'-5"							4	17	5'-6"	7'-8"	12
13	2'-6"	1'-0"	9'-0"				6	9	1'-6"	4	17	11'-6"	4	32	24'-6"	5	50	6"	8'-6"	5	23	1'-1"	12'-5"	3'-3"	15'-8"	5	22	1'-1"	9'-0"	3'-3"	12'-3"							4	17	6'-0"	8'-2"	13
14	2'-9"	1'-0"	10'-1"				6	9	1'-6"	4	17	12'-6"	4	34	24'-6"	6	38	8"	9'-7"	5	25	1'-0"	13'-5"	3'-7"	17'-0"	5	24	1'-0"	9'-0"	3'-7"	12'-7"							4	17	6'-10"	9'-0"	14
15	3'-0"	1'-0"	11'-3"	5	20	13'-6"	6	10	1'-6"	4	17	13'-6"	4	38	24'-6"	6	50	6"	10'-9"	5	20	1'-3"	3'-8"	3'-10"	7'-6"	5	19	1'-3"	12'-2"	3'-10"	16'-0"	5	19	1'-3"	8'-0"	4'-2"	12"-2"	4	17	7'-9"	9'-11"	15
16	3'-4"	1'-0"	12'-3"	6	17	14'-6"	6	10	1'-6"	4	17	14'-6"	4	38	24'-6"	6	60	5"	11'-9"	6	17	1'-6"	3'-3"	4'-2"	7'-5"	6	16	1'-6"	3'-2"	4'-2"	7'-4"	6	16	1'-6"	9'-3"	4'-7"	13'-10"	4	17	8'-5"	10'-7"	16
17	3'-8"	1'-2"	13'-8"	6	19	15'-4"	6	11	1'-6"	4	17	15'-4"	4	42	24'-6"	6	60	5"	13'-2"	6	19	1'-4"	4'-1"	4'-7"	8'-8"	6	18	1'-4"	3'-4"	4'-7"	7'-11"	6	18	1'-4"	9'-3"	4'-11"	14'-2"	4	17	9'-6"	11'-8"	17
18	4'-0"	1'-2"	14'-7"	6	17	16'-4"	6	12	1'-6"	4	17	16'-4"	4	46	24'-6"	8	38	8"	14'-1"	7	17	1'-6"	4'-4"	4'-11"	9'-3"	7	16	1'-6"	3'-4"	4'-11"	8'-3"	7	16	1'-6"	7'-11"	5'-0"	12'-11"	4	17	10'-1"	12'-3"	18
19	4'-4"	1'-2"	15'-10"	6	19	17'-4"	6	12	1'-6"	4	17	17'-4"	4	48	24'-6"	8	43	7"	15'-4"	7	19	1'-4"	5'-2"	5'-4"	10'-6"	7	18	1'-4"	4'-11"	5'-4"	10'-3"	7	18	1'-4"	8'-11"	5'-4"	14'-3"	4	17	11'-0"	13'-2"	19
20	4'-9"	1'-2"	16'-11"	6	17	18'-4"	6	13	1'-6"	4	17	18'-4"	4	50	24'-6"	8	50	6"	16'-5"	8	17	1'-6"	4'-4"	5'-9"	10'-1"	8	16	1'-6"	4'-11"	5'-9"	10'-8"	8	16	1'-6"	9'-11"	5'-9"	15'-8"	4	17	11'-8"	13'-10"	20

QUANTITIES

H	CONCRETE / 25' UNIT	STEEL / 25' UNIT	CONCRETE PER LIN.FT.	STEEL PER LIN.FT.
	C.Y.	LBS.	C.Y.	LBS.
6	7.51	624	0.30	24
7	8.86	735	0.35	29
8	10.10	890	0.40	35
9	11.44	1017	0.46	40
10	12.88	1231	0.52	49
11	14.56	1504	0.58	60
12	16.95	1647	0.68	65
13	20.60	1867	0.82	74
14	22.82	2126	0.91	85
15	25.14	2707	1.01	108
16	27.33	3046	1.09	121
17	31.83	3478	1.27	139
18	34.14	3961	1.37	158
19	36.84	4723	1.47	188
20	39.39	5455	1.58	218

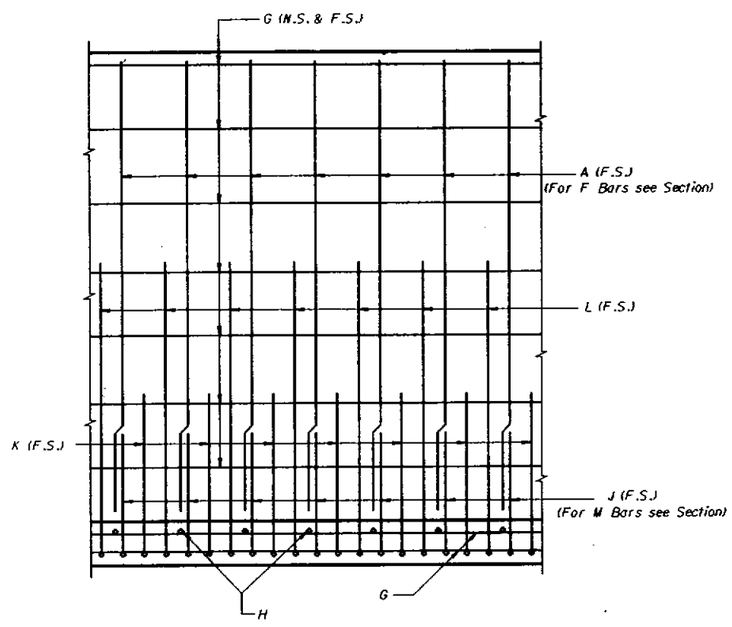

VIEW A-A

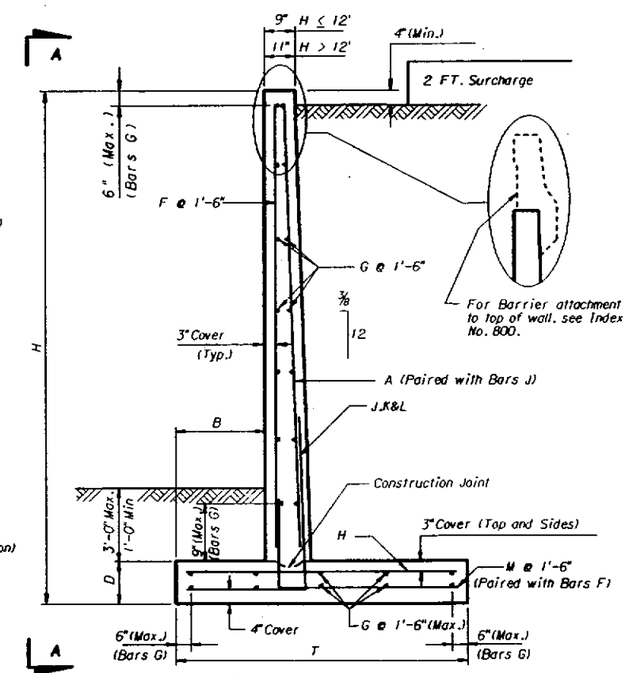

TYPICAL SECTION

NOTE:
To accommodate the Variable Height of a wall Unit, vertical Bars may be field cut to fit and the number of horizontal Bars G required by the highest wall dimension within a 25' Unit shall be equally spaced at each end of the Unit.

BENDING DIAGRAM

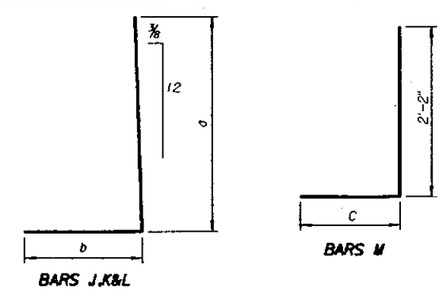

NOTE: All bar dimensions are out to out.

NOTE: Bars M are paired with Bars F and Bars A are paired with Bars J. Bars F and M are No. 4 Bars. Bars J are as shown.

* NOTE: For placement details for Bars D see Standard Index No. 800.

Note: Work this Drawing with Standard Index No. 800.

REVISIONS					
Date	By	Description	Date	By	Description
			92		

	Names	Dates
Drawn by	M.J.	3/87
Checked by	M.P.	3/87
Designed by		
Checked by		
Approved by	A.G.M.	

ENGINEER OF RECORD:
STRUCTURES DESIGN OFFICE
CENTRAL OFFICE
605 Suwannee Street, MS 33
Tallahassee, Florida 32399-0450

LOGO:

SEAL:

FLORIDA DEPARTMENT OF TRANSPORTATION
STRUCTURES DESIGN OFFICE

ROAD NO.	COUNTY	PROJECT NO.

SHEET TITLE:
CASE II (2.0 KIPS/SQ. FT. MAX. BEARING PRESSURE)
6 FT. TO 20 FT. HEIGHT

PROJECT NAME:

Drawing No. 1 of 1

Index No. 806

MON NOV 9 13:10:27 1992 ST1K(R20,230,806.DGN

FED. ROAD DIV. NO.	STATE	PROJECT NO.	FISCAL YEAR	SHEET NO.
3	FLA.			

RETAINING WALL DATA

| WALL DIMENSIONS | | | | REINFORCING STEEL SCHEDULE | | | |

FED. ROAD DIV. NO.	STATE	PROJECT NO.	FISCAL YEAR	SHEET NO.
3	FLA.			

RETAINING WALL DATA

| WALL DIMENSIONS | | | | REINFORCING STEEL SCHEDULE | | | |

FED. ROAD DIV. NO.	STATE	PROJECT NO.	FISCAL YEAR	SHEET NO.
3	FLA.			

RETAINING WALL DATA

WALL DIMENSIONS / REINFORCING STEEL SCHEDULE

H	B	D	T	BARS A SIZE	BARS A NO.	BARS A LENGTH	BARS D* SIZE	BARS D* NO.	BARS D* LENGTH	BARS F SIZE	BARS F NO.	BARS F LENGTH	BARS G SIZE	BARS G NO.	BARS G LENGTH	BARS H SIZE	BARS H NO.	BARS H SPACING	BARS H LENGTH
6	1'-1"	11"	4'-3"				6	4	1'-6"	4	17	4'-7"	4	16	24'-6"	4	18	1'-5"	3'-9"
7	1'-2"	11"	4'-10"				6	5	1'-6"	4	17	5'-7"	4	18	24'-6"	4	19	1'-4"	4'-4"
8	1'-4"	11"	5'-3"				6	5	1'-6"	4	17	6'-7"	4	20	24'-6"	4	28	11"	4'-9"
9	1'-7"	11"	5'-9"				6	6	1'-6"	4	17	7'-7"	4	22	24'-6"	4	34	9"	5'-3"
10	1'-7"	11"	6'-3"				6	7	1'-6"	4	17	8'-7"	4	24	24'-6"	4	50	6"	5'-9"
11	1'-8"	11"	6'-8"				6	7	1'-6"	4	17	9'-7"	4	26	24'-6"	5	43	7"	6'-2"
12	1'-11"	1'-0"	7'-1"				6	8	1'-6"	4	17	10'-6"	4	28	24'-6"	5	38	8"	6'-7"
13	2'-0"	1'-0"	7'-7"				6	9	1'-6"	4	17	11'-6"	4	30	24'-6"	5	50	6"	7'-1"
14	2'-1"	1'-0"	8'-1"				6	9	1'-6"	4	17	12'-6"	4	32	24'-6"	6	43	7"	7'-7"
15	2'-3"	1'-0"	8'-7"	5	20	13'-6"	6	10	1'-6"	4	17	13'-6"	4	34	24'-6"	6	50	6"	8'-1"
16	2'-5"	1'-0"	9'-1"	6	17	14'-6"	6	10	1'-6"	4	17	14'-6"	4	34	24'-6"	7	50	6"	8'-7"
17	2'-5"	1'-2"	9'-7"	6	19	15'-4"	6	11	1'-6"	4	17	15'-4"	4	38	24'-6"	7	43	7"	9'-1"
18	2'-8"	1'-2"	10'-0"	6	17	16'-4"	6	12	1'-6"	4	17	16'-4"	4	40	24'-6"	7	50	6"	9'-6"
19	2'-9"	1'-2"	10'-7"	6	19	17'-4"	6	12	1'-6"	4	17	17'-4"	4	40	24'-6"	8	50	6"	10'-1"
20	2'-11"	1'-2"	11'-1"	6	17	18'-4"	6	13	1'-6"	4	17	18'-4"	4	44	24'-6"	8	60	5"	10'-7"
21	3'-0"	1'-5"	11'-5"	6	17	19'-1"	6	14	1'-6"	4	17	19'-1"	4	46	24'-6"	8	50	6"	10'-11"
22	3'-2"	1'-5"	11'-10"	7	17	20'-1"	6	14	1'-6"	4	17	20'-1"	4	46	24'-6"	8	50	6"	11'-4"
23	3'-3"	1'-5"	12'-5"	7	17	21'-1"	6	15	1'-6"	4	17	21'-1"	4	48	24'-6"	9	50	6"	11'-11"
24	3'-6"	1'-5"	12'-10"	7	20	22'-1"	6	16	1'-6"	4	17	22'-1"	4	52	24'-6"	9	60	5"	12'-4"
25	3'-6"	1'-5"	13'-5"	7	17	23'-1"	6	16	1'-6"	4	17	23'-1"	4	52	24'-6"	10	50	6"	12'-11"
26	3'-10"	1'-8"	13'-9"	7	19	23'-10"	6	17	1'-6"	4	17	23'-10"	4	54	24'-6"	10	43	7"	13'-3"
27	4'-1"	1'-8"	14'-6"	8	17	24'-10"	6	18	1'-6"	4	17	24'-10"	4	58	24'-6"	10	50	6"	14'-0"
28	4'-5"	1'-8"	15'-3"	8	19	25'-10"	6	18	1'-6"	4	17	25'-10"	4	58	24'-6"	10	50	6"	14'-8"
29	4'-9"	1'-8"	15'-11"	8	20	26'-10"	6	19	1'-6"	4	17	26'-10"	4	62	24'-6"	11	50	6"	15'-5"
30	5'-2"	1'-8"	16'-8"	8	22	27'-10"	6	20	1'-6"	4	17	27'-10"	4	64	24'-6"	11	50	6"	16'-2"

H	BARS J SIZE	BARS J NO.	BARS J SPACING	BARS J a	BARS J b	BARS J LENGTH	BARS K SIZE	BARS K NO.	BARS K SPACING	BARS K a	BARS K b	BARS K LENGTH	BARS L SIZE	BARS L NO.	BARS L SPACING	BARS L a	BARS L b	BARS L LENGTH	BARS M SIZE	BARS M NO.	BARS M C	BARS M LENGTH	H
6	5	28	11"	5'-5"	1'-6"	6'-11"													4	17	2'-8"	4'-10"	6
7	5	30	10"	6'-5"	1'-7"	8'-0"													4	17	3'-2"	5'-4"	7
8	5	34	9"	7'-5"	1'-9"	9'-2"													4	17	3'-5"	5'-7"	8
9	5	34	9"	8'-5"	2'-1"	10'-6"													4	17	3'-8"	5'-10"	9
10	5	38	8"	9'-5"	2'-1"	11'-6"													4	17	4'-2"	6'-4"	10
11	5	48	7"	10'-5"	2'-3"	12'-8"													4	17	4'-6"	6'-8"	11
12	5	23	1'-1"	11'-5"	2'-6"	13'-11"	5	22	1'-1"	9'-8"	2'-6"	12'-2"							4	17	4'-8"	6'-10"	12
13	5	23	1'-4"	12'-5"	2'-9"	15'-2"	5	22	1'-1"	9'-0"	2'-9"	11'-9"							4	17	5'-1"	7'-3"	13
14	5	25	1'-3"	13'-5"	2'-11"	16'-4"	5	24	1'-0"	9'-0"	2'-11"	11'-11"							4	17	5'-6"	7'-8"	14
15	5	20	1'-3"	3'-8"	3'-1"	6'-9"	5	19	1'-3"	12'-2"	3'-1"	15'-3"	5	19	1'-3"	8'-0"	3'-1"	11'-1"	4	17	5'-10"	8'-0"	15
16	6	17	1'-6"	3'-3"	3'-3"	6'-6"	6	16	1'-6"	3'-2"	3'-3"	6'-5"	6	16	1'-6"	9'-3"	3'-3"	12'-6"	4	17	6'-2"	8'-4"	16
17	6	19	1'-4"	4'-1"	3'-4"	7'-5"	6	18	1'-4"	3'-4"	3'-4"	6'-8"	6	18	1'-4"	9'-3"	3'-4"	12'-7"	4	17	6'-8"	8'-10"	17
18	7	17	1'-6"	4'-4"	3'-7"	7'-11"	7	16	1'-6"	3'-4"	3'-7"	6'-11"	7	16	1'-6"	7'-11"	3'-7"	11'-6"	4	17	6'-10"	9'-0"	18
19	7	19	1'-4"	5'-2"	3'-9"	8'-11"	7	18	1'-4"	4'-11"	3'-9"	8'-8"	7	18	1'-4"	8'-11"	3'-9"	12'-8"	4	17	7'-4"	9'-6"	19
20	8	17	1'-6"	4'-4"	3'-11"	8'-3"	8	16	1'-6"	4'-11"	3'-11"	8'-10"	8	16	1'-6"	9'-11"	3'-11"	13'-10"	4	17	7'-8"	9'-10"	20
21	8	17	1'-6"	5'-8"	4'-0"	9'-8"	8	16	1'-6"	6'-10"	4'-0"	10'-10"	8	16	1'-6"	11'-10"	4'-0"	15'-10"	4	17	7'-11"	10'-1"	21
22	9	17	1'-6"	5'-8"	4'-3"	9'-11"	9	16	1'-6"	5'-7"	4'-3"	9'-10"	9	16	1'-6"	10'-10"	4'-3"	15'-1"	4	17	8'-2"	10'-4"	22
23	9	17	1'-6"	6'-11"	4'-4"	11'-3"	9	16	1'-6"	7'-6"	4'-4"	11'-10"	9	16	1'-6"	13'-6"	4'-4"	17'-10"	4	17	8'-8"	10'-10"	23
24	9	20	1'-3"	6'-11"	4'-7"	11'-6"	9	19	1'-3"	7'-6"	4'-7"	12'-1"	9	20	1'-3"	13'-6"	4'-7"	18'-1"	4	17	8'-10"	11'-0"	24
25	10	17	1'-6"	8'-6"	4'-8"	13'-2"	10	16	1'-6"	9'-5"	4'-8"	14'-1"	10	16	1'-6"	15'-6"	4'-8"	20'-2"	4	17	9'-5"	11'-7"	25
26	10	19	1'-4"	9'-0"	5'-0"	14'-0"	10	18	1'-4"	9'-5"	5'-0"	14'-5"	10	18	1'-4"	15'-6"	5'-0"	20'-6"	4	17	9'-5"	11'-7"	26
27	11	17	1'-6"	9'-6"	5'-4"	14'-10"	11	16	1'-6"	10'-0"	5'-4"	15'-4"	11	16	1'-6"	18'-0"	5'-4"	23'-4"	4	17	9'-11"	12'-1"	27
28	11	19	1'-4"	10'-0"	5'-8"	15'-8"	11	18	1'-4"	10'-0"	5'-8"	15'-8"	11	18	1'-4"	18'-0"	5'-8"	23'-8"	4	17	10'-4"	12'-6"	28
29	11	20	1'-4"	10'-6"	6'-0"	16'-6"	11	19	1'-3"	11'-6"	6'-0"	17'-6"	11	18	1'-4"	19'-6"	6'-0"	25'-6"	4	17	10'-8"	12'-10"	29
30	11	22	1'-2"	11'-0"	6'-6"	17'-6"	11	21	1'-2"	11'-6"	6'-6"	18'-0"	11	21	1'-2"	19'-6"	6'-6"	26'-0"	4	17	11'-0"	13'-2"	30

QUANTITIES

H	CONCRETE / 25' UNIT C.Y.	STEEL / 25' UNIT LBS.	CONCRETE PER LIN.FT. C.Y.	STEEL PER LIN.FT. LBS.
6	7.51	624	0.30	24
7	8.86	735	0.35	29
8	10.10	890	0.40	35
9	11.44	1017	0.46	40
10	12.81	1225	0.51	49
11	14.13	1536	0.57	61
12	15.95	1547	0.64	61
13	19.29	1727	0.77	69
14	20.96	1986	0.84	79
15	22.67	2374	0.91	94
16	24.40	2706	0.98	108
17	27.42	2889	1.10	115
18	29.19	3234	1.17	129
19	31.17	3958	1.25	158
20	33.09	4575	1.32	183
21	37.15	4641	1.49	185
22	39.12	5269	1.56	210
23	41.35	6204	1.65	248
24	43.38	7473	1.74	298
25	45.66	8183	1.83	327
26	50.44	8550	2.02	342
27	53.16	10175	2.13	407
28	55.92	11234	2.24	449
29	58.57	12994	2.34	519
30	61.38	14442	2.46	577

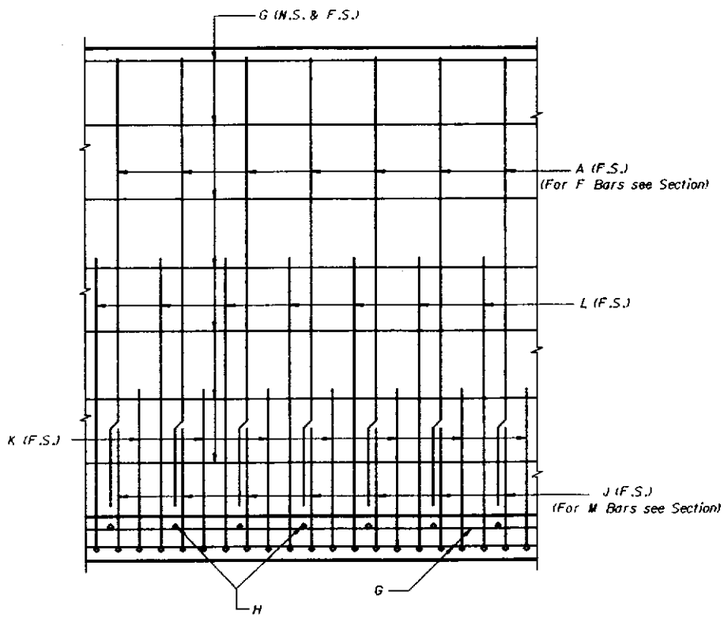

VIEW A-A

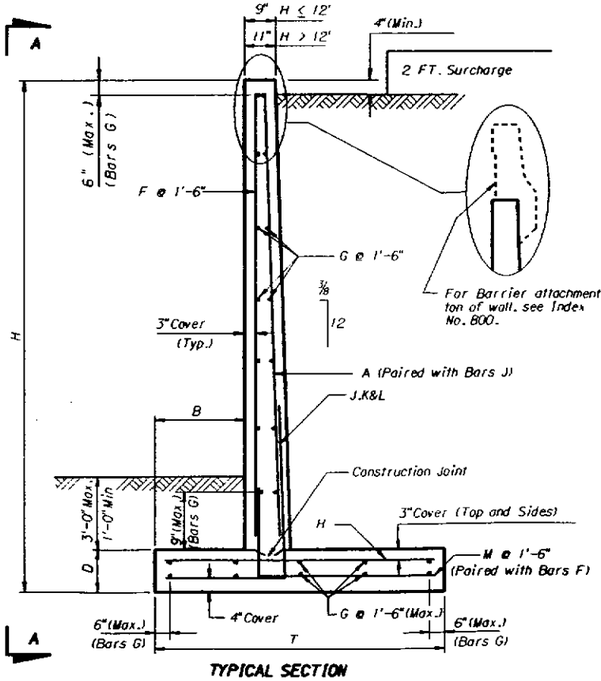

TYPICAL SECTION

NOTE:
To accommodate the Variable Height of a wall Unit, vertical Bars may be field cut to fit and the number of horizontal Bars G required by the highest wall dimension within a 25' Unit shall be equally spaced at each end of the Unit.

BENDING DIAGRAM

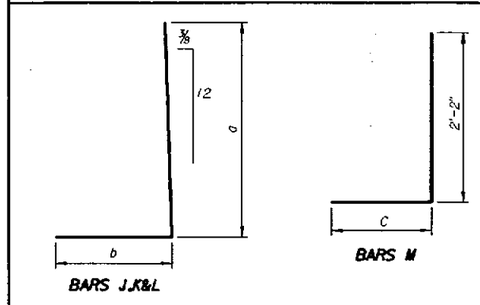

NOTE: All bar dimensions are out to out.

NOTE: Bars M are paired with Bars F and Bars A are paired with Bars J. Bars F and M are No. 4 Bars. Bars J are as shown.

* NOTE: For placement details for Bars D see Standard Index No. 800.

Note: Work this Drawing with Standard Index No. 800.

REVISIONS					
Date	By	Description	Date	By	Description
			92		

	Names	Dates
Drawn by	M.I.	3/87
Checked by	M.P.	3/87
Designed by		
Checked by		
Approved by	A.G.M.	

ENGINEER OF RECORD:
STRUCTURES DESIGN OFFICE
CENTRAL OFFICE
605 Suwannee Street, MS 33
Tallahassee, Florida 32399-0450

LOGO:

SEAL:

FLORIDA DEPARTMENT OF TRANSPORTATION
STRUCTURES DESIGN OFFICE

ROAD NO.	COUNTY	PROJECT NO.

SHEET TITLE: CASE II(5.0 & 6.0 KIPS/SQ. FT. MAX. BEARING PRESSURE) 6 FT. TO 30 FT. HEIGHT

PROJECT NAME:

Drawing No. 1 of 1

Index No. 809

ST14(120230809.DGN) Mon Nov 9 13:32:06 1992

FED. ROAD DIV. NO.	STATE	PROJECT NO.	FISCAL YEAR	SHEET NO.
3	FLA.			

RETAINING WALL DATA

| WALL DIMENSIONS | | | | REINFORCING STEEL SCHEDULE | | | |

FED. ROAD DIV. NO.	STATE	PROJECT NO.	FISCAL YEAR	SHEET NO.
3	FLA.			

RETAINING WALL DATA

REINFORCING STEEL SCHEDULE

WALL DIMENSIONS				BARS A			BARS D*			BARS F			BARS G			BARS H				BARS J						BARS K						BARS L						BARS M				H
H	B	D	T	SIZE	NO.	LENGTH	SIZE	NO.	LENGTH	SIZE	NO.	LENGTH	SIZE	NO.	LENGTH	SIZE	NO.	SPACING	LENGTH	SIZE	NO.	SPACING	a	b	LENGTH	SIZE	NO.	SPACING	a	b	LENGTH	SIZE	NO.	SPACING	a	b	LENGTH	SIZE	NO.	C	LENGTH	
6	8"	11"	2'-10"				6	4	1'-6"	4	17	4'-7"	4	14	24'-6"	4	18	1'-5"	2'-4"	4	25	1'-0"	5'-5"	1'-1"	6'-6"													4	17	1'-8"	3'-10"	6
7	9"	11"	3'-5"				6	5	1'-6"	4	17	5'-7"	4	16	24'-6"	4	18	1'-5"	2'-11"	4	25	1'-0"	6'-5"	1'-2"	7'-7"													4	17	2'-2"	4'-4"	7
8	11"	11"	3'-11"				6	5	1'-6"	4	17	6'-7"	4	18	24'-6"	4	18	1'-5"	3'-5"	4	25	1'-0"	7'-5"	1'-4"	8'-9"													4	17	2'-6"	4'-8"	8
9	1'-2"	11"	4'-4"				6	6	1'-6"	4	17	7'-7"	4	20	24'-6"	4	18	1'-5"	3'-10"	4	28	11"	8'-5"	1'-8"	10'-1"													4	17	2'-8"	4'-10"	9
10	1'-4"	11"	5'-3"				6	7	1'-6"	4	17	8'-7"	4	22	24'-6"	4	25	1'-0"	4'-9"	4	30	10"	9'-5"	1'-10"	11'-3"													4	17	3'-5"	5'-7"	10
11	1'-7"	11"	6'-2"				6	7	1'-6"	4	17	9'-7"	4	24	24'-6"	4	34	9"	5'-8"	5	25	1'-0"	10'-5"	2'-2"	12'-7"													4	17	4'-1"	6'-3"	11
12	1'-10"	1'-0"	7'-0"				6	8	1'-6"	4	17	10'-6"	4	26	24'-6"	4	30	10"	6'-6"	5	34	9"	11'-5"	2'-5"	13'-10"													4	17	4'-8"	6'-10"	12
13	2'-1"	1'-0"	7'-11"				6	9	1'-6"	4	17	11'-6"	4	30	24'-6"	4	34	9"	7'-5"	5	34	9"	12'-5"	2'-10"	15'-3"													4	17	5'-4"	7'-6"	13
14	2'-4"	1'-0"	8'-11"				6	9	1'-6"	4	17	12'-6"	4	32	24'-6"	4	30	10"	8'-5"	5	43	7"	13'-5"	3'-2"	16'-7"													4	17	6'-1"	8'-3"	14
15	2'-8"	1'-0"	9'-11"				6	10	1'-6"	4	17	13'-6"	4	34	24'-6"	5	34	9"	9'-5"	5	25	1'-0"	14'-5"	3'-6"	17'-11"	5	24	1'-0"	5'-9"	3'-6"	9'-3"							4	17	6'-9"	8'-11"	15
16	3'-0"	1'-0"	11'-0"	5	20	14'-6"	6	10	1'-6"	4	17	14'-6"	4	36	24'-6"	5	38	8"	10'-6"	5	20	1'-3"	2'-10"	3'-10"	6'-8"	5	19	1'-3"	4'-9"	3'-10"	8'-7"	5	19	1'-3"	10'-9"	3'-10"	14'-7"	4	17	7'-6"	9'-8"	16
17	3'-5"	1'-2"	12'-2"	6	17	15'-4"	6	11	1'-6"	4	17	15'-4"	4	40	24'-6"	5	30	10"	11'-8"	6	17	1'-6"	3'-5"	4'-4"	7'-9"	6	16	1'-6"	5'-4"	4'-4"	9'-8"	6	16	1'-6"	8'-4"	4'-4"	12'-8"	4	17	8'-3"	10'-5"	17
18	3'-8"	1'-2"	13'-8"	6	20	16'-4"	6	12	1'-6"	4	17	16'-4"	4	44	24'-6"	5	34	9"	13'-2"	6	20	1'-3"	3'-5"	4'-7"	8'-0"	6	19	1'-3"	5'-4"	4'-7"	9'-11"	6	19	1'-3"	8'-4"	4'-7"	12'-11"	4	17	9'-6"	11'-8"	18
19	4'-2"	1'-8"	14'-7"	6	17	16'-10"	6	12	1'-6"	4	17	16'-10"	4	46	24'-6"	5	30	10"	14'-1"	7	17	1'-6"	4'-10"	5'-2"	10'-0"	6	16	1'-6"	6'-5"	5'-2"	11'-7"	7	16	1'-6"	10'-5"	5'-2"	15'-7"	4	17	9'-11"	12'-1"	19
20	4'-8"	1'-8"	15'-3"	6	19	17'-10"	6	13	1'-6"	4	17	17'-10"	4	48	24'-6"	5	30	10"	14'-9"	7	19	1'-4"	4'-10"	5'-8"	10'-6"	7	18	1'-4"	7'-5"	5'-8"	13'-1"	7	18	1'-4"	11'-5"	5'-8"	17'-1"	4	17	10'-1"	12'-3"	20

QUANTITIES

H	CONCRETE / 25' UNIT C.Y.	STEEL / 25' UNIT LBS.	CONCRETE PER LIN.FT. C.Y.	STEEL PER LIN.FT. LBS.
6	6.31	470	0.25	18
7	7.66	547	0.31	21
8	8.97	620	0.36	24
9	10.24	716	0.41	28
10	11.96	841	0.48	33
11	13.71	1045	0.55	41
12	15.87	1261	0.63	50
13	19.60	1436	0.78	57
14	21.74	1692	0.87	67
15	23.90	1866	0.96	74
16	26.17	2202	1.05	88
17	30.21	2463	1.21	98
18	33.15	2914	1.33	116
19	41.56	3114	1.66	124
20	43.96	3644	1.76	145

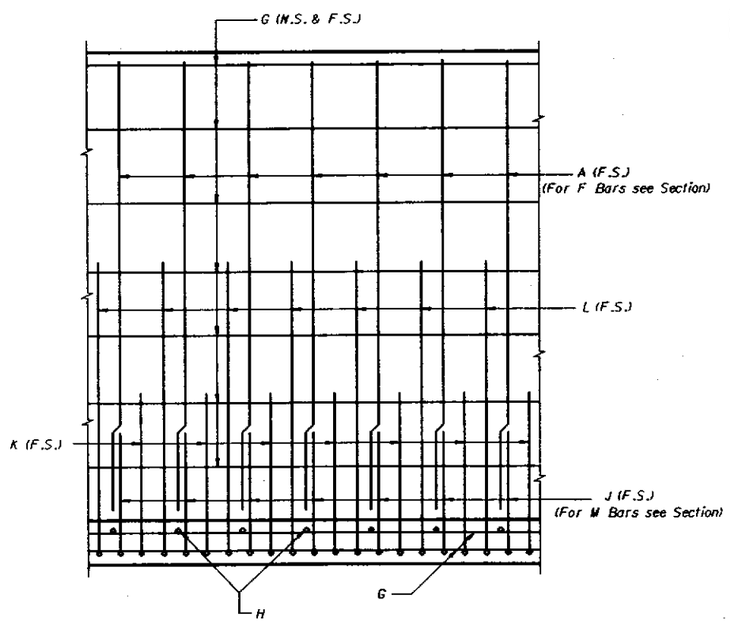

VIEW A-A

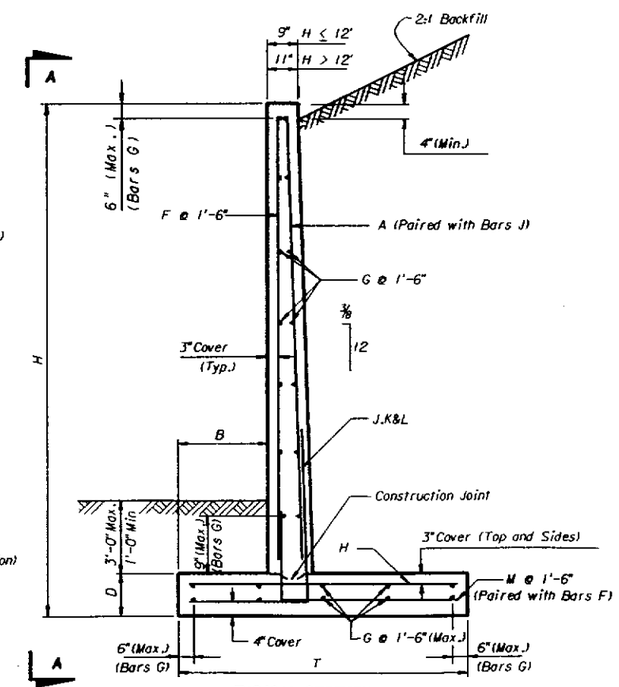

TYPICAL SECTION

NOTE:
To accommodate the Variable Height of a wall Unit, vertical Bars may be field cut to fit and the number of horizontal Bars G required by the highest wall dimension within a 25' Unit shall be equally spaced at each end of the Unit.

BENDING DIAGRAM

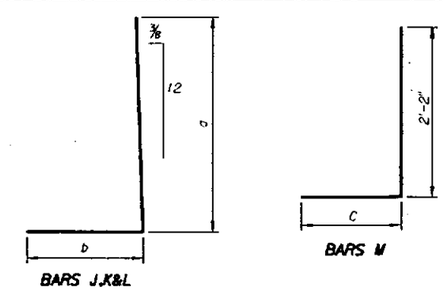

NOTE: All bar dimensions are out to out.

NOTE: Bars M are paired with Bars F and Bars A are paired with Bars J. Bars F and M are No. 4 Bars. Bars J are as shown.

* NOTE: For placement details for Bars D see Standard Index No. 800.

Note: Work this Drawing with Standard Index No. 800.

REVISIONS					
Date	By	Description	Date	By	Description
			92		

	Names	Dates
Drawn by	M.I.	6/85
Checked by	M.P.	6/85
Designed by		
Checked by		
Approved by	A.G.M.	

ENGINEER OF RECORD:
STRUCTURES DESIGN OFFICE
CENTRAL OFFICE
605 Suwannee Street, MS 33
Tallahassee, Florida 32399-0450

LOGO:

SEAL:

FLORIDA DEPARTMENT OF TRANSPORTATION
STRUCTURES DESIGN OFFICE

ROAD NO.	COUNTY	PROJECT NO.

SHEET TITLE:
CASE III (2.5 KIPS/SQ. FT. MAX. BEARING PRESSURE) 6 FT. TO 20 FT. HEIGHT

PROJECT NAME:

Drawing No. 1 of 1

Index No. 811

Mon Nov 9 13:26:04 1992 STI:U20,230181.DGN

FED. ROAD DIV. NO.	STATE	PROJECT NO.	FISCAL YEAR	SHEET NO.
3	FLA.			

RETAINING WALL DATA

REINFORCING STEEL SCHEDULE

WALL DIMENSIONS				BARS A			BARS D*			BARS F			BARS G			BARS H				BARS J						BARS K						BARS L						BARS M				H
H	B	D	T	SIZE	NO.	LENGTH	SIZE	NO.	LENGTH	SIZE	NO.	LENGTH	SIZE	NO.	LENGTH	SIZE	NO.	SPACING	LENGTH	SIZE	NO.	SPACING	a	b	LENGTH	SIZE	NO.	SPACING	a	b	LENGTH	SIZE	NO.	SPACING	a	b	LENGTH	SIZE	NO.	C	LENGTH	
6	8"	11"	2'-10"				6	4	1'-6"	4	17	4'-7"	4	14	24'-6"	4	18	1'-5"	2'-4"	4	25	1'-0"	5'-5"	1'-1"	6'-6"													4	17	1'-8"	3'-10"	6
7	9"	11"	3'-5"				6	5	1'-6"	4	17	5'-7"	4	16	24'-6"	4	18	1'-5"	2'-11"	4	25	1'-0"	6'-5"	1'-2"	7'-7"													4	17	2'-2"	4'-4"	7
8	11"	11"	3'-11"				6	5	1'-6"	4	17	6'-7"	4	16	24'-6"	4	18	1'-5"	3'-5"	4	25	1'-0"	7'-5"	1'-4"	8'-9"													4	17	2'-6"	4'-8"	8
9	1'-2"	11"	4'-4"				6	6	1'-6"	4	17	7'-7"	4	20	24'-6"	4	18	1'-5"	3'-10"	4	28	11"	8'-5"	1'-8"	10'-1"													4	17	2'-8"	4'-10"	9
10	1'-2"	11"	4'-10"				6	7	1'-6"	4	17	8'-7"	4	22	24'-6"	4	25	1'-0"	4'-4"	4	30	10"	9'-5"	1'-8"	11'-1"													4	17	3'-2"	5'-4"	10
11	1'-4"	11"	5'-6"				6	7	1'-6"	4	17	9'-7"	4	22	24'-6"	4	38	8"	5'-0"	5	25	1'-0"	10'-5"	1'-11"	12'-4"													4	17	3'-8"	5'-10"	11
12	1'-7"	1'-0"	6'-3"				6	8	1'-6"	4	17	10'-6"	4	26	24'-6"	4	34	9"	5'-9"	5	34	9"	11'-5"	2'-2"	13'-7"													4	17	4'-2"	6'-4"	12
13	1'-10"	1'-0"	6'-11"				6	9	1'-6"	4	17	11'-6"	4	28	24'-6"	4	38	8"	6'-5"	5	34	9"	12'-5"	2'-7"	15'-0"													4	17	4'-7"	6'-9"	13
14	2'-1"	1'-0"	7'-11"				6	9	1'-6"	4	17	12'-6"	4	30	24'-6"	4	34	9"	7'-5"	5	43	7"	13'-5"	2'-11"	16'-4"													4	17	5'-4"	7'-6"	14
15	2'-4"	1'-0"	8'-10"				6	10	1'-6"	4	17	13'-6"	4	34	24'-6"	5	38	8"	8'-4"	5	25	1'-0"	14'-5"	3'-2"	17'-7"	5	24	1'-0"	5'-9"	3'-2"	8'-11"							4	17	6'-0"	8'-2"	15
16	2'-7"	1'-0"	9'-10"	5	20	14'-6"	6	11	1'-6"	4	17	14'-6"	4	36	24'-6"	5	43	7"	9'-4"	5	20	1'-3"	2'-10"	3'-5"	6'-3"	5	19	1'-3"	4'-9"	3'-5"	8'-2"	5	20	1'-3"	10'-9"	3'-5"	14'-2"	4	17	6'-9"	8'-11"	16
17	2'-11"	1'-2"	10'-9"	6	17	15'-4"	6	11	1'-6"	4	17	15'-4"	4	38	24'-6"	5	38	8"	10'-3"	6	17	1'-6"	3'-5"	3'-10"	7'-3"	6	16	1'-6"	5'-4"	3'-10"	9'-2"	6	16	1'-6"	8'-4"	3'-10"	12'-2"	4	17	7'-4"	9'-6"	17
18	3'-2"	1'-2"	11'-11"	6	20	16'-4"	6	12	1'-6"	4	17	16'-4"	4	42	24'-6"	5	50	6"	11'-5"	6	20	1'-3"	3'-5"	4'-1"	7'-6"	6	19	1'-3"	5'-4"	4'-1"	9'-5"	6	20	1'-3"	8'-4"	4'-1"	12'-5"	4	17	8'-3"	10'-5"	18
19	3'-8"	1'-8"	12'-10"	6	17	16'-10"	6	12	1'-6"	4	17	16'-10"	4	42	24'-6"	5	30	10"	12'-4"	7	17	1'-6"	4'-10"	4'-8"	9'-6"	7	16	1'-6"	6'-5"	4'-8"	11'-1"	7	16	1'-6"	10'-5"	4'-8"	15'-1"	4	17	8'-8"	10'-10"	19
20	4'-1"	1'-8"	13'-6"	6	19	17'-10"	6	13	1'-6"	4	17	17'-10"	4	46	24'-6"	5	34	9"	13'-0"	7	19	1'-4"	4'-10"	5'-1"	9'-11"	7	18	1'-4"	7'-5"	5'-1"	12'-6"	7	18	1'-4"	11'-5"	5'-1"	16'-6"	4	17	8'-11"	11'-1"	20
21	4'-6"	1'-8"	14'-5"	6	17	18'-10"	6	14	1'-6"	4	17	18'-10"	4	48	24'-6"	5	38	8"	13'-11"	8	17	1'-6"	5'-11"	5'-6"	11'-5"	8	16	1'-6"	9'-1"	5'-6"	14'-7"	8	16	1'-6"	13'-1"	5'-6"	18'-7"	4	17	9'-5"	11'-7"	21
22	4'-11"	1'-8"	15'-2"	6	19	19'-10"	6	14	1'-6"	4	17	19'-10"	4	50	24'-6"	5	43	7"	14'-8"	8	19	1'-4"	6'-1"	6'-0"	12'-1"	8	18	1'-4"	9'-1"	6'-0"	15'-1"	8	18	1'-4"	14'-1"	6'-0"	20'-1"	4	17	9'-9"	11'-11"	22
23	5'-6"	2'-2"	16'-3"	6	20	20'-4"	6	15	1'-6"	4	17	20'-4"	4	54	24'-6"	5	43	7"	15'-9"	8	20	1'-3"	6'-7"	6'-7"	13'-2"	8	19	1'-3"	9'-7"	6'-7"	16'-2"	8	20	1'-3"	14'-7"	6'-7"	21'-2"	4	17	10'-3"	12'-5"	23
24	5'-11"	2'-2"	17'-0"	6	19	21'-4"	6	15	1'-6"	4	17	21'-4"	4	54	24'-6"	5	43	7"	16'-6"	9	19	1'-4"	7'-8"	7'-0"	14'-8"	9	18	1'-4"	10'-3"	7'-0"	17'-3"	9	18	1'-4"	16'-3"	7'-0"	23'-3"	4	17	10'-7"	12'-9"	24
25	6'-4"	2'-2"	17'-11"	6	20	22'-4"	6	16	1'-6"	4	17	22'-4"	4	58	24'-6"	5	43	7"	17'-5"	9	20	1'-3"	7'-8"	7'-6"	15'-2"	9	19	1'-3"	11'-3"	7'-6"	18'-9"	9	20	1'-3"	17'-3"	7'-6"	24'-9"	4	17	11'-1"	13'-3"	25

QUANTITIES

H	CONCRETE / 25' UNIT C.Y.	STEEL / 25' UNIT LBS.	CONCRETE PER LIN.FT. C.Y.	STEEL PER LIN.FT. LBS.
6	6.31	470	0.25	18
7	7.66	547	0.31	21
8	8.97	588	0.36	23
9	10.24	716	0.41	28
10	11.60	828	0.46	33
11	13.14	999	0.53	39
12	15.18	1246	0.61	49
13	18.67	1380	0.75	55
14	20.81	1639	0.83	65
15	22.90	1836	0.92	73
16	25.09	2188	1.00	87
17	28.68	2424	1.15	96
18	31.26	2971	1.25	118
19	38.86	3030	1.55	121
20	41.26	3532	1.65	141
21	44.07	4130	1.76	165
22	46.65	4737	1.87	189
23	56.56	5286	2.26	211
24	59.53	6108	2.38	244
25	62.87	6766	2.51	270

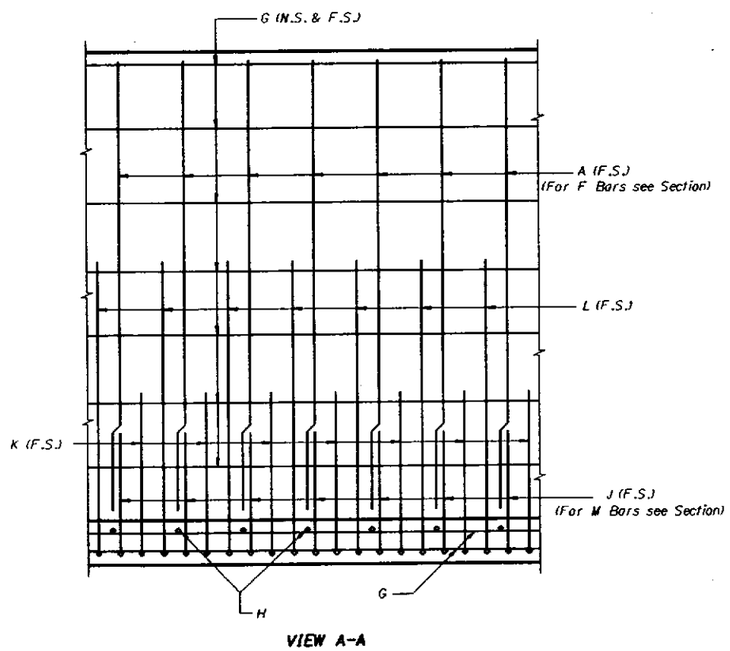

VIEW A-A

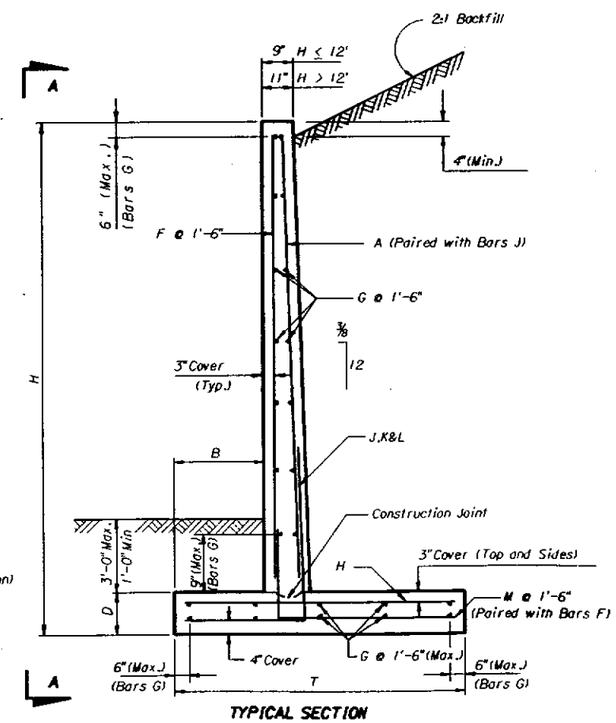

TYPICAL SECTION

NOTE:
To accommodate the Variable Height of a wall Unit, vertical Bars may be field cut to fit and the number of horizontal Bars G required by the highest wall dimension within a 25' Unit shall be equally spaced at each end of the Unit.

BENDING DIAGRAM

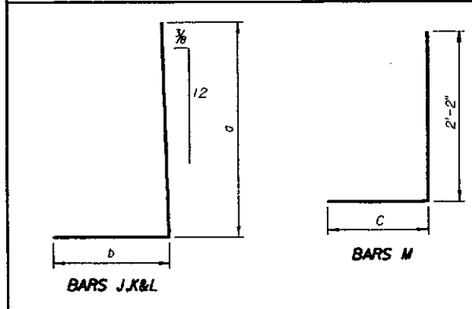

NOTE: All bar dimensions are out to out.

NOTE: Bars M are paired with Bars F and Bars A are paired with Bars J. Bars F and M are No. 4 Bars. Bars J are as shown.

* NOTE: For placement details for Bars D see Standard Index No. 800.

Note: Work this Drawing with Standard Index No. 800.

REVISIONS					
Date	By	Description	Date	By	Description
			92		

	Names	Dates
Drawn by	M.I.	3/87
Checked by	M.P.	3/87
Designed by		
Checked by		
Approved by	A.G.M.	

ENGINEER OF RECORD:
STRUCTURES DESIGN OFFICE
CENTRAL OFFICE
605 Suwannee Street, MS 33
Tallahassee, Florida 32399-0450

LOGO:

SEAL:

FLORIDA DEPARTMENT OF TRANSPORTATION
STRUCTURES DESIGN OFFICE

ROAD NO.	COUNTY	PROJECT NO.

SHEET TITLE: CASE III (3.0 KIPS/SQ. FT. MAX. BEARING PRESSURE) 6 FT. TO 25 FT. HEIGHT

PROJECT NAME:

Drawing No. 1 of 1

Index No. 812

ST1:E120.230.812.DGN
Mon Nov 9 13:28:05 1992

FED. ROAD DIV. NO.	STATE	PROJECT NO.	FISCAL YEAR	SHEET NO.
3	FLA.			

RETAINING WALL DATA

| WALL DIMENSIONS | | | | REINFORCING STEEL SCHEDULE | | | |

FED. ROAD DIV. NO.	STATE	PROJECT NO.	FISCAL YEAR	SHEET NO.
3	FLA.			

RETAINING WALL DATA

WALL DIMENSIONS / REINFORCING STEEL SCHEDULE

H	B	D	T	BARS A SIZE	BARS A NO.	BARS A LENGTH	BARS D* SIZE	BARS D* NO.	BARS D* LENGTH	BARS F SIZE	BARS F NO.	BARS F LENGTH	BARS G SIZE	BARS G NO.	BARS G LENGTH
6	8"	11"	2'-10"				6	4	1'-6"	4	17	4'-7"	4	14	24'-6"
7	9"	11"	3'-5"				6	5	1'-6"	4	17	5'-7"	4	16	24'-6"
8	11"	11"	3'-11"				6	5	1'-6"	4	17	6'-7"	4	16	24'-6"
9	1'-2"	11"	4'-4"				6	6	1'-6"	4	17	7'-7"	4	20	24'-6"
10	1'-2"	11"	4'-10"				6	7	1'-6"	4	17	8'-7"	4	22	24'-6"
11	1'-4"	11"	5'-4"				6	7	1'-6"	4	17	9'-7"	4	22	24'-6"
12	1'-6"	1'-0"	5'-9"				6	8	1'-6"	4	17	10'-6"	4	26	24'-6"
13	1'-7"	1'-0"	6'-3"				6	9	1'-6"	4	17	11'-6"	4	28	24'-6"
14	1'-8"	1'-0"	6'-9"				6	9	1'-6"	4	17	12'-6"	4	28	24'-6"
15	1'-10"	1'-0"	7'-4"				6	10	1'-6"	4	17	13'-6"	4	32	24'-6"
16	2'-1"	1'-0"	8'-2"	5	20	14'-6"	6	11	1'-6"	4	17	14'-6"	4	34	24'-6"
17	2'-4"	1'-2"	8'-10"	6	17	15'-4"	6	11	1'-6"	4	17	15'-4"	4	36	24'-6"
18	2'-6"	1'-2"	9'-10"	6	20	16'-4"	6	12	1'-6"	4	17	16'-4"	4	38	24'-6"
19	2'-11"	1'-8"	10'-8"	6	17	16'-10"	6	12	1'-6"	4	17	16'-10"	4	40	24'-6"
20	3'-4"	1'-8"	11'-3"	6	19	17'-10"	6	13	1'-6"	4	17	17'-10"	4	42	24'-6"
21	3'-8"	1'-8"	12'-0"	6	17	18'-10"	6	14	1'-6"	4	17	18'-10"	4	46	24'-6"
22	4'-1"	1'-8"	12'-8"	6	19	19'-10"	6	14	1'-6"	4	17	19'-10"	4	46	24'-6"
23	4'-6"	2'-2"	13'-8"	6	20	20'-4"	6	15	1'-6"	4	17	20'-4"	4	50	24'-6"
24	4'-11"	2'-2"	14'-4"	6	19	21'-4"	6	15	1'-6"	4	17	21'-4"	4	50	24'-6"
25	5'-4"	2'-2"	15'-3"	6	20	22'-4"	6	16	1'-6"	4	17	22'-4"	4	54	24'-6"
26	5'-8"	2'-2"	16'-0"	7	20	23'-4"	6	17	1'-6"	4	17	23'-4"	4	56	24'-6"
27	6'-1"	2'-8"	17'-0"	7	20	23'-10"	6	17	1'-6"	4	17	23'-10"	4	58	24'-6"
28	6'-6"	2'-8"	17'-9"	8	19	24'-10"	6	18	1'-6"	4	17	24'-10"	4	62	24'-6"
29	6'-11"	2'-8"	18'-7"	8	20	25'-10"	6	18	1'-6"	4	17	25'-10"	4	62	24'-6"
30	7'-5"	3'-2"	19'-8"	8	17	26'-4"	6	19	1'-6"	4	17	26'-4"	4	66	24'-6"

H	BARS H SIZE	BARS H NO.	BARS H SPACING	BARS H LENGTH	BARS J SIZE	BARS J NO.	BARS J SPACING	BARS J a	BARS J b	BARS J LENGTH
6	4	18	1'-5"	2'-4"	4	25	1'-0"	5'-5"	1'-1"	6'-6"
7	4	18	1'-5"	2'-11"	4	25	1'-0"	6'-5"	1'-2"	7'-7"
8	4	18	1'-5"	3'-4"	4	25	1'-0"	7'-5"	1'-4"	8'-9"
9	4	18	1'-5"	3'-10"	4	28	11"	8'-5"	1'-8"	10'-1"
10	4	25	1'-0"	4'-4"	4	30	10"	9'-5"	1'-8"	11'-1"
11	4	34	9"	4'-10"	5	25	1'-0"	10'-5"	1'-11"	12'-4"
12	4	34	9"	5'-3"	5	34	9"	11'-5"	2'-1"	13'-6"
13	4	43	7"	5'-9"	5	34	9"	12'-5"	2'-4"	14'-9"
14	4	60	5"	6'-3"	5	43	7"	13'-5"	2'-6"	15'-11"
15	5	43	7"	6'-10"	5	25	1'-0"	14'-5"	2'-8"	17'-1"
16	5	60	5"	7'-8"	5	20	1'-3"	2'-10"	2'-11"	5'-9"
17	5	50	6"	8'-4"	6	17	1'-6"	3'-5"	3'-3"	6'-8"
18	5	60	5"	9'-4"	6	20	1'-3"	3'-5"	3'-5"	6'-10"
19	5	38	8"	10'-2"	7	17	1'-6"	4'-10"	3'-11"	8'-9"
20	5	43	7"	10'-9"	7	19	1'-4"	4'-10"	4'-3"	9'-1"
21	5	50	6"	11'-6"	8	17	1'-6"	5'-11"	4'-8"	10'-7"
22	5	60	5"	12'-2"	8	19	1'-4"	6'-1"	5'-2"	11'-3"
23	5	43	7"	13'-2"	8	20	1'-3"	6'-7"	5'-7"	12'-2"
24	5	50	6"	13'-10"	9	19	1'-4"	7'-8"	6'-0"	13'-8"
25	5	50	6"	14'-9"	9	20	1'-3"	7'-8"	6'-6"	14'-2"
26	5	60	5"	15'-6"	9	20	1'-3"	8'-2"	6'-10"	15'-0"
27	5	60	5"	16'-6"	9	20	1'-3"	8'-8"	7'-4"	16'-0"
28	5	60	5"	17'-3"	10	19	1'-4"	9'-2"	7'-9"	16'-11"
29	5	60	5"	18'-1"	10	20	1'-3"	9'-8"	8'-2"	17'-10"
30	6	50	6"	19'-2"	11	17	1'-6"	10'-2"	8'-9"	18'-11"

H	BARS K SIZE	BARS K NO.	BARS K SPACING	BARS K a	BARS K b	BARS K LENGTH	BARS L SIZE	BARS L NO.	BARS L SPACING	BARS L a	BARS L b	BARS L LENGTH
6												
7												
8												
9												
10												
11												
12												
13												
14												
15												
16	5	24	1'-0"	5'-9"	2'-8"	8'-5"						
17	5	19	1'-3"	4'-9"	2'-11"	7'-8"	5	19	1'-3"	10'-9"	2'-11"	13'-8"
18	6	16	1'-6"	5'-4"	3'-3"	8'-7"	6	16	1'-6"	8'-4"	3'-3"	11'-7"
19	6	19	1'-3"	5'-4"	3'-5"	8'-9"	6	19	1'-3"	8'-4"	3'-5"	11'-9"
20	7	16	1'-6"	6'-5"	3'-11"	10'-4"	7	16	1'-6"	10'-5"	3'-11"	14'-4"
21	7	18	1'-4"	7'-5"	4'-3"	11'-8"	7	18	1'-4"	11'-5"	4'-3"	15'-8"
22	8	16	1'-6"	9'-1"	4'-8"	13'-9"	8	16	1'-6"	13'-1"	4'-8"	17'-9"
23	8	18	1'-4"	9'-1"	5'-2"	14'-3"	8	18	1'-4"	14'-1"	5'-2"	19'-3"
24	9	19	1'-3"	9'-7"	5'-7"	15'-2"	8	19	1'-3"	14'-7"	5'-7"	20'-2"
25	9	18	1'-4"	11'-3"	6'-0"	17'-3"	9	18	1'-4"	16'-3"	6'-0"	22'-3"
26	9	19	1'-3"	11'-3"	6'-6"	17'-9"	9	19	1'-3"	17'-3"	6'-6"	23'-9"
27	9	19	1'-3"	12'-3"	6'-10"	19'-1"	9	19	1'-3"	18'-3"	6'-10"	25'-1"
28	10	18	1'-4"	13'-9"	7'-9"	21'-6"	10	18	1'-4"	19'-9"	7'-9"	27'-6"
29	10	19	1'-3"	14'-9"	8'-2"	22'-11"	10	19	1'-3"	20'-9"	8'-2"	28'-11"
30	11	16	1'-6"	15'-3"	8'-9"	24'-0"	11	16	1'-6"	21'-3"	8'-9"	30'-0"

H	BARS M SIZE	BARS M NO.	BARS M C	BARS M LENGTH	H
6	4	17	1'-8"	3'-10"	6
7	4	17	2'-2"	4'-4"	7
8	4	17	2'-6"	4'-8"	8
9	4	17	2'-8"	4'-10"	9
10	4	17	3'-2"	5'-4"	10
11	4	17	3'-6"	5'-8"	11
12	4	17	3'-9"	5'-11"	12
13	4	17	4'-2"	6'-4"	13
14	4	17	4'-7"	6'-9"	14
15	4	17	5'-0"	7'-2"	15
16	4	17	5'-7"	7'-9"	16
17	4	17	6'-0"	8'-2"	17
18	4	17	6'-10"	9'-0"	18
19	4	17	7'-3"	9'-5"	19
20	4	17	7'-5"	9'-7"	20
21	4	17	7'-10"	10'-0"	21
22	4	17	8'-1"	10'-3"	22
23	4	17	8'-8"	10'-10"	23
24	4	17	8'-11"	11'-1"	24
25	4	17	9'-5"	11'-7"	25
26	4	17	9'-10"	12'-0"	26
27	4	17	10'-5"	12'-7"	27
28	4	17	10'-9"	12'-11"	28
29	4	17	11'-2"	13'-4"	29
30	4	17	11'-9"	13'-11"	30

QUANTITIES

H	CONCRETE / 25' UNIT C.Y.	STEEL / 25' UNIT LBS.	CONCRETE PER LIN.FT. C.Y.	STEEL PER LIN.FT. LBS.
6	6.31	470	0.25	18
7	7.66	547	0.31	21
8	8.97	587	0.36	23
9	10.24	716	0.41	28
10	11.60	828	0.46	33
11	13.00	980	0.52	39
12	14.71	1227	0.59	49
13	18.06	1369	0.72	54
14	19.73	1661	0.79	66
15	21.51	1745	0.86	69
16	23.55	2158	0.94	86
17	26.61	2361	1.06	94
18	29.01	2801	1.16	112
19	35.52	2923	1.42	116
20	37.78	3377	1.51	135
21	40.34	4018	1.61	160
22	42.79	4634	1.71	185
23	51.38	4849	2.06	193
24	54.18	5850	2.17	234
25	57.52	6389	2.30	255
26	60.55	7153	2.42	286
27	71.20	7478	2.85	299
28	74.61	9001	2.98	360
29	78.27	9783	3.13	391
30	90.86	10513	3.63	420

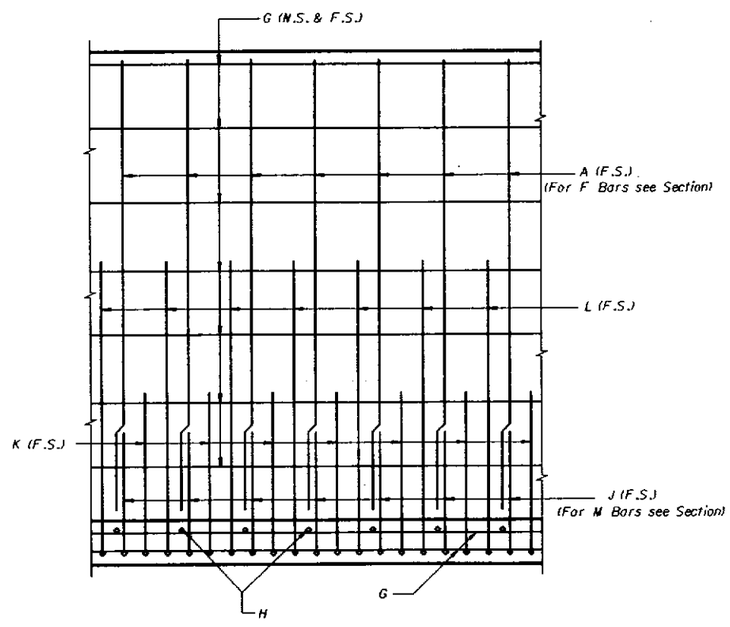

VIEW A-A

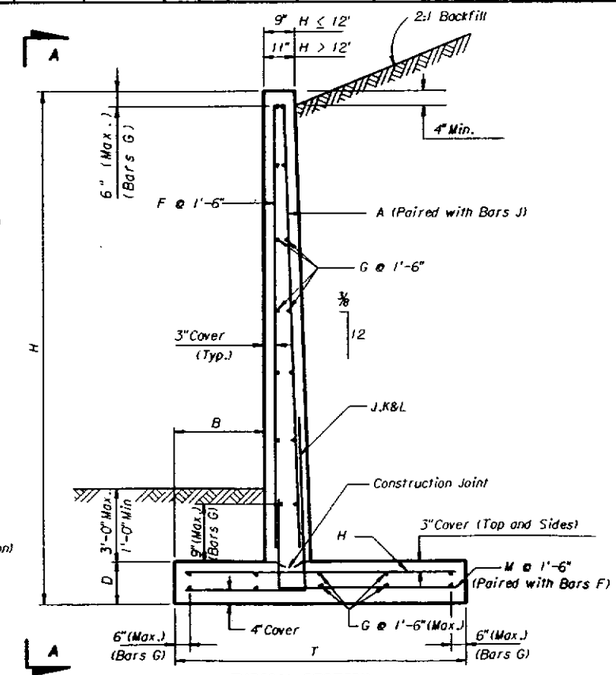

TYPICAL SECTION

NOTE:
To accommodate the Variable Height of a wall Unit, vertical Bars may be field cut to fit and the number of horizontal Bars G required by the highest wall dimension within a 25' Unit shall be equally spaced at each end of the Unit.

BENDING DIAGRAM

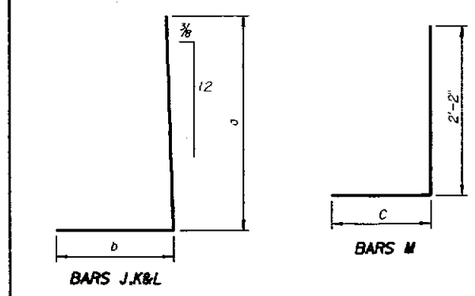

NOTE: All bar dimensions are out to out.

NOTE: Bars M are paired with Bars F and Bars A are paired with Bars J. Bars F and M are No. 4 Bars. Bars J are as shown.

* NOTE: For placement details for Bars D see Standard Index No. 800.

Note: Work this Drawing with Standard Index No. 800.

REVISIONS Date	By	Description	Date	By	Description
			92		

	Names	Dates
Drawn by	M.J.	3/87
Checked by	M.P.	3/87
Designed by		
Checked by		
Approved by	A.G.M.	

ENGINEER OF RECORD:
STRUCTURES DESIGN OFFICE
CENTRAL OFFICE
605 Suwannee Street, MS 33
Tallahassee, Florida 32399-0450

LOGO:

SEAL:

FLORIDA DEPARTMENT OF TRANSPORTATION
STRUCTURES DESIGN OFFICE

ROAD NO.	COUNTY	PROJECT NO.

SHEET TITLE:
CASE III (4.0 KIPS/SQ. FT. MAX. BEARING PRESSURE) 6 FT. TO 30 FT. HEIGHT

PROJECT NAME:

Drawing No. 1 of 1

Index No. 814

ST1:(120,230)814.DGN
Mon Nov 9 13:32:12 1992

FED. ROAD DIV. NO.	STATE	PROJECT NO.	FISCAL YEAR	SHEET NO.
3	FLA.			

RETAINING WALL DATA

| WALL DIMENSIONS | | | | REINFORCING STEEL SCHEDULE | | | |

FED. ROAD DIV. NO.	STATE	PROJECT NO.	FISCAL YEAR	SHEET NO.
3	FLA.			

RETAINING WALL DATA

WALL DIMENSIONS / REINFORCING STEEL SCHEDULE

H	B	D	T	BARS A SIZE	BARS A NO.	BARS A LENGTH	BARS D* SIZE	BARS D* NO.	BARS D* LENGTH	BARS F SIZE	BARS F NO.	BARS F LENGTH	BARS G SIZE	BARS G NO.	BARS G LENGTH	BARS H SIZE	BARS H NO.	BARS H SPACING	BARS H LENGTH
6	8"	11"	2'-10"				6	4	1'-6"	4	17	4'-7"	4	14	24'-6"	4	18	1'-5"	2'-4"
7	9"	11"	3'-5"				6	5	1'-6"	4	17	5'-7"	4	16	24'-6"	4	18	1'-5"	2'-11"
8	11"	11"	3'-11"				6	5	1'-6"	4	17	6'-7"	4	16	24'-6"	4	18	1'-5"	3'-5"
9	1'-2"	11"	4'-4"				6	6	1'-6"	4	17	7'-7"	4	20	24'-6"	4	18	1'-5"	3'-10"
10	1'-2"	11"	4'-10"				6	7	1'-6"	4	17	8'-7"	4	22	24'-6"	4	28	11"	4'-4"
11	1'-4"	11"	5'-4"				6	7	1'-6"	4	17	9'-7"	4	22	24'-6"	4	38	8"	4'-10"
12	1'-6"	1'-0"	5'-9"				6	8	1'-6"	4	17	10'-6"	4	26	24'-6"	4	34	9"	5'-3"
13	1'-7"	1'-0"	6'-3"				6	9	1'-6"	4	17	11'-6"	4	28	24'-6"	4	43	7"	5'-9"
14	1'-8"	1'-0"	6'-9"				6	9	1'-6"	4	17	12'-6"	4	28	24'-6"	4	60	5"	6'-3"
15	1'-10"	1'-0"	7'-2"				6	10	1'-6"	4	17	13'-6"	4	32	24'-6"	5	43	7"	6'-8"
16	1'-11"	1'-0"	7'-7"	5	20	14'-6"	6	10	1'-6"	4	17	14'-6"	4	34	24'-6"	5	60	5"	7'-1"
17	2'-2"	1'-2"	8'-2"	6	17	15'-4"	6	11	1'-6"	4	17	15'-4"	4	34	24'-6"	5	50	6"	7'-8"
18	2'-2"	1'-2"	8'-9"	6	20	16'-4"	6	11	1'-6"	4	17	16'-4"	4	38	24'-6"	6	50	6"	8'-3"
19	2'-6"	1'-8"	9'-4"	6	17	16'-10"	6	12	1'-6"	4	17	16'-10"	4	38	24'-6"	6	30	10"	8'-10"
20	2'-10"	1'-8"	9'-11"	6	19	17'-10"	6	12	1'-6"	4	17	17'-10"	4	40	24'-6"	6	34	9"	9'-5"
21	3'-2"	1'-8"	10'-7"	6	17	18'-10"	6	13	1'-6"	4	17	18'-10"	4	44	24'-6"	6	38	8"	10'-1"
22	3'-6"	1'-8"	11'-2"	6	19	19'-10"	6	14	1'-6"	4	17	19'-10"	4	44	24'-6"	6	43	7"	10'-8"
23	3'-11"	2'-2"	11'-11"	6	20	20'-4"	6	14	1'-6"	4	17	20'-4"	4	48	24'-6"	6	34	9"	11'-5"
24	4'-3"	2'-2"	12'-7"	6	19	21'-4"	6	15	1'-6"	4	17	21'-4"	4	48	24'-6"	6	38	8"	12'-1"
25	4'-7"	2'-2"	13'-3"	6	20	22'-4"	6	15	1'-6"	4	17	22'-4"	4	52	24'-6"	6	43	7"	12'-9"
26	4'-11"	2'-2"	14'-1"	7	20	23'-4"	6	17	1'-6"	4	17	23'-4"	4	54	24'-6"	6	43	7"	13'-7"
27	5'-4"	2'-8"	15'-0"	7	20	23'-10"	6	17	1'-6"	4	17	23'-10"	4	56	24'-6"	6	38	8"	14'-6"
28	5'-8"	2'-8"	15'-8"	8	19	24'-10"	6	18	1'-6"	4	17	24'-10"	4	58	24'-6"	6	43	7"	15'-2"
29	6'-0"	2'-8"	16'-7"	8	20	25'-10"	6	18	1'-6"	4	17	25'-10"	4	60	24'-6"	6	43	7"	16'-1"
30	6'-6"	3'-2"	17'-5"	8	17	26'-4"	6	19	1'-6"	4	17	26'-4"	4	62	24'-6"	6	50	6"	16'-11"

H	BARS J SIZE	BARS J NO.	BARS J SPACING	BARS J a	BARS J b	BARS J LENGTH	BARS K SIZE	BARS K NO.	BARS K SPACING	BARS K a	BARS K b	BARS K LENGTH	BARS L SIZE	BARS L NO.	BARS L SPACING	BARS L a	BARS L b	BARS L LENGTH	BARS M SIZE	BARS M NO.	BARS M C	BARS M LENGTH	H
6	4	25	1'-0"	5'-5"	1'-1"	6'-6"													4	17	1'-8"	3'-10"	6
7	4	25	1'-0"	6'-5"	1'-2"	7'-7"													4	17	2'-2"	4'-4"	7
8	4	25	1'-0"	7'-5"	1'-4"	8'-9"													4	17	2'-6"	4'-8"	8
9	4	28	11"	8'-5"	1'-8"	10'-1"													4	17	2'-8"	4'-10"	9
10	4	30	10"	9'-5"	1'-8"	11'-1"													4	17	3'-2"	5'-4"	10
11	5	25	1'-0"	10'-5"	1'-11"	12'-4"													4	17	3'-6"	5'-8"	11
12	5	34	9"	11'-5"	2'-1"	13'-6"													4	17	3'-9"	5'-11"	12
13	5	34	9"	12'-5"	2'-4"	14'-9"													4	17	4'-2"	6'-4"	13
14	5	43	7"	13'-5"	2'-6"	15'-11"													4	17	4'-7"	6'-9"	14
15	5	25	1'-0"	14'-5"	2'-8"	17'-1"	5	24	1'-0"	5'-9"	2'-8"	8'-5"							4	17	4'-10"	7'-0"	15
16	5	20	1'-3"	2'-10"	2'-9"	5'-7"	5	19	1'-3"	4'-9"	2'-9"	7'-6"	5	19	1'-3"	10'-9"	2'-9"	13'-6"	4	17	5'-2"	7'-4"	16
17	6	20	1'-3"	3'-5"	3'-1"	6'-6"	6	16	1'-6"	5'-4"	3'-1"	8'-5"	6	16	1'-6"	8'-4"	3'-1"	11'-5"	4	17	5'-6"	7'-8"	17
18	6	20	1'-3"	3'-5"	3'-1"	6'-6"	6	19	1'-3"	5'-4"	3'-1"	8'-5"	6	19	1'-3"	8'-4"	3'-1"	11'-5"	4	17	6'-1"	8'-3"	18
19	7	17	1'-6"	4'-10"	3'-6"	8'-4"	7	16	1'-6"	6'-5"	3'-6"	9'-11"	7	16	1'-6"	10'-5"	3'-6"	13'-11"	4	17	6'-4"	8'-6"	19
20	7	19	1'-4"	4'-10"	3'-10"	8'-8"	7	18	1'-4"	7'-5"	3'-10"	11'-3"	7	18	1'-4"	11'-5"	3'-10"	15'-3"	4	17	6'-7"	8'-9"	20
21	8	17	1'-6"	5'-11"	4'-2"	10'-1"	8	16	1'-6"	9'-1"	4'-2"	13'-3"	8	16	1'-6"	13'-1"	4'-2"	17'-3"	4	17	6'-11"	9'-1"	21
22	8	19	1'-4"	6'-1"	4'-7"	10'-8"	8	18	1'-4"	9'-1"	4'-7"	13'-8"	8	18	1'-4"	14'-1"	4'-7"	18'-8"	4	17	7'-2"	9'-4"	22
23	8	20	1'-3"	6'-7"	5'-0"	11'-7"	8	19	1'-3"	9'-7"	5'-0"	14'-7"	8	19	1'-3"	14'-7"	5'-0"	19'-7"	4	17	7'-6"	9'-8"	23
24	9	19	1'-4"	7'-8"	5'-4"	13'-0"	9	18	1'-4"	11'-3"	5'-4"	16'-7"	9	18	1'-4"	16'-3"	5'-4"	21'-7"	4	17	7'-10"	10'-0"	24
25	9	20	1'-3"	7'-8"	5'-9"	13'-5"	9	19	1'-3"	11'-3"	5'-9"	17'-0"	9	19	1'-3"	17'-3"	5'-9"	23'-0"	4	17	8'-2"	10'-4"	25
26	9	20	1'-3"	8'-2"	6'-1"	14'-3"	9	19	1'-3"	12'-3"	6'-1"	18'-4"	9	19	1'-3"	18'-3"	6'-1"	24'-4"	4	17	8'-8"	10'-10"	26
27	9	20	1'-3"	8'-8"	6'-7"	15'-3"	9	19	1'-3"	12'-9"	6'-7"	19'-4"	9	19	1'-3"	18'-9"	6'-7"	25'-4"	4	17	9'-2"	11'-4"	27
28	10	19	1'-4"	9'-2"	6'-11"	16'-1"	10	18	1'-4"	13'-9"	6'-11"	20'-8"	10	18	1'-4"	19'-9"	6'-11"	26'-8"	4	17	9'-6"	11'-8"	28
29	10	20	1'-3"	9'-8"	7'-3"	16'-11"	10	19	1'-3"	14'-9"	7'-3"	22'-0"	10	19	1'-3"	20'-9"	7'-3"	28'-0"	4	17	10'-1"	12'-3"	29
30	11	17	1'-6"	10'-2"	7'-10"	18'-0"	11	16	1'-6"	15'-3"	7'-10"	23'-1"	11	16	1'-6"	21'-3"	7'-10"	29'-1"	4	17	10'-5"	12'-7"	30

QUANTITIES

H	CONCRETE / 25' UNIT C.Y.	STEEL / 25' UNIT LBS.	CONCRETE PER LIN.FT. C.Y.	STEEL PER LIN.FT. LBS.
6	6.31	470	0.25	18
7	7.66	539	0.31	21
8	8.97	588	0.36	23
9	10.24	716	0.41	28
10	11.60	837	0.46	33
11	13.00	993	0.52	39
12	14.71	1227	0.59	49
13	18.06	1369	0.72	54
14	19.73	1661	0.79	66
15	21.35	1734	0.85	69
16	23.01	2105	0.92	84
17	25.89	2276	1.04	91
18	27.84	2797	1.11	111
19	33.46	2833	1.34	113
20	35.73	3284	1.43	131
21	38.15	3883	1.53	155
22	40.47	4432	1.62	177
23	47.87	4703	1.91	188
24	50.67	5649	2.03	225
25	53.50	6246	2.14	249
26	56.70	6855	2.27	274
27	66.26	7078	2.65	283
28	69.47	8624	2.78	344
29	73.33	9416	2.93	376
30	84.26	10025	3.37	401

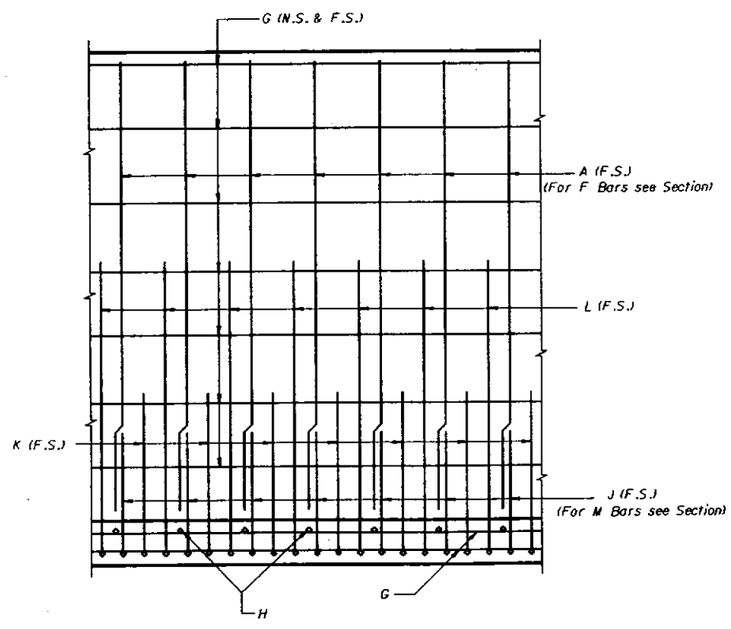

VIEW A-A

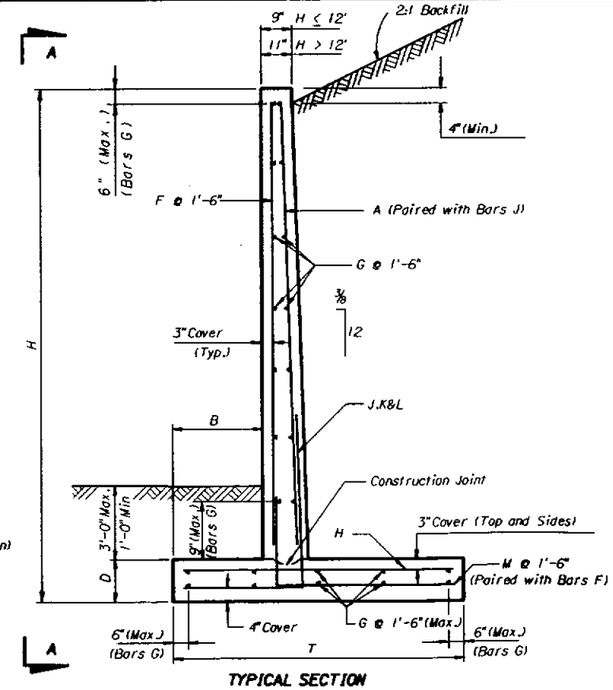

TYPICAL SECTION

NOTE:
To accommodate the Variable Height of a wall Unit, vertical Bars may be field cut to fit and the number of horizontal Bars G required by the highest wall dimension within a 25' Unit shall be equally spaced at each end of the Unit.

BENDING DIAGRAM

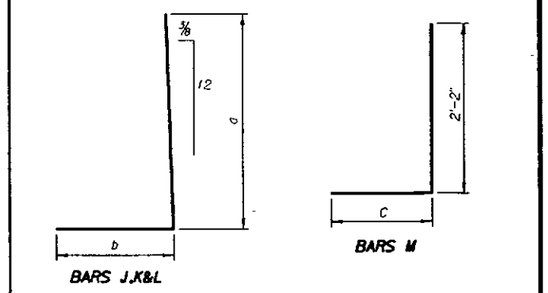

NOTE: All bar dimensions are out to out.

NOTE: Bars M are paired with Bars F and Bars A are paired with Bars J. Bars F and M are No. 4 Bars. Bars J are as shown.

* NOTE: For placement details for Bars D see Standard Index No. 800.

Note: Work this Drawing with Standard Index No. 800.

REVISIONS					
Date	By	Description	Date	By	Description
			92		

	Names	Dates
Drawn by	M.J.	3/87
Checked by	M.P.	3/87
Designed by		
Checked by		
Approved by	A.G.M.	

ENGINEER OF RECORD:
STRUCTURES DESIGN OFFICE
CENTRAL OFFICE
605 Suwannee Street, MS 33
Tallahassee, Florida 32399-0450

LOGO:

SEAL:

FLORIDA DEPARTMENT OF TRANSPORTATION
STRUCTURES DESIGN OFFICE

ROAD NO.	COUNTY	PROJECT NO.

SHEET TITLE: CASE III (5.0 KIPS/SQ FT MAX BEARING PRESSURE) 6 FT. TO 30 FT. HEIGHT

PROJECT NAME:

Drawing No. 1 of 1

Index No. 816

ST1:E120.230816.DGN

Mon Nov 9 13:36:23 1992

FED. ROAD DIV. NO.	STATE	PROJECT NO.	FISCAL YEAR	SHEET NO.
3	FLA.			

RETAINING WALL DATA

WALL DIMENSIONS / REINFORCING STEEL SCHEDULE

H	B	D	T	BARS A SIZE	BARS A NO.	BARS A LENGTH	BARS D* SIZE	BARS D* NO.	BARS D* LENGTH	BARS F SIZE	BARS F NO.	BARS F LENGTH	BARS G SIZE	BARS G NO.	BARS G LENGTH	BARS H SIZE	BARS H NO.	BARS H SPACING	BARS H LENGTH
6	8"	11"	2'-10"				6	4	1'-6"	4	17	4'-7"	4	14	24'-6"	4	18	1'-5"	2'-4"
7	9"	11"	3'-5"				6	5	1'-6"	4	17	5'-7"	4	16	24'-6"	4	18	1'-5"	2'-11"
8	11"	11"	3'-11"				6	5	1'-6"	4	17	6'-7"	4	16	24'-6"	4	18	1'-5"	3'-5"
9	1'-2"	11"	4'-4"				6	6	1'-6"	4	17	7'-7"	4	20	24'-6"	4	18	1'-5"	3'-10"
10	1'-2"	11"	4'-10"				6	7	1'-6"	4	17	8'-7"	4	22	24'-6"	4	28	11"	4'-4"
11	1'-4"	11"	5'-4"				6	7	1'-6"	4	17	9'-7"	4	22	24'-6"	4	38	8"	4'-10"
12	1'-6"	1'-0"	5'-9"				6	8	1'-6"	4	17	10'-6"	4	26	24'-6"	4	34	9"	5'-3"
13	1'-7"	1'-0"	6'-3"				6	9	1'-6"	4	17	11'-6"	4	28	24'-6"	4	43	7"	5'-9"
14	1'-8"	1'-0"	6'-9"				6	9	1'-6"	4	17	12'-6"	4	28	24'-6"	4	60	5"	6'-3"
15	1'-10"	1'-0"	7'-2"				6	10	1'-6"	4	17	13'-6"	4	32	24'-6"	5	43	7"	6'-8"
16	1'-11"	1'-0"	7'-7"	5	20	14'-6"	6	11	1'-6"	4	17	14'-6"	4	34	24'-6"	5	60	5"	7'-1"
17	2'-2"	1'-2"	8'-2"	6	17	15'-4"	6	11	1'-6"	4	17	15'-4"	4	34	24'-6"	5	50	6"	7'-8"
18	2'-2"	1'-2"	8'-9"	6	20	16'-4"	6	12	1'-6"	4	17	16'-4"	4	38	24'-6"	6	50	6"	8'-3"
19	2'-5"	1'-8"	9'-0"	6	17	16'-10"	6	12	1'-6"	4	17	16'-10"	4	38	24'-6"	5	43	7"	8'-6"
20	2'-9"	1'-8"	9'-6"	6	19	17'-10"	6	13	1'-6"	4	17	17'-10"	4	40	24'-6"	5	50	6"	9'-0"
21	3'-0"	1'-8"	9'-11"	6	17	18'-10"	6	14	1'-6"	4	17	18'-10"	4	42	24'-6"	5	60	5"	9'-5"
22	3'-4"	1'-8"	10'-7"	6	19	19'-10"	6	14	1'-6"	4	17	19'-10"	4	44	24'-6"	6	43	7"	10'-1"
23	3'-8"	2'-2"	11'-3"	6	20	20'-4"	6	15	1'-6"	4	17	20'-4"	4	46	24'-6"	5	50	6"	10'-9"
24	4'-0"	2'-2"	11'-11"	6	19	21'-4"	6	15	1'-6"	4	17	21'-4"	4	48	24'-6"	5	60	5"	11'-5"
25	4'-4"	2'-2"	12'-7"	6	20	22'-4"	6	16	1'-6"	4	17	22'-4"	4	50	24'-6"	6	43	7"	12'-1"
26	4'-7"	2'-2"	13'-5"	7	20	23'-4"	6	17	1'-6"	4	17	23'-4"	4	54	24'-6"	6	50	6"	12'-11"
27	5'-0"	2'-8"	14'-2"	7	20	23'-10"	6	17	1'-6"	4	17	23'-10"	4	54	24'-6"	6	38	8"	13'-8"
28	5'-4"	2'-8"	14'-10"	8	19	24'-10"	6	18	1'-6"	4	17	24'-10"	4	58	24'-6"	6	43	7"	14'-4"
29	5'-8"	2'-8"	15'-8"	8	20	25'-10"	6	18	1'-6"	4	17	25'-10"	4	58	24'-6"	6	50	6"	15'-2"
30	6'-1"	3'-2"	16'-5"	8	17	26'-4"	6	19	1'-6"	4	17	26'-4"	4	62	24'-6"	6	50	6"	15'-11"

H	BARS J SIZE	BARS J NO.	BARS J SPACING	BARS J a	BARS J b	BARS J LENGTH	BARS K SIZE	BARS K NO.	BARS K SPACING	BARS K a	BARS K b	BARS K LENGTH	BARS L SIZE	BARS L NO.	BARS L SPACING	BARS L a	BARS L b	BARS L LENGTH	BARS M SIZE	BARS M NO.	BARS M C	BARS M LENGTH	H
6	4	25	1'-0"	5'-5"	1'-1"	6'-6"													4	17	1'-8"	3'-10"	6
7	4	25	1'-0"	6'-5"	1'-2"	7'-7"													4	17	2'-2"	4'-4"	7
8	4	25	1'-0"	7'-5"	1'-4"	8'-9"													4	17	2'-6"	4'-8"	8
9	4	28	11"	8'-5"	1'-8"	10'-1"													4	17	2'-8"	4'-10"	9
10	4	30	10"	9'-5"	1'-8"	11'-1"													4	17	3'-2"	5'-4"	10
11	5	25	1'-0"	10'-5"	1'-11"	12'-4"													4	17	3'-6"	5'-8"	11
12	5	34	9"	11'-5"	2'-1"	13'-6"													4	17	3'-9"	5'-11"	12
13	5	34	9"	12'-5"	2'-4"	14'-9"													4	17	4'-2"	6'-4"	13
14	5	43	7"	13'-5"	2'-6"	15'-11"													4	17	4'-7"	6'-9"	14
15	5	25	1'-0"	14'-5"	2'-8"	17'-1"	5	24	1'-0"	5'-9"	2'-8"	8'-5"							4	17	4'-10"	7'-0"	15
16	5	20	1'-3"	2'-10"	2'-9"	5'-7"	5	19	1'-3"	4'-9"	2'-9"	7'-6"	5	19	1'-3"	10'-9"	2'-9"	13'-6"	4	17	5'-2"	7'-4"	16
17	6	17	1'-6"	3'-5"	3'-1"	6'-6"	6	16	1'-6"	5'-4"	3'-1"	8'-5"	6	16	1'-6"	8'-4"	3'-1"	11'-5"	4	17	5'-6"	7'-8"	17
18	6	20	1'-3"	3'-5"	3'-1"	6'-6"	6	19	1'-3"	5'-4"	3'-1"	8'-5"	6	19	1'-3"	8'-4"	3'-1"	11'-5"	4	17	6'-1"	8'-3"	18
19	7	17	1'-6"	4'-10"	3'-5"	8'-3"	7	16	1'-6"	6'-5"	3'-5"	9'-10"	7	16	1'-6"	10'-5"	3'-5"	13'-10"	4	17	6'-1"	8'-3"	19
20	7	19	1'-4"	4'-10"	3'-9"	8'-7"	7	18	1'-4"	7'-5"	3'-9"	11'-2"	7	18	1'-4"	11'-5"	3'-9"	15'-2"	4	17	6'-3"	8'-5"	20
21	8	17	1'-6"	5'-11"	4'-0"	9'-11"	8	16	1'-6"	9'-1"	4'-0"	13'-1"	8	16	1'-6"	13'-1"	4'-0"	17'-1"	4	17	6'-5"	8'-7"	21
22	8	19	1'-4"	6'-1"	4'-5"	10'-6"	8	18	1'-4"	9'-1"	4'-5"	13'-6"	8	18	1'-4"	14'-1"	4'-5"	18'-6"	4	17	6'-9"	8'-11"	22
23	8	20	1'-3"	6'-7"	4'-9"	11'-4"	8	19	1'-3"	9'-7"	4'-9"	14'-4"	8	19	1'-3"	14'-7"	4'-9"	19'-4"	4	17	7'-1"	9'-3"	23
24	9	19	1'-4"	7'-8"	5'-1"	12'-9"	9	18	1'-4"	11'-3"	5'-1"	16'-4"	9	18	1'-4"	16'-3"	5'-2"	21'-5"	4	17	7'-5"	9'-7"	24
25	9	20	1'-3"	7'-8"	5'-6"	13'-2"	9	19	1'-3"	11'-3"	5'-6"	16'-9"	9	19	1'-3"	17'-3"	5'-6"	22'-9"	4	17	7'-9"	9'-11"	25
26	9	20	1'-3"	8'-2"	5'-9"	13'-11"	9	19	1'-3"	12'-3"	5'-9"	18'-0"	9	19	1'-3"	18'-3"	5'-9"	24'-0"	4	17	8'-4"	10'-6"	26
27	9	20	1'-3"	8'-8"	6'-3"	14'-11"	9	19	1'-3"	12'-9"	6'-3"	19'-0"	9	19	1'-3"	18'-9"	6'-3"	25'-0"	4	17	8'-8"	10'-10"	27
28	10	19	1'-4"	9'-2"	6'-7"	15'-9"	10	18	1'-4"	13'-9"	6'-7"	20'-4"	10	18	1'-4"	19'-9"	6'-7"	26'-4"	4	17	9'-0"	11'-2"	28
29	10	20	1'-3"	9'-8"	6'-11"	16'-7"	10	19	1'-3"	14'-9"	6'-11"	21'-8"	10	19	1'-3"	20'-9"	6'-11"	27'-8"	4	17	9'-6"	11'-8"	29
30	11	17	1'-6"	10'-2"	7'-5"	17'-7"	11	16	1'-6"	15'-3"	7'-5"	22'-8"	11	16	1'-6"	21'-3"	7'-5"	28'-8"	4	17	9'-10"	12'-0"	30

QUANTITIES

H	CONCRETE / 25' UNIT C.Y.	STEEL / 25' UNIT LBS.	CONCRETE PER LIN.FT. C.Y.	STEEL PER LIN.FT. LBS.
6	6.31	470	0.25	18
7	7.66	547	0.31	21
8	8.97	588	0.36	23
9	10.24	716	0.41	28
10	11.60	837	0.46	33
11	13.00	993	0.52	39
12	14.71	1227	0.59	49
13	18.06	1369	0.72	54
14	19.73	1661	0.79	66
15	21.35	1734	0.85	69
16	23.01	2107	0.92	84
17	25.89	2276	1.04	91
18	27.84	2799	1.11	111
19	32.95	2805	1.32	112
20	35.08	3262	1.40	130
21	37.12	3839	1.48	153
22	39.57	4365	1.58	174
23	46.53	4607	1.86	184
24	49.33	5632	1.97	225
25	52.17	6118	2.09	244
26	55.36	6889	2.21	275
27	64.20	6926	2.57	277
28	67.41	8486	2.70	339
29	71.07	9394	2.84	375
30	81.33	9835	3.25	393

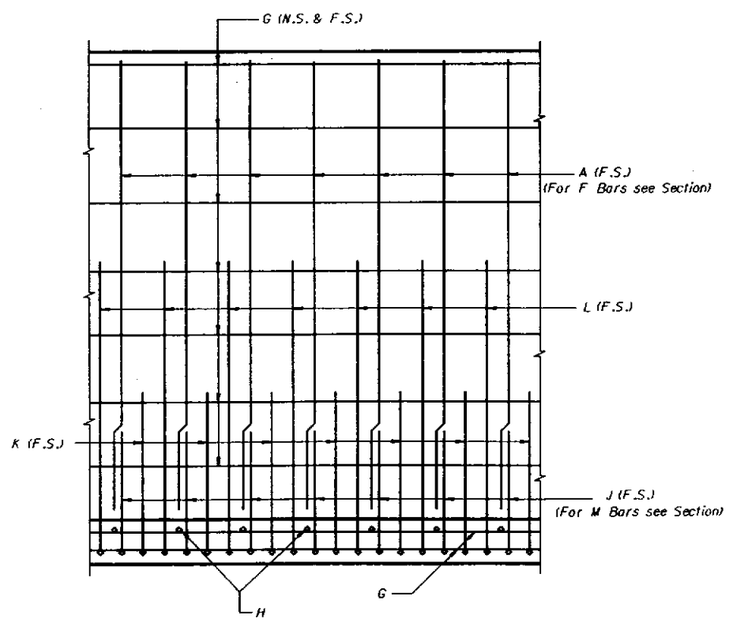

VIEW A-A

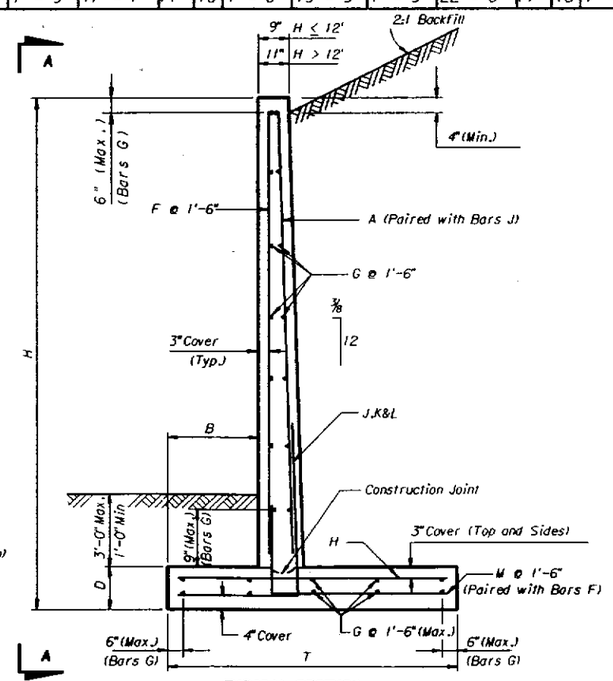

TYPICAL SECTION

NOTE:
To accommodate the Variable Height of a wall Unit, vertical Bars may be field cut to fit and the number of horizontal Bars G required by the highest wall dimension within a 25' Unit shall be equally spaced at each end of the Unit.

BENDING DIAGRAM

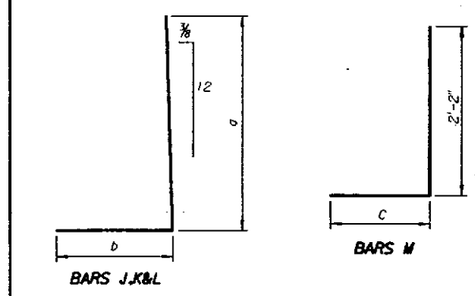

NOTE: All bar dimensions are out to out.

NOTE: Bars M are paired with Bars F and Bars A are paired with Bars J. Bars F and M are No. 4 Bars. Bars J are as shown.

* NOTE: For placement details for Bars D see Standard Index No. 800.

Note: Work this Drawing with Standard Index No. 800.

REVISIONS					
Date	By	Description	Date	By	Description
			92		

	Names	Dates
Drawn by	M.J.	3/87
Checked by	M.P.	3/87
Designed by		
Checked by		
Approved by	A.G.M.	

ENGINEER OF RECORD:
STRUCTURES DESIGN OFFICE
CENTRAL OFFICE
605 Suwannee Street, MS 33
Tallahassee, Florida 32399-0450

LOGO:

SEAL:

FLORIDA DEPARTMENT OF TRANSPORTATION
STRUCTURES DESIGN OFFICE

ROAD NO.	COUNTY	PROJECT NO.

SHEET TITLE: CASE III (5.5 KIPS/SQ. FT. MAX. BEARING PRESSURE) 6 FT. TO 30 FT. HEIGHT

PROJECT NAME:

Drawing No. 1 of 1

Index No. 817

MON NOV 9 13:38:25 1992 ST1:(120.230)817.DGN

FED. ROAD DIV. NO.	STATE	PROJECT NO.	FISCAL YEAR	SHEET NO.
3	FLA.			

RETAINING WALL DATA

REINFORCING STEEL SCHEDULE

WALL DIMENSIONS				BARS A			BARS D*			BARS F			BARS G			BARS H				BARS J						BARS K						BARS L						BARS M				H
H	B	D	T	SIZE	NO.	LENGTH	SIZE	NO.	LENGTH	SIZE	NO.	LENGTH	SIZE	NO.	LENGTH	SIZE	NO.	SPACING	LENGTH	SIZE	NO.	SPACING	a	b	LENGTH	SIZE	NO.	SPACING	a	b	LENGTH	SIZE	NO.	SPACING	a	b	LENGTH	SIZE	NO.	C	LENGTH	
6	8"	11"	2'-10"				6	4	1'-6"	4	17	4'-7"	4	14	24'-6"	4	18	1'-5"	2'-4"	4	26	1'-0"	5'-5"	1'-1"	6'-6"													4	17	1'-8"	3'-10"	6
7	9"	11"	3'-5"				6	4	1'-6"	4	17	5'-7"	4	16	24'-6"	4	18	1'-5"	2'-11"	4	26	1'-0"	6'-5"	1'-3"	7'-8"													4	17	2'-2"	4'-4"	7
8	11"	11"	3'-10"				6	5	1'-6"	4	17	6'-7"	4	18	24'-6"	4	18	1'-5"	3'-4"	4	26	1'-0"	7'-5"	1'-5"	8'-10"													4	17	2'-5"	4'-7"	8
9	1'-2"	11"	4'-4"				6	6	1'-6"	4	17	7'-7"	4	20	24'-6"	4	18	1'-5"	3'-10"	4	28	11"	8'-5"	1'-8"	10'-1"													4	17	2'-8"	4'-10"	9
10	1'-2"	11"	4'-10"				6	6	1'-6"	4	17	8'-7"	4	22	24'-6"	4	28	11"	4'-4"	4	31	10"	9'-5"	1'-9"	11'-2"													4	17	3'-2"	5'-4"	10
11	1'-4"	11"	5'-4"				6	7	1'-6"	4	17	9'-7"	4	22	24'-6"	4	34	9"	4'-10"	5	26	1'-0"	10'-5"	1'-11"	12'-4"													4	17	3'-6"	5'-8"	11
12	1'-6"	1'-0"	5'-9"				6	8	1'-6"	4	17	10'-6"	4	26	24'-6"	4	34	9"	5'-3"	5	34	9"	11'-5"	2'-1"	13'-6"													4	17	3'-9"	5'-11"	12
13	1'-7"	1'-0"	6'-3"				6	8	1'-6"	4	17	11'-6"	4	28	24'-6"	4	43	7"	5'-9"	5	34	9"	12'-5"	2'-5"	14'-10"													4	17	4'-2"	6'-4"	13
14	1'-8"	1'-0"	6'-9"				6	9	1'-6"	4	17	12'-6"	4	28	24'-6"	4	61	5"	6'-3"	5	43	7"	13'-5"	2'-6"	15'-11"													4	17	4'-7"	6'-9"	14
15	1'-10"	1'-0"	7'-2"				6	10	1'-6"	4	17	13'-6"	4	32	24'-6"	5	43	7"	6'-8"	5	26	1'-0"	14'-5"	2'-9"	17'-2"	5	25	1'-0"	5'-9"	2'-9"	8'-6"							4	17	4'-10"	7'-0"	15
16	1'-11"	1'-0"	7'-8"	5	21	14'-6"	6	10	1'-6"	4	17	14'-6"	4	34	24'-6"	5	61	5"	7'-2"	5	21	1'-3"	2'-10"	2'-10"	5'-8"	5	20	1'-3"	4'-9"	2'-10"	7'-7"	5	20	1'-3"	10'-9"	2'-10"	13'-7"	4	17	5'-3"	7'-5"	16
17	2'-2"	1'-2"	8'-2"	6	17	15'-4"	6	11	1'-6"	4	17	15'-4"	4	36	24'-6"	5	51	6"	7'-8"	6	17	1'-6"	3'-5"	3'-1"	6'-6"	6	16	1'-6"	5'-4"	3'-1"	8'-5"	6	16	1'-6"	8'-4"	3'-1"	11'-5"	4	17	5'-6"	7'-8"	17
18	2'-2"	1'-2"	8'-9"	6	21	16'-4"	6	12	1'-6"	4	17	16'-4"	4	38	24'-6"	5	51	6"	8'-3"	6	21	1'-3"	3'-5"	3'-2"	6'-7"	6	20	1'-3"	5'-4"	3'-2"	8'-6"	6	20	1'-3"	8'-4"	3'-2"	11'-6"	4	17	6'-1"	8'-3"	18
19	2'-5"	1'-8"	9'-0"	6	17	16'-10"	6	12	1'-6"	4	17	16'-10"	4	40	24'-6"	5	43	7"	8'-6"	7	17	1'-6"	4'-10"	3'-5"	8'-3"	7	16	1'-6"	6'-5"	3'-5"	9'-10"	7	16	1'-6"	10'-5"	3'-5"	13'-10"	4	17	6'-1"	8'-3"	19
20	2'-9"	1'-8"	9'-6"	6	19	17'-10"	6	13	1'-6"	4	17	17'-10"	4	44	24'-6"	6	34	9"	9'-0"	7	19	1'-4"	4'-10"	3'-9"	8'-7"	7	18	1'-4"	7'-5"	3'-9"	11'-2"	7	18	1'-4"	11'-5"	3'-9"	15'-2"	4	17	6'-3"	8'-5"	20
21	3'-0"	1'-8"	9'-11"	6	17	18'-10"	6	13	1'-6"	4	17	18'-10"	4	44	24'-6"	6	38	8"	9'-5"	8	17	1'-6"	5'-11"	4'-1"	10'-0"	8	16	1'-6"	9'-1"	4'-1"	13'-2"	8	16	1'-6"	13'-1"	4'-1"	17'-2"	4	17	6'-5"	8'-7"	21
22	3'-3"	1'-8"	10'-4"	6	19	19'-10"	6	14	1'-6"	4	17	19'-10"	4	46	24'-6"	6	43	7"	9'-10"	8	19	1'-4"	6'-7"	4'-4"	10'-11"	8	18	1'-4"	9'-1"	4'-4"	13'-5"	8	18	1'-4"	14'-1"	4'-4"	18'-5"	4	17	6'-7"	8'-9"	22
23	3'-6"	2'-2"	10'-10"	6	21	20'-4"	6	15	1'-6"	4	17	20'-4"	4	48	24'-6"	6	34	9"	10'-4"	8	21	1'-3"	6'-7"	4'-8"	11'-3"	8	20	1'-3"	9'-7"	4'-8"	14'-3"	8	20	1'-3"	14'-7"	4'-8"	19'-3"	4	17	6'-10"	9'-0"	23
24	3'-9"	2'-2"	11'-5"	6	19	21'-4"	6	15	1'-6"	4	17	21'-4"	4	50	24'-6"	5	61	5"	10'-11"	9	19	1'-4"	7'-8"	4'-11"	12'-7"	9	18	1'-4"	10'-3"	4'-11"	15'-2"	9	18	1'-4"	16'-3"	4'-11"	21'-2"	4	17	7'-2"	9'-4"	24
25	4'-1"	2'-2"	12'-0"	6	21	22'-4"	6	16	1'-6"	4	17	22'-4"	4	50	24'-6"	5	61	5"	11'-6"	9	21	1'-3"	7'-8"	5'-3"	12'-11"	9	20	1'-3"	11'-3"	5'-3"	16'-6"	9	20	1'-3"	17'-3"	5'-3"	22'-6"	4	17	7'-5"	9'-7"	25
26	4'-4"	2'-2"	12'-9"	7	21	23'-4"	6	17	1'-6"	4	17	23'-4"	4	54	24'-6"	7	34	9"	12'-3"	9	21	1'-3"	8'-2"	5'-7"	13'-9"	9	20	1'-3"	12'-3"	5'-7"	17'-10"	9	20	1'-3"	18'-3"	5'-7"	23'-10"	4	17	7'-11"	10'-1"	26
27	4'-9"	2'-8"	13'-6"	7	21	23'-10"	6	17	1'-6"	4	17	23'-10"	4	56	24'-6"	6	38	8"	13'-0"	9	21	1'-3"	8'-8"	6'-0"	14'-8"	9	20	1'-3"	12'-9"	6'-0"	18'-9"	9	20	1'-3"	18'-9"	6'-0"	24'-9"	4	17	8'-3"	10'-5"	27
28	5'-1"	2'-8"	14'-3"	8	19	24'-10"	6	18	1'-6"	4	17	24'-10"	4	58	24'-6"	7	31	10"	13'-9"	10	19	1'-4"	9'-2"	6'-4"	15'-6"	10	18	1'-4"	13'-9"	6'-4"	20'-1"	10	18	1'-4"	19'-9"	6'-4"	26'-1"	4	17	8'-8"	10'-10"	28
29	5'-5"	2'-8"	14'-11"	8	21	25'-10"	6	19	1'-6"	4	17	25'-10"	4	62	24'-6"	6	51	6"	14'-5"	10	21	1'-3"	9'-8"	6'-9"	16'-5"	10	20	1'-3"	14'-9"	6'-9"	21'-6"	10	20	1'-3"	20'-9"	6'-9"	27'-6"	4	17	9'-0"	11'-2"	29
30	5'-9"	3'-2"	15'-9"	8	17	26'-4"	6	19	1'-6"	4	17	26'-4"	4	62	24'-6"	6	51	6"	15'-3"	11	17	1'-6"	10'-2"	7'-1"	17'-3"	11	16	1'-6"	15'-3"	7'-1"	22'-4"	11	16	1'-6"	21'-3"	7'-1"	28'-4"	4	17	9'-6"	11'-8"	30

QUANTITIES

H	CONCRETE / 25' UNIT C.Y.	STEEL / 25' UNIT LBS.	CONCRETE PER LIN.FT. C.Y.	STEEL PER LIN.FT. LBS.
6	6.31	477	0.25	19
7	7.66	554	0.31	22
8	8.90	629	0.36	25
9	10.24	719	0.41	28
10	11.60	847	0.46	33
11	13.00	997	0.52	39
12	14.71	1233	0.59	49
13	18.06	1375	0.72	55
14	19.73	1673	0.79	66
15	21.35	1769	0.85	70
16	23.09	2167	0.92	86
17	25.89	2317	1.04	92
18	27.84	2883	1.11	115
19	32.95	2838	1.32	113
20	35.08	3318	1.40	132
21	37.12	3828	1.48	153
22	39.19	4393	1.57	175
23	45.70	4741	1.83	189
24	48.33	5540	1.93	221
25	51.00	6227	2.04	249
26	54.03	6969	2.16	278
27	62.55	7113	2.50	284
28	65.97	8368	2.64	334
29	69.21	9730	2.77	389
30	79.37	9717	3.17	388

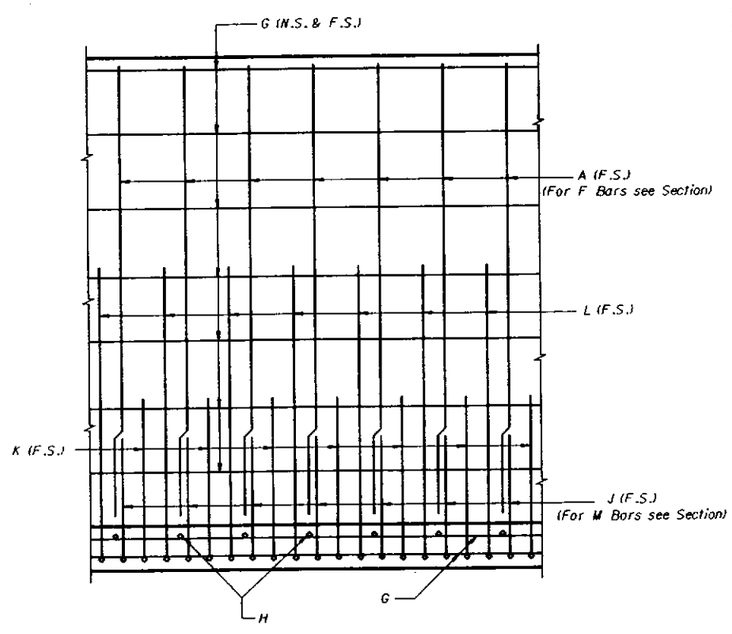

VIEW A-A

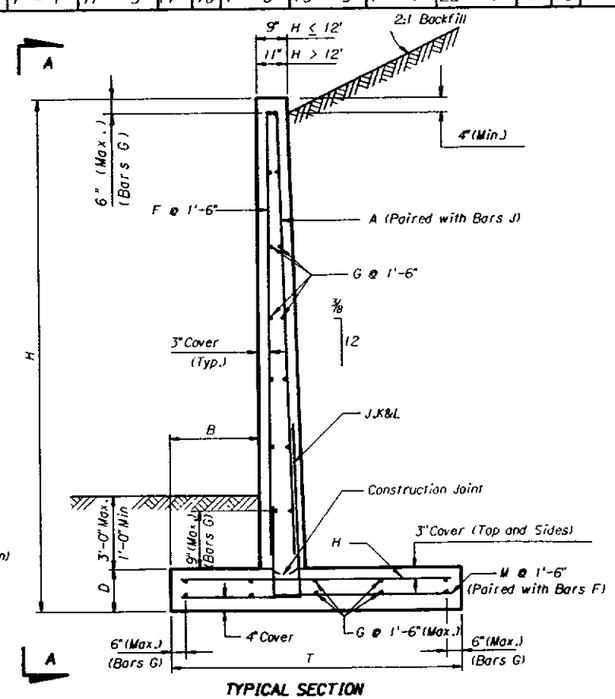

TYPICAL SECTION

NOTE:
To accommodate the Variable Height of a wall Unit, vertical Bars may be field cut to fit and the number of horizontal Bars G required by the highest wall dimension within a 25' Unit shall be equally spaced at each end of the Unit.

BENDING DIAGRAM

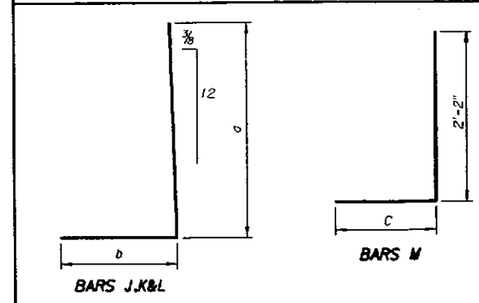

NOTE: All bar dimensions are out to out.

NOTE: Bars M are paired with Bars F and Bars A are paired with Bars J. Bars F and M are No. 4 Bars. Bars J are as shown.

* NOTE: For placement details for Bars D see Standard Index No. 800.

Note: Work this Drawing with Standard Index No. 800.

REVISIONS					
Date	By	Description	Date	By	Description
			92		

	Names	Dates
Drawn by	M.I.	3/87
Checked by	M.P.	3/87
Designed by		
Checked by		
Approved by	A.G.M.	

ENGINEER OF RECORD:
STRUCTURES DESIGN OFFICE
CENTRAL OFFICE
605 Suwannee Street, MS 33
Tallahassee, Florida 32399-0450

LOGO:

SEAL:

FLORIDA DEPARTMENT OF TRANSPORTATION
STRUCTURES DESIGN OFFICE

ROAD NO.	COUNTY	PROJECT NO.

SHEET TITLE:
CASE III (6.0 KIPS/SQ. FT. MAX. BEARING PRESSURE) 6 FT. TO 30 FT. HEIGHT

PROJECT NAME:

Drawing No. 1 of 1

Index No. 818

Mon Nov 9 13:40:37 1992 ST1:E120,230818.DGN

FED. ROAD DIV. NO.	STATE	PROJECT NO.	FISCAL YEAR	SHEET NO.
3	FLA.			

RETAINING WALL DATA

H	WALL DIMENSIONS B	D	T	SHEAR KEY DIMENSIONS E	F	G	BARS A1 SIZE	NO.	LENGTH	BARS A2 SIZE	NO.	SPACING	LENGTH	BARS A3 SIZE	NO.	SPACING	LENGTH	BARS D SIZE	NO.	LENGTH	BARS F SIZE	NO.	LENGTH	BARS G SIZE	NO.	LENGTH	BARS H SIZE	NO.	SPACING	LENGTH	BARS J SIZE	NO.	SPACING	a	b	LENGTH	BARS M SIZE	NO.	C	LENGTH	H
6	10"	11"	3'-11"															6	4	1'-6"	4	17	4'-7"	4	14	24'-6"	4	18	1'-5"	3'-5"	4	25	1'-0"	5'-5"	1'-3"	6'-8"	4	17	2'-7"	4'-11"	6
7	1'-3"	11"	4'-8"															6	5	1'-6"	4	17	5'-7"	4	18	24'-6"	4	18	1'-5"	4'-2"	4	25	1'-0"	6'-5"	1'-8"	8'-1"	4	17	2'-11"	5'-3"	7
8	1'-3"	1'-0"	5'-4"															6	5	1'-6"	4	17	6'-6"	4	18	24'-6"	4	23	1'-1"	4'-10"	4	28	11"	7'-5"	1'-8"	9'-1"	4	17	3'-7"	5'-11"	8
9	1'-8"	1'-0"	6'-3"	1'-0"	1'-0"	2'-1"				4	19	1'-3"	5'-8"					6	6	1'-6"	4	17	7'-6"	4	24	24'-6"	4	23	1'-1"	5'-9"	4	20	1'-3"	8'-5"	2'-2"	10'-7"	4	17	4'-1"	6'-5"	9
10	2'-3"	1'-2"	8'-3"	1'-0"	1'-0"	2'-8"				4	27	11"	4'-11"					6	7	1'-6"	4	17	8'-4"	4	28	24'-6"	4	30	10"	7'-9"	4	28	11"	9'-5"	2'-9"	12'-2"	4	17	5'-6"	7'-10"	10
11	3'-0"	1'-2"	10'-6"	1'-0"	1'-0"	3'-6"				5	22	1'-1"	5'-11"					6	7	1'-6"	4	17	9'-4"	4	32	24'-6"	4	30	10"	10'-0"	5	23	1'-1"	10'-5"	3'-7"	14'-0"	4	17	7'-0"	9'-4"	11
12	3'-6"	1'-5"	11'-6"	1'-0"	1'-0"	4'-0"				5	27	11"	6'-9"					6	8	1'-6"	4	17	10'-1"	4	34	24'-6"	5	25	1'-0"	11'-0"	5	28	11"	11'-5"	4'-1"	15'-6"	4	17	7'-6"	10'-4"	12
13	4'-0"	1'-5"	13'-3"	1'-0"	1'-0"	4'-8"				5	27	11"	7'-1"					6	8	1'-6"	4	17	11'-1"	4	38	24'-6"	5	25	1'-0"	12'-9"	5	28	11"	12'-5"	4'-9"	17'-2"	4	17	8'-9"	11'-7"	13
14	5'-0"	1'-8"	16'-3"	1'-0"	1'-0"	5'-9"				6	24	1'-0"	7'-6"					6	9	1'-6"	4	17	11'-10"	4	44	24'-6"	5	30	10"	15'-9"	6	26	1'-0"	13'-5"	5'-10"	19'-3"	4	17	10'-9"	13'-7"	14
15	7'-0"	1'-8"	22'-3"	1'-0"	1'-0"	7'-9"	5	20	12'-10"	6	19	1'-3"	7'-10"	6	19	1'-3"	10'-10"	6	10	1'-6"	4	17	12'-10"	4	54	24'-6"	7	34	9"	21'-9"	6	20	1'-3"	3'-11"	7'-10"	11'-9"	4	17	14'-9"	17'-7"	15

QUANTITIES

H	CONCRETE / 25' UNIT C.Y.	STEEL / 25' UNIT LBS.	CONCRETE PER LIN.FT. C.Y.	STEEL PER LIN.FT. LBS.
6	7.23	498	0.29	19
7	8.72	613	0.35	24
8	10.51	691	0.42	27
9	13.19	865	0.53	34
10	17.10	1129	0.68	45
11	20.50	1423	0.82	56
12	24.98	1735	1.00	69
13	30.08	1930	1.20	77
14	38.67	2543	1.55	101
15	49.15	3916	1.97	156

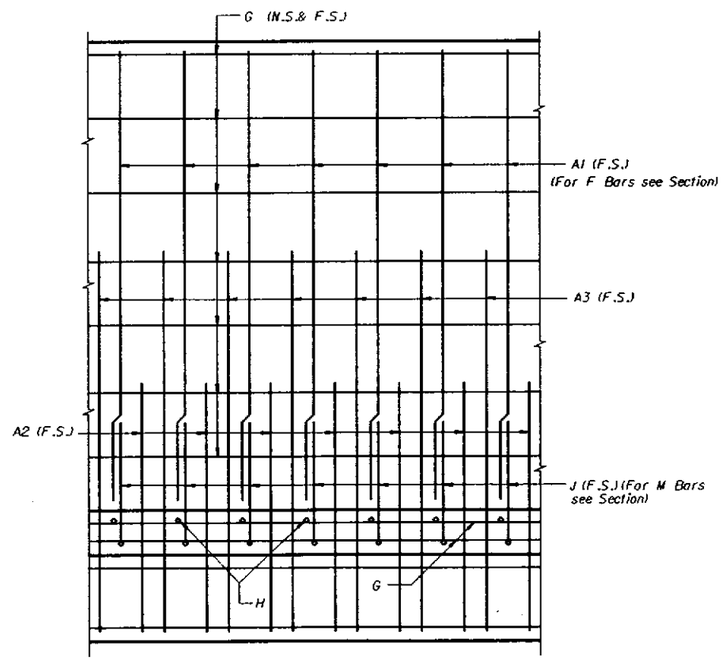

VIEW A-A

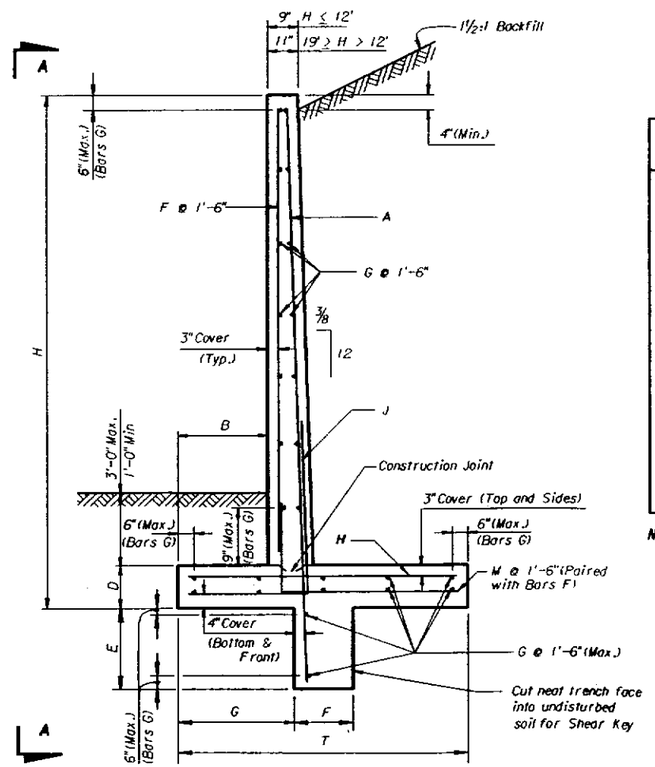

TYPICAL SECTION

NOTE:
To accommodate the Variable Height of a wall Unit, vertical Bars may be field cut to fit and the number of horizontal Bars G required by the highest wall dimension within a 25' Unit shall be equally spaced at each end of the Unit.

BENDING DIAGRAM

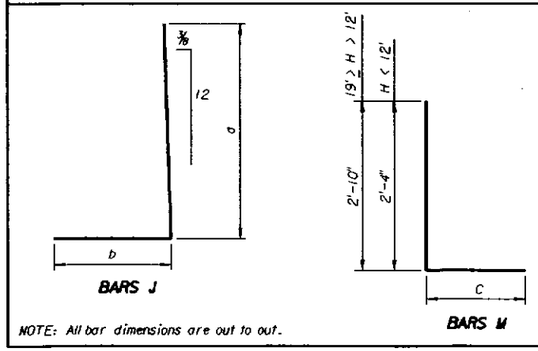

NOTE: All bar dimensions are out to out.

NOTE:
Bars M Paired with Bars F and Bars A1 Paired with Bars J. Bars F and M are No.4 Bars. Bars J are as shown.

NOTE: For placement details for Bars D see Standard Index No. 800.

NOTE: Work this Drawing with Standard Index No. 800.

REVISIONS Date	By	Description	Date	By	Description
			92		

	Names	Dates
Drawn by	M.I.	3/87
Checked by	M.P.	3/87
Designed by		
Checked by		
Approved by	A.G.M.	

ENGINEER OF RECORD:
STRUCTURES DESIGN OFFICE
CENTRAL OFFICE
605 Suwannee Street, MS 33
Tallahassee, Florida 32399-0450

LOGOS:

SEAL:

FLORIDA DEPARTMENT OF TRANSPORTATION
STRUCTURES DESIGN OFFICE

ROAD NO.	COUNTY	PROJECT NO.

SHEET TITLE:
CASE IV (3.0 KIPS/SQ FT MAX BEARING PRESSURE) 6 FT. TO 15 FT. HEIGHT

PROJECT NAME:

Drawing No. 1 of 1

Index No. 819

Mon Nov 9 13:42:41 1992 ST:L120.230819.DGN

FED. ROAD DIV. NO.	STATE	PROJECT NO.	FISCAL YEAR	SHEET NO.
3	FLA.			

RETAINING WALL DATA

H	WALL DIMENSIONS B	D	T	SHEAR KEY DIMENSIONS E	F	G	BARS A1 SIZE	NO.	LENGTH	BARS A2 SIZE	NO.	SPACING	LENGTH	BARS A3 SIZE	NO.	SPACING	LENGTH	BARS D SIZE	NO.	LENGTH	BARS F SIZE	NO.	LENGTH	BARS G SIZE	NO.	LENGTH	BARS H SIZE	NO.	SPACING	LENGTH	BARS J SIZE	NO.	SPACING	a	b	LENGTH	BARS M SIZE	NO.	C	LENGTH	H
6	10"	11"	3'-11"															6	4	1'-6"	4	17	4'-7"	4	14	24'-6"	4	18	1'-5"	3'-5"	4	25	1'-0"	5'-5"	1'-3"	6'-8"	4	17	2'-7"	4'-11"	6
7	1'-3"	11"	4'-8"															6	5	1'-6"	4	17	5'-7"	4	18	24'-6"	4	18	1'-5"	4'-2"	4	25	1'-0"	6'-5"	1'-8"	8'-1"	4	17	2'-11"	5'-3"	7
8	1'-3"	1'-0"	5'-4"															6	5	1'-6"	4	17	6'-6"	4	18	24'-6"	4	23	1'-1"	4'-10"	4	28	11"	7'-5"	1'-8"	9'-1"	4	17	3'-7"	5'-11"	8
9	1'-6"	1'-0"	5'-10"	1'-0"	1'-0"	1'-11"				4	19	1'-3"	5'-8"					6	6	1'-6"	4	17	7'-6"	4	24	24'-6"	4	23	1'-1"	5'-4"	4	20	1'-3"	8'-5"	2'-0"	10'-5"	4	17	3'-10"	6'-2"	9
10	1'-8"	1'-2"	6'-7"	1'-0"	1'-0"	2'-1"				4	27	11"	4'-11"					6	7	1'-6"	4	17	8'-4"	4	26	24'-6"	4	30	10"	6'-1"	4	28	11"	9'-5"	2'-2"	11'-7"	4	17	4'-5"	6'-9"	10
11	1'-10"	1'-2"	7'-5"	1'-0"	1'-0"	2'-4"				5	22	1'-1"	5'-11"					6	7	1'-6"	4	17	9'-4"	4	28	24'-6"	5	25	1'-0"	6'-11"	5	23	1'-1"	10'-5"	2'-5"	12'-10"	4	17	5'-1"	7'-5"	11
12	2'-3"	1'-5"	9'-3"	1'-0"	1'-0"	2'-9"				5	27	11"	6'-9"					6	8	1'-6"	4	17	10'-1"	4	32	24'-6"	5	25	1'-0"	8'-9"	5	28	11"	11'-5"	2'-10"	14'-3"	4	17	6'-6"	9'-4"	12
13	3'-0"	1'-5"	10'-9"	1'-0"	1'-0"	3'-8"				5	27	11"	7'-1"					6	8	1'-6"	4	17	11'-1"	4	34	24'-6"	5	25	1'-0"	10'-3"	5	28	11"	12'-5"	3'-9"	16'-2"	4	17	7'-3"	10'-1"	13
14	3'-6"	1'-8"	11'-9"	1'-3"	1'-1"	4'-3"				6	24	1'-0"	7'-6"					6	9	1'-6"	4	17	11'-10"	4	38	24'-6"	5	34	9"	11'-3"	6	25	1'-0"	13'-5"	4'-4"	17'-9"	4	17	7'-9"	10'-7"	14
15	4'-0"	1'-8"	13'-3"	1'-7"	1'-3"	4'-9"	5	20	12'-10"	6	19	1'-3"	7'-10"	6	19	1'-3"	10'-10"	6	10	1'-6"	4	17	12'-10"	4	42	24'-6"	5	34	9"	12'-9"	6	20	1'-3"	3'-11"	4'-10"	8'-9"	4	17	8'-9"	11'-7"	15
16	4'-6"	2'-2"	14'-9"	1'-4"	1'-1"	5'-4"	5	17	13'-4"	6	16	1'-6"	8'-4"	6	16	1'-6"	12'-4"	6	10	1'-6"	4	17	13'-4"	4	44	24'-6"	5	43	7"	14'-3"	7	17	1'-6"	5'-4"	5'-4"	10'-8"	4	17	9'-9"	13'-7"	16
17	5'-6"	2'-8"	17'-9"	10"	1'-0"	6'-4"	5	19	13'-10"	6	18	1'-4"	9'-10"	6	18	1'-4"	12'-10"	6	10	1'-6"	4	17	13'-10"	4	48	24'-6"	5	60	5"	17'-3"	7	19	1'-4"	7'-1"	6'-5"	13'-6"	4	17	11'-9"	15'-7"	17
18	6'-6"	2'-8"	20'-10"	1'-0"	1'-0"	7'-4"	5	17	14'-10"	6	16	1'-6"	10'-10"	6	16	1'-6"	13'-10"	6	11	1'-6"	4	17	14'-10"	4	54	24'-6"	5	60	5"	20'-4"	8	17	1'-6"	8'-9"	7'-5"	16'-2"	4	17	13'-10"	17'-8"	18
19	7'-6"	2'-8"	23'-10"	1'-1"	1'-0"	8'-5"	5	17	15'-10"	8	16	1'-6"	12'-6"	8	16	1'-6"	19'-6"	6	12	1'-6"	4	17	15'-10"	4	60	24'-6"	5	60	5"	23'-4"	9	17	1'-6"	8'-2"	8'-6"	16'-8"	4	17	15'-10"	19'-8"	19

QUANTITIES

H	CONCRETE / 25' UNIT CY.	STEEL / 25' UNIT LBS.	CONCRETE PER LIN.FT. CY.	STEEL PER LIN.FT. LBS.
6	7.23	498	0.29	19
7	8.72	613	0.35	24
8	10.51	691	0.42	27
9	12.81	854	0.51	34
10	15.30	1039	0.61	41
11	17.17	1288	0.69	51
12	22.03	1596	0.88	63
13	26.80	1761	1.07	70
14	32.06	2232	1.28	89
15	36.17	2502	1.45	100
16	45.44	2791	1.82	111
17	59.74	3632	2.39	145
18	68.78	4139	2.75	165
19	77.57	5483	3.10	219

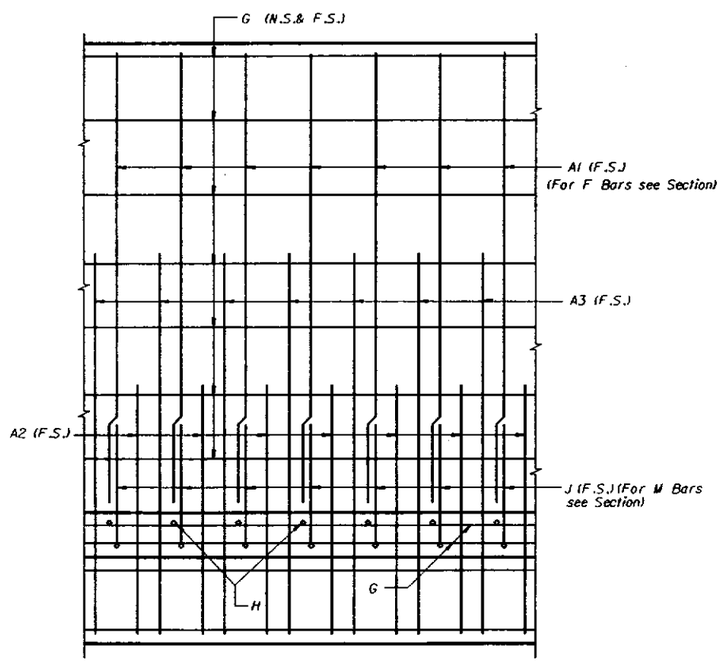

VIEW A-A

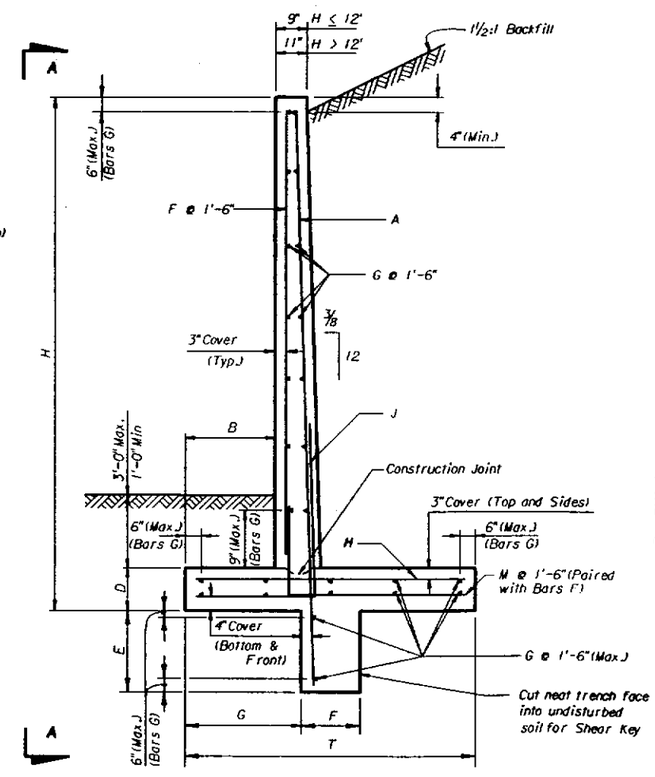

TYPICAL SECTION

NOTE:
To accommodate the Variable Height of a wall Unit, vertical Bars may be field cut to fit and the number of horizontal Bars G required by the highest wall dimension within a 25' Unit shall be equally spaced at each end of the Unit.

BENDING DIAGRAM

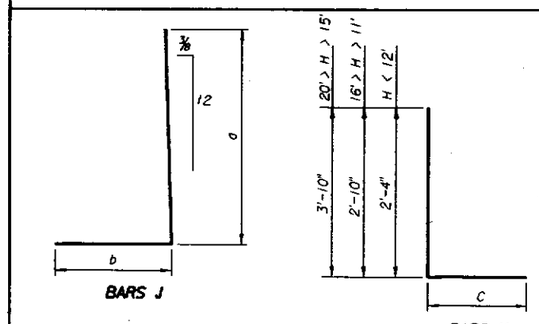

NOTE: All bar dimensions are out to out.

NOTE:
Bars M Paired with Bars F and Bars A1 Paired with Bars J. Bars F and M are No.4 Bars. Bars J are as shown.

NOTE: For placement details for Bars D see Standard Index No. 800.

NOTE: Work this Drawing with Standard Index No. 800.

REVISIONS Date	By	Description	Date	By	Description
			92		

	Names	Dates
Drawn by	M.I.	3/87
Checked by	M.P.	3/87
Designed by		
Checked by		
Approved by	A.G.M.	

ENGINEER OF RECORD:
STRUCTURES DESIGN OFFICE
CENTRAL OFFICE
605 Suwannee Street, MS 33
Tallahassee, Florida 32399-0450

LOGO:

SEAL:

FLORIDA DEPARTMENT OF TRANSPORTATION
STRUCTURES DESIGN OFFICE

ROAD NO.	COUNTY	PROJECT NO.

SHEET TITLE:
CASE IV (4.0 KIPS/SQ FT MAX BEARING PRESSURE) 6 FT. TO 19 FT. HEIGHT

PROJECT NAME:

Drawing No. 1 of 1

Index No. 820

Mon Nov 9 13:44:45 1992 STIK120.2301820.DGN

FED. ROAD DIV. NO.	STATE	PROJECT NO.	FISCAL YEAR	SHEET NO.
3	FLA.			

RETAINING WALL DATA

WALL DIMENSIONS				SHEAR KEY DIMENSIONS			REINFORCING STEEL SCHEDULE																																			
							BARS A1			BARS A2				BARS A3				BARS D			BARS F			BARS G			BARS H				BARS J						BARS M				
H	B	D	T	E	F	G	SIZE	NO.	LENGTH	SIZE	NO.	SPACING	LENGTH	SIZE	NO.	SPACING	LENGTH	SIZE	NO.	LENGTH	SIZE	NO.	LENGTH	SIZE	NO.	LENGTH	SIZE	NO.	SPACING	LENGTH	SIZE	NO.	SPACING	a	b	LENGTH	SIZE	NO.	C	LENGTH	H
6	10"	11"	3'-11"															6	4	1'-6"	4	17	4'-7"	4	14	24'-6"	4	18	1'-5"	3'-5"	4	25	1'-0"	5'-5"	1'-3"	6'-8"	4	17	2'-7"	4'-11"	6
7	1'-3"	11"	4'-8"															6	5	1'-6"	4	17	5'-7"	4	18	24'-6"	4	18	1'-5"	4'-2"	4	25	1'-0"	6'-5"	1'-8"	8'-1"	4	17	2'-11"	5'-3"	7
8	1'-3"	1'-0"	5'-4"															6	5	1'-6"	4	17	6'-6"	4	18	24'-6"	4	23	1'-1"	4'-10"	4	28	11"	7'-5"	1'-8"	9'-1"	4	17	3'-7"	5'-11"	8
9	1'-6"	1'-0"	5'-10"	1'-0"	1'-0"	1'-11"				4	19	1'-3"	5'-8"					6	6	1'-6"	4	17	7'-6"	4	24	24'-6"	4	23	1'-1"	5'-4"	4	20	1'-3"	8'-5"	2'-0"	10'-5"	4	17	3'-10"	6'-2"	9
10	1'-8"	1'-2"	6'-7"	1'-0"	1'-0"	2'-1"				4	27	11"	4'-11"					6	7	1'-6"	4	17	8'-4"	4	26	24'-6"	4	30	10"	6'-1"	4	28	11"	9'-5"	2'-2"	11'-7"	4	17	4'-5"	6'-9"	10
11	1'-10"	1'-2"	7'-1"	1'-0"	1'-0"	2'-4"				5	22	1'-1"	5'-11"					6	7	1'-6"	4	17	9'-4"	4	28	24'-6"	5	25	1'-0"	6'-7"	5	23	1'-1"	10'-5"	2'-5"	12'-10"	4	17	4'-9"	7'-1"	11
12	2'-0"	1'-5"	8'-0"	1'-3"	1'-2"	2'-6"				5	27	11"	6'-9"					6	8	1'-6"	4	17	10'-1"	4	30	24'-6"	5	25	1'-0"	7'-6"	5	28	11"	11'-5"	2'-7"	14'-0"	4	17	5'-6"	8'-4"	12
13	2'-3"	1'-5"	8'-6"	1'-5"	1'-2"	2'-11"				5	27	11"	7'-1"					6	8	1'-6"	4	17	11'-1"	4	30	24'-6"	5	28	11"	8'-0"	5	28	11"	12'-5"	3'-0"	15'-5"	4	17	5'-9"	8'-7"	13
14	2'-6"	1'-8"	9'-9"	1'-6"	1'-3"	3'-3"				6	24	1'-0"	7'-6"					6	9	1'-6"	4	17	11'-10"	4	34	24'-6"	6	22	1'-2"	9'-3"	6	25	1'-0"	13'-5"	3'-4"	16'-9"	4	17	6'-9"	9'-7"	14
15	3'-0"	1'-8"	10'-9"	1'-10"	1'-3"	3'-9"	5	20	12'-10"	6	19	1'-3"	7'-10"	6	19	1'-3"	10'-10"	6	10	1'-6"	4	17	12'-10"	4	38	24'-6"	6	23	1'-1"	10'-3"	6	20	1'-3"	3'-11"	3'-10"	7'-9"	4	17	7'-3"	10'-1"	15
16	3'-6"	2'-2"	11'-9"	1'-9"	1'-3"	4'-4"	5	17	13'-4"	6	16	1'-6"	8'-4"	6	16	1'-6"	12'-4"	6	10	1'-6"	4	17	13'-4"	4	40	24'-6"	6	30	10"	11'-3"	7	17	1'-6"	5'-4"	4'-4"	9'-8"	4	17	7'-9"	11'-7"	16
17	4'-0"	2'-8"	13'-3"	1'-4"	1'-4"	4'-10"	5	19	13'-10"	6	18	1'-4"	9'-10"	6	18	1'-4"	12'-10"	6	10	1'-6"	4	17	13'-10"	4	42	24'-6"	7	30	10"	12'-9"	7	19	1'-4"	7'-1"	4'-11"	12'-0"	4	17	8'-9"	12'-7"	17
18	4'-6"	2'-8"	14'-10"	1'-9"	1'-4"	5'-4"	5	17	14'-10"	6	16	1'-6"	10'-10"	6	16	1'-6"	13'-10"	6	11	1'-6"	4	17	14'-10"	4	44	24'-6"	7	30	10"	14'-4"	8	17	1'-6"	8'-9"	5'-5"	14'-2"	4	17	9'-10"	13'-8"	18
19	5'-0"	2'-8"	16'-4"	2'-0"	1'-6"	5'-11"	5	17	15'-10"	8	16	1'-6"	12'-6"	8	16	1'-6"	19'-6"	6	12	1'-6"	4	17	15'-10"	4	50	24'-6"	7	30	10"	15'-10"	9	17	1'-6"	8'-1"	6'-0"	14'-1"	4	17	10'-10"	14'-8"	19
20	5'-6"	2'-11"	18'-1"	2'-0"	1'-6"	6'-7"	6	17	16'-7"	8	16	1'-6"	12'-0"	8	16	1'-6"	16'-0"	6	12	1'-6"	4	17	16'-7"	4	52	24'-6"	8	25	1'-0"	17'-7"	9	17	1'-6"	8'-5"	6'-8"	15'-1"	4	17	12'-1"	16'-5"	20
21	6'-6"	2'-11"	21'-1"	2'-2"	1'-6"	7'-7"	6	19	17'-7"	8	18	1'-4"	13'-4"	8	18	1'-4"	17'-4"	6	13	1'-6"	4	17	17'-7"	4	58	24'-6"	8	25	1'-0"	20'-7"	9	19	1'-4"	8'-5"	7'-8"	16'-1"	4	17	14'-1"	18'-5"	21
22	7'-0"	2'-11"	22'-7"	2'-6"	1'-6"	8'-2"	6	17	18'-7"	9	16	1'-6"	14'-4"	9	16	1'-6"	19'-4"	6	13	1'-6"	4	17	18'-7"	4	60	24'-6"	8	25	1'-0"	22'-1"	10	17	1'-6"	10'-3"	8'-3"	18'-6"	4	17	15'-1"	19'-5"	22
23	8'-0"	3'-2"	25'-8"	2'-6"	1'-8"	9'-2"	7	19	19'-4"	10	18	1'-4"	15'-8"	10	18	1'-4"	20'-8"	6	14	1'-6"	4	17	19'-4"	4	66	24'-6"	8	28	11"	25'-2"	10	19	1'-4"	10'-3"	9'-3"	19'-6"	4	17	17'-2"	21'-6"	23

QUANTITIES

H	CONCRETE / 25' UNIT C.Y.	STEEL / 25' UNIT LBS.	CONCRETE PER LIN.FT. C.Y.	STEEL PER LIN.FT. LBS.
6	7.23	498	0.29	19
7	8.72	648	0.35	25
8	10.51	691	0.42	27
9	12.81	854	0.51	34
10	15.30	1039	0.61	41
11	16.81	1275	0.67	51
12	20.81	1512	0.83	60
13	24.45	1615	0.98	64
14	29.45	2024	1.18	80
15	32.60	2291	1.30	91
16	40.11	2536	1.60	101
17	49.50	3144	1.98	125
18	55.20	3446	2.21	137
19	60.83	4624	2.43	184
20	72.97	4917	2.92	196
21	82.82	5775	3.31	231
22	88.87	6576	3.55	263
23	104.70	8616	4.19	344

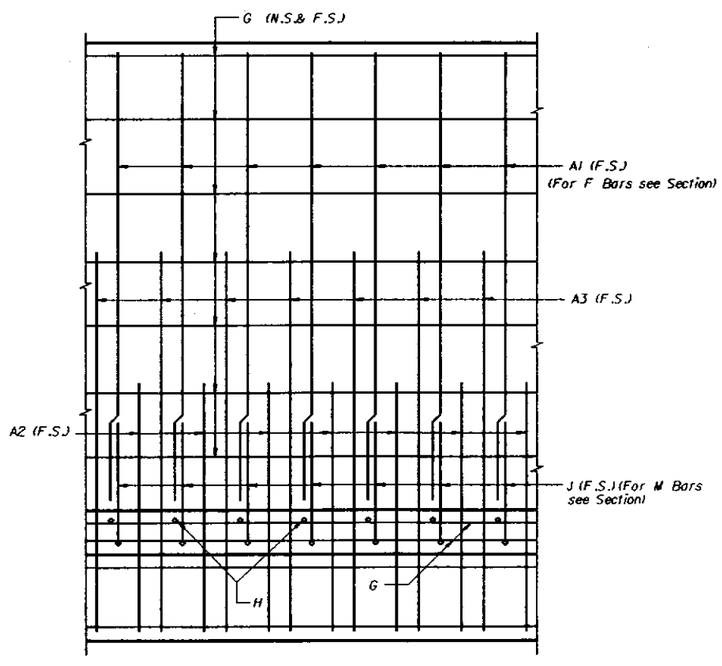

VIEW A-A

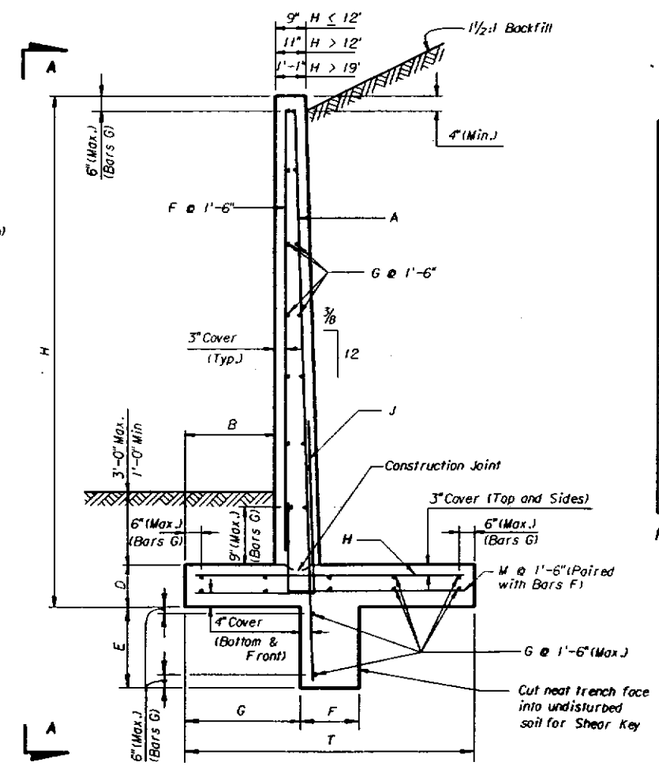

TYPICAL SECTION

NOTE:
To accommodate the Variable Height of a wall Unit, vertical Bars may be field cut to fit and the number of horizontal Bars G required by the highest wall dimension within a 25' Unit shall be equally spaced at each end of the Unit.

BENDING DIAGRAM

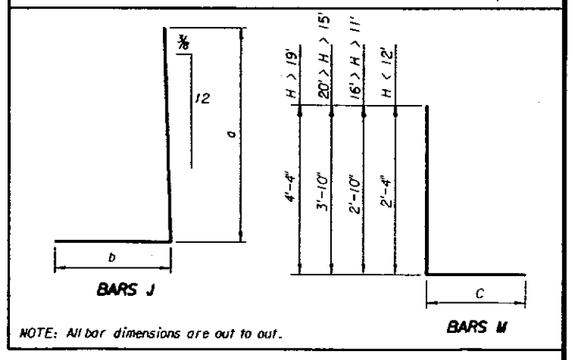

NOTE: All bar dimensions are out to out.

NOTE:
Bars M Paired with Bars F and Bars A1 Paired with Bars J. Bars F and M are No.4 Bars. Bars J are as shown.

NOTE: For placement details for Bars D see Standard Index No. 800.

NOTE: Work this Drawing with Standard Index No. 800.

REVISIONS					
Date	By	Description	Date	By	Description
			92		

	Names	Dates
Drawn by	M.P.	3/87
Checked by	M.J.	3/87
Designed by		
Checked by		
Approved by	A.G.M.	

ENGINEER OF RECORD:
STRUCTURES DESIGN OFFICE
CENTRAL OFFICE
605 Suwannee Street, MS 33
Tallahassee, Florida 32399-0450

LOGO:

SEAL:

FLORIDA DEPARTMENT OF TRANSPORTATION
STRUCTURES DESIGN OFFICE

ROAD NO.	COUNTY	PROJECT NO.

SHEET TITLE:
CASE IX (5.0 KIPS/SQ FT MAX BEARING PRESSURE) 6 FT. TO 23 FT. HEIGHT

PROJECT NAME:

Drawing No. 1 of 1

Index No. 821

STR(120,230)821.DGN
Mon Nov 9 13:46:50 1992

FED. ROAD DIV. NO.	STATE	PROJECT NO.	FISCAL YEAR	SHEET NO.
3	FLA.			

RETAINING WALL DATA

WALL DIMENSIONS				SHEAR KEY DIMENSIONS		
H	B	D	T	E	F	G
6	10"	11"	3'-11"			
7	1'-3"	11"	4'-8"			
8	1'-3"	1'-0"	5'-4"			
9	1'-6"	1'-0"	5'-10"	1'-0"	1'-0"	1'-11"
10	1'-8"	1'-2"	6'-7"	1'-0"	1'-0"	2'-1"
11	1'-10"	1'-2"	7'-1"	1'-0"	1'-0"	2'-4"
12	2'-0"	1'-5"	8'-0"	1'-3"	1'-2"	2'-6"
13	2'-3"	1'-5"	8'-6"	1'-5"	1'-2"	2'-11"
14	2'-3"	1'-8"	9'-6"	1'-6"	1'-1"	3'-0"
15	2'-6"	1'-8"	9'-9"	2'-0"	1'-3"	3'-3"
16	3'-0"	2'-2"	10'-9"	1'-9"	1'-3"	3'-10"
17	3'-6"	2'-8"	11'-9"	1'-6"	1'-2"	4'-4"
18	3'-6"	2'-8"	12'-10"	2'-0"	1'-3"	4'-4"
19	4'-0"	2'-8"	13'-4"	2'-4"	1'-4"	4'-11"
20	4'-6"	2'-11"	15'-1"	2'-3"	1'-4"	5'-7"
21	5'-0"	2'-11"	16'-7"	2'-8"	1'-6"	6'-1"
22	5'-6"	2'-11"	18'-1"	3'-0"	1'-7"	6'-8"
23	6'-0"	3'-2"	19'-8"	3'-0"	1'-6"	7'-2"
24	6'-6"	3'-2"	21'-2"	3'-4"	1'-7"	7'-9"
25	7'-6"	3'-2"	24'-2"	3'-6"	1'-7"	8'-9"
26	8'-0"	3'-5"	25'-9"	3'-7"	1'-7"	9'-3"

REINFORCING STEEL SCHEDULE

H	BARS A1 SIZE	BARS A1 NO.	BARS A1 LENGTH	BARS A2 SIZE	BARS A2 NO.	BARS A2 SPACING	BARS A2 LENGTH	BARS A3 SIZE	BARS A3 NO.	BARS A3 SPACING	BARS A3 LENGTH
6											
7											
8											
9				4	19	1'-3"	5'-8"				
10				4	27	11"	4'-11"				
11				5	22	1'-1"	5'-11"				
12				5	27	11"	6'-9"				
13				6	27	11"	7'-1"				
14				6	24	1'-0"	7'-6"				
15	5	20	12'-10"	6	19	1'-3"	7'-10"	6	19	1'-3"	10'-10"
16	5	17	13'-4"	6	16	1'-6"	8'-4"	6	16	1'-6"	12'-4"
17	5	19	13'-10"	6	18	1'-4"	9'-10"	6	18	1'-4"	12'-10"
18	5	17	14'-10"	6	16	1'-6"	10'-10"	6	16	1'-6"	13'-10"
19	5	17	15'-10"	8	16	1'-6"	12'-6"	8	16	1'-6"	19'-6"
20	6	17	16'-7"	8	16	1'-6"	12'-0"	8	16	1'-6"	16'-0"
21	6	19	17'-7"	8	18	1'-4"	13'-4"	8	18	1'-4"	17'-4"
22	6	17	18'-7"	9	16	1'-6"	14'-4"	9	16	1'-6"	19'-4"
23	7	19	19'-4"	10	18	1'-4"	15'-8"	10	18	1'-4"	20'-8"
24	7	17	20'-4"	10	16	1'-6"	15'-11"	10	16	1'-6"	21'-11"
25	7	20	21'-4"	10	10	1'-3"	17'-2"	10	19	1'-3"	21'-2"
26	7	20	22'-1"	11	19	1'-3"	16'-11"	11	19	1'-3"	25'-5"

H	BARS D SIZE	BARS D NO.	BARS D LENGTH	BARS F SIZE	BARS F NO.	BARS F LENGTH	BARS G SIZE	BARS G NO.	BARS G LENGTH
6	6	4	1'-6"	4	17	4'-7"	4	14	24'-6"
7	6	5	1'-6"	4	17	5'-7"	4	18	24'-6"
8	6	5	1'-6"	4	17	6'-6"	4	18	24'-6"
9	6	6	1'-6"	4	17	7'-6"	4	24	24'-6"
10	6	7	1'-6"	4	17	8'-4"	4	26	24'-6"
11	6	7	1'-6"	4	17	9'-4"	4	28	24'-6"
12	6	8	1'-6"	4	17	10'-1"	4	30	24'-6"
13	6	8	1'-6"	4	17	11'-1"	4	30	24'-6"
14	6	9	1'-6"	4	17	11'-10"	4	34	24'-6"
15	6	10	1'-6"	4	17	12'-10"	4	36	24'-6"
16	6	10	1'-6"	4	17	13'-4"	4	38	24'-6"
17	6	10	1'-6"	4	17	13'-10"	4	40	24'-6"
18	6	11	1'-6"	4	17	14'-10"	4	42	24'-6"
19	6	12	1'-6"	4	17	15'-10"	4	44	24'-6"
20	6	12	1'-6"	4	17	16'-7"	4	46	24'-6"
21	6	13	1'-6"	4	17	17'-7"	4	53	24'-6"
22	6	13	1'-6"	4	17	18'-7"	4	55	24'-6"
23	6	14	1'-6"	4	17	19'-4"	4	57	24'-6"
24	6	15	1'-6"	4	17	20'-4"	4	61	24'-6"
25	6	15	1'-6"	4	17	21'-4"	4	64	24'-6"
26	6	16	1'-6"	4	17	22'-1"	4	71	24'-6"

H	BARS H SIZE	BARS H NO.	BARS H SPACING	BARS H LENGTH	BARS J SIZE	BARS J NO.	BARS J SPACING	BARS J a	BARS J b	BARS J LENGTH	BARS M SIZE	BARS M NO.	BARS M C	BARS M LENGTH	H
6	4	18	1'-5"	3'-5"	4	25	1'-0"	5'-5"	1'-3"	6'-8"	4	17	2'-7"	4'-11"	6
7	4	18	1'-5"	4'-2"	4	25	1'-0"	6'-5"	1'-8"	8'-1"	4	17	2'-11"	5'-3"	7
8	4	23	1'-1"	4'-10"	4	28	11"	7'-5"	1'-8"	9'-1"	4	17	3'-7"	5'-11"	8
9	4	23	1'-1"	5'-4"	4	20	1'-3"	8'-5"	2'-0"	10'-5"	4	17	3'-10"	6'-2"	9
10	4	30	10"	6'-1"	4	28	11"	9'-5"	2'-2"	11'-7"	4	17	4'-5"	6'-9"	10
11	4	25	1'-0"	6'-7"	5	23	1'-1"	10'-5"	2'-5"	12'-10"	4	17	4'-9"	7'-1"	11
12	4	25	1'-0"	7'-6"	5	28	11"	11'-5"	2'-7"	14'-0"	4	17	5'-6"	8'-4"	12
13	4	28	11"	8'-0"	5	28	11"	12'-5"	3'-0"	15'-5"	4	17	5'-9"	8'-7"	13
14	5	34	9"	9'-0"	6	25	1'-0"	13'-5"	3'-1"	16'-6"	4	17	6'-9"	9'-7"	14
15	5	38	8"	9'-3"	6	20	1'-3"	3'-11"	3'-4"	7'-3"	4	17	6'-9"	9'-7"	15
16	5	43	7"	10'-3"	7	17	1'-6"	5'-4"	3'-10"	9'-2"	4	17	7'-3"	11'-1"	16
17	5	60	5"	11'-3"	7	19	1'-4"	7'-1"	4'-5"	11'-6"	4	17	7'-9"	11'-7"	17
18	5	60	5"	12'-4"	8	17	1'-6"	8'-9"	4'-5"	13'-2"	4	17	8'-10"	12'-8"	18
19	5	60	5"	12'-10"	9	17	1'-6"	8'-1"	5'-0"	13'-1"	4	17	8'-10"	12'-8"	19
20	6	43	7"	14'-7"	9	17	1'-6"	8'-5"	5'-8"	14'-1"	4	17	10'-1"	14'-5"	20
21	6	43	7"	16'-1"	9	19	1'-4"	8'-5"	6'-2"	14'-7"	4	17	11'-1"	15'-5"	21
22	6	43	7"	17'-7"	10	17	1'-6"	10'-3"	6'-9"	17'-0"	4	17	12'-1"	16'-5"	22
23	6	50	6"	19'-2"	10	19	1'-4"	10'-3"	7'-3"	17'-6"	4	17	13'-2"	17'-6"	23
24	6	50	6"	20'-8"	11	17	1'-6"	11'-11"	7'-9"	19'-8"	4	17	14'-2"	18'-6"	24
25	6	50	6"	23'-8"	11	20	1'-3"	11'-11"	8'-10"	20'-9"	4	17	16'-2"	20'-6"	25
26	6	50	6"	25'-3"	11	20	1'-3"	11'-11"	9'-4"	21'-3"	4	17	17'-3"	21'-7"	26

QUANTITIES

H	CONCRETE / 25' UNIT C.Y.	STEEL / 25' UNIT LBS.	CONCRETE PER LIN.FT. C.Y.	STEEL PER LIN.FT. LBS.
6	7.23	498	0.29	19
7	8.72	613	0.35	24
8	10.51	691	0.42	27
9	12.81	854	0.51	34
10	15.30	1039	0.61	41
11	16.81	1214	0.67	48
12	20.81	1442	0.83	57
13	24.45	1619	0.98	64
14	28.83	2029	1.15	81
15	31.25	2251	1.25	90
16	38.10	2433	1.52	97
17	45.77	3003	1.83	120
18	50.42	3249	2.02	129
19	53.53	4277	2.14	171
20	64.87	4507	2.59	180
21	71.36	5227	2.85	209
22	77.64	6012	3.11	240
23	87.42	7817	3.50	312
24	94.13	8112	3.77	324
25	104.79	8879	4.19	355
26	116.75	11024	4.67	440

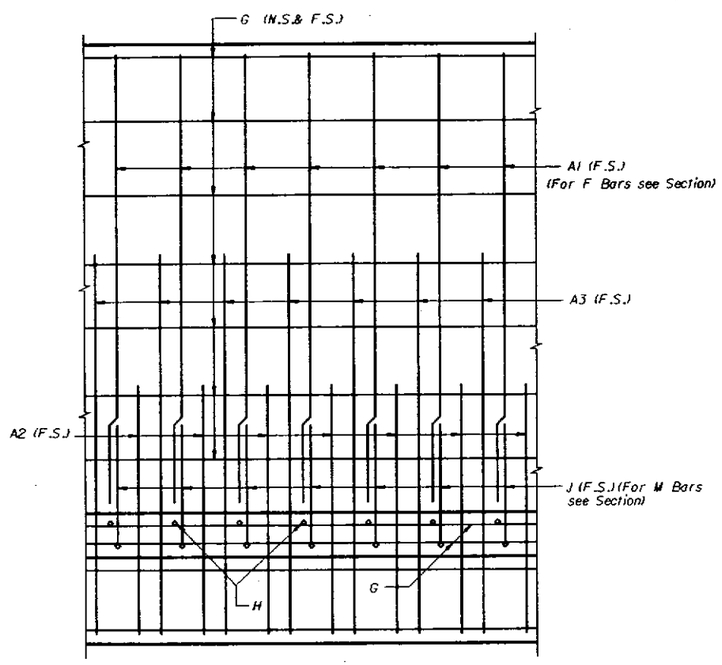

VIEW A-A

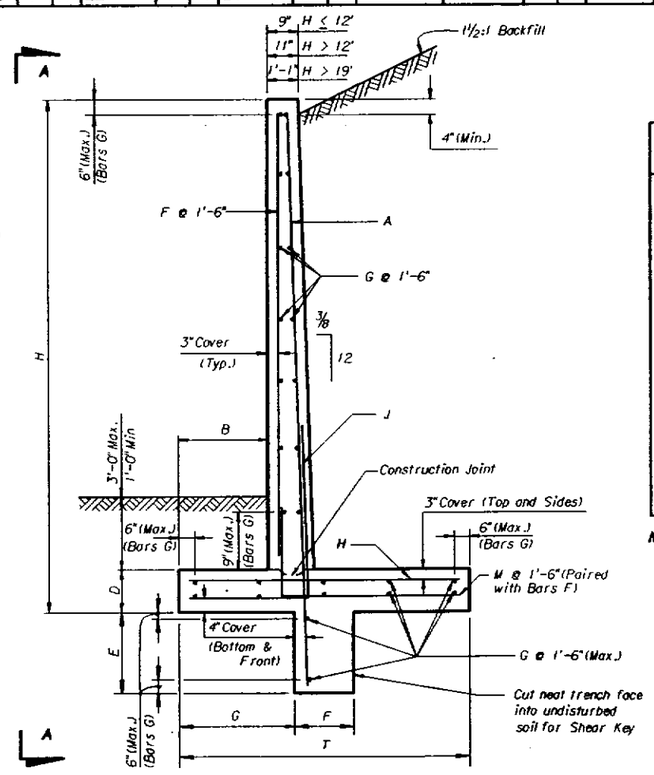

TYPICAL SECTION

NOTE:
To accommodate the Variable Height of a wall Unit, vertical Bars may be field cut to fit and the number of horizontal Bars G required by the highest wall dimension within a 25' Unit shall be equally spaced at each end of the Unit.

BENDING DIAGRAM

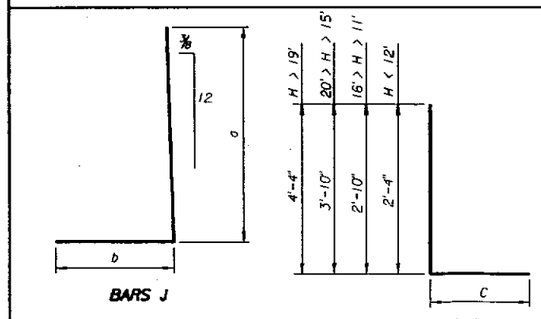

NOTE: All bar dimensions are out to out.

NOTE:
Bars M Paired with Bars F and Bars A1 Paired with Bars J. Bars F and M are No.4 Bars. Bars J are as shown.

NOTE: For placement details for Bars D see Standard Index No. 800.

NOTE: Work this Drawing with Standard Index No. 800.

REVISIONS					
Date	By	Description	Date	By	Description
			92		

	Names	Dates
Drawn by	M.I.	3/87
Checked by	M.P.	3/87
Designed by		
Checked by		
Approved by	A.G.M.	

ENGINEER OF RECORD:

LOGO:

SEAL:

FLORIDA DEPARTMENT OF TRANSPORTATION
STRUCTURES DESIGN OFFICE

ROAD NO.	COUNTY	PROJECT NO.

SHEET TITLE: CASE IX (6.0 KIPS/SQ FT MAX BEARING PRESSURE) 6 FT. TO 26 FT. HEIGHT

PROJECT NAME:

Drawing No. 1 of 1

Index No. 822

MON NOV 9 13:46:54 1992 ST1:L120.230\822.DGN

FED. ROAD DIV. NO.	STATE	PROJECT NO.	FISCAL YEAR	SHEET NO.
3	FLA.			

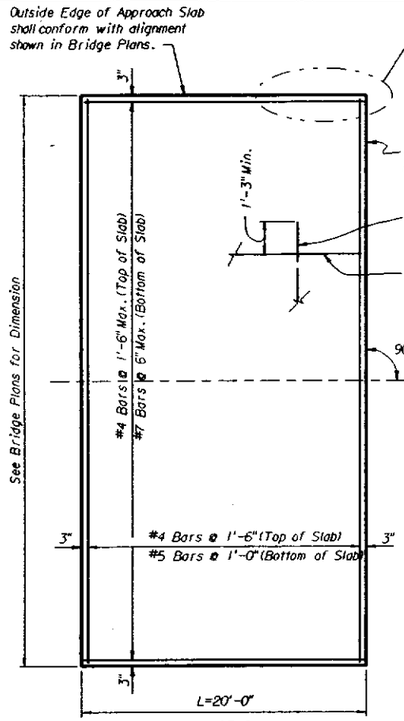

CASE I
(See Note No.2)

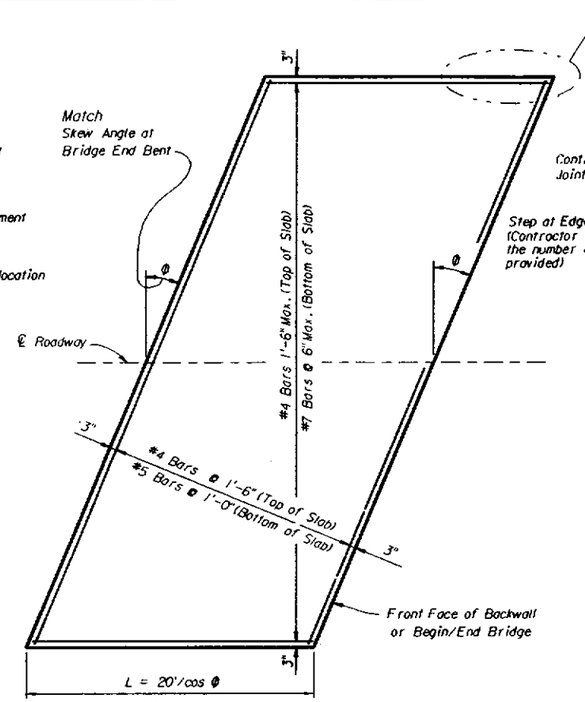

CASE II
(See Note No.3)

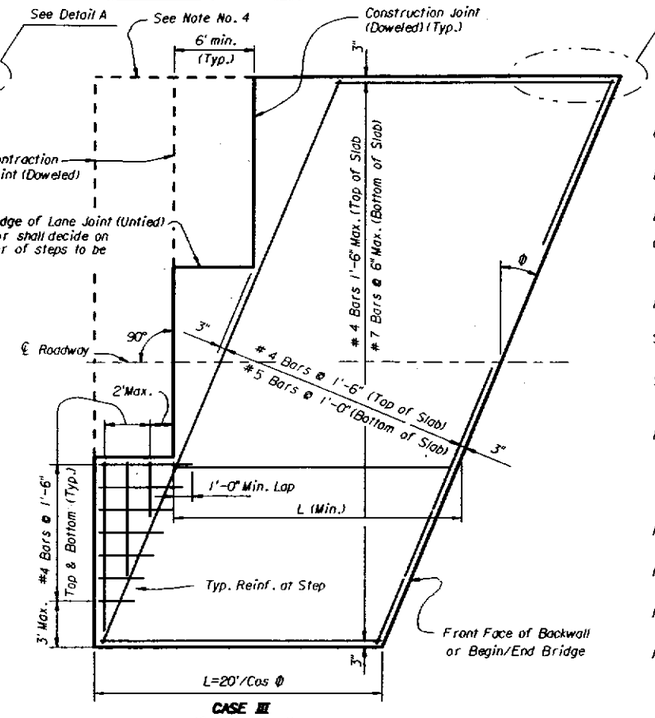

CASE III
(See Note No.4)

GENERAL NOTES

GENERAL SPECIFICATIONS: Florida Department of Transportation Standard Specifications for Road & Bridge Construction current edition and Supplements thereto.

DESIGN SPECIFICATIONS: Designed in accordance with the 1989 edition of the AASHTO Specifications for Highway Bridges and Approved Revisions.

DESIGN LOADING: HS 20-44

CONCRETE STRESSES: Class II f'c = 3400 psi (If environment is slightly aggressive). Class IV f'c = 3400 psi (If environment is moderately or extremely aggressive). (See Bridge Plans for Environment Classification).

REINFORCING STEEL: Reinforcing Steel shall be Grade 60.

SURFACE TREATMENT: The top of the approach slab shall be given the same treatment as the bridge deck.

SUBBASE: The subbase shall consist of the same material shown in the Roadway Plans, and shall be placed parallel to the bottom of the Approach Slab.

PAYMENT: Payment shall be made under: Item No. 360-1 Concrete Approach Slab-each. The work shall comply with the details on this sheet, the Bridge and Roadway Plans, and Section 360. The bid price for approach Slab shall include all items placed on the slab, such as sidewalks, barriers, raised median etc., unless otherwise noted in the Bridge or Roadway Plans. Grooving of the Approach Slab riding surface is a Bridge Pay Item. See Bridge Plans.

Note No. 1: If a longitudinal joint is necessary or allowed by the Engineer, the transverse steel shall be extended as shown.

Note No. 2: **Case I** indicates an approach slab adjacent to a nonskewed bridge. Unless otherwise indicated, all details shown apply to **Cases II** and **III** also.

Note No. 3: **Case II** indicates an approach slab between a flexible roadway approach pavement and a skewed bridge.

Note No. 4: **Case III** indicates an approach slab between a rigid roadway approach pavement and a skewed bridge. The Contractor may at his option construct the entire approach slab trapezoidal or provide steps as shown. If steps are selected, the interface (transverse) between the approach slab and roadway pavement, and extension of this interface across the roadway pavement shall be doweled (contraction joint) in accordance with Index No. 305 (Roadway Standards).

Note No. 5: If the bridge or roadway plans indicate a raised sidewalk, this shall be provided on the approach slab.

Note No. 6: If the bridge or roadway plans indicate a barrier wall or a raised median, this shall be provided on the approach slab.

Note No. 7: If the bridge or roadway plans indicate a traffic railing (barrier) and/or other type of railing, this shall be provided on the approach slab. If guardrail connection is required the barrier shall be transitioned as indicated on the standard drawings.

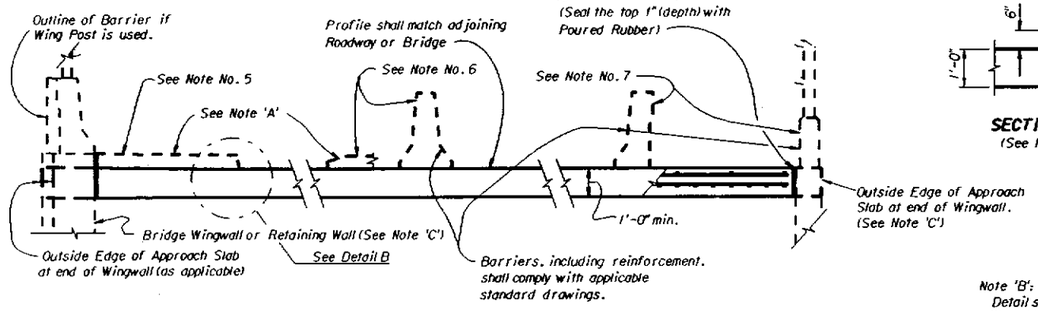

TRANSVERSE SECTION

Note 'C': If Wingwall/Retaining Wall is not used, mount railing system on Approach Slab.

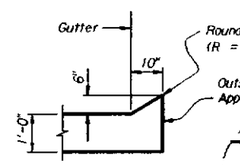

SECTION C-C
(See Note 'B')

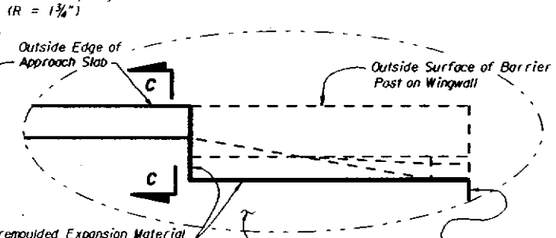

DETAIL A
(Part Plan)

Note 'B':
Detail shown on Section C-C applies beyond Wing Post for Traffic Railing Barrier along the edge of the Bridge. This detail does not apply at raised sidewalk.

* ESTIMATED QUANTITIES

ITEM	UNIT	QUANTITY
Concrete	C.Y.	0.333
Reinforcing Steel	LB.	54.200

* Quantities shown are per square yard (plan area), and do not include items placed on the slab such as: sidewalks, raised median and barriers.

NOTE: Total area of Approach Slab is given in the Bridge Plans.

Note 'A':
Raised Sidewalks and raised median shall be built using plain (unreinforced) concrete. The sidewalk width shall be extended to the outside edge of approach slab at areas beyond wingwall. See Roadway Plans for additional details.

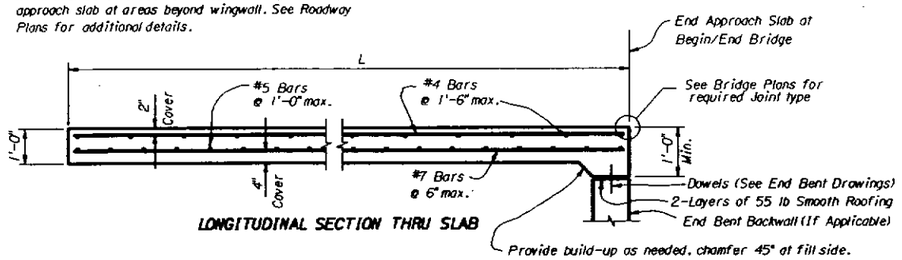

LONGITUDINAL SECTION THRU SLAB

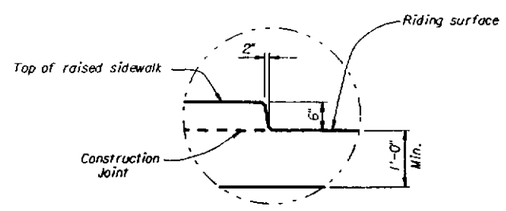

DETAIL B

(NOT-IN-CONTRACT)
INSTRUCTIONS TO DESIGNER

Besides providing the plan area (s, y) of approach slabs in the Bridge Plans, please define slab boundaries, i.e.:

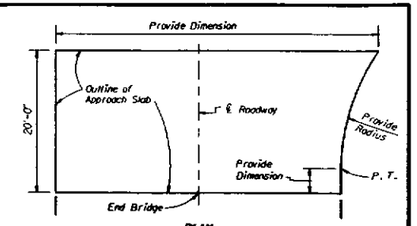

PLAN

REVISIONS					
Date	By	Description	Date	By	Description
			92R		

	Names	Dates
Drawn by	SHM	2-89
Checked by	AJG	2-89
Designed by	AJG	3-89
Checked by	TJB	3-89
Approved by	AJG	

ENGINEER OF RECORD:
STRUCTURES DESIGN OFFICE
CENTRAL OFFICE
605 Suwannee Street, MS 33
Tallahassee, Florida 32399-0450

LOGO:

SEAL:

FLORIDA DEPARTMENT OF TRANSPORTATION
STRUCTURES DESIGN OFFICE

ROAD NO.	COUNTY	PROJECT NO.

SHEET TITLE: APPROACH SLABS

PROJECT NAME:

Drawing No. 1 of 1

Index No. 900

STIx120.230900.DGN
Mon Nov 9 13:50:02 1992

FED. ROAD DIV. NO.	STATE	PROJECT NO.	FISCAL YEAR	SHEET NO.
3	FLA.			

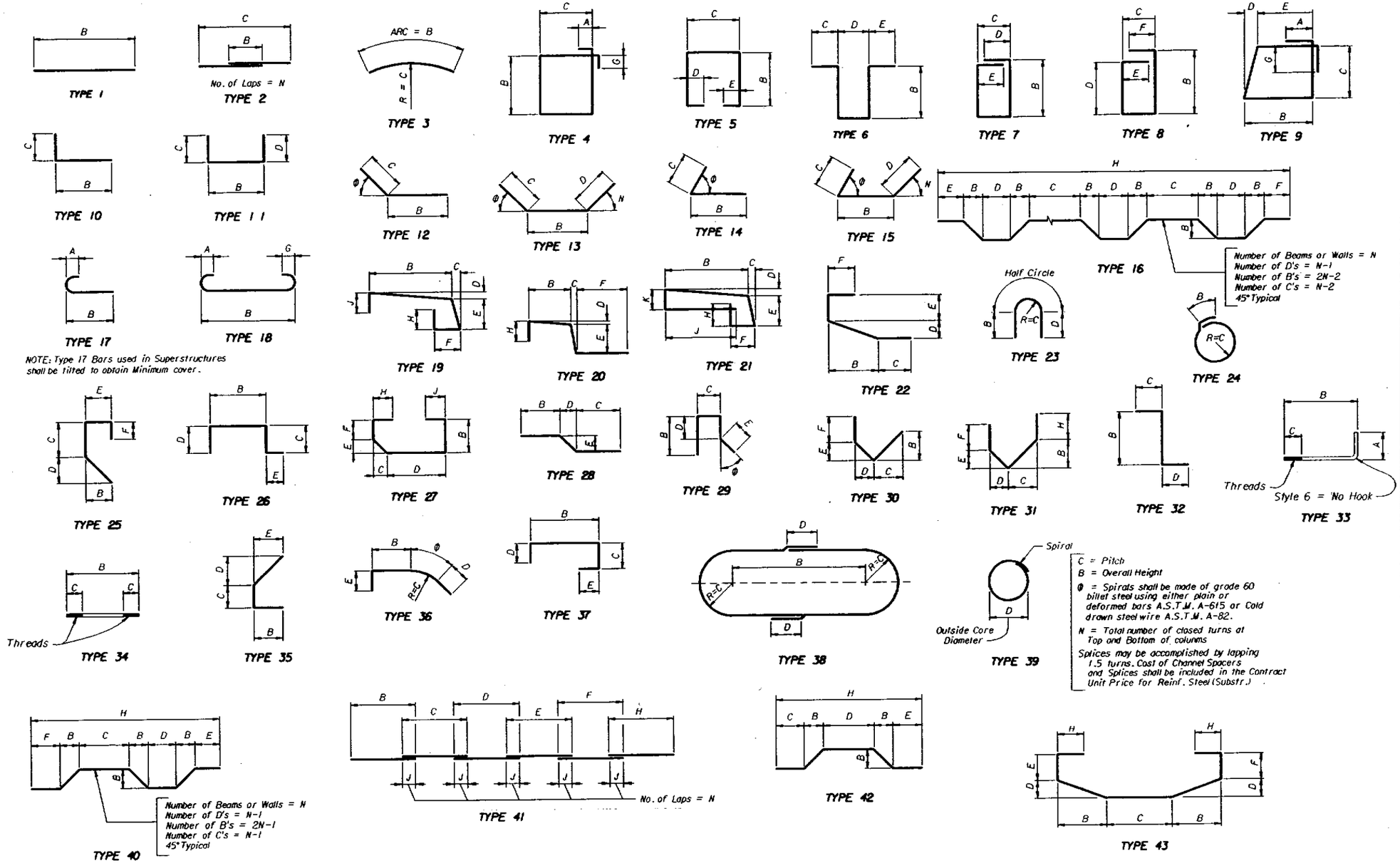

NOTE: For Bar Dimensions See REINFORCING BAR LIST Sheet.

HOOK DETAILS

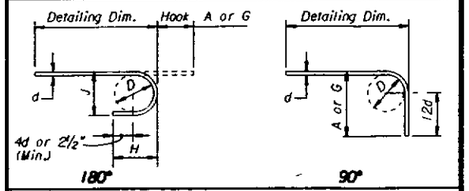

RECOMMENDED END HOOKS
ALL GRADES
D = 6d for #3 thru #8
D = 8d for #9, #10 and #11
D = 10d for #14 and #18

BAR SIZE	180° HOOKS		90° HOOKS
	A OR G	J	A OR G
#3	5"	3"	6"
#4	6"	4"	8"
#5	7"	5"	10"
#6	8"	6"	1'-0"
#7	10"	7"	1'-2"
#8	1'-1"	8"	1'-4"
#9	1'-3"	1'-1¾"	1'-7"
#10	1'-5"	1'-1¼"	1'-10"
#11	1'-7"	1'-2¾"	2'-0"
#14	2'-3"	1'-9¾"	2'-7"
#18	3'-0"	2'-4½"	3'-5"
STYLE	1		3

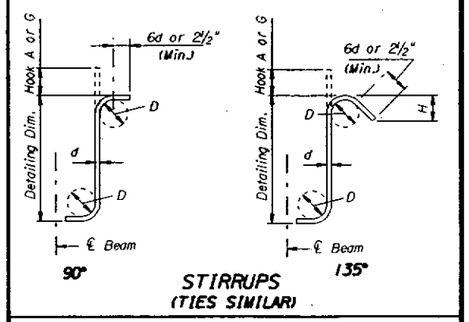

STIRRUPS
(TIES SIMILAR)

RECOMMENDED STIRRUP & TIE HOOK DIMENSIONS

BAR SIZE	D (IN.)	90° HOOKS	135° HOOKS	
		HOOK A or G	HOOK A or G	APPROX. H
#3	1½"	4"	4"	2½"
#4	2"	4½"	4½"	3"
#5	2½"	6"	5½"	3¾"
#6	4½"	1'-0"	7¾"	4½"
#7	5½"	1'-2"	9"	5¼"
#8	6"	1'-4"	10¼"	6"
STYLE		4	5	

STYLE 6 = NO HOOK

Hook Styles Detailed on this sheet are for Illustration Only.
Actual Hook Style for any particular bar will be shown under A or G Heading on REINFORCING BAR LIST sheet.
All Dimensions are out to out.

REVISIONS					
Date	By	Description	Date	By	Description
			92		

	Names	Dates
Drawn by	RDH	1-86
Checked by	RDS	1-86
Designed by		
Checked by		
Approved by	AGM	

ENGINEER OF RECORD:
STRUCTURES DESIGN OFFICE
CENTRAL OFFICE
605 Suwannee Street, MS 33
Tallahassee, Florida 32399-0450

LOGO:

SEAL:

FLORIDA DEPARTMENT OF TRANSPORTATION
STRUCTURES DESIGN OFFICE

ROAD NO.	COUNTY	PROJECT NO.

SHEET TITLE: STANDARD BAR BENDING DETAILS

PROJECT NAME:

Drawing No. 1 of 1

Index No. 1300

ST\E120.23071300.DGN
Mon Nov 9 11:59:00 1992

FED. ROAD DIV. NO.	STATE	PROJECT NO.	FISCAL YEAR	SHEET NO.
3	FLA.			

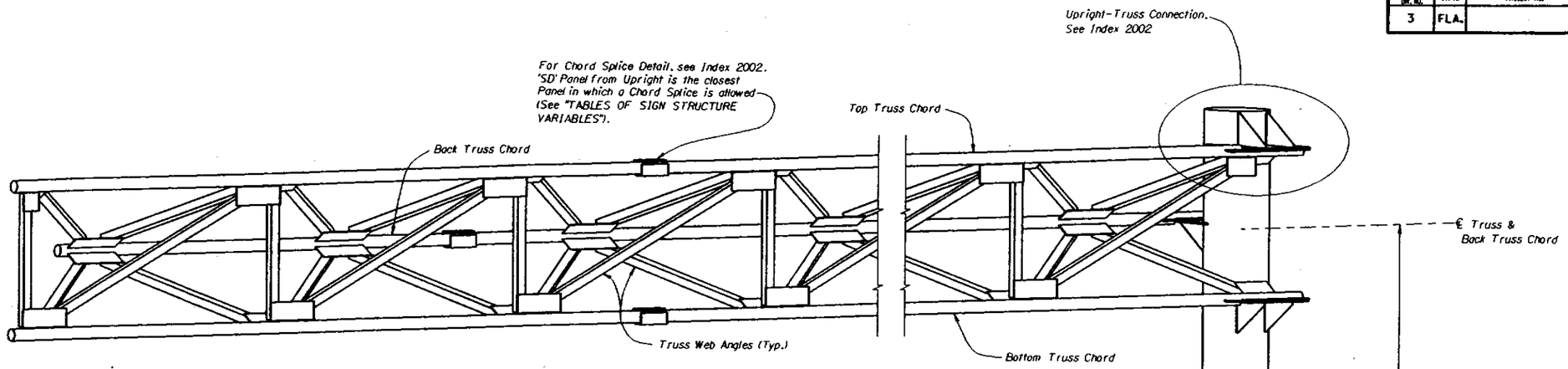

CANTILEVER SIGN STRUCTURE NOTES

1) Sign Structure Materials shall be as follows:
   - Upright & Chords (Steel Pipe) -> API-5L-X42 (42 ksi yield) or ASTM A500 Grade B
   - Webs and Splices (Steel Angles) -> ASTM A 709, Grade 36
   - Steel Plates -> ASTM A 709, Grade 36
   - Weld Metal -> E70XX
   - Bolts (except Anchor Bolts) -> ASTM A 307

2) Steel Anchor Bolts shall be AASHTO 314-90 Grade 55. Nuts for Anchor Bolts shall be ASTM A 563 Grade A Heavy Hex.

3) All Steel items shall be Galvanized as follows:
   - Structural Shapes and Plates -> ASTM A 123
   - All Nuts, Bolts and Washers -> ASTM A 153 Class C or D depending on size

4) All Bolts, except Anchor Bolts, shall have Single Self-Locking Nuts or, in lieu thereof regular nuts with a galvanized 'Palnut' locking nut manufactured by TRW, installed in accordance with the manufacturer's recommendations. Anchor Bolts shall have Double nuts.

5) Concrete shall be Class II with a Minimum 28-day Compressive Strength (f'c) of 3400 psi.

6) Reinforcing Steel shall be ASTM A 615 Grade 60.

7) Grout shall have a Minimum Compressive Strength of 5000 psi and shall meet the requirements of Special Provision Section 934.

8) Alternate Designs for this Structure are not allowed. Shop Drawings for this Structure are required and Fabrication shall not begin until these Shop Drawings are approved.

9) The Structure must be assembled after Galvanizing and prior to shipment to the site to assure fit up. It may be disassembled for shipping.

10) The Design Wind Speed is in Conformance with the "Structures Design Guidelines" Revision 'h' with a 30 percent Gust Factor.

11) Provide the back rake as indicated on the Camber Diagram by adjusting the leveling nuts beneath the base plate after placement of the upright and prior to installation of the Truss.

12) Sign Panels attached to the Truss shall be centered (in elevation) on the Structure. See Elevation Drawing for size and location of sign panel. Sign Panels shall be Aluminum.

13) Splices shall be located a minimum distance of 2 Truss Panel Lengths apart. The number and location of Splices are at the Contractor's discretion except for the limitation noted on the Isometric View on this sheet.

14) Except for Anchor Bolts, all bolt hole diameters shall be equal to the bolt diameter plus 1/16", prior to galvanizing. Hole diameters for Anchor Bolts shall not exceed the bolt diameter + 1/2".

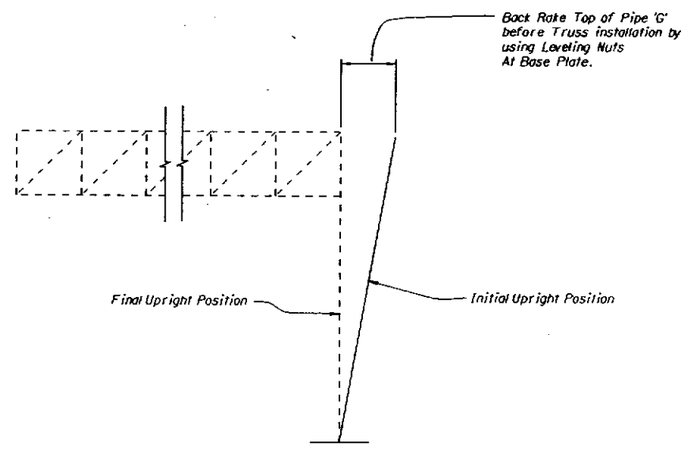

CAMBER DIAGRAM

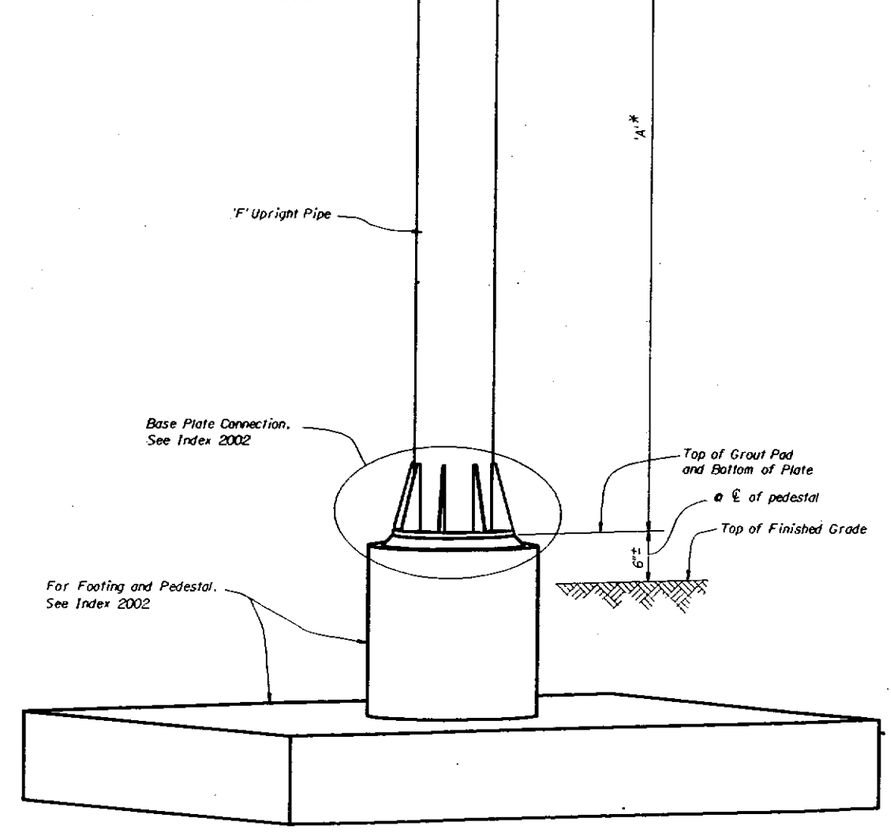

ISOMETRIC VIEW

* NOTE: Contractor shall verify these Dimensions Prior to Fabrication of Upright.

NOTE: Work this Standard with Structures Standard Index Nos. 2002, 2003 & S-2004.

NOTE: See 'TABLES OF SIGN STRUCTURE VARIABLES' for referenced dimensions, sizes and quantities.

NOTE: See Roadway Index Drawing 17505 for information on fabrication and installation of lighting.

REVISIONS					
Date	By	Description	Date	By	Description
			92		

	Names	Dates
Drawn by	WEH	3-90
Checked by	MHA	3-90
Designed by	MHA	3-90
Checked by	REN	3-90
Approved by	REN	

ENGINEER OF RECORD:
STRUCTURES DESIGN OFFICE
CENTRAL OFFICE
605 Suwannee Street, MS 33
Tallahassee, Florida 32399-0450

LOGO:

SEAL:

FLORIDA DEPARTMENT OF TRANSPORTATION
STRUCTURES DESIGN OFFICE

ROAD NO.	COUNTY	PROJECT NO.

SHEET TITLE: CANTILEVER SIGN STRUCTURE NOTES, CAMBER, ISOMETRIC VIEW

PROJECT NAME:

Drawing No. 1 of 1

Index No. 2001

Mon Nov. 9 12:13:17 1992 ST1:[20.23012001.DGN

FED. ROAD DIV. NO.	STATE	PROJECT NO.	FISCAL YEAR	SHEET NO.
3	FLA.			

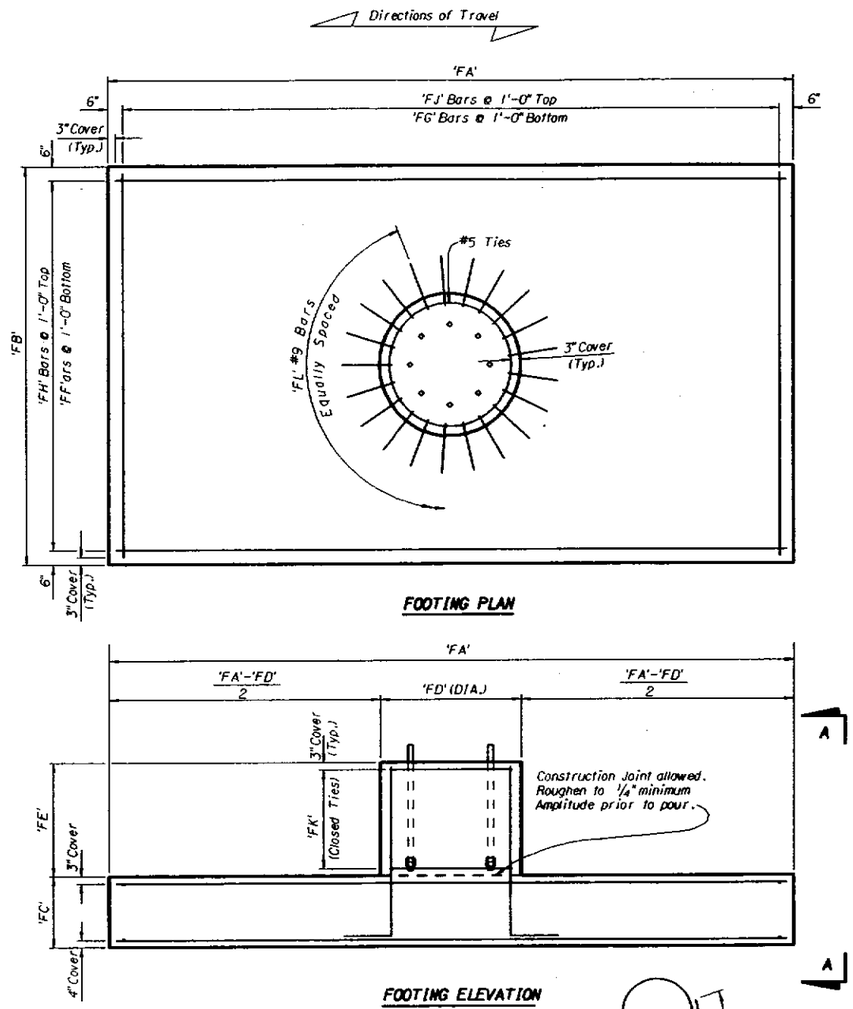

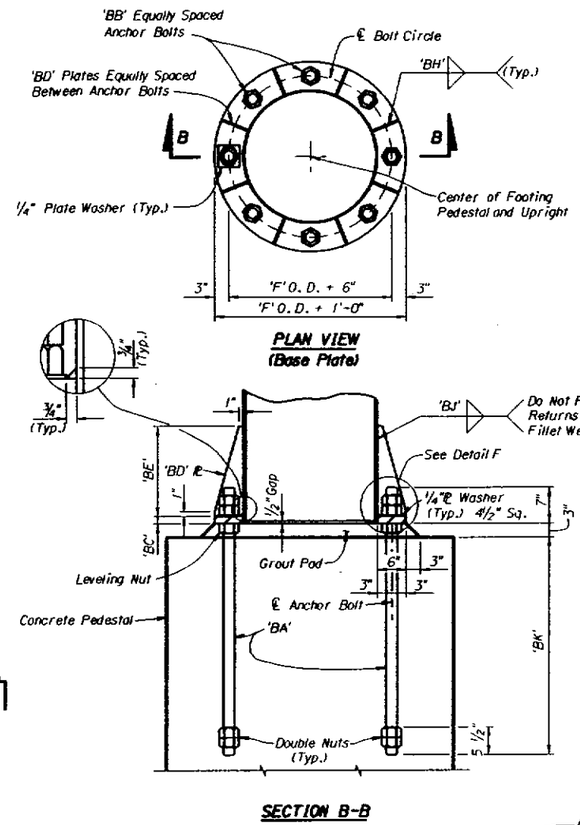

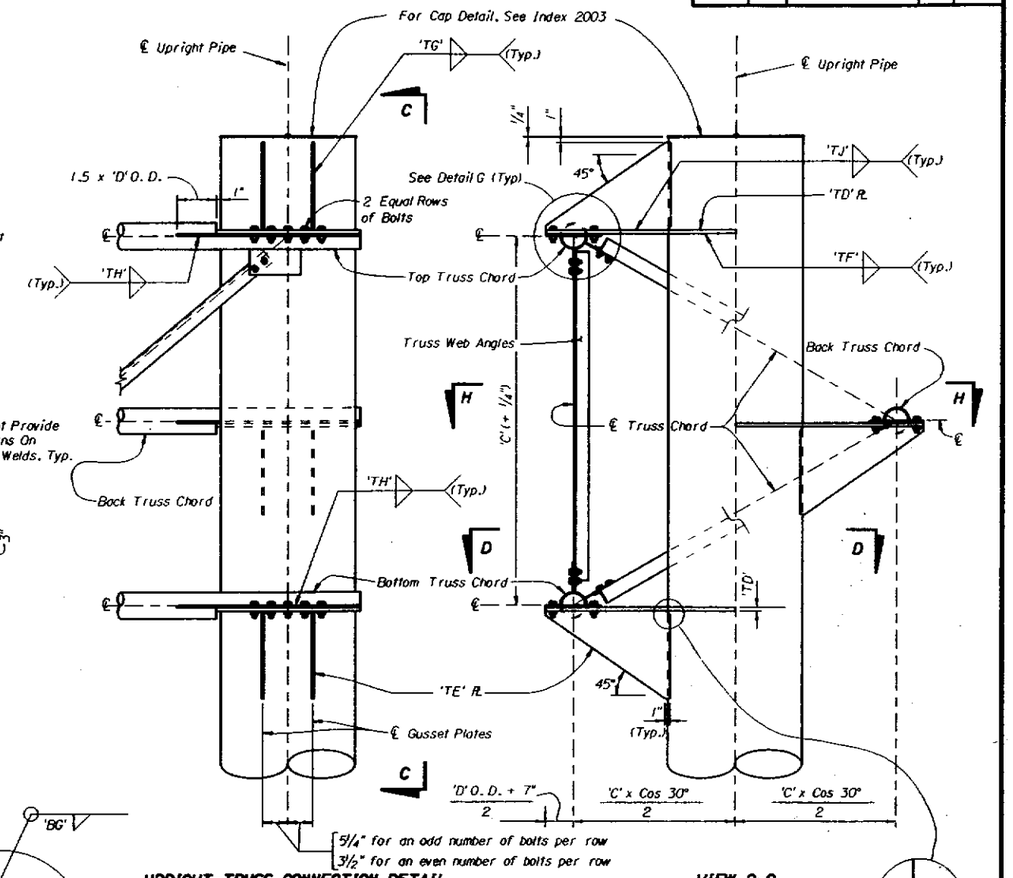

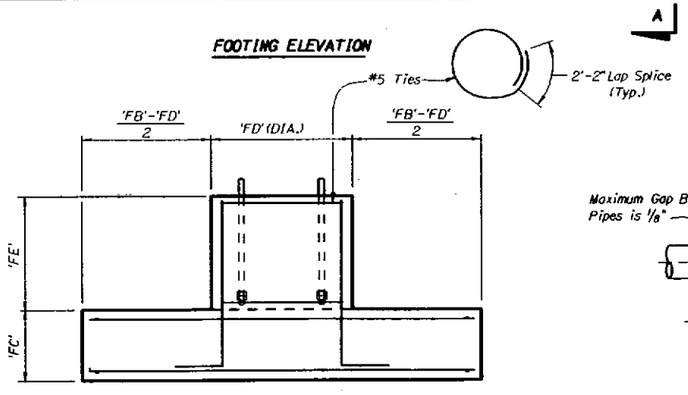

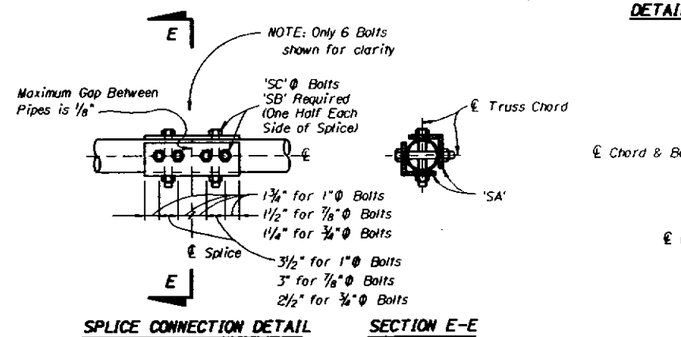

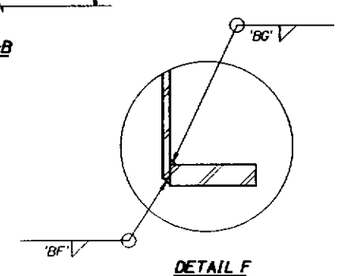

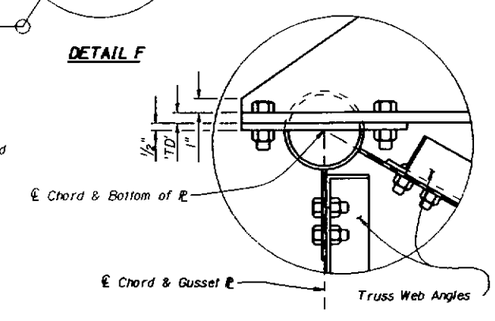

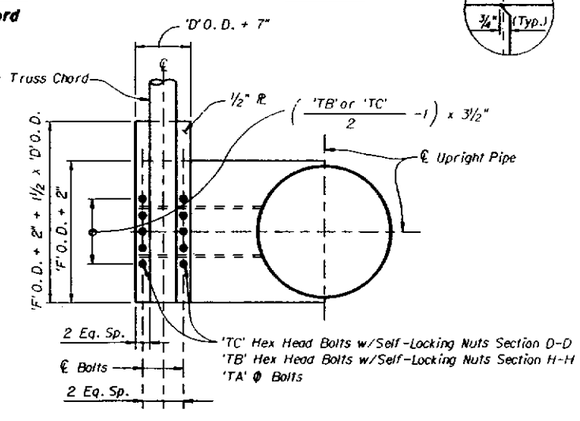

NOTE: Work this Standard with Standard Index Nos. 2001, 2003 & S-2004.
NOTE: See 'TABLE OF SIGN STRUCTURE VARIABLES' for referenced dimensions, sizes and quantities.

REVISIONS					
Date	By	Description	Date	By	Description
			92		

	Names	Dates
Drawn by	REB	7-89
Checked by	MHA	7-89
Designed by	MHA	7-89
Checked by	REN	7-89
Approved by	REN	

ENGINEER OF RECORD:
STRUCTURES DESIGN OFFICE
CENTRAL OFFICE
605 Suwannee Street, MS 33
Tallahassee, Florida 32399-0450

LOGO:

SEAL:

FLORIDA DEPARTMENT OF TRANSPORTATION
STRUCTURES DESIGN OFFICE

ROAD NO.	COUNTY	PROJECT NO.

SHEET TITLE: CANTILEVER SIGN STRUCTURE CONNECTION DETAILS

PROJECT NAME:

Drawing No. 1 of 1

Index No. 2002

Mon Nov 9 12:14:28 1992 ST:L120.23012002.DGN

FED. ROAD DIV. NO.	STATE	PROJECT NO.	FISCAL YEAR	SHEET NO.
3	FLA.			

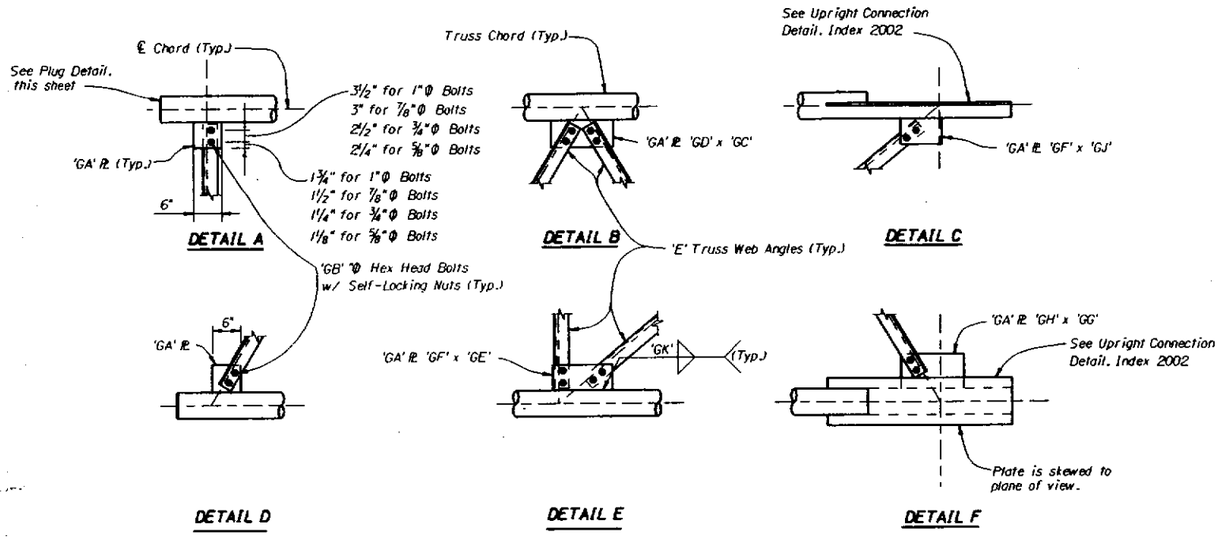

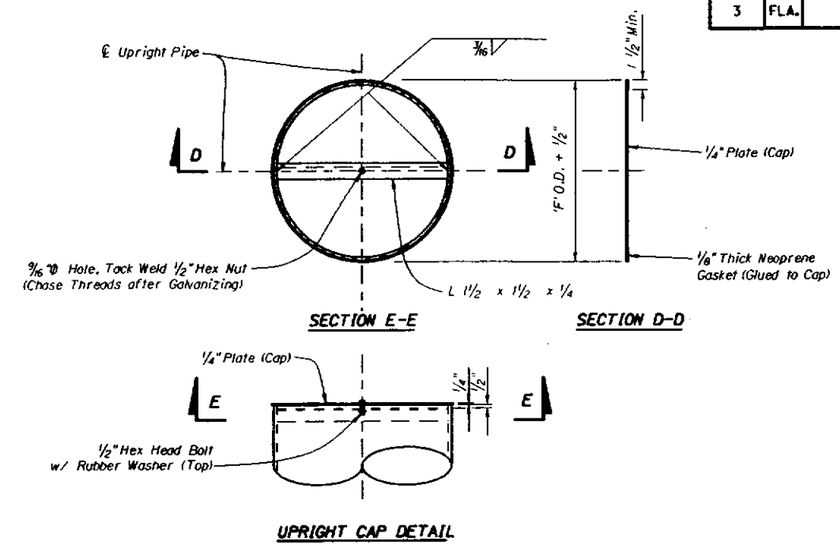

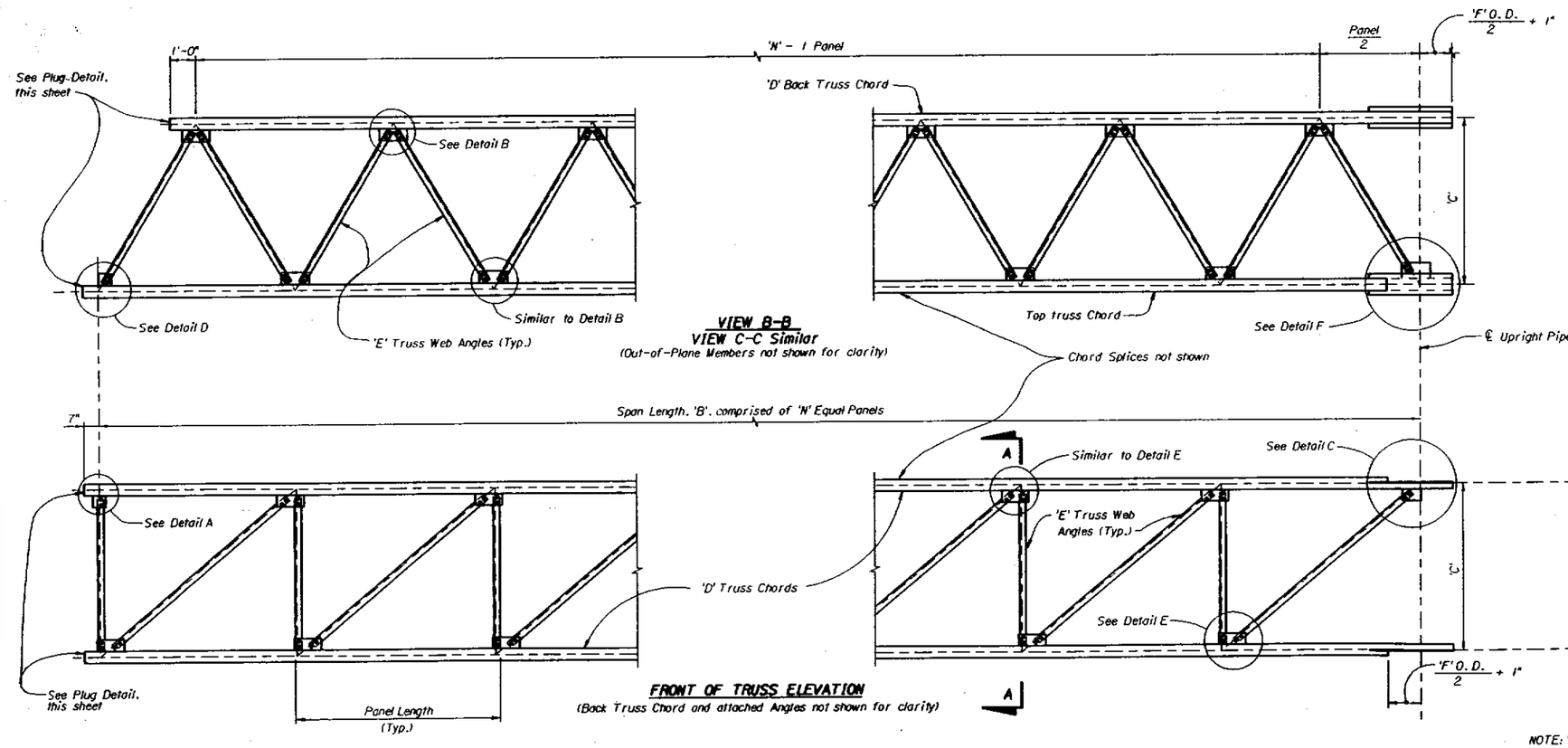

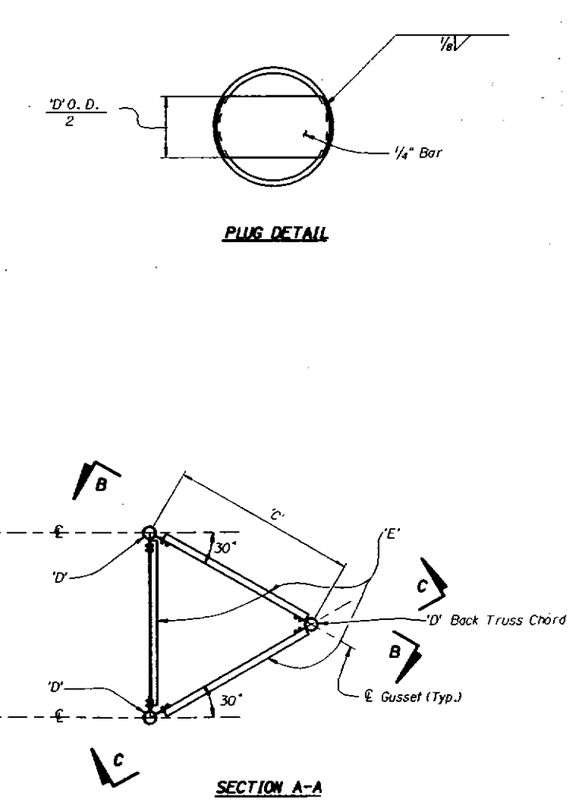

NOTE: Work this Standard with Standard Index Nos. 2001, 2002 & S-2004.
NOTE: See 'TABLES OF SIGN STRUCTURE VARIABLES' for referenced dimensions, sizes and quantities.

REVISIONS					
Date	By	Description	Date	By	Description
			92		

	Names	Dates
Drawn by	REB	8-89
Checked by	MHA	8-89
Designed by	MHA	8-89
Checked by	REN	8-89
Approved by	REN	

ENGINEER OF RECORD:
STRUCTURES DESIGN OFFICE
CENTRAL OFFICE
605 Suwannee Street, MS 33
Tallahassee, Florida 32399-0450

LOGO:

SEAL:

FLORIDA DEPARTMENT OF TRANSPORTATION
STRUCTURES DESIGN OFFICE

ROAD NO.	COUNTY	PROJECT NO.

SHEET TITLE: CANTILEVER SIGN STRUCTURE TRUSS ELEVATION

PROJECT NAME:

Drawing No. 1 of 1

Index No. 2003

ST1:K120.2301\2003.DGN

Mon Nov 9 12:53:34 1992

FED. ROAD DIV. NO.	STATE	PROJECT NO.	FISCAL YEAR	SHEET NO.
3	FLA.			

TABLE OF SIGN STRUCTURE VARIABLES

SIGN NO.	STATION	DIMENSIONS			NO. OF PANELS	MEMBER SIZES			BACKRAKE	GUSSET PLATES										TRUSS CONNECTION									SPLICE			
		A	B	C	N	D (CHORD)	E (WEB)	F (UPRIGHT)	G	GA	GB	GC	GD	GE	GF	GG	GH	GJ	GK	TA	TB	TC	TD	TE	TF	TG	TH	TJ	SA	SB	SC	SD

TABLE OF SIGN STRUCTURE VARIABLES (CONT.)

SIGN NO.	BASE CONNECTION									ANCHOR BOLT EMBEDMENT	FOOTING DIMENSIONS					FOOTING REINFORCING				PEDESTAL REINFORCING	
	BA	BB	BC	BD	BE	BF	BG	BH	BJ	BK	FA	FB	FC	FD	FE	FF	FG	FH	FJ	FK	FL

FOUNDATION NOTES:

NOTE: Work this Semi-Standard with Standard Index Nos. 2001, 2002 & 2003.

REVISIONS					
Date	By	Description	Date	By	Description
			92		

	Names	Dates
Drawn by		
Checked by		
Designed by		
Checked by		
Approved by		

ENGINEER OF RECORD:

LOGO:

SEAL:

FLORIDA DEPARTMENT OF TRANSPORTATION
STRUCTURES DESIGN OFFICE

ROAD NO.	COUNTY	PROJECT NO.

SHEET TITLE: TABLES OF SIGN STRUCTURE VARIABLES

PROJECT NAME:

Drawing No. 1 of 1

Index No. S-2004

Mon Nov 9 14:52:41 1992 ST1:f:\20.230\S2004.DGN

FED. ROAD DIV. NO.	STATE	PROJECT NO.	FISCAL YEAR	SHEET NO.
3	FLA.			

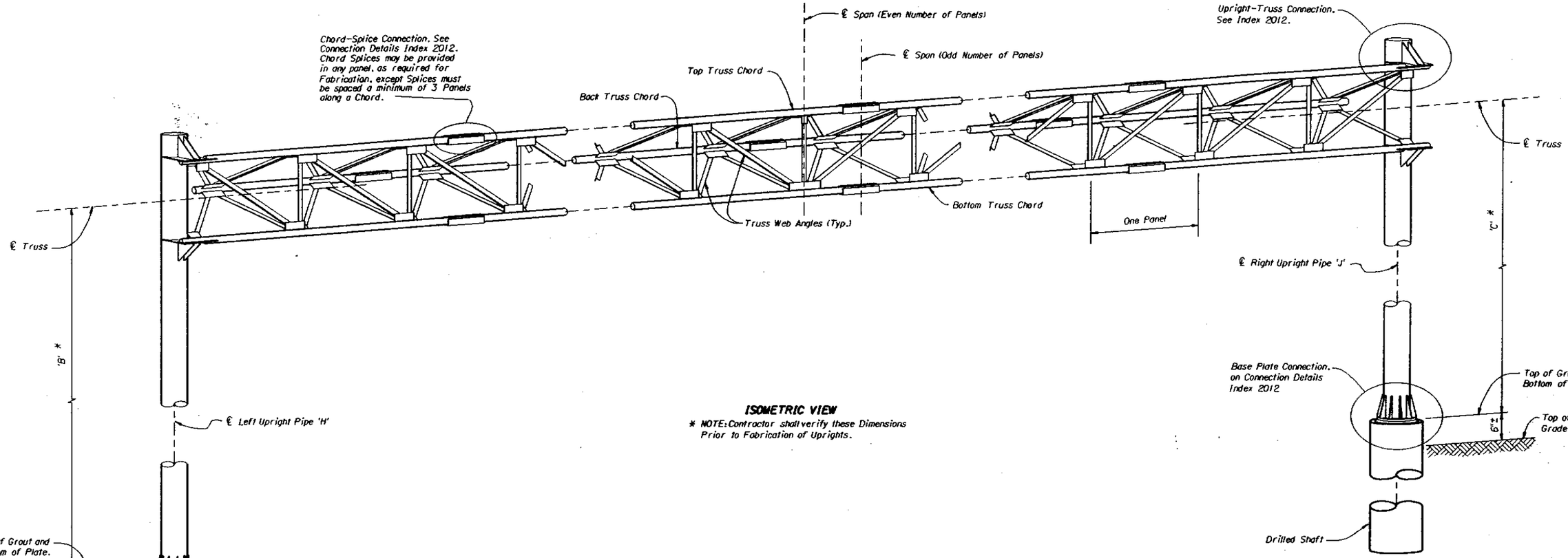

ISOMETRIC VIEW

* NOTE: Contractor shall verify these Dimensions Prior to Fabrication of Uprights.

SPAN SIGN STRUCTURE NOTES

1) Sign Structure Materials shall be as follows:

Upright & Chords (Steel Pipe)	-> API-5L-X42 (42 ksi yield) or ASTM A 500 Grade B (42 ksi yield)
Webs and Sipices (Steel Angles)	-> ASTM A 709 Grade 36
Steel Plates	-> ASTM A 709 Grade 36
Weld Metal	-> E70XX
Bolts (except Anchor Bolts)	-> ASTM A 307

2) Steel Anchor Bolts shall be AASHTO 314-90 Grade 55. Nuts for Anchor Bolts shall be ASTM A 563 Grade A Heavy Hex.

3) All Steel items shall be Galvanized as follows:

Structural Shapes and Plates	-> ASTM A 123
All Nuts, Bolts and Washers	-> ASTM A 153 Class C or D depending on size

4) All Bolts, except Anchor Bolts, shall have Single Self-Locking Nuts or, in lieu thereof, regular nuts with a galvanized 'Palnut' locking nut manufactured by TRW, installed in accordance with the manufacturer's recommendations. Anchor Bolts shall have Double nuts.

5) Concrete shall be Class IV (Drilled Shaft) with a minimum 28-day Compressive Strength (f'c) of 4,000 psi for all environmental classifications.

6) Reinforcing Steel shall be ASTM A 615 Grade 60.

7) Alternate Designs for this Structure are not allowed.

8) Grout shall have a Minimum 28-day Compressive Strength of 5000 psi and shall meet the requirements of Special Provision Section 934.

9) Shop Drawings for this Structure are required and Fabrication shall not begin until these Shop Drawings are approved.

10) The Structure must be assembled after Galvanizing and prior to shipment to the site to assure fit up. It may be disassembled for shipping.

11) The Design Wind Speed is in Conformance with the "Structures Design Guidelines", Revision "h", Chapter 21, with a 30 percent Gust Factor.

12) Provide a Parabolic Camber with the Maximum Upward Deflection as called for on the Camber Diagram. Indicate on the Shop Drawings the Method to be used to provide the required Camber.

13) Sign Panels attached to the Truss shall be centered (in elevation) on the Structure. Sign Panels shall be Aluminum.

14) Except for Anchor bolts, all bolt hole diameters shall be equal to the bolt diameter plus 1/16", prior to galvanizing. Hole diameters for Anchor bolts shall not exceed the bolt diameter plus 1/2".

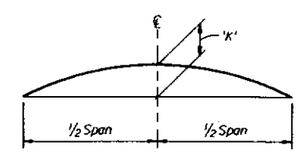

CAMBER DIAGRAM

NOTE: See Roadway Index Drawing 17505 for information on Fabrication and installation of lighting.

NOTE: Work this Standard with Structures Standard Index Nos. 2012, 2013, and S-2014.

NOTE: See 'Tables Of Sign Structure Variables' for referenced dimensions, sizes and quantities.

REVISIONS					
Date	By	Description	Date	By	Description
			92		

	Names	Dates
Drawn by	DCP	6-89
Checked by	MHA	6-89
Designed by	MHA	6-89
Checked by	REN	6-89
Approved by	REN	

ENGINEER OF RECORD: STRUCTURES DESIGN OFFICE, CENTRAL OFFICE, 605 Suwannee Street, MS 33, Tallahassee, Florida 32399-0450

LOGO:

SEAL:

FLORIDA DEPARTMENT OF TRANSPORTATION
STRUCTURES DESIGN OFFICE

ROAD NO.	COUNTY	PROJECT NO.

SHEET TITLE: SPAN SIGN STRUCTURE NOTES, CAMBER, ISOMETRIC VIEW

PROJECT NAME:

Drawing No. 1 of 1

Index No. 2011

STI:\120\2301201I.DGN

Mon Nov 9 12:17:30 1992

FED. ROAD DIV. NO.	STATE	PROJECT NO.	FISCAL YEAR	SHEET NO.
3	FLA.			

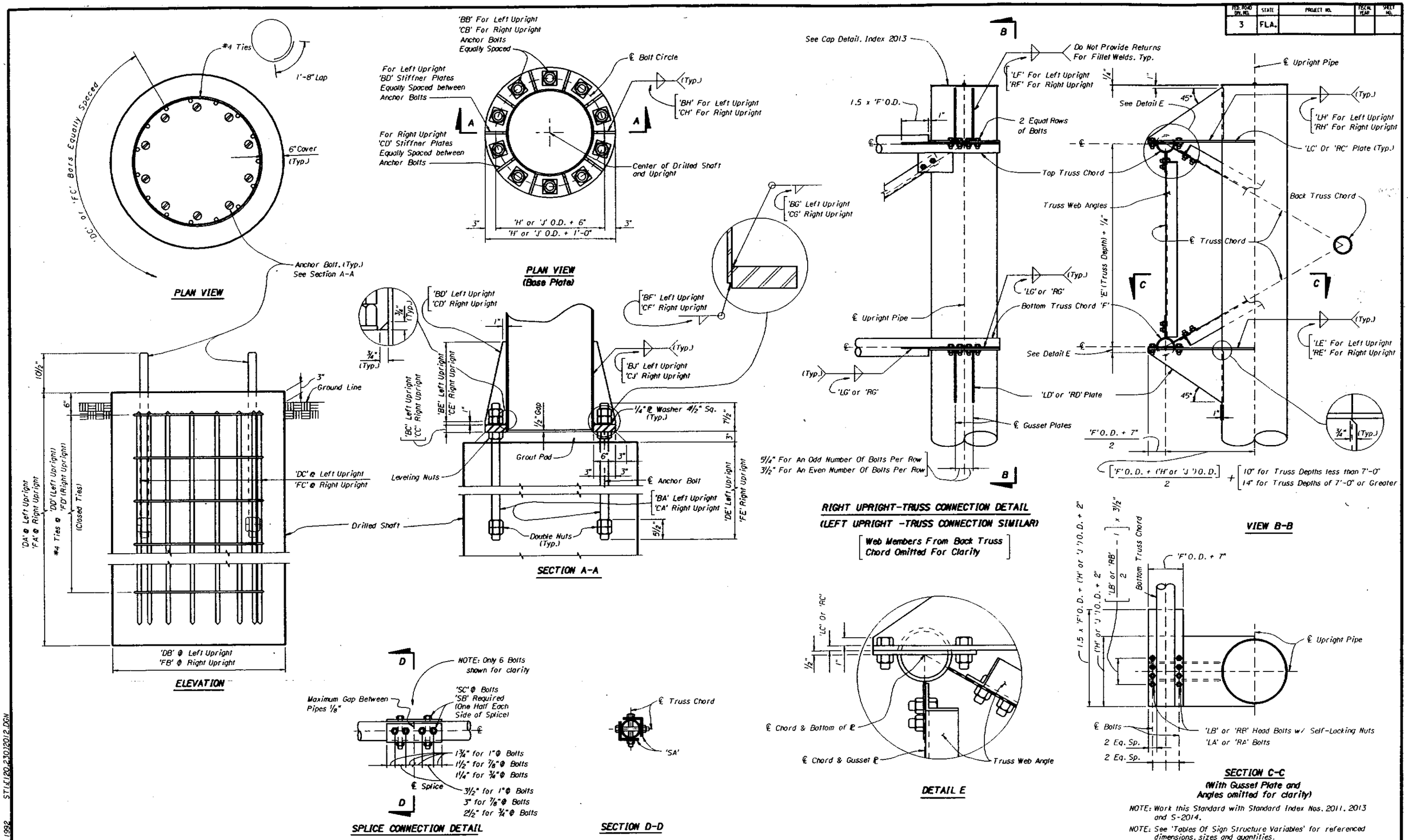

NOTE: Work this Standard with Standard Index Nos. 2011, 2013 and S-2014.

NOTE: See 'Tables Of Sign Structure Variables' for referenced dimensions, sizes and quantities.

REVISIONS					
Date	By	Description	Date	By	Description
			92		

	Names	Dates
Drawn by	REB	6-89
Checked by	MHA	6-89
Designed by	MHA	6-89
Checked by		
Approved by	REN	

ENGINEER OF RECORD:
STRUCTURES DESIGN OFFICE
CENTRAL OFFICE
605 Suwannee Street, MS 33
Tallahassee, Florida 32399-0450

LOGO:

SEAL:

FLORIDA DEPARTMENT OF TRANSPORTATION
STRUCTURES DESIGN OFFICE

ROAD NO.	COUNTY	PROJECT NO.

SHEET TITLE: SPAN SIGN STRUCTURE CONNECTION DETAILS

PROJECT NAME:

Drawing No. 1 of 1

Index No. 2012

MON NOV 9 12:24:48 1992 ST1:K120.230\2012.DGN

FED. ROAD DIV. NO.	STATE	PROJECT NO.	FISCAL YEAR	SHEET NO.
3	FLA.			

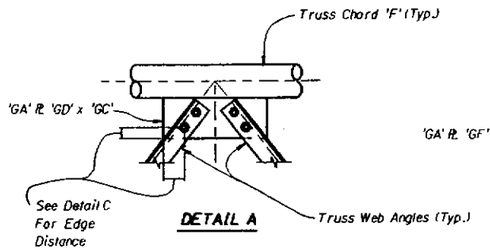

DETAIL A

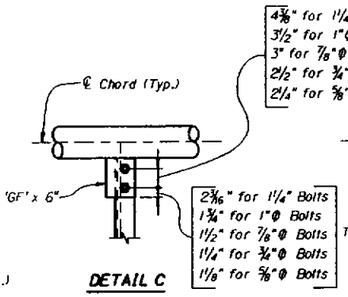

DETAIL C

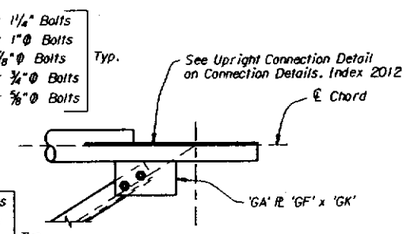

DETAIL E

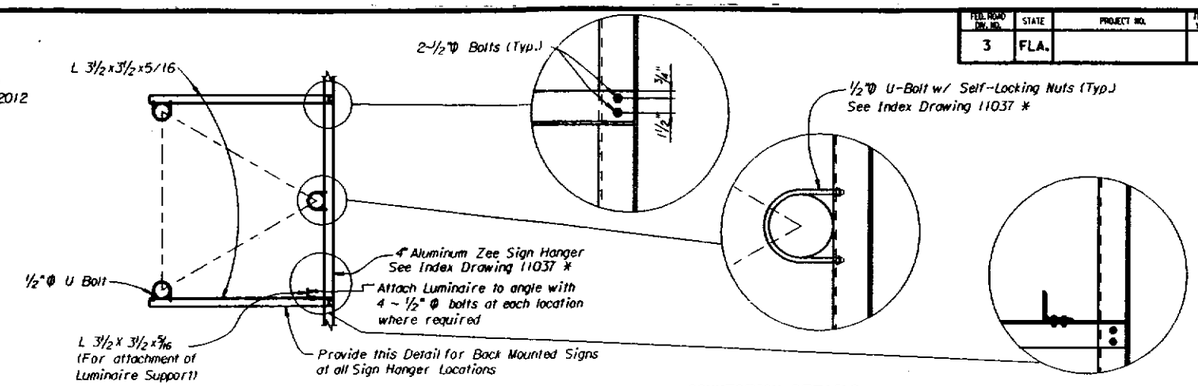

BACK-SIDE SIGN MOUNTING DETAIL

CONNECTION DETAILS

NOTE: Front-side mounted sign details are shown on Index Drawing 11037. *

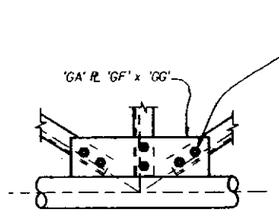

DETAIL B

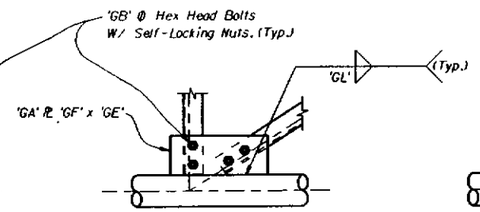

DETAIL D

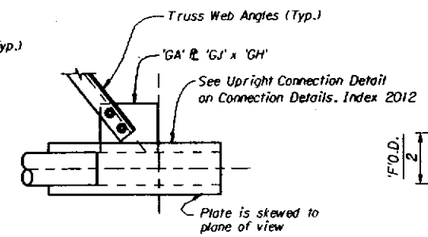

DETAIL F

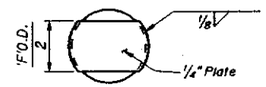

PLUG DETAIL
(Each end of Back Truss Chord)

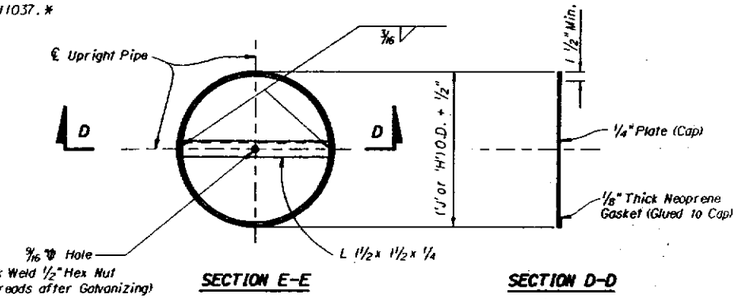

SECTION E-E

SECTION D-D

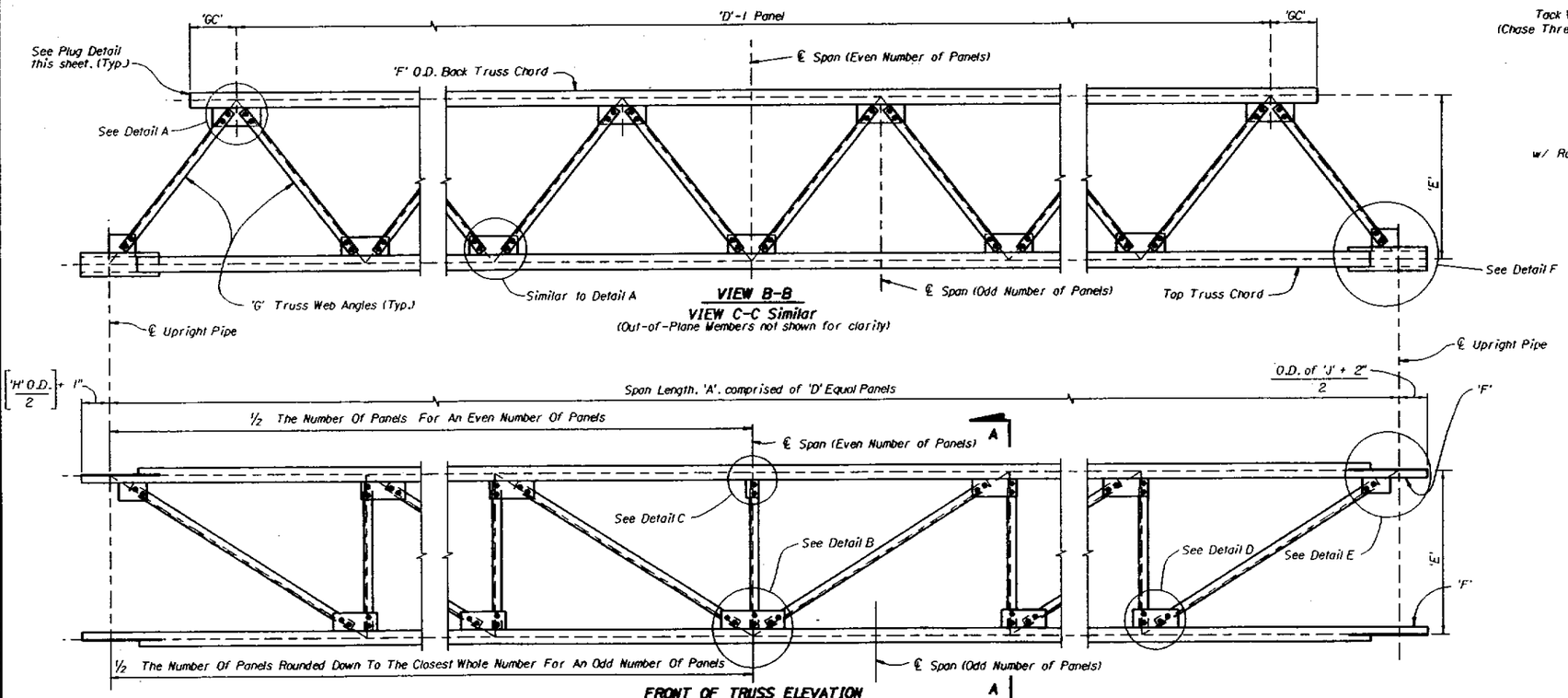

VIEW B-B
VIEW C-C Similar
(Out-of-Plane Members not shown for clarity)

FRONT OF TRUSS ELEVATION
(Back Truss Chord and attached Angles not shown for clarity)

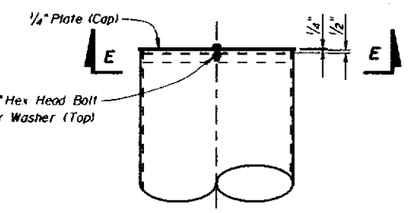

UPRIGHT CAP DETAIL

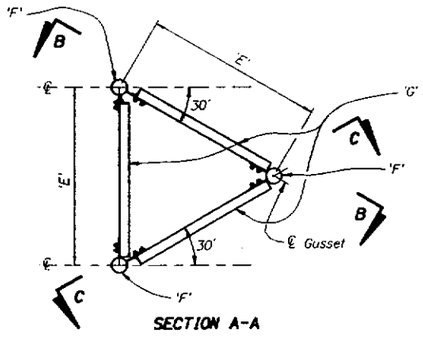

SECTION A-A

* NOTE: See Roadway Index Drawing 11037.

NOTE: Work this Standard with Standard Index Nos. 2011, 2012 and S-2014.

NOTE: See 'Tables Of Sign Structure Variables' for referenced dimensions, sizes and quantities.

REVISIONS					
Date	By	Description	Date	By	Description
			92		

	Names	Dates
Drawn by	REB	6-89
Checked by	MHA	6-89
Designed by	MHA	6-89
Checked by	REN	6-89
Approved by	REN	

ENGINEER OF RECORD:
STRUCTURES DESIGN OFFICE
CENTRAL OFFICE
605 Suwannee Street, MS 33
Tallahassee, Florida 32399-0450

LOGO:

SEAL:

FLORIDA DEPARTMENT OF TRANSPORTATION
STRUCTURES DESIGN OFFICE

ROAD NO.	COUNTY	PROJECT NO.

SHEET TITLE: SPAN SIGN STRUCTURE TRUSS ELEVATION

PROJECT NAME:

Drawing No. 1 of 1

Index No. 2013

Mon Nov 9 12:26:02 1992 STK120.2301201.3.DGN

FED. ROAD DIV. NO.	STATE	PROJECT NO.	FISCAL YEAR	SHEET NO.
3	FLA.			

TABLE OF SIGN STRUCTURE VARIABLES

SIGN NO.	STATION	DIMENSIONS			NO. OF PANELS	MEMBER SIZES						GUSSET PLATES										
		A	B	C	D	E (WEB)	F (CHORD)	G (WEB)	H (LEFT UPRIGHT)	J (RIGHT UPRIGHT)	K (CAMBER)	GA	GB	GC	GD	GE	GF	GG	GH	GJ	GK	GL

TABLE OF SIGN STRUCTURE VARIABLES (CONT.)

SIGN NO.	LEFT TRUSS CONNECTION								RIGHT TRUSS CONNECTION								SPLICE		
	LA	LB	LC	LD	LE	LF	LG	LH	RA	RB	RC	RD	RE	RF	RG	RH	SA	SB	SC

FOUNDATION NOTES:

TABLE OF SIGN STRUCTURE VARIABLES (CONT.)

SIGN NO.	LEFT BASE CONNECTION									RIGHT BASE CONNECTION									LEFT DRILLED SHAFT					RIGHT DRILLED SHAFT				
	BA	BB	BC	BD	BE	BF	BG	BH	BJ	CA	CB	CC	CD	CE	CF	CG	CH	CJ	DA	DB	DC	DD	DE	FA	FB	FC	FD	FE

NOTE: Work this Semi-Standard With Standard Index Nos. 2011, 2012, & 2013.

REVISIONS					
Date	By	Description	Date	By	Description
			92		

	Names	Dates
Drawn by		
Checked by		
Designed by		
Checked by		
Approved by		

ENGINEER OF RECORD:

LOGO:

SEAL:

FLORIDA DEPARTMENT OF TRANSPORTATION
STRUCTURES DESIGN OFFICE

ROAD NO.	COUNTY	PROJECT NO.

SHEET TITLE: TABLES OF SIGN STRUCTURE VARIABLES

PROJECT NAME:

Drawing No. 1 of 1

Index No. S-2014

ST1:(120,230)S2014.DGN

Mon Nov 9 14:53:37 1992