STATE OF FLORIDA
DEPARTMENT OF TRANSPORTATION

ROADWAY AND TRAFFIC DESIGN STANDARDS

FOR DESIGN, CONSTRUCTION, MAINTENANCE AND UTILITY OPERATIONS FOR STREETS AND HIGHWAYS ON STATE MAINTAINED SYSTEMS

JANUARY 1992

TOPIC NO. 625-010-003- b

Ray E. Reissener P.E.
1/23/92

Ray E. Reissener
State Roadway Design Engineer

PATENTED DEVICES, MATERIALS AND PROCESSES

The use of any design, method, process, material or device either expressed or implied by these standards that are covered by patent, copyright, or proprietary priviledge is the sole responsibility of the user. Any infringement on the rights of the inventor, patentee, assignee or licensee shall be the sole responsibility of the user. For additional information refer to Subsection 7-3 of the FDOT Standard Specifications for Road and Bridge Construction.

This publication was produced at an annual cost of $135,000 or $30.00 per copy to provide standards and criteria for the design, construction and maintenance of highway transportation facilities constructed or maintained by or for the Department Of Transportation.

This publication is printed on recycled paper.

This document can be procured by contacting the following:

FLORIDA DEPARTMENT OF TRANSPORTATION
MAP & PUBLICATION SALES
MAIL STATION 12
605 SUWANNEE STREET
TALLAHASSEE, FLORIDA 32399-0450

Phone (904) 488-9220

REVISIONS
ROAD DESIGN STANDARDS
1992

INDEX NUMBER	SHEET NUMBER	DESCRIPTION
		Every standard drawing sheet in the 1992 Roadway And Traffic Design Standards has been produced by computer drafting. *In taking advantage of verification, registering and other features of CADD, and due to certain restraints of CADD, changes appear on the sheets that are not listed in the tabulated Revisions. These changes may include reformating, typographical corrections, alignment of views and details, scale, rotation, skew, abbreviation, grouping, shape, proportion and other nonfunctional changes. All pay item numbers have been deleted from the 1992 Standards; their deletions are considered nonfunctional changes and are not tabulated below. The revision no. on each Standard Sheet reflects the year of the latest change in function, intent and purpose on that sheet.* *Revisions to the standards that reflect function, intent and purpose are tabulated below.*
001	1 of 1	*Completely revised to include commonly used abbreviations.*
002	1 of 3	*'GENERAL NOTE' added.*
	2 of 3	*Sheet reformatted; added symbols for pipe culvert: mitered end section, straight endwall, U-type endwall, median drain and other end treatments; added symbol for guardrail; deleted side drain pipe; changed 'north point' to 'north arrow'; expanded 'round' to read 'round or diameter'; changed 'overhead power cable' and 'buried power cable' to 'overhead electric' and 'buried electric'; added reference to General Notes.*
	3 of 3	*Sheet reformatted; revised symbol for traffic signal head (mast arm mounted); deleted signal item number; removed 'new' from 'pole & luminaire', 'high mast lighting tower' and 'joint use pole'; revised 'high mast lighting tower' symbol; removed 'concrete' from 'lighting pull box'; deleted 'waterproof lighting pull box' and symbol; revised 'under deck lighting fixture' to read 'pier cap under deck luminaire'; added 'pendant hung under deck luminaire' and symbol; revised pavement arrow and added straignt arrow; revised symbols for stop bars and traffic signs (both post mounted and overhead); added reference to General Notes.*
102	1 of 3	*'CHART I' 'TYPE IV Heavy-Non-Cohesive And Very Heavy-Cohesive' curve and references deleted. 'Paved Ditch'; curve and references deleted.*
	3 of 3	*'TYPE IV SILT FENCE' All details and references deleted.*
104	1 of 1	*Table 'SEEDING RATES FOR NEW SHOULDERS AND SLOPES', seeding dates revised.*
105	1 of 1	*General Notes No. 4 and 5 revised; table 'SEEDING RATES', seeding dates revised.*
199	1 of 1	*New Sheet 'GEOTEXTILE CRITERIA'*
200	1 of 2	*Sheet reformatted; Structure bottoms redesigned; 'SPECIAL TOP SLAB' and 'SLAB TO WALL DETAILS FOR PRECAST ALTERNATE' added; 'GENERAL NOTES' renumbered, new note No. 1.*
	2 of 2	*New Sheet*
201	1 of 6	*Sheet reformatted; 'STRUCTURE TOPS' 'TYPE 7-T (TRAFFIC) (H-20)' and 'TYPE 8' moved to Sheet 2; 'TYPE 7-NT (NON-TRAFFIC)' deleted; 2-Piece Cover added; '3'-0"' dimension added to Types I, II and III Frames; 'GENERAL NOTES' No. 2, 3, 4 and 5 moved to Sheet 2, Note No. 1 deleted, Note No. 6 renumbered; 'COVER FOR ALL FRAMES' added 'Ribs (Optional)' and logo.*
	2 of 6	*Sheet reformatted; 'STRUCTURE TOPS' 'TYPE 7-T (TRAFFIC) (H-20)' and 'TYPE 8' added from Sheet 1; 'PRECAST CONCENTRIC AND ECCENTRIC CONE' added; 'GENERAL NOTES' added from Sheet 1; 'LADDER BARS FOR STRUCTURES OVER 10' IN DEPTH' deleted; 'DRAINAGE STRUCTURE INVERT' added note.*
	4 of 6	*'NOTES FOR THIN-WALL PRECAST OPTIONS' Notes 1 and 2 Revised; 'EQUILIVENT STEEL AREA TABLE' Revised Grade 40 Reinforcing Bar sizes.*
205	1 of 4	*'GENERAL NOTES' note no. 4 revised; 'FLEXIBLE PAVEMENT', 'UNPAVED W/O SELECT BEDDING' & 'UNPAVED WITH SELECT BEDDING' revised to include Spiral Rib Pipe Arch values.*
	3 of 4	*'GENERAL NOTES' note no. 4 added; Table 'PIPE ARCH- $2\frac{2}{3}$" x $\frac{1}{2}$" CORRUGATION' revised to include 'PIPE ARCH: SPIRAL RIB: $\frac{3}{4}$" x $\frac{3}{4}$" x $7\frac{1}{2}$" RIB SPACING' and 'PIPE ARCH: SPIRAL RIB: $\frac{3}{4}$" x 1" x $11\frac{1}{2}$" RIB SPACING.*
	4 of 4	*'NOTES' note no. 5 and 6 added; Table 'PIPE ARCH- $2\frac{2}{3}$" x $\frac{1}{2}$" CORRUGATION' revised to include 'PIPE ARCH: SPIRAL RIB: $\frac{3}{4}$" x $\frac{3}{4}$" x $7\frac{1}{2}$" RIB SPACING' and 'PIPE ARCH: SPIRAL RIB: $\frac{3}{4}$" x 1" x $11\frac{1}{2}$" RIB SPACING'; Table 'ROUND PIPE-SPIRAL RIB' added.*
209	1 of 1	*'APPLICATION GUIDELINES TO CURB INLETS AND GUTTER INLETS' 'INDEX 214 and 215' 'TYPE CURB/GUTTER' Added type 'D'*
212	1 of 1	*'GENERAL NOTES' Note 3 revised (deleted reference to Type J Bottoms).*
213	1 of 1	*'GENERAL NOTES' Note 3 revised (deleted reference to Type J Bottoms).*
214	1 of 1	*'GENERAL NOTES' Note 6 Revised; 'TOP SLABS' Deleted reference to Type J Bottoms.*
215	1 of 1	*'GENERAL NOTES' Note 6 Revised; 'TOP SLABS' Deleted reference to Type J Bottoms.*
217	1 of 1	*'SECTION BB' 'SECTION (INLETS TYPES 3, 4 & 5) (NON-SYMMETRICAL SECTION SHOWN)' Deleted reference to Type J Bottoms.*
218	1 of 2	*'INLET WITH STRUCTURE BOTTOM' Deleted reference to Type J Bottoms.*
219	1 of 2	*'GENERAL NOTES' Note 6 revised (deleted reference to Type J Bottoms).*
220	1 of 1	*'INLET WITH STRUCTURE BOTTOM' Deleted reference to Type J Bottoms; 'RECOMMENDED MAXIMUM PIPE SIZES' Deleted reference to Type J Bottoms.*
221	1 of 1	*'OPTIONAL BAR SPACING' detail added; 'INLET WITH STRUCTURE BOTTOM' Deleted reference to Type J Bottoms; 'GENERAL NOTES' Added recommended pipe size.*
229	1 of 1	*'GENERAL NOTES' Note 4 revised.*

REVISIONS
ROAD DESIGN STANDARDS
1992

INDEX NUMBER	SHEET NUMBER	DESCRIPTION
230	1 of 1	'INLET WITH STRUCTURE BOTTOM' Deleted reference to Type J Bottoms; 'RECOMMENDED MAXIMUM PIPE SIZES' Deleted reference to Type J Bottoms.
231	1 of 1	'INLET WITH STRUCTURE BOTTOM' Deleted reference to Type J Bottoms; 'RECOMMENDED MAXIMUM PIPE SIZES' Deleted reference to Type J Bottoms.
232	1 of 4	'STRUCTURE BOTTOM FOR INLETS TYPE C, D & E' Deleted reference to Type J Bottoms.
233	1 of 1	'GENERAL NOTES' Note 33 revised (deleted reference to Type J Bottoms).
234	1 of 1	'STEEL GRATING' Added detail 'INLET WITH STRUCTURD BOTTOM'; Deleted reference to Type J Bottoms.
235	1 of 1	'GENERAL NOTES' Note 33 revised (deleted reference to Type J Bottoms).
251	1 of 2	Redesigned to meet 'AASHTO 1989' Specifications.
	2 of 2	Redesigned to meet 'AASHTO 1989' Specifications.
252	1 of 2	Redesigned to meet 'AASHTO 1989' Specifications.
	2 of 2	Redesigned to meet 'AASHTO 1989' Specifications.
253	1 of 2	Redesigned to meet 'AASHTO 1989' Specifications.
	2 of 2	Redesigned to meet 'AASHTO 1989' Specifications.
255	1 of 1	Redesigned to meet 'AASHTO 1989' Specifications.
264	1 of 1	'GENERAL NOTES': Notes 3 and 4 revised.
272	1 of 6	'DIMEMSIONS AND QUANTITIES' Replaced Table '3" CONCRETE SLAB (CY)' with '5½" CONCRETE SLAB (CY)'.
	2 of 6	'DIMEMSIONS AND QUANTITIES' Replaced Table '3" CONCRETE SLAB (CY)' with '5½" CONCRETE SLAB (CY)'.
	3 of 6	'DIMEMSIONS AND QUANTITIES' Replaced Table '3" CONCRETE SLAB (CY)' with '5½" CONCRETE SLAB (CY)'.
	4 of 6	'DIMEMSIONS AND QUANTITIES' Replaced Table '3" CONCRETE SLAB (CY)' with '5½" CONCRETE SLAB (CY)'.
	5 of 6	'DIMEMSIONS AND QUANTITIES' Replaced Table '5½" CONCRETE SLAB (CY)' with '3" CONCRETE SLAB (CY)'.
273	1-4 of 6	'DIMENSIONS AND QUANTITIES' Revised concrete and sodding quantities; All Drawings revised to include concrete apron.
273	6 of 6	'PERMISSIBLE PAVEMENT MODIFICATION' deleted 'FOR CLASS I TURNOUTS', Revised diagram to include concrete apron, revised slope notation; 'DITCH TRANSITION' Revised diagram to include concrete apron.
280	1 of 4	'DETAIL OF BELL & SPIGOT CONCRETE PIPE JOINT USING ROUND RUBBER GASKET' added; 'FILTER FABRIC JACKET' added; 'ELIPTICAL CONCRETE PIPE JOINTS' revised; 'INLETS, MANHOLE OR JUNCTION BOXES ON INTEGRAL PRECAST CONCRETE RISER FOR CONCRETE PIPE' and 'GUARD AT PIPE ENDS' moved to Sheet 2.
	2 of 4	'INLETS, MANHOLE OR JUNCTION BOXES ON INTEGRAL PRECAST CONCRETE RISER FOR CONCRETE PIPE' and 'GUARD AT PIPE ENDS' added; Reference to Type P Bottoms deleted.
	4 of 4	'FRANGIBLE BASE' detail added.
282	1 of 2	Sheet reformatted
285	1 of 2	'LONGITUDINAL SECTION' Revised limits to be paid for as French Drain.
	2 of 2	'ELIPTICAL PIPE' and 'ROUND PIPE' 'Slot Cut' dimensions revised.
286	1 of 2	'GENERAL NOTES' Note 10 revised (added Type III, deleted Type II); 'UPPER LIMIT' and 'LOWER LIMIT' and 'TYPE V b' revised No. 9 Coarse Aggregate to No. 57.
300	1 of 1	Deleted General Notes No. 1 and 2; 'CURB AND GUTTER ADJACENT TO FLEXIBLE PAVEMENT' revised drawing and notations, revised heading to read 'CURB AND GUTTER AND TYPE A CURB ADJACENT TO FLEXIBLE PAVEMENT'; 'MEDIAN CURB AND GUTTER ENDINGS' revised to read 'CURB AND GUTTER ENDINGS' and revised drawings; 'EXPANSION JOINT BETWEEN GUTTER AND CONCRETE PAVEMENT' added notation directing joint seal usage on both high and low sides of pavement; 'CONCRETE CURB AND GUTTER' added 'Note'; 'DROP CURB' added 'Note'; 'CONCRETE CURB' added 'Note'; 'TYPE A' added notation.
301	1 of 1	Sheet completely revised, (old Sheet 2 of 2 deleted).
303	1 of 1	Index deleted.
304	2 of 2	'GENERAL NOTE' No. 6 is expanded; 'OPTIONAL RAMP CURB' revised to read 'RAMP CURB OPTIONS'; 'RAMPS FOR LINEAR PEDESTRAIN TRAFFIC' mid block 'PLAN VIEW' transition dimension and maximum slope rate added.
305	1 of 5	Reformatted sheet; added headding 'LONGITUDINAL JOINTS'; 'LONGITUDINAL CONSTRUCTION JOINT' revised note; added headding 'TRANSVERSE JOINT' and revised notation; chart 'TIE BAR SPACING WITH MAXIMUM DISTANCE TO FREE EDGE 12'' notation added.
	4 of 5	'DETAIL OF JOINT ARRANGEMENT', 'TYPICAL SECTION FOR MULTI LANE CONSTRUCTION' deleted, 'GENERAL NOTES' revised to 'NOTES', revised Notes No. 1 and No. 3; added headding 'STEEL HOOK BOLT ASSEMBLY', 'ALTERNATE KEYWAY AND TIE BAR' revised to read 'ALTERNATE KEYWAY AND HOOK BOLT'; 'DETAIL OF JOINT ARRANGEMENT' 'JOINT LAYOUT AT 'T' INTERSECTIONS OR OFFSET INTERSECTIONS' revised to read 'JOINT LAYOUT AT 'T' INTERSECTIONS'.
	5 of 5	New Sheet 'JOINT LAYOUT AT ENTRANCE AND EXIT RAMP TERMINALS'.

REVISIONS
ROAD DESIGN STANDARDS
1992

INDEX NUMBER	SHEET NUMBER	DESCRIPTION
306	1 of 1	Sheet title revised to read 'BRIDGE APPROACH EXPANSION JOINT-CONCRETE PAVEMENT'; Sheet is reformatted; 'DESIGN NOTES' added; 'GENERAL NOTES' completely revised; Subtitles revised; 'REINFORCING STEEL' chart: number and length of 'D' Bars revised.
400	1 of 14	'LENGTH OF ADVANCEMENT' diagram revised for clarity; 'Length Of Advancement' chart: note modified and relocated below diagram.
	2 of 14	'GUARDRAIL APPLICATION FOR ROADSIDE HAZARDS', 'DIVIDED ROADWAY-DETAIL B' and 'UNDIVIDED ROADWAY-DETAIL C' the '2 Panels' approaching hazard have been revised to read 'Varies (2 Panels Min.)'.
	3 of 14	'DETAIL W' 'RADIAL PANELS ADJOINING BRIDGE' '187' RADIAL PANEL' and '125' RADIAL PANEL' $7\frac{1}{4}$" dimension corrected to $5\frac{1}{4}$".
	4 of 14	Subtitles expanded; 'GUARDRAIL APPLICATIONS FOR MEDIANS 50 FEET OR GREATER' guardrail lengths on chart revised.
	5 of 14	Subtitles expanded.
	6 of 14	Subtitles expanded; reformated sheet; consolidated legends; revised reference numbers on diagrams as necessary to conform with consolidated legend.
	7 of 14	'TIMBER BREAKAWAY POST' Note deleted; 'STANDARD FLARE-DETAIL P' last sentence in 'Notes' revised.
	8 of 14	'GUARDRAIL LOCATION-DETAIL K' rubrail payment note added to table 'Notes'.
	9 of 14	'DETAIL Q' 'PLAN' Revised curb & gutter alignment from tangent to parabolic flare; 'SECTION BB' and 'SECTION CC' revised to reflect curb & gutter realignment.
	10 of 14	'DETAIL J' subheading revised, shoulder line and misc asph. pavement added, slope protection notations and sketches added.
	11 of 14	'LOCATION AT CURB & GUTTER SECTIONS-DETAIL L' added '(maximum speed 45 MPH)' to Type 'F' Curb section; 'END ANCHORAGE TYPE II-DETAIL R' removed 'Galvanized' from $1\frac{1}{2}$" ID Pipe Sleve; 'ADHESIVE REFLECTORS-DETAIL M' revised 'REFLECTOR NOTES' No. 3 and 4.
	12 of 14	'SPECIAL STEEL GUARDRAIL POST' 'FOR MOUNTING GUARDRAIL ON EXISTING APPROACH SLABS' 'SIDE VIEW' diameter of anchor bolt corrected to $\frac{7}{8}$".
	14 of 14	'BEAM WASHER' added subheading '(RECTANGULAR PLATE WASHER)'; '$\frac{5}{8}$" BUTTON HEAD BOLT' added thread length notation to chart; 'BACK-UP PLATE' revised to read 'BEAM BACK-UP PLATE', revised 'Note'.
401	9 of 9	'SCHEME 29' reinforcement replaced; deepened foot of wall.
410	1 of 14	Sheet reformatted; 'DETAIL A' moved to Sheet 2 of 14; 'DETAIL II' 'CONCRETE BARRIER WALL TERMINAL' 'AS A TEMPORARY BARRIER TERMINAL' removed from usage note; 'STANDARD BARRIER WALL SECTION' added 'HALF WALL' section; reflective marker notation expanded, notations under section revised; chart 'REFLECTIVE BARRIER MARKER SPACING ON WALL' 'REMARKS' replaced remarks; 'MEDIAN BARRIER WALL FOR SUPERELEVATED SECTIONS OR FOR VARIABLE ROADWAY PROFILE GRADES' notations under section were modified for clarity, reference to Index 217 removed; 'WALL FACE SAFETY SHAPES' section and notations added; 'GENERAL NOTES' Note Nos. 1 and 7 revised.
	2 of 14	Sheet reformated; 'GUARDRAIL CONNECTION TO STANDARD CONCRETE BARRIER WALL' and 'TIMBER OFFSET BLOCK FOR GUARDRAIL SPECIAL END SHOE CONNECTION TO F-SHAPE CONCRETE BARRIER WALL' deleted; 'GUARDRAIL CONNECTION TO TRAILING END CONCRETE BARRIER WALL' new diagram and notes; 'FREE END REINFORCEMENT' expanded to show reinforcement required for guardrail connections, connections to concrete traffic railing on bridge approach slabs and retaining walls, and ends with G-R-E-A-T System Connections; 'DETAIL A' moved to this sheet.
	6 of 14	Guardrail connection to rigid ends revised; Guardrail connection note revised; End guardrail measurement note added; Deleted the word 'Transitions' from all diagrams; 'CONCRETE BARRIER WALLS ON APPROACHES TO BRIDGES' subheading reworded; 'WITH PLAIN CONCRETE BARRIER WALL (SHOULDER)' shoulder line for both normal shoulder for extended guardrail and extended shoulder for 62.5' guardrail shown.
	11 of 14	'HAZARD PENETRATING STEM OF BARRIER WALL' additional diagrams provided for clarification, the maximum 'a' for 3" chamfers was revised to <3" for circular hazards and <4" for octagonal hazards.
	12 of 14	'SHOULDER BARRIER WALL AT ABOVE GROUND RIGID HAZARDS WHEN GUARDRAIL OFFSET FROM HAZARD LESS THAN 3 FEET' guardrail attachment revised (2 Schemes were developed, <50 MPH and ≥50 MPH); Notes revised and expanded.
	13 of 14	New Sheet.
	14 of 14	New Sheet.
415	1 of 2	'WALL ALIGNMENT' flare rate redefined; 'TEMPORARY INERTIAL ATTENUATOR' drawing modified to indicate an 0°-5° deflection and to allow the use of pallets under modules, Note No. 3 revised; 'PALLET DETAIL' and notations added; 'WALL UNIT' top and end radius and/or chamfer revised.
431	1-6 of 6	New Index 'G-R-E-A-T SYSTEM'
432	1-2 of 2	New Index 'C-A-T SYSTEM'
433	1-4 of 4	New Index 'BRAKEMASTER'
438	1-2 of 2	New Index 'DRAGNET'
439	1-4 of 4	New Index 'CONSTRUCTION ZONE G-R-E-A-T'

REVISIONS
ROAD DESIGN STANDARDS
1992

INDEX NUMBER	SHEET NUMBER	DESCRIPTION
450	1 of 2	Sheet redrawn for clarity; 'FENCING TERMINALS AT BOX CULVERTS' '2'-6" Min' offset from ℄ of box revised to '3' Min.' offset from inside edge of wall; 'FENCING TERMINALS AT BRIDGE ENDS (ROADWAY)' notation added to 'PLAN' detailing the anchoring of barbed wire (end of bridge).
	2 of 2	Graphic clarifications in all views; 'FENCING TERMINALS AT RURAL INTERCHANGES' subheading defined.
451	1 of 2	'GENERAL NOTES' Note Nos. 2 and 9 (Class 2 zinc coating changed to Class 3 zinc coating), Note No. 13 revised.
452	1 of 2	'GENERAL NOTES' Note Nos. 4-A-(1), 4-B-(1), 4-C-(1) changed ASTM A120 to ASTM F1083; 4-A-(7), 4-B-(4), 4-C-(4) deleted Spec Subarticle 966-1.5, added ASTM F1234; 4-D-(1), 4-D-(2), 4-D-(3) restated forclarity; Note No. 8 changed 330' to 350'; 'TYPE IV VINYL COATED FABRIC' second column 'Aluminum Coating' deleted.
461	1 of 1	'GENERAL NOTES' Note No. 5 is expanded to include 'monolithic construction'.
500	1 of 2	Sheet retitled; 'REMOVAL OF MUCK' and 'GENERAL NOTES' retained on this sheet; plastic material information transfered to new Sheet 2 of 2; Utilization of material transfered to Index No. 505; Miscellaneous details transfered to new Index No. 506.
	2 of 2	REMOVAL OF PLASTIC MATERIALS transferred to this sheet.
505	1 of 1	'GENERAL NOTES' restructured; 'DESIGN NOTES' added; The utilization of Select (S), Plastic (P), and Hign Plastic (H) classified as Muck is limited to outer embankment slopes; Muck (M) restricted to topsiol use.
506	1 of 1	New Index 'MISCELLANEOUS EARTHWORK DETAILS' (data transfered from Index No. 500).
510	1 of 2	Sheet reformatted (for better grouping of details, tables, charts and text); superelevation for 0° 15' to 2° 00' curves revised to conform to AASHTO; '2-LANE, 4-LANE OR 6-LANE PAVEMENT, NO MEDIAN' 'Rotation' notation removed.
511	1 of 2	'GENERAL NOTES' Note No. 8 revised.
	2 of 2	'SPECIAL APPLICATION SUPERELEVATION RATES' notation is expanded for clarity.
513	1 of 1	'LAYER THICKNESS FOR ASPHALT CONCRETE STRUCTURAL COURSES' chart 'TYPE S-I WITH TYPE S-I TOP LAYER' corrected to read 'TYPE S-II WITH TYPE S-I TOP LAYER'; 'DESIGN NOTES' replaced.
514	1 of 2	Index 514 divided into two sheets; specified optional bases designated 'GENERAL USE BASE GROUPS AND STRUCTURAL NUMBERS' retained on this sheet and 'GENERAL NOTES' added; Composite Limerock-Asphalt Base' deleted; 'Composite Bases' indicated and structural numbers revised.
	2 of 2	New Sheet; Specified optional bases moved to this sheet and designated 'LIMITED USE OPTIONAL BASE GROUPS AND STRUCTURAL NUMBERS'.
515	1-3 of 4	Completely revised to reflect Administrative Rules 14-96 and 14-97.
	4 of 4	'SUPERELEVATION SECTIONS' expanded; 'PROFILE AND STORM WATER RUNOFF NOTES' Note No. 1 revised.
516	1 of 1	'QUANTITIES FOR ONE TURNOUT (SY)' chart retitled to read 'AREAS FOR ONE 5' DEEP TURNOUT (SY)'; 'TURNOUT PAVEMENT STRUCTURAL MINIMUM REQUIREMENTS' retitled to read 'PAVEMENT STRUCTURE FOR 5' DEEP TURNOUTS' and revised; other revision to reflect Administrative Rules 14-96 and 14-97.
518	1 of 1	'INSET' retitled to 'INSET B' and modified to reflect shoulder installation only; 'INSET A' added to reflect roadway installation only.
520	1 of 1	'GRAVITY WALL' Note No. 3 deleted, wall height expressed as 'Height (Exposed Face)', slope line and '1½:1 Max.' notation added behind wall, deleted wall joint note and revised drawing to indicate maximum joint spacing; 'ALUMINUM HANDRAIL ON GRAVITY WALL' retitled 'ALUMINUM PIPE HANDRAIL', base plate and anchors modified from 4 bolt to 2 bolt anchorage, Note No. 2 expanded to include requirements for anchor bolts, Note No. 3 added for payment, notation added permitting 'Adhesive Anchors', revised 10" dropoff notation, added 'MOUNT ON GRAVITY WALL SHOWN' to 'TYPICAL SECTION AT POST'; 'CONCRETE STEPS' added Notes No. 4 and 5 for payment.
525	1 of 5	Deleted referances to concrete pavement joints. Degree of curve updated from 8°20' to 8°15'.
	2 of 5	Deleted referances to concrete pavement joints. 'GENERAL NOTES' completely revised.
	3 of 5	Deleted referances to concrete pavement joints. Degree of curve updated from 8°20' to 8°15'.
	5 of 5	'LEFT TURN CONTROL' revised left turn to conform to Index No. 301.
526	1 of 8	Sheet revised to conform with Index 301.
	2 of 8	Sheet revised to conform with Index 301.
530	1 of 1	Index deleted.
532	1 of 3	'GENERAL NOTE' Note No. 5 expanded to allow mailbox to be placed back of sidewalk.
546	1 of 1	'GENERAL NOTES' Notes 4C and 5 revised, Note No. 7 added; 'WINDOW DETAIL' distance from sight line datum to top of ground cover reduced from 3' to 1', dimension 3.75' corrected to 3.5'; 'LEGEND' added.
600	1 of 10	'CONTENTS' added 'Channelizing And Lighting Device Consistency' and 'Clear Zone'; 'PREFACE' added note describing requirements of Index No. 600; 'SYMBOLS' description revised.
	2 of 10	'REGULATORY SPEED IN WORK ZONES' next to last paragraph deleted ("Regulatory Speed" and "Reduce Speed Ahead" . . .).
	3 of 10	'WARNING LIGHTS' 'Payment' deleted; 'CHANNELIZING AND LIGHTING DEVICE CONSISTENCY' Section added; 'REFLECTORIZED RAISED PAVEMENT MARKERS' revised to comply with spec. change; 'SIGN COVERING AND INTERMITTENT WORK STOPPAGE SIGNING' paragraph revised.

REVISIONS
ROAD DESIGN STANDARDS
1992

INDEX NUMBER	SHEET NUMBER	DESCRIPTION
600	4 of 10	'VARIABLE MESSAGE SIGN (VMS)' paragraph added; 'ROADSIDE BARRIERS' Index No. revised; 'ABOVE GROUND HAZARD' paragraph revised; 'CLEAR ZONE WIDTH' paragraph and chart added.
	5 of 10	'NOTES' No. 2 'e. Tubular Marker' added, No. 3 'c. Temporary Curb . . .' added, No. 5 A. and B. revised.
	6 of 10	New Sheet 'TEMPORARY CURB FOR WORK ZONES'
	7 of 10	'TUBULAR MARKER' notation added; 'TYPE III BARRICADE' one warning light deleted; 'CHANNELIZING AND LIGHTING DEVICE NOTES' Nos. 3 and 4 revised, No. 7 Deleted, No. 8 added.
	9 of 10	'MOT 1', 'MOT 2' and 'MOT 3' details and notations added; 'OM 3R' 'B/W' changed to 'B/Y'.
	10 of 10	New Sheet 'TYPICAL PLACEMENT OF REFLECTIVE PAVEMENT MARKERS IN LIEU OF TEMPORARY TAPE OR PAINT IN WORK ZONES'
602	1 of 1	'Maximum Spacing' notation revised; 'SYMBOLS' 'Type I Or Type II Barricade Or Drum' notation revised; 'GENERAL NOTES' No. 4 and 7 revised, No. 8 deleted.
603	1 of 1	'Maximum Spacing' and 'Cones At 25' Centers' notations revised; 'SYMBOLS' 'Type I, Type II Or Type III Barricade Or Drum' and 'Type I Or Type II Barricade Or Drum' revised; 'GENERAL NOTES' No. 6 revised, No. 9 deleted.
604	1 of 1	'Maximum Spacing' and 'Cones At 25' Centers' notations revised; 'SYMBOLS' 'Type I, Type II Or Type III Barricade Or Drum' and 'Type I Or Type II Barricade Or Drum' revised; 'GENERAL NOTES' No. 7 revised, No. 8 deleted.
605	1 of 1	'Maximum Spacing' and 'Cones At 25' Centers' notations revised; 'SYMBOLS' 'Type I Or Type II Barricade, Cone Or Drum' revised; 'GENERAL NOTES' No. 4 revised, No. 6 added, No. 7 deleted; 'TYPICAL APPLICATIONS' 'Mowing' and 'Litter Removal' added.
606	1 of 1	'Cones At 25' Centers' notation revised; 'Varies See General Note 2' revised to '500'; 'SYMBOLS' 'Type I Or Type II Barricades, Cone Or Drum' revised; 'GENERAL NOTES' No. 6 revised.
607	1 of 1	'SYMBOLS' 'Type I Or Type II Barricade Or Drum' revised; 'GENERAL NOTES' No. 4 revised.
608	1 of 4	'SYMBOLS' 'Type I Or Type II Barricades Or Vertical Panel Or Drum' added; 'GENERAL NOTES' No. 9 deleted; 'SIGNAL MOUNT DETAILS' 'SPAN WIRE SIGNALS' '6' Min.' revised to read 'Clear Zone'.
	2 of 4	'Cones At 25' Centers' notations revised.
	3 of 4	'Cones At 25' Centers' notations revised; 'All Transition Barricades' notation revised.
609	1 of 1	'SYMBOLS' 'Type I Or Type II Barricade Or Drum' revised; 'GENERAL NOTES' No. 3 and 5 revised; 'Speed Limit' sign and notation added to either end of detail; 'Cones At 25' Centers' notation revised.
611	1 of 1	'SYMBOLS' 'Type I Or Type II Barricade Or Drum' revised; 'GENERAL NOTES' No. 4, 6 and 14 revised, No. 7 deleted; 'Cones At 25' Centers' and 'Maximum Spacing Between Devices' notations revised.
612	1 of 1	'Maximum Spacing' and 'Cones At 25' Centers' notations revised; 'SYMBOLS' 'Type I Or Type II Barricade, Cone Or Drum' revised; 'GENERAL NOTES' No. 4 and 8 revised, No. 9 deleted.
613	1 of 2	'SYMBOLS' 'Type I Or Type II Barricade Or Drum' revised; 'GENERAL NOTES' No. 8 revised, No. 9 deleted; 'Cones At 25' Centers' and 'Maximum Spacing Between Devices' notations revised.
614	1 of 2	'SYMBOLS' 'Type I Or Type II Barricade Or Drum' revised; 'GENERAL NOTES' No. 5 and 6 revised.
	2 of 2	'SCHEME 1' Two Way traffic signs removed; 'SCHEME 3' 'GREAT' System added; 'SCHEMES 1, 2 and 3' 'Speed Limit' signs and notations added, 'Cones At 25' Centers' notations revised, 'BUFFER LENGTH' Table revised.
615	1 of 1	'SYMBOLS' 'Type I Or Type II Barricade Or Drum' revised; 'GENERAL NOTES' No. 5 and 6 revised; 'Cones At 25' Centers': notations revised.
616	1 of 2	'SYMBOLS' 'Type I Or Type II Barricade Or Drum' revised; 'GENERAL NOTES' No. 4 revised; 'Speed Limit' sign and notation added to either end of detail; 'Cones At 25' Centers' notation revised; 'CONDITION NOTES' No. 1 revised.
	2 of 2	'SYMBOLS' 'Type I Or Type II Barricade Or Drum' revised; 'CONDITION NOTES' No. 2 revised, No. 5 deleted; 'Speed Limit' sign and notation added to either end of detail; 'Cones At 25' Centers' notation revised.
617	1 of 1	'SYMBOLS' 'Type I Or Type II Barricade Or Drum' revised; 'GENERAL NOTES' No. 3 revised, No. 6 deleted; 'Cones At 25' Centers' and 'Maximum Spacing Between Devices' notations revised.
620	1 of 1	'SYMBOLS' 'Type I Or Type II Barricade Or Drum' revised; 'GENERAL NOTES' No. 2 and 7 revised.
621	1 of 1	'SYMBOLS' 'Type I Or Type II Barricade Or Drum' revised; 'GENERAL NOTES' No. 7 revised.
622	1 of 1	'SYMBOLS' 'Type I Or Type II Barricade Or Drum' revised; 'GENERAL NOTES' No. 3 and 8 revised.
623	1 of 2	'SYMBOLS' 'Type I Or Type II Barricade Or Drum' revised; 'GENERAL NOTES' No. 5 revised.
	2 of 2	'SYMBOLS' 'Type I Or Type II Barricade Or Drum' revised; 'GENERAL NOTES' No. 8 revised, No. 9 deleted.
624	1 of 1	'SYMBOLS' 'Type I Or Type II Barricade Or Drum' revised; 'GENERAL NOTES' No. 4 and 7 revised, No. 8 deleted.
625	1 of 2	'SYMBOLS' 'Type I Or Type II Barricade Or Drum' revised; 'GENERAL NOTES' No. 6 revised.

REVISIONS
ROAD DESIGN STANDARDS
1992

INDEX NUMBER	SHEET NUMBER	DESCRIPTION	INDEX NUMBER	SHEET NUMBER	DESCRIPTION
625	2 of 2	'SYMBOLS' 'Type I Or Type II Barricade Or Drum' revised; 'GENERAL NOTES' No. 8 revised, No. 9 deleted.			
626	1 of 1	'SYMBOLS' 'Type I Or Type II Barricade Or Drum' revised; 'GENERAL NOTES' No. 5 and 8 revised; 'Maximum Spacing Between Devices' notation added.			
627	1 of 1	'GENERAL NOTES' No. 5 added.			
630	1 of 2	'SYMBOLS' 'Type I Or Type II Barricade Or Drum' revised; 'GENERAL NOTES' No. 2 and 3 revised.			
640	1 of 2	'SYMBOLS' 'Type I Or Type II Barricade Or Drum' revised; 'PHASE I & II' 'Speed Limit' sign and notation added to either end of views.			
	2 of 2	'SYMBOLS' 'Type I Or Type II Barricade Or Drum' revised; 'PHASE III' 'Speed Limit' sign and notation added to either end of views; 'GENERAL NOTES' No. 4 and 7 revised.			
641	1 of 2	'SYMBOLS' 'Type I Or Type II Barricade Or Drum' revised.			
	2 of 2	'SYMBOLS' 'Type I Or Type II Barricade Or Drum' revised; 'GENERAL NOTES' No. 5 revised.			
650	1 of 2	'SYMBOLS' 'Type I Or Type II Barricade Or Drum' revised; 'PHASE I & II' 'Speed Limit' sign and notation added to either end of views; 'Temporary Crash Cushion' symbol and notation deleted; 'Advisory Speed Plate' deleted.			
	2 of 2	'GENERAL NOTES' No. 11 revised.			
651	1 of 2	'SYMBOLS' 'Type I Or Type II Barricade Or Drum' revised; 'GENERAL NOTES' No. 5 and 7 revised; 'Speed Limit' sign and notation added; 'Removable' deleted from 'Reflectorized Pavement Markings'; 'BUFFER LENGTH' chart revised.			
	2 of 2	New sheet added 'CURVILINEAR ALIGNMENT CROSSOVER'			
700	1 of 2	Date revised to 'September 1991'. 'CLEAR ZONE (CZ)' Deleted 'Minimum' in columns 2, 3 & 5 and redesignated 'Desirable' to 'Standard' in columns 2, 3, 4 & 5; 'SIGNS' Notes in colomns 2, 3, 4 & 5 revised. 'TREES' 4' revised to 6" in column 1; second sentence revised in column 2. 'Clear Zone Footnotes' Notes 1 and 2 revised; Notes 4 and 6 deleted and labled 'Vacant' and Note 10 added.			
	2 of 2	'TABLE 1' heading added; 'Step 2' revised; Deleted 6' column from 30, 35 and 40 Vmph; Deleted 14' column from 60, 65 and 70 Vmph; Deleted 18' column from 50 Vmph; Added 10' column to 55 Vmph.			

TABLE OF CONTENTS
ROADWAY DESIGN STANDARDS

ABBREVIATIONS AND SYMBOLS

001 Standard Abbreviations
002 Standard Symbols (3 Sheets)

EROSION CONTROL AND WATER QUALITY

100 Temporary Slope Drain And Sod Flume
101 Trash Retainer And Sediment Basin
102 Baled Hay Or Straw Barriers And Silt Fences (3 Sheets)
103 Turbidity Barriers
104 Erosion Control For Permanent Construction
105 Shoulder Sodding And Reworking On Existing Facilities

DRAINAGE

199 Geotextile Criteria
200 Structure Bottoms-Type J And P (2 Sheets)
201 Supplementary Details For Manholes And Inlets (6 Sheets)
205 Cover Height (4 Sheets)
209 Curb Inlet And Gutter Inlet Application Guide
210 Curb Inlet Tops-Types 1, 2, 3 And 4
211 Curb Inlet Tops-Types 5 and 6 (2 Sheets)
212 Curb Inlet-Type 7
213 Curb Inlet-Type 8
214 Curb Inlet Top-Type 9
215 Curb Inlet Top-Type 10
217 Median Barrier Inlets Types 1, 2, 3, 4 And 5
218 Barrier Wall Inlet (2 Sheets)
219 Barrier Wall Inlet-Concrete Barrier Wall (Rigid) (C & G) (2 Sheets)
220 Gutter Inlet-Type S
221 Gutter Inlet-Type V
229 Ditch Bottom And Median Inlet Application Guide
230 Ditch Bottom Inlet-Type A
231 Ditch Bottom Inlet-Type B
232 Ditch Bottom Inlets-Types C, D, E And H (4 Sheets)
233 Ditch Bottom Inlets-Types F And G
234 Ditch Bottom Inlet-Type J
235 Ditch Bottom Inlet-Type K
245 Underdrain Inspection Box
249 Pipe End Treatment Application Guide
250 Straight Concrete Endwalls-Single And Multiple Pipe (2 Sheets)
251 Straight Concrete Endwalls-Single And Double 60" Pipe (2 Sheets)
252 Straight Concrete Endwalls-Single And Double 66" Pipe (2 Sheets)
253 Straight Concrete Endwalls-Single And Double 72" Pipe (2 Sheets)
255 Straight Concrete Endwall-Single 84" Pipe
258 Straight Sand-Cement Endwalls

DRAINAGE (CONT.)

260 U-Type Concrete Endwalls With Grates-15" To 30" Pipe
261 U-Type Concrete Endwalls-Baffles And Grate Optional-15" To 30" Pipe (3 Sheets)
264 U-Type Concrete Endwall-Energy Dissipator-30" To 72" Pipe
266 Winged Concrete Endwalls-Single Round Pipe
268 U-Type Sand-Cement Endwalls
270 Flared End Section
272 Cross Drain Mitered End Section (6 Sheets)
273 Side Drain Mitered End Section (6 Sheets)
280 Miscellaneous Drainage Details (4 Sheets)
281 Ditch Pavement And Sodding (2 Sheets)
282 Back Of Sidewalk Drainage
283 Median Opening Flume
284 Concrete Spillways (2 Sheets)
285 French Drain (2 Sheets)
286 Underdrain And Edgedrain (2 Sheets)
290 Concrete Box Culvert-Single, Double, Triple And Quadruple Barrels (5 Sheets)
293 Safety Modifications For Inlets In Box Culverts
295 Safety Modifications For Endwalls

CURBS AND PAVEMENT JOINTS

300 Curb & Curb And Gutter
301 Median Storage Lanes
302 Traffic Separators
304 Curb Cut Ramps (2 Sheets)
305 Concrete Pavement Joints (5 Sheets)
306 Bridge Approach Expansion Joint-Concrete Pavement

BARRIERS AND FENCES

400 Guardrail (14 Sheets)
401 Guardrail Anchorage And Continuous Barrier For Existing Bridges (9 Sheets)
410 Concrete Barrier Wall (14 Sheets)
415 Precast Concrete Temporary Barrier Wall (2 Sheets)
431 G-R-E-A-T System (6 Sheets)
432 C-A-T System (2 Sheets)
433 Brakemaster (4 Sheets)
438 Dragnet (2 Sheets)
439 Construction Zone G-R-E-A-T (4 Sheets)
450 Fence Location (2 Sheets)
451 Fence-Type A (2 Sheets)
452 Fence-Type B (2 Sheets)
453 Cantilever Slide Gate-Type B Fence
460 Glare Screen
461 Opaque Visual Barrier

TABLE OF CONTENTS
ROADWAY DESIGN STANDARDS

GENERAL

500 Removal Of Muck And Plastic Material (2 Sheets)
505 Embankment Utilization
506 Miscellaneous Earthwork Details
510 Superelevation (2 Sheets)
511 Superelevation-Municipal Construction (2 Sheets)
513 Flexible Pavement-Layer Thickness For Structural Courses
514 Optional Base Groups And Structural Numbers (2 Sheets)
515 Turnouts (4 Sheets)
516 Turnouts-Resurfacing Projects
517 Temporary Crossover-Construction Details-Rural
518 Rumble Strips
520 Walls, Handrails And Steps
525 Ramp Terminals (5 Sheets)
526 Roadway Transitions (8 Sheets)
532 Mailboxes (3 Sheets)
535 Tractor Crossings
540 Settlement Plate
545 Landscaping-Back Of Guardrail Application
546 Landscaping At Intersections
560 Railroad Crossings (8 Sheets)

TRAFFIC CONTROL THROUGH WORK ZONES

600 General Information For Traffic Control Through Work Zones (10 Sheets)
601 Two-Lane, Two-Way Rural Day Or Night Operations
602 Two-Lane, Two-Way Rural Day Or Night Operations
603 Two-Lane, Two-Way Rural Operations One Daylight Period Or Less
604 Two-Lane, Two-Way Rural Night Operations Or Operations Exceeding One Daylight Period
605 Two-Lane, Two-Way Rural Moving Operations-Daylight Only
606 Moving Operations Rural Two-Lane, Two-Way Daylight Only
607 Two-Lane,Two-Way Rural Shortime Day Or Night Operations
608 Two-Lane, Two-Way Lane Closure By Signal Control, Day Or Night Operations (4 Sheets)
609 Two-Lane, Two-Way Rural Temporary Detour Day Or Night Operations
610 Multilane, Divided Or Undivided Rural Day Or Night Operations
611 Multilane, Divided Or Undivided Rural Day Or Night Operations
612 Multilane, Divided And Undivided Rural, Operations One Daylight Period Or Less
613 Multilane, Divided And Undivided Rural Night Operations Or Operations Exceeding One Daylight Period (2 Sheets)
614 Multilane Divided Rural Day Or Night Operations (2 Sheets)
615 Multilane Undivided Rural Day Or Night Operations
616 Multilane Divided Rural (2 Sheets)
617 Multilane Divided Rural

TRAFFIC CONTROL THROUGH WORK ZONES (CONT.)

620 Two-Lane, Two-Way Urban Day Or Night Operations
621 Two-Lane, Two-Way Urban Day Or Night Operations
622 Multilane, Two-Way Urban Divided Or Undivided Day Or Night Operations
623 Multilane, Two-Way Urban Divided Or Undivided Day Or Night Operations (2 Sheets)
624 Multilane, Divided With Traversable Median Or Undivided, Urban Day Or Night Operations
625 Multilane One-Way Or Multilane Divided With Non-Traversable Median Urban Day Or Night Operations (2 Sheets)
626 Multilane One-Way Or Multilane Divided With Non-Traversable Median Urban Day Or Night Operations
627 Moving Operations
630 Temporary Crossover For Paving Train Operations Rural (2 Sheets)
640 Converting Two-Lanes To Four-Lanes Divided Rural (2 Sheets)
641 Converting Two-Lanes To Four-Lanes Divided Urban (2 Sheets)
650 Two-Lane, Two-Way Rural Structure Replacement (2 Sheets)
651 Multilane Divided Overpass Maintenance And Construction (2 Sheets)

DESIGN CRITERIA

700 Design Criteria Related To Highway Safety (2 Sheets)

A	AREA
AAA	AMERICAN AUTOMOBILE ASSOCIATION
AASHO	AMERICAN ASSOCIATION OF STATE HIGHWAY OFFICIALS
AASHTO	AMERICAN ASSOCIATION OF STATE HIGHWAY AND TRANSPORTATION OFFICIALS
ABC	ASPHALT BASE COURSE
ABD	ABANDONED
ABS	ACRYLONITRITE-BUTADIENE-STYRENE PIPE
AC	ACRE
AC or ASPH CONC	ASPHALTIC CONCRETE
ACCEL	ACCELERATION
ACT	ACTUATED
ADJ	ADJUST
ADT	AVERAGE DAILY TRAFFIC
AADT	ANNUAL AVERAGE DAILY TRAFFIC
AGG	AGGREGATE
AH	AHEAD
AISC	AMERICAN INSTITUTE OF STEEL CONSTRUCTION
ALT	ALTERNATE
ALUM	ALUMINUM
AM	12:00 MIDNIGHT UNTIL 12:00 NOON
ANSI	AMERICAN NATIONAL STANDARDS INSTITUTE
AOS	APPARENT OPENING SIZE
APPL	APPLIED, APPLICATION
APPRH	APPROACH
APPROX	APPROXIMATE
ARTBA	AMERICAN ROAD & TRANSPORTATION BUILDERS ASSOCIATION
ARTF	ARTIFICIAL
ASPH	ASPHALT
ASSEM	ASSEMBLY
ASTM	AMERICAN SOCIETY FOR TESTING MATERIALS
ATTNUATR	ATTENUATOR
AUX or AUXIL	AUXILIARY
AVE	AVENUE
AWG	AMERICAN WIRE GAUGE
AWS	AMERICAN WELDING SOCIETY
B to B	BACK TO BACK
BASC	BASCULE
BBL	BARREL
BC	BOTTLE CAP or BOLT CIRCLE
B/C	BACK OF CURB
BCCMP	BITUMINOUS COATED CORRUGATED METAL PIPE CULVERT
BCPA	BITUMINOUS COATED PIPE ARCH CULVERT
BCPCMP	BITUMINOUS COATED AND PAVED CORRUGATED METAL PIPE CULVERT
BCPPA	BITUMINOUS COATED AND PAVED PIPE ARCH CULVERT
BCT	BREAKAWAY CABLE TERMINAL
BE	BURRIED ELECTRIC
BEG	BEGIN
BIT	BITUMINOUS
BK	BACK
BL	BASE LINE
BLDG	BUILDING
BLKHD	BULKHEAD
BLVD	BOULEVARD
BM	BENCH MARK
BOR	BORDER
BOT	BOTTOM
BP	BORROW PIT
BR	BRIDGE
BRG	BEARING
BRKWY	BREAKAWAY
BT	BURRIED TELEPHONE CABLE or DUCT
BTFLY	BUTTERFLY
BW	BARBED WIRE or BOTTOM WIDTH
C	CANTILEVER LENGTH, CENTIGRADE, CELSIUS, CUT or COLORLESS
C & G	CURB AND GUTTER
CA	COURSE AGGREGATE
CAP	CAPACITY or CORRUGATED ALUMINUM PIPE
CAPS	CAPITAL LETTERS
CATV	CABLE TELEVISION
CB	CATCH BASIN
CBC	CONCRETE BOX CULVERT
CBS	CONCRETE BOX STRUCTURE
CC, C/C, or C to C	CENTER TO CENTER
CCEW	CENTER TO CENTER EACH WAY
CD	CROSS DRAIN or CANDELA
CEM	CEMENT
CEM'D	CEMENTED
CFS	CUBIC FEET PER SECOND
CH	CHANNEL
CH CH	CHANNEL CHANGE
CHG	CHANGEABLE
CI	CAST IRON
CIP	CAST IRON PIPE
CIPL	CAST IN PLACE
CKT	CIRCUIT
CL	CLEARANCE OR CENTER LINE
CM	CONCRETE MONUMENT or CENTIMETER
CMB	CONCRETE MEDIAN BARRIER
CMP	CORRUGATED METAL PIPE
CMPA	CORRUGATED METAL PIPE ARCH
CO	COUNTY or COMPANY
COL	COLUMN
COM	COMMERCIAL
COMP	COMPOSITE
CONC	CONCRETE
CONST	CONSTRUCT or CONSTRUCTION
CONTRL	CONTROLLER
CONT	CONTINUATION
CONTR	CONTRACTOR
COORD	COORDINATE
COR	CORNER
CORR	CORRUGATED
CP	CONCRETE PIPE
CPE	CORRUGATED POLYETHYLENE PIPE
CR	CONTROL RADIUS or COUNTY ROAD
CRA	CLEAR RECOVERY AREA
CRS	COURSE
CS	CURVE TO SPIRAL
CSE	COURSE
CSP	CORRUGATED STEEL PIPE
CT	CLEAR TRUNK
CTLVR	CANTILEVER
CTR	CENTER
CU	COPPER
CULV	CULVERT
CY	CUBIC YARD
CYL	CYLINDRICAL
CZ	CLEAR ZONE
D	DEGREE OF CURVATURE, DEPTH, DENSITY, DISTANCE, DIAMETER or DIRECTIONAL DISTRIBUTION
DA	DRAINAGE AREA
DBI	DITCH BOTTOM INLET
DBL	DOUBLE
DCS	DEGREE OF CURVATURE (SPIRAL)
DD	DRY DENSITY
DDHV	DIRECTIONAL DESIGN HOUR TRAFFIC
DECEL	DECELERATION
DELIN	DELINEATORS
DEMOBL	DEMOBILIZATION
DEPT	DEPARTMENT
DET	DETOUR
DHV	DESIGN HOURLY VOLUME
DHW	DESIGN HIGH WATER
DT	DITCH
DI	DROP INLET
DIA or D	DIAMETER
DIM	DIMENSION
DISP	DISPOSAL
DMM	DOMESTIC MAIL MANUAL
DOT	DEPARTMENT OF TRANSPORTATION
DPI	DITCH POINT INTERSECTION
DR	DRAIN, DRIVE or DESIGN REVIEW
DRIV	DRIVEN
DRWY	DRIVEWAY
DS	DESIGN SPEED
DSL	DESIGN SERVICE LIFE
DTOE	DISTRICT TRAFFIC OPERATIONS ENGINEER
DWG	DRAWING
E	EAST or EXTERNAL DISTANCE
e	RATE OF SUPERELEVATION
E to E	END TO END
EA	EACH
EB	EASTBOUND
EL OR ELEV	ELEVATION
ELAST	ELASTOMERIC
ELEC	ELECTRIC
ELLIP	ELLIPTICAL
EMBK	EMBANKMENT
EMUL	EMULSIFIED
ENCL	ENCLOSURE
ENGR	ENGINEER
EOS	END OF SURVEY or EQUIVALENT OPENING SIZE
EQ	EQUATION OR EQUAL
EQUIP	EQUIPMENT
ESMT	EASEMENT
EST or ESTM	ESTIMATE
ESTBLMNT	ESTABLISHMENT
ETC	ET CETERA (AND SO FORTH)
EW	ENDWALL
EXCAV or EXC	EXCAVATION
EXIST	EXISTING
EXP	EXPANSION
EXT	EXTENSION
F	FILL
F or FINAL	FINAL QUANTITY
F & I	FURNISH & INSTALL
F to F	FACE TO FACE
FA	FEDERAL AID or FINE AGGREGATE
FAC	FLORIDA ADMINISTRATIVE CODE
FAP	FEDERAL AID PROJECT
FC	FRICTION COURSE
FDN	FOUNDATION
FDOT	FLORIDA DEPARTMENT OF TRANSPORTATION
FE	FLOOR ELEVATION
FED	FEDERAL
FERT	FERTILIZER
FES	FLARED END SECTION
FETS	FLARED END TERMINAL SECTION
FH	FIRE HYDRANT
FHWA	FEDERAL HIGHWAY ADMINISTRATION
FIN	FINISH
FL	FLOW LINE or FLASH
FL or FLA	FLORIDA
FLEX	FLEXIBLE
FNQ	FUSE (TYPE SLOW BURN)
FPS	FEET PER SECOND
FR	FRAME
FRANG	FRANGIBLE
FREQ	FREQUENCY
FS	FAR SIDE
FT	FEET
FURN	FURNISH
FUT	FUTURE
G	GRAM
G or GALV	GALVANIZED
GA	GAUGE or GAGE
GA or GAL	GALLON
GAR	GARAGE
GD	GUTTER DRAIN
GIP	GALVANIZED IRON PIPE
GM	GAS MAIN
GP	GRADE POINT
GR	GRADE, GUARDRAIL or GRATE
GRD	GROUND
GTTR	GUTTER
H or HT	HEIGHT
HD	HEAD or HIGH DENSITY
HDWL	HEADWALL
HH	HEAVY HEX
HNDRL	HANDRAIL
HOA	HAND/OFF/AUTOMATIC
HORIZ	HORIZONTAL
HP	HIGH PRESSURE or HORSE POWER
HR	HOUR
HS	HIGH STRENGTH
HSE	HOUSE
HW	HIGH WATER
HWY	HIGHWAY
HYD	HYDRANT or HYDRAULIC
I	EXTERNAL ANGLE (DELTA)
ICHG	INTERCHANGE
IES	ILLUMINATING ENGINEERING SOCIETY
ID	INSIDE DIAMETER
IMC	INTERMEDIATE METAL CONDUIT
IN	INCH
INC	INCORPORATED or INCLUDING
INCL or INC	INCLUDED
IP	IRON PIPE
INSTL	INSTALL
ISECT	INTERSECTION
ITE	INSTITUTE OF TRANSPORTATION ENGINEERS
JB	JUNCTION BOX
JCT	JUNCTION
JT	JOINT
K	PEAK HOUR FACTOR
KIP	1000 POUNDS (FORCE)
KSI	KIPS PER SQUARE INCH
KV	KILOVOLT
KVA	KILOVOLT AMPERES
L	LENGTH or LENGTH OF CURVE
2L	TWO LANE
LA or L/A	LIMITED ACCESS
LAT	LATERAL or LATITUDE
LB	POUND
LBR	LIMEROCK BEARING RATIO
LC	LONG CHORD
LGTH	LENGTH
LIN	LINEAR
LMRK	LIMEROCK
LOC	LOCATION
LS	LENGTH OF SPIRAL
LT	LEFT
LTD	LIGHTED
LUM	LUMINAIRE
L/W	LIGHTWEIGHT
M	MASS, METER or MIDDLE ORDINATE LENGTH
MACH	MACHINE
MAINT	MAINTENANCE
MATL	MATERIAL
MAX	MAXIMUM
MB	MEDIAN BARRIER
MBM	THOUSAND (FEET) BOARD MEASURE
MED	MEDIAN
MEMB	MEMBER
MES	MITERED END SECTION
MESS	MESSAGE
MG	1000 GALLONS
MH	MANHOLE
MHW	MEAN HIGH WATER
MI	MILE
MID	MIDDLE
MIL	MILITARY (SPEC) or ONE THOUSANDTH OF AN INCH
MIN	MINIMUM
MISC	MISCELLANEOUS
MLW	MEAN LOW WATER
MM	MILIMETER
MOBL	MOBILIZATION
MOD	MODIFY or MODIFIED
MON	MONUMENT
MOT	MAINTENANCE OF TRAFFIC
MP	MILE POST
MPH	MILES PER HOUR
MSL	MEAN SEA LEVEL
MTD	MOUNTED
MUTCD	MANUAL ON UNIFORM TRAFFIC CONTROL DEVICES
N	NORTH
NA or N/A	NOT AVALABLE or NOT APPLICABLE
N & C	NAIL & (BOTTLE) CAP
NB	NORTHBOUND
NC	NATIONAL COURSE
NDCBU	NEIGHBORHOOD DELIVERY AND COLLECTION BOX UNIT
NE	NORTHEAST
NEMA	NATIONAL ELECTRICAL MANUFACTURERS ASSOCIATION
NGVD	NATIONAL GEODETIC VERTICAL DATUM of 1929
NGS	NATIONAL GEODETIC SURVEY
NHW	NORMAL HIGH WATER
NIC	NOT IN CONTRACT
NJ	NEW JERSEY
NO	NUMBER
NOM	NOMINAL
NORM	NORMAL
NS	NON STRESS, NOT SUITABLE or NEAR SIDE
NT	NON TRAFFIC
NTS	NOT TO SCALE
NW	NORTHWEST
O PASS	OVERPASS
O to O	OUT TO OUT
OA	OVERALL
OC	ON CENTER
OD	OUTSIDE DIAMETER
OE	OVERHEAD ELECTRIC
OH or OVHD	OVERHEAD
OPT	OPTION, OPTIONAL or OPTICALLY
OT	OVERHEAD TELEPHONE
OZ	OUNCE
P	PASSENGER CAR & LIGHT DELIVERY TRUCK
P or PLAN	PLAN QUANTITY
PAR	PARALLEL
PART	PARTICIPATION
PAVT	PAVEMENT
PC	POINT OF CURVATURE
PCBC	PRECAST CONCRETE BOX CULVERT
PCC	POINT OF COMPOUND CURVATURE or PLAIN CEMENT CONCRETE
PCE	PERMANENT CONSTRUCTION EASEMENT
PE	PROFESSIONAL ENGINEER
PED	PEDESTRIAN or PEDESTAL
PEN	PENETRATION
PG	PROFILE GRADE
PGL	PROFILE GRADE LINE
PH	PHASE
pH	MEASURE OF ACIDITY OR ALKALINITY
PI	POINT OF INTERSECTION
PK	PER CAP
PKG	PARKING
PL	PROPERTY LINE or PLATE
PM	12:00 NOON UNTIL 12:00 MIDNIGHT
POC	POINT ON CURVE
POST	POINT ON SEMI-TANGENT
POT	POINT ON TANGENT
PP	POWER POLE
PR	PAIR
PRC	POINT OF REVERSE CURVATURE
PRCST	PRECAST
PREST	PRESTRESSED
PROB	PROBABILITY
PROG	PROGRAMMED
PROJ	PROJECT or PROJECTION
PRM	PERMANENT REFERENCE MONUMENT
PROV	PROVISIONS
PRSE	PRESSURE
PS&E	PLANS, SPECIFICATIONS AND ESTIMATES
PSI	POUNDS PER SQUARE INCH
PT	POINT OF TANGENCY
P-TIME	PRE-TIMED
PVC	POLYVINYL CHLORIDE
PW	PRESSURE WATER
Q	PEAK DISCHARGE or FLOW VOLUME (CFS)
R or RAD	RADIUS
R or RNG	RANGE
RBAC	ROCK BASE ASPHALTIC CONCRETE
RBST	ROCK BASE SURFACE TREATMENT
RCP	REINFORCED CONCRETE PIPE
RCPA	REINFORCED CONCRETE PIPE ARCH
RD	ROAD or ROUND
RD-SD	ROADSIDE
RDWY	ROADWAY
REC	RECOVERY
RECT	RETICULINE or RECTANGULAR
REF	REFERENCE
REFL	REFLECTIVE
REINF	REINFORCED or REINFORCING
REJUV	REJUVENATION
RELOC	RELOCATED
REM	REMOVAL
REPL	REPLACE
REQ or REQD	REQUIRED
RES	RESIDENCE or RESIDENTIAL
RHW	INSULATION (MOISTURE & HEAT RESISTANT RUBBER)
RM	REFERENCE MONUMENT
RP	REFERENCE POINT
RPM	RAISED REFLECTIVE PAVEMENT MARKERS
RR	RAILROAD
RSF	RESURFACE
RT	RIGHT
R/W	RIGHT OF WAY
S	SPEED or SOUTH
SAHM	SAND-ASPHALT HOT MIX
SAN	SANITARY
SB	SOUTHBOUND
SBAC	SHELL BASE ASPHALTIC CONCRETE
SBAM	SAND BITUMINOUS ROAD MIX
SBST	SHELL BASE SURFACE TREATMENT
SC	SEAL COAT or SPIRAL TO CURVE
SCH	SCHEDULE
SCST	SAND-CLAY SURFACE TREATMENT
SD	SIDE DRAIN
SE	SOUTHEAST
SEC	SECOND
SECT	SECTION
SED	SEDIMENT
SEP	SEPARATOR
SEQ	SEQUENTIAL
SERV	SERVICE
SF	SHRINKAGE FACTOR
SG	SUBGRADE
SG or SP GR	SPECIFIC GRAVITY
SH or SHT	SHEET
SHLDR	SHOULDER
SHW	SEASONAL HIGH WATER
SPA	SPACE
SPCG or SP	SPACING
SPEC	SPECIFICATION
SQ FT or SF	SQUARE FOOT
SQ IN	SQUARE INCH
SQ YD OR SY	SQUARE YARD
SR	STATE ROAD
SS	STORM SEWER
SSMD	SOLID STATE MODULAR DESIGN
ST	STREET, SURFACE TREATMENT or SPIRAL TO TANGENT
STA	STATION
STAB	STABILITY or STABILIZATION
STD	STANDARD
STG	STRONG
STL	STEEL
STR	STRUCTURE
STY	STORY
SU	SINGLE UNIT TRUCKS
SUB or SUBS	SUBSOIL
SUBGR	SUBGRADE
SUPPTS	SUPPORTS
SUR	SURVEY
SURF	SURFACE
SW	SOUTHWEST
SW or SWK	SIDEWALK
SYST	SYSTEM
T	PERCENT TRUCKS
T or TAN	TANGENT LENGTH OF CURVE or THICKNESS
T or TWP	TOWNSHIP
TBM	TEMPORARY BENCH MARK
TC	TANGENT TO CURVE
TCB	TEMPORARY CONCRETE BARRIER
TCE	TEMPORARY CONSTRUCTION EASEMENT
TCP	TERRA COTTA PIPE
TCZ	TRAFFIC CONTROL ZONE
TEL	TELEPHONE
TEMP	TEMPERATURE or TEMPORARY
TF or TRAF	TRAFFIC
THEO	THEORETICAL
THRMPLSTC	THERMOPLASTIC
THW or THWN	INSULATION (FLAME RETARDANT, MOISTURE AND HEAT RESISTANT THERMOPLASTIC)
TK or THICK	THICKNESS
TN	TON
TRANS	TRANSITION or TRANSVERSE
TREAT	TREATMENT
TS	TANGENT TO SPIRAL
TSC	LENGTH OF TANGENT (SPIRAL CURVE)
TYP	TYPICAL
U PASS	UNDERPASS
UG or UNDGRD	UNDERGROUND
UL	UNDERWRITERS LABORATORIES
UNDDR	UNDERDRAINS
UNDRDWY	UNDERROADWAY
UNL	UNLOADED
UNTR	UNTREATED
USC&GS	US COAST AND GEODETIC SURVEY (NOW NATIONAL GEODETIC SURVEY)
USF	UNIVERSITY OF SOUTH FLORIDA
USGS	US GEOLOGICAL SURVEY
USPS	UNITED STATES POSTAL SERVICE
UTIL	UTILITIES
V	VOLT, VELOCITY or VOLUME
VAR	VARIABLE
VC	VERTICAL CURVE
VCP	VITRIFIED CLAY PIPE
VEH	VEHICLE
VERT	VERTICAL
VF	VERTICAL FOOT
Vh	VERIFIED HORIZONTAL LOCATION
VMS	VARIABLE MESSAGE SIGN
VOL	VOLUME
VP	VERTICAL PANEL
VPD	VEHICLES PER DAY
VRMS	VOLTS ROOT MEAN SQUARE
Vv	VARIFIED VERTICAL ELEVATION
Vvh	VARIFIED VERTICAL ELEVATION AND HORIZONTAL LOCATION
VW	VARIABLE WIDTH
W	WIDTH or WEST
W/C	WATER-CEMENT RATIO
WB	WESTBOUND
WB40	INTERMEDIATE SEMI TRAILER (40' WB)
WB50	LARGE SEMI TRAILER (50' WB)
WB60	TANDUM SEMI TRAILER (60' WB)
WM	WATER MAIN
W.P.I.	WORK PROGRAM ITEM
WT	WATER TABLE OR WEIGHT
WWF	WELDED WIRE FABRIC
X	COORDINATE DISTANCE (EAST-WEST) or EXTRA
X RD	CROSS ROAD
XING	CROSSING
XSEC	CROSS SECTION
Y	COORDINATE DISTANCE (NORTH-SOUTH)
YR	YEAR

UNITS OF MEASURE

AC	ACRE
AS	ASSEMBLY
BA	BARREL
BU	BUSHEL
CF	CUBIC FT.
CO	PER CLEANOUT
CY	CUBIC YARD
CW	CWT
DA	DAYS
EA	EACH
MB	(MBM) 1000 BOARD MEASURE
FT	FOOT
GA	GALLON
GM	GROSS MILE
LB	POUND
LF	LINEAR FOOT
LS	LUMP SUM
ED	PER EACH PER DAY
LU	PER LUMINAIRE
MG	THOUSAND GALLONS
NM	NET MILE
PB	PER BUILDING
PC	PER CLUSTER
PE	PILE
PI	PER INTERSECTION
PJ	PER JOINT
PL	PLANT
PO	POST
PP	PER POLE
PW	PER WELL
RM	ROAD MILE
SF	SQUARE FOOT
SP	SPAN
SY	SQUARE YARD
TN	TON
VF	VERTICAL FOOT

STATE OF FLORIDA DEPARTMENT OF TRANSPORTATION
ROAD DESIGN

STANDARD ABBREVIATIONS

	Names	Dates
Designed By		
Drawn By		
Checked By		
F.H.W.A. Approved:		

Approved By: Ruth E. Kinnaman
State Roadway Design Engineer

Revision No.	Sheet No.	Index No.
92	1 of 1	001

STANDARD SYMBOLS FOR KEY MAP

- Highway With Full Control of Access
- Highway With Frontage Roads
- Highway Interchange
- Proposed Controlled Access Highway
- Divided Highway
- Hard Surfaced Road
- Soil, Gravel Or Shell Surfaced Road
- Graded And Drained Road
- Unimproved Road
- Primitive Road
- P — Private Road
- Streets In Inset Or Delimited Areas
- Extension Of Local Roads Within Cities
- FAI — Federal Aid Interstate Highway
- FAU — Federal Aid Urban Highway
- FAP — Federal Aid Primary Highway
- FAS — Federal Aid Secondary Highway
- NFR — National Forest Road
- SFR — State Forest Road
- SPR — State Park Road
- Interstate Highway
- US Numbered Highway
- State Highway
- County Road

- Railroad
- Double Track Railroad
- Abandoned Railroad
- Railroad Station
- Grade Crossing
- Railroad Above
- Railroad Below
- Military Field
- Commercial Or Municipal Airport
- Landing Area Or Strip
- Runways

- -FF- Free Ferry
- -TF- Toll Ferry
- Canal Or Drainage Ditch
- Intracoastal Waterway
- Narrow Stream
- Wide Stream
- Dam
- Dam Or Spillway With Lock
- Dam With Road
- Flood Control Structure
- Lake, Reservoir Or Pond
- Intermittent Pond
- M — Meandered Lake
- Marsh Or Swamp
- Mangroves
- Levee Or Dike
- Levee Or Dike With Road
- Highway Bridge
- 3 — Small Bridges Closely Spaced
- Drawbridge
- Highway Grade Separation
- Tunnel
- State Boundary Line
- County Boundary Line
- Civil Township Boundary
- Extended Township Line
- Land Grant Line
- Land Section Line
- State Survey Section Line
- Survey By Others
- Location Of Inset Boundary Within Map
- Military Reservation Boundary
- College Or University Boundary
- Corporate Limits
- Delimited Area, Population Est.
- Reservation, Forest Or Park Boundary
  Wildlife Refuge Boundary

- Residential Area Under Development
- Lighthouse
- State Capital
- County Seat
- Other City Or Village
- Seminole Indian Village
- Welcome Station
- WS — Wayside Park Or Small Park
- WS — Park With Boat Ramp
- B — Boat Ramp
- Museum
- Recreational Area Or Historic Site
- Scenic Site
- Post Office
- School
- Church
- Cemetery
- Church And Cemetery
- Hospital, Health Center Or Rest Home
- Toll House, Port Of Entry Or Weight Station
- Fair Grounds, Race Course Or Rodeo Arena
- Mine Or Strip Mine
- Governmental Research Station

- Agricultural Inspection Station
- FM — Farmers Market
- Game Preserve
- Game Checking Station
- Bird Sanctuary
- Fire Control Headquarters
- Lookout Tower
- FS — Fire Station
- Patrol Or Police Station
- Correctional Institution Or Road Camp
- DOT — Department of Transportation Facility
- Coast Guard Station
- A — Armory
- J — Junkyard
- F — Sanitary Fill
- S — Sewage Disposal Plant
- I — Incinerator
- Power Plant
- Power Substation
- Communications Facility
- Locked Gate Or Fence
- WOOD — Triangulation Station

GENERAL NOTE

1. Symbols on this index are for use on all Roadway, Signing and Marking, Signalization, and Lighting projects. For work zone traffic control symbols refer to Index 600. When similar symbols are used, additional notations may be required for clarity.

STATE OF FLORIDA DEPARTMENT OF TRANSPORTATION
ROAD DESIGN

STANDARD SYMBOLS

	Names	Dates
Designed By		
Drawn By		
Checked By		
F.H.W.A. Approved:		

Approved By: State Roadway Design Engineer

Revision No.	Sheet No.	Index No.
92	1 of 3	002

STANDARD SYMBOLS FOR PLAN SHEETS

GENERAL SYMBOLS

- State Line
- County Line
- Township Line
- Section Line
- City Line
- Base Or Survey Line
- Right-Of-Line
- Easement Line
- Limited Access Line
- Fence Line
- National Or State Park Or Forest
- Grant Line
- Railroad (Drainage Maps)
- Railroad (Detail Plans)
- Fence (Limited Access)
- Box Culvert
- Bridge
- Pipe Culvert-Mitered End Section
- Pipe Culvert-Straight Endwall
- Pipe Culvert-U-Type Endwall
- Pipe Culvert-Median Drain
- Pipe Culvert-Other End Treatments
- Storm Sewer (18")
- Inlet
- Manhole
- Tied Longitudinal Joint
- Keyed Longitudinal Joint
- Doweled Transverse Expansion Joint
- Doweled Transverse Contraction Joint
- Tansverse Contraction Joint Without Dowels
- Survey Reference Point
- ALACHUA — Triangulation Station
- B.M. NO. 112 — Bench Mark
- Point Of Intersection
- North Arrow
- TYP. TYPE PAVT. WALK — Edges Of Existing Pavement And Sidewalk
- Guardrail
- Base Line
- Centerline
- Property Line
- Delta Angle
- Approximate
- Round Or Diameter
- Curb
- Curb And Gutter
- Water Well, Spring
- Levee
- MP 327 — Railroad Mile Post
- 12' — Gate
- Pump Island
- Storage Tank (Surface)
- Storage Tank (Underground)
- Mine Or Quarry
- B P — Borrow Pit
- Church
- S — Store
- RES — Residence
- B — Barn
- School
- Stream
- Shore Line
- Marsh
- Hedge
- Trees
- Edge Of Wooded Area
- Shrubbery
- Grove Or Orchard
- Lt. Skew Rt. / Rt. Skew Lt. — Definition Of Skew For Cross Drains And Barrels Of Conrete Box Culverts
- Concrete
- Wood
- e — Rate Of Superelevation

UTILITY ADJUSTMENT SYMBOLS

EXISTING	PROPOSED	
		Power Pole
OE (7.5KV)	OE (7.5KV)	Overhead Electric
		Telephone Pole
OT (100PR)	OT (100PR)	Overhead Telephone Cable
OH (CATV)	OH (CATV)	Overhead Cable Television
		Combination Pole
		Guy Wire And Anchor Pin
BE (7.5KV)	BE (7.5KV)	Buried Electric
BE 4MTD (7.5KV)	BE 4MTD (7.5KV)	Buried Electric Duct
BT (200PR)	BT (200PR)	Buried Telephone Cable
BT 6MTD	BT 6MTD	Buried Telephone Duct
UG (CATV)	UG (CATV)	Underground Cable Television
		Tower
		Light Pole
6" GM	6" GM	Gas Main
6" WM	6" WM	Water Main
8" SAN	8" SAN	Sanitary Sewer
		Manhole
		Water Meter
		Valve
		Fire Hydrant

See General Note Sheet 1 Of 3.

STATE OF FLORIDA DEPARTMENT OF TRANSPORTATION
ROAD DESIGN

STANDARD SYMBOLS

	Names	Dates
Designed By		
Drawn By	CDP	08/12
Checked By	COR	08/12
F.H.W.A. Approved: 07/07/15		

Approved By: State Roadway Design Engineer

Revision No.	Sheet No.	Index No.
92	2 of 3	002

STANDARD SYMBOLS FOR PLAN SHEETS

TRAFFIC SIGNALS SYMBOLS

EXISTING	PROPOSED	
		Traffic Signal Head (Span Wire Mounted)
		Traffic Signal Head (Pedestal Mounted)
		Traffic Signal Head (Mast Arm Mounted)
		Traffic Signal Pole (Concrete, Wood, Metal)
		Vehicle Detector (Loop)
		Signal Cable (On Messenger Wire)
		Conduit
		Vehicle Detector (Points)
		Pedestrian Detector
		Pedestrian Signal Head (Pole Or Pedestal Mounted)
		Controller Cabinet (Base Mounted)
		Controller Cabinet (Base Mounted)
	W - D W	Walk - Dont Walk
	FDW	Flashing Dont Walk
	5	Signal Face Number
		Signal Lens
	P	Programmed Signal Head
		Messenger Wire
	3	Pole Tabulation Cross Reference
	*3	Pole Tabulation Cross Reference (Joint Use Pole)
	∅	Signal Phase

LIGHTING SYMBOLS

EXISTING	PROPOSED	
		Pole & Luminaire
		Existing Pole & Luminaire To Be Removed
		Final Position Of Relocated Or Adjusted Pole & Luminaire
		High Mast Lighting Tower
		City Or Utility Owned Luminaire & Pole
		PVC (Polyvinyl Chloride) Lighting Conduit And Conductors
		Rigid Galvanized Lighting Conduit And Conductors
		Lighting Pull-Box
		Light Distribution Point
		Joint Use Pole
		Pier Cap Underdeck Luminaire
		Pendant Hung Under Deck Luminaire

SIGNING AND PAVEMENT MARKING SYMBOLS

	Pavement Arrow
	Single Solid Line
	Double Solid Line
	Skip Line
	Stop Bar
	Traffic Sign (Post Mounted)
	Traffic Sign (Overhead)
13	Sign Number
700-83	Sign Item Number
	Traffic Flow Arrow

See General Notes, Sheet 1 of 3

STATE OF FLORIDA DEPARTMENT OF TRANSPORTATION
ROAD DESIGN

STANDARD SYMBOLS

	Names	Dates
Designed By		
Drawn By	CDP	08/72
Checked By	COR	08/72
F.H.W.A. Approved: 07/07/75		

Approved By _____ State Roadway Design Engineer

Revision No.	Sheet No.	Index No.
92	3 of 3	002

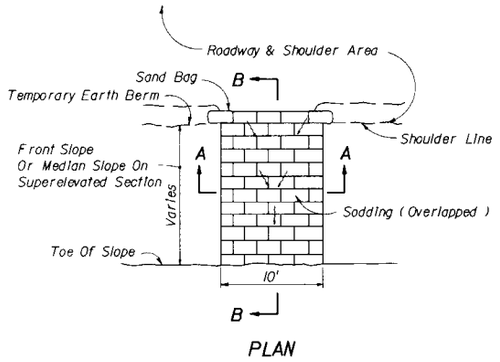

PLAN

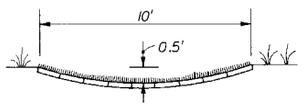

SECTION AA



SECTION BB

SOD FLUME (SODDING OVERLAPPED)

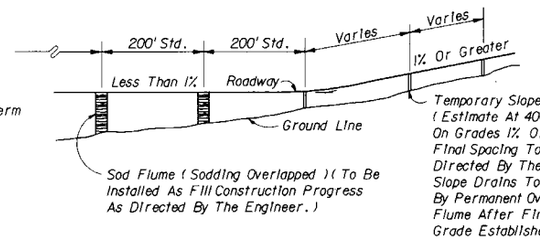

ELEVATION

SLOPE DRAIN APPLICATION

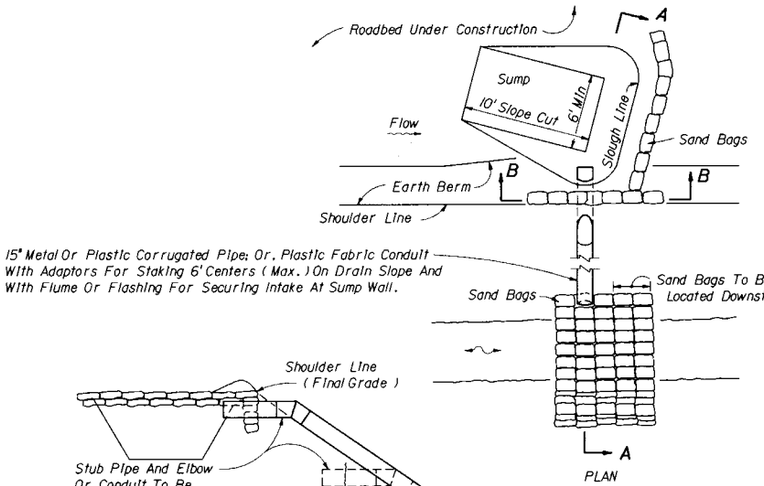

Note:
Slope drain pipe to be paid for as Slope Drains (Temporary) LF, based on linear feet of pipe or conduit installed. Payment to be made for one installation per site, including one stub and elbow or one intake flume or flashing. Sump construction and maintenance and curtains to be included in cost for Slope Drains (Temporary). Sand bags to be paid for as Sandbagging CY.

TEMPORARY SLOPE DRAIN

STATE OF FLORIDA DEPARTMENT OF TRANSPORTATION
ROAD DESIGN

TEMPORARY SLOPE DRAIN AND SOD FLUME

	Names	Dates
Designed By		
Drawn By		
Checked By		

Approved By
State Design Engineer, Roadways

F.H.W.A. Approved: 10/01/80

Revision No.	Sheet No.	Index No.
83	1 of 1	100

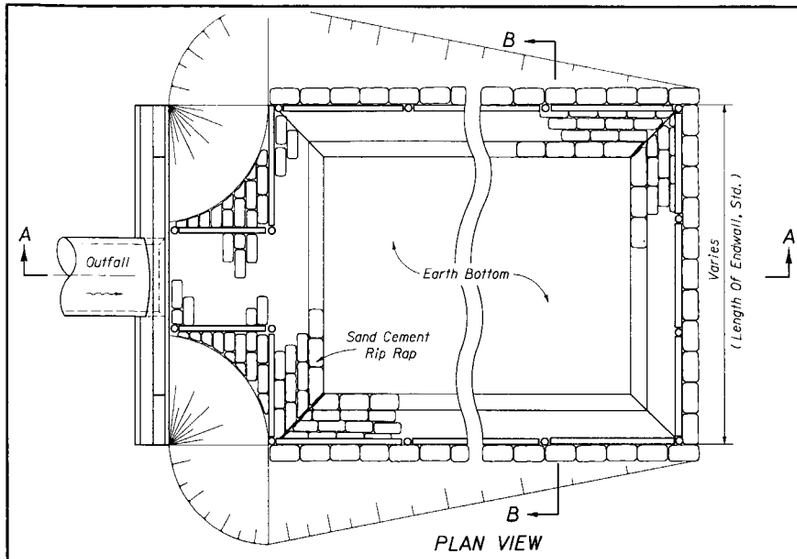

PLAN VIEW

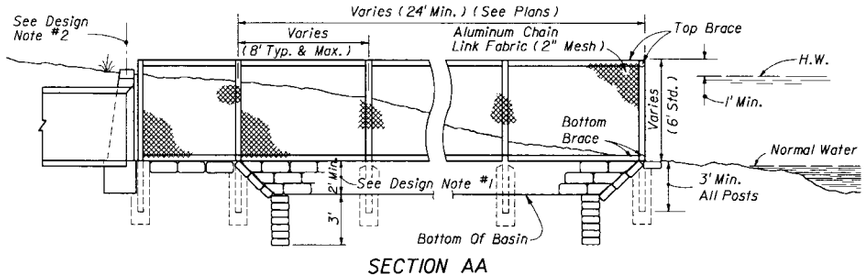

SECTION AA

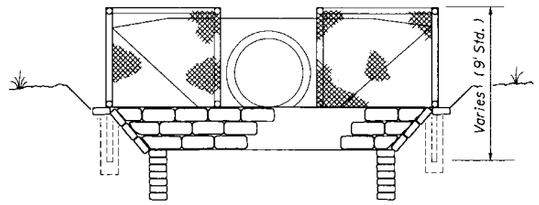

SECTION BB

INTENDED FOR USE WHEN THE STORM SEWER OUTFALLS ADJACENT TO A SHORE LINE

TYPE A

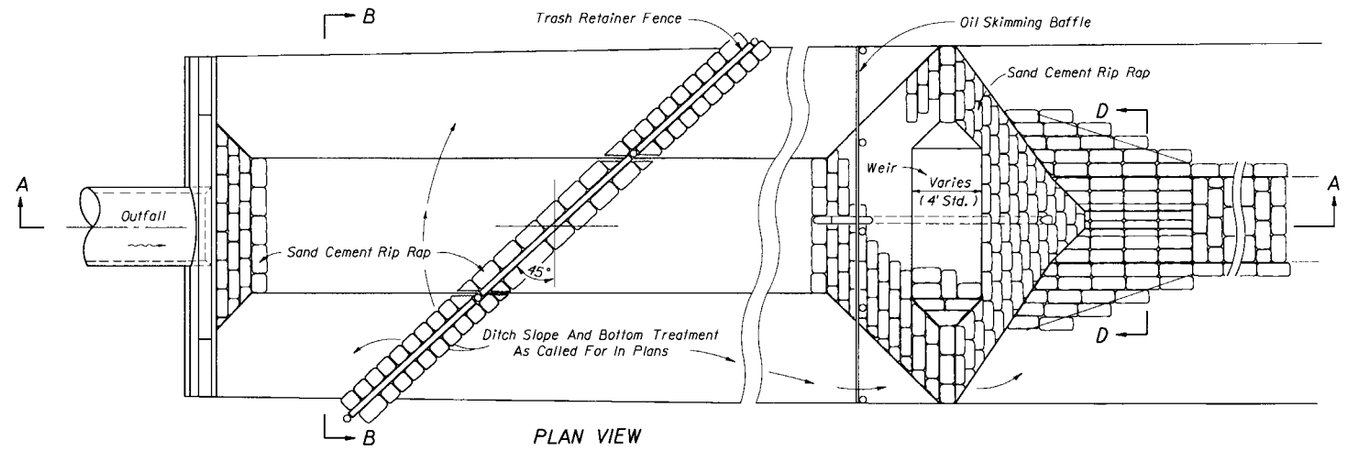

PLAN VIEW

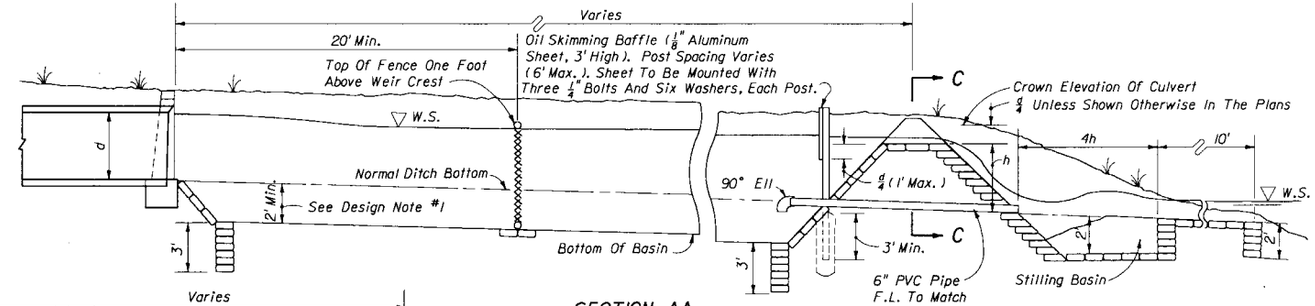

SECTION AA

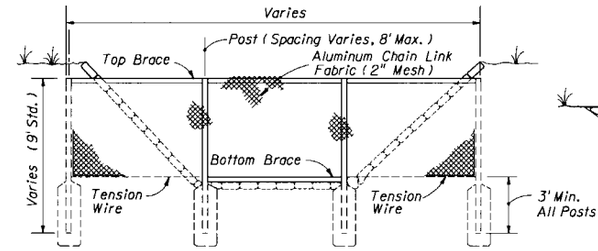

SECTION BB

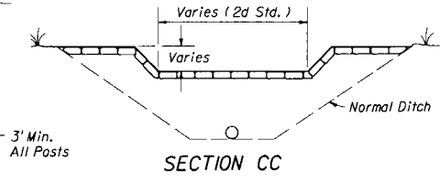

SECTION CC

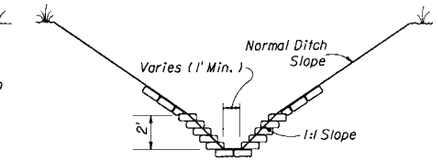

SECTION DD

INTENDED FOR USE WHEN THE STORM SEWER OUTFALLS IN AN OPEN DITCH

TYPE B

DESIGN NOTES

1. Basins should be as deep as practical with a minimum depth of 2.0 feet.
2. In Type A, when the top of endwall is below high water, fence also will be required along the top of the endwall.
3. In Type B, the weir shall be located as far from the endwall as practical. On steep ditch grades two or more weirs may be required. Intermediate weirs shall be constructed without stilling basins.
4. In Type B, the 6" PVC pipe shall be constructed unless shown otherwise in the plans.

GENERAL CONSTRUCTION NOTES

1. Fence materials shall be aluminum or concrete only.
2. Aluminum posts shall be 3" diameter minimum. Aluminum rail braces shall be in accordance with Index 452. Concrete posts and rail braces shall be in accordance with Index 451. All posts to be set in concrete.
3. Fabric shall be installed to inside of posts and rail braces, and tied to posts and braces at 6" centers.
4. For additional details on fencing, see Index Nos. 451 and 452.
5. All basin slopes to be 1:1 unless detailed otherwise in the plans.
6. Sediment basins to be constructed prior to commencement of upland constuction. Maintenance and clean out to be by the Contractor until acceptance of project by the Engineer.

GENERAL NOTES

1. The cost for Type A and Type B trash retainer and sediment basins shall include the cost for riprap, fencing, baffles, piping and for sump and weir earthwork over and above ditch excavation called for in the plans. Payment for both Type A Type B shall be under the contract unit price for Sediment Basins, Each. Cleanouts as called for in the plans shall be paid for under the contract unit price for Sediment Basin Cleanouts, CO.

STATE OF FLORIDA DEPARTMENT OF TRANSPORTATION
ROAD DESIGN

TRASH RETAINER AND SEDIMENT BASIN

	Names	Dates
Designed By	WJR	05/74
Drawn By		
Checked By	HLB	05/74
F.H.W.A. Approved:		10/07/80

Approved By
State Drainage Engineer

Revision No.	Sheet No.	Index No.
90	1 of 1	101

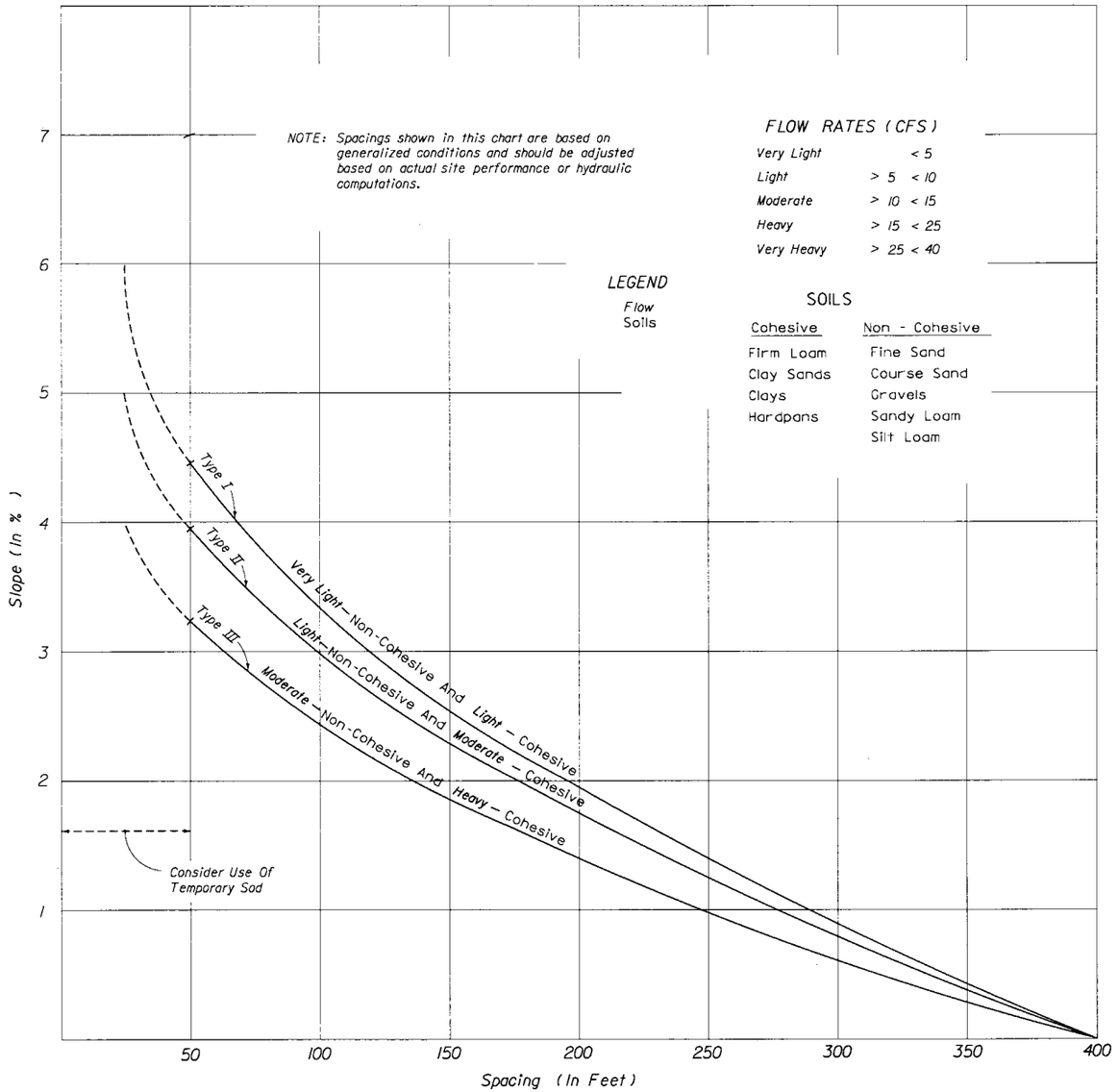

CHART I

RECOMMENDED SPACING FOR TYPE I AND TYPE II HAY BALE BARRIERS, AND TYPE III SILT FENCES

STATE OF FLORIDA DEPARTMENT OF TRANSPORTATION
ROAD DESIGN

BALED HAY OR STRAW BARRIERS AND SILT FENCES

	Names	Dates
Designed By	EGR	02/80
Drawn By	HSD	09/82
Checked By	JVG	09/82
F.H.W.A. Approved:		09/23/82

Approved By _____
State Roadway Design Engineer

Revision No.	Sheet No.	Index No.
92	1 of 3	102

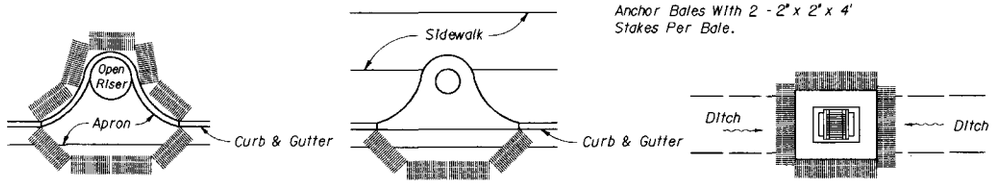

PROTECTION AROUND INLETS OR SIMILAR STRUCTURES

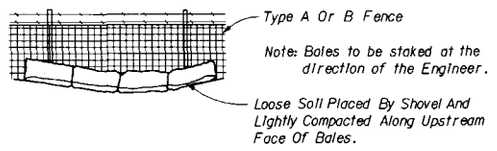

BALES BACKED BY FENCE

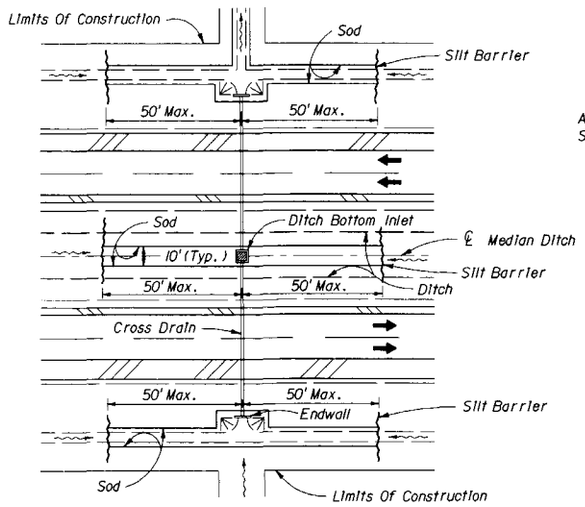

DITCH INSTALLATIONS AT DRAINAGE STRUCTURES

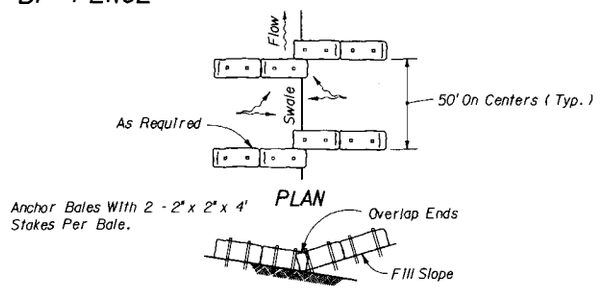

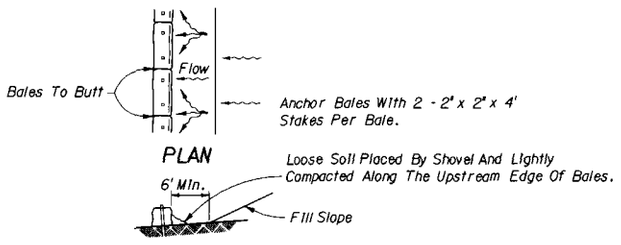

BARRIERS FOR FILL SLOPES

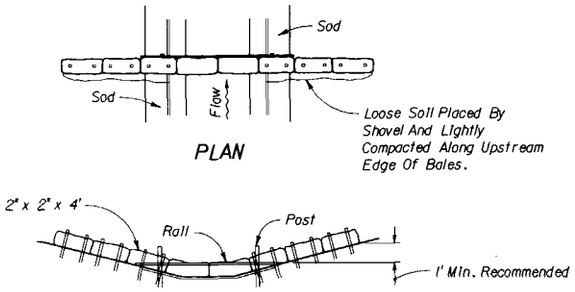

BARRIER FOR PAVED DITCH

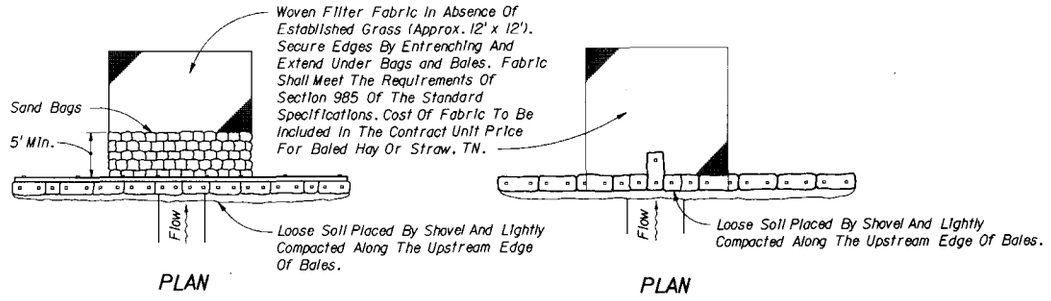

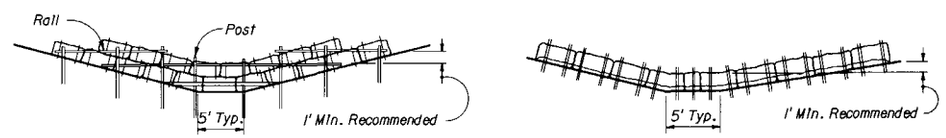

Application and Spacing: The use of Types I & II bale barriers should be limited to the conditions outlined In Chart I, Sheet 1 of 3, Index No. 102

TYPE II TYPE I

BARRIER FOR UNPAVED DITCHES

STATE OF FLORIDA DEPARTMENT OF TRANSPORTATION
ROAD DESIGN

BALED HAY OR STRAW BARRIERS AND SILT FENCES

	Names	Dates
Designed By	WJR	5/74
Drawn By		
Checked By	HLB	6/74
F.H.W.A. Approved:		10/07/80

Approved By _____
State Design Engineer, Roadways

Revision No.	Sheet No.	Index No.
86	2 of 3	102

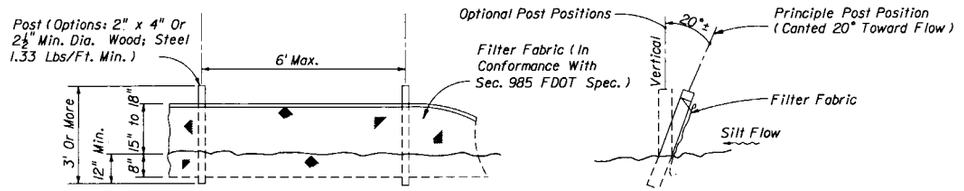

ELEVATION

SECTION

Note: Silt Fence to be paid for under the contract unit price for Staked Silt Fence (LF).

TYPE III SILT FENCE

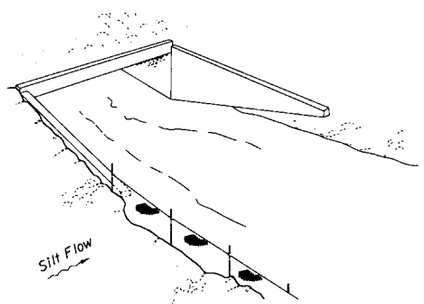

Type III Silt Fence

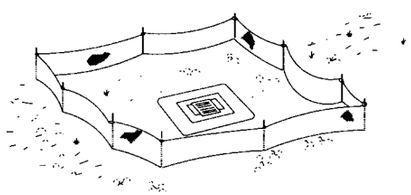

Type III Silt Fence Protection Around Ditch Bottom Inlets.

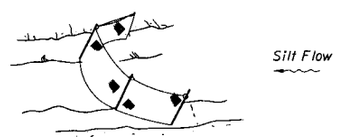

Note: Spacing for Type III Fence to be in accordance with Chart I, Sheet 1 of 3 and ditch installations at drainage structures Sheet 2 of 3.

Type III Silt Fence

Do not deploy in a manner that silt fences will act as a dam across permanent flowing watercourses. Silt fences are to be used at upland locations and turbidity barriers used at permanent bodies of water.

SILT FENCE APPLICATIONS

STATE OF FLORIDA DEPARTMENT OF TRANSPORTATION
ROAD DESIGN

BALED HAY OR STRAW BARRIERS AND SILT FENCES

	Names	Dates
Designed By	RAA/CJA	09/85
Drawn By	LRE	09/85
Checked By	RAA	10/85
F.H.W.A. Approved:		

Approved By
State Roadway Design Engineer

Revision No.	Sheet No.	Index No.
92	3 of 3	102

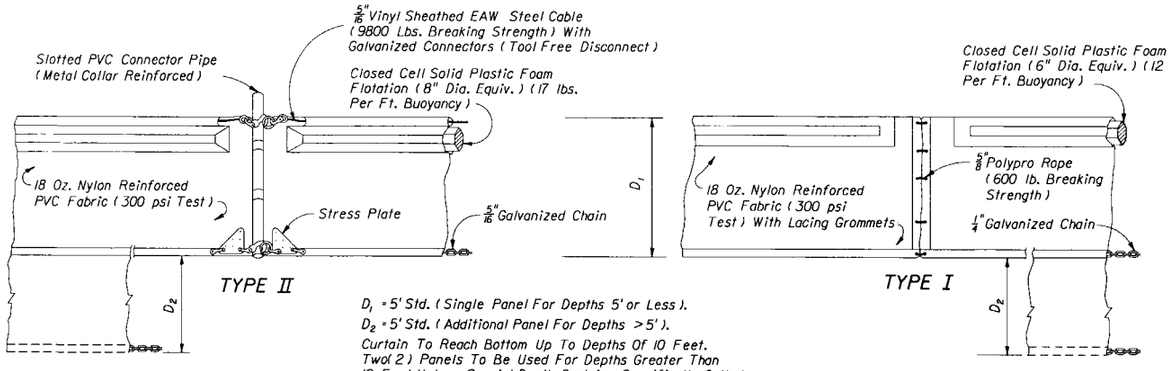

D_1 = 5' Std. (Single Panel For Depths 5' or Less).

D_2 = 5' Std. (Additional Panel For Depths >5').

Curtain To Reach Bottom Up To Depths Of 10 Feet. Two(2) Panels To Be Used For Depths Greater Than 10 Feet Unless Special Depth Curtains Specifically Called For In The Plans Or As Determined By The Engineer.

NOTICE: COMPONENTS OF TYPES I AND II MAY BE SIMILAR OR IDENTICAL TO PROPRIETARY DESIGNS. ANY INFRINGEMENT ON THE PROPRIETARY RIGHTS OF THE DESIGNER SHALL BE THE SOLE RESPONSIBILITY OF THE USER. SUBSTITUTIONS FOR TYPES I AND II SHALL BE AS APPROVED BY THE ENGINEER.

FLOATING TURBIDITY BARRIERS

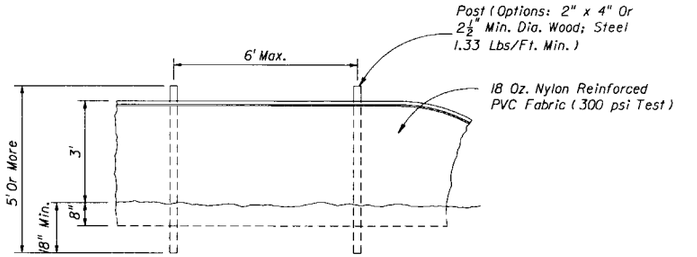

STAKED TURBIDITY BARRIER

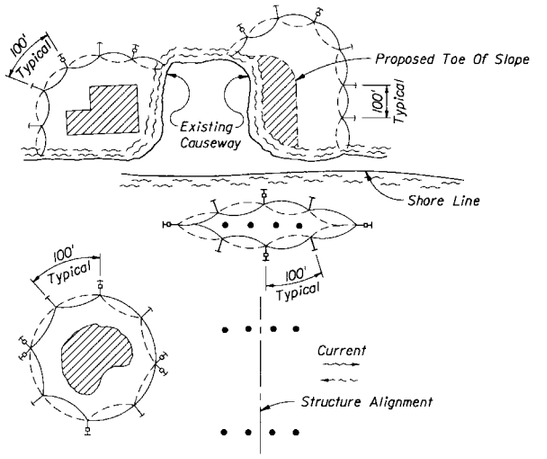

LEGEND

- Pile Locations
- Dredge Or Fill Area
- Mooring Buoy w/Anchor
- Anchor
- Barrier Movement Due To Current Action

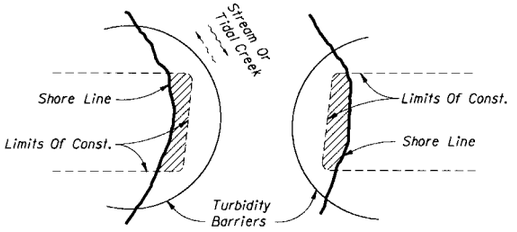

NOTES:

1. Turbidity barriers are to be used in all permanent bodies of water regardless of water depth.
2. Number and spacing of anchors dependent on current velocities.
3. Deployment of barrier around pile locations may vary to accommodate construction operations.
4. Navigation may require segmenting barrier during construction operations.
5. For additional information see Section 104 of the Standard Specifications.

Note:
Turbidity barriers for flowing streams and tidal creeks may be either floating, or staked types or any combinations of types that will suit site conditions and meet erosion control and water quality requirements. The barrier type(s) will be at the Contractors option unless otherwise specified in the plans, however payment will be under the pay item(s) established in the plans for Floating Turbidity Barrier and/or Staked Turbidity Barrier. Posts in staked turbidity barriers to be installed in vertical position unless otherwise directed by the Engineer.

TURBIDITY BARRIER APPLICATIONS

GENERAL NOTES

1. Floating turbidity barriers are to be paid for under the contract unit price for Floating Turbidity Barrier, LF.
2. Staked turbidity barriers are to be paid for under the contract unit price for Staked Turbidity Barrier, LF.

STATE OF FLORIDA DEPARTMENT OF TRANSPORTATION
ROAD DESIGN

TURBIDITY BARRIERS

	Names	Dates
Designed By	RAA/CJA	9/85
Drawn By	LRE	9/85
Checked By	RAA	10/85
F.H.W.A. Approved:		

Approved By
State Roadway Design Engineer

Revision No.	Sheet No.	Index No.
90	1 of 1	103

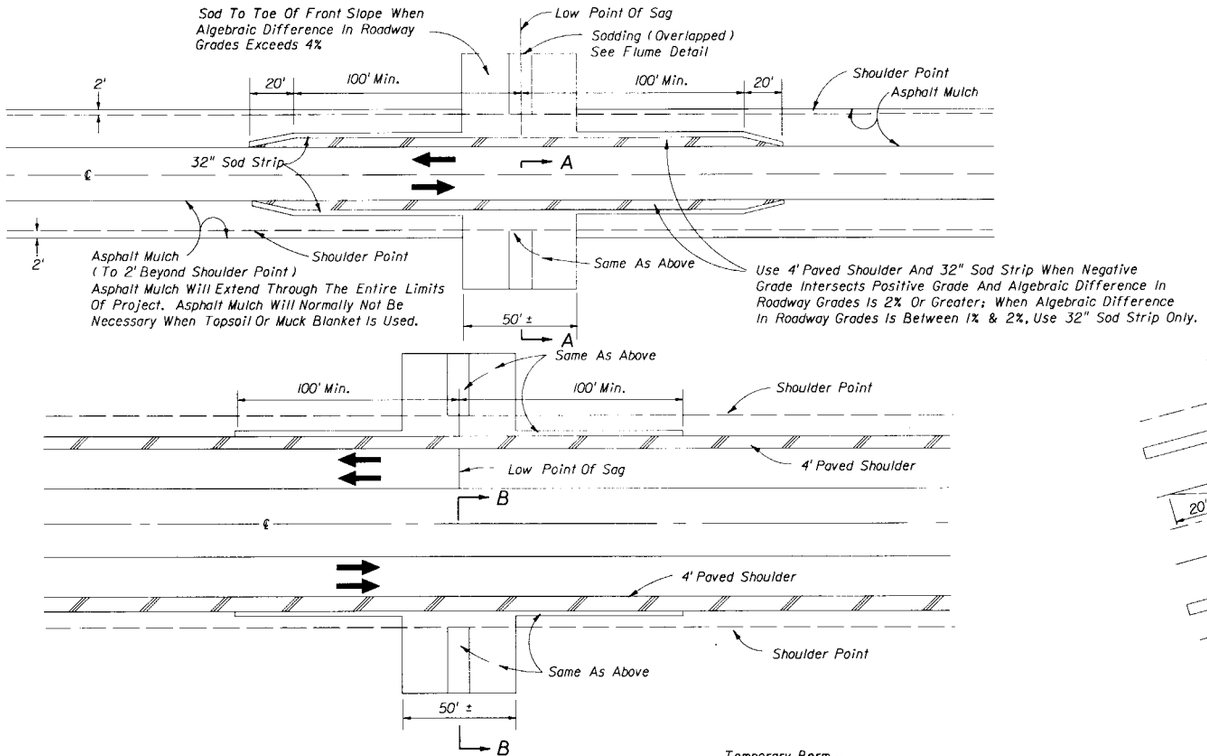

SHOULDER AND SLOPE TREATMENT IN SAG VERTICAL CURVES

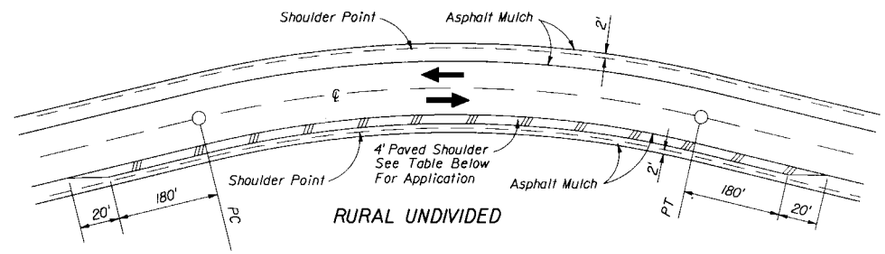

RURAL UNDIVIDED

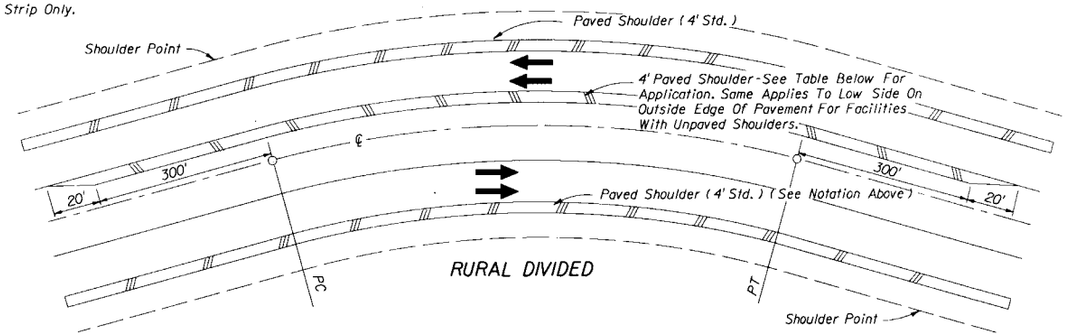

RURAL DIVIDED

CRITERIA FOR PAVING SHOULDER ON DIVIDED AND UNDIVIDED FACILITIES		
Design Speed	Degree Of Curve	Note: Paved shoulders are required on all curves meeting the criteria tabulated. For curves not meeting the criteria, shoulders are to be paved where erosion of the shoulder is evident or anticipated.
30	7° Or Greater	
40	5° Or Greater	
50	4° Or Greater	
60	3° Or Greater	
65	3° Or Greater	
70	2° Or Greater	

SHOULDER AND SLOPE TREATMENT FOR SUPERELEVATED ROADWAYS

SEEDING RATES (Lbs/Ac) FOR NEW SHOULDERS AND SLOPES*								
TYPE OF SEED	ZONE I				ZONE II			
	COASTAL		INLAND		COASTAL		INLAND	
	Mar. to Nov.	Nov. to Mar.	Mar. to Oct.	Oct. to Mar.	Feb. to Dec.	Dec. to Feb.	Feb. to Dec.	Dec. to Feb.
PERMANENT GRASS								
Unhulled Bermuda	20	20	20	20	20	20	20	20
Bahia Argentina Or Pensacola			80	80			80	80
QUICK GROWING								
Brown Top Millet	20		20		20		20	
Annual Rye Grass		20		20		20		20
TOTAL POUNDS PER ACRE	40	40	120	120	40	40	120	120

Note: The seeding rates shown in this table apply only when seed is spread by an approved mechanical spreader meeting the requirements of Section 570 and 577 of the Standard Specifications.

*See Index No. 105 for zone boundaries and seeding rates for shoulder reworking.

GENERAL NOTES

1. Erosion control details are applicable to new construction, reconstruction and RRR projects.
2. For sodding adjacent to ditches and at headwalls, see Index No. 281.
3. All front slopes steeper than 3:1 are to be sodded.

STATE OF FLORIDA DEPARTMENT OF TRANSPORTATION
ROAD DESIGN

EROSION CONTROL DETAILS FOR PERMANENT CONSTRUCTION

	Names	Dates
Designed By	HLG	04/75
Drawn By		
Checked By	DCB	04/75
F.H.W.A. Approved:		10/07/80

Approved By
State Roadway Design Engineer

Revision No.	Sheet No.	Index No.
92	1 of 1	104

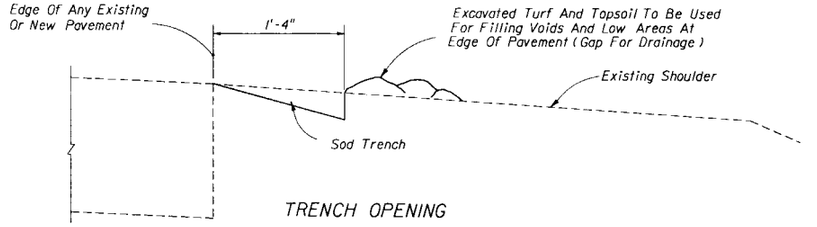

TRENCH OPENING

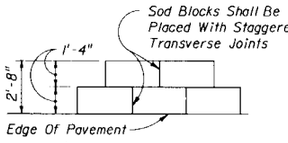

PLAN VIEW

PATTERN DETAIL

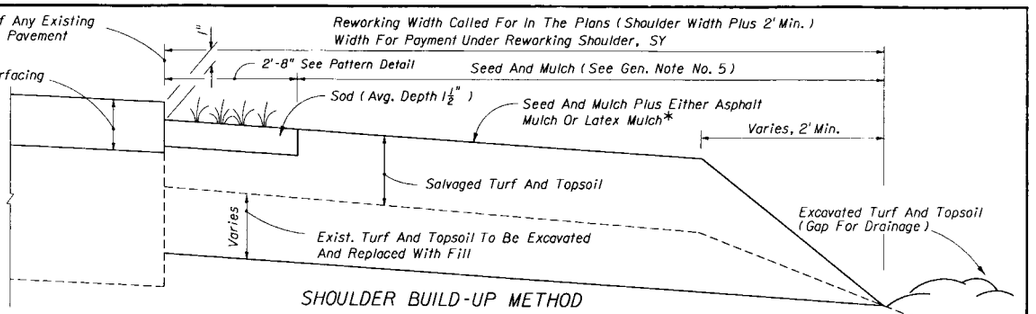

SHOULDER BUILD-UP METHOD

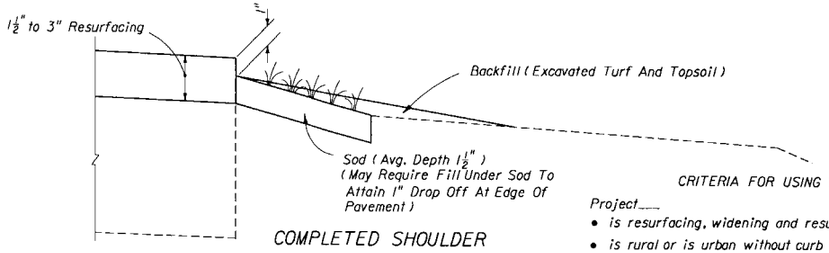

COMPLETED SHOULDER

TYPE R-1

CRITERIA FOR USING TREATMENT TYPE R-1

Project____

- is resurfacing, widening and resurfacing or construction of shoulder pavement
- is rural or is urban without curb and gutter
- has good existing soil and turf with no significant shoulder erosion (Isolated areas of significant erosion will require additional special treatment. Where poor soil and/or turf conditions exist shoulder reworking, Type R-2, should be applied.)
- resurfacing build-up is 1½" to 3"

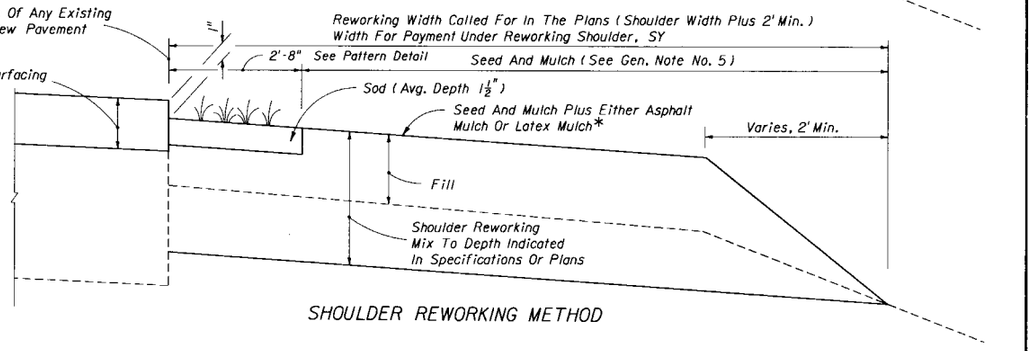

SHOULDER REWORKING METHOD

*Asphalt Mulch Or Latex Mulch May Be Deleted For Low Volume Roadways (ADT Less Than 1600) Or Where Shoulder Pavement Is Constructed.

CRITERIA FOR USING TREATMENT TYPE R-2

Project____

is resurfacing or construction of shoulder pavement
is rural or is urban without curb and gutter
has good existing soil and turf
resurfacing build-up is 3" or more

A SIMILAR TREATMENT MAY BE USED FOR PROJECTS THAT REQUIRE SHOULDER WIDENING. DETAILS ARE TO BE SHOWN IN THE PLANS.

TYPE R-2

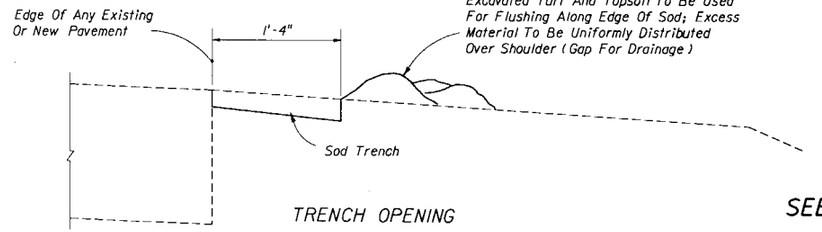

TRENCH OPENING

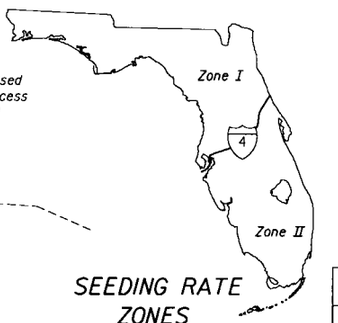

SEEDING RATE ZONES

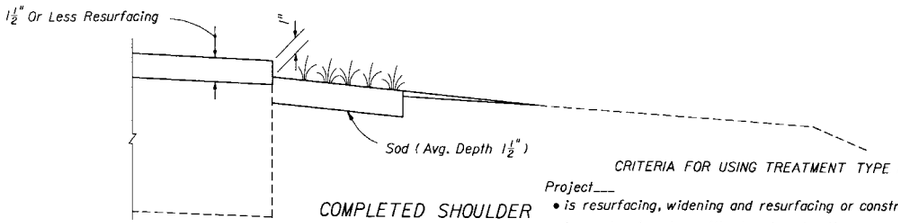

COMPLETED SHOULDER

TYPE R-3

CRITERIA FOR USING TREATMENT TYPE R-3

Project____

- is resurfacing, widening and resurfacing or construction of shldr. pavt.
- is rural or is urban without curb and gutter
- has good existing soil and turf with no significant shoulder erosion (isolated areas of significant erosion will require additional special treatment. Where poor soil and/or turf conditions exist shoulder reworking, Type R-2, should be applied.)
- resurfacing build-up is 1½" or less

SEEDING RATES (Lbs/Ac)

TYPE OF SEED	ZONE I				ZONE II			
	COASTAL		INLAND		COASTAL		INLAND	
	Mar. to Nov.	Nov. to Mar.	Mar. to Oct.	Oct. to Mar.	Feb. to Dec.	Dec. to Feb.	Feb. to Dec.	Dec. to Feb.
PERMANENT GRASS								
Unhulled Bermuda	15	15	10	15	15	15	10	15
Bahia Argentina Or Pensacola			30	30			30	30
QUICK GROWING								
Brown Top Millet	20		20		20		20	
Annual Rye Grass		20		20		20		20
TOTAL POUNDS PER ACRE	35	35	60	65	35	35	60	65

Note: The seeding rates shown in this table apply only when seed is spread by an approved mechanical spreader meeting the requirements of Section 570 and 577 of the Standard Specifications.

GENERAL NOTES

1. Special attention is to be directed to the construction of the required 1" drop-off at edge of pavement.
2. Fertilize entire unpaved shoulder and front slope to toe of slope or bottom of ditch.
3. Topsoil obtained from borrow pits or other sources may be used in lieu of excavated turf and topsoil when economically feasible. No additional payment will be made for substituting topsoil for excavated turf or topsoil.
4. Payment for excavation of turf and topsoil and for backfill of this material under Types R-1 and R-3, is to be included in the contract unit price for Sodding, SY.
5. Payment for reworking shoulders, shall include the cost for those seeding and mulching operations within the limits for reworking shoulders. Materials (Seed, Mulch, Fertilizer and Water) and Sodding shall be paid for as separate items. Reworking shoulders shall be paid for under the contract unit price for Reworking Shoulders, SY.

STATE OF FLORIDA DEPARTMENT OF TRANSPORTATION
ROAD DESIGN

SHOULDER SODDING AND REWORKING ON EXISTING FACILITIES

	Names	Dates
Designed By	EGR	09/07/84
Drawn By	HSD	09/07/84
Checked By	EGR	09/07/84
F.H.W.A. Approved:		09/21/84

Approved By _____
State Roadway Design Engineer

Revision No.	Sheet No.	Index No.
92	1 of 1	105

STANDARD CRITERIA

CLASS	TYPE (1)	APPLICATION DESCRIPTION	STANDARD INDEX NO.	PERMEABILITY cm/sec	A. O. S. Range U.S. Sieve #	GRAB TENSILE STRENGTH lbs.	PUNCTURE lbs.	TRAPEZOIDAL TEAR lbs.	MULLEN BURST PSI	ELONGATION % (Max. Allowed)	SEAM STRENGTH lbs.	U V RESISTANCE (Min. Allowed) %	U V RESISTANCE (Min. Allowed) Time (Hrs.)			COMMENTS
DRAINAGE (D)	D-1	Revetment Classes 3-6		1×10^{-2}	* 40-70	250	115	50	500	30	225	80	500			Woven Monofilament only Min. Elongation 15%
	D-2	Revetment Class 1 & 2		1×10^{-2}	* 70-100	200	80	50	320	50	180	80	500			Woven Monofilament only Min. Elongation 15%
		Cyclopean Stone														
		Articulating Block														
		Gabions														
		Rock, Rubble, Broken Concrete	280													
	D-3	Underdrain Trench Wrap	286	1×10^{-2}	* 70-100	90	45	35	180	50	81	80	150			When placed adjacent to temporary sheeting which will be removed, the filter fabric shall meet the requirements of D-2 fabric.
		French Drain	285													
		Sheet Piling Filter														
		Filter Fabric Jacket (Culvert)	280													
	D-4	Slope Pavement (Sand-Cement)		1×10^{-2}	* 70-100	180	50	35	180	50	162	80	150			Non-Woven only Min. Thickness 90 Mils
		Ditch Pavement (Sand-Cement)	281													Non-Woven only Min. Thickness 90 Mils
	D-5	Mechanical Stabilized Retaining Wall		1×10^{-2}	* 70-100	90	50	40	180	50	81	80	150			
		Cast-In-Place Retaining Wall														
	D-6	Slope Pavement (Concrete)		1×10^{-2}	* 70-100	180	50	35	180	50	162	80	150			Non-Woven only Min. Thickness 120 Mils
		Ditch Pavement (Concrete)	281													Non-Woven only Min. Thickness 120 Mils
	D-7	Underdrain Filter Sock	286		* 70-100											See Standard Specification 948-5
EROSION (E)	E-1	Staked Silt Fence		1×10^{-2}	NA	90		35	180	15-40	81	80	500			
	E-2	Floating Silt Curtain	102													
	E-3	Wind Screen	103	1×10^{-2}	NA	90				15-40	81	80	150			
STABILIZATION (R)	R-1	Reinforcement		1×10^{-3}	30	200	90	90	210-430	15-40	180	80	150			
	R-2	Separation		1×10^{-3}	30	180	80	50	290	15-40	162					

(1) Type refers to FDOT class and application.

TABLE 1

Test	Unit	Test Method
Permeability	cm/sec	ASTM-D-4491
AOS	U.S. Sieve No.	ASTM-D-4751
Grab Tensile Strength	LBS	ASTM-D-4632
Puncture	LBS	ASTM-D-4833
Trapezoidal Tear	LBS	ASTM-D-4533
Mullen Burst	PSI	ASTM-D-3786
Elongation	%	ASTM-D-4632
Ultra Violet Resistance	% Retained In Strength	ASTM-D-4355

GENERAL NOTES

1. Specifications for geotextiles are Section 985 or the Section identified by the specific application. Physical criteria for each application is provided by this standard, in conjunction with those sections.
2. All values are MINIMUM AVERAGE ROLL values in the weakest principal direction unless otherwise stated.
3. Range of values do not preclude the responsibility to design the fabric to the insitu materials and conditions.
4. Unless specifically restricted in COMMENTS column, any type of material may be used.

DESIGN NOTES

1. The Designer shall review this criteria and adjust the values as necessary to satisfy project requirements. These adjustments shall be called for in the plans or contained in the project special provisions. (See design note 3.)
2. U V Resistance: The value represents the percent of minimum textile strength retained (ASTM-D-4632) after weathering per ASTM-D-4355 for the test period (hours).
3. *A. O. S. Design Guide.
   *Soil with ≥ 50% passing No. 200 sieve, A. O. S. Range is 100-140.
   *Soil with ≥ 15% but < 50% passing No. 200 sieve, A. O. S. Range is 70-100.
   *Soil with < 15% passing No. 200 sieve, A. O. S. Range is 40-70.

STATE OF FLORIDA DEPARTMENT OF TRANSPORTATION
ROAD DESIGN

GEOTEXTILE CRITERIA

	Names	Dates
Designed By	COMM	8/91
Drawn By	DLD	8/91
Checked By	KHH	8/91
F.H.W.A. Approved:		

Approved By: G. G. Rouse, State Drainage Engineer

Revision No.	Sheet No.	Index No.
92	1 of 1	199

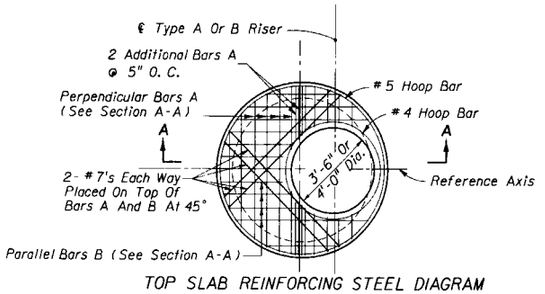

TOP SLAB REINFORCING STEEL DIAGRAM

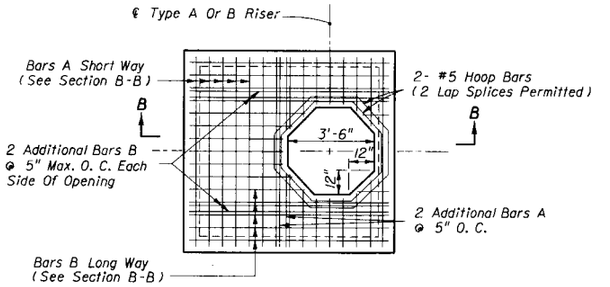

TOP SLAB REINFORCING STEEL DIAGRAM

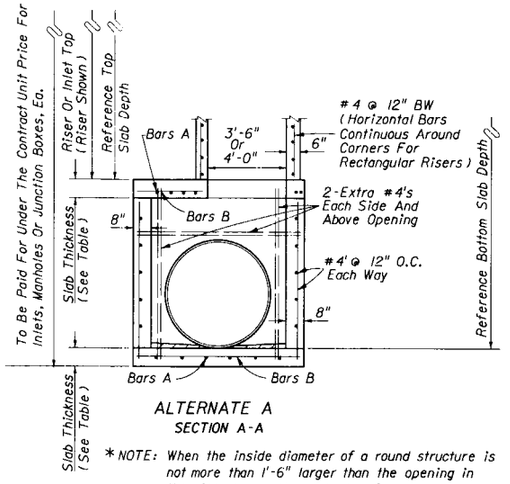

ALTERNATE A
SECTION A-A

* NOTE: When the inside diameter of a round structure is not more than 1'-6" larger than the opening in the riser or top slab, the top of the structure or riser shall be constructed according to the "Special Top Slab" details on this sheet.

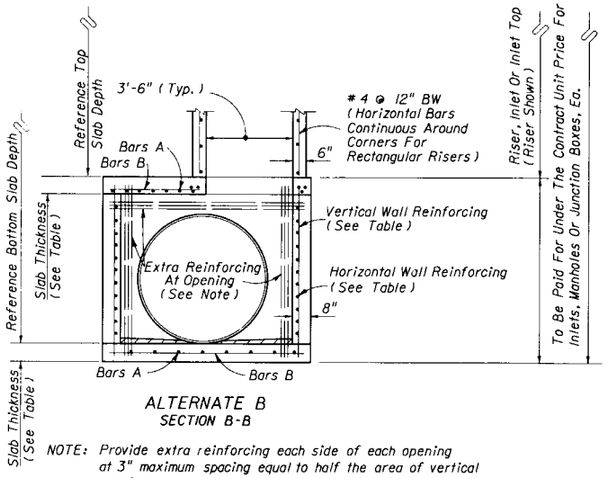

ALTERNATE B
SECTION B-B

NOTE: Provide extra reinforcing each side of each opening at 3" maximum spacing equal to half the area of vertical reinforcment removed by the opening and provide the same area of reinforcment above each opening at 3" maximum spacing as removed by the opening.

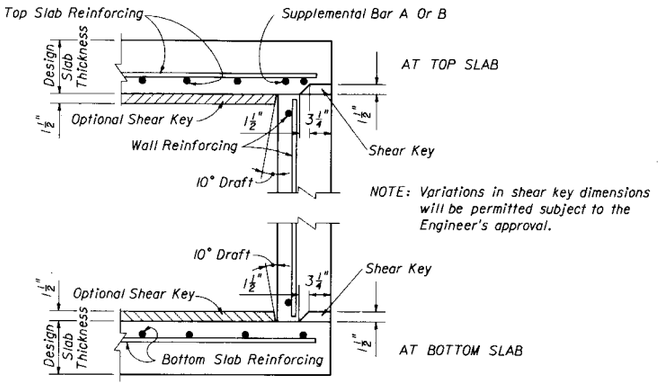

SLAB TO WALL DETAILS FOR PRECAST ALTERNATE

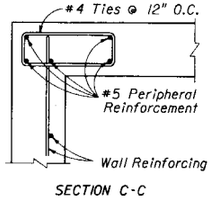

SECTION C-C

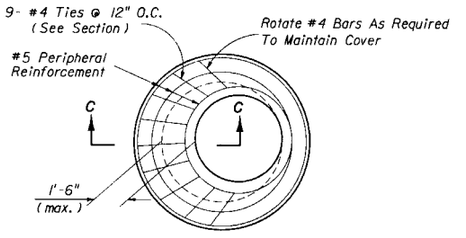

SPECIAL TOP SLAB *

GENERAL NOTES

1. Standard structure bottoms 4'-0" diameter and smaller (Alt. A) and 3'-6" square (Alt. B) are designated Type P. Larger standard structure bottoms are designated Type J. Risers are permitted for all structures.
2. Walls of circular structures (Alternate A) constructed in place may be of non-reinforced concrete or brick or reinforced concrete. Precast and rectangular structures (Alternate B) shall be constructed of reinforced concrete only.
3. Wall thickness and reinforcement are for either reinforced cast-in-place or precast concrete units except that precast circular units may be furnished with walls in accordance with either A.S.T.M. C-478 (up to 96" diameter) or A.S.T.M. C-76, Class III, B Wall, modified where the elliptical steel cage area is placed in the center one-third of the wall.
4. Top and floor slab thickness and reinforcement are for precast and cast in place construction. Top and floor slabs shall be of Class II concrete. Concrete as specified in A.S.T.M. C-478 (4000 psi) may be used in lieu of Class I and Class II concrete in precast items manufactured in plants which are under the 'Standard Operating Procedures' for the inspection of precast drainage products.
5. All reinforcement shall be A.S.T.M. A615, Grade 60 or 65 KSI welded wire fabric, either smooth or deformed.
6. Structure bottoms may be used in conjunction with curb inlet tops Types 1, 2, 3, 4, 5, 6, 9, and 10, and any manhole or junction box unless otherwise shown in the plans or other standard drawings. Alt. B structure bottoms may be used in conjunction with curb inlet Types 7 & 8, or any ditch bottom inlet unless otherwise shown in the plans or other standard drawings.
7. Rectangular structures may be rotated as directed by the Engineer in order to facilitate connections between the structure walls and storm sewer pipes.
8. Except when ACI hooks are specifically required, embedment hooks in the top and bottom slabs may be replaced with straight embedments or peripheral reinforcement in accordance with the reinforcement detail shown under 'Rebar Straight End Embedment Or Peripheral Reinforcement In Lieu of ACI Standard Hooks For Top And Bottom Slabs', Index No. 201, Sheet 3 of 6.
9. All steel bars shall have 1½" minimum cover unless otherwise shown. Horizontal steel in rectangular structures shall be lapped a minimum of 24 bar diameters at corners.
10. The corner fillets shown are necessary for rectangular structures used with circular risers and inlet throats and used on skew with rectangular risers, inlet and inlet throats. Fillets will be required in lieu of the bottom slab of the Alt. B riser when used with the Alt. A box. Each fillet shall be reinforced with 2- #5 bars.
11. Inlet throats, riser or manhole tops shall be secured to structures as shown on Index No. 201.
12. Structures with depths over 14' are to be checked for floatation by designer of project drainage.
13. Units larger than specified standard may be substituted at the contractor's option when these units will not cause or increase the severity of utility conflicts. Such larger units shall be furnished at no additional cost to the Department. Larger Alternate A units cannot replace Alternate B units without approval of the Engineer. This note applies to this Index only.
14. For manhole and junction box tops, for frames and covers, and, for supplementary details see Index No. 201.

STATE OF FLORIDA DEPARTMENT OF TRANSPORTATION
ROAD DESIGN

STRUCTURE BOTTOMS TYPE J AND P

	Names	Dates
Designed By		
Drawn By		
Checked By		
F.H.W.A. Approved:		05/01/75

Approved By: State Drainage Engineer

Revision No.	Sheet No.	Index No.
92	1 of 2	200

SLAB DESIGNS - SQUARE AND RECTANGULAR STRUCTURES

(ALL SLABS 8" THICK - REINFORCING PARALLEL TO SHORT WAY AND LONG WAY)

SHORT-WAY		LONG-WAY	
SLAB DEPTH	SCHEDULE	SLAB DEPTH	SCHEDULE
SIZE: 3'-6" x UNLIMITED			
≥ 0.5' < 29'	B	≥ 0.5' - 40'	B
29' - 40'	C		
SIZE: 4'-0" x UNLIMITED			
≥ 0.5' < 19'	B	≥ 0.5' < 34'	B
19' < 29'	C	34' - 40'	C
29' - 40'	D		
SIZE: 5' x 5'			
≥ 0.5' < 3'	C	≥ 0.5' < 3'	C
3' < 19'	B	3' < 19'	B
19' < 28'	C	19' < 28'	C
28' < 38'	D	28' < 38'	D
38' - 40'	F	38' - 40'	F
SIZE: 5' x 6'			
≥ 0.5' < 3'	C	≥ 0.5' < 3'	C
3' < 16'	B	3' < 20'	B
16' < 24'	C	20' < 29'	C
24' < 34'	D	29' - 40'	D
34' - 40'	F		
SIZE: 5' x 7'			
≥ 0.5' < 3'	C	≥ 0.5' < 3'	C
3' < 14'	B	3' < 22'	B
14' < 21'	C	22' < 33'	C
21' < 39'	D	33' - 40'	D
39' 40'	F		
SIZE: 5' x 8'			
≥ 0.5' < 3'	C	≥ 0.5' < 39'	B
3' < 8'	B	39' - 40'	C
8' < 17'	C		
17' < 23'	D		
23' - 40'	F		
SIZE: 5' x 9'			
≥ 0.5' < 3'	C	≥ 0.5' < 32'	B
3' < 8'	B	32' - 40'	C
8' < 17'	C		
17' < 23'	D		
23' - 40'	F		

SHORT-WAY		LONG-WAY	
SLAB DEPTH	SCHEDULE	SLAB DEPTH	SCHEDULE
SIZE: 6' x 6'			
≥ 0.5' < 3'	D	≥ 0.5' < 3'	D
3' < 4'	C	3' < 4'	C
4' < 14'	B	4' < 14'	B
14' < 21'	C	14' < 21'	C
21' < 28'	D	21' < 28'	D
28' - 40'	F	28' - 40'	F
SIZE: 6' x 7'			
≥ 0.5' < 3'	D	≥ 0.5' < 3'	D
3' < 4'	C	3' < 4'	C
4' < 12'	B	4' < 15'	B
12' < 19'	C	15' < 21'	C
19' < 26'	D	21' < 30'	D
26' - 40'	F	30' - 40'	F
SIZE: 6' x 8'			
≥ 0.5' < 3'	D	≥ 0.5' < 3'	D
3' < 4'	C	3' < 4'	C
4' < 7'	B	4' < 16'	B
7' < 16'	C	16' < 23'	C
16' < 23'	D	23' < 32'	D
23' - 40'	F	32' - 40'	F
SIZE: 6' x 9'			
≥ 0.5' < 3'	D	≥ 0.5' < 3'	D
3' < 15'	C	3' < 4'	C
15' < 21'	D	4' < 18'	B
21' < 27'	E	18' < 27'	C
27' - 40'	G	27' < 37'	D
		37' - 40'	E
SIZE: 7' x 7'			
≥ 0.5' < 3'	E	≥ 0.5' < 3'	E
3' < 4'	D	3' < 4'	D
4' < 16'	C	4' < 16'	C
16' < 22'	D	16' < 22'	D
22' < 28'	E	22' < 28'	E
28' - 40'	G	28' - 40'	G
SIZE: 7' x 8'			
≥ 0.5' < 3'	E	≥ 0.5' < 3'	E
3' < 4'	D	3' < 4'	D
4' < 15'	C	4' < 17'	C
15' < 21'	D	17' < 23'	D
21' < 27'	E	23' < 29'	E
27' - 40'	G	29' - 40'	G
SIZE: 7' x 9'			
≥ 0.5' < 3'	E	≥ 0.5' < 3'	E
3' < 4'	D	3' < 4'	D
4' < 12'	C	4' < 18'	C
12' < 18'	D	18' < 24'	D
18' < 24'	E	24' < 32'	E
24' - 40'	G	32' - 40'	G

SHORT-WAY		LONG-WAY	
SLAB DEPTH	SCHEDULE	SLAB DEPTH	SCHEDULE
SIZE: 8' x 8'			
≥ 0.5' < 3'	D	≥ 0.5' < 3'	D
3' < 4'	C	3' < 4'	C
4' < 9'	B	4' < 9'	B
9' < 17'	C	9' < 17'	C
17' < 31'	D	17' < 31'	D
31' - 40'	G	31' - 40'	G
SIZE: 8' x 9'			
≥ 0.5' < 3'	D	≥ 0.5' < 3'	E
3' < 4'	C	3' < 4'	D
4' < 16'	B	4' < 18'	C
16' < 22'	C	18' < 25'	D
22' < 29'	D	25' < 32'	F
29' - 40'	F	32' - 40'	G
SIZE: 9' x 9'			
≥ 0.5' < 3'	F	≥ 0.5' < 3'	F
3' < 14'	C	3' < 14'	C
14' < 20'	D	14' < 20'	D
20' < 26'	E	20' < 26'	E
26' - 40'	G	26' - 40'	G

WALL DESIGNS - RECTANGULAR STRUCTURES

VERTICAL REINFORCING		HORIZONTAL REINFORCING	
WALL DEPTH	SCHEDULE	WALL DEPTH	SCHEDULE
SIZE: 3'-6"			
≥ 1.17' - 40'	A	≥ 1.17' - 40'	B
SIZE: 4'-0"			
≥ 1.17' - 40'	A	≥ 1.17' - 40'	B
SIZE: 5'-0"			
≥ 1.17' - 40'	A	≥ 1.17' < 33'	B
		33' - 40'	C
SIZE: 6'-0"			
≥ 1.17' - 40'	A	≥ 1.17' < 22'	B
		22' - 40'	C
SIZE: 7'-0"			
≥ 1.17' - 40'	A	≥ 1.17' < 15'	B
		15' < 25'	C
		25' - 40'	D
SIZE: 8'-0"			
≥ 1.17' - 40'	A	≥ 1.17' < 11'	B
		11' < 19'	C
		19' < 29'	D
		29' - 40'	F
SIZE: 9'-0"			
≥ 1.17' - 40'	A	≥ 1.17' < 15'	C
		15' < 22'	D
		22' - 40'	F

SLAB DESIGNS - ROUND STRUCTURES

SLAB DEPTH	SLAB THICKNESS	REINFORCING (2 WAYS) SCHEDULE
SIZE: 3'-6"		
≥ 0.5' - 40'	8"	C
SIZE: 4'-0"		
≥ 0.5' - 40'	8"	C
SIZE: 5'-0"		
≥ 0.5' < 30'	8"	C
30' - 40'	8"	D
SIZE: 6'-0"		
≥ 0.5' < 8'	8"	B
8' < 18'	8"	C
18' < 30'	8"	D
30' < 37'	8"	E
37' - 40'	8"	G
SIZE: 8'-0"		
≥ 0.5' < 9'	10"	C
9' < 15'	10"	D
15' < 23'	10"	E
23' < 33'	12"	E
33' - 40'	12"	G
SIZE: 10'-0"		
≥ 0.5' < 6'	10"	C
6' < 11'	10"	D
11' < 17'	10"	E
17' < 23'	12"	E
23' - 40'	12"	G
SIZE: 12'-0"		
≥ 0.5' < 6'	12"	C
6' < 11'	12"	D
11' < 16'	12"	E
16' < 20'	14"	E
20' - 40'	14"	G

GENERAL NOTES

1. Slab reinforcement is appropriate for top, intermediate, and bottom slabs.
2. Slab depth is measured from finished grade to top of slab.
3. Wall design depth is measured to the top of the bottom slab for boxes and to the top of the intermediate slab for risers.
4. Wall height is the distance between top of lower slab to bottom of upper slab.

REINFORCING SCHEDULE

SCHEDULE	GRADE 60 STEEL OR 65 KSI (WIRE FABRIC) in^2/ft
A	0.20
B	0.24
C	0.37
D	0.53
E	0.73
F	1.06
G	1.45

STATE OF FLORIDA DEPARTMENT OF TRANSPORTATION
ROAD DESIGN

STRUCTURE BOTTOMS TYPE J AND P

	Names	Dates
Designed By		
Drawn By	dds	05/86
Checked By	JBW	05/86
F.H.W.A. Approved:		11/07/86

Approved By
E. W. Reiss
State Drainage Engineer

Revision No.	Sheet No.	Index No.
92	2 of 2	200

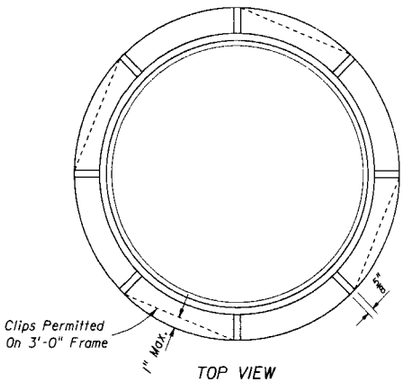

TYPE I

For Manholes

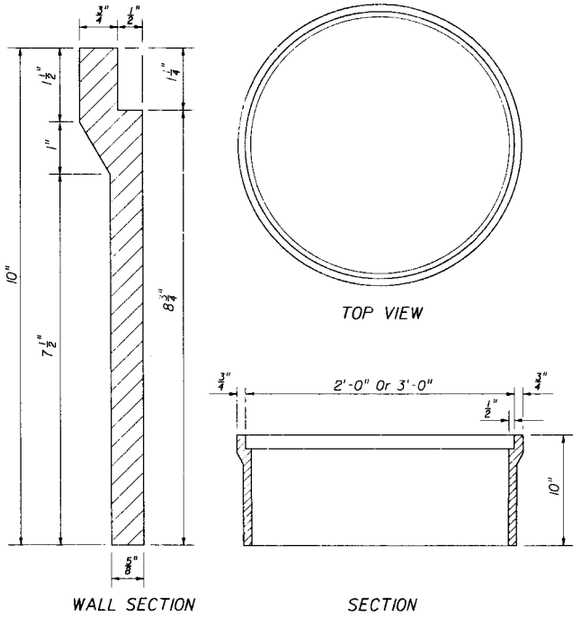

TYPE II

For Curb Inlets Types 1, 2, 3, & 4

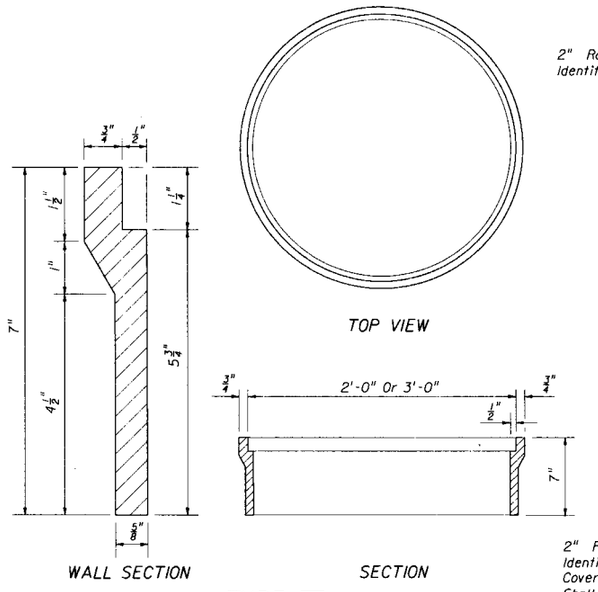

TYPE III

For Curb Inlets Types 7 & 8

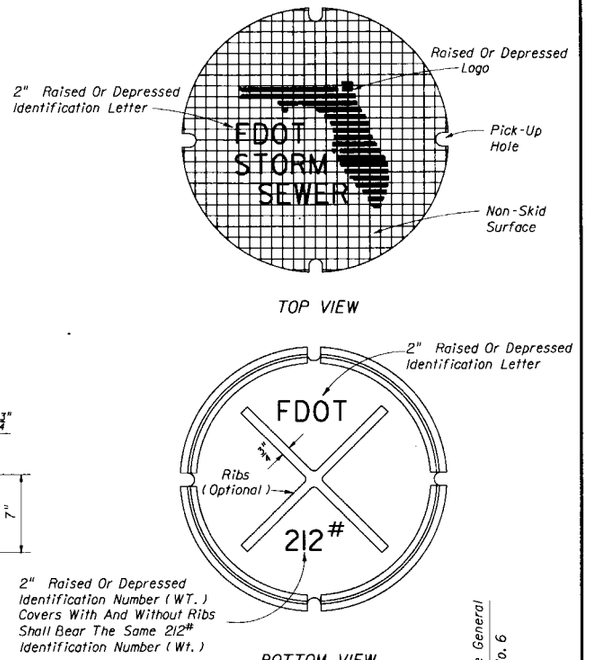

COVER FOR ALL FRAMES

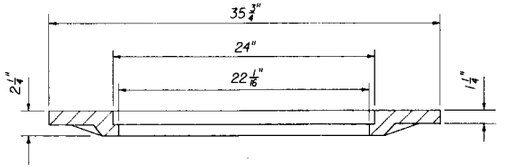

2-PIECE COVER

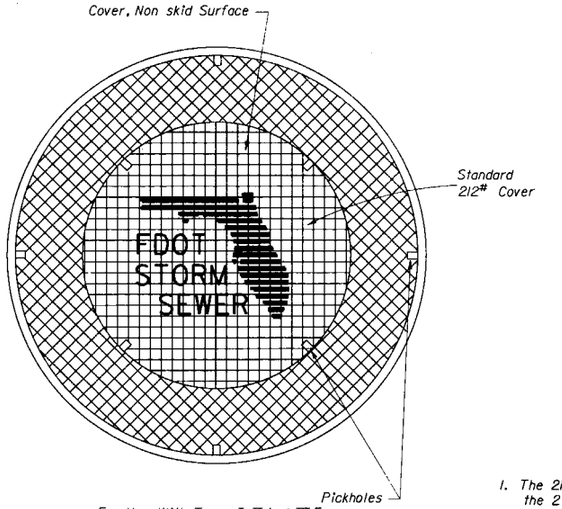

For Use With Types I, II And III Frames With 3'-0" Opening

2-PIECE COVER

CAST IRON FRAMES

WEIGHT OF CASTINGS						
Frame Type	2' OPENING		3' OPENING			
	Frame	Cover (Std.)	Frame	2-Piece Cover		
				Cover	Ring	Total
I	126 Lbs.	212 Lbs.	220 Lbs.	212 Lbs.	250 Lbs.	462 Lbs.
II	134 Lbs.	212 Lbs.	260 Lbs.	212 Lbs.	250 Lbs.	462 Lbs.
III	98 Lbs.	212 Lbs.	220 Lbs.	212 Lbs.	250 Lbs.	462 Lbs.

NOTES (FRAMES, AND COVER)

1. The 212 lb. cover is to be used for all frames Types I, II, III and the 2-Piece Cover, and is the replacement cover for all previous frames with 1 1/2" deep seats (traffic type). The 185 lb. cover (non-traffic type), 1984 Roadway and Traffic Design Standards Index No. 201, is the replacement cover for existing frames with 3/4" deep seats. Installation of frames with 1/2" deep seats is not permitted. The 185 lb. covers are to be placed in existing 1/2" deep seated frames only when specifically called for in the plans or as specifically directed by the Engineer.

STATE OF FLORIDA DEPARTMENT OF TRANSPORTATION
ROAD DESIGN

SUPPLEMENTARY DETAILS FOR MANHOLES AND INLETS

	Names	Dates
Designed By		
Drawn By	HSD	06/82
Checked By	JBW	06/82
F.H.W.A. Approved:		09/23/82

Approved By: C. C. Ruge
State Drainage Engineer

Revision No.	Sheet No.	Index No.
92	1 of 6	201

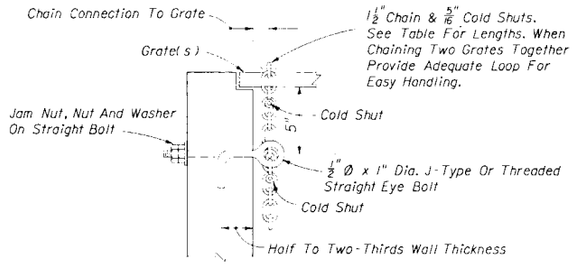

Note: When Alternate G grate is specified, the chain, bolt, nuts, washer and cold shuts shall be galvanized in accordance with the specifications for the grate.

Cost of eye bolt and chain to be included in the contract unit price for inlets.

EYE BOLT AND CHAIN REQUIREMENTS				
Index Number	Inlet Type	Eye Bolts	Length Of Chain	Handling & Remarks
217	(MB) 1	1	4'-0"	Slide & Spin
	(MB) 2	1	4'-0"	Slide & Spin
	(MB) 3	2	2 @ 4'-0"	Slide & Spin
	(MB) 4	2	2 @ 4'-0"	Slide & Spin
	(MB) 5	2	2 @ 4'-0"	Slide & Spin
218	(BW)	1	3'-8"	Slide Or Slide & Spin
219	(BW, RGD)	1	4'-0"	Slide & Spin
220	S	1	4'-0"	Slide & Spin
221	V	1	4'-0"	Slide & Spin
230	A	1	3'-0"	Slide
231	B	1	5'-0"	Slide & Spin
232	C	1	2'-6"	Slide & Spin
	D	1	2'-6"	Slide & Spin
	E	2	2 @ 2'-6"	Slide & Spin
	H	2	2 @ 2'-6"	Flip Ctr. Grate and Slide & Spin Single Free Grate
			1 @ 1'-6"	Ctr. Grate To One End Grate
233	F	1	3'-6"	Flip Or Slide & Spin
	G	1	6'-0"	Slide
			2'-0"	Lifting Loop
234	J	1	4'-0"	Slide & Spin

EYE BOLT AND CHAIN FOR LOCKING GRATES TO INLETS

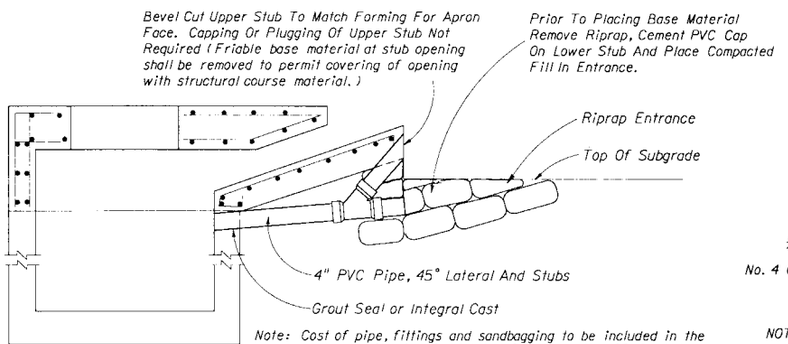

Note: Cost of pipe, fittings and sandbagging to be included in the contract unit price for inlets. See Index No. 102 for bale barrier protection at inlet.

TEMPORARY DRAINS FOR SUBGRADE AND BASE

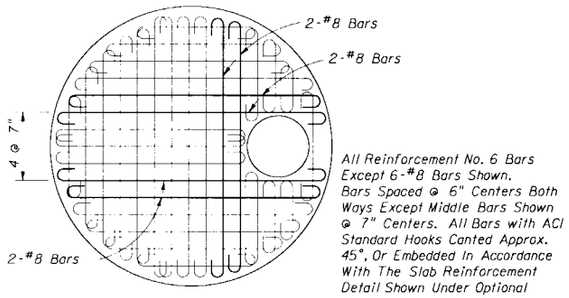

REINFORCEMENT PLAN

All Reinforcement No. 6 Bars Except 6-#8 Bars Shown. Bars Spaced @ 6" Centers Both Ways Except Middle Bars Shown @ 7" Centers. All Bars with ACI Standard Hooks Canted Approx. 45°, Or Embedded In Accordance With The Slab Reinforcement Detail Shown Under Optional Construction Joints, Sheet No. 3 of 6, Except All #8 Bars And #6 Bars Around Manhole Opening Shall Be Hooked.

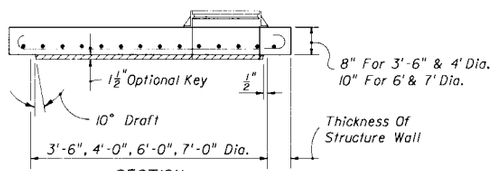

SECTION

TYPE 7-T (TRAFFIC) (H-20)

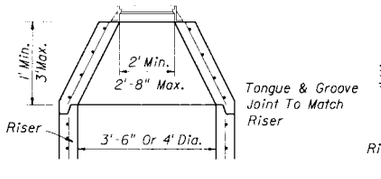

PRECAST CONCENTRIC CONE

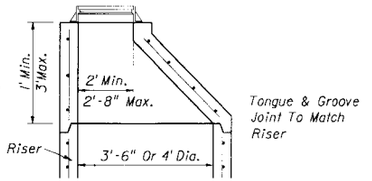

PRECAST ECCENTRIC CONE

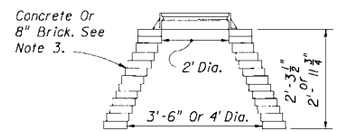

BRICK OR CONCRETE

TYPE 8

MANHOLES

MANHOLE TOPS

NOTES (TOPS)

1. Manhole top Type 7 slabs shall be of Class II concrete. Concrete as specified in ASTM C-478 may be used for precast units; see General Note No. 3.
2. Manhole top Type 7 slabs may be of cast-in-place or precast construction. The optional key is for precast tops and in lieu of dowels. Frame and slab openings are to be omitted when top is used over a junction box. Frames can be adjusted with from one to six courses of brick.
3. Manhole top Type 8 may be of cast-in-place or precast concrete construction or brick construction. For concrete construction, the concrete and steel reinforcement shall be the same as the supporting wall unit. An eccentric cone may be used.
4. Manhole tops shall be secured to structures by optional construction joints as shown on Sheet 3 of 6.

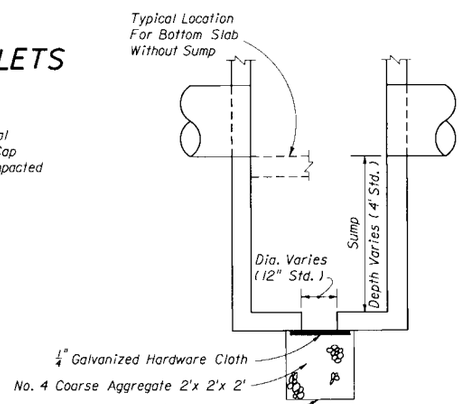

NOTE: Sump bottom appropriate for all manhole and inlet types. Cost for sump bottom to be included in the contract unit price for inlet or manhole.

SUMP BOTTOM

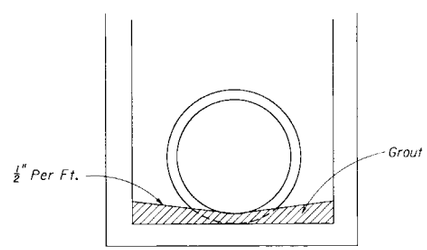

Note: Grout to consist of 3:1 Sand-Cement Mixture or any Class Concrete.

FOR ALL STRUCTURES UNLESS EXCLUDED BY SPECIAL DETAIL

DRAINAGE STRUCTURE INVERT

STATE OF FLORIDA DEPARTMENT OF TRANSPORTATION
ROAD DESIGN

SUPPLEMENTARY DETAILS FOR MANHOLES AND INLETS

	Names	Dates
Designed By	HLB	04/75
Drawn By		
Checked By	LMF	04/75
F.H.W.A. Approved:		10/07/80

Approved By E. C. Runer
State Drainage Engineer

Revision No.	Sheet No.	Index No.
92	2 of 6	201

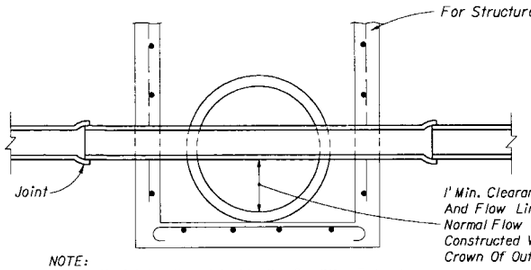

NOTE:
1. No joints allowed inside the Condition I structure.
2. Only cast iron, ductile iron or steel water mains or cast iron, and ductile iron sanitary sewer will be allowed to pass directly through structure.

CONDITION I

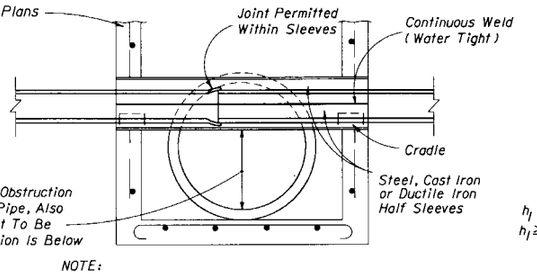

NOTE:
1. Only water mains will be allowed to pass through a Condition II structure.

CONDITION II

DESIGNERS NOTE

"Sumped" conflict manholes shall not be used unless the system is hydraulically designed to take in account the headloss generated if the sump is completely blocked. "Sumped" conflict manholes must be larger than those normally provided.

UTILITY PIPES THRU STORM SEWER STRUCTURES

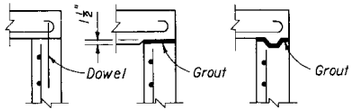

TOP SLABS TO WALLS

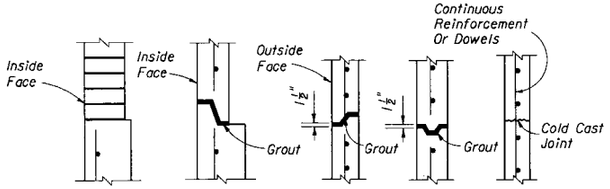

WALL JOINTS

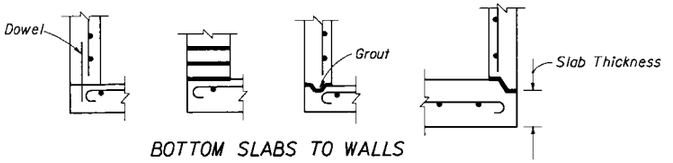

BOTTOM SLABS TO WALLS

1. One or more types of joints may be used in a single structure, except brick wall structure. Brick wall construction is permitted on circular units only.
2. All grouted joints are to have a maximum thickness of 1".
3. Keyways are to be a minimum of 1½" deep.
4. Joint dowels are to be #4 bars, 12" long with a minimum of 6 bars per joint for circular structures approximately evenly spaced, and, 2 bars per side at approximate quarter points for rectangular structures.
5. Minimum cover on reinforcing bars is 1¼".
6. Joints between wall segments and between wall segments and top or bottom slabs may be sealed either by preformed plastic gasket material using the procedures given in Section 430-7.3 or by grout.
7. Approved product inserts may be used in lieu of dowel embedment.

OPTIONAL CONSTRUCTION JOINTS

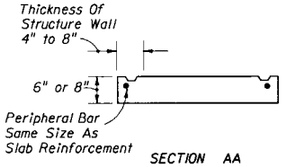

SECTION AA

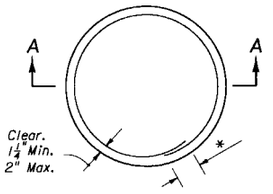

PLAN VIEW

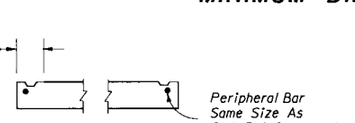

SECTION BB

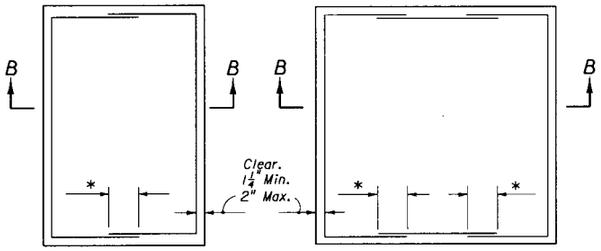

PLAN VIEW PLAN VIEW

*Lap = 18 Bar Diameters (12" Min.)

CIRCULAR BOXES 3'-6", 4'-0", 6'-0", 7'-0" & 8'-0" DIAMETER

SQUARE AND RECTANGULAR BOXES TO 8'-0" x 8'-0"

PERIPHERAL REINFORCEMENT

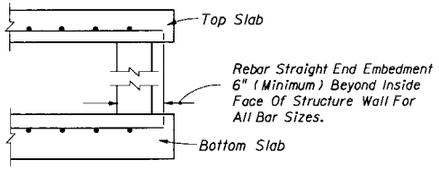

STRAIGHT END EMBEDMENT

(NOTE: NOT APPLICABLE AROUND MANHOLE AND RISER OPENINGS)

REBAR STRAIGHT END EMBEDMENT OR PERIPHERAL REINFORCEMENT IN LIEU OF ACI STANDARD HOOKS FOR TOP AND BOTTOM SLABS

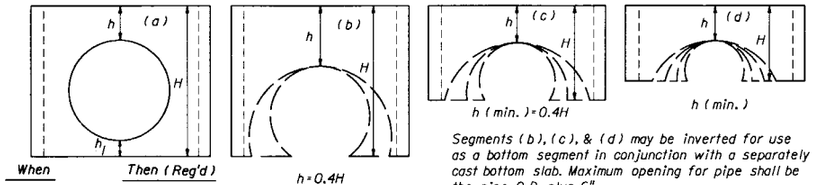

When	Then (Reg'd)
h_1 < 0.75h (min.)	h ≥ 0.4H
h_1 ≥ 0.75h (min.)	h ≥ h (min.)

h = 0.4H

Segments (b), (c), & (d) may be inverted for use as a bottom segment in conjunction with a separately cast bottom slab. Maximum opening for pipe shall be the pipe O.D. plus 6".

Minimum Value For h	
h (min.)	Box Or Riser Diameter
1'-0"	3'-6" & 4'-0"
1'-6"	5'-0" & 6'-0"
2'-0"	> 6'-0"

TOP OR BOTTOM SEGMENTS WITH CONSTRUCTION JOINTS OTHER THAN DOWEL OPTION

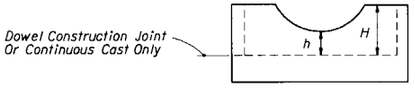

h ≥ zero

H ≥ h

(Minimums Tabulated Above Do Not Apply)

TOP OR BOTTOM SEGMENT FOR DOWEL CONSTRUCTION JOINTS OR CONTINUOUS CAST SEGMENTS

COMPARATIVE SIDE VIEWS

MINIMUM DIMENSIONS FOR BOX AND RISER SEGMENTS

GENERAL NOTES

1. For square or rectangular precast drainage structures, either deformed or smooth welded wire fabric may be used provided:
   a) The smooth welded wire fabric shall comply with ASTM A-185, and deformed welded wire fabric shall comply with ASTM A-497.
   b) Width and length of the unit is four times the spacing of the cross wires.
   c) Wire fabric shall be continuous around the box, spliced at quarter point(s) with overlap of not less than the spacing of the cross wires plus two inches.
2. For equivalent steel areas for precast drainage structures, see Sheet 4 of 6.
3. Horizontal steel in the walls of rectangular structures shall be lapped a minimum of 24 bar diameter at corners.
4. Welding of splices and laps is permitted. The requirements and restrictions placed on welding in AASHTO M-259 shall apply.
5. Rebar straight end embeddment or peripheral reinforcement may be used in lieu of ACI standard hooks for top and bottom slabs except when hooks are specifically called for in plans or standard drawings.
6. Concrete as specified in ASTM C-478, (4000 psi) may be used in lieu of Class I and Class II concrete in precast items manufactured in plants which are under the 'Standard Operating Procedures For The Inspection Of Precast Drainage Products'.
7. Maximum opening for pipe shall be the pipe o.d. plus 6". Mortor used to seal the pipe into the opening will be of such a mix that shrinkage will not cause leakage into or out of the structure.
8. For pay item purposes, the height used to determine if a drainage structure is less than or greater than 10 feet shall be computed using (a) the elevation of the top of the manhole lid, (b) the grate elevation or the theoretical gutter grade elevation of an inlet, or (c) the outside top elevation of a junction box less the flow line elevation of the lowest pipe or to top of sump floor.

STATE OF FLORIDA DEPARTMENT OF TRANSPORTATION
ROAD DESIGN

SUPPLEMENTARY DETAILS FOR MANHOLES AND INLETS

	Names	Dates
Designed By	HLB	04/75
Drawn By		
Checked By	LMF	04/75
F.H.W.A. Approved:		10/07/80

Approved By E. G. Rice
State Drainage Engineer

Revision No.	Sheet No.	Index No.
90	3 of 6	201

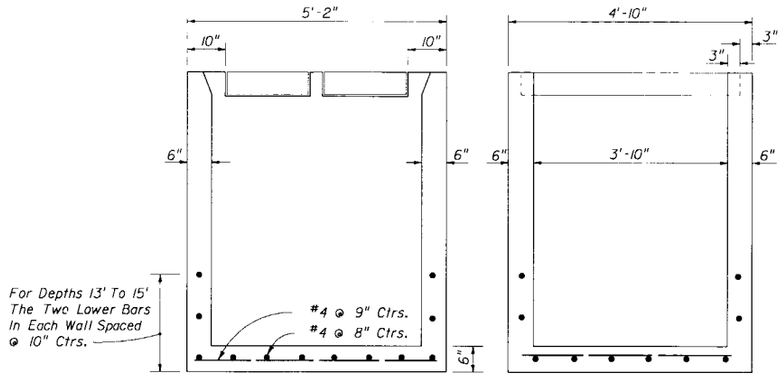

DITCH BOTTOM INLET TYPE B

INDEX 231

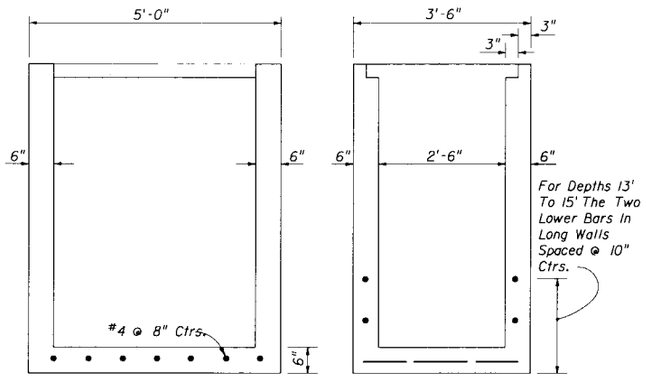

DITCH BOTTOM INLET TYPE F

INDEX 233

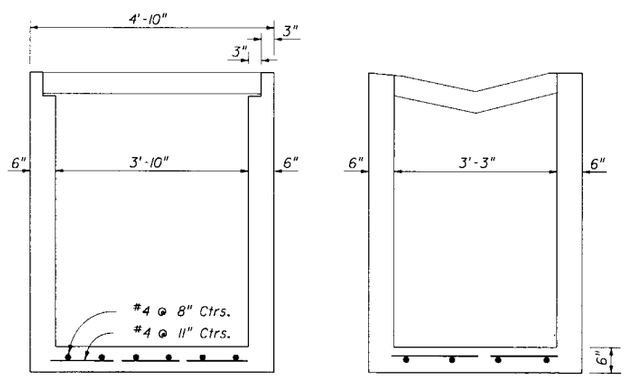

GUTTER INLET TYPE S

INDEX 220

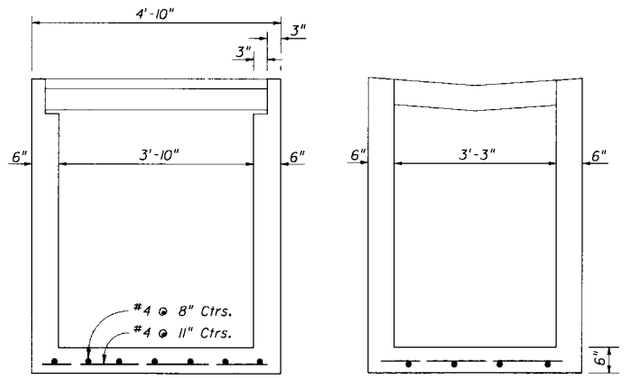

GUTTER INLET TYPE J & V

INDEX 221 & 234

NOTES FOR THIN-WALL PRECAST OPTIONS

1. The details on Sheets 4, 5 & 6 are optional for precast inlet construction up to depths of 15'. These inlets can be used with Alt. "B" Bottoms, Index 200. Cast-in-place construction must adhere to the details contained on the referenced indexes.

2. Only the dimensions and reinforcement changes or other modifications are indicated. For all other dimensions and details, the referenced index drawings apply. When these precast units are used inconjunction with Alt "B" Structure Bottoms, Index 200, the interior dimensions of an Alt. "B" Bottom can be adjusted to reflect these inlet interior dimensions.

3. Concrete which meets the requirements of ASTM C-478 shall be used for structures constructed to these details.

4. Reinforcement can be either deformed bar reinforcement or welded wire fabric. Bar reinforcement other than 40 KSI may be used, however only two grades are recognized; Grade 40 and Grade 60. Welded wire fabric, including deformed welded wire fabric, will be recognized as having a design strength of 65 KSI. The area of reinforcement required may be reduced in accordance with the Equivalent Steel Area Table provided. For bars and spacings not given, the steel area required can be determined by the following equations:

$$\text{Grade 60 Steel Area} = A_s\,60 = \frac{40}{60}K \times A_s\,40$$

$$\text{Welded Wire Fabric Steel Area} = A_s\,65 = \frac{40}{65}K \times A_s\,40$$

In no case will fabric with wires smaller than W3.1 or spacings greater than 8" be permitted. Bar reinforcement shall show the minimum yield designation grade mark of either the number 60 or one (1) grade mark line to be acceptable at the higher value. Maximum bar spacing shall not be greater than two (2) times the slab thickness with a maximum spacing of 12" or three (3) times the wall thickness, with a maximum spacing of 18".

EQUIVALENT STEEL AREA TABLE

GRADE 40 REINFORCING BAR		EQUIVALENT GRADE 60 REINFORCING BAR		EQUIVALENT 65 KSI WELDED WIRE FABRIC	
Bar Size & Spacing	Steel Area	Bar Size & Spacing	Min. Steel Area	Style Designation	Min. Steel Area
#4 @ 12" CCEW	0.20	#3 @ 9½" CCEW	.1333	3" x 3"-W3.1 x W3.1 or 4" x 4"-W4.5 x W4.5 or 6" x 6"-W6.5 x W6.5	.1230
#4 @ 9" CCEW	0.267	#4 @ 13½" CCEW or #3 @ 7" CCEW	.1778	3" x 3"-W4.5 x W4.5 or 4" x 4"-W5.5 x W5.5 or 6" x 6"-W8.5 x W8.5	.1641
#6 @ 6" CCEW	0.88	#5 @ 6" CCEW or #6 @ 9" CCEW	.5867	4" x 4"-W20 x W20 or 6" x 6"-W30 x W30	.5415
#7 @ 6" CCEW	1.20	#6 @ 6½" CCEW or #7 @ 9" CCEW	.80	4" x 4"-W26 x W26	.7385

STATE OF FLORIDA DEPARTMENT OF TRANSPORTATION
ROAD DESIGN

SUPPLEMENTARY DETAILS FOR MANHOLES AND INLETS

	Names	Dates
Designed By	EGR/JGW	09/86
Drawn By	WPH/dds	09/86
Checked By	EGR	09/86
F.H.W.A. Approved:		11/07/86

Approved By
State Drainage Engineer

Revision No.	Sheet No.	Index No.
92	4 of 6	201

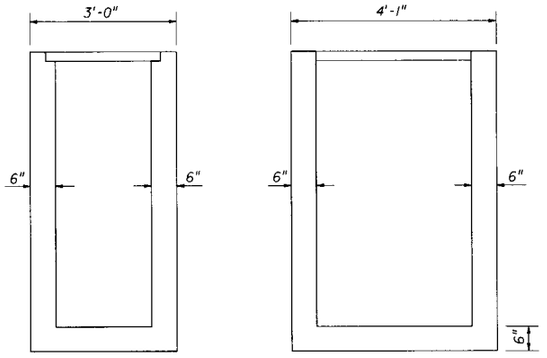

PARTIAL SECTION BB

PARTIAL SECTION CC

DITCH BOTTOM INLET C

INDEX 232

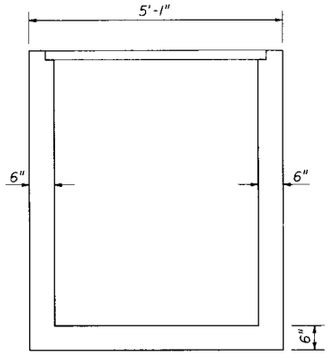

PARTIAL SECTION BB

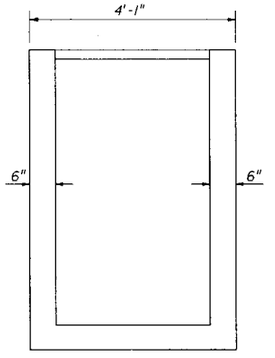

PARTIAL SECTION CC

DITCH BOTTOM INLET D

INDEX 232

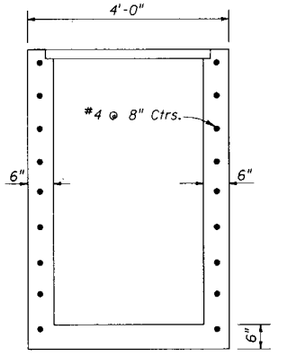

PARTIAL SECTION BB

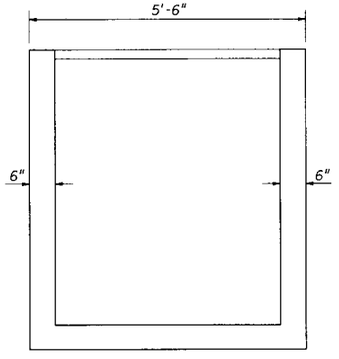

PARTIAL SECTION CC

DITCH BOTTOM INLET E

INDEX 232

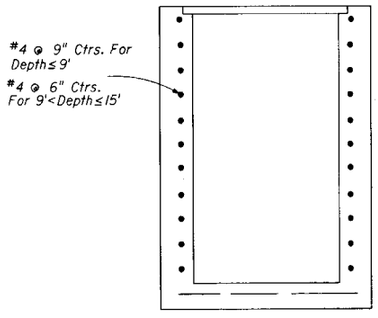

PARTIAL SECTION BB

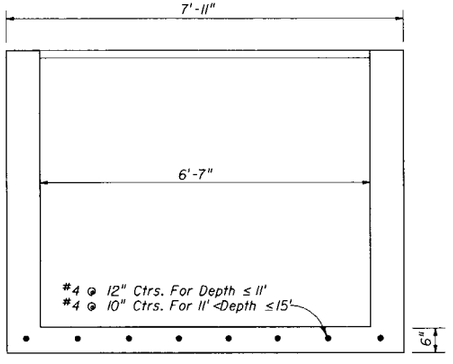

PARTIAL SECTION CC

DITCH BOTTOM INLET H (3-GRATE)

INDEX 232

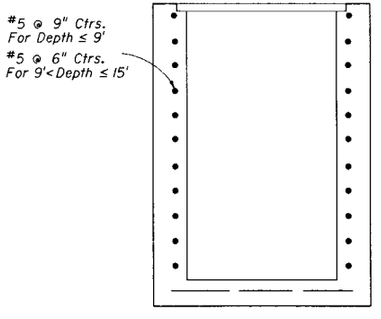

PARTIAL SECTION BB

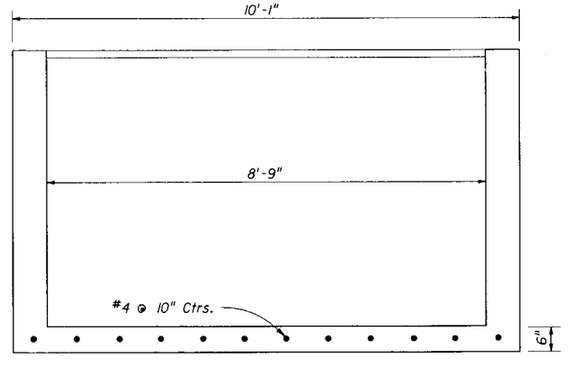

PARTIAL SECTION CC

DITCH BOTTOM INLET H (4-GRATE)

INDEX 232

STATE OF FLORIDA DEPARTMENT OF TRANSPORTATION
ROAD DESIGN

SUPPLEMENTARY DETAILS FOR MANHOLES AND INLETS

	Names	Dates
Designed By	EGR/JGW	09/86
Drawn By	WPH/dds	09/86
Checked By	EGR	09/86
F.H.W.A. Approved:		11/07/86

Approved By E G Rueger
State Drainage Engineer

Revision No.	Sheet No.	Index No.
90	5 of 6	201

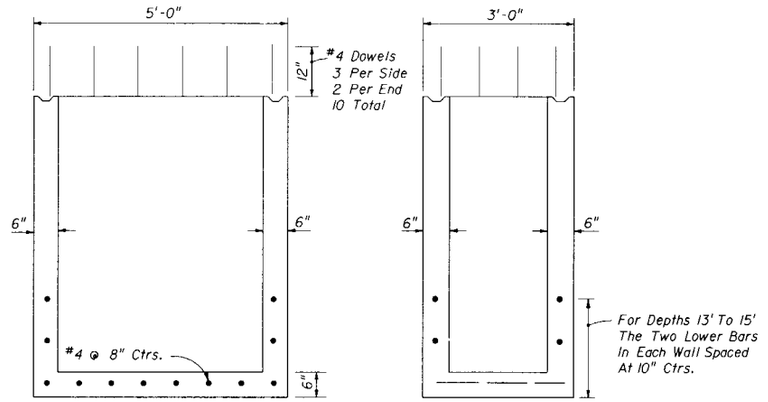

PARTIAL SECTION AA

PARTIAL SECTION BB

MEDIAN BARRIER INLET TYPES 1 & 2

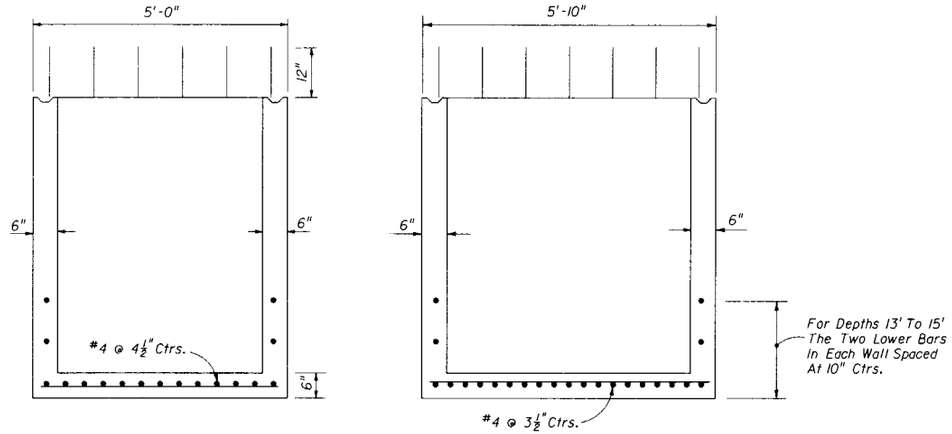

PARTIAL SECTION AA

PARTIAL SECTION BB

MEDIAN BARRIER INLET TYPES 3,4, & 5

INDEX 217

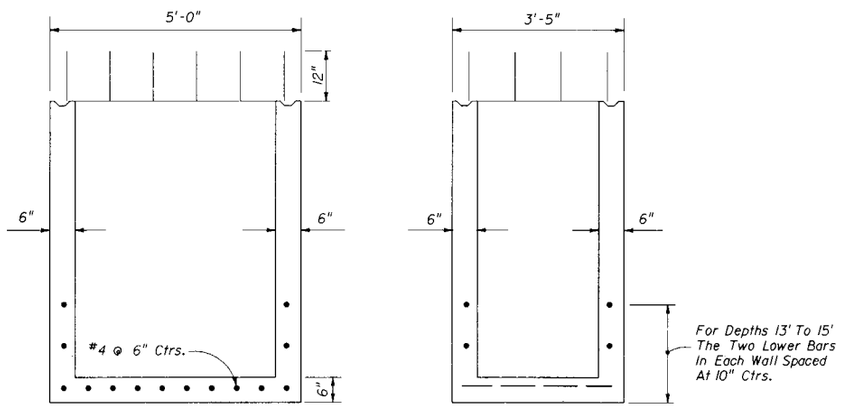

PARTIAL SECTION AA

PARTIAL SECTION BB

BARRIER WALL (RIGID) (C & G)

INDEX 219

STATE OF FLORIDA DEPARTMENT OF TRANSPORTATION
ROAD DESIGN

SUPPLEMENTARY DETAILS FOR MANHOLES AND INLETS

	Names	Dates	Approved By
Designed By			E. G. Rangel, State Drainage Engineer
Drawn By			
Checked By			
F.H.W.A. Approved:			

Revision No.	Sheet No.	Index No.
90	6 of 6	201

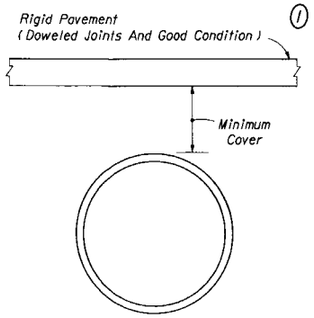

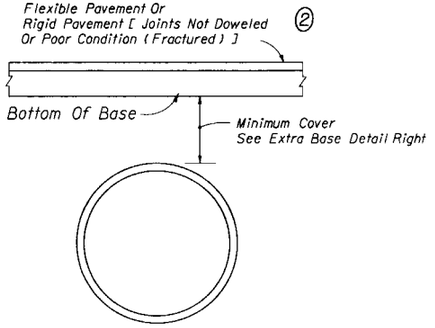

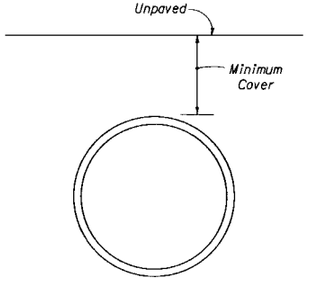

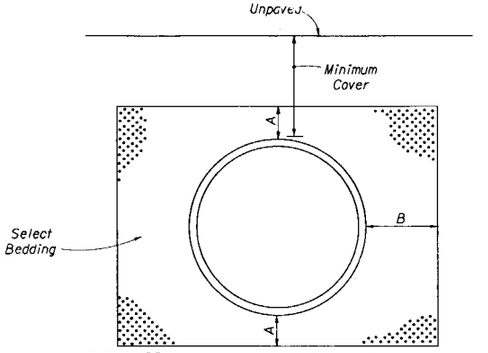

PIPE TYPE	A	B
Concrete	3"	12"
Corrugated Steel	6"	$\frac{D}{2}$ but not less than 12"
Corrugated Aluminum	6"	$\frac{D}{8}$ but not less than 18"
Corrugated Polyethlyene	6"	24"

Extra Base Required When This Dimension Is Less Than 12" For Concrete Pipe, 15" For Corrugated Steel Pipe And 18" For Corrugated Aluminum Pipe And Corrugated Polyethylene Pipe; See Application Note Below.

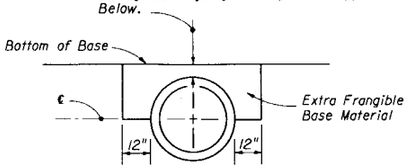

Extra base material to be paid for as equivalent square yard base, except when material is called for on cubic yard or tonnage basis.

FRANGIBLE BASE

Extra Base Required When This Dimension Is Less Than 12" For Concrete Pipe, 15" For Corrugated Steel Pipe And 18" For Corrugated Aluminum Pipe And Corrugated Polyethylene Pipe; See Application Note Below.

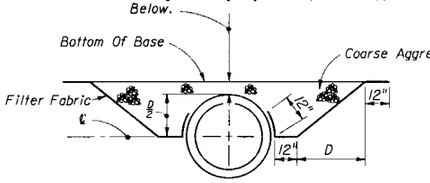

The Contractor shall furnish and install coarse aggregate on filter fabric. The coarse aggregate shall be placed in 6 inch lifts and compacted sufficiently as to be firm and unyielding. The coarse aggregate shall be gravel or stone meeting the requirements of Section 901-2 or 901-3 respectively. The gradation shall meet Section 901-6, Grades 4, 467, 5, 56, or 57 unless restricted in the plans. The filter fabric shall be Type D-3 (See index 199). The cost of furnishing and installing the coarse aggregate and filter fabric shall be included in the cost of the culvert.

ASPHALTIC CONCRETE BASE

Note: Extra base is required when cross culverts are located on facilities subject to high speed traffic (> 45 mph) or high traffic volumes (> 1600 ADT) and the cover is within the ranges specified in the notations above.

EXTRA BASE FOR CROSS CULVERTS UNDER FLEXIBLE PAVEMENTS

RIGID PAVEMENT ①

PIPE TYPE/SIZE & SHAPE	MINIMUM COVER
CONCRETE	
All Round & Elliptical	6"
CORRUGATED STEEL	
15"-72" Round & Arch Equiv.	9"
78" & Larger Round & Arch Eq.	15"
CORRUGATED ALUMINUM	
15"-72" Round & Arch Equiv.	9"
78"-102" Round & Arch Equiv.	15"
108" & Larger Round	18"
CORRUGATED POLYETHYLENE	
15"-24" Round	9"

FLEXIBLE PAVEMENT ②

PIPE TYPE/SIZE & SHAPE	MINIMUM COVER
CONCRETE	
All Round & Elliptical	6"
CORRUGATED STEEL	
12"-30" Round	12" [12"]
36"-48" Round	18" (12") [15"]
54"-72" Round	21" (15") [18"]
78"-96" Round	(18") [27"]
102 & Larger Round	(24") [33"]
15"-30" Arch Equivalent	18" [18"]
36"-48" Arch Equivalent	24" (12") [18"]
54"-72" Arch Equivalent	27" (15") [24"]
78"-96" Arch Equivalent	(18") [30"]
102" & Larger Arch Equivalent	(24")
CORRUGATED ALUMINUM	
12"-24" Round	15" [12"]
30"-48" Round	18" (12") [18"]
54"-72" Round	24" (18") [24"]
78"-102" Round	(24") [30"]
108" & Larger	(30")
15"-24" Arch Equivalent	24" [21"]
30"-48" Arch Equivalent	27" (15") [24"]
54"-72" Arch Equivalent	30" (18") [27"]
78"-90" Arch Equivalent	(24") [30"]
96"-102" Arch Equivalent	(30")
CORRUGATED POLYETHYLENE	
15"-24" Round	15"

UNPAVED W/O SELECT BEDDING

PIPE TYPE/SIZE & SHAPE	MINIMUM COVER	
	COMM	NON COMM
CONCRETE		
All Round & Elliptical	12"	9"
CORRUGATED STEEL		
12"-30" Round	24" [18"]	18" [15"]
36"-48" Round	24" (18") [21"]	18" (12") [15"]
54"-72" Round	24" (18") [21"]	18" (12") [15"]
78"-96" Round	(24") [30"]	(18") [27"]
102 & Larger Round	(30") [36"]	(24") [33"]
15"-30" Arch Equivalent	24" [18"]	18" [15"]
36"-48" Arch Equivalent	30" (18") [24"]	24" (12") [18"]
54"-72" Arch Equivalent	36" (24") [30"]	30" (18") [24"]
78"-96" Arch Equivalent	(30") [36"]	(24") [30"]
102" & Larger Arch Equivalent	(36")	(30")
CORRUGATED ALUMINUM		
12"-24" Round	27" [24"]	21" [18"]
30"-48" Round	30" (24") [27"]	24" (18") [21"]
54"-72" Round	36" (30") [33"]	30" (24") [27"]
78"-102" Round	(36") [42"]	(30") [36"]
108" & Larger	42"	36"
15"-24" Arch Equivalent	36" [33"]	27" [24"]
30"-48" Arch Equivalent	39" (27") [36"]	33" (21") [30"]
54"-72" Arch Equivalent	42" (30") [36"]	36" (24") [30"]
78"-90" Arch Equivalent	(36") [42"]	(30") [36"]
96"-102" Arch Equivalent	(42")	(36")
CORRUGATED POLYETHYLENE		
15"-24" Round	27"	21"

UNPAVED WITH SELECT BEDDING

PIPE TYPE/SIZE & SHAPE	MINIMUM COVER	
	COMM	NON COMM
CONCRETE		
All Round & Elliptical	9"	6"
CORRUGATED STEEL		
12"-30" Round	18" [15"]	12" [12"]
36"-48" Round	18" (12") [15"]	12" (12") [12"]
54"-72" Round	18" (12") [15"]	15" (12") [12"]
78"-96" Round	(18") [27"]	(12") [12"]
102 & Larger Round	24" [33"]	18" [21"]
15"-30" Arch Equivalent	18" [18"]	12" [12"]
36"-48" Arch Equivalent	24" (12") [21"]	18" (12") [15"]
54"-72" Arch Equivalent	30" (18") [24"]	24" (12") [18"]
78"-96" Arch Equivalent	(24") [27"]	(18") [21"]
102" & Larger Arch Equivalent	(30")	(24")
CORRUGATED ALUMINUM		
12"-24" Round	21" [21"]	15" [15"]
30"-48" Round	24" (18") [21"]	18" (12") [15"]
54"-72" Round	30" (24") [27"]	24" (18") [21"]
78"-102" Round	(30") [33"]	(24") [27"]
108" & Larger	36"	30"
15"-24" Arch Equivalent	27" [24"]	24" [21"]
30"-48" Arch Equivalent	33" (21") [27"]	27" (15") [21"]
54"-72" Arch Equivalent	36" (24") [30"]	30" (18") [24"]
78"-90" Arch Equivalent	(30") [36"]	(24") [30"]
96"-102" Arch Equivalent	(36")	(30")
CORRUGATED POLYETHYLENE		
15"-24" Round	21"	15"

GENERAL NOTES

1. The tabulated values are recommended minimum dimensions to withstand anticipated highway traffic loads. Additional cover may be required to support construction equipment loads or highway traffic loads before pavement is completed. Some size thickness combinations may require minimum cover greater than those listed above. See Sheets 2, 3, & 4.
2. Less than the tabulated minimum cover may be used provided suitable method (s) are detailed in the plans. These features may include but are not limited to extra strength pipe, select bedding, select backfill and encasement.
3. Values shown in parentheses are for 3" x 1" corrugations which must be specified to utilize the lesser cover.
4. The tabulated values in the brackets [ ] apply to Type I-R (Spiral Rib) pipe which must be specifed to utilize the lesser cover.
5. Commercial and noncommercial refers to typical vehicular utilization of unpaved roads and drives where rutting and cover displacement may occur.

MINIMUM COVER FOR CONCRETE, STEEL, ALUMINUM AND POLYETHYLENE PIPE

STATE OF FLORIDA DEPARTMENT OF TRANSPORTATION
ROAD DESIGN

COVER HEIGHT

	Names	Dates
Designed By	EGR	09/84
Drawn By	DAE	09/84
Checked By	EGR	09/84
F.H.W.A. Approved:		09/21/84

Approved By
State Drainage Engineer

Revision No.	Sheet No.	Index No.
92	1 of 4	205

ROUND PIPE DIMENSIONS

Equiv. Dia. (In.)	Area (Sq. Ft.)	Wall Thickness (In.)* Classes II, III, IV, V		
		A WALL	B WALL	C WALL
12	0.8	1 3/4	2	NA
15	1.2	1 7/8	2 1/4	NA
18	1.8	2	2 1/2	NA
24	3.1	2 1/2	3	3 3/4
30	4.9	2 3/4	3 1/2	4 1/4
36	7.1	3	4	4 3/4
42	9.6	3 1/2	4 1/2	5 1/4
48	12.6	4	5	5 3/4
54	15.9	4 1/2	5 1/2	6 1/4
60	19.6	5	6	6 3/4
66	23.8	5 1/2	6 1/2	7 1/4
72	28.3	6	7	7 3/4
78	33.2	6 1/2	7 1/2	8 1/4
84	38.5	7	8	8 3/4
90	44.4	7 1/2	8 1/2	9 1/4
96	50.3	8	9	9 3/4
102	56.7	8 1/2	9 1/2	10 1/4
108	63.7	9	10	10 3/4
114	70.9	9 1/2	—	—
120	78.5	10	—	—

* For Informational Purposes Only
Do Not Specify Wall Thickness
Option B Wall Is Industry Standard

ROUND PIPE INSTALLATIONS
(All Sizes)

Design	Height Of Fill (Ft.)	Pipe Class	Bedding Class	Projection Condition
Standard	1-8	II	C	Positive
	9-14	III	C	Positive
	15-22	IV	C	Positive
	23-26*	V *	C *	Positive
Modified Bedding	27-32	V	B	Positive
Modified Trench	33-43	V	B	Zero
	44-70	V	B	Negative
	71+	V	B	Imperfect

Pipe Class II — D-Load = 1000 Lbs/Ft/Ft (.01" Crack)
D-Load = 1500 Lbs/Ft/Ft (Ultimate)

Pipe Class III — D-Load = 1350 Lbs/Ft/Ft (.01" Crack)
D-Load = 2000 Lbs/Ft/Ft (Ultimate)

Pipe Class IV — D-Load = 2000 Lbs/Ft/Ft (.01" Crack)
D-Load = 3000 Lbs/Ft/Ft (Ultimate)

Pipe Class V — D-Load = 3000 Lbs/Ft/Ft (.01" Crack)
D-Load = 3750 Lbs/Ft/Ft (Ultimate)

* Under some conditions, the use of Class IV pipe and Class B bedding should be considered in lieu of Class V with Class C bedding.

ELLIPTICAL PIPE DIMENSIONS

Nominal Dimensions Horiz. Rise (In.)	Horiz. Span (In.)	Vert. Rise (In.)	Vert. Span (In.)	Equiv. Dia. (In.)	Area (Sq.Ft.)	Wall Thickness (In.) Classes HE II, III, IV VE II, III, IV
NA	NA	NA	NA	12	NA	NA
12	18	18	12	15	1.3	2 1/2
14	23	23	14	18	1.8	2 3/4
19	30	30	19	24	3.3	3 1/4
24	38	38	24	30	5.1	3 3/4
29	45	45	29	36	7.4	4 1/2
34	53	53	34	42	10.2	5
38	60	60	38	48	12.9	5 1/2
43	68	68	43	54	16.6	6
48	76	76	48	60	20.5	6 1/2
53	83	83	53	66	24.8	7
58	91	91	58	72	29.5	7 1/2
63	98	98	63	78	34.6	8
68	106	106	68	84	40.1	8 1/2
72	113	113	72	90	46.1	9
77	121	121	77	96	52.4	9 1/2
82	128	128	82	102	59.2	10
87	136	136	87	108	66.4	10 1/2
92	143	143	92	114	74.0	11
97	151	151	97	120	82.0	11 1/2

For Informational Purposes Only

ELLIPTICAL PIPE INSTALLATIONS
(All Sizes)

Installation	Height Of Fill (Ft.)	Pipe Class	Bedding Class
Horizontal	1-6*	HE II*	C
	7-10	HE III	C
	11-16	HE IV	C
	17+	Special Design	Modified
Vertical	1-6*	VE II*	C
	7-10	VE III	C
	11-16	VE IV	C
	17+	Special Design	Modified

Pipe Class HE II And VE II — D-Load = 1000 Lbs/Ft/Ft (.01" Crack)
D-Load = 1500 Lbs/Ft/Ft (Ultimate)

Pipe Class HE III And VE III — D-Load = 1350 Lbs/Ft/Ft (.01" Crack)
D-Load = 2000 Lbs/Ft/Ft (Ultimate)

Pipe Class HE IV And VE IV — D-Load = 2000 Lbs/Ft/Ft (.01" Crack)
D-Load = 3000 Lbs/Ft/Ft (Ultimate)

*Note: HE III and VE III pipe required for depths of cover less than 2' for 15", 18" and 24" equivalent.

Note: Height of fill (maximum cover) is measured from top of finished grade to outside top of pipe.

MAXIMUM COVER FOR REINFORCED CONCRETE PIPE ROUND AND ELLIPTICAL

STATE OF FLORIDA DEPARTMENT OF TRANSPORTATION
ROAD DESIGN

COVER HEIGHT

	Names	Dates
Designed By	EGR	09/85
Drawn By	HSD	09/85
Checked By	EGR	09/85

Approved By: E.G. Rueger, State Drainage Engineer

F.H.W.A. Approved:

Revision No. 90 | Sheet No. 2 of 4 | Index No. 205

ROUND PIPE - $2\frac{2}{3}$" x $\frac{1}{2}$" CORRUGATION

D (In)	Area (Sq. Ft.)	Maximum Height Of Fill (Ft.) Sheet Thickness In Inches (Gage) 0.064 (16)	0.079 (14)	0.109 (12)	0.138 (10)	0.168 (8)	Min. Cover (Ft.)
12	.79	100+	100+	NA	NA	NA	See Sheet 1 of 4
15	1.23	100+	100+	NA	NA	NA	
18	1.77	100+	100+	100+	NA	NA	
21	2.40	100+	100+	100+	NA	NA	
24	3.14	100+	100+	100+	NA	NA	
30	4.91	85	100+	100+	NA	NA	
36	7.1	71+	88	100+	100+	NA	
42	9.6	60+	76	100+	100+	NA	
48	12.6	53	66	93	100+	100+*	
54	16.0	NS	59	82	100+	100+*	
60	19.6	NS	NS	74	95	100+*	
66	23.8	NS	NS	NS	87	100+*	
72	28.3	NS	NS	NS	79	97*	
78	33.2	NS	NS	NS	NS	90*	
84	38.5	NS	NS	NS	NS	83*	

ROUND PIPE - 3" x 1" CORRUGATION

D (In)	Area (Sq. Ft.)	Maximum Height Of Fill (Ft.) Sheet Thickness In Inches (Gage) 0.064 (16)	0.079 (14)	0.109 (12)	0.138 (10)	0.168 (8)	Min. Cover (Ft.)
36	7.1	81	100+	100+	NA	NA	See Sheet 1 of 4
42	9.6	70	87	100+	NA	NA	
48	12.6	61	76	100+	100+	NA	
54	16.0	54	68	95	100+	NA	
60	19.6	48	61	85	100+	NA	
66	23.8	44	55	78	100	100+*	
72	28.3	40	51	71	91	100+*	
78	33.2	37	47	66	84	100+*	
84	38.5	35	43	61	78	100+*	
90	44.2	32	40	57	73	90*	
96	50.3	NS	38	53	68	84*	
102	56.7	NS	36	50	64	79*	
108	63.6	NS	NS	47	61	75*	
114	70.9	NS	NS	45	58	71*	
120	78.5	NS	NS	42	55	67*	
132	95.0	NS	NS	NS	50	61*	

ROUND PIPE - 5" x 1" CORRUGATION (3)

D (In)	Area (Sq. Ft.)	Maximum Height Of Fill (Ft.) Sheet Thickness In Inches (Gage) 0.064 (16)	0.079 (14)	0.109 (12)	0.138 (10)	0.168 (8)	Min. Cover (Ft.)
36	7.1	72	90	100+	NA	NA	See Sheet 1 of 4
42	9.6	62	77	100+	NA	NA	
48	12.6	54	68	95	100+	NA	
54	16.0	48	60	84	100+	NA	
60	19.6	43	54	76	98	NA	
66	23.8	39	49	69	89	100+*	
72	28.3	36	45	63	81	100*	
78	33.2	33	41	58	75	92*	
84	38.5	31	38	54	70	85*	
90	44.2	29	36	50	65	80*	
96	50.3	NS	34	47	61	75*	
102	56.7	NS	32	44	57	70*	
108	63.6	NS	NS	42	54	66*	
114	70.9	NS	NS	40	51	63*	
120	78.5	NS	NS	38	49	60*	
132	95.0	NS	NS	NS	44	54*	

Notes:

Increase the minimum cover values shown on Sheet 1 of 4 by 6" for gage and size combinations below the heavy lines.

Height of fill (maximum cover) is measured from top of finished grade to outside top of pipe.

Recorrugated end not available. May be considered for cross drain and side drain applications only.

NA - Not Available

NS - Not Suitable (For Highway H-20 Loadings)

(1) *Limited availability of this product. Check availability before specifying (generally limited to 3" x 1" corrugation pipe arch fabricated from 60" and smaller diameter round pipe in 12 ga. and thicker material).*

(2) *360° perforated pipe arch (french drain pipe) is not recommended. Do not specify without checking suitability and availability.*

(3) *5" x 1" corrugated pipe is currently not manufactured for the Florida market. Check availability before specifying.*

(4) *.109 in. (12 gage) for spiral rib, 8' maximum cover, $\frac{3}{4}$" x 1" x $1\frac{1}{2}$" rib spacing (2 rib) only.*

PIPE ARCH: SPIRAL RIB: $\frac{3}{4}$" x $\frac{3}{4}$" x $7\frac{1}{2}$" RIB SPACING
PIPE ARCH: SPIRAL RIB: $\frac{3}{4}$" x 1" x $11\frac{1}{2}$" RIB SPACING
PIPE ARCH - $2\frac{2}{3}$" x $\frac{1}{2}$" CORRUGATION

Span (In)	Rise (In)	Equiv. Round Pipe (In)	Area (Sq. Ft.)	Minimum Sheet Thickness Required (In) (Ga)	Maximum Height Of Fill (Ft.) Maximum Corner Pressure Lbs/Sq. Ft. 4000	6000	Min. Cover (Ft.)
17	13	15	1.1	.064 (16)	12	14	See Sheet 1 of 4
21	15	18	1.6	.064 (16)	10	14	
24	18	21	2.2	.064 (16)	7	13	
28	20	24	2.9	.064 (16)	5	11	
35	24	30	4.5	.064 (16)	NS	7	
42	29	36	6.5	.064 (16)	NS	7	
49	33	42	8.9	.079 (14)	NS	6	
57	38	48	11.6	.109 (12)	NS	8	
64	43	54	14.7	.109 (12)	NS	9	
71	47	60	18.1	.138 (10) (4)	NS	10 (4)	
77	52	66	21.9	.168 (8)* (4)	5	10 (4)	
83	57	72	26.0	.168 (8)* (4)	5	10 (4)	

PIPE ARCH - 3" x 1" (1)(2)(3) and 5" x 1" (2)(3) CORR.

Span (In)	Rise (In)	Equiv. Round Pipe (In)	Area (Sq. Ft.)	Minimum Sheet Thickness Required (In) (Ga)	Maximum Height Of Fill (Ft.) Maximum Corner Pressure Lbs/Sq.Ft. 4000	6000	Min. Cover (Ft.)
40	31	36	7.0	.079 (14)	8	12	See Sheet 1 of 4
46	36	42	9.4	.079 (14)	8	13	
53	41	48	12.3	.079 (14)	8	13	
60	46	54	15.6	.079 (14)	8	13	
66	51	60	19.3	.079 (14)	9	13	
73	55	66	23.2	.079 (14)	11	16	
81	59	72	27.4	.079 (14)	11	17	
87	63	78	32.1	.079 (14)	10	16	
95	67	84	37.0	.079 (14)	11	17	
103	71	90	42.4	.109 (12)	10	15	
112	75	96	48.0	.109 (12)	10	16	
117	79	102	54.2	.109 (12)	10	15	
128	83	108	60.5	.138 (10)	9	14	
137	87	114	67.4	.138 (10)	8	13	
142	91	120	74.5	.168 (8)	7	12	

ROUND PIPE - SPIRAL RIB
RIB SPACING ($\frac{3}{4}$" x $\frac{3}{4}$" - $7\frac{1}{2}$") or ($\frac{3}{4}$" x 1" - $11\frac{1}{2}$")

D (In.)	Area (Sq. Ft.)	Maximum Height Of Fill (Ft.) Sheet Thickness In Inches (Gage) 0.064 (16)	0.079 (14)	0.109 (12)	0.138 (10)	0.168 (8)	Min. Cover (Ft.)
12	0.79	NA	NA	NA	NA	NA	See Sheet 1 of 4
15	1.23	NA	NA	NA	NA	NA	
18	1.77	68	72	NA	NA	NA	
21	2.40	58	62	100 +	NA	NA	
24	3.14	51	72	100 +	NA	NA	
30	4.91	41	58	97	NA	NA	
36	7.1	34	48	81	NA	NA	
42	9.6	29	41	69	NA	NA	
48	12.6	26	36	61	NA	NA	
54	16.0	23	32	54	NA	NA	
60	19.6	NS	29	49	NA	NA	
66	23.8	NS	26	44	NA	NA	
72	28.3	NS	24	40	NA	NA	
78	33.2	NS	NS	37	NA	NA	
84	38.5	NS	NS	35	NA	NA	
90	44.2	NS	NS	32	NA	NA	
96	50.3	NS	NS	30	NA	NA	
102	56.7	NS	NS	29	NA	NA	
108	63.6	NS	NS	27 (A)	NA	NA	

(A) = $\frac{3}{4}$" x 1" x $11\frac{1}{2}$" Only.

MAXIMUM COVER FOR CORRUGATED STEEL PIPE ROUND AND PIPE ARCH

STATE OF FLORIDA DEPARTMENT OF TRANSPORTATION
ROAD DESIGN

COVER HEIGHT

	Names	Dates
Designed By	EGR	09/85
Drawn By	HSD	09/85
Checked By	EGR	09/85

Approved By: E G Kruger
State Drainage Engineer

F.H.W.A. Approved:

Revision No.	Sheet No.	Index No.
92	3 of 4	205

ROUND PIPE - 2⅔" x ½" CORRUGATION

D (In)	Area (Sq. Ft.)	Maximum Height Of Fill (Ft.) Sheet Thickness In Inches (Gage) 0.060 (16)	0.075 (14)	0.105 (12)	0.135 (10)	0.164 (8)	Min. Cover (Ft.)
12	0.8	90	100+	NA	NA	NA	See Sheet 1 of 4
15	1.2	72	80	NA	NA	NA	
18	1.8	59	75	100+	NA	NA	
21	2.4	52	65	92	NA	NA	
24	3.1	44	56	79	NA	NA	
30	4.9	35 DR	44	63	NA	NA	
36	7.1	NS	36 DR	52	68	NA	
42	9.6	NS	NS	44 DR	58	NA	
48	12.6	NS	NS	38 DR	50 DR	61	
54	15.9	NS	NS	34 DR	45 DR	54 DR	
60	19.6	NS	NS	NS	39 DR	49 DR	
66	23.8	NS	NS	NS	NS	44 DR	
72	28.3	NS	NS	NS	NS	40 DR	

ROUND PIPE - 3" x 1" CORRUGATION

D (In)	Area (Sq. Ft.)	Maximum Height Of Fill (Ft.) Sheet Thickness In Inches (Gage) 0.060 (16)	0.075 (14)	0.105 (12)	0.135 (10)	0.164 (8)	Min. Cover (Ft.)
36	7.1	33	42	60	NA	NA	See Sheet 1 of 4
42	9.6	28	36	51	NA	NA	
48	12.6	24	31	45	58	NA	
54	15.9	21	28	39	51	NA	
60	19.6	19	24	35	46	NA	
66	23.8	15 DR	22	32	42	51	
72	28.3	NS	20 DR	29	38	47	
78	33.2	NS	15 DR	27	35	43	
84	38.5	NS	NS	24 DR	32	40	
90	44.2	NS	NS	23 DR	30	37	
96	50.3	NS	NS	21 DR	28 DR	34	
102	56.7	NS	NS	NS	26 DR	32	
108	63.6	NS	NS	NS	24 DR	30 DR	
114	70.9	NS	NS	NS	NS	28 DR	
120	78.5	NS	NS	NS	NS	27 DR	

ROUND PIPE - SPIRAL RIB
RIB SPACING (¾" x ¾" - 7½") or (¾" x 1" - 11½")

D (In.)	Area (Sq. Ft.)	Maximum Height Of Fill (Ft.) Sheet Thickness In Inches (Gage) 0.060 (16)	0.075 (14)	0.105 (12)	0.135 (10)	0.164 (8)	Min. Cover (Ft.)
12	0.79	NA	NA	NA	NA	NA	See Sheet 1 of 4
15	1.23	63 (1)	87 (1)	NA	NA	NA	
18	1.77	55	76	NA	NA	NA	
21	2.40	47	65	NA	NA	NA	
24	3.14	41	57	NA	NA	NA	
30	4.91	33 DR	45	73	NA	NA	
36	7.1	NS	38 DR	61	NA	NA	
42	9.6	NS	NS	52	NA	NA	
48	12.6	NS	NS	46	65	NA	
54	16.0	NS	NS	40 DR	57	NA	
60	19.6	NS	NS	NS	52	NA	
66	23.8	NS	NS	NS	47 DR	NA	
72	28.3	NS	NS	NS	43 DR	NA	
78	33.2	NS	NS	NS	39 DR (3)	NA	
84	38.5	NS	NS	NS	34 DR (3)	NA	
90	44.2	NS	NS	NS	32 DR (1)(4)	NA	
96	50.3	NS	NS	NS	30 DR (1)(4)	NA	

PIPE ARCH: SPIRAL RIB: ¾" x ¾" x 7½" RIB SPACING
PIPE ARCH: SPIRAL RIB: ¾" x 1" x 11½" RIB SPACING
PIPE ARCH - 2⅔" x ½" CORRUGATION (2)

Span (In)	Rise (In)	Equiv. Round Pipe (In)	Area (Sq. Ft.)	Minimum Sheet Thickness Required (In) (Ga)	Maximum Height Of Fill (Ft.) Maximum Corner Pressure - Lbs/Sq.Ft. 4000	6000	Min. Cover (Ft.)
17	13	15	1.1	.060 (16)	12	15	See Sheet 1 of 4
21	15	18	1.6	.060 (16)	10	14	
24	18	21	2.2	.060 (16)	7	13	
28	20	24	2.9	.075 (14)	5	11	
35	24	30	4.5	.075 (14)	NS	7	
42	29	36	6.5	.105 (12)	NS	7	
49	33	42	8.9	.105 (12)	NS	6	
57	38	48	11.6	.135 (10) (5)	NS	8 (5)	
64	43	54	14.7	.135 (10) (5)	NS	9 (5)	
71	47	60	18.1	.164 (8) (5)	NS	10 (5)	
77	52	66	21.9	.164 (8) (6)	NS	10 (6)	
83	57	72	26.0	.164 (8) (6)	NS	10 (6)	

PIPE ARCH - 3" x 1" CORRUGATION (1)(2)

Span (In)	Rise (In)	Equiv. Round Pipe (In)	Area (Sq. Ft.)	Minimum Sheet Thickness Required (In) (Ga)	Maximum Height Of Fill (Ft.) Maximum Corner Pressure - Lbs/Sq.Ft. 4000	6000	Min. Cover (Ft.)
40	31	36	7.0	.060 (16)	8	12	See Sheet 1 of 4
46	36	42	9.4	.060 (16)	8	13	
53	41	48	12.3	.060 (16)	8	13	
60	46	54	15.6	.075 (14)	8	13	
66	51	60	19.3	.075 (14)	8	13	
73	55	66	23.2	.105 (12)	11	16	
81	59	72	27.4	.105 (12)	11	17	
87	63	78	32.1	.105 (12)	10	16	
95	67	84	37.0	.105 (12)	11	17	
103	71	90	42.4	.135 (10)	10	15	
112	75	96	48.0	.135 (10)	10	16	
117	79	102	54.2	.164 (8)	10	15	

Notes:

Increase the minimum cover values shown on Sheet 1 of 4 by 6" for gage and size combinations below the heavy lines.

Height of fill (maximum cover) is measured from top of finished grade to outside top of pipe.

NA - Not Available

NS - Not Suitable (For Highway H-20 Loadings)

DR - Design Review is recommended for each specific application. The review should identify any special handling, installation, backfill procedures, and construction load restrictions which may be required. See FDOT Drainage Manual, Chapter 19, Section 19.4, Vol. II, 1987. The specification of the next thicker culvert in lieu of this review is not appropriate. (The review performed by the designer does not relieve the contractor from analyzing and taking any necessasry precautions required to protect partially or completely constructed pipe from the equipment used during construction.)

(1) Limited availability of this product. Check availability before specifying.

(2) 360° perforated pipe (french drain pipe) is not recommended in the pipe arch shape. Do not specify without checking both for suitability and availability.

(3) Special installation restrictions required. Installations require special excavation and backfill procedures and shall be in accordance with manufacturers recommendations.

(4) This size and gage combination must be strutted during installation per manufacturers recommendations. Extra care will be required during handling and installation.

(5) .105 in. (12 gage) for spiral rib, 8' maximum cover, ¾" x 1" x 11½" rib spacing (2 rib) only.

(6) .135 in. (10 gage) for spiral rib, 8' maximum cover, ¾" x 1" x 11½" rib spacing (2 rib) only.

CORRUGATED ALUMINUM ALLOY ROUND PIPE AND PIPE ARCH

STATE OF FLORIDA DEPARTMENT OF TRANSPORTATION
ROAD DESIGN

COVER HEIGHT

	Names	Dates
Designed By	EGR	09/85
Drawn By	HSD	09/85
Checked By	EGR	09/85

Approved By: G. G. Lucas, State Drainage Engineer

Revision No.	Sheet No.	Index No.
92	4 of 4	205

F.H.W.A. Approved:

APPLICATION GUIDELINES TO CURB INLETS AND GUTTER INLETS

INDEX NO.	INLET TYPE	TYPE CURB/GUTTER	GRADE CONSIDERATION	HYDRAULIC INTAKE (CFS) (1)	BICYCLE SAFE / PEDESTRIAN SAFE	UTILITY LOCATION FROM CURB	MAXIMUM PIPE SIZE WITH STANDARD BOTTOMS (5)	COMMENTS
210 (2)	1	E & F	Continuous	4.1	Yes / Limited	Inside	30"	
	2 (3)	E & F	Sag	9.0	Yes / Limited	Inside	30"	
	3	E & F	Continuous	1.9	Yes / Limited	Inside	30"	
	4 (3)	E & F	Sag	6.5	Yes / Limited	Inside	30"	
211 (2)	5	E & F	Continuous	3.1	Yes / Limited	Outside	30"	
	6 (3)	E & F	Sag	7.5	Yes / Limited	Outside	30"	
212 (2)	7	Separator I & II	Continuous or Sag	4.4	Yes / Limited	Inside	24" Longitudinal 30" Transverse	
213 (2)	8	Separator IV & V	Continuous or Sag	4.4	Yes / Limited	Inside	24" Longitudinal 30" Transverse	
214 (2)	9	D & F	Continuous or Sag	0.5	Yes / Yes	Outside	30"	To be used only where flows are light to moderate and R/W does not permit the use of throated curb inlets. Vanes to be directed to major flow direction.
215 (2)	10	D & F	Continuous or Sag	0.3	Yes / Yes	Outside	30"	To be used only where flows are light and R/W does not permit the use of throated curb inlets.
217	1	Median Barrier Wall	Continuous	4.0	No / Yes (4)	NA	15" Longitudinal 30" Transverse	
	2	Median Barrier Wall	Sag	5.0	No / No (4)	NA	15" Longitudinal 30" Transverse	
	3 (3)	Median Barrier Wall	Double Inlet Continuous	4.0	No / Yes (4)	NA	42" Longitudinal 30" Transverse	
	4 (3)	Median Barrier Wall	Double Inlet Sag	5.0	No / Yes (4)	NA	42" Longitudinal 30" Transverse	
	5 (3)	Median Barrier Wall	Double Inlet Sag & Continuous	5.0	No / Yes (4)	NA	42" Longitudinal 30" Transverse	
218	—	Barrier Wall	Continuous or Sag	5.2	Yes / Yes	NA	30"	
220	S	Shoulder	Continuous	4.0	No / Yes (4)	NA	30" Transverse	
221	V	Valley	Continuous or Sag	5.0	Yes / Yes	NA	30" Transverse	

(1) Hydraulic intake values do not represent hydraulic capacity but are shown to compare inlets based on a 0.2% longitudinal slope, .02 cross slope and a 90% efficiency factor. For other conditions the values shown should be adjusted for bypass flow or debris blockage. Sag inlet intake value is based on flooding the outside lane or shoulder, where spread rather than hydraulic intake may dictate inlet selection or spacing. Full design data and additional information is available in "A Study of Stormwater Inlet Capacities" by U.S.F., and the Department's 1987 Drainage Manual Vol. 2, Chapter 12 and Vol. 3, Chapter 2.

(2) Curb inlets and transitions should be located outside pedestrian cross walk areas, preferably upgrade from these locations.

(3) Double throated inlets are usually not warranted unless the minor flow is in excess of 50 feet distance or 0.5 cfs.

(4) Median Barrier Inlets Types 1, 2, 3, 4, 5 & Shoulder Inlet Type S can be made bicycle safe by specifying the reticuline grate.

(5) Pipe sizes are circular, Class III, B Wall, concrete pipe. Elliptical pipe and corrugated pipe are to be checked for fit in accordance with Index No. 201; metal pipe sizes should be reviewed using $2\frac{2}{3}$" x $\frac{1}{2}$" corrugation up to 30" and 3" x 1" corrugation for larger sizes.

STATE OF FLORIDA DEPARTMENT OF TRANSPORTATION
ROAD DESIGN

CURB INLET & GUTTER INLET APPLICATION GUIDE

	Names	Dates
Designed By	E G R	09/06/84
Drawn By	D A E	09/06/84
Checked By	E G R	09/06/84
F.H.W.A. Approved:		09/21/84

Approved By _____
State Drainage Engineer

Revision No.	Sheet No.	Index No.
92	1 of 1	209

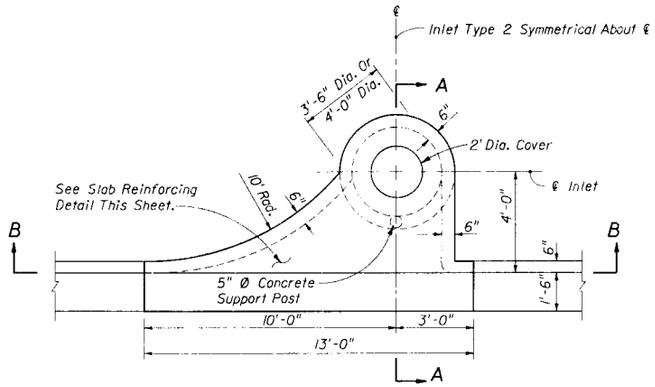

PLAN (INLET TYPE 2 SYMMETRICAL ABOUT ℄)

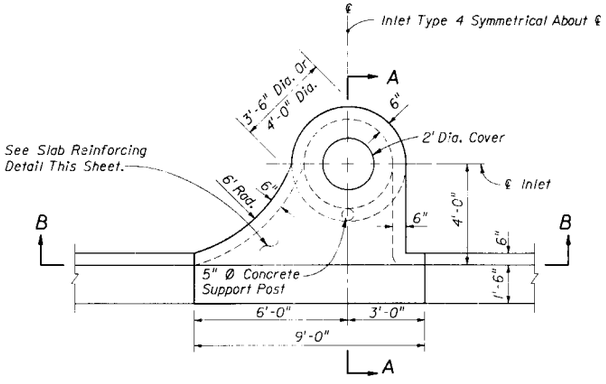

PLAN (INLET TYPE 4 SYMMETRICAL ABOUT ℄)

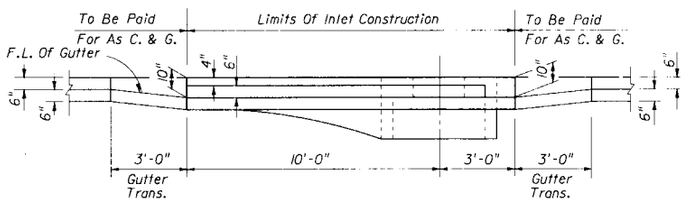

SECTION BB (INLET TYPE 2 SYMMETRICAL ABOUT ℄)

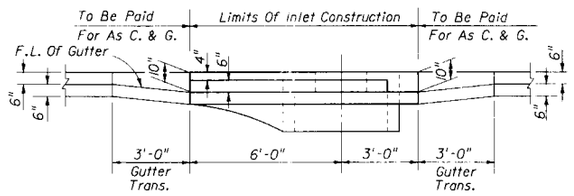

SECTION BB (INLET TYPE 4 SYMMETRICAL ABOUT ℄)

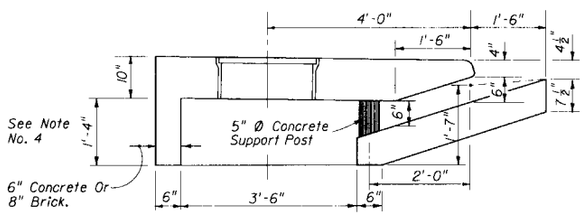

DIMENSIONAL SECTION

INLETS TYPES 1 AND 2

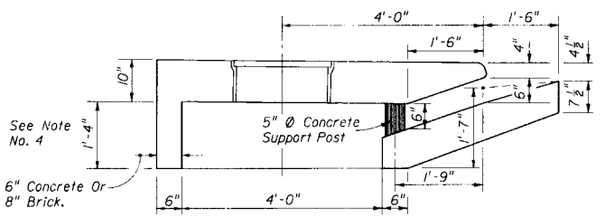

DIMENSIONAL SECTION

INLETS TYPES 3 AND 4

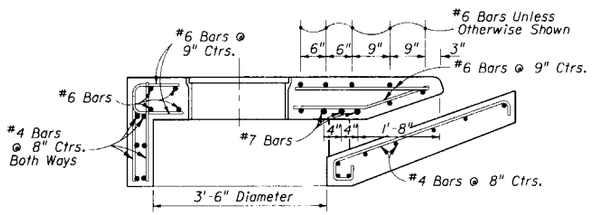

REINFORCING SECTION
3'-6" DIA. STRUCTURE BOTTOM (SECTION AA)

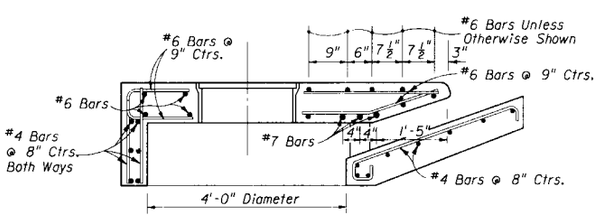

REINFORCING SECTION
4'-0" DIA. STRUCTURE BOTTOM (SECTION AA)

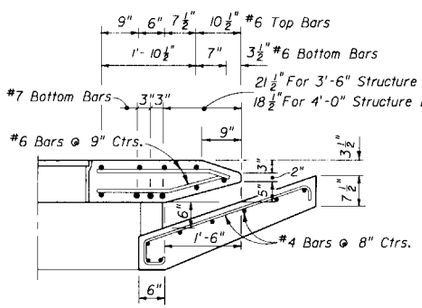

DIMENSION & REINFORCING HALF SECTION
TYPES A & E CURB (HALF SECTION AA)
(TYPE E GUTTER SHOWN)

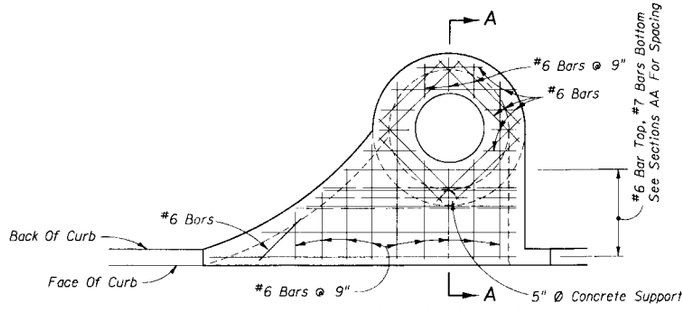

INLETS TYPES 1 AND 3

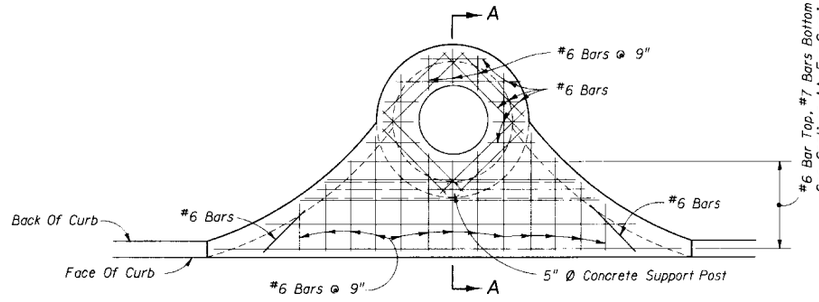

INLETS TYPES 2 AND 4

SLAB REINFORCING

GENERAL NOTES

1. The finished grade and slope of the inlet tops are to conform with the finished cross slope and grade of the proposed sidewalk and/or border.
2. When inlets are to be constructed on a curve, refer to the plans to determine the radius and, where necessary, modify the inlet details accordingly. Bend steel when necessary.
3. All steel in inlet top shall have 1½" minimum cover unless otherwise shown. Inlet tops shall be either cast-in-place or precast concrete.
4. The rear wall portion of inlet tops Types 1, 2, 3 & 4 may be constructed with brick. Dowels to top slab required.
6. For supplemental details see Index No. 201.
5. Only round concrete support post will be acceptable.
7. These inlets are to be used with Curb and Gutter Types E and F. Locate outside of pedestrain crosswalk where practical.
8. For sturcture bottoms see Index No. 200.
9. Inlet to be paid for under the contract unit price for Inlets (Curb) (Type —), Each.

STATE OF FLORIDA DEPARTMENT OF TRANSPORTATION
ROAD DESIGN

CURB INLET TOPS
TYPES 1, 2, 3, & 4

	Names	Dates
Designed By		
Drawn By		
Checked By		
Approved:		05/01/75

Approved By: E.G. Price
State Drainage Engineer

Revision No.	Sheet No.	Index No.
92	1 of 1	210

TRANSVERSE SECTIONS FOR INLETS TYPES 1, 2, 3 & 4

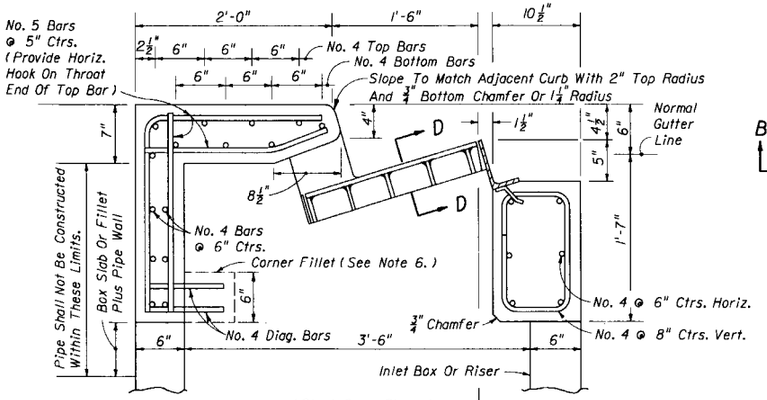

(Steel Cover Shown)

SECTION AA

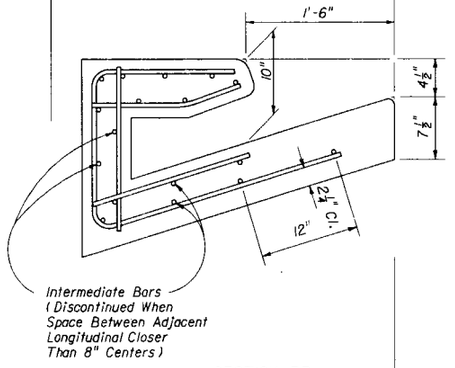

SECTION PP

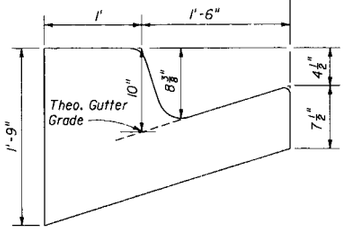

SECTION QQ

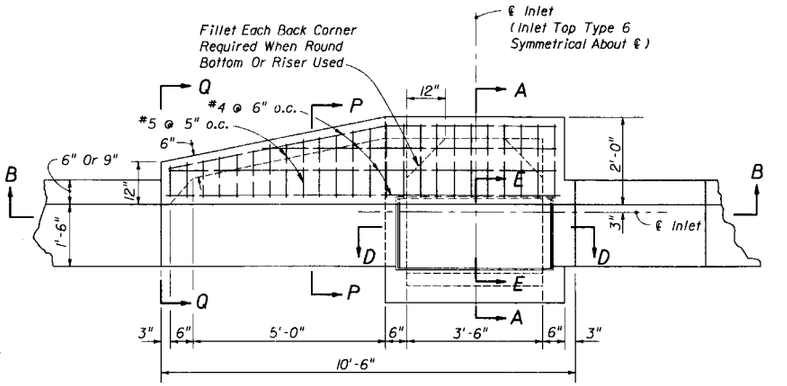

TOP VIEW

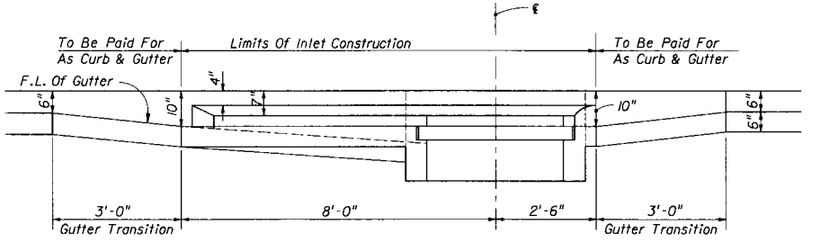

SECTION BB

(Curb Inlet Top Type 6 Symmetrical With Left Half)

INLET TYPE 5

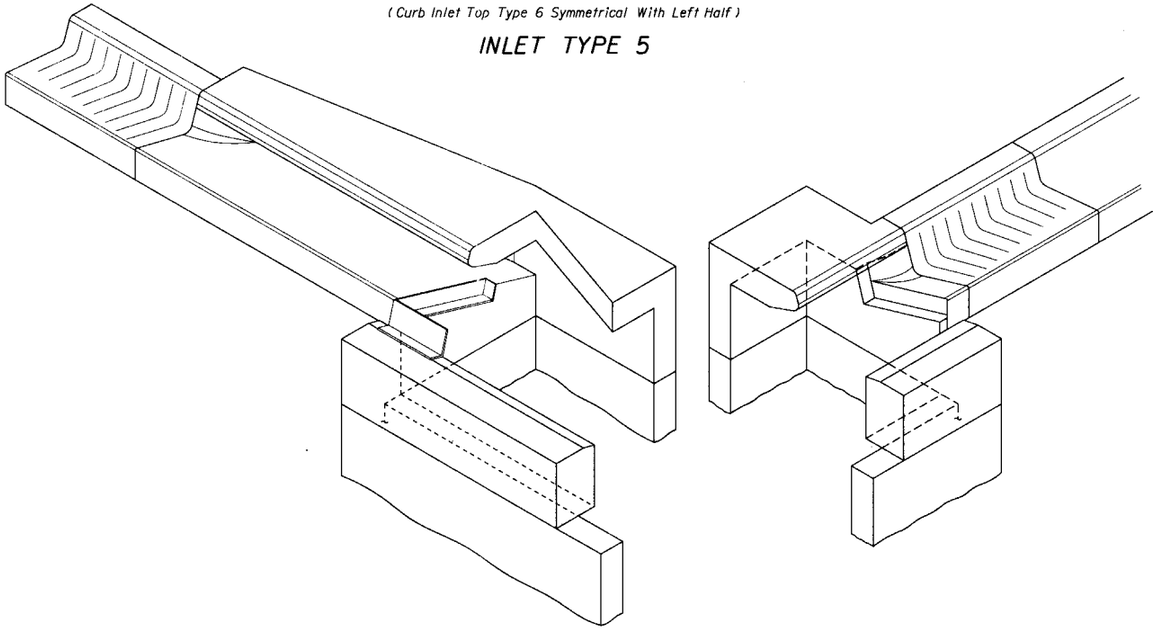

SKETCHS SHOWING FRAME SEAT AND THROAT RECESS

GENERAL NOTES

1. The finished grade and slope of the inlet tops are to conform with the finished cross slope and grade of the proposed sidewalk and/or parkway.
2. When inlets are to be constructed on a curve, refer to the plans to determine the radius and, where necessary, modify the inlet details accordingly. Bend steel when necessary.
3. All reinforcing steel shall have 1¼" minimum cover unless otherwise shown. Inlet tops shall be either cast-in-place or precast concrete.
4. Precasting of this inlet top will be permitted. Precast units shall conform to the dimensions shown or in accordance with approved shop drawings. Request for shop drawing approval shall be directed to the State Drainage Engineer.
5. Concrete meeting the requirements of A.S.T.M. C 478 (4,000 P.S.I.) may be used in lieu of Class I concrete for precast units, manufactured in plants which are under the Standard Operating Procedures for the inspection of precast drainage products.
6. The corner fillets shown for rectangular throats are necessary only when throats are to be used in conjunction with circular inlet bottoms or when used on skew with rectangular inlet boxes.
7. For inlet bottoms see Index No. 200.
8. These inlet tops are designed for use with standard curb and gutter Type E and Type F. Locate outside of pedestrian crosswalk where practical.
9. See Index 201 for supplemental details.
10. All steel used for frame and cover shall meet the requirements of ASTM A-36.
11. Either cast iron covers or steel covers may be used. Iron covers shall be Class No. 30 castings in accordance with ASTM A-48.
12. When Alternate "G" Cover is specified in plans either the cast iron cover and galvanized steel frame or the the galvanized steel cover and frame must be used. Covers are to be grouted in accordance with the grouting detail shown on sheet 2 of 2, in lieu of tack welding.
13. Inlet to be paid for under the contract unit price for Inlets (Curb) (Type ___), Each.

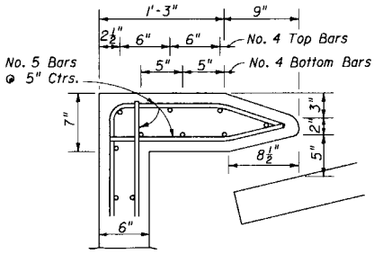

TOP MODIFICATION FOR TYPE E CURB

STATE OF FLORIDA DEPARTMENT OF TRANSPORTATION
ROAD DESIGN

CURB INLET TOPS TYPES 5 & 6

	Names	Dates
Designed By		
Drawn By		
Checked By		
F.H.W.A. Approved:		

Approved By: [signature] State Drainage Engineer

Revision No.	Sheet No.	Index No.
92	1 of 2	211

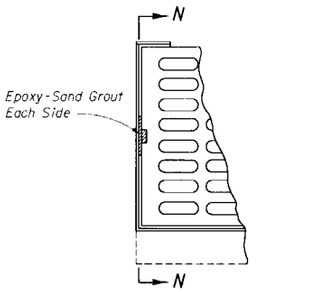

TOP VIEW

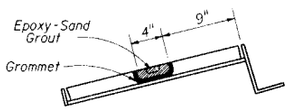

SECTION NN

GROUTING DETAILS

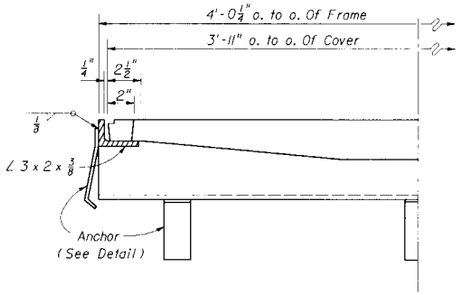

HALF SECTION DD

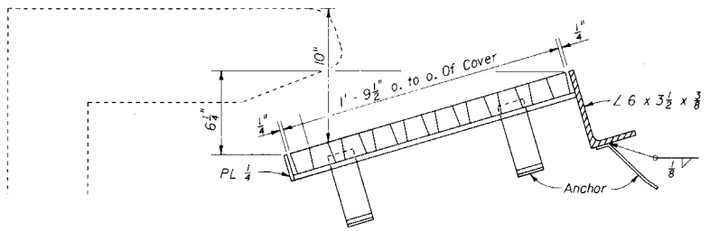

SECTION EE

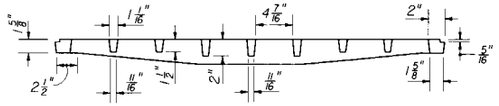

SECTION GG

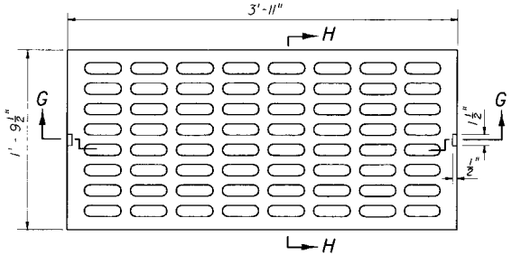

TOP VIEW

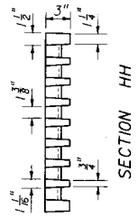

SECTION HH

CAST IRON COVER

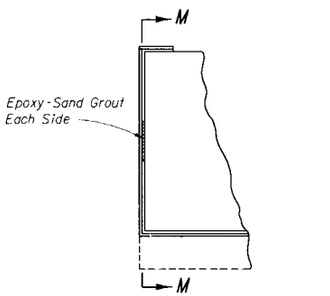

TOP VIEW

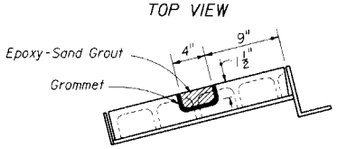

SECTION MM

GROUTING DETAILS

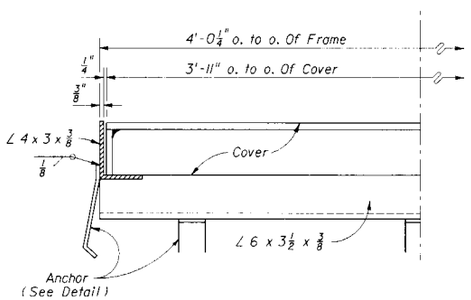

HALF SECTION DD

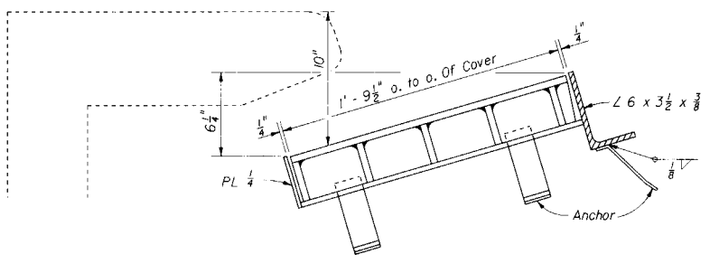

SECTION EE

STEEL COVER

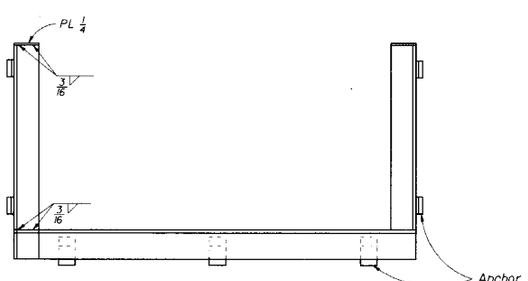

TOP VIEW

FRAME

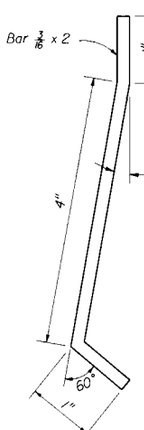

ANCHOR DETAIL

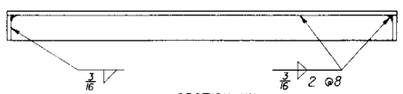

SECTION XX

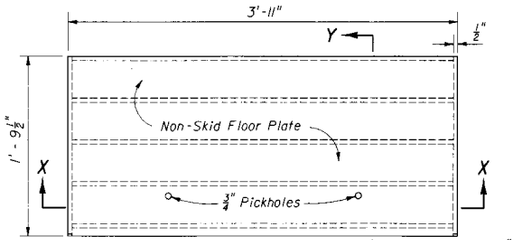

TOP VIEW

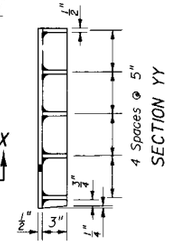

SECTION YY

STATE OF FLORIDA DEPARTMENT OF TRANSPORTATION
ROAD DESIGN

CURB INLET TOPS TYPES 5 & 6

	Names	Dates
Designed By		
Drawn By		
Checked By		
F.H.W.A. Approved:		

Approved By _____
State Drainage Engineer

Revision No.	Sheet No.	Index No.
90	2 of 2	211

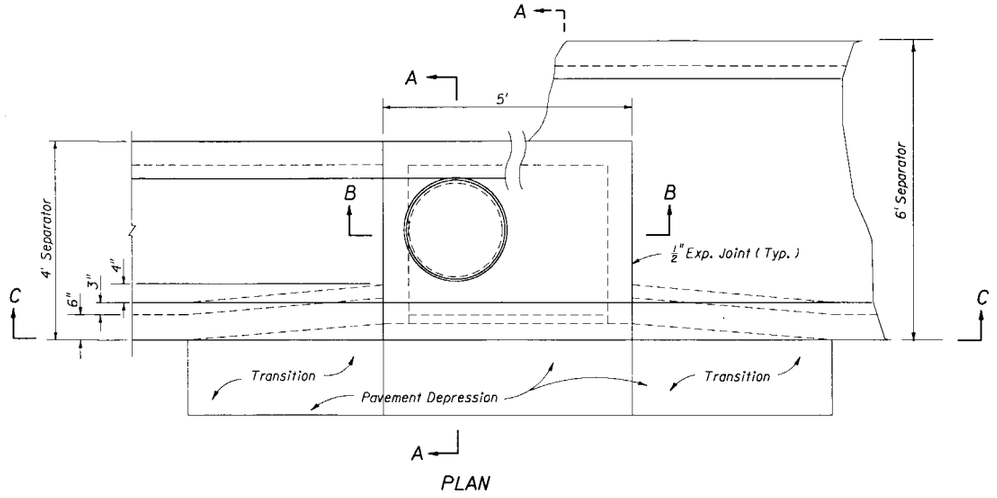

PLAN

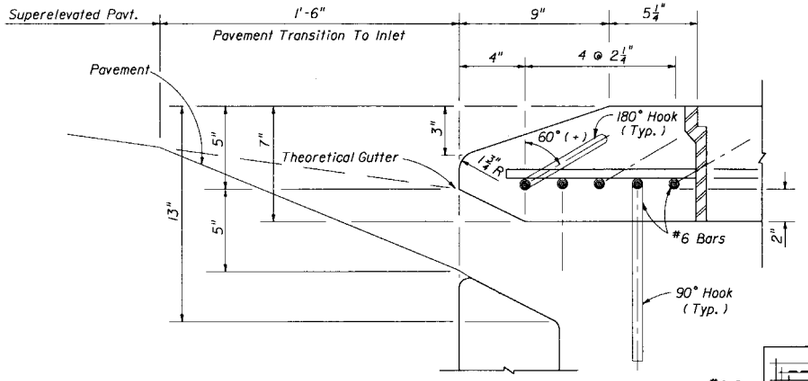

THROAT DETAIL

#6 Bars
ACI Std. Hooks Required Each End Of Straight Bars And Right End Of Bent Bars: 180° Hooks, Canted 60° (+), On Odd Bars; 90° Hooks, Down, On Even Bars Numbered From Throat Side.

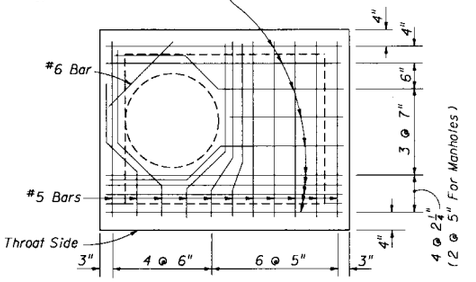

REINFORCING STEEL DIAGRAM
TOP SLAB OF INLETS

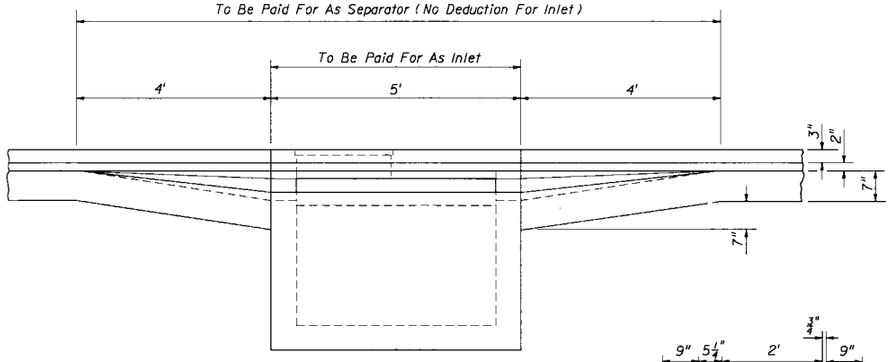

SECTION CC

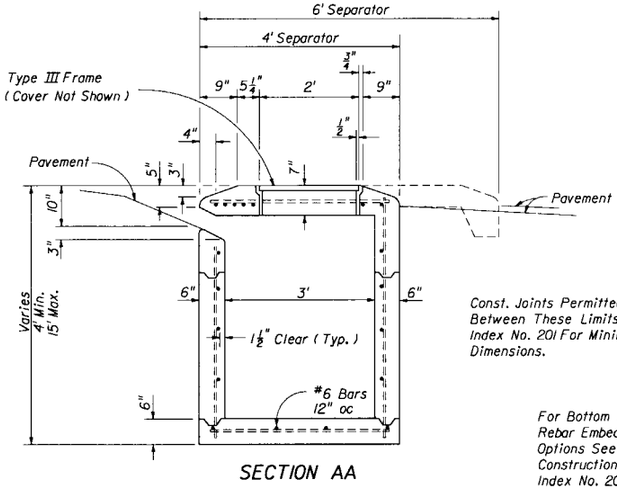

SECTION AA

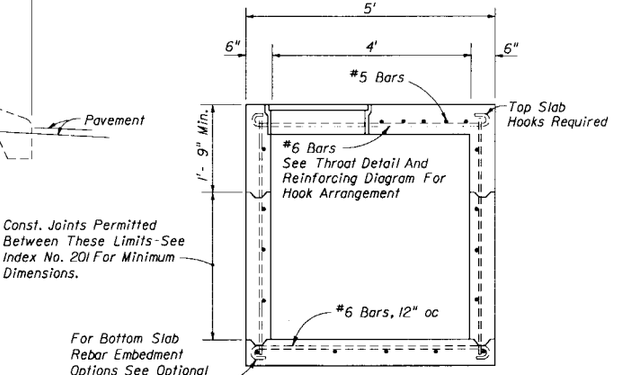

Const. Joints Permitted Between These Limits-See Index No. 201 For Minimum Dimensions.

For Bottom Slab Rebar Embedment Options See Optional Construction Joints, Index No. 201.

SECTION BB

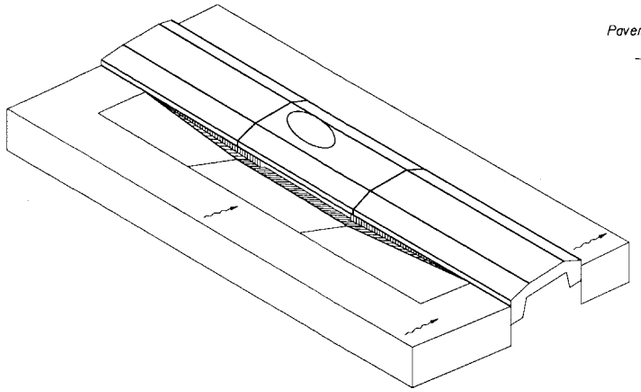

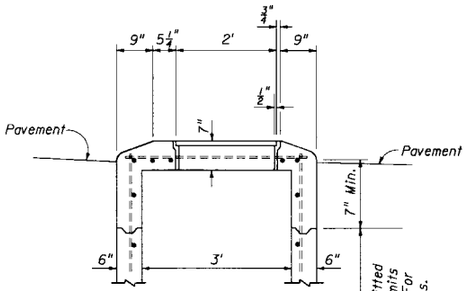

MODIFICATION WHEN USED AS A MANHOLE

Const. Joints Permitted Between These Limits See Index No. 201 For Minimum Dimensions.

GENERAL NOTES

1. This inlet is used in Traffic Separators Types I and II; or, in separators constructed with Curbs Types A, B and E and sidewalk paving, which cannot accommodate Inlets Types 1, 2, 3, 4, 5, or 6. Use of this Inlet on through traffic side of the separator is not permitted in medians with Curbs Types A and B. Locate inlet outside of pedestrian cross traffic.
2. Reinforcing-No. 4 bars @ 12" centers unless otherwise noted. Cut or bend bars out of way of pipe when necessary. Bars to clear pipe by 1½".
3. Recommended maximum pipe sizes are 24" longitudinal and 30" transverse. For larger pipe, inlets with Alt. B bottoms, Index No. 200 are recommended.
4. For supplementary details see Index No. 201.
5. Inlet to be paid for under the contract unit price for Inlets (Curb) (Type __), Each.

STATE OF FLORIDA DEPARTMENT OF TRANSPORTATION
ROAD DESIGN

CURB INLET TYPE 7

	Names	Dates
Designed By	EGR	08/81
Drawn By	HSD	08/81
Checked By	JG	08/81
F.H.W.A. Approved: 10/08/81		

Approved By E.G. Regis
State Drainage Engineer

Revision No.	Sheet No.	Index No.
92	1 of 1	212

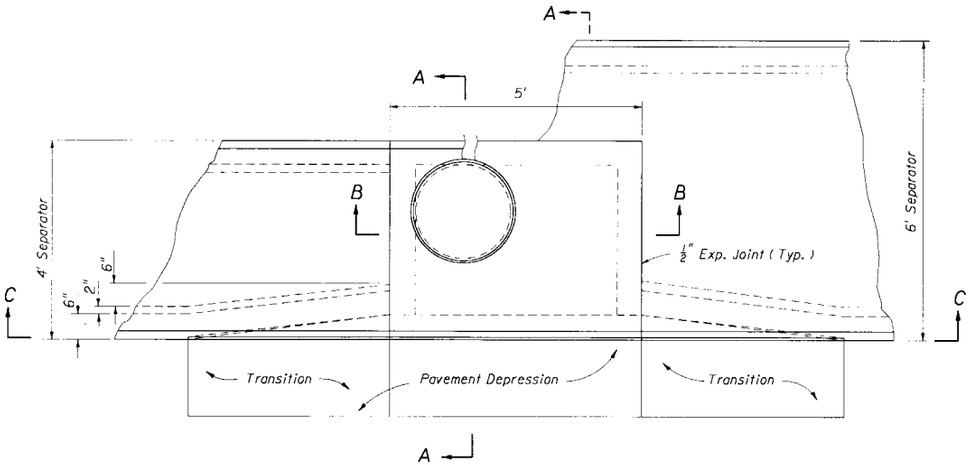

PLAN

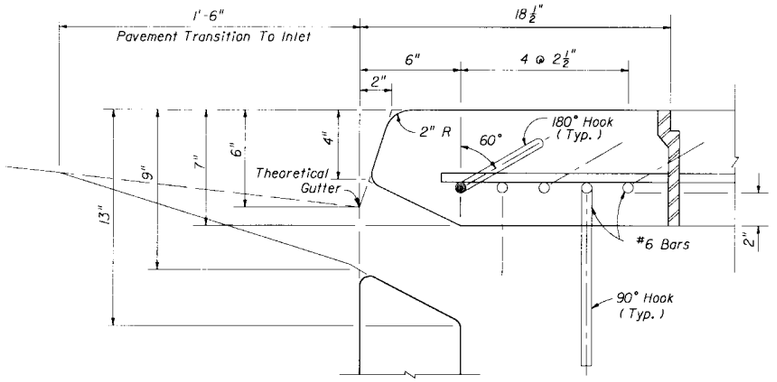

THROAT DETAIL (SECTION AA)

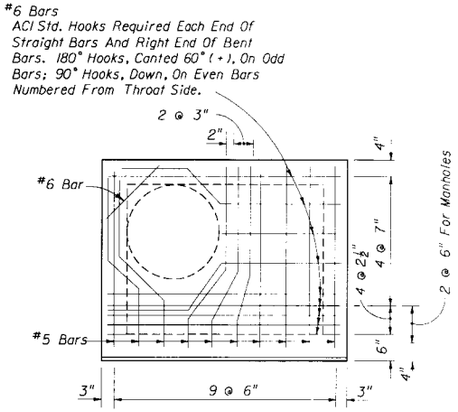

REINFORCING STEEL DIAGRAM
TOP SLAB OF INLET

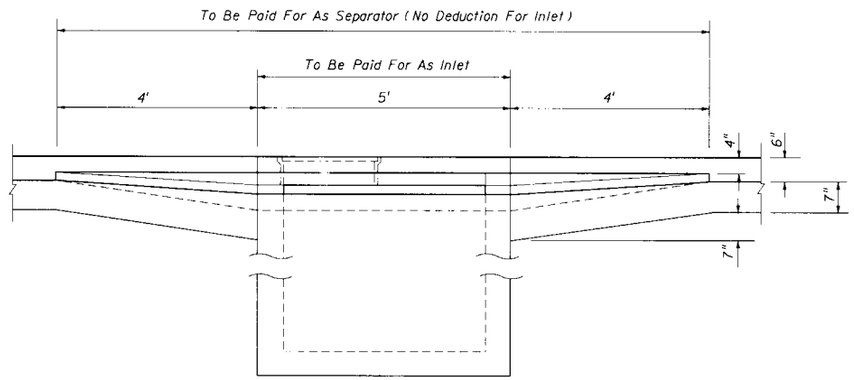

SECTION CC

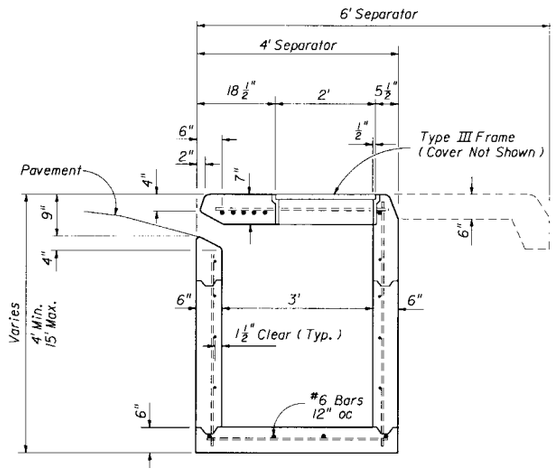

SECTION AA

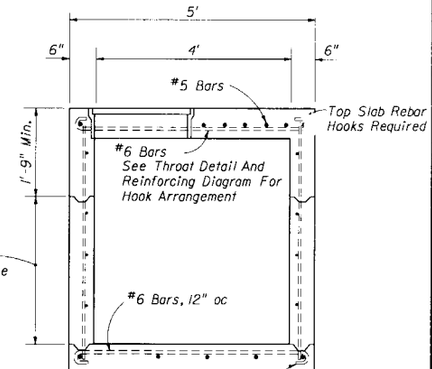

Const. Joints Permitted Between These Limits - See Index No. 201 For Minimum Dimensions.

SECTION BB

For Bottom Slab Rebar Embedment Options See Optional Construction Joints, Index No. 201.

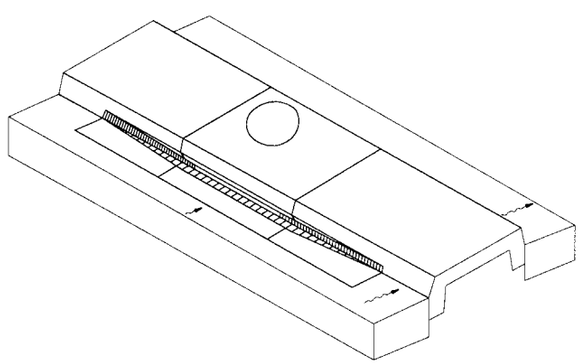

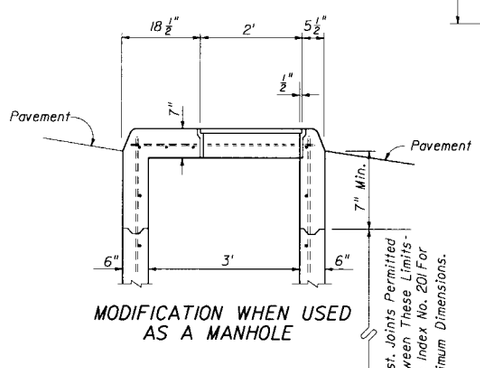

MODIFICATION WHEN USED AS A MANHOLE

Const. Joints Permitted Between These Limits - See Index No. 201 For Minimum Dimensions.

GENERAL NOTES

1. This inlet is to be used only in Traffic Separators Types IV and V; or, in separators constructed with Curbs Types D and F and sidewalk paving, which cannot accommodate Inlets Types 1, 2, 3, 4, 5 or 6. Use of this inlet on the through traffic side of the separator should be avoided in medians constructed with Curb Type D (Curb inlets Types 9 or 10 are recommended). Locate inlet outside of pedestrian cross traffic.
2. Reinforcing - No. 4 bars at 12" centers unless otherwise noted. Cut or bend bars out of way of pipe when necessary. Bars to clear pipe by 1 1/2".
3. Recommended maximum pipe sizes are 24" longitudinal and 30" transverse. For larger pipe, inlets with Alt. B bottoms, Index No. 200 are recommended.
4. For supplemental details see Index No. 201.
5. Inlet to be paid for under the contract unit price for Inlets (Curb) (Type _), Each.

STATE OF FLORIDA DEPARTMENT OF TRANSPORTATION
ROAD DESIGN

CURB INLET TYPE 8

	Names	Dates
Designed By	EGR	07/81
Drawn By	HSD	07/81
Checked By	JG	07/81
F.H.W.A. Approved:		10/08/81

Approved By: E.G. Price, State Drainage Engineer

Revision No.	Sheet No.	Index No.
92	1 of 1	213

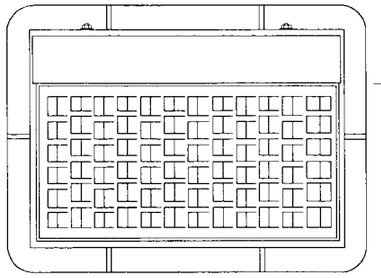

TOP VIEW

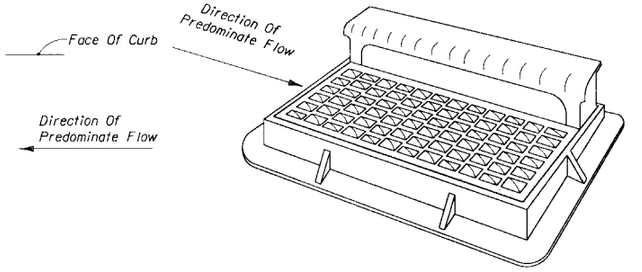

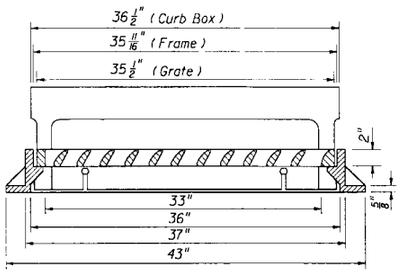

LONGITUDINAL SECTION

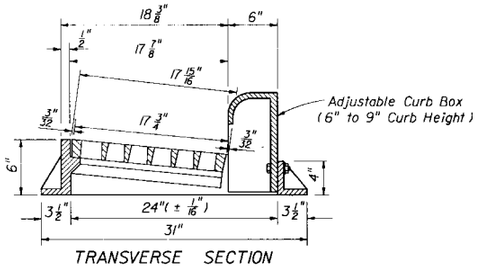

TRANSVERSE SECTION

FRAME AND GRATE

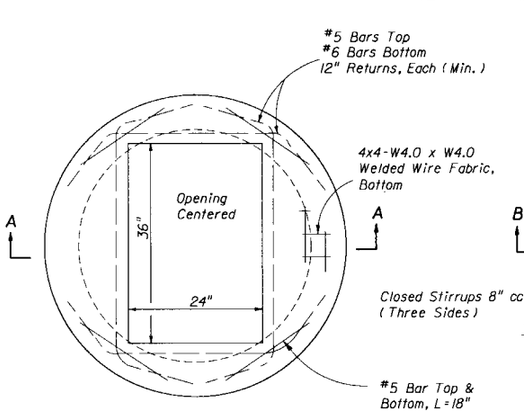

TOP VIEW

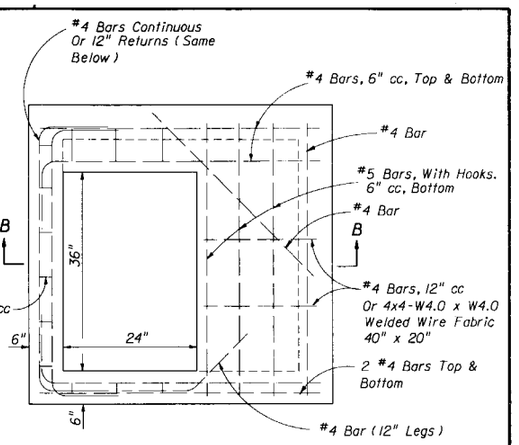

TOP VIEW

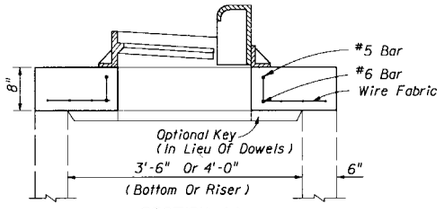

SECTION AA

(SEE NOTE 6 BELOW)

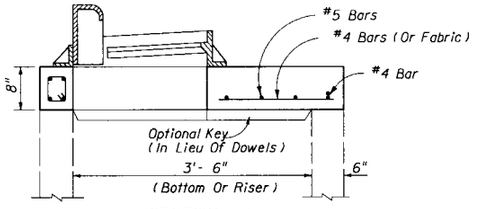

SECTION BB

(SEE NOTE 6 BELOW)

TOP SLABS

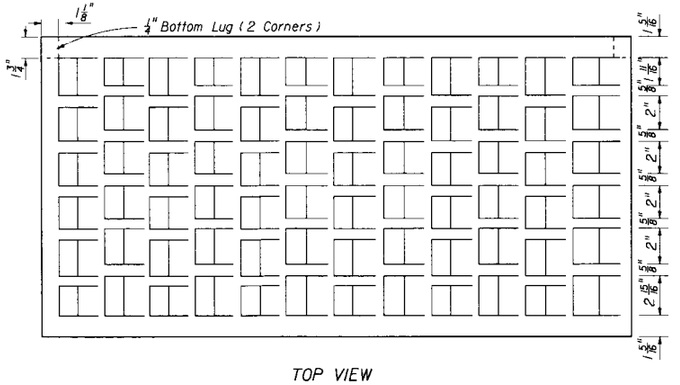

TOP VIEW

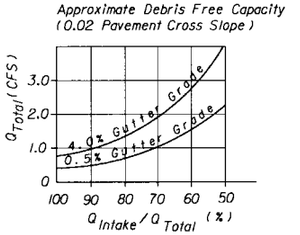

EFFICIENCY CURVE

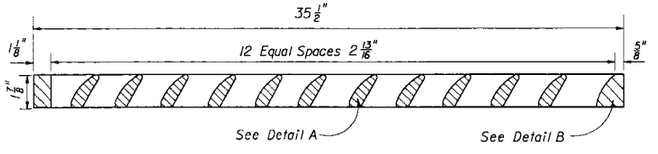

SECTION

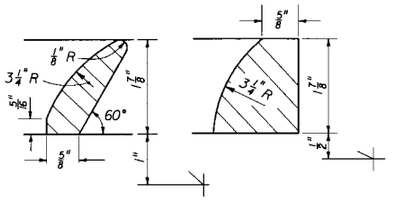

DETAIL A

DETAIL B

GRATE DETAIL

GENERAL NOTES

1. This inlet is primarily intended for locations with light to moderate flows where right of way does not permit the use of throated Curb Inlets Types 1 through 6. The typical application is on curb returns to city streets. The inlet grate is suitable for pedestrian and bicycle traffic.
2. This inlet to be located in vertical faced curbs such as Curb and Gutter Type F. Grate shall be oriented with vanes directed toward predominate flow. Inlet to be located outside pedestrian crosswalk where practical.
3. For structure bottoms see Index No. 200. For supplemental details see Index No. 201.
4. All steel in slab tops shall have 1 1/4" minimum cover unless otherwise shown. Tops shall be either cast-in-place or precast concrete.
5. For Alternate B applications, top slab openings shall be placed such that 2 edges of inlet frame will be located directly above bottom wall or riser wall.
6. When used on a structure with dimensions larger than those detailed above and risers are not applied, the top slab shall be constructed using Index 200 with the slab opening adjust to 24" x 36". The "Special Top Slab" on Index 200 is not permitted.
7. Frame may be adjusted with one to six courses of brick.
8. Inlet and grate detail shown is Neenah R-3067-L. Vaned grates with approximately equal openings will be permitted that satisfy AASHTO H-20 loading. Inlet and grate shall be Class 30 castings in accordance with ASTM A 48. Grates shall be reversible, right or left.

STATE OF FLORIDA DEPARTMENT OF TRANSPORTATION
ROAD DESIGN

CURB INLET TOP TYPE 9

	Names	Dates
Designed By	EGR	
Drawn By	HSD	01/81
Checked By	JVG	01/81
F.H.W.A. Approved:		10/08/81

Approved By: State Drainage Engineer

Revision No.	Sheet No.	Index No.
92	1 of 1	214

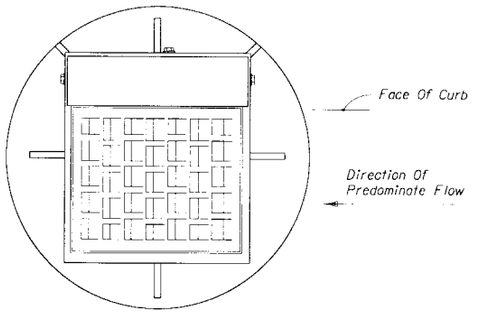

TOP VIEW

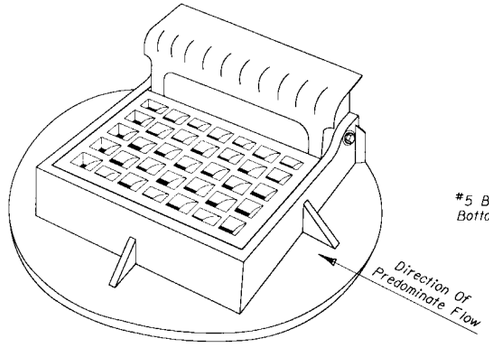

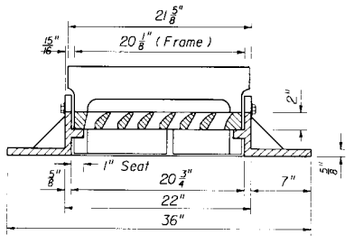

LONGITUDINAL SECTION

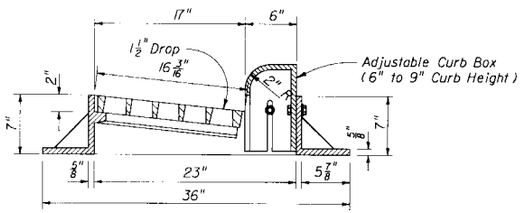

TRANSVERSE SECTION

FRAME AND GRATE

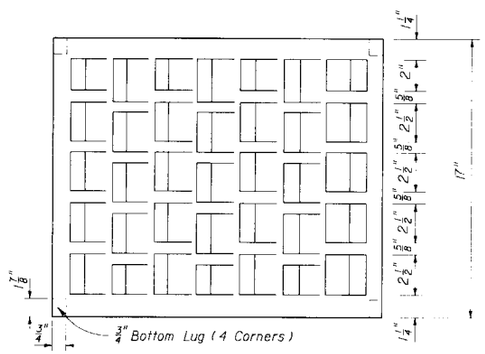

PLAN

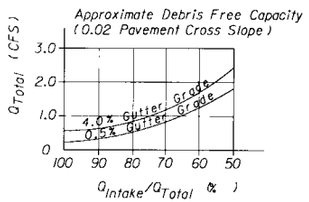

EFFICIENCY CURVE

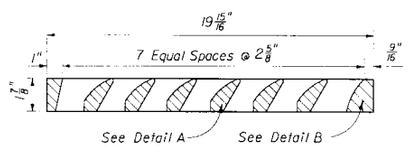

SECTION

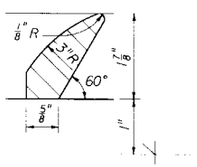

DETAIL A

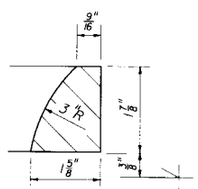

DETAIL B

GRATE DETAIL

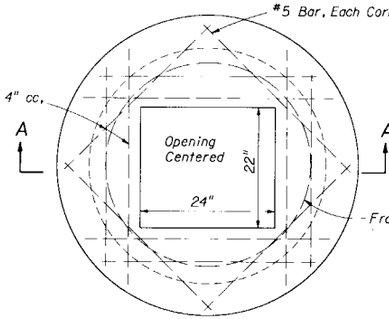

TOP VIEW

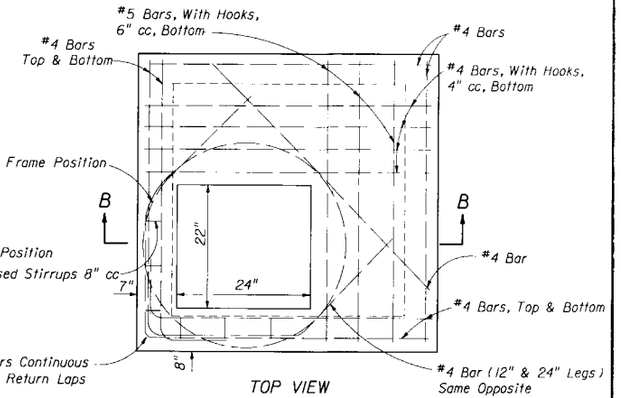

TOP VIEW

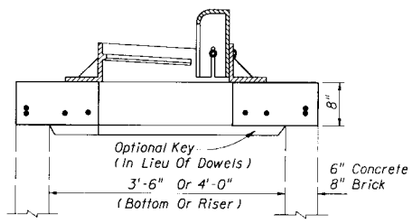

SECTION AA

(SEE NOTE 6 BELOW)

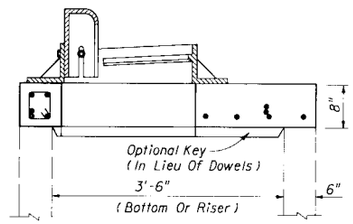

SECTION BB

(SEE NOTE 6 BELOW)

TOP SLABS

GENERAL NOTES

1. This inlet is primarily intended for locations with light flows where right of way does not permit the use of throated Curb Inlets Types 1 through 6. The typical application is on curb returns to city streets. The inlet grate is suitable for pedestrian and bicycle traffic.
2. This inlet to be located in vertical faced curbs such as Curb and Gutter Type F. Grate shall be oriented with vanes directed toward predominate flow. Inlet to be located outside pedestrian crosswalk where practical.
3. For structure bottoms see Index No. 200. For supplemental details see Index No. 201.
4. All steel in slab tops shall have 1 1/4" minimum cover unless otherwise shown. Tops shall be either cast-in-place or precast concrete.
5. For Alternate B applications, top slab openings shall be placed such that 2 edges of inlet frame will be located directly above bottom or riser walls.
6. When used on a structure with dimensions larger than those detail above and risers are not applied, the top slab shall be constructed using Index 200 with the slab opening adjusted to 24" x 36". The "Special Top Slab" on Index 200 is not permitted.
7. Frame may be adjusted with one to six courses of brick.
8. Inlet and grate detail shown is Neenah R-3065-L. Vaned grates with approximately equal openings will be permitted that satisfy AASHTO H-20 loading. Inlet and grate shall be Class 30 castings in accordance with ASTM A 48. Grates shall be reversible, left or right.

STATE OF FLORIDA DEPARTMENT OF TRANSPORTATION
ROAD DESIGN

CURB INLET TOP TYPE 10

	Names	Dates
Designed By	EGR	
Drawn By	HSD	1/81
Checked By	JVG	1/81
F.H.W.A. Approved:		10/ 8/81

Approved By
State Drainage Engineer

Revision No.	Sheet No.	Index No.
92	1 of 1	215

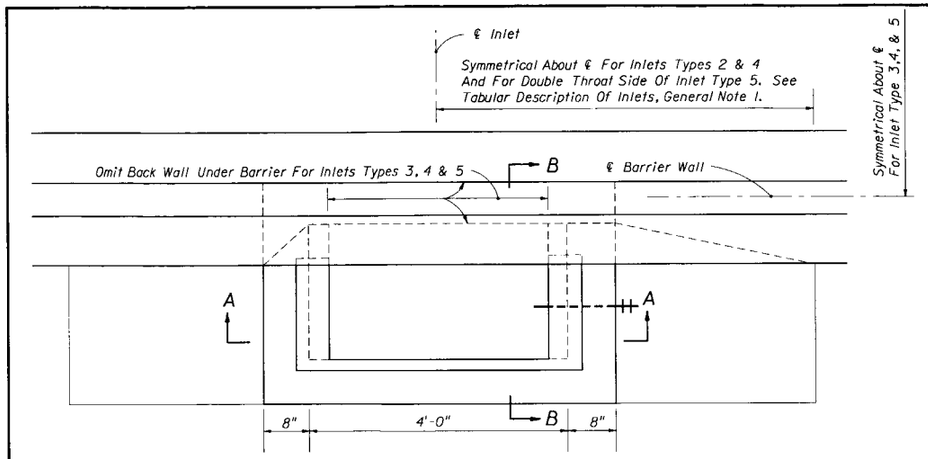

PLAN (INLETS TYPES I THRU 5)

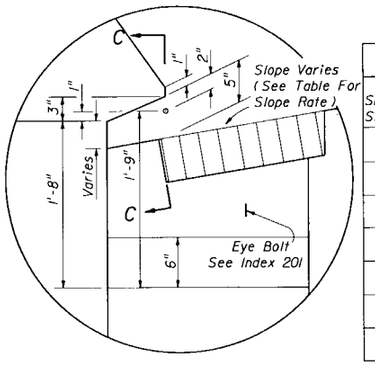

INSET A

GRATE SLOPE		
Shoulder Slope	Grate Slope Rate	Remarks
0.03	6.7:1	Std. Med. Conc. Shldr.
0.05	6:1	Std. Med. Flex. Shldr.
0.06	5.6:1	
0.07	5.2:1	
0.08	5:1	
0.09	4.7:1	
0.10	4.5:1	e (max)

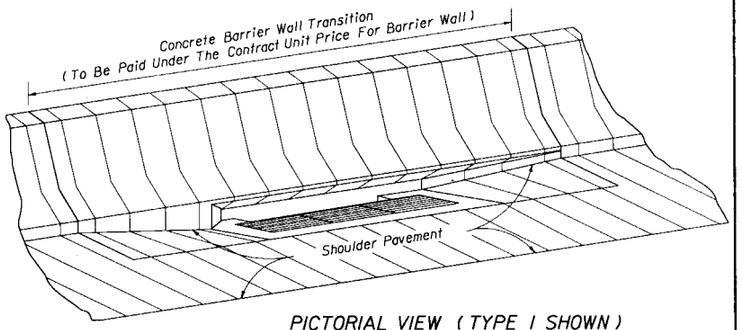

PICTORIAL VIEW (TYPE I SHOWN)

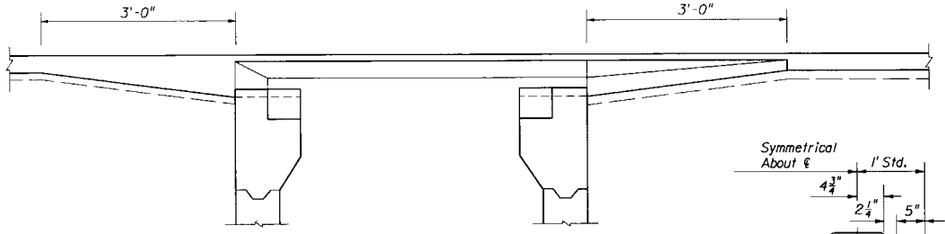

SECTION CC

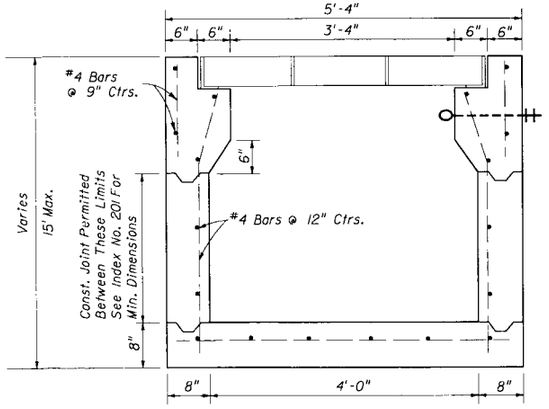

SECTION AA

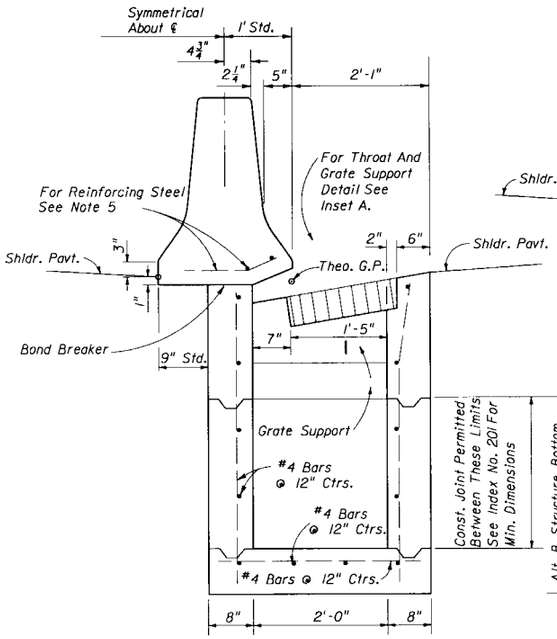

SECTION (INLETS TYPES 1 & 2)

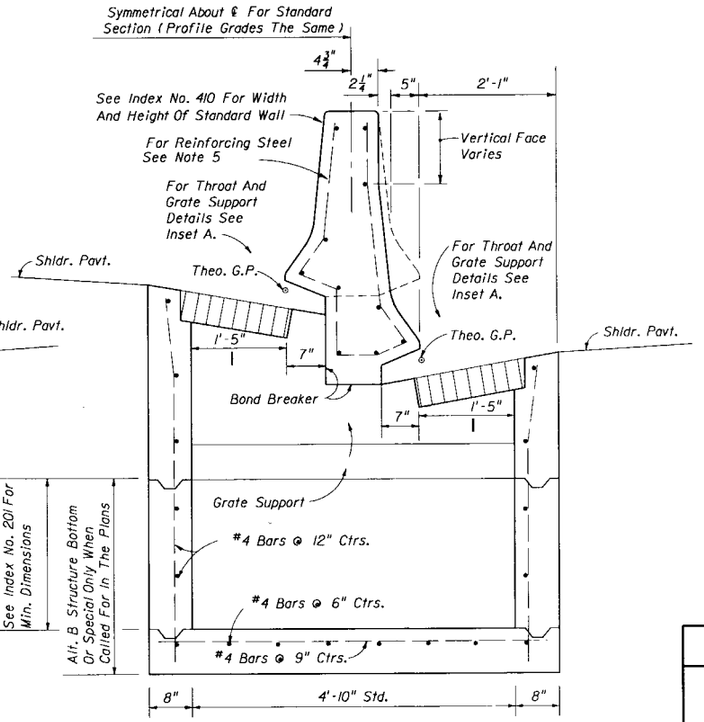

SECTION (INLETS TYPES 3, 4 & 5)
(NON-SYMMETRICAL SECTION SHOWN)

SECTION BB

GENERAL NOTES

1. Inlet Descriptions:
   - Type 1 Single throat, one side of barrier wall.
   - Type 2 Double throats, one side of barrier wall.
   - Type 3 Two single throats, opposite sides of barrier wall.
   - Type 4 Two double throats, opposite sides of barrier wall.
   - Type 5 Double throats, one side of barrier wall, and single throat other side of barrier wall.
2. For grate details see Index No. 220. The parallel bar grate shall be used unless the reticuline grate is called for in the plans. The reticuline grate shall be specified where bicycle traffic is anticipated.
3. For standard concrete barrier wall dimensions, and for dimensions of concrete barrier wall incorporating light standards within the wall, see Index No. 410.
4. Reinforcing steel shall have 2" minimum cover.
5. All reinforcing steel #4 bars. Longitudinal steel bars extend over full length of concrete barrier wall transition. Tie bars @ 12" ctrs. Reinforcing to be paid for under the contract unit price for concrete barrier wall.
6. For supplemental details see Index No. 201.
7. Inlets to be paid for under the contract unit price for Inlets (MB) (Type 1, 2, 3, 4, or 5), each. Barrier wall to be paid for under the contract unit price for Concrete Barrier Wall, LF.

STATE OF FLORIDA DEPARTMENT OF TRANSPORTATION
ROAD DESIGN

MEDIAN BARRIER INLETS TYPES 1, 2, 3, 4 & 5

	Names	Dates
Designed By		
Drawn By	HSD	06/83
Checked By	JVG/JBW	07/83
F.H.W.A. Approved:		10/06/83

Approved By: State Drainage Engineer

Revision No.	Sheet No.	Index No.
92	1 of 1	217

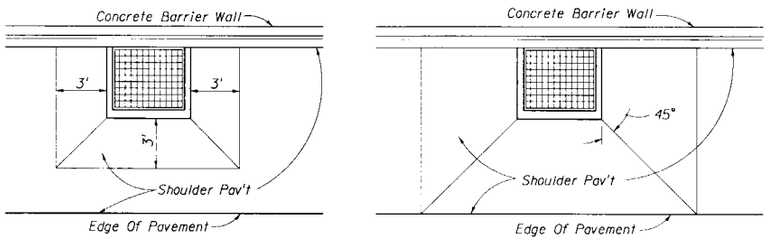

LOW SIDE SUPERELEVATION HIGH SIDE TRANSITION

PAVEMENT WARP FOR SHOULDERS IN SUPERELEVATION

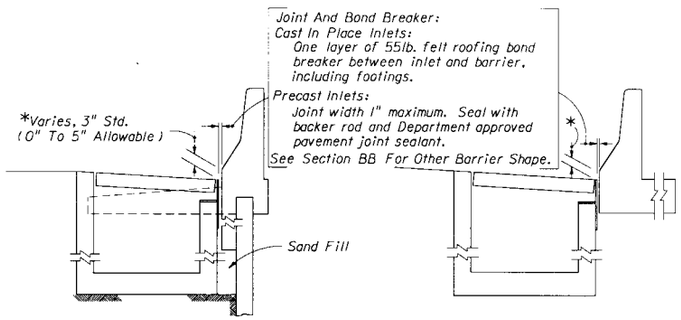

BARRIER WALL / RETAINING WALL SINGLE FACE ROADWAY BARRIER

INLET SECTION AT WALLS

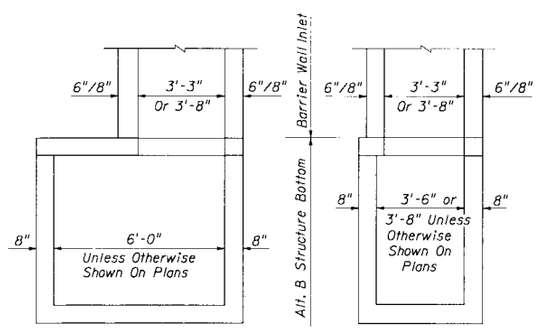

Note: Alt. B Structure Bottom Only. See Index No. 200.

INLET WITH STRUCTURE BOTTOM

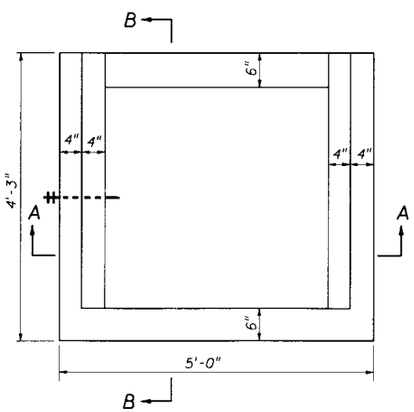

TOP VIEW (WITHOUT GRATE)

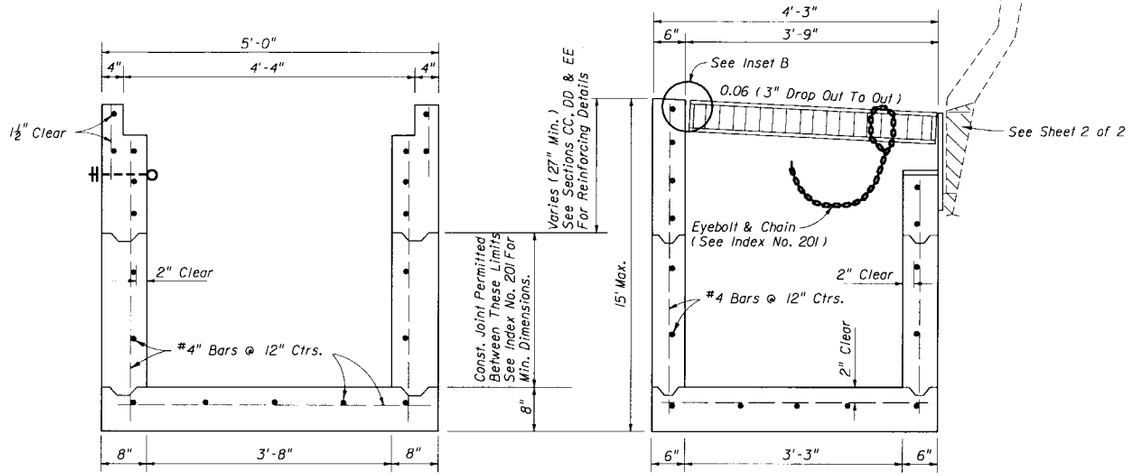

SECTION AA (WITHOUT GRATE) SECTION BB

GENERAL NOTES

1. This inlet is primarily intended for use adjacent to concrete barrier walls on paved shoulders. Use of the inlet adjacent to other wall types shall be approved by the Drainage Engineer. The inlet is suitable for bicycle and occasional pedestrian traffic. It is not intended for use in curb and gutter or other areas where throated inlets are required, nor areas subject to high debris.
2. Inlets located in embankments constructed with earth anchored retaining wall shall be designed with minimum depths to reduce adverse impact on the anchorage system. Runs of pipe parallel to and near anchored wall shall be avoided wherever practical. Special coordination must be exercised during the design and construction of storm water systems within anchored wall systems.
3. Inlet bottoms and/or tops may be either precast or cast-in-place. Whether cast as a single unit or as multiple segments, and whether precast or cast-in-place, the upper 2'-3" of the inlet shall be reinforced in accordance with sections CC, DD and EE.
4. Exposed edges shall be chamfered $\frac{3}{4}$".
5. When Alternate G grate is specified in the plans, the grate is to be hot dipped galvanized after fabrication. Field installation of the filler bar called for in Inset B will not be permitted, thereby requiring tolerance adjustment during fabrication and/or casting, or, matching grate to structure prior to galvanizing.
6. For supplemental details see Index Nos. 200 and 201.
7. Inlets to be paid for under the contract unit for Inlets (Barrier Wall), Each.

STATE OF FLORIDA DEPARTMENT OF TRANSPORTATION
ROAD DESIGN

BARRIER WALL INLET

	Names	Dates
Designed By	JVG/EGR	09/86
Drawn By	HSD	09/86
Checked By	JVG	09/86
F.H.W.A. Approved: 11/07/86		

Approved By
State Drainage Engineer

Revision No.	Sheet No.	Index No.
92	1 of 2	218

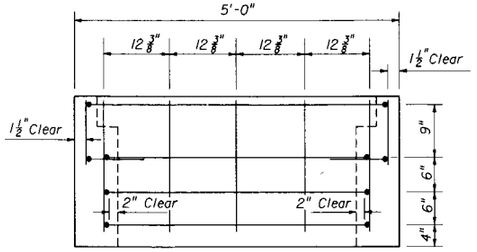

SECTION CC

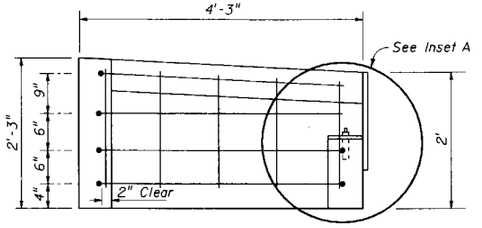

SECTION DD

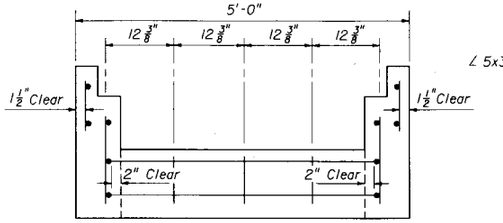

SECTION EE

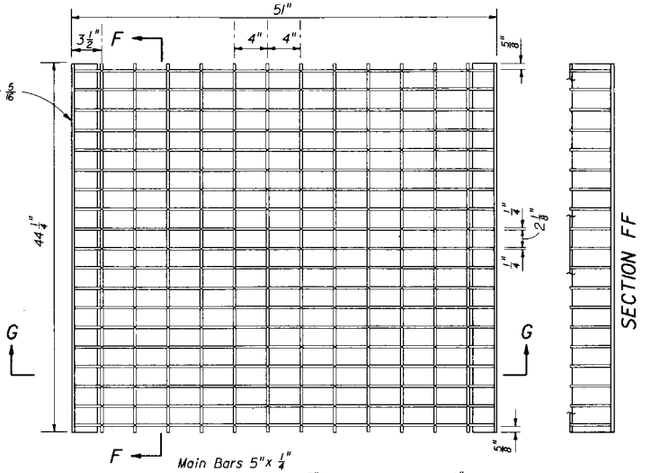

TOP VIEW

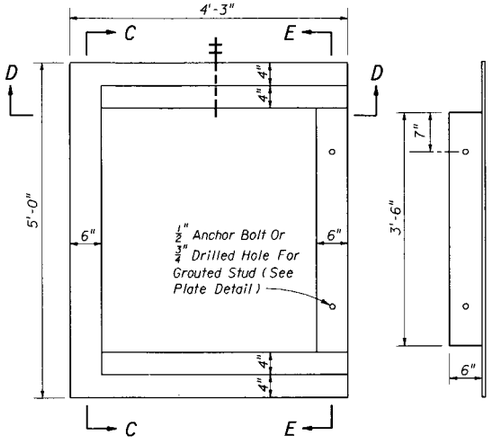

TOP VIEW OF INLET
WITHOUT GRATE

TOP VIEW OF
METAL PLATE

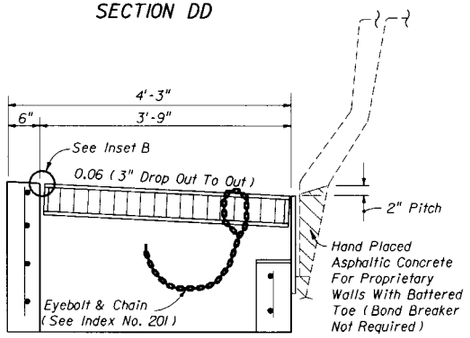

TRANSVERSE SECTION
WITH GRATE & PLATE

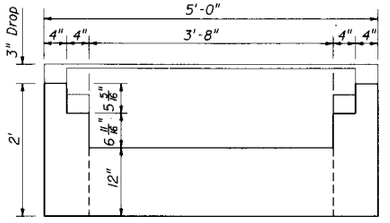

BACK VIEW
WITHOUT BACK PLATE

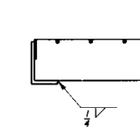

SECTION GG

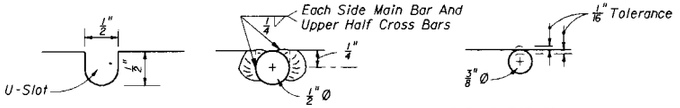

CROSS BAR OPTIONS

STEEL GRATE

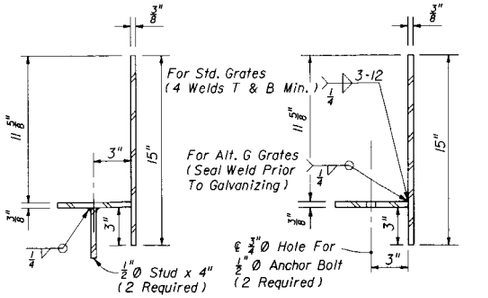

OPTION FOR
GROUT STUD

OPTION FOR
IMBEDDED ANCHOR

TRANSVERSE SECTIONS
THRU BACKWALL PLATE

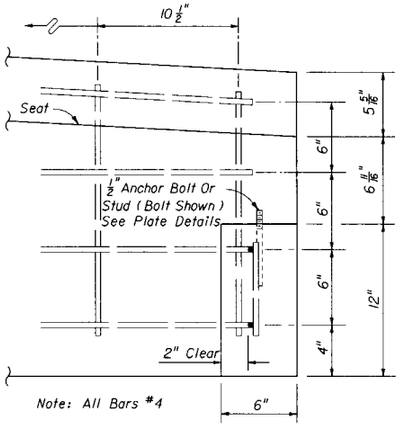

INSET A

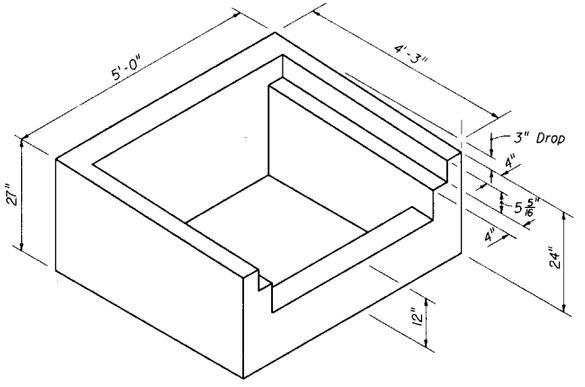

PICTORIAL VIEW

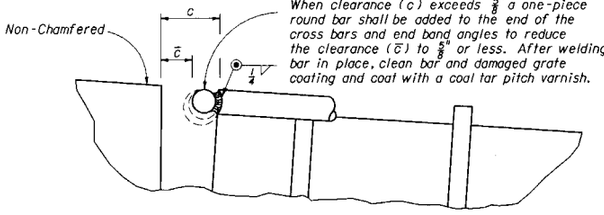

INSET B

STATE OF FLORIDA DEPARTMENT OF TRANSPORTATION
ROAD DESIGN

BARRIER WALL INLET

	Names	Dates
Designed By	JVG/EGR	09/86
Drawn By	HSD	09/86
Checked By	JVG	09/86
F.H.W.A. Approved:		11/07/86

Approved By E. R. Price
State Drainage Engineer

Revision No.	Sheet No.	Index No.
87	2 of 2	218

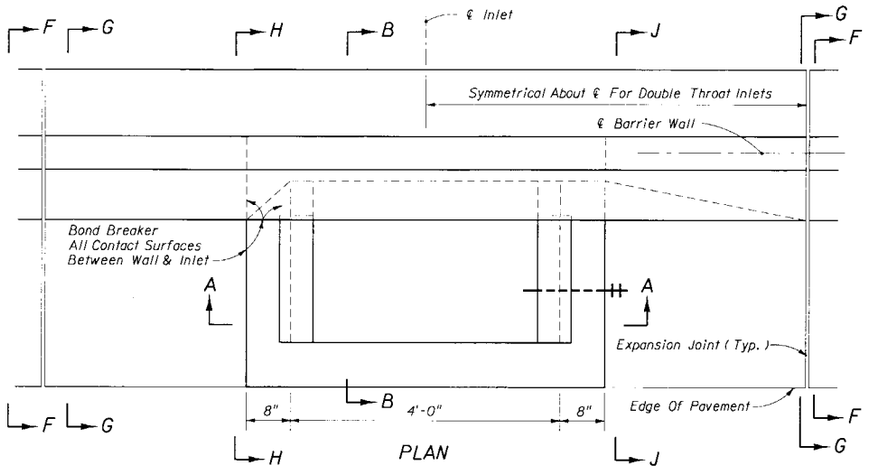

PLAN

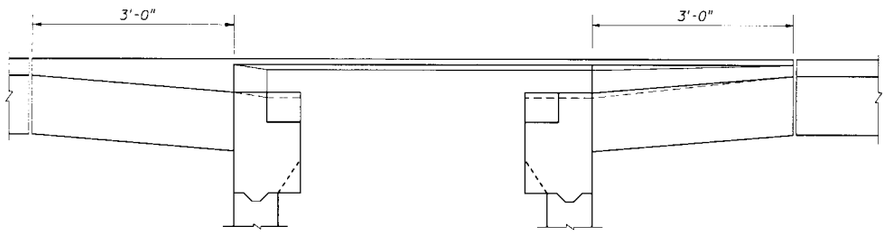

SECTION CC

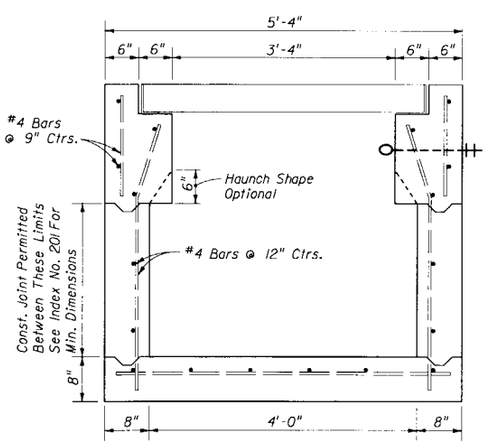

SECTION AA

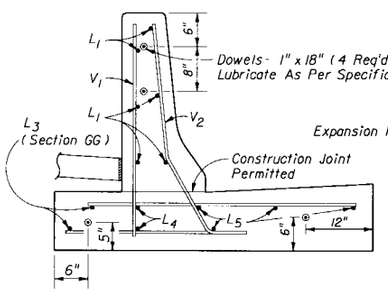

Note: For SECTION FF and additional details see Index No. 410, 'CONCRETE BARRIER WALL (RIGID) (CURB & GUTTER) '

SECTION FF & GG

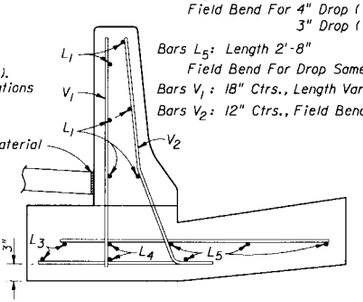

SECTION HH

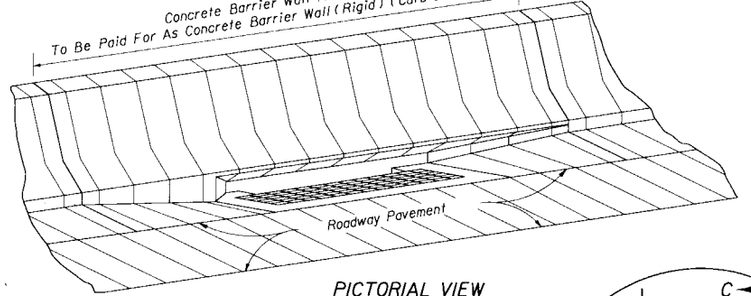

PICTORIAL VIEW

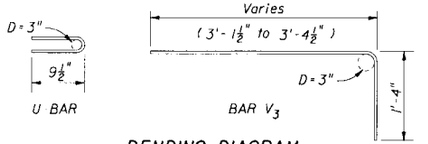

BENDING DIAGRAM

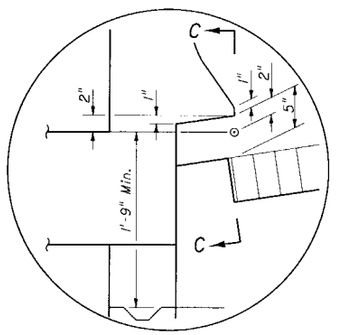

INSET A

GENERAL NOTES

1. This inlet to be used in conjunction with Concrete Barrier Wall (Rigid) (Curb & Gutter), Index No. 410.
2. All reinforcing steel #4 bars. Reinforcing shall have 2" min. cover unless otherwise shown. Cost to be included in cost for concrete barrier wall.
3. Barrier wall shall be Class II concrete, finished in accordance with Index No. 410.
4. A flat 18" x 2⅛" drainage slot shall be constructed at the inlet centerline when the inlet is located in a curb sag. No more than one V1 bar, one V3 bar and one U-bar are to be deleted for construction of the drainage slot.
5. For supplemental details see Index Nos. 201, 209 and 410.
6. Recommended maximum pipe sizes are 18" longitudinal and 30" transverse. For larger pipe, use Alt. B bottoms, Index No. 200.
7. Grates can be fabricated with reticuline bars or with either ⅜"Ø electroforged or ½"Ø welded cross bars and full depth bars as detailed.
8. When Alternate G grate is specified in plans, the grate is to be hot dipped galvanized after fabrication.
9. For pay item purposes the height of the structure shall be computed using the theoretical gutter elevation, less the flow line elevation of the lowest pipe or to top of sump floor.
10. Inlets to be paid for under the contract unit price for Inlets (Barrier Wall) (Rigid) (Curb & Gutter), Each.

Barrier wall to be paid for under the contract unit price for Concrete Barrier Wall (Rigid-Curb & Gutter) LF.

Bars L_1 : Length 11'-1", Straight
Bars L_3 & L_4 : Length 11'-1"
Field Bend For 4" Drop (Top Bars)
3" Drop (Bottom Bars)
Bars L_5 : Length 2'-8"
Field Bend For Drop Same As L_3 & L_4
Bars V_1 : 18" Ctrs., Length Varies
Bars V_2 : 12" Ctrs., Field Bend

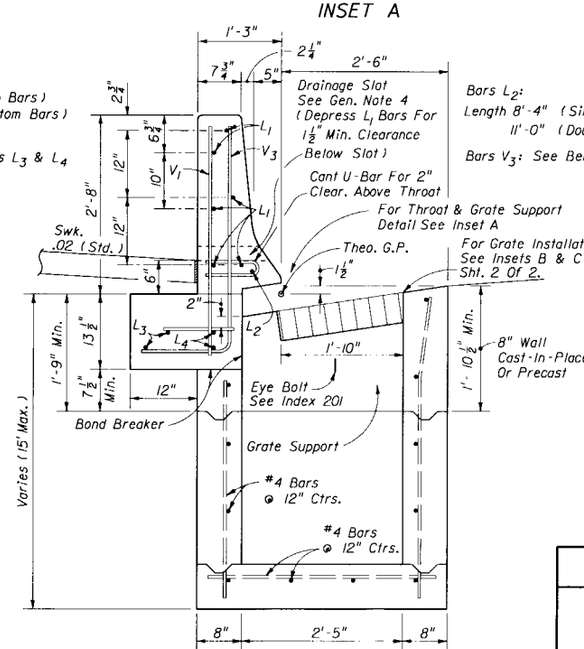

SECTION BB

Bars L_2:
Length 8'-4" (Single Throat)
11'-0" (Double Throat)
Bars V_3: See Bending Diagram

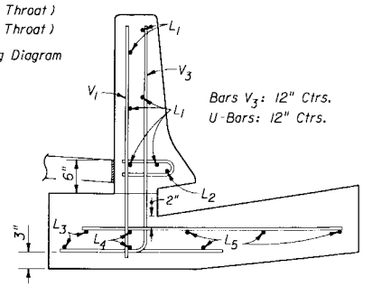

Note: Replaces Section HH for double throat inlet.

SECTION JJ

STATE OF FLORIDA DEPARTMENT OF TRANSPORTATION
ROAD DESIGN

BARRIER WALL INLET

CONCRETE BARRIER WALL (RIGID) (C & G)

	Names	Dates
Designed By	EGR/JVG	9/89
Drawn By	JBW	9/89
Checked By	EGR/JVG	9/89
F.H.W.A. Approved:		

Approved By: E.G. Kruger
State Drainage Engineer

Revision No.	Sheet No.	Index No.
92	1 of 2	219

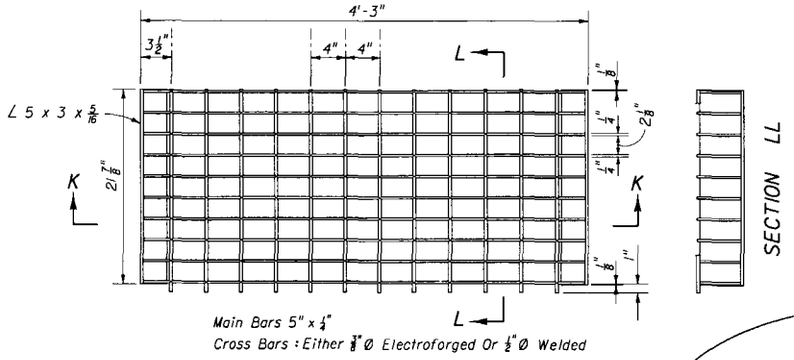

PLAN

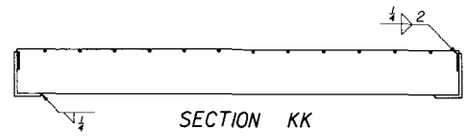

SECTION KK

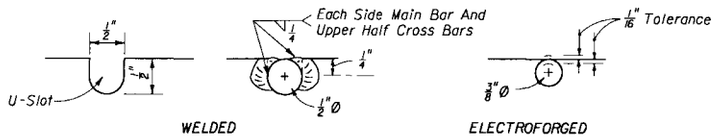

CROSS BAR OPTIONS

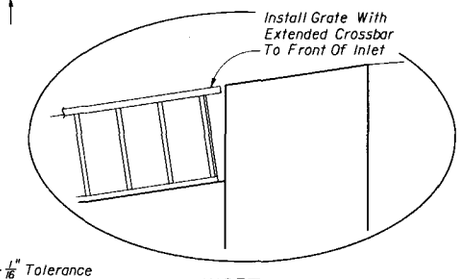

INSET B

SECTION LL

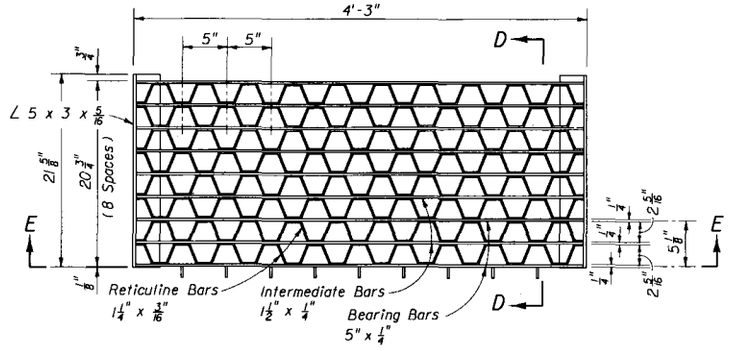

PLAN

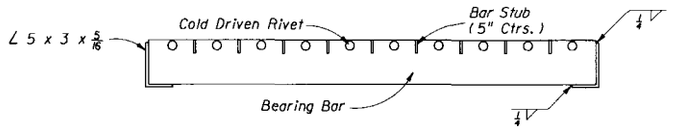

SECTION EE

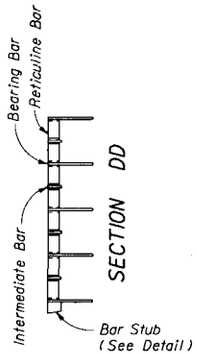

SECTION DD

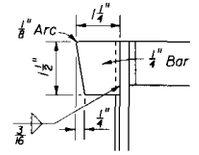

BAR STUB

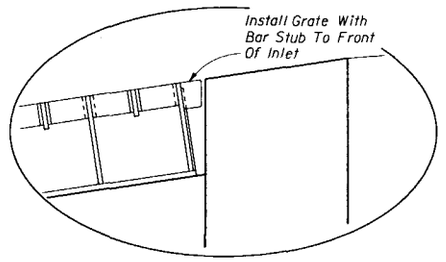

INSET C

CROSS BAR

RETICULINE

OPTIONAL STEEL GRATES

STATE OF FLORIDA DEPARTMENT OF TRANSPORTATION
ROAD DESIGN

BARRIER WALL INLET

CONCRETE BARRIER WALL (RIGID) (C & G)

	Names	Dates
Designed By	EGR/JVG	9/89
Drawn By	JBW	9/89
Checked By	EGR/JVG	9/89
F.H.W.A. Approved:		

Approved By E.G. Lynge
State Drainage Engineer

Revision No.	Sheet No.	Index No.
90	2 of 2	219

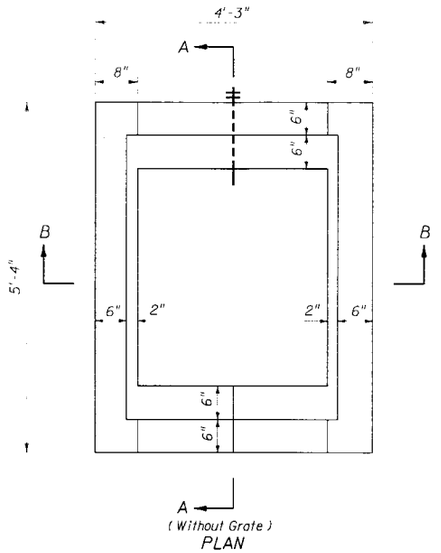

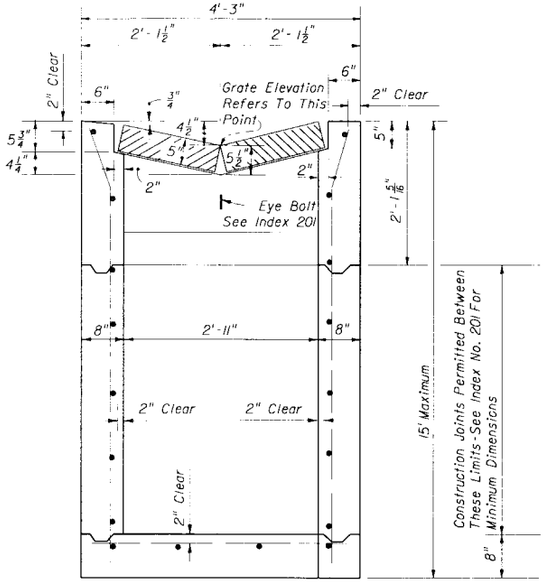

SECTION BB

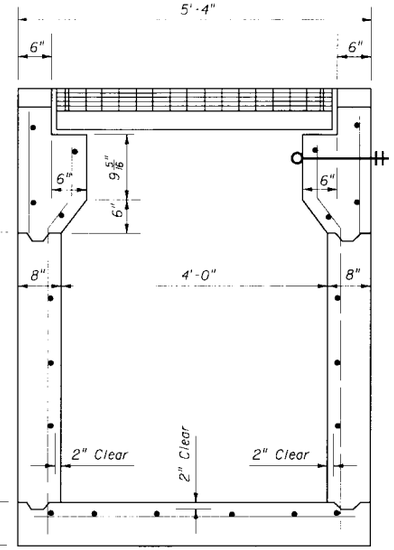

SECTION AA

RECOMMENDED MAXIMUM PIPE SIZES	
INLET INSIDE WIDTH	PIPE SIZE
2'-11"	24"
4'-0"	36"

Note: Recommended sizes are for concrete pipe. Sizes for other types of pipe must be verified for fit in accordance with Index No. 201. For larger pipe see bottom detail right and index No. 200.

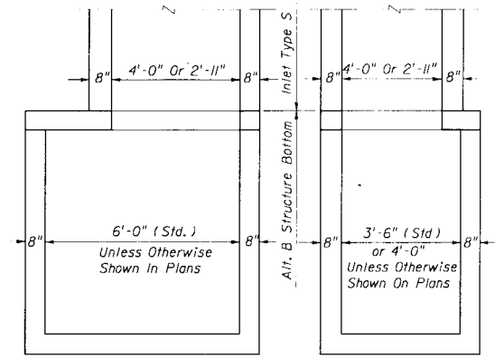

NOTE: Alt. B Structure Bottom Only. See Index No. 200

INLET WITH STRUCTURE BOTTOM

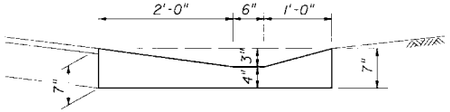

SECTION DD

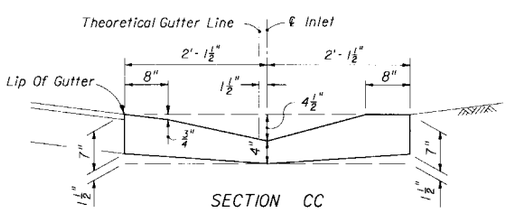

SECTION CC

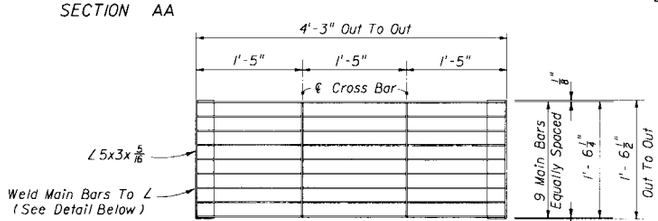

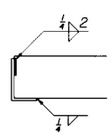

DETAIL

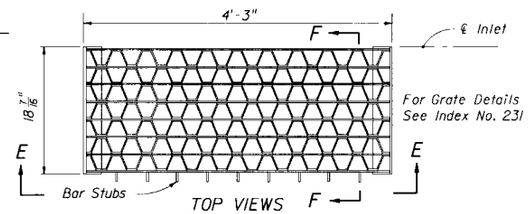

TOP VIEWS

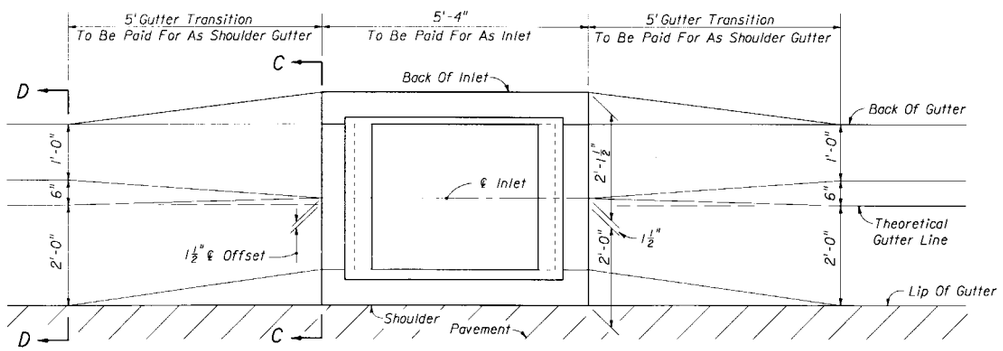

SHOULDER GUTTER TRANSITION

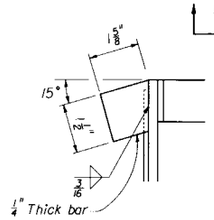

DETAIL OF BAR STUB

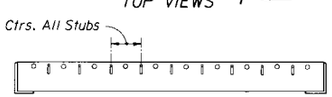

SECTION EE



SECTION FF

GENERAL NOTES

1. This inlet with parallel bar grate shall be used for limited access facilities and other bicycle restricted facilities subject to heavy loads; and, may be used in locations where inlets Type A and B, with wide grate opening, are unacceptable. On limited access facilites with designated bicycle access and on all other facilities, including roads overpassing limited access highways, the reticuline grate shall be used.
2. Reinforcing steel all No. 4 bars at 12" centers both ways with 2" clearance to inside of walls and bottom. Bars to be cut or bent for 1½" minimum clearance around pipe.
3. All exposed edges and corners shall be tooled to ¾" radius.
4. When Alternate G grate is specified in plans, the grate is to be hot dipped galvanized after fabrication.
5. For supplementary details see Index Nos. 200 and 201.

STEEL GRATE

STATE OF FLORIDA DEPARTMENT OF TRANSPORTATION
ROAD DESIGN

GUTTER INLET TYPE S

	Names	Dates
Designed By		
Drawn By		
Checked By		
F.H.W.A. Approved:		05/01/75

Approved By: State Drainage Engineer

Revision No.	Sheet No.	Index No.
92	1 of 1	220

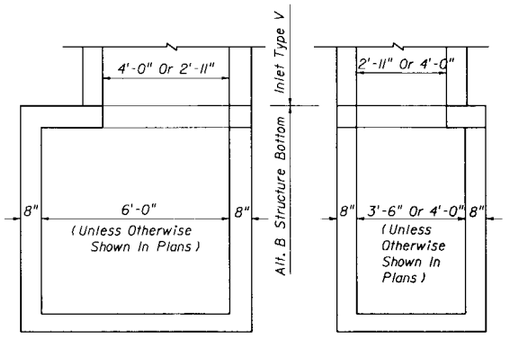

NOTE: Alt. B Structure Bottom Only. See Index No. 200

(For Pipes 30" Dia. And Larger)

INLET WITH STRUCTURE BOTTOM

GENERAL NOTES

1. This inlet is designed for village swales, ditches, or other areas subject to heavy wheel loads, minimum debris and subject to pedestrian and/or bicycle traffic.
2. When alternate "G" grate is specified in plans, the grate is to be hot dipped galvanized after fabrication.
3. Reinforcing - No. 4 bars at 12" ctrs. both ways. Cut or bend bars out of way of pipe to clear pipe $1\frac{1}{2}$".
4. All exposed edges and corners shall be tooled to $\frac{1}{4}$" radius.
5. Recomended maximum pipe sizes shown are for concrete pipe.
6. For supplementary details see Index No. 201.

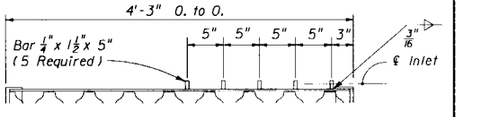

OPTIONAL BAR SPACING

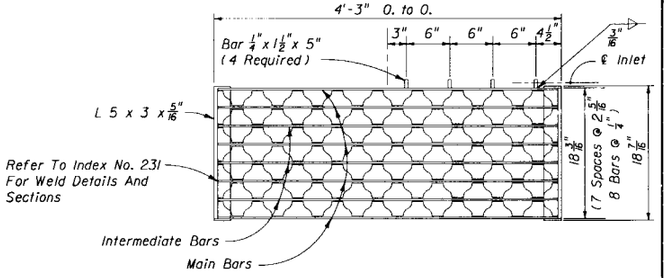

STEEL GRATE

TWO REQUIRED PER INLET

5" Steel Grate — Main Bars 5" x $\frac{1}{4}$"

Intermediate Bars $1\frac{1}{2}$" x $\frac{1}{4}$" — Reticuline Bars $1\frac{1}{4}$" x $\frac{3}{16}$"

Steel Grate : Manufactured By Borden, Florida Steel, U.S. Foundry Irving, Reliance, Greulich (Or Equal).

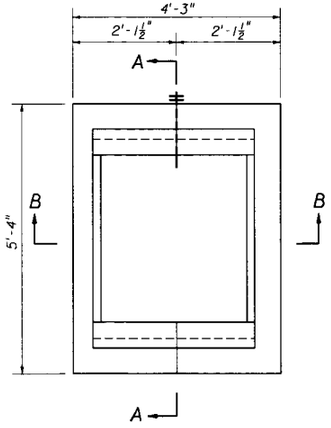

PLAN

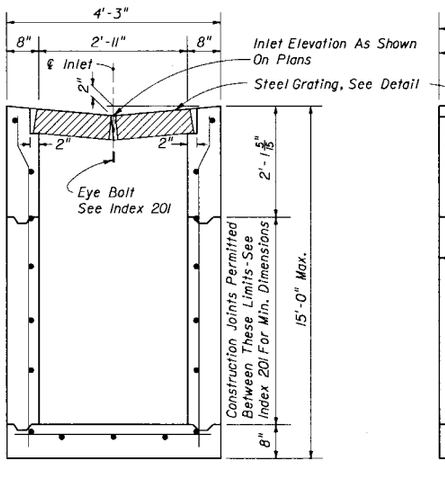

SECTION BB

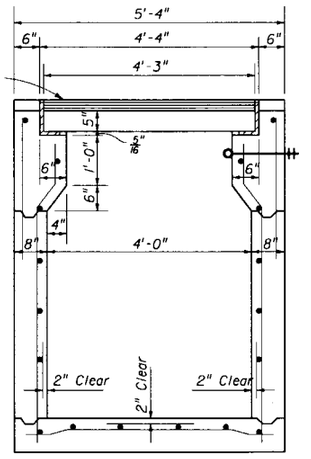

SECTION AA

Recomended Maximum Pipe Size:
2'-11" Wall - 24" Size
4'-0" Wall - 36" Size

STATE OF FLORIDA DEPARTMENT OF TRANSPORTATION
ROAD DESIGN

GUTTER INLET TYPE V

	Names	Dates
Designed By		
Drawn By	WHW	4/57
Checked By	RMM	4/57
F.H.W.A. Approved:		5/1/75

Approved By [signature] State Drainage Engineer

Revision No.	Sheet No.	Index No.
92	1 of 1	221

APPLICATION GUIDELINES FOR DITCH BOTTOM AND MEDIAN INLETS

INDEX NO.	TYPE	LOCATION	CAPACITY (CFS)						SAFETY			DEBRIS TOLERANCE	PIPE SIZE LIMITATION		OTHER DESIGN CONSIDERATIONS
			GRATE ONLY		GRATE WITH SINGLE STD. SLOT		GRATE WITH SINGLE TRAV. SLOT						INLET INSIDE WIDTH	MAXIMUM PIPE SIZE	
			FLOW CONDITION		FLOW CONDITION		FLOW CONDITION								
			A	B	A	B	A	B	TRAFFIC	PEDESTRIAN	BICYCLE				
230	A	Limited Access Facilities	7	4	NA	NA	NA	NA	Heavy Wheel Loads	No	No	Good	2'-0" 3'-1"	18" 24"	
231	B	Limited Access Facilities	16	6	NA	NA	NA	NA	Heavy Wheel Loads	No	No	Excellent	3'-8" 4'-2"	30" 36"	
232	C	*Outside CZ	5	4	11	8	7	5	Infrequent Traffic	Yes	Yes	Poor*	2'-0" 3'-1"	18" 24"	* See Note 4. For back of sidewalk location see Index No. 282
	D	*Outside CZ	14	6	27	15	20	8	Infrequent Traffic	Yes	Yes	Poor*	3'-1" 4'-1"	24" 36"	* See Note 4.
	E	*Outside CZ	10	6	19	13	14	7	Infrequent Traffic	Yes	Yes	Poor*	3'-0" 4'-6"	24" 42"	* See Note 4.
	H	Outside CZ	15	7	24	14	NA	NA	Infrequent Traffic	Yes	Yes	Poor*	3'-0" 7'-8"	24" 66" Or 2-30"	* See Note 4.
233	F	Inside CZ	9	5	NA	NA	NA	NA	Heavy Wheel Loads	Yes	Yes	Poor	2'-0" 4'-0"	18" 36"	
	G	Inside CZ	23	7	NA	NA	NA	NA	Heavy Wheel Loads	Yes	Yes	Poor	4'-4" 5'-0"	36" 42"	
234	J	Inside CZ	9	4	NA	NA	NA	NA	Heavy Wheel Loads	Yes	No	Fair	2'-11" 4'-0"	24" 36"	
235	K	Outside CZ	NA	NA	NA	NA	NA	NA	NA	NA	NA	Good	3'-8" See Index	36"	Debris buildup may occur on Type B fencing.

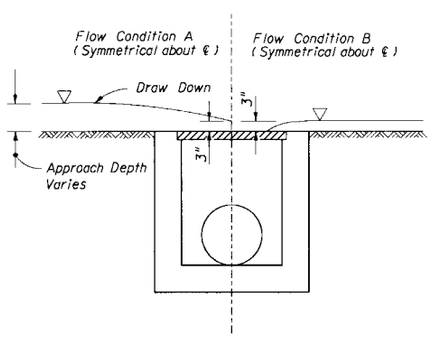

GENERAL NOTES

1. All inlets must be selected to satisfy hydraulic suitability, with proper consideration given to safety and economics.
2. CZ denotes clear zone, formerly CRA denoting clear recovery area.
3. Alternate G grates should be specified when in salt water environment.
4. Inlets without slots or inlets with traversable slots maybe located within the clear zone. Inlets C, D and E capacity and debris tolerance may be increased by the addition of a slot. Slotted inlets located within roadway clear zones and in areas accessible to pedestrians shall have traversable slots. Traversable slots are not adaptable to inlet Type H.
5. Special ditch blocks require plan details.
6. Pipe size limitations are based on circular Class III, B Wall, Concrete Pipe. Elliptical pipe and corrugated pipe are to be checked for fit in accordance with Index No. 201; metal pipe sizes should be reviewed using $2\frac{2}{3}$" x $\frac{1}{2}$" corrugation up through 30" and 3" x 1" corrugation for larger sizes.
7. The capacity values shown are approximate and are intended as a guide to assist in describing relative performance. Inlets are assumed to be in a sag condition (No Bypass Flow). The effects of vortex flow have not been considered. Inlet control is assumed. The Designer must verify the outlet conditions and design assumptions before accepting the capacity values shown; outlet constraints are likely to control with minimum pipe sizes.

Flow condition A - Orifice Flow Conditions

1. Grates are 50% blocked with 3" of water depth above the grate.
2. Slots are 25% blocked.
3. Orifice Equation: $Q = 0.67\ A\ \sqrt{2gH}$

Flow Condition B - Weir Flow Conditions

1. A 3" head above the top of the inlet is assumed.
2. The effective weir length is assumed to be equal to the inlet perimeter with no deduction for the grate or debris.
3. For inlets with slots, the effective head for the side of the inlet with the slot is 15" for standard 12" slots and 10" for traversable slots. The slot is assumed to be 25% blocked. In some instances the flow will be in orifice conditions into the slot.
4. Weir Equation: $Q = 3.0\ LH^{3/2}$

Note: NA = Not Applicable

STATE OF FLORIDA DEPARTMENT OF TRANSPORTATION
ROAD DESIGN

DITCH BOTTOM AND MEDIAN INLET APPLICATION GUIDE

	Names	Dates
Designed By	EGR	09/06/84
Drawn By	HSD	09/06/84
Checked By	EGR	09/06/84
F.H.W.A. Approved: 09/21/84		

Approved By: E. G. Kruse, State Drainage Engineer

Revision No.	Sheet No.	Index No.
92	1 of 1	229

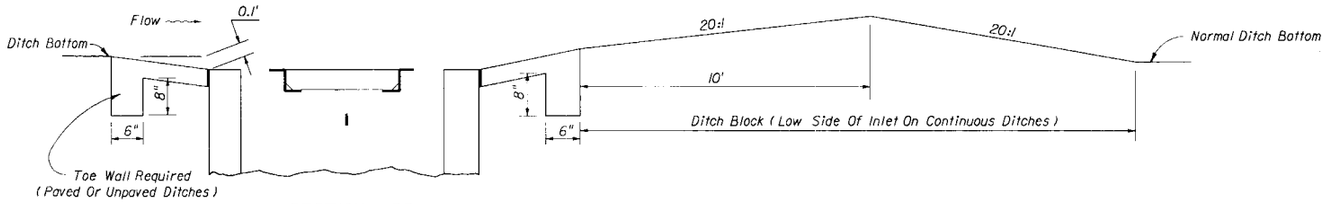

SECTION DD

RECOMMENDED MAXIMUM PIPE SIZES	
INLET INSIDE WIDTH	PIPE SIZE
2'-0"	18"
3'-1"	24"

Note: Recommended sizes are for concrete pipe. Sizes for other types of pipe must be verified for fit in accordance with Index No. 201. For larger pipe see bottom detail right and Index No. 200.

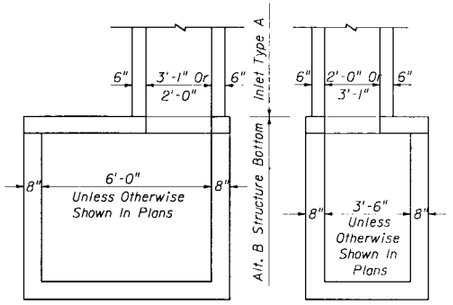

NOTE: Alt. B Structure Bottom Only. See Index No. 200

INLET WITH STRUCTURE BOTTOM

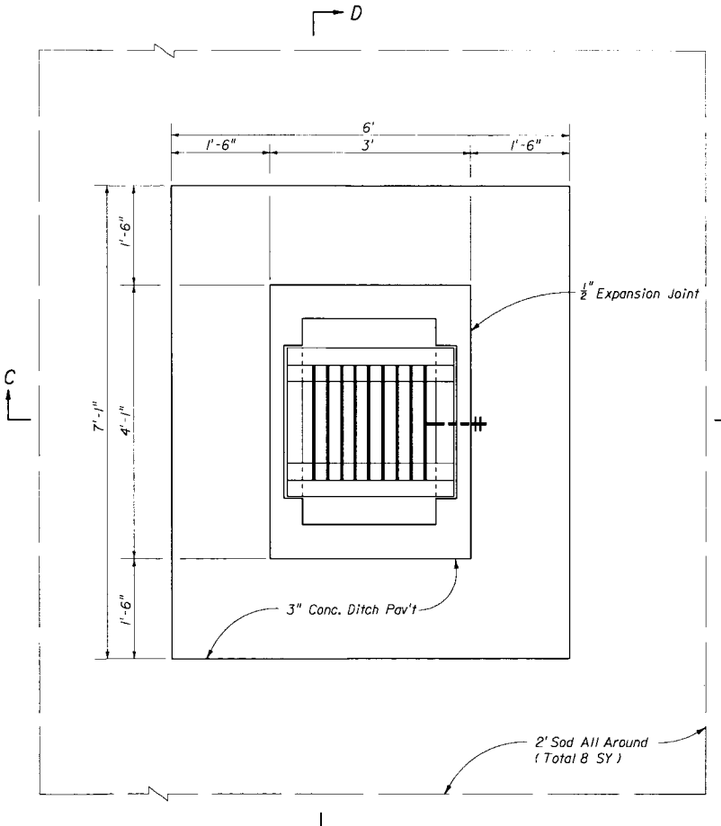

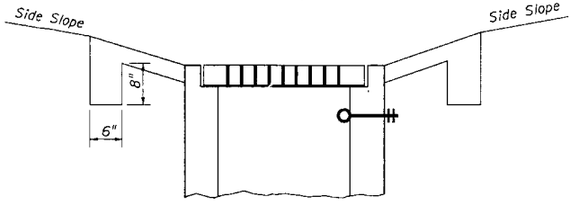

SECTION CC

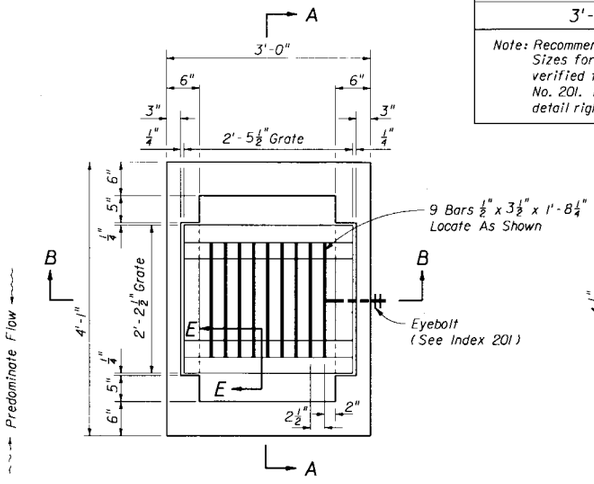

PLAN

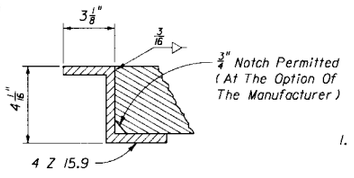

SECTION EE

GENERAL NOTES

1. This inlet is designed for ditches, medians, or other areas subject to heavy wheel loads on limited access facilities where debris may be a problem and flow through this grate is less than 7cfs. NOTICE: This inlet is not for use in areas subject to pedestrian and/or bicycle traffic.
2. Reinforcing-2" clearance to inside face. Cut or bend bars out of way of pipe to clear pipe by 1 1/2".
3. Chamfer exposed edges (3/4" Chamfer).
4. When alternate " G " grate is specified in plans, the grate is to be hot dipped galvanized after fabrication.
5. Cost of ditch paving to be included in the cost of Inlet. Sodding to be paid for under contract unit price for Sodding, SY.
6. For supplemental details see Index No. 201.

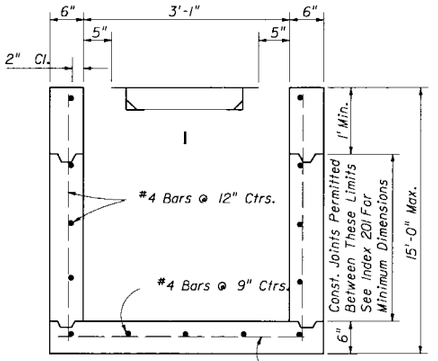

SECTION AA

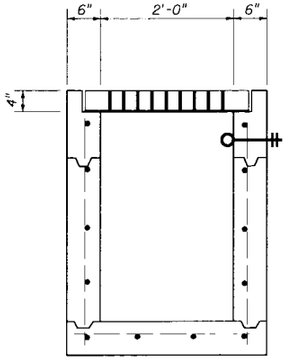

SECTION BB

STATE OF FLORIDA DEPARTMENT OF TRANSPORTATION
ROAD DESIGN

DITCH BOTTOM INLET TYPE A

	Names	Dates
Designed By		
Drawn By		
Checked By		
F.H.W.A. Approved:		7/18/75

Approved By
State Drainage Engineer

Revision No.	Sheet No.	Index No.
92	1 of 1	230

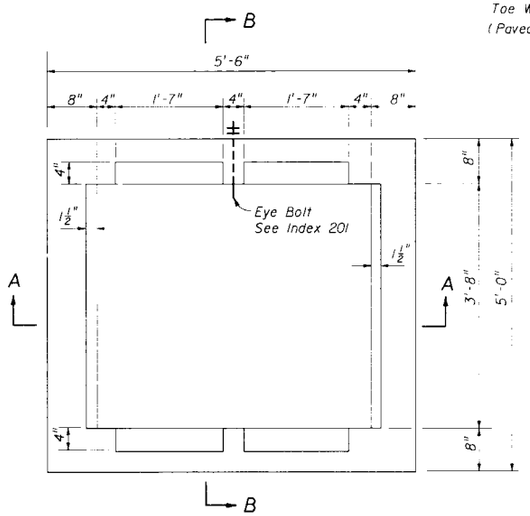

PLAN
(Grate Not Shown)

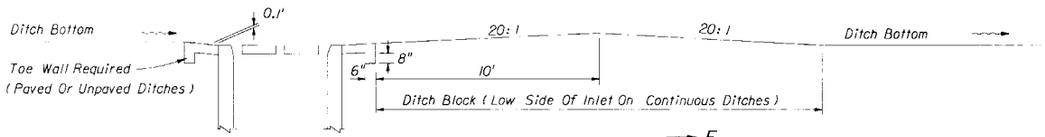

SECTION EE

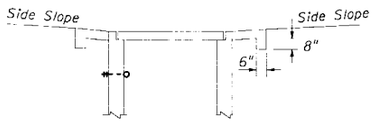

SECTION FF

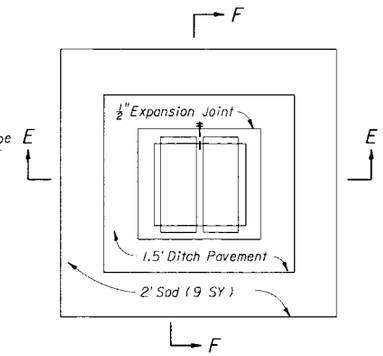

SODDING, PAVEMENT AND DITCH BLOCK

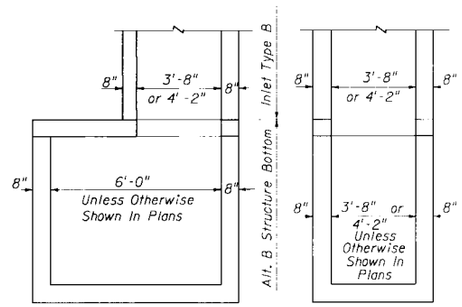

NOTE: Alt. B Structure Bottom Only. See Index No. 200

INLET WITH STRUCTURE BOTTOM

RECOMMENDED MAXIMUM PIPE SIZES	
INLET INSIDE WIDTH	PIPE SIZE
3' - 8"	30"
4' - 2"	36"

Note: Recommended sizes are for concrete pipe. Sizes for other types of pipe must be verified for fit in accordance with Index No. 201. For larger pipe see bottom detail above and Index No. 200.

Predominate Flow (s)

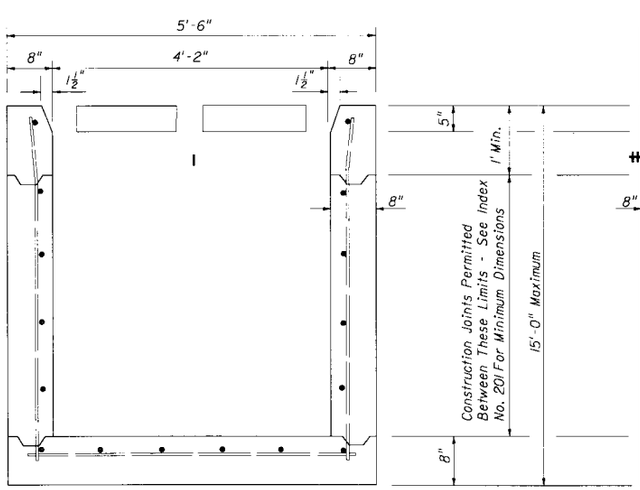

SECTION AA

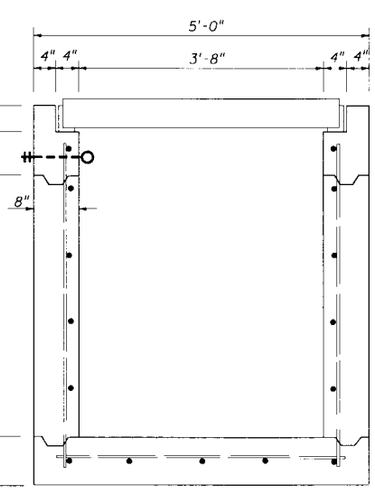

SECTION BB

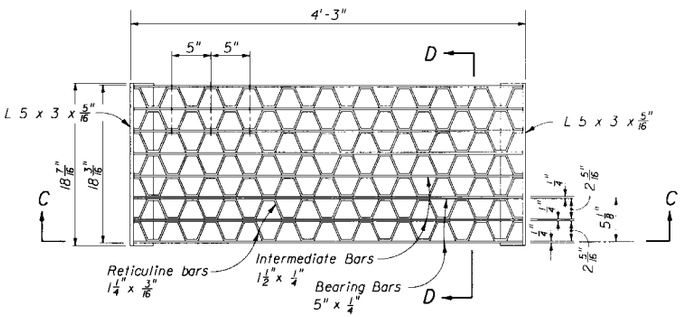

PLAN

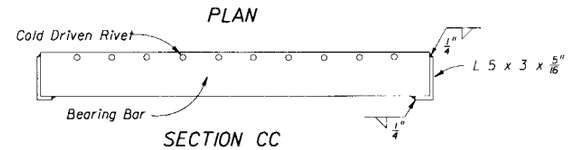

SECTION CC

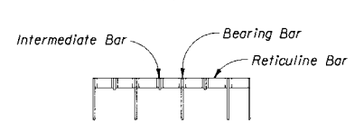

SECTION DD

STEEL GRATE

GENERAL NOTES

1. NOTICE: Inlet intended for use only on that portion of limited access facilities not subject to pedestrian and / or bicycle traffic.
2. Inlet designed for ditches, medians or other areas subject to heavy wheel loads, where debris may be a problem, and inlet intake is 7 cfs or more.
3. Reinforcing steel all No. 4 bars at 12" centers both ways with 2" clearance to inside of walls and bottom. Bars to be cut or bent for 1½" minimum clearance around pipe.
4. When alternate G grates are specified in the plans, the grates are to be hot dipped galvanized after fabrication.
5. Ditch paving to be included in cost of inlet. Sodding to be paid for under the contract unit price for Sodding SY.
6. For supplementary details see Index No. 201.

STATE OF FLORIDA DEPARTMENT OF TRANSPORTATION
ROAD DESIGN

DITCH BOTTOM INLET TYPE B

	Names	Dates
Designed By	HAB	04/67
Drawn By	RWR	05/82
Checked By	JVG	05/82
F.H.W.A. Approved:		07/18/72 09/23/82

Approved By
State Drainage Engineer

Revision No.	Sheet No.	Index No.
92	1 of 1	231

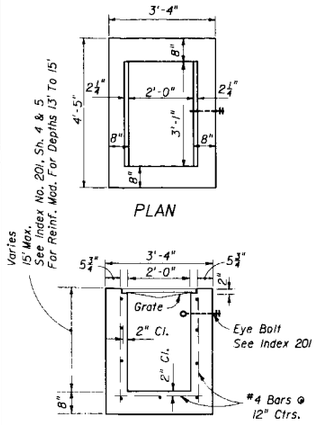

TYPE C

Recommended Maximum Pipe Size:
2'-0" Wall-18" Pipe
3'-1" Wall-24" Pipe

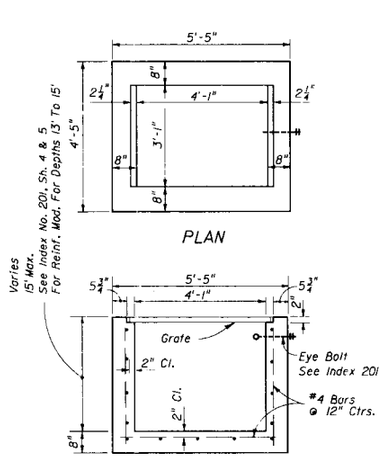

TYPE D

Recommended Maximum Pipe Size:
3'-1" Wall-24" Pipe
4'-1" Wall-36" Pipe

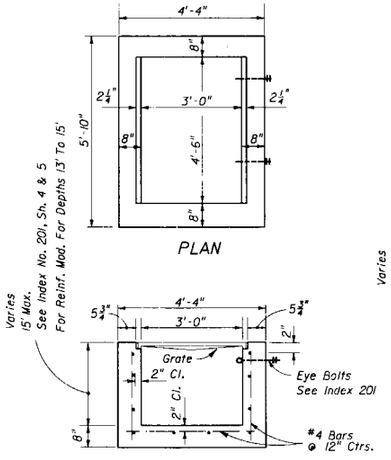

TYPE E

Recommended Maximum Pipe Size:
3'-0" Wall-24" Pipe
4'-6" Wall-42" Pipe

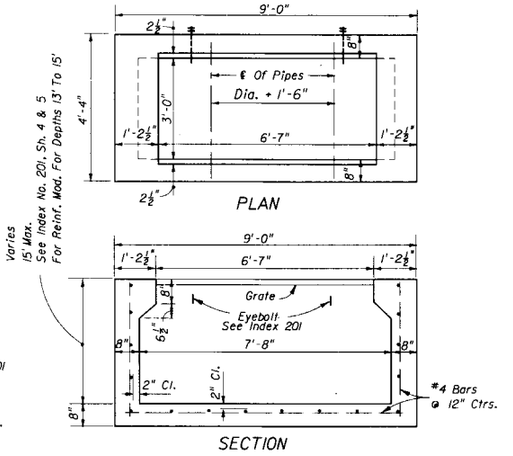

TYPE H

Recommended Maximum Pipe Size:
3'-0" Wall-24" Pipe
7'-8" Wall-1-66" Pipe
2-30" Pipe

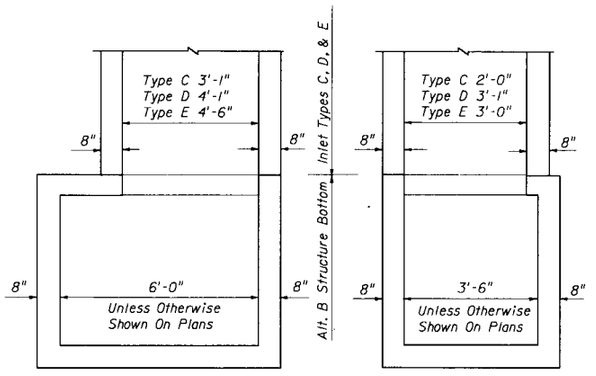

NOTE: Alt. B Structure Bottom Only. See Index No. 200

STRUCTURE BOTTOM FOR INLETS TYPE C, D & E

INLETS

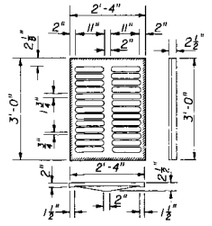

TYPE C
Approx. Weight 235 Lbs.

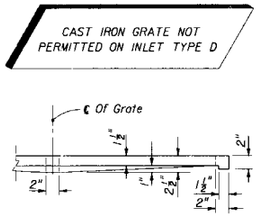

HALF SECTION CAST IRON GRATES

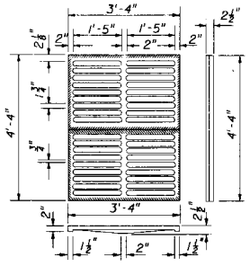

TYPE E
Approx. Weight 465 Lbs.

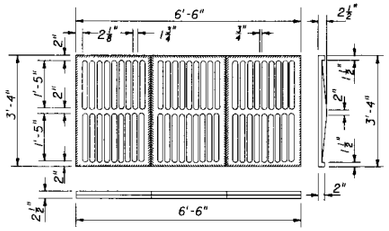

TYPE H
Approx. Weight 725 Lbs.

CAST IRON GRATES

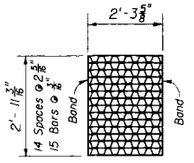

TYPE C
Straight Bars 2"x 3/16"
Reticuline Bars 1 1/4" x 3/16"
Bands 1 1/2" x 1/4"
Approx. Weight 100 Lbs.

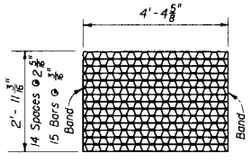

TYPE D
Straight Bars 2"x 3/16"
Reticuline Bars 1 1/4" x 3/16"
Bands 1 1/2" x 1/4"
Approx. Weight 180 Lbs.

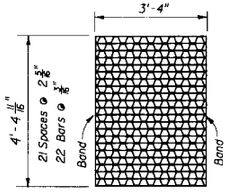

TYPE E
Straight Bars 2"x 3/16"
Reticuline Bars 1 1/4" x 3/16"
Bands 1 1/2" x 1/4"
Approx. Weight 215 Lbs.

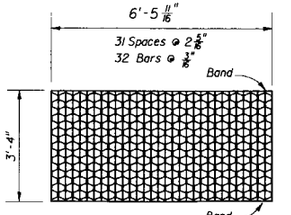

TYPE H
Straight Bars 2"x 3/16"
Reticuline Bars 1 1/4" x 3/16"
Bands 1 1/2" x 1/4"
Approx. Weight 315 Lbs.

NOTICE: Steel Grates Are Required On Inlets With Traversable Slots And On Inlets where Bicycle Traffic Is Anticipated.

STEEL GRATES

GENERAL NOTES

1. These inlets are suitable for bicycle and pedestrian areas and are to be used in ditches, medians and other areas subject to infrequent traffic loadings but are not to be placed in areas subject to any heavy wheel loads.
2. Inlets subject to minimal debris should be constructed without slots. Where debris is a problem inlets should be constructed with slots. Slotted inlets located within roadway clear zones and in areas accessible to pedestrians shall have traversable slots. The traversable slot modification is not adaptable to inlet Type H. Slots may be constructed at either or both ends as shown on plans.
3. Steel grates are to be used on all inlets where bicycle traffic is anticipated. Steel grates are to be used on all inlets with traversable slots. Either cast iron or steel grates may be used on inlets without slots where bicycle traffic is not anticipated. Either cast iron or steel grates may be used on all inlets with non-traversable slots. Subject to the selection described above, when Alternate G grate is specified in the plans, either the steel grate, hot dipped galvanized after fabrication, or the cast iron grate may be used, unless the plans stipulate the particular type.
4. Recommended maximum pipe sizes shown are for concrete pipe. Pipe sizes larger than those recommended must be checked for fit.
5. All exposed corners and edges of concrete are to be chamfered 3/4".
6. Pavement to be used on inlets without slots and inlets with non-traversable slots only when called for in the plans; but required on all traversable slot inlets. Cost to be included in contract unit price for inlets. Quantities shown are for information only.
7. Traversable slots constructed in existing inlets shall be paid for as inlets partial, and shall include the cost for slot openings, paving and any required replacement grates.
8. Sodding to be used on all inlets not located in paved areas and paid for under contract unit price for Sodding SY.
9. For supplementary details see Index No. 201.

STATE OF FLORIDA DEPARTMENT OF TRANSPORTATION
ROAD DESIGN

DITCH BOTTOM INLETS TYPES C, D, E & H

	Names	Dates
Designed By		
Drawn By		
Checked By	EGR/JG	07/81
F.H.W.A. Approved:		10/07/80

Approved By
State Drainage Engineer

Revision No.	Sheet No.	Index No.
92	1 of 4	232

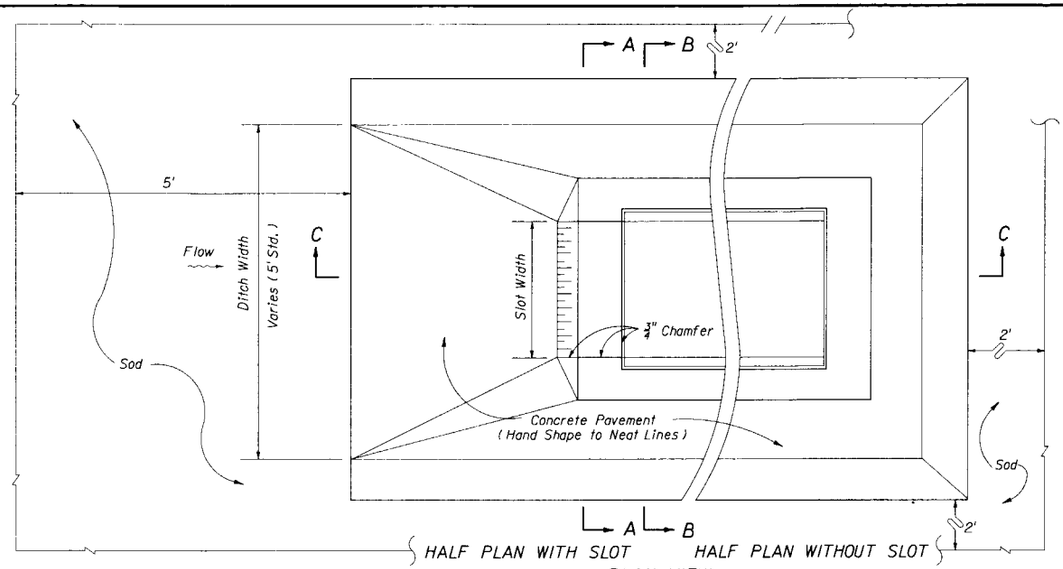

PLAN VIEW

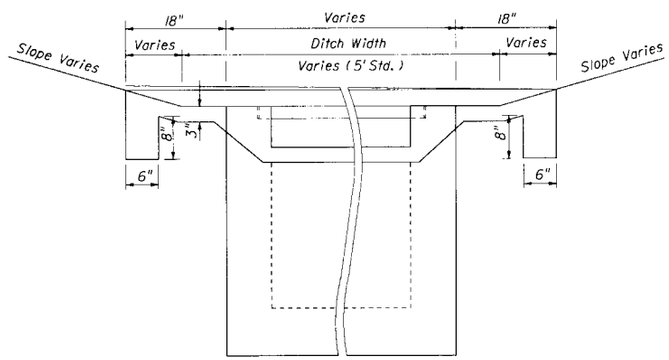

SECTION AA

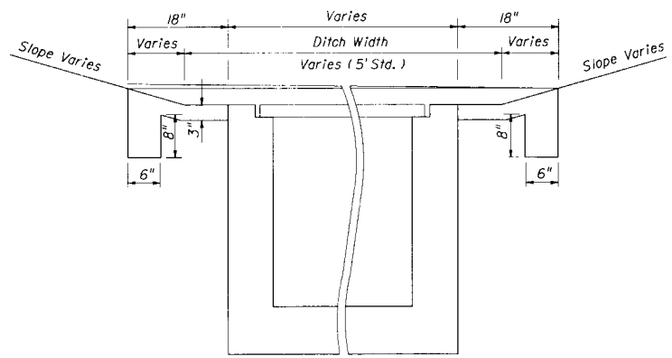

SECTION BB

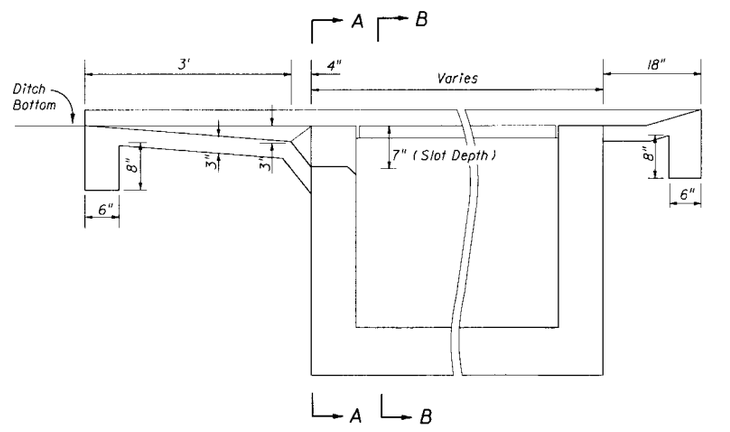

SECTION CC

PAVEMENT AND SODDING QUANTITIES FOR TRAVERSABLE SLOTS						
Inlet	Pavement				Sod	
	Single Slot		Double Slot		Single Slot	Double Slot
	SY	CY	SY	CY	SY	SY
C	4.87	0.77	6.16	0.93	12	16
D	5.99	0.91	7.70	1.10	14	19
E	5.88	0.91	7.37	1.08	14	18

TRAVERSABLE SLOTS

STATE OF FLORIDA DEPARTMENT OF TRANSPORTATION
ROAD DESIGN

DITCH BOTTOM INLETS TYPES C, D, E, & H

	Names	Dates
Designed By	EGR	02/80
Drawn By	JM	02/80
Checked By	JVG	02/80
F.H.W.A. Approved:		10/07/80

Approved By
State Drainage Engineer

Revision No.	Sheet No.	Index No.
87	2 of 4	232

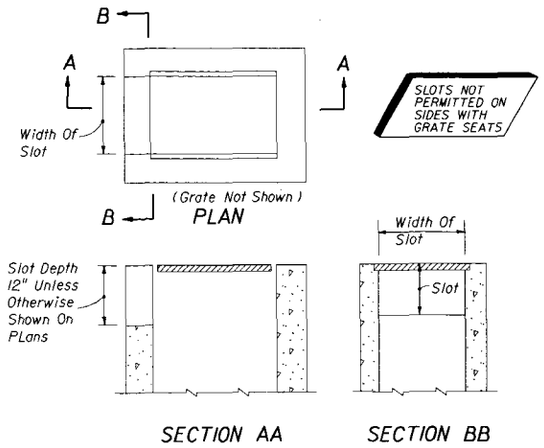

NOTE: See Index No. 229 For Application Guidelines

NON-TRAVERSABLE SLOTS

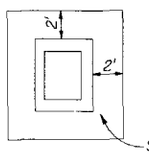

Inlet	Sod SY
C	6
D	6
E	7
H	8

SOD ONLY

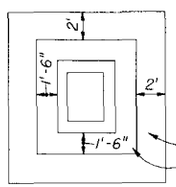

Inlet	Pavt CY	Sod SY
C	0.30	8
D	0.36	9
E	0.37	9
H	0.45	11

PAVT. AND SOD

NOTE: See General Notes Nos. 6 and 7

SODDING AND PAVEMENT FOR INLETS WITHOUT SLOTS AND INLETS WITH NON-TRAVERSABLE SLOTS

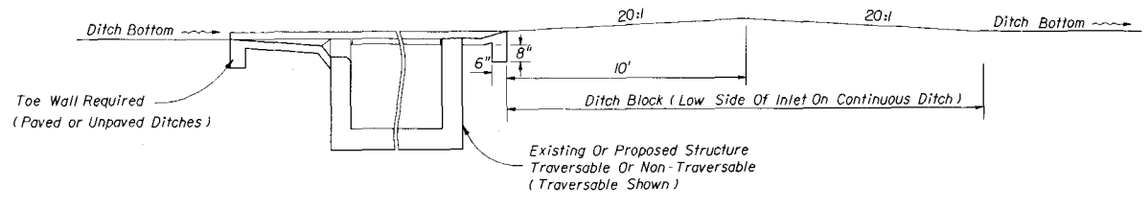

DITCH BLOCK FOR INLETS WITH OR WITHOUT SLOTS

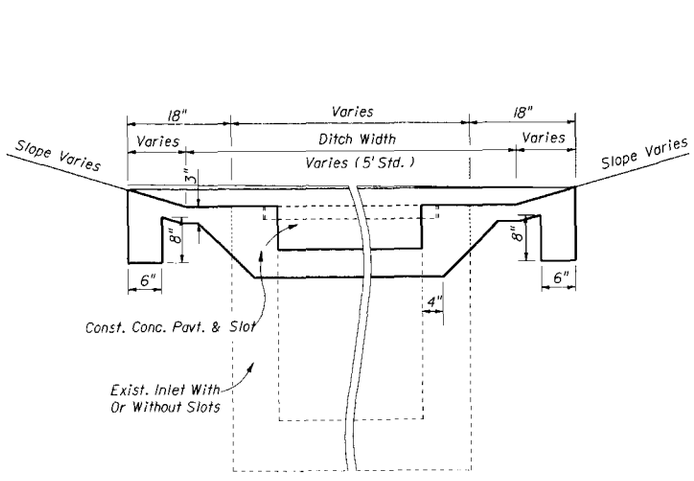

SECTION AA

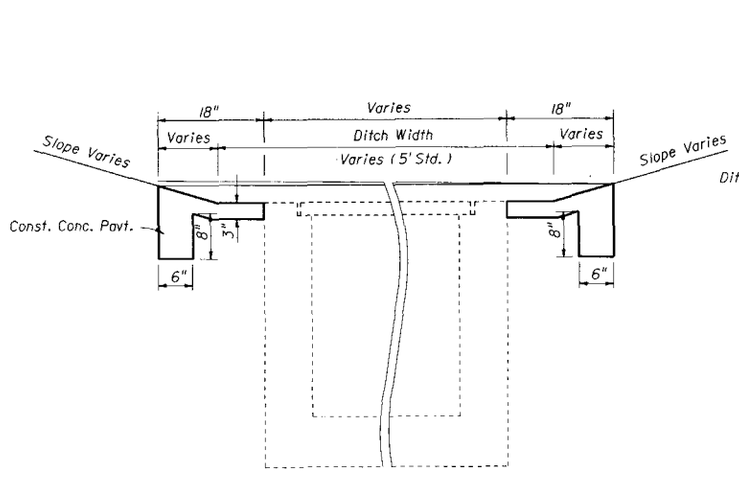

SECTION BB

PAVEMENT AND SODDING QUANTITIES FOR TRAVERSABLE SLOTS						
Inlet	Pavement				Sod	
	Single Slot		Double Slot		Single Slot	Double Slot
	SY	CY	SY	CY	SY	SY
C	4.87	0.83	6.16	1.05	12	16
D	5.99	1.01	7.70	1.30	14	19
E	5.88	0.99	7.37	1.24	14	18

NOTE: For plan view and additional details see sheet 2 of 4.
For payment see General Notes Nos. 6 and 7.

TRAVERSABLE SLOTS FOR EXISTING INLETS

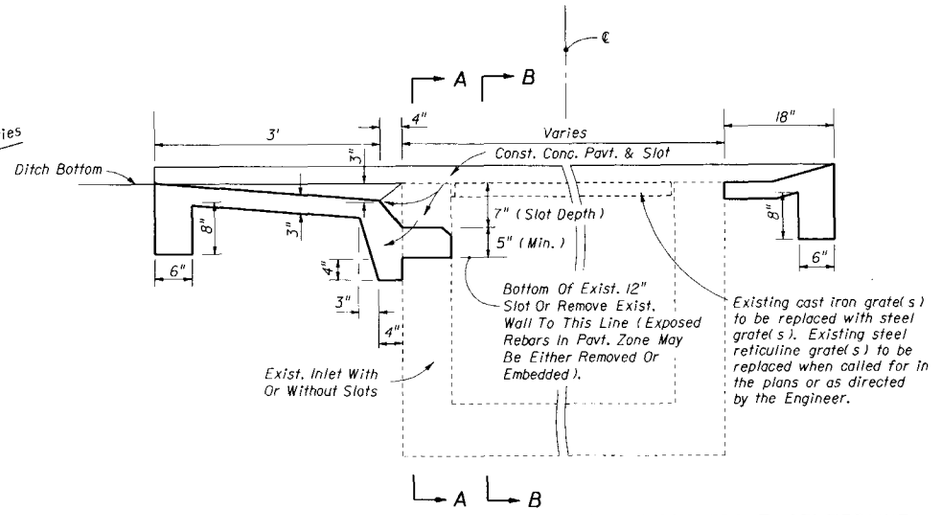

SINGLE SLOT SHOWN (DOUBLE SLOTS SYMMETRICAL ABOUT CENTERLINE)
SECTION CC (CASE 1)

STATE OF FLORIDA DEPARTMENT OF TRANSPORTATION
ROAD DESIGN

DITCH BOTTOM INLETS TYPES C,D,E & H

	Names	Dates
Designed By	EGR	07/84
Drawn By	DAE	07/84
Checked By	JBW/JVG	07/84
F.H.W.A. Approved:		09/21/84

Approved By E.W. Kruse
State Drainage Engineer

Revision No.	Sheet No.	Index No.
90	3 of 4	232

DESIGN NOTES

1. The general purpose of these conversions is to remove the hazard of the protruding inlet top, while not creating a hazard by depressing the top too deeply.

2. The corrective procedure depends on the approach ditch grade and hydraulic requirements of the site. The selection of the appropriate case depends on the relationship between inlet top and ditch elevation, and, on the vertical clearance between the top of the uppermost pipe(s) and the grate. The purpose for the Case 1 conversion is to add the traversable slot to an existing inlet where top removal, change in grate elevation and ditch transitions are not required. Case 2 will normally be applicable to ditches with flatter grades adjoining the inlet. Case 3 will normally be applicable to ditches with steeper grades adjoining the inlet where buildup of the existing ditch is acceptable.

3. The designer shall stipulate in the plans which case is to be constructed at each individual inlet location.

   Where the existing inlet top is above the existing ditch (Case 2) but borrow material will be required to adjust the ditch (Case 3), and vertical clearance or other conditions do not prevent removal of the inlet top, the designer should call for Case 2. The designer shall determine if ditch reconstruction is required more than 35 feet beyond any traversable slot side and shall include separate pay items in the plans to cover the cost for that portion of required ditch reconstruction exceeding the 35 foot limit. The designer shall also determine whether ditch pavement is required for ditch restoration within the 35 foot limit and include that pavement under a pay item separate from the inlets partial.

   When the detention ditch concept is to be used with Case 3, the designer shall stipulate 'Case 3 (Detention)' in the plans.

   The designer shall determine whether tight soil or other conditions at each individual inlet indicates the need for underdrain in Case 3 conversions and shall call for Underdrain, Type I in the plans.

METHOD OF PAYMENT

1. Existing inlets converted to traversable slot tops under Cases 1, 2 and 3 shall be paid for as inlets partial, each. Case shall not be included in the pay item description.

2. All ditch reconstruction work within 35 feet of each traversable slot conversion, whether required by these details or as a direct result of the conversion, shall be included as a part of the partial cost. Reconstruction work shall include excavation and removal of surplus materials or borrow materials in place, grading, compaction, shaping and seeding and mulching. Sodding, ditch pavement and underdrain are not included as part of the inlet partial cost and are to be paid for separately.

3. Inlet pavement and sodding shall be in accordance with the sections on this detail and with the Plan on Sheet 2 of 4 and Sections AA, BB and CC (as Case 1) and tabular quantities on Sheet 3 of 4.

4. Unit price and payment shall constitute full compensation for inlet conversion, replacement grate(s) ditch reconstruction, seeding and mulching, and shall be paid for under the contract unit price for Inlets (DT Bot) (Type ___) (Partial), each.

   Sodding shall be paid for under the contract unit price for Sodding, SY.

   Ditch pavement shall be paid for separate from the inlet by pavement type(s) and unit(s) as called for in the plans.

   Underdrain called for in the plans for Case 3 conversions shall be paid for as Underdrain, Type I, LF.

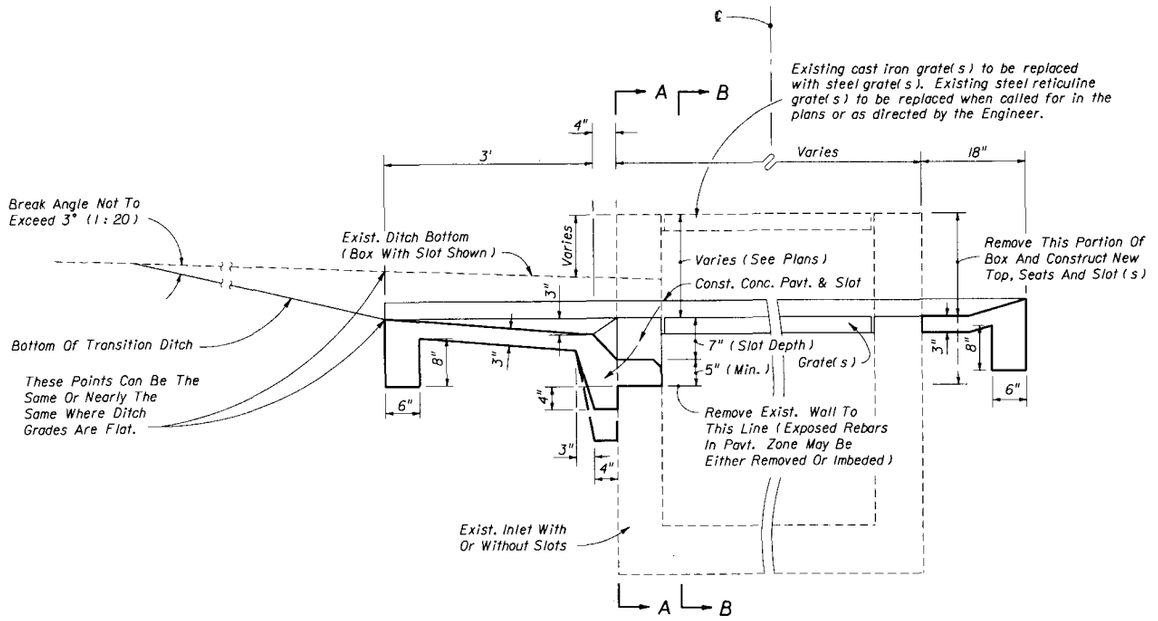

SINGLE SLOT SHOWN (DOUBLE SLOTS SYMMETRICAL ABOUT CENTERLINE)
SECTION CC (CASE 2)

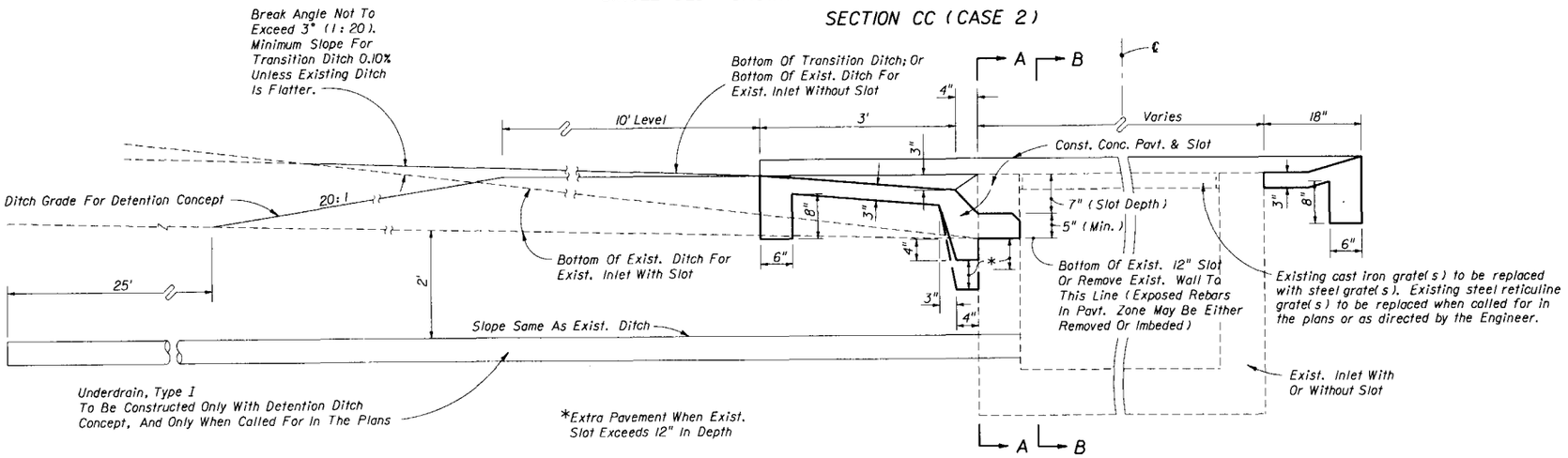

SINGLE SLOT SHOWN (DOUBLE SLOTS SYMMETRICAL ABOUT CENTERLINE)
SECTION CC (CASE 3)

TRAVERSABLE SLOT INLETS (PARTIAL) FOR EXISTING INLETS

STATE OF FLORIDA DEPARTMENT OF TRANSPORTATION
ROAD DESIGN

DITCH BOTTOM INLETS TYPES C, D, E & H

	Names	Dates
Designed By	JVG/EGR	03/10/86
Drawn By	HSD/dds	05/20/86
Checked By	JVG/EGR	05/22/86
F.H.W.A. Approved:		11/07/86

Approved By: E. G. Rueter, State Drainage Engineer

Revision No.	Sheet No.	Index No.
90	4 of 4	232

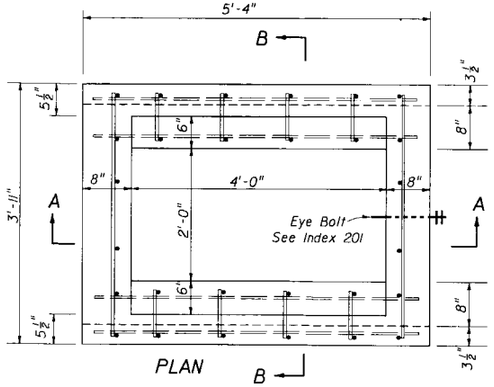

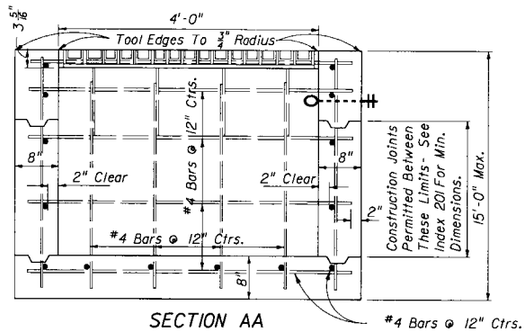

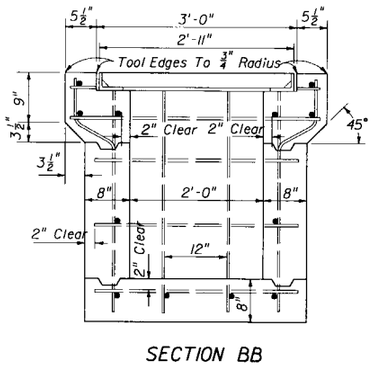

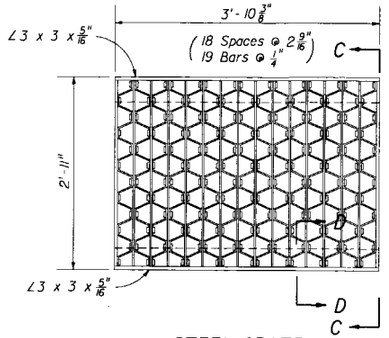

TYPE F

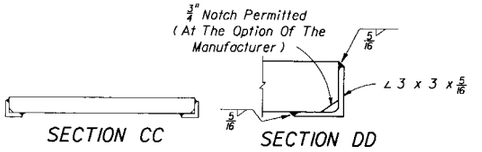

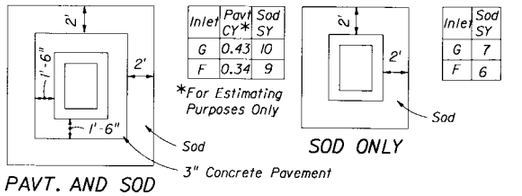

Inlet	Pavt CY*	Sod SY
G	0.43	10
F	0.34	9

*For Estimating Purposes Only

Inlet	Sod SY
G	7
F	6

Notes: 1. Pavement and/or sod to be used only where called for in the plans.
2. Cost of paving to be included in cost of inlet.

PAVEMENT AND SODDING

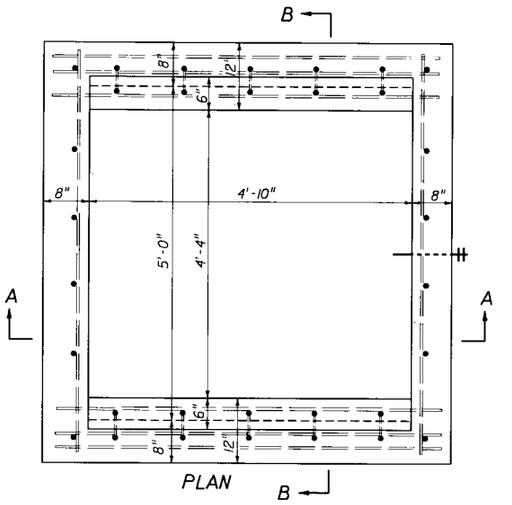

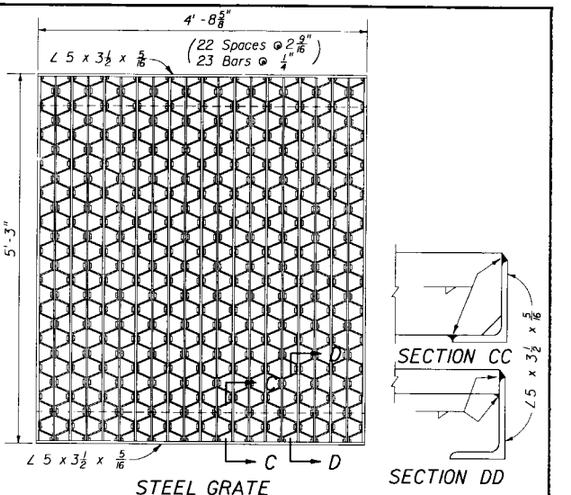

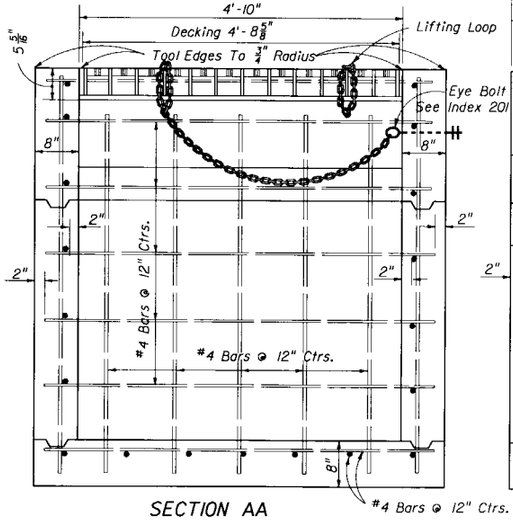

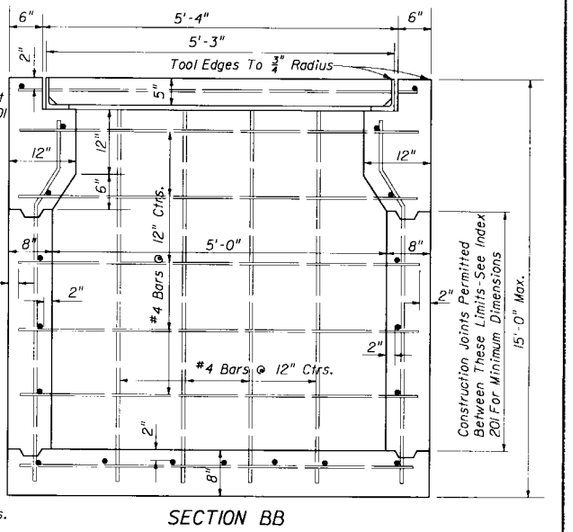

TYPE G

GENERAL NOTES

1. These inlets are designed for use in ditches, medians, pavement areas, or other areas subject to heavy wheel loads where debris is minimal and is subject to pedestrian and/or bicycle traffic.
2. When alternate G grate is specified in plans, the grate is to be hot dipped galvanized after fabrication.
3. These inlets may be used with Alt. B structure bottoms, Index 200. The inlet and bottom combinations are to be paid for under the contract unit price for inlets (DT Bot) (Type F (or G)) (J Bot, Depth), Ea.

STATE OF FLORIDA DEPARTMENT OF TRANSPORTATION
ROAD DESIGN

DITCH BOTTOM INLETS TYPES F & G

	Names	Dates
Designed By	TWJ	01/50
Drawn By	MEF	01/50
Checked By	WHM	01/50
F.H.W.A. Approved:		05/01/75

Approved By: B.G. Luce
State Drainage Engineer

Revision No.	Sheet No.	Index No.
92	1 of 1	233

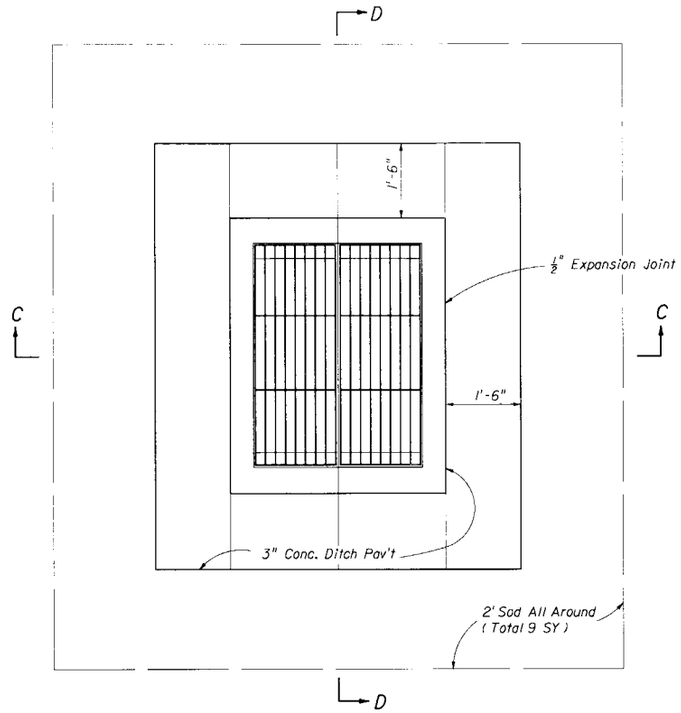

PAVEMENT & SODDING

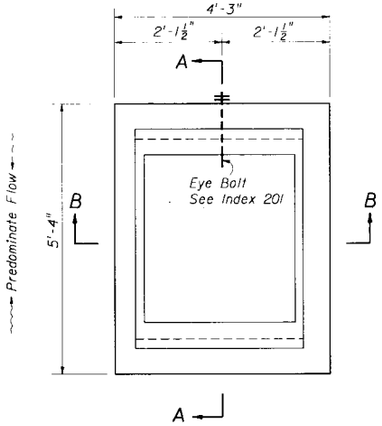

PLAN

RECOMMENDED MAXIMUM PIPE SIZES	
INLET INSIDE WIDTH	PIPE SIZE
2'-11"	24"
4'-0"	36"

Note: Recommended sizes are for concrete pipe. Sizes for other types of pipe must be verified for fit in accordance with Index No. 201. For larger pipe see bottom detail right and Index No. 200.

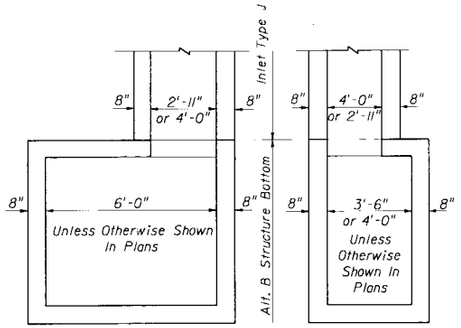

NOTE: Alt. B Structure Bottom Only. See Index 200

INLET WITH STRUCTURE BOTTOM

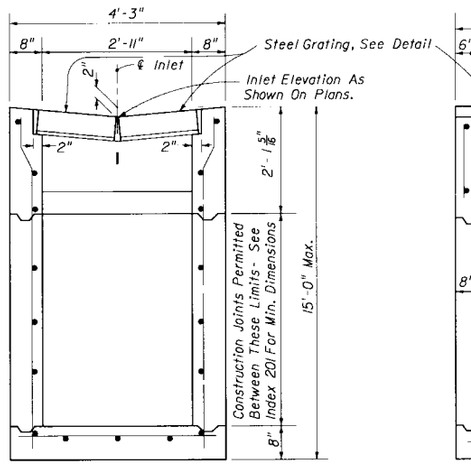

SECTION BB

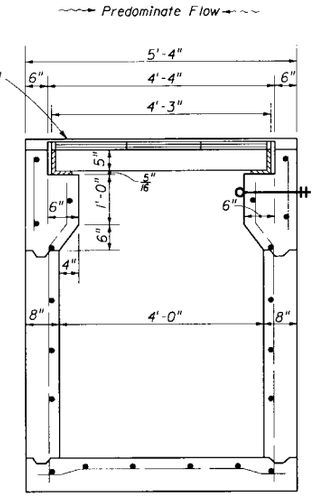

SECTION AA

GENERAL NOTES

1. This inlet is designed for ditches, medians or other areas subject to heavy wheel loads, where only light debris is expected and pedestrian traffic is anticipated. NOTICE: Inlet not for use in areas subject to bicycle traffic.
2. Reinforcing- No. 4 bars at 12" centers both ways with 2" clearance to inside face. Cut or bend bars out of way of pipe when necessary; bars to clear pipe by 1 1/2".
3. When alternate G grate is specified in plans the grate is to be hot dipped galvanized after fabrication.
4. For supplemental details, see Index 201.
5. Cost of ditch paving to be included in cost of inlet. Sodding to be paid for under contract unit price for Sodding, SY.

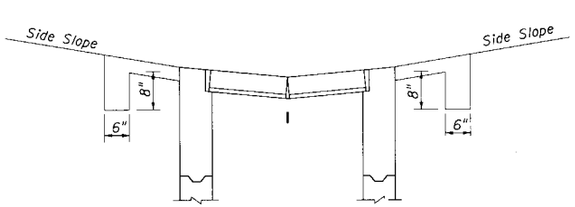

SECTION CC

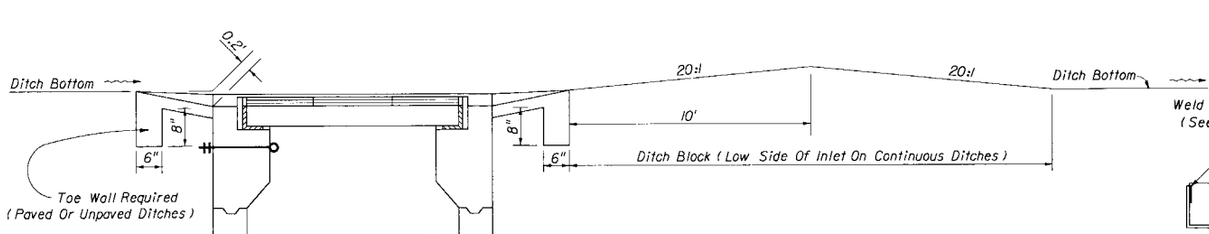

SECTION DD

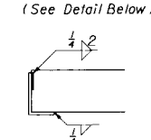

DETAIL

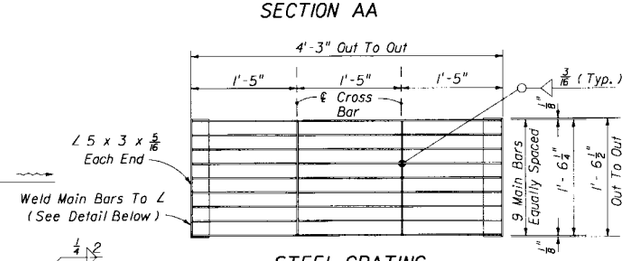

STEEL GRATING

Note: Two Required Per Inlet

Main Bars 5" x 1/4" (Notched For Cross Bars).

Cross Bars 1 3/4" x 1/4" (Continuously Welded At Main Bar Notches).

Main Bars And Cross Bars Flush On Top.

STATE OF FLORIDA DEPARTMENT OF TRANSPORTATION
ROAD DESIGN

DITCH BOTTOM INLET TYPE J

	Names	Dates	Approved By
Designed By	LMF	08/76	E. G. Huge, State Drainage Engineer
Drawn By			
Checked By	SRL	08/76	
F.H.W.A. Approved:		09/03/76	

Revision No.	Sheet No.	Index No.
92	1 of 1	234

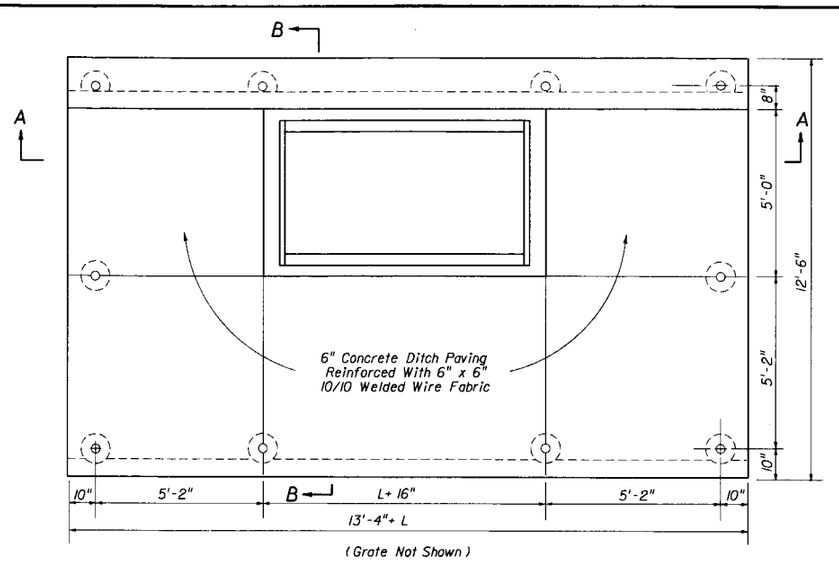

(Grate Not Shown)

PLAN

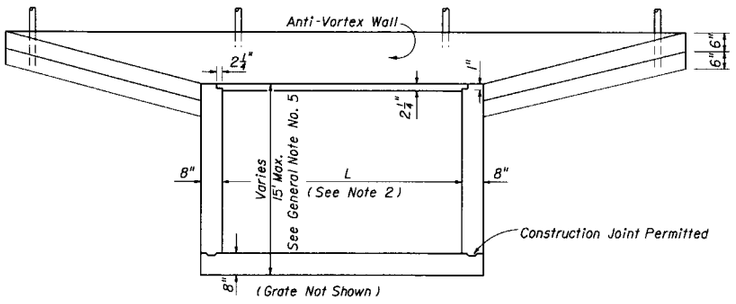

(Grate Not Shown)

SECTION AA

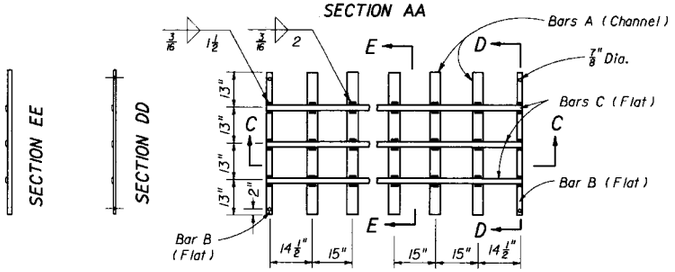

STEEL GRATE

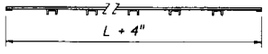

SECTION CC

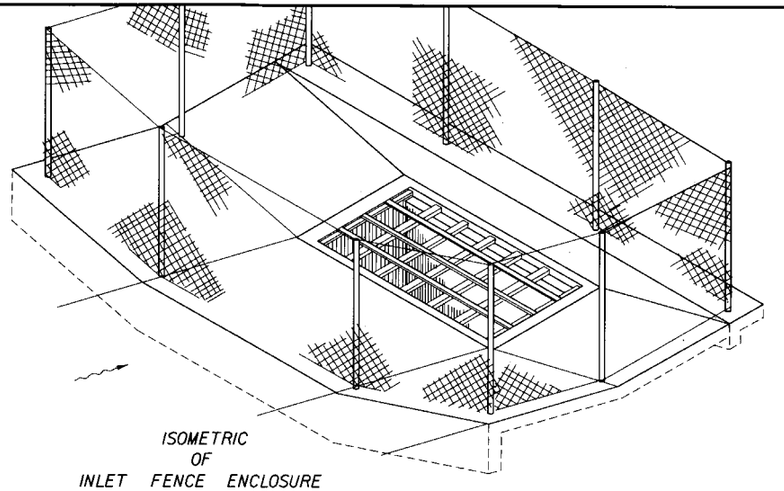

ISOMETRIC
OF
INLET FENCE ENCLOSURE

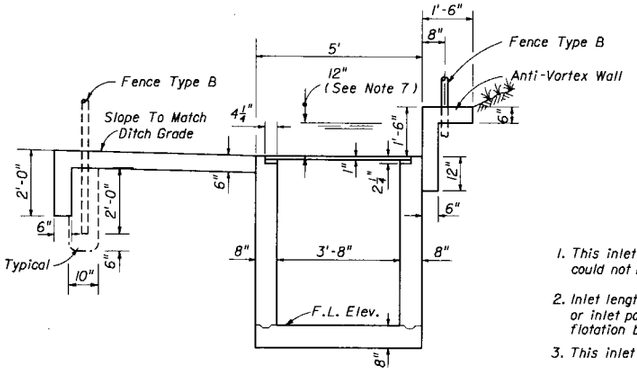

(Grate Not Shown)

SECTION BB

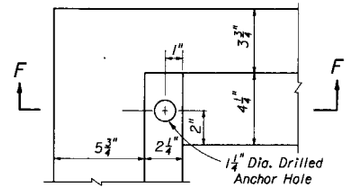

GRATE SEAT AND ANCHOR HOLE PLAN

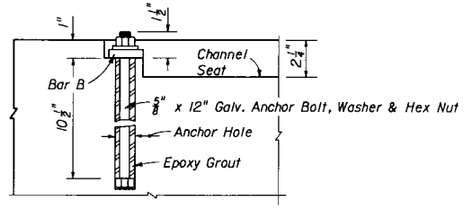

(With Bar B And Anchor Bolt)

SECTION FF

GRATE QUANTITIES						
PIPE SIZE	L	BILL OF STEEL			STEEL WEIGHT	
		BAR	No. REQ'D.	LENGTH	CHANNEL 4" x 5.4#	FLAT 2" x ½" (3.4#)
30"& 36"	4'-9"	A	3	4'-4"	70	
		B	2	4'-4"		30
		C	3	5'-1"		52
42"& 48"	6'-0"	A	4	4'-4"	94	
		B	2	4'-4"		30
		C	3	6'-4"		65
54"& 60"	7'-3"	A	5	4'-4"	117	
		B	2	4'-4"		30
		C	3	7'-7"		77
66"& 72"	8'-6"	A	6	4'-4"	140	
		B	2	4'-4"		30
		C	3	8'-10"		90
SPECIAL	9'-9"	A	7	4'-4"	164	
		B	2	4'-4"		30
		C	3	10'-1"		103
SPECIAL	11'-0"	A	8	4'-4"	187	
		B	2	4'-4"		30
		C	3	11'-4"		116
SPECIAL	12'-3"	A	9	4'-4"	211	
		B	2	4'-4"		30
		C	3	12'-7"		128
SPECIAL	13'-6"	A	10	4'-4"	234	
		B	2	4'-4"		30
		C	3	13'-10"		141
SPECIAL	14'-9"	A	11	4'-4"	257	
		B	2	4'-4"		30
		C	3	15'-1"		154
SPECIAL	16'-0"	A	12	4'-4"	281	
		B	2	4'-4"		30
		C	3	16'-4"		167
SPECIAL	17'-3"	A	13	4'-4"	304	
		B	2	4'-4"		30
		C	3	17'-7"		179
SPECIAL	18'-6"	A	14	4'-4"	328	
		B	2	4'-4"		30
		C	3	18'-10"		192

GENERAL NOTES

1. This inlet is to be used at locations having high flow rates, usually where an endwall could not be utilized without hazardous intake.
2. Inlet length (L) shall be set by the designer for the greater of either culvert requirement or inlet pool not to exceed 12" depth. Structures over 6' in depth are to be checked for flotation by the designer of project drainage.
3. This inlet is not intended for use with Alternate B structure bottoms.
4. Inlet and anti-vortex wall to be Class I Concrete.
5. Reinforcing- No. 4 bars at 12" centers both ways for pipe sizes up to 72" diameter; 1½" clearance to inside face and bottom of inlet. See Index No. 201, Sh. 4 & 5 for reinf. steel modification for depths 13' to 15'. Bend top and corner bars to clear anchor holes. Inlets for special size pipe require special reinforcement design and design approval by the project design engineer.
6. Channel section C 3 x 6 may be used as an alternate for the C 4 x 5.4 channel.
7. Channels and bars shall be ASTM A 242, A 441, A 572 or A 588, Grade 50 steel, and galvanized in accordance with Section 962-7 of the Standard Specifications.
8. Fence enclosure shall be Fence Type B (Index No. 452). All posts to be set in concrete. A minimum of 10 posts required. Corner and approach side posts to be 3" nominal.
9. Cost of ditch paving, anti-vortex wall, grate, concrete, reinforcing steel and fence enclosure to be included in the cost of inlet. Inlet to be paid for under the contract unit price for inlets (DT Bot) (Type K), Each.

STATE OF FLORIDA DEPARTMENT OF TRANSPORTATION
ROAD DESIGN

DITCH BOTTOM INLET TYPE K

	Names	Dates
Designed By	FHWA	
Drawn By	SM	6/79
Checked By	JG	6/79
F.H.W.A. Approved:		

Approved By: E. G. Lynch
State Drainage Engineer

Revision No.	Sheet No.	Index No.
92	1 of 1	235

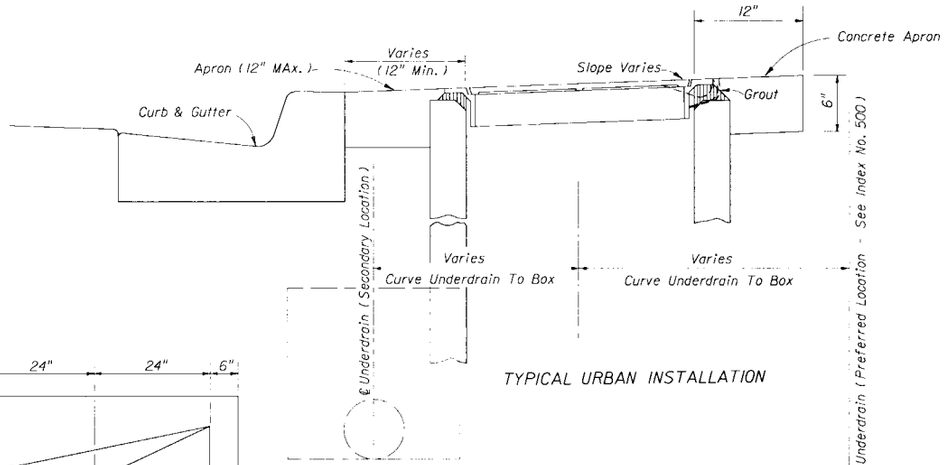

TYPICAL URBAN INSTALLATION

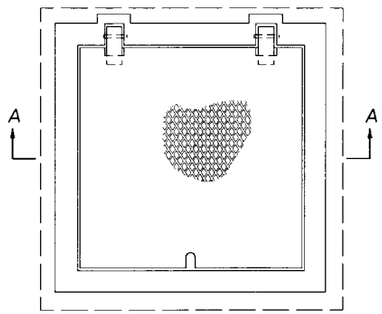

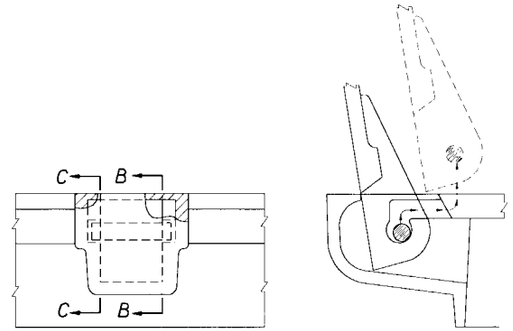

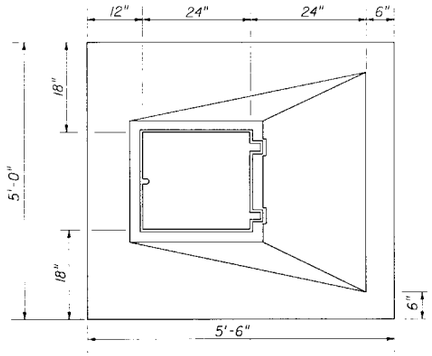

TOP VIEW

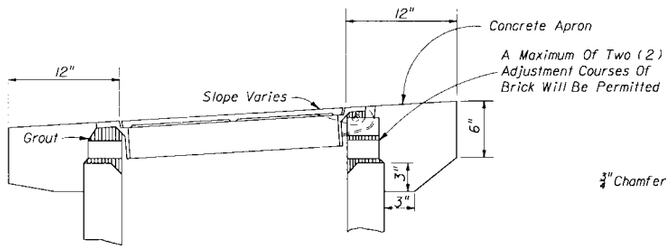

PERMISSIBLE TOP ADJUSTMENT



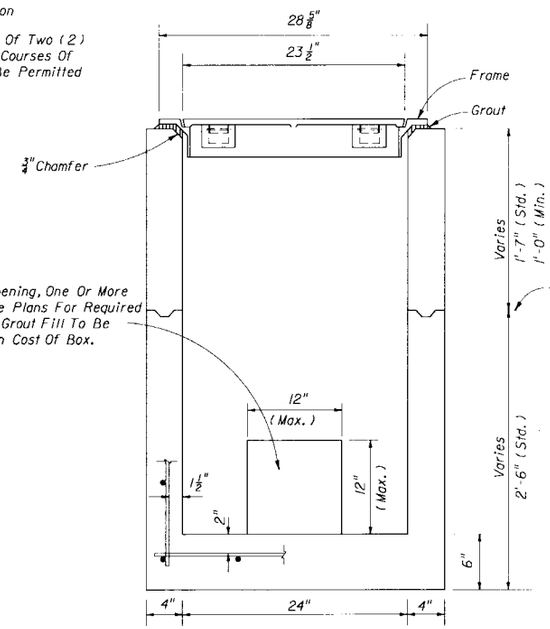

SECTION AA

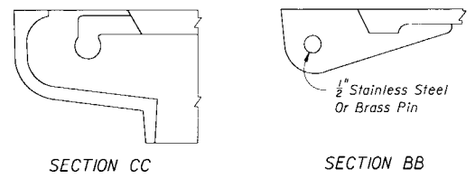

HINGE DETAIL

GENERAL NOTES

1. Cast iron cover and frame to be Neenah Foundary Company R-6660-JH, U.S. Foundary Manufacturing Corporation No. A-632 or equal. Neenah R-6660-JH detailed this index.
2. Box to be Class I Concrete, reinforced with No. 3 bars on 8" centers both ways, sides and bottom.
3. Concrete apron to be included in the contract unit price for Underdrain Inspection Box.
4. All covers shall be furnished with pick holes. Fitted lifts or handles are not permitted.
5. Manhole Type P Alternate A, Index 200, with Type I Frame and Cover, Index 201, may be used in lieu of the box detailed on this sheet, and is recommended when high ADT increases chance of the repeated vehicle loadings.

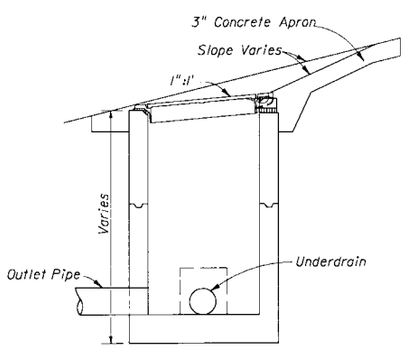

SECTION

TYPICAL INSTALLATION ON SLOPES

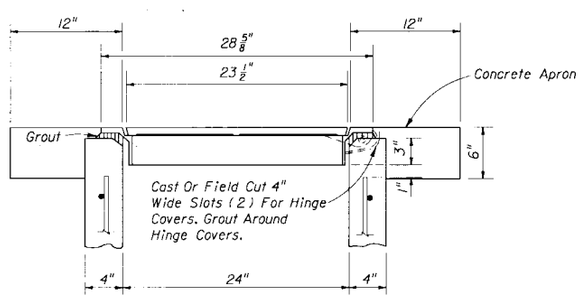

TYPICAL TOP AND APRON

BOX AND TOP

STATE OF FLORIDA DEPARTMENT OF TRANSPORTATION
ROAD DESIGN

UNDERDRAIN INSPECTION BOX

	Names	Dates
Designed By	WS	05/81
Drawn By	JM	05/81
Checked By	JVG	05/81
F.H.W.A. Approved:		10/08/81

Approved By
Chief, Bureau of State Drainage Engineer

Revision No.	Sheet No.	Index No.
82	1 of 1	245

APPLICATION GUIDELINES FOR PIPE END TREATMENTS

INDEX NO.	DESCRIPTION		APPLICATION			INLET END			OUTLET END		SAFETY		ECONOMIC RATING	
	TYPE	PIPE SIZE	CROSSDRAIN	SIDEDRAIN	MEDIAN	APPLICABLE	HYDRAULIC PERFORMANCE	K_e	APPLICABLE	EROSION TOLERANT	PERMITTED LOCATION	TRAFFIC-SAFE GRATE AVAILABLE		
250	Straight Concrete	Single and Multiple 15" Thru 54"	Yes	No	Limited	Yes	Excellent	0.2	Limited	Good	Outside CZ	No	Fair	For back of sidewalk location see Index No. 282
251	Straight Concrete	Single and Double 60"	Yes	No	Limited	Yes	Excellent	0.2	Limited	Good	Outside CZ	No	Fair	
252	Straight Concrete	Single and Double 66"	Yes	No	Limited	Yes	Excellent	0.2	Limited	Good	Outside CZ	No	Fair	
253	Straight Concrete	Single and Double 72"	Yes	No	Limited	Yes	Excellent	0.2	Limited	Good	Outside CZ	No	Fair	
255	Straight Concrete	Single 84"	Yes	No	Limited	Yes	Excellent	0.2	Limited	Good	Outside CZ	No	Fair	
258	Straight Sand Cement	Single & Multiple 18" Thru 84"	Limited*	No	Limited	Yes	Very Good	0.3	Yes	Good	Outside CZ	No	Good	*For temporary construction or use on a minor facility
260	U Type With Grate Concrete	Single 15" Thru 30"	Limited	No	Yes	Yes	Fair	0.7	Yes	Very Good	Inside CZ	Required	Good	
261	U Type Concrete	Single 15" Thru 30"	Limited	No	Yes	Limited	Good	0.5-0.7	Yes	Good	Grate Required Inside CZ	Yes	Fair	
264	Concrete Energy Dissipator	Single 30" Thru 72"	Limited	No	No	No	NA	NA	Yes	Excellent	Outside CZ	No	NA	
266	Winged Concrete	Single 12" Thru 48"	Yes	No	Yes	Yes	Very Good	0.3	Yes	Good	Outside CZ	No	Good	
268	U Type Sand Cement	Single &* Multiple 15" Thru 60"	Limited	No	Limited	Yes	Good	0.5	Yes	Very Good	Outside CZ	No	Good	*For temporary construction or use on a minor facility.
270	Flared End Section Concrete	Single 12" Thru 72"	Yes	No	Yes	Yes	Good	0.5	Yes	Very Good*	Outside* CZ	No	Very Good	*Construction of optional toewall and concrete jacket may be necessary. Flared end sections sizes 12" and 15" may be located as close as 8' beyond the outside edge of the shoulder.
272	Cross Drain Mitered End Section	Single & Multiple 15" Thru 72"	Yes	No	Yes	Yes	Fair	0.7	Yes	Good	Outside* CZ	No	Very Good	*Mitered end sections sizes 15", 18" and 24" may be located as close as 8' beyond the outside edge of the shoulder.
273	Side Drain Mitered End Section	Single & Multiple 15" Thru 60"	No	Yes	No	Yes	Fair	0.7 (w/o grate) 1.0 (with grate)	Yes	Good	Inside* CZ	Yes	Good	*Mitered end section size 30" and larger require use of grate. Grate may be deleted if pipe is located outside CZ and is offset from approach ditch alignment.
274	Side Drain Mitered End Section	Single 15" Thru 24"	No	Yes*	No	Yes	Fair	0.7	Yes	Good	Inside CZ	No	Good	*For sidedrain installations constructed by FDOT maintenance forces or constructed under FDOT maintenance permit only.

1. All end treatments must be selected to satisfy hydraulic suitabilities with proper consideration given to safety and economics.
2. CZ denotes clear zone, formerly CRA denoting clear recovery area.
3. Grates should not be placed on outlet ends unless positive debris protection is provided at inlet end.
4. Additional notes concerning application restrictions may be shown on individual indexes.
5. Economic ratings are based on statewide average costs.
6. End treatments with a K_e of 0.5 or greater should be used only in areas of low design velocities and negligible debris.
7. Pipe sizes are circular, Class III B Wall, concrete pipe. Elliptical pipe and corrugated pipe are to be checked for fit in accordance with Index No. 201; metal pipe sizes should be reviewed using $2\frac{2}{3} \times \frac{1}{2}$" corrugation up to 30" and 3" x 1" corrugation for larger sizes.

STATE OF FLORIDA DEPARTMENT OF TRANSPORTATION
ROAD DESIGN

PIPE END TREATMENT APPLICATION GUIDE

	Names	Dates
Designed By	EGR	09/05/84
Drawn By	DAE	09/05/84
Checked By	EGR	09/06/84
F.H.W.A. Approved		09/21/84

Approved By _____
State Drainage Engineer

Revision No.	Sheet No.	Index No.
90	1 of 1	249

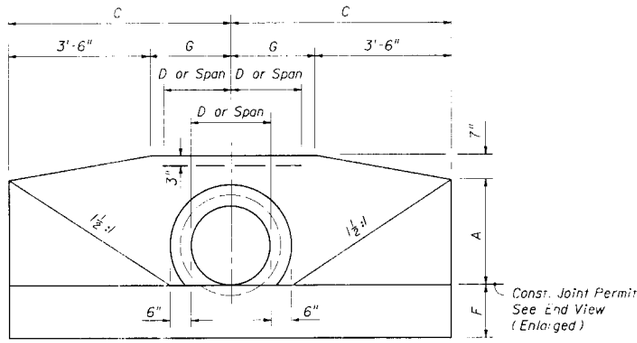

FRONT VIEW

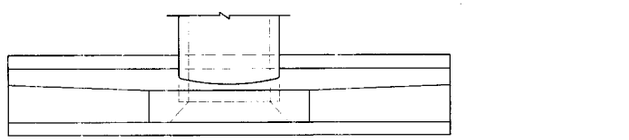

TOP VIEW

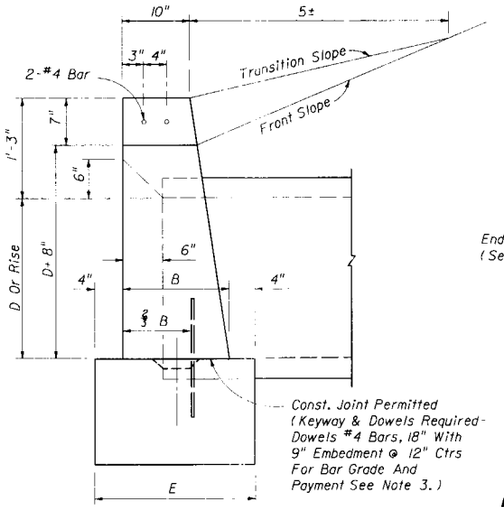

END VIEW (ENLARGED)

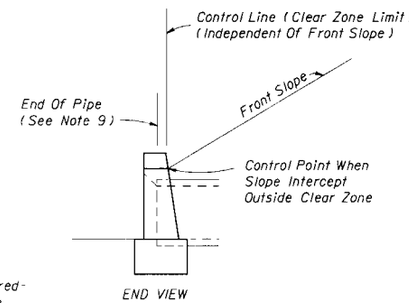

END VIEW

STANDARD LOCATION CONTROL

ENDWALL DIMENSIONS (EXCLUSIVE OF MULTIPLE PIPE SPACING)

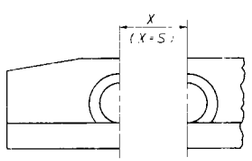

FRONT VIEW

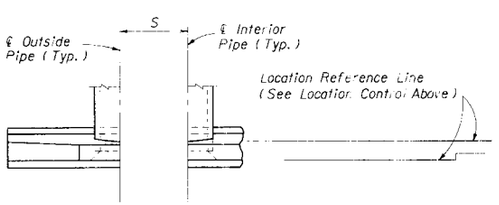

TOP VIEW

NORMAL PIPE

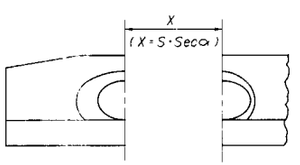

FRONT VIEW

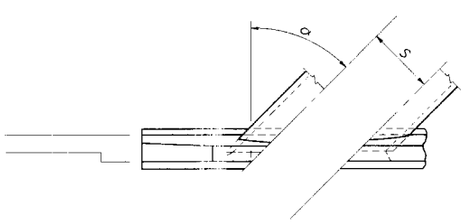

TOP VIEW

SKEWED PIPE

LEGEND

- α Pipe Skew
- S Center To Center Pipe Spacing
- X Centerline To Centerline Dimension At Face Of Headwall

ENDWALL POSITIONS FOR SINGLE AND MULTIPLE PIPE AND SPACING FOR MULTIPLE PIPE

GENERAL NOTES

1. Endwall dimensions, locations and positions are for round and elliptical concrete pipe and for round and pipe-arch corrugated metal pipe. Round concrete pipe shown.
2. Front slope and ditch transitions shall be in accordance with Index No. 280.
3. Endwalls may be cast in place or precast concrete. Reinforcing steel shall be Grades 40 or 60. Additional reinforcement necessary for handling precast units shall be determined by the Contractor or the supplier. Cost of reinforcement shall be included in the contract unit price for concrete, (endwalls).
4. All exposed corners and edges of concrete are to be chamfered ¾".
5. Concrete meeting the requirements of ASTM C-478 (4000 psi) may be used in lieu of Class I concrete in precast items manufactured in plants which are under the Standard Operating Procedures for the inspection of precast drainage products.
6. On outfall ditches with side slopes flatter than 1½":1, provide 20' transitions from the endwall to the flatter side slopes, right of way permitting.
7. For sodding around endwalls see Index No. 281.
8. Payment for concrete quantities for endwalls skewed to the pipe shall be made on the following basis:

Endwall Skew To Pipe	Use Tabulated Value
0° to 5°	0°
6° to 15°	15°
16° to 30°	30°
31° or over	45°

9. Pipe length plan quantities shall be based on the pipe end locations shown in the standard location control end view, or lengths based on special endwall locations called for in the plans.
10. Payment for pipe in pipe culverts shall be based on plan quantities, adjusted for endwall locations subsequently established by the Engineer.
11. Endwalls to be paid for under the contract unit price for Class I Concrete (Endwalls), CY.

STATE OF FLORIDA DEPARTMENT OF TRANSPORTATION
ROAD DESIGN

STRAIGHT CONCRETE ENDWALLS SINGLE AND MULTIPLE PIPE

	Names	Dates
Designed By	HAB/EGR	7.3/83
Drawn By	RWR/HSD	83
Checked By	JBW/JMG	83
F.H.W.A. Approved:		10/06/83

Approved By [signature]
State Drainage Engineer

Revision No.	Sheet No.	Index No.
92	1 of 2	250

DATA AND ESTIMATED QUANTITIES FOR ONE ENDWALL

ROUND CONCRETE AND CORRUGATED METAL PIPE

D	Opening Area (SF) Number Of Pipes 1	2	3	4	Dimensions A	B	C	E	F	G	S	X 0°	15°	30°	45°	Class I Concrete (CY) Number And Type Of Pipe And Skew Angle Of Pipe — Single Concrete 0°	Single Metal 0°	Double Concrete 0°	15°	30°	45°	Double Metal 0°	15°	30°	45°	Triple Concrete 0°	15°	30°	45°	Triple Metal 0°	15°	30°	45°	Quadruple Concrete 0°	15°	30°	45°	Quadruple Metal 0°	15°	30°	45°	D
15"	1.23	2.46	3.69	4.92	1'-11"	1'-2"	4'-0"	1'-10"	1'-2"	0'-6"	2'-7"	2'-7"	2'-8"	3'-0"	3'-8"	1.23	1.24	1.59	1.60	1.65	1.74	1.62	1.63	1.68	1.78	1.94	1.96	2.05	2.23	1.99	2.02	2.11	2.30	2.30	2.34	2.47	2.74	2.37	2.41	2.75	2.84	15"
18"	1.77	3.54	5.31	7.08	2'-2"	1'-3"	4'-6"	1'-11"	1'-3"	1'-0"	2'-10"	2'-10"	2'-11"	3'-3"	4'-0"	1.56	1.59	1.99	2.01	2.06	2.17	2.04	2.06	2.11	2.23	2.43	2.46	2.56	2.79	2.51	2.54	2.65	2.89	2.86	2.91	3.06	3.40	2.96	3.01	3.17	3.53	18"
21"	2.41	4.82	7.23	9.64	2'-5"	1'-4"	5'-0"	2'-0"	1'-4"	1'-6"	3'-2"	3'-2"	3'-3"	3'-8"	4'-6"	1.97																											21"
24"	3.14	6.28	9.42	12.56	2'-8"	1'-4"	5'-6"	2'-0"	1'-4"	2'-0"	3'-5"	3'-5"	3'-6"	3'-11"	4'-10"	2.24	2.29	2.82	2.84	2.91	3.06	2.91	2.93	3.01	3.17	3.39	3.43	3.57	3.87	3.52	3.56	3.71	4.03	3.97	4.03	4.24	4.69	4.14	4.20	4.43	4.91	24"
27"	3.98	7.96	11.94	15.92	2'-11"	1'-5"	6'-0"	2'-1"	1'-5"	2'-6"	3'-10"	3'-10"	4'-0"	4'-5"	5'-5"	2.73																											27"
30"	4.91	9.82	14.73	19.64	3'-2"	1'-6"	6'-6"	2'-2"	1'-6"	3'-0"	4'-3"	4'-3"	4'-5"	4'-11"	6'-0"	3.26	3.34	4.13	4.16	4.26	4.49	4.28	4.31	4.43	4.67	4.98	5.04	5.25	5.69	5.20	5.27	5.49	5.97	5.84	5.93	6.24	6.91	6.13	6.23	6.56	7.29	30"
36"	7.07	14.14	21.21	28.28	3'-8"	1'-8"	7'-6"	2'-4"	1'-8"	4'-0"	5'-1"	5'-1"	5'-3"	5'-10"	7'-2"	4.53	4.64	5.73	5.77	5.92	6.23	5.95	6.00	6.15	6.49	6.92	7.00	7.29	7.91	7.25	7.34	7.65	8.33	8.13	8.26	8.69	9.62	8.57	8.71	9.18	10.20	36"
42"	9.62	19.24	28.86	38.48	4'-2"	1'-10"	8'-6"	2'-6"	2'-0"	5'-0"	6'-0"	6'-0"	6'-3"	6'-11"	8'-6"	6.33	6.49	8.11	8.17	8.39	8.85	8.43	8.50	8.73	9.23	9.90	10.02	10.45	11.38	10.38	10.52	10.98	11.99	11.68	11.87	12.51	13.89	12.32	12.52	13.22	14.73	42"
48"	12.57	25.14	37.71	50.28	4'-8"	2'-1"	9'-6"	2'-9"	2'-0"	6'-0"	6'-9"	6'-9"	7'-0"	7'-10"	9'-7"	8.15	8.38	10.40	10.48	10.75	11.33	10.85	10.94	11.23	11.87	12.64	12.80	13.34	14.50	13.34	13.51	14.11	15.39	14.89	15.13	15.93	17.68	15.82	16.08	16.97	18.90	48"
54"	15.90	31.80	47.70	63.60	5'-2"	2'-6"	10'-6"	3'-2"	2'-3"	7'-0"	7'-8"	7'-8"	7'-11"	8'-10"	10'-10"	11.71	11.77	15.23	15.35	15.78	16.69					18.77	19.02	19.86	21.69					22.29	22.66	23.93	26.67					54"

CORRUGATED METAL PIPE ARCH

Span	Rise	Opening Area (SF) Number Of Pipes 1	2	3	4	Dimensions A	B	C	E	F	G	S	X 0°	15°	30°	45°	Class I Concrete (CY) Number Of Pipe And Skew Angle Of Pipe — Single 0°	Double 0°	15°	30°	45°	Triple 0°	15°	30°	45°	Quadruple 0°	15°	30°	45°	Span	Rise	Approx. Equiv. Round Pipe
17"	13"	1.1	2.2	3.3	4.4	1'-9"	1'-2"	3'-10"	1'-10"	1'-2"	0'-4"	2'-6"	2'-6"	2'-7"	2'-11"	3'-6"	1.16	1.47	1.48	1.52	1.60	1.78	1.80	1.88	2.04	2.09	2.12	2.23	2.48	17"	13"	15"
21"	15"	1.6	3.2	4.8	6.4	1'-11"	1'-2"	4'-3"	1'-10"	1'-2"	0'-9"	2'-10"	2'-10"	2'-11"	3'-3"	4'-0"	1.33	1.69	1.70	1.75	1.84	2.04	2.06	2.15	2.33	2.40	2.44	2.57	2.84	21"	15"	18"
28"	20"	2.8	5.6	8.4	11.2	2'-4"	1'-3"	5'-2"	1'-11"	1'-3"	1'-8"	3'-5"	3'-5"	3'-6"	3'-11"	4'-10"	1.78	2.31	2.33	2.39	2.53	2.83	2.87	2.99	3.26	3.36	3.42	3.60	4.01	28"	20"	24"
35"	24"	4.3	8.6	12.9	17.2	2'-8"	1'-4"	5'-11½"	2'-0"	1'-4"	2'-5½"	4'-0"	4'-0"	4'-2"	4'-7"	5'-8"	2.34	3.03	3.05	3.14	3.32	3.72	3.77	3.93	4.29	4.40	4.47	4.72	5.25	35"	24"	30"
42"	29"	5.9	11.8	17.7	23.6	3'-1"	1'-5"	6'-10½"	2'-1"	1'-5"	3'-4½"	4'-9"	4'-9"	4'-11"	5'-6"	6'-9"	3.13	4.06	4.09	4.20	4.45	4.99	5.06	5.28	5.76	5.93	6.03	6.36	7.09	42"	29"	36"
49"	33"	8.4	16.8	25.2	33.6	3'-5"	1'-6"	7'-8"	2'-2"	1'-6"	4'-2"	5'-6"	5'-6"	5'-8"	6'-4"	7'-9"	3.83	5.00	5.04	5.18	5.48	6.16	6.24	6.52	7.12	7.32	7.44	7.86	8.76	49"	33"	42"
57"	38"	10.6	21.2	31.8	42.4	3'-10"	1'-7"	8'-7½"	2'-3"	1'-7"	5'-1½"	6'-4"	6'-4"	6'-7"	7'-4"	8'-11"	4.87	6.31	6.36	6.53	6.91	7.74	7.84	8.18	8.93	9.18	9.33	9.85	10.96	57"	38"	48"
64"	43"	13.2	26.4	39.6	52.8	4'-3"	1'-8"	9'-6½"	2'-4"	1'-8"	6'-0½"	7'-1"	7'-1"	7'-4"	8'-2"	10'-0"	5.88	7.64	7.70	7.91	8.37	9.40	9.52	9.94	10.86	11.15	11.33	11.97	13.33	64"	43"	54"
71"	47"	16.9	33.8	50.7	67.6	4'-7"	1'-10"	10'-4"	2'-6"	2'-0"	6'-10"	7'-10"	7'-10"	8'-1"	9'-1"	11'-1"	7.80	10.15	10.23	10.51	11.12	12.49	12.65	13.22	14.43	14.85	15.10	15.94	17.77	71"	47"	60"

Note: Use the guidelines of General Note No. B for selecting tabular quantities.

CONCRETE ELLIPTICAL PIPE

Rise	Span	Opening Area (SF) Number Of Pipes 1	2	3	4	Dimensions A	B	C	E	F	G	S	X 0°	15°	30°	45°	Class I Concrete (CY) Number Of Pipe And Skew Angle Of Pipe — Single 0°	Double 0°	15°	30°	45°	Triple 0°	15°	30°	45°	Quadruple 0°	15°	30°	45°	Rise	Span	Approx. Equiv. Round Pipe
12"	18"	1.3	2.6	3.9	5.2	1'-8"	1'-2"	3'-9"	1'-10"	1'-2"	0'-3"	2'-10"	2'-10"	2'-11"	3'-3"	4'-0"	1.09	1.45	1.46	1.51	1.60	1.80	1.82	1.91	2.09	2.16	2.20	2.33	2.60	12"	18"	15"
14"	23"	1.8	3.6	5.4	7.2	1'-10"	1'-3"	4'-2½"	1'-11"	1'-3"	8½"	3'-5"	3'-5"	3'-6"	3'-11"	4'-10"	1.36	1.82	1.84	1.89	2.01	2.29	2.32	2.43	2.68	2.75	2.80	2.97	3.33	14"	23"	18"
19"	30"	3.3	6.6	9.9	13.2	2'-3"	1'-4"	5'-1½"	2'-0"	1'-4"	1'-7½"	4'-2"	4'-2"	4'-4"	4'-10"	5'-11"	1.89	2.55	2.57	2.65	2.82	3.22	3.27	3.43	3.77	3.88	3.95	4.19	4.70	19"	30"	24"
24"	38"	5.1	10.2	15.3	20.4	2'-8"	1'-5"	6'-3"	2'-1"	1'-5"	2'-9"	5'-2"	5'-2"	5'-4"	6'-0"	7'-4"	2.64	3.55	3.58	3.69	3.93	4.48	4.54	4.77	5.24	5.39	5.49	5.82	6.53	24"	38"	30"
29"	45"	7.4	14.8	22.2	29.6	3'-1"	1'-6"	7'-0"	2'-2"	1'-6"	3'-6"	6'-0"	6'-0"	6'-3"	6'-11"	8'-6"	3.32	4.48	4.52	4.66	4.96	5.64	5.72	6.00	6.60	6.80	6.92	7.34	8.24	29"	45"	36"
34"	53"	10.2	20.4	30.6	40.8	3'-6"	1'-7"	7'-11½"	2'-3"	1'-7"	4'-5½"	7'-1"	7'-1"	7'-4"	8'-2"	10'-0"	4.24	5.76	5.81	6.00	6.39	7.29	7.40	7.76	8.55	8.81	8.97	9.52	10.70	34"	53"	42"
38"	60"	12.9	25.8	38.7	51.6	3'-10"	1'-8"	8'-9"	2'-4"	1'-8"	5'-3"	7'-11"	7'-11"	8'-2"	9'-2"	11'-2"	5.22	7.16	7.23	7.46	7.96	9.10	9.24	9.70	10.71	11.05	11.25	11.95	13.46	38"	60"	48"
43"	68"	16.6	33.2	49.8	66.4	4'-3"	1'-10"	9'-8½"	2'-6"	1'-10"	6'-2½"	8'-10"	8'-10"	9'-2"	10'-2"	12'-6"	6.63	9.01	9.09	9.38	10.00	11.39	11.56	12.13	13.36	13.77	14.02	14.88	16.73	43"	68"	54"
48"	76"	20.5	41.0	61.5	82.0	4'-8"	2'-1"	10'-8"	2'-9"	2'-0"	7'-2"	9'-9"	9'-9"	10'-1"	11'-3"	13'-9"	8.66	11.74	11.85	12.22	13.02	14.82	15.04	15.77	17.37	17.91	18.23	19.34	21.74	48"	76"	60"
53"	83"	24.8	49.6	74.4	99.2	5'-1"	2'-6"	11'-7"	3'-2"	2'-6"	8'-1"	10'-7"	10'-7"	10'-11"	12'-3"	15'-0"	12.50	16.98	16.98	17.67	18.83	21.47	21.78	22.86	25.18	25.97	26.44	28.06	31.55	53"	83"	66"
58"	91"	29.5	59.0	88.5	118.0	5'-6"	2'-10"	12'-6½"	3'-6"	2'-10"	9'-0½"	11'-4"	11'-4"	11'-9"	13'-1"	16'-0"	16.46	22.26	22.46	23.16	24.66	28.05	28.46	29.85	32.85	33.85	34.46	36.55	41.05	58"	91"	72"

STATE OF FLORIDA DEPARTMENT OF TRANSPORTATION
ROAD DESIGN

STRAIGHT CONCRETE ENDWALLS SINGLE AND MULTIPLE PIPE

	Names	Dates
Designed By	HAB/EGR	7/3/83
Drawn By	RWR/HSD	83
Checked By	JBW/JVG	83
F.H.W.A. Approved:		10/06/83

Approved By: E. V. Kruse
State Drainage Engineer

Revision No.	Sheet No.	Index No.
88	2 of 2	250

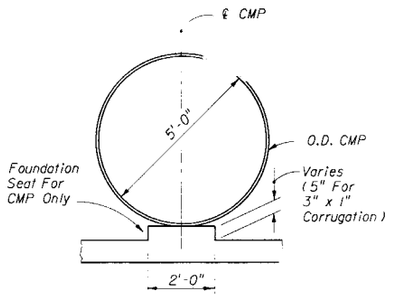

SECTION BB

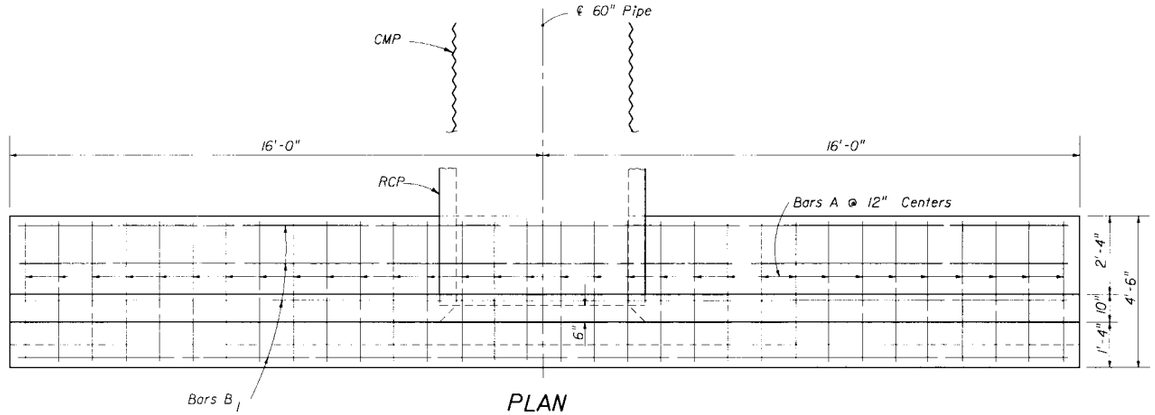

PLAN
(Showing Bar In Footing)

BILL OF REINFORCING STEEL

MARK	SIZE	NO. REQ'D	LENGTH	LOCATION	BENDING
A	No. 4	32	4'-2"	Footing	Straight
B_1	No. 4	13	31'-8"	Footing And Wall	Straight
B_2	No. 4	4	12'-4"	Wall	Straight
B_3	No. 4	4	13'-9"	Wall	Straight
C	No. 4	26	9'-4"	Wall	Bend
D	No. 4	18	7'-6"	Wall	Straight
E	No. 4	8	1'-8"	Footing And Wall	Straight

BENDING DIAGRAM

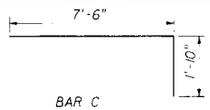

NOTE: All bar dimensions are out to out

ESTIMATED QUANTITIES

ITEM	UNIT	RCP	CMP
Concrete Class II	Cu. Yd.	11.3	11.4
Reinforcing Steel	Lb.	695	695

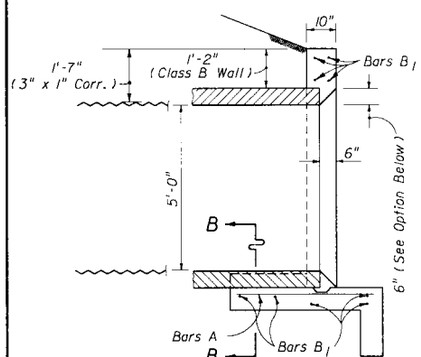

SECTION AA

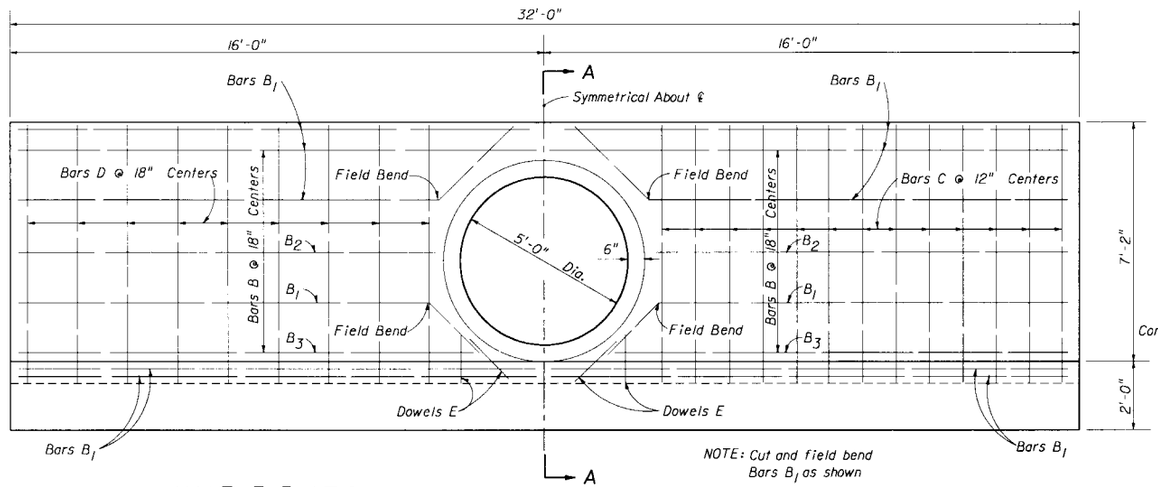

HALF ELEVATION
(Showing Bars In Front Face Of Wall)

NOTE: Cut and field bend Bars B_1 as shown

HALF ELEVATION
(Showing Bars In Back Face Of Wall)

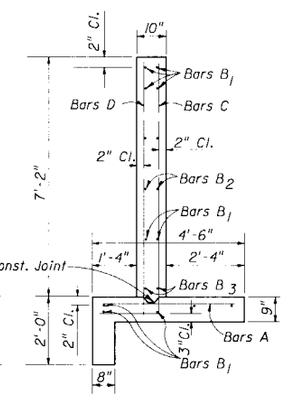

TYPICAL SECTION THRU ENDWALL

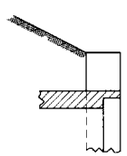

OPTIONAL ENTRANCE FOR CONCRETE PIPE

GENERAL NOTES

1. Endwalls may be cast-in-place or precast construction. Cast-in-place endwalls shall conform to the details on this index, design specifications AASHTO 1989. Precast construction which adheres to this index, including any additional reinforcement required for handling which shall be determined by the Contractor or supplier, does not require additional approvals. Deviations from this index, for precast units, shall require the approval of the State Drainage Engineer prior to construction. For precast construction, see Index No. 201 for opening and grouting details.
2. Reinforcing steel shall be either Grade 40 or 60.
3. Concrete shall be Class II except concrete meeting the requirements of ASTM C 478 (4000 PSI) may be used in lieu of Class II concrete in precast units manufactured in plants which are under the Standard Operating Procedures for the inspection of precast drainage products.
4. Chamfer: All exposed edges and corners to be chamfered $\frac{3}{4}$" unless otherwise shown.
5. Metal pipe shall be bituminous coated on all surfaces in contact with concrete and 12" beyond the boundary of contact. Any suitable bituminous material may be field applied.
6. Sodding shall be in accordance with Index No. 281 and paid for under the contract unit price for Sodding, SY.
7. Basis of payment for either cast-in-place or precast construction shall be the estimated quantities tabulated on the Index. Concrete and reinforcing steel shall be paid for under the contract unit prices for Class II Concrete (Endwalls) CY and Reinforcing Steel (Roadway) LB.

STATE OF FLORIDA DEPARTMENT OF TRANSPORTATION
ROAD DESIGN

STRAIGHT CONCRETE ENDWALLS
SINGLE AND DOUBLE 60" PIPE

	Names	Dates
Designed By		
Drawn By	TWJ	11/49
Checked By	WHM	11/49
F.H.W.A. Approved:		03/20/75

Approved By: E.G. Kruse, State Drainage Engineer

Revision No.	Sheet No.	Index No.
92	1 of 2	251

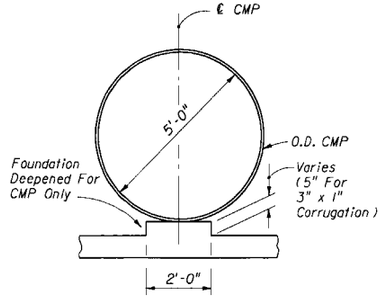

SECTION BB

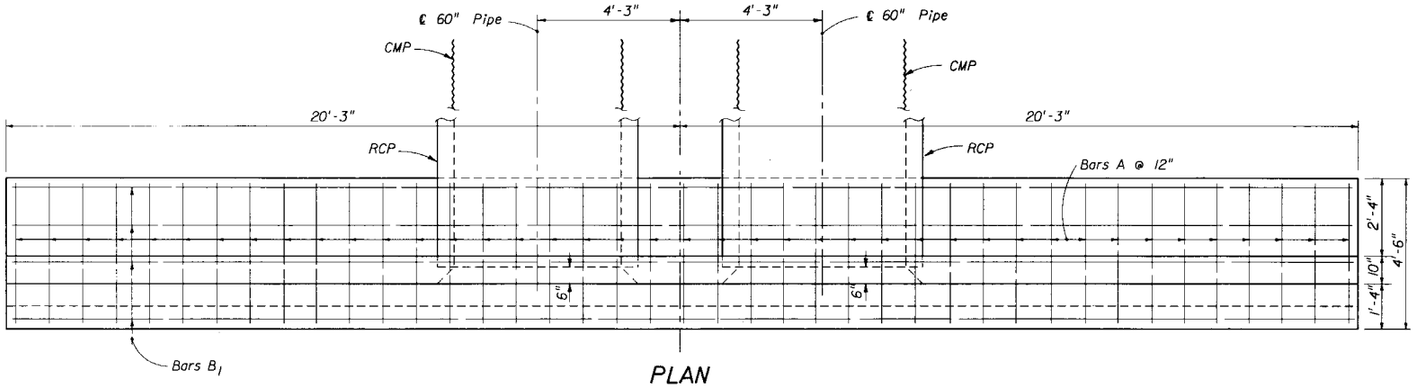

PLAN

(Showing Bar In Footing)

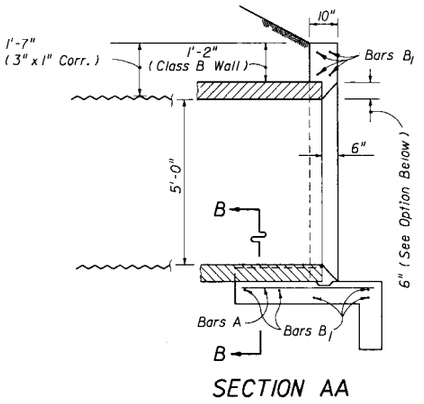

SECTION AA

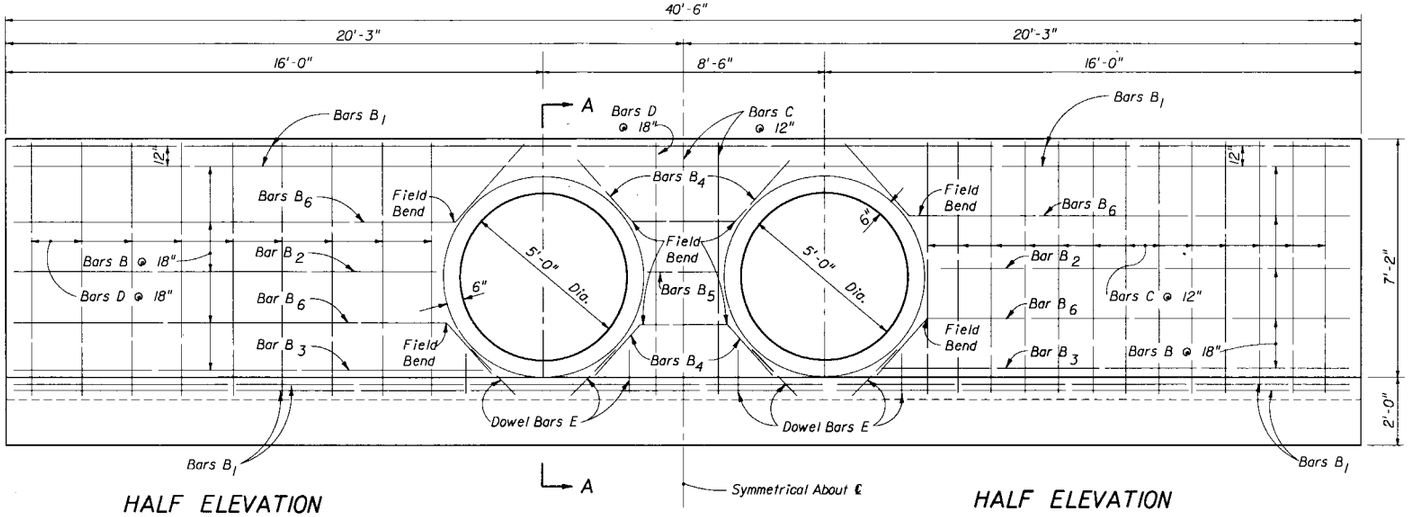

HALF ELEVATION

(Showing Bars In Front Face Of Wall)

HALF ELEVATION

(Showing Bars In Back Face Of Wall)

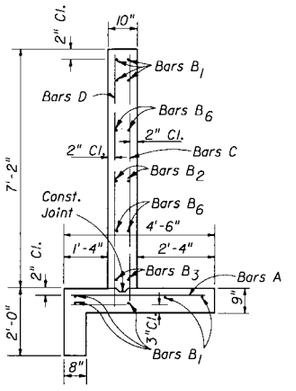

TYPICAL SECTION
THRU ENDWALL

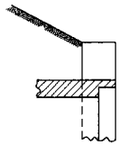

OPTIONAL ENTRANCE
FOR CONCRETE PIPE

BILL OF REINFORCING STEEL

MARK	SIZE	NO. REQ'D	LENGTH	LOCATION	BENDING
A	4	41	4'-2"	Footing	Straight
B_1	4	9	40'-2"	Footing & Wall	Straight
B_2	4	4	12'-6"	Wall	Straight
B_3	4	4	13'-9"	Wall	Straight
B_4	4	4	6'-0"	Wall	Field Bend
B_5	4	2	2'-2"	Wall	Straight
B_6	4	8	15'-0"	Wall	Field Bend
C	4	29	9'-4"	Footing & Wall	Bend
D	4	20	7'-6"	Footing & Wall	Straight
E	4	16	1'-8"	Footing & Wall	Straight

BENDING DIAGRAM

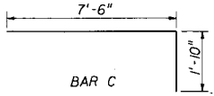

NOTE: All bar dimensions are out to out

ESTIMATED QUANTITIES

ITEM	UNIT	RCP	CMP
Concrete Class II	Cu. Yd.	13.7	13.8
Reinforcing Steel	Lb.	824	824

NOTE: See Sheet 1 of 2 For General Notes.

STATE OF FLORIDA DEPARTMENT OF TRANSPORTATION
ROAD DESIGN

STRAIGHT CONCRETE ENDWALLS
SINGLE AND DOUBLE 60" PIPE

	Names	Dates
Designed By		
Drawn By	TWJ	11/49
Checked By	WHM	11/49
F.H.W.A. Approved:		03/20/75

Approved By: G.G. Kruse
State Drainage Engineer

Revision No.	Sheet No.	Index No.
92	2 of 2	251

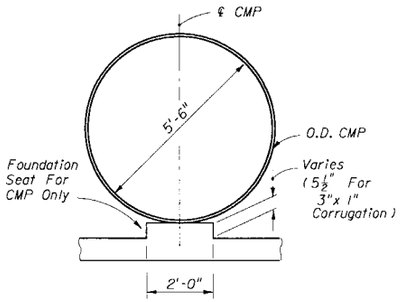

SECTION BB

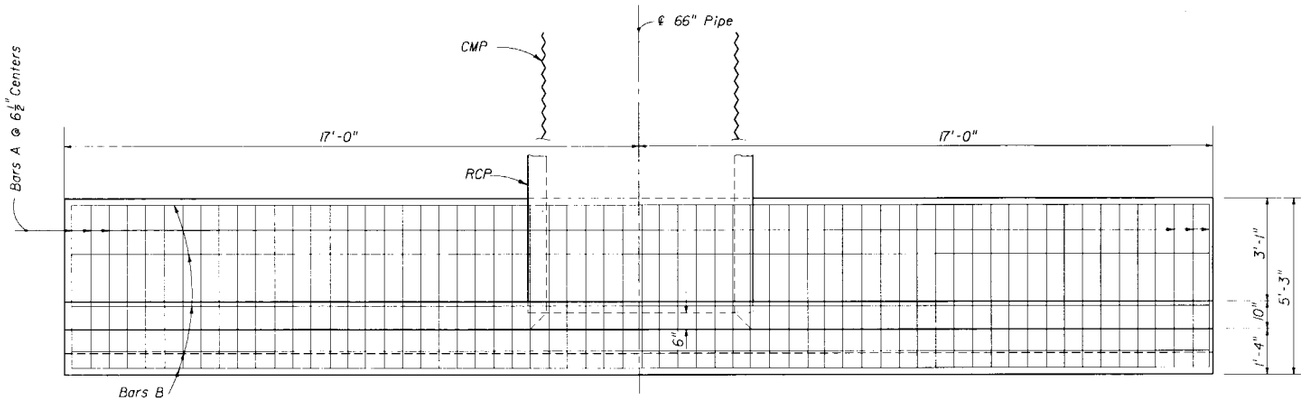

PLAN
(Showing Bars In Footing)

BILL OF REINFORCING STEEL					
MARK	SIZE	NO. REQ'D	LENGTH	LOCATION	BENDING
A	5	63	4'-11"	Footing	Straight
B	4	17	33'-8"	Footing & Wall	Straight
C	5	34	9'-11"	Wall	Bend
D	4	20	8'-1"	Wall	Straight
E	4	4	1'-8"	Wall	Straight

BENDING DIAGRAM

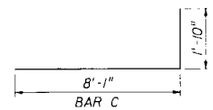

NOTE: All bar dimensions are out to out

ESTIMATED QUANTITIES			
ITEM	UNIT	RCP	CMP
Concrete Class II	Cu. Yd.	13.2	13.3
Reinforcing Steel	Lb.	1170	1170

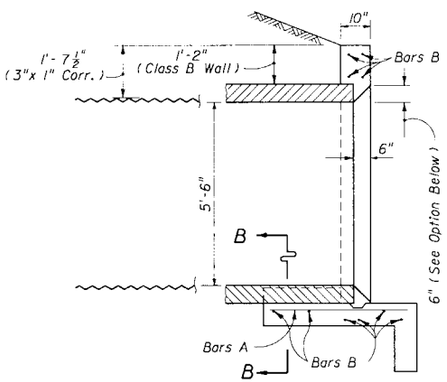

SECTION AA

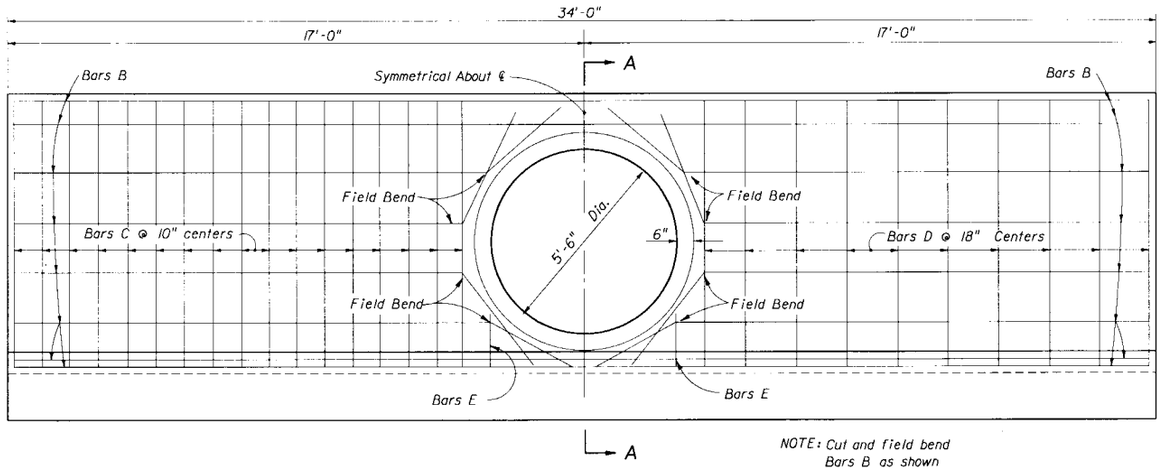

NOTE: Cut and field bend Bars B as shown

HALF ELEVATION
(Showing Bars In Back Face Of Wall)

HALF ELEVATION
(Showing Bars In Front Face Of Wall)

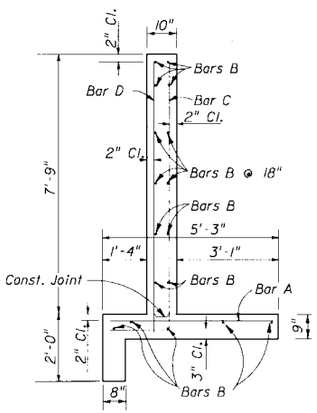

TYPICAL SECTION THRU ENDWALL

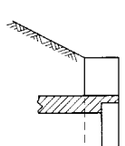

OPTIONAL ENTRANCE FOR CONCRETE PIPE

GENERAL NOTES

1. Endwalls may be cast-in-place or precast construction. Cast-in-place endwalls shall conform to the details on this index, design specifications AASHTO 1989. Precast construction which adheres to this Index, including any additional reinforcement required for handling which shall be determined by the Contractor or supplier, does not require additional approvals. Deviations from this Index, for precast units, shall require the approval of the State Drainage Engineer prior to construction. For precast construction, see Index No. 201 for opening and grouting details.
2. Reinforcing steel shall be either Grade 40 or 60.
3. Concrete shall be Class II except concrete meeting the requirements of ASTM C 478 (4000 psi) may be used in lieu of Class II concrete in precast units manufactured in plants which are under the Standard Operating Procedures for the inspection of precast drainage products.
4. Chamfer: All exposed edges and corners to be chamfered ¾" unless otherwise shown.
5. Metal pipe shall be bituminous coated on all surfaces in contact with concrete and 12" beyond the boundary of contact. Any suitable bituminous material may be field applied.
6. Sodding shall be in accordance with Index No. 281 and paid for under the contract unit price for Sodding, SY.
7. Basis of payment for either cast-in-place or precast construction shall be the estimated quantities tabulated on the Index. Concrete and reinforcing steel shall be paid for under the contract unit prices for Class II Concrete (Endwalls) CY and Reinforcing Steel (Roadway) LB.

STATE OF FLORIDA DEPARTMENT OF TRANSPORTATION
ROAD DESIGN

STRAIGHT CONCRETE ENDWALLS
SINGLE AND DOUBLE 66" PIPE

	Names	Dates
Designed By	JLW	03/54
Drawn By		
Checked By	RCB	03/54
F.H.W.A. Approved:		10/07/80

Approved By: C.G. Ruge, State Drainage Engineer

Revision No.	Sheet No.	Index No.
92	1 of 2	252

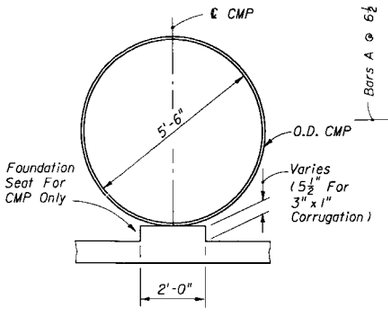

SECTION BB

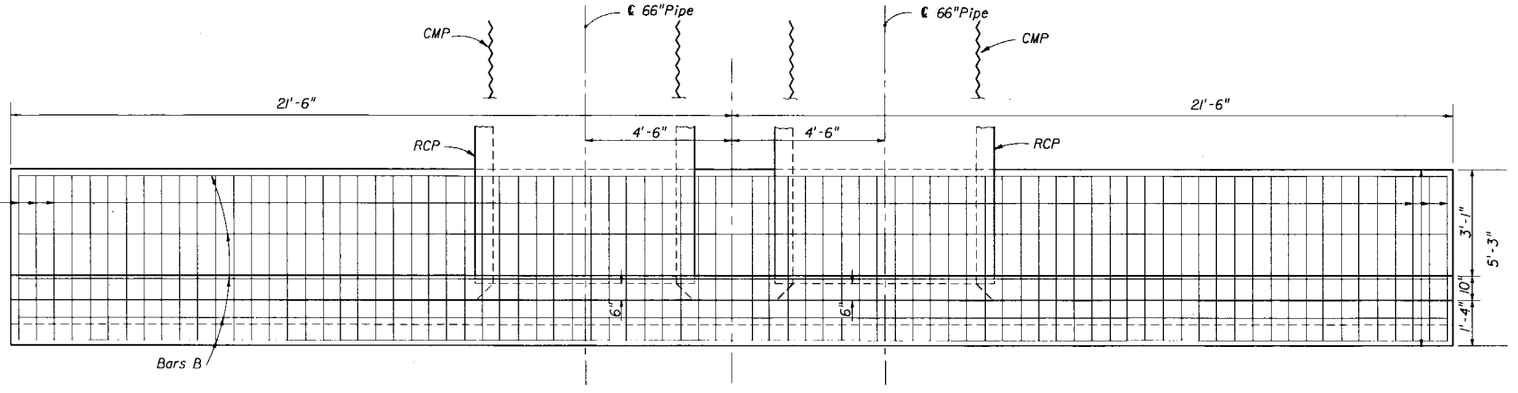

PLAN
(Showing Bars In Footing)

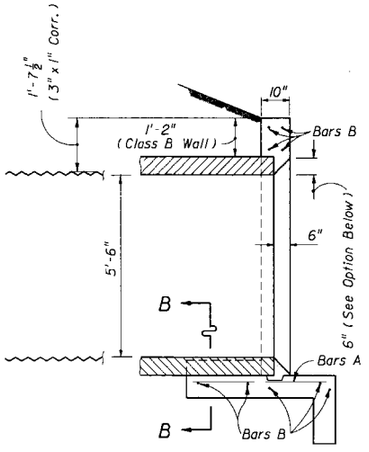

SECTION AA

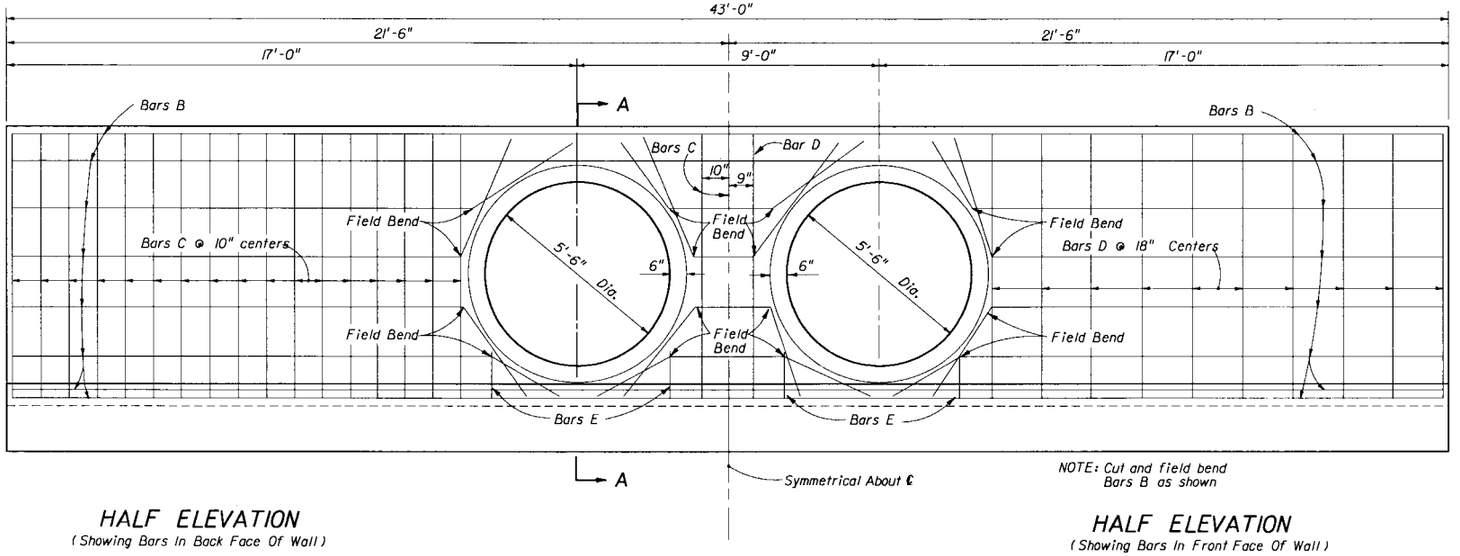

HALF ELEVATION
(Showing Bars In Back Face Of Wall)

NOTE: Cut and field bend Bars B as shown

HALF ELEVATION
(Showing Bars In Front Face Of Wall)

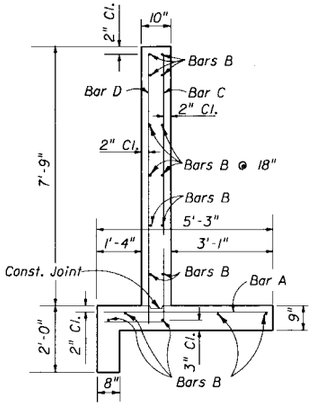

TYPICAL SECTION THRU ENDWALL

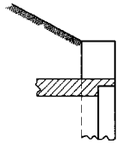

OPTIONAL ENTRANCE FOR CONCRETE PIPE

BILL OF REINFORCING STEEL

MARK	SIZE	NO. REQ'D	LENGTH	LOCATION	BENDING
A	5	80	4'-11"	Footing	Straight
B	4	17	42'-8"	Footing & Wall	Straight
C	5	37	9'-11"	Wall	Bend
D	4	22	8'-1"	Wall	Straight
E	4	8	1'-8"	Wall	Straight

BENDING DIAGRAMS

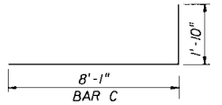

NOTE: All bar dimensions are out to out

ESTIMATED QUANTITIES

ITEM	UNIT	RCP	CMP
Concrete Class II	Cu. Yd.	16.0	16.2
Reinforcing Steel	Lb.	1,406	1,406

NOTE: See Sheet 1 of 2 for General Notes.

STATE OF FLORIDA DEPARTMENT OF TRANSPORTATION
ROAD DESIGN

STRAIGHT CONCRETE ENDWALLS
SINGLE AND DOUBLE 66" PIPE

	Names	Dates
Designed By	JSP	11/79
Drawn By	FWT	11/79
Checked By		

Approved By _____
State Drainage Engineer

F.H.W.A. Approved: 10/07/80

Revision No.	Sheet No.	Index No.
92	2 of 2	252

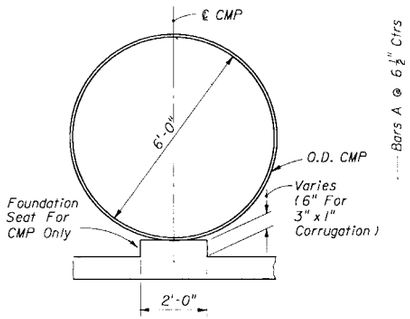

SECTION BB

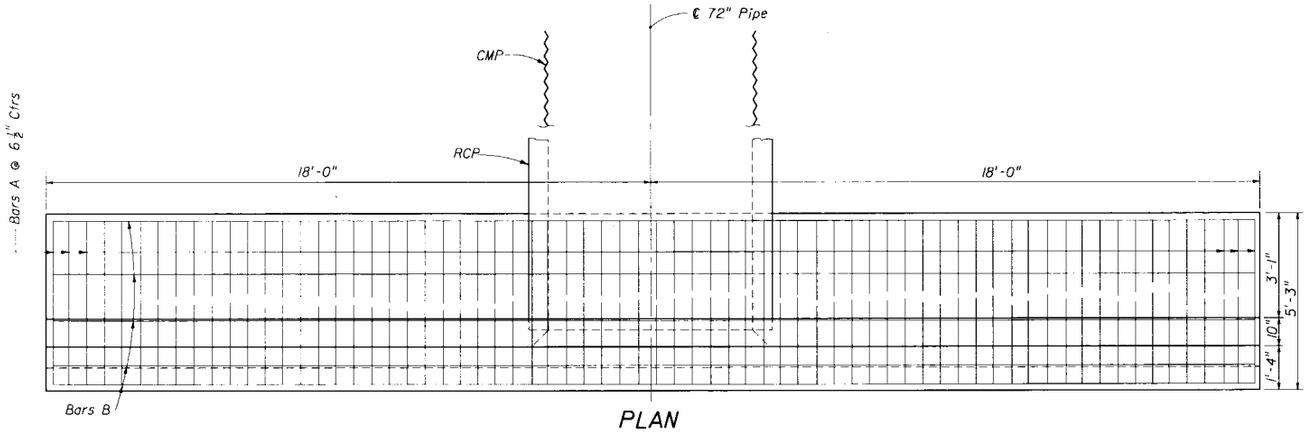

PLAN
(Showing Bars In Footing)

BILL OF REINFORCING STEEL

MARK	SIZE	NO. REQ'D	LENGTH	LOCATION	BENDING
A	5	68	4'-11"	Footing	Straight
B	4	17	35'-8"	Footing & Wall	Straight
C	5	34	10'-5"	Wall	Bend
D	4	20	8'-7"	Wall	Straight
E	4	4	2'-6"	Wall	Straight
F	4	4	1'-6"	Wall	Straight

BENDING DIAGRAM

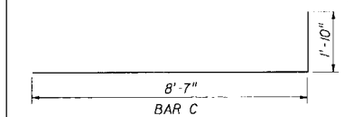

NOTE: All bar dimensions are out to out

ESTIMATED QUANTITIES

ITEM	UNIT	RCP	CMP
Concrete Class II	Cu. Yd.	14.4	14.5
Reinforcing Steel	Lb.	1249	1249

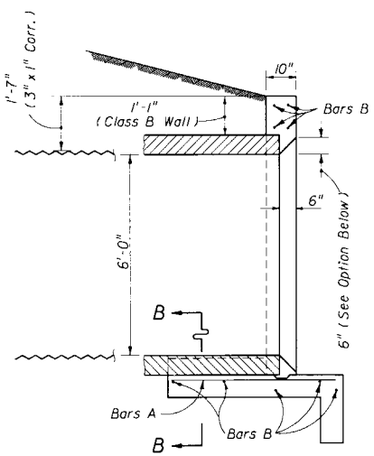

SECTION AA

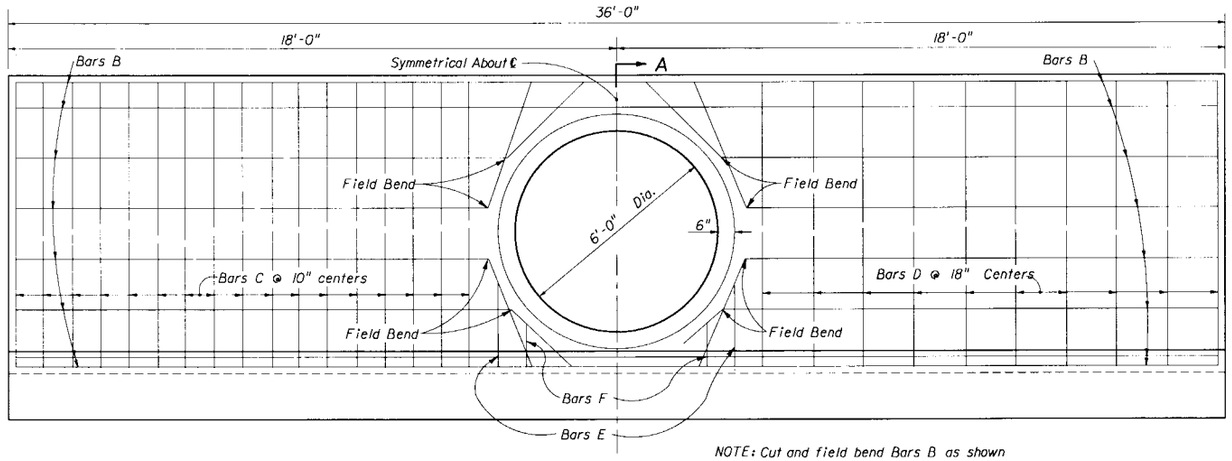

NOTE: Cut and field bend Bars B as shown

HALF ELEVATION
(Showing Bars In Back Face Of Wall)

A

HALF ELEVATION
(Showing Bars In Front Face Of Wall)

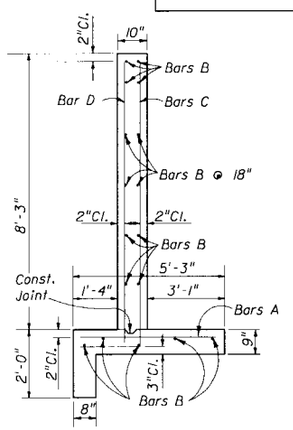

TYPICAL SECTION THRU ENDWALL

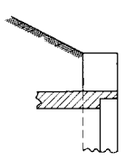

OPTIONAL ENTRANCE FOR CONCRETE PIPE

GENERAL NOTES

1. Endwalls may be cast-in-place or precast construction. Cast-in-place endwalls shall conform to the details on this index, design specifications AASHTO 1989. Precast construction which adheres to this index, including any additional reinforcement required for handling which shall be determined by the Contractor or supplier, does not require additional approvals. Deviations from this index, for precast units, shall require the approval of the State Drainage Engineer prior to construction. For precast construction, see Index No. 201 for opening and grouting details.
2. Reinforcing steel shall be either Grade 40 or 60.
3. Concrete shall be Class II except concrete meeting the requirements of ASTM C 478 (4000 PSI) may be used in lieu of Class II concrete in precast units manufactured in plants which are under the Standard Operating Procedures for the inspection of precast drainage products.
4. Chamfer: All exposed edges and corners to be chamfered ¾" unless otherwise shown.
5. Metal pipe shall be bituminous coated on all surfaces in contact with concrete and 12" beyond the boundary of contact. Any suitable bituminous material may be field applied.
6. Sodding shall be in accordance with Index No. 281 and paid for under the contract unit price for Sodding, SY.
7. Basis of payment for either cast-in-place or precast construction shall be the estimated quantities tabulated on the Index. Concrete and reinforcing steel shall be paid for under the contract unit prices for Class II Concrete (Endwalls) CY and Reinforcing Steel (Roadway) LB.

STATE OF FLORIDA DEPARTMENT OF TRANSPORTATION
ROAD DESIGN

STRAIGHT CONCRETE ENDWALLS
SINGLE AND DOUBLE 72" PIPE

	Names	Dates
Designed By	EVC	10/55
Drawn By		
Checked By	WHW	10/55
F.H.W.A. Approved:		03/20/75

Approved By: State Drainage Engineer

Revision No.	Sheet No.	Index No.
92	1 of 2	253

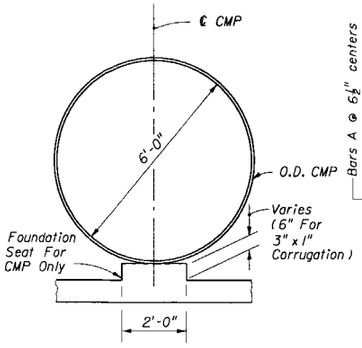

SECTION BB

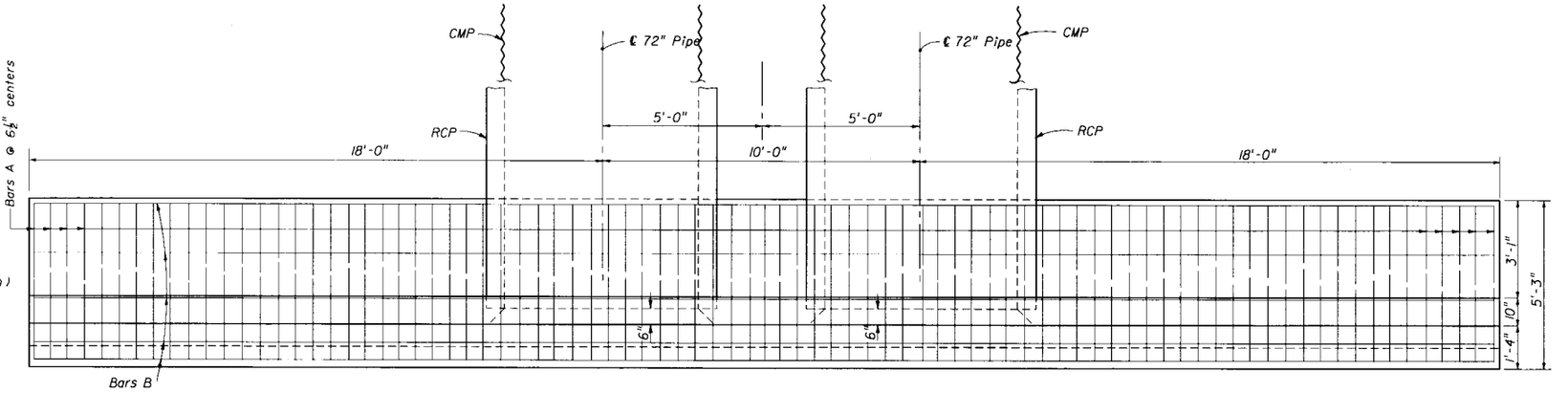

PLAN

(Showing Bars In Footing)

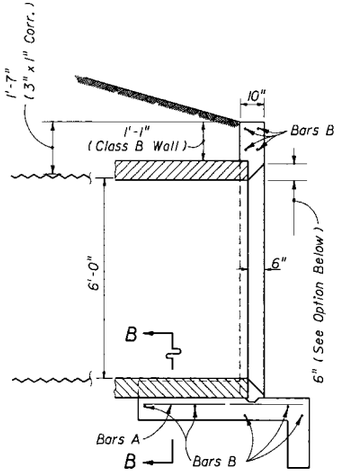

SECTION AA

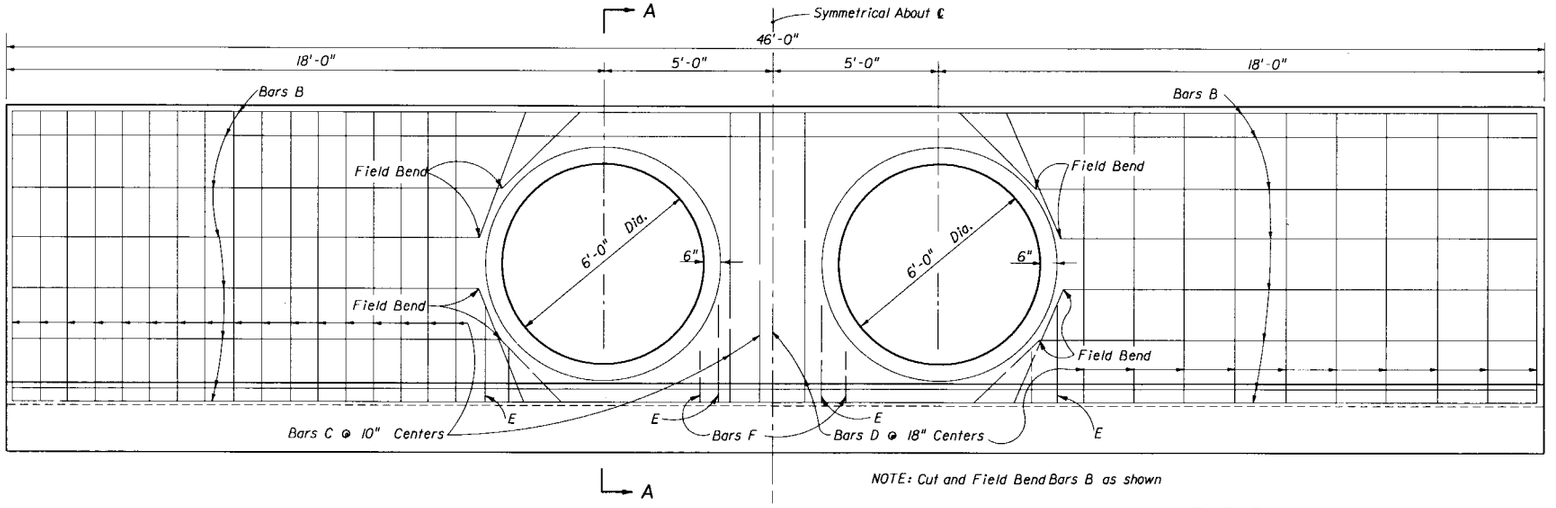

NOTE: Cut and Field Bend Bars B as shown

HALF ELEVATION

(Showing Bars In Back Face Of Wall)

HALF ELEVATION

(Showing Bars In Front Face Of Wall)

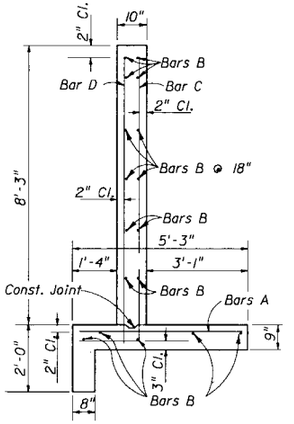

TYPICAL SECTION THRU ENDWALL

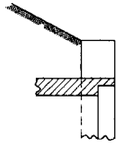

OPTIONAL ENTRANCE FOR CONCRETE PIPE

BILL OF REINFORCING STEEL

MARK	SIZE	NO. REQ'D	LENGTH	LOCATION	BENDING
A	5	85	4'-11"	Footing	Straight
B	4	17	45'-8"	Footing & Wall	Straight
C	5	38	10'-5"	Wall	Bend
D	4	23	8'-7"	Wall	Straight
E	4	8	2'-6"	Wall	Straight
F	4	8	1'-6"	Wall	Straight

BENDING DIAGRAM

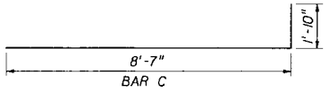

NOTE: All bar dimensions are out to out

ESTIMATED QUANTITIES

ITEM	UNIT	RCP	CMP
Concrete Class II	Cu. Yd.	17.5	17.8
Reinforcing Steel	Lb.	1519	1519

NOTE: See Sheet 1 of 2 for General Notes.

STATE OF FLORIDA DEPARTMENT OF TRANSPORTATION
ROAD DESIGN

STRAIGHT CONCRETE ENDWALLS

SINGLE AND DOUBLE 72" PIPE

	Names	Dates
Designed By	EVC	10/55
Drawn By		
Checked By	WHW	10/55
F.H.W.A. Approved:		07/07/15

Approved By: E. E. Reid
State Drainage Engineer

Revision No.	Sheet No.	Index No.
92	2 of 2	253

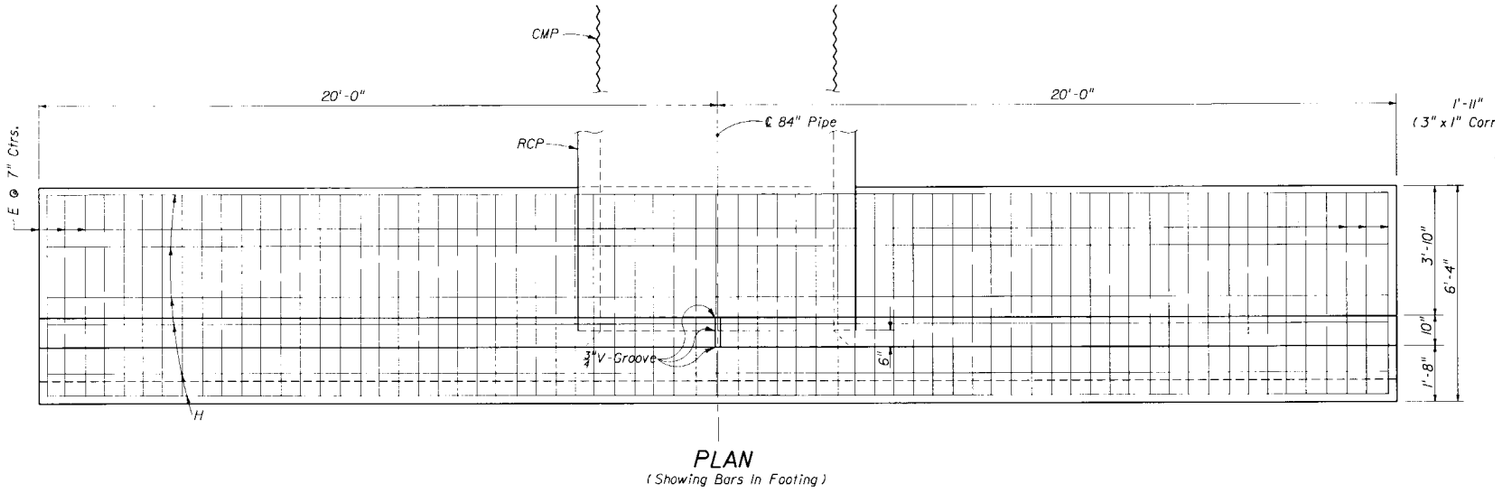

PLAN

(Showing Bars In Footing)

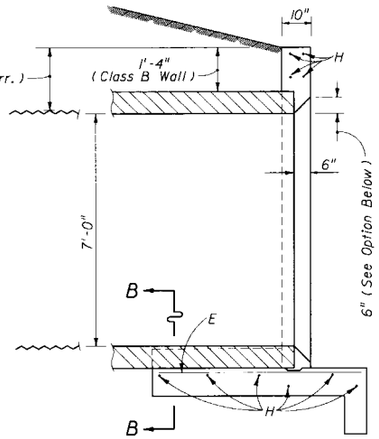

SECTION AA

BILL OF REINFORCING STEEL			
MARK	SIZE	NO. REQ'D	LENGTH
E	6	69	6'-0"
H	4	20	39'-8"
V_1	6	26	12'-4"
V_2	6	26	7'-10"
V_3	4	22	10'-2"
V_4	4	4	2'-0"

BENDING DIAGRAM

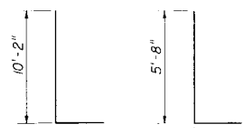

NOTE: All bar dimensions are out to out

ESTIMATED QUANTITIES			
ITEM	UNIT	RCP	CMP
Concrete Class II	Cu. Yd.	20.0	20.2
Reinforcing Steel	Lb.	2,095	2,095

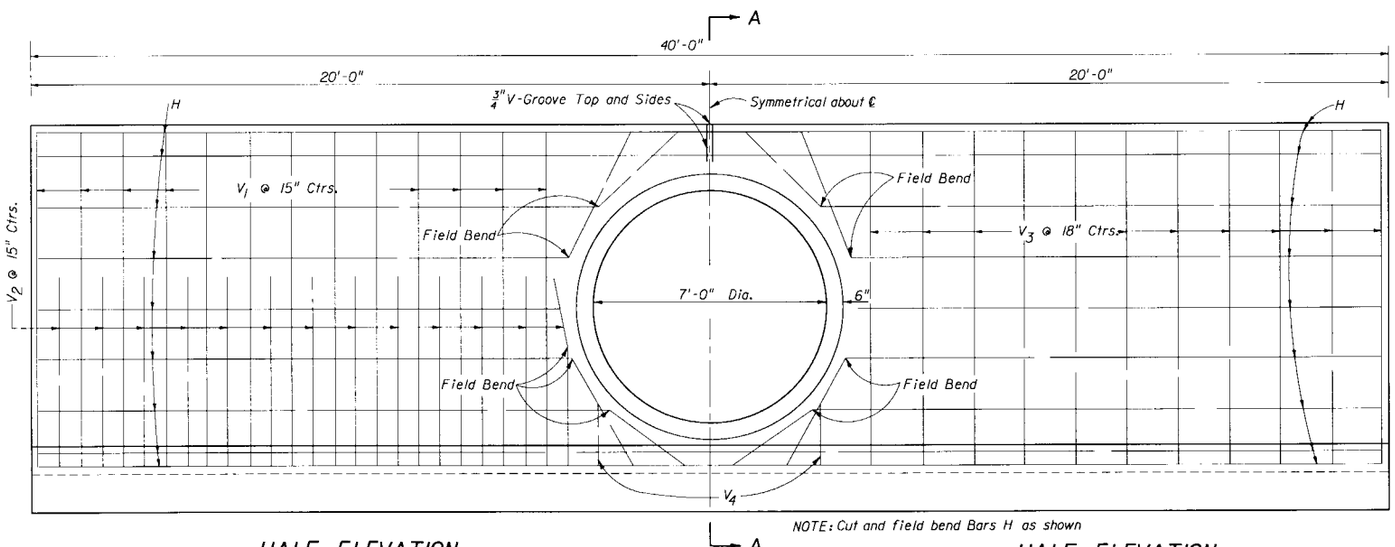

NOTE: Cut and field bend Bars H as shown

HALF ELEVATION

(Showing Bars In Back Face Of Wall)

HALF ELEVATION

(Showing Bars In Front Face Of Wall)

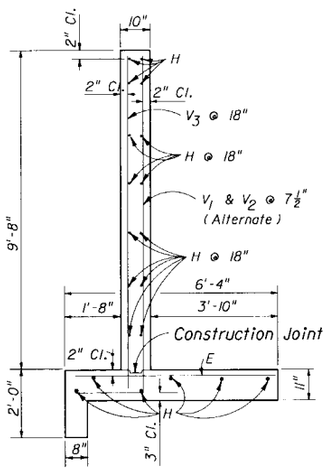

TYPICAL SECTION THRU ENDWALL

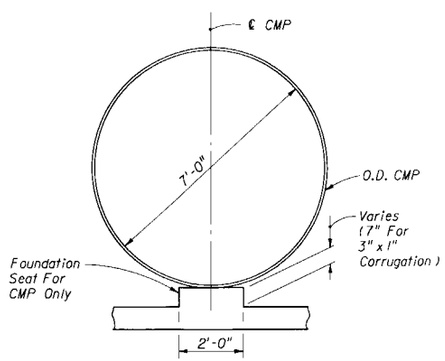

SECTION BB

GENERAL NOTES

1. Endwalls may be cast-in-place or precast construction. Cast-in-place endwalls shall conform to the details on this index, design specifications AASHTO 1989. Precast construction which adheres to this index, including any additional reinforcement required for handling which shall be determined by the Contractor or supplier, does not require additional approvals. Deviations from this index, for precast units, shall require the approval of the State Drainage Engineer prior to construction. For precast construction, see Index No. 201 for opening and grouting details.
2. Reinforcing steel shall be either Grade 40 or 60.
3. Concrete shall be Class II except concrete meeting the requirements of ASTM C 478 (4000 PSI) may be used in lieu of Class II concrete in precast units manufactured in plants which are under the Standard Operating Procedures for the inspection of precast drainage products.
4. Chamfer: All exposed edges and corners to be chamfered ¾" unless otherwise shown.
5. Metal pipe shall be bituminous coated on all surfaces in contact with concrete and 12" beyond the boundary of contact. Any suitable bituminous material may be field applied.
6. Sodding shall be in accordance with Index No. 281 and paid for under the contract unit price for Sodding, SY.
7. Basis of payment for either cast-in-place or precast construction shall be the estimated quantities tabulated on the Index. Concrete and reinforcing steel shall be paid for under the contract unit prices for Class II Concrete (Endwalls) CY and Reinforcing Steel (Roadway) LB.

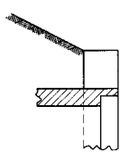

OPTIONAL ENTRANCE FOR CONCRETE PIPE

STATE OF FLORIDA DEPARTMENT OF TRANSPORTATION
ROAD DESIGN

STRAIGHT CONCRETE ENDWALL

SINGLE 84" PIPE

	Names	Dates
Designed By		
Drawn By	WHW	07/58
Checked By	HCG	07/58
Revised:		03/20/75

Approved By: E.G. Long
State Drainage Engineer

Revision No.	Sheet No.	Index No.
92	1 of 1	255

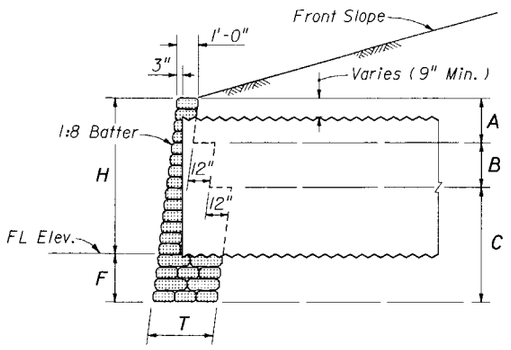

CORRUGATED METAL PIPE

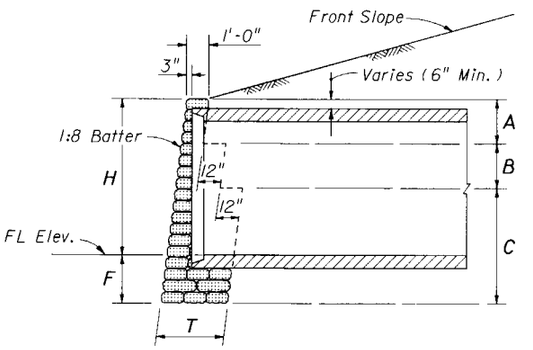

CONCRETE PIPE

SECTION YY

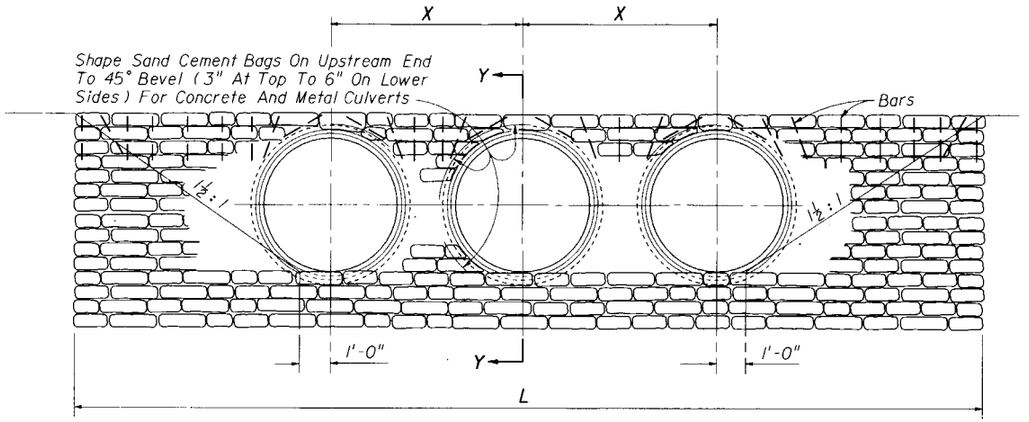

Note: (1) For concrete and corrugated metal pipes. Concrete pipe shown.

(2) The top row of riprap bags shall be secured by pinning, using No. 4 reinforcing bars 18 inches in length, as follows:

(a) The end bags shall be secured using two bars per bag, one vertical and one diagonal as shown.

(b) The next to last bag on each end shall be secured with two bars vertically.

(c) Bags located over the pipe shall be secured by a bar which is driven diagonally except that for concrete pipe two bars shall be used for single bags above the pipe.

(d) Intermediate bags shall be secured with a single bar.

Bars shall be driven to one inch below the surface of the bag.

The cost of furnishing and installing the bars shall be included in the cost of the riprap.

FRONT ELEVATION

TABLE OF DIMENSIONS AND QUANTITIES FOR ONE ENDWALL

SIZE OF PIPE	H	T	A	B	C	F	X	ONE PIPE CULVERTS			TWO PIPE CULVERTS			THREE PIPE CULVERTS			FOUR PIPE CULVERTS		
								L	RIPRAP CY		L	RIPRAP CY		L	RIPRAP CY		L	RIPRAP CY	
									CP	CMP		CP	CMP		CP	CMP		CP	CMP
18"	2'-3"	1'-0"	4'-0"	0'-0"	0'-0"	1'-9"	2'-10"	8'-9"	1.2	1.2	11'-7"	1.5	1.6	14'-5"	1.8	1.9	17'-3"	2.1	2.3
24"	2'-9"	2'-0"	2'-0"	2'-6"	0'-0"	1'-9"	3'-5"	10'-3"	2.4	2.5	13'-8"	3.0	3.2	17'-1"	3.7	4.0	20'-6"	4.3	4.7
30"	3'-4"	2'-0"	2'-0"	3'-2"	0'-0"	1'-10"	4'-3"	12'-0"	3.3	3.4	16'-3"	4.2	4.5	20'-6"	5.1	5.5	24'-9"	6.0	6.5
36"	3'-10"	2'-0"	2'-0"	3'-8"	0'-0"	1'-10"	5'-1"	13'-6"	4.0	4.2	18'-7"	5.2	5.7	23'-8"	6.3	6.9	28'-9"	7.4	8.2
42"	4'-5"	3'-0"	2'-0"	2'-0"	2'-4"	1'-11"	6'-0"	15'-3"	6.4	6.7	21'-3"	8.3	8.9	27'-3"	10.2	11.2	33'-3"	12.3	13.4
48"	4'-11"	3'-0"	2'-0"	2'-0"	2'-10"	1'-11"	6'-9"	16'-9"	7.7	8.1	23'-6"	10.0	10.8	30'-3"	12.3	13.5	37'-0"	14.5	16.2
54"	5'-6"	3'-0"	2'-0"	2'-0"	3'-6"	2'-0"	7'-8"	18'-6"	9.5	10.1	26'-2"	12.4	13.5	33'-10"	15.3	17.0	41'-6"	18.2	20.4
60"	6'-0"	3'-0"	2'-0"	2'-0"	4'-0"	2'-0"	8'-6"	20'-0"	11.0	11.7	28'-6"	14.4	15.8	37'-0"	17.8	19.8	45'-6"	21.1	23.8
66"	6'-7"	3'-0"	2'-0"	2'-0"	4'-8"	2'-1"	9'-3"	21'-9"	13.2	14.1	31'-0"	17.2	18.9	40'-3"	21.2	23.7	49'-6"	25.1	28.5
72"	7'-1"	3'-0"	2'-0"	2'-0"	5'-2"	2'-1"	10'-0"	23'-3"	15.0	16.0	33'-3"	19.4	21.4	43'-3"	23.9	26.8	53'-3"	28.3	32.3
78"	7'-8"	3'-0"	2'-0"	2'-0"	5'-10"	2'-2"	10'-9"	25'-0"	17.5	18.7	35'-9"	22.6	25.0	46'-6"	27.8	31.3	57'-3"	32.9	37.6
84"	8'-2"	3'-0"	2'-0"	2'-0"	6'-4"	2'-2"	11'-8"	26'-6"	19.5	20.9	38'-2"	25.3	28.1	49'-10"	31.1	35.2	61'-6"	36.9	42.4

STATE OF FLORIDA DEPARTMENT OF TRANSPORTATION
ROAD DESIGN

STRAIGHT SAND-CEMENT ENDWALLS

	Names	Dates
Designed By		
Drawn By	JBW	07/88
Checked By	JVG/EGR	08/88
F.H.W.A. Approved: 12/06/76		

Approved By E.G. Rueger
State Drainage Engineer

Revision No.	Sheet No.	Index No.
90	1 of 1	258

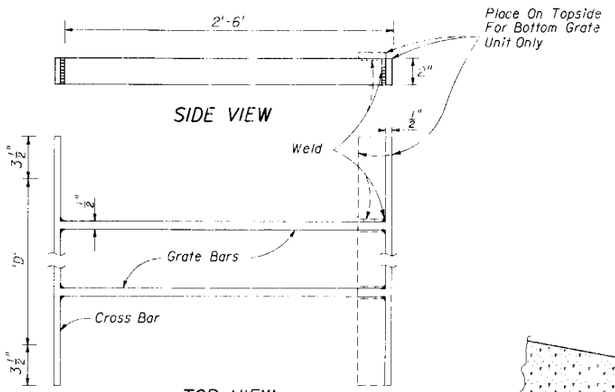

TOP VIEW
GRATE TYPE NO. 1

Pipe Size	Grate Bars Reqd.	Grate Wt.
15"	2	28.93

Bars to be evenly spaced across dimension 'D'.
All bars $\frac{1}{2}$" x 2".

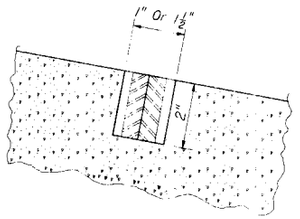

SECTION AA

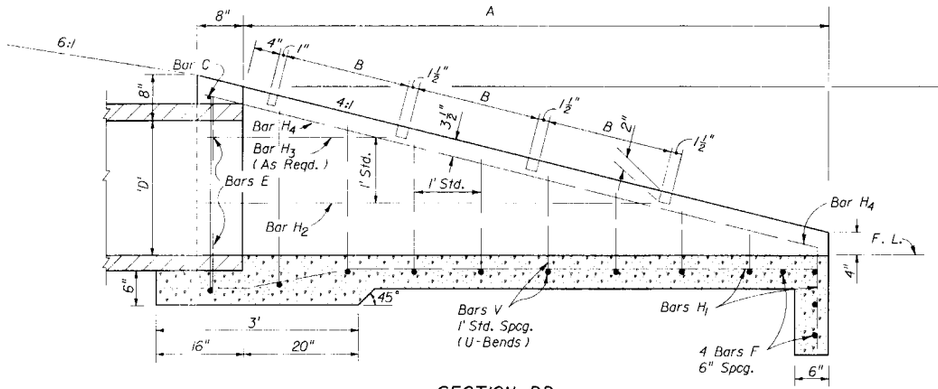

SECTION BB

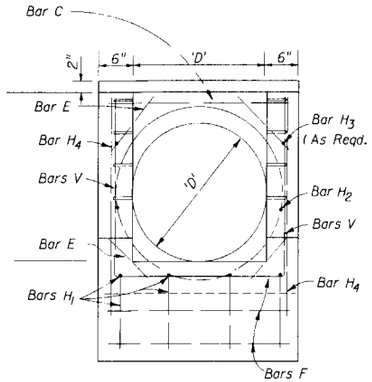

END VIEW

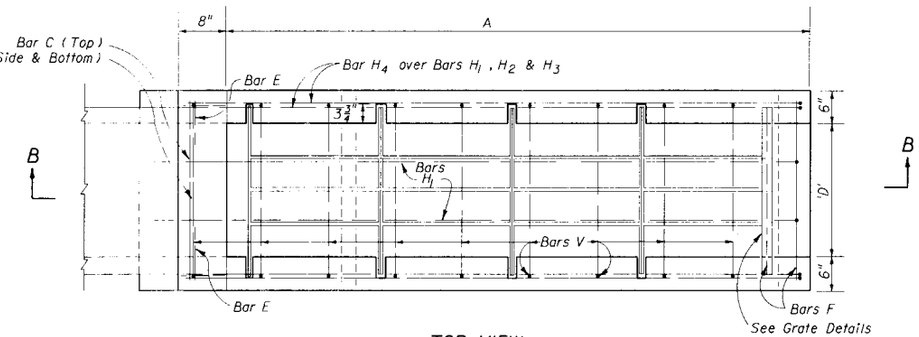

TOP VIEW

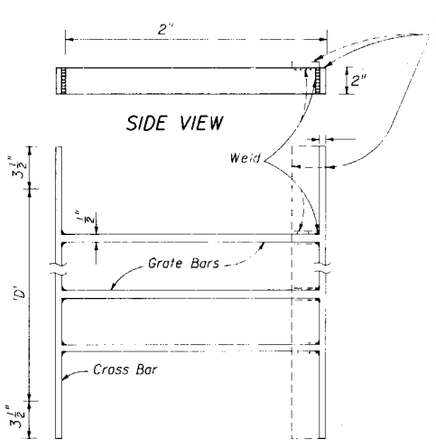

TOP VIEW
GRATE TYPE NO. 2

Pipe Size	Grate Bars Reqd.	Grate Wt.
18"	3	33.69
24"	4	43.63
30"	5	53.55

Bars to be evenly spaced across dimension 'D'.
All bars $\frac{1}{2}$" x 2".

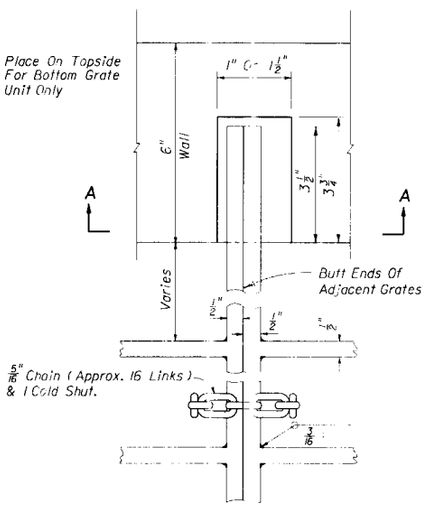

TOP VIEW

GRATE, SEAT, WELD & CHAIN DETAIL

TABLE OF DIMENSIONS AND QUANTITIES											
Slope	Pipe Size D	A	B	Conc. Class I (CY)	Reinf. Steel (Lbs.)	Number Of Grates Req'd Type No. 1	Number Of Grates Req'd Type No. 2	Total Grate Wt. (Lbs.)	Sodding (SY)	Slope Transition Offset	Slope Transition L
4:1	15"	5.67'	2.38'	0.85	56	2	0	57.86	15	4.2'	42'
	18"	6.67'	1.875'	1.01	73	0	3	101.08	16	4.8'	48'
	24"	8.67'	1.875'	1.65	97	0	4	174.52	19	5.8'	58'
	30"	10.67'	1.875'	2.33	129	0	5	267.75	21	6.9'	69'

GENERAL NOTES

1. This endwall is to be used only in the clear zone for the drainage of medians and other areas having low design velocities and negligible debris. Grates exposed to salt water shall be designated in the plan as Alternate G.
2. Reinforcing steel : All bars are size #4. Spacings shown are center to center. Laps to be 12" minimum. Clearance is 2" except as noted.
   Square welded wire fabric (two cages max.) having an equivalent cross sectional area (0.20 sq. in.) may be substituted for bar reinforcement.
3. Grates shall be ASTM A 242, A 441, A 572 or A 588, Grade 50 steel, and galvanized in accordance with Section 962-7 of the Standard Specifications.
4. Endwall to be paid for under the contract unit price for U-Endwall With Grate, Each. Payment shall include cost of concrete, reinforcing steel, grate, and accessories. Quantities shown are for estimating purposes only.
5. Sod slopes 5' each side and above endwall. Sodding to be paid for under contract unit price for sodding.
6. Precasting of this endwall will be permitted. Precast units shall conform to the dimensions shown or in accordance with approved shop drawings. Request for shop drawing approval shall be directed to the State Drainage Engineer. Use Index No. 201 for opening and grouting details.
7. Concrete meeting the requirements of A.S.T.M. C 478 (4,000 P.S.I.) may be used in lieu of Class I concrete for precast units manufactured in plants which are under the Standard Operating Procedures for the inspection of precast drainage products.

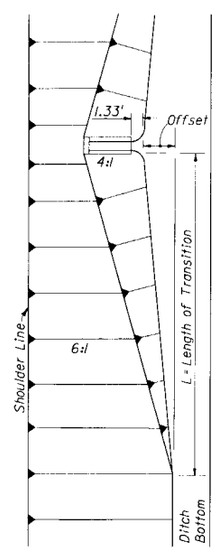

FRONT SLOPE TRANSITION AT ENDWALL

STATE OF FLORIDA DEPARTMENT OF TRANSPORTATION
ROAD DESIGN

U-TYPE CONCRETE ENDWALLS WITH GRATES
15" TO 30" PIPE

	Names	Dates
Designed By	EGR	06/77
Drawn By	HKH	06/77
Checked By	JVG	06/77
F.H.W.A. Approved:		07/15/77

Approved By _____ State Drainage Engineer

Revision No.	Sheet No.	Index No.
92	1 of 1	260

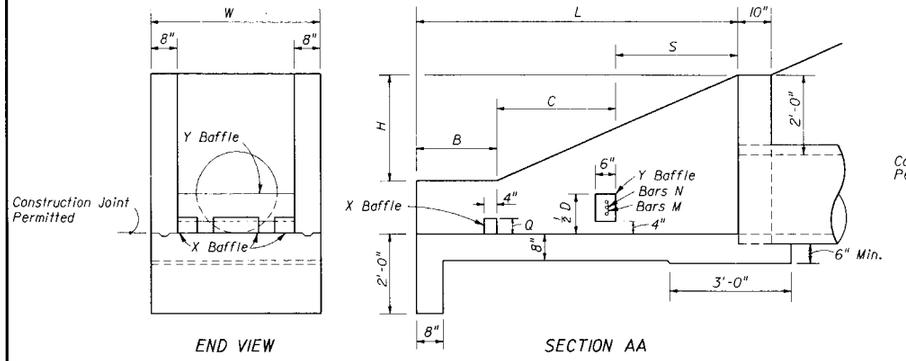

END VIEW SECTION AA

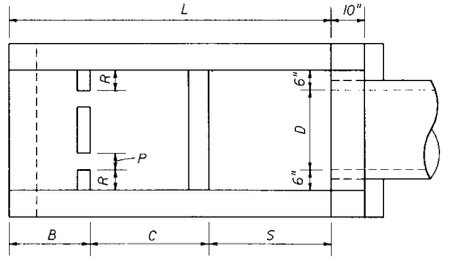

PLAN

DIMENSIONAL DETAILS

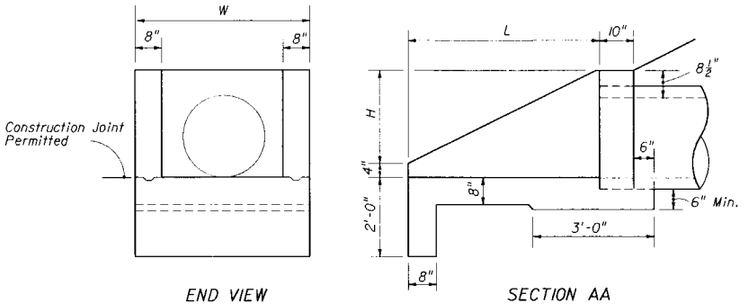

END VIEW SECTION AA

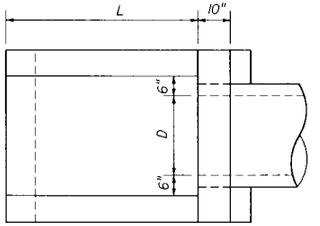

PLAN

DIMENSIONAL DETAILS

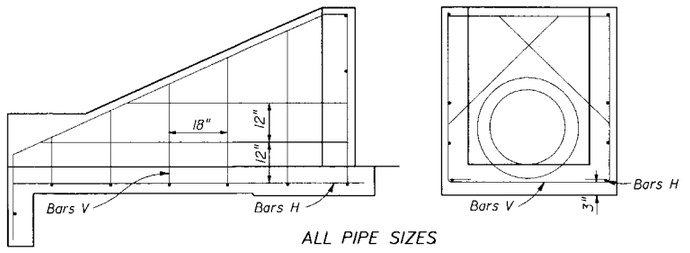

ALL PIPE SIZES
SIDE VIEW AND BACKWALL SECTION

REINFORCING DETAIL

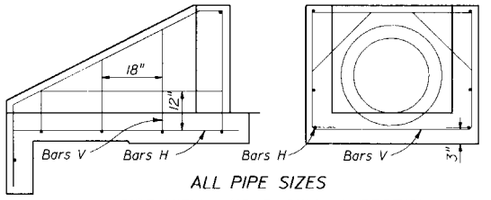

ALL PIPE SIZES
SIDE VIEW AND BACKWALL SECTION

REINFORCING DETAIL

GENERAL NOTES

1. Baffles to be constructed only when called for in plans.
2. When steel grating is required on endwall see Sheet 3 of 3 for details.
3. All reinforcing No. 4 bars with 2" clearance except as noted.
4. All angles, channels and bars shall be ASTM A 242, A 441, A 572 or A 588, Grade 50 steel, and galvanized in accordance with Section 962-7 of the Standard Specifications.
5. Channel section C 3 x 6 may be substituted for C 4 x 5.4 channel.
6. Precasting of this endwall will be permitted. Precast units shall conform to the dimensions shown or in accordance with approved shop drawings. Request for shop drawing approval shall be directed to the State Drainage Engineer. Use Index No. 201 for opening and grouting details.
7. Concrete meeting the requirements of ASTM C-478 (4000 psi) may be used in lieu of Class I concrete in precast units manufactured in plants which are under the Standard Operating Procedures for the inspection of precast drainage products.
8. Sodding shall be in accordance with Index No. 281, and paid for under the contract unit price for Sodding SY.
9. Endwall to be paid for under the contract unit price for Class I Concrete (Endwalls) CY and Reinforcing Steel (Roadway) LB. Cost of grates to be paid for under the contract unit price for Endwall Grate LB, plan quantity. Cost of galvanized bolts and nuts to be included in the bid price for the grate.

DIMENSIONS AND QUANTITIES FOR ONE U-ENDWALL

Pipe Size								X Baffle			Y Baffle Reinf. Steel		Concrete Class I Cu. Yd.	Reinf. Steel Lbs.
D	Area Sq. Ft.	L	H	W	S	B	C	P	Q	R	Bar M	Bar N		
15"	1.23	5'-9"	2'-3½"	3'-7"	2'-3"	1'-3"	2'-3"	4"	4"	4"	2 #4	1 #4	1.61	72
18"	1.77	6'-6"	2'-5"	3'-10"	2'-6"	1'-6"	2'-6"	4"	4"	5"	3 #4	2 #4	1.89	86
24"	3.14	8'-0"	2'-8"	4'-4"	3'-0"	2'-0"	3'-0"	5"	5"	6"	4 #4	3 #4	2.52	108
30"	4.91	9'-6"	2'-11"	4'-10"	3'-6"	2'-6"	3'-6"	5"	5"	7"	4 #4	4 #4	3.34	131

WITH BAFFLES

DIMENSIONS AND QUANTITIES FOR ONE U-ENDWALL

Pipe Size					Concrete Class I Cu. Yd.	Reinf. Steel Lbs.
D	Area Sq. Ft.	L	H	W		
15"	1.23	3'-3"	1'-7½"	3'-7"	0.89	39
18"	1.77	3'-9"	1'-10½"	3'-10"	1.05	43
24"	3.14	4'-9"	2'-4½"	4'-4"	1.40	55
30"	4.91	5'-9"	2'-10½"	4'-10"	1.88	64

WITHOUT BAFFLES

ENDWALLS FOR 2:1 SLOPES

STATE OF FLORIDA DEPARTMENT OF TRANSPORTATION
ROAD DESIGN

U-TYPE CONCRETE ENDWALLS BAFFLES AND GRATE OPTIONAL 15" TO 30" PIPE

	Names	Dates
Designed By		
Drawn By	dds	09/85
Checked By		
F.H.W.A. Approved:		03/20/75

Approved By
State Drainage Engineer

Revision No.	Sheet No.	Index No.
90	1 of 3	261

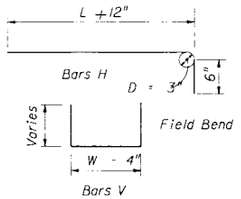

BENDING DIAGRAM

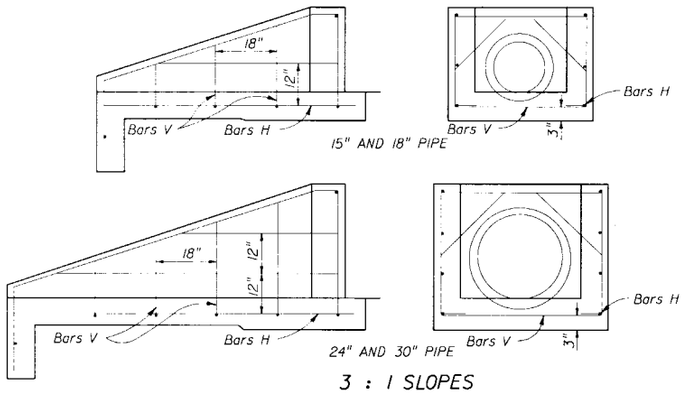

3 : 1 SLOPES

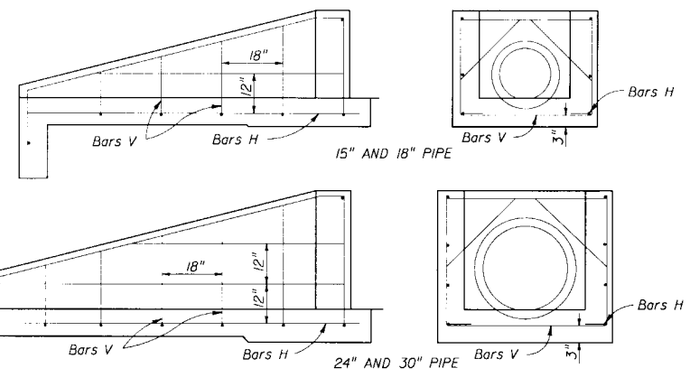

4 : 1 SLOPES

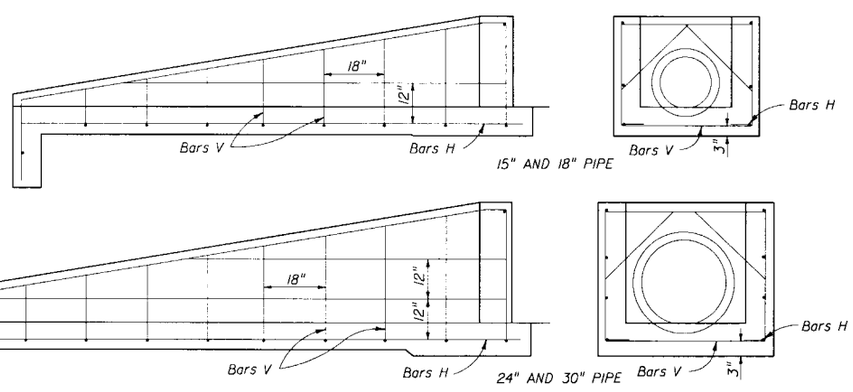

6 : 1 SLOPES

SIDE VIEWS AND BACKWALL SECTIONS
REINFORCING DETAILS

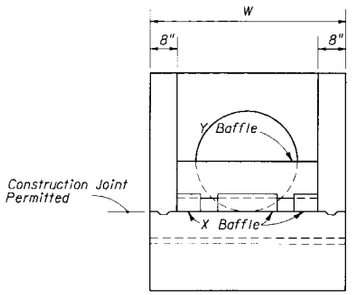

END VIEW

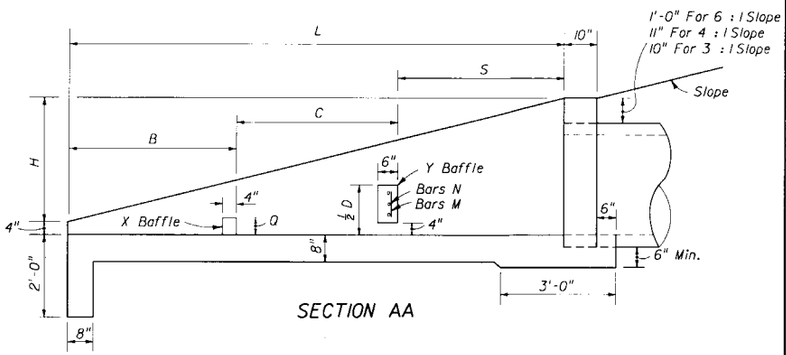

SECTION AA

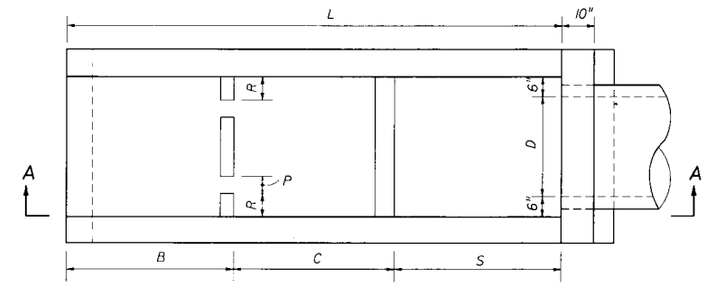

PLAN

DIMENSIONAL DETAILS

DIMENSIONS AND QUANTITIES FOR ONE U-ENDWALL

Rate Of Slope	Pipe Size D	Pipe Size Area Sq. Ft.	L	H	W	Baffle Locations (When Required) S	Baffle Locations (When Required) B	Baffle Locations (When Required) C	Concrete Class I Cu. Yd.	Reinf. Steel Lbs.
3 : 1	15"	1.23	5'-3"	1'-9"	3'-7"	1'-9"	1'-9"	1'-9"	1.19	51
	18"	1.77	6'-0"	2'-0"	3'-10"	2'-0"	2'-0"	2'-0"	1.42	56
	24"	3.14	7'-6"	2'-6"	4'-4"	2'-6"	2'-6"	2'-6"	1.94	77
	30"	4.91	9'-0"	3'-0"	4'-10"	3'-0"	3'-0"	3'-0"	2.54	96
4 : 1	15"	1.23	7'-4"	1'-10"	3'-7"	2'-6"	2'-6"	2'-4"	1.54	64
	18"	1.77	8'-4"	2'-1"	3'-10"	2'-10"	2'-10"	2'-8"	1.84	71
	24"	3.14	10'-4"	2'-7"	4'-4"	3'-6"	3'-6"	3'-4"	2.53	92
	30"	4.91	12'-4"	3'-1"	4'-10"	4'-2"	4'-2"	4'-0"	3.34	124
6 : 1	15"	1.23	11'-6"	1'-11"	3'-7"	3'-10"	3'-10"	3'-10"	2.19	89
	18"	1.77	13'-0"	2'-2"	3'-10"	4'-4"	4'-4"	4'-4"	2.63	103
	24"	3.14	16'-0"	2'-8"	4'-4"	5'-4"	5'-4"	5'-4"	3.59	143
	30"	4.91	19'-0"	3'-2"	4'-10"	6'-4"	6'-4"	6'-4"	4.81	180

DIMENSIONS AND QUANTITIES FOR BAFFLES

Pipe Size D	X Baffle P Width	X Baffle Q Height	X Baffle R Length	Y Baffle Reinf. Steel Bar M	Y Baffle Reinf. Steel Bar N	Concrete Class I Cu. Yd.	Reinf. Steel Lbs.
15"	4"	4"	4"	2-#4	1-#4	0.10	4
18"	4"	4"	5"	3-#4	2-#4		8
24"	5"	5"	6"	4-#4	3-#4		12
30"	5"	5"	7"	4-#4	4-#4		16

ENDWALLS WITH AND WITHOUT BAFFLES FOR 3 : 1, 4 : 1 AND 6 : 1 SLOPES

STATE OF FLORIDA DEPARTMENT OF TRANSPORTATION
ROAD DESIGN

U-TYPE CONCRETE ENDWALLS
BAFFLES AND GRATE OPTIONAL
15" TO 30" PIPE

	Names	Dates
Designed By		
Drawn By	dds	9/85
Checked By		

Approved By: E.G. Lynn
State Drainage Engineer

F.H.W.A. Approved:

Revision No.	Sheet No.	Index No.
88	2 of 3	261

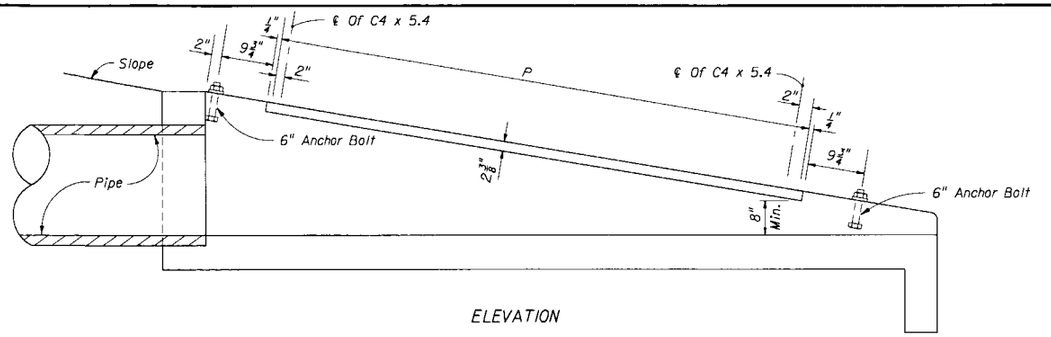

ELEVATION

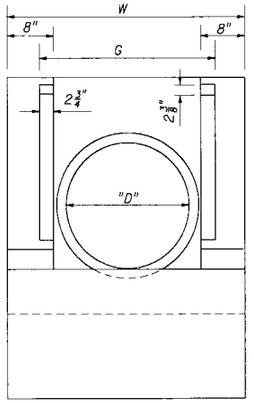

END VIEW

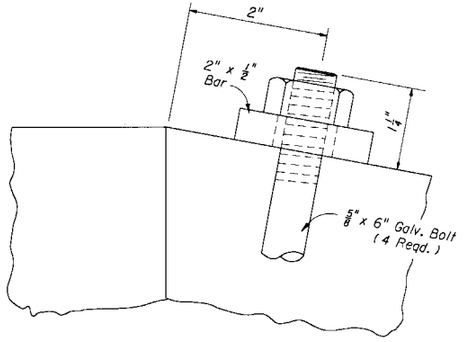

ANCHOR BOLT DETAIL

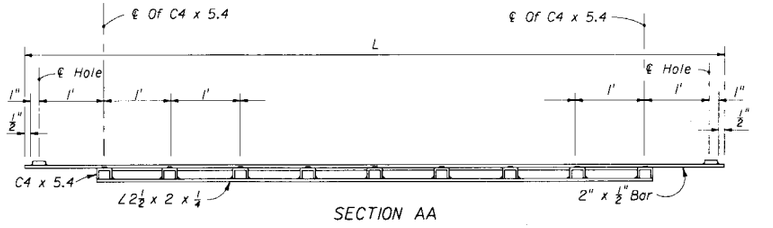

SECTION AA

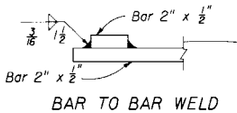

BAR TO BAR WELD

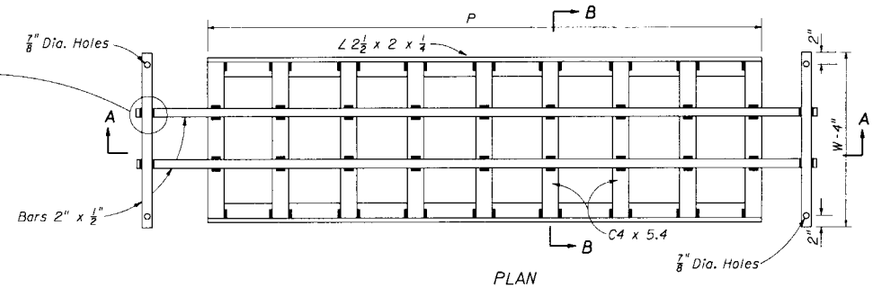

PLAN

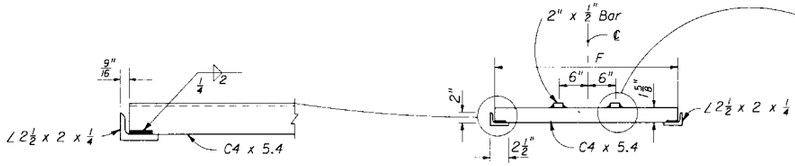

SECTION BB

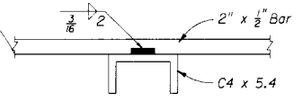

BAR TO CHANNEL WELD

CHANNEL TO ANGLE WELD

MOUNTING FOR STEEL GRATE

STEEL GRATE

STEEL GRATING USE CRITERIA

1. Grates to be used on pipe culvert endwalls located within the designated clear zone. Positive debris control shall be provided at all upgradient openings. Grates shall not be used unless one or more of the following conditions exist
   - A. Drainage area to culvert consists of median or infield areas or areas where debris and/or drift is negligible.
   - B. Runoff to culvert is by sheet flow or in such ill defined channels that debris transport is not considered a major problem.
   - C. Runoff to culvert is minor except on an infrequent basis (10 to 15 year frequency); for example a drainage basin in flat sandy terrain with normally low ground water table.
   - D. Areas where culvert blockage with resultant backwater would not seriously affect roadway embankment, traffic operation or upland property.
2. Steel grating to be used only where called for in plans.

TABLE OF DIMENSIONS AND QUANTITIES FOR ONE GRATE

Rate Of Slope	Size Pipe " D "	G	2 Each Bars @ 3.4 Lbs./L.F.			(X) Channels @ 5.4 Lbs./L.F.			2 Angles @ 3.62 Lbs./L.F.		Total Weight Lbs.
			L	W-4"	Lbs.	(X)	F	Lbs.	P	Lbs.	
6:1	15"	2'-8½"	9'-3"	3'-3"	85	8	2'-6⅞"	111	7'-4"	53	249
	18"	2'-11½"	10'-3"	3'-6"	94	9	2'-9⅞"	137	8'-4"	62	292
	24"	3'-5½"	13'-3"	4'-0"	117	12	3'-3⅞"	215	11'-4"	82	414
	30"	3'-11½"	16'-3"	4'-6"	141	15	3'-9⅞"	310	14'-4"	104	555
4:1	15"	2'-8½"	6'-3"	3'-3"	65	5	2'-6⅞"	70	4'-4"	32	167
	18"	2'-11½"	7'-3"	3'-6"	73	6	2'-9⅞"	92	5'-4"	39	204
	24"	3'-5½"	9'-3"	4'-0"	90	8	3'-3⅞"	144	7'-4"	53	287
	30"	3'-11½"	11'-3"	4'-6"	107	10	3'-9⅞"	206	9'-4"	68	381
3:1	15"	2'-8½"	4'-3"	3'-3"	51	3	2'-6⅞"	42	2'-4"	17	110
	18"	2'-11½"	5'-3"	3'-6"	60	4	2'-9⅞"	61	3'-4"	24	145
	24"	3'-5½"	6'-3"	4'-0"	70	5	3'-3⅞"	90	4'-4"	31	191
	30"	3'-11½"	8'-3"	4'-6"	87	7	3'-9⅞"	145	6'-4"	46	278

STATE OF FLORIDA DEPARTMENT OF TRANSPORTATION
ROAD DESIGN

U-TYPE CONCRETE ENDWALLS BAFFLES AND GRATE OPTIONAL 15" TO 30" PIPE

	Names	Dates
Designed By		
Drawn By	CDP	07/71
Checked By		
F.H.W.A. Approved:		03/20/75

Approved By
State Drainage Engineer

Revision No.	Sheet No.	Index No.
92	3 of 3	261

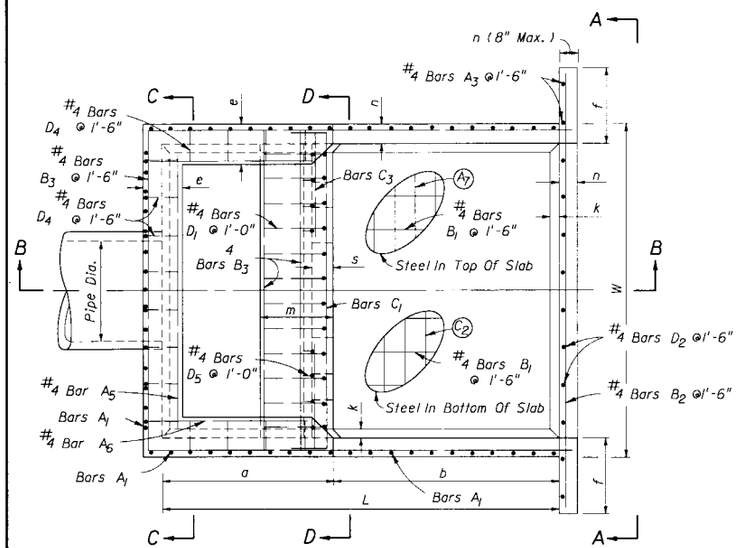

PLAN

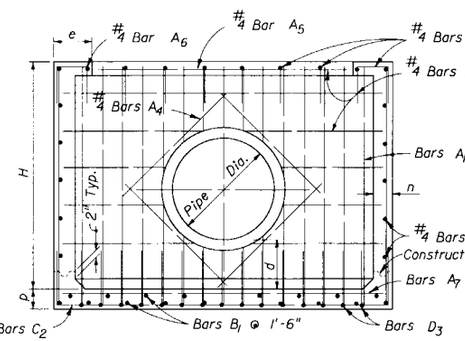

SECTION CC

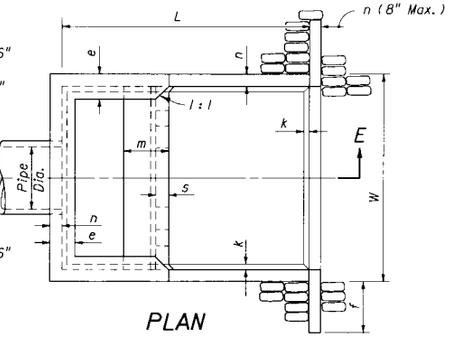

PLAN

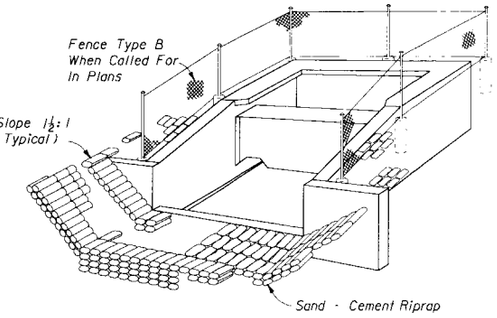

PERSPECTIVE

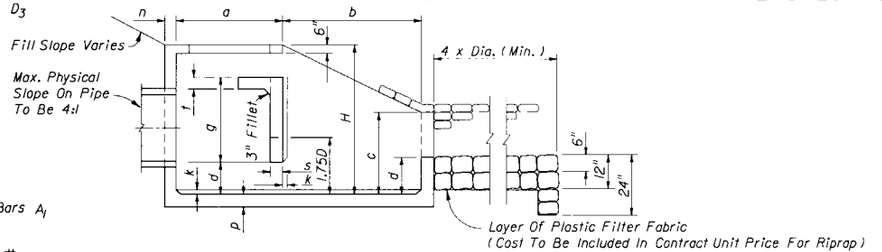

SECTION EE

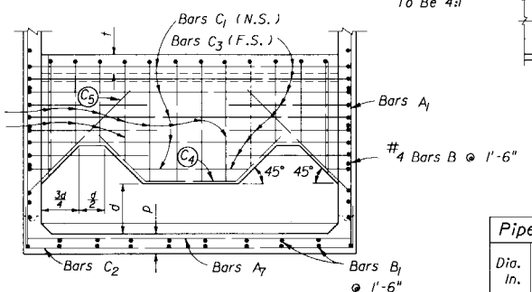

SECTION DD

Note: Bars C_4 & C_5 (N.S. & F.S.) equivalent in size to C_3 (cut and bend as required)

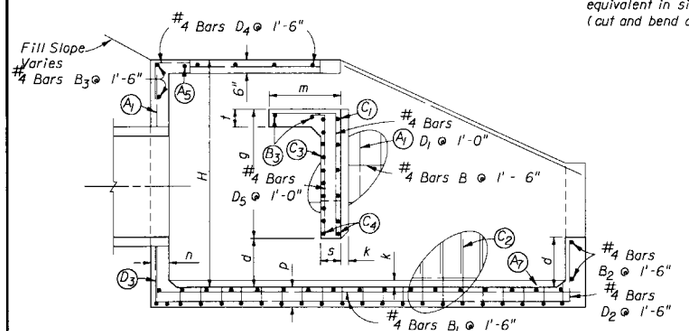

SECTION BB

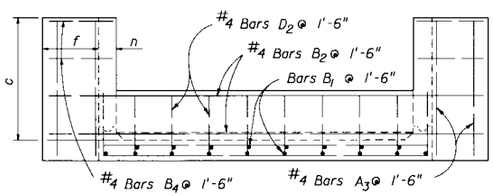

VIEW AA

Pipe Size		Q (Max.)	Dimensions															Concrete Class I C.Y.	Reinf. Steel Lbs.	Sand Cement Riprap C.Y. (Nom.)
			Ft. - In.										Inches							
Dia. In.	Area S.F.	(cfs)	W	H	L	a	b	c	d	e	f	g	m	n	p	s	t	k			
30	4.91	59	9-0	6-3	10-8	4-7	6-1	3-4	1-4	1-2	2-6	3-0	1-11	6	6½	7	7	3	6.72	736	10.6
36	7.07	85	10-5	7-3	12-4	5-3	7-1	3-10	1-7	1-3	3-0	3-6	2-3	7	7½	8	8	3	10.34	1,072	13.6
42	9.62	115	11-10	8-0	14-0	6-0	8-0	4-5	1-9	1-6	3-0	3-11	2-6	8	8½	9	8	4	14.82	1,429	17.5
48	12.57	151	13-3	9-0	15-8	6-9	8-11	4-11	2-0	1-7	3-0	4-5	2-10	9	9½	10	8	4	20.36	2,000	22.1
54	15.90	191	14-8	9-9	17-4	7-4	10-0	5-5	2-2	1-10	3-0	4-11	3-0	10	10½	10	8	4	27.19	2,659	27.2
60	13.63	236	16-1	10-9	19-0	8-0	11-0	5-11	2-5	1-11	3-0	5-4	3-4	11	11½	11	8	6	34.49	3,552	32.5
66	23.76	285	17-3	11-6	20-6	8-8	11-10	6-5	2-7	2-1	3-0	5-9	3-7	12	12½	12	8	6	42.82	4,472	38.3
72	28.27	339	18-6	12-3	22-0	9-3	12-9	6-11	2-9	2-3	3-0	6-2	3-9	12	12½	12	8	6	50.68	5,426	44.5

GENERAL NOTES

1. Chamfer all exposed edges $\frac{3}{4}$"
2. Concrete meeting the requirements of ASTM C-478 (4000 psi) may be used in lieu of Class I Concrete in precast items manufactured in plants which are under the Standard Operating Procedures for the inspection of precast drainage products.
3. Endwall to be paid for under the contract unit price for Class I Concrete (Endwalls) CY and Reinforcing Steel (Roadway) LB. Riprap to be paid for under the contract unit price for Riprap (Sand-Cement) (Roadway) CY. Cost of plastic filter fabric to be included in the contract unit price for riprap.
4. Fencing, when called for in the plans, to be paid for under the contract unit price for Fencing, Type B LF. Corner posts and end posts to be paid for under the contract unit price for Corner Post Assembly (Type B Fence) EA. and End Post Assembly (Type B Fence) EA. respectively. See Index No. 452 for details of Type B fencing.

BARS												
	A_1		A_7		C_1		C_2		C_3		D_3	
Pipe Size	Size (No.)	Spacing (Ft. -In.)	Size (No.)	Spacing (Ft. -In.)	Size (No.)	Spacing (Ft. -In.)	Size (No.)	Spacing (Ft. -In.)	Size (No.)	Spacing (Ft. -In.)	Size (No.)	Spacing (Ft. -In.)
30"	4	0-9½	4	1-6	5	0-11	4	0-9½	5	0-5½	4	0-9½
36"	5	1-0	4	1-6	5	0-10	5	1-0	5	0-5	5	1-0
42"	5	0-11	4	1-6	6	1-1	5	0-11	6	0-6½	5	0-11
48"	5	0-9½	4	1-0	6	1-0	5	0-9½	6	0-6	5	0-9½
54"	5	0-8½	4	0-10	7	1-1	5	0-8½	7	0-6½	5	0-8½
60"	6	0-10	5	1-1	7	1-0	6	0-10	7	0-6	6	0-10
66"	6	0-8½	5	0-11½	7	0-11	6	0-8½	7	0-5½	6	0-8½
72"	6	0-7½	5	0-10	7	0-10	6	0-7½	7	0-5	6	0-7½

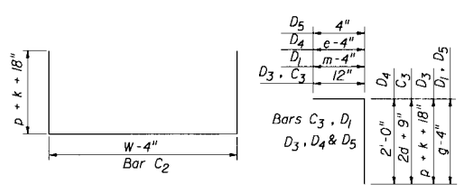

Note : All bar dimensions are out to out.

BENDING DIAGRAM

STATE OF FLORIDA DEPARTMENT OF TRANSPORTATION
ROAD DESIGN

U-TYPE CONCRETE ENDWALL ENERGY DISSIPATOR
30" TO 72" PIPE

	Names	Dates
Designed By	HAB	10/69
Drawn By	RWR	02/84
Checked By	JVG	02/84
F.H.W.A. Approved:		03/20/75

Approved By: E. C. Lange, State Drainage Engineer

Revision No.	Sheet No.	Index No.
92	1 of 1	264

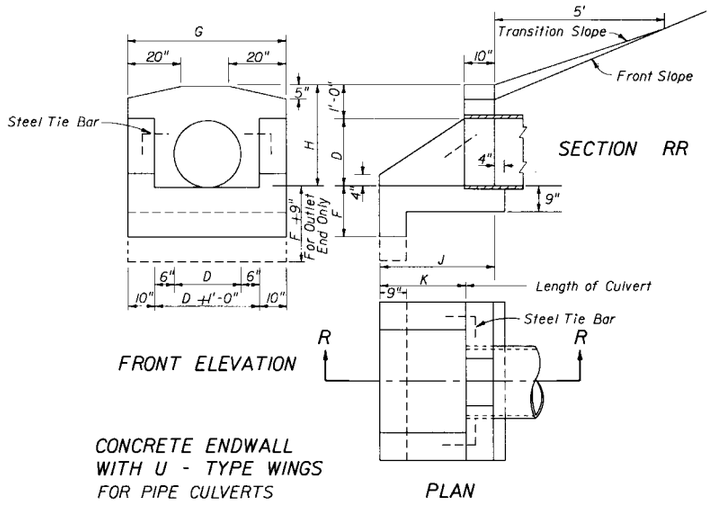

CONCRETE ENDWALL
WITH U - TYPE WINGS
FOR PIPE CULVERTS

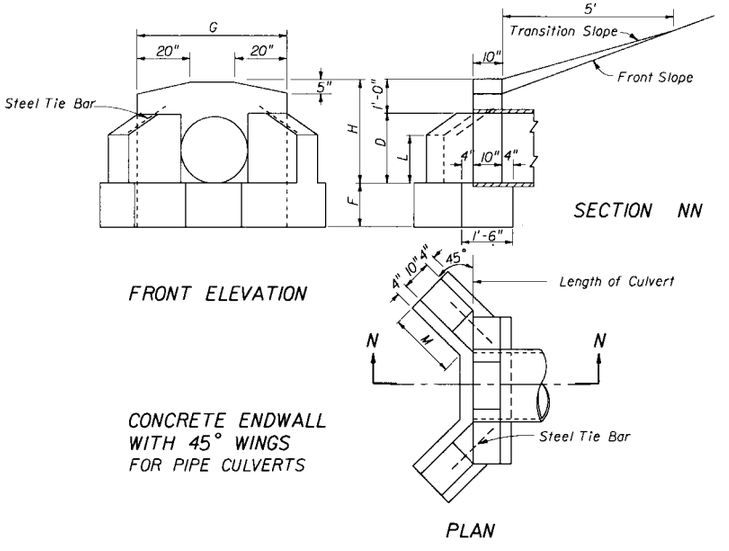

CONCRETE ENDWALL
WITH 45° WINGS
FOR PIPE CULVERTS

TABLE OF DIMENSIONS AND ESTIMATED QUANTITIES
PIPE CULVERT ENDWALLS WITH U - TYPE WINGS

DIMENSIONS							QUANTITIES IN ONE ENDWALL						
Opening		Wall			Footing		Total Cu. Yds. Concrete, Class I						Steel Tie Bars
D	Area Sq.Ft.	G	H	K	F	J	Conc. Pipe		C.M. Pipe		C.I. Pipe		
							Inlet	Outlet	Inlet	Outlet	Inlet	Outlet	
12"	0.8	3'-8"	2'-0"	1'-0"	1'-3"	2'-2"	0.48	0.55	0.49	0.57	0.49	0.57	none
15"	1.2	3'-11"	2'-3"	1'-5"	1'-3"	2'-7"	0.59	0.67	0.62	0.70	0.61	0.70	none
18"	1.8	4'-2"	2'-6"	1'-9"	1'-3"	2'-11"	0.70	0.79	0.74	0.82	0.74	0.82	none
24"	3.1	4'-8"	3'-0"	2'-6"	1'-6"	3'-8"	1.01	1.11	1.06	1.16	1.06	1.16	2 - $\frac{3}{4}$"Ø x 2'-0"
30"	4.9	5'-2"	3'-6"	3'-3"	1'-6"	4'-5"	1.33	1.44	1.41	1.51	1.40	1.51	2 - $\frac{3}{4}$"Ø x 2'-0"
36"	7.1	5'-8"	4'-0"	4'-0"	1'-9"	5'-2"	1.73	1.85	1.84	1.96	1.82	1.94	2 - $\frac{3}{4}$"Ø x 2'-6"
42"	9.6	6'-2"	4'-6"	4'-9"	2'-0"	5'-11"	2.19	2.32	2.32	2.45			2 - $\frac{3}{4}$"Ø x 2'-6"
48"	12.6	6'-8"	5'-0"	5'-6"	2'-0"	6'-8"	2.64	2.78	2.81	2.95			2 - $\frac{3}{4}$"Ø x 3'-0"

TABLE OF DIMENSIONS AND ESTIMATED QUANTITIES
PIPE CULVERT ENDWALLS WITH 45° WINGS

DIMENSIONS							QUANTITIES IN ONE ENDWALL			
Opening		Wall				Footing	Concrete, Class I			Steel Tie Bars
D	Area Sq.Ft.	H	G	L	M	F	Total Cu. Yds.			
							Conc. Pipe	C.M. Pipe	C.I. Pipe	
18"	1.8	2'-6"	3'-10"	1'-2"	1'-7"	1'-3"	0.74	0.77	0.77	none
24"	3.1	3'-0"	4'-4"	1'-5"	2'-1"	1'-4"	1.01	1.06	1.06	2 - $\frac{3}{4}$"Ø x 2'-0"
30"	4.9	3'-6"	4'-10"	1'-9"	2'-5"	1'-6"	1.32	1.40	1.39	2 - $\frac{3}{4}$"Ø x 2'-0"
36"	7.1	4'-0"	5'-4"	2'-0"	2'-11"	1'-8"	1.72	1.83	1.82	2 - $\frac{3}{4}$"Ø x 3'-0"
42"	9.6	4'-6"	5'-10"	2'-3"	3'-6"	2'-0"	2.34	2.47		2 - $\frac{3}{4}$"Ø x 3'-0"
48"	12.6	5'-0"	6'-4"	2'-6"	4'-0"	2'-0"	2.74	2.90		2 - $\frac{3}{4}$"Ø x 3'-0"
15"	1.2	2'-3"	3'-7"	1'-0"	1'-3"	1'-3"	0.56	0.59	0.59	none

GENERAL NOTES

1. Chamfer all exposed edges $\frac{3}{4}$"
2. Concrete meeting the requirements of ASTM C-478 (4000 psi) may be used in lieu of Class I concrete in precast units manufactured in plants which are under the Standard Operating Procedures for the inspection of precast drainage products.
3. Endwall to be paid for under the contract unit price for Class I Concrete (Endwalls) CY. Cost of steel tie bars to be included in the contract unit price for Class I Concrete.
4. Sodding to be in accordance with Index No. 281, and paid for under the contract unit price for Sodding Sy.

STATE OF FLORIDA DEPARTMENT OF TRANSPORTATION
ROAD DESIGN

WINGED CONCRETE ENDWALLS SINGLE ROUND PIPE

	Names	Dates
Designed By		
Drawn By	TJK	12/31
Checked By	GEF	03/32
F.H.W.A. Approved:		03/20/75

Approved By: State Drainage Engineer

Revision No.	Sheet No.	Index No.
86	1 of 1	266

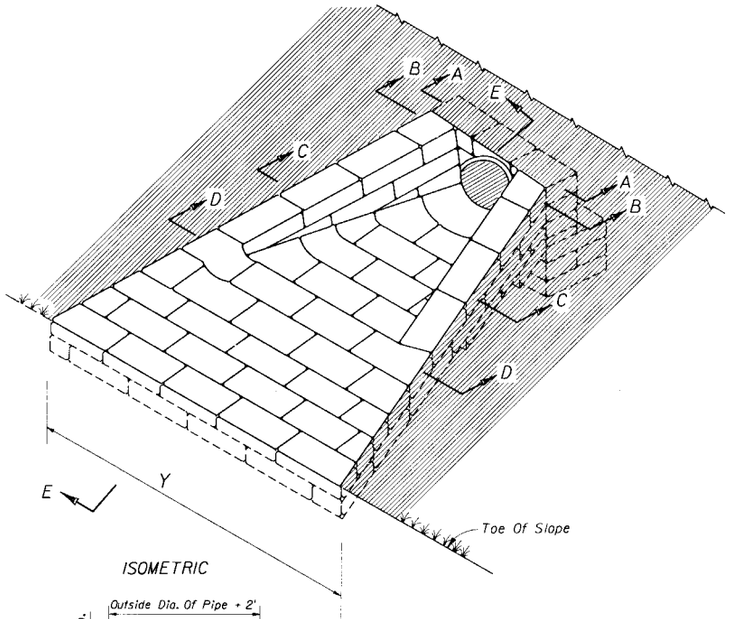

ISOMETRIC

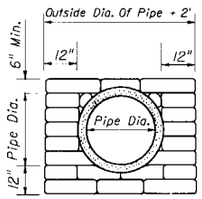

SECTION AA

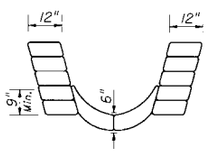

SECTION BB

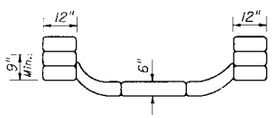

SECTION CC

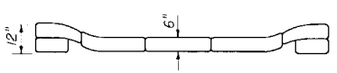

SECTION DD

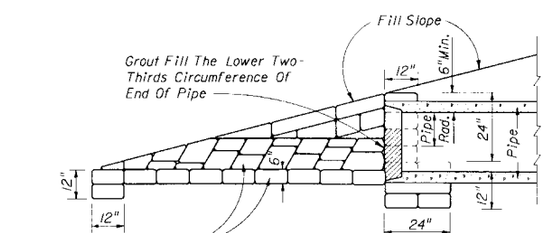

Place Plastic Filter Fabric Type D-4 (See Index 199) Around And Below Sand Cement Riprap. Cost Of Fabric To Be Included In Cost Of Sand Cement Riprap

SECTION EE

DETAIL FOR SINGLE PIPE CULVERT

Note: For multiple pipe culvert spacing between pipe centers = X

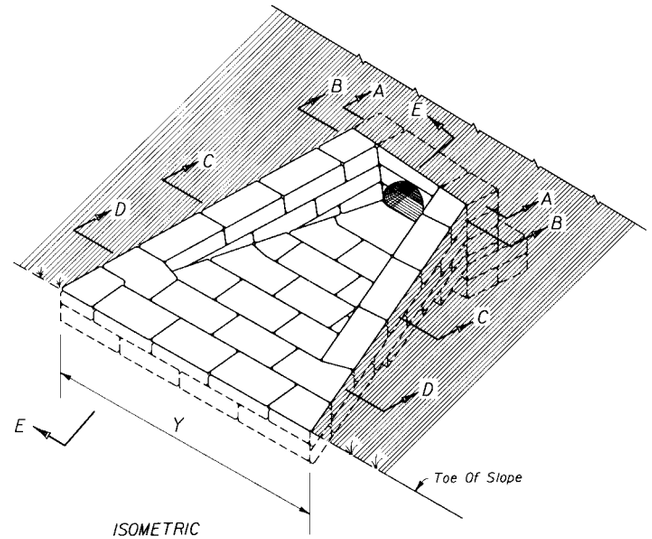

ISOMETRIC

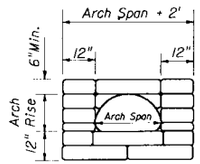

SECTION AA

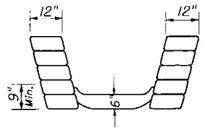

SECTION BB

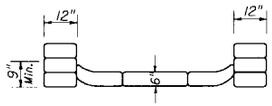

SECTION CC

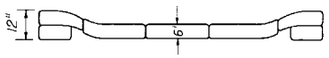

SECTION DD

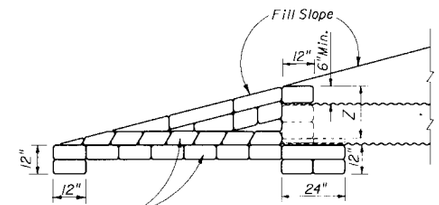

Place Plastic Filter Fabric Type D-4 (See Index 199) Around And Below Sand Cement Riprap. Cost Of Fabric To Be Included In Cost Of Sand Cement Riprap

SECTION EE

DETAILS FOR SINGLE METAL PIPE ARCH CULVERTS

NOTE: For multiple metal pipe arch culvert spacing between arch centers = X

DIMENSIONS AND QUANTITIES FOR METAL PIPE ARCH CULVERTS

Span	Rise	Dimensions						Quantity of Sand-Cement Riprap in Cu. Yds. for One Endwall											
		X	Y				Z	For 2:1 Slopes				For 4:1 Slopes				For 6:1 Slopes			
			1-Arch	2-Arch	3-Arch	4-Arch		1-Arch	2-Arch	3-Arch	4-Arch	1-Arch	2-Arch	3-Arch	4-Arch	1-Arch	2-Arch	3-Arch	4-Arch
17"	13"	2'-6"	6'-6"	9'-0"	11'-6"	14'-0"	1'-7"	1.0	1.5	2.0	2.5	1.5	2.2	2.9	3.6				
21"	15"	2'-10"	7'-6"	10'-4"	13'-2"	16'-0"	1'-9"	1.2	1.8	2.4	3.0	1.9	2.7	3.5	4.3				
28"	20"	3'-5"	9'-3"	12'-8"	16'-1"	19'-6"	2'-0"	1.7	2.5	3.3	4.1	2.6	3.7	4.8	5.9				
35"	24"	4'-0"	11'-0"	15'-0"	19'-0"	23'-0"	2'-0"	2.2	3.1	4.0	4.9	3.4	4.7	6.0	7.3				
42"	29"	4'-9"	12'-9"	17'-6"	22'-3"	27'-0"	2'-0"	2.9	4.1	5.3	6.5	4.5	6.1	7.7	9.3				
49"	33"	5'-6"	14'-6"	20'-0"	25'-6"	31'-0"	2'-0"	3.5	4.9	6.3	7.7	5.5	7.4	9.3	11.2				
57"	38"	6'-4"	16'-6"	22'-10"	29'-2"	35'-6"	2'-0"	4.4	6.1	7.8	9.5	6.9	9.2	11.5	13.8				
64"	43"	7'-1"	18'-3"	25'-4"	32'-5"	39'-6"	2'-0"	5.1	7.0	8.9	10.8	8.1	10.7	13.3	15.9				
71"	47"	7'-10"	20'-0"	27'-10"	35'-8"	43'-6"	2'-0"	5.9	8.1	10.3	12.5	9.5	12.4	15.3	18.2				

DIMENSIONS AND QUANTITIES FOR ROUND PIPE CULVERTS

Pipe Dia.	Dimensions					Quantity of Sand-Cement Riprap in Cu. Yds. for One Endwall											
	X	Y				For 2:1 Slopes				For 4:1 Slopes				For 6:1 Slopes			
		1-Pipe	2-Pipes	3-Pipes	4-Pipes	1-Pipe	2-Pipes	3-Pipes	4-Pipes	1-Pipe	2-Pipes	3-Pipes	4-Pipes	1-Pipe	2-Pipes	3-Pipes	4-Pipes
15"	2'-7"	7'-0"	9'-7"	12'-2"	14'-9"	1.2	1.6	2.1	2.6	1.7	2.4	3.0	3.6				
18"	2'-10"	8'-0"	10'-10"	13'-8"	16'-6"	1.4	2.0	2.6	3.1	2.1	2.9	3.7	4.4				
24"	3'-5"	10'-0"	13'-5"	16'-10"	20'-3"	1.9	2.7	3.5	4.3	2.9	4.0	5.1	6.3				
30"	4'-3"	12'-0"	16'-3"	20'-6"	24'-9"	2.5	3.6	4.8	5.9	3.8	5.4	7.0	8.6				
36"	5'-1"	14'-0"	19'-1"	24'-2"	29'-3"	3.1	4.6	6.2	7.7	4.8	7.0	9.2	11.4				
42"	6'-0"	16'-0"	22'-0"	28'-0"	34'-0"	3.8	5.8	7.7	9.7	6.0	8.8	11.7	14.5				
48"	6'-9"	18'-0"	24'-9"	31'-6"	38'-3"	4.5	7.0	9.4	11.8	7.2	10.8	14.3	17.9				
54"	7'-8"	20'-0"	27'-8"	35'-4"	43'-0"	5.3	8.3	11.3	14.2	8.5	12.9	17.3	21.7				
60"	8'-6"	22'-0"	30'-6"	39'-0"	47'-6"	6.2	9.7	13.3	16.9	10.0	15.3	20.6	25.9				

STATE OF FLORIDA DEPARTMENT OF TRANSPORTATION
ROAD DESIGN

U-TYPE SAND-CEMENT ENDWALLS

	Names	Dates
Designed By	JEP	12/48
Drawn By	HW	03/54
Checked By	COD	03/54
F.H.W.A. Approved:		08/30/77

Approved By: Ed T. Kruse, State Drainage Engineer

Revision No.	Sheet No.	Index No.
92	1 of 1	268

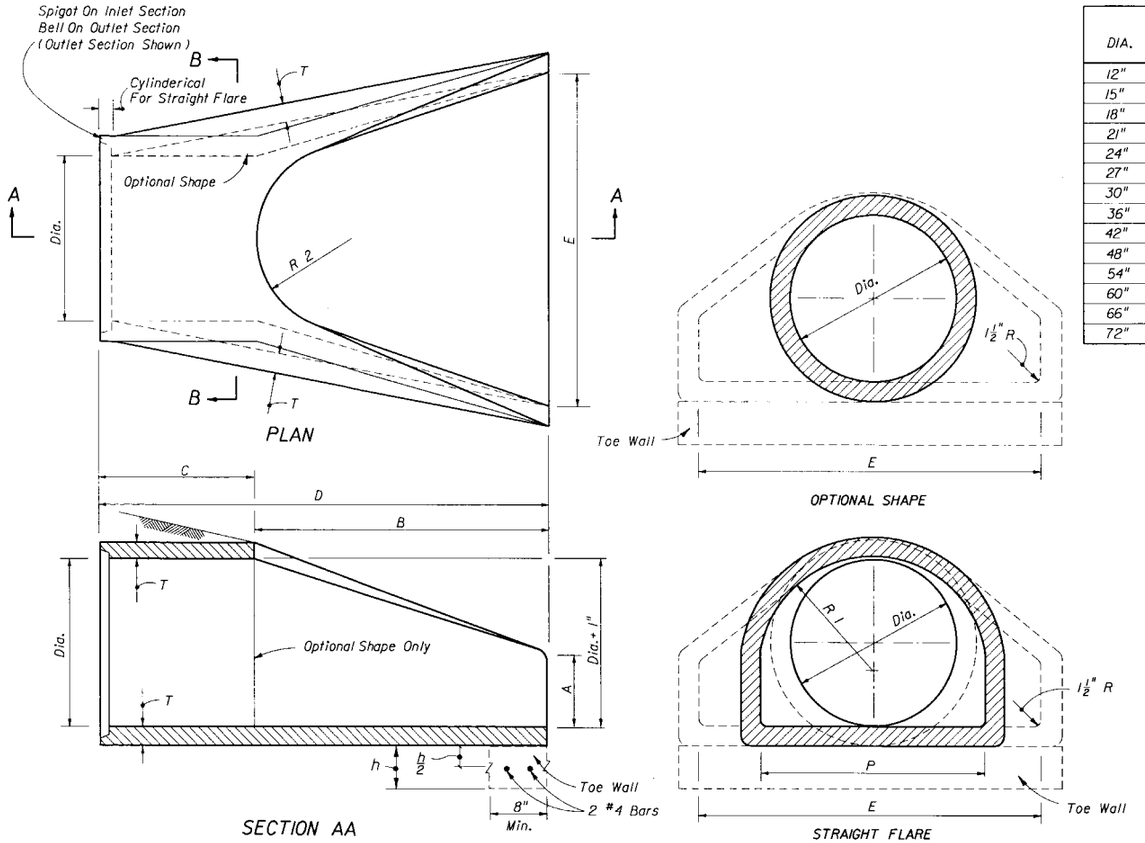

FLARED END SECTION

DIA.	T	REINF REINF. SQ IN/LF	BELL Or SPIGOT	A	B	C	D	E	P	R 1	R 2	FLAT	WEIGHT (LBS.)	h	TOE WALL CLASS I CONC (Misc.) CY
12"	2"	0.07	1½"	4"	2'-0"	4'-0 7/8"	6'-0 7/8"	2'-0"	19 15/16"	10 1/8"	9"	3½"	530	12"	.06
15"	2¼"	0.07	2"	6"	2'-3"	3'-10"	6'-1"	2'-6"	24 5/16"	12½"	11"	3½"	740	12"	.07
18"	2½"	0.07	2½"	9"	2'-3"	3'-10"	6'-1"	3'-0"	29"	15½"	12"	4"	990	15"	.11
21"	2¾"	0.07	2¼"	9"	2'-11"	3'-2"	6'-1"	3'-6"	31 5/8"	16 5/8"	13"	4"	1280	15"	.12
24"	3"	0.07	2½"	9½"	3'-7½"	2'-6"	6'-1½"	4'-0"	33 3/16"	16 13/16"	14"	4½"	1520	18"	.17
27"	3¼"	0.148	2½"	10½"	4'-0"	2'-1½"	6'-1½"	4'-6"	36"	18 5/16"	14½"	4½"	1930	18"	.19
30"	3½"	0.148	3"	1'-0"	4'-6"	1'-7½"	6'-1¾"	5'-0"	37"	18½"	15"	5"	2190	21"	.24
36"	4"	0.148	3½"	1'-3"	5'-3"	2'-10¾"	8'-1¾"	6'-0"	47 13/16"	24 5/16"	20"	5½"	4100	21"	.29
42"	4½"	0.148	3¾"	1'-9"	5'-3"	2'-11"	8'-2"	6'-6"	53 7/8"	27½"	22"	5½"	5380	24"	.36
48"	5"	0.148	4¼"	2'-0"	6'-0"	2'-2"	8'-2"	7'-0"	56½"	28½"	22"	5½"	6550	24"	.39
54"	5½"	0.174	4¾"	2'-3"	5'-5"	2'-11"	8'-4"	7'-6"	65½"	33 3/8"	24"	6¼"	8040	24"	.42
60"	6"	0.174	5"	2'-6"	5'-0"	3'-3"	8'-3"	8'-0"	72½"	36 11/16"	24"	6¾"	8750	24"	.44
66"	6½"	0.174	5½"	2'-0"	6'-6"	1'-9"	8'-3"	8'-6"	72"	36⅜"	24"	7¼"	10630	24"	.47
72"	7"	0.174	6"	2'-0"	6'-6"	1'-9"	8'-3"	9'-0"	77 13/16"	38 15/16"	24"	7¾"	12520	24"	.50

GENERAL NOTES

1. Flared end sections shall conform to the requirements of ASTM C-76 with the exception that dimensions and reinforcement shall be as prescribed in the table above. Circumferential reinforcement may consist of either one cage or two cages of steel. Compressive strength of concrete shall be 4000 psi. Shop drawings for flared end sections having dimensions other than above must be submitted for approval to the State Drainage Engineer.

2. Connections between the flared end section and the pipe culvert may be any of the following types unless otherwise shown on the plans.

   a. Joints meeting the requirements of Section 941-1.5 of the Standard Specifications (O-Ring Gasket).
   Flared end section joint diminsions and tolerances shall be identical or compatiable to those used in the pipe culvert joint. When pipe culvert and flared end section manufacturers are different, the compatiability of joint designs shall be certified to by the manufacturer of the flared end sections.

   b. Joints sealed with preformed plastic gaskets.
   The gaskets shall meet the requirements of Section 942-2 of the Standard Specifications and the minimum sizes for gaskets shall be as that specified for equivalent sizes of elliptical pipe.

   c. Reinforced concrete jackets, as detailed on this drawing.
   Cost of the reinforced concrete jacket to be included in the contract unit price for the flared end section.
   When non-coated corrugated metal pipe is called for in the plans, the pipe shall be bituminous coated in the jacketed area as specified on Index No. 280. Bituminous coating to be included in the contract unit price for the pipe culvert.

3. Toe walls shall be constructed when shown on the plans or at locations designated by the Engineer. Toe walls are to be cast-in-place with Class I Concrete and paid for under the contract unit price for Class I Concrete (Miscellaneous) CY. Reinforcing steel to be included in cost of toe wall.

4. On skewed pipe culverts the flared end sections shall be placed in line with the pipe culvert. Side slopes shall be warped as required to fit the flared end sections.

5. Flared End Section to be paid for under the contract unit price for Flared End Section (Concrete), Each. Sodding shall be in accordance with Index No. 281, and paid for under the contract unit price for Sodding, SY.

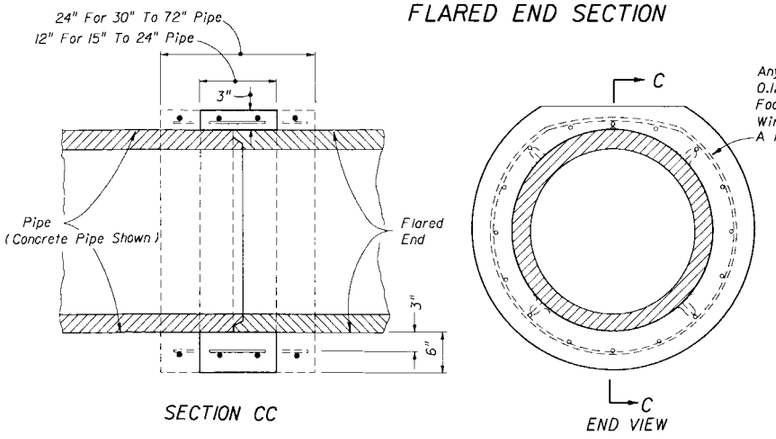

REINFORCED CONCRETE JACKET DETAIL

DESIGN NOTES

1. Flared end sections are intended for use outside the clear zone on median drain and cross drain installation, except that flared end sections for pipe sizes 12" and 15" are permitted within the clear zone. When the slope intersection permits, these flared end sections may be located with the culvert opening as close as 8' beyond the outside edge of the shoulder.

   Flared end sections are not intended for side drain installations.

2. Reinforced concrete jackets shall be used at all locations where high velocities and/or highly erosive soils may cause disjointing. These locations are to be shown on the plans.

3. Toe walls shall be used whenever the anticipated velocity of discharge and soil type are such that erosive action would occur. Toe walls are not required where ditch pavement is provided, except when disjointing would occur if the ditch pavement should fail.

STATE OF FLORIDA DEPARTMENT OF TRANSPORTATION
ROAD DESIGN

FLARED END SECTION

	Names	Dates
Designed By	EGR	09/77
Drawn By	HKH	09/77
Checked By	JVG	09/77
F.H.W.A. Approved:		09/23/77

Approved By: E.G. Rice
State Drainage Engineer

Revision No.	Sheet No.	Index No.
90	1 of 1	270

DIMENSIONS AND QUANTITIES

	D	X	A	B	C	E	F	G	M Single Pipe	M Double Pipe	M Triple Pipe	M Quad. Pipe	N	5½" CONCRETE SLAB (CY) ◪ Single Pipe	5½" CONCRETE SLAB (CY) ◪ Double Pipe	5½" CONCRETE SLAB (CY) ◪ Triple Pipe	5½" CONCRETE SLAB (CY) ◪ Quad. Pipe	SODDING (SQ. YDS.) Single Pipe	SODDING (SQ. YDS.) Double Pipe	SODDING (SQ. YDS.) Triple Pipe	SODDING (SQ. YDS.) Quad. Pipe
2:1 Slope	15"	2'-7"	1.92'	2.18'	4.10'	2.06'	5'	1.22'	4.63'	7.21'	9.79'	12.37'	1.19'	0.38	0.58	0.77	0.96	21	24	27	30
	18"	2'-10"	1.97'	2.74'	4.71'	2.56'	6'	1.41'	4.92'	7.75'	10.58'	13.42'	1.21'	0.44	0.65	0.87	1.09	22	25	28	31
	24"	3'-5"	2.06'	3.85'	5.91'	3.56'	7'	1.73'	5.50'	8.92'	12.33'	15.75'	1.25'	0.54	0.83	1.12	1.42	24	28	32	35
	30"	4'-3"	2.15'	4.95'	7.10'	4.56'	8'	2.00'	6.08'	10.33'	14.58'	18.83'	1.29'	0.66	1.09	1.50	1.91	26	31	35	40
	36"	5'-1"	2.25'	6.08'	8.33'	5.56'	9'	2.24'	6.67'	11.75'	16.83'	21.92'	1.33'	0.81	1.38	1.95	2.51	28	34	39	45
	42"	6'-0"	2.34'	7.21'	9.55'	6.56'	10'	2.45'	7.25'	13.25'	19.25'	25.25'	1.38'	0.97	1.70	2.45	3.19	30	37	43	50
	48"	6'-9"	2.43'	8.33'	10.76'	7.56'	11'	2.65'	7.83'	14.58'	21.33'	28.08'	1.42'	1.13	2.04	2.93	3.84	32	39	47	54
	54"	7'-8"	2.52'	9.44'	11.96'	8.56'	12'	2.83'	8.42'	16.08'	23.75'	31.42'	1.46'	1.31	2.44	3.58	4.72	34	42	51	59
	60"	8'-6"	2.62'	10.56'	13.18'	9.56'	14'	3.00'	9.00'	17.50'	26.00'	34.50'	1.50'	1.51	2.89	4.28	5.68	36	45	55	64
	66"	9'-2"	2.71'	11.68'	14.39'	10.56'	15'	3.18'	9.58'	18.75'	27.92'	37.08'	1.54'	1.68	3.25	4.84	6.43	38	48	58	68
	72"	10'-0"	2.80'	12.80'	15.60'	11.56'	16'	3.30'	10.16'	20.16'	30.16'	40.16'	1.58'	1.89	3.74	5.59	7.45	40	51	62	73
4:1 Slope	15"	2'-7"	2.27'	4.09'	6.36'	4.03'	8'	1.22'	4.63'	7.21'	9.79'	12.37'	1.19'	0.57	0.87	1.15	1.44	23	26	29	32
	18"	2'-10"	2.36'	5.12'	7.48'	5.03'	9'	1.41'	4.92'	7.75'	10.58'	13.42'	1.21'	0.66	0.99	1.31	1.65	25	28	31	35
	24"	3'-5"	2.53'	7.18' △	9.71'	7.03' △	11'	1.73'	5.50'	8.92'	12.33'	15.75'	1.25'	0.85	1.30	1.75	2.20	28	32	36	40
	30"	4'-3"	2.70'	9.25'	11.95'	9.03'	13'	2.00'	6.08'	10.33'	14.58'	18.83'	1.29'	1.10	1.74	2.39	3.05	31	36	41	46
	36"	5'-1"	2.87'	11.31' ◇	14.18'	11.03' ◇	15'	2.24'	6.67'	11.75'	16.83'	21.92'	1.33'	1.32	2.21	3.08	3.96	34	40	46	52
	42"	6'-0"	3.05'	13.37'	16.42'	13.03'	17'	2.45'	7.25'	13.25'	19.25'	25.25'	1.38'	1.58	2.76	3.91	5.09	38	44	51	58
	48"	6'-9"	3.22'	15.43'	18.65'	15.03'	19'	2.65'	7.83'	14.58'	21.33'	28.08'	1.42'	1.85	3.30	4.73	6.17	41	48	56	63
	54"	7'-8"	3.39'	17.49'	20.88'	17.03'	21'	2.83'	8.42'	16.08'	23.75'	31.42'	1.46'	2.14	3.95	5.77	7.58	44	52	61	69
	60"	8'-6"	3.56'	19.55'	23.11'	19.03'	23'	3.00'	9.00'	17.50'	26.00'	34.50'	1.50'	2.45	4.66	6.87	9.07	47	56	66	75
	66"	9'-2"	3.73'	21.62'	25.35'	21.03'	25'	3.18'	9.58'	18.75'	27.92'	37.08'	1.54'	2.88	5.54	8.18	10.84	49	59	69	80
	72"	10'-0"	3.91'	22.68'	26.59'	23.03'	27'	3.30'	10.16'	20.16'	30.16'	40.16'	1.58'	3.18	6.27	9.36	12.45	52	63	74	85

◪ See General Note No. 3.
See Sheet 5 Of 6 For 3" Slab Quantities

	B	E	
△	6.42'	6.25'	Dimensions permitted to allow use of 8' standard pipe lengths.
◇	10.40'	10.10'	Dimensions permitted to allow use of 12' standard pipe lengths.

△◇ Concrete slab shall be deepened to form bridge across crown of pipe. See section below.

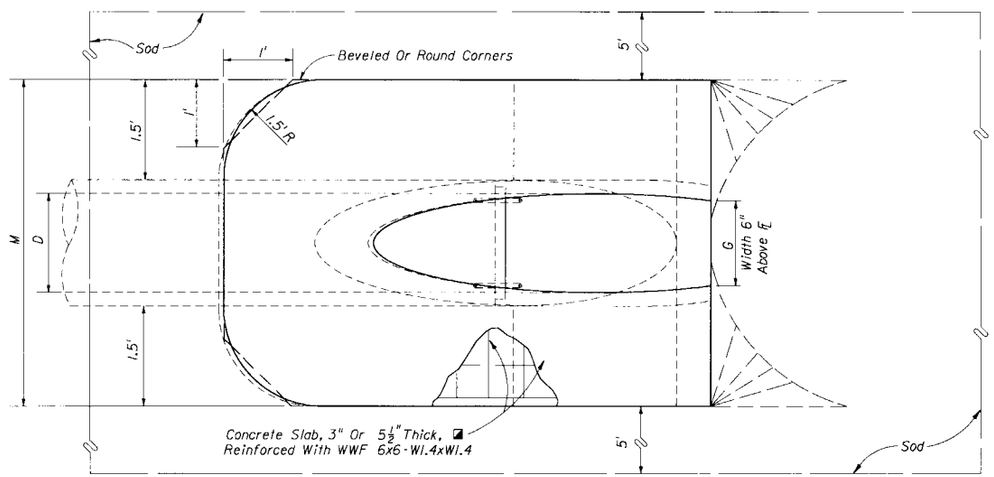

TOP VIEW - SINGLE PIPE

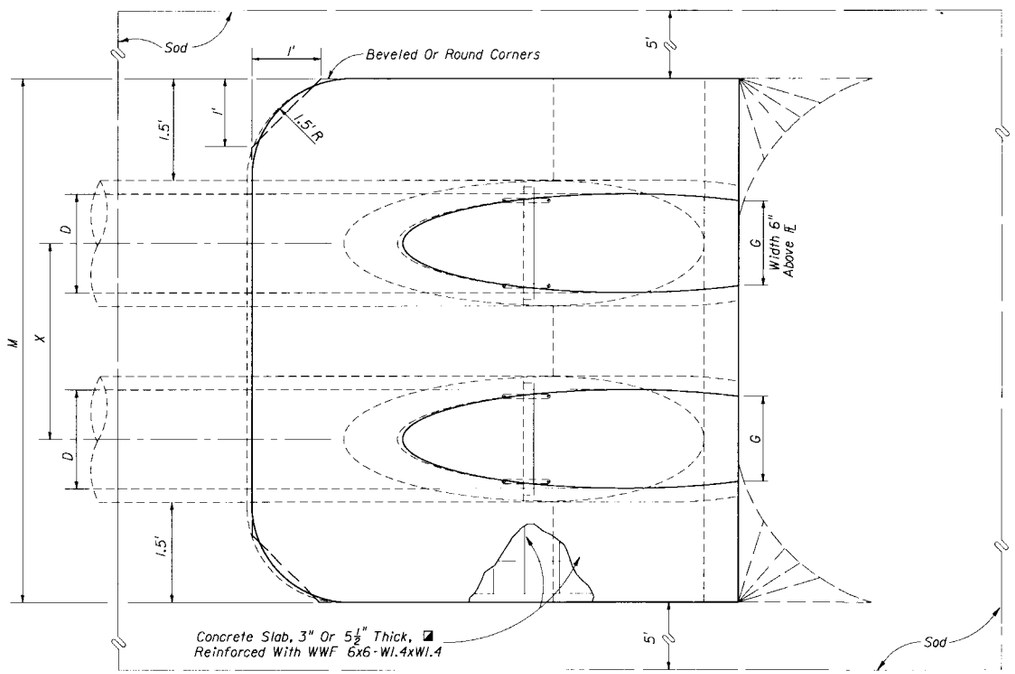

TOP VIEW - MULTIPLE PIPE

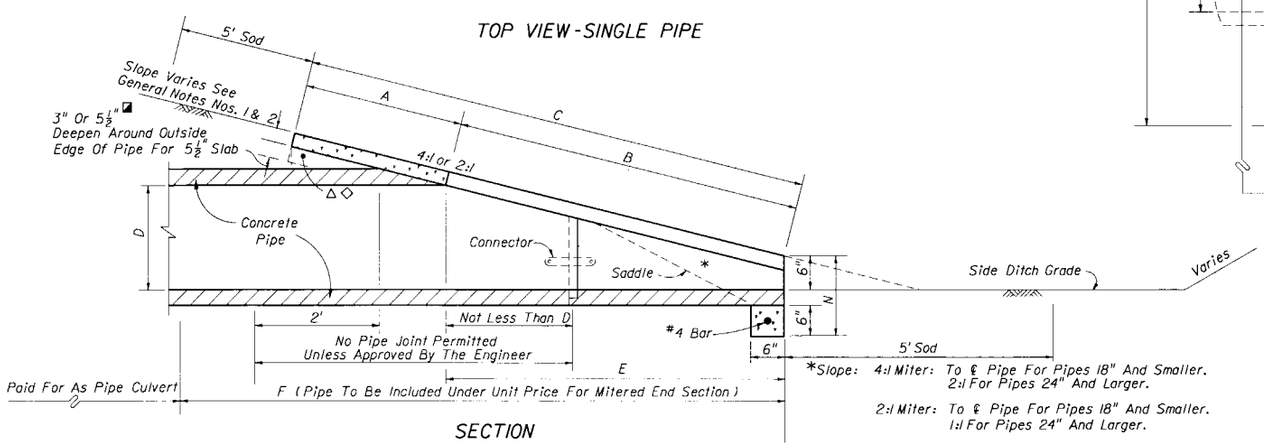

SECTION

*Slope: 4:1 Miter: To ℄ Pipe For Pipes 18" And Smaller.
2:1 For Pipes 24" And Larger.

2:1 Miter: To ℄ Pipe For Pipes 18" And Smaller.
1:1 For Pipes 24" And Larger.

NOTE: See sheet 6 for details and notes.

STATE OF FLORIDA DEPARTMENT OF TRANSPORTATION
ROAD DESIGN

CROSS DRAIN MITERED END SECTION

SINGLE AND MULTIPLE ROUND CONCRETE PIPE

	Names	Dates
Designed By	DCB	06/78
Drawn By		
Checked By	KNW	06/78
F.H.W.A. Approved:		07/21/78

Approved By: E.G. Kruger
State Drainage Engineer

Revision No.	Sheet No.	Index No.
92	1 of 6	272

DIMENSIONS AND QUANTITIES

	D	X	A	B	C	E	F	G	M Single Pipe	M Double Pipe	M Triple Pipe	M Quad. Pipe	N	5½" CONCRETE SLAB (CY) ◪ Single Pipe	5½" CONCRETE SLAB (CY) ◪ Double Pipe	5½" CONCRETE SLAB (CY) ◪ Triple Pipe	5½" CONCRETE SLAB (CY) ◪ Quad. Pipe	SODDING (SQ. YDS.) Single Pipe	SODDING (SQ. YDS.) Double Pipe	SODDING (SQ. YDS.) Triple Pipe	SODDING (SQ. YDS.) Quad. Pipe
2:1 Slope	15"	2'-7"	2.5'	1.68'	4.18'	1.50'	5'	1.23'	4.33'	6.92'	9.50'	12.08'	1.04'	0.35	0.54	0.74	0.94	21	24	27	29
	18"	2'-10"	2.5'	2.24'	4.74'	2.00'	6'	1.41'	4.58'	7.42'	10.25'	13.08'	1.04'	0.38	0.62	0.87	1.12	22	25	28	31
	24"	3'-5"	2.5'	3.35'	5.85'	3.00'	7'	1.73'	5.08'	8.50'	11.92'	15.33'	1.04'	0.47	0.76	1.05	1.34	23	27	31	35
	30"	4'-3"	2.5'	4.47'	6.97'	4.00'	8'	2.00'	5.58'	9.83'	14.08'	18.33'	1.04'	0.57	0.96	1.37	1.77	25	30	35	39
	36"	5'-1"	2.5'	5.59'	8.09'	5.00'	9'	2.24'	6.08'	11.17'	16.25'	21.33'	1.04'	0.67	1.19	1.72	2.26	27	33	38	44
	42"	6'-0"	2.5'	6.71'	9.21'	6.00'	10'	2.45'	6.58'	12.58'	18.58'	24.58'	1.04'	0.78	1.48	2.17	2.87	29	36	42	49
	48"	6'-9"	2.5'	7.83'	10.33'	7.00'	11'	2.65'	7.08'	13.83'	20.58'	27.33'	1.04'	0.89	1.71	2.54	3.36	31	38	46	53
	54"	7'-8"	2.5'	8.94'	11.44'	8.00'	12'	2.83'	7.58'	15.25'	22.92'	30.58'	1.04'	1.02	2.06	3.10	4.14	33	41	50	58
	60"	8'-6"	2.5'	10.06'	12.56'	9.00'	13'	3.00'	8.08'	16.58'	25.08'	33.58'	1.04'	1.14	2.38	3.63	4.89	34	44	53	63
4:1 Slope	15"	2'-7"	2.5'	3.09'	5.59'	3.0'	7.0'	1.23'	4.33'	6.92'	9.50'	12.08'	1.04'	0.44	0.68	0.91	1.15	22	25	28	31
	18"	2'-10"	2.5'	4.12'	6.62'	4.0'	8.0'	1.41'	4.58'	7.42'	10.25'	13.08'	1.04'	0.49	0.77	1.03	1.31	24	27	30	33
	24"	3'-5"	2.5'	6.18'	8.68'	6.0'	10.0'	1.73'	5.08'	8.50'	11.92'	15.33'	1.04'	0.65	1.09	1.38	1.77	27	30	34	38
	30"	4'-3"	2.5'	8.25'	10.75'	8.0'	12.0'	2.00'	5.58'	9.83'	14.08'	18.33'	1.04'	0.81	1.34	1.90	2.44	29	34	39	44
	36"	5'-1"	2.5'	10.31'	12.81'	10.0'	14.0'	2.24'	6.08'	11.17'	16.25'	21.33'	1.04'	0.97	1.68	2.41	3.14	32	38	44	49
	42"	6'-0"	2.5'	12.37'	14.87'	12.0'	16.0'	2.45'	6.58'	12.58'	18.58'	24.58'	1.04'	1.13	2.08	3.06	4.02	35	42	48	55
	48"	6'-9"	2.5'	14.43'	16.93'	14.0'	18.0'	2.65'	7.08'	13.83'	20.58'	27.33'	1.04'	1.29	2.49	3.69	4.88	38	46	53	60
	54"	7'-8"	2.5'	16.49'	18.99'	16.0'	20.0'	2.83'	7.58'	15.25'	22.92'	30.58'	1.04'	1.48	2.98	4.47	5.98	41	49	58	66
	60"	8'-6"	2.5'	18.55'	21.05'	18.0'	22.0'	3.00'	8.08'	16.58'	25.08'	33.58'	1.04'	1.66	3.49	5.31	7.13	44	53	63	72

◪ See General Note No. 3.
See Sheet 5 Of 6 For 3" Slab Quantities

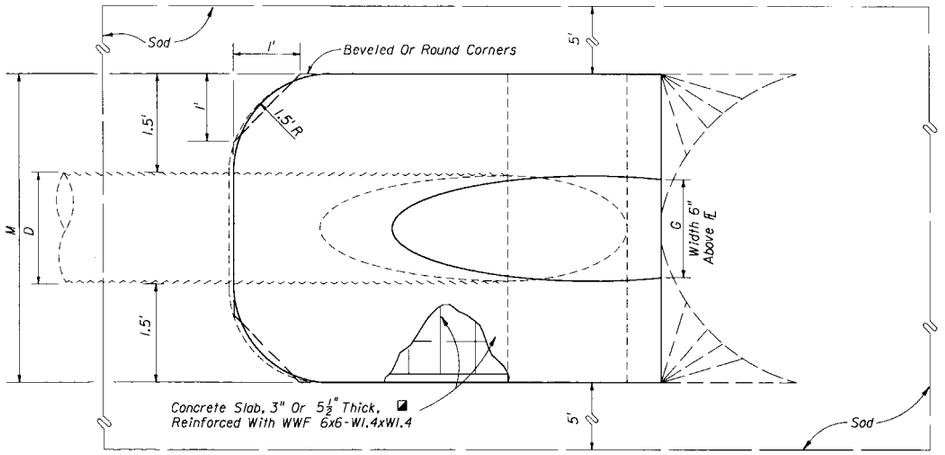

TOP VIEW - SINGLE PIPE

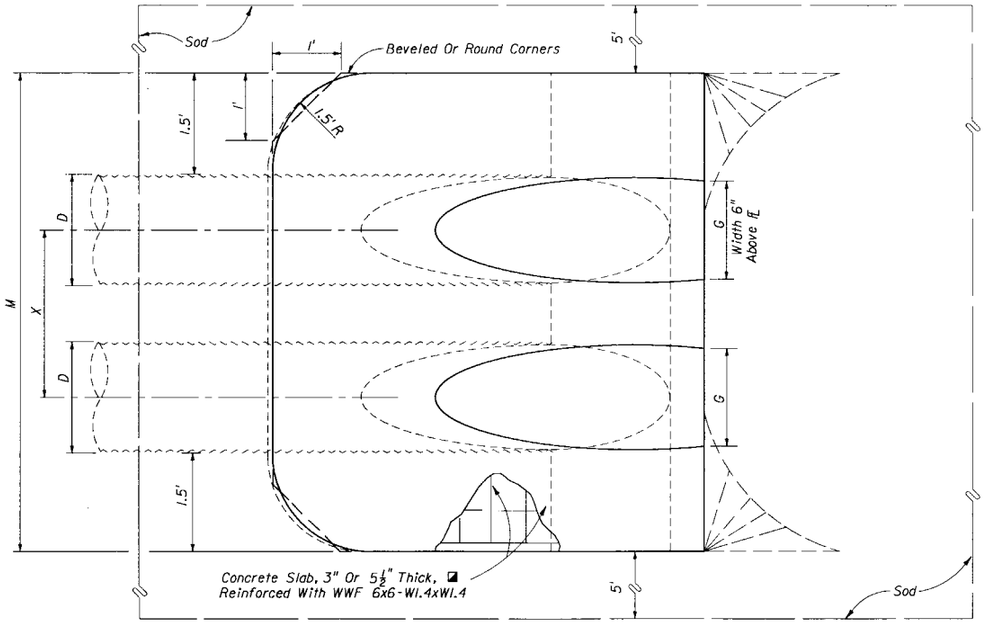

TOP VIEW - MULTIPLE PIPE

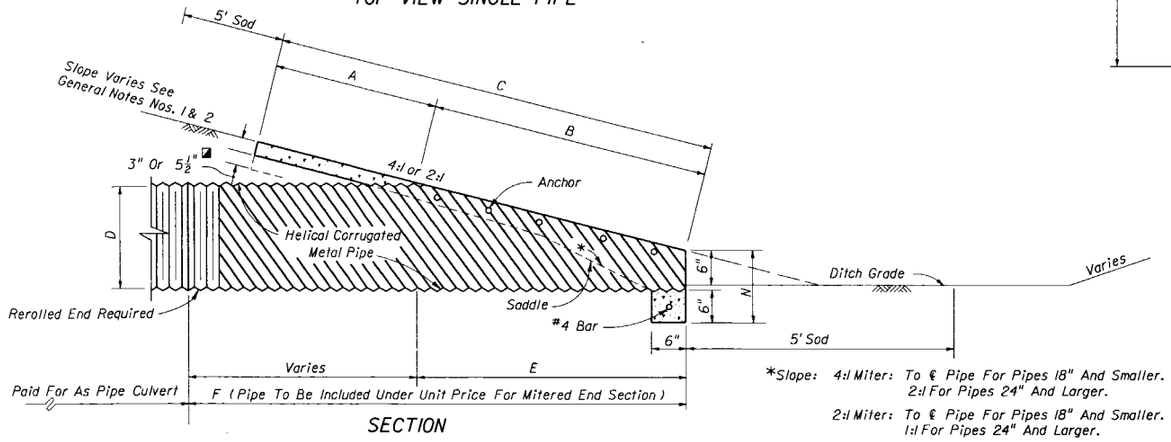

SECTION

*Slope: 4:1 Miter: To ℄ Pipe For Pipes 18" And Smaller.
2:1 For Pipes 24" And Larger.
2:1 Miter: To ℄ Pipe For Pipes 18" And Smaller.
1:1 For Pipes 24" And Larger.

NOTE: See Sheet 6 For Details And Notes.

STATE OF FLORIDA DEPARTMENT OF TRANSPORTATION
ROAD DESIGN

CROSS DRAIN MITERED END SECTION

SINGLE AND MULTIPLE ROUND CORRUGATED METAL PIPE

	Names	Dates
Designed By	DCB	06/78
Drawn By		
Checked By	KNM	06/78
F.H.W.A. Approved:		07/21/78

Approved By: G. L. Lange
State Drainage Engineer

Revision No.	Sheet No.	Index No.
92	2 of 6	272

F:\M\15200410021\2SH02.DGN
Wed Sep 25 11:02:18 1991

DIMENSIONS AND QUANTITIES

1974 AASHTO

	SPAN	RISE	X	A	B	C	E	F	G	M Single Pipe	M Double Pipe	M Triple Pipe	M Quad. Pipe	N	5½" CONCRETE SLAB (CY) ◪ Single Pipe	5½" CONCRETE SLAB (CY) ◪ Double Pipe	5½" CONCRETE SLAB (CY) ◪ Triple Pipe	5½" CONCRETE SLAB (CY) ◪ Quad. Pipe	SODDING (SQ. YDS.) Single Pipe	SODDING (SQ. YDS.) Double Pipe	SODDING (SQ. YDS.) Triple Pipe	SODDING (SQ. YDS.) Quad. Pipe
2:1 Slope	17"	13"	2'-6"	2.5'	1.30'	3.80'	1.17'	4'	1.39'	4.50'	7.00'	9.50'	12.00'	1.04'	0.41	0.61	0.81	1.02	21	23	26	29
	21"	15"	2'-10"	2.5'	1.68'	4.17'	1.50'	5'	1.76'	4.83'	7.67'	10.50'	13.33'	1.04'	0.43	0.66	0.88	1.10	22	25	28	31
	28"	20"	3'-5"	2.5'	2.61'	5.11'	2.33'	6'	2.22'	5.42'	8.83'	12.25'	15.67'	1.04'	0.51	0.78	1.06	1.33	23	27	30	34
	35"	24"	4'-0"	2.5'	3.35'	5.85'	3.00'	7'	2.55'	6.00'	10.00'	14.00'	18.00'	1.04'	0.57	0.90	1.22	1.55	24	29	33	38
	42"	29"	4'-9"	2.5'	4.29'	6.79'	3.83'	8'	2.97'	6.58'	11.33'	16.08'	20.83'	1.04'	0.64	1.04	1.46	1.87	26	31	37	42
	49"	33"	5'-6"	2.5'	5.03'	7.53'	4.50'	9'	3.34'	7.17'	12.67'	18.17'	23.67'	1.04'	0.73	1.23	1.72	2.22	28	34	40	46
	57"	38"	6'-4"	2.5'	5.96'	8.46'	5.33'	10'	3.65'	7.83'	14.17'	20.50'	26.83'	1.04'	0.83	1.44	2.04	2.64	29	36	44	51
	64"	43"	7'-1"	2.5'	6.89'	9.39'	6.17'	11'	3.89'	8.42'	15.50'	22.58'	29.67'	1.04'	0.95	1.67	2.39	3.11	31	39	47	55
	71"	47"	7'-10"	2.5'	7.64'	10.14'	6.83'	12'	4.14'	9.00'	16.83'	24.67'	32.50'	1.04'	1.05	1.89	2.74	3.57	33	41	50	59
4:1 Slope	17"	13"	2'-6"	2.5'	2.41'	4.91'	2.33'	7'	1.39'	4.50'	7.00'	9.50'	12.00'	1.04'	0.48	0.71	0.95	1.18	22	25	27	30
	21"	15"	2'-10"	2.5'	3.09'	5.59'	3.00'	8'	1.76	4.83'	7.67'	10.50'	13.33'	1.04'	0.52	0.80	1.09	1.31	23	26	29	32
	28"	20"	3'-5"	2.5'	4.81'	7.31'	4.67'	9'	2.22'	5.42'	8.83'	12.25'	15.67'	1.04'	0.61	0.92	1.27	1.59	25	29	33	37
	35"	24"	4'-0"	2.5'	6.18'	8.68'	6.00'	11'	2.55'	6.00'	10.00'	14.00'	18.00'	1.04'	0.73	1.14	1.55	1.97	28	32	37	41
	42"	29"	4'-9"	2.5'	7.90'	10.40'	7.67'	12'	2.97'	6.58'	11.33'	16.08'	20.83'	1.04'	0.87	1.39	1.92	2.45	30	35	41	46
	49"	33"	5'-6"	2.5'	9.28'	11.78'	9.00'	14'	3.34'	7.17'	12.67'	18.17'	23.67'	1.04'	1.00	1.66	2.30	2.96	32	38	45	51
	57"	38"	6'-4"	2.5'	11.00'	13.50'	10.67'	16'	3.65'	7.83'	14.17'	20.50'	26.83'	1.04'	1.18	2.00	2.82	3.64	35	42	49	56
	64"	43"	7'-1"	2.5'	12.71'	15.21'	12.33'	17'	3.89'	8.42'	15.50'	22.58'	29.67'	1.04'	1.36	2.39	3.38	4.38	38	45	53	61
	71"	47"	7'-10"	2.5'	14.09'	16.59'	13.67'	19'	4.14'	9.00'	16.83'	24.67'	32.50'	1.04'	1.50	2.65	3.81	4.97	40	48	57	66

◪ See General Note No. 3.
See Sheet 5 Of 6 For 3" Slab Quantities

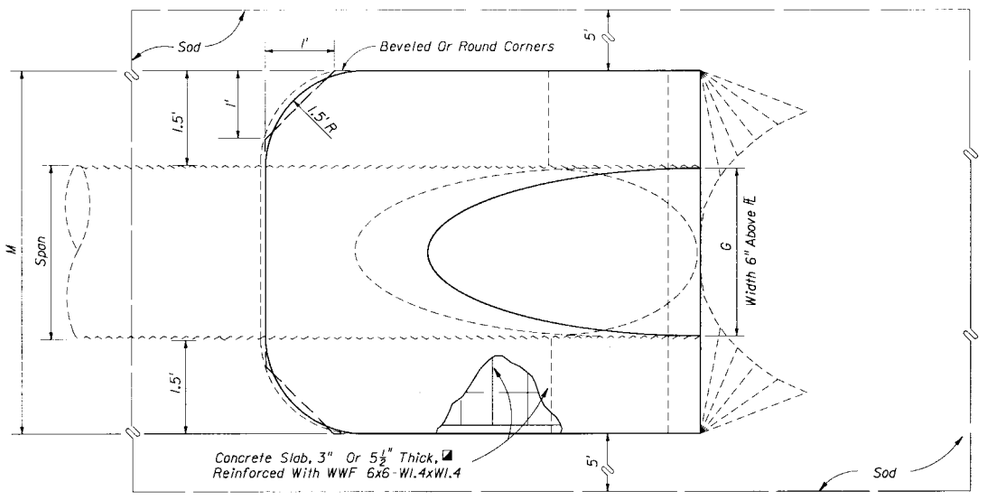

TOP VIEW-SINGLE PIPE

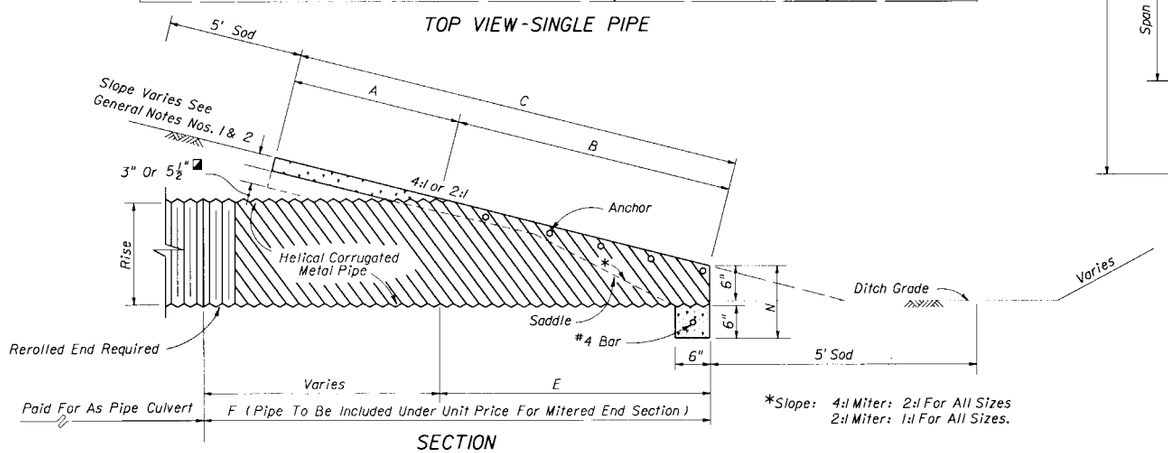

SECTION

*Slope: 4:1 Miter: 2:1 For All Sizes
2:1 Miter: 1:1 For All Sizes.

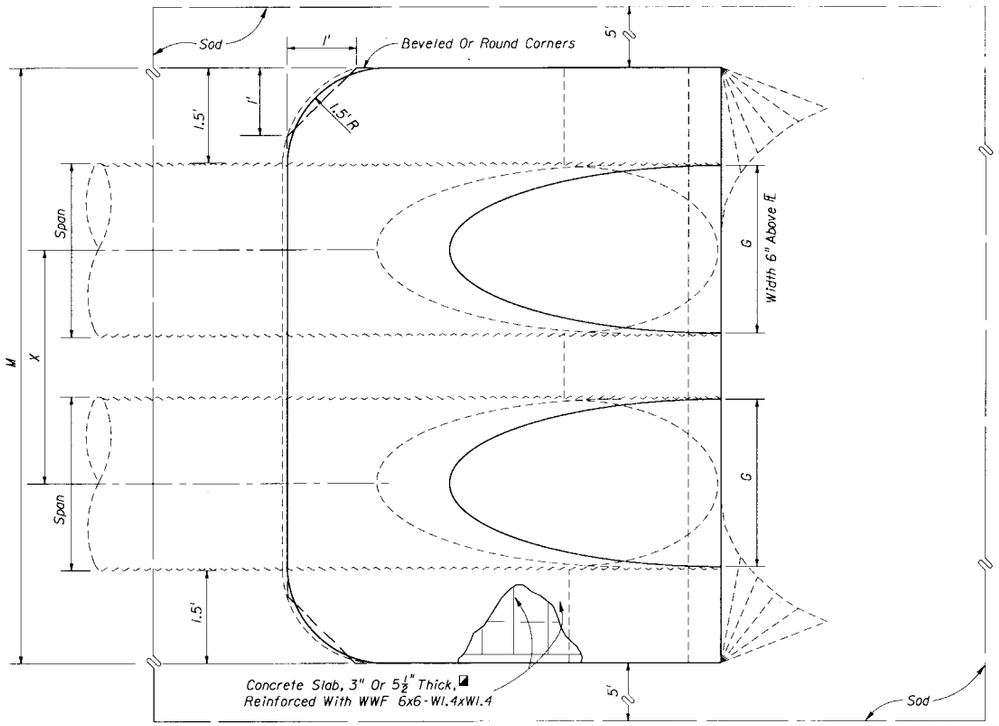

TOP VIEW-MULTIPLE PIPE

NOTE: See Sheet 6 For Details And Notes.

STATE OF FLORIDA DEPARTMENT OF TRANSPORTATION
ROAD DESIGN

CROSS DRAIN MITERED END SECTION

SINGLE AND MULTIPLE CORRUGATED METAL PIPE-ARCH

	Names	Dates
Designed By	DCB	06/78
Drawn By		
Checked By	KNW	06/78
F.H.W.A. Approved:		07/21/78

Approved By: State Drainage Engineer

Revision No.	Sheet No.	Index No.
92	3 of 6	272

FL\ALI52004300272SH03.DGN
Wed Sep 25 11:05:53 1991

DIMENSIONS & QUANTITIES

	Rise R	Span S	X	A	B	C	E	F	G	M Single Pipe	M Double Pipe	M Triple Pipe	M Quad. Pipe	N	5½"CONC. SLAB (CY) ◪ Single Pipe	5½"CONC. SLAB (CY) ◪ Double Pipe	5½"CONC. SLAB (CY) ◪ Triple Pipe	5½"CONC. SLAB (CY) ◪ Quad. Pipe	SODDING (SQ. YDS.) Single Pipe	SODDING (SQ. YDS.) Double Pipe	SODDING (SQ. YDS.) Triple Pipe	SODDING (SQ. YDS.) Quad. Pipe
2:1 Slope	12"	18"	2'-10"	1.97'	1.62'	3.59'	1.56'	4'	1.50'	4.92'	7.75'	10.58'	13.42'	1.21'	0.30	0.49	0.67	0.85	21	24	27	30
	14"	23"	3'-4"	2.01'	1.99'	4.00'	1.89'	5'	1.90'	5.38'	8.71'	12.04'	15.38'	1.23'	0.37	0.59	0.81	1.02	22	26	29	33
	19"	30"	4'-0"	2.11'	2.92'	5.03'	2.73'	6'	2.37'	6.04'	10.04'	14.04'	18.04'	1.27'	0.50	0.80	1.09	1.39	24	28	33	37
	24"	38"	5'-0"	2.20'	3.85'	6.05'	3.56'	7'	2.85'	6.79'	11.79'	16.79'	21.79'	1.31'	0.62	1.03	1.45	1.86	26	31	37	42
	29"	45"	5'-11"	2.34'	4.79'	7.13'	4.39'	8'	3.19'	7.50'	13.42'	19.33'	25.25'	1.38'	0.75	1.30	1.84	2.39	28	34	41	47
	34"	53"	7'-0"	2.43'	5.72'	8.15'	5.23'	9'	3.57'	8.25'	15.25'	22.25'	29.25'	1.42'	0.90	1.61	2.32	3.03	30	37	45	53
	38"	60"	7'-10"	2.52'	6.46'	8.98'	5.89'	9'	3.95'	8.92'	16.75'	24.58'	32.42'	1.46'	1.03	1.89	2.74	3.60	31	40	49	57
	43"	68"	8'-11"	2.62'	7.39'	10.01'	6.73'	10'	4.28'	9.67'	18.58'	27.50'	36.42'	1.50'	1.19	2.26	3.33	4.40	33	43	53	63
	48"	76"	9'-11"	2.71'	8.33'	11.04'	7.56'	11'	4.59'	10.42'	20.33'	30.25'	40.17'	1.54'	1.38	2.65	3.93	5.21	35	46	57	68
	53"	83"	10'-8"	2.80'	9.26'	12.06'	8.39'	12'	4.77'	11.08'	21.75'	32.42'	43.08'	1.58'	1.55	3.03	4.50	5.96	37	49	61	73
	58"	91"	11'-8"	2.90'	10.19'	13.09'	9.23'	13'	5.01'	11.83'	23.50'	35.17'	46.83'	1.63'	1.75	3.47	5.20	6.93	39	52	65	78
4:1 Slope	12"	18"	2'-10"	2.36'	3.06'	5.42'	3.03'	5'	1.50'	4.92'	7.75'	10.58'	13.42'	1.21'	0.45	0.68	0.92	1.14	23	26	29	32
	14"	23"	3'-4"	2.44'	3.75'	6.19'	3.70'	6'	1.90'	5.38'	8.71'	12.04'	15.38'	1.23'	0.53	0.83	1.13	1.42	24	28	32	35
	19"	30"	4'-0"	2.62'	5.47'	8.09'	5.36'	8'	2.37'	6.04'	10.04'	14.04'	18.04'	1.27'	0.74	1.15	1.57	1.98	27	32	36	40
	24"	38"	5'-0"	2.79'	7.18'	9.97'	7.03'	10'	2.85'	6.79'	11.79'	16.79'	21.79'	1.31'	0.97	1.57	2.19	2.81	30	36	41	47
	29"	45"	5'-11"	3.05'	8.90'	11.95'	8.70'	12'	3.19'	7.50'	13.42'	19.33'	25.25'	1.38'	1.22	2.07	2.92	3.77	33	40	46	53
	34"	53"	7'-0"	3.22'	10.62'	13.84'	10.36'	13'	3.57'	8.25'	15.25'	22.25'	29.25'	1.42'	1.48	2.62	3.77	4.92	36	44	52	59
	38"	60"	7'-10"	3.39'	11.99'	15.38'	11.70'	15'	3.95'	8.92'	16.75'	24.58'	32.42'	1.46'	1.72	3.12	4.53	5.92	38	47	56	65
	43"	68"	8'-11"	3.56'	13.71'	17.27'	13.36'	17'	4.28'	9.67'	18.58'	27.50'	36.42'	1.50'	2.02	3.78	5.56	7.32	41	51	61	71
	48"	76"	9'-11"	3.73'	15.43'	19.16'	15.03'	19'	4.59'	10.42'	20.33'	30.25'	40.17'	1.54'	2.34	4.49	6.64	8.79	44	55	66	77
	53"	83"	10'-8"	3.91'	17.15'	21.06'	16.70'	20'	4.77'	11.08'	21.75'	32.42'	43.08'	1.58'	2.66	5.17	7.66	10.16	47	59	71	83
	58"	91"	11'-8"	4.08'	18.87'	22.95'	18.36'	22'	5.01'	11.83'	23.50'	35.17'	46.83'	1.63'	3.02	5.98	8.95	11.90	50	63	76	89

◪ See General Note No. 3.
See Sheet 5 Of 6 For 3" Slab Quantities

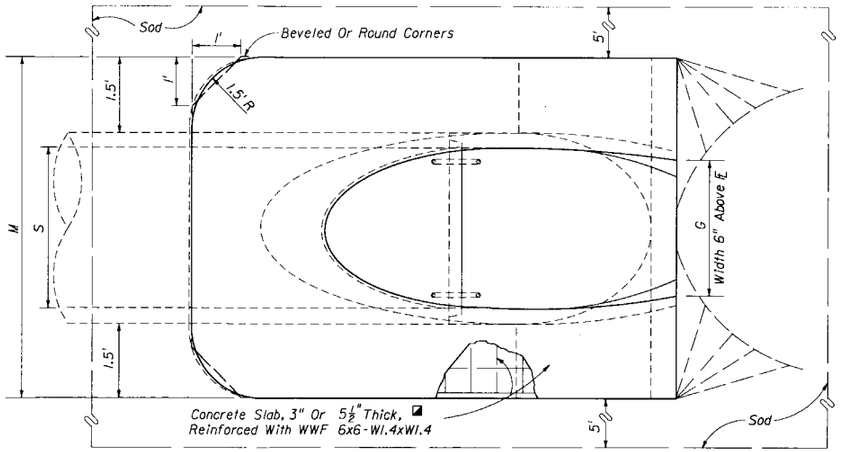

TOP VIEW-SINGLE PIPE

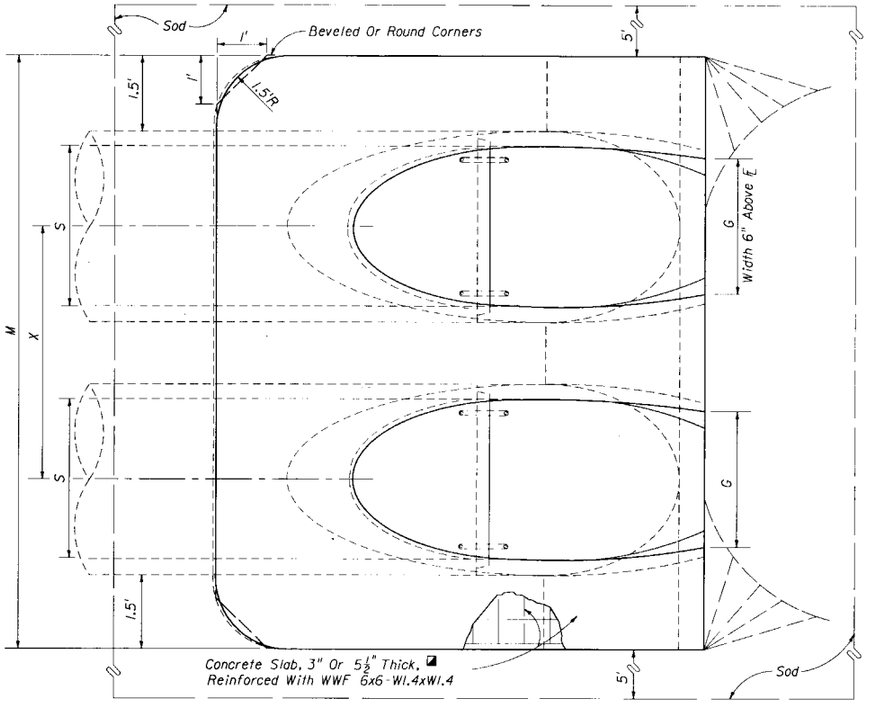

TOP VIEW-MULTIPLE PIPE

NOTE: See Sheet 6 For Details And Notes.

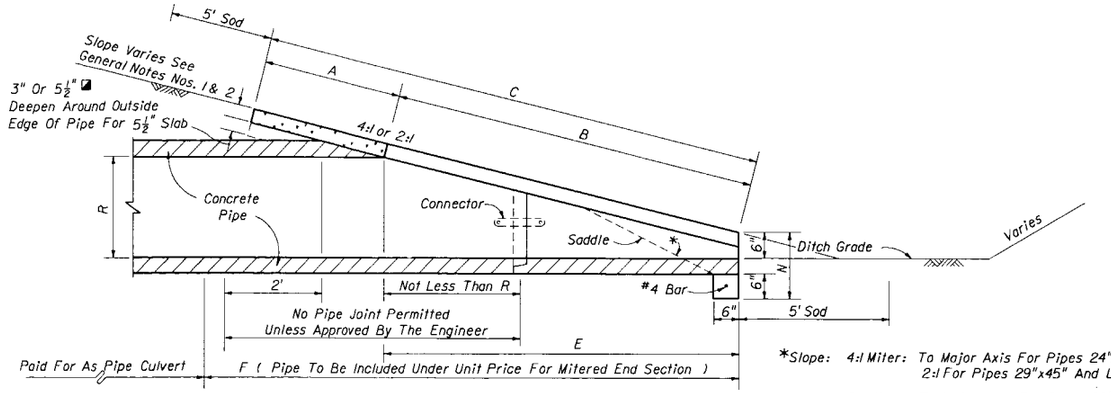

SECTION

*Slope: 4:1 Miter: To Major Axis For Pipes 24"x38" And Smaller.
2:1 For Pipes 29"x45" And Larger.

2:1 Miter: To Major Axis For Pipes 29"x45" And Smaller.
1:1 For Pipes 34"x53" And Larger.

STATE OF FLORIDA DEPARTMENT OF TRANSPORTATION
ROAD DESIGN

CROSS DRAIN MITERED END SECTION

SINGLE AND MULTIPLE ELLIPTICAL CONCRETE PIPE

	Names	Dates
Designed By	EGR	06/81
Drawn By	HSD	06/81
Checked By	JVG/JBW	06/81
F.H.W.A. Approved:		10/08/81

Approved By: Ed Kuss
State Drainage Engineer

Revision No.	Sheet No.	Index No.
92	4 of 6	272

F:\dl\52004\d00725H04.DGN
Wed Sep 25 11:05:34 1991

QUANTITIES FOR 3" THICK CONCRETE SLABS (CY)

	D	ROUND - CONCRETE			
		Single Pipe	Double Pipe	Triple Pipe	Quad. Pipe
2 : 1 Slope	15"	0.27	0.41	0.54	0.67
	18"	0.31	0.45	0.60	0.75
	24"	0.39	0.59	0.79	1.00
	30"	0.46	0.76	1.04	1.32
	36"	0.55	0.94	1.33	1.71
	42"	0.66	1.15	1.66	2.15
	48"	0.76	1.37	1.96	2.57
	54"	0.87	1.62	2.38	3.14
	60"	0.99	1.90	2.81	3.73
	66"	1.11	2.15	3.21	4.27
	72"	1.24	2.46	3.68	4.90
4 : 1 Slope	15"	0.40	0.61	0.80	1.00
	18"	0.47	0.69	0.91	1.14
	24"	0.60	0.90	1.21	1.52
	30"	0.76	1.19	1.63	2.07
	36"	0.89	1.48	2.05	2.63
	42"	1.05	1.82	2.57	3.34
	48"	1.21	2.15	3.07	4.00
	54"	1.39	2.55	3.72	4.88
	60"	1.59	3.02	4.44	5.86
	66"	1.91	3.66	5.40	7.15
	72"	2.12	4.18	6.24	8.30

	D	ROUND - CMP			
		Single Pipe	Double Pipe	Triple Pipe	Quad. Pipe
2 : 1 Slope	15"	0.24	0.37	0.51	0.64
	18"	0.26	0.43	0.61	0.78
	24"	0.32	0.52	0.72	0.91
	30"	0.38	0.64	0.91	1.18
	36"	0.44	0.78	1.13	1.48
	42"	0.51	0.96	1.41	1.87
	48"	0.57	1.09	1.63	2.15
	54"	0.65	1.32	1.99	2.66
	60"	0.71	1.49	2.28	3.07
4 : 1 Slope	15"	0.31	0.47	0.63	0.79
	18"	0.34	0.53	0.71	0.90
	24"	0.44	0.69	0.92	1.18
	30"	0.53	0.88	1.25	1.60
	36"	0.62	1.07	1.53	2.00
	42"	0.71	1.30	1.92	2.52
	48"	0.80	1.54	2.29	3.02
	54"	0.91	1.83	2.74	3.67
	60"	1.02	2.15	3.27	4.39

	Span	Rise	CMP - ARCH			
			Single Pipe	Double Pipe	Triple Pipe	Quad. Pipe
2 : 1 Slope	17"	13"	0.33	0.49	0.65	0.81
	21"	15"	0.33	0.50	0.67	0.83
	28"	20"	0.37	0.56	0.76	0.95
	35"	24"	0.40	0.62	0.84	1.07
	42"	29"	0.43	0.70	0.98	1.25
	49"	33"	0.49	0.82	1.15	1.48
	57"	38"	0.55	0.95	1.35	1.75
	64"	43"	0.62	1.10	1.57	2.05
	71"	47"	0.69	1.24	1.80	2.35
4 : 1 Slope	17"	13"	0.38	0.56	0.74	0.92
	21"	15"	0.39	0.59	0.80	0.95
	28"	20"	0.43	0.64	0.88	1.10
	35"	24"	0.49	0.77	1.05	1.33
	42"	29"	0.57	0.92	1.27	1.62
	49"	33"	0.65	1.08	1.50	1.93
	57"	38"	0.76	1.30	1.83	2.37
	64"	43"	0.87	1.55	2.18	2.83
	71"	47"	0.95	1.68	2.43	3.17

	Rise	Span	ELLIPTICAL - CONCRETE			
			Single Pipe	Double Pipe	Triple Pipe	Quad. Pipe
2 : 1 Slope	12"	18"	0.19	0.33	0.45	0.57
	14"	23"	0.25	0.40	0.55	0.69
	19"	30"	0.34	0.55	0.75	0.95
	24"	38"	0.43	0.71	1.00	1.28
	29"	45"	0.52	0.90	1.27	1.65
	34"	53"	0.62	1.11	1.60	2.09
	38"	60"	0.70	1.29	1.87	2.46
	43"	68"	0.81	1.54	2.26	2.99
	48"	76"	0.93	1.79	2.66	3.53
	53"	83"	1.04	2.04	3.03	4.02
	58"	91"	1.17	2.33	3.49	4.66
4 : 1 Slope	12"	18"	0.30	0.45	0.61	0.76
	14"	23"	0.36	0.56	0.76	0.95
	19"	30"	0.51	0.79	1.08	1.36
	24"	38"	0.68	1.10	1.53	1.96
	29"	45"	0.86	1.45	2.04	2.63
	34"	53"	1.02	1.81	2.60	3.39
	38"	60"	1.18	2.14	3.10	4.05
	43"	68"	1.38	2.58	3.79	4.99
	48"	76"	1.59	3.05	4.51	5.97
	53"	83"	1.80	3.50	5.19	6.88
	58"	91"	2.04	4.04	6.05	8.05

STATE OF FLORIDA DEPARTMENT OF TRANSPORTATION
ROAD DESIGN

CROSS DRAIN MITERED END SECTION

	Names	Dates
Designed By		
Drawn By	dds	05/86
Checked By	JBW	05/86
F.H.W.A. Approved:		11/07/86

Approved By: State Drainage Engineer

Revision No.	Sheet No.	Index No.
92	5 of 6	272

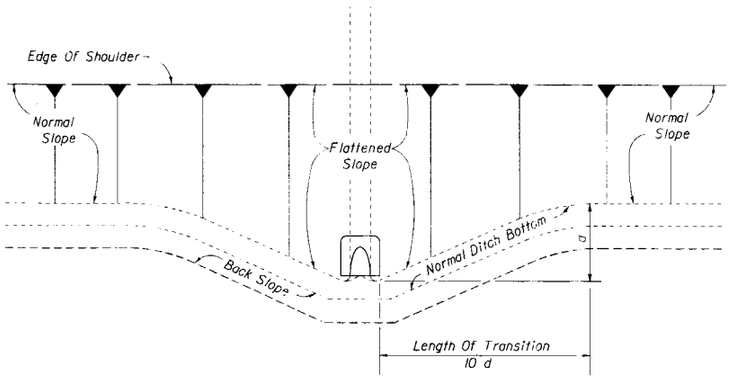

PLAN

NOTE: See General Note 2

SLOPE AND DITCH TRANSITIONS

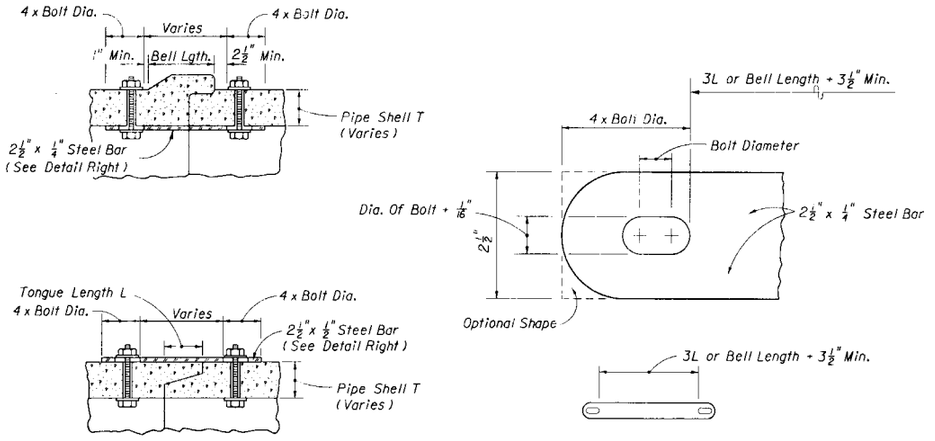

All bars, bolts, nuts and washers are to be galvanized steel.
Bolts diameters shall be ⅜" for 15" to 36" pipe and ⅝" for 42" to 72" pipe.
Two connectors required per joint, located 60° right and left of bottom center of pipe.
Bolt holes in pipe shell are to be drilled.

CONCRETE PIPE CONNECTOR

GENERAL NOTES

1. Mitered end sections for pipe sizes 15", 18" and 24" round or equivalent pipe arch or elliptical pipe are permitted within the clear zone. When the slope intersection permits, the mitered end section may be located with the culvert opening as close as 8' beyond the outside edge of the shoulder.
2. Slope and ditch transitions shall be used when the normal roadway slope must be flattened to place end section outside clear zone. See detail left.
3. The reinforced concrete slab shall be constructed for all sizes of cross drain pipe and cast in place with Class I concrete. Slabs shall be 5½" thick unless 3" thickness called for in plans.
4. Concrete pipe used in the assembly of mitered end sections shall be selective lengths to avoid excessive connections.
5. Corrugated metal pipe galvanizing that is damaged during beveling and perforating for mitered end section shall be repaired.
6. That portion of corrugated metal pipe in direct contact with the concrete slab shall be bituminous coated prior to placing of the concrete.
7. Unless otherwise designated in the plans, concrete pipe mitered end sections may be used with any type of cross drain pipe; corrugated steel pipe mitered end sections may be used with any type of cross drain pipe except aluminum pipe; and, corrugated aluminum mitered end sections may be used with any type of cross drain pipe except steel pipe. When bituminous coated metal pipe is specified for cross drain pipe, mitered end sections shall be constructed with like pipe or concrete pipe.
8. When the mitered end section pipe is dissimilar to the cross drain pipe, a concrete jacket shall be constructed in accordance with Standard Index 280.
9. When existing multiple cross drain pipes are spaced other than the dimensions shown in this detail, or have non-parallel axes, or have non-uniform sections, the mitered end sections will be constructed either separately as single pipe mitered end sections or collectively as multiple pipe end sections as directed by the Engineer; however, mitered end sections will be paid for each based on each independent pipe end.
10. The cost of all pipe(s), fasteners, reinforcing, connectors, anchors, concrete, sealants, jackets, and coupling bands shall be included in the cost for the mitered end section. Sodding shall be paid for separately under the contract unit price of Sodding, SY.
11. Mitered end sections shall be paid for under the contract unit price for Mitered End Section (CD), Each, based on each independent pipe end. Mitered end sections use for detention/retention basin outlets are to be paid for under the contract unit price for Mitered End Section, Each.

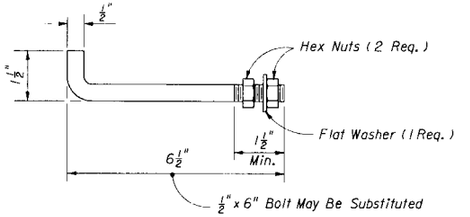

Anchors required for CMP only.

Anchor, washer and nuts to be galvanized steel.

Bend anchor where required to center in concrete slab. Damaged surfaces to be repaired after bending. Anchors are to be spaced a distance equal to four (4) corrugations. Place the anchors in the outside crest of corrugation.

Flat washers to be placed on inside wall of pipe.

Holes in the mitered end pipe are to be drilled or punched; burning not permitted.

ANCHOR DETAIL

STATE OF FLORIDA DEPARTMENT OF TRANSPORTATION
ROAD DESIGN

CROSS DRAIN MITERED END SECTION

SPECIAL DETAILS AND NOTES

	Names	Dates
Designed By	DCB	06/78
Drawn By		
Checked By	KNM	06/78
F.H.W.A. Approved:		07/21/78

Approved By C.G. Bruce
State Drainage Engineer

Revision No.	Sheet No.	Index No.
92	6 of 6	272

DIMENSIONS & QUANTITIES

D	X	A	B	C	E	F	G	M Single Pipe	M Double Pipe	M Triple Pipe	M Quad Pipe	N	GRATE SIZES Standard Weight Pipe	GRATE SIZES Extra Strong Pipe	CONCRETE (Cu. Yds.) Single Pipe	CONCRETE (Cu. Yds.) Double Pipe	CONCRETE (Cu. Yds.) Triple Pipe	CONCRETE (Cu. Yds.) Quad Pipe	SODDING (Sq. Yds.) Single Pipe	SODDING (Sq. Yds.) Double Pipe	SODDING (Sq. Yds.) Triple Pipe	SODDING (Sq. Yds.) Quad Pipe
15"	2'-7"	2.27'	4.09'	6.36'	4.03'	8'	1.22'	4.63'	7.21'	9.79'	12.37'	1.19'			0.76	1.16	1.54	1.94	8	10	11	12
18"	2'-10"	2.36'	5.12'	7.48'	5.03'	9'	1.41'	4.92'	7.75'	10.58'	13.42'	1.21'			0.85	1.28	1.71	2.17	9	10	12	13
24"	3'-5"	2.53'	7.18' △	9.71'	7.03' △	11'	1.73'	5.50'	8.92'	12.33'	15.75'	1.25'			1.02	1.58	2.15	2.75	10	12	13	15
30"	4'-3"	2.70'	9.25'	11.95'	9.03'	13'	2.00'	6.08'	10.33'	14.58'	18.83'	1.29'	$2\frac{1}{2}$"	3"	1.23	1.98	2.74	3.50	12	14	15	17
36"	5'-1"	2.87'	11.31' ◇	14.18'	11.03' ◇	15'	2.24'	6.67'	11.75'	16.83'	21.92'	1.33'	$2\frac{1}{2}$"	3"	1.40	2.38	3.33	4.24	13	15	17	20
42"	6'-0"	3.05'	13.37'	16.42'	13.03'	17'	2.45'	7.25'	13.25'	19.25'	25.25'	1.38'	$2\frac{1}{2}$"	$3\frac{1}{2}$"	1.60	2.83	4.04	5.26	14	17	19	22
48"	6'-9"	3.22'	15.43'	18.65'	15.03'	19'	2.65'	7.83'	14.58'	21.33'	28.08'	1.42'	$2\frac{1}{2}$"	$3\frac{1}{2}$"	1.81	3.26	4.70	6.14	15	18	21	24
54"	7'-8"	3.39'	17.49'	20.88'	17.03'	21'	2.83'	8.42'	16.08'	23.75'	31.42'	1.46'	3"	4"	2.03	3.78	5.54	7.28	17	20	23	27
60"	8'-6"	3.56'	19.55'	23.11'	19.03'	23'	3.00'	9.00'	17.50'	26.00'	34.50'	1.50'	3"	4"	2.28	4.36	6.43	8.50	18	22	25	29

△ 6.42' ◇ 10.40'

△ 6.25' ◇ 10.10' Dimensions permitted to allow use of 8' standard pipe lengths. Dimensions permitted to allow use of 12' standard pipe lengths.

△ ◇ Concrete slab shall be deepened to form bridge across crown of pipe. See section below.

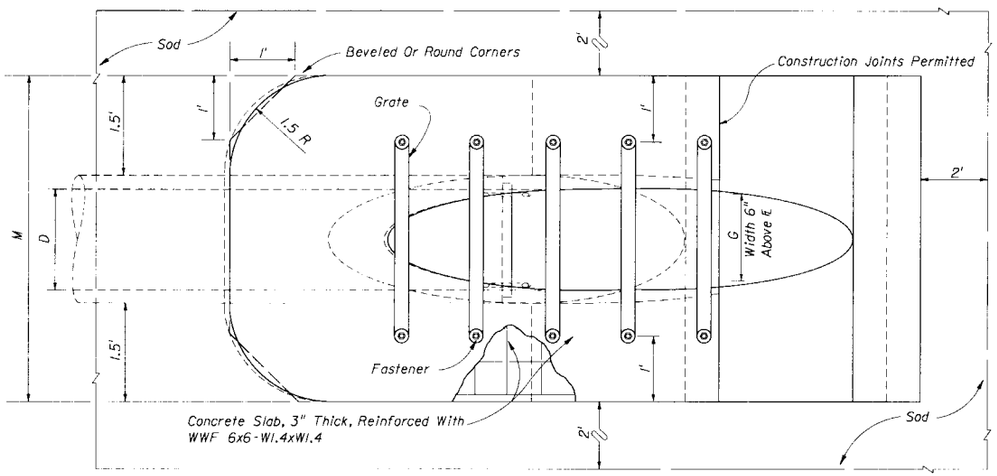

TOP VIEW - SINGLE PIPE

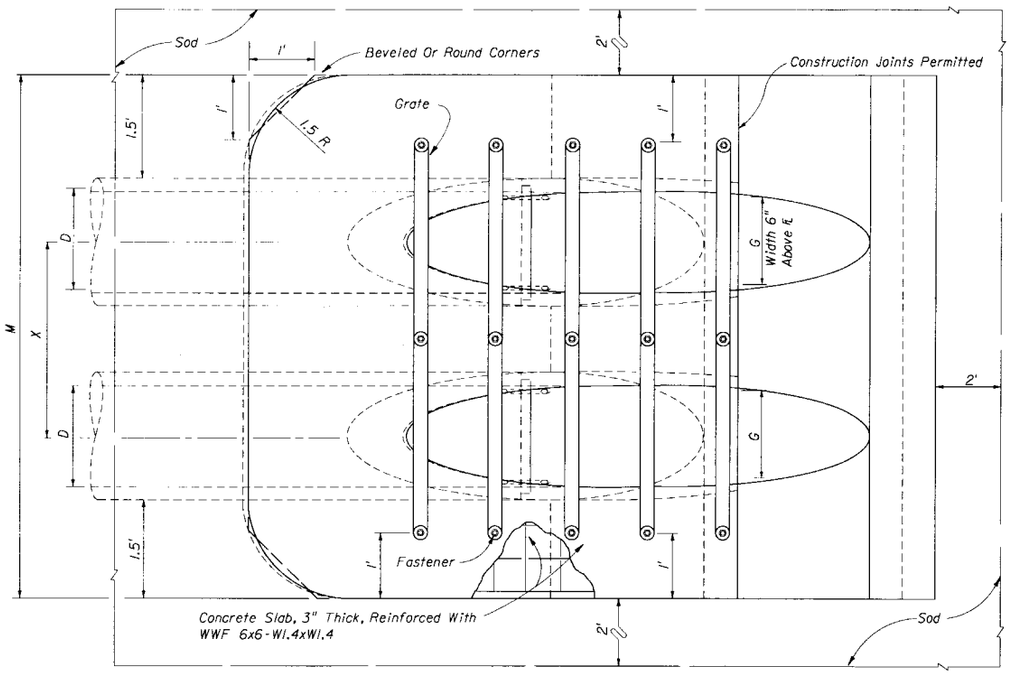

TOP VIEW - MULTIPLE PIPE

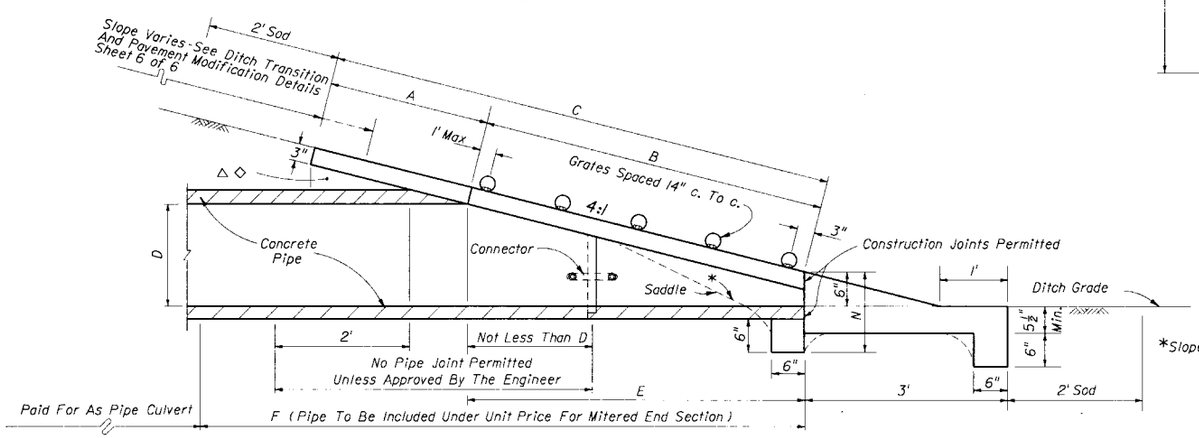

SECTION

*Slope:
To ℄ Pipe For Pipes 18" And Smaller
2:1 For Pipes 24" And Larger.

Note: See Sheets 5 and 6 for details and general notes.

STATE OF FLORIDA DEPARTMENT OF TRANSPORTATION
ROAD DESIGN

SIDE DRAIN MITERED END SECTION

SINGLE AND MULTIPLE ROUND CONCRETE PIPE

	Names	Dates
Designed By	EGR	06/78
Drawn By	HKH	06/78
Checked By	JVG	06/78
F.H.W.A. Approved:		10/21/77

Approved By _____ State Drainage Engineer

Revision No.	Sheet No.	Index No.
92	1 of 6	273

DIMENSIONS & QUANTITIES

D	X	A	B	C	E	F	G	M				N	GRATE SIZES		CONCRETE (Cu. Yds.)				SODDING (Sq. Yds.)			
								Single Pipe	Double Pipe	Triple Pipe	Quad. Pipe		Standard Weight Pipe	Extra Strong Pipe	Single Pipe	Double Pipe	Triple Pipe	Quad. Pipe	Single Pipe	Double Pipe	Triple Pipe	Quad. Pipe
8"	2'-0"	2.5'	0.72'	3.22'	0.7'	4.0'	0.58'	3.75'	5.75'	7.75'	9.75'	1.04'			0.52	0.90	1.22	1.54	7	8	8	9
10"	2'-2"	2.5'	1.34'	3.84'	1.3'	5.0'	0.81'	3.92'	6.08'	8.25'	10.41'	1.04'			0.64	0.99	1.34	1.70	7	8	9	10
12"	2'-4"	2.5'	2.06'	4.56'	2.0'	6.0'	1.00'	4.08'	6.42'	8.75'	11.08'	1.04'			0.68	1.09	1.48	1.88	7	8	10	11
15"	2'-7"	2.5'	3.09'	5.59'	3.0'	7.0'	1.23'	4.33'	6.92'	9.50'	12.08'	1.04'			0.64	1.00	1.35	1.71	8	9	10	11
18"	2'-10"	2.5'	4.12'	6.62'	4.0'	8.0'	1.41'	4.58'	7.42'	10.25'	13.08'	1.04'			0.69	1.09	1.49	1.89	9	10	11	12
24"	3'-5"	2.5'	6.18'	8.68'	6.0'	10.0'	1.73'	5.08'	8.50'	11.92'	15.33'	1.04'			0.83	1.34	1.82	2.34	10	11	13	14
30"	4'-3"	2.5'	8.25'	10.75'	8.0'	12.0'	2.00'	5.58'	9.83'	14.08'	18.33'	1.04'	2½"	3"	0.96	1.63	2.32	2.99	11	13	15	17
36"	5'-1"	2.5'	10.31'	12.81'	10.0'	14.0'	2.24'	6.08'	11.17'	16.25'	21.33'	1.04'	2½"	3"	1.08	1.92	2.77	3.62	12	14	17	19
42"	6'-0"	2.5'	12.37'	14.87'	12.0'	16.0'	2.45'	6.58'	12.58'	18.58'	24.58'	1.04'	2½"	3½"	1.20	2.26	3.34	4.61	13	16	18	21
48"	6'-9"	2.5'	14.43'	16.93'	14.0'	18.0'	2.65'	7.08'	13.83'	20.58'	27.33'	1.04'	2½"	3½"	1.60	3.11	4.62	6.12	14	17	20	23
54"	7'-8"	2.5'	16.49'	18.99'	16.0'	20.0'	2.83'	7.58'	15.25'	22.92'	30.58'	1.04'	3"	4"	1.76	3.56	5.34	7.14	15	19	22	26
60"	8'-6"	2.5'	18.55'	21.05'	18.0'	22.0'	3.00'	8.08'	16.58'	25.08'	33.58'	1.04'	3"	4"	1.94	4.03	6.12	8.20	17	20	24	28

REMARKS

These sizes are restricted to inlet and outlet treatment for water management systems or similar applications.

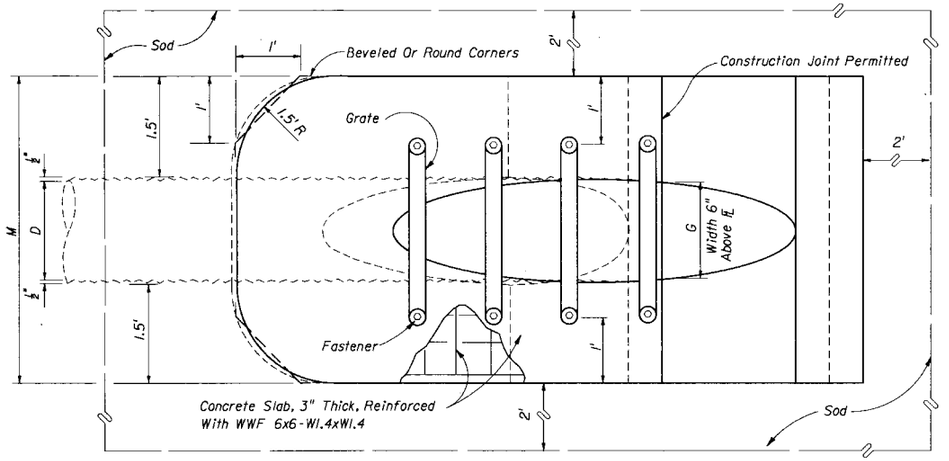

TOP VIEW-SINGLE PIPE

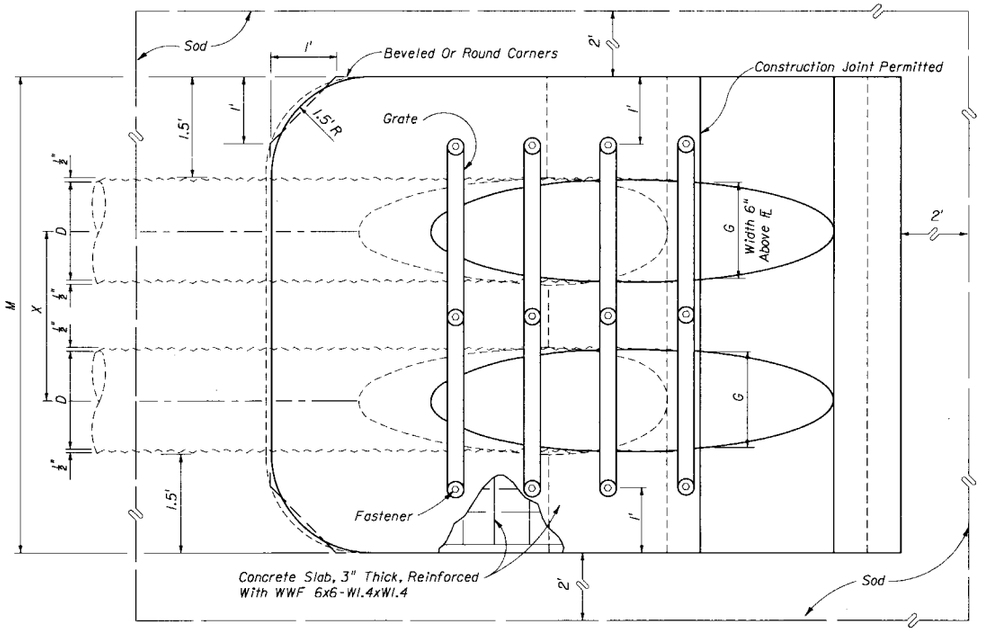

TOP VIEW-MULTIPLE PIPE

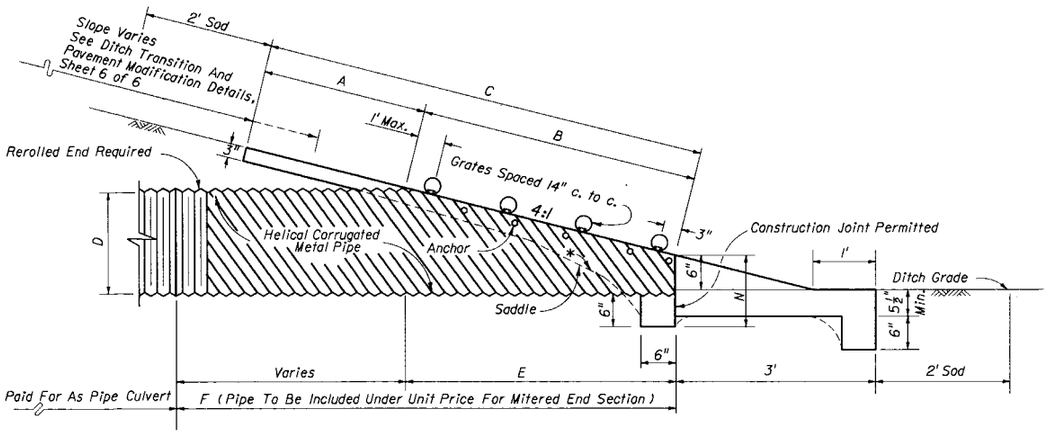

SECTION

NOTE: See Sheets 5 and 6 for details and general notes.

*Slope:

To ℄ Pipe For Pipe 18" And Smaller
2:1 For Pipe 24" And Larger

STATE OF FLORIDA DEPARTMENT OF TRANSPORTATION
ROAD DESIGN

SIDE DRAIN
MITERED END SECTION
SINGLE AND MULTIPLE ROUND CORRUGATED METAL PIPE

	Names	Dates
Designed By	EGR	08/77
Drawn By	HKH	08/77
Checked By	JVG	08/77
F.H.W.A. Approved:		10/21/77

Approved By: State Drainage Engineer

Revision No.	Sheet No.	Index No.
92	2 of 6	273

DIMENSIONS & QUANTITIES

1974 AASHTO Span	1974 AASHTO Rise	X	A	B	C	E	F	G	M Single Pipe	M Double Pipe	M Triple Pipe	M Quad. Pipe	N	GRATE SIZES Standard Weight Pipe	GRATE SIZES Extra Strong Pipe	CONCRETE (Cu. Yds.) Single Pipe	CONCRETE (Cu. Yds.) Double Pipe	CONCRETE (Cu. Yds.) Triple Pipe	CONCRETE (Cu. Yds.) Quad. Pipe	SODDING (Sq. Yds.) Single Pipe	SODDING (Sq. Yds.) Double Pipe	SODDING (Sq. Yds.) Triple Pipe	SODDING (Sq. Yds.) Quad. Pipe
17"	13"	2'-6"	2.5'	2.41'	4.91'	2.33'	7'	1.39'	4.50'	7.00'	9.50'	12.00'	1.04'			0.62	0.95	1.27	1.60	8	9	10	11
21"	15"	2'-10"	2.5'	3.09'	5.59'	3.00'	8'	1.76'	4.83'	7.67'	10.50'	13.33'	1.04'			0.69	1.06	1.44	1.77	8	9	11	12
28"	20"	3'-5"	2.5'	4.81'	7.31'	4.67'	9'	2.22'	5.42'	8.83'	12.25'	15.67'	1.04'			0.81	1.26	1.73	2.19	9	11	12	14
35"	24"	4'-0"	2.5'	6.18'	8.68'	6.00'	11'	2.55'	6.00'	10.00'	14.00'	18.00'	1.04'	2½"	3"	0.94	1.51	2.09	2.66	10	12	14	15
42"	29"	4'-9"	2.5'	7.90'	10.40'	7.67'	12'	2.97'	6.58'	11.33'	16.08'	20.83'	1.04'	2½"	3½"	1.06	1.76	2.46	3.16	11	13	15	17
49"	33"	5'-6"	2.5'	9.28'	11.78'	9.00'	14'	3.34'	7.17'	12.67'	18.17'	23.67'	1.04'	2½"	3½"	1.19	2.02	2.84	3.68	12	14	17	19
57"	38"	6'-4"	2.5'	11.00'	13.50'	10.67'	16'	3.65'	7.83'	14.17'	20.50'	26.83'	1.04'	3"	4"	1.35	2.35	3.35	4.36	13	16	19	22
64"	43"	7'-1"	2.5'	12.71'	15.21'	12.33'	17'	3.89'	8.42'	15.50'	22.58'	29.67'	1.04'	3"	4"	1.50	2.70	3.86	5.03	14	17	20	24
71"	47"	7'-10"	2.5'	14.09'	16.59'	13.67'	19'	4.14'	9.00'	16.83'	24.67'	32.50'	1.04'	3"	4"	1.62	2.94	4.27	5.59	15	18	22	25

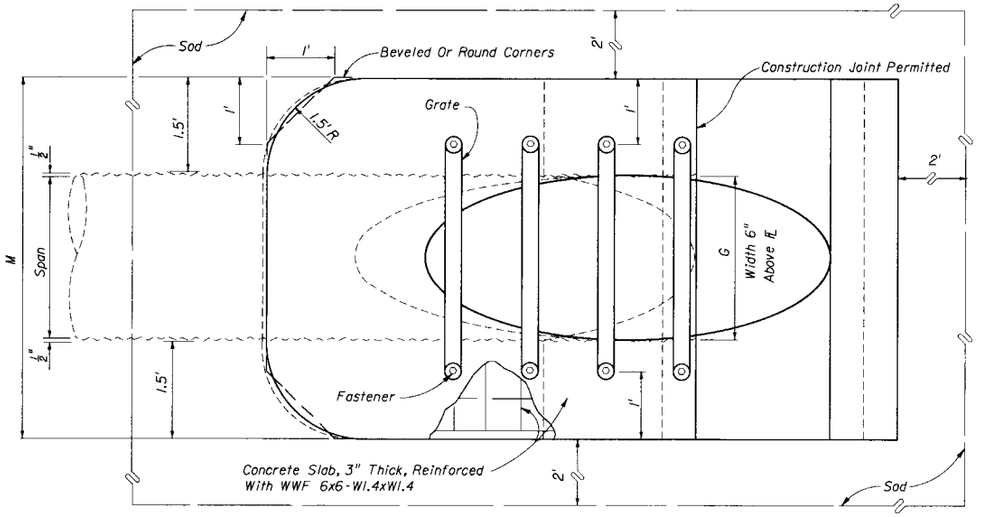

TOP VIEW - SINGLE PIPE

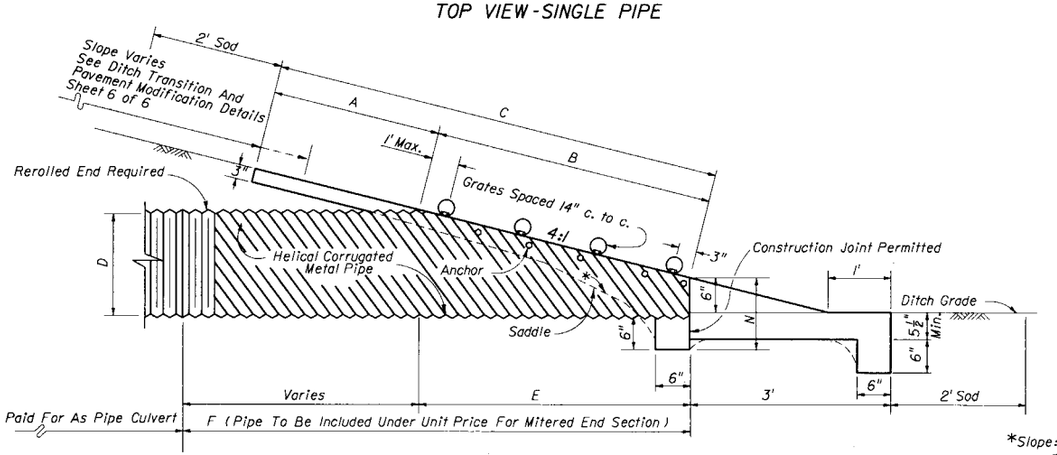

SECTION

*Slope:
To Span Line For Pipe Arch 28" x 20" And Smaller
2:1 For Pipe Arch 35" x 24" And Larger

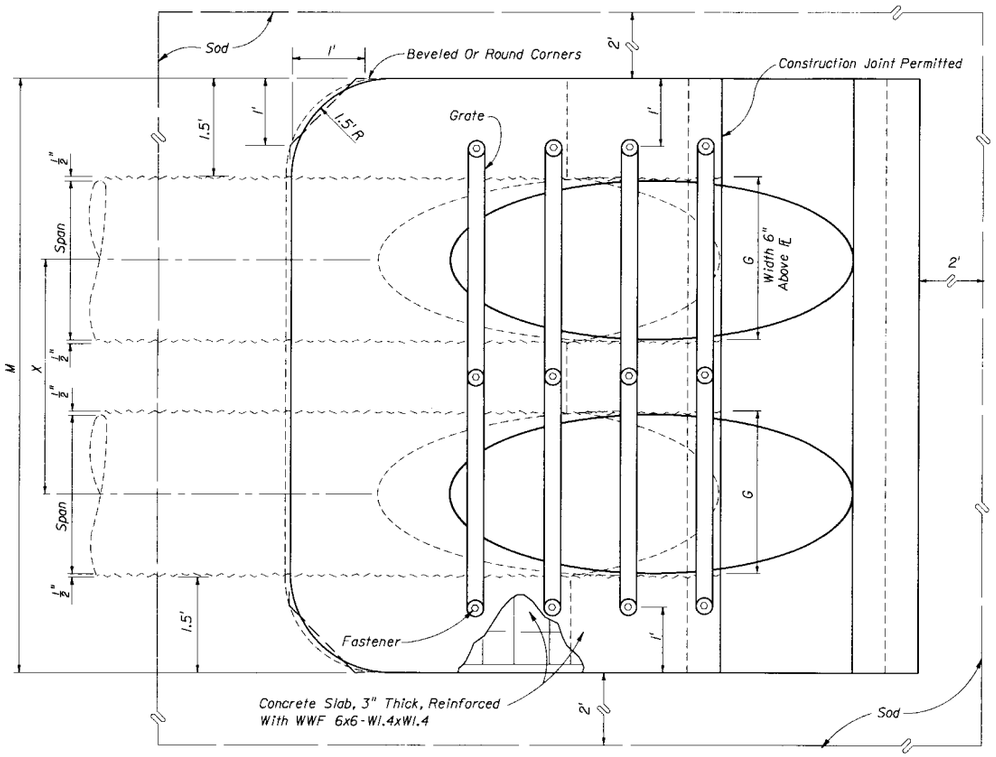

TOP VIEW - MULTIPLE PIPE

NOTE: See Sheets 5 and 6 for details and general notes.

STATE OF FLORIDA DEPARTMENT OF TRANSPORTATION
ROAD DESIGN

SIDE DRAIN MITERED END SECTION

SINGLE AND MULTIPLE CORRUGATED METAL PIPE-ARCH

	Names	Dates
Designed By	EGR	08/77
Drawn By	HKH	08/77
Checked By	JVG	08/77
F.H.W.A. Approved:		10/21/77

Approved By
State Drainage Engineer

Revision No.	Sheet No.	Index No.
92	3 of 6	273

DIMENSIONS & QUANTITIES

Rise R	Span S	X	A	B	C	E	F	G	M				N	GRATE SIZES		CONCRETE (Cu. Yds.)				SODDING (Sq. Yds.)			
									Single Pipe	Double Pipe	Triple Pipe	Quad. Pipe		Standard Weight Pipe	Extra Strong Pipe	Single Pipe	Double Pipe	Triple Pipe	Quad. Pipe	Single Pipe	Double Pipe	Triple Pipe	Quad. Pipe
12"	18"	2'-10"	2.36'	3.06'	5.42'	3.03'	5'	1.50'	4.92'	7.75'	10.58'	13.42'	1.21'			0.68	1.04	1.41	1.77	8	9	11	12
14"	23"	3'-4"	2.44'	3.75'	6.19'	3.70'	6'	1.90'	5.38'	8.71'	12.04'	15.38'	1.23'			0.76	1.19	1.63	2.05	9	10	12	13
19"	30"	4'-0"	2.62'	5.47'	8.09'	5.36'	8'	2.37'	6.04'	10.04'	14.04'	18.04'	1.27'	2½"	3"	0.95	1.52	2.09	2.65	10	12	13	15
24"	38"	5'-0"	2.79'	7.18'	9.97'	7.03'	10'	2.85'	6.79'	11.79'	16.79'	21.79'	1.31'	2½"	3"	1.18	1.95	2.74	3.53	11	13	15	18
29"	45"	5'-11"	3.05'	8.90'	11.95'	8.70'	12'	3.19'	7.50'	13.42'	19.33'	25.25'	1.38'	2½"	3½"	1.41	2.42	3.44	4.45	12	15	18	20
34"	53"	7'-0"	3.22'	10.62'	13.84'	10.36'	13'	3.57'	8.25'	15.25'	22.25'	29.25'	1.42'	3"	3½"	1.63	2.92	4.22	5.52	13	17	20	23
38"	60"	7'-10"	3.39'	11.99'	15.38'	11.70'	15'	3.95'	8.92'	16.75'	24.58'	32.42'	1.46'	3"	4"	1.83	3.36	4.89	6.41	14	18	21	25
43"	68"	8'-11"	3.56'	13.71'	17.27'	13.36'	17'	4.28'	9.67'	18.58'	27.50'	36.42'	1.50'	3"	4"	2.09	3.95	5.80	7.65	16	20	23	27
48"	76"	9'-11"	3.73'	15.43'	19.16'	15.03'	19'	4.59'	10.42'	20.33'	30.25'	40.17'	1.54'	Special	Special	2.37	4.54	6.73	8.92	17	21	26	30
53"	83"	10'-8"	3.91'	17.15'	21.06'	16.70'	20'	4.77'	11.08'	21.75'	32.42'	43.08'	1.58'	Special	Special	2.61	5.09	7.56	10.03	18	23	27	32
58"	91"	11'-8"	4.08'	18.87'	22.95'	18.36'	22'	5.01'	11.83'	23.50'	35.17'	46.83'	1.63'	Special	Special	2.91	5.77	8.64	11.50	19	24	29	35

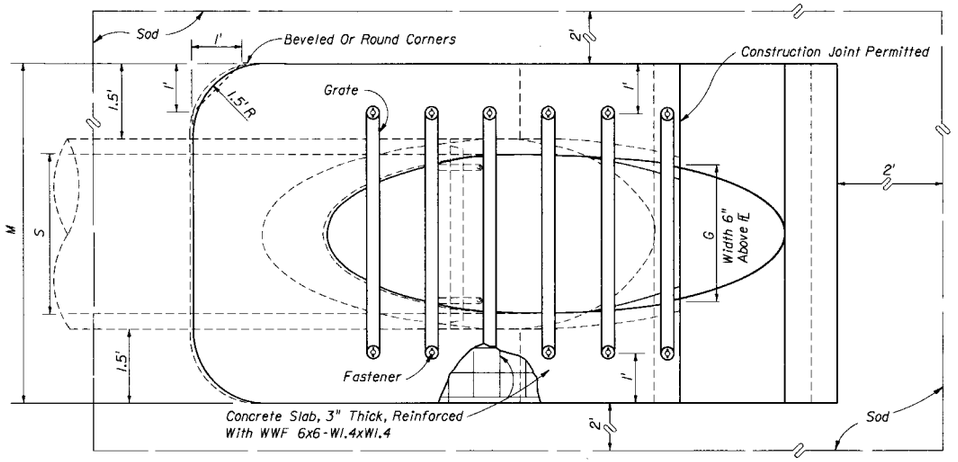

TOP VIEW - SINGLE PIPE

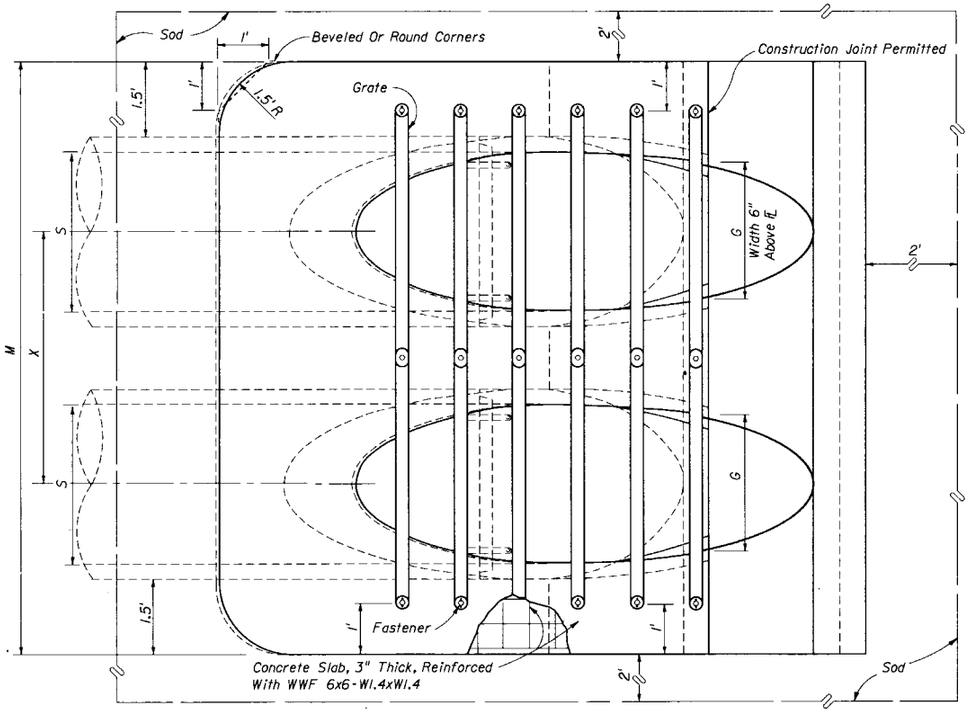

TOP VIEW - MULTIPLE PIPE

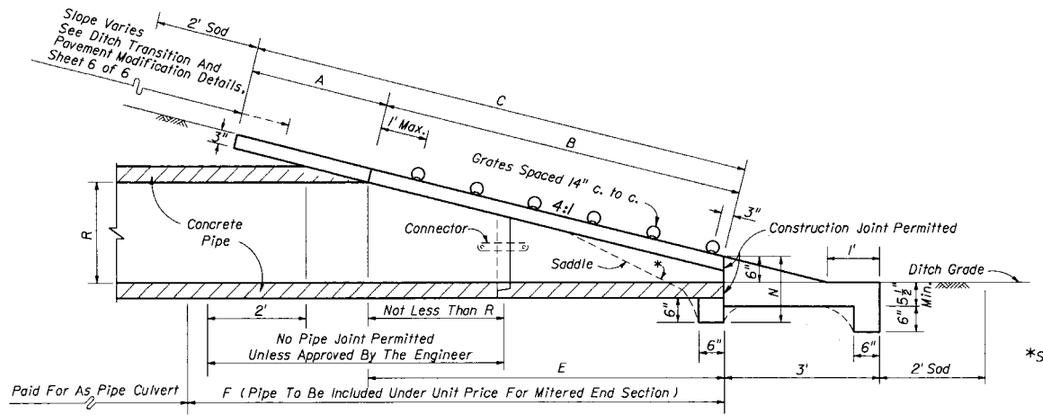

SECTION

NOTE: See Sheets 5 and 6 for details and general notes.

*Slope:
To Major Axis For Pipes 24" x 38" And Smaller.
2:1 For Pipes 29" x 45" And Larger.

STATE OF FLORIDA DEPARTMENT OF TRANSPORTATION
ROAD DESIGN

SIDE DRAIN MITERED END SECTION

SINGLE AND MULTIPLE ELLIPTICAL CONCRETE PIPE

	Names	Dates
Designed By	EGR	06/81
Drawn By	HSD	06/81
Checked By	JVG/JBW	06/81
F.H.W.A. Approved:		10/08/81

Approved By: E.G. Kruse
State Drainage Engineer

Revision No.	Sheet No.	Index No.
92	4 of 6	273

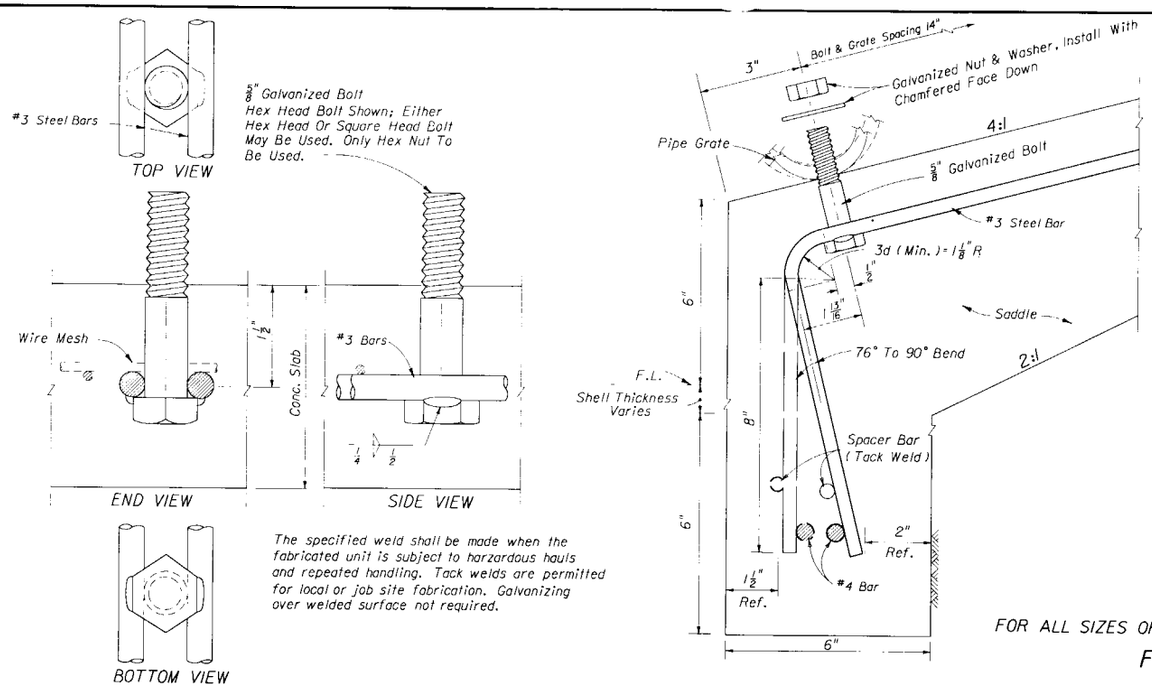

The specified weld shall be made when the fabricated unit is subject to harzardous hauls and repeated handling. Tack welds are permitted for local or job site fabrication. Galvanizing over welded surface not required.

FOR ALL SIZES OF SINGLE AND MULTIPLE DRAIN PIPE

FASTENER UNIT

Drain Size	s	n	L	La
CONCRETE PIPE (ROUND)				
15"	3	4	4'-0"	4'-11"
18"	4	5	5'-2"	6'-1"
24"	6	7	7'-6"	8'-5"
30"	7	8	8'-8"	9'-7"
36"	9	10	11'-0"	11'-11"
42"	11	12	13'-4"	14'-3"
48"	13	14	15'-8"	16'-7"
54"	14	15	16'-10"	17'-9"
60"	16	17	19'-2"	20'-1"
CORRUGATED METAL PIPE (ROUND)				
15"	2	3	2'-10"	3'-9"
18"	3	4	4'-0"	4'-11"
24"	5	6	6'-4"	7'-3"
30"	7	8	8'-8"	9'-7"
36"	8	9	9'-10"	10'-9"
42"	10	11	12'-2"	13'-1"
48"	12	13	14'-6"	15'-5"
54"	14	15	16'-10"	17'-9"
60"	15	16	18'-0"	18'-11"
CORRUGATED METAL PIPE (ARCH) * **				
17" x 13"	1	2	1'-8"	2'-7"
21" x 15"	2	3	2'-10"	3'-9"
28" x 20"	4	5	5'-2"	6'-1"
35" x 24"	5	6	6'-4"	7'-3"
42" x 29"	6	7	7'-6"	8'-5"
49" x 33"	7	8	8'-8"	9'-7"
57" x 38"	9	10	11'-0"	11'-11"
64" x 43"	10	11	12'-2"	13'-1"
71" x 47"	12	13	14'-6"	15'-5"

Drain Size	s	n	L	La
ELLIPTICAL CONCRETE PIPE				
12" x 18"	2	3	2'-10"	3'-9" **
14" x 23"	3	4	4'-0"	4'-11"
19" x 30"	4	5	5'-2"	6'-1"
24" x 38"	5	6	6'-4"	7'-3"
29" x 45"	7	8	8'-8"	9'-7"
34" x 53"	8	9	9'-10"	10'-9"
38" x 60"	10	11	12'-2"	13'-1"
43" x 68"	11	12	13'-4"	14'-3"
48" x 76"	13	14	15'-8"	16'-7"
53" x 83"	14	15	16'-10"	17'-9"
58" x 91"	15	16	18'-0"	18'-11"

Note: ⅝" x 3" bolts are standard for all grate fasteners, except when the contractor elects to use the slotted upper holes for the intermediate fasteners on multiple drain pipe, which will require the following bolt lengths:

Grate Size (Std. & X-Stg.)	Bolt Length
2½"	5½"
3"	6"
3½"	6½"
4"	7"

**To be used only when grates are called for in the plans.
***1974 AASHTO Pipe Arch Sizes.

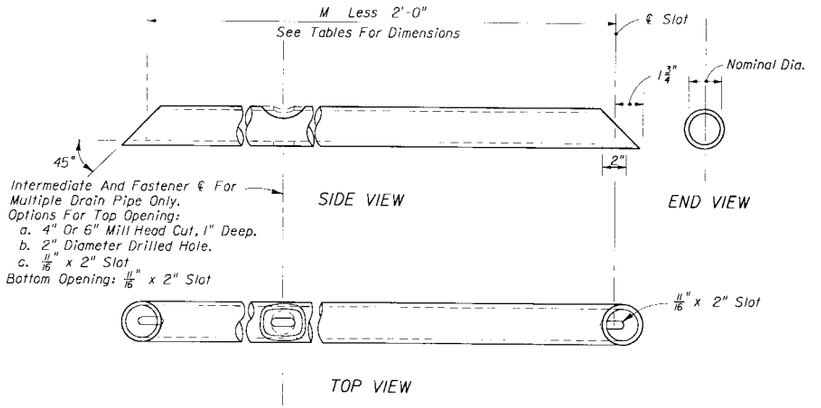

See General Notes, Sheet 6.

GRATE DETAIL

FOR SINGLE & MULTIPLE DRAIN PIPE

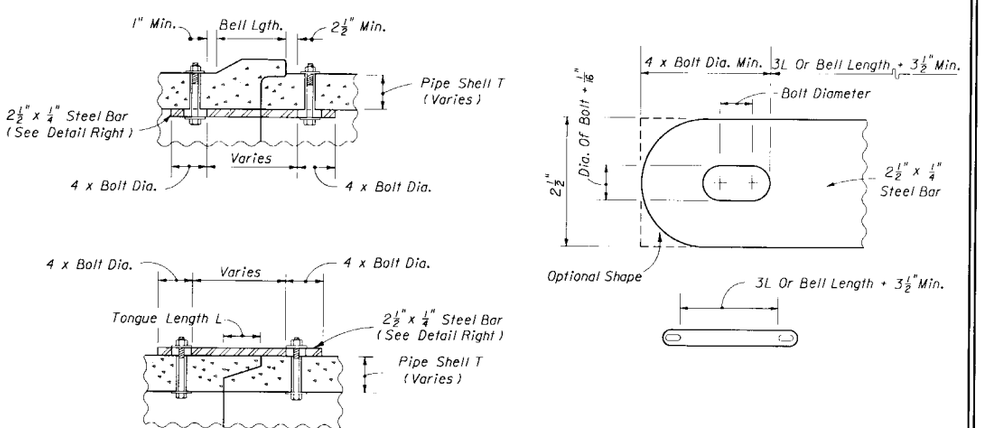

All bars, bolts, nuts and washers are to be galvanized steel.
Bolt diameters shall be ⅜" for 15" to 36" pipe and ⅝" for 42" to 60" pipe.
Two connectors required per joint, located 60° right and left of bottom center of pipe.
Bolt holes in pipe shell are to be drilled.

CONCRETE PIPE CONNECTOR DETAIL

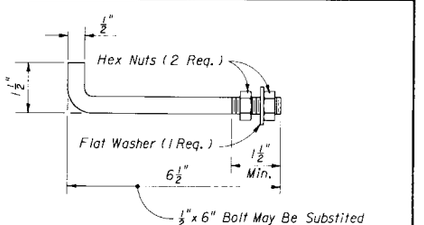

Anchors required for CMP only.
Anchor, washer and nuts to be galvanized steel.
Bend anchor where required to center in concrete slab. Damaged surfaces to be repaired after bending.
Anchors are to be spaced a distance equal to four (4) corrugations. Place the anchors in the outside crest of corrugation.
Flat washer to be placed on inside wall of pipe.

Holes in the mitered end pipe are to be drilled or punched; burning not permitted.

ANCHOR DETAIL

STATE OF FLORIDA DEPARTMENT OF TRANSPORTATION
ROAD DESIGN

SIDE DRAIN MITERED END SECTION

DETAILS FOR CONCRETE & CORRUGATED METAL PIPE

	Names	Dates
Designed By	EGR	08/77
Drawn By	HKH	08/77
Checked By	JVG	08/77
F.H.W.A. Approved:		10/21/77

Approved By: State Drainage Engineer

Revision No.	Sheet No.	Index No.
88	5 of 6	273

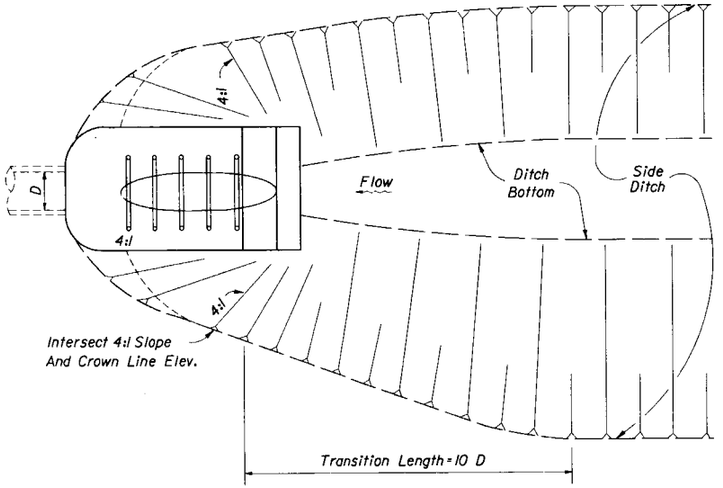

PLAN

DITCH TRANSITION

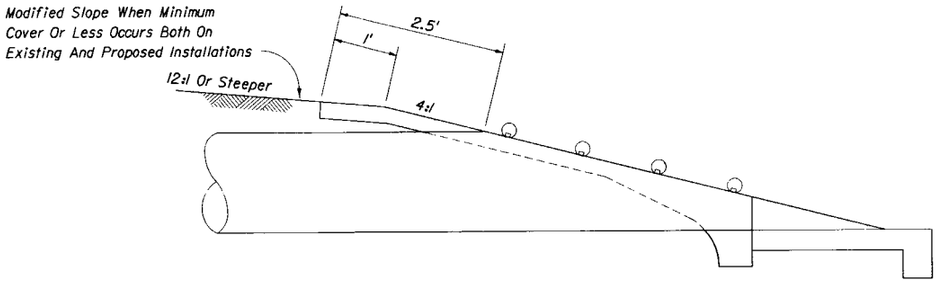

PERMISSIBLE PAVEMENT MODIFICATION

GENERAL NOTES

1. Unless otherwise designated in the plans, concrete pipe mitered end sections may be used with any type of side drain pipe; corrugated steel pipe mitered end sections may be used with any type of side drain pipe except aluminum pipe; and, corrugated aluminum mitered end sections may be used with any type of side drain pipe except steel pipe. When bituminous coated metal pipe is specified for side drain pipe, mitered end sections shall be constructed with like pipe or concrete pipe. When the mitered end section pipe is dissimilar to the side drain pipe, a concrete jacket shall be constructed in accordance with Index No. 280.
2. Concrete pipe used in the assembly of mitered end sections shall be of selective lengths to avoid excessive connections.
3. Corrugated metal pipe galvanizing that is damaged during beveling and perforating for mitered end section shall be repaired.
4. That portion of corrugated metal pipe in direct contact with the concrete slab shall be bituminous coated prior to placing of the concrete.
5. Corrugated polyethylene pipe (CPE) for side drain application of 15", 18" or 24" diameter shall utilize either corrugated metal or concrete mitered end sections. When used in conjunction with corrugated metal mitered end sections, connection shall be by either a formed metal band specifically designated to join CPE pipe and metal pipe or other coupler approved by the State Drainage Engineer. When used in conjunction with a concrete mitered end section, connection shall be by concrete jacket constructed in accordance with Index No. 280.
6. When existing multiple side drain pipes are spaced other than the dimensions shown in this detail, or have non-parallel axes, or have non-uniform sections, the mitered end sections will be constructed either separately as single pipe mitered end sections or collectively as multiple pipe end sections as directed by the Engineer; however, mitered end sections will be paid for each, based on each independent pipe end.
7. In addition to the requirements of Section 430-4, side drain culverts shall comply with the bedding and backfill requirements shown on Index No. 280.
8. The reinforced concrete slab shall be constructed for all sizes of side drain pipe and cast in place with Class I concrete.
9. Round pipe size 30" or greater, pipe-arch size 35" x 24" or greater and elliptical pipe 19" x 30" or greater shall be grated unless excepted in the plans. Smaller sizes of pipe shall be grated only when called for in plans. The lower grate on trailing downstream ends on divided highways shall be omitted.
10. Grates are to be fabricated from steel ASTM A 53, Grade B, pipe. The lower grate on all traffic approach ends shall be Schedule 80 and all remaining grates shall be Schedule 40.
    Grates subject to salt free and corrosive free environment may be fabricated from galvanized pipe, with base metal exposed during fabrication repaired as specified in Section 562, Standard Specifications; or, fabricated from black pipe and hot dipped galvanized after fabrication in accordance with ASTM A 123.
    Grates subject to salt water or highly corrosive environment shall be hot dipped galvanized after fabrication in accordance with ASTM A 123.
11. Ditch transitions shall be used on all grades in excess of 3% as directed by the Engineer.
12. The project engineer shall contact the District Drainage Engineer for possible alternate treatment prior to constructing side drain mitered end sections where a minimum spacing of 30' will not result between the toe points of the mitered end sections.
13. The cost of all pipe (s), grates, fasteners, reinforcing, connectors, anchors, concrete, sealants, jackets and coupling bands shall be included in the cost for the mitered end section. Sodding shall be paid for separately under the contract unit price for Sodding, SY.
14. Mitered end sections shall be paid for under the contract unit price for Mitered End Section (SD), Each, based on each independent pipe end.

DESIGN NOTES

1. In critical hydraulic locations, grates shall not be used until potential debris transport has been evaluated by the drainage engineer and appropiate adjustments made. Ditch grades in excess of 3% or pipe with less than 1.5' of cover and grades in excess of 1% will require such an evaluation (General Note 9).
2. The design engineer shall determine highly corrosive locations and specify in the plans when the grates shall be hot-dipped galvanized after fabrication (General Note 10).
3. The design engineer shall determine and designate in the plans which alternate types of mitered end section will not be permitted. The restriction shall be based on corrosive or structural requirements.

STATE OF FLORIDA DEPARTMENT OF TRANSPORTATION
ROAD DESIGN

SIDE DRAIN MITERED END SECTION
NOTES & INFORMATION

	Names	Dates
Designed By	EGR	08/77
Drawn By	HKH	08/77
Checked By	JVK	08/77
F.H.W.A. Approved:		10/21/77

Approved By E. C. Kruse
State Drainage Engineer

Revision No.	Sheet No.	Index No.
92	6 of 6	273

SCHEDULE OF BELL REINFORCEMENT Classes II, III, IV, V; Wall A, B, C		
Nominal Pipe Diameter	Design Bell Reinforcement	Maximum Reinforcement Under Tolerance
	SQ. IN. PER FOOT	SQ. IN. PER FOOT
15"	0.07	0.010
18"	0.07	0.010
24"	0.09	0.010
30"	0.12	0.010
36"	0.14	0.010
42"	0.16	0.010
48"	0.19	0.011
54"	0.21	0.012
60"	0.23	0.0135
66"	0.26	0.015
72"	0.28	0.0165
78"	0.30	0.018
84"	0.33	0.0195
90"	0.35	0.021
96"	0.37	0.0225
102"	0.40	0.024
108"	0.42	0.0255

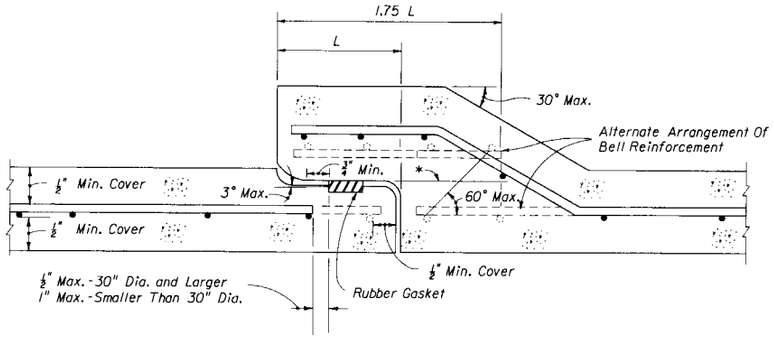

*All circumferential steel located above this line within 1.75 L is defined as bell reinforcement.

DETAIL OF BELL & SPIGOT CONCRETE PIPE JOINT USING ROUND RUBBER GASKET

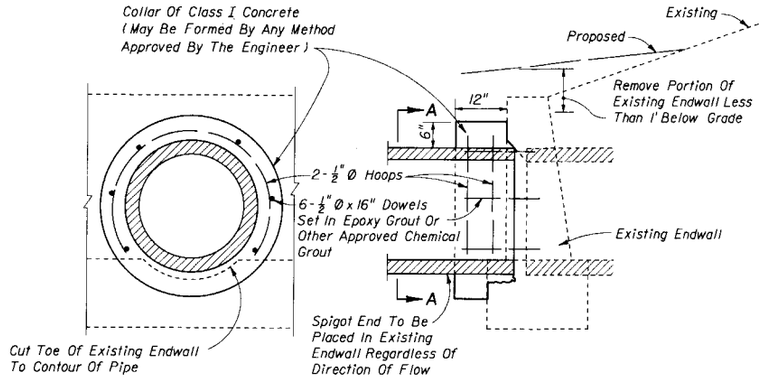

SECTION AA LONGITUDINAL SECTION

Note: Cost for removal and disposal of portions of top and toe of existing endwall and cost of concrete, reinforcing steel and construction of collar to be included in the contract unit price for pipe culvert.

CONCRETE COLLAR FOR EXTENSION OF EXISTING PIPE CULVERTS

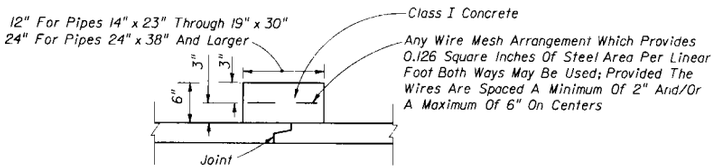

CONCRETE JACKET

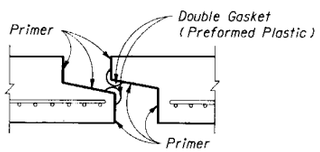

Filter Fabric Jacket Required

PREFORMED PLASTIC JOINT (BEFORE PULL-UP)

Cost of concrete jacket or filter fabric jacket to be included in cost of elliptical concrete pipe culverts.

ELLIPTICAL CONCRETE PIPE JOINTS

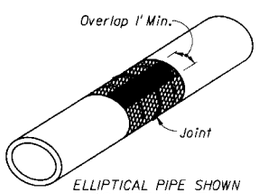

ELLIPTICAL PIPE SHOWN ISOMETRIC VIEW

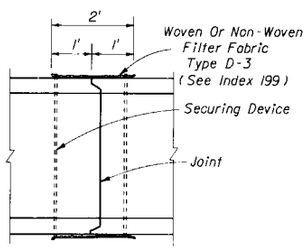

PIPE SECTION

Cost of filter fabric jacket to be included in cost of pipe culverts.

FOR ALL PIPE - CONCRETE PIPE SHOWN

FILTER FABRIC JACKET

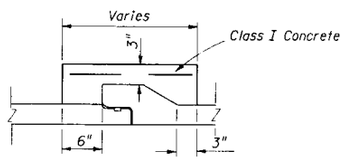

(All Pipe Sizes)

BELL AND SPIGOT

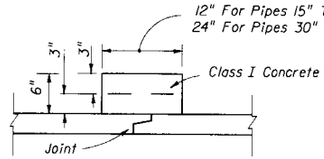

TONGUE & GROOVE

Note: For reinforcement see ellipital pipe concrete jacket.

DISSIMILAR JOINTS

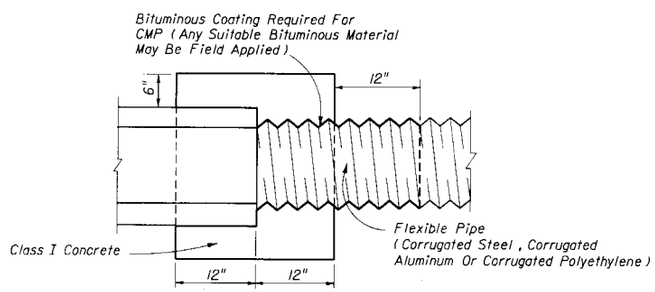

Note: Cost of concrete and bituminous coating to be included in contract unit price for either new pipe or Mitered End Section.
A concrete jacket shall not be used to join:
(a) metal pipe of dissimilar materials
(b) flexible pipe when the minimum cover required in accordance with Index No. 205 cannot be obtained.

DISSIMILAR TYPES

CONCRETE JACKET FOR CONNECTING DISSIMILAR TYPES OF PIPE AND CONCRETE PIPES WITH DISSIMILAR JOINTS

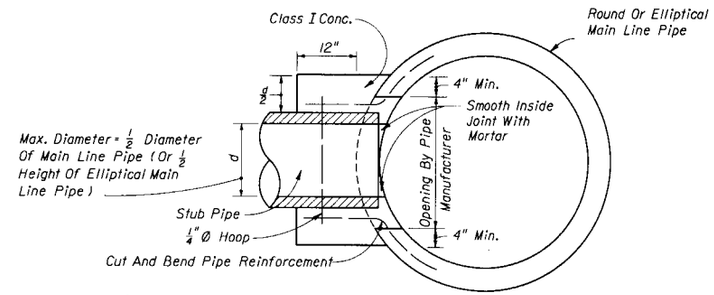

Cost of concrete and steel to be included in contract unit price for pipe culvert.

CONCRETE COLLAR FOR JOINING MAINLINE PIPE AND STUB PIPE

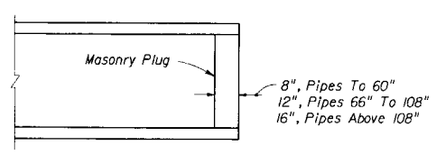

Note: Unless otherwise called for in the plans, the cost of plugging pipes to be included in contract unit price for new pipe.

PIPE PLUG

STATE OF FLORIDA DEPARTMENT OF TRANSPORTATION
ROAD DESIGN

MISCELLANEOUS DRAINAGE DETAILS

	Names	Dates
Designed By		
Drawn By	HSD	01/85
Checked By	JBW/JMG	09/85
F.H.W.A. Approved:		

Approved By
State Drainage Engineer

Revision No.	Sheet No.	Index No.
92	1 of 4	280

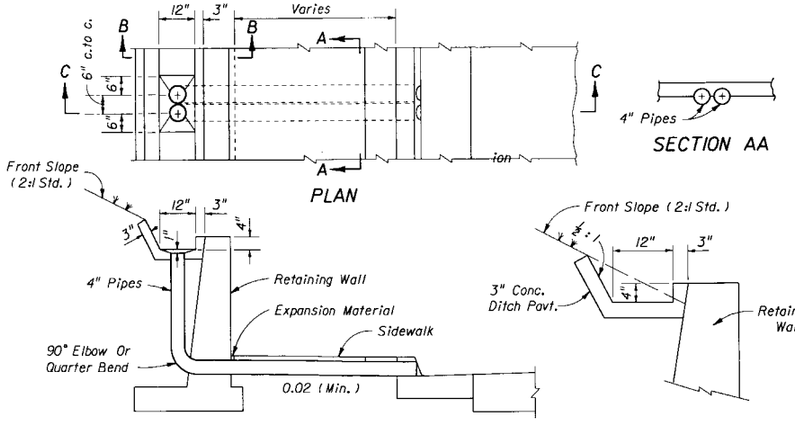

Note: Either cast iron pipe or PVC pipe, Schedule 40, may be used. Pipe to be paid for under the contract unit price for either Cast Iron Pipe For Roof Drains (4"), LF, or Polyvinyl Chloride Pipe Culvert (4"), LF.

CONCRETE GUTTER AND DRAINS AT RETAINING WALLS

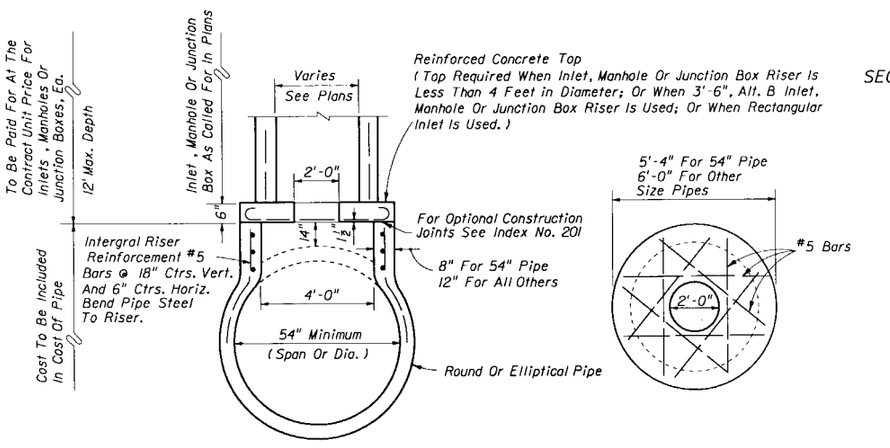

INLETS, MANHOLES OR JUNCTION BOXES ON INTEGRAL PRECAST CONCRETE RISER FOR CONCRETE PIPE

RAILROAD COMPANY	CLEARANCE BELOW BOTTOM OF RAIL (FEET)	STRENGTH ASTM (C76) CLASS
Apalachicola Northern	4.0	IV
Atlanta And St. Andrews Bay	4.0	IV
Florida East Coast	5.5*	IV
Burlington Northern Railroad	S-TRK M/L	
	4.5 5.5	IV
CSX Transportation, Inc.	5.5	IV
Southern Railway System		
Georgia Southern And Florida	5.5	V
Live Oak Perry And South Georgia	5.5	V
St. Johns River Terminal	5.5	V

*Clearance is for casing pipe. All subgrade corrier pipelines and wirelines will be installed within a casing pipe which will extend from Right-of-Way line to Right-of-Way line.

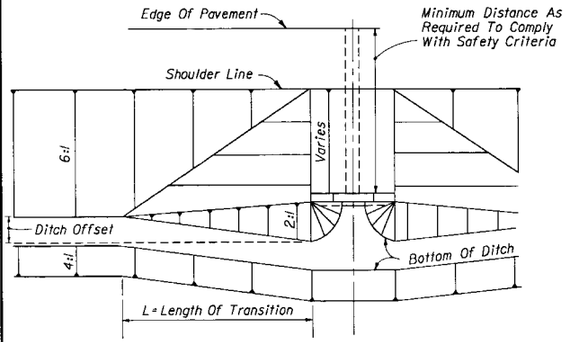

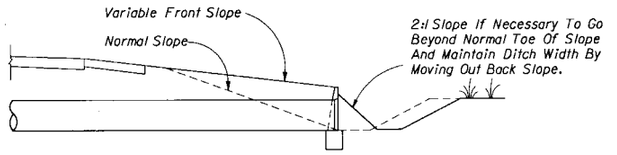

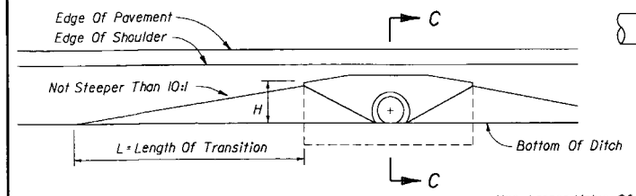

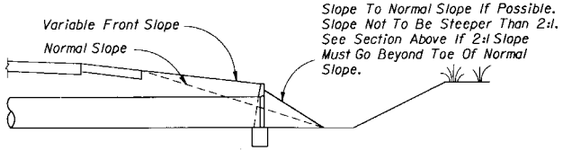

NOTE: Filling or excavation of variable slopes to be done during normal grading operations.

SECTION CC

Use Larger Value Of Either:
1. L = 10 x H (No Maximum)
2. L = 10 x Ditch Offset (Maximum L = 100')

METHOD FOR SETTING LIMITS OF VARIABLE FRONT SLOPES AT DRAINAGE STRUCTURES

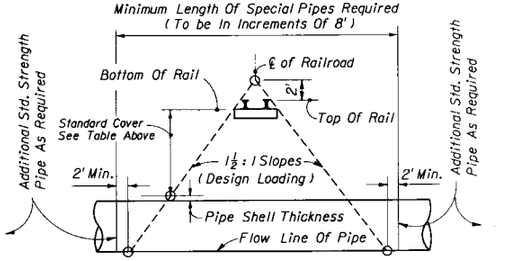

METHOD FOR DETERMINING THE LENGTH OF SPECIAL PIPE REQUIRED UNDER RAILROADS

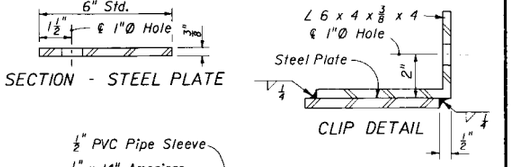

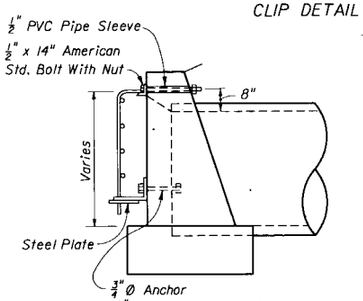

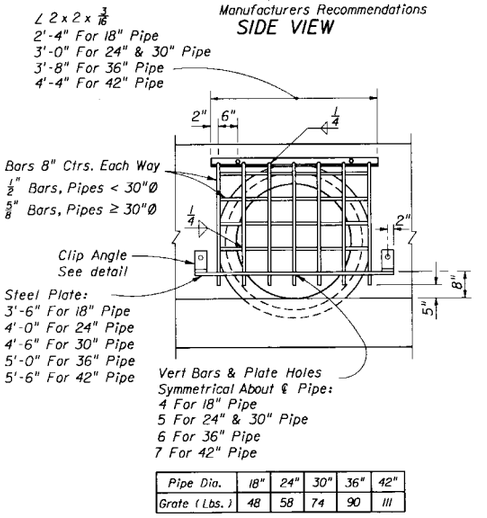

Pipe Dia.	18"	24"	30"	36"	42"
Grate (Lbs.)	48	58	74	90	111

FRONT VIEW

Note: Guards to be constructed only at locations specifically called for in plans. Guard, plate & clips, bolts, nuts and sleeves to be included in the contract unit price for Endwall Grate, LB.

GUARD AT PIPE ENDS

STATE OF FLORIDA DEPARTMENT OF TRANSPORTATION
ROAD DESIGN

MISCELLANEOUS DRAINAGE DETAILS

	Names	Dates
Designed By		
Drawn By		
Checked By		
F.H.W.A. Approved: 11/16/78		

Approved By: Ed. Long
State Drainage Engineer

Revision No.	Sheet No.	Index No.
92	2 of 4	280

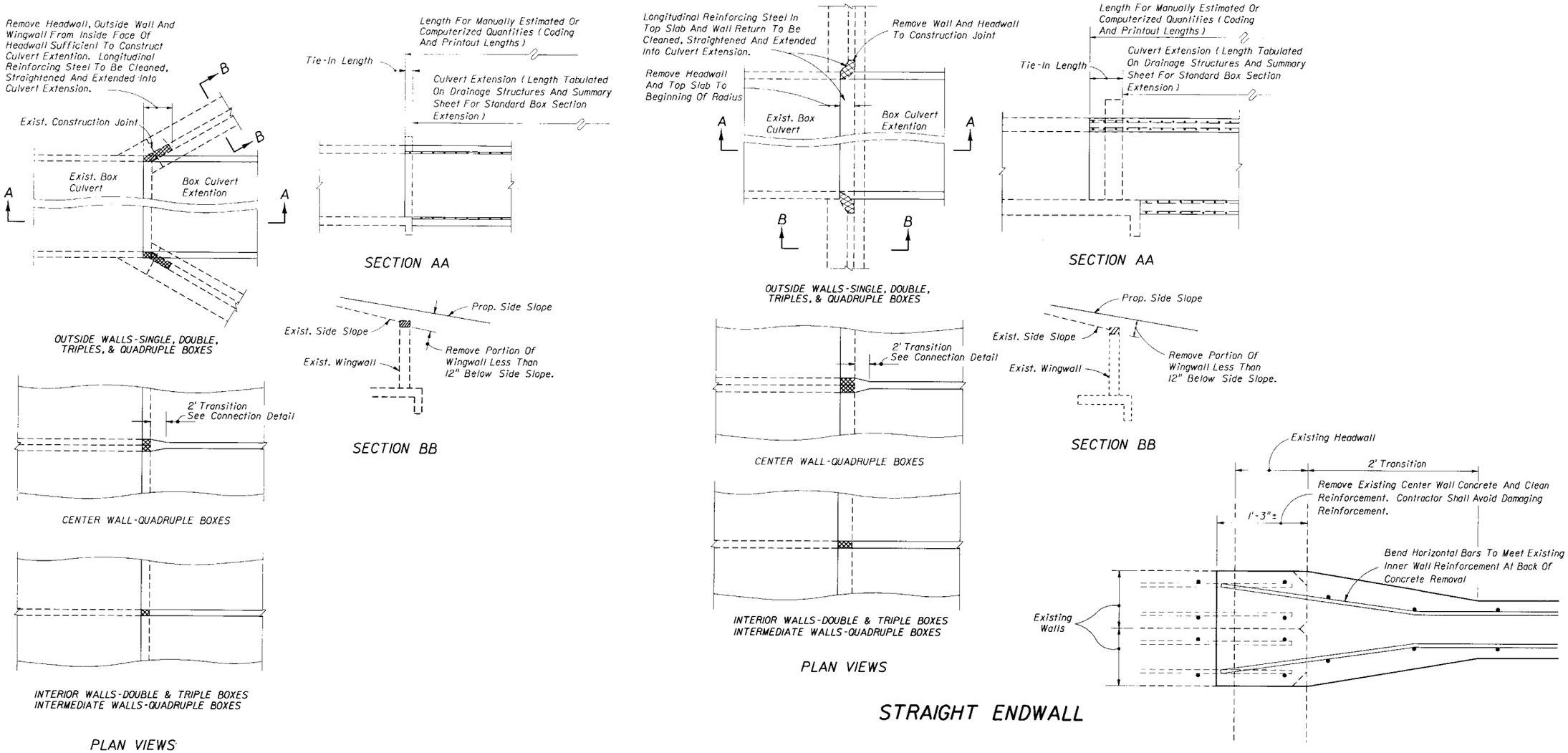

NOTE: The computerized printout for reinforcing steel does not include the additional lengths needed for extension and overlaps or connections to the horizontal reinforcement in the interior walls of double, triple quadruple existing concrete box culverts; the cost for additional reinforcement and the thickened concrete wall in the transitional area shall be included in the costs for constructing the tie-in.

Cost for removal and disposal of material from existing headwalls, wingwalls and the top slab, and cost of cleaning, straightening and extending longitudinal reinforcing steel shall be included in the cost for concrete and steel of the culvert extension.

For concrete box culvert details, see Index No. 290.

CONNECTION DETAILS FOR CONCRETE BOX CULVERT EXTENSIONS

STATE OF FLORIDA DEPARTMENT OF TRANSPORTATION
ROAD DESIGN

MISCELLANEOUS DRAINAGE DETAILS

	Names	Dates	Approved By
Designed By			State Drainage Engineer
Drawn By			
Checked By			
F.H.W.A. Approved:		11/16/78	

Revision No.	Sheet No.	Index No.
90	3 of 4	280

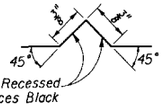

Black Plastic Figures 3" in height as approved by the Engineer may be used in liew of numbers formed by $\frac{3}{4}$" "V" Grooves. "V" Grooves shall be formed by preformed figures.

SECTION THRU RECESSED "V" GROOVE TO FORM INSCRIBED FIGURES

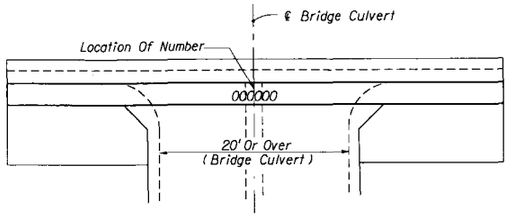

The number is to be placed in the center of the top surface of all bridge culvert headwalls.

For Bridge Number See Plan-Profile Sheet(s).

TOP VIEW OF HEADWALL

BRIDGE CULVERT NUMBER LOCATION

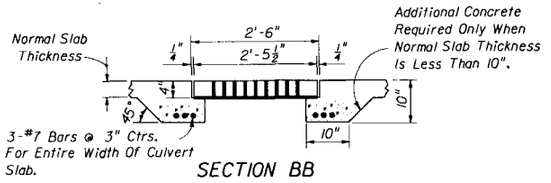

SECTION BB

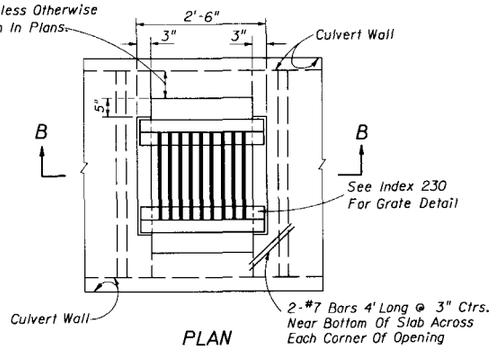

PLAN

INLET TYPE A GRATE

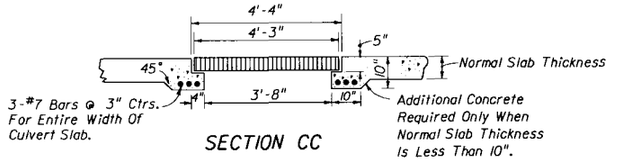

SECTION CC

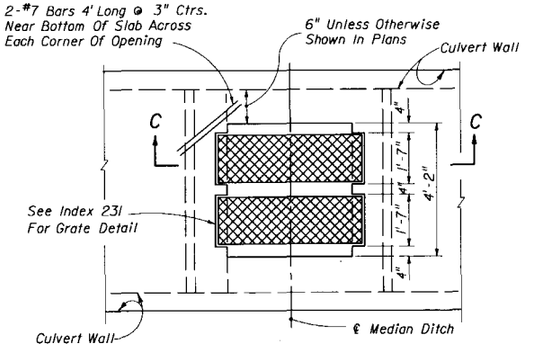

PLAN

INLET TYPE B GRATE

NOTE: 1. Cost of Steel Grating to be included in cost of Box Culvert.
2. All steel shall be $1\frac{1}{4}$" clear.

INLET IN TOP OF BOX CULVERT

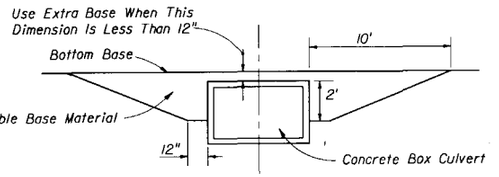

Extra frangible base material to be paid for as equivalent square yard base, except when material is called for on cubic yard or tonnage basis.

FRANGIBLE BASE

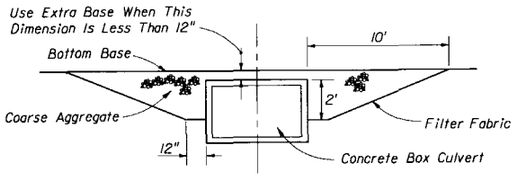

The Contractor shall furnish and install coarse aggregate on filter fabric. The coarse aggregate shall be placed in 6 inch lifts and compacted sufficiently as to be firm and unyielding. The coarse aggregate shall be gravel or stone meeting the requirements of Section 901-2 or 901-3 respectively. The gradation shall meet Section 901-6, Grades 4, 467, 5, 56 or 57 unless restricted in the plans. The filter fabric shall be Type D-3 (See Index 199).

ASPHALTIC CONCRETE BASE

NOTE: Extra base is required when cross box culverts are located on facilities subject to high speed traffic (>45 mph) or high traffic volumes (>1600 ADT) and the cover is within the range specified in the notation above.

EXTRA BASE FOR CROSS BOX CULVERTS UNDER FLEXIBLE PAVEMENT

STATE OF FLORIDA DEPARTMENT OF TRANSPORTATION
ROAD DESIGN

MISCELLANEOUS DRAINAGE DETAILS

	Names	Dates
Designed By		
Drawn By		
Checked By		
F.H.W.A. Approved:		

Approved By: B.G. Kruger
State Drainage Engineer

Revision No.	Sheet No.	Index No.
92	4 of 4	280

FLN:SE&T:DSHC
Mon Dec 02 15:38:01

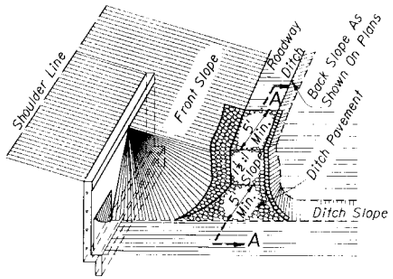

JUNCTION OF ROADWAY DITCH * AND LATERAL DITCH

* Soil cement or misc. asphalt will not be permitted for this type of construction

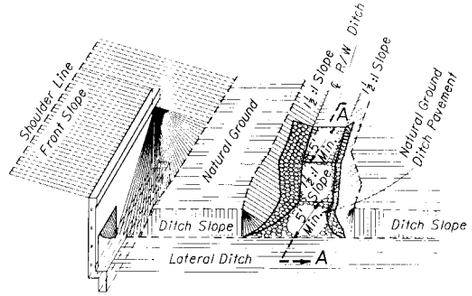

JUNCTION OF R/W DITCH * AND LATERAL DITCH

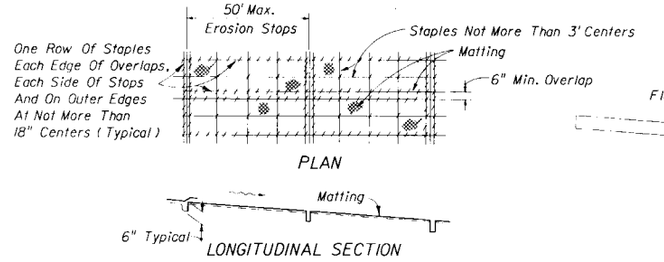

PLAN

LONGITUDINAL SECTION

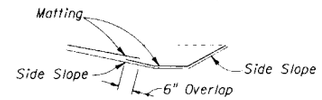

SECTION

MATTING FOR DITCH

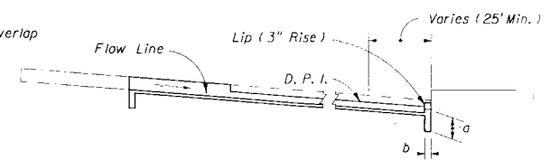

SECTION EE

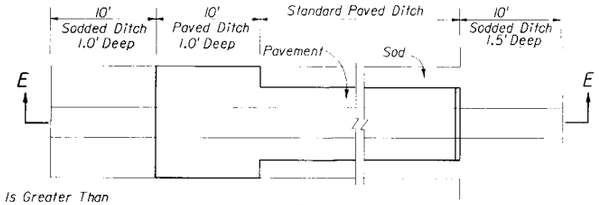

PLAN

PAVED DITCH END TREATMENT

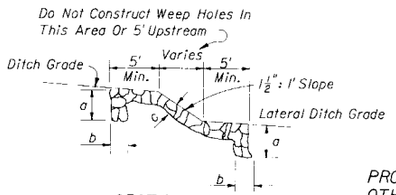

SECTION AA

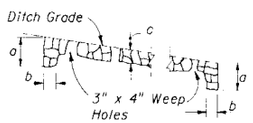

PROFILE OF DITCH PAV'T AT LOCATIONS OTHER THAN JUNCTION WITH LATERAL DITCH

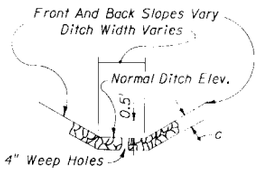

TYPICAL SECTION

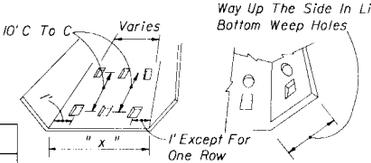

When "X" = 1' To 4' Const. 1 Row (Centered)
"X" = 5' To 7' Const. 2 Rows
"X" = 8' To 12' Const. 3 Rows
"X" = 13' To 17' Const. 4 Rows
"X" = 18' To 22' Const. 5 Rows

DITCH PAVEMENT

Pavement Type	Dimensions a	b	c	Payment Unit	Basis Of Estimate	Filter Fabric Type	Velocity Range	References & Remarks
Concrete	24"	6"	3"	SY	SY	D-6	Low-High	Section 524 of the Standard Specifications.
Miscellaneous Asphalt	24"	12"	4"	TN	0.2 TN/SY	None	Low-Moderate	Section 339.
Soil-Cement	24"	12"	4"	SY	SY	None	Low	Section 170.
Riprap (Sand-Cement)	24"	12"	4"	CY	0.11 CY/SY	D-4	Low-Moderate	Section 530. Grouting of joints required.
Riprap (Concrete Block)	15⅝"	7⅝"	7⅝"	CY	0.22 CY/SY	D-2	Low	Subsection 530.-2.2. Hole side up, closed staggerd joints (no grout), swaled section only.
Riprap (Broken Concrete Or Stone) + Slurry	24"	12"	9"	SY	SY	D-2	Moderate-High	Section 530 (Expanded).

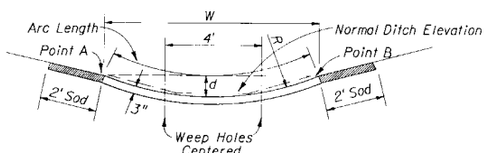

TO REPLACE:

	W	d	R	No. Of Rows Of Weep Holes	Arc Length
6' Median Swale 6:1 Front Slopes; 4:1 Back Slope	6'	.24'	19'	0	6.0
5' B.W. Ditch	10'	.67'	19'	2	10.1
4' B.W. Ditch	9'	.54'	19'	2	9.1
4:1 Front Slopes & Back Slope					
5' B.W. Ditch	9'	.74'	14'	2	9.2
4' B.W. Ditch	8'	.58'	14'	1 (in center)	8.1

ALTERNATE DITCH PAVEMENT

For use only where side slopes are 4:1 or flatter. Point "A" and "B" are to be the same elevation and should be used to locate the paved section.

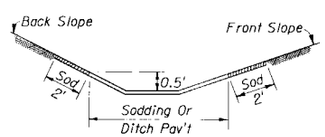

ROADWAY SIDE DITCH

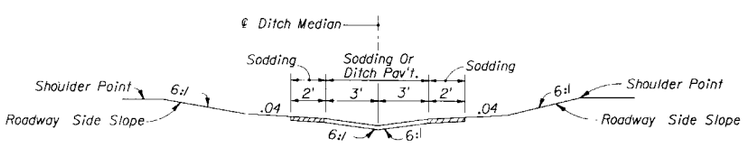

SWALED MEDIAN (No Weep Holes)

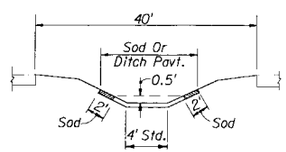

40' MEDIAN

Notes: All weep holes to be 3" x 4" rectangle or 4" or 5" dia. circular hole. ½ cu. ft. (12" x 12" x 6") of No. 6 aggregate to be placed under each hole. 1 sq. ft. of galvanized wire mesh (¼" openings) shall be placed between the aggregate and the concrete. Cost of holes, aggregate and wire mesh to be included in the cost of ditch pavement.

WEEP HOLE ARRANGEMENT

GENERAL NOTES

1. Type of ditch pavement shall be as shown on plans.
2. In concrete ditch pavement, contraction joints are to be spaced at 25' maximum intervals, or as directed by the Engineer. Contraction joints may be either formed (construction joint) or tooled. No open joints will be permitted.

   Expansion joints with ½" preformed joint filler shall be constructed at all inlets, endwalls, and at intervals of not more than 200'.
3. Lip at end of ditch pavement shall normally be located downstream of D.P.I. or on flatter grades where there is a decrease in ditch velocity.
4. Toewalls are to be used with all ditch paving. A toewall is not required adjacent to drainage structures.
5. When directed by the Engineer, weep hole spacing may be reduced to 5' minimum.
6. For junction of R/W ditch spillway and lateral ditch, sides of paving to be 1' high minimum.
7. For ditch pavements requiring filter fabric the fabric shall be placed directly beneath the pavement for the entire length and width of the pavement. When weep holes with aggregate are used the filter fabric shall be placed below the aggregate to form a mat continuous with or underlapping the pavement fabric. (See Index 199 for fabric type and application).
8. Cost of plastic filter fabric to be included in the contract unit price. for ditch pavement.

STATE OF FLORIDA DEPARTMENT OF TRANSPORTATION
ROAD DESIGN

DITCH PAVEMENT & SODDING

	Names	Dates
Designed By		
Drawn By		
Checked By		
F.H.W.A. Approved:		05/01/75

Approved By: C. L. Price
State Drainage Engineer

Revision No.	Sheet No.	Index No.
92	1 of 2	281

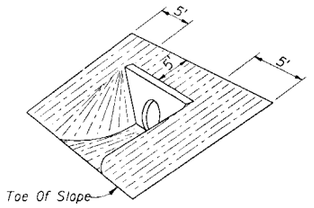

Note: Sodding quantities for each endwall to be determined by the designer from this detail.

(EXCEPT INDEX 250)

STRAIGHT ENDWALL

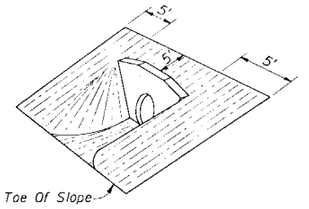

STRAIGHT ENDWALL
INDEX 250

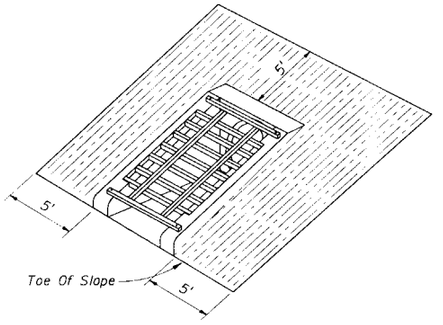

U - TYPE ENDWALL
INDEX 261

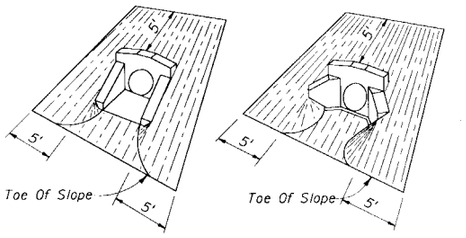

U - TYPE WINGS 45° WINGS

WINGED ENDWALLS
INDEX 266

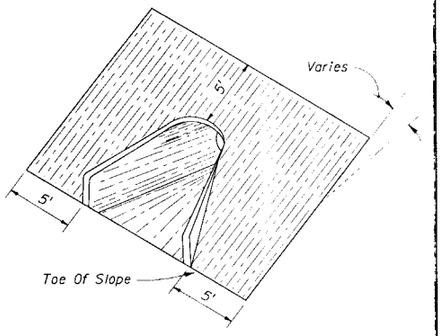

FLARED END SECTION
INDEX 270

SODDING QUANTITIES (S. Y.)

PIPE SIZE	INDEX 250												INDEX 261				INDEX 266								INDEX 270
	SLOPE												SLOPE				SLOPE								ALL SLOPES
	2 : 1			3 : 1			4 : 1			6 : 1			2 : 1	3 : 1	4 : 1	6 : 1	2 : 1		3 : 1		4 : 1		6 : 1		
	PIPES												PIPES				PIPES								PIPES
	1	2	3	1	2	3	1	2	3	1	2	3	1	1	1	1	1		1		1		1		1
12"																	14		15		18		22		10
15"	19	21	24	22	26	29	26	30	33	34	38	43	13 (15)	16	17	23	15		17		20		25		11
18"	21	24	27	25	29	33	30	34	38	39	44	50	14 (16)	17	19	25	16		18		22		28		11
21"																									12
24"	26	30	34	32	37	42	38	44	50	50	58	66	15 (17)	19	21	28	19		22		26		34		14
27"																									15
30"	31	37	42	39	46	53	46	55	63	62	74	85	17 (18)	21	24	32	21		25		30		40		16
36"	37	44	52	46	56	65	56	67	79	76	91	107					24		29		35		47		18
42"	43	53	62	55	67	79	67	82	96	91	111	132					27		32		39		54		19
48"	50	62	73	64	79	93	78	97	115	108	133	158					30		36		44		61		21
54"	57	71	85	74	92	110	91	113	136	126	157	188													21
60"																									22
66"																									25
72"																									26
													( ) Endwall With Baffles												

STATE OF FLORIDA DEPARTMENT OF TRANSPORTATION
ROAD DESIGN

DITCH PAVEMENT & SODDING

	Names	Dates
Designed By		
Drawn By	HSD	08/85
Checked By	JBW/JMG	09/85
F.H.W.A. Approved:		07/07/75

Approved By
State Drainage Engineer

Revision No.	Sheet No.	Index No.
86	2 of 2	281

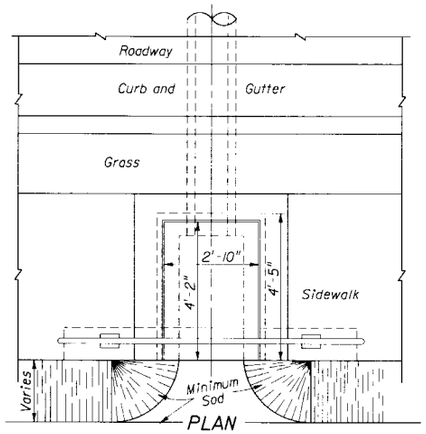

PLAN

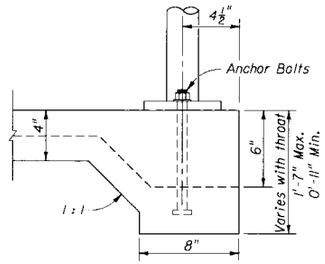

SECTION BB

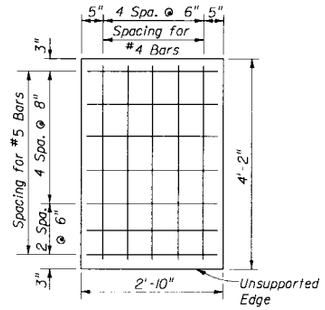

SLAB REINFORCEMENT

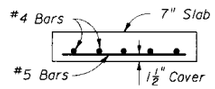

SLAB SECTION

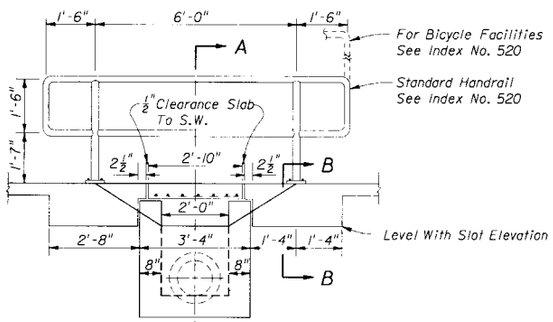

FRONT ELEVATION

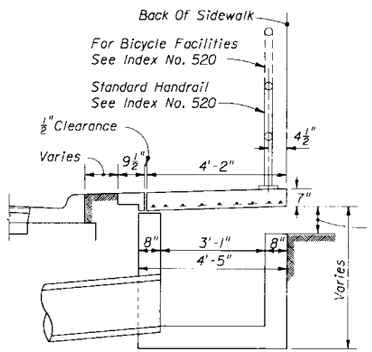

1' Max., 4" Min.
Grading And Sodding Back Of Sidewalk As Directed By The Engineer

SECTION AA

Notes: 1. Dimensions shown are for a 5' sidewalk with utility strip.
2. For additional details see Index No. 232.
3. Inlet to be paid for under the contract unit price for inlets (Ditch Bottom) (Type C Modified), Ea.

INLET TYPE C (MODIFIED)

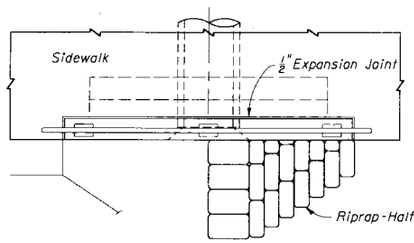

PLAN

Pipe Size	C	Conc.-CY	Riprap-CY (Sand-Cement)
15"	4'-9"	2.27	1.1
18"	5'-3"	2.59	1.3
24"	6'-3"	3.26	1.8

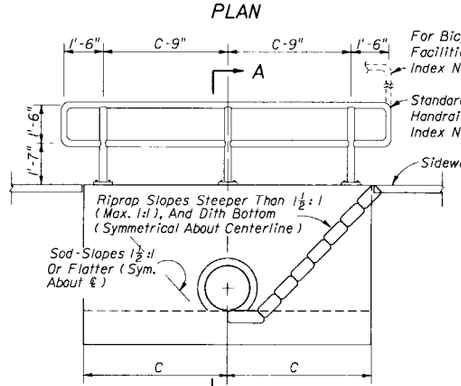

FRONT ELEVATION

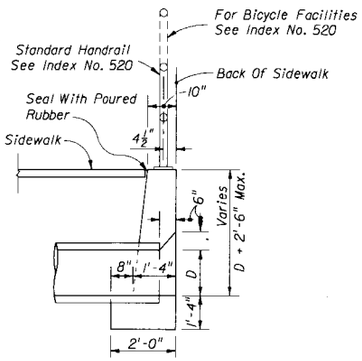

SECTION AA

Notes: 1. Maximum pipe size shall be 24" diameter.
2. Grading back of sidewalk varies and shall be done as directed by the Engineer.
3. Concrete quantities shown are for maximum wall heights, and shall be basis for estimate and payment.
4. Riprap quantities shown are for estimate purposes only. Cost of riprap to be included in cost of the endwall.
5. Endwalls to be paid for under the contract unit price for Class I Concrete (Endwalls), CY. Handrail to be paid for under the contract unit price for Pipe Handrail, LF..

SPECIAL CONCRETE ENDWALL

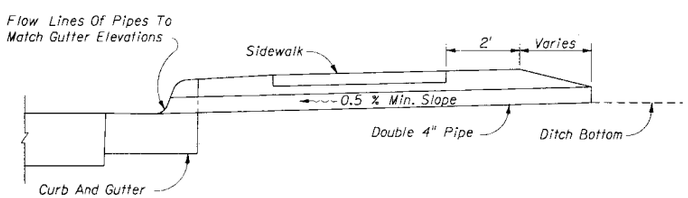

Notes: 1. To be constructed at locations as directed by the Engineer.
2. Either cast iron pipe or PVC rigid conduit, U.L. listed for direct sunlight exposure. Schedule 40, may be used.
3. Pipe to be paid for under the contract unit price for either Cast Iron Soil Pipe (Standard) (4"), LF or Polyvinyl Chloride Pipe Culvert (4"), LF.

SHALLOW DITCHES

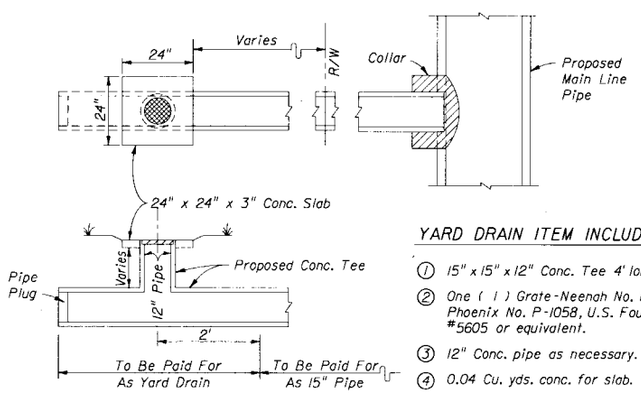

YARD DRAIN ITEM INCLUDES :

(1) 15" x 15" x 12" Conc. Tee 4' long.
(2) One (1) Grate-Neenah No. R-4030, Phoenix No. P-1058, U.S. Foundry #5605 or equivalent.
(3) 12" Conc. pipe as necessary.
(4) 0.04 Cu. yds. conc. for slab.

Notes: 1. Yard drains to be located outside the R/W. Drainage area should not exceed 750 S.F. (grate flow 0.1 cfs).
2. Yard drains may be constructed at the option of the property owner as shown on the plans.
3. Cost of plugs and collars to be included in the cost for 15" concrete pipe. For collar and plug details see Index No. 280.
4. Yard drains to be paid for under the contract unit price for Yard Drains, Each.

YARD DRAINS

STATE OF FLORIDA DEPARTMENT OF TRANSPORTATION
ROAD DESIGN

BACK OF SIDEWALK DRAINAGE

	Names	Dates
Designed By		
Drawn By		
Checked By		

Approved By: [signature]
State Drainage Engineer

F.H.W.A. Approved: 05/01/75

Revision No.	Sheet No.	Index No.
92	1 of 1	282

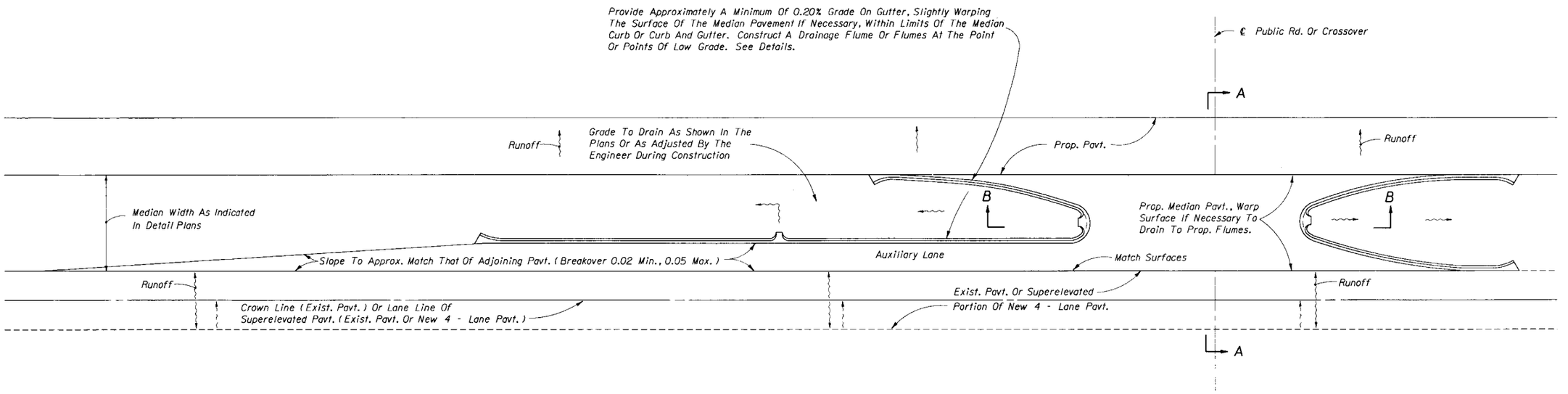

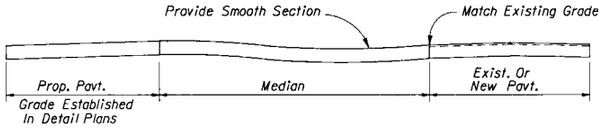

SECTION AA



SECTION BB

(May Drain From Any Point Designated In the Plans Or As Adjusted By The Engineer During Construction)

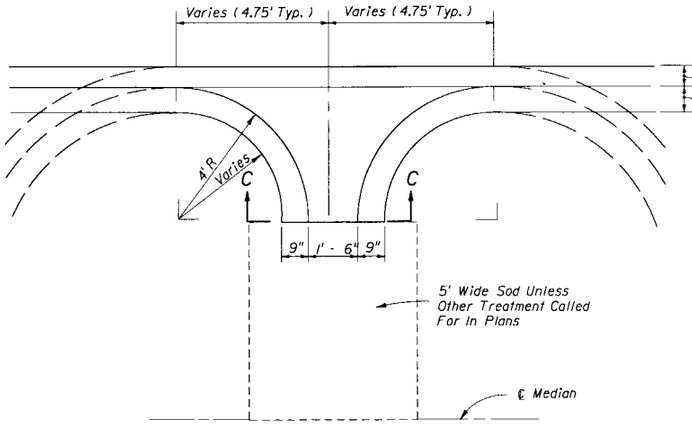

FLUME DETAIL

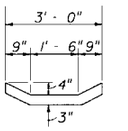

SECTION CC

GENERAL NOTES

1. These details are to apply to projects which provide for the conversion of 2 - lane sections to 4 - lane divided highway sections and for superelevated sections of new 4 - lane divided highways. Layout above is illustration only. Cost of flumes to be included in the contract price for Curb or Curb and Gutter. Sod to be paid for under the contract unit price for Sodding, SY.

2. Flumes to be located in low point of noses and at other points as designated in the plans. The locations may be adjusted by the Engineer during construction.

STATE OF FLORIDA DEPARTMENT OF TRANSPORTATION
ROAD DESIGN

MEDIAN OPENING FLUME

	Names	Dates
Designed By	CHR	03/59
Drawn By		
Checked By	CDD	03/59
F.H.W.A. Approved:		03/20/75

Approved By: [signature]
State Design Engineer, Roadways

Revision No.	Sheet No.	Index No.
83	1 of 1	283

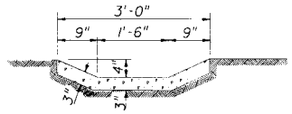

SECTION AA

Note: Set reflector plates on right hand curb at bridge ends as shown. Plates to be furnished by D.O.T. and installed by the contractor. Cost of installing plates to be included in the contract unit price for concrete ditch pavement (3" thick).

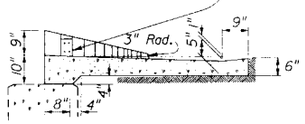

SECTION BB

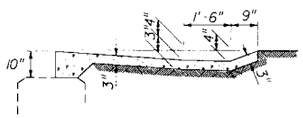

SECTION CC

Note: Spillway to terminate as directed by the engineer.

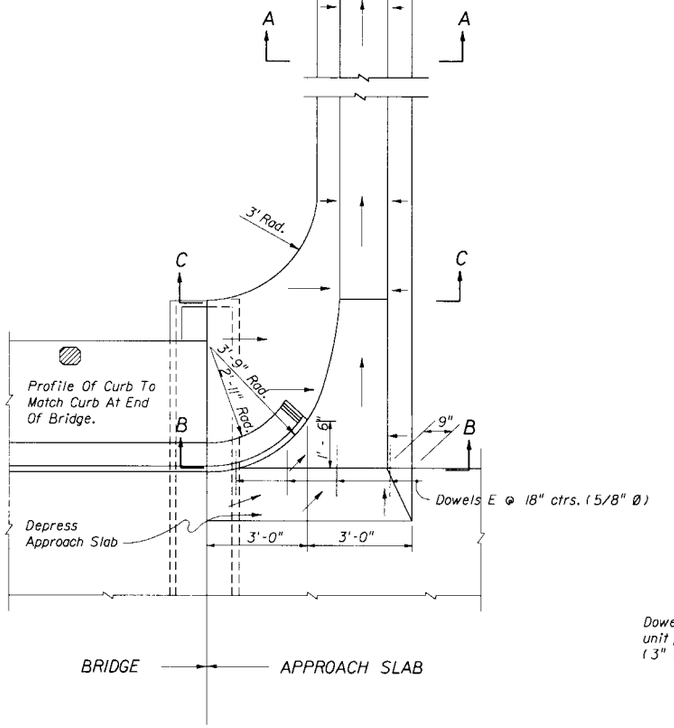

PLAN

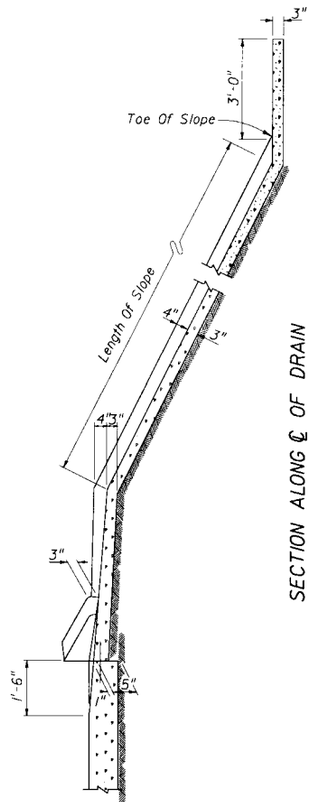

SECTION ALONG ℄ OF DRAIN

Dowels to be included in the contract unit price for concrete ditch pavement (3" thick).

GENERAL NOTES

1. This detail not recommended for grades greater than 0.5% or discharges exceeding 0.5 cfs.

ESTIMATED QUANTITIES		
ITEM	UNIT	QUANTITY
Concrete Ditch Pavement (3" Thick)	Sq. yd.	* 10.87

* Quantity shown above includes pavement for 10 ft. "Length of Slope". For each additional foot of slope length add 0.349 sq. yds.

STATE OF FLORIDA DEPARTMENT OF TRANSPORTATION
ROAD DESIGN

CONCRETE SPILLWAYS
BRIDGE END SPILLWAY

	Names	Dates
Designed By	CES	12/51
Drawn By		
Checked By	HLF	12/51
F.H.W.A. Approved:		03/20/15

Approved By: B.G. Kruger
State Drainage Engineer

Revision No.	Sheet No.	Index No.
88	1 of 2	284

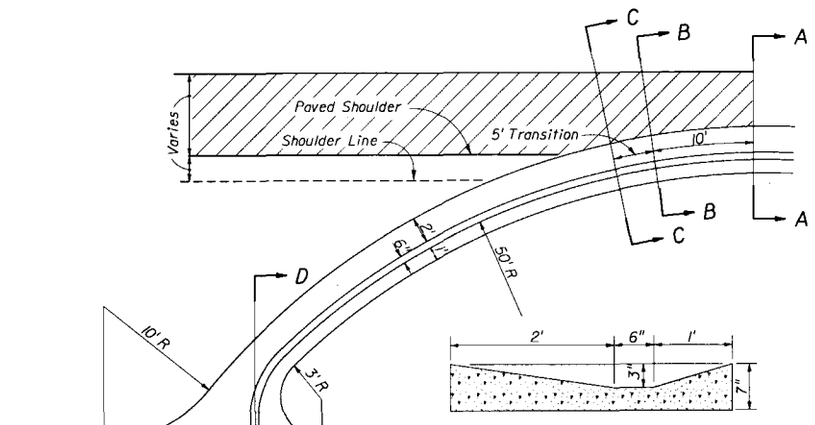

SECTION AA

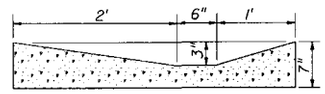

SECTION BB

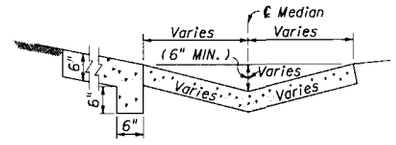

SECTION DD

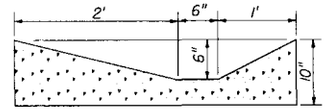

SECTION CC

1. Spillway to be paid for as shoulder gutter.
2. If spillway empties into a shallow or median ditch, the detail should be modified as necessary.

DETAIL OF CONC. SPILLWAY AT END OF SHOULDER GUTTER

(TO BE USED WHERE INLETS, PIPES & ENDWALLS ARE IMPRACTICAL)

STATE OF FLORIDA DEPARTMENT OF TRANSPORTATION
ROAD DESIGN

CONCRETE SPILLWAYS
SHOULDER GUTTER SPILLWAY

	Names	Dates
Designed By		
Drawn By		
Checked By		
F.H.W.A. Approved:		11/16/78

Approved By
State Drainage Engineer

Revision No.	Sheet No.	Index No.
81	2 of 2	284

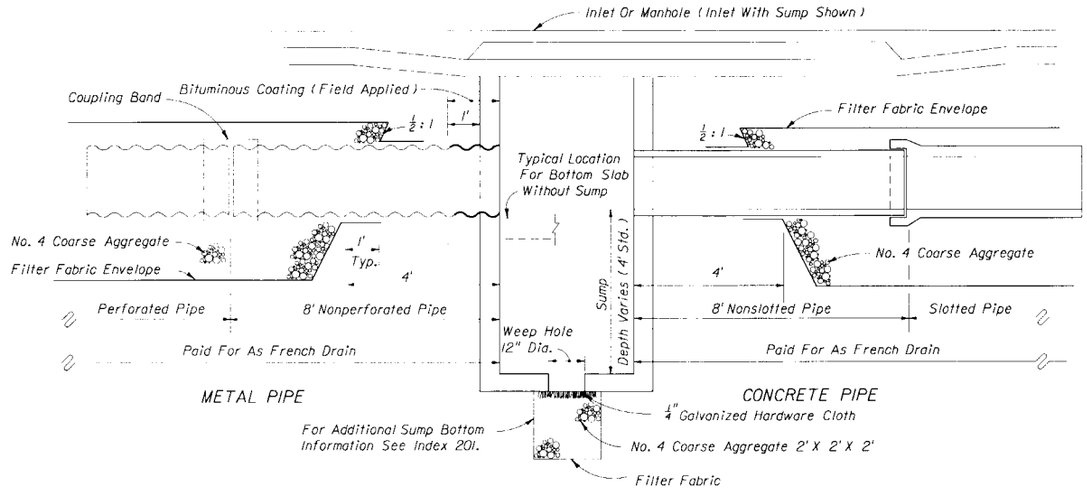

LONGITUDINAL SECTION

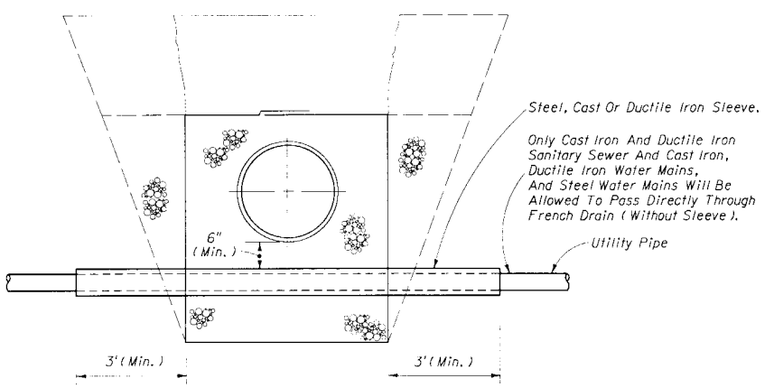

ROUND PIPE SHOWN

UTILIITY PIPES THRU FRENCH DRAIN

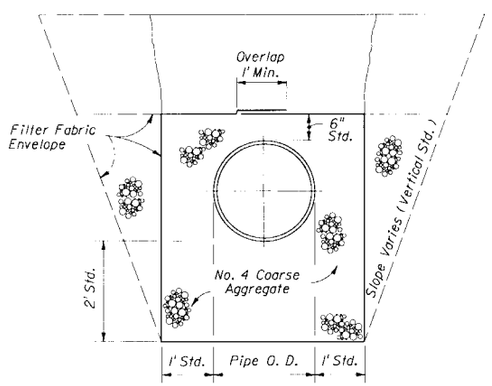

ROUND PIPE SHOWN

STANDARD CROSS SECTION (ENLARGED)

FRENCH DRAIN SYSTEM

GENERAL NOTES

1. Pipe shall be any of the optional types permitted in Section 443 of the Specifications unless otherwise restricted in the plans. Dissimilar types of pipe will not be permitted in a continuous run of pipe.
2. Concrete pipe shall be placed with the slots positioned on sides.
3. Alignment joints are standard (gaskets not required). Recorrugation of metal pipe ends not required.
4. The contractor may submit other methods of providing slots having equal or greater area of opening, for approval by the Engineer.
5. Filter fabric shall be Subsurface Drainage type meeting the requirements of Section 985. All filter fabric joints shall lap a minimum of one (1) foot.
6. The standard cross section shall be constructed unless other section(s) described or detailed in the plans.
7. For supplemental details see Index No. 280.
8. The contractor shall take the necessary precautions to prevent contamination of the trench with sand, silt and foreign materials.
9. The 12" diameter weep hole shall be eliminated, when the bottom of the inlet is below the normal water table, unless otherwise shown in the plans.
10. French drains following the typical cross section shall be paid for under the contract unit price for French Drains, LF. The unit price shall include the cost of pipe, pipe plugs, pipe fittings, coarse aggregate and filter fabric in place, and the cost for trench excavation, backfill and compaction. The unit price shall also include the cost for disposal of surplus excavated materials and cost for restoration of pavement removed or damaged by french drain construction, but shall not include payments for items paid for elsewhere.

    French drains with a significantly different cross section shall be paid for under the contract unit prices for separate items as follows:

    (a) Slotted or Perforated Pipe Culvert, LF. Unit price shall include cost for pipe, pipe plugs and fittings in place.

    (b) Ballast Rock (French Drain Aggregate), CY. Unit price shall inculde cost for coarse aggregate in place, and cost for trench excavation, backfill and compaction. The unit price shall also include the cost for disposal of surplus excavated materials and cost for restoration of pavement removed or damaged by french drain construction, but shall not include payment for items paid for elsewhere.

    (c) Plastic Filter Fabric (Subsurface), SY. Unit price shall be for cost of fabric in place. Quantity shall be determined by plan neat dimensions of the fabric envelope.

DESIGN NOTES

1. Pipe invert should be at or above the water table whenever possible.
2. French drains with minor dimensional changes or otherwise different from the standard cross-section shall be either described or detailed in the plans.

    French drains with significantly different cross-sections shall be detailed in the plans.

STATE OF FLORIDA DEPARTMENT OF TRANSPORTATION
ROAD DESIGN

FRENCH DRAIN

	Names	Dates
Designed By	MPS	09/83
Drawn By	RWR	09/83
Checked By	EGR	09/83
F.H.W.A. Approved:		10/06/83

Approved By
State Drainage Engineer

Revision No.	Sheet No.	Index No.
92	1 of 2	285

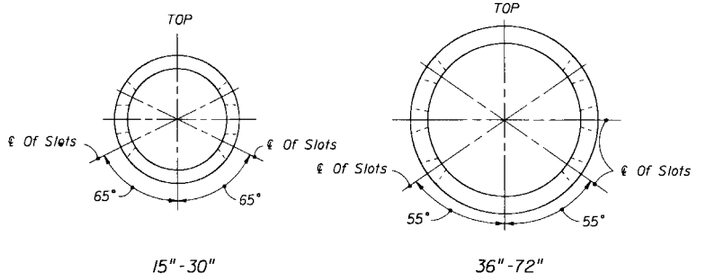

15"-30" 36"-72"

ELLIPTICAL PIPE		
Pipe Size	Slot Cut Opening c	
	Min.	Max.
14"x23"	10"	12"
19"x30"	14"	16"
24"x38"	14"	16"
29"x45"	20"	22"
34"x53"	20"	22"
38"x60"	20"	22"

ROUND PIPE		
Pipe Size	Slot Cut Opening c	
	Min.	Max.
15"	12"	14"
18"	12"	14"
24"	16"	18"
30"	16"	18"
36"	22"	24"
42"	22"	24"
48"	22"	24"
54"	24"	26"
60"	24"	26"
66"	24"	26"
72"	24"	26"

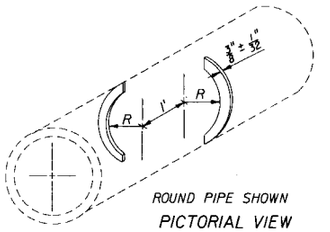

ROUND PIPE SHOWN
PICTORIAL VIEW

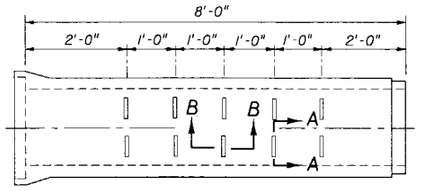

SIDE VIEW

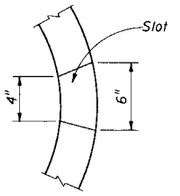

SECTION AA

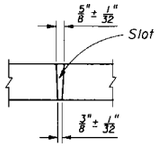

SECTION BB

OPTION A - ROUND PIPE

A curved cut is acceptable provided the control dimension is maintained (Typical For Elliptical & Round Pipe)

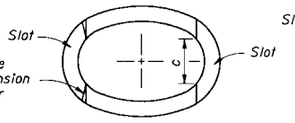

ELLIPTICAL PIPE

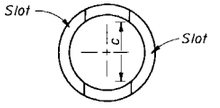

ROUND PIPE

SECTION AA

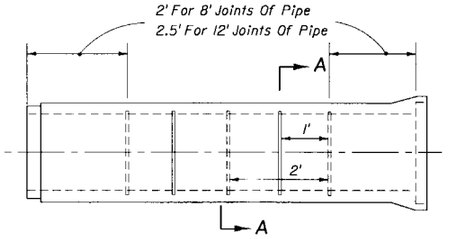

SIDE VIEW

OPTION B - ROUND OR ELLIPTICAL PIPE

SLOTTED PIPE OPTIONS

STATE OF FLORIDA DEPARTMENT OF TRANSPORTATION
ROAD DESIGN

FRENCH DRAIN

	Names	Dates
Designed By		
Drawn By		
Checked By		

Approved By: State Drainage Engineer

F.H.W.A. Approved:

Revision No.	Sheet No.	Index No.
92	2 of 2	285

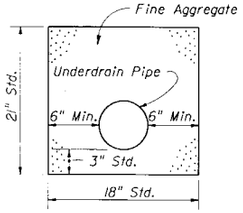

TYPE I

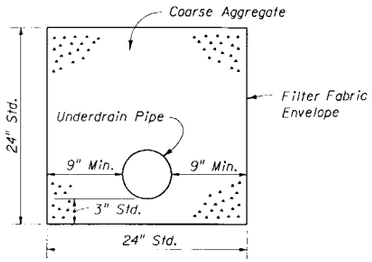

TYPE II

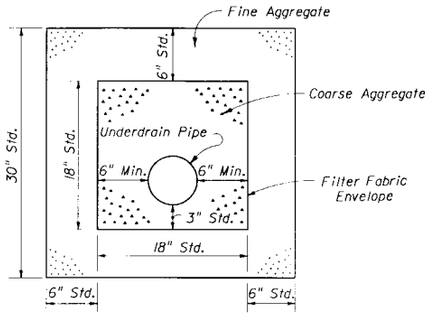

TYPE III

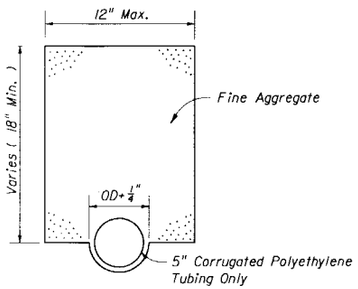

TYPE IV

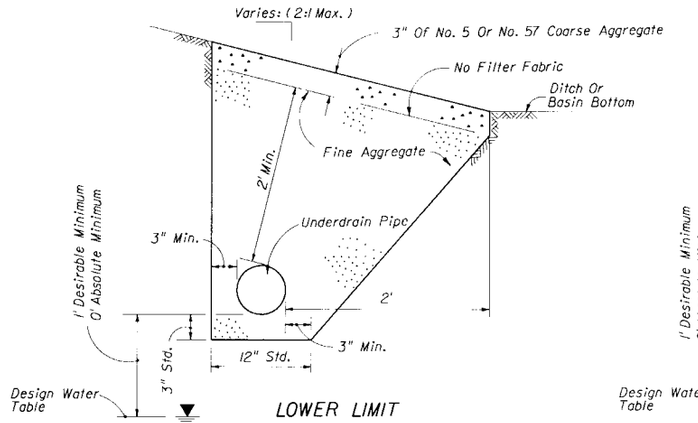

LOWER LIMIT

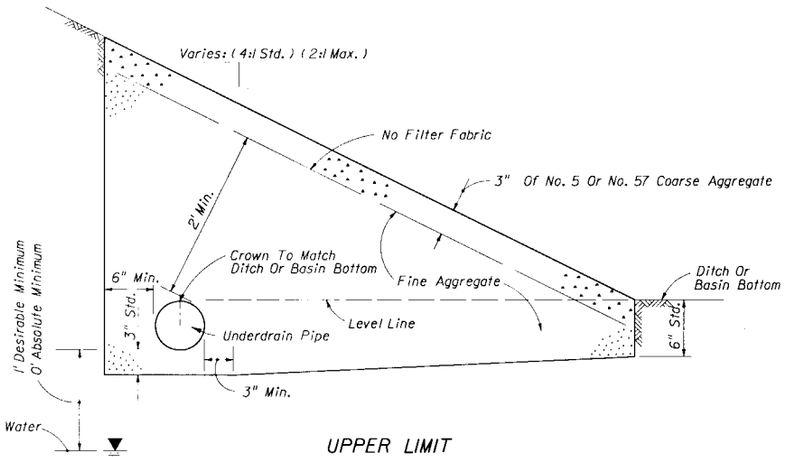

UPPER LIMIT

TYPE V a

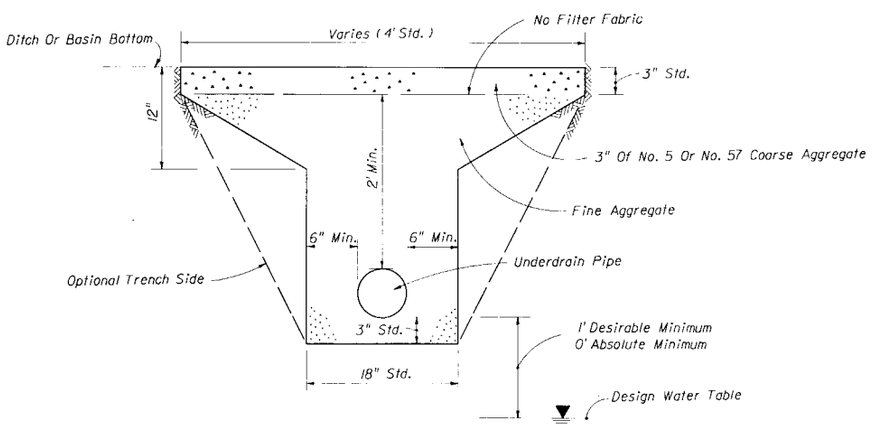

TYPE V b

UNDERDRAIN

DESIGN NOTES FOR UNDERDRAIN

1. The type of underdrain should be selected to meet design water removal rate and soil conditions. Caution is prescribed in the use of these typical sections since special designs may be required to satisfy project conditions.
2. Type I underdrain is intended for minimum water removal conditions.
3. Type II underdrain is intended for moderate water removal conditions. Where reactive conditions may create chemical clogging, the use of an inert material and/or elimination of the filter fabric may be necessary.
4. Type III underdrain is intended for maximum water removal conditions. The filter fabric separation is required between the coarse aggregate or fine aggregate including those described in general notes 2 and 3. Design note 3 applies for reactive conditions.
5. Type IV underdrain is intended for minimum water removal edgedrain and underdrain applications.
6. Type V underdrain is intended for use in detention basins and other locations which require a filtration system. Type Va is recommended and Type Vb should be used only when Type Va is inappropriate. The standard fine aggregate specified for Type V underdrain conforms to filtration gradation requirements of Chapter 17-25.025 F.A.C..
7. The designer should evaluate whether a filter fabric envelope is required around underdrain Types I, III, IV and Va. When required, fabric shall be specified in the plans. Fabric to be paid for separately.

GENERAL NOTES FOR UNDERDRAIN

1. The underdrain pipe shall be either 4" smooth or 5" corrugated tubing unless otherwise shown in the plans. The size to be furnished will be based on the nominal internal diameter of a pipe with a smooth interior wall. Except when prohibited by the plans, the special provisions or this standard, pipe with a corrugated interior wall may be provided based on the following size equivalency.
   - 4" smooth interior equivalent to 5" corrugated interior
   - 5" smooth interior equivalent to 6" corrugated interior
   - 6" smooth interior equivalent to 8" corrugated interior
   - 8" smooth interior equivalent to 10" corrugated interior
2. Fine aggregate shall be quartz sand meeting the requirements of Sections 902-4 of the Standard Specifications.
3. Coarse aggregate shall be gravel or stone meeting the requirements of Sections 901-2 or 901-3 respectively. The gradation shall meet Section 901-6, Grades 4, 467, 5, 56, or 57 stone unless restricted in the plans.
4. Underdrain Type I, II, III and V shall be in accordance with Section 440 and Underdrain Type IV (Edgedrain) in accordance with Section 441.
5. Filter fabric shall be Type D-3 (See Index 199).
6. When corrugated polyethylene tubing with slots or 360° perforations is used in conjunction with fine aggregate, a filter fabric sock meeting Section 948-5 is required.
7. For standard location details, see Index 500. Special locations require location details in the plans.
8. All Filter fabric joints shall overlap a minimum of one (1) foot.
9. Underdrain outlet pipes shall be constructed in accordance with the outlet pipe details and general notes for Draincrete Edgedrain, Sheet 2 of 2. Outlet pipes are to be 4" diameter unless larger pipe sizes are specified in the plans.
10. Pay Item shall be based on the size of the smooth interior products. The contract unit price for Underdrain, LF, shall include the following components for each underdrain type as follows:
    - Type I: Pipe, sock and aggregate.
    - Type II: Pipe, aggregate and filter fabric envelope.
    - Type III: Pipe, aggregates and internal filter fabric envelope.
    - Type Va & Vb: Pipe, sock and aggregates.

    Underdrain Type IV is to be paid for under the contract unit price Corrugated Polyethylene Tubing Edgedrain, LF, and shall include the cost for tubing, sock and aggregate.

    External filter fabric envelopes, when specified for underdrain Types I, III, IV and Va, shall be paid for separately under the contract unit price for Plastic Filter Fabric ( ) SY.

STATE OF FLORIDA DEPARTMENT OF TRANSPORTATION
ROAD DESIGN

UNDERDRAIN AND EDGEDRAIN

	Names	Dates
Designed By	EGR	10/85
Drawn By	HSD	10/85
Checked By	EGR	10/85
F.H.W.A. Approved:		

Approved By: C. C. Kruse, State Drainage Engineer

Revision No.	Sheet No.	Index No.
92	1 of 2	286

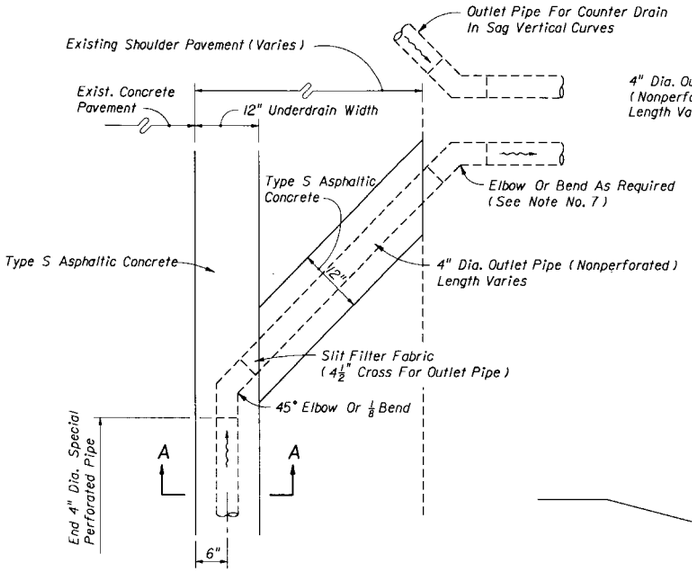

ALIGNMENT OF OUTLET PIPE

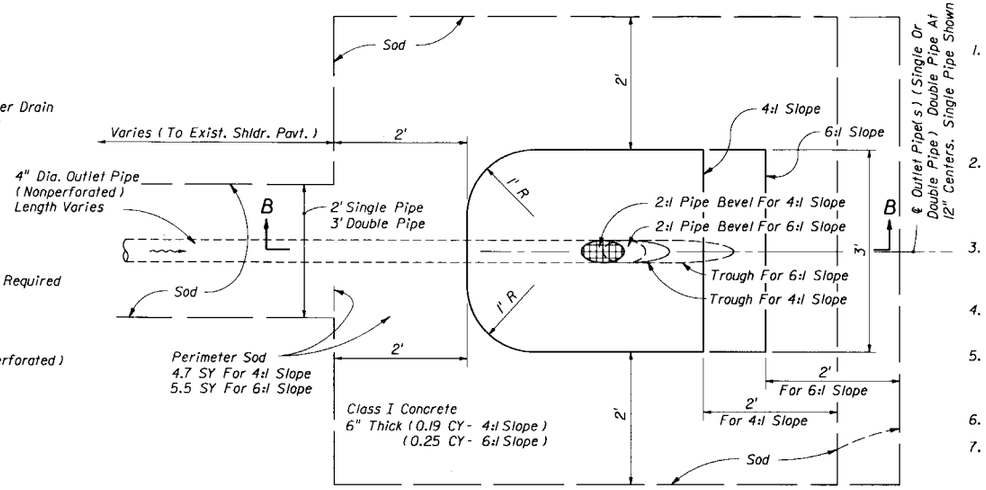

PLAN - OUTLET PIPE APRON

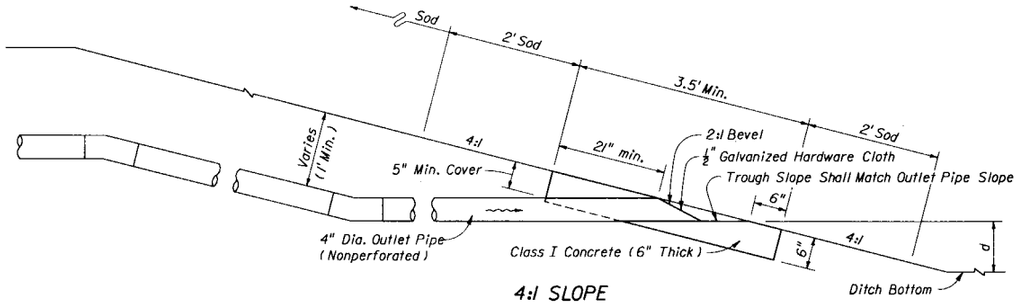

4:1 SLOPE

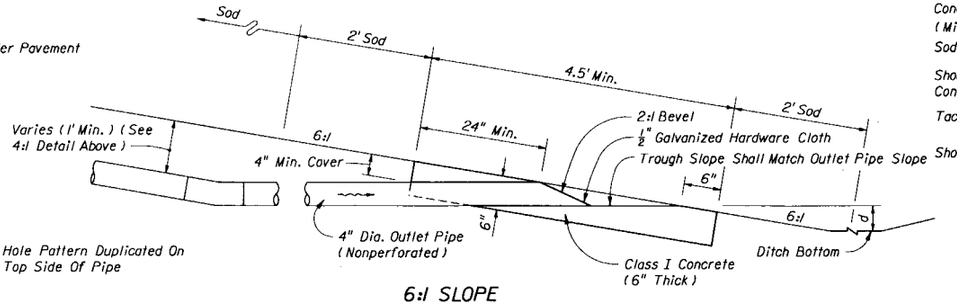

6:1 SLOPE

SECTIONS BB

d : 1.75' std. for grassed ditches
0.5' std. for paved ditches
[less is acceptable to provide minimum 0.1% outlet pipe slope]

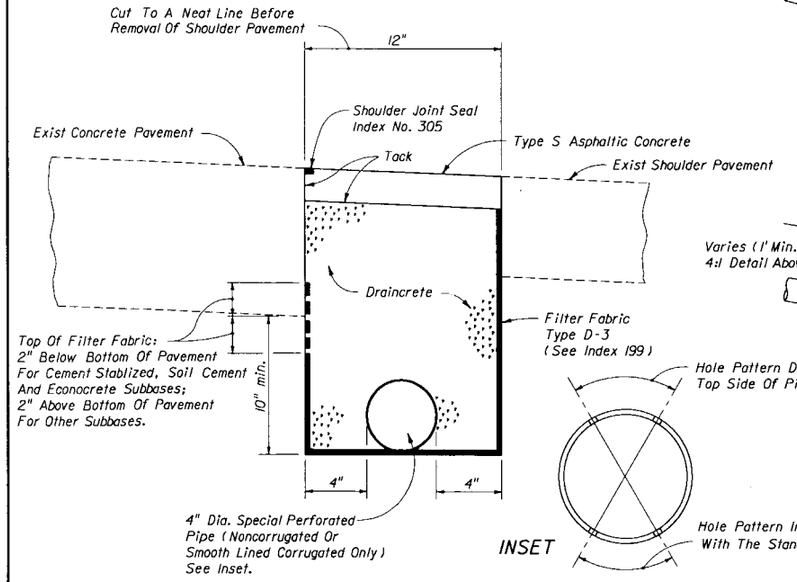

SECTION AA

4" EDGEDRAIN

GENERAL NOTES FOR DRAINCRETE EDGEDRAIN

1. The contractor shall confine the construction of draincrete edgedrain to an area in which the entire operation can be carried out in five (5) work days, unless another construction period is called for in the plans, with sufficient time allowed for the draincrete to set before placement of the Type S asphaltic concrete pavement.
   No trench greater than 2" in depth will be allowed overnight. Trenches shall be barricaded at all times.
2. Draincrete edgedrain shall be constructed adjacent to the low edge of the roadway pavement. When the low edge shifts between outside and inside edges of pavement the draincrete edgedrain shall extend 50' beyond and begin 50' before the flat point (100' overlap).
   Draincrete edgedrain shall be placed on the low side of ramps of crossroad terminals.
3. Draincrete edgedrain shall be constructed on a grade parallel with the edge of pavement profile, except on profiles flatter than one-tenth percent (0.10%) the draincrete edgedrain shall be constructed on a grade of one-tenth percent (0.10%).
4. Immediately prior to placing the filter fabric the entire vertical face of the concrete pavement shall be cleaned to remove adhering base material and soil.
5. The Contractor shall devise a procedure for holding the filter fabric in position on the vertical face of the trench. The procedure must be approved by the Engineer prior to placement of the draincrete.
6. The upper end of each seperate run of draincrete edgedrain pipe shall be capped.
7. Edgedrain outlet pipes shall be constructed at a maximum of 500' intervals. Elbows or ⅛ bends shall be used to connect the outlet pipe to the edgedrain pipe. The elbows or bends shall be of the same material as the outlet pipe but compatible with the edgedrain pipe.
   When directed by the Engineer, outlet pipes shall be stubbed into existing inlets or into existing ditch pavements at an elevation 0.5' above the inlet flowline or ditch bottom. Concrete apron and bordering sod are not required for stubbed outlets, but replacement sodding will be required at trenches for pipes stubbed into paved ditches.
   In sag vertical curves separate outlet pipes for edgedrains from opposite directions shall use a single apron unless otherwise shown in the plans or otherwise directed by the Engineer.
   Backfill around outlet pipes shall be of cohesive soils, draincrete will not be permitted.
8. Existing paved shoulder that is removed for the construction of outlet pipes shall be replaced with Type S asphaltic concrete at the rate of 500 lbs. per square yard.
9. The contract unit price for Edgedrain (Draincrete) (4") LF, shall be full compensation for removal of existing shoulder pavement, trench excavation, disposal of excess materials, filter fabric, draincrete edgedrain pipe and fittings, draincrete, and, barricades necessary for underdrain construction.
   The contract unit price for Underdrain Outlet Pipe (4") LF., shall be full compensation for removal of existing shoulder pavement, trench excavation, pipe and fittings, hardware cloth, stubbing into existing inlets and paved ditches, restoration of ditch pavement, backfill in place, and, disposal of excess materials.
   Concrete apron shall be paid for under the contract unit price for Class I Concrete (Miscellaneous) CY.
   Sodding shall be paid for under the contract unit price for Sodding SY.
   Shoulder pavement shall be paid for under the contract unit price for Type S Asph Conc (Inc Bit) TN.
   Tack coat shall be paid for under the contract unit price for Bit Matl (Tack Coat) GA.
   Shoulder joint seal shall be paid for under the contract unit price for Shoulder Joint Seal LF.

DRAINCRETE EDGEDRAIN ON RURAL FACILITIES

STATE OF FLORIDA DEPARTMENT OF TRANSPORTATION
ROAD DESIGN

UNDERDRAIN AND EDGEDRAIN

	Names	Dates
Designed By		
Drawn By	HSD/dds	06/86
Checked By	JWG/WNL EGR	06/86
F.H.W.A. Approved:		11/07/86

Approved By: E. C. Ruge
State Drainage Engineer

Revision No.	Sheet No.	Index No.
92	2 of 2	286

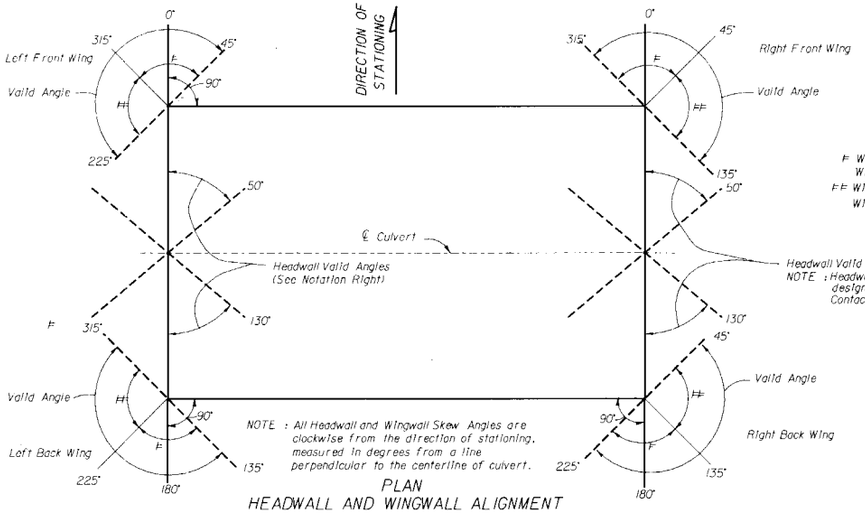

PLAN
HEADWALL AND WINGWALL ALIGNMENT

* Within these limits the top surface of the Wingwalls shall be level.

** Within these limits the top surface of the Wingwalls shall be sloped.

Headwall Valid Angles
NOTE : Headwalls with skew angles between 51° and 129° require special design authorization. Other design options should be considered. Contact the District Drainage Engineer to obtain authorization.

NOTE: Designs for box culverts under this Index are to be produced only by computer analysis, utilizing the program named PSTDN55. Designs under this Index are to be limited to the live loads and dimensional restraints shown in the General Notes of this Index and to the fill on the barrel(s) as shown in the roadway plans. It is the construction Contractors responsibility to provide for suppporting construction loads that exceed the above loadings.

GENERAL NOTES

DESIGN SPECIFICATIONS: A.A.S.H.T.O. 1983.

LOADING: HS20-44, Modified for Military Loading as Required

SURFACE FINISH: The Class Surface finish for all concrete surfaces shall be a general surface finish.

SKEWED CONSTRUCTION JOINTS: Construction joints in barrels of culverts with skewed wingwalls may be placed parallel to the headwalls and the reinforcing steel, in the slabs may be cut provided that the cut reinforcing steel extends beyond the construction joint enough for splices to be made in accordance with the table (lower right) this sheet. The cost of construction joints shall be at the expense of the contractor.

CULVERT EXTENTIONS: For cut backs and ties into existing concrete box culverts see Index No. 280

* REINFORCING BAR SCHEDULE:

A. When the depth is less than or equal to 2.0 feet, Bars C2 are utilized in the bottom of the top slab. In all other cases, Bars C2 are replaced with Bars C1 spaced at 18 inches on centers.

B. When the skew angle for a headwall equals 0 degrees plus or minus 11 degrees the respective S Bars (S2 or S3) will not be utilized.

C. When the barrel height is less than 6 Feet, Bars B2 will be eliminated as shown in Detail J.

D. If the span is less than five feet, Bars A1 and A2 will be Type II Bars.

E. The portions of Bars "N" that extend thru Construction Joints into wingwalls above footings shall be wrapped with one layer of 55 lb smooth roofing.

F. For culvert extensions Bar C1 is redesignated Bar C3 in the bottom slab.

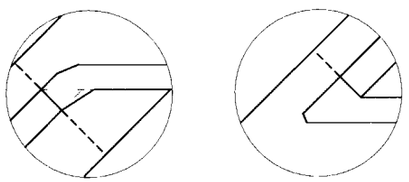

DETAIL "G"

DETAIL "H"

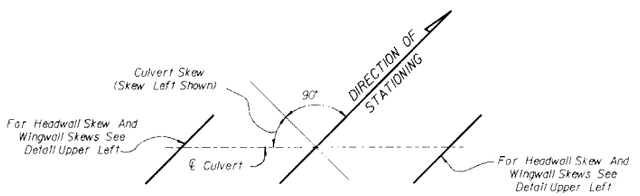

SKETCH "A"

NOTE : For Culvert Skew see Roadway Plans.

CULVERT ALIGNMENT

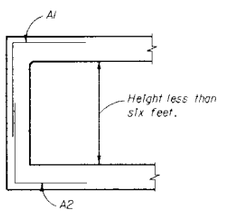

DETAIL "J"

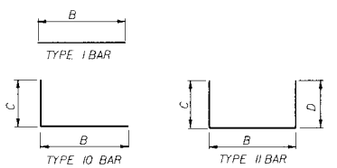

TABLE OF MINIMUM BAR SPLICE LENGTHS

BAR SIZE	SPLICE	BAR SIZE	SPLICE
4	1'- 8"	8	3'- 10
5	2'- 2"	9	4'- 10"
6	2'- 7"	10	6'- 1"
7	3'- 0"	11	7'- 6"

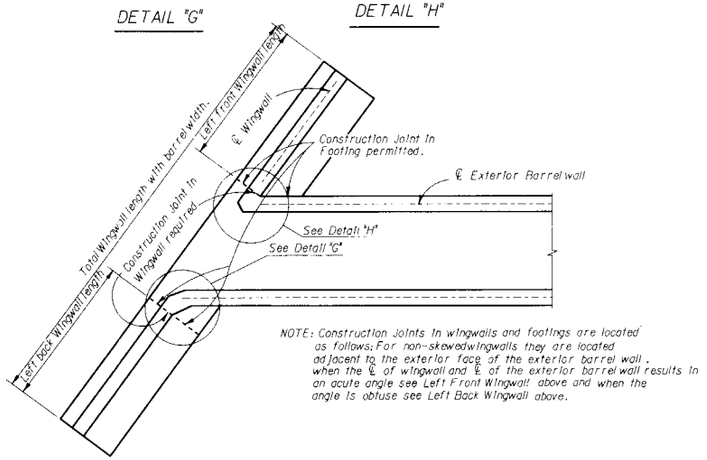

NOTE: Construction Joints in wingwalls and footings are located as follows; For non-skewed wingwalls they are located adjacent to the exterior face of the exterior barrel wall, when the ℄ of wingwall and ℄ of the exterior barrel wall results in an acute angle see Left Front Wingwall above and when the angle is obtuse see Left Back Wingwall above.

PART PLAN SHOWING WINGWALLS AND THE LOCATION OF CONSTRUCTION JOINTS

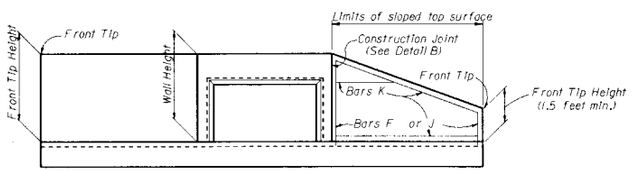

END ELEVATION OF CULVERT

NOTE: Cut the vertical bars F as required for the longest bar and use the remainder for the shortest bar in the wingwall. The vertical bars J and the horizontal bars K shall be constructed likewise. The lengths shown in the reinforcing steel bar schedule for bars F, J and K require cutting for sloped top wingwalls only.

STATE OF FLORIDA DEPARTMENT OF TRANSPORTATION
ROAD DESIGN

CONCRETE BOX CULVERT
CULVERT DETAILS

	Names	Dates
Designed By		
Drawn By	GFG	1-86
Checked By	RCB	1-86
F.H.W.A. Approved:		

Approved By: Kenneth H. Morgan
State Roadway Design Engineer

Revision No.	Sheet No.	Index No.
90	1 of 5	290

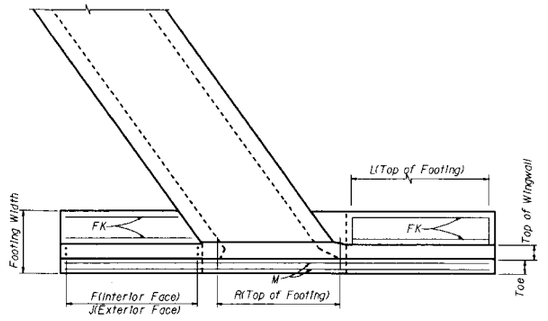

PART PLAN AT END OF CULVERT

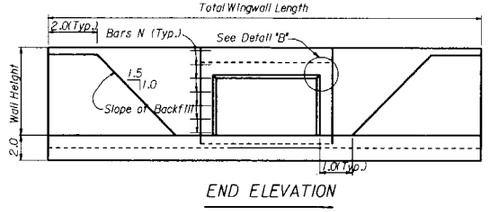

END ELEVATION

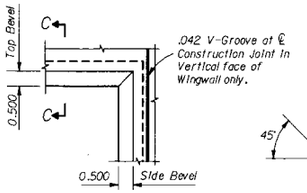

DETAIL "B"



SECTION C-C

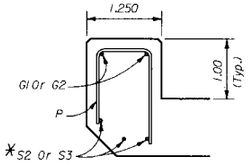

DETAIL "D"

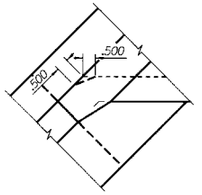

DETAIL "E"

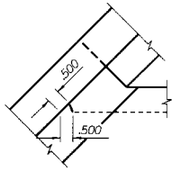

DETAIL "F"

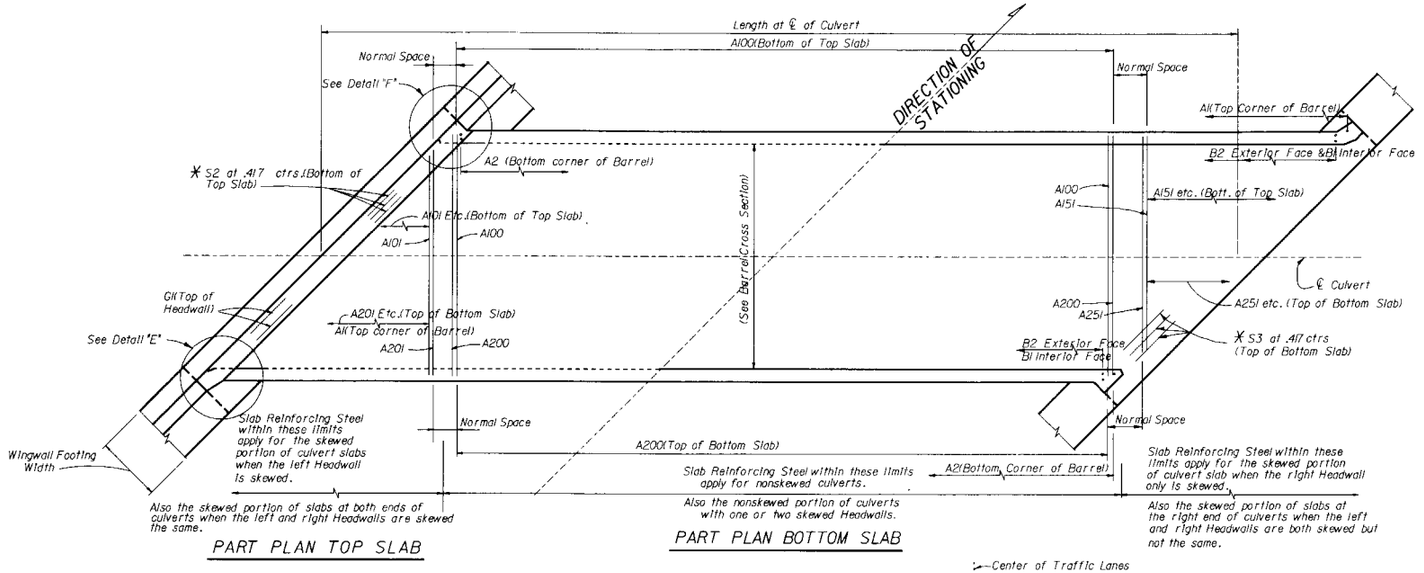

PART PLAN TOP SLAB

PART PLAN BOTTOM SLAB

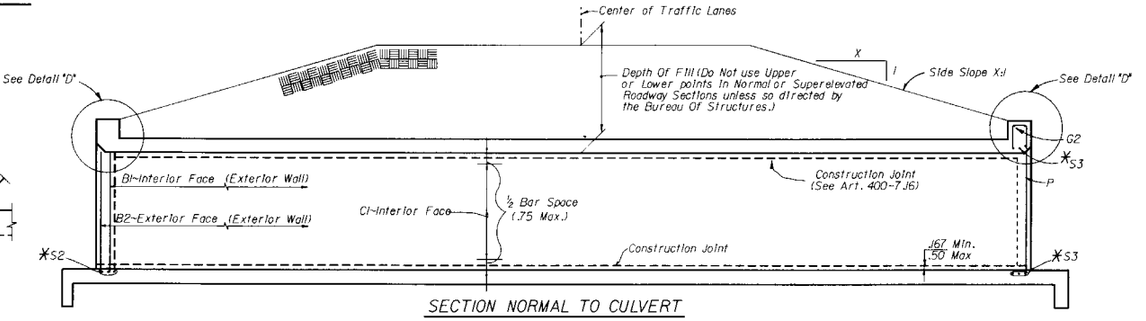

SECTION NORMAL TO CULVERT

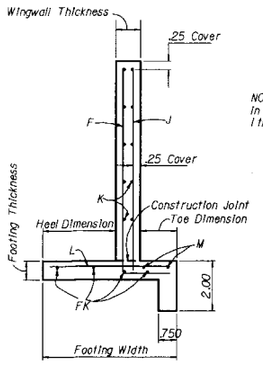

NOTE: For Bars F, J, K, L and or FK In the Wingwalls, the subscripts 1 thru 4 apply as follows:
1-Left Front
2-Left Back
3-Right Front
4-Right Back

SECTION THRU WINGWALL

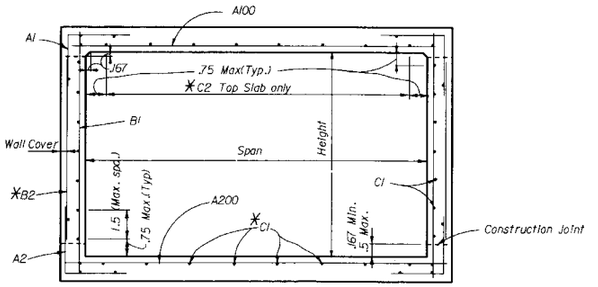

SECTION THRU BARREL

NOTE: The location of the first bar from the ends of the culvert shall not be less than .25, but not greater than one half the bar spacing.

* See Culvert Details and Reinforcing Bar Schedule, Sheet 1 of 5

STATE OF FLORIDA DEPARTMENT OF TRANSPORTATION
ROAD DESIGN

CONCRETE BOX CULVERT
SINGLE BARREL

	Names	Dates
Designed By		
Drawn By	GFG	1-86
Checked By	RCB	1-86
F.H.W.A. Approved:		

Approved By _____ State Roadway Design Engineer

Revision No.	Sheet No.	Index No.
90	2 of 5	290

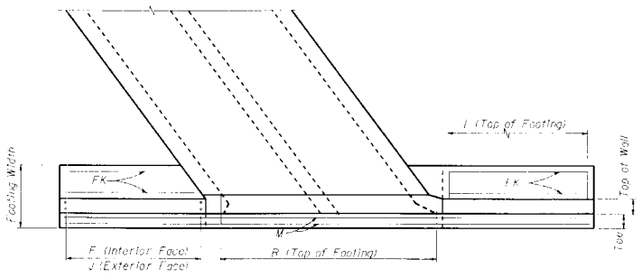

PART PLAN AT END OF CULVERT

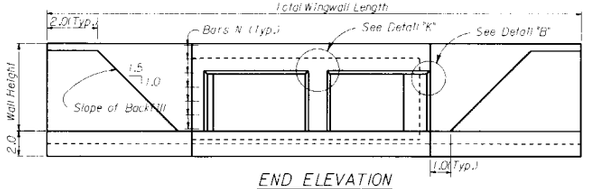

END ELEVATION

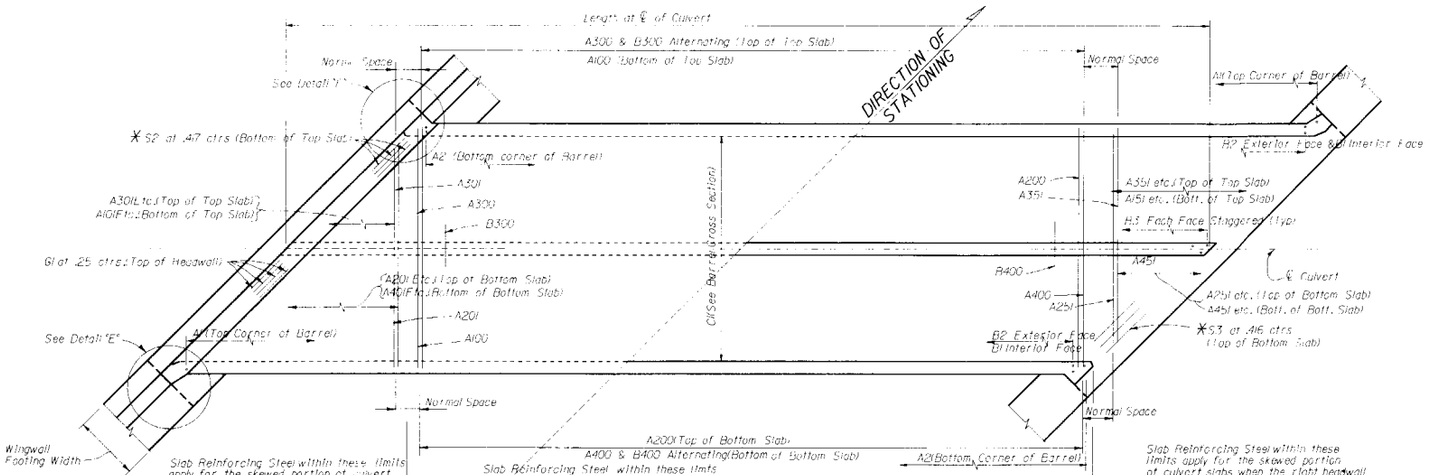

PART PLAN TOP SLAB

PART PLAN BOTTOM SLAB

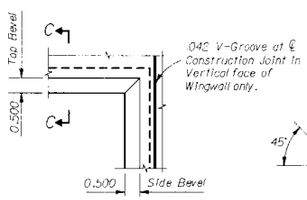

DETAIL "B"



SECTION C-C

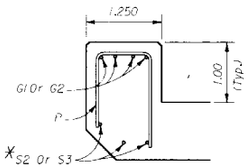

DETAIL "D"

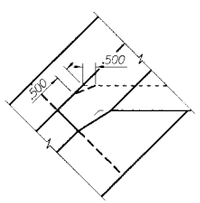

DETAIL "E"

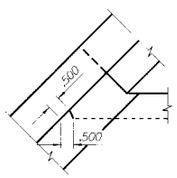

DETAIL "F"

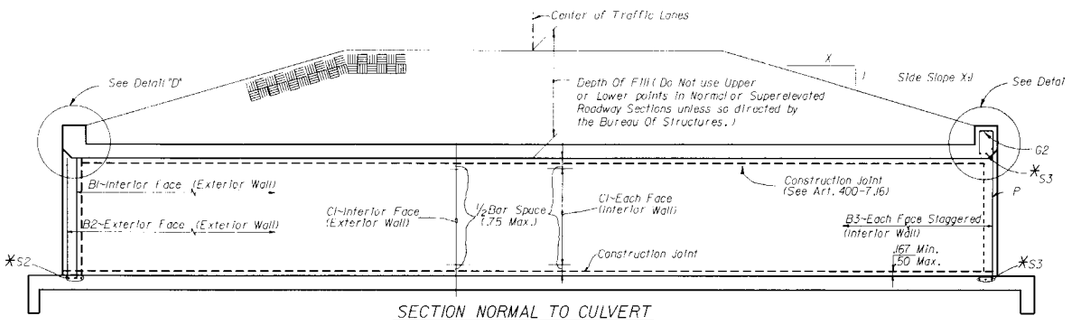

SECTION NORMAL TO CULVERT

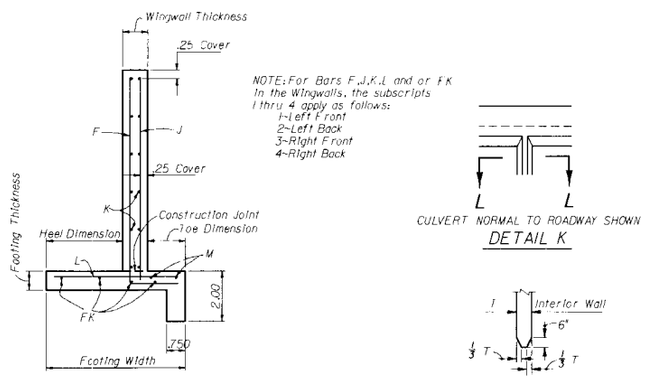

SECTION THRU WINGWALL

NOTE: For Bars F, J, K, L and or FK in the Wingwalls, the subscripts 1 thru 4 apply as follows:
1-Left Front
2-Left Back
3-Right Front
4-Right Back

CULVERT NORMAL TO ROADWAY SHOWN

DETAIL K

SECTION LL

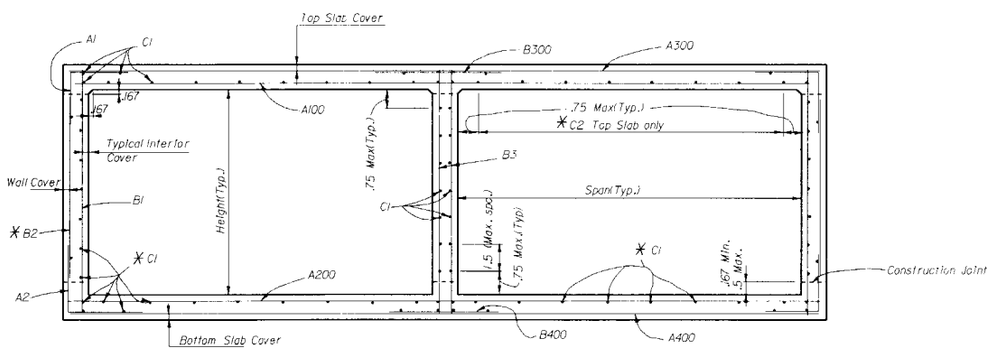

SECTION THRU BARREL

NOTE: The location of the first bar from the ends of the culvert shall not be less than .25, but not greater than one half the bar spacing.

✱ See Culvert Details and Reinforcing Bar Schedule, Sheet 1 of 5

STATE OF FLORIDA DEPARTMENT OF TRANSPORTATION
ROAD DESIGN

CONCRETE BOX CULVERT
DOUBLE BARREL

	Names	Dates
Designed By		
Drawn By	GFG	1-86
Checked By	RCB	1-86

Approved By _____
State Roadway Design Engineer

Revision No.	Sheet No.	Index No.
90	3 of 5	290

F.H.W.A. Approved:

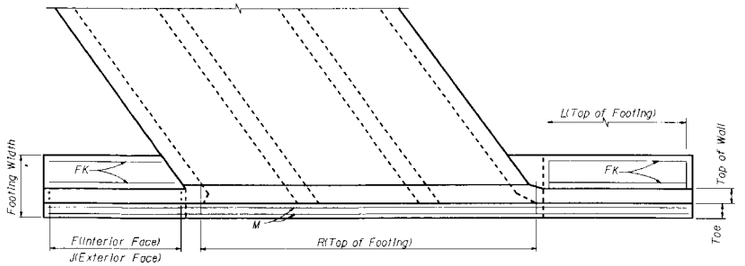

PART PLAN AT END OF CULVERT

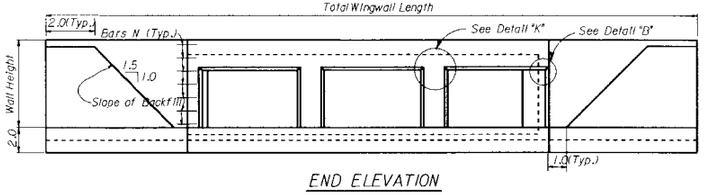

END ELEVATION

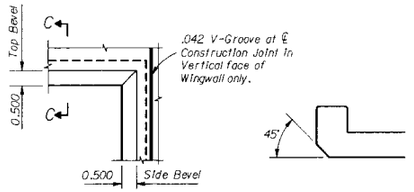

DETAIL "B"

SECTION C-C

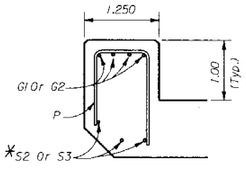

DETAIL "D"

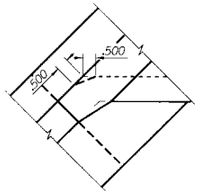

DETAIL "E"

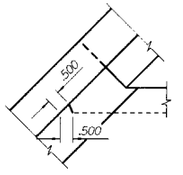

DETAIL "F"

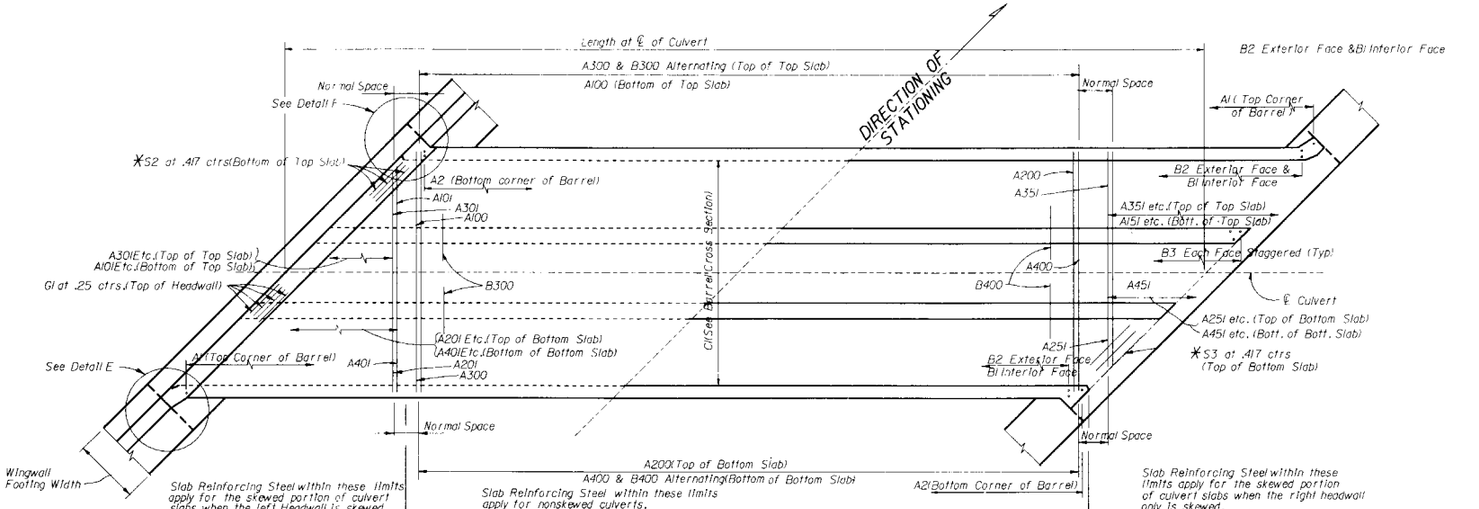

PART PLAN TOP SLAB

PART PLAN BOTTOM SLAB

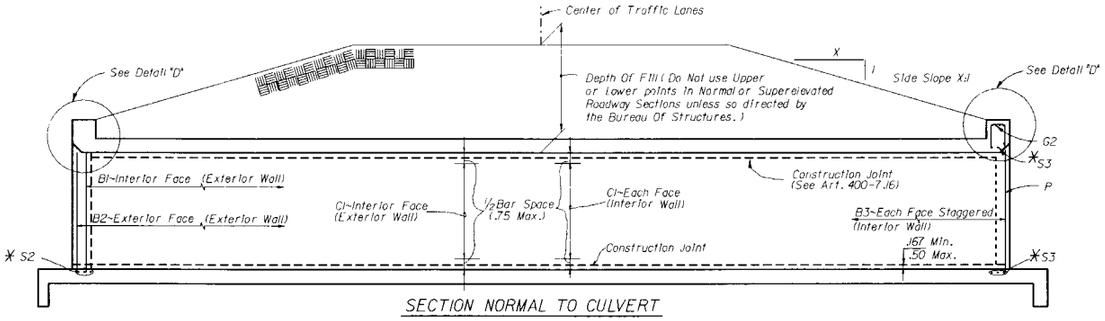

SECTION NORMAL TO CULVERT

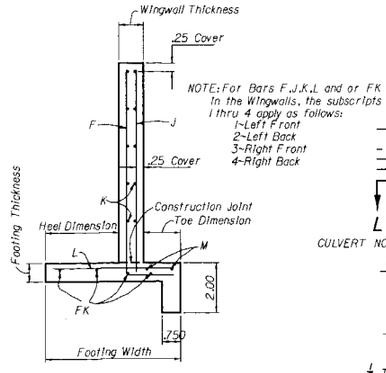

SECTION THRU WINGWALL

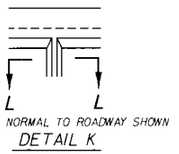

CULVERT NORMAL TO ROADWAY SHOWN

DETAIL K

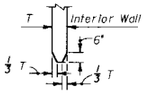

SECTION LL

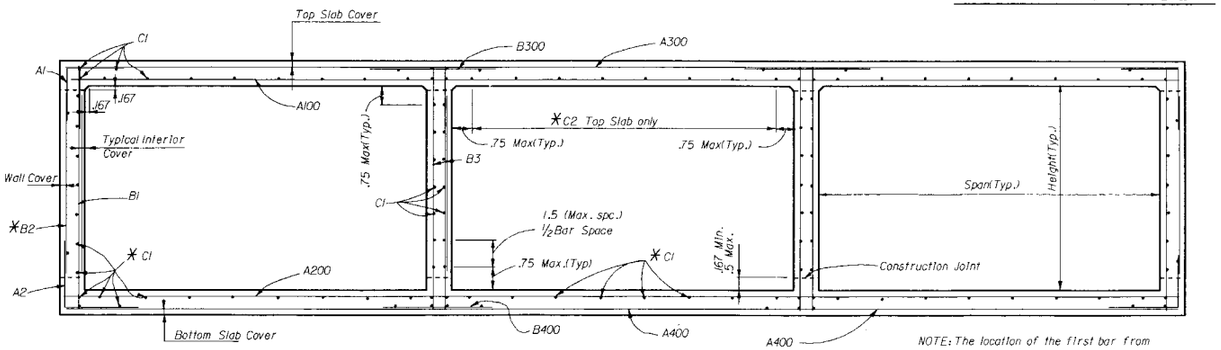

SECTION THRU BARREL

NOTE: The location of the first bar from the ends of the culvert shall not be less than .25, but not greater than one half the bar spacing.

*See Culvert Details and Reinforcing Bar Schedule, Sheet 1 of 5

STATE OF FLORIDA DEPARTMENT OF TRANSPORTATION
ROAD DESIGN

CONCRETE BOX CULVERT
TRIPLE BARREL

	Names	Dates
Designed By		
Drawn By	GFG	1-86
Checked By	RCB	1-86
F.H.W.A. Approved:		

Approved By: Kenneth H. Woodcock
State Roadway Design Engineer

Revision No.	Sheet No.	Index No.
90	4 of 5	290

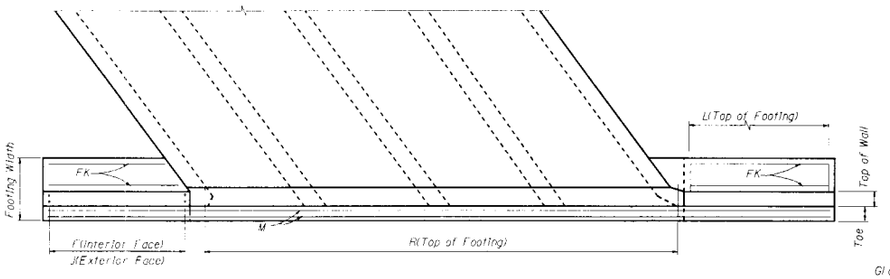

PART PLAN AT END OF CULVERT

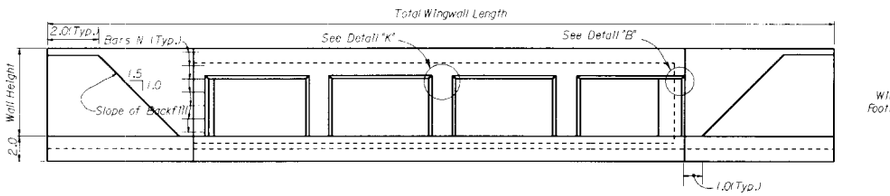

END ELEVATION

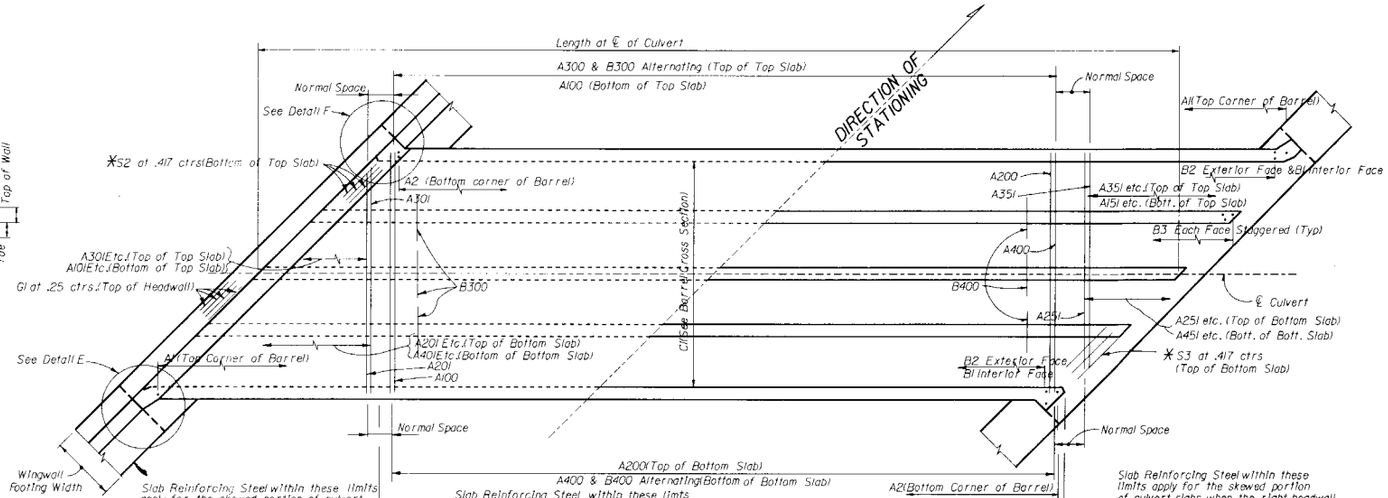

PART PLAN TOP SLAB

PART PLAN BOTTOM SLAB

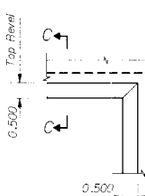

DETAIL "B"

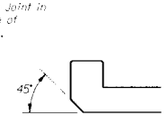

SECTION C-C

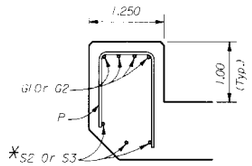

DETAIL "D"

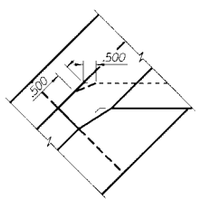

DETAIL "E"

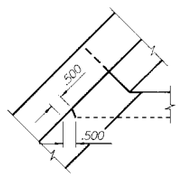

DETAIL "F"

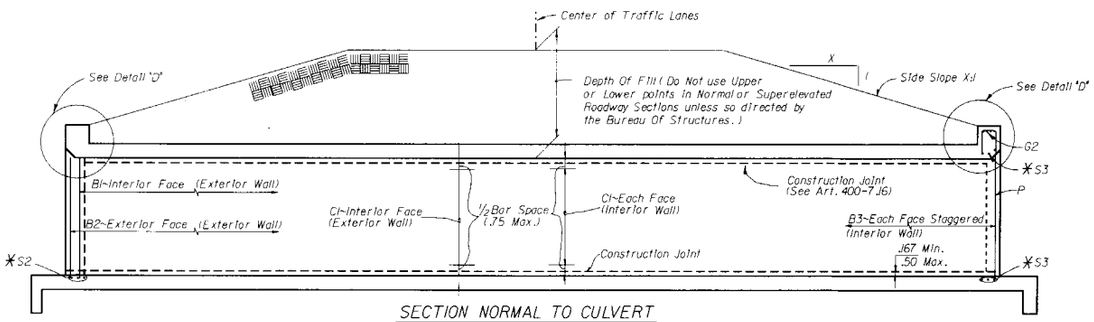

SECTION NORMAL TO CULVERT

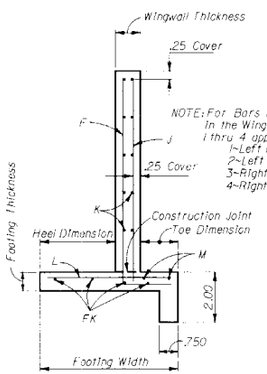

SECTION THRU WINGWALL

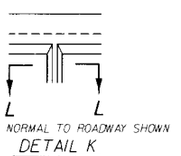

CULVERT NORMAL TO ROADWAY SHOWN

DETAIL K

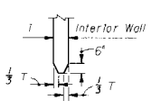

SECTION LL

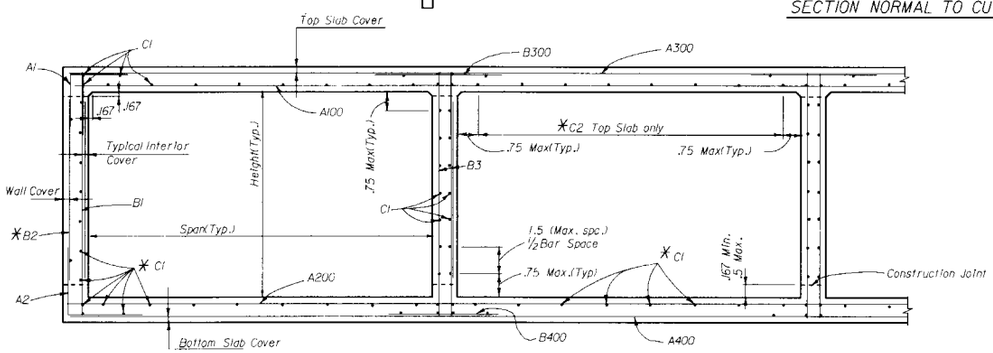

SECTION THRU BARREL

*See Culvert Details and Reinforcing Bar Schedule, Sheet 1 of 5

NOTE: The location of the first bar from the ends of the culvert shall not be less than .25, but not greater than one half the bar spacing.

STATE OF FLORIDA DEPARTMENT OF TRANSPORTATION
ROAD DESIGN

CONCRETE BOX CULVERT

QUADRUPLE BARREL

	Names	Dates
Designed By		
Drawn By	GFG	1-86
Checked By	RCB	1-86

Approved By: Bennett R. Wright
State Roadway Design Engineer

Revision No.	Sheet No.	Index No.
90	5 of 5	290

F.H.W.A. Approved:

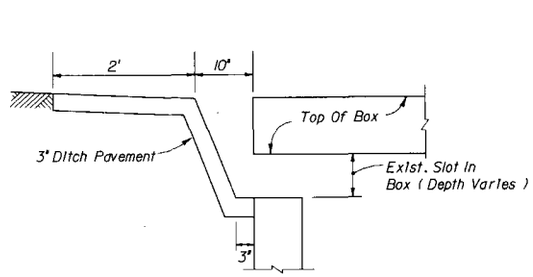

ELEVATION

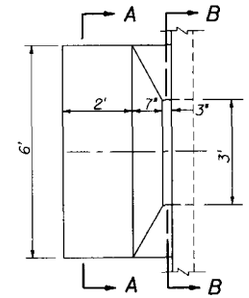

PLAN

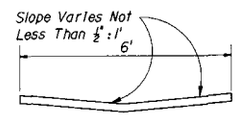

SECTION AA

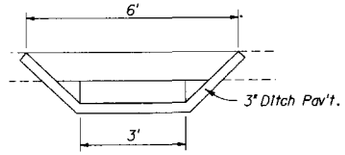

SECTION BB

SAFETY MODIFICATION FOR INLETS IN BOX CULVERTS

STATE OF FLORIDA DEPARTMENT OF TRANSPORTATION
ROAD DESIGN

SAFETY MODIFICATIONS FOR INLETS IN BOX CULVERTS

	Names	Dates
Designed By	HAB	07/67
Drawn By	MJT	07/67
Checked By	DWS	07/67
F.H.W.A. Approved:		03/20/75

Approved By _____
State Drainage Engineer

Revision No.	Sheet No.	Index No.
81	1 of 1	293

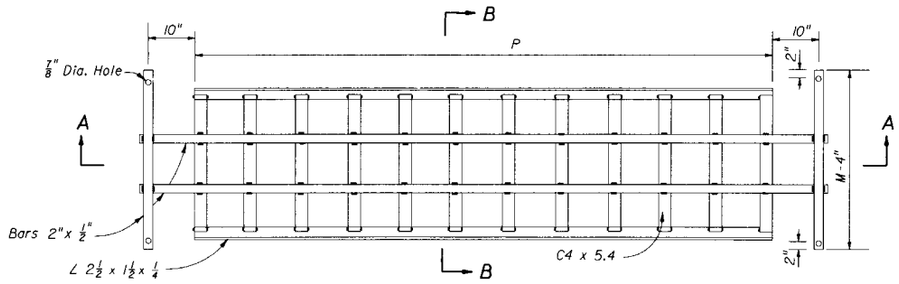

PLAN

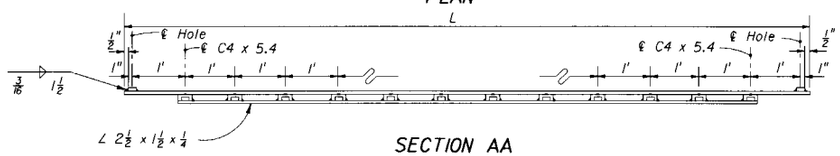

SECTION AA

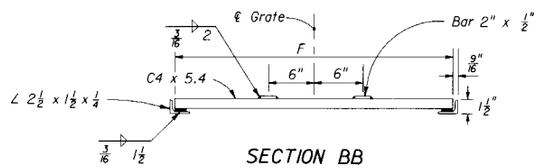

SECTION BB

GRATE DETAIL

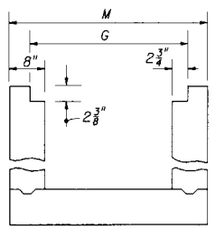

GRATE SEAT DETAIL

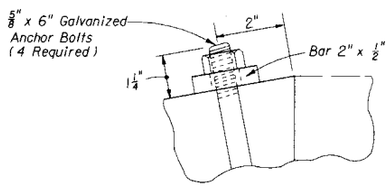

ANCHOR BOLT DETAIL

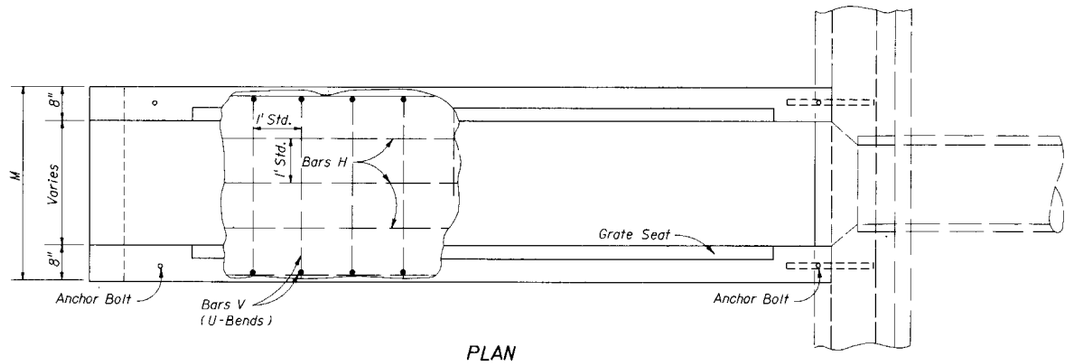

PLAN

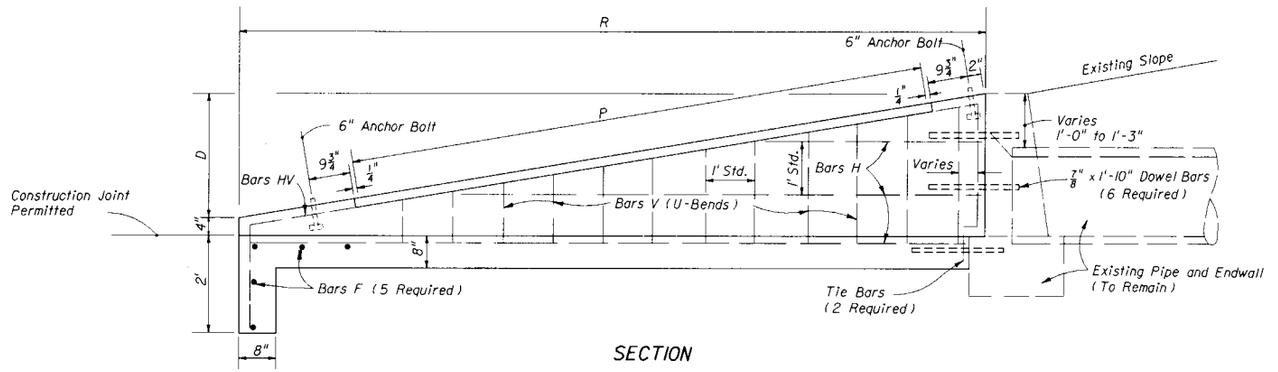

SECTION

GENERAL NOTES

1. For use criteria see " Steel Grating Use Criteria " Index No. 261.
2. Grates shall be ASTM A 242, A 441, A 572 or A 588, Grade 50 steel, and galvanized in accordance with Section 962-7 of the Standard Specifications.
3. Channel section C3 x 6.0 may be substituted for the C4 x 5.4 channel.
4. All reinforcing No. 4 bars with 2" clearance except as noted. Spacings shown are center to center. Laps to be 12" minimum. Welded wire fabric (two cages max.) having an equivalent cross section area (0.20 sq. in.) may be subsituted for bar reinforcement.
5. Drill 1 3/4" holes 8" deep with a rotary drill in existing endwall for dowel bars. Holes shall be thoroughly cleaned prior to placing dowel bars and epoxy.
6. Endwall to be paid for under the contract unit price for Class I Concrete (Endwalls) CY and Reinforcing Steel (Roadway) LB. Cost of dowel bars and epoxy mortar to be included in the contract unit price for reinforcing steel. Cost of grates to be paid for under the contract unit price for Endwall Grate LB., plan quantity. Cost of galvanized bolts and nuts to be included in the contract unit price for the grate.
7. Sod slopes 5' each side and above endwall. Sodding to be paid for under the contract unit price for Sodding SY.

DIMENSIONS AND QUANTITIES PER GRATE

Slope	Pipe Size	Channels @ 5.4 Lbs./L.F.			Bars @ 3.4 lbs/L.F. (2 ea.)			Angles @ 3.2 Lbs./L.F. (2)		Total Weight-Lbs.
		Quantity	F	Lbs.	L	M-4"	Lbs.	P	Lbs.	
6:1	15"	10	2'-6 7/8"	139	11'-3"	3'-3"	99	9'-4"	60	298
	18"	12	2'-9 7/8"	183	13'-3"	3'-6"	114	11'-4"	73	370
	24"	15	3'-3 7/8"	269	16'-3"	4'-0"	138	14'-4"	92	499
	30"	18	3'-9 7/8"	372	19'-3"	4'-6"	162	17'-4"	111	645
4:1	15"	6	2'-6 7/8"	83	7'-3"	3'-3"	71	5'-4"	34	188
	18"	7	2'-9 7/8"	107	8'-3"	3'-6"	80	6'-4"	41	228
	24"	9	3'-3 7/8"	161	10'-3"	4'-0"	97	8'-4"	53	311
	30"	11	3'-9 7/8"	227	12'-3"	4'-6"	114	10'-4"	66	407

DIMENSIONS AND QUANTITIES PER U-ENDWALL

Pipe Size	G	M	D	R	P	Class I Concrete-C.Y.	Reinforcing Steel-Lbs.	Sodding S Y
15"	2'-8 1/2"	3'-7"	2'-2"	13'-0"	9'-4"	2.12	167	23
18"	2'-11 1/2"	3'-10"	2'-5"	14'-6"	11'-4"	2.53	173	25
24"	3'-5 1/2"	4'-4"	2'-11"	17'-6"	14'-4"	3.48	238	29
30"	3'-11 1/2"	4'-10"	3'-5"	20'-6"	17'-4"	4.57	315	32
15"	2'-8 1/2"	3'-7"	2'-2"	8'-8"	5'-4"	1.44	120	19
18"	2'-11 1/2"	3'-10"	2'-5"	9'-8"	6'-4"	1.72	130	20
24"	3'-5 1/2"	4'-4"	2'-11"	11'-8"	8'-4"	2.36	167	22
30"	3'-11 1/2"	4'-10"	3'-5"	13'-8"	10'-4"	3.09	225	25

STATE OF FLORIDA DEPARTMENT OF TRANSPORTATION
ROAD DESIGN

SAFETY MODIFICATIONS FOR ENDWALLS

	Names	Dates
Designed By		
Drawn By		
Checked By		

Approved By: C.C. Quiñones
State Drainage Engineer

F.H.W.A. Approved:

Revision No.	Sheet No.	Index No.
90	1 of 1	295

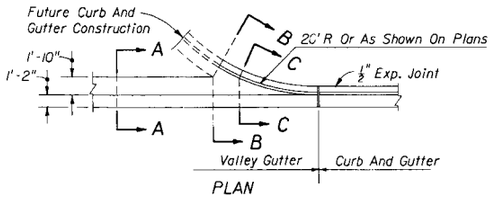

PLAN

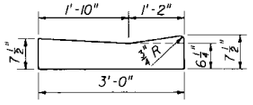

SECTION AA

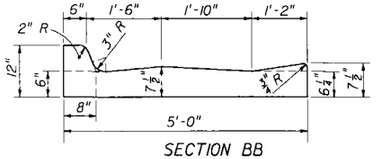

SECTION BB

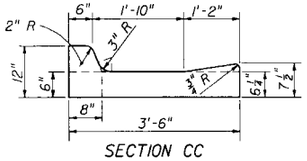

SECTION CC

VALLEY GUTTER

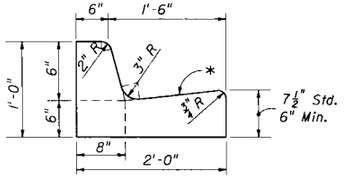

*Note: When used on high side of roadways, the cross slope of the gutter shall match the cross slope of the adjacent pavement the thickness of the lip shall be 6", unless otherwise shown on plans.

TYPE F

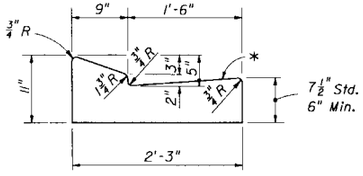

*See Note Above.

TYPE E

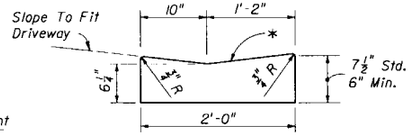

*See Note Above.

Note: To be paid for as parent curb.

DROP CURB

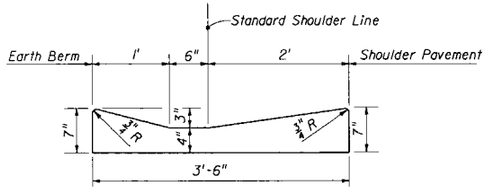

SHOULDER GUTTER

Note: For use adjacent to concrete or flexible pavement, concrete shown.
For details depicting usage adjacent to flexible pavement, see diagram right.
Expansion joint, preformed joint filler and joint seal are required on concrete pavement only, see diagram right.

CONCRETE CURB AND GUTTER

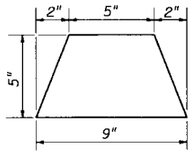

ASPHALTIC CONCRETE CURB

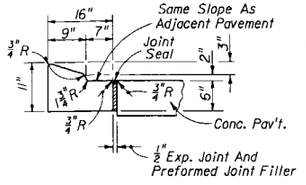

For details depicting usage adjacent to flexible pavement, see diagram right.

TYPE A

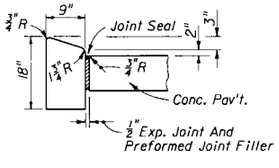

TYPE B

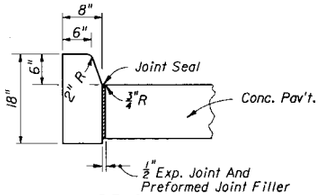

TYPE D

Note: For use adjacent to concrete or flexible pavement, concrete shown.
Expansion joint, preformed joint filler and joint seal are required on concrete pavement only, see diagram right.

CONCRETE CURB

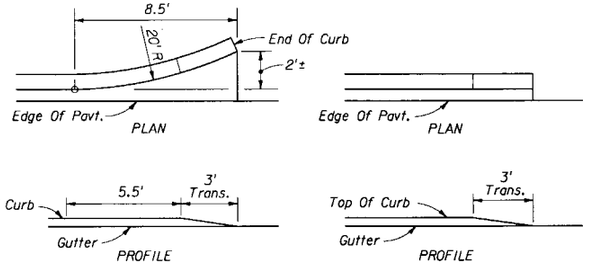

FLARED END STRAIGHT END

CURB TYPE A

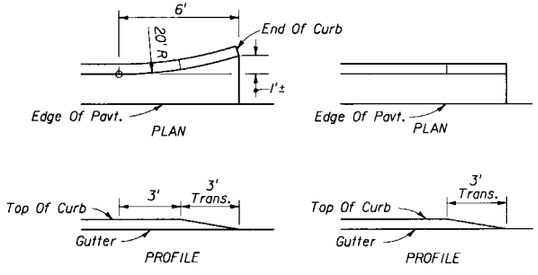

FLARED END STRAIGHT END

CURB AND GUTTER TYPES E & F

CURB AND GUTTER ENDINGS

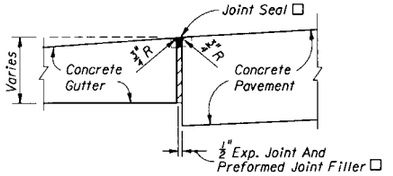

□ Applies to both high and low sides of pavement, low side shown.

EXPANSION JOINT BETWEEN GUTTER AND CONCRETE PAVEMENT

Surface On Low Side Of Pavement To Be ¼" Above Lip Of Gutter Except FC-2 To Be ⅝" Above Lip. Surface On High Side To Be Flush With Gutter.

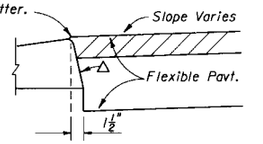

△ Applies to both high and low sides of pavement, low side shown.

CURB AND GUTTER AND TYPE A CURB ADJACENT TO FLEXIBLE PAVEMENT

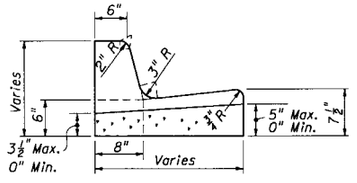

Note: See general note No. 1

CONTRACTION JOINT IN CURB OR CURB AND GUTTER

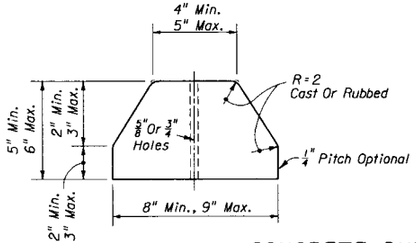

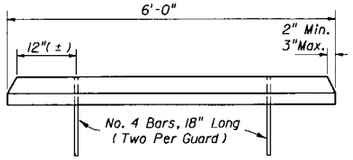

CONCRETE BUMPER GUARD

GENERAL NOTES

1. For curb, gutter, curb and gutter and traffic separators provide ⅛" – 1" contraction joints at 10' centers (max.). Contraction joints adjacent to concrete pavement on tangents and flat curves are to match the pavement joints, with intermediate joints not to exceed 10' centers.
2. Ends of Curbs Types B and D shall transition from full to zero heights in 3 feet.

STATE OF FLORIDA DEPARTMENT OF TRANSPORTATION
ROAD DESIGN

CURB & CURB AND GUTTER

	Names	Dates
Designed By		
Drawn By		
Checked By		
F.H.W.A. Approved:		07/07/75

Approved By: State Roadway Design Engineer

Revision No.	Sheet No.	Index No.
92	1 of 1	300

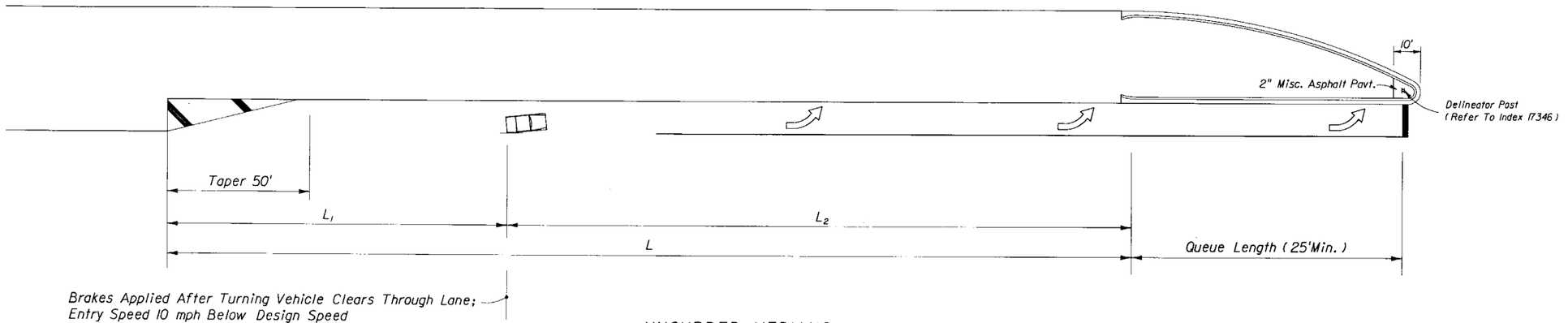

UNCURBED MEDIANS

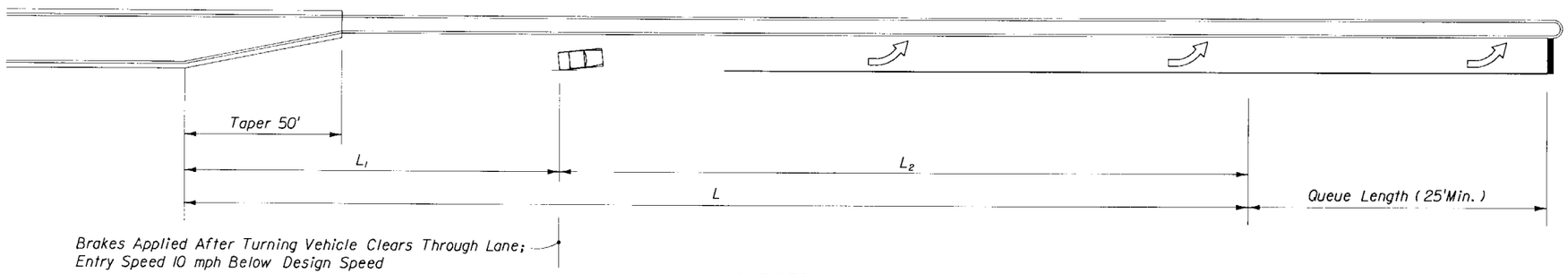

CURBED MEDIANS

TURN LANES • CURBED AND UNCURBED MEDIANS				
Design Speed (mph)	Entry Speed (mph)	Clearance Distance L_1	Brake To Stop Distance L_2	Total Deceleration Distance L
65	55	170'	255'	425'
55	45	125'	175'	300'
45	35	85'	100'	185'
35	25	70'	75'	145'

Note: Right turn lane taper and distances identical to left turn lanes.
Queue lengths and deceleration distances are to be maximized for facility conditions. The tabulated deceleration distances are minimum values, except where lesser values are imposed by unrelocatable control points.

STATE OF FLORIDA DEPARTMENT OF TRANSPORTATION
ROAD DESIGN

TURN LANES

	Names	Dates
Designed By	RER	05/91
Drawn By	HSD	05/91
Checked By	JVG/RER	05/91
F.H.W.A. Approved:		

Approved By
State Roadway Design Engineer

Revision No.	Sheet No.	Index No.
92	1 of 1	301

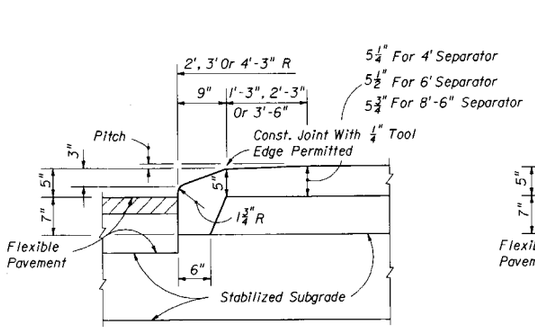

LONGITUDINAL SECTION (NOSE)

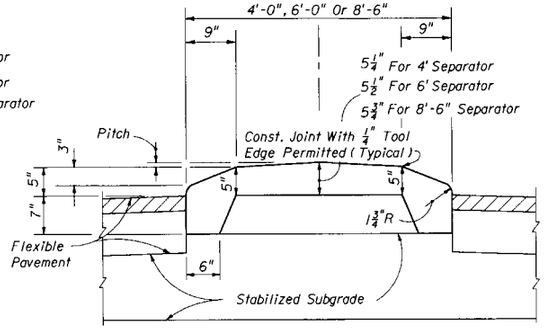

TRANSVERSE SECTION

OPTION I

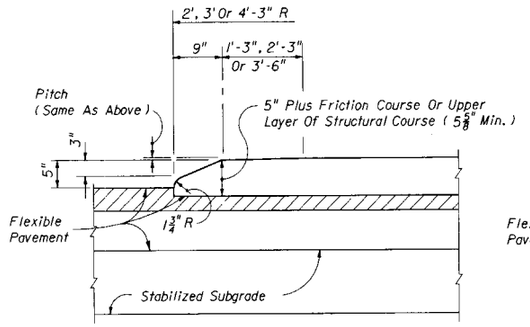

LONGITUDINAL SECTION (NOSE)

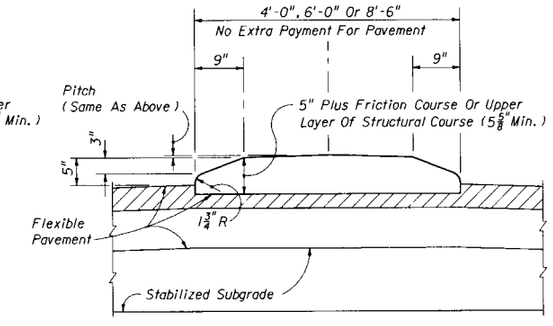

TRANSVERSE SECTION

OPTION II

TYPE I CONCRETE TRAFFIC SEPARATOR

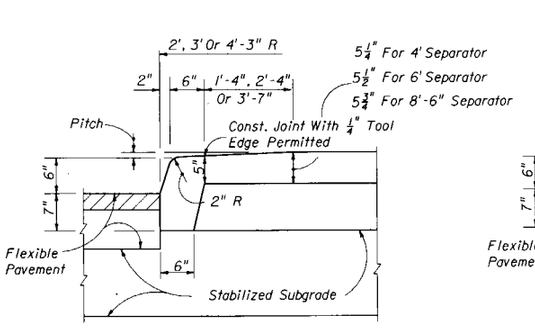

LONGITUDINAL SECTION (NOSE)

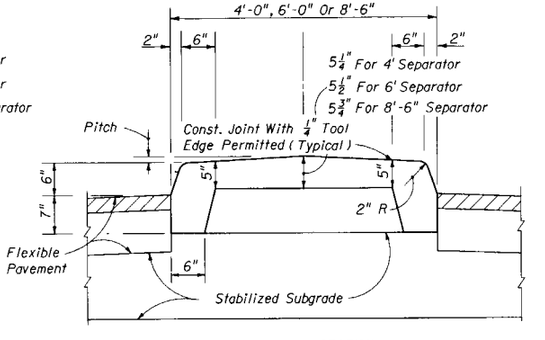

TRANSVERSE SECTION

OPTION I

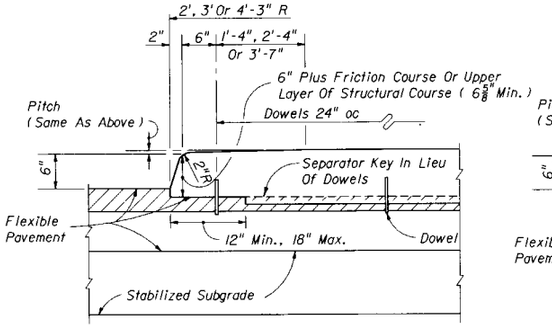

LONGITUDINAL SECTION (NOSE)

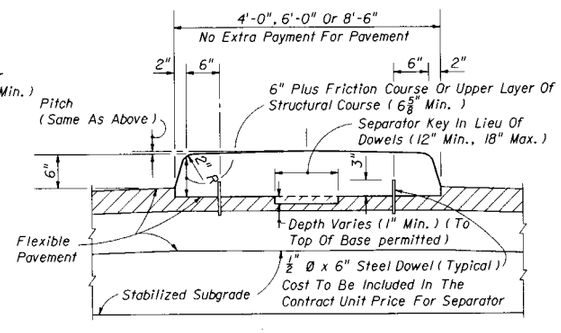

TRANSVERSE SECTION

OPTION II

TYPE IV CONCRETE TRAFFIC SEPARATOR

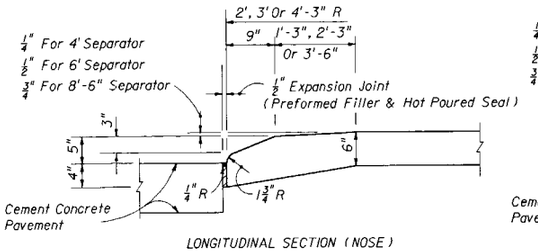

LONGITUDINAL SECTION (NOSE)

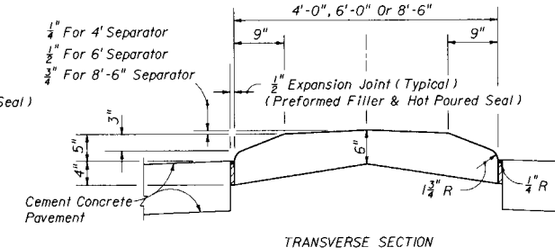

TRANSVERSE SECTION

TYPE II CONCRETE TRAFFIC SEPARATOR

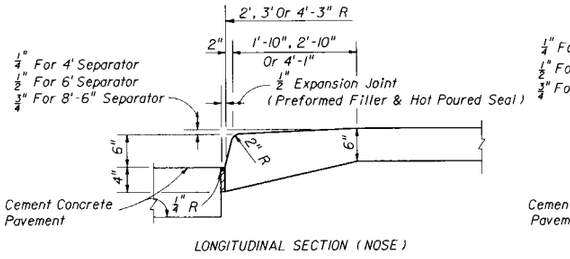

LONGITUDINAL SECTION (NOSE)

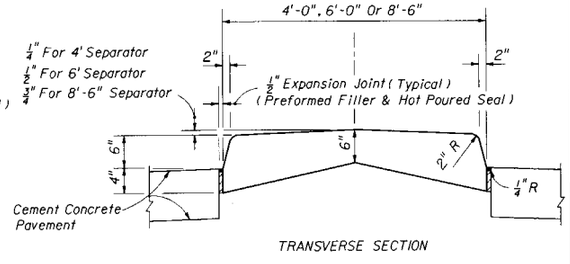

TRANSVERSE SECTION

TYPE V CONCRETE TRAFFIC SEPARATOR

NOTES

1. Separators Type I and IV are to be used with flexible pavement. Separators Types II and V are to be used with rigid pavement.
2. Either Option I or Option II may be used for Types I and IV separators except when a specific option is called for in the plans.
3. Separators having widths other than 4', 6' or 8'-6" shall be detailed in the plans as special separators and paid for under the contract unit price for either Concrete Traffic Separator (Special) (_' Wide) LF or (Special) (VW) SY.

STATE OF FLORIDA DEPARTMENT OF TRANSPORTATION
ROAD DESIGN

TRAFFIC SEPARATORS

	Names	Dates
Designed By		
Drawn By	HSD	09/81
Checked By	JVG	09/81
F.H.W.A. Approved:		09/23/82

Approved By _____
State Roadway Design Engineer

Revision No.	Sheet No.	Index No.
90	1 of 1	302

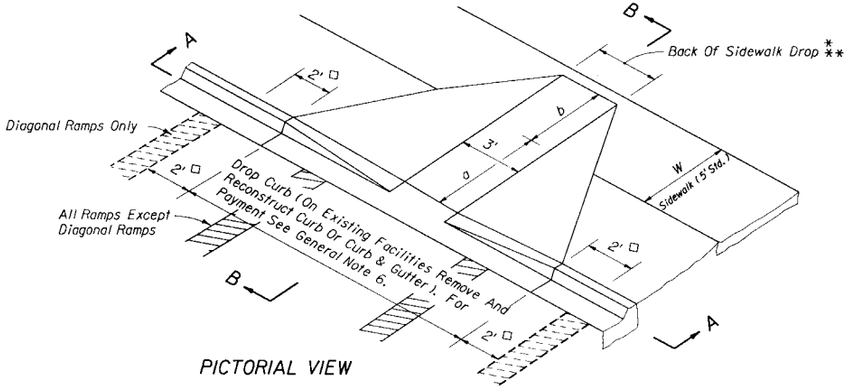

PICTORIAL VIEW

W	a	W + a + 10"	x	b
5'	0'	5.8'	5.8'	5.0'*
6'	0'	6.8'	6.8'	6.0'**
7'	0'	7.8'	7.3'	6.5'**
8'	0'	8.8'	7.3'	6.5'**
5'	2.0'	7.8'	7.8'	5.0'
5'	2.5'	8.3'	8.1'	4.8'
5'	3.0'	8.8'	8.3'	4.4'
5'	3.5'	9.3'	8.4'	4.1'
5'	4.0'	9.8'	8.6'	3.8'
5'	4.5'	10.3'	8.7'	3.4'
5'	5.0'	10.8'	8.9'	3.1'

b = x - (a + 10")
b = Distance from front edge of sidewalk to back point of 12:1 slope.

*Back of sidewalk drop required for all sidewalk slopes.

**Back of sidewalk drop required for sidewalk slopes 0.04 and part 0.02.

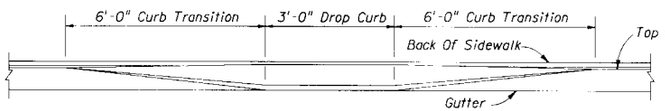

SECTION AA

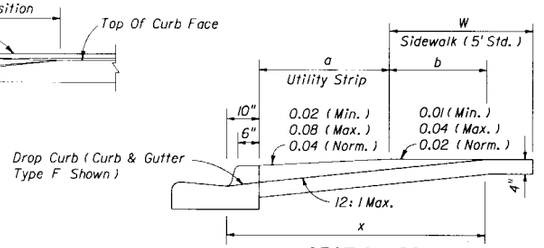

SECTION BB

◇ Not less than 2' of full height curb adjacent to diagonal ramp and within crosswalk limits

⊡ Crosswalk widths and configuation vary; must conform to Traffic Design Standards.

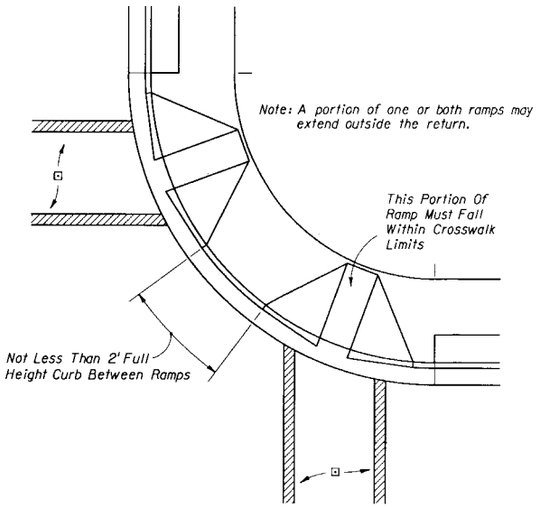

INTERMEDIATE RAMPS

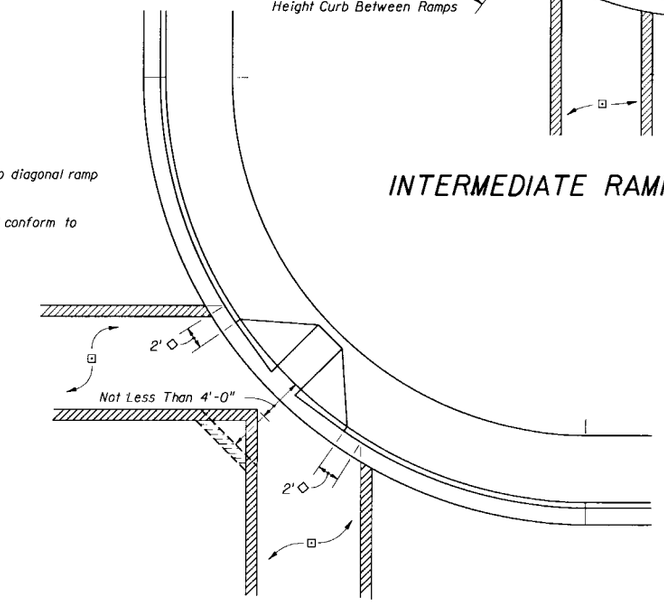

DIAGONAL RAMPS

INTRABLOCK RAMPS AND DIMENSIONAL FEATURES FOR RAMPS TRANSVERSE TO SIDEWALKS

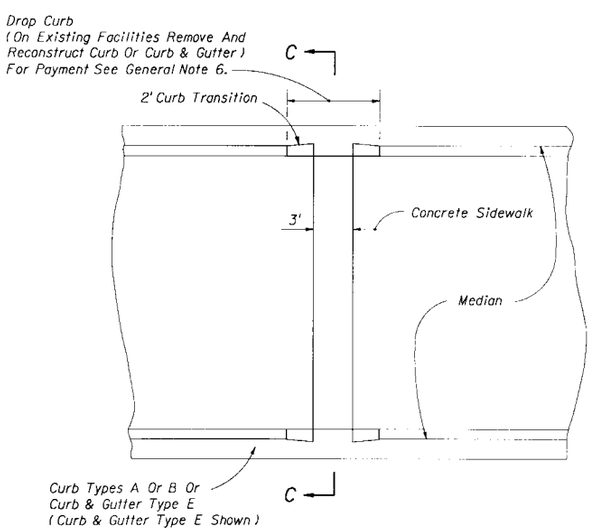

PLAN

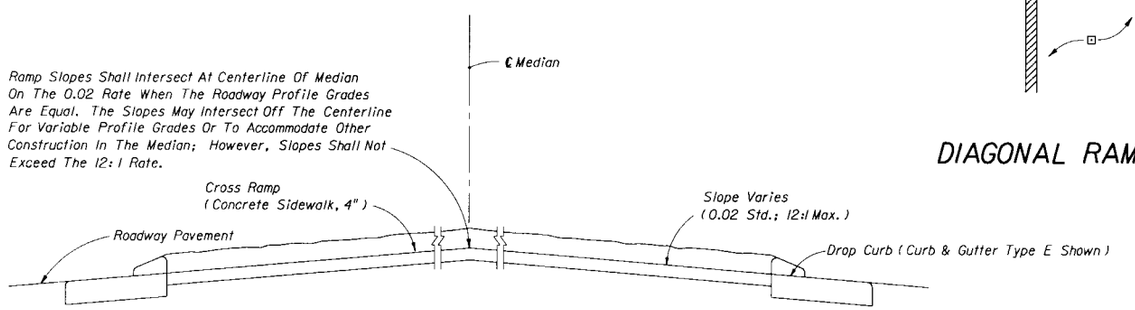

SECTION CC

MEDIAN CROSS RAMP

STATE OF FLORIDA DEPARTMENT OF TRANSPORTATION
ROAD DESIGN

CURB CUT RAMPS
PHYSICALLY HANDICAPPED

	Names	Dates
Designed By		
Drawn By	RWR	04/83
Checked By	JVG	04/83
F.H.W.A. Approved:		10/06/83

Approved By: [signature]
State Roadway Design Engineer

Revision No.	Sheet No.	Index No.
88	1 of 2	304

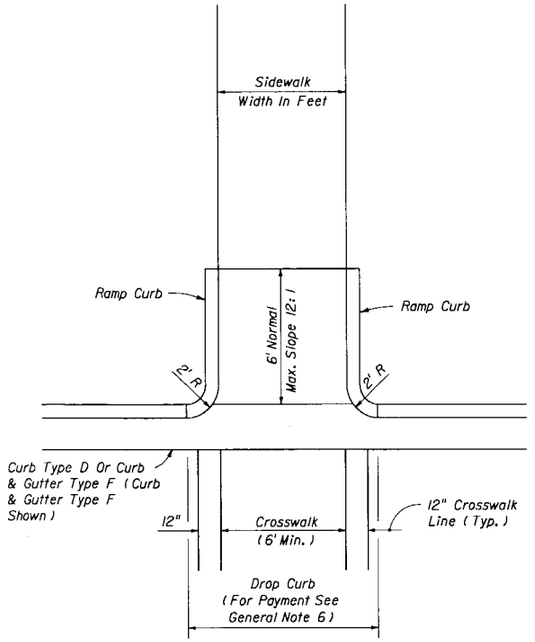

PLAN VIEW

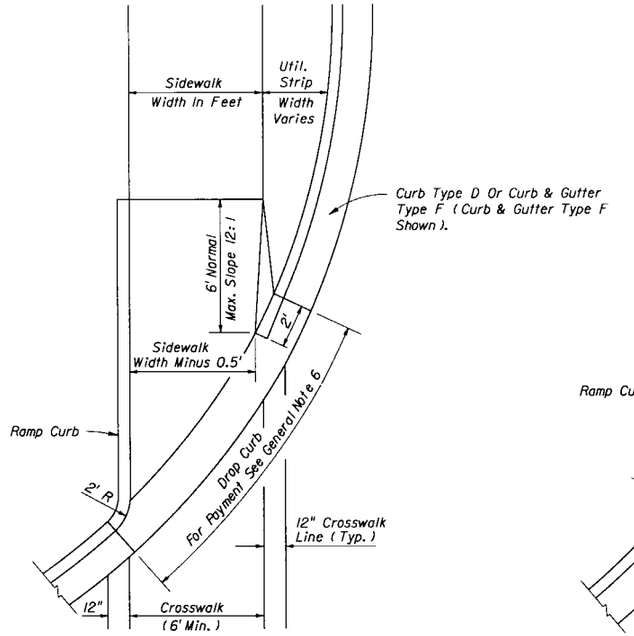

PLAN VIEW

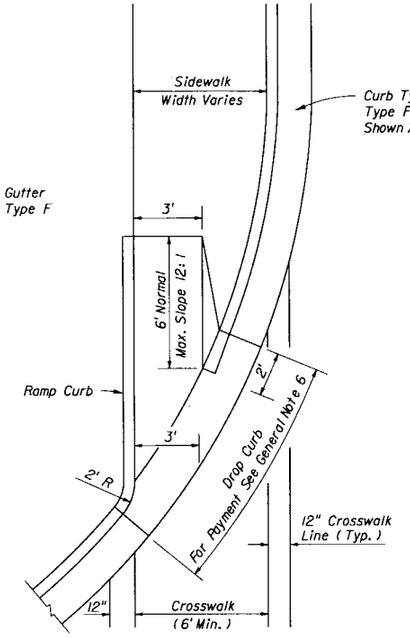

PLAN VIEW

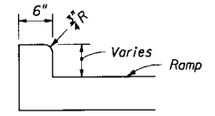

RAMP WITH INTEGRAL CAST CURB

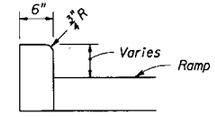

RAMP WITH SEPARATELY CAST CURB

RAMP CURB OPTIONS

GENERAL NOTES

1. Curb cut ramps are to be constructed on all curbed facilities, but only at those locations where a marked crosswalk adjoins a sidewalk; the crosswalk and sidewalk each can be either existing to remain or new markings and construction.
2. Ramps locations are to be coordinated with and in conformance with crosswalk marking details as shown in the plans.
3. If a curb ramp is located where pedestrians must walk across the ramp, then it shall have flared sides; the maximum slope of the flare shall be 12:1. See sheet 1 of 2.
   Curb ramps with returned curbs may be used where pedestrians would not normally walk across the ramp.
4. Ramps shall have a tactile surface, textured to a depth not exceeding $\frac{1}{8}$" by use of a tamp or roller fabricated with an imprinting surface of either 1" mesh 0.250 wire cloth (plain weave, conventional crimp), $1\frac{1}{2}$"#6 expanded metal (standard) or 3 lb. expanded metal grating.
5. Ramps to be constructed at all locations shown in the plans even when sidewalk is not constructed concurrently.
6. Ramps to be paid for as follows:
   Drop curb to be paid for under the contract unit price for the parent curb, ie, Conc. Curb (Type __), LF. or Conc. Curb and Gutter (Type __), LF. (On existing facilities removal of curb or curb and gutter to be included in the cost of curb or curb and gutter.).
   Ramp to be paid for under the contract unit price for Concrete Sidewalk (__), SY. (On existing facilities removal of sidewalk to be included in the cost of concrete sidewalk.). Ramp curbs are to be included in the cost for ramps; pay quantity shall be sidewalk area only.

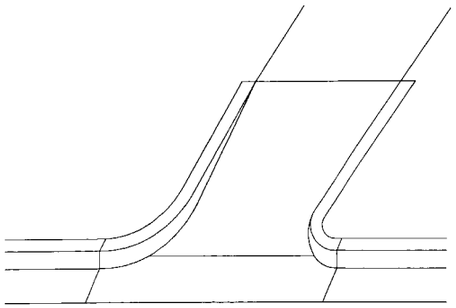

PICTORIAL VIEW

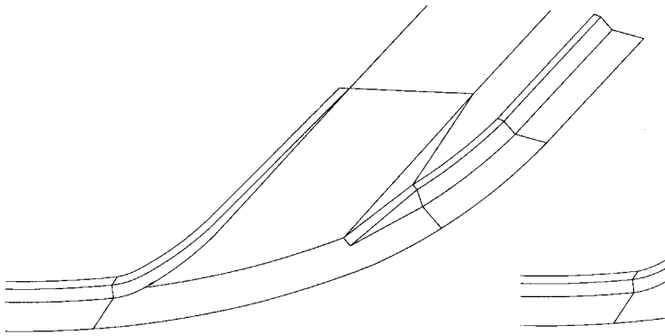

PICTORIAL VIEW

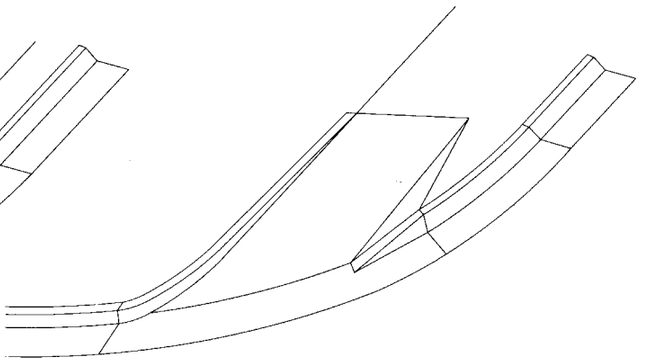

PICTORIAL VIEW

FOR TRANSVERSE PEDESTRIAN TRAFFIC SEE SHEET 1 OF 2

RAMPS FOR LINEAR PEDESTRIAN TRAFFIC

STATE OF FLORIDA DEPARTMENT OF TRANSPORTATION
ROAD DESIGN

CURB CUT RAMPS
PHYSICALLY HANDICAPPED

	Names	Dates
Designed By		
Drawn By		
Checked By		
F.H.W.A. Approved: 02/08/79		

Approved By _____
State Roadway Design Engineer

Revision No.	Sheet No.	Index No.
92	2 of 2	304

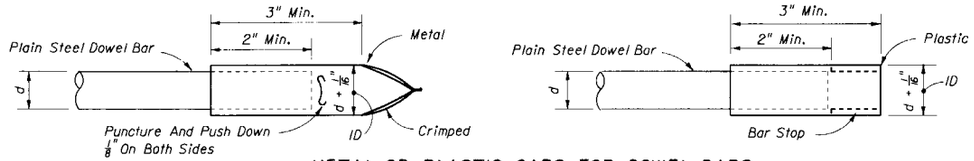

METAL OR PLASTIC CAPS FOR DOWEL BARS

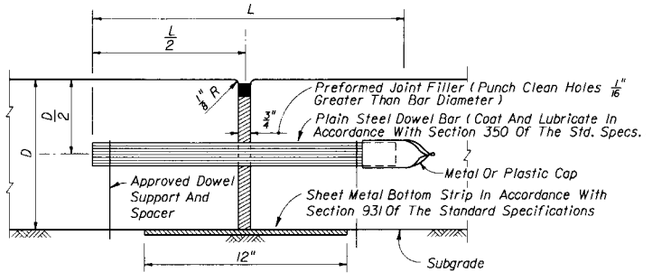

Note: Expansion joints to be placed on approaches to bridges, at street intersections and other locations indicated in detail plans.

TRANSVERSE EXPANSION JOINT

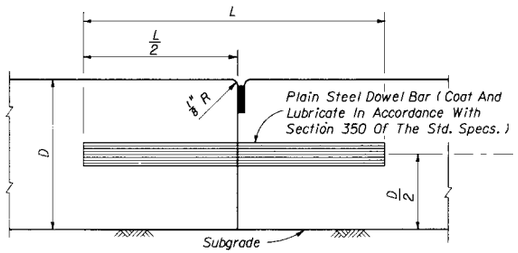

BUTT CONSTRUCTION JOINT TO BE USED AT DISCONTINUANCES OF WORK

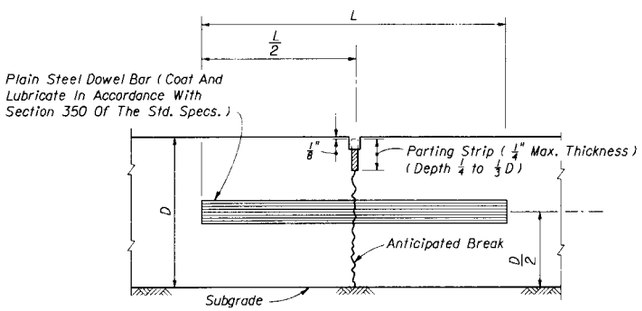

TRANSVERSE CONTRACTION JOINT, VIBRO CAST METHOD

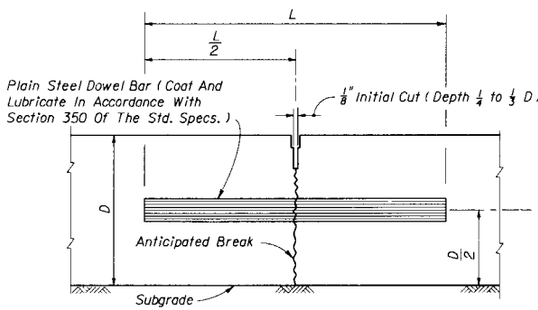

TRANSVERSE CONTRACTION JOINT, SAWED METHOD

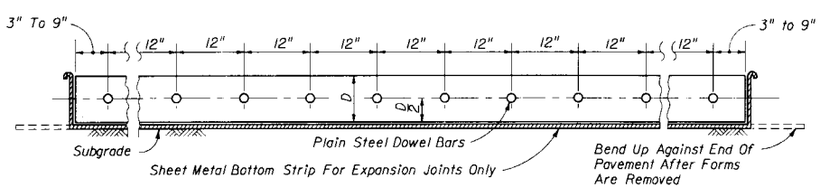

DOWEL BAR LAYOUT

DOWELS (LENGTH 18")	
Pavement Thickness "D"	Diameter
6"	1"
7"	1"
8"	1"
9"	1 1/4"
10"	1 1/4"
11"	1 1/4"
12"	1 1/4"

TRANSVERSE JOINTS ARE TO BE SPACED AT A MAXIMUM OF 20'. DOWELS ARE REQUIRED AT ALL TRANSVERSE JOINTS UNLESS OTHERWISE NOTED IN PLANS.

TRANSVERSE JOINTS

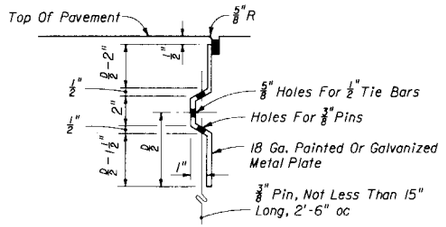

DEFORMED METAL PLATE

TIE BAR SPACING WITH MAXIMUM DISTANCE TO FREE EDGE 12'		
Pavement Thickness "D"	Maximum Spacing	
	No. 4 Bars Length 25"	No. 5 Bars Length 30"
6"	48"	48"
7"	45"	48"
8"	40"	48"
9"	35"	48"
10"	32"	48"
11"	29"	45"
12"	26"	41"

For Pavement Thickness Or For Joint Spacings Not Covered Herein Refer To FDOT Jointed Plain Concrete Pavement Design Manual

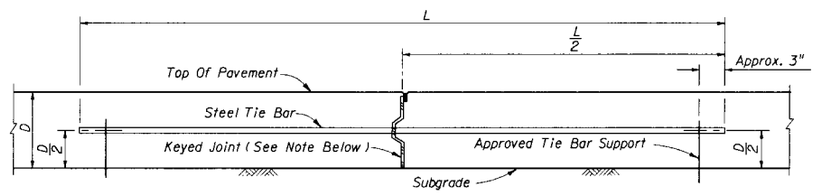

Note: Keyed longitudinal joints are required on all concrete pavement 9" thick or greater. The keyed joint may be formed by either the metal plate detailed above; by bolting shaped timber to the side form; or, by extrusion from slip-form paver. Alternate keyway shape and tie bar details may be approved by the Engineer.

LONGITUDINAL CONSTRUCTION JOINT

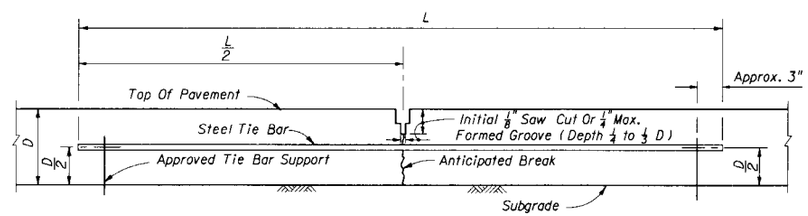

Note: Slabs poured simultaneously. Tie bars may be inserted in the plastic concrete by means approved by the Engineer.

LONGITUDINAL LANE-TIE JOINT

LONGITUDIAL JOINTS

Note: For joint seal dimensions see Sheet 2 of 5.

STATE OF FLORIDA DEPARTMENT OF TRANSPORTATION
ROAD DESIGN

CONCRETE PAVEMENT JOINTS

	Names	Dates
Designed By		
Drawn By	HW	08/57
Checked By	HEC	08/57
F.H.W.A. Approved:		10/07/80

Approved By
State Pavement Design Engineer

Revision No.	Sheet No.	Index No.
90	1 of 5	305

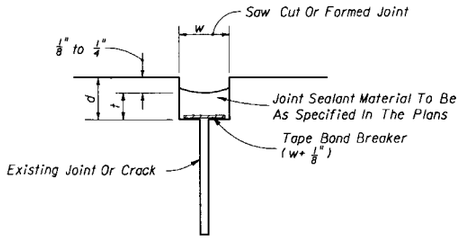

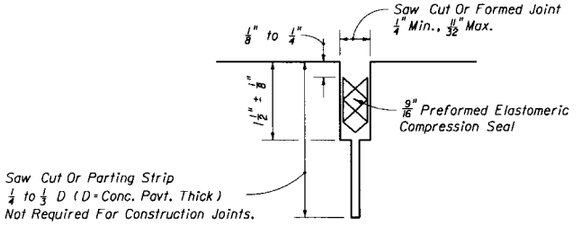

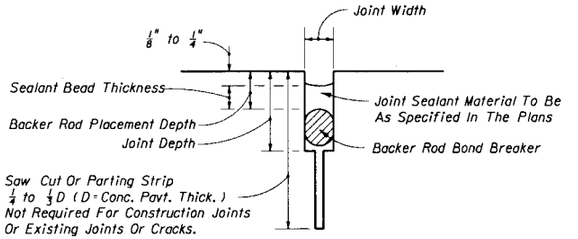

Note: Dimension w will be shown in the plans or established by the Engineer based on field conditions. Dimension d will be constructed so that the shape factor $\frac{w}{t}$ has a maximum value of 2.0 and a mimimum value of 1.0.

BACKER ROD BOND BREAKER (CONCRETE-CONCRETE JOINTS)				
JOINT DIMENSIONS (INCHES)				
JOINT WIDTH	SEALANT BEAD THICKNESS	BACKER ROD DIAMETER	MINIMUM JOINT DEPTH	BACKER ROD PLACEMENT DEPTH
1/4	1/4	3/8	1	1/2
3/8	1/4	1/2	1 1/4	1/2
1/2	1/4	5/8	1 1/4	1/2
5/8	5/16	3/4	1 1/2	9/16
3/4	3/8	1	1 3/4	5/8
7/8	7/16	1 1/8	1 3/4	11/16
1	1/2	1 1/4	2	3/4
>1	1/2	1 1/4 +	2+	3/4

Unless otherwise indicated on the plans the joint width for new construction will be 1/4" for construction joints, 3/8" for all other joints.

For rehabilitaion projects the joint width will be shown on the plans or established by the Engineer based on field conditions.

FOR REHABILITATION PROJECTS
TAPE BOND BREAKER

FOR NEW PROJECTS
PREFORMED ELASTOMERIC COMPRESSION SEAL

FOR NEW AND REHABILITATION PROJECTS
BACKER ROD BOND BREAKER

CONCRETE-CONCRETE JOINTS

d = w = 3/4" Unless Specified Otherwise In The Plans

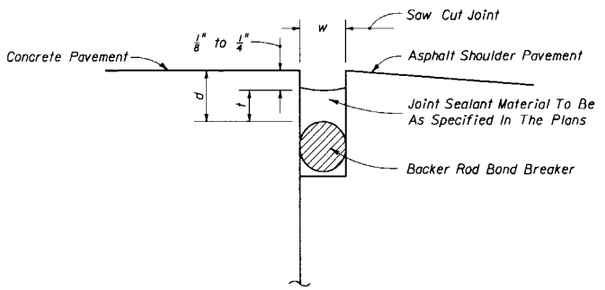

BACKER ROD BOND BREAKER

d = w = 3/4" Unless Specified Otherwise In The Plans

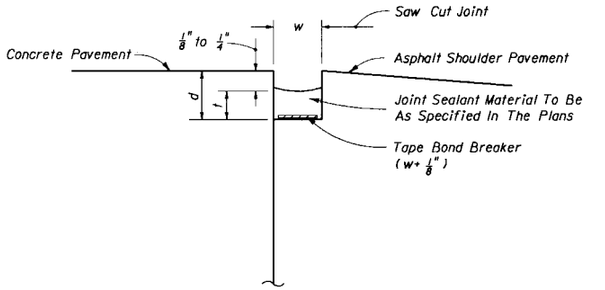

TAPE BOND BREAKER

FOR NEW AND REHABILITATION PROJECTS;
EITHER TAPE OR BACKER ROD BOND BREAKER REQUIRED;
SHOULDER MUST BE REPAIRED IF PROPER JOINT SHAPE
CAN NOT BE ATTAINED

CONCRETE-ASPHALT SHOULDER JOINTS

JOINT SEAL DIMENSIONS

STATE OF FLORIDA DEPARTMENT OF TRANSPORTATION
ROAD DESIGN

CONCRETE PAVEMENT JOINTS

	Names	Dates
Designed By	WNL	05/86
Drawn By	HSD	05/86
Checked By	JVG	05/86
F.H.W.A. Approved:		11/07/86

Approved By: _____
State Pavement Design Engineer

Revision No.	Sheet No.	Index No.
90	2 of 5	305

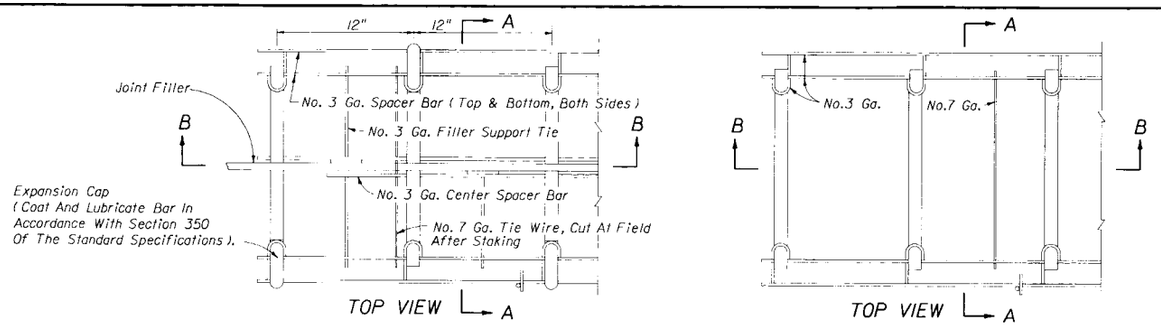

WADY INDUSTRIES, INC.

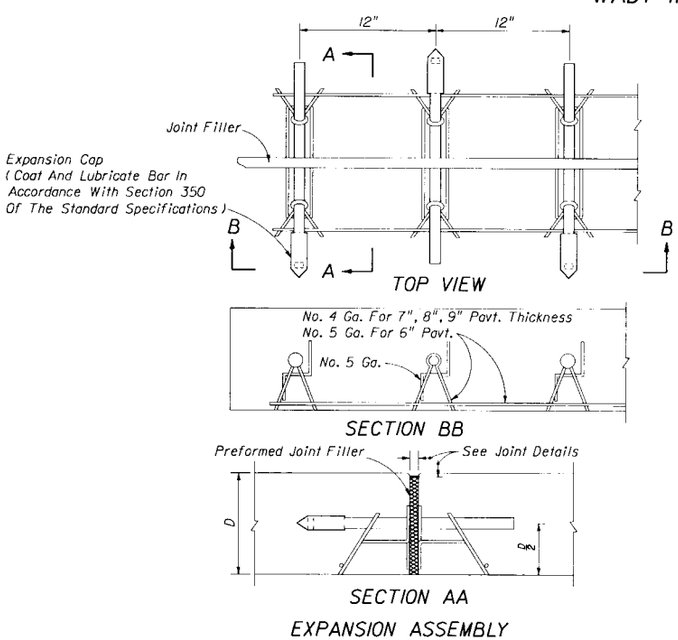

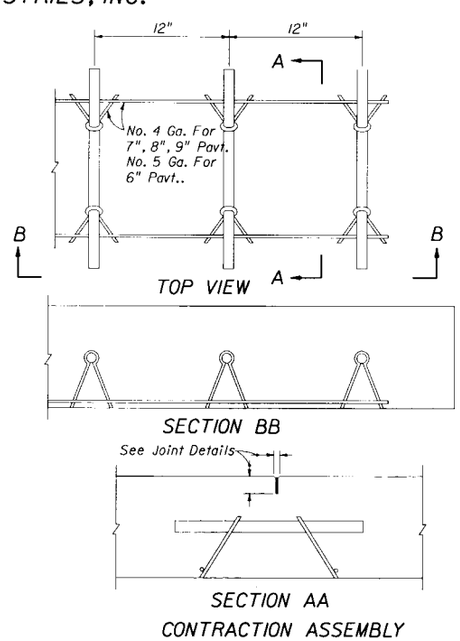

FLORIDA STEEL CORPORATION

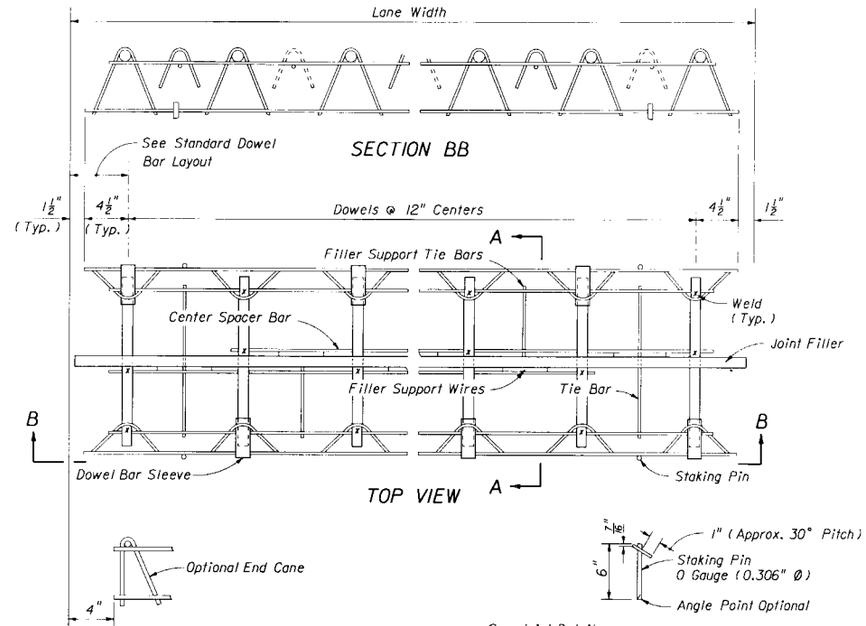

*Expansion assembly is illustrated. For contraction assembly omit expansion joint material, center spacer bars, filler support wires, support tie bars and dowel bar sleeves.

EXPANSION AND CONTRACTION ASSEMBLY*

THE DAYTON SURE GRIP AND SHORE COMPANY

DOWEL ASSEMBLIES FOR EXPANSION AND CONTRACTION JOINTS

STATE OF FLORIDA DEPARTMENT OF TRANSPORTATION
ROAD DESIGN

CONCRETE PAVEMENT JOINTS

	Names	Dates
Designed By		
Drawn By	JAD	09/81
Checked By	JVG	09/81
F.H.W.A. Approved:		10/07/80

Approved By: _____
State Pavement Design Engineer

Revision No.	Sheet No.	Index No.
87	3 of 5	305

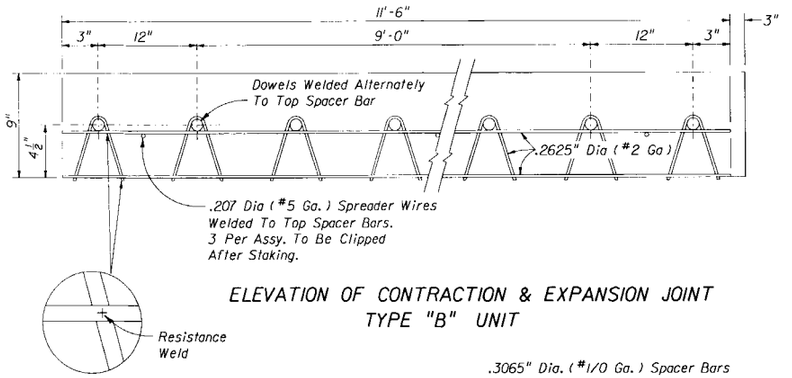

ELEVATION OF CONTRACTION & EXPANSION JOINT
TYPE "B" UNIT

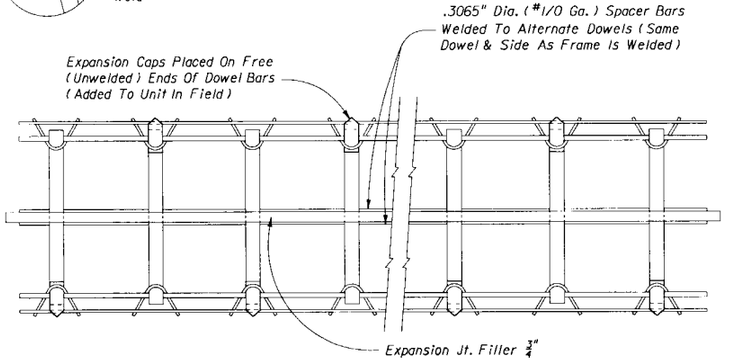

PLAN
TYPE "B" UNIT

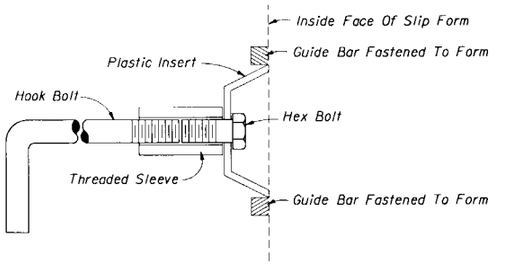

NOTE: After the concrete has set to the extent that the Keyway will retain its shape, the hex bolt and plastic insert shall be removed. The remaining portion of the hook bolt assembly shall be installed immediately prior to placing of concrete in the adjacent lane.

ALTERNATE KEYWAY AND HOOK BOLT

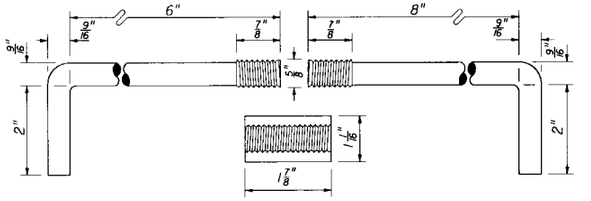

DETAIL FOR STEEL HOOK BOLT ASSEMBLY

STEEL HOOK BOLT ASSEMBLY

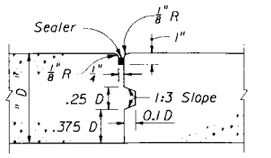

DETAIL OF KEYED JOINT

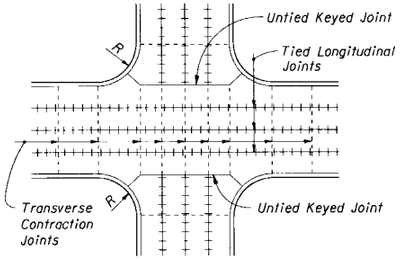

JOINT LAYOUT AT THRU INTERSECTION

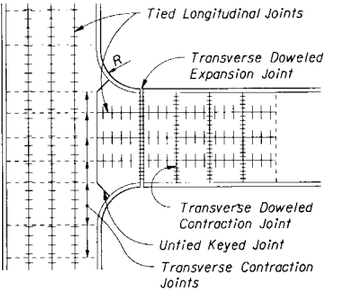

JOINT LAYOUT AT 'T' INTERSECTIONS

NOTES

1. Longitudinal joints will not be required for single lane pavement 14' or less in width. For entrance and exit ramp joint details, see sheet 5 of 5.
2. When pavement width necessitates five or more longitudinal joints which would normally be tied, provide one or more untied but keyed joints. No joint shall be tied that is more than 24' from a free edge or free joint including tied rigid shoulders.
3. Arrangement of longitudinal joints are to be as directed by the Engineer.
4. All manholes, meter boxes and other projections into the pavement shall be boxed-in with ½" preformed expansion joint material.

DETAIL OF JOINT ARRANGEMENT

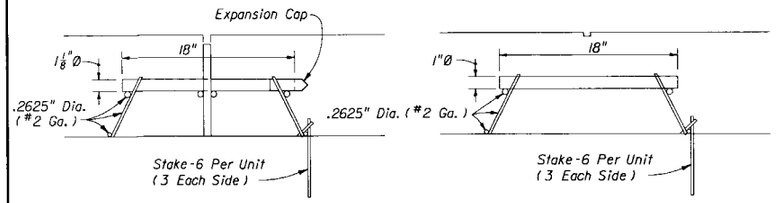

SECTION THROUGH EXPANSION JOINT UNIT

SECTION THROUGH CONTRACTION JOINT UNIT

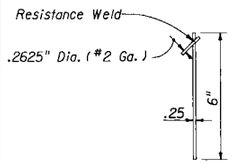

STAKE DETAIL

EXPANSION AND CONTRACTION JOINT DOWEL ASSEMBLY ALTERNATE

IRONCO MFG. CO. INC.
HELENA, AL
(Formerly Hugensmith Materials, Inc. Pelham, AL)

STATE OF FLORIDA DEPARTMENT OF TRANSPORTATION
ROAD DESIGN

CONCRETE PAVEMENT JOINTS

	Names	Dates
Designed By		
Drawn By	LMF	06/15
Checked By	SFA	06/15
F.H.W.A. Approved:		10/07/90

Approved By
State Pavement Design Engineer

Revision No.	Sheet No.	Index No.
92	4 of 5	305

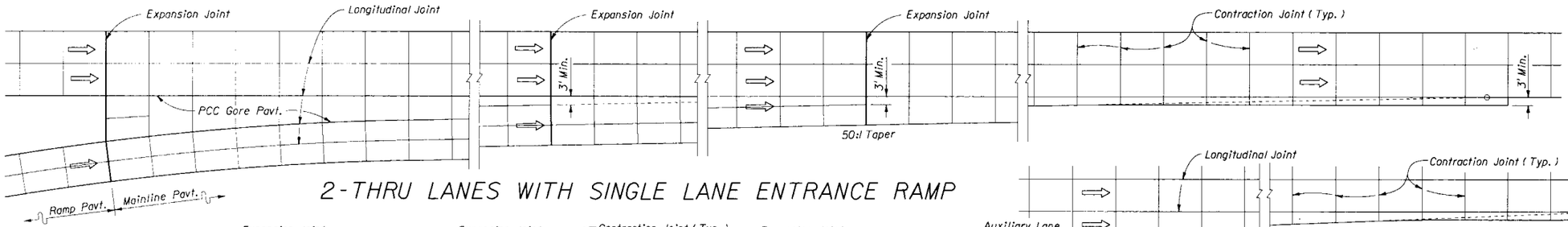

2-THRU LANES WITH SINGLE LANE ENTRANCE RAMP

ENTRANCE TAPER WITH AUXILIARY LANE

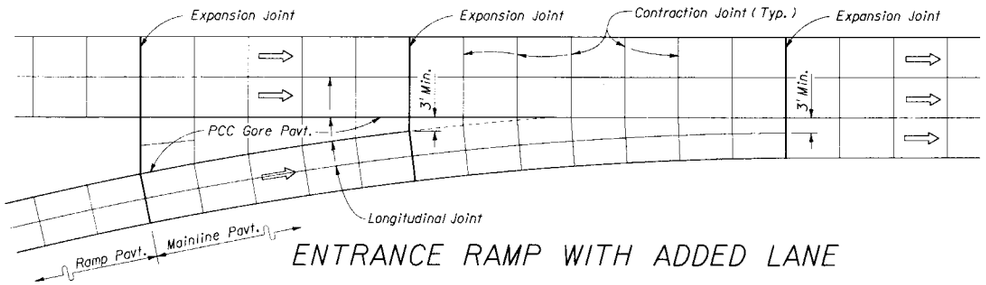

ENTRANCE RAMP WITH ADDED LANE

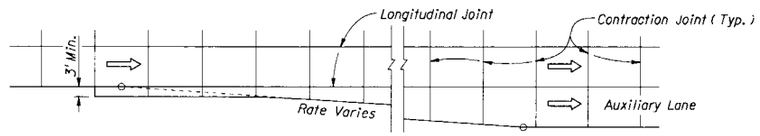

EXIT TAPER WITH AUXILIARY LANE

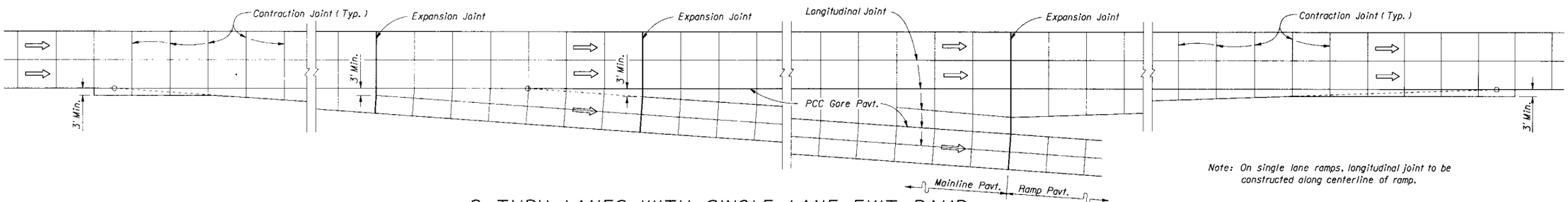

2-THRU LANES WITH SINGLE LANE EXIT RAMP

Note: On single lane ramps, longitudinal joint to be constructed along centerline of ramp.

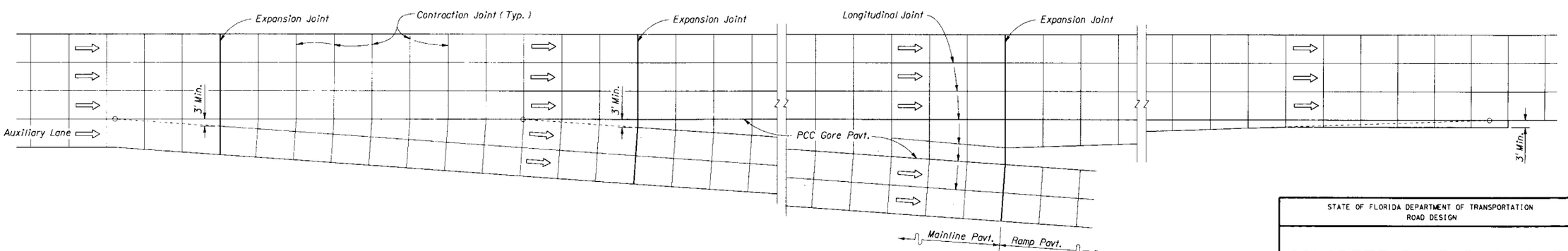

3-THRU LANES WITH AUXILIARY LANE AND 2-LANE EXIT RAMP

JOINT LAYOUT AT ENTRANCE AND EXIT RAMP TERMINALS

STATE OF FLORIDA DEPARTMENT OF TRANSPORTATION
ROAD DESIGN

CONCRETE PAVEMENT JOINTS

	Names	Dates
Designed By	HKH/BTD	11/91
Drawn By	HKH	11/91
Checked By	WNL	11/91

Approved By
State Pavement Design Engineer

F.H.W.A. Approved:

Revision No.	Sheet No.	Index No.
92	5 of 5	305

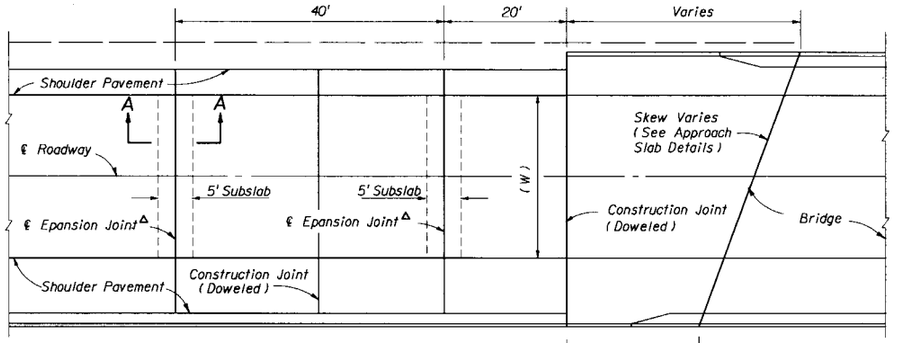

△Expansion Joints Shall Be Constructed Parallel To The Existing Transverse Pavement Joints On Rehabilitation Projects, And Parallel To The Standard Transverse Pavement Joints Shown In The Plans For New Construction.

PLAN

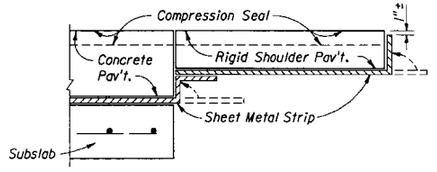

WITH RIGID SHOULDER PAVEMENT

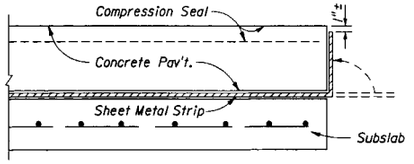

WITH GRASSED SHOULDER OR FLEXIBLE SHOULDER PAVEMENT

Note: Immediately prior to placing the seal, the joint shall be thoroughly cleaned of all foreign material. Immediately after the seal is placed, sheet metal strip shall be bent up against the pavement edge.

The sheet metal strip shall be a minimum 16 gage steel, 12" wide and shall be galvanized in accordance with ASTM A-526, Coating Designation G90.

Rigid shoulder pavement shall be concrete or econcrete as called for in the plans.

DETAIL SHOWING SHEET METAL STRIP

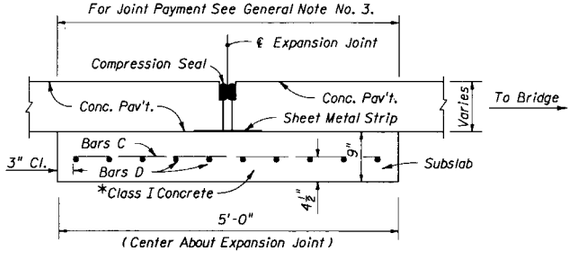

REINFORCING STEEL				
Mark	Size	Spac.	No. Reg.	Lgth.
C	5	6"	Varies	4'-6"
D	5	6"	10	W Minus 6"

*Finish surface smooth. Cure with heavy coating of wax base white pigmented curing compound. Apply second application immediately prior to placing pavement.

SECTION AA

EXPANSION JOINT

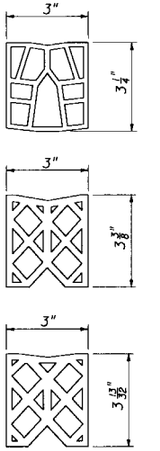

OPTIONAL SEALS

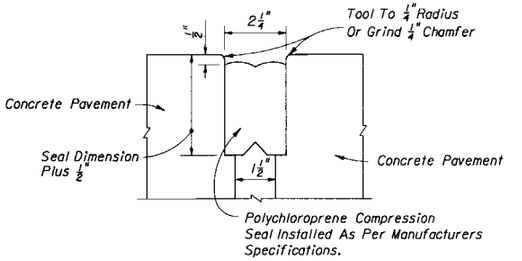

Note: All contacting surfaces between the compression seal and concrete shall be thoroughly coated with a lubricant-adhesive.

JOINT DIMENSIONS

COMPRESSION SEAL DETAIL

DESIGN NOTES

1. For rehabilitation projects, the designer must indicate in the plans the number of slabs to be removed, the number of sub slabs to be constructed/reconstructed, and the location of expansion joints.
2. Pay quantity of expansion joint to be calculated across pavement at right angles to the centerline of the roadway pavement. Shoulder pavement joint included.

GENERAL NOTES

1. The centerline of roadway and the centerline of bridge do not necessarily coincide. Prior to the placement of the expansion joint, the centerline of the roadway pavement shall be determined.
2. For information on other types of concrete pavement joints see Index No. 305.
3. Pay quantity for expansion joint is the length of joint to be constructed across the roadway and shoulder pavements, measured at right angles to the centerline of the roadway.

   Payment for expansion joint shall be full compensation for joint construction, including reinforced concrete subslab, sheet metal strip and compression seal, but, not including roadway pavement reconstruction associated with joint replacement or reconstruction.

   Expansion joint to be paid for under the contract unit price for Bridge Approach Expansion Joint, LF.

STATE OF FLORIDA DEPARTMENT OF TRANSPORTATION
ROAD DESIGN

BRIDGE APPROACH EXPANSION JOINT - CONCRETE PAVEMENT

	Names	Dates
Designed By		
Drawn By	LMF	06/75
Checked By	SFA	06/75
F.H.W.A. Approved:		08/16/77

Approved By
State Pavement Design Engineer

Revision No.	Sheet No.	Index No.
92	1 of 1	306

GENERAL NOTES

1. The illustrated applications for guardrail are standard requirements.

   The beginning of guardrail need shall be at the greatest of the upstream distances from the hazard, as determined from Figure 1, other applicaation details of this index and the lengths described below for bridges.

   Bridges generally have associated lateral hazards, whereby the length of advancement is established by the intersect of the hazard boundary and the clear zone limit as shown in Figure 1. For bridges that extend in advance of the lateral hazard a distance sufficient to shield the hazard, and the ends of their traffic rails or handrail are the only hazards that require shielding, then the length of guardrail will be either 62.5 feet or 87.5 feet in accordance with Details H, I, S & T of this index; however, when Schemes 11, 12, 13 & 14 of Index No. 401 apply, these lengths must be increased to achieve the reverse bridge connections in those Schemes.

2. One panel equals 12.5 feet. Post spacings shall be 6'-3" except that reduced spacings shall be used for (a) transitions to anchorages at rigid structures such as bridges (See Detail J), (b) the conditions in Note No. 3 below, (c) special post applications, (d) the specific post spacings shown in Index No. 401, and, (e) specific spacings called for in the plans.

3. At above ground rigid hazards where the face of guardrail is offset from the hazard less than the desirable 4 foot minimum, a 3 foot minimum offset may be used with post spacing of 3'-1½" extending over the length of the hazard plus one panel of approach rail. For an offset less than 3 feet, the concrete safety shape shall be used unless other shielding is approved by the Engineer of record. See Index 410, detail "Shoulder Barrier At Rigid Above Ground Hazards" for typical safety shape, and the plans for special shapes and applications.

4. In addition to use at conventional roadside hazards, guardrail will be required where fill slopes within the clear zones exceed 3:1, except that where fill heights are less than 6 feet guardrail may be omitted (regardless of fill slope) unless in the opinion of the Engineer its use is deemed necessary due to other roadside features.

5. Straight rail sections may be used for all radii of 125 feet or greater. For radii less than 125 feet the rail must be fabricated to fit.

6. Corrugated sheet steel beams, end shoes, end sections and back-up plates shall conform to the current requirements of AASHTO M180, Class A (12 ga.), Type 2 (zinc) coating. Aluminum guardrail elements will not be permitted unless specifically called for in the plans. All other metallic componets, hardware and accessories shall be in conformance with the appropriate current AASHTO requirements.

7. Permissible post and offset block combinations are tabulated on sheet 11 of 14.

8. Where necessary to enlarge or add holes to galvanized guardrail, the work will be done by drilling or reaming. Damaged galvanized guardrail will be metalized in accordance with Sections 562 and 971 of the Standard Specifications. No burning of holes will be permitted.

9. Guardrail reflector color (white or yellow) shall conform to the color of the near lane edgeline.

10. Crash cushions may be required in lieu of or in conjunction with guardrail at locations where space does not permit development of sufficient guardrail length, offset or crashworthiness at terminals. On high speed facilities (50 mph or greater) crash cushions shall be constructed at Type II end anchorages located in the median within the clear zone.

11. Median guardrail for bridges located on divided roadways shall be constructed the same as outer roadway guardrail under the following conditions:
    (a) Medians of uniform width that are occupied by other transportation and joint use facilities.
    (b) Medians of uniform variable widths with independent vertical alignments not suited to normal median guardrail installations.
    (c) Medians of bifurcated roadways.

12. Any guardrail with existing concrete posts that is being reset under a construction contract shall be reset using wood or steel posts.

13. All guardrail panels, end sections and special end shoes shall be lapped in the direction of adjacent traffic.

14. Guardrail mounting height of 1'-9" to center of W beam and 1'-6" to lower post bolt in thrie beam is critical and shall be attained in all cases.

15. Guardrail connections to existing bridges shall be in accordance with this Index Index No.401. Connections to concrete barrier walls shall be in accordance with this index and Index No. 410.

Design Speed (mph)	X (Length Of Advancement) Ft. ◪
50-70	= 13 (D-d)
45 Or Less	= 16 (D-d)

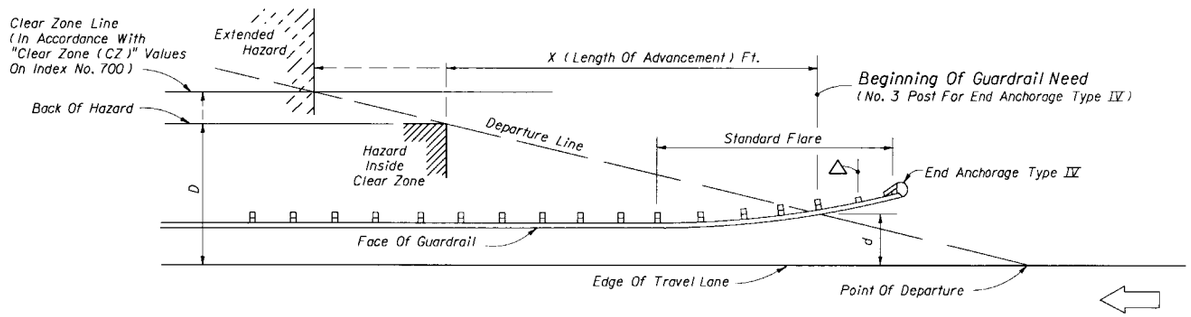

◪ Length of advancement determined from the diagram and equations above establishes the location of the upstream beginning of need for guardrail, however, the length of advancement can be no less than that required by other details of this index, and by the minimum lengths described by General Note No. 1.

The Standard Flare with End Anchorage Type IV is shown in the diagram above, however, the diagram applies to other configurations that may occur at the beginning of need, such as, other flare designs; upstream returns; and, other upstream deflected, tangent and curvalinear conditions.

△ Type IV End Anchorages constructed prior to July 1, 1990, which were located by the line of departure passing through the face of rail at the second breakaway post, will not require relocation except under the following conditions: (a) the plans call for resetting or relocation (b) so directed by the Engineer. Reset or relocated guardrail is to be set with the line of departure passing through the face of rail at the third post as shown.

Equation Variables:

D = Distance in feet from near edge of the near approach travel lane to either (a) the back of hazard, when the hazard is located inside the clear zone or (b) the clear zone line, when the hazard extends to or goes beyond the clear zone line. For left side hazards and clear zones on two-way undivided facilities, D is measured from the inside edge of the near approach travel lane.

d = Distance in feet from the near edge of the near approach travel lane to the face of guardrail at its intersection with the departure line (No. 3 post where End Anchorage Type IV used). For left side hazards and clear zones on two-way undivided facilities, d is measured from the inside edge of the near approach travel lane. See Standard Flare-Detail P for additional information.

LENGTH OF ADVANCEMENT

Figure 1

STATE OF FLORIDA DEPARTMENT OF TRANSPORTATION
ROAD DESIGN

GUARDRAIL

	Names	Dates
Designed By		
Drawn By	HSD	8/83
Checked By	JVG	8/83
F.H.W.A. Approved:		10/06/83

Approved By: Ray L. Lemme
State Roadway Design Engineer

Revision No.	Sheet No.	Index No.
92	1 of 14	400

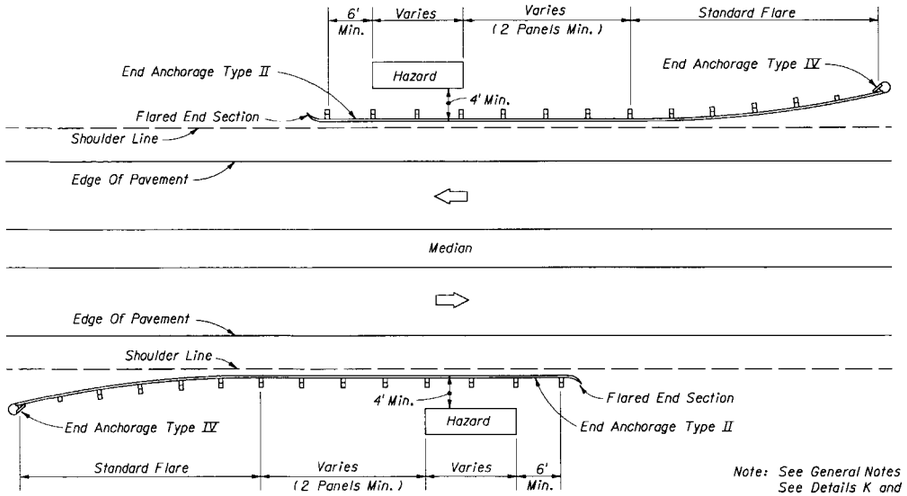

DIVIDED ROADWAY - DETAIL B

Note: See General Notes Nos. 1, 2, 3, and 4.
See Details K and L for guardrail offsets.
See Detail P for standard flare.
For urban curb and gutter sections that require shielding from hazards see concrete barrier wall Index No. 410.

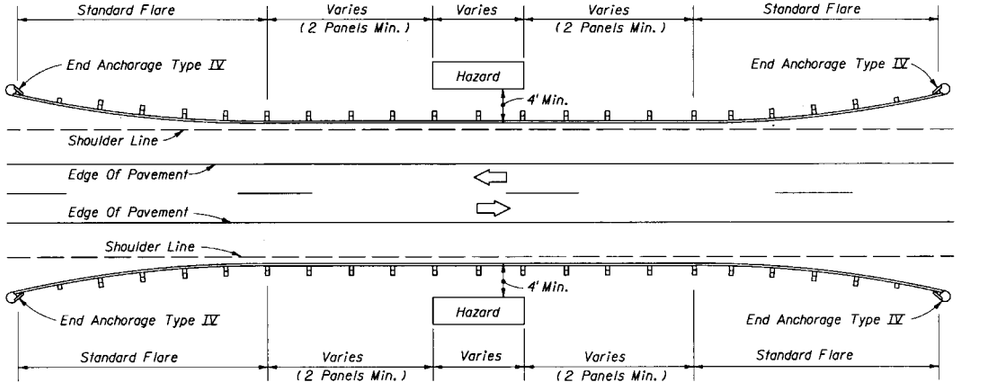

UNDIVIDED ROADWAY - DETAIL C

GUARDRAIL APPLICATION FOR ROADSIDE HAZARDS

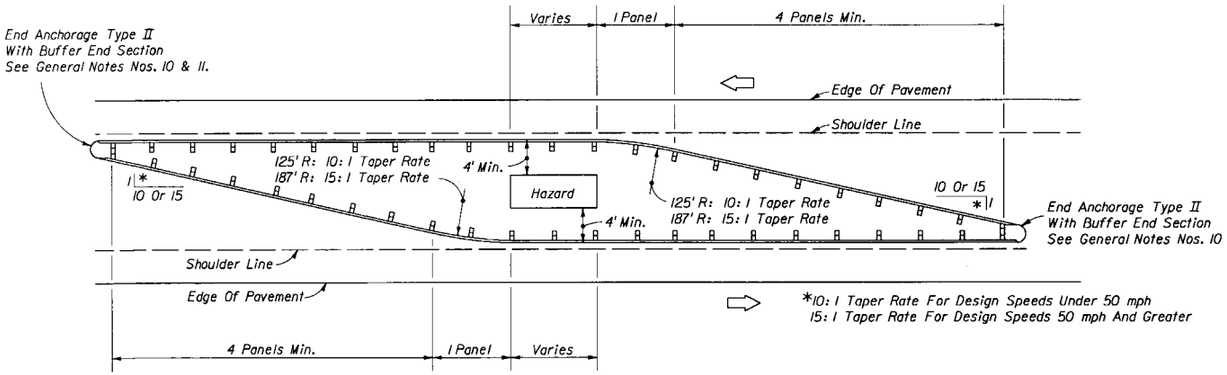

OPPOSING TRAFFIC - DETAIL D

Note: See General Notes Nos. 1, 2, 3 and 11.
See Details K and L for guardrail offsets.
For urban curb and gutter sections that require shielding from hazards see concrete barrier wall Index No. 410.

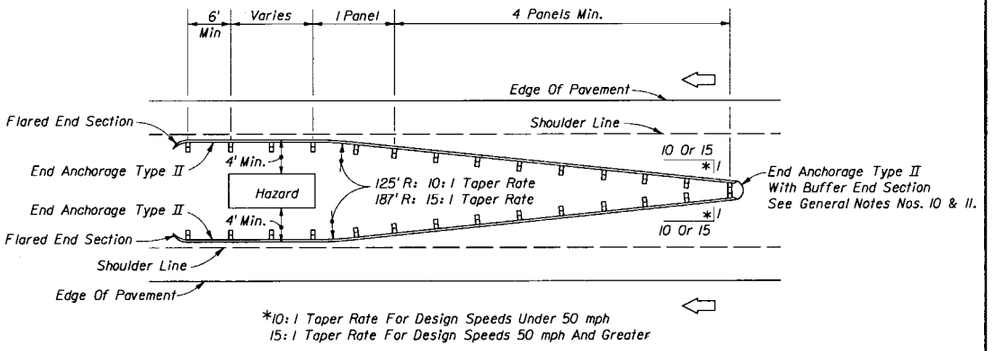

ONE-WAY TRAFFIC - DETAIL G

GUARDRAIL APPLICATION FOR MEDIAN AND GORE HAZARDS

STATE OF FLORIDA DEPARTMENT OF TRANSPORTATION
ROAD DESIGN

GUARDRAIL

	Names	Dates
Designed By		
Drawn By	HSD	09/81
Checked By	JBW/MG	09/81
F.H.W.A. Approved:		10/08/81

Approved By: [signature]
State Roadway Design Engineer

Revision No.	Sheet No.	Index No.
92	2 of 14	400

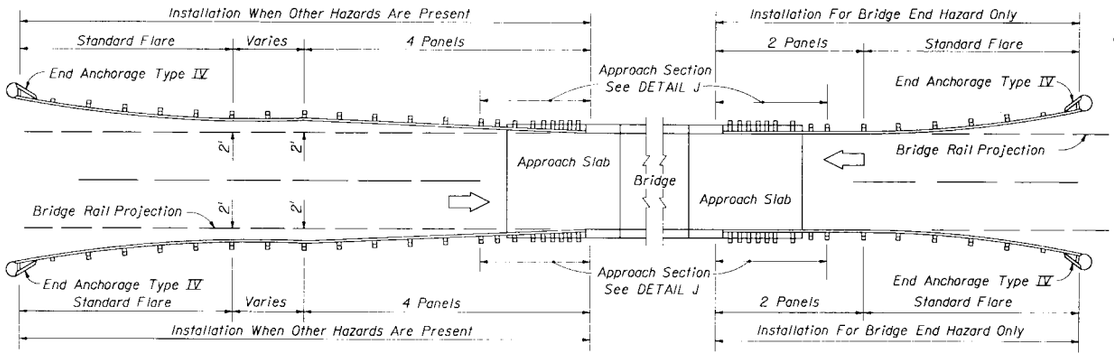

UNDIVIDED ROADWAY - DETAIL H

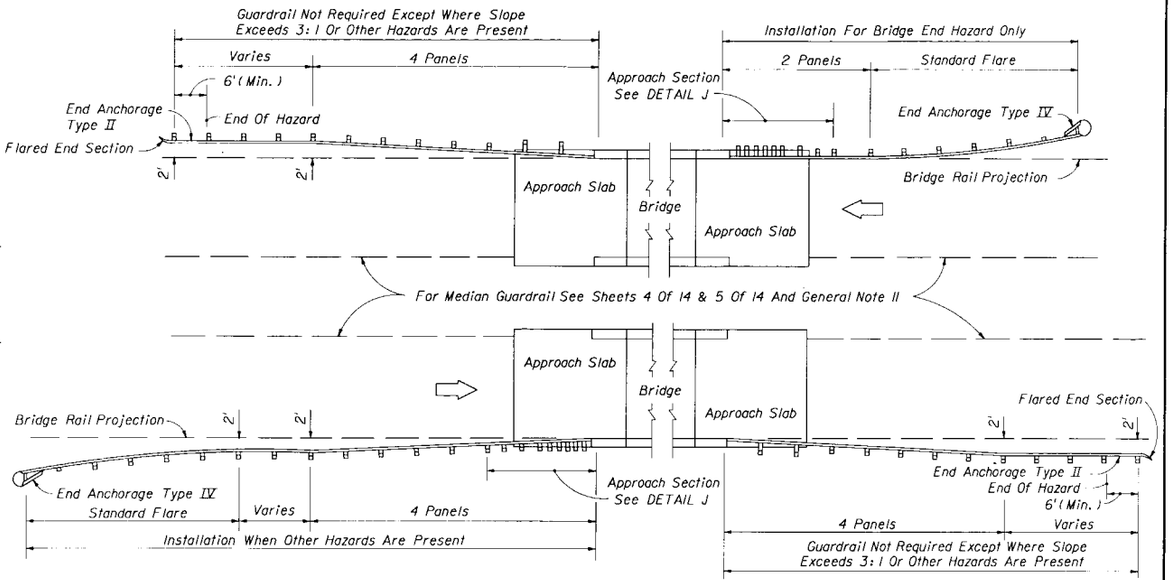

DIVIDED ROADWAY - DETAIL I

Note: See General Notes Nos. 1 and 2. See Details J and N For Connections To Bridges

GUARDRAIL APPLICATIONS FOR BRIDGES WITH FULL WIDTH SHOULDERS

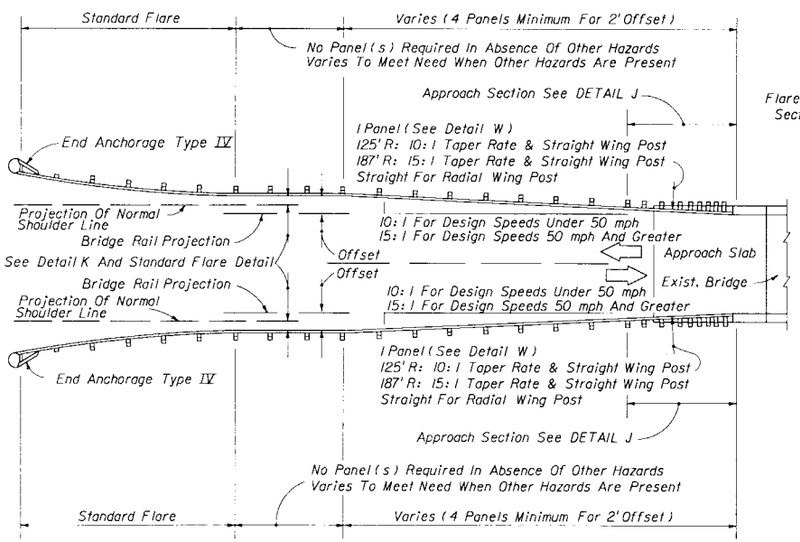

UNDIVIDED ROADWAY - DETAIL S

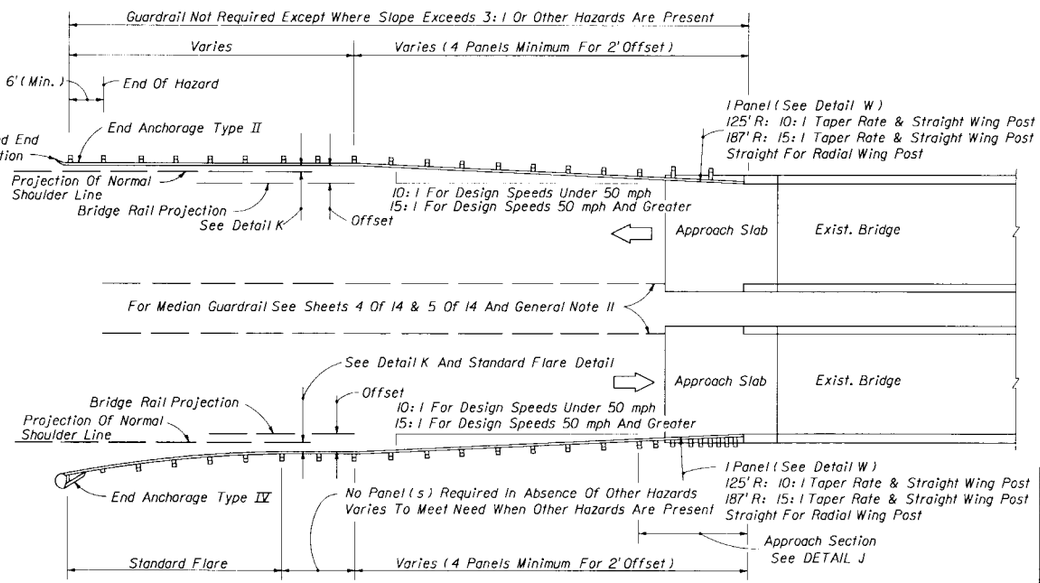

DIVIDED ROADWAY - DETAIL T

Note: See General Note No. 2. See Details J And N And Index No. 401 For Connections To Bridges.

GUARDRAIL APPLICATIONS FOR EXISTING BRIDGES WITH LESS THAN FULL WIDTH SHOULDERS

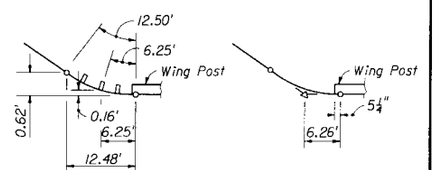

125' RADIAL PANEL

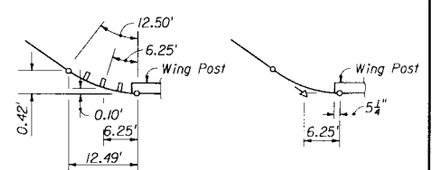

187' RADIAL PANEL

RADIAL PANELS ADJOINING BRIDGE

DETAIL W

STATE OF FLORIDA DEPARTMENT OF TRANSPORTATION
ROAD DESIGN

GUARDRAIL

	Names	Dates
Designed By		
Drawn By	HSD	08/83
Checked By	JBW/JMG	08/83
F.H.W.A. Approved:		10/06/83

Approved By: Hugh Rasmussen
State Roadway Design Engineer

Revision No.	Sheet No.	Index No.
92	3 of 14	400

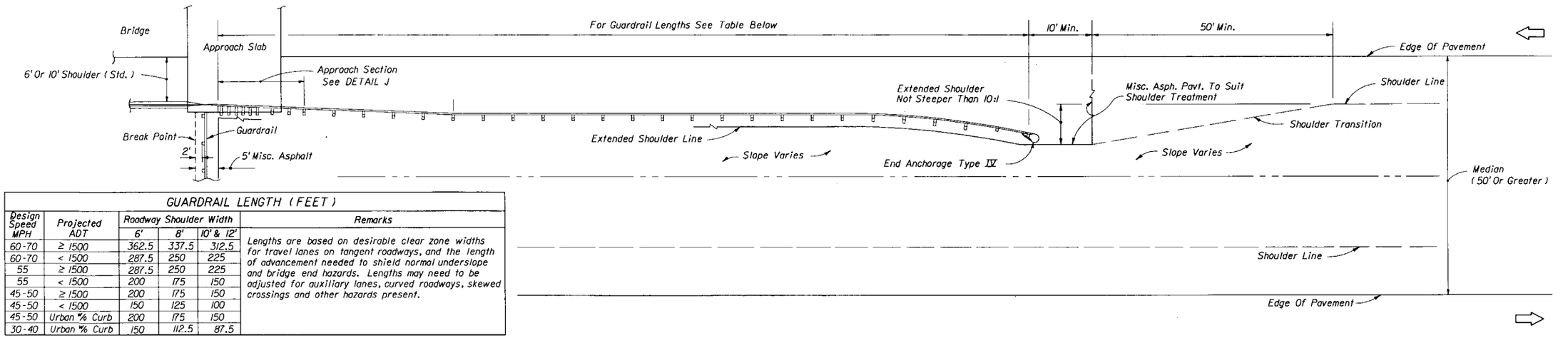

GUARDRAIL LENGTH (FEET)					
Design Speed MPH	Projected ADT	Roadway Shoulder Width 6'	8'	10' & 12'	Remarks
60-70	≥ 1500	362.5	337.5	312.5	Lengths are based on desirable clear zone widths for travel lanes on tangent roadways, and the length of advancement needed to shield normal underslope and bridge end hazards. Lengths may need to be adjusted for auxiliary lanes, curved roadways, skewed crossings and other hazards present.
60-70	< 1500	287.5	250	225	
55	≥ 1500	287.5	250	225	
55	< 1500	200	175	150	
45-50	≥ 1500	200	175	150	
45-50	< 1500	150	125	100	
45-50	Urban "% Curb	200	175	150	
30-40	Urban "% Curb	150	112.5	87.5	

GUARDRAIL APPLICATIONS FOR MEDIANS 50 FEET OR GREATER

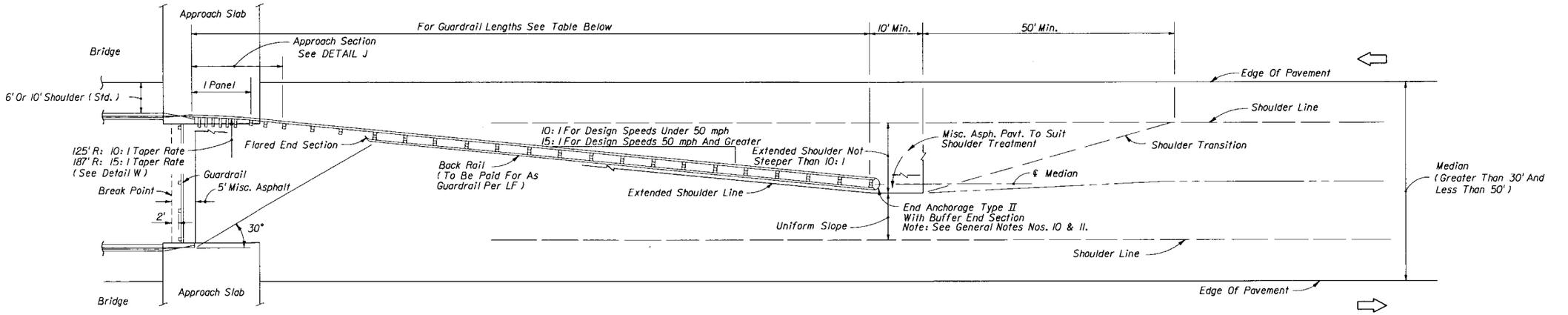

GUARDRAIL LENGTHS																							
Median Width (Ft.)	10:1 TAPER RATE												15:1 TAPER RATE										
	6' Bridge Shoulder						10' Bridge Shoulder						6' Bridge Shoulder						10' Bridge Shoulder				
	Panels (No.)			Length (Ft.)			Panels (No.)			Length (Ft.)			Panels (No.)			Length (Ft.)			Panels (No.)			Length (Ft.)	
	Front	Back	Total	Front	Back	Total	Front	Back	Total	Front	Back	Total	Front	Back	Total	Front	Back	Total	Front	Back	Total	Front	Back	Total
32	8	6	14	100	75	175	5	4	9	62.5	50	112.5	11	9	20	137.5	112.5	250	6	5	11	75	62.5	137.5
34	8	6	14	100	75	175	5	4	9	62.5	50	112.5	12	10	22	150	125	275	7	6	13	87.5	75	162.5
36	9	7	16	112.5	87.5	200	6	5	11	75	62.5	137.5	13	11	24	162.5	137.5	300	8	7	15	100	87.5	187.5
38	10	8	18	125	100	225	7	6	13	87.5	75	162.5	14	11	25	175	137.5	312.5	10	8	18	125	100	225
40	11	8	19	137.5	100	237.5	8	6	14	100	75	175	16	13	29	200	162.5	362.5	11	9	20	137.5	112.5	250
42	12	9	21	150	112.5	262.5	8	7	15	100	87.5	187.5	17	14	31	212.5	175	387.5	12	10	22	150	125	275
44	12	9	21	150	112.5	262.5	9	7	16	112.5	87.5	200	18	15	33	225	187.5	412.5	13	11	24	162.5	137.5	300
46	13	10	23	162.5	125	287.5	10	8	18	125	100	225	19	15	34	237.5	187.5	425	14	12	26	175	150	325
48	14	10	24	175	125	300	11	8	19	137.5	100	237.5	20	16	36	250	200	450	16	12	28	200	150	350

GUARDRAIL APPLICATIONS FOR MEDIANS GREATER THAN 30' AND LESS THAN 50'

STATE OF FLORIDA DEPARTMENT OF TRANSPORTATION
ROAD DESIGN

GUARDRAIL

	Names	Dates
Designed By		
Drawn By	HSD	09/81
Checked By	JBW/JVG	09/81
F.H.W.A. Approved:		10/08/81

Approved By
State Roadway Design Engineer

Revision No.	Sheet No.	Index No.
92	4 of 14	400

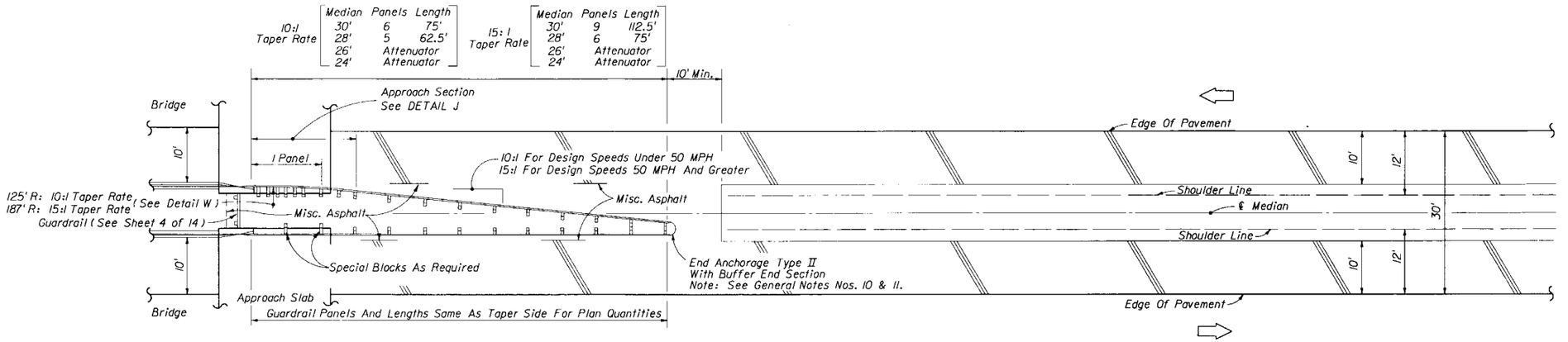

GUARDRAIL APPLICATIONS FOR MEDIANS 30' OR LESS WITH 10' BRIDGE SHOULDERS

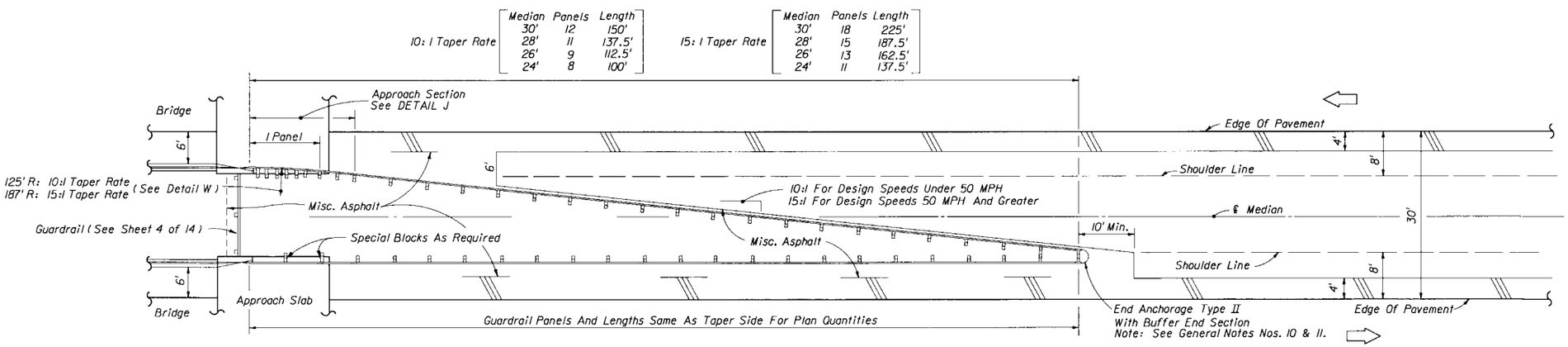

GUARDRAIL APPLICATIONS FOR MEDIANS 30' OR LESS WITH 6' BRIDGE SHOULDERS

NOTE:
The guardrail configurations shown apply only to parallel or near parallel bridges with open medians 30' or less in width. When medians 30' or less in width are closed by continuous decking between the bridge travel ways, traffic separation shall be attained by appropriate treatments such as, but not limited to, raised separators, curbs, guardrail, concrete barrier walls and special barriers.

STATE OF FLORIDA DEPARTMENT OF TRANSPORTATION
ROAD DESIGN

GUARDRAIL

	Names	Dates
Designed By		
Drawn By	RWR	08/82
Checked By	JVG/JBW	08/82
F.H.W.A. Approved:		09/23/82

Approved By
State Roadway Design Engineer

Revision No.	Sheet No.	Index No.
92	5 of 14	400

RADIAL GUARDRAIL

	Normal Turnouts					
	Taper			Simple Curve		
R_1	R_2	Panels Required	△	R_2	Panels Required	△
15'	25'	3	85° 56'	25'	3	85° 56'
20'	25'	3	85° 56'	25'	3	85° 56'
25'	25'	3	85° 56'	25'	3	85° 56'
30'	25'	3	85° 56'	25'	3	85° 56'
35'	25'	3	85° 56'	25'	3	85° 56'
40'	40'	5	89° 31'	40'	5	89° 31'
45'	40'	5	89° 31'	40'	5	89° 31'
50'	40'	5	89° 31'	40'	5	89° 31'

Note: Only 25' and 40' radius panels are to be used for return guardrail on normal turnouts. On skewed turnouts the number of panels used and their arrangement with straight panels will be as shown in the plans or as directed by the Engineer.

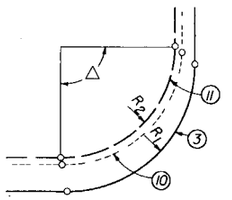

RADIAL GUARDRAIL

LEGEND

1. Edge of roadway pavement
2. Taper
3. Pavement return (radius R_1).
4. Standard flare to be installed except when existing guardrail on intersecting drive or side road adjoins the project.
5. Post for locating standard flare, proximate to PC or PT:
   No. 2 post-Radii 25' or less.
   No. 3 post-Radii 25' thru 50'.
   No. 4 post-Radii 50' or greater.
6. Post for locating standard flare, proximate to PC or PT:
   No. 3 post-Radii 25' or less.
   No. 4 post-Radii greater than 25'.
7. Expanded shoulder for standard flare.
8. Shoulder transition.
9. Type IV end anchorage, (standard flare only).
10. Shoulder for radial guardrail returns.
11. Radial guardrail to be installed when guardrail required on the intersecting drive or side road (radius R_2).
12. Type II end anchorage (radial return only).
13. Guardrail installation limited to roadway right of way unless otherwise called for in the plans.

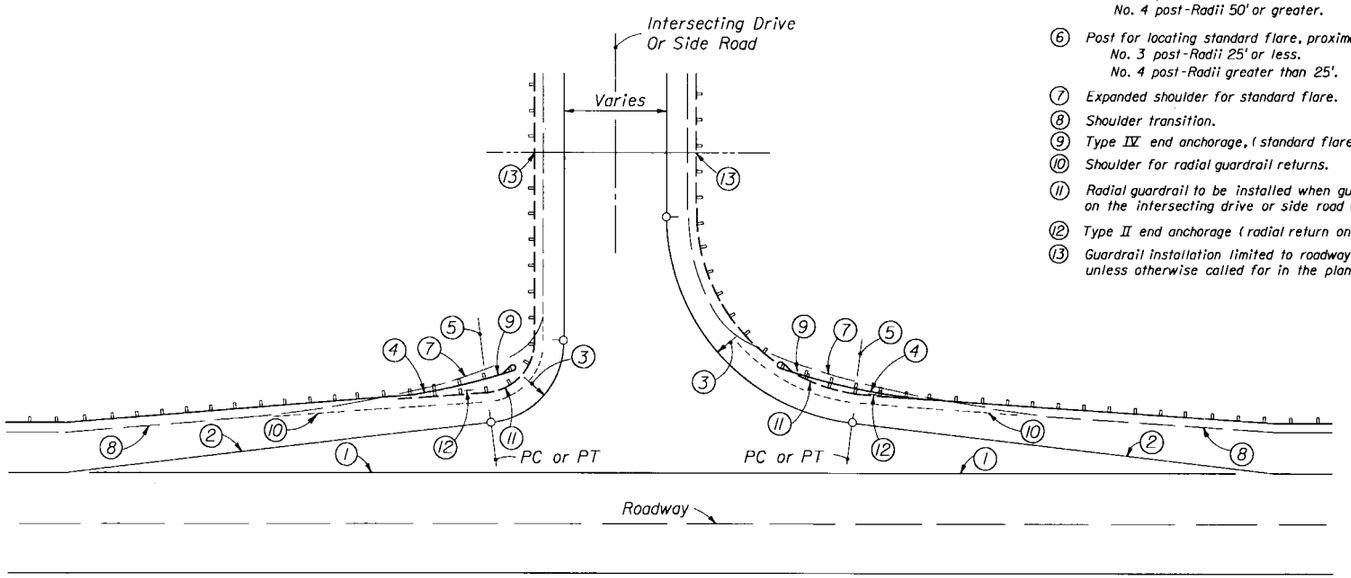

TAPER TURNOUTS

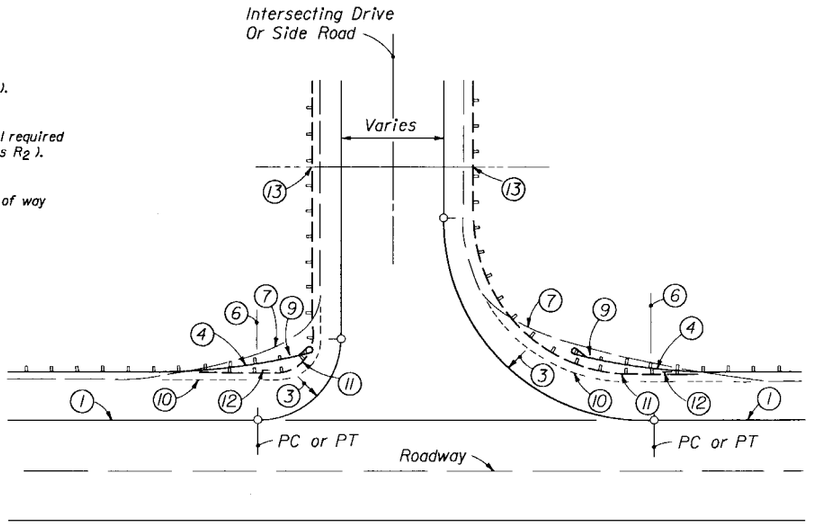

SIMPLE CURVE TURNOUTS

GUARDRAIL APPLICATIONS FOR INTERSECTING DRIVES AND SIDE ROADS ON RURAL FACILITIES

STATE OF FLORIDA DEPARTMENT OF TRANSPORTATION
ROAD DESIGN

GUARDRAIL

	Names	Dates
Designed By		
Drawn By	HSD	09/83
Checked By	JVC	09/83
F.H.W.A. Approved:		10/06/83

Approved By
State Roadway Design Engineer

Revision No.	Sheet No.	Index No.
92	6 of 14	400

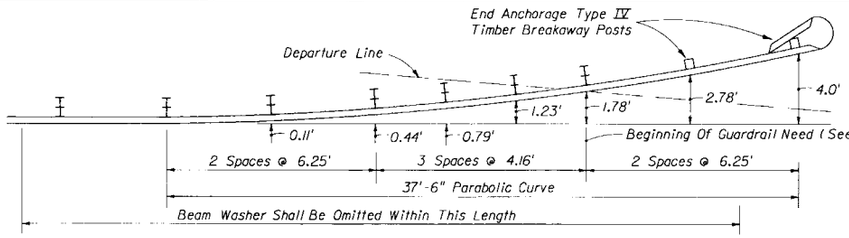

STEEL POSTS

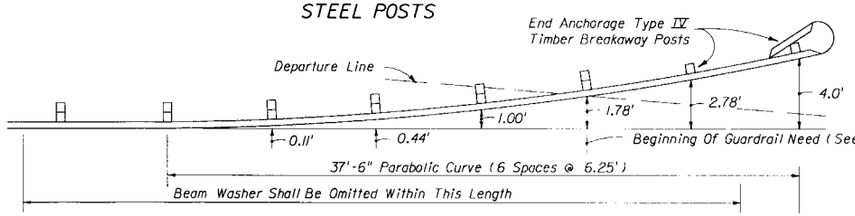

WOOD POSTS

STANDARD FLARE - DETAIL P

Notes:
All posts in flare except breakaway posts to be standard length posts.

All posts except breakaway post will have offset blocks. For post and offset block combinations see Sheet 11 of 14.

The beginning of guardrail need to be determined by Figure 1 (Length Of Advancement), Sheet 1 of 14.

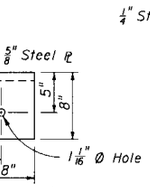

Note: Seal weld before galvanizing.

BEARING PLATE

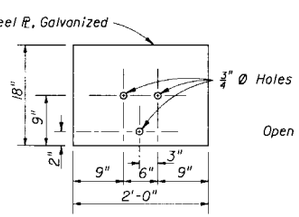

SOIL PLATE

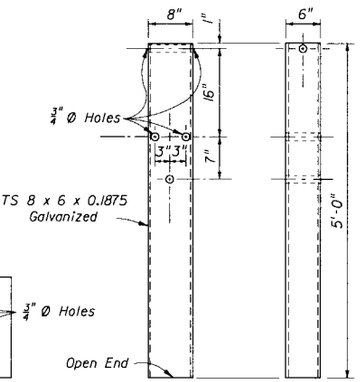

STEEL TUBE

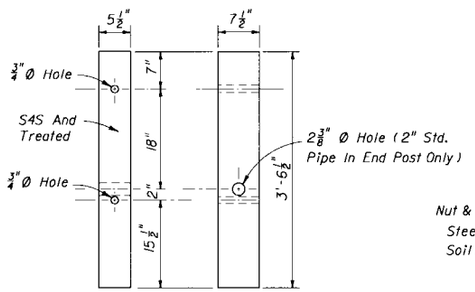

TIMBER BREAKAWAY POST

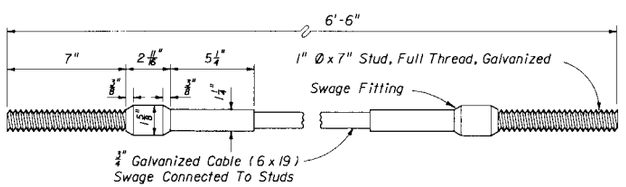

Note: BCT Cable Assembly to be in accordance with the specifications of Standard F-37-76, ARTBA Technical Bulletin No. 268-B, June 1979.

CABLE ASSEMBLY

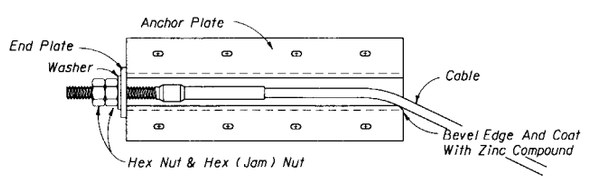

Note: For additional information see Anchor Plate detail.

INSIDE VIEW

CABLE CONNECTION TO BEAM

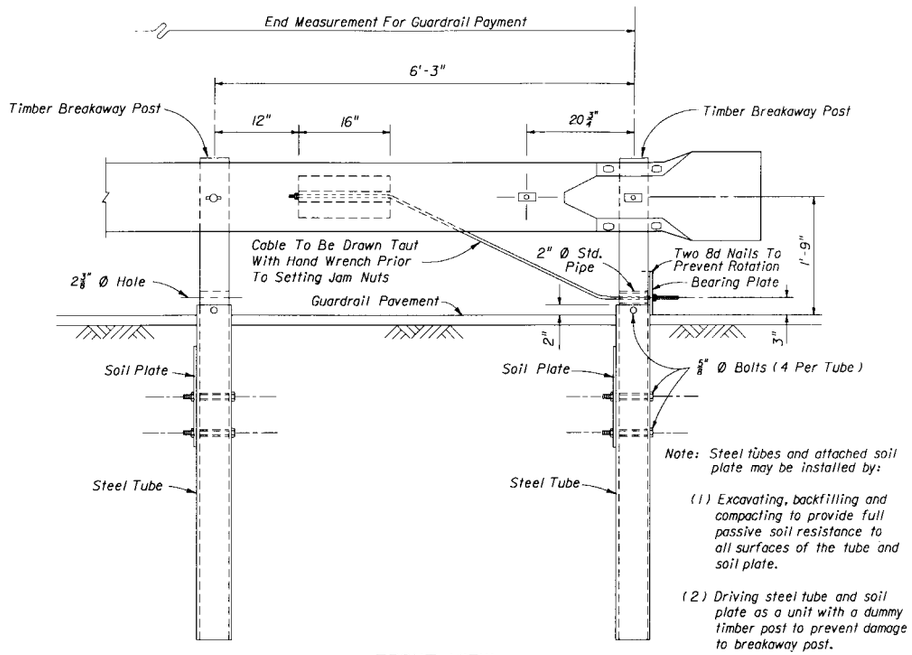

FRONT VIEW

Note: Steel tubes and attached soil plate may be installed by:

(1) Excavating, backfilling and compacting to provide full passive soil resistance to all surfaces of the tube and soil plate.

(2) Driving steel tube and soil plate as a unit with a dummy timber post to prevent damage to breakaway post.

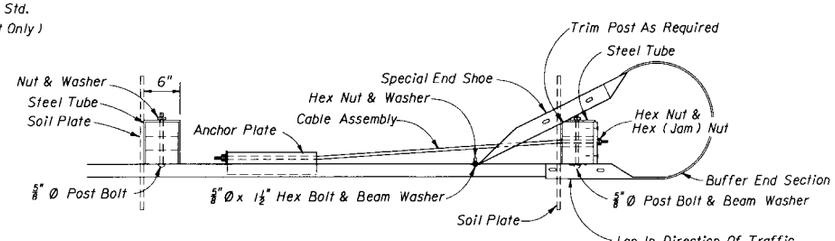

TOP VIEW

Note: The payment for the items of End Anchorage Assemblies Type IV shall include furnishing and installing the Buffer End Section, Special End Shoe, One-Piece Anchor Plate, Cable Assembly, Pipe Sleeve, Soil Plates, Steel Tubes, Bearing Plate, two Treated Timber Break-Away Posts, and the necessary hardware.

END ANCHORAGE TYPE IV

STATE OF FLORIDA DEPARTMENT OF TRANSPORTATION
ROAD DESIGN

GUARDRAIL

	Names	Dates
Designed By		
Drawn By	JM	01/81
Checked By	JGV	01/81
F.H.W.A. Approved:		10/08/81

Approved By
State Roadway Design Engineer

Revision No.	Sheet No.	Index No.
92	7 of 14	400

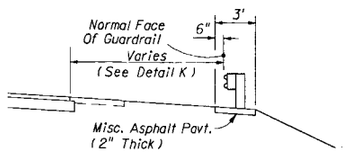

SHOULDER WITH OR WITHOUT 4' PAVEMENT

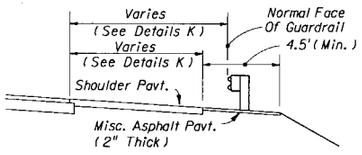

PAVED SHOULDERS

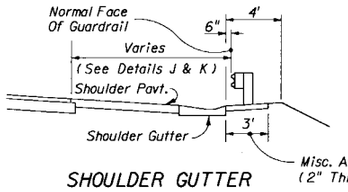

SHOULDER GUTTER

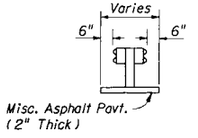

DOUBLE FACE RAIL

MISCELLANEOUS PAVEMENT FOR STANDARD SECTIONS

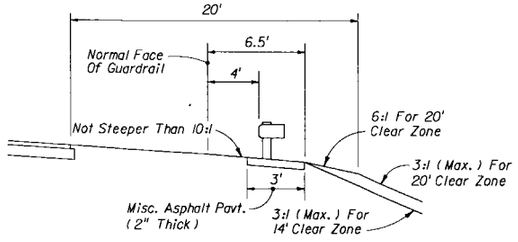

SECTION AA (EXAMPLE FOR 20' CLEAR ZONE)

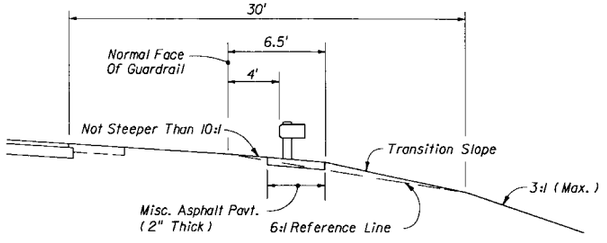

SECTION AA (EXAMPLE FOR 30' CLEAR ZONE)

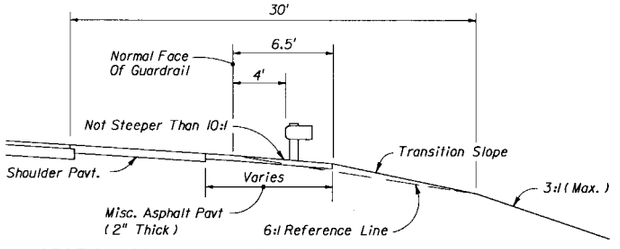

SECTION BB (EXAMPLE FOR 30' CLEAR ZONE)

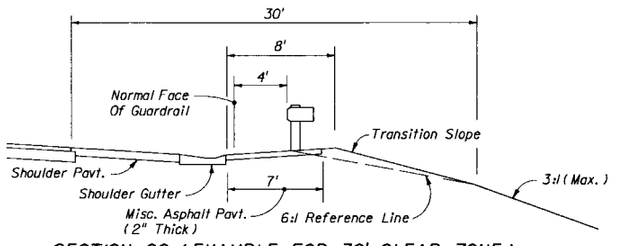

SECTION CC (EXAMPLE FOR 30' CLEAR ZONE)

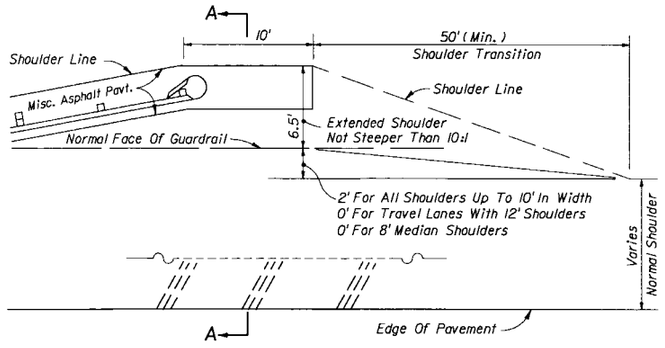

SHOULDER WITH OR WITHOUT 4' PAVEMENT

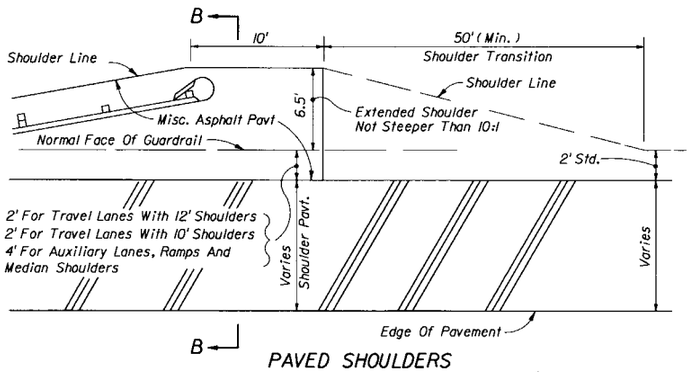

PAVED SHOULDERS

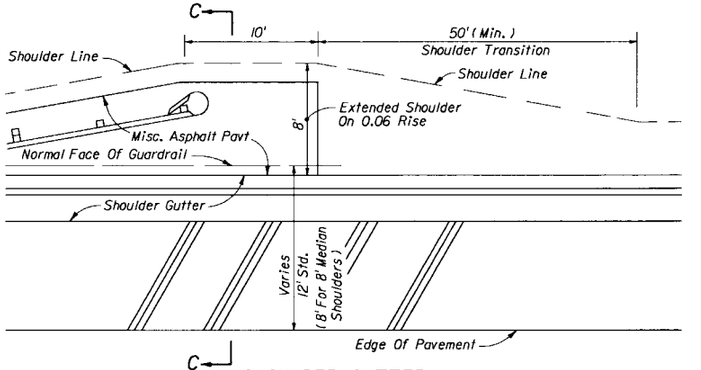

SHOULDER GUTTER

SHOULDERS, SLOPES AND MISCELLANEOUS PAVING FOR THE STANDARD FLARE

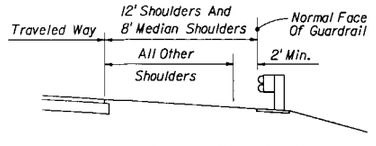

STANDARD LOCATIONS

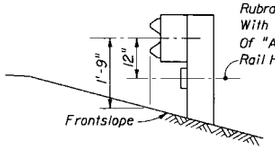

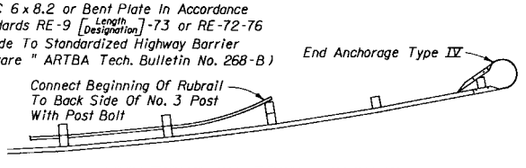

LOCATIONS ON FRONT SLOPES

LATERAL PLACEMENT ON FRONTSLOPES (FROM EDGE OF TRAVELED WAY)			
SLOPE	NOT RECOMMENDED	ACCEPTABLE WITH RUBRAIL	Notes:
4:1	14' to 27'	28' to 45'	For shoulders less than 12' in width the tabulated values will be reduced by the difference between 12' and the shoulder width.
5:1	15' to 25'	26' to 45'	
6:1	17' to 22'	23' to 45'	
7:1	21' to 24'	25' to 45'	Placement of guardrail on frontslopes steeper than 4:1 not recommended.
8:1	Acceptable to 25'	26' to 45'	
9:1	Acceptable to 26'	27' to 45'	Cost of rubrail to be included in the contract unit price for guardrail.
10:1	Acceptable to 27'	28' to 45'	

GUARDRAIL LOCATION - DETAIL K

STATE OF FLORIDA DEPARTMENT OF TRANSPORTATION
ROAD DESIGN

GUARDRAIL

	Names	Dates
Designed By		
Drawn By	JM	07/81
Checked By	JBW/JVG	07/81
F.H.W.A. Approved:		10/08/81

Approved By _____
State Roadway Design Engineer

Revision No.	Sheet No.	Index No.
92	8 of 14	400

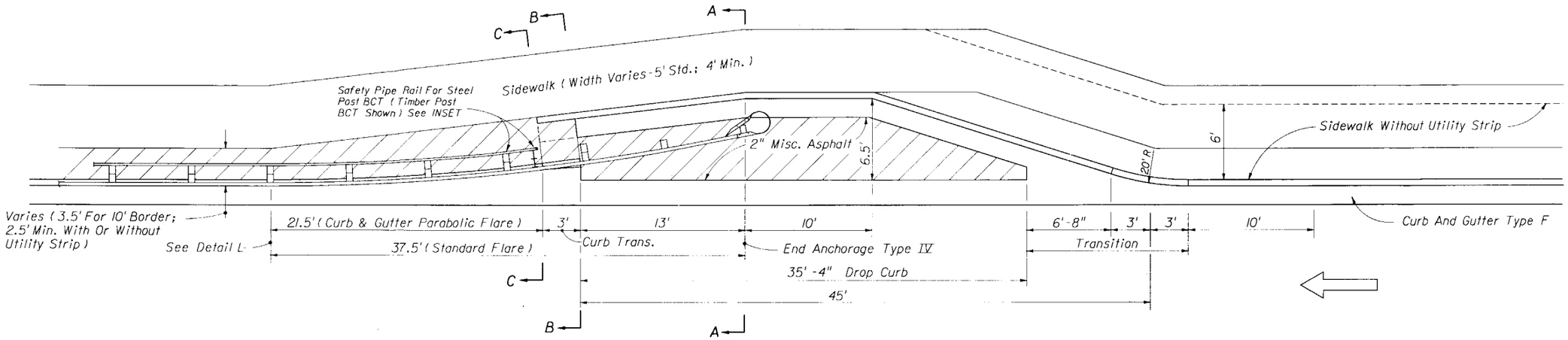

PLAN

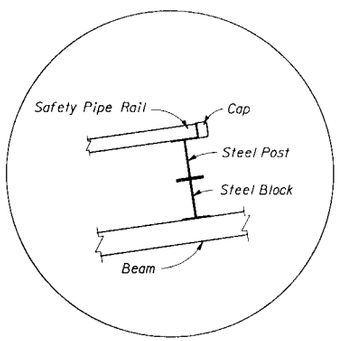

Safety Pipe Rail For Steel Post BCT

INSET

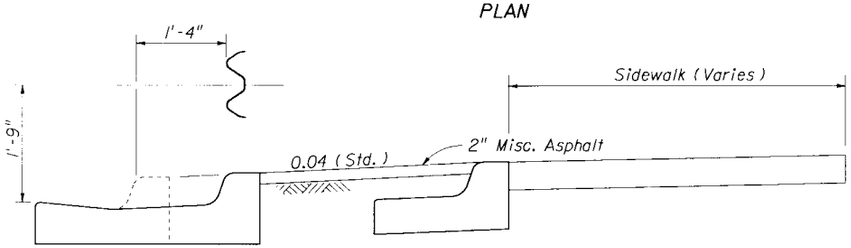

SECTION CC

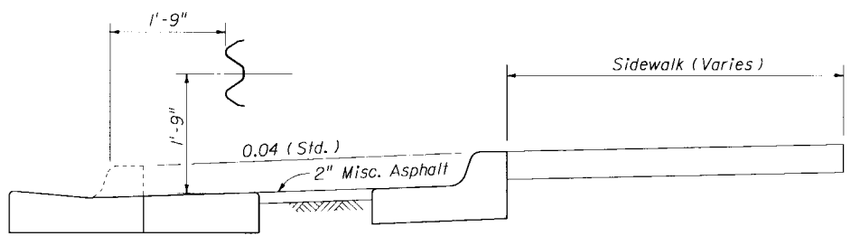

SECTION BB

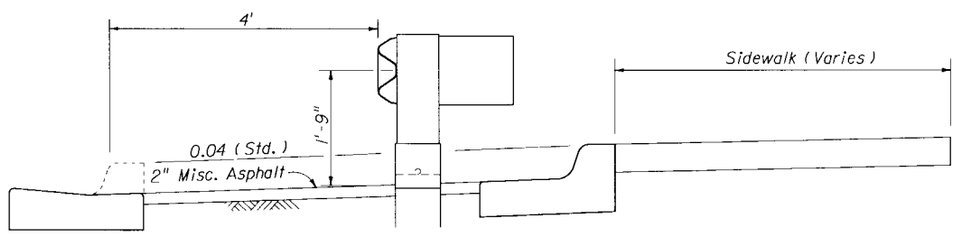

SECTION AA

APPROACH TREATMENT FOR STANDARD FLARE FOR CURB AND GUTTER

DETAIL Q

STATE OF FLORIDA DEPARTMENT OF TRANSPORTATION
ROAD DESIGN

GUARDRAIL

	Names	Dates
Designed By	JVG/JBW	10/87
Drawn By	JBW	10/87
Checked By	JVG	10/87
F.H.W.A. Approved:		

Approved By: _____
State Roadway Design Engineer

Revision No.	Sheet No.	Index No.
92	9 of 14	400

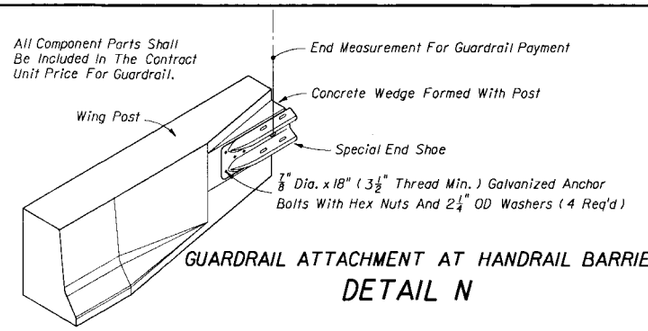

GUARDRAIL ATTACHMENT AT HANDRAIL BARRIER

DETAIL N

APPROACH POSTS AND SPECIAL OFFSET BLOCKS	
OFFSET BLOCK DIMENSIONS	
(a)	6" x 17" x 14"
(b)	6" x 16⅛" x 14"
(c)	6" x 16" x 14"
(d)	6" x 15⅛" x 14"
(e)	6" x 15" x 14"
(f)	6" x 14" x 14"
(g)	6" x 13" x 14"
(h)	6" x 11" x 14"

Dimensions shown are suited to standard approach slabs with parallel curb configurations and typical guardrail lateral transitions. For other approach slab configurations and guardrail alignments, the approach posts are to be adjusted and the depth of the offset blocks adjusted for a snug fit against the back of the rail. Offset blocks can be no deeper than one special block plus one standard block. The nested rails shall not be bolted to the blocks and posts at blocks (a), (c) and (e). One 16d galvanized nail is to be used between timber blocks and posts (a) through (h) to prevent incidental rotation of blocks. All posts are standard posts except where approach slab configurations require the use of special steel posts. Where applicable, normal offset blocks are to be used with special steel posts. When steel offset blocks are used, rail back-up plates are not to be used at offset blocks (a) through (f).

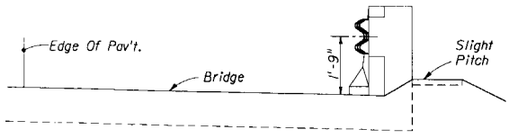

SECTION AA

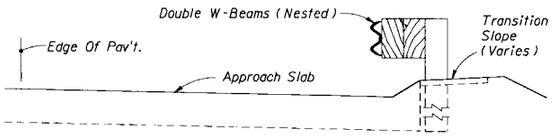

SECTION BB

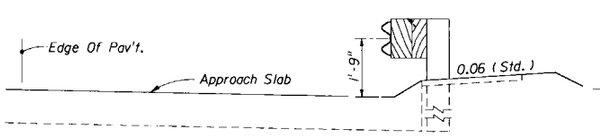

SECTION CC

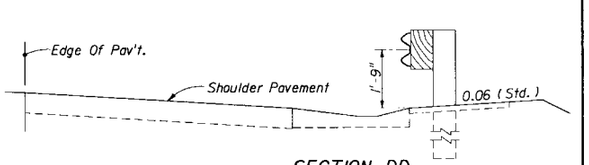

SECTION DD

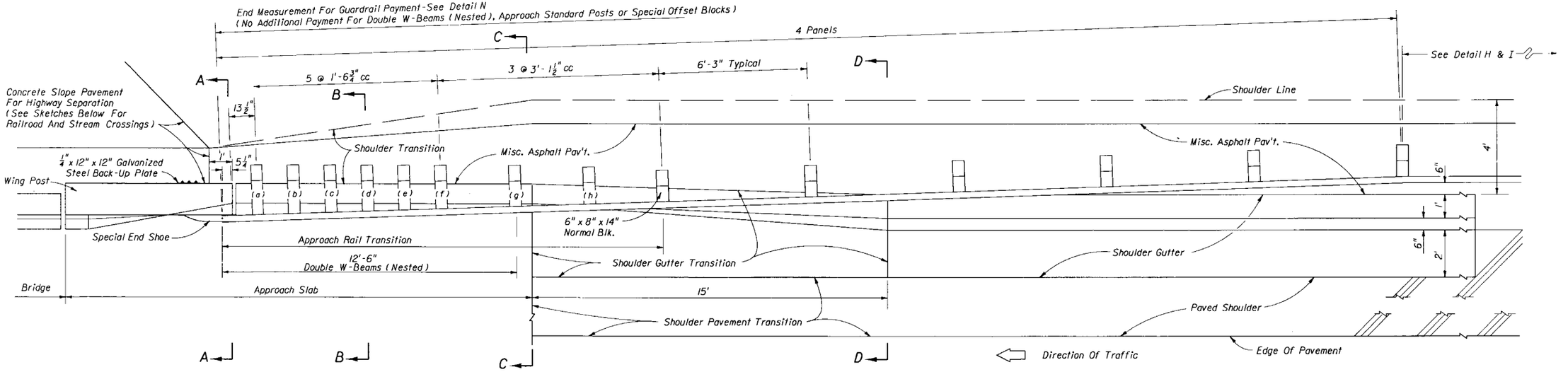

APPROACH GUARDRAIL FOR BRIDGE CONNECTIONS • GUARDRAIL, SHOULDER GUTTER AND SHOULDER TRANSITIONS AT BRIDGE APPROACHES

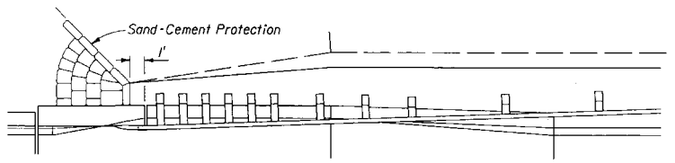

SKETCH- BRIDGES OVER RAILROADS*

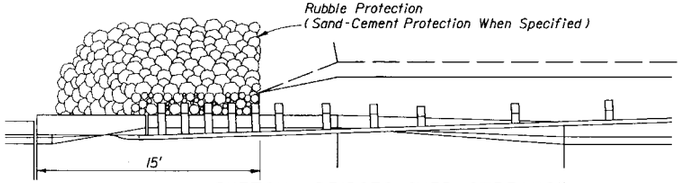

SKETCH- BRIDGES OVER STREAMS*

*For Additional Information See FDOT Structures Design Office "Detailing Manual" and "Design Guidelines".

DETAIL J

STATE OF FLORIDA DEPARTMENT OF TRANSPORTATION
ROAD DESIGN

GUARDRAIL

	Names	Dates
Designed By		
Drawn By	JBW/HSD	04/91
Checked By	JVG/JBW	04/91
F.H.W.A. Approved:		

Approved By: State Roadway Design Engineer

Revision No.	Sheet No.	Index No.
92	10 of 14	400

REFLECTOR NOTES

1. Reflectors shall conform to Section 993-5 of the Standard Specifications.
2. Reflector color (white or yellow) shall conform to the color of the near lane edgeline.
3. Face of rail bolt, screw, rivet or bracket mounted reflectors shall not be used in lieu of adhesive mounted reflectors.
4. Post mounted reflectors that meet the requirements of the 1988 Roadway and Traffic Design Standards may be used by FDOT Maintenance to replace damaged or missing reflectors in a continuous run of existing post mounted reflectors. Adhesive and post mounted reflectors shall not be intermixed in a continous run of guardrail.
5. The cost for reflectors shall be included in the contract unit price for Guardrail.

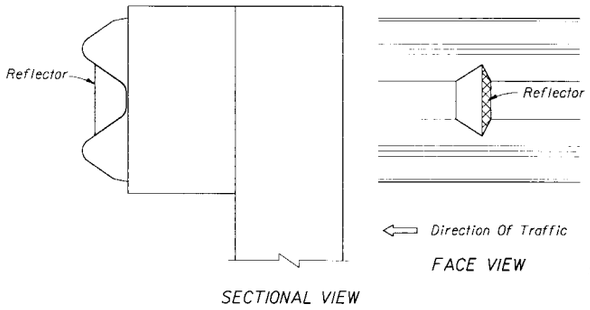

REFLECTOR MOUNTING

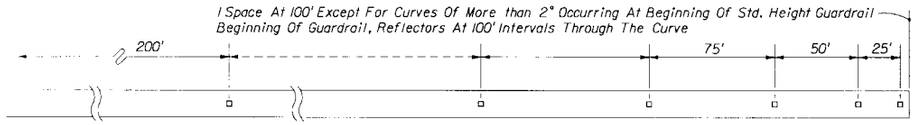

Note: Adjustment in spacing may be required to fit exact guardrail lengths as directed by the Engineer. For minimum installations (length 62.5') provide one reflector at each end and at approximate center.

REFLECTOR SPACING

ADHESIVE REFLECTORS-DETAIL M

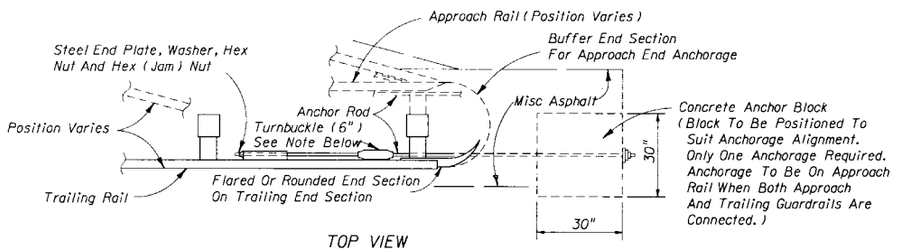

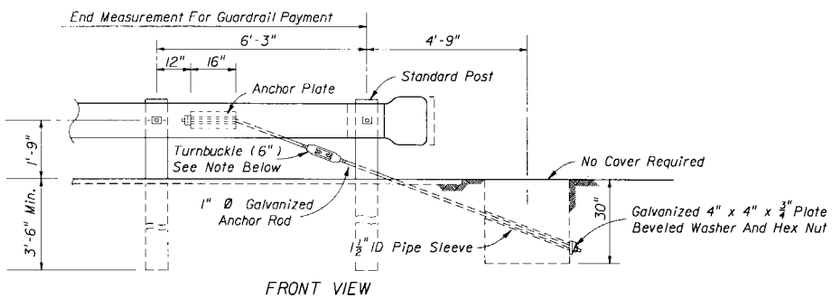

Note:
The payment for the items of End Anchorage Assemblies Type II shall include furnishing and installing anchor plate, anchor rod, pipe sleeve, anchor block, either flared, rounded or buffer end section, and the necessary hardware.

Turnbuckle to be used only for guardrail that is reset vertically. The existing anchor rod (1" or 1 1/4" Dia.) shall be field cut, threaded 4" on each end, and, metalized in accordance with Sections 562 and 971 of the Standard Specifications. The cost for cutting, threading, metalizing and the turnbuckle shall be included in the contract unit price for Reset Guardrail, LF.

END ANCHORAGE TYPE II-DETAIL R

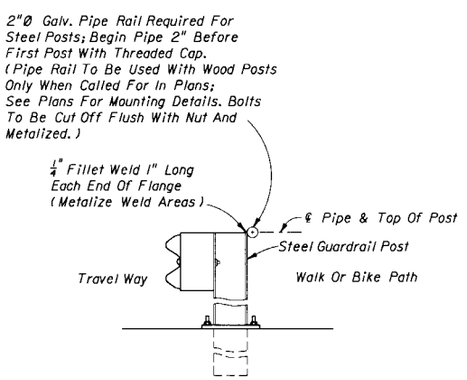

Note: Cost of pipe to be included in the contract unit price for Guardrail.

FOR LOCATIONS USED BY SUBSTANTIAL NUMBERS OF PEDESTRIANS, CYCLISTS OR FISHERMEN

SPECIAL SAFETY PIPE RAIL

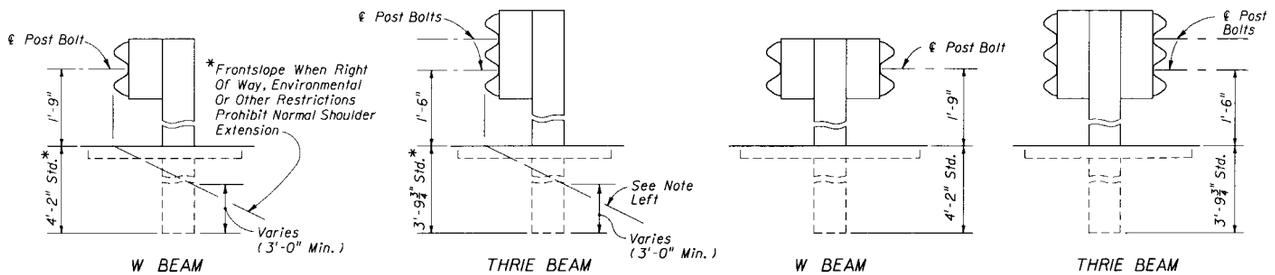

MOUNTING HEIGHTS ON SHOULDERS AND IN MEDIANS

POST	OFFSET BLOCK	Remarks
Timber	6" x 8" & 5" x 8" (Nominal) x 14" Timber	Post bolt hole in timber block to be centered (± 1/4"). All timber off set blocks shall be dressed on all four sides (S4S). See note below.
Steel W6 x 8.5 And 6" C	6" x 8" & 5" x 8" (Nominal) x 14" Timber W6 x 8.5 x 14" & 6" C x 14" Steel To Match Post	Same as above 5/8"Ø x 1 1/2" galv. hex head bolts with full length thread and nuts (2 Req'd.) and washers (4 Req'd.) for mounting steel block to post. Bolts are to be installed in opposite holes, top and bottom.
Note: Thrie beam blocks are 22" in length.		

PERMISSIBLE POST AND OFFSET BLOCK COMBINATIONS

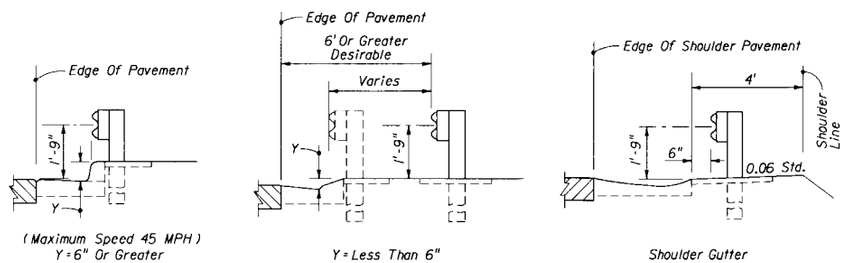

LOCATION AT CURB & GUTTER SECTIONS-DETAIL L

STATE OF FLORIDA DEPARTMENT OF TRANSPORTATION
ROAD DESIGN

GUARDRAIL

	Names	Dates
Designed By		
Drawn By	HSD	09/81
Checked By	JBV/MG	09/81
F.H.W.A. Approved:		10/08/81

Approved By: _____
State Roadway Design Engineer

Revision No.	Sheet No.	Index No.
92	11 of 14	400

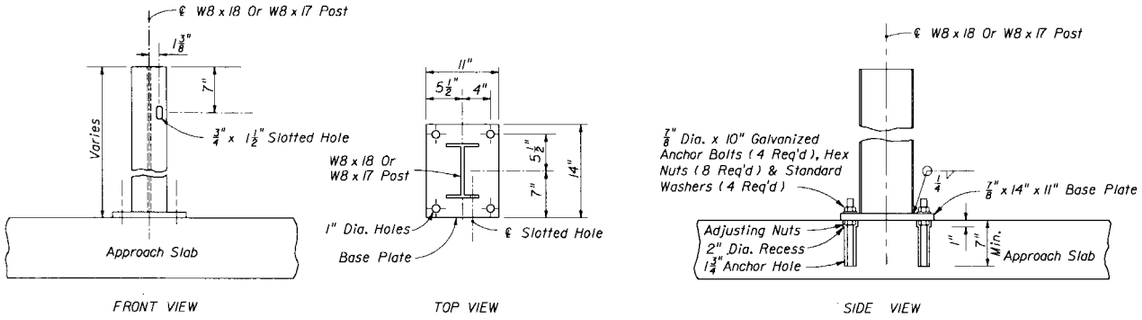

FOR MOUNTING GUARDRAIL ON EXISTING APPROACH SLABS

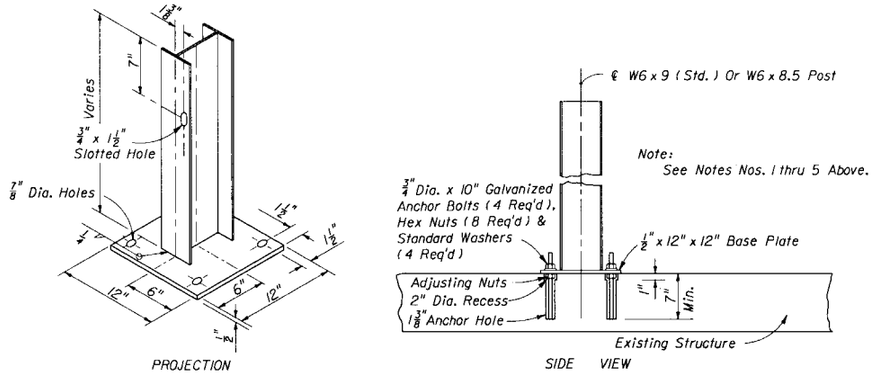

FOR CONSTRUCTION OF GUARDRAIL WHERE CULVERT, PIER FOOTING OR OTHER STRUCTURE PRECLUDES NORMAL POST INSTALLATION

NOTES: (SPECIAL STEEL POST)

1. Either anchor bolts, concrete wedge anchors or approved concrete adhesive (chemical) anchors may be used.

   Anchor bolts, wedge anchors and adhesive anchors shall have a minimum tensile strength of 60,000 psi and galvanized in accordance with ASTM A153 (stainless steel components may be substituted but components plated in accordance with ASTM B-633 are not acceptable). Adhesive anchor rods shall be equal in diameter to that detailed for anchor bolts. Wedge anchors are to be installed in accordance with the manufacturers recommendations, assuming 3000 psi compressive strength for concrete. Wedge anchors shall also meet the following requirements: (a) tensile load each anchor: approach slabs 14,000 lbs.; other structures 8000 lbs. (b) shear load each anchor: approach slabs 15,000 lbs.; other structures 7800 lbs.

2. Posts are to be plumbed by adjusting nuts or mortar seating. Posts installed using anchor bolts and adhesive anchors are to be set with adjusting nuts as detailed, unless the Engineer approves the use of mortar seating in lieu of adjusting nuts. Posts installed using wedge anchors are to be set with mortar seating. Base plates shall be grouted with neat finish.

3. Anchor bolts shall be set in approved epoxy mortar. Adhesive anchors shall be set in accordance with the manufacturers recommended adhesive as approved by the Qualified Product List, or as approved by the Engineer.

4. Anchor holes and recesses shall be drilled; wedge anchor holes are to be drilled in accordance with the manufacturers specifications. Encountered reinforcing steel shall be drilled through. Holes shall be thoroughly cleaned when setting bolts and anchors and dry when setting wedge anchors.

5. Steel post and base units shall be galvanized in accordance with ASTM A123. Any damaged galvanized areas are to be metalized in accordance with Section 562 of the Standard Specifications.

SPECIAL STEEL GUARDRAIL POSTS

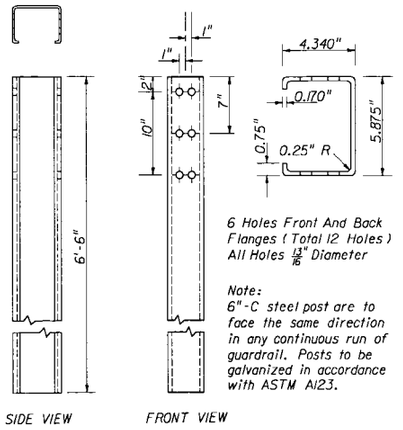

6 Holes Front And Back Flanges (Total 12 Holes) All Holes 13/16" Diameter

Note:
6"-C steel post are to face the same direction in any continuous run of guardrail. Posts to be galvanized in accordance with ASTM A123.

6"-C STEEL POST

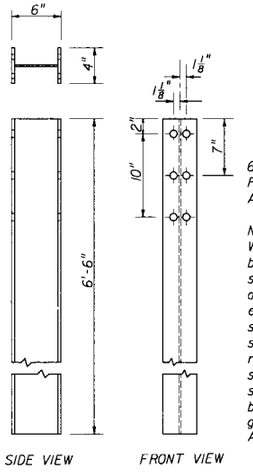

6 Holes Front And Back Flanges (Total 12 Holes) All Holes 13/16" Diameter

Note:
W6 x 9 and W6 x 8.5 steel posts may be either rolled or welded structural shapes conforming to or exceeding the design properties of W6 x 9, AISC, eight edition, or W6 x 8.5, AISC, seventh edition respectively. Welding shall be in accordance with the requirements of ASTM A769. Posts shall be cut to length and the ends seal welded between web and flange before galvanizing. Posts to be galvanized in accordance with ASTM A123.

W6 X 9 Or W6 X 8.5 STEEL POST

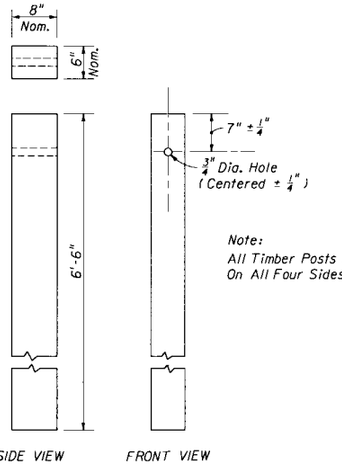

Note:
All Timber Posts Shall Be Dressed On All Four Sides (S4S)

TIMBER POST

STANDARD TIMBER AND STEEL GUARDRAIL POST

STATE OF FLORIDA DEPARTMENT OF TRANSPORTATION
ROAD DESIGN

GUARDRAIL

	Names	Dates
Designed By		
Drawn By	JM	08/81
Checked By	JVG/JBW	08/81
F.H.W.A. Approved:		10/08/81

Approved By: Kirk Brown
State Roadway Design Engineer

Revision No.	Sheet No.	Index No.
90	12 of 14	400

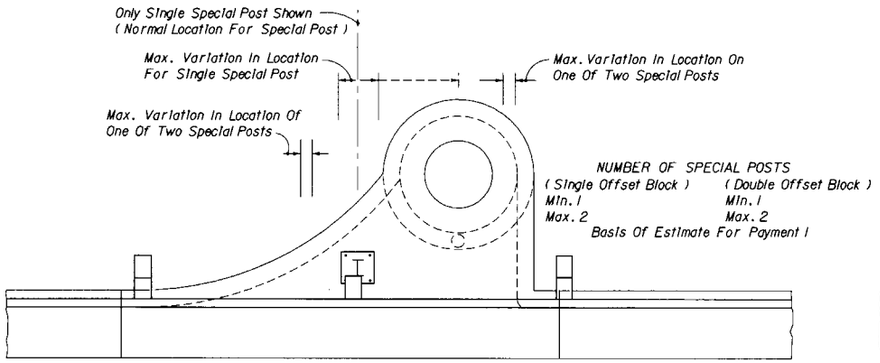

CURB INLET TYPE 1

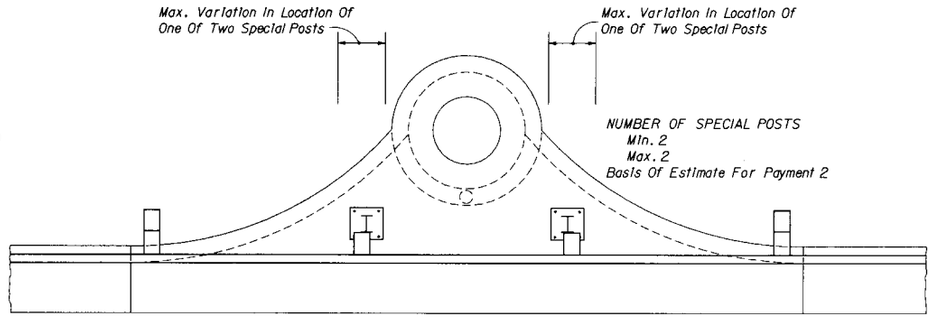

CURB INLET TYPE 2

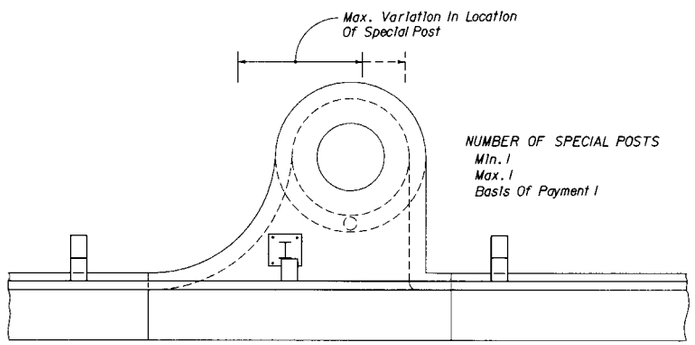

CURB INLET TYPE 3

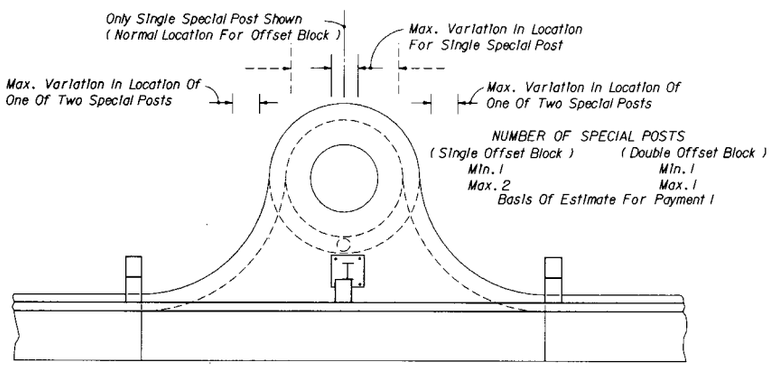

CURB INLET TYPE 4

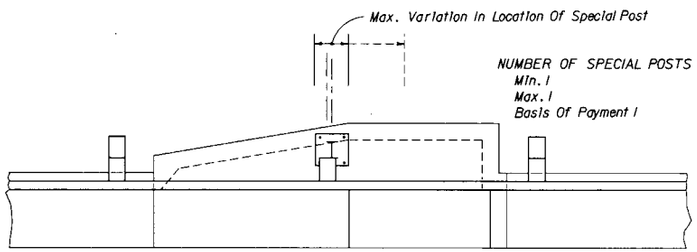

CURB INLET TYPE 5

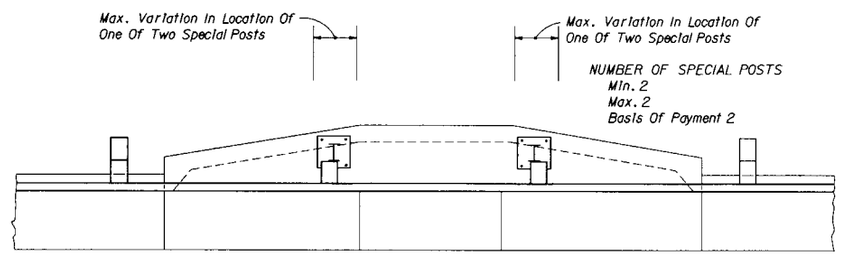

CURB INLET TYPE 6

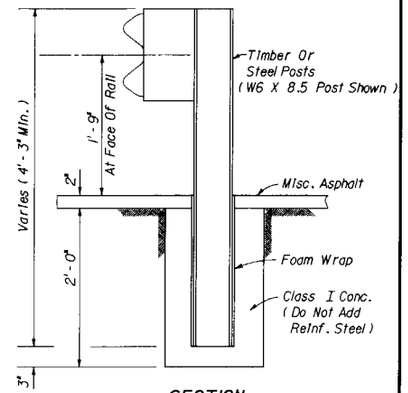

SECTION

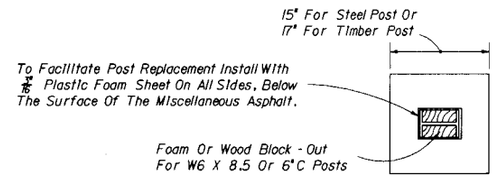

PLAN
(SQUARE OPTION)

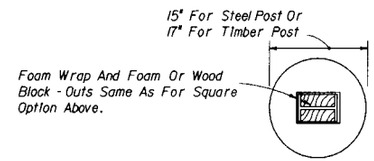

PLAN
(ROUND OPTION)

TO BE USED PRINCIPALLY OVER SHALLOW UTILITIES

ENCASED GUARDRAIL POST

Notes:

1. The locations shown for special posts mounted on inlets are to be used as guidelines for positioning the posts and for estimating the number of required posts.
2. Special posts and their anchorages mounted on curb inlets shall be in accordance with special steel guardrail posts Sheet 12 of 14, and paid for under the contract unit price for Special Guardrail Post, each.
3. Variations shown for the locations of special posts mounted on inlets are established from standard post spacing (6' - 3"); clearance of standard posts from inlets (4" min.); use of single and double offset blocks on standard posts adjacent to the inlets; optional flange mountings; and, concrete anchor edge distances (2" for grouted and 3 3/4" for expansion anchors). The number of posts and their locations may vary by reducing post spacing and adjusting the length of rail panel (s).
4. Encased guardrail posts shall conform in section to standard timber and steel posts, and be paid for under the contract unit price for Special Guardrail Post, each. Payment shall include cost of foam wrap and concrete encasement.

LEGEND

Variation In Location Of Special Post:

Single Offset Block (s) On Adjacent Standard Post (s)

Expanded Location By Using Double Offset Blocks On Adjacent Standard Post (s)

SPECIAL POST LOCATIONS ON CURB INLETS

STATE OF FLORIDA DEPARTMENT OF TRANSPORTATION
ROAD DESIGN

GUARDRAIL

	Names	Dates
Designed By		
Drawn By	HSD	08/83
Checked By	JVG	08/83
F.H.W.A. Approved:		10/06/83

Approved By _____
State Design Engineer, Roadways

Revision No.	Sheet No.	Index No.
88	13 of 14	400

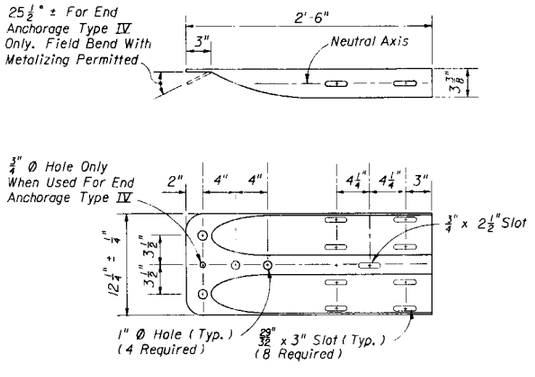

Note: ⅝" Steel washer required with splice bolts

SPECIAL END SHOE

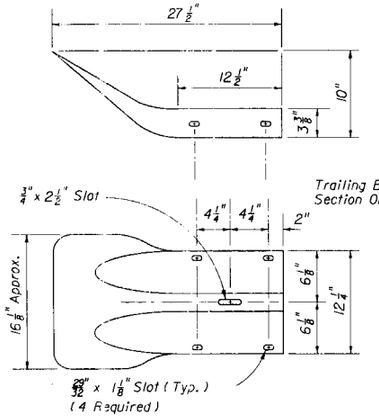

FLARED END SECTION

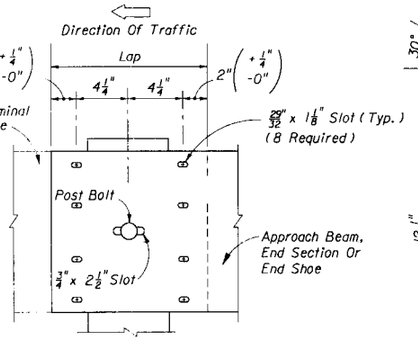

RAIL SPLICE

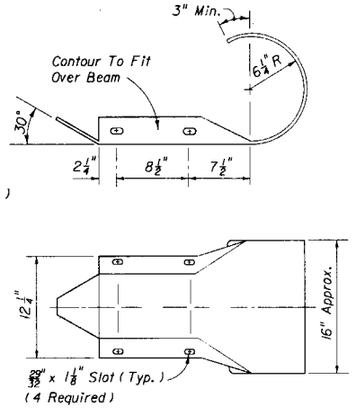

ROUNDED END SECTION

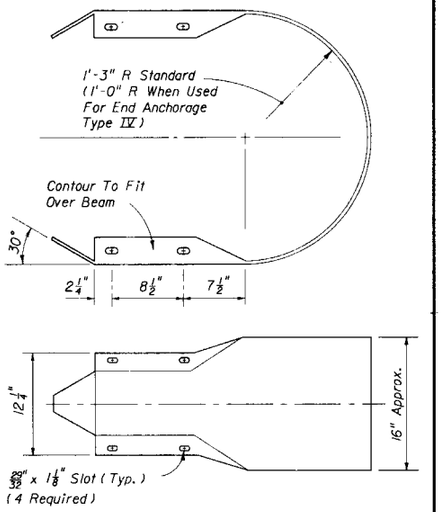

BUFFER END SECTION

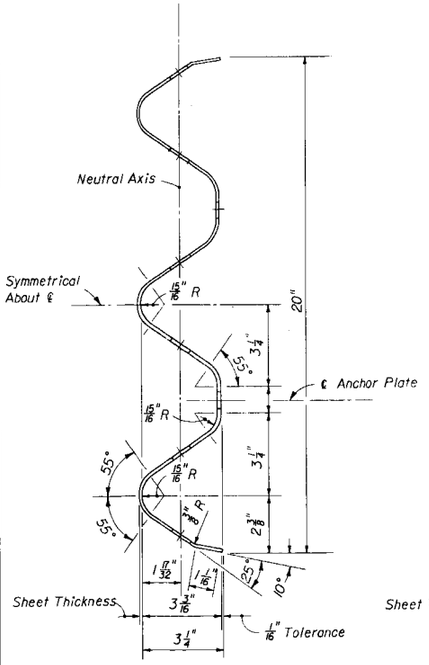

THRIE BEAM

Use of thrie beam is subject to the approval of the State Roadway Design Engineer.

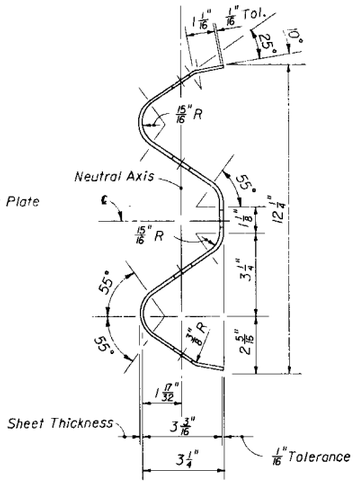

W BEAM

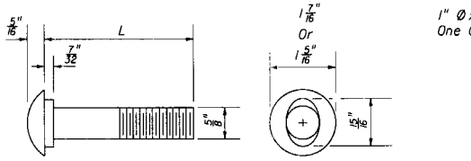

L	Thread Length	Application
1¼"	Full Length	Rail Splice Bolt
2"	1½" Min.	Rail To Steel Offset Block Bolt
9½"	1¾" Min.	Post Bolt - Single Faced Guardrail Timber Block On Steel Post
18"	2½" Min.	Post Bolt - Single Faced Guardrail Timber Posts
25"	2" Min.	Post Bolt - Double Faced Guardrail Timber Posts
Special bolts having lengths of 10" or greater shall have a thread length of not less than 2".		

Note: Specifications same as for hex bolts.

⅝" BUTTON HEAD BOLT

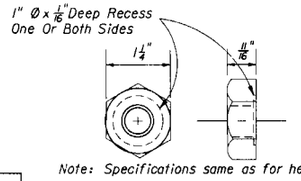

Note: Specifications same as for hex nuts.

⅝" RECESS NUT

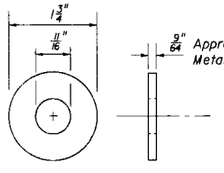

⅝" STEEL WASHER

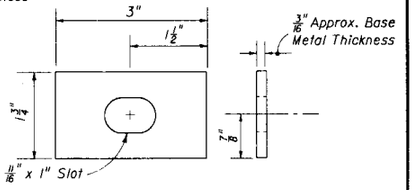

Note: Beam washers are required on the first post and buffer end section of End Anchorages Type IV and at the last two posts of End Anchorages Type II. Washers are to be used where necessary to accomplish alignment or where the post bolt head shows tendency to pull through the rail slot. Washers installed on guardrail, between end anchorages, prior to July 1, 1990 may remain in place until the guardrail is relocated or until repairs require removal and reinstallment of a post bolt.

(RECTANGULAR PLATE WASHER)

BEAM WASHER

Hex bolts shall conform to the requirements of ASTM A307 and hex nuts to the requirements of ASTM A563, Grade A or better. Heavy hex nuts may be used in lieu of hex nuts and hex nuts used for jam nuts.

HEX BOLTS AND NUTS

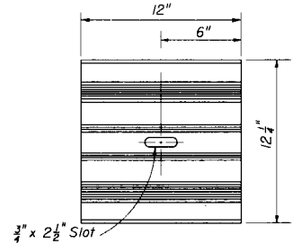

Note: Back up plate is placed behind rail elements at intermediate (non splice) post when steel offset block used.

BEAM BACK-UP PLATE

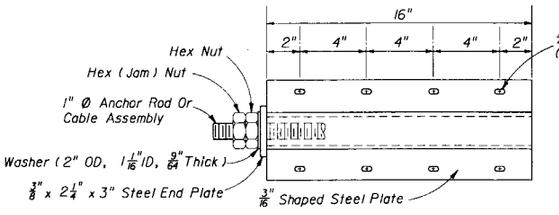

BACK VIEW

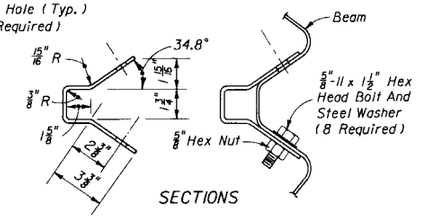

SECTIONS

BEAM ANCHOR PLATE

STATE OF FLORIDA DEPARTMENT OF TRANSPORTATION
ROAD DESIGN

GUARDRAIL

	Names	Dates
Designed By		
Drawn By	HSD	8/81
Checked By	JBW/JVG	8/81
F.H.W.A. Approved:		10/8/81

Approved By: State Roadway Design Engineer

Revision No.	Sheet No.	Index No.
92	14 of 14	400

GENERAL NOTES

1. Whether an existing bridge handrail is to remain in place, be retrofitted or be replaced, is a determination that must be made independent of any information contained on this index.

   Only after it has been established that an existing bridge handrail is to remain in place is this index to be used to analyze guardrail to bridge connections.

2. The schemes on this index are not to be used for new bridge construction, bridge widening, bridge barrier wall or handrail replacement, or, for existing bridges that have wing posts for guardrail connection that conform with configurations shown in current Roadway Design Standards and Bridge Design Standards.

3. The schemes on this index are divided into two general categories, representing curbed and uncurbed roadway approaches. A scheme selection guide is provided under 'Designer Notes' for curbed and uncurbed roadway approaches. Approach slabs with curbs or wing walls with radial safety curbs will be treated as curbed roadway approaches.

4. Existing bridge features shown in these schemes are example configurations only. The principle key to scheme selection is bridge curb or sidewalk width. Location control is keyed to bridge face of curb, except for certain trailing conditions.

5. Details that are repetitive on the schemes and features that are detailed on Index No. 400 have been purposely deleted to produce clarity and simplification in the schemes, and to emphasize proper location and positioning of the anchorage and connecting guardrail.

6. All schemes are right side or right hand details for traffic flow right to left. Left side applications are opposite hand.

7. For undivided two-way bridges 'trailing end', as used in this index, is in relation to the direction of travel of near lane traffic, but it is always considered as an approach for opposing lane traffic.

8. All connections of guardrail special end shoes to concrete anchorage posts, panels and walls shall have a $\frac{1}{4}$" x 12" x 12" galvanized steel back-up plate for gang tightening of hex nuts on $\frac{7}{8}$" diameter galvanized anchor bolts. Special end shoe anchor bolts shall have a nominal length equal to the thickness of the concrete anchorage plus $1\frac{1}{2}$".

   When thru bolts would penetrate existing bridge rails, $\frac{7}{8}$" diameter bolt clusters and chemical anchor bolts meeting the manufacturers recommendation may be substituted as approved by the Engineer.

9. Unless otherwise called for in the plans exposed concrete surfaces shall have a Class 3 surface finish and Class 5 Applied Finish Coating in accordance with Sections 521 and 400 respectively of the Standard Specifications.

10. The guardrail end anchorage schemes on this index do not include cost for payment of guardrail. See Index 400 Detail N for limit of guardrail measurement.

    Each independent anchorage described in these schemes shall be paid for as a bridge end anchorage assembly under the contract unit price for Bridge Anchorage Assembly, Each. The unit price shall be full compensation for the following :

    (a) Each concrete anchor post, panel or transition wall including reinforcing steel, existing rail or rail and post removal, socket filling, bond breaker, post beveling, drilling, dowels, grouting, excavation, backfill, special end shoe and accessory items.

    (b) Each guardrail steel terminal post, including flared end section, anchorage and accessory items (optional use not included).

    (c) Each special end shoe anchored directly to an existing bridge end post or wing post, including back-up plate and accessory items.

    Continuous concrete safety barrier (Schemes 1 & 19) shall be paid for as a roadway item under the contract unit price for Concrete Handrail (Retrofit Barrier) (Vert Face), LF.

    Continuous guardrail across bridges shall be paid for as a roadway item under the contract unit price for Guardrail (Bridge) LF, and Special Guardrail Post, Each. The unit price for guardrail shall include the cost for all accessories prescribed under Index No. 400 and the unit price for special posts shall include the cost for all accessories and anchorage prescribed in Index 400 and in Scheme 16 of this Index.

DESIGN NOTES

1. The details in this index are intended to be used for existing bridges that have end and approach slab configurations constructed under former Department standards; and, are not intended to preclude special design details more suited to bridges with unusual handrail or wingpost configurations, or, when there is conflict with drainage structures or other features that can not be adjusted.

2. The schemes provide the designer with a convenient method of providing standardized information on the plans. In the selection and assignment of schemes the designer must predetermine existing bridge handrail, curb, sidewalk and approach slab conditions, particularly the location of embedded conduit. Special attention must be directed to the presence or absence of curbed approaches on each independent corner of the bridge.

3. Each corner of the bridge that requires a guardrail connection should be labeled independently by scheme number, and, where continuous barrier is required across a bridge the scheme number should be labeled independently on the side(s) of the bridge. When continuous guardrail is called for, bridge end anchorage assemblies will be omitted, but, when continuous concrete safety barrier is called for, one or more bridge end anchorage assemblies will be labeled on the plans.

4. The scheme selection guide below is to be used as a quick reference for determining anchorages and continuous barriers that are applicable to specific conditions for existing bridges. When appropriate, special details are to be used in lieu of schemes or to supplement or complement the scheme details. In selecting schemes the width of curb, safety curb and sidewalk is the distance from face of curb to the nearest face of post, rail or parapet.

SCHEME SELECTION GUIDE (NUMBERS)

	WITH ROADWAY CURBS APPROACHING BRIDGES Sheets 2 thru 6		WITHOUT ROADWAY CURBS APPROACHING BRIDGES Sheets 7 thru 9	
ONE-WAY BRIDGES	APPROACH END	TRAILING END	APPROACH END	TRAILING END
Handrail Curb	3, 4, 18	3, 4, 18	21, 22, 27, 30	23, 27, 30
Narrow Curb	2, 3, 8, 9, 10, 11, 12, 13, 14	2, 3, 8, 15	20, 21, 27, 29	23, 27, 29
Wide Safety Curb	1, 2, 8, 11, 12, 13, 14, 15, 16, 17	1, 2, 8, 11, 12, 13, 14, 15, 16	19, 20, 28, 29	19, 23, 29
Sidewalks	1, 16	1, 16	19	19
TWO-WAY BRIDGES	APPROACH AND TRAILING ENDS		APPROACH AND TRAILING ENDS	
Handrail Curb	3, 4, 9, 10, 18		21, 22, 26, 30	
Narrow Curb	2, 3, 6, 7, 9, 10, 11, 12, 13, 14		20, 21, 25, 29	
Wide Safety Curb	1, 2, 5, 6, 9, 10, 11, 12, 13, 14, 16		19, 20, 24, 25, 29	
Sidewalks	1, 16		19	

STATE OF FLORIDA DEPARTMENT OF TRANSPORTATION
ROAD DESIGN

GUARDRAIL ANCHORAGE AND CONTINUOUS BARRIER FOR EXISTING BRIDGES

	Names	Dates
Designed By	JVG	09/86
Drawn By	HSD	09/86
Checked By	JVG	09/86

Approved By: _____
State Roadway Design Engineer

Revision No.	Sheet No.	Index No.
88	1 of 9	401

F.H.W.A. Approved:

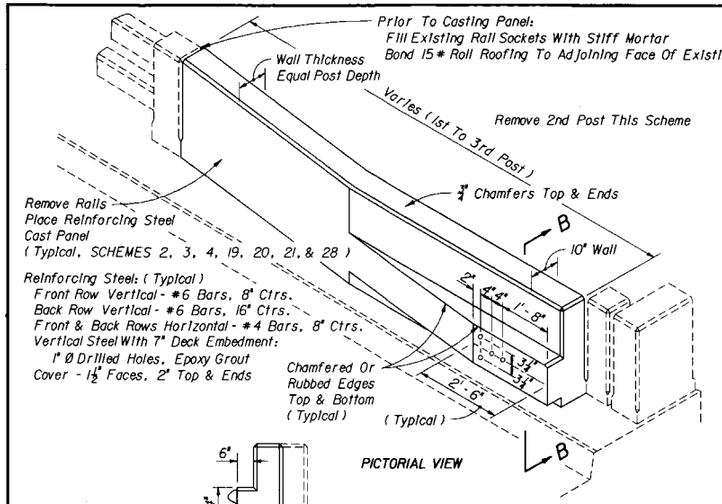

APPLICATIONS

SAFETY CURB 1'-1" TO 2'-0" WIDE
POST AND DISCOUNTINUOUS BEAM RAILING
APPROACH AND TRAILING ENDS OF TWO-WAY BRIDGES
APPROACH END OF ONE-WAY BRIDGES
TRAILING END OF ONE-WAY BRIDGES WHEN OTHER HAZARDS PRESENT

SCHEME 2

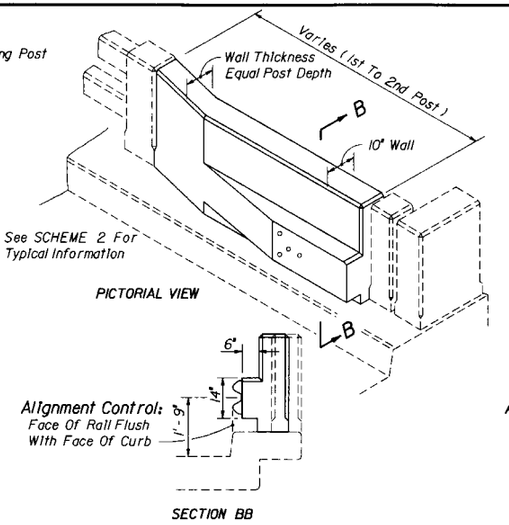

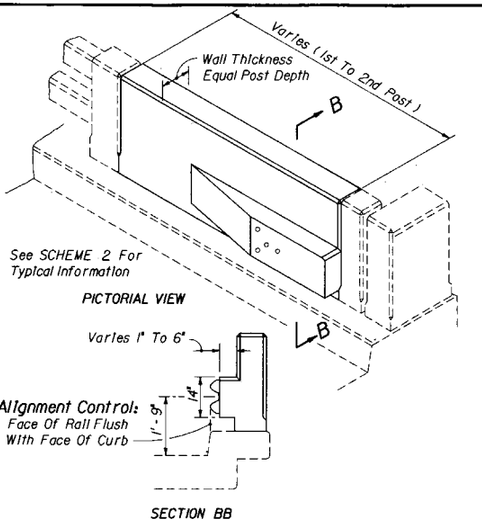

CURBS 4" TO 12" WIDE - DEPICTIONS ARE FOR 9" AND 12" WIDTHS

APPLICATIONS

SAFETY CURB LESS THAN 1'-0" WIDE
POST AND DISCOUNTINUOUS BEAM RAILING
APPROACH AND TRAILING ENDS OF TWO-WAY BRIDGES
APPROACH END OF ONE-WAY BRIDGES
TRAILING END OF ONE-WAY BRIDGES WHEN OTHER HAZARDS PRESENT

SCHEME 3

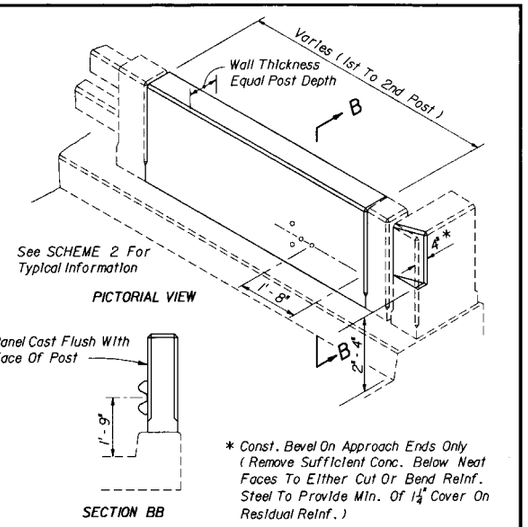

APPLICATIONS

HANDRAIL CURB
POST AND DISCOUNTINUOUS BEAM RAILING
APPROACH AND TRAILING ENDS OF TWO-WAY BRIDGES
APPROACH END OF ONE-WAY BRIDGES
TRAILING END OF ONE-WAY BRIDGES WHEN OTHER HAZARDS PRESENT

SCHEME 4

CAST IN PLACE PANELS

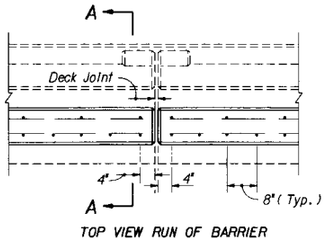

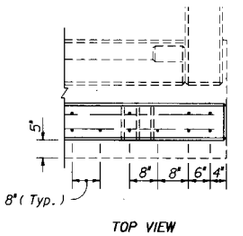

Estimated Quantities (Per L.F.)
Class II Concrete 0.06 CY
Reinforcing Steel 16# Per L.F.

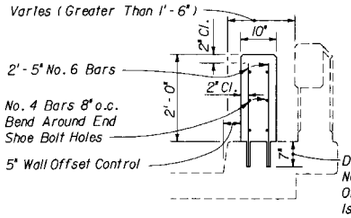

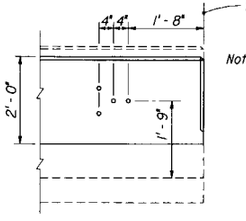

Note: Holes For Special End Shoe Required:
One-Way Bridges
Approach Ends
Trailing Ends When Other Hazards Present
Two-Way Bridges:
Approach And Trailing Ends

APPLICATIONS

SAFETY CURB WIDER THAN 1'-6" AND SIDEWALKS
CONTINUOUS BARRIER ACROSS BRIDGE

SCHEME 1

CONCRETE SAFETY BARRIER

BRIDGES WITH APPROACHING ROADWAY CURB

STATE OF FLORIDA DEPARTMENT OF TRANSPORTATION
ROAD DESIGN

GUARDRAIL ANCHORAGE AND CONTINUOUS BARRIER FOR EXISTING BRIDGES

	Names	Dates
Designed By	JVG	09/86
Drawn By	HSD	09/86
Checked By	JVG	09/86
F.H.W.A. Approved:		

Approved By
State Design Engineer, Roadways

Revision No.	Sheet No.	Index No.
87	2 of 9	401

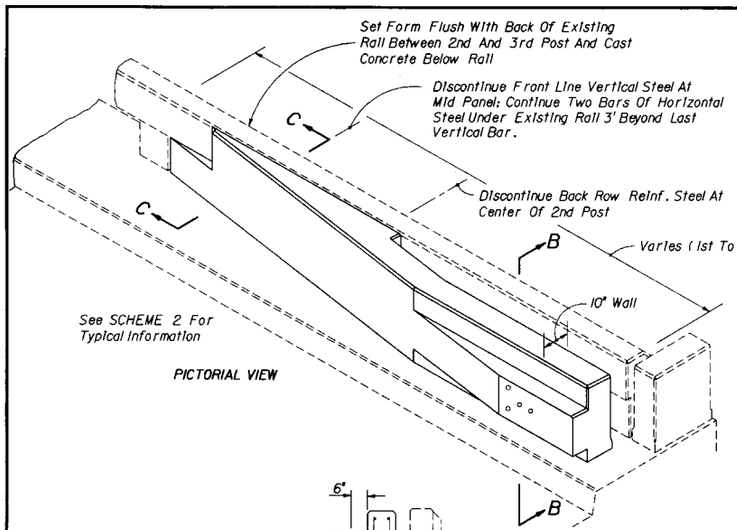

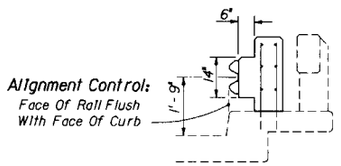

SECTION BB

APPLICATIONS

SAFETY CURB 2'-0" WIDE
CONCRETE CONTINUOUS BEAM RAILING
APPROACH AND TRAILING ENDS OF TWO-WAY BRIDGES
TRAILING END OF ONE-WAY BRIDGES WHEN OTHER HAZARDS PRESENT

SCHEME 5

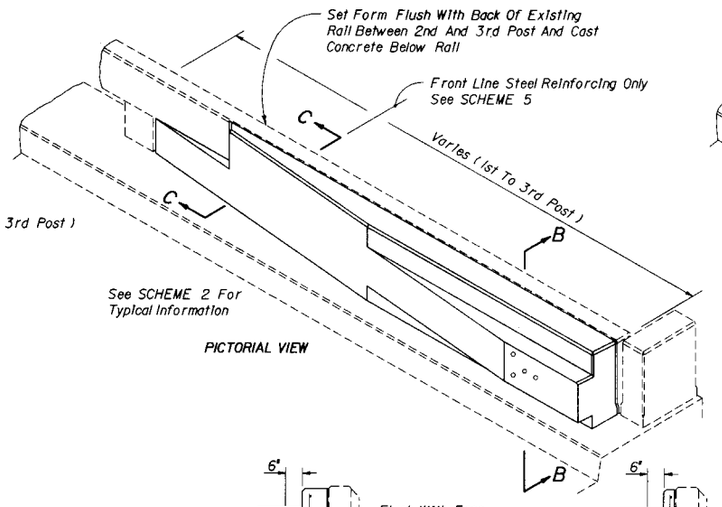

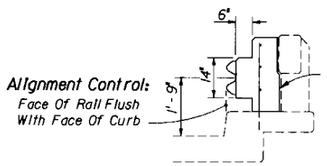

SECTION BB
CURBS 18" TO 23" WIDE (18" SHOWN)

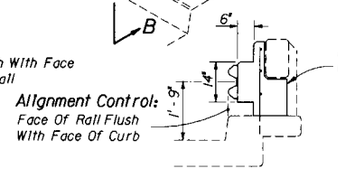

SECTION BB
CURBS 13" TO 17" WIDE (13" SHOWN)

APPLICATIONS

SAFETY CURB 1'-1" TO 1'-11" WIDE
CONCRETE CONTINUOUS BEAM RAILING
APPROACH AND TRAILING ENDS OF TWO-WAY BRIDGES (CURBS 1'-1" TO 1'-11" WIDE)
TRAILING END OF ONE-WAY BRIDGES WHEN OTHER HAZARDS PRESENT (CURBS 1'-8" TO 1'-11" WIDE)

SCHEME 6

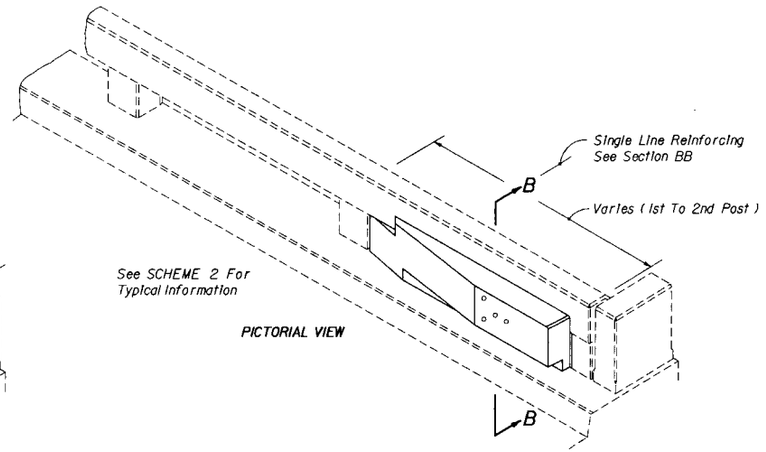

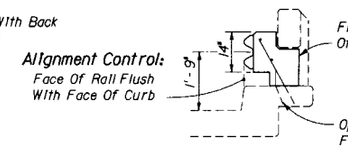

SECTION BB
(12" CURBS SHOWN)

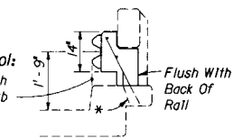

SECTION BB
(9" CURBS SHOWN)

APPLICATIONS

SAFETY CURB 9" TO 1'-0" WIDE
CONCRETE CONTINUOUS BEAM RAILING
APPROACH AND TRAILING ENDS OF TWO-WAY BRIDGES

SCHEME 7

CAST IN PLACE PANELS

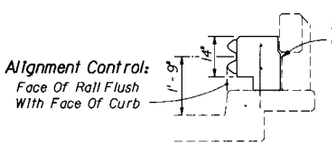

SECTION BB
CURBS 17" TO 19" WIDE (19" SHOWN)

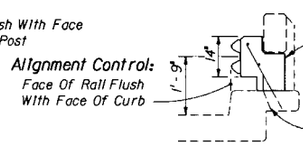

SECTION BB
CURBS 9" TO 16" WIDE (12" SHOWN)

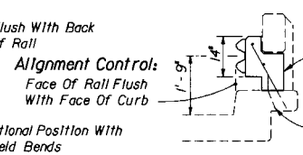

SECTION BB
CURBS 9" TO 16" WIDE (9" SHOWN)

APPLICATIONS

SAFETY CURB 9" TO 1'-7" WIDE
CONCRETE CONTINUOUS BEAM RAILING
APPROACH END OF ONE-WAY BRIDGES
TRAILING END OF ONE-WAY BRIDGES WHEN OTHER HAZARDS PRESENT

SCHEME 8

CAST IN PLACE PANELS

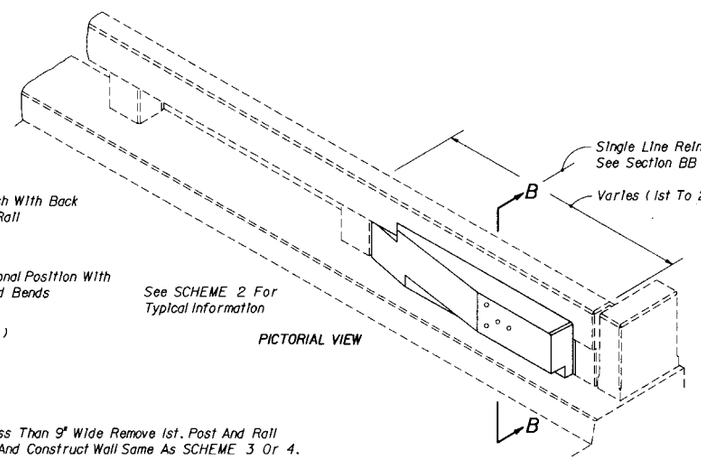

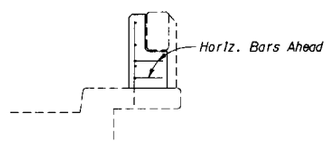

SECTION CC (SCHEMES 5, 6 & 8)

Note: For Curbs Less Than 9" Wide Remove 1st. Post And Rail To 2nd Post And Construct Wall Same As SCHEME 3 Or 4.
For Safety Curbs Wider Than 19" See SCHEME 5, 6 & 19.

BRIDGES WITH APPOACHING ROADWAY CURB

STATE OF FLORIDA DEPARTMENT OF TRANSPORTATION
ROAD DESIGN

GUARDRAIL ANCHORAGE AND CONTINUOUS BARRIER FOR EXISTING BRIDGES

	Names	Dates
Designed By	JVG	09/86
Drawn By	NSD	09/86
Checked By	JVG	09/86
F.H.W.A. Approved:		

Approved By _____
State Design Engineer, Roadways

Revision No.	Sheet No.	Index No.
87	3 of 9	401

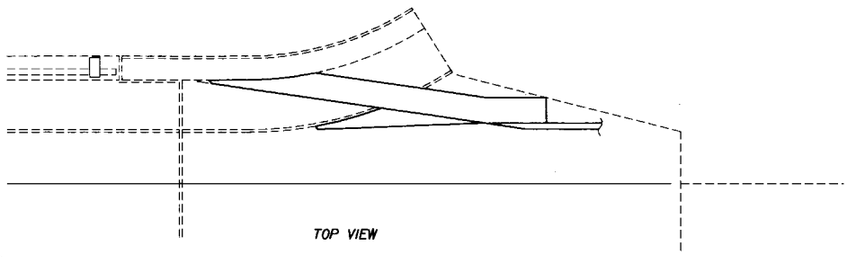

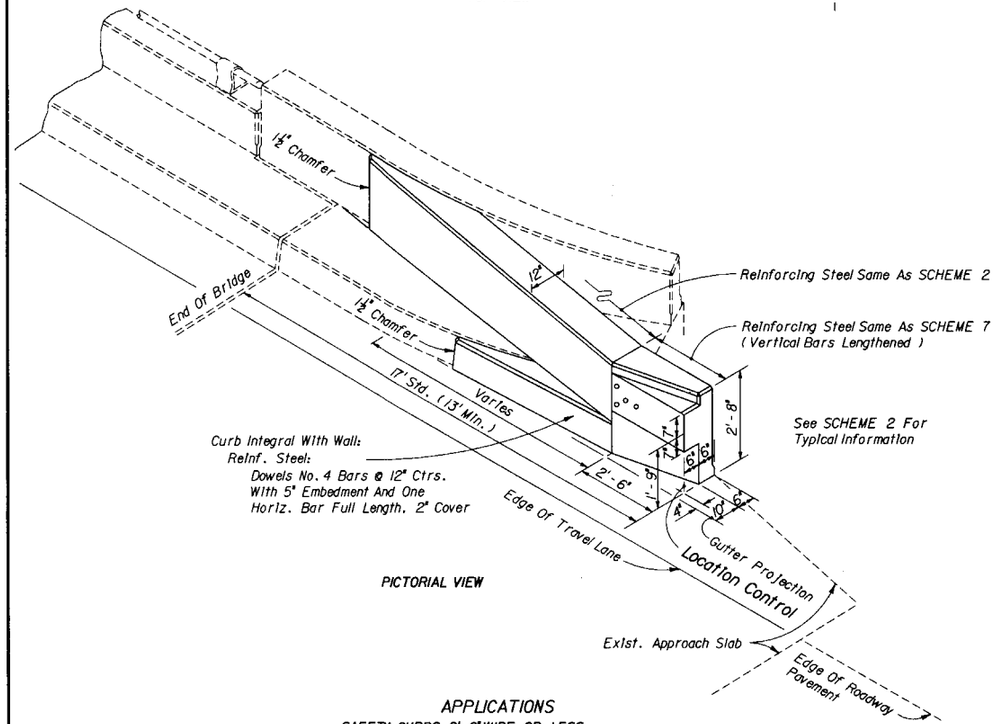

PICTORIAL VIEW

APPLICATIONS

SAFETY CURBS 2'-0" WIDE OR LESS
CONCRETE PARAPET WITH METAL PIPE RAILING
APPROACH AND TRAILING ENDS OF TWO-WAY BRIDGED
APPROACH END OF ONE-WAY BRIDGES
APPROACH SLAB FOUNDATION

SCHEME 9

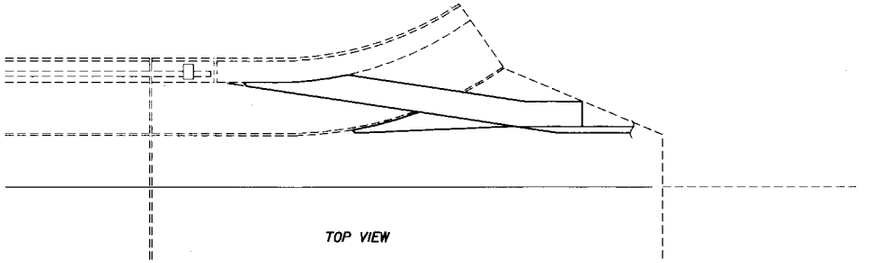

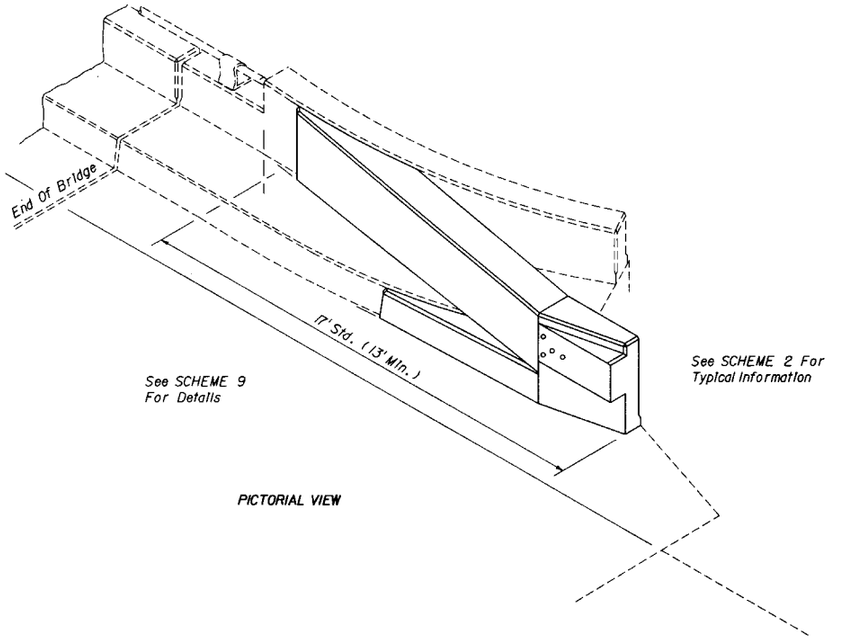

PICTORIAL VIEW

APPLICATIONS

SAFETY CURBS 2'-0" WIDE OR LESS
CONCRETE PARAPET WITH METAL PIPE RAILING
APPROACH AND TRAILING ENDS OF TWO-WAY BRIDGES
APPROACH END OF ONE-WAY BRIDGES
APPROACH SLAB FOUNDATION

SCHEME 10

CAST IN PLACE TRANSITION WALL

BRIDGE WITH APPROACHING ROADWAY CURB

STATE OF FLORIDA DEPARTMENT OF TRANSPORTATION
ROAD DESIGN

GUARDRAIL ANCHORAGE AND CONTINUOUS BARRIER FOR EXISTING BRIDGES

	Names	Dates
Designed By	JVG	09/86
Drawn By	HSD	09/86
Checked By	JVG	09/86
F.H.W.A. Approved:		

Approved By
State Design Engineer, Roadways

Revision No.	Sheet No.	Index No.
87	4 of 9	401

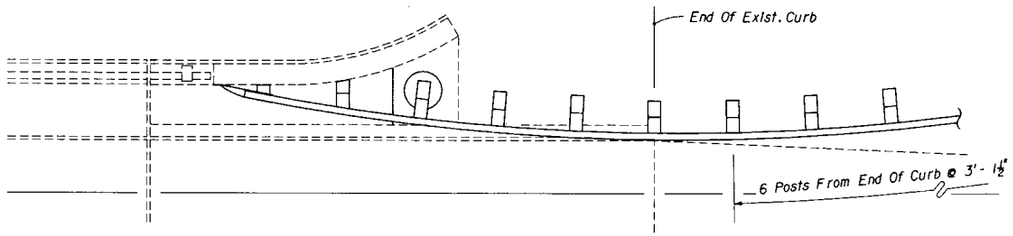

See SCHEME 11 For Additional Information

APPLICATIONS

SAFETY CURB 2'-0" WIDE OR LESS
APPROACH AND TRAILING ENDS OF TWO-WAY BRIDGES
APPROACH END OF ONE-WAY BRIDGES
TRAILING END OF ONE-WAY BRIDGES WHEN OTHER HAZARDS PRESENT

SCHEME 12

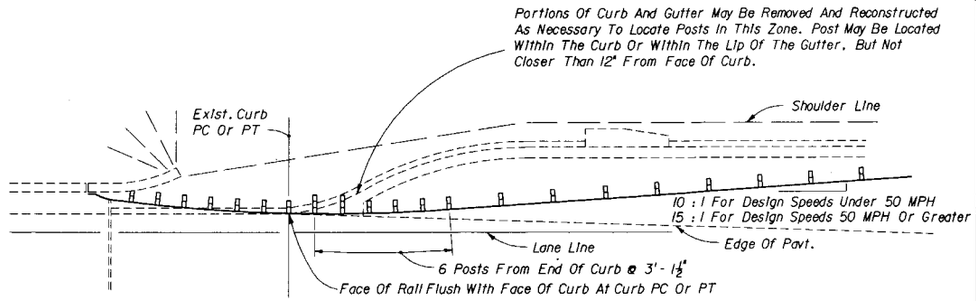

See SCHEMES 11 & 12 For Additional Information

APPLICATIONS

SAFETY CURB 2'-0" WIDE OF LESS
APPROACH AND TRAILING ENDS OF TWO-WAY BRIDGES
APPROACH END OF ONE-WAY BRIDGES
TRAILING END OF ONE-WAY BRIDGES WHEN OTHER HAZARDS PRESENT

SCHEME 13

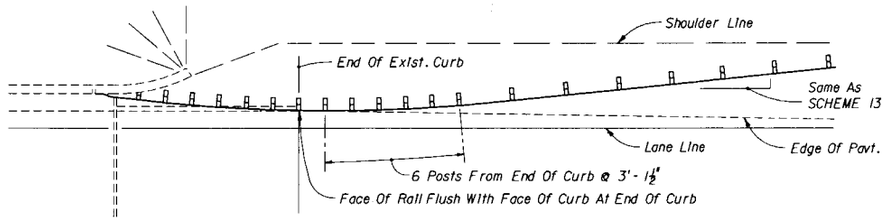

See SCHEMES 11 & 12 For Additional Information

APPLICATIONS

SAFETY CURB 2'-0" WIDE OR LESS
APPROACH AND TRAILING ENDS OF TWO-WAY BRIDGES
APPROACH END OF ONE-WAY BRIDGES
TRAILING END OF ONE-WAY BRIDGES WHEN OTHER HAZARDS PRESENT

SCHEME 14

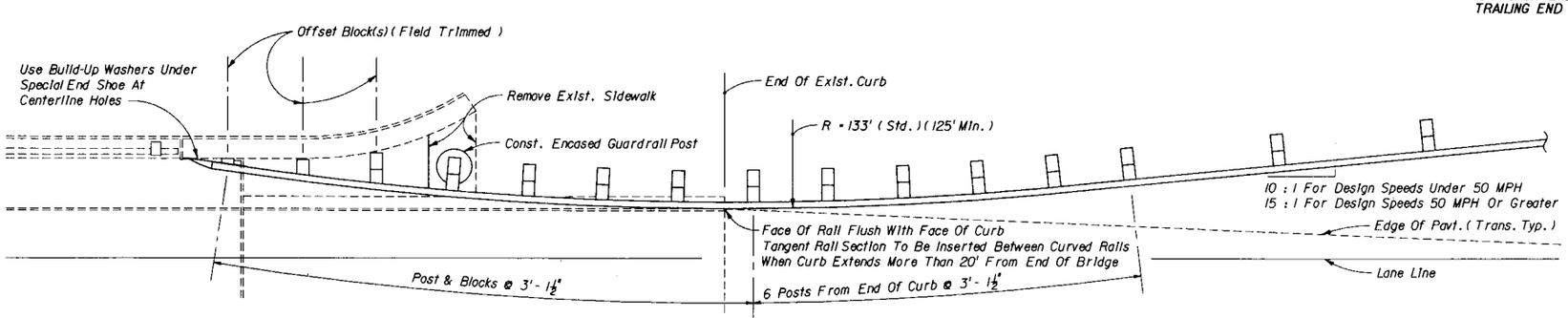

APPLICATIONS

SAFETY CURB 2'-0" WIDE OF LESS
APPROACH AND TRAILING ENDS OF TWO-WAY BRIDGES
APPROACH END OF ONE-WAY BRIDGES
TRAILING END OF ONE-WAY BRIDGES WHEN OTHER HAZARDS PRESENT

SCHEME 11

CURVILINEAR GUARDRAIL

BRIDGES WITH APPROACHING ROADWAY CURB

STATE OF FLORIDA DEPARTMENT OF TRANSPORTATION
ROAD DESIGN

GUARDRAIL ANCHORAGE AND CONTINUOUS BARRIER FOR EXISTING BRIDGES

	Names	Dates
Designed By	JVG	09/86
Drawn By	HSD	09/86
Checked By	JVG	09/86
F.H.W.A. Approved		

Approved By _____
State Design Engineer, Roadways

Revision No.	Sheet No.	Index No.
87	5 of 9	401

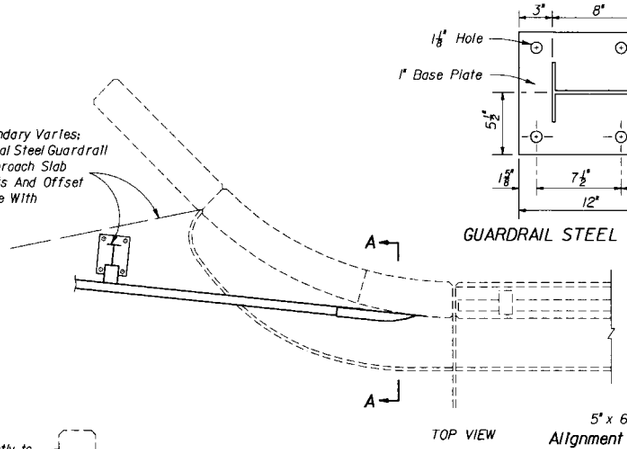

GUARDRAIL STEEL TERMINAL POST

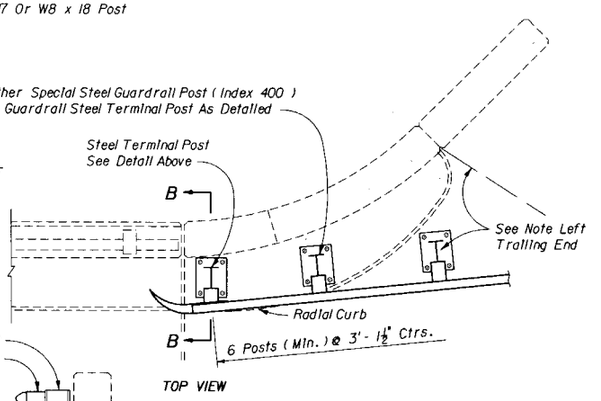

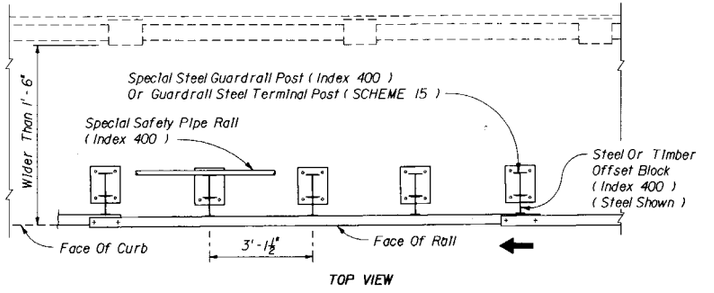

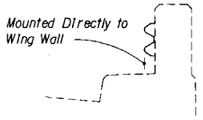

TRAILING END:
SAFETY CURB 2'-0" OR LESS IN WIDTH

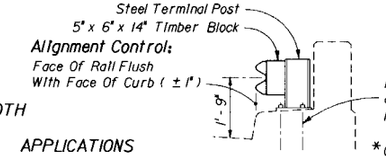

APPLICATIONS
SAFETY CURB 2'-0" OR LESS IN WIDTH
APPROACH END OF ONE-WAY BRIDGES
TRAILING END OF ONE-WAY BRIDGES WHEN OTHER HAZARDS PRESENT

SCHEME 15

STEEL ANCHOR POST AT RADIAL WING WALL

APPROACH END:
SAFETY CURBS 1'-6" TO 2'-0" WIDE

*Optional Anchor Bolt:
1" Dia. Molly Chemical Anchor (Parabond) (Polyester Resin/Aggregate Capsule); 1" Dia. Hilti Chemical Anchor (HVA) (Polyester Resin/Aggregate Capsule); Or Equal 1" Dia. Chemical Anchor As Approved By The Engineer.
Anchors Shall Be Installed In Accordance With Manufacturers Recommendations.

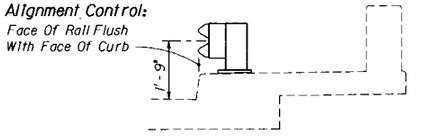

Note: Post Of Uniform Type And Blocks Of Uniform Material And Size To Be Used Throughout Run Of Bridge. ⅞" Or 1" Anchor Bolt To Match Post Selected.

APPLICATION
SAFETY CURB WIDER THAN 1'-6" AND SIDEWALK

SCHEME 16

GUARDRAIL CONTINUOUS ACROSS BRIDGE

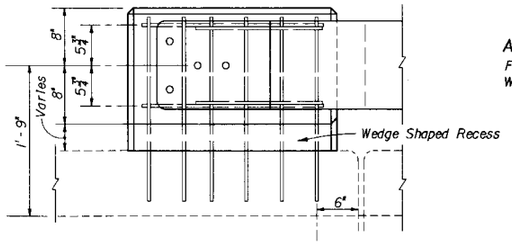

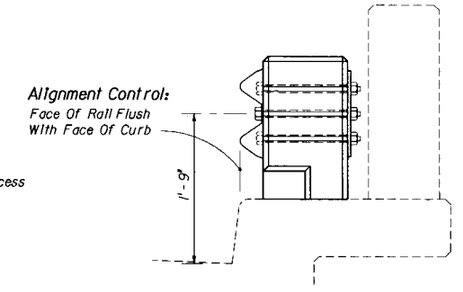

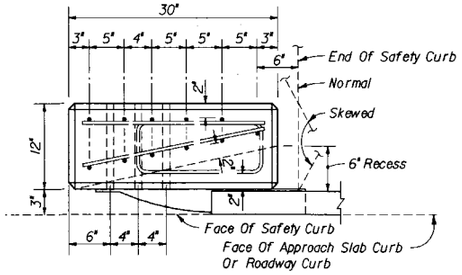

Reinforcing Steel:
All No. 4 Bars (No. 3 Bars Permitted For Hoops). Vertical Bars Embedded In ¾" Drilled Holes 7" Deep With Full Depth Epoxy Grout, Polyester Resign/Aggregate Capsule Adhesive Or Other Chemical Grout Approved By The Engineer.

Note: Scheme comparatively enlarged to facilitate reinforcement detailing.

APPLICATIONS
SAFETY CURB 1'-6" TO 2'-0" WIDE
APPROACH END OF ONE-WAY BRIDGES ONLY

SCHEME 17

CONCRETE ANCHOR POST

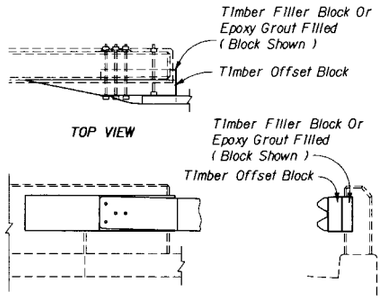

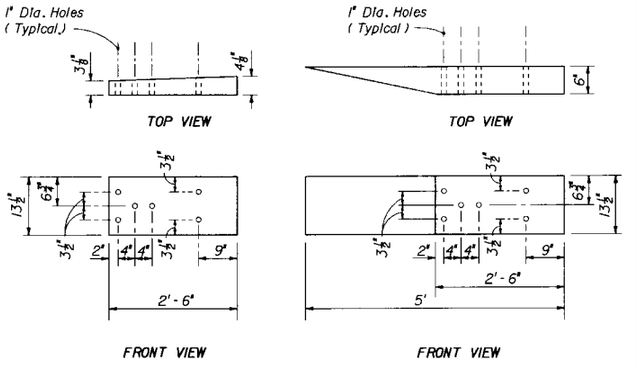

TIMBER FILLER BLOCK

TIMBER OFFSET BLOCK

APPLICATIONS
HANDRAIL CURB
SPECIAL END SHOE RECESS (EXISTING)
APPROACH AND TRAILING END OF TWO-WAY BRIDGES
APPROACH END OF ONE-WAY BRIDGES (NOTES: SPECIAL END SHOE TO REMAIN IN THE RECESS ON TRAILING END)

SCHEME 18

END POST WITH SPECIAL END SHOE RECESS

BRIDGES WITH APPROACHING ROADWAY CURB

STATE OF FLORIDA DEPARTMENT OF TRANSPORTATION
ROAD DESIGN

GUARDRAIL ANCHORAGE AND CONTINUOUS BARRIER FOR EXISTING BRIDGES

	Names	Dates
Designed By	JMG	09/86
Drawn By	HSD	09/86
Checked By	JMG	09/86
F.H.W.A. Approved:		

Approved By
State Design Engineer, Roadways

Revision No.	Sheet No.	Index No.
87	6 of 9	401

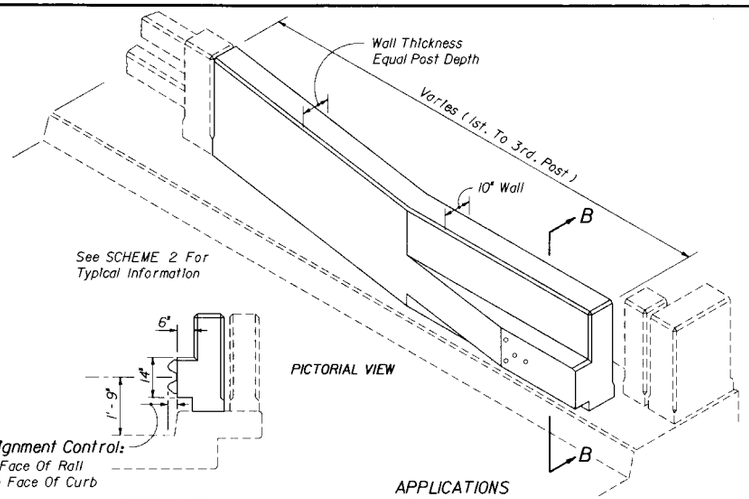

PICTORIAL VIEW

SECTION BB

APPLICATIONS

SAFETY CURB 0'-11" TO 2'-0" WIDE
POST AND DISCONTINUOUS BEAM RAILING
APPROACH ENDS OF ONE-WAY BRIDGE
APPROACH AND TRAILING ENDS OF TWO-WAY BRIDGES

SCHEME 20

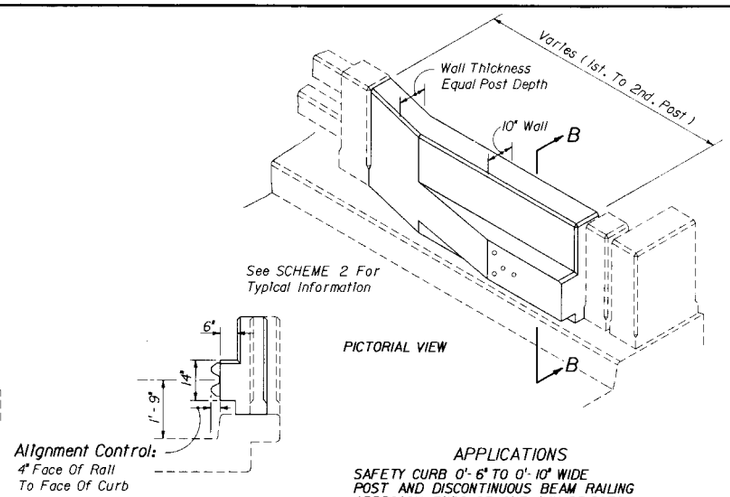

PICTORIAL VIEW

SECTION BB

APPLICATIONS

SAFETY CURB 0'-6" TO 0'-10" WIDE
POST AND DISCONTINUOUS BEAM RAILING
APPROACH ENDS OF ONE-WAY BRIDGES
APPROACH AND TRAILING ENDS OF TWO-WAY BRIDGES

SCHEME 21

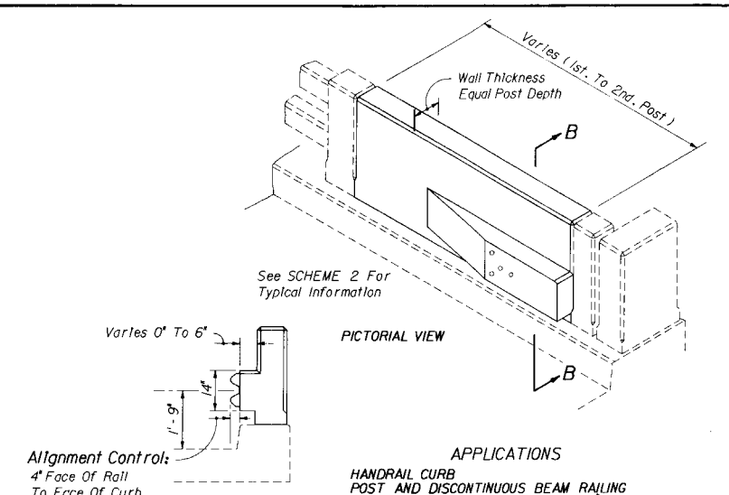

PICTORIAL VIEW

SECTION BB

APPLICATIONS

HANDRAIL CURB
POST AND DISCONTINUOUS BEAM RAILING
APPROACH END OF ONE-WAY BRIDGES
APPROACH AND TRAILING ENDS OF TWO-WAY BRIDGES

SCHEME 22

CAST IN PLACE PANELS

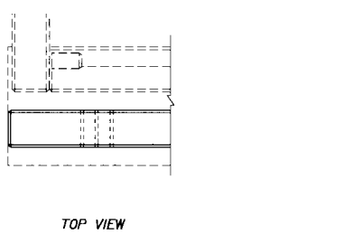

TOP VIEW

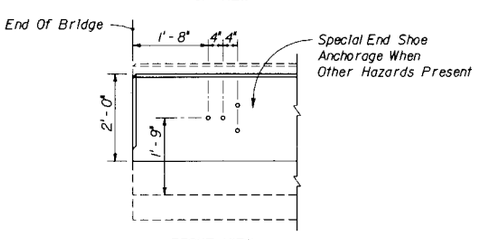

FRONT VIEW

TRAILING END OF ONE-WAY BRIDGES

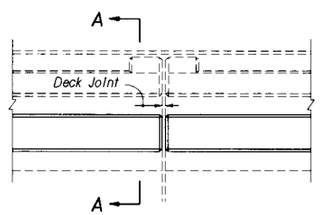

TOP VIEW

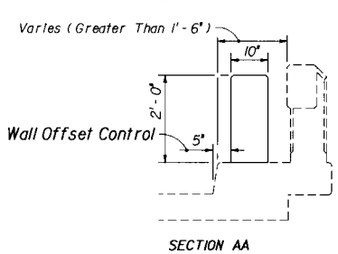

SECTION AA

RUN OF BARRIER

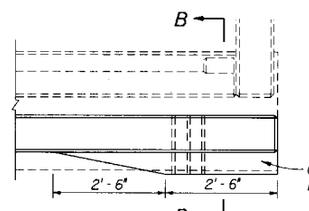

TOP VIEW

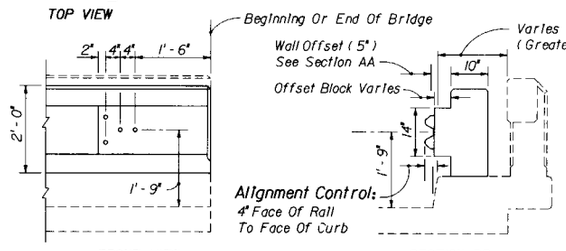

FRONT VIEW

SECTION BB

APPROACH END OF ONE-WAY BRIDGES
APPROACH AND TRAILING ENDS OF TWO-WAY BRIDGES

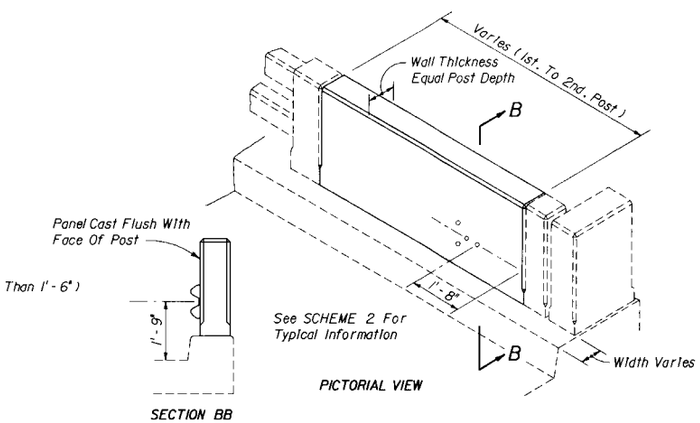

PICTORIAL VIEW

SECTION BB

APPLICATION

TRAILING END ON ONE-WAY BRIDGES WHEN OTHER HAZARDS PRESENT

SCHEME 23

CAST IN PLACE CONCRETE PANEL

See SCHEME 1 For Reinforcing Details And Estimated Quantities

APPLICATIONS

SAFETY CURB WIDER THAN 1'-6", AND SIDEWALKS
CONTINUOUS BARRIER ACROSS BRIDGE

SCHEME 19

CONCRETE SAFETY BARRIER

BRIDGE WITHOUT APPROACHING ROADWAY CURB

STATE OF FLORIDA DEPARTMENT OF TRANSPORTATION
ROAD DESIGN

GUARDRAIL ANCHORAGE AND CONTINUOUS BARRIER FOR EXISTING BRIDGES

	Names	Dates
Designed By	JVG	09/86
Drawn By	HSD	09/86
Checked By	JVG	09/86

Approved By
State Design Engineer, Roadways

F.H.W.A. Approved:

Revision No.	Sheet No.	Index No.
87	7 of 9	401

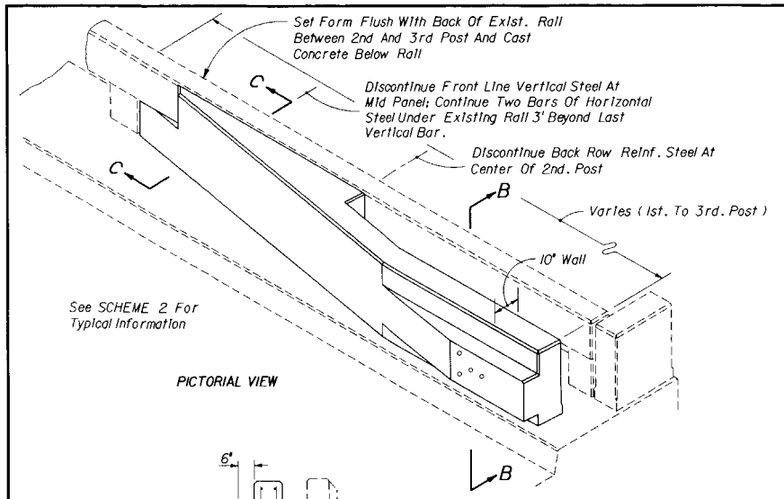

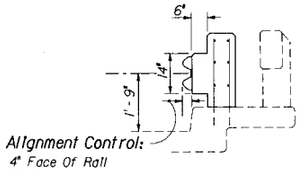

Alignment Control:
4" Face Of Rail
To Face Of Curb

SECTION BB
(24" Shown)

APPLICATIONS
SAFETY CURBS 1'-8" TO 2'-0" WIDE
CONCRETE CONTINUOUS BEAM RAILING
APPROACH AND TRAILING ENDS OF TWO-WAY BRIDGES

SCHEME 24

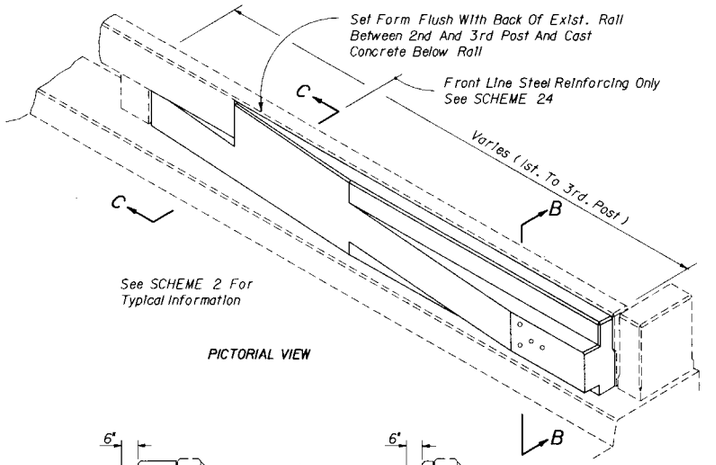

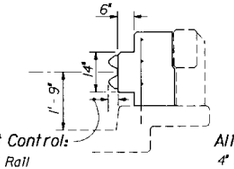

Alignment Control:
4" Face Of Rail
To Face Of Curb

SECTION BB
Curbs 14" To 19" (19" Shown)

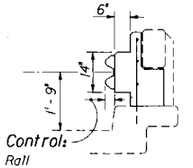

Alignment Control:
4" Face Of Rail
To Face Of Curb

SECTION BB
Curbs 9" To 13" (9" Shown)

APPLICATIONS
SAFETY CURBS 9" TO 1'-7" WIDE
CONCRETE CONTINUOUS BEAM RAILING
APPROACH AND TRAILING ENDS OF TWO-WAY BRIDGES

SCHEME 25

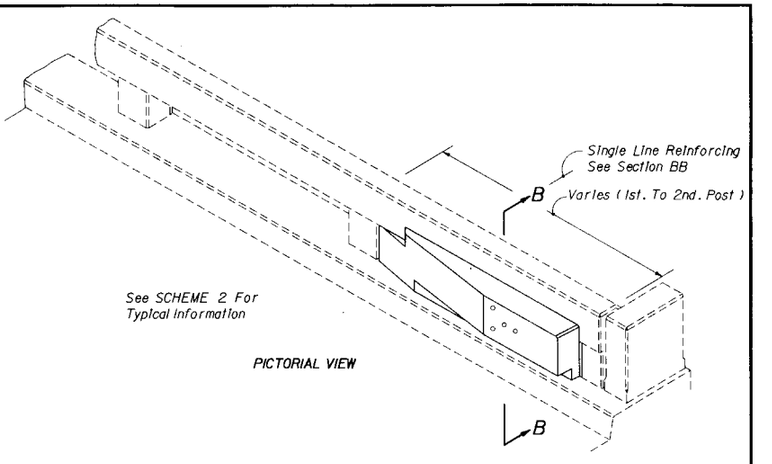

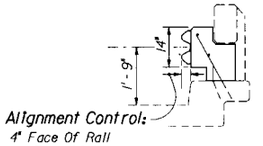

Alignment Control:
4" Face Of Rail
To Face Of Curb

SECTION BB
(8" Shown)

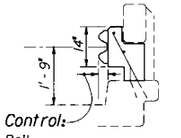

Alignment Control:
4" Face Of Rail
To Face Of Curb

SECTION BB
(5" Shown)

APPLICATIONS
SAFETY CURBS 5" TO 8" WIDE
CONCRETE CONTINUOUS BEAM RAILING
APPROACH AND TRAILING ENDS OF TWO-WAY BRIDGES

SCHEME 26

CAST IN PLACE PANELS

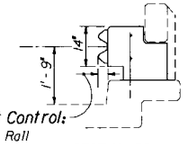

Alignment Control:
4" Face Of Rail
To Face Of Curb

SECTION BB

CURBS 9" TO 15" WIDE (13" SHOWN)
APPROACH ENDS

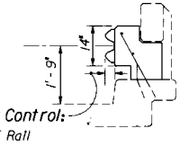

Alignment Control:
4" Face Of Rail
To Face Of Curb

SECTION BB

CURBS 5" TO 8" WIDE (8 SHOWN)
APPROACH ENDS

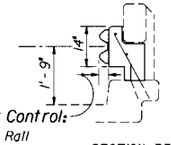

Alignment Control:
4" Face Of Rail
To Face Of Curb

SECTION BB

CURBS 5" TO 8" WIDE (5" SHOWN)
APPROACH ENDS

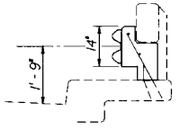

SECTION BB

CURB WIDTHS VARY
TRAILING END WHEN OTHER HAZARDS PRESENT

Note: For Approach End Curb Less Than 5" Wide See SCHEME 22.

Note: For Trailing End Curb Less Than 5" Wide See SCHEME 23

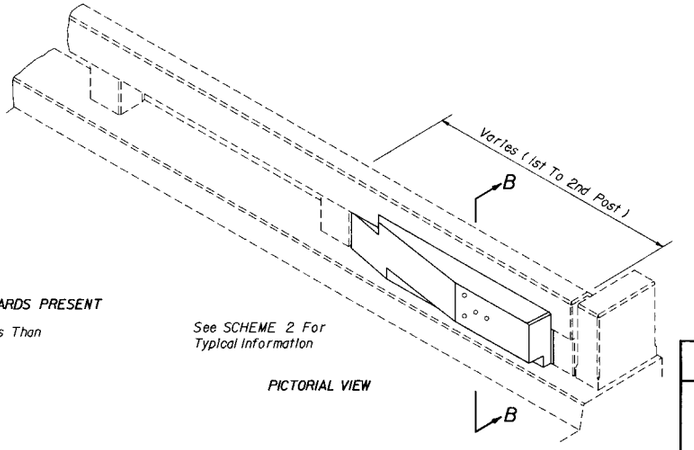

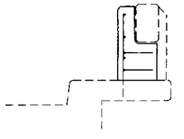

SECTION CC (SCHEMES 24 & 25)

APPLICATIONS
SAFETY CURB 5" TO 1'-3" WIDE
CONCRETE CONTINUOUS BEAM RAILING
APPROACH END OF ONE-WAY BRIDGES
TRAILING END OF ONE-WAY BRIDGES WHEN OTHER HAZARDS PRESENT

SCHEME 27

CAST IN PLACE PANELS

BRIDGES WITHOUT APPROACHING ROADWAY CURB

STATE OF FLORIDA DEPARTMENT OF TRANSPORTATION
ROAD DESIGN

GUARDRAIL ANCHORAGE AND CONTINUOUS BARRIER FOR EXISTING BRIDGES

	Names	Dates
Designed By	JVG	09/86
Drawn By	HSD	09/86
Checked By	JVG	09/86
F.H.W.A. Approved:		

Approved By
State Design Engineer, Roadways

Revision No.	Sheet No.	Index No.
87	8 of 9	401

Reinforcing Steel: See SCHEME 17.

Note: Scheme comparatively enlarged to facilitate reinforcement detailing.

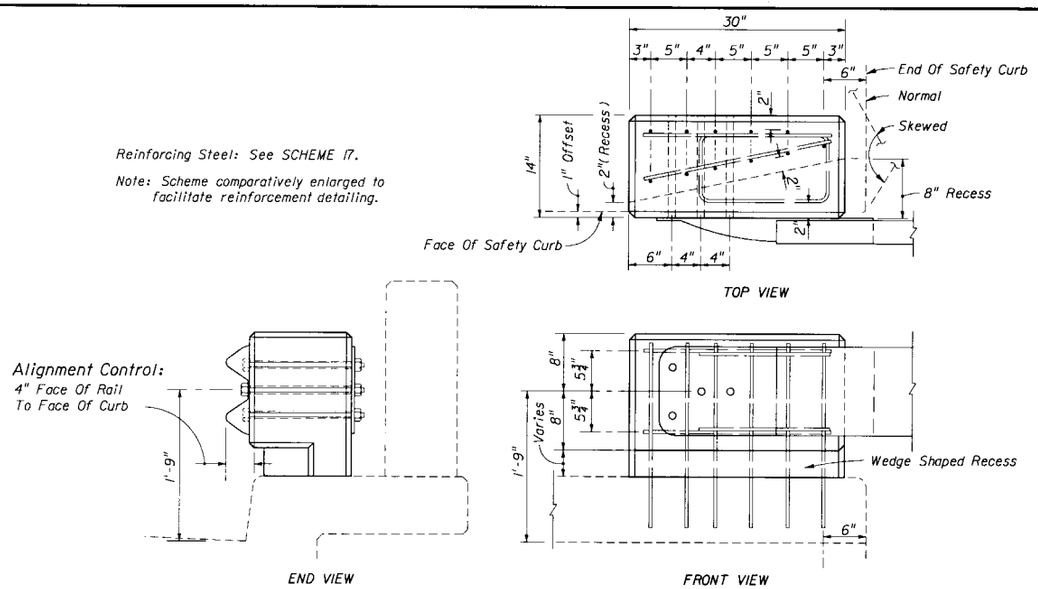

APPLICATIONS

SAFETY CURB WIDER THAN 1'-4" AND UP TO 2'-0"
APPROACH END OF ONE-WAY BRIDGES ONLY

SCHEME 28

CONCRETE ANCHOR POST

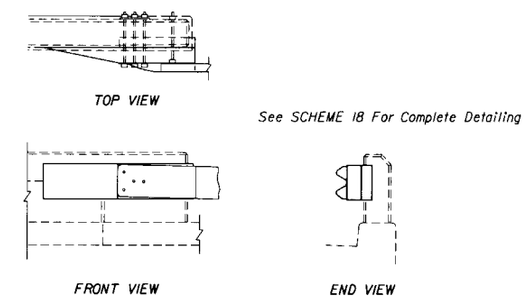

APPLICATIONS

HANDRAIL CURB
SPECIAL END SHOE RECESS (EXISTING)
APPROACH AND TRAILING END OF TWO-WAY BRIDGES
APPROACH END OF ONE-WAY BRIDGES (NOTE: SPECIAL END SHOE TO REMAIN IN THE RECESS ON TRAILING END)

SCHEME 30

END POST WITH SPECIAL END SHOE RECESS

Note (Scheme 29):

Portions of existing approach slab curbing, wingwalls, shoulder gutter, flumes and etc. may have to be revamped or removed.

Transition walls shall be reinforced in accordance with the 'Free End Reinforcement' detail of Index No. 410 with the hairpin bars spaced as shown in this pictorial. Walls mounted on existing approach slabs shall be anchored into the slabs with the front line of the hairpin reinforcement embedded 7" in the slab using portland cement mortar in accordance with Subsection 460-30 of the Standard Specifications.

Transition walls mounted on soil foundation shall have footings deepened 30" and the walls doweled into the end of the existing bridge in the following manner:
Four 1¼ diameter holes 6" deep shall be drilled in the end post of the existing bridge and No. 6 bars 15" long set in epoxy mortar. The holes shall be located as near as practical to the vertical center of the end of the transition wall and equally spaced to provide cover of 3" Minimum. The ends of the dowels extending into the transition wall shall be wrapped with on layer of 15# asphalt felt with the ends crimped.

Approaching guardrail shall have approach post spacings, offset blocks and double W-beams in accordance with Details H, I, S & T, Index No. 400.

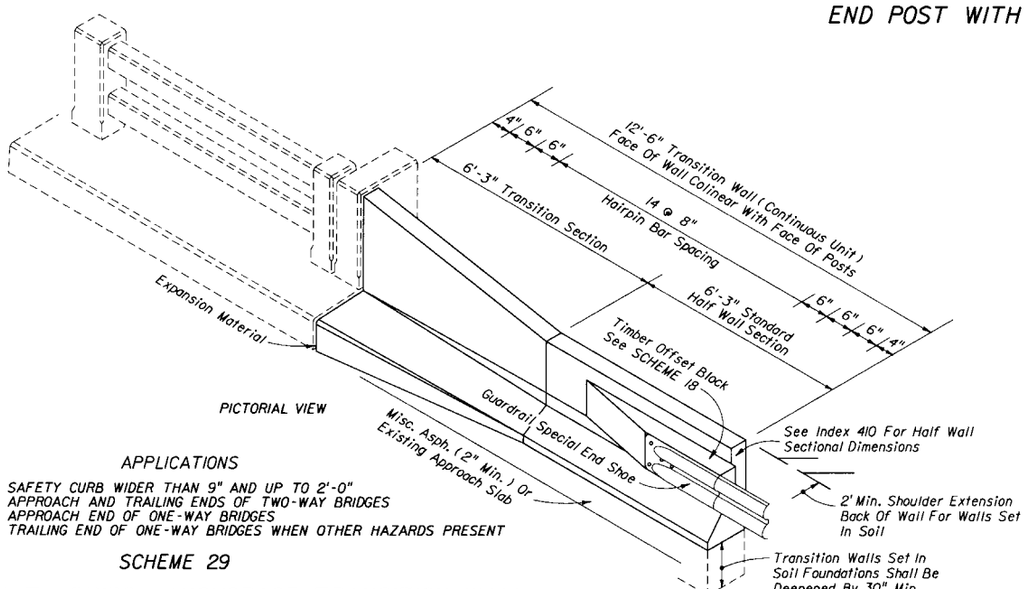

PICTORIAL VIEW

APPLICATIONS

SAFETY CURB WIDER THAN 9" AND UP TO 2'-0"
APPROACH AND TRAILING ENDS OF TWO-WAY BRIDGES
APPROACH END OF ONE-WAY BRIDGES
TRAILING END OF ONE-WAY BRIDGES WHEN OTHER HAZARDS PRESENT

SCHEME 29

CONCRETE BRIDGE ANCHORAGE TRANSITION WALL

BRIDGES WITHOUT APPROACHING ROADWAY CURB

STATE OF FLORIDA DEPARTMENT OF TRANSPORTATION
ROAD DESIGN

GUARDRAIL ANCHORAGE AND CONTINUOUS BARRIER FOR EXISTING BRIDGES

	Names	Dates
Designed By	JVG	09/86
Drawn By	HSD	09/86
Checked By	JVG	09/86

Approved By: State Roadway Design Engineer

Revision No.	Sheet No.	Index No.
92	9 of 9	401

F.H.W.A. Approved:

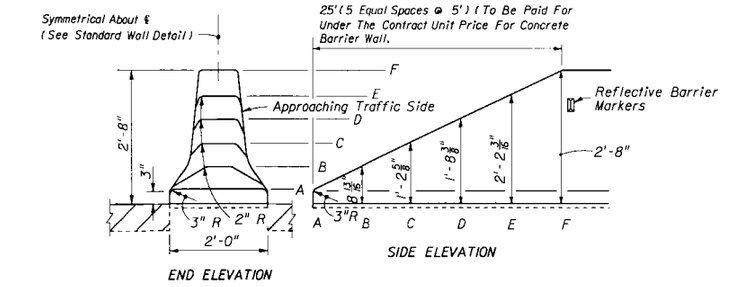

TO BE USED ONLY WHERE TERMINAL LOCATED CLEAR ZONE WIDTH FROM EDGE OF THE NEAR APPROACH DRIVING LANE. (SEE DETAIL A)

CONCRETE BARRIER WALL TERMINAL

DETAIL II

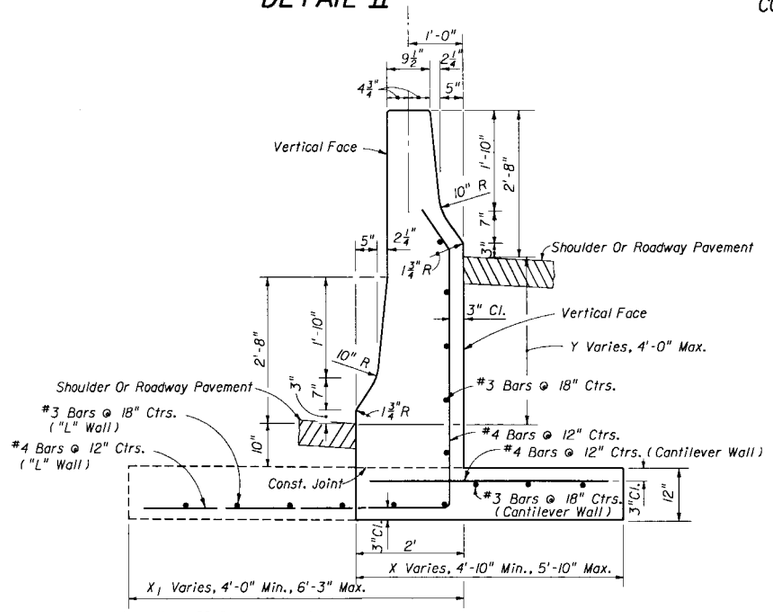

Note: Wall segments shall be 20 feet or more in length.

Design Criteria: Vehicle: 4000 lbs., 60 mph, 25°, Avg. Lat. Impact Deceleration Force- 7G's (28 Kips;)
Vehicle Force Applications: 1000 lbs. Vert. At Top of Toe; 28 Kips Horiz. At 5½" Above Pavt.

Unless the plans stipulate a specific wall type, either the cantilever wall or the "L" wall may be constructed at the Contractors option.

Steel not required in cantilever walls of heights Y=0'-0" To 0'-6" when footing and stem cast as one unit. When footing and stem cast separately by construction joint, the footing joint surface shall be roughened and No. 4 dowels 24" long installed at the centerline of the stem on 24" centers with 9" embedment in the footing.

Cost of the steel and concrete footing to be included in the contract unit price for Concrete Barrier Wall, LF.

See General Note No. 7 for details of connection and reinforcement required when wall is continuous with standard barrier wall.

	Height Y	0'-0"	0'-6"	1'-0"	1'-6"	2'-0"	2'-6"	3'-0"	3'-6"	4'-0"
Cantilever Wall	Width X	4'-10"	5'-0"	5'-2"	5'-3"	5'-5"	5'-6"	5'-7"	5'-9"	5'-10"
"L" Wall	Width X_1	4'-0"	4'-4"	4'-8"	5'-0"	5'-3"	5'-6"	5'-9"	6'-0"	6'-3"

MEDIAN BARRIER WALL FOR SUPERELEVATED SECTIONS OR FOR VARIABLE ROADWAY PROFILE GRADES

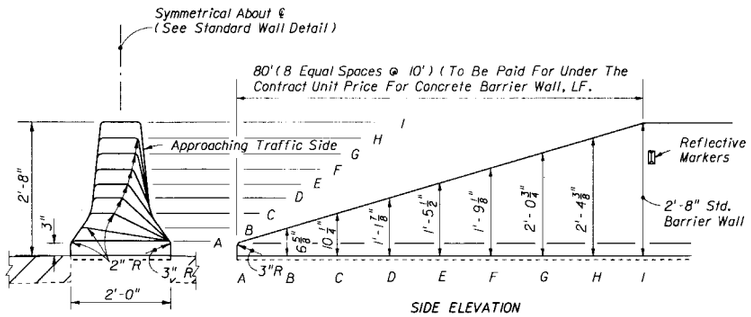

DESIGN SPEED 45 MPH OR LESS

CONCRETE BARRIER WALL TERMINAL FOR NARROW MEDIAN

DETAIL III

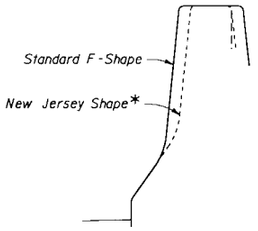

*Existing New Jersey shaped walls that are to remain in place or be modified as called for in the plans; or, walls that are to be repaired, modified or constructed as directed by the Engineer. Wall dimensions shall be in accordance with Index No. 410 of the 1988 Roadway and Traffic Design Standards.

Where standard F-Shape walls abut existing NJ Shape walls, face transitions of not less than 5' in length shall be constructed at the end of the F-Shape wall.

WALL FACE SAFETY SHAPES

GENERAL NOTES

1. Class II concrete shall be used for all reinforced and plain (nonreinforced) concrete barrier walls; except, in moderately and extremely aggressive environments, Class IV concrete shall be used. Exposed concrete surfaces shall have a Class 3 surface finish in accordance with Section 521 of the Standard Specifications, unless other finish called for in the plans. The surfaces shall have a Class 5 Applied Finish Coating in accordance with Section 400 only when called for in the plans.
2. Concrete barrier wall terminal notes for design speeds greater than 45 mph.
   a. Terminated in a wide median section outside recovery area of the appproach traffic- See Detail A.
   b. Terminated within a shielded location.
   c. Terminal protection by the use of an impact attenuator system.
   d. Terminated in conjunction with a suitably designed transition to another type median barrier that can be introduced more safely.
3. Expansion joints in wall required only at bridge ends and/or at locations where wall is an integral part of existing or proposed concrete slab; wall joints are to match an existing or proposed expansion joint.
4. When the barrier is installed adjacent to the pavement the top 12" of the subgrade shall be compacted to at least 100% of the density as defined in the AASHTO T-99 specifications.
5. Cast-in-place barrier wall normally will be a continuous pour without transverse contraction joints. Cast-in-place segments with a length < 40' shall be joined to adjacent sections by doweling. See Detail B.
6. Precast construction is allowed as an alternate to cast-in-place construction.
   a. Wall segments less than 40' in length shall be joined by a transverse joint in accordance with Details C & D. The minimum segment length is 20'.
   b. Bedding of the precast sections shall be facilitated by the use of sand-cement grout or equal method to assure uniform bearing.
   c. Reinforcement may be required for handling stresses.

REFLECTIVE BARRIER MARKER SPACING ON WALL	
Distance - Edge of Travel Lane to Barrier Wall.	Spacing
1' to < 4'	40'
4' to 8'	80'
> than 8'	none required

REMARKS

1. Reflectors shall conform to Section 993-5 of the Standard Specifications.
2. Reflector color (white or yellow) shall conform to the color of the near edgeline.

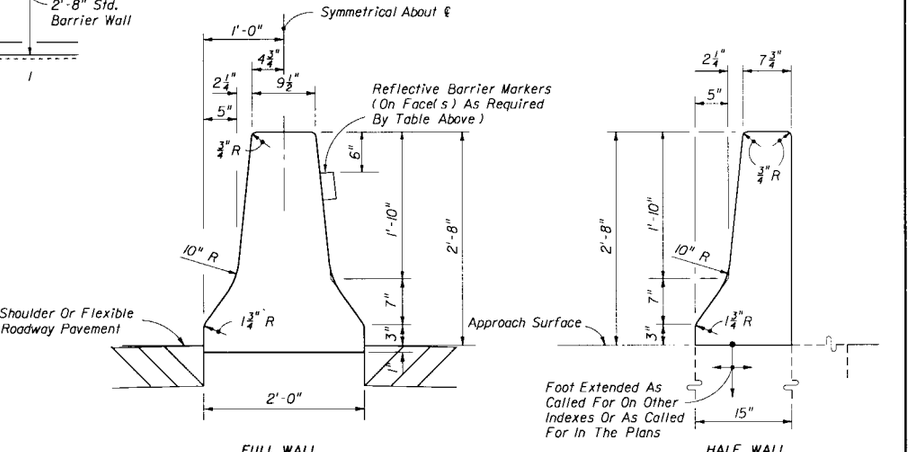

For concrete median barrier wall details at piers, highway lighting and guardrail connections, see Sheets 2, 3, 12 and 13.

Standard barrier to be paid for under the contract unit price for Concrete Barrier Wall, LF.

STANDARD BARRIER WALL SECTIONS

GENERAL NOTES (CONT.)

7. Concrete barrier walls that are continuous over roadway and bridge shall be pin connected at the roadway end of the approach slab. Both cast-in-place and precast roadway barrier walls shall be connected at the approach slab by Option 3 or 4 end treatments of Index No. 415, and reinforced in accordance with the free end reinforcement details of this Index. Median and outside barrier walls on the approach slab shall be designed, constructed and paid for as a part of the approach slab. Pins shall remain free but secured from ready removal by spot welding a ½" Ø x 2" stud approximately 3 inches below the upper pair of eye connectors.
   This connection method also applies to standard barrier walls that are continuous with median barrier walls for superelevated sections and for variable roadway profile grades (see detail left).
8. Cost of reinforcing steel and reflective barrier markers shall be included in the contract unit price for concrete barrier wall. See individual details for pay item information.
9. For barrier wall inlet details see Indexes Nos. 217, 218 and 219.

STATE OF FLORIDA DEPARTMENT OF TRANSPORTATION
ROAD DESIGN

CONCRETE BARRIER WALL

	Names	Dates
Designed By		
Drawn By	AF/HSD	7/3/91
Checked By	LMF/JG	7/3/91
F.H.W.A. Approved:		5/20/77

Approved By: Ray L. Kassim
State Roadway Design Engineer

Revision No.	Sheet No.	Index No.
92	1 of 14	410

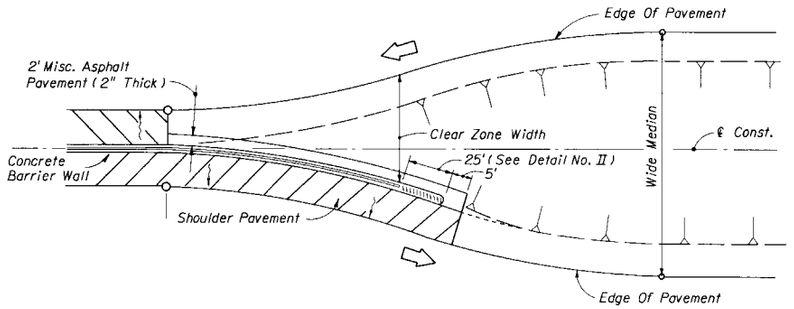

CONCRETE BARRIER WALL TRANSITION BETWEEN WIDE AND NARROW MEDIANS

DETAIL A

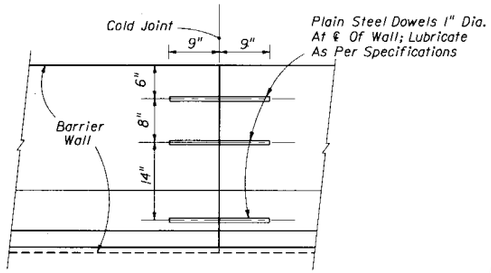

DOWELED TRANSVERSE CONSTRUCTION JOINT WHEN ABUTTING SEGMENT(S) LESS THAN 40' IN LENGTH

DETAIL B

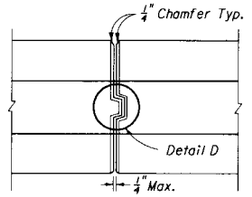

TOP VIEW

PRECAST BARRIER TRANSVERSE JOINTS

DETAIL C

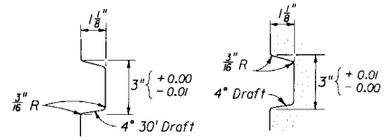

TOP VIEW

STRAIGHT TONGUE AND GROOVE

DETAIL D

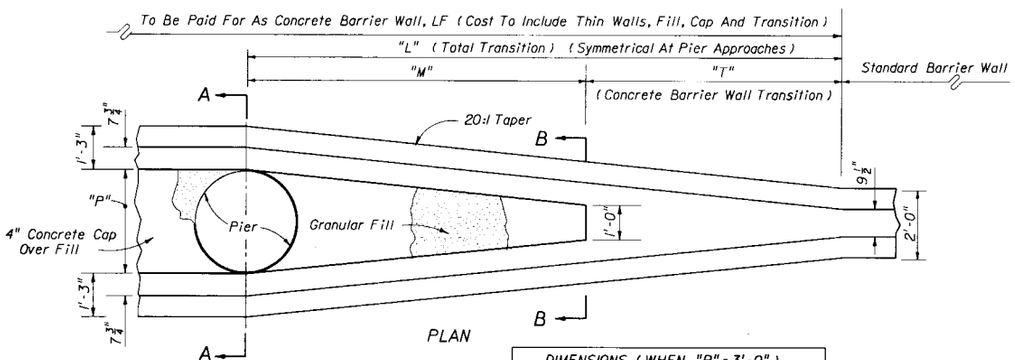

PLAN

DIMENSIONS (WHEN "P" = 3'-0")		
"L"	"M"	"T"
35'	20'	15.0'

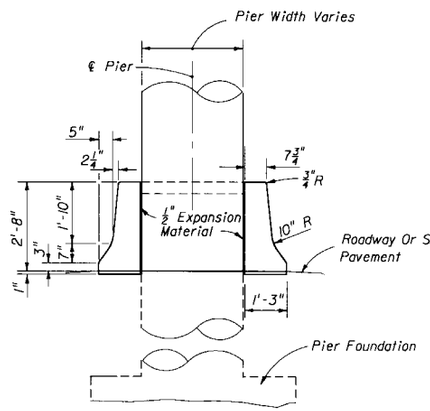

SECTION AA

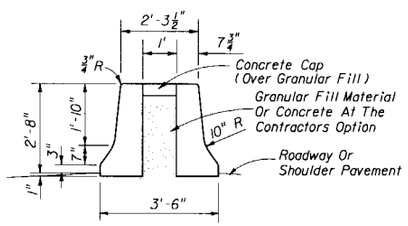

SECTION BB

CONCRETE MEDIAN BARRIER WALL (THIN WALLS, FILL, CAP AND TRANSITION)

DETAIL I



END VIEW END VIEW FRONT VIEW

NOTES

1. End of wall flush mounted connections are not applicable to two-lane two-way facilities. See Sheets 12, 13 and 14 for trailing end connections on two-lane two-way facilities and for approach guardrail connections.
2. Trailing guardrail connections to double face safety shaped walls will be under one of the following traffic conditions and mounting methods:
   (a) One-way traffic trailing condition one side only – flush mount with flat steel back-up plate on back side.
   (b) One-way traffic trailing condition both sides – flush mount both sides.
   (c) For trailing condition one side and approach traffic condition opposite side – see "Median Barrier Wall" mounting, Sheets 13 and 14.

GUARDRAIL CONNECTION TO TRAILING END CONCRETE BARRIER WALL

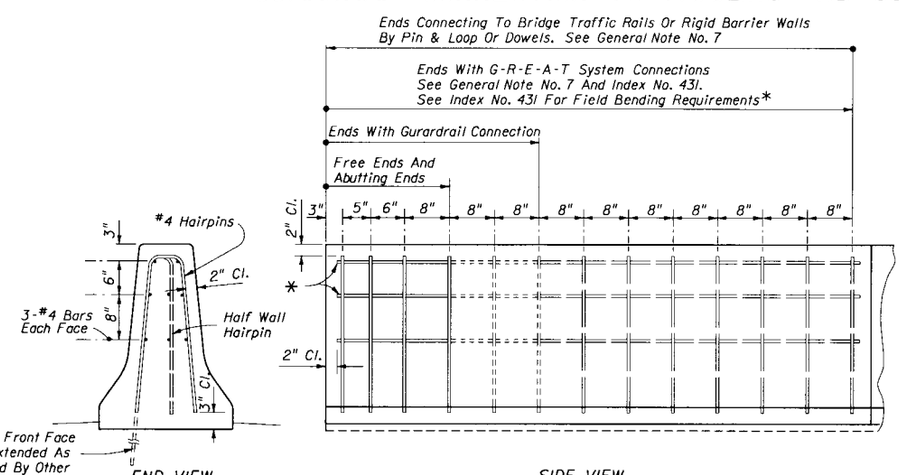

END VIEW SIDE VIEW

Note: Free end reinforcement required for nonreinforced walls at all exposed ends; abutting ends of true joints; ends with guardrail connections; ends with G-R-E-A-T System connections; and, ends connecting to bridge traffic rails or other rigid barrier walls. See General Note No. 7 for free end reinforcement and connections to rigid structures.

FREE END REINFORCEMENT

STATE OF FLORIDA DEPARTMENT OF TRANSPORTATION
ROAD DESIGN

CONCRETE BARRIER WALL

	Names	Dates
Designed By		
Drawn By	AF/HSD	7/3/91
Checked By	LMF/JNG	7/3/91
F.H.W.A. Approved: 10/8/78		

Approved By _____
State Roadway Design Engineer

Revision No.	Sheet No.	Index No.
92	2 of 14	410

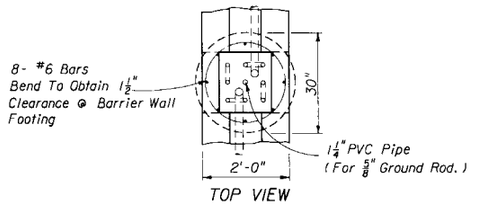

TOP VIEW

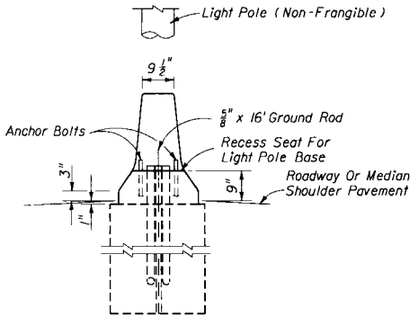

SECTION CC

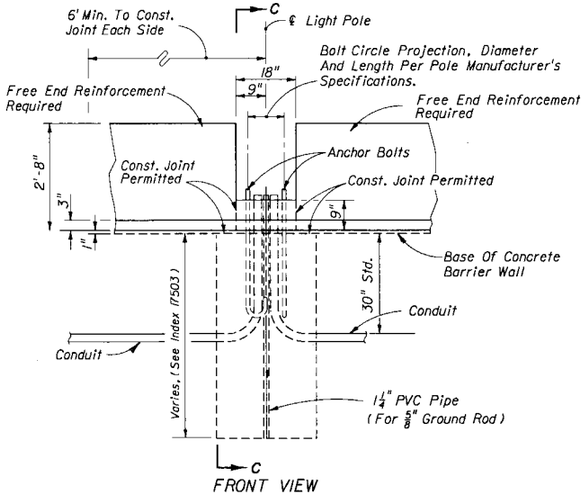

FRONT VIEW

Note: For foundation design and details see Index No. 17503.
Refer to Highway Lighting Plans for size of conduit.
Payment for the 30" concrete shaft including reinforcing steel, anchor bolts and accessories shall be included in the contract unit price for Lighting Pole Complete-Each.
For additional information see Index No. 17506.

LIGHT POLE MOUNTING IN MEDIAN BARRIER WALL

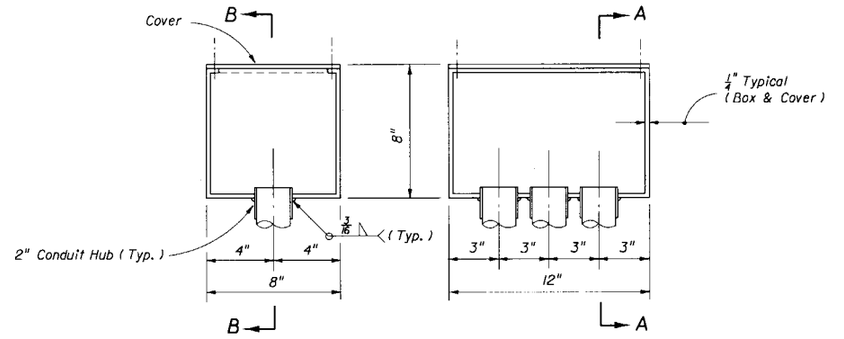

SECTION AA SECTION BB

JUNCTION BOX

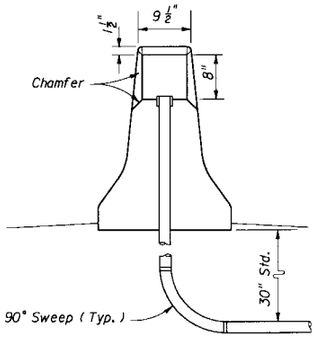

TRANSVERSE SECTION

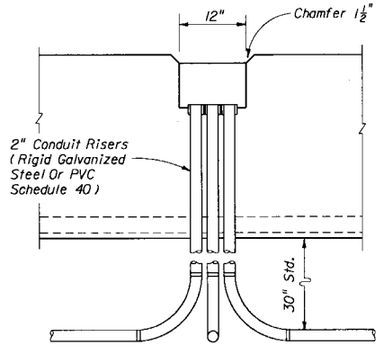

LONGITUDINAL SECTION

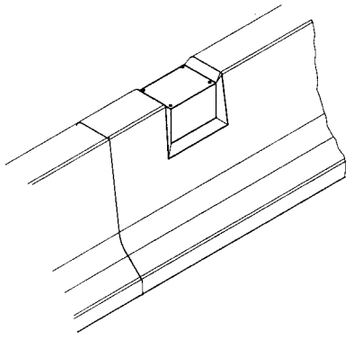

PICTORIAL

INSTALLATION

JUNCTION BOX NOTES

1. Junction boxes are to be fabricated from steel conforming to ASTM A-36 and be hot dipped galvanized after fabrication. All seams shall be continuously welded and ground smooth. A neoprene gasket shall be attached to the box to provide a watertight cover. The cover screws shall be fully galvanized.
2. Remove excess concrete while green and hand form chamfers.
3. Junction box complete and conduit risers are incidental to the construction and cost of the barrier wall; there is to be no separate compensation for the box, risers or installation unless specifically called for in the plans.

JUNCTION BOX - ELECTRICAL

STATE OF FLORIDA DEPARTMENT OF TRANSPORTATION
ROAD DESIGN

CONCRETE BARRIER WALL

	Names	Dates
Designed By		
Drawn By	HSD	9/85
Checked By	JVC	9/85
F.H.W.A. Approved:		

Approved By
State Roadway Design Engineer

Revision No.	Sheet No.	Index No.
90	3 of 14	410

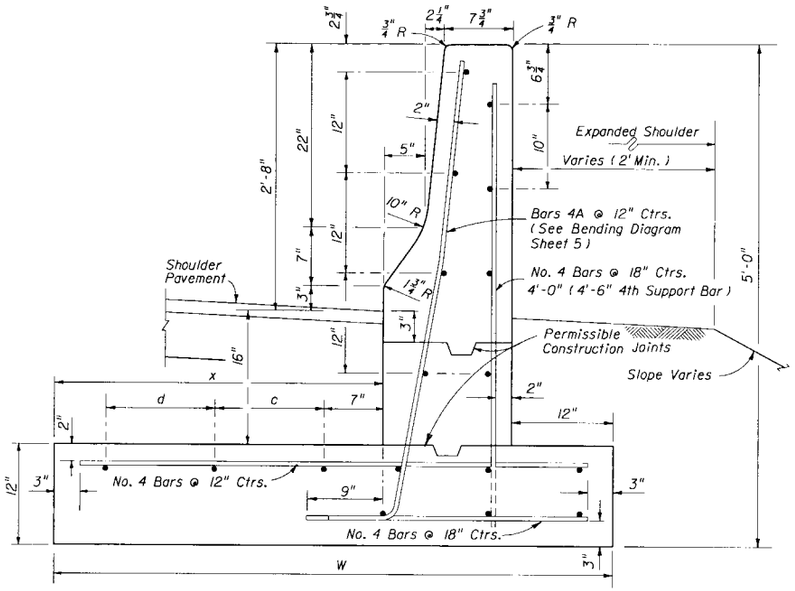

CANTILEVER WALL

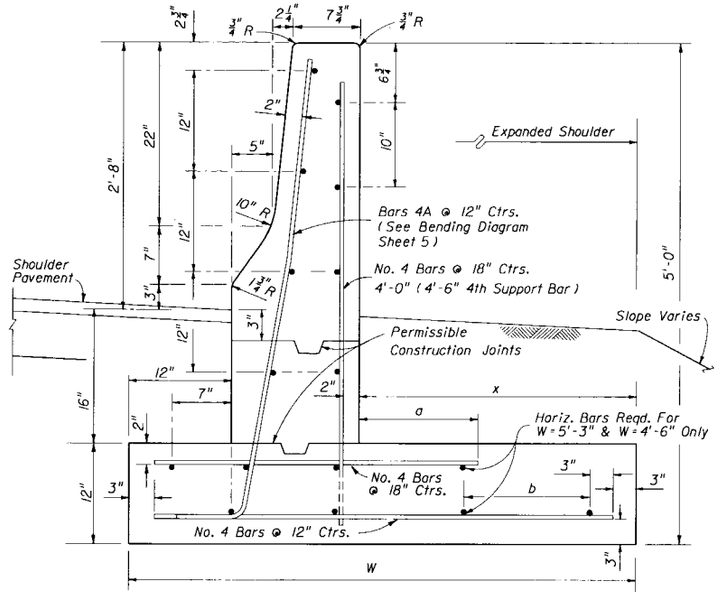

L-WALL

NOTE: All longitudinal reinforcement No. 4 bars.

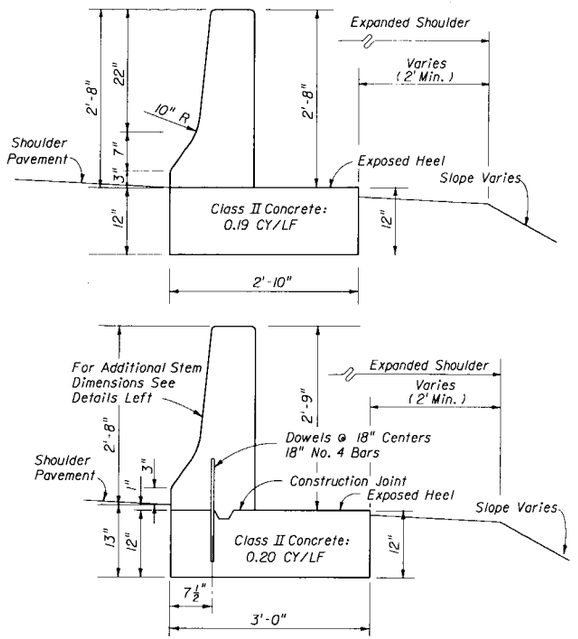

WALL OPTIONS

NOTE:
Wall to be paid for under the contract unit price for Concrete Barrier Wall (Plain-Shoulder), LF.

DESIGN NOTE:
Wall shall have a length of 40' or greater. Wall of 40' or more in length may be made up of segments of 20' or more in length provided the segments are joined by a transverse joint in accordance with Detail B, Sheet 2; segments shall have dimensions same as wall shown above.

PLAIN CONCRETE BARRIER WALL (SHOULDER)

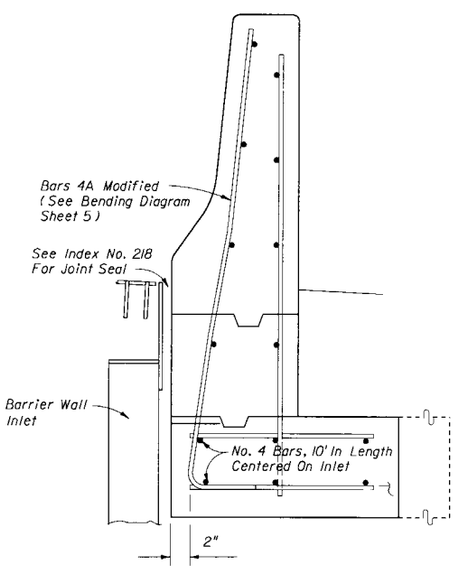

REINFORCING STEEL MODIFICATIONS
AT BARRIER WALL INLETS (INDEX NO. 218)

DIMENSIONS AND QUANTITIES

CANTILEVER WALL

Length* Of Barrier Wall	W	x	c	d	Class II Concrete CY Per Lin. Ft.	Reinforcing Steel LBS. Per Lin. Ft.
≥ 40'	3'-3"	1'-0"	NA	NA	0.27	18
35' to 39'	3'-6"	1'-3"	NA	NA	0.28	18
30' to 34'	4'-0"	1'-9"	NA	NA	0.29	19
25' to 29'	4'-6"	2'-3"	14"	NA	0.31	20
21' to 24'	5'-0"	2'-9"	18"	NA	0.33	20
19' & 20'	5'-6"	3'-3"	13"	13"	0.35	21
17' & 18'	6'-0"	3'-9"	16"	16"	0.37	21
15' & 16'	6'-6"	4'-3"	18"	18"	0.39	22

L-WALL

Length* Of Barrier Wall	W	x	a	b	Class II Concrete CY Per Lin. Ft.	Reinforcing Steel LBS. Per Lin. Ft.
≥ 40'	3'-3"	1'-0"	6"	NA	0.27	18
35' to 39'	3'-6"	1'-3"	6"	NA	0.28	18
30' to 34'	3'-9"	1'-6"	6"	NA	0.29	18
25' to 29'	4'-0"	1'-9"	9"	NA	0.30	19
20' to 24'	4'-6"	2'-3"	12"	12"	0.31	20
15' to 19'	5'-3"	3'-0"	16"	17"	0.34	21

Quantities shown are for information only. For method of payment see payment note below.

Barrier wall inlets (Index 218) shall be isolated from the barrier wall stem and footing by 1" expansion material.

*Any length less than 40' must be a continuous (non-jointed) segment. Walls of 40' or more in length may be made up of segments of 20' or more in length provided the segments are joined by a transverse joint in accordance with Detail B, Sheet 2; segments shall have dimensions same as wall ≥40' above.

PAYMENT:
Wall to be paid for under the contract unit price for Concrete Barrier Wall (Rigid-Shoulder), LF.

DESIGN NOTES:
Use of this barrier wall should be limited to special applications such as hazard encroachment into the clear zone where barrier wall deflection, rotation or translation cannot be tolerated; example hazards to consider are as follows:
(a) Structure supporting piers, bents and pylons (b) Pumping, metering, control or other similar critical stations (c) Quarries (d) Intolerable vertical drops (e) Historic structures or monuments (f) Rail transit travel way or passenger station (g) Other similar occupancies

REINFORCED CONCRETE BARRIER WALL (SHOULDER)

STATE OF FLORIDA DEPARTMENT OF TRANSPORTATION
ROAD DESIGN

CONCRETE BARRIER WALL

	Names	Dates
Designed By		
Drawn By	HSD	9/85
Checked By	JVG	9/85
F.H.W.A. Approved:		

Approved By: R. E. Turner
State Roadway Design Engineer

Revision No.	Sheet No.	Index No.
90	4 of 14	410

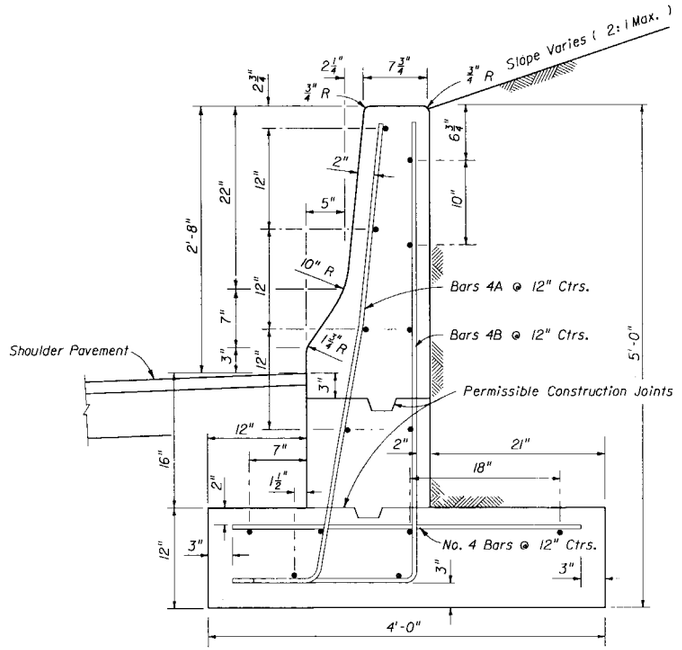

NOTE: All longitudinal reinforcement No. 4 bars.
Minimum segment length for this wall is 20 feet.
Wall to be paid for under the contract unit price
for Concrete Barrier Wall (Rigid-Retaining), LF.

QUANTITIES: Class II Concrete 0.29 CY/LF
Reinforcing Steel 20 LBS/LF

REINFORCED CONCRETE BARRIER WALL (RETAINING)

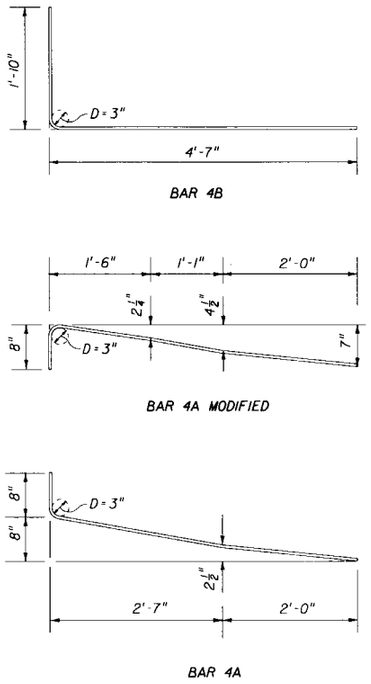

BENDING DIAGRAMS

STATE OF FLORIDA DEPARTMENT OF TRANSPORTATION
ROAD DESIGN

CONCRETE BARRIER WALL

	Names	Dates
Designed By		
Drawn By		
Checked By		

Approved By
State Roadway Design Engineer

F.H.W.A. Approved:

Revision No.	Sheet No.	Index No.
90	5 of 14	410

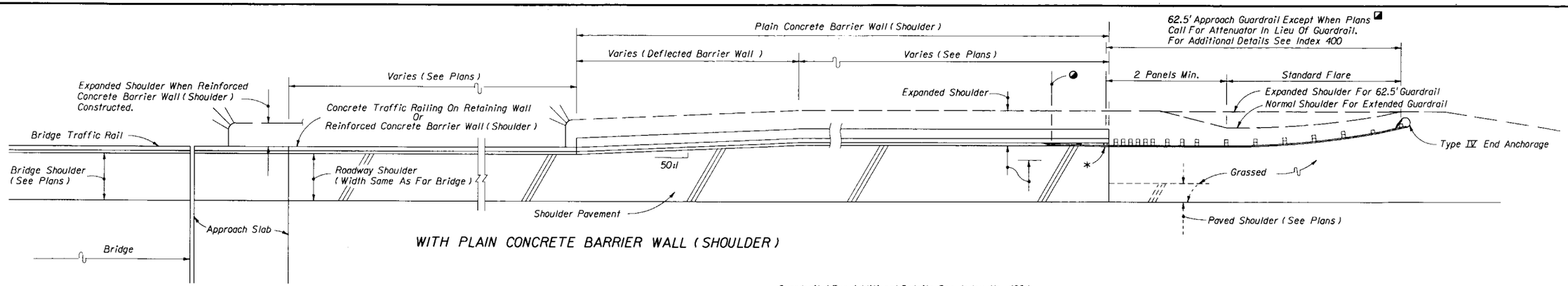

WITH PLAIN CONCRETE BARRIER WALL (SHOULDER)

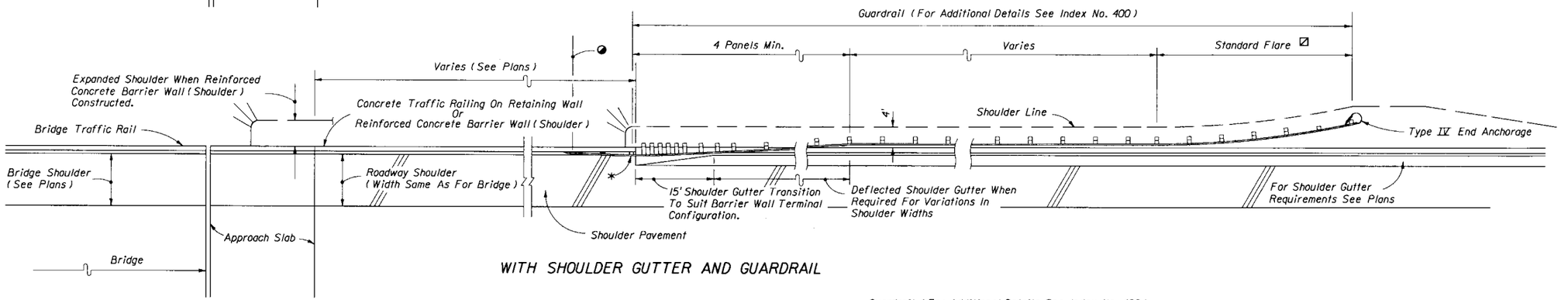

WITH SHOULDER GUTTER AND GUARDRAIL

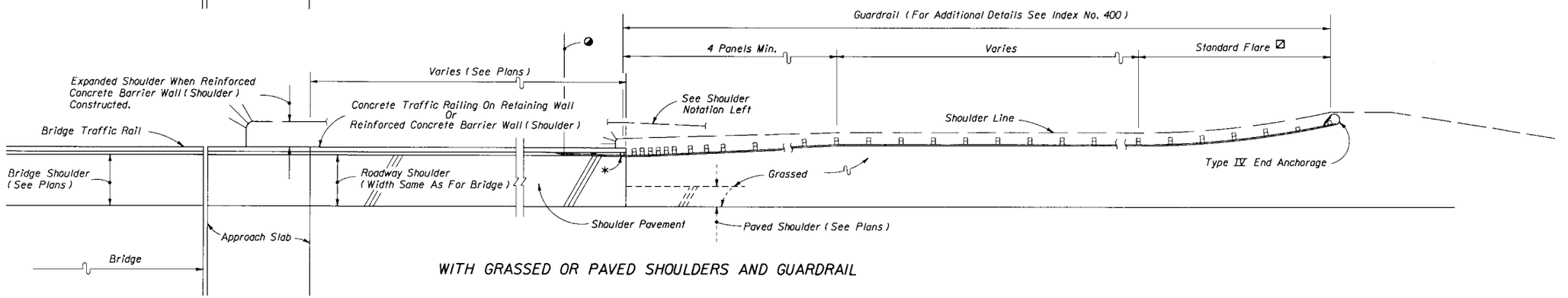

WITH GRASSED OR PAVED SHOULDERS AND GUARDRAIL

△ *Views show approach roadside barriers when length of need exceeds the length of either retaining walls with concrete traffic railings* or Reinforced Concrete Barrier Wall (Shoulder) on shoulders. When either of these rigid barriers alone satisfies the approach length of need, the wall ends shall be shielded by crash cushions, or, by guardrail the same as for bridge traffic rails, as detailed in Index No. 400.*

See other flagged notes for trailing end treatments.

Miscellaneous asphalt paving under guardrail not shown.

* *Guardrail connection to concrete traffic railings on retaining walls shall be in accordance with the Structures Design Office Standard Drawings and the plans. Guardrail connections to shoulder concrete barrier walls shall be in accordance with the details shown on Sheets 2, 13 and 14. Back-up plates, Index 400, Detail J, required for all connections.*

◒ *End measurement for guardrail payment when guardrail connected to shoulder barrier walls. See Index 400, Detail J for end measurement when guardrail connected to concrete traffic rails constructed with approach slab or on retaining walls.*

◪ *To be deleted on trailing ends except for 2-lane 2-way facilities. The tangent guardrail shall be anchored by End Anchorage Type II, Index No. 400.*

◪ *To be deleted on trailing ends except for 2-lane 2-way facilities.*

EITHER REINFORCED CONCRETE BARRIER WALL (SHOULDER) OR RETAINING WALL WITH CONCRETE TRAFFIC RAILING △

CONCRETE BARRIER WALLS ON APPROACHES TO BRIDGES

STATE OF FLORIDA DEPARTMENT OF TRANSPORTATION
ROAD DESIGN

CONCRETE BARRIER WALL

	Names	Dates
Designed By	KNM/JVG	8/89
Drawn By	HSD	8/89
Checked By	KNM/JVG	8/89
F.H.W.A. Approved:		

Approved By _____ State Roadway Design Engineer

Revision No.	Sheet No.	Index No.
92	6 of 14	410

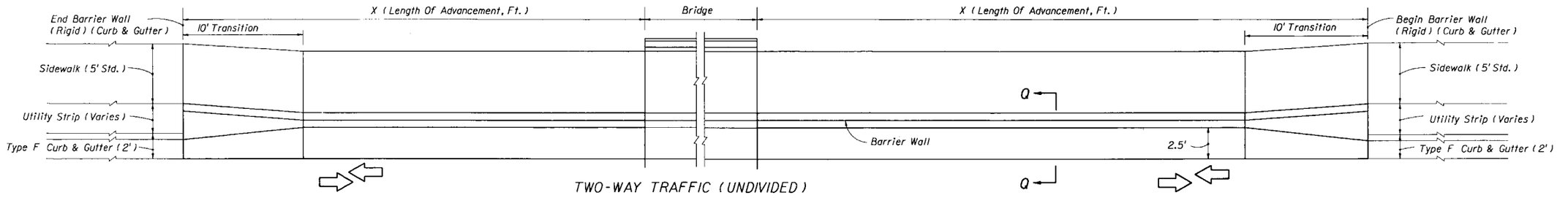

TWO-WAY TRAFFIC (UNDIVIDED)

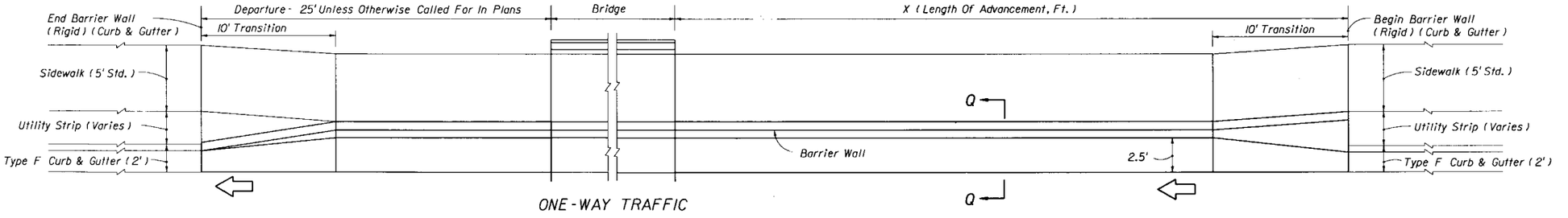

ONE-WAY TRAFFIC

BRIDGE END HAZARD

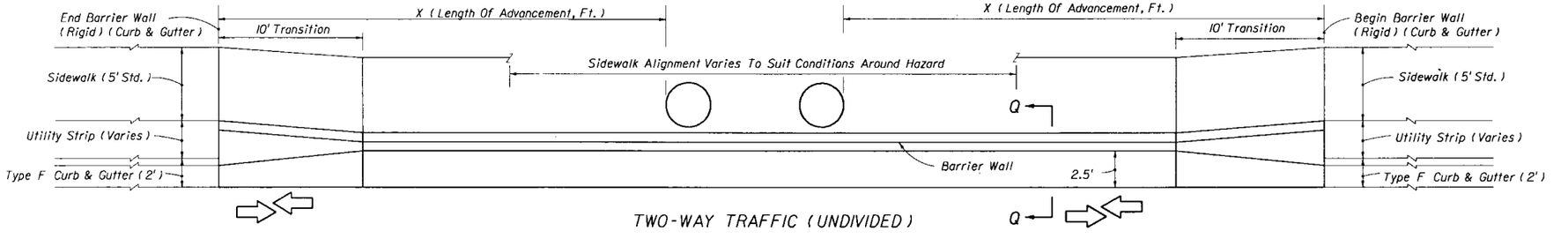

TWO-WAY TRAFFIC (UNDIVIDED)

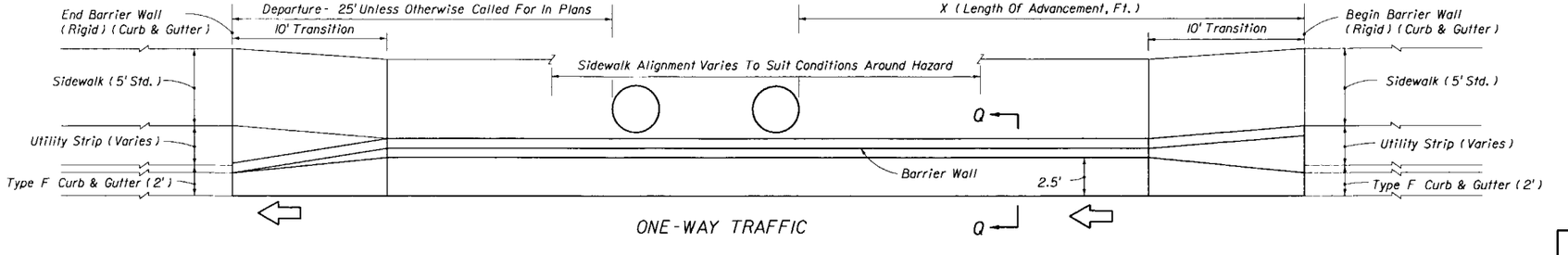

ONE-WAY TRAFFIC

HAZARD 4' OR LESS FROM FACE OF CURB

NOTE:

X = Length of advancement in feet for near and opposing approach lanes. See Sheet 11.

For locations without utility strips see Sheet 8.

For transition, sidewalk and sectional details see Sheets 9 & 10.

The 2.5' offsets to toe of barrier wall cannot be reduced to accommodate hazards; however, hazards located in the stem of the wall can be accommodated by the detail on Sheet 11.

CONCRETE BARRIER WALL (RIGID) (CURB & GUTTER) • CURB AND GUTTER WITH UTILITY STRIP

STATE OF FLORIDA DEPARTMENT OF TRANSPORTATION
ROAD DESIGN

CONCRETE BARRIER WALL

	Names	Dates
Designed By		
Drawn By	HSD	10/85
Checked By	JBW/JVG	10/85
F.H.W.A. Approved:		

Approved By
State Roadway Design Engineer

Revision No.	Sheet No.	Index No.
90	7 of 14	410

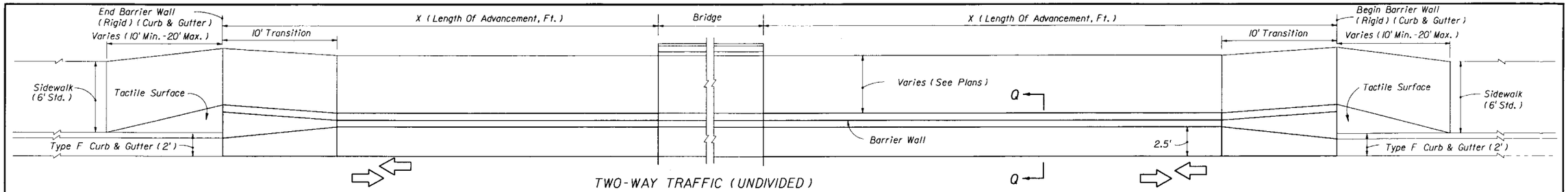

TWO-WAY TRAFFIC (UNDIVIDED)

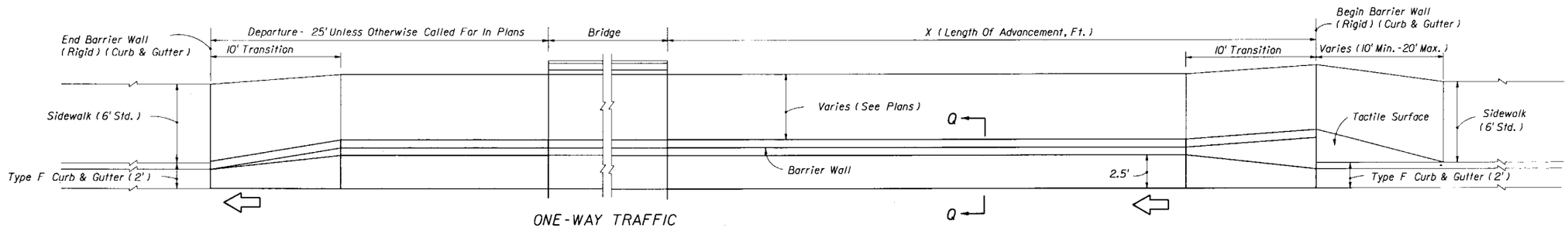

ONE-WAY TRAFFIC

BRIDGE END HAZARD

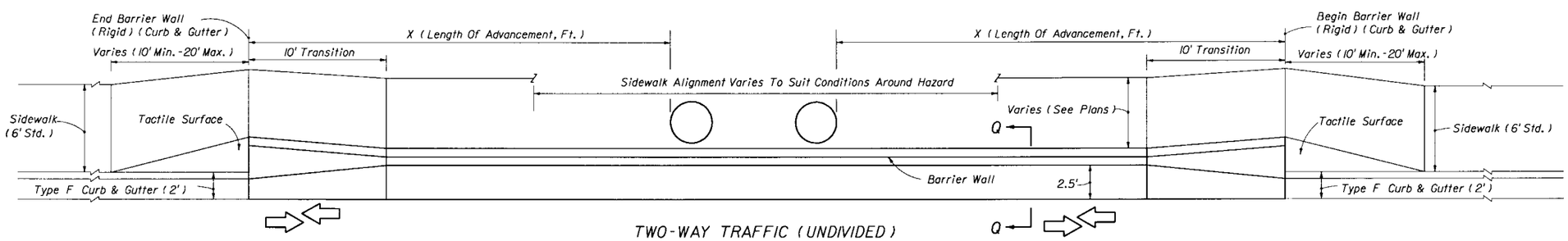

TWO-WAY TRAFFIC (UNDIVIDED)

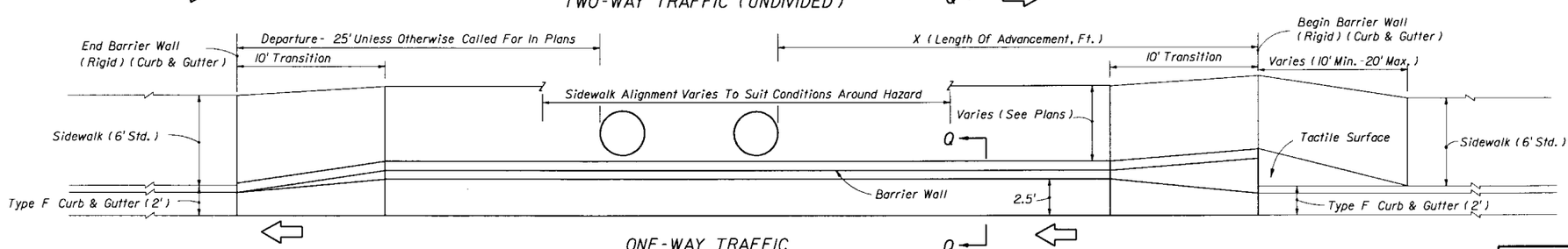

ONE-WAY TRAFFIC

HAZARD 4' OR LESS FROM FACE OF CURB

NOTE:

X = Length of advancement in feet for near and opposing approach lanes. See Sheet 11.

For locations with utility strips see Sheet 7.

For transition, sidewalk and sectional details see Sheet 9 & 10.

The 2.5' offsets to toe of barrier wall cannot be reduced to accommodate hazards; however, hazards located in the stem of the wall can be accommodated by the detail on Sheet 11.

CONCRETE BARRIER WALL (RIGID) (CURB & GUTTER) • CURB AND GUTTER WITHOUT UTILITY STRIP

STATE OF FLORIDA DEPARTMENT OF TRANSPORTATION
ROAD DESIGN

CONCRETE BARRIER WALL

	Names	Dates
Designed By		
Drawn By	HSD	10/85
Checked By	JBW/JVG	10/85
F.H.W.A. Approved:		

Approved By: _____
State Roadway Design Engineer

Revision No.	Sheet No.	Index No.
90	8 of 14	410

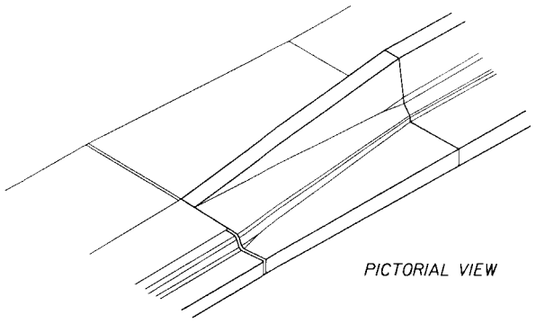

PICTORIAL VIEW

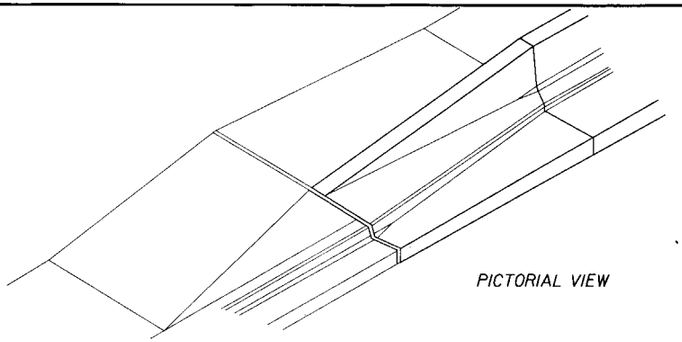

PICTORIAL VIEW

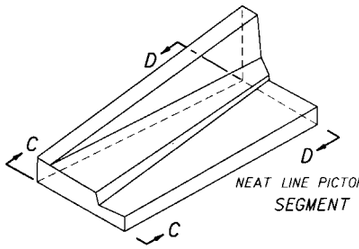

NEAT LINE PICTORIAL VIEW
SEGMENT

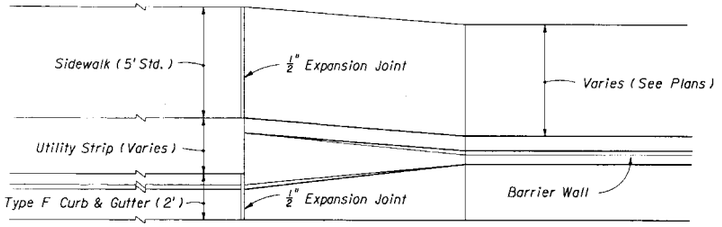

PLAN

WITH UTILITY STRIP

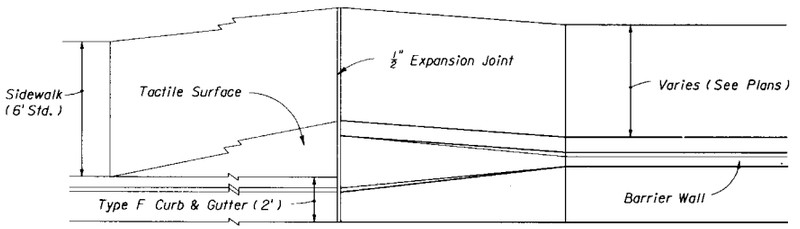

PLAN

WITH UTILITY STRIP

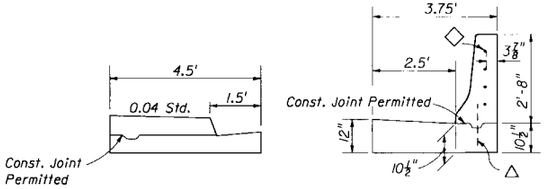

SECTION CC

SECTION DD

◇ See Sheet 10

△ See Sheet 10

TWO-WAY TRAFFIC (OPPOSING LANE APPROACH)

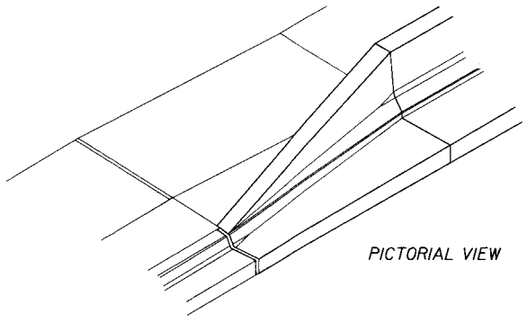

PICTORIAL VIEW

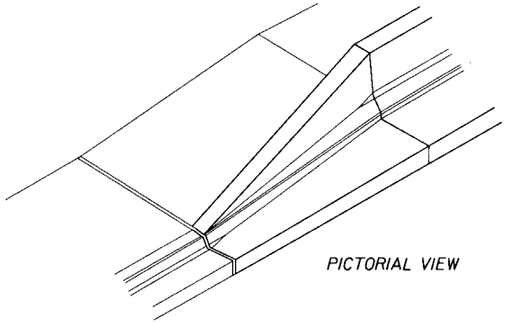

PICTORIAL VIEW

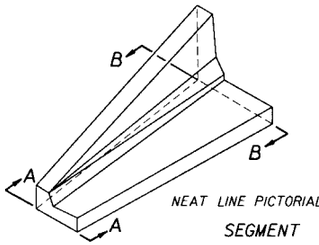

NEAT LINE PICTORIAL VIEW
SEGMENT

◇ See Sheet 10

△ See Sheet 10

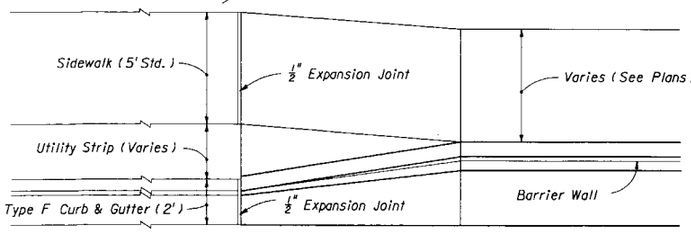

PLAN

WITH UTILITY STRIP

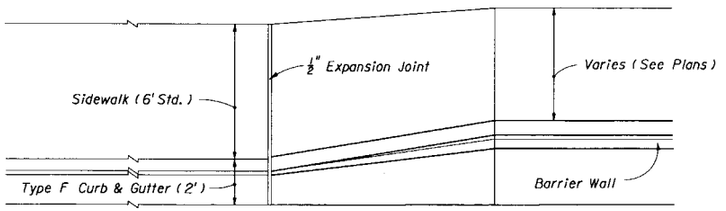

PLAN

WITH UTILITY STRIP

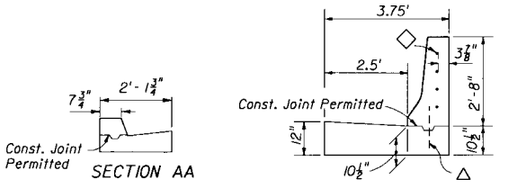

SECTION AA

SECTION BB

ONE-WAY TRAFFIC (TRAILING END)

CONCRETE BARRIER WALL (RIGID) (CURB & GUTTER) • TRANSITION SEGMENTS

STATE OF FLORIDA DEPARTMENT OF TRANSPORTATION
ROAD DESIGN

CONCRETE BARRIER WALL

	Names	Dates
Designed By		
Drawn By	HSD	10/85
Checked By	JBW/JVG	10/85
F.H.W.A. Approved:		

Approved By _____
State Roadway Design Engineer

Revision No.	Sheet No.	Index No.
90	9 of 14	410

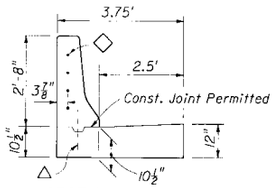

SECTION BB

◇ See Notes This Sheet

△ See Notes This Sheet

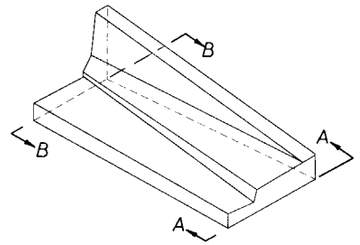

WITH OR WITHOUT UTILITY STRIP

NEAT LINE PICTORIAL VIEW

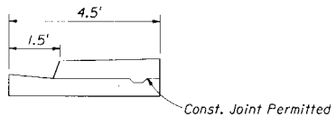

SECTION AA

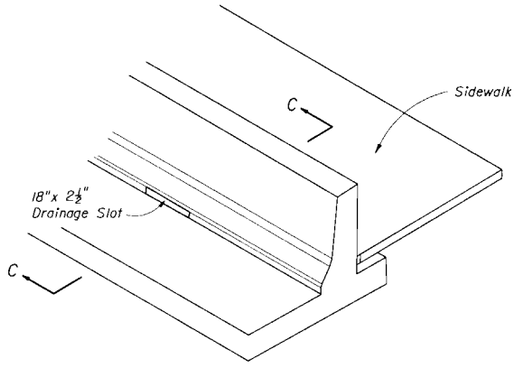

NEAT LINE PICTORIAL VIEW

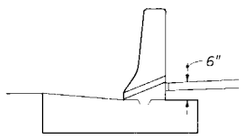

SECTION CC

Note: Drainage slots shall be located at all low points along the sidewalk, and, unless otherwise shown in the plans, slots shall be spaced at intervals not exceeding 50 feet in fill sections and 20 feet in cut sections. Slots shall be located such that only one bar is cut away or deleted in front and back lines of vertical reinforcement.

SIDEWALK DRAINAGE SLOT FOR BARRIER WALL (RIGID) (CURB & GUTTER)

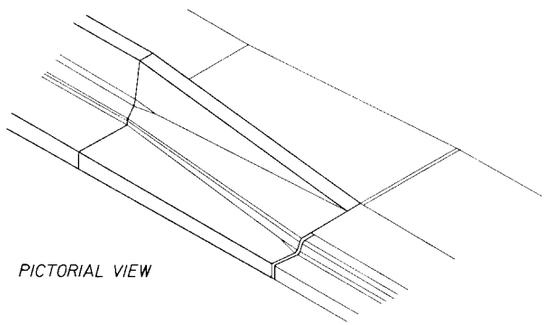

PICTORIAL VIEW

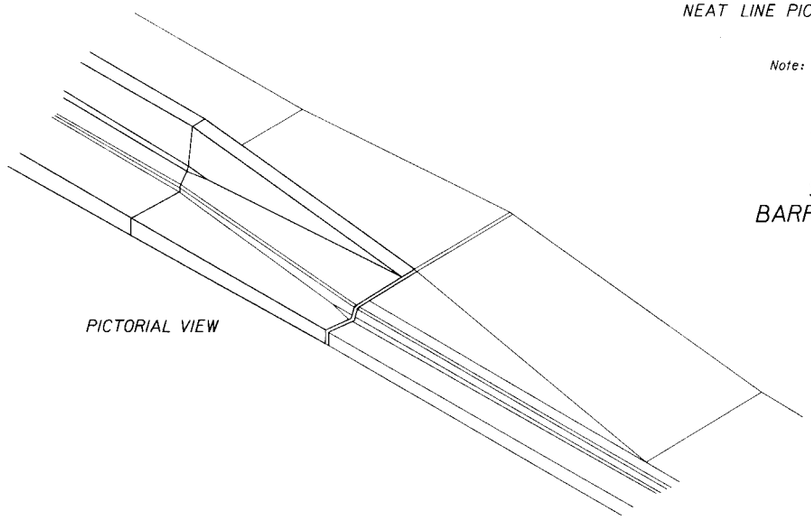

PICTORIAL VIEW

NOTE:

◇ Transition Segments Shall Be Doweled Into The End Of The Barrier Wall In The Following Manner:
Four 1¼" diameter holes 6" deep on 6" centers shall be drilled in the end of the barrier and No. 6 bars 15" long set in epoxy mortar. The ends of the dowels extending into the transition segment shall be wrapped with one layer of 15 lb. asphalt felt with the ends crimped.

△ When Construction Joints Are Utilized For Transition Segment Construction The Stem Shall Be Doweled To The Footing In The Following Manner:
Five No. 4 bars 15" long shall be embedded 7" into the footing. The dowels shall be spaced 15" on centers with the first dowel located 12" from the barrier wall. Dowels may be placed within or adjacent to the keyway.

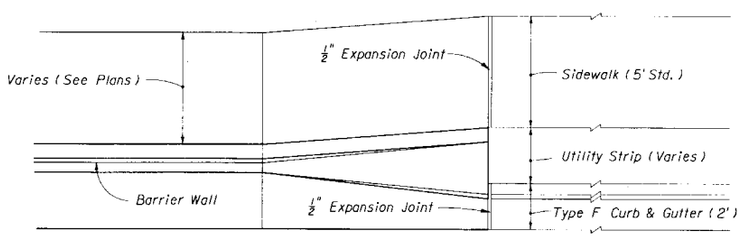

PLAN

WITH UTILITY STRIP

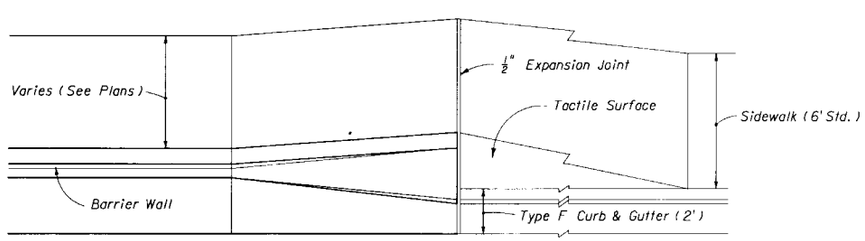

PLAN

WITHOUT UTILITY STRIP

RIGHT SIDE SHOWN, LEFT SIDE OPPOSITE HAND

ONE-WAY AND TWO-WAY TRAFFIC (NEAR LANE APPROACH)

CONCRETE BARRIER WALL (RIGID) (CURB & GUTTER) • TRANSITION SEGMENT

STATE OF FLORIDA DEPARTMENT OF TRANSPORTATION
ROAD DESIGN

CONCRETE BARRIER WALL

	Names	Dates
Designed By		
Drawn By	HSD	10/85
Checked By	JBW/JVG	10/85
F.H.W.A. Approved:		

Approved By [signature]
State Roadway Design Engineer

Revision No.	Sheet No.	Index No.
90	10 of 14	410

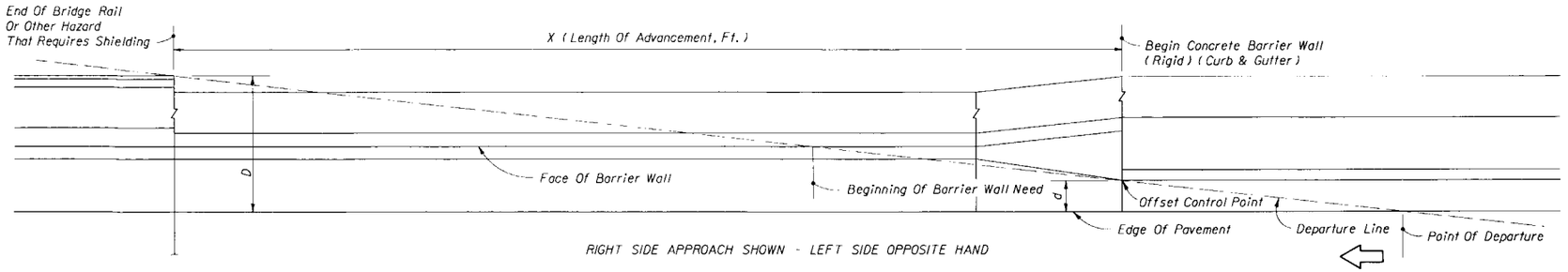

RIGHT SIDE APPROACH SHOWN - LEFT SIDE OPPOSITE HAND

NEAR LANE APPROACH

Design Speed (mph)	Length Of Advancement, Ft. (X)
45 Or Less	= 16 (D-d)
Note: The minimum length of advancement for both near and opposing lane approaches is 40 feet.	

Equation Variables:

D = Distance in feet from near edge of the near approach travel lane to back of hazard or clear zone width whichever is lesser. For left side hazards and clear zones on two-way undivided facilities D is measured from the inside edge of the near approach travel lane.

d = Distance in feet from the near edge of the near approach travel lane to the face of curb (at offset control point). For left side hazards on two-way undivided facilities d is measured from the inside edge of the nearest opposing travel lane.

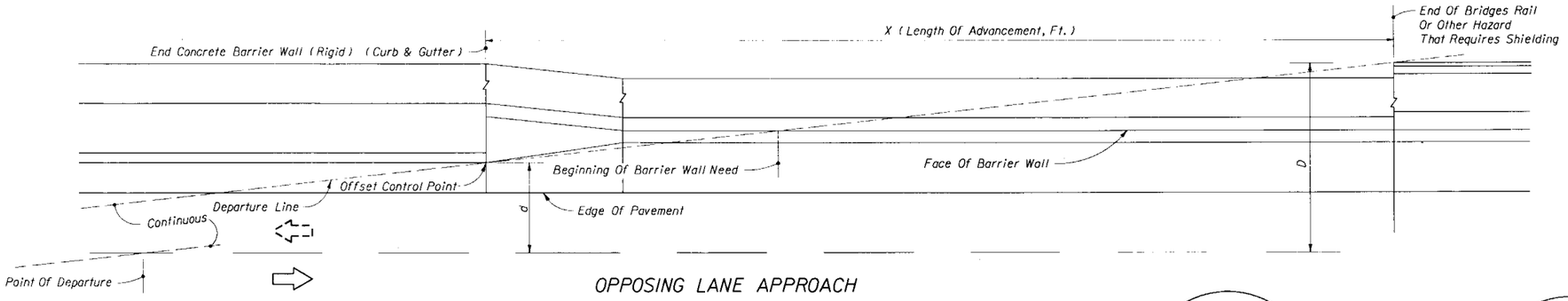

OPPOSING LANE APPROACH

WITH OR WITHOUT UTILITY STRIP - UTILITY STRIP SHOWN - SEE SHEET 7 & 8 FOR APPLICATIONS

LENGTH OF ADVANCEMENT

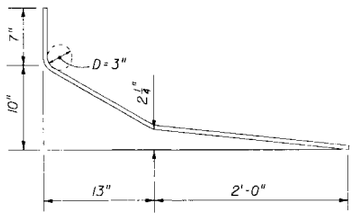

BAR 4 C
BENDING DIAGRAM

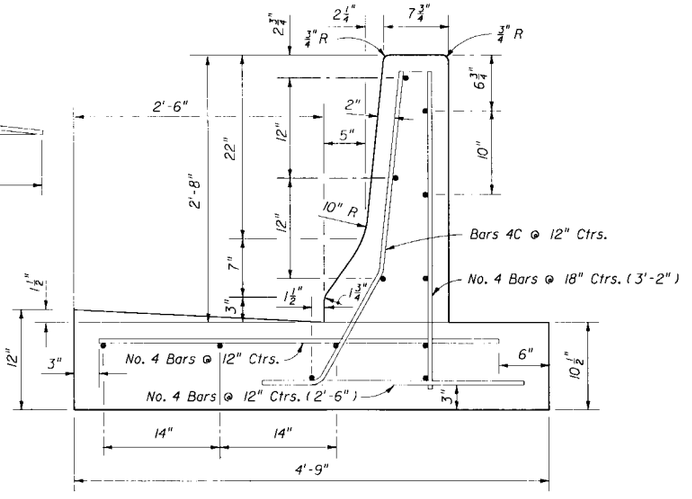

SECTION QQ

Estimated Quantities Per Linear Foot Of Wall:
Class II Concrete: 0.23 CY
Reinforcing Steel: 17 Lbs.

Note: All longitudinal reinforcement No. 4 bars. Minimum segment length for this wall is 40 feet. Shorter segments due to construction or expansion joint construction shall be doweled in the manner described for 'Transition Segments' on Sheet 10.

Transverse expansion joints are to be constructed at the juncture of wall transitions and curb and gutter, and at intervals so that spacing will not exceed 100'.

For barrier wall inlet details see Index No. 219.

Wall to be paid for under the contract unit price for Concrete Barrier Wall (Rigid - Curb & Gutter), LF.

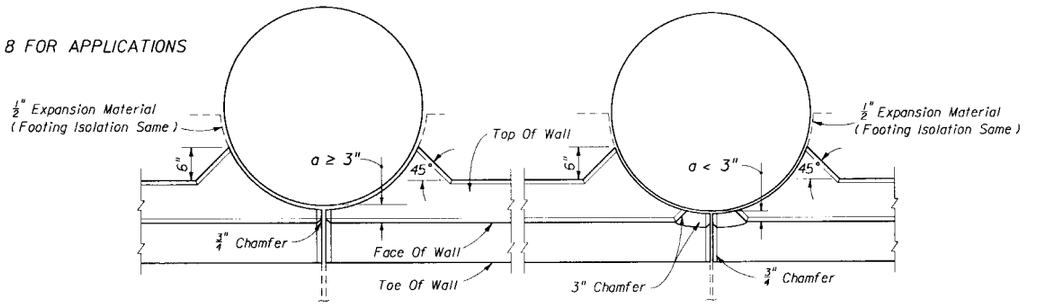

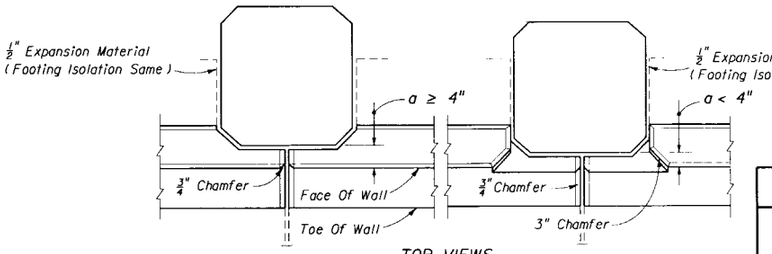

TOP VIEWS

'a' Varies (Circular Or Octagonal Hazard Not More Than 2" In Front Of Face Of Wall)

HAZARD PENETRATING STEM OF BARRIER WALL

CONCRETE BARRIER WALL (RIGID) (CURB & GUTTER)

STATE OF FLORIDA DEPARTMENT OF TRANSPORTATION
ROAD DESIGN

CONCRETE BARRIER WALL

	Names	Dates
Designed By		
Drawn By	HSD	10/85
Checked By	JBW/JVG	10/85
F.H.W.A. Approved:		

Approved By _____
State Roadway Design Engineer

Revision No.	Sheet No.	Index No.
92	11 of 14	410

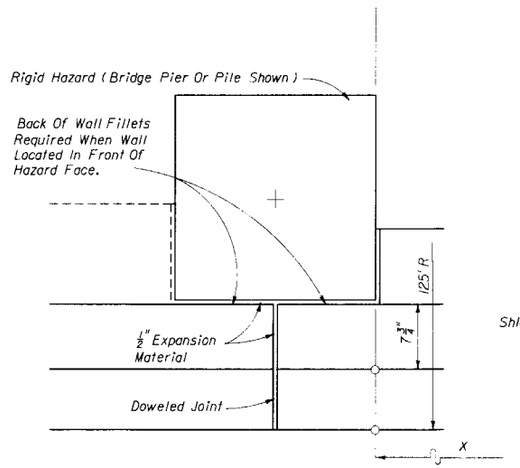

BARRIER WALL AT SQUARE OR RECTANGULAR SHAPED HAZARD

PARTIAL PLAN

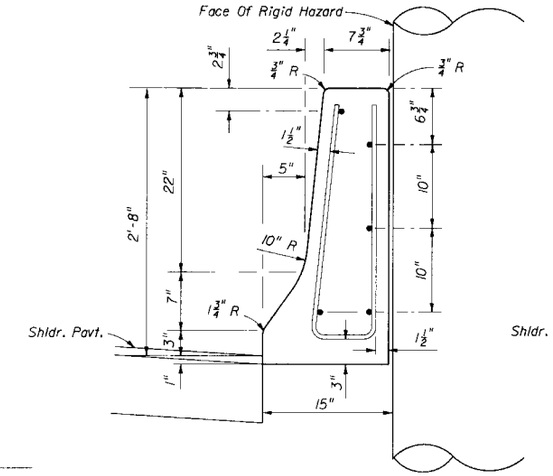

SECTION AA

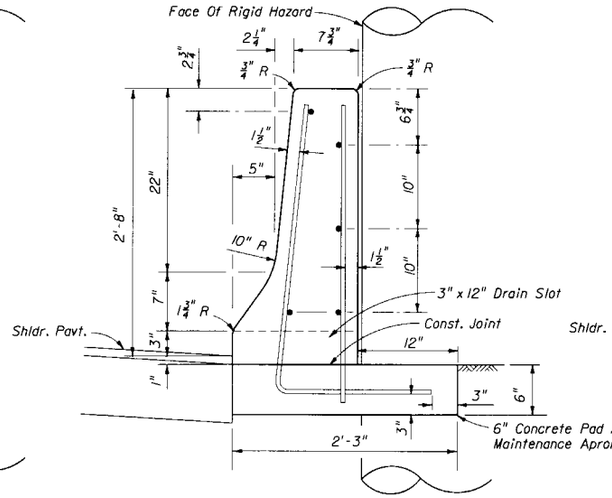

TO BE CONST. IN LIEU OF SECTION AA WHEN THRU DRAINAGE REQUIRED

SECTION BB

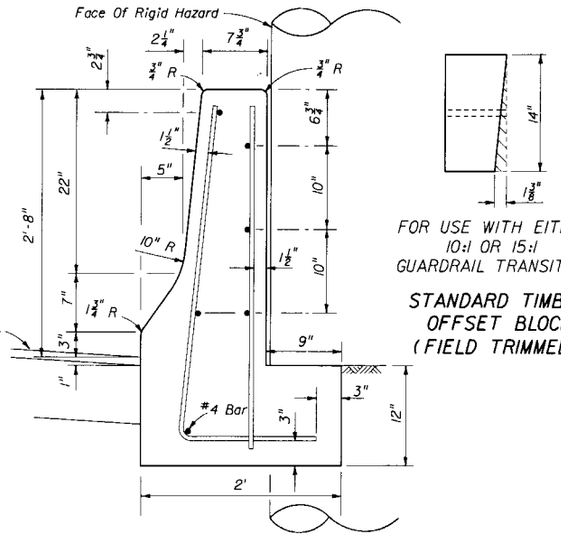

SECTION CC

FOR USE WITH EITHER 10:1 OR 15:1 GUARDRAIL TRANSITIONS

STANDARD TIMBER OFFSET BLOCK (FIELD TRIMMED)

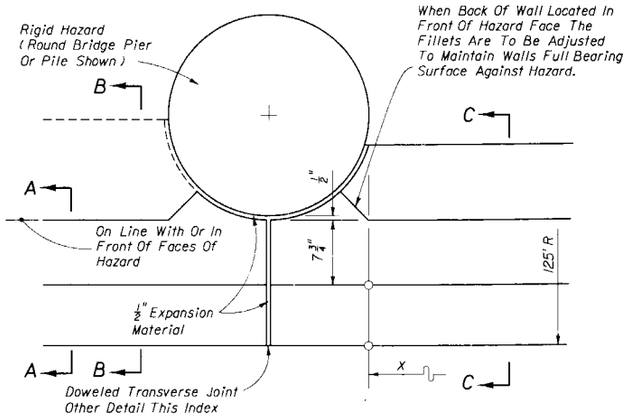

BARRIER WALL AT ROUND PIER

PARTIAL PLAN

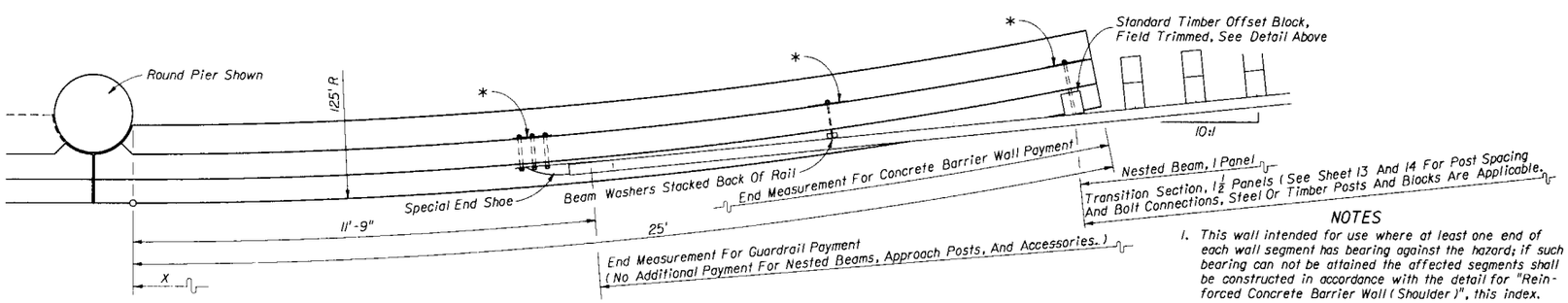

PLAN FOR DESIGN SPEED <50 MPH

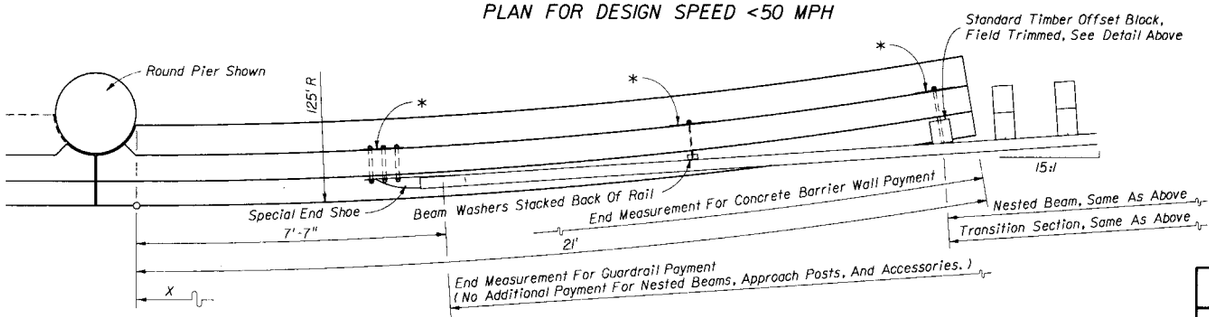

PLAN FOR DESIGN SPEED ≥50 MPH

* 1/4" x 12" x 12" Galvanized Steel Back-Up Plate

NOTES

1. This wall intended for use where at least one end of each wall segment has bearing against the hazard; if such bearing can not be attained the affected segments shall be constructed in accordance with the detail for "Reinforced Concrete Barrier Wall (Shoulder)", this index.

   In cases where the barrier wall and slope pavement or other structure would occupy the same location, the wall and structure are to be modified as detailed in the plans.
2. These walls and their guardrail connections apply to one-way approaches and to trailing ends of two-lane two-way facilities; on other facilities the end connection on Sheet 2 may be used on wall trailing ends.

   For walls with normal offsets from hazards and their guardrail connections, see Sheets 13 and 14.
3. All vertical reinforcement #4 Bars at 16" centers. All horizontal bars #5 Bars except as shown.
4. Refer to Index No. 400 for additional guardrail information.
5. Wall to be paid for under the contract unit price for Concrete Barrier Wall (Rigid-Shoulder), L.F.

ARC LENGTH (FT)	DISTANCE "x" (FT)	OFFSETS "y" "y" (FT)
4	4.00	0.06
8	7.99	0.26
12	11.98	0.58
16	15.96	1.02
20	19.91	1.60
21	20.91	1.76
24	23.85	2.30
25	24.83	2.49

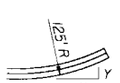

Note:
Wall may be constructed in chords having lengths ≤ 4 feet.

SHOULDER BARRIER WALL AT ABOVE GROUND RIGID HAZARDS WHEN GUARDRAIL OFFSET FROM HAZARD LESS THAN 3 FEET

STATE OF FLORIDA DEPARTMENT OF TRANSPORTATION
ROAD DESIGN

CONCRETE BARRIER WALL

	Names	Dates
Designed By		11/89
Drawn By	HSD	11/89
Checked By	JVG/KNM	11/89
F.H.W.A. Approved:		

Approved By: _____
State Roadway Design Engineer

Revision No.	Sheet No.	Index No.
92	12 of 14	410

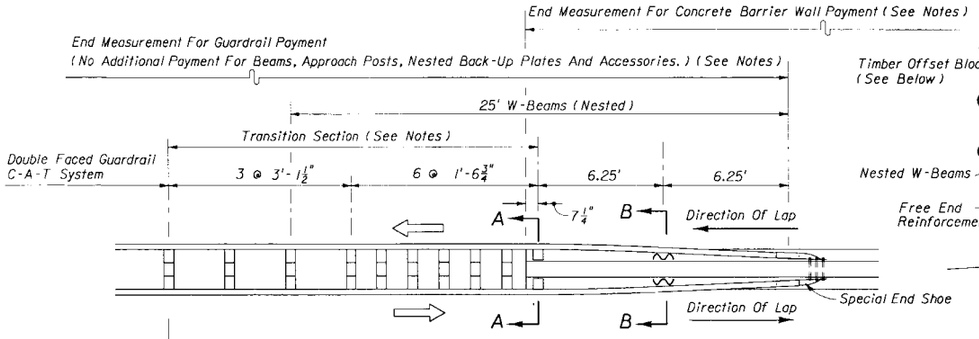

MEDIAN BARRIER WALL

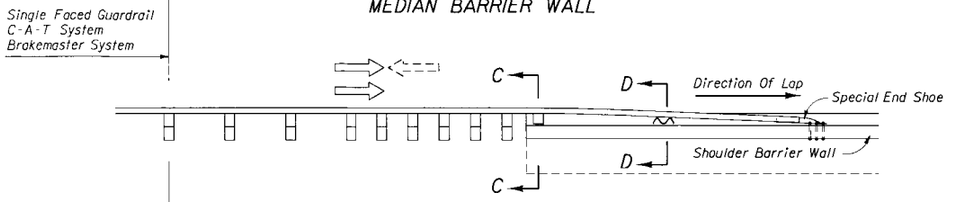

RIGHT SIDE APPROACH ONE-WAY LANES OR
RIGHT SIDE APPROACH TWO-LANE TWO-WAY

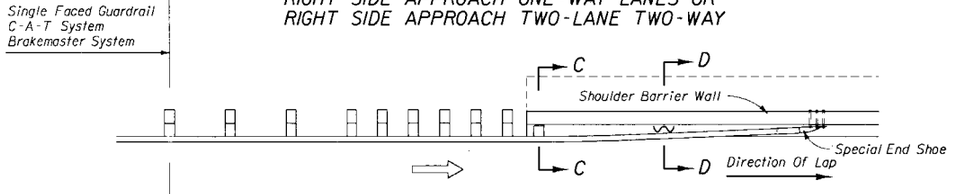

LEFT SIDE APPROACH ONE-WAY LANES

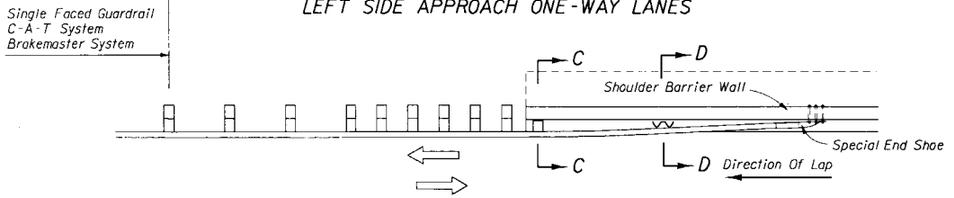

LEFT SIDE OF TWO-LANE TWO-WAY (APPROACH FOR FAR LANE)

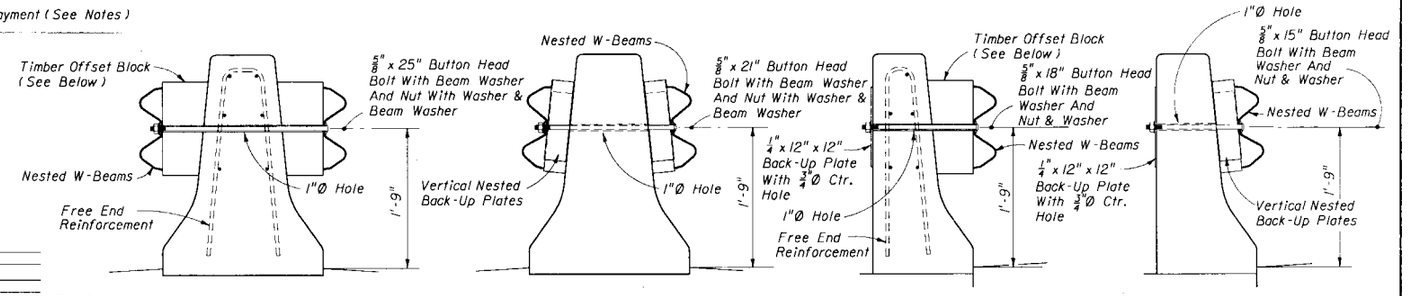

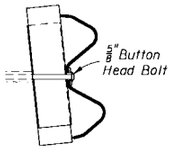

SECTION EE

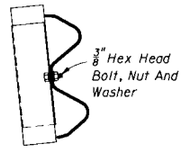

SECTION FF

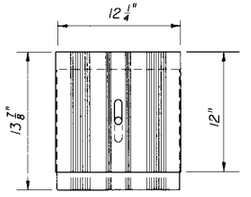

VERTICALLY NESTED BACK-UP PLATES

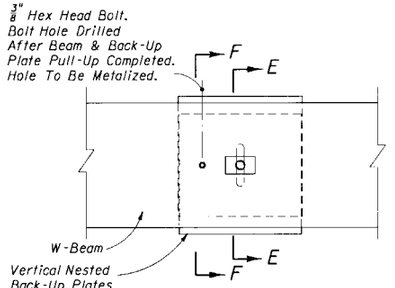

FACE VIEW

BACK-UP PLATE AND BEAM MOUNTING DETAIL

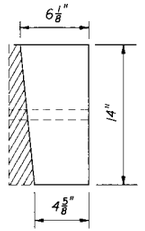

FOR DOUBLE FACED GUARDRAIL USING TIMBER POSTS AND FOR SINGLE FACED GUARDRAIL USING EITHER TIMBER OR STEEL POSTS

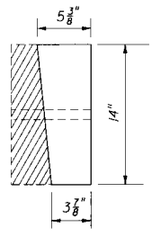

FOR DOUBLE FACED GUARDRAIL USING STEEL POSTS

STANDARD TIMBER OFFSET BLOCKS • FIELD TRIMMED FOR USE AT SECTIONS AA & CC

NOTES

1. The longitudinal dimensions and payment limits shown for median concrete barrier wall also apply to shoulder concrete barrier walls.
2. For barrier wall trailing end guardrail connections for one-way lanes, see Sheet 2.
3. Where reaming is necessary to fit nested beams the reamed surfaces shall be metalized in accordance with Index No. 400.
4. Steel guardrail post may be substituted for timber posts, when guardrail using steel posts connects to the transition section, however, when the C-A-T System connects to the double faced transition section, timber posts shall be used.
5. The nested beams shall not be bolted to blocks and posts at posts numbers 1, 3 and 5 from barrier wall.
6. For additional guardrail information refer to Index No. 400. For additional crash cushion/attenuating terminal information refer to Index No's. 432 and 433.

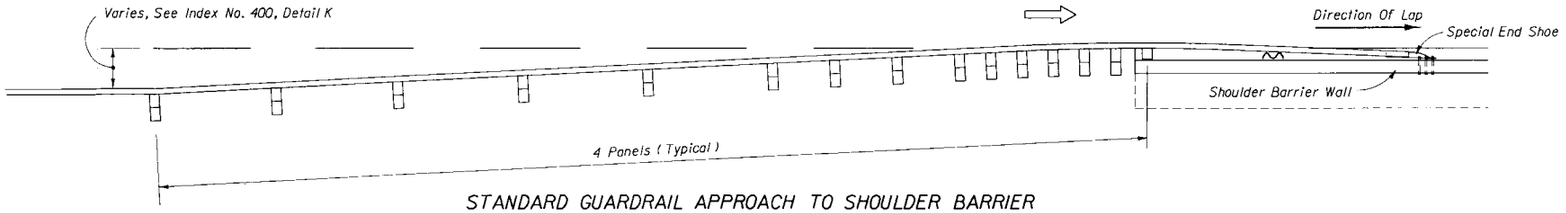

STANDARD GUARDRAIL APPROACH TO SHOULDER BARRIER

GUARDRAIL CONNECTION TO CONCRETE BARRIER WALLS

STATE OF FLORIDA DEPARTMENT OF TRANSPORTATION
ROAD DESIGN

CONCRETE BARRIER WALL

	Names	Dates
Designed By	JVG	05/91
Drawn By	HSD	05/91
Checked By	JVG	05/91
F.H.W.A. Approved:		

Approved By
State Roadway Design Engineer

Revision No.	Sheet No.	Index No.
92	13 of 14	410

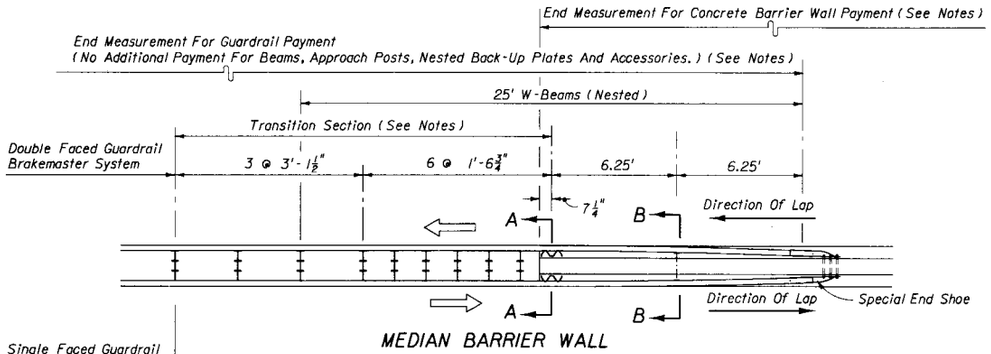

MEDIAN BARRIER WALL

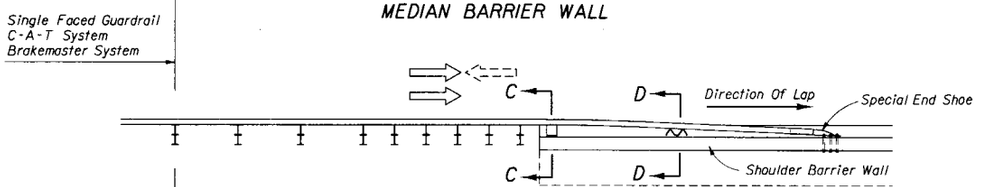

RIGHT SIDE APPROACH ONE-WAY LANES OR
RIGHT SIDE APPROACH TWO-LANE TWO-WAY

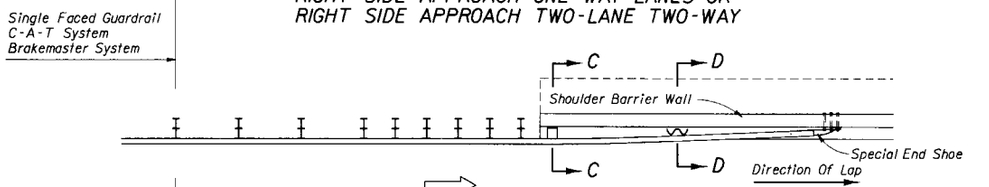

LEFT SIDE APPROACH ONE-WAY LANES

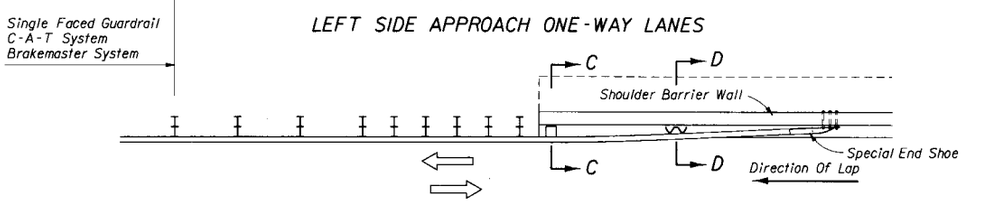

LEFT SIDE OF TWO-LANE TWO-WAY (APPROACH FOR FAR LANE)

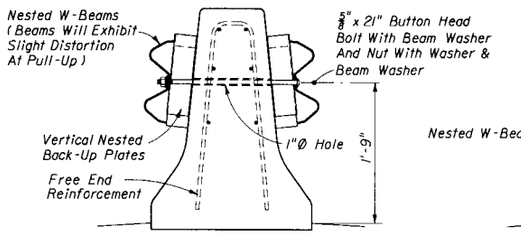

SECTION AA

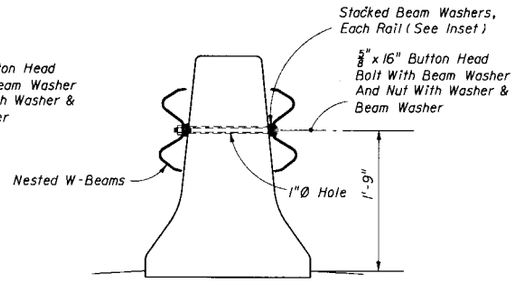

SECTION BB

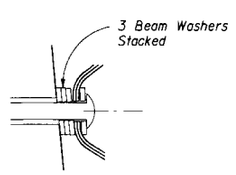

INSET

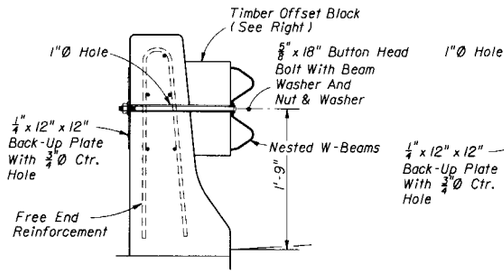

SECTION CC

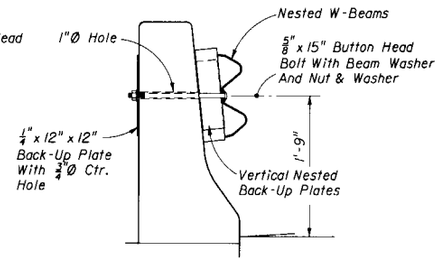

SECTION DD

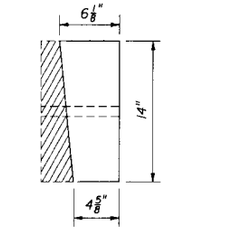

STANDARD TIMBER OFFSET BLOCK
FIELD TRIMMED
FOR USE AT SECTIONS CC

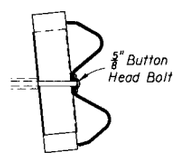

SECTION EE

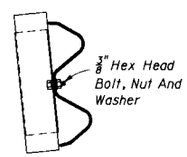

SECTION FF

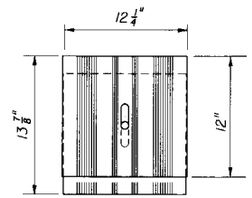

VERTICALLY NESTED
BACK-UP PLATES

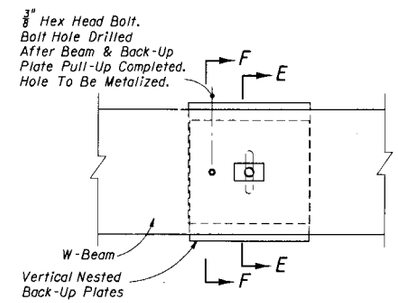

FACE VIEW

BACK-UP PLATE AND BEAM MOUNTING DETAIL

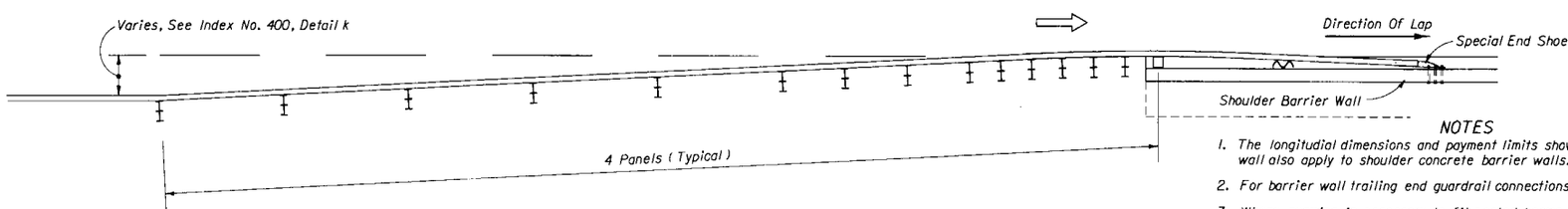

STANDARD GUARDRAIL APPROACH TO SHOULDER BARRIER

GUARDRAIL CONNECTION TO CONCRETE BARRIER WALLS

NOTES

1. The longitudial dimensions and payment limits shown for median concrete barrier wall also apply to shoulder concrete barrier walls.
2. For barrier wall trailing end guardrail connections for one-way lanes, see Sheet 2.
3. Where reaming is necessary to fit nested beams the reamed surfaces shall be metalized in accordance with Index No. 400.
4. Timber offset blocks may be substituted for steel offset blocks only where single faced guardrail using timber offset blocks connects to the transition section.
5. The nested beams shall not be bolted to blocks and posts at posts numbers 1, 3 and 5 from barrier wall.
6. For additional guardrail information refer to Index No. 400. For additional crash cushion/attenuating terminal information refer to Index No's. 432 and 433.

STATE OF FLORIDA DEPARTMENT OF TRANSPORTATION
ROAD DESIGN

CONCRETE BARRIER WALL

	Names	Dates
Designed By	JVG	05/91
Drawn By	HSD	05/91
Checked By	JVG	05/91
F.H.W.A. Approved:		

Approved By: _____
State Roadway Design Engineer

Revision No.	Sheet No.	Index No.
92	14 of 14	410

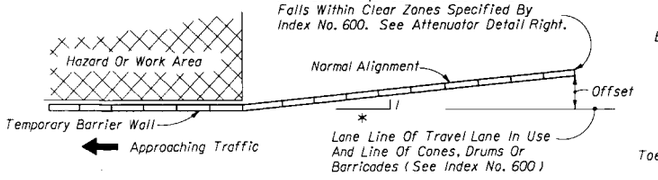

*Flare In Accordance With Other FDOT Roadway And Traffic Design Standards Or As Called For In The Plans, But Not Steeper Than 10:1.

PLAN

Notes:

1. Temporary barrier to be placed as shown in plans or as directed by the Engineer.
2. For additional information refer to Index No. 600.

WALL ALIGNMENT

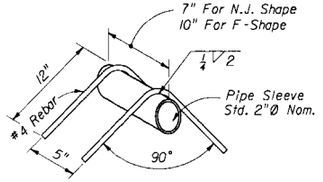

LIFTING SLEEVE

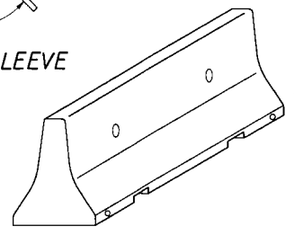

See Optional End Treatments For End Configurations Sheet 2 Of 2

PICTORIAL VIEW

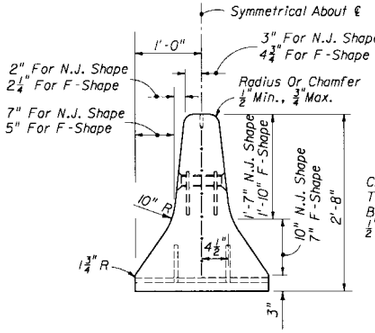

SECTION

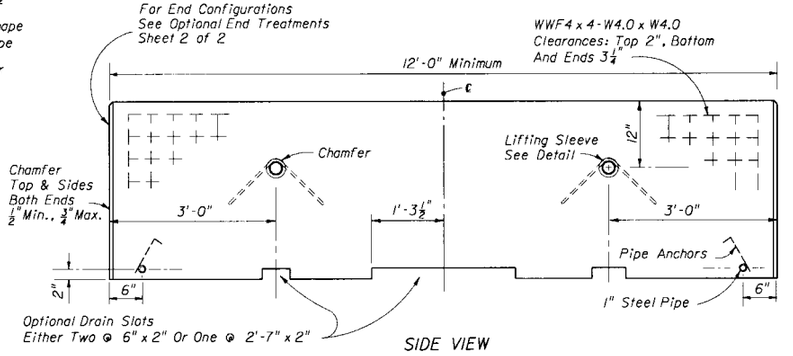

SIDE VIEW

WALL UNIT

TEMPORARY INERTIAL ATTENUATOR

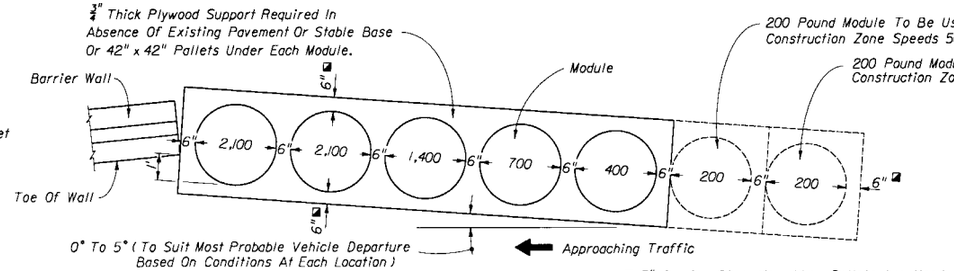

PLAN

Notes :

1. Number shown inside module indicates the weight in pounds of sand. All modules are approximately 36" inches in height and in diameter.
2. Inertial attenuator to be installed in accordance with manufacturers specifications and recommendations.
3. A Type I Object Marker panels shall be placed on the approach end module in accordance with Index No. 17353.
4. Inertial attenuators shall be paid for as Vehicular Impact Attenuator (Inertia) (Temp), Ea. Relocation of attenuators shall be paid for as Relocate Temporary Vehicular Impact Attenuator, Ea.

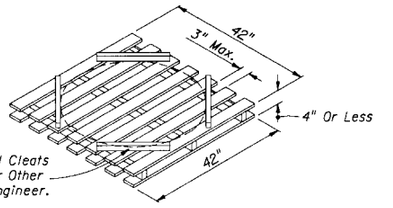

Pallet Shall Be Constructed Of Wood Or Other Frangible Or Resilient Materials Other Than Metals, And, Shall Be Sufficiently Durable To Support Modules For Their Expected Period Of Use; Wood Pallet Detail Shown.

PALLET DETAIL

GENERAL NOTES

1. Temporary concrete barrier wall units may be either the New Jersey safety shape or the F-Shape configuration, however, intermixing of units with different shapes in a continuous run of barrier will not be permitted.
2. Material and workmanship for the wall shall meet the requirements of Sections 400 and 521 of the Standard Specifications, except the bottom of the unit can be finished to a dense uniform surface by floating in lieu of the Class 3 finish. Concrete shall be Class II.
3. The wall units shall be used for temporary barrier walls unless the plans specify other types of barrier walls.
4. Type C Steady-Burn Lights are to be mounted on top of temporary concrete barrier walls that are used as barriers along travel ways in work zones. The lights are to be spaced at 50' centers. For additional information refer to 'Warning Lights' on Index No. 600.
5. Wall units shall not be used for permanent barrier wall construction regardless of unit length, unless specifically permitted by the plans.
6. Units with any of the optional end treatments may be used for temporary barrier wall installations, subject to the following requirements:
   (a) The plans may specify the option.
   (b) Option 1 and Option 2 units may not be mixed with each other or with Option 3 or Option 4.
   (c) Option 3 and Option 4 units are interchangable and may be mixed in a single run of wall, however, they may not be mixed with Option 1 or Option 2.
   (d) Option 1 units cast prior to August 1, 1982 shall be installed in accordance with Option 1 annotations.
7. Units may be reused provided they have the structural integrity and surface qualities of new units.
8. Units shall be furnished by the Contractor except when the plans stipulate the availability of Department owned units. Regardless of unit source the Contractor shall furnish all hardware and shall be responsible for all handling including loading, transport, unloading, stockpiling, installation, removal and return.

   When the plans stipulate that temporary concrete barrier wall(s) are to become property of the Department at completion of the project, only Option 4 end treatment units are to be used, except as otherwise specified in the plans.

   Units with plain ends will not be permitted regardless of end ties or anchorage.
9. Units used for work zone traffic control and other temporary applications shall be paid for under the contract unit price for Concrete Barrier (Temp), LF.

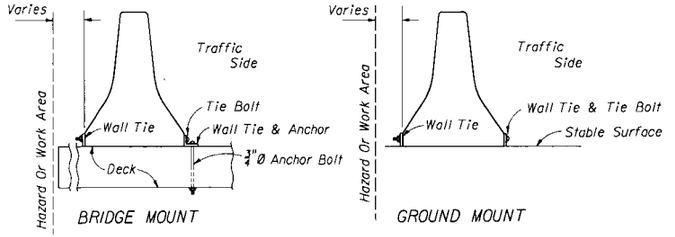

BRIDGE MOUNT GROUND MOUNT

Anchor bolts shall have a pullout and shear capacity of 14,000 lbs. Wedge or chemical anchor bolts may be used in lieu of bolt, washer and nut assembly shown. Core drills shall be used to construct through bolt holes, and, drills specified by the manufacturer shall be used to construct expansion and chemical anchor bolt holes. After removal of walls, anchors shall be removed to 1" min. below deck surface and holes filled with epoxy grout.

WALL TIES & ANCHORAGE

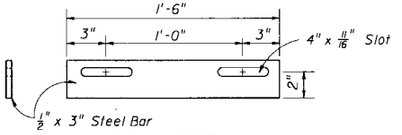

WALL TIE

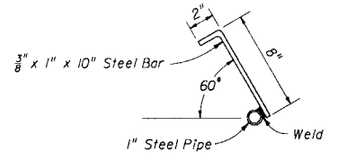

WALL TIE & ANCHOR PIPE

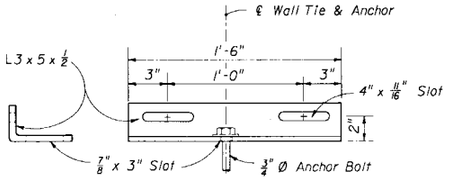

WALL TIE & ANCHOR

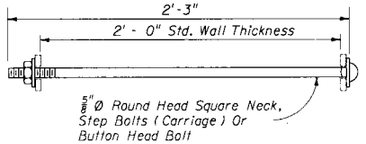

WALL TIE BOLT

STATE OF FLORIDA DEPARTMENT OF TRANSPORTATION
ROAD DESIGN

PRECAST CONCRETE TEMPORARY BARRIER WALL

	Names	Dates
Designed By		
Drawn By	HSD	04/82
Checked By	JVG	04/82
F.H.W.A. Approved:		04/28/82

Approved By
State Roadway Design Engineer

Revision No.	Sheet No.	Index No.
92	1 of 2	415

OPTION 1 ANNOTATIONS

1. Tolerances: Tongue 0" to (-) $\frac{1}{4}$" ; Groove 0" to (+) $\frac{1}{4}$"
2. Barrier unit without anchor pipes, with toe heights of not less than 3" nor more than 4" and with or without bottom keyways, produced prior to August 1, 1982 and used on projects let to contract after August 1, 1982 may be used under the following adaptations:
   (a) Ground Mounted Units: Units shall be tied front and back with wall ties mounted 4" above the top of the toe by anchors located 6" from the end of the unit. Anchor bolts shall be $\frac{3}{8}$" diameter providing a minimum pull-out strength of 9000 lbs. and may be either threaded insert, wedge or epoxy grouted sleeve types with $4\frac{1}{2}$" minimum imbedment.
   (b) Bridge Mounted Units: Units shall be tied front and back same as ground mounted units. In addition, an "L" clip shall be welded on center to the bottom edge of the front wall tie to provide deck anchorage using the $\frac{3}{4}$" diameter anchor bolt. The clip shall have a $\frac{1}{2}$" x 2" minimum cross section and may be fabricated by either method shown in the sketches below. Units with varying toe heights will not be permitted in any single run of wall.

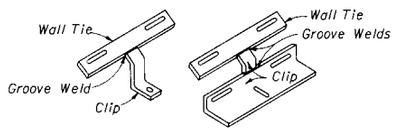

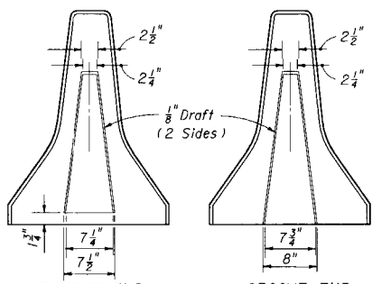

TONGUE END GROOVE END

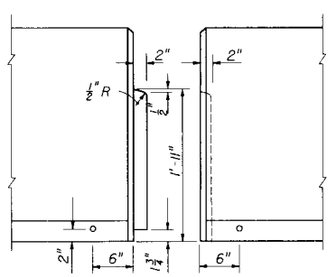

SIDE VIEW

NOTICE: OPTION 1 IS A PROPRIETARY DESIGN. ANY INFRINGEMENT ON THE PROPRIETARY RIGHTS OF THE DESIGNER SHALL BE THE SOLE RESPONSIBILITY OF THE USER.

TRAPEZOIDAL TONGUE AND GROOVE OPTION 1

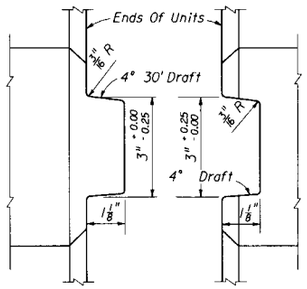

TOP VIEW

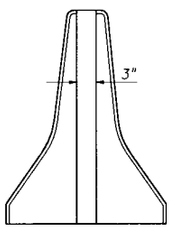

END VIEW

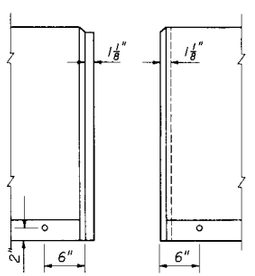

SIDE VIEW

STRAIGHT TONGUE AND GROOVE OPTION 2

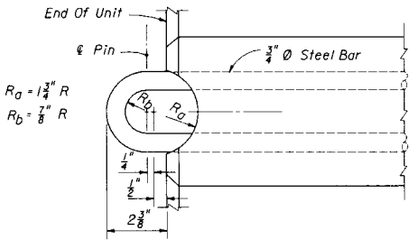

TOP VIEW

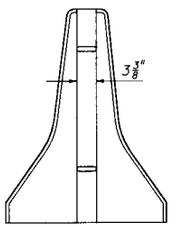

END VIEW

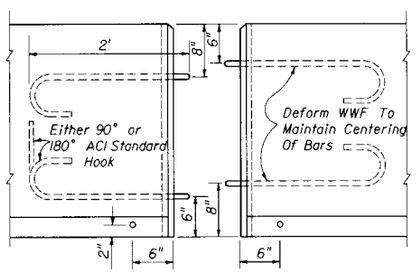

SIDE VIEW

ROUND BAR CONNECTOR OPTION 3

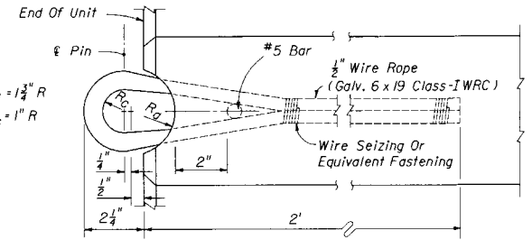

TOP VIEW

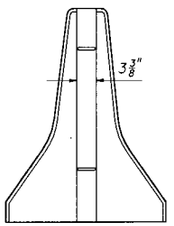

END VIEW

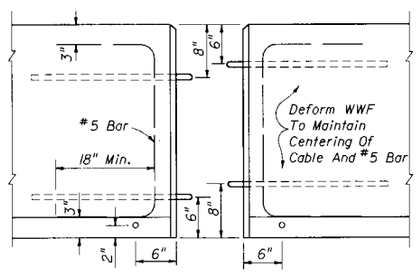

SIDE VIEW

WIRE ROPE CONNECTOR OPTION 4

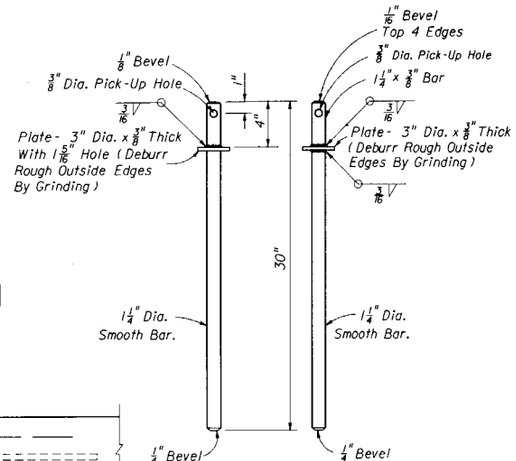

OPTIONAL PINS

STEEL CONNECTING PIN FOR OPTIONS 3 AND 4

WALL TIE AND ANCHORAGE REQUIREMENTS

END OPTION	GROUND MOUNT	BRIDGE MOUNT	REMARKS
1	Yes	Yes	
2	Yes	Yes	
3	No	Yes	
4	No	Yes	

Note: When the plans call for wall units furnished by the Department, ground and bridge mount ties and anchors will be required. Tie and anchor assemblies shall be furnished by the Contractor.

OPTIONAL END TREATMENTS FOR WALL UNITS

STATE OF FLORIDA DEPARTMENT OF TRANSPORTATION
ROAD DESIGN

PRECAST CONCRETE TEMPORARY BARRIER WALL

	Names	Dates
Designed By		
Drawn By	HSD	04/82
Checked By	JVG	04/82
F.H.W.A. Approved:		04/28/82

Approved By: Emmett H. Morgan
State Roadway Design Engineer

Revision No.	Sheet No.	Index No.
90	2 of 2	415

INDEX OF SHEETS

SHEET NO.	DESCRIPTION
1	General System Features And Bay Selection Guidelines
2	Concrete Backup Wall Assembly
3	Tension Strut Backup Assembly
4	Wide Flange Backup Assembly
5	Concrete Barrier Wall Backup Assembly
6	Transition Assembly Features

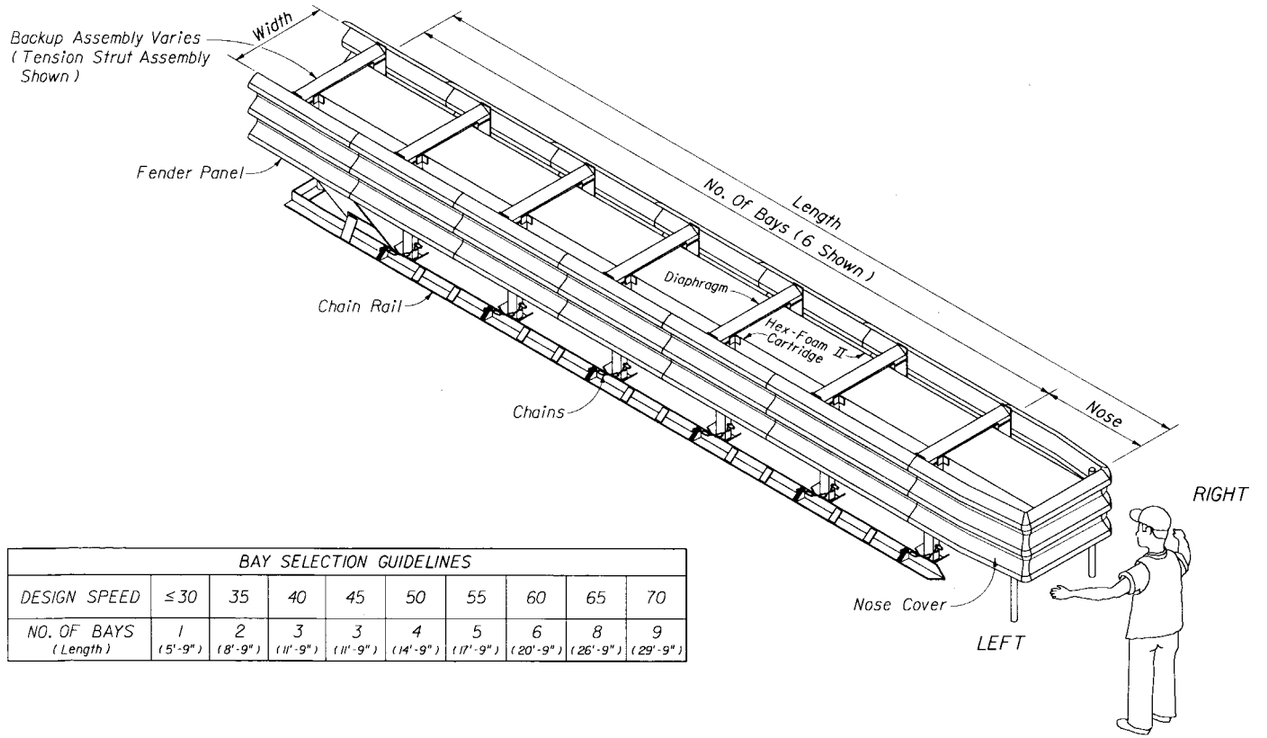

BAY SELECTION GUIDELINES									
DESIGN SPEED	≤ 30	35	40	45	50	55	60	65	70
NO. OF BAYS (Length)	1 (5'-9")	2 (8'-9")	3 (11'-9")	3 (11'-9")	4 (14'-9")	5 (17'-9")	6 (20'-9")	8 (26'-9")	9 (29'-9")

GENERAL SYSTEM FEATURES AND BAY SELECTION GUIDELINES

GENERAL NOTES

1. The energy absorbing system represented on this standard drawing is a proprietary design by Energy Absorption Systems, Inc. and marketed under the trade name G-R-E-A-T, short for Guard Rail Energy Absorbing Terminal. Any infringement on the rights of the designer shall be the sole responsibility of the user.

2. This standard drawing is produced by the Florida Department Of Transportation solely for use by the Department and its assignees. This standard drawing provides the general graphics and information necessary to field identify component parts of the G-R-E-A-T System (G-R-E-A-T) and their incorporation into a whole system.

3. This standard drawing is sufficient for plan details for the G-R-E-A-T installed as a free standing system or installed in connection with concrete barrier walls and other fixed barrier systems, and precludes the requirement for shop drawing submittals unless the plans otherwise call for such submittals.

4. The G-R-E-A-T shall be assembled and installed in accordance with the manufacturers detailed drawings, procedures and specifications.

5. The G-R-E-A-T is available in 2'-0", 2'-6" and 3'-0" widths. Each of these widths can be matched to any of the four backup assemblies shown in this index. The four backup assemblies are to be utilized as follows:
   (a) Independent systems:
      (1) Concrete backup wall assemblies.
      (2) Tension strut backup assemblies.
      (3) Wide flange backup assemblies.
   (b) Dependent systems:
      (1) Concrete barrier wall backup assemblies.
   (c) Combination systems:
      (1) Any of the independent systems (a) above with thrie beam/W-beam side panel transition assembly connected to single face or double face guardrail systems.
      (2) Dependent systems (b) above with bracket assemblies and transition panels connected to safety shaped concrete barrier wall systems.
   Variations from the uses described above shall be constructed as detailed in the plans and/or as required by shop drawings.

6. Only the G-R-E-A-T Hex-Foam II cartridges shall be used in all bays and the nose section.

7. Concrete foundations and backup blocks shall be constructed with 4000 psi min. compressive strength concrete.

8. The G-R-E-A-T shall be constructed on cross slopes 12.5:1 or flatter.

9. All metallic components shall meet the galvanizing requirements for guardrail, Index No. 400.

10. The G-R-E-A-T System will be paid for under the contract unit price for Impact Attenuator Vehicular (GREAT), Each.

DESIGN NOTES AND GUIDELINES

1. The G-R-E-A-T System (G-R-E-A-T) is designed to cushion automobile end-on hits and to redirect automobiles from side hits. The G-R-E-A-T is designed to shield narrow fixed hazards or the ends of other fixed barrier systems. The number of bays to be used in a specific unit will be determined by the design speed, except where the Engineer determines that another speed is more applicable. The unit width will be determined by the width of the object to be shielded or by the connecting barrier system. The backup assembly for a specific unit will be determined by either (a) the unit standing free of the object to be shielded or (b) the barrier system(s) to which it is connected.

2. The G-R-E-A-T is a restorable system that is particularly suited to shielding hazards subject to high speed traffic, high volume traffic, and/or traffic with a history of frequent errant vehicle departures from the roadway or the potential exists for such departures. The G-R-E-A-T alone is not suited to shielding a wide hazard. The G-R-E-A-T is particularly suited to shielding hazards where the approach space is limited; and, is particularly suited to conditions where the terminal must be located close to the traffic lane.

3. Currently the Department does not recognize other proprietary items as being equally suitable alternatives to the G-R-E-A-T, and until such alternatives are available, the G-R-E-A-T need not be bid against other proprietary items.

STATE OF FLORIDA DEPARTMENT OF TRANSPORTATION
ROAD DESIGN

G-R-E-A-T SYSTEM

	Names	Dates
Designed By	MFG/JVG	10/91
Drawn By	JBW	10/91
Checked By	JVG/RER	10/91
F.H.W.A. Approved:		

Approved By _____
State Roadway Design Engineer

Revision No.	Sheet No.	Index No.
92	1 of 6	431



TOP VIEW

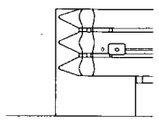

SIDE VIEW

Note: Deflector required on left side for bidirectional facilities unless extension or transition panel called for.

INSET

ASSEMBLY LENGTHS		
NO. OF BAYS	L (Bays)	L_0 (Foundation)
1	5'-9"	6'-6"
2	8'-9"	9'-6"
3	11'-9"	12'-6"
4	14'-9"	15'-6"
5	17'-9"	18'-6"
6	20'-9"	21'-6"
7	23'-9"	24'-6"
8	26'-9"	27'-6"
9	29'-9"	30'-6"
10	32'-9"	33'-6"
11	35'-9"	36'-6"
12	38'-9"	39'-6"

A (Assembly Width)	B (Anchor Bolt Ctrs.)
2'-0"	2'-3"
2'-6"	2'-9"
3'-0"	3'-3"

Note: Bolt longitudinal spacing to be in accordance with the manufacturers installation drawings and specifications.

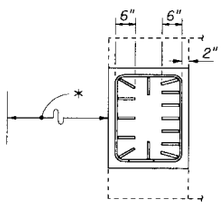

* Any shielding required behind the back-up wall shall be constructed in accordance with the roadway plans.

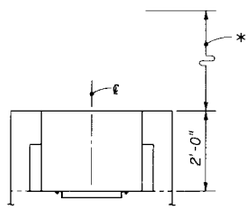

PLAN

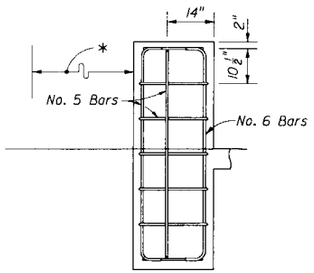

REINFORCEMENT

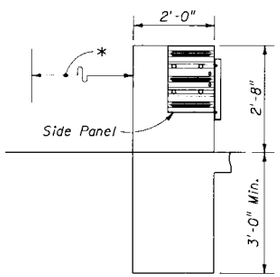

SIDE VIEW

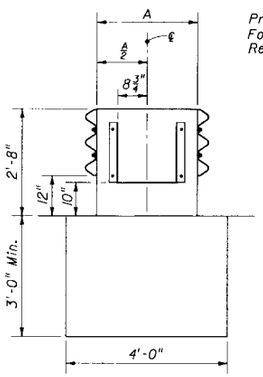

SECTION AA

WALL DETAILS

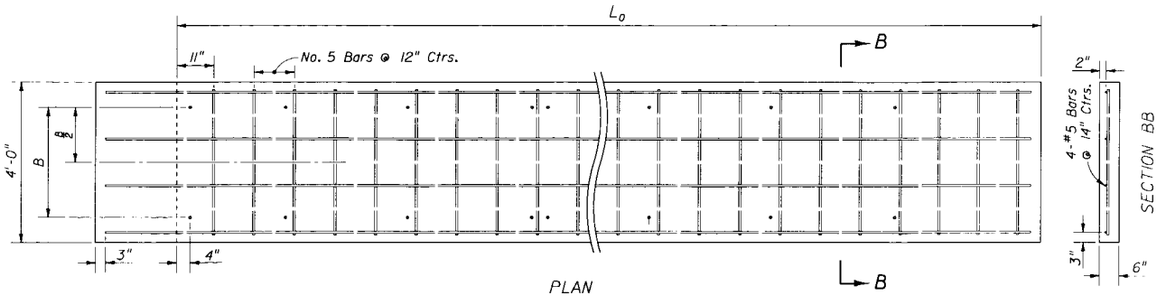

PLAN

FOUNDATION

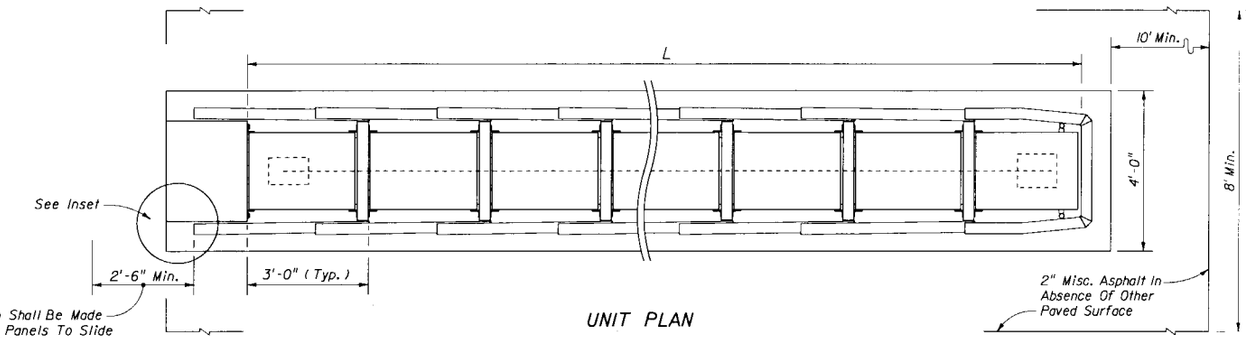

UNIT PLAN

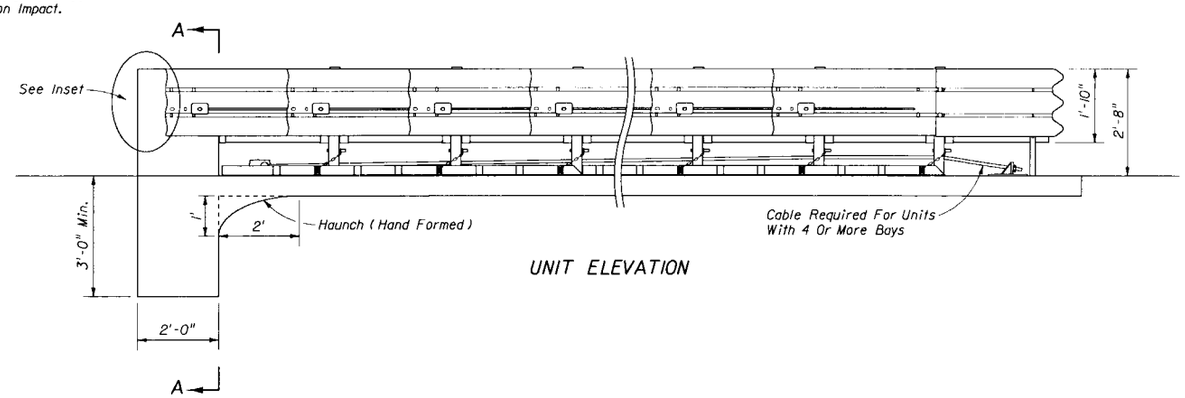

UNIT ELEVATION

NOTES

1. For the number of bays required see table, Sheet 1.
2. See Transition Assembly Features for guardrail connections.
3. For design information see the General Notes.

CONCRETE BACKUP WALL ASSEMBLY

STATE OF FLORIDA DEPARTMENT OF TRANSPORTATION
ROAD DESIGN

G-R-E-A-T SYSTEM

	Names	Dates
Designed By	MFG/JVG	10/91
Drawn By	JBW	10/91
Checked By	JVG/RER	10/91

Approved By: State Roadway Design Engineer

F.H.W.A. Approved:

Revision No.	Sheet No.	Index No.
92	2 of 6	431

A (Assembly Width)	B (Anchor Bolt Ctrs.)
2'-0"	2'-3"
2'-6"	2'-9"
3'-0"	3'-3"
Note: Bolt longitudinal spacing to be in accordance with the manufacturers installation drawings and specifications.	

ASSEMBLY LENGTHS		
NO. OF BAYS	L (Bays)	L_o (Foundation)
1	5'-9"	10'-0"
2	8'-9"	10'-0"
3	11'-9"	13'-0"
4	14'-9"	16'-0"
5	17'-9"	19'-0"
6	20'-9"	22'-0"
7	23'-9"	25'-0"
8	26'-9"	28'-0"
9	29'-9"	31'-0"
10	32'-9"	34'-0"
11	35'-9"	37'-0"
12	38'-9"	40'-0"

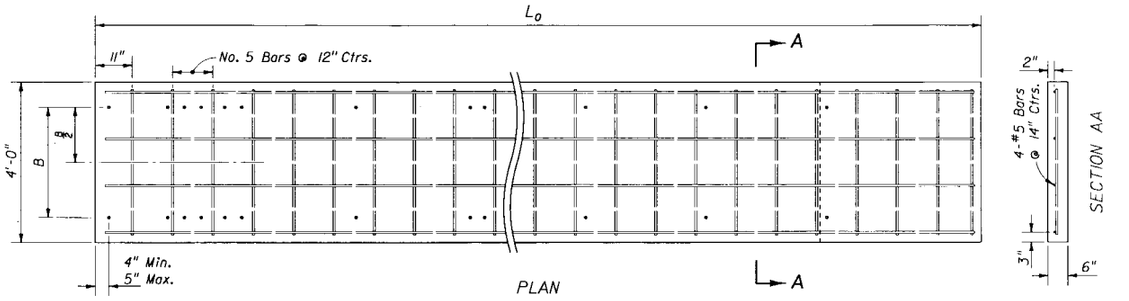

PLAN

FOUNDATION

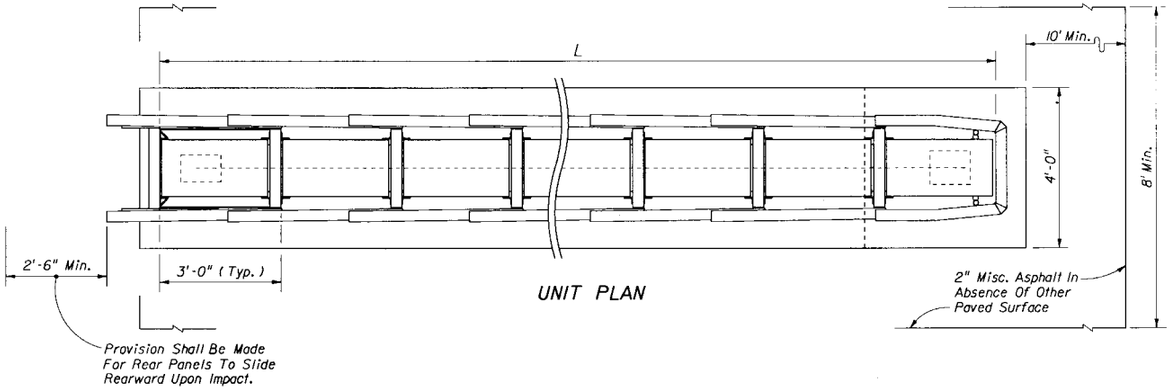

UNIT PLAN

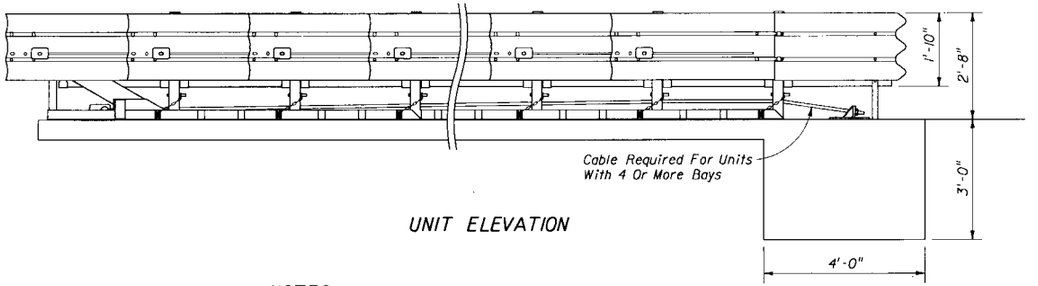

UNIT ELEVATION

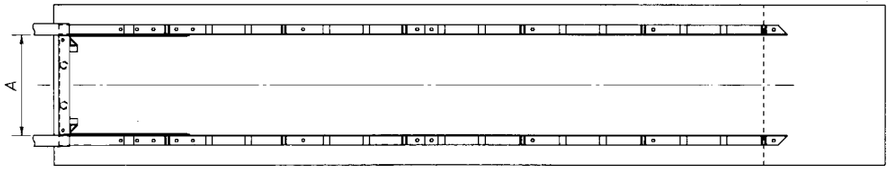

STRUT AND RAIL PLAN

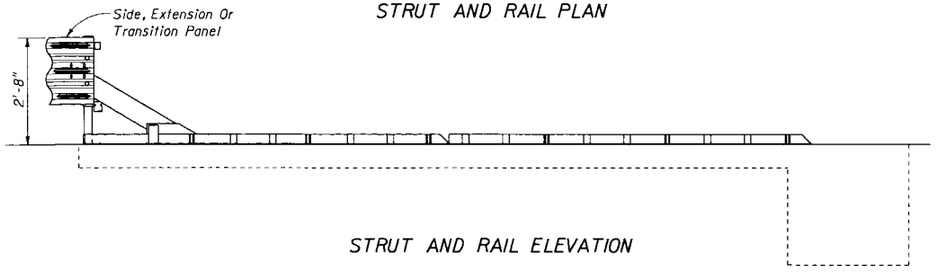

STRUT AND RAIL ELEVATION

NOTES

1. For the number of bays required see table, Sheet 1.
2. See Transition Assembly Features for guardrail connections.
3. For design information see the General Notes.

TENSION STRUT BACKUP ASSEMBLY

STATE OF FLORIDA DEPARTMENT OF TRANSPORTATION
ROAD DESIGN

G-R-E-A-T SYSTEM

	Names	Dates
Designed By	MFG/JVG	10/91
Drawn By	JBW	10/91
Checked By	JVG/RER	10/91
F.H.W.A. Approved:		

Approved By
State Roadway Design Engineer

Revision No.	Sheet No.	Index No.
92	3 of 6	431

ASSEMBLY LENGTHS		
NO. OF BAYS	L (Bays)	L_0 (Foundation)
1	5'-9"	7'-9"
2	8'-9"	10'-9"
3	11'-9"	13'-9"
4	14'-9"	16'-9"
5	17'-9"	19'-9"
6	20'-9"	22'-9"
7	23'-9"	25'-9"
8	26'-9"	28'-9"
9	29'-9"	31'-9"
10	32'-9"	34'-9"
11	35'-9"	37'-9"
12	38'-9"	40'-9"

A (Assembly Width)	B (Post Spacing)	C (Anchor Bolt Ctrs.)
2'-0"	1'-0"	2'-3"
2'-6"	1'-6"	2'-9"
3'-0"	2'-0"	3'-3"

Note: Bolt longitudinal spacing to be in accordance with the manufacturers installation drawings and specifications.

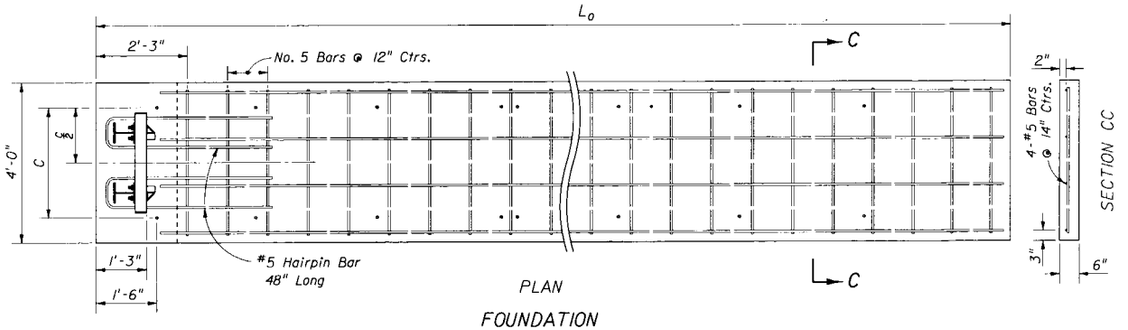

PLAN

FOUNDATION

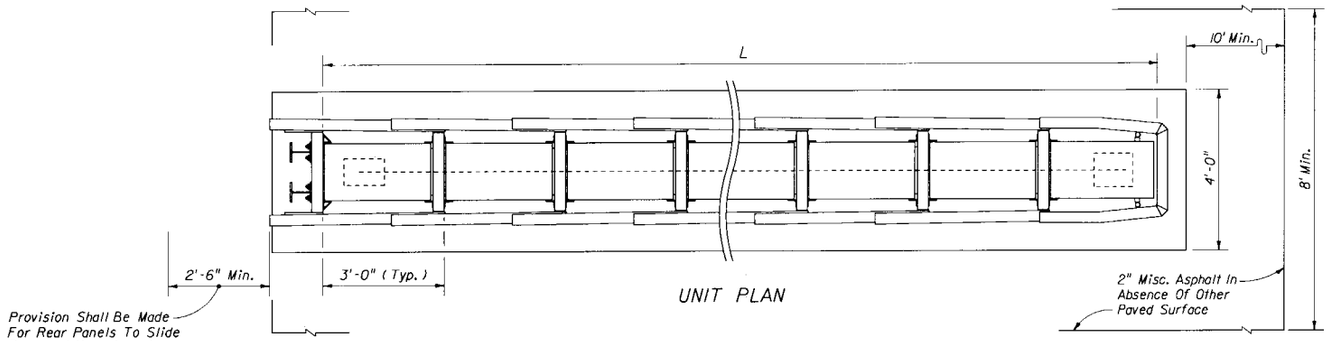

UNIT PLAN

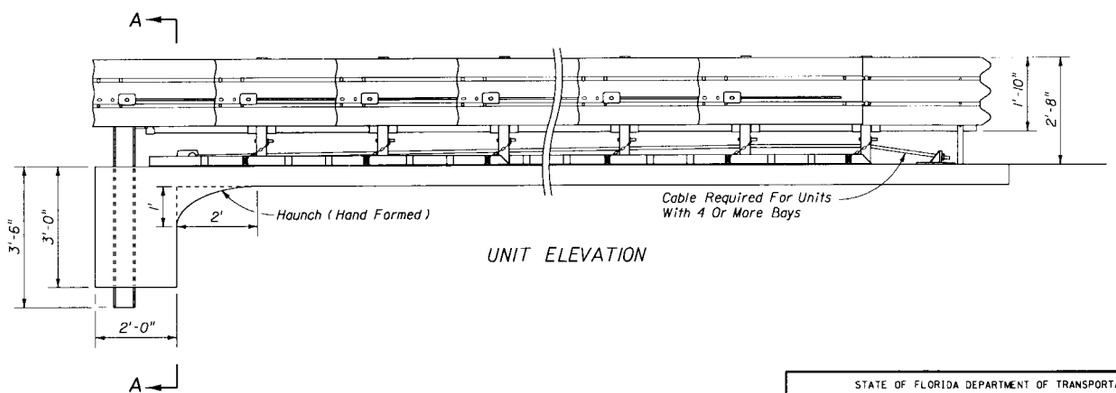

UNIT ELEVATION

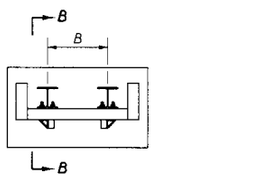

PLAN

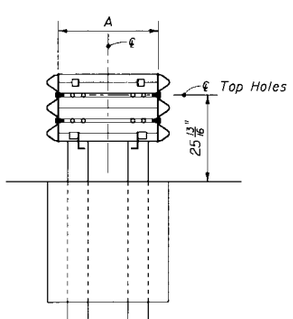

SECTION AA

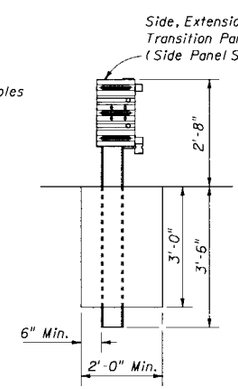

SIDE VIEW

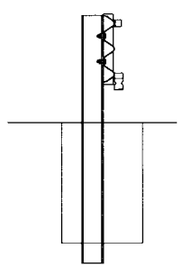

SECTION BB

WALL DETAILS

NOTES

1. For the number of bays required see table, Sheet 1.
2. See Transition Assembly Features for guardrail connections.
3. For design information see the General Notes.

WIDE FLANGE BACKUP ASSEMBLY

STATE OF FLORIDA DEPARTMENT OF TRANSPORTATION
ROAD DESIGN

G-R-E-A-T SYSTEM

	Names	Dates
Designed By	MFG/JVG	10/91
Drawn By	JBW	10/91
Checked By	JVG/RER	10/91
F.H.W.A. Approved:		

Approved By _____ State Roadway Design Engineer

Revision No.	Sheet No.	Index No.
92	4 of 6	431

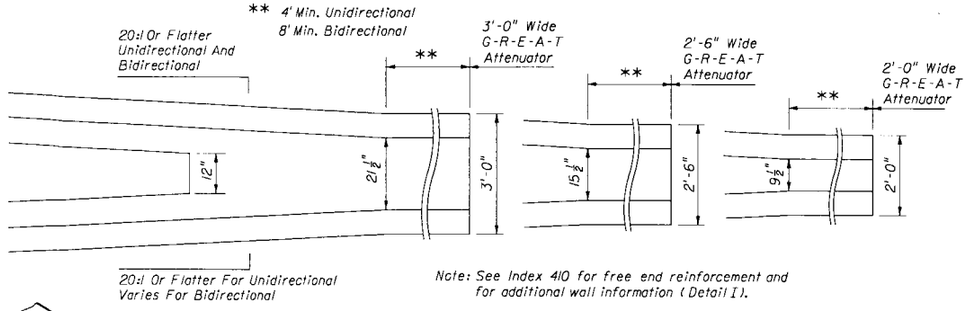

Note: See Index 410 for free end reinforcement and for additional wall information (Detail I).

TRANSITIONAL CONCRETE BARRIER WALL BACKUP

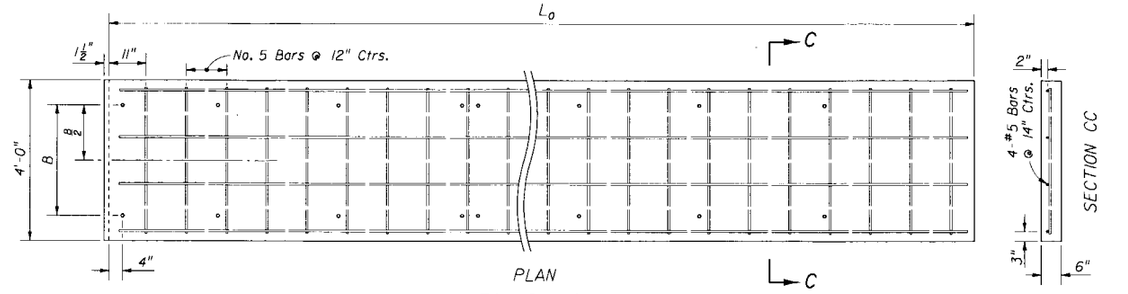

PLAN

FOUNDATION

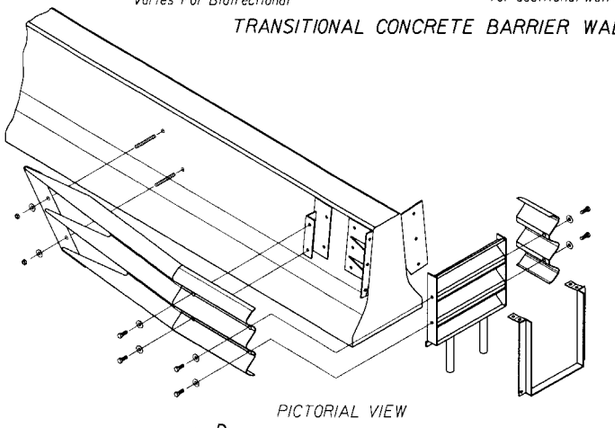

PICTORIAL VIEW

A (Assembly Width)	B (Anchor Bolt Ctrs.)
2'-0"	2'-3"
2'-6"	2'-9"
3'-0"	3'-3"

Note: Bolt longitudinal spacing to be in accordance with the manufacturers installation drawings and specifications.

ASSEMBLY LENGTHS		
NO. OF BAYS	L (Bays & Nose Section)	L_o (Foundation)
1	5'-9"	6'-6"
2	8'-9"	9'-6"
3	11'-9"	12'-6"
4	14'-9"	15'-6"
5	17'-9"	18'-6"
6	20'-9"	21'-6"
7	23'-9"	24'-6"
8	26'-9"	27'-6"
9	29'-9"	30'-6"
10	32'-9"	33'-6"
11	35'-9"	36'-6"
12	38'-9"	39'-6"

Unidirectional Alignment Shown. See Details Below For Both Unidirectional And Bidirectional Connections.

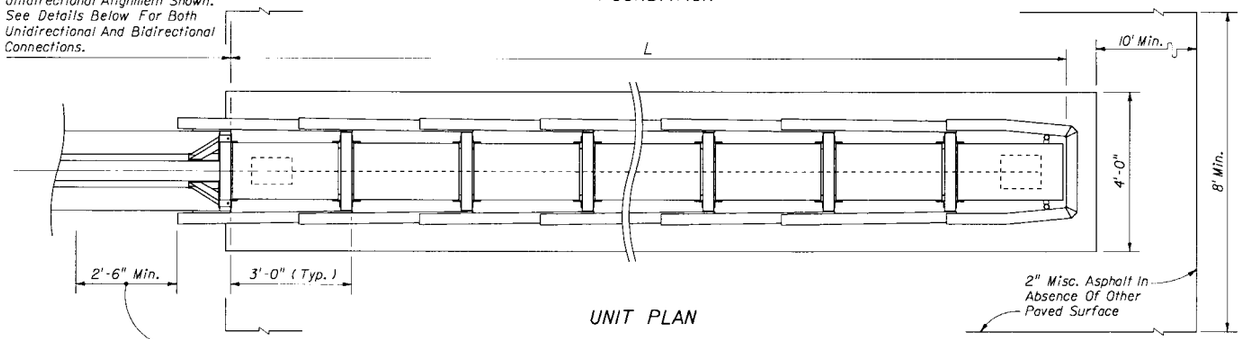

UNIT PLAN

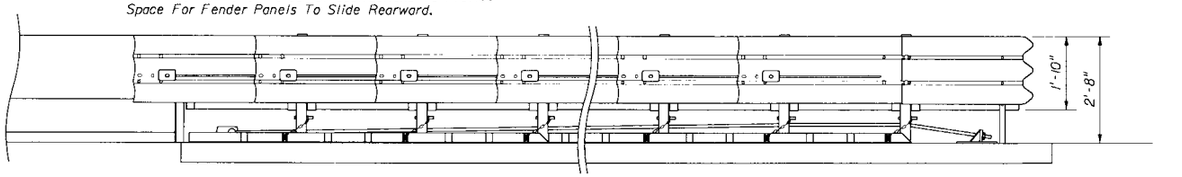

UNIT ELEVATION

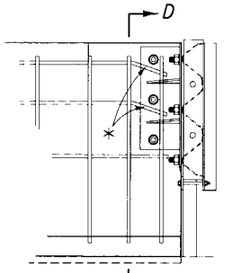

SIDE VIEW

* Bars to be field bent for anchor bolt clearance

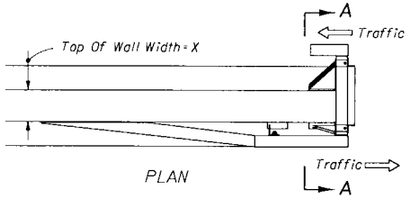

PLAN

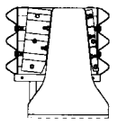

SECTION AA

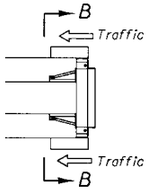

PLAN

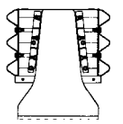

SECTION BB

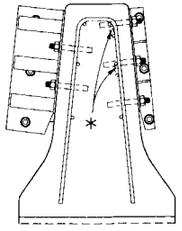

SECTION DD

UNIDIRECTIONAL

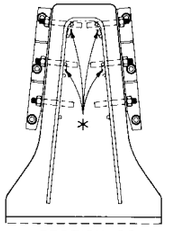

SECTION DD

BIDIRECTIONAL

FIELD BENDING OF WALL REINFORCEMENT

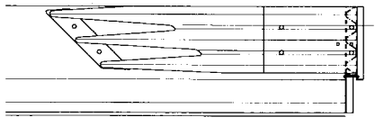

SIDE VIEW

BIDIRECTIONAL

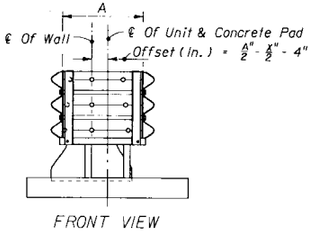

FRONT VIEW

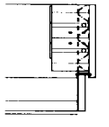

SIDE VIEW

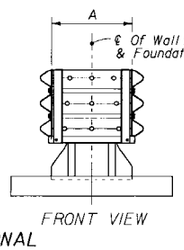

FRONT VIEW

UNIDIRECTIONAL

CONCRETE BARRIER WALL BACKUP ASSEMBLY

NOTES

1. This backup assembly applies to single and double face F-Shape and single face New Jersey (NJ) Shape concrete barrier walls (double face F-Shape detailed). Adaptable to single face F-Shape walls by bracket adjustment. See Index No., 410 for barrier wall information.
2. Concrete barrier wall free end reinforcement required with G-R-E-A-T system connection; See Index No. 410.
3. For the number of bays required see table, Sheet 1.
4. For design information see the General Notes.

STATE OF FLORIDA DEPARTMENT OF TRANSPORTATION
ROAD DESIGN

G-R-E-A-T SYSTEM

	Names	Dates
Designed By	MFG/JVG	10/91
Drawn By	JBW	10/91
Checked By	JVG/RER	10/91
F.H.W.A. Approved:		

Approved By
State Roadway Design Engineer

Revision No.	Sheet No.	Index No.
92	5 of 6	431

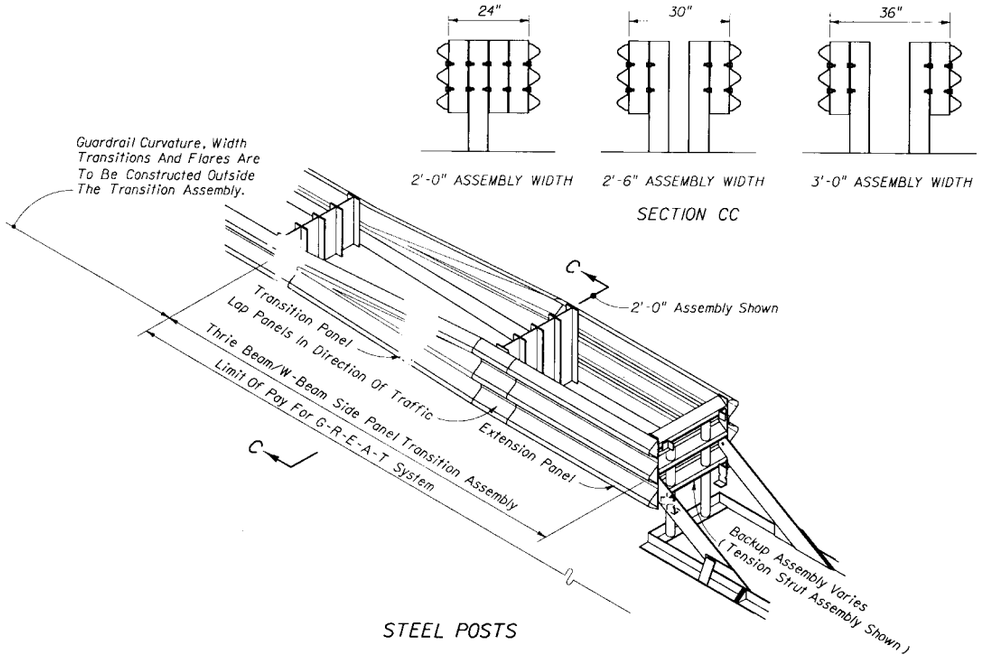

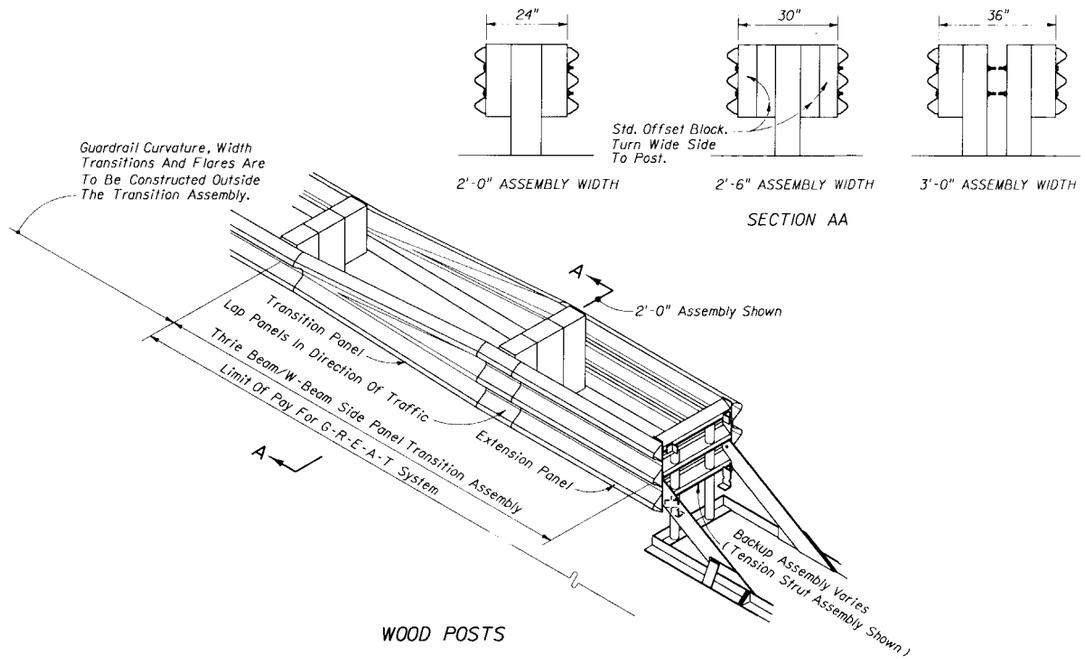

DOUBLE FACE GUARDRAIL

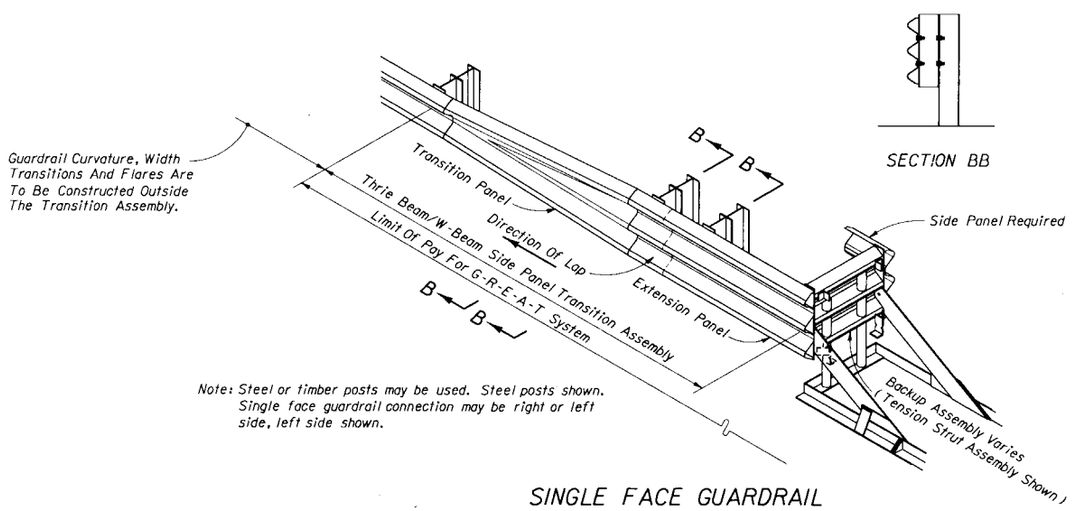

Note: Steel or timber posts may be used. Steel posts shown. Single face guardrail connection may be right or left side, left side shown.

SINGLE FACE GUARDRAIL

NOTES

1. The Thrie Beam/W-Beam Side Panel Assembly required for all Concrete Backup, Tension Strut Backup and Wide Flange Backup assembly connections to guardrail, unless other connection called for in the plans.
2. For additional information see the General Notes and assembly details.

TRANSITION ASSEMBLY FEATURES

STATE OF FLORIDA DEPARTMENT OF TRANSPORTATION
ROAD DESIGN

G-R-E-A-T SYSTEM

	Names	Dates
Designed By	MFG/JVG	10/91
Drawn By	JBW	10/91
Checked By	JVG/RER	10/91
F.H.W.A. Approved:		

Approved By: _____ State Roadway Design Engineer

Revision No.	Sheet No.	Index No.
92	6 of 6	431

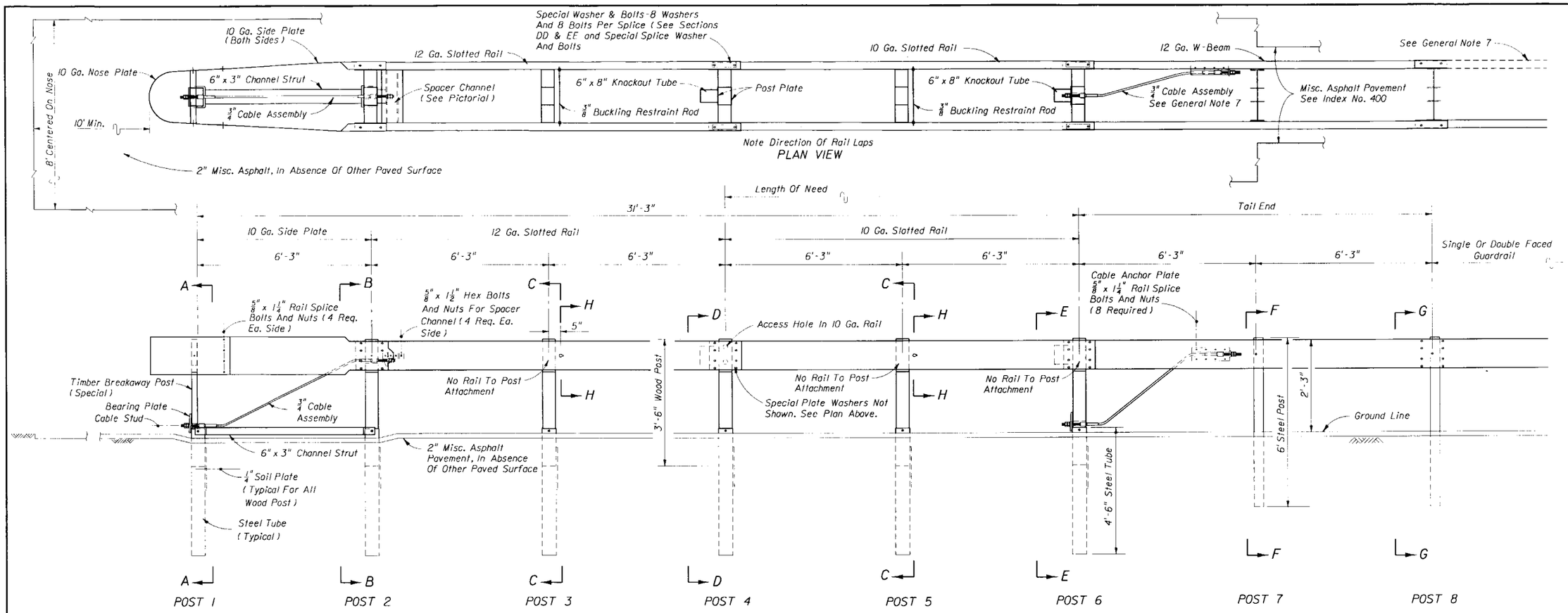

GENERAL NOTES

1. The energy absorbing system represented on this standard drawing is a proprietary design by SYRO Steel Company and marketed under the trade name C-A-T, short for Crash Cushion/Attenuating Terminal. Any infringement on the rights of the designer shall be the sole responsibility of the user.
2. This standard drawing is produced by the Florida Department Of Transportation solely for use by the Department and its assignees. This standard drawing provides the general graphics and information necessary to field identify component parts of the C-A-T system and their incorporation into a whole system.
3. This standard drawing is sufficient for plan details for the C-A-T system installed in connection with standard single and double faced W-beam guardrail systems, and precludes the requirement for shop drawing submittals unless the plans otherwise call for such submittals.
4. The C-A-T system shall be assembled and installed in accordance with the manufacturers detailed drawings, procedures and specifications.
5. The C-A-T system shall be constructed only on slopes 10:1 or flatter.
6. The C-A-T system shall not be located closer than eleven (11) feet to any traffic lane.
7. The 'tail end' section represented on this drawing applies to connections with single and double faced guardrail. The cable anchorage at Post No. 6 is to be used with single faced guardrail connections only.

   Where the C-A-T system is installed in conjunction with a rigid structure, a guardrail transition section shall be constructed between the C-A-T system and the structure connection. The transition sections shown on Indexes 400 and 410 shall be constructed for connections to bridge concrete traffic rails and roadway concrete barrier walls; transition sections for connections to other rigid structures shall be as detailed in the plans and/or as approved by shop drawings.
8. Metallic components shall meet the galvanizing requirements for guardrail, Index No. 400.
9. The C-A-T system for single and double faced guardrail applications will be paid for the under the contract unit price for Impact Attenuator Vehicular (CAT), Each.

DESIGN NOTES AND GUIDELINES

1. The C-A-T system is designed to cushion automobile end-on hits and to redirect automobiles from side hits when impacting at speeds up to and including 60 mph. The C-A-T unit has a singular design for all speeds of 60 mph or less, and any adjustment to its design will not be permitted except as authorized by the manufacturer.
2. The C-A-T system is not intended for use in gores of freeway and expressway mainline ramp termimals; gores of roadway forks; or other gore locations where there is a history of high frenquency vehicle departure from the roadway or the potential exists for such departures. The C-A-T system is not a restorable design and therefore requires complete replacement after having sustained either an end-on or a side vehicular impact. Deformed side rail elements that will inhibit the shearing of lands between the rail slots will be subfunctional and are to be replaced immediately; deformed elements are not to be refurbished for reuse.
3. Currently the Department does not recognize other proprietary items as being equally suitable alternatives to the C-A-T, and until such alternatives are available, the C-A-T need not be bid against other proprietary items.

STATE OF FLORIDA DEPARTMENT OF TRANSPORTATION
ROAD DESIGN

C-A-T SYSTEM

	Names	Dates
Designed By	MFG/JVG	7/91
Drawn By	HSD	7/91
Checked By	JVG/RER	7/91
F.H.W.A. Approved:		

Approved By: _____
State Roadway Design Engineer

Revision No.	Sheet No.	Index No.
92	1 of 2	432

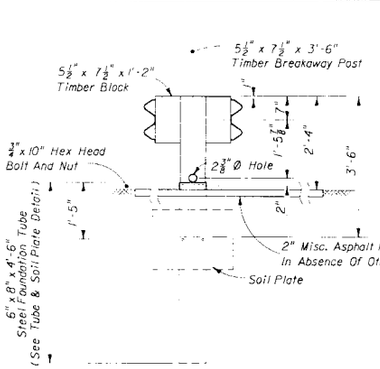

TYPICAL DIMENSIONING

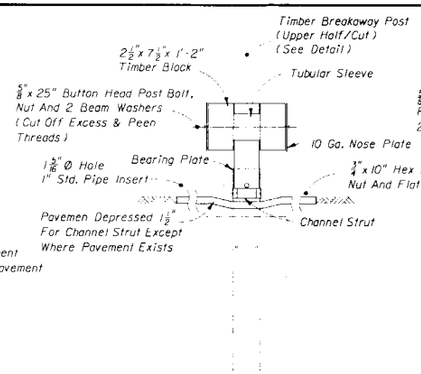

SECTION AA
POST NO. 1

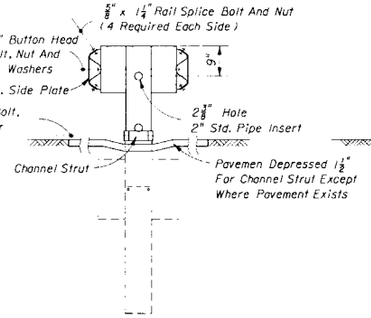

SECTION BB
POST NO. 2

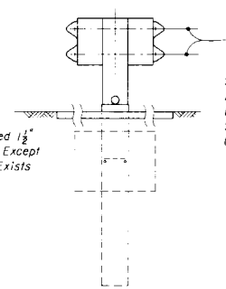

SECTION CC
POST 3 & 5

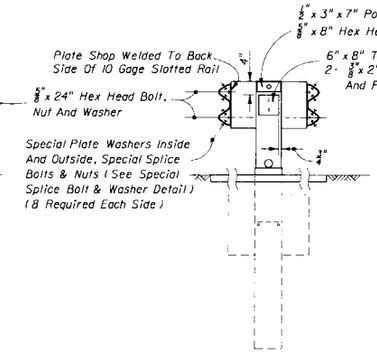

SECTION DD
POST NO. 4

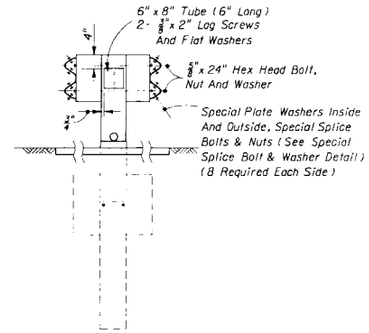

SECTION EE
POST NO. 6

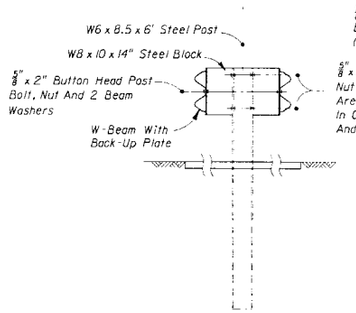

SECTION FF
POST NO. 7

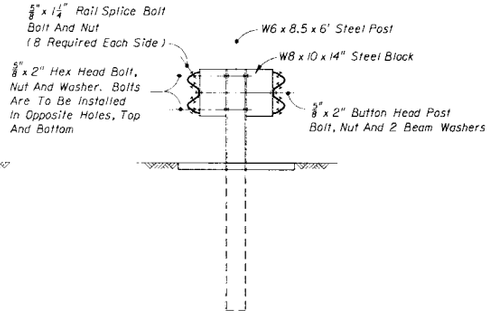

SECTION GG
POST NO. 8

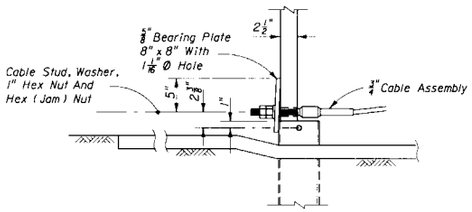

SIDE VIEW
(Channel Strut Not Shown)
CABLE-LOWER ASSEMBLY
POST NO. 1

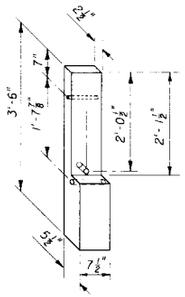

OBLIQUE VIEW-BACK VIEW
POST NO. 1

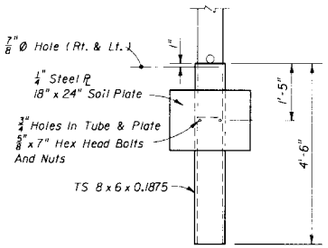

FOUNDATION TUBE AND SOIL PLATE

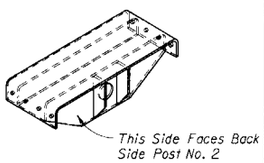

PICTORIAL VIEW
SPACER CHANNEL

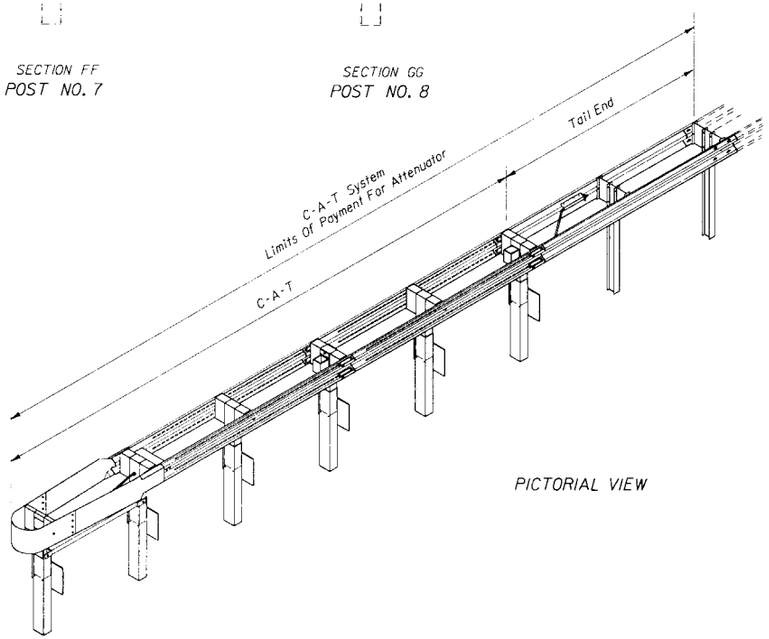

PICTORIAL VIEW

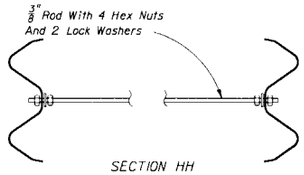

SECTION HH
BUCKLING RESTRAINT ROD

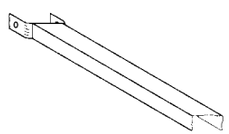

OBLIQUE HALF SECTION
6" x 3" CHANNEL STRUT

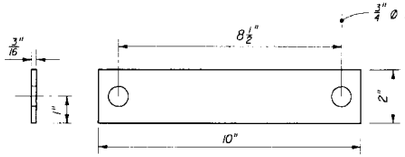

SPECIAL PLATE WASHER

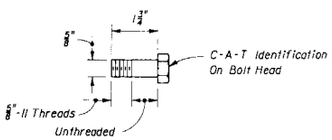

SPECIAL HEX HEAD BOLT
SPECIAL PLATE WASHER AND SPLICE BOLT

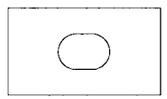

See Index 400 For Details
BEAM WASHER

STATE OF FLORIDA DEPARTMENT OF TRANSPORTATION
ROAD DESIGN

C-A-T SYSTEM

	Names	Dates
Designed By	MFG/JVG	7/91
Drawn By	HSD	7/91
Checked By	JVG/RER	7/91

Approved By
State Roadway Design Engineer

F.H.W.A. Approved:

Revision No.	Sheet No.	Index No.
92	2 of 2	432

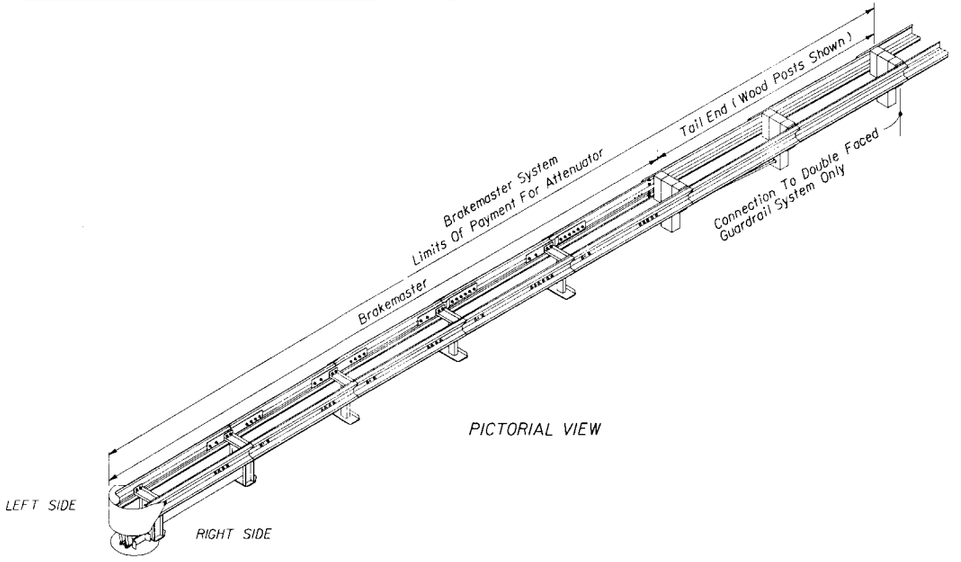

BIDIRECTIONAL SYSTEM

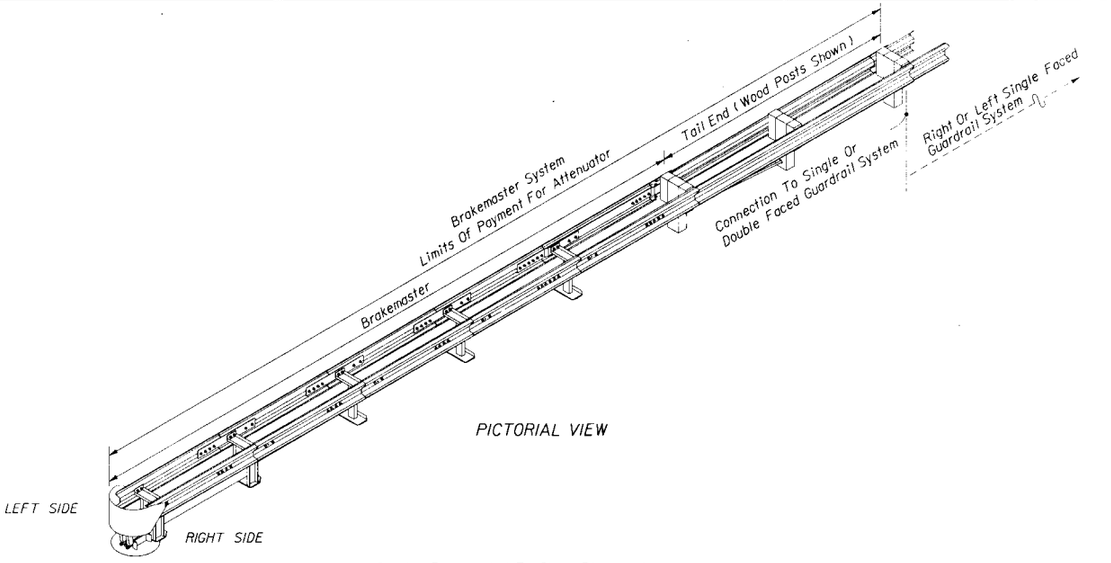

UNIDIRECTIONAL SYSTEM

GENERAL NOTES

1. The energy absorbing system represented on this standard drawing is a proprietary design by Energy Absorption Systems, Inc. and marketed under the trade name Brakemaster. Any infringement on the rights of the designer shall be the sole responsibility of the user.
2. This standard drawing is produced by the Florida Department Of Transportation solely for use by the Department and its assignees. This standard drawing provides the general information and graphics necessary to field identify component parts of the Brakemaster system and their incorporation into a whole system.
3. This standard drawing is sufficient for plan details for the Brakemaster system installed in connection with standard single and double faced W-beam guardrail systems, and precludes the requirement for shop drawing submittals unless the plans otherwise call for such submittals.
4. The Brakemaster system shall be assembled and installed in accordance with the manufacturers detailed drawings, procedures and specifications.
5. The Brakemaster system shall be constructed only on slopes 12:1 or flatter.
6. The Brakemaster system shall not be located closer than eleven (11) feet to any traffic lane.
7. The 'tail end' section represented on this drawing applies to connections with single and double faced guardrail. Where the Brakemaster system is installed in conjunction with safety shaped or vertical faced barrier walls or other rigid structures, a special transitional guardrail section between the Brakemaster and wall or structure shall be as detailed on Index No. 410 or as approved by shop drawings.
8. Metallic componets shall meet the galvanizing requirements for guardrail, Index No. 400.
9. The Brakemaster system will be paid for under the contract unit price for Impact Attenuator Vehicular (Brakemaster), Each.

DESIGN NOTES AND GUIDELINES

1. The Brakemaster system is designed to cushion automobile end-on hits and to redirect automobiles from side hits when impacting at speeds up to and including 60 mph. The Brakemaster unit has a singular design for all speeds of 60 mph or less, and any adjustment to its design will not be permitted except as authorized by the manufacturer.
2. The Brakemaster system is specially designed to shield both narrow hazards and the ends of other fixed barriers located in low frequency impact areas. The Brakemaster system is not intended for use in gores of freeways and expressway mainline ramp terminals; gores of roadway forks; and, other gore locations where there is a history of high frequency vehicle departures from the roadway or the potential exists for such departures. The Brakemaster system is not a restorable design and therefore requires complete replacement after having sustained either an end-on or a side vehicular impact. Deformed side rail elements of the Brakemaster will be subfunctional and are to be replaced immediately; deformed elements are not to be refurbished for reuse. When replacing an impacted Brakemaster system the cable/brake assembly is not to be reused, if the cable sleeve is exposed. After vehicle impact on the Brakemaster system the cable/brake assembly can be returned to the manufacturer for credit toward replacement of the cable.
3. Currently the Department does not recognize other proprietary items as being equally suitable alternatives to the Brakemaster, and until such alternatives are available, the Brakemaster need not be bid against other proprietary items.

STATE OF FLORIDA DEPARTMENT OF TRANSPORTATION
ROAD DESIGN

BRAKEMASTER

	Names	Dates
Designed By	MFG/JVG	7/91
Drawn By	HSD	7/91
Checked By	JVG	7/91
F.H.W.A. Approved:		

Approved By _____
State Roadway Design Engineer

Revision No.	Sheet No.	Index No.
92	1 of 4	433

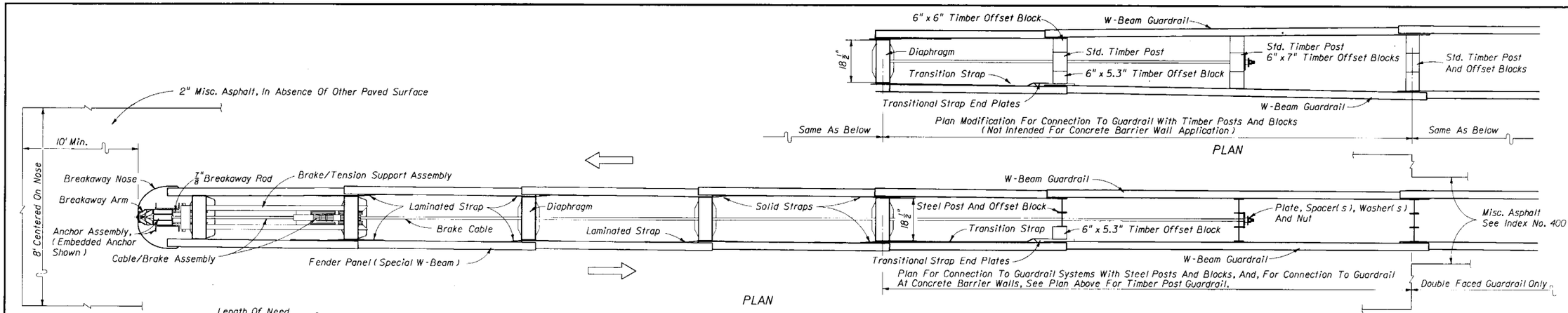

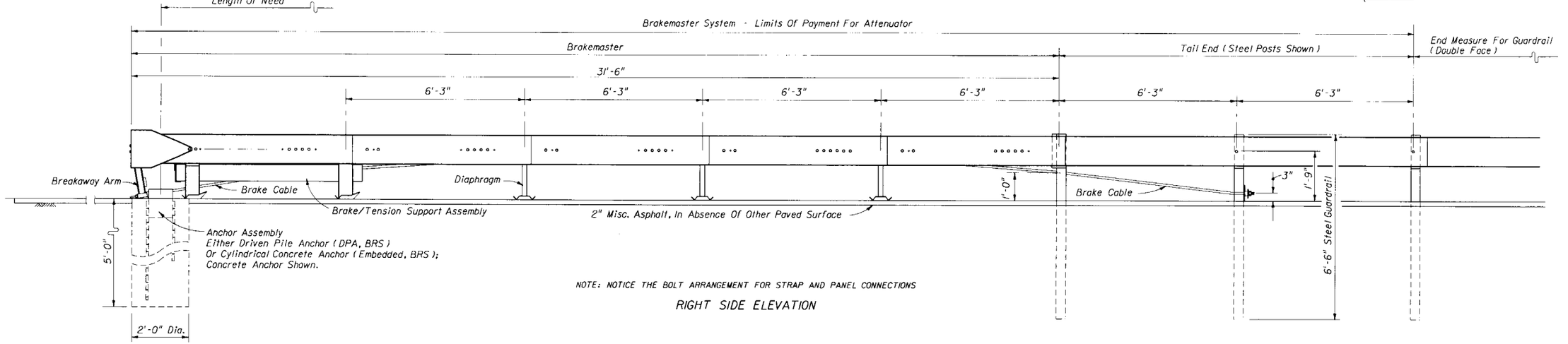

NOTE: NOTICE THE BOLT ARRANGEMENT FOR STRAP AND PANEL CONNECTIONS

RIGHT SIDE ELEVATION

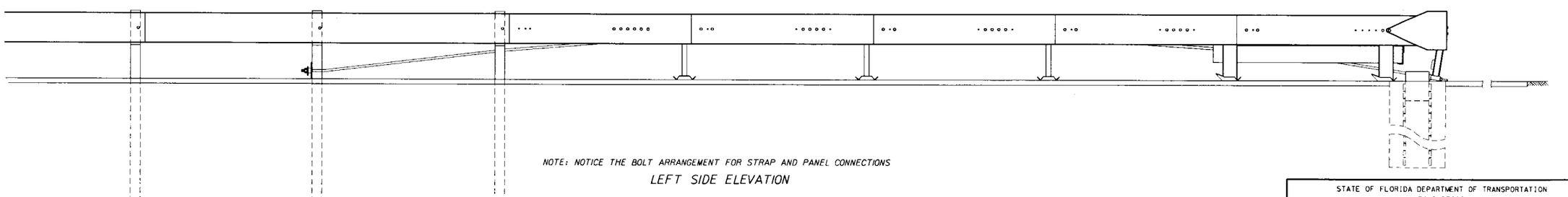

NOTE: NOTICE THE BOLT ARRANGEMENT FOR STRAP AND PANEL CONNECTIONS

LEFT SIDE ELEVATION

BIDIRECTIONAL SYSTEM

STATE OF FLORIDA DEPARTMENT OF TRANSPORTATION
ROAD DESIGN

BRAKEMASTER

	Names	Dates
Designed By	MFG/JVG	7/91
Drawn By	HSD	7/91
Checked By	JVG	7/91
F.H.W.A. Approved:		

Approved By
State Roadway Design Engineer

Revision No.	Sheet No.	Index No.
92	2 of 4	433

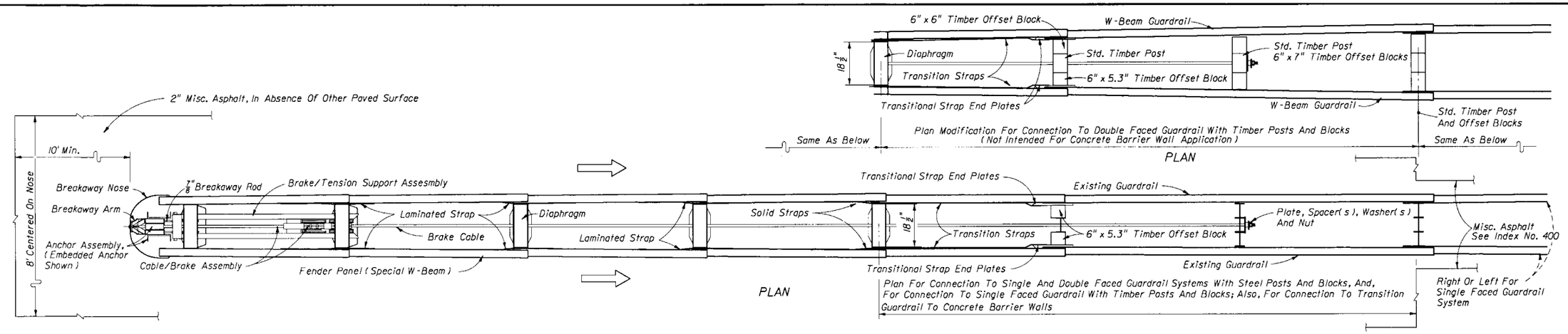

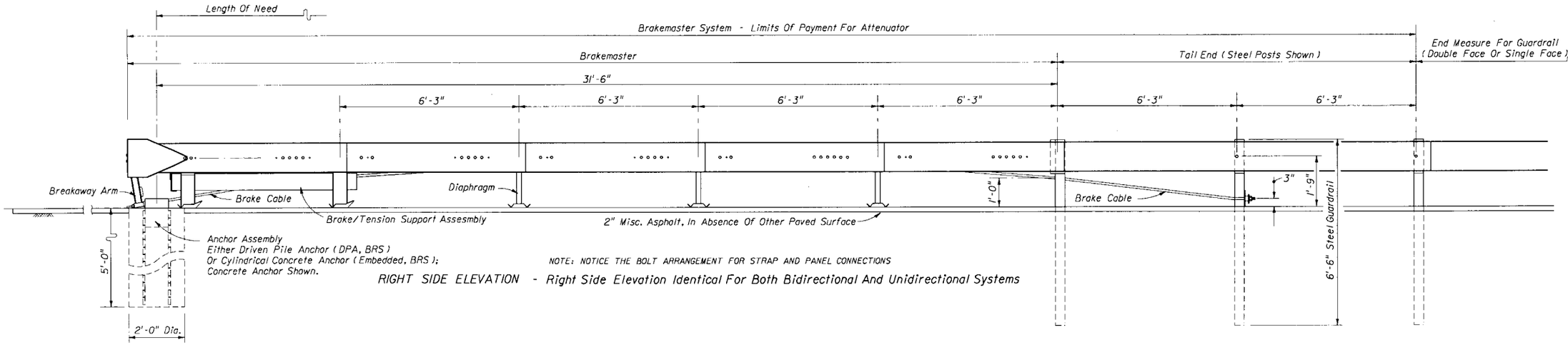

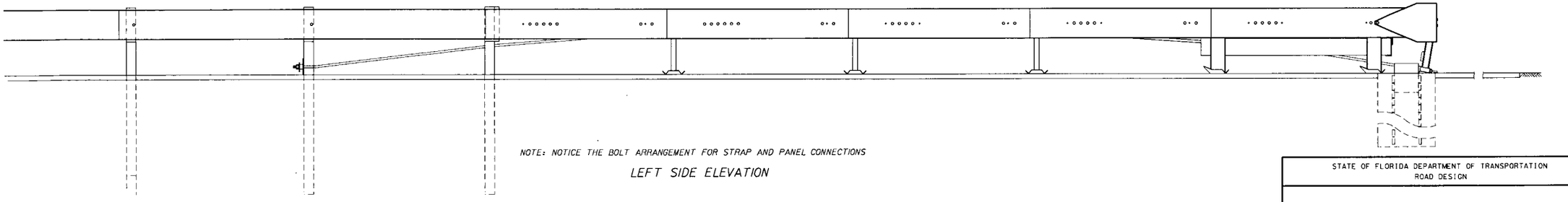

NOTE: NOTICE THE BOLT ARRANGEMENT FOR STRAP AND PANEL CONNECTIONS

LEFT SIDE ELEVATION

UNIDIRECTIONAL SYSTEM

STATE OF FLORIDA DEPARTMENT OF TRANSPORTATION
ROAD DESIGN

BRAKEMASTER

	Names	Dates
Designed By	MFG/JVG	7/91
Drawn By	HSD	7/91
Checked By	JVG	7/91
F.H.W.A. Approved:		

Approved By
State Roadway Design Engineer

Revision No.	Sheet No.	Index No.
92	3 of 4	433

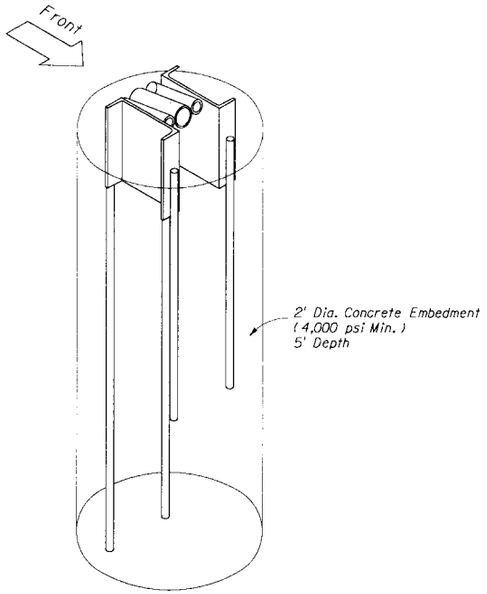

ISOMETRIC VIEW

ANCHOR ASSEMBLY, EMBEDDED BRS

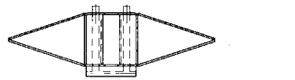

TOP VIEW

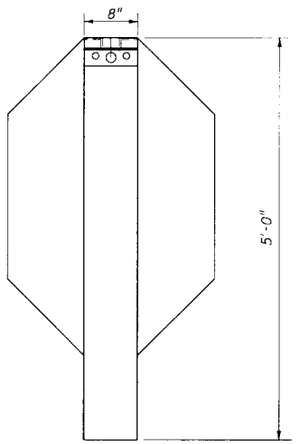

FRONT VIEW

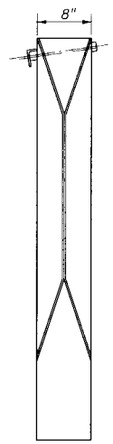

SIDE VIEW

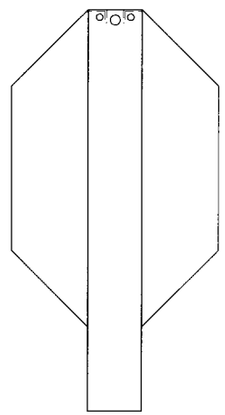

BACK VIEW

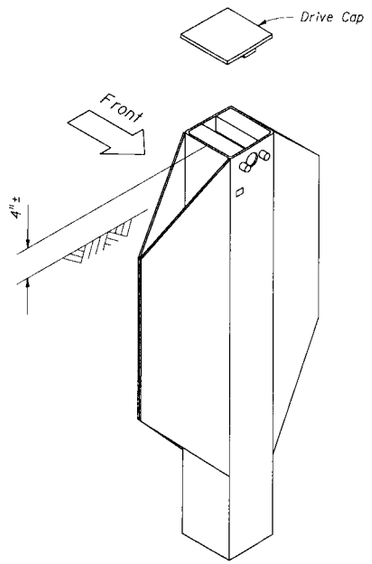

ISOMETRIC VIEW

Note: This assembly is driven into 8" dia. 5' deep pilot hole by drive cap furnished.

ANCHOR ASSEMBLY, DPA BRS

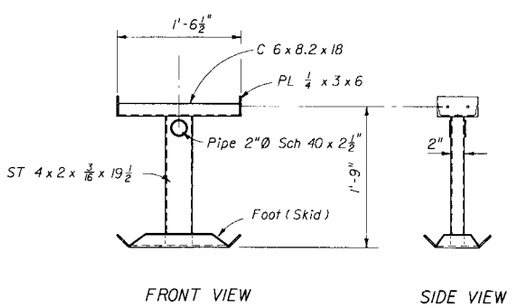

FRONT VIEW SIDE VIEW

DIAPHRAGM, BRS

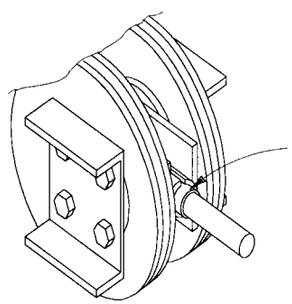

BRAKE/CABLE REPLACEMENT

STATE OF FLORIDA DEPARTMENT OF TRANSPORTATION
ROAD DESIGN

BRAKEMASTER

	Names	Dates
Designed By	MFG/JVG	7/91
Drawn By	HSD	7/91
Checked By	JVG	7/91

Approved By: _____
State Roadway Design Engineer

F.H.W.A. Approved:

Revision No.	Sheet No.	Index No.
92	4 of 4	433

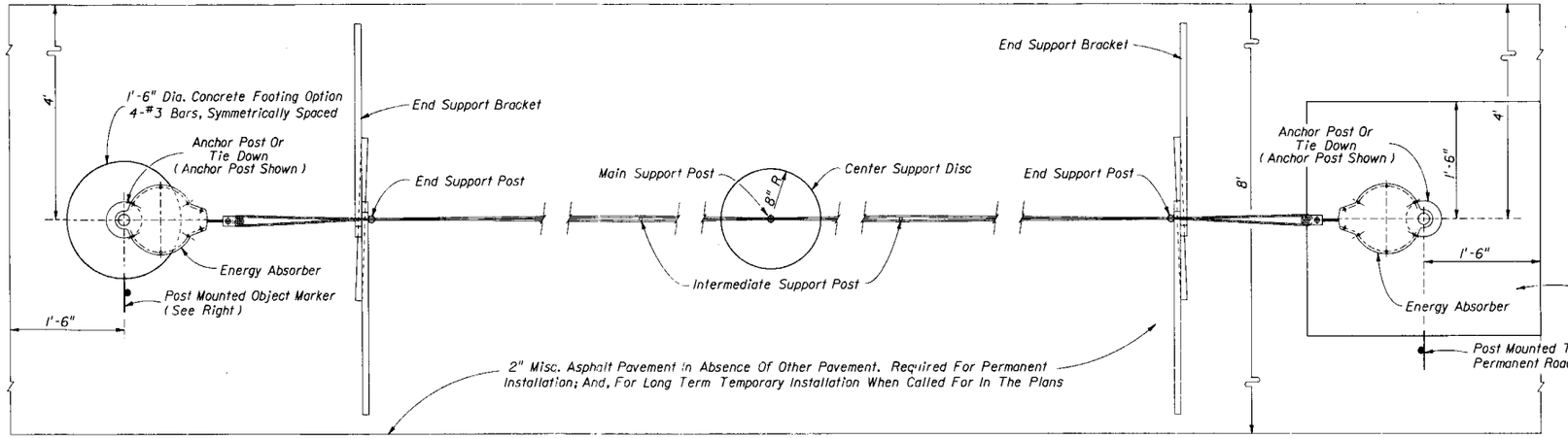

PLAN

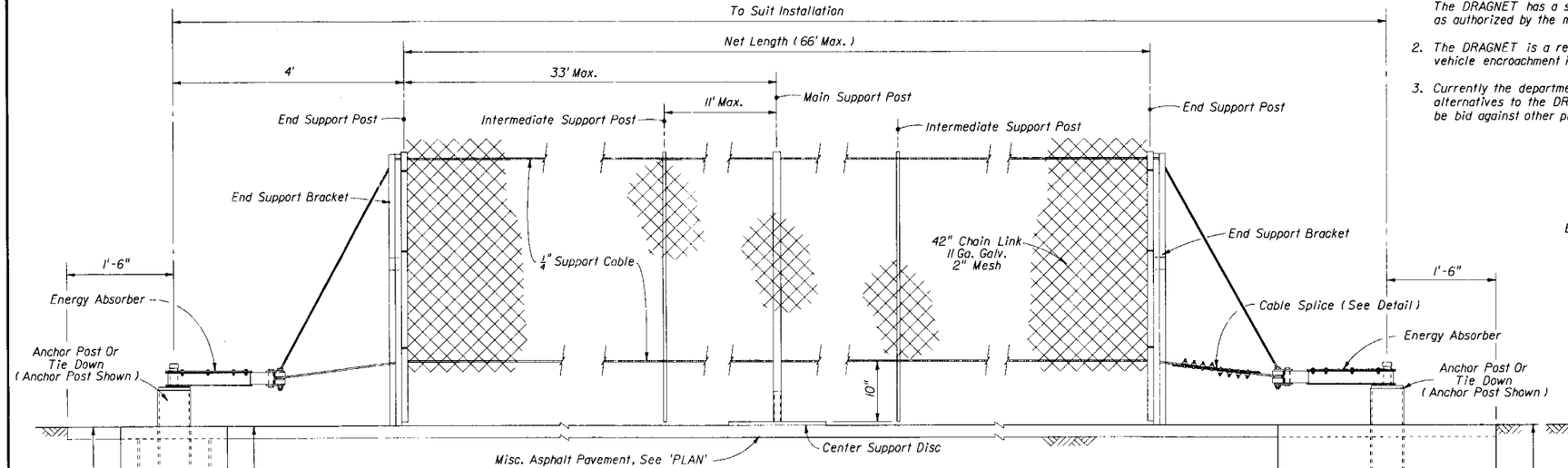

ELEVATION

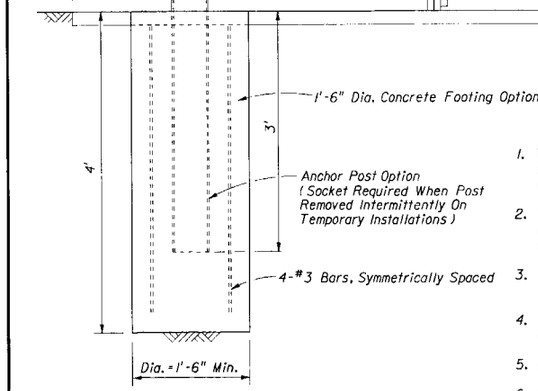

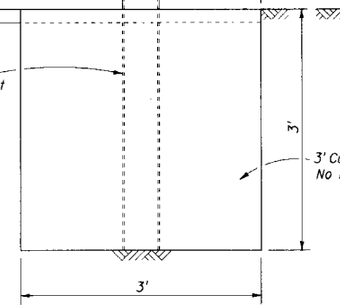

GENERAL NOTES

1. The vehicle arresting barrier represented on this standard is a proprietary product of Highway Safety Systems, Inc. and marketed under the trade name DRAGNET. Any infringement on the rights of the designer shall be the sole responsibility of the user.
2. This standard drawing is produced by the Florida Department Of Transportation solely for use by the Department and its assignees. This standard drawing provides the general graphics and information necessary to field identify componet parts of the DRAGNET system and their incorporation into a whole system.
3. This standard drawing is sufficent for plan details for the DRAGNET installed as a free standing system and precludes the requirement for shop drawing submittals unless the plans otherwise call for such submittals.
4. The DRAGNET shall be assembled and installed in accordance with the manufacturers detailed drawings, procedures and specifications.
5. Concrete footings shall be constructed with Class I concrete.
6. The cost of the DRAGNET shall include furnishing and installing all componets and materials necessary for a complete installation and will be paid for under the contract unit price for Impact Attenuator Vehicular (DRAGNET), Each.

DESIGN NOTES AND GUIDELINES

1. The DRAGNET is designed to safely stop automobiles when impacted at speeds of 60 mph or less. The DRAGNET has a singular design and any adjustment to its design will not be permitted except as authorized by the manufacturer.
2. The DRAGNET is a restorable system that is particularly suited to the prevention of head-on vehicle encroachment into hazardous areas.
3. Currently the department does not recognize other proprietary items as being equally suitable alternatives to the DRAGNET and until such alternatives are available, the DRAGNET need not be bid against other proprietary items.

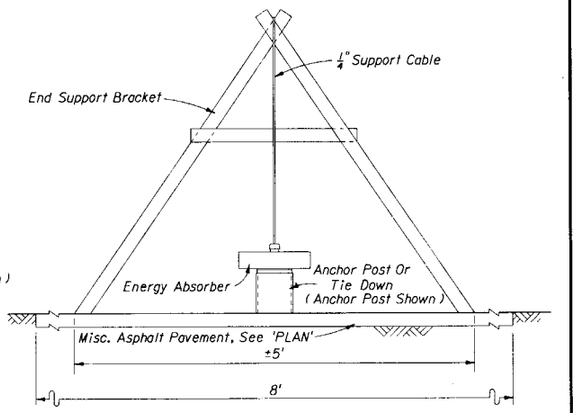

END VIEW

STATE OF FLORIDA DEPARTMENT OF TRANSPORTATION
ROAD DESIGN

DRAGNET

	Names	Dates
Designed By	MFG/HKH	10/91
Drawn By	HKH	10/91
Checked By	JVG	10/91
F.H.W.A. Approved:		

Approved By
State Roadway Design Engineer

Revision No.	Sheet No.	Index No.
92	1 of 2	438

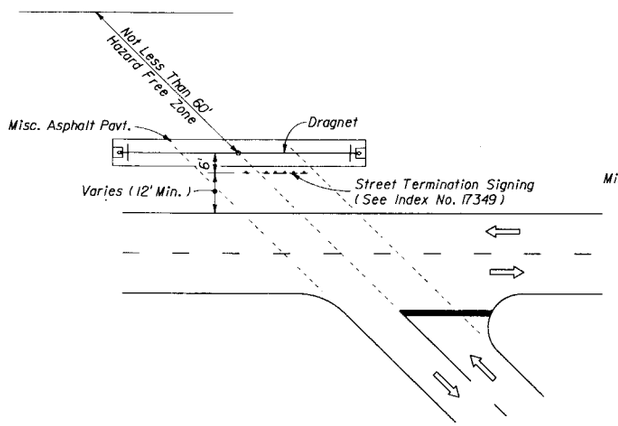

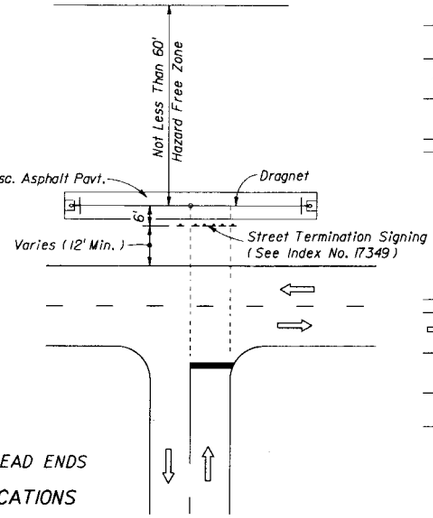

'T' INTERSECTIONS OR DEAD ENDS

PERMANENT APPLICATIONS

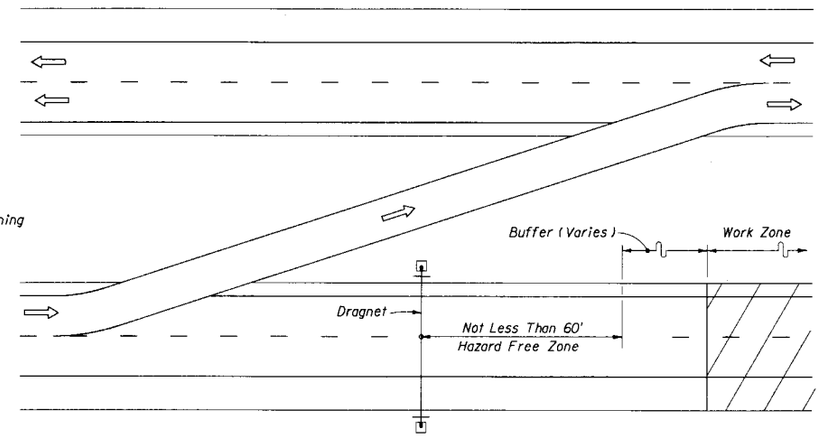

TEMPORARY ROADWAY CLOSURES

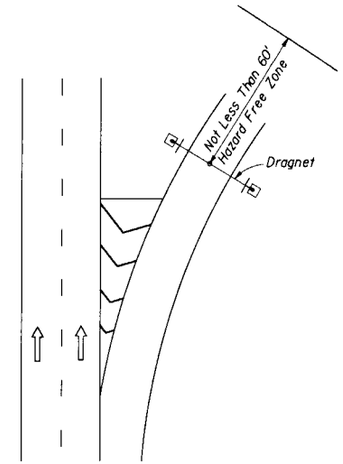

TEMPORARY RAMP CLOSURES

See Index No. 600 For Traffic Control Through Work Zones

TEMPORARY APPLICATIONS

TYPICAL APPLICATIONS

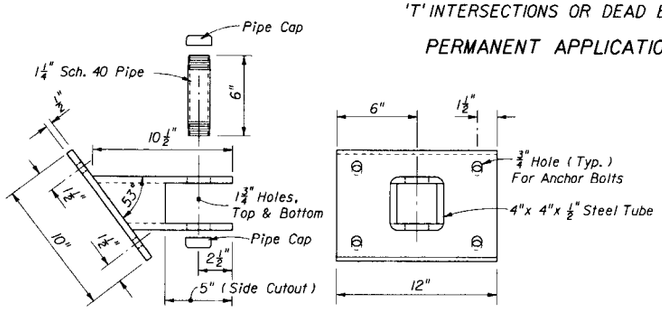

SIDE VIEW FRONT VIEW

For Use On Concrete Barrier Installation

TIE DOWN

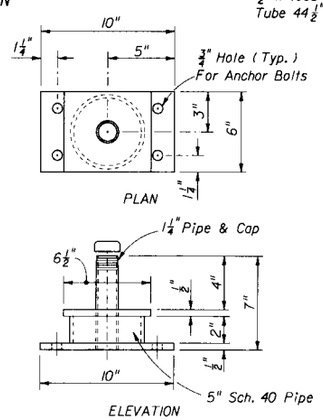

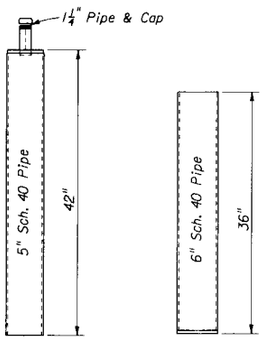

ANCHOR POST ASSEMBLY

For Use Where Anchor Post Is To Be Removed.

ANCHOR POST SOCKET

For Use Inside Clear Zone. Can Be Used With Either Concrete Footing Option Or On Existing Concrete Slab.

TIE DOWN

Note: Tie down anchor bolts shall be ½" dia. adhesive anchors with 4½" min. embedment, installed to manufacturers specifications; 4 required per tie down.

ANCHOR DETAILS

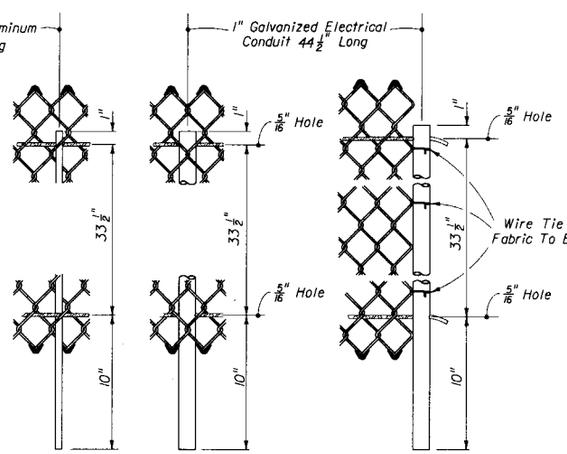

INTERMEDIATE SUPPORT POST

MAIN SUPPORT POST

END SUPPORT POST

SUPPORT POST DETAILS

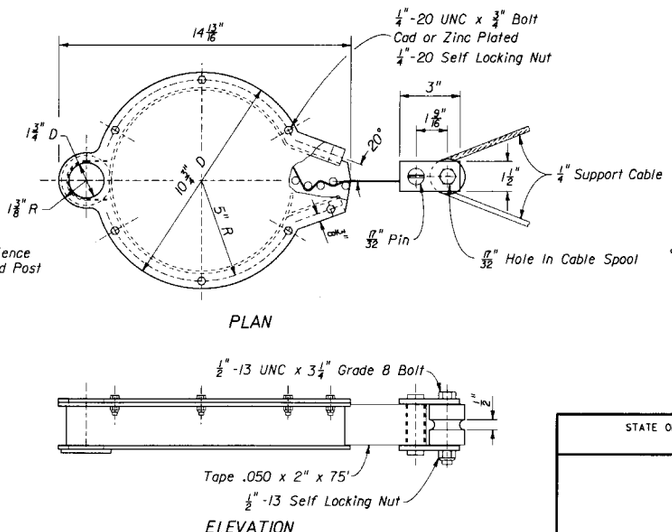

PLAN

ELEVATION

ENERGY ABSORBER ASSEMBLY

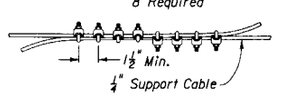

CABLE SPLICE DETAIL

STATE OF FLORIDA DEPARTMENT OF TRANSPORTATION
ROAD DESIGN

DRAGNET

	Names	Dates
Designed By	MFG/HKH	10/91
Drawn By	HKH	10/91
Checked By	JVG	10/91
F.H.W.A. Approved:		

Approved By
State Roadway Design Engineer

Revision No.	Sheet No.	Index No.
92	2 of 2	438

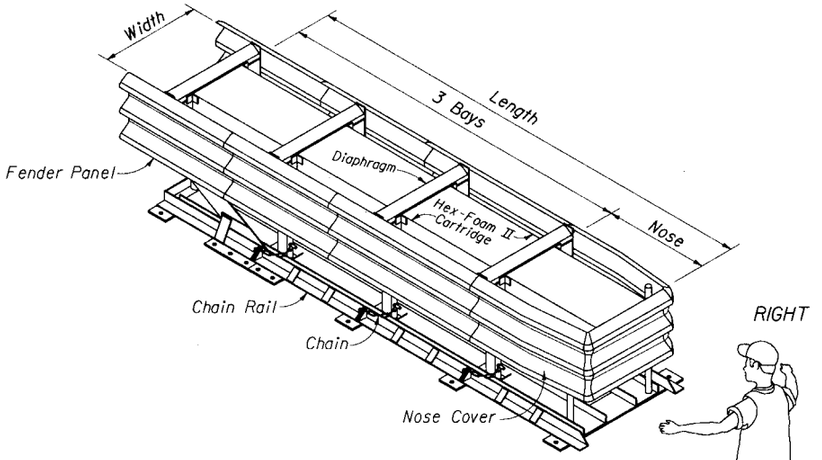

(45 mph Or Less)

3 BAY UNIT

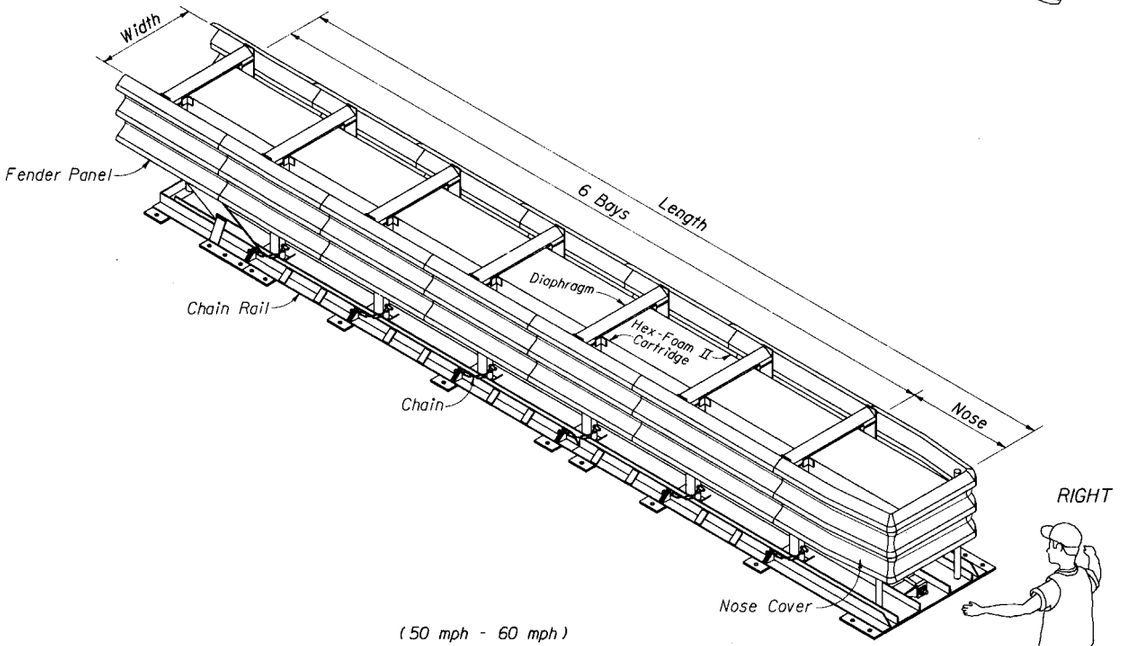

(50 mph - 60 mph)

6 BAY UNIT

GENERAL NOTES

1. The energy absorbing system represented on this standard drawing is a proprietary design by Energy Absorption Systems, Inc. and marketed under the trade name G-R-E-A-T_{CZ} , short for Construction Zone Guard Rail Energy Absorbing Terminal. Any infringement on the rights of the designer shall be the sole responsibility of the user.

2. This standard drawing is produced by the Florida Department Of Transportation solely for use by the Department and its assignees. This standard drawing provides the general graphics and information necessary to field identify component parts of the G-R-E-A-T_{CZ} System (G-R-E-A-T_{CZ}) and their incorporation into a whole system.

3. This standard drawing is sufficient for plan details for the G-R-E-A-T_{CZ} installed as a free standing system or installed in connection with concrete barrier walls and other fixed barrier systems, and precludes the requirement for shop drawing submittals unless the plans otherwise call for such submittals.

4. The G-R-E-A-T_{CZ} shall be assembled and installed in accordance with the manufacturers detailed drawings, procedures and specifications.

5. The standard widths for the 3-bay and 6-bay G-R-E-A-T_{CZ} are 2'-0" and 2'-6".

6. Connection between the G-R-E-A-T_{CZ} and guardrail shall be as shown in the 'Transition Assembly Features' on Index No. 431.

   For concrete barrier wall with unidirectional traffic there is no connection between the G-R-E-A-T_{CZ} and the wall. The G-R-E-A-T_{CZ} should abut the end of the wall, but a space not to exceed 11" is allowed. For concrete barrier wall with bidirectional traffic, the transitional panel shown on the "Tension Strut Backup Assembly 'Insert'" details shall be the only connection between the G-R-E-A-T_{CZ} and the wall.

   Variation from the connections described above shall be as detailed in the plans or as prescribed by the manufacturer.

7. Only the G-R-E-A-T_{CZ} Hex-Foam II cartridges shall be used in all bays and the nose section.

8. The G-R-E-A-T_{CZ} shall be constructed on cross slopes 12.5:1 or flatter.

9. All metallic components shall meet the galvanizing requirements for guardrail, Index No. 400.

10. Both chemical bolt anchors (MP-3 anchors) and anchor pins are supplied with each G-R-E-A-T_{CZ} unit purchase. For units that are relocated and require reset anchorage, the user shall reinstall the unit with manufacturer supplied new MP-3 anchors or anchor pins, or, with other anchors as approved by the G-R-E-A-T_{CZ} manufacturer.

11. G-R-E-A-T_{CZ} units that have been impacted by vehicles but are to be repaired and remain in service shall have design condition anchorages when restorations are complete. Units with disturbed anchors can be repositioned over undisturbed foundation and reset, or, reset in place with the disturbed portions of their foundations restored to design condition. All disturbed MP-3 anchors are to be replaced; any disturbed anchor pin that remains undamaged can be reused.

12. The G-R-E-A-T_{CZ} manufacturer's 'Driveable Pile Anchor System' (DPA system) is not a part of this standard. Any use of the DPA System will require shop drawing approval.

13. The cost for foundations, subgrade preparation and miscellaneous asphalt shown on this index shall be included in the cost for the G-R-E-A-T_{CZ} system. The G-R-E-A-T_{CZ} System will be paid for under the contract unit price for Impact Attenuator (GREAT) (TEMP), Each.

DESIGN NOTES AND GUIDELINES

1. The G-R-E-A-T_{CZ} System (G-R-E-A-T_{CZ}) is designed to cushion automobile end-on hits and to redirect automobiles from side hits. The G-R-E-A-T_{CZ} is designed to shield narrow fixed hazards or the ends of other fixed barrier systems. The 6 Bay Unit shall be used for work zone speeds of 50 mph and above, up to and including 60 mph. The 3 Bay Unit can be used for work zone speeds of 45 mph or less.

2. The G-R-E-A-T_{CZ} is a restorable system that is particularly suited to shielding hazards subject to high speed traffic, high volume traffic, and/or traffic with a history of frequent errant vehicle departures from the roadway or the potential exists for such departures. The G-R-E-A-T_{CZ} alone is not suited to shielding a wide hazard. The G-R-E-A-T_{CZ} is particularly suited to shielding hazards where the approach space is limited; and, is particularly suited to conditions where the terminal must be located close to the traffic lane.

3. Currently the Department does not recognize other proprietary items as being equally suitable alternatives to the G-R-E-A-T_{CZ}, and until such alternatives are available, the G-R-E-A-T_{CZ} need not be bid against other proprietory items.

STATE OF FLORIDA DEPARTMENT OF TRANSPORTATION
ROAD DESIGN

CONSTRUCTION ZONE G-R-E-A-T

	Names	Dates
Designed By	MFG/JVG	10/91
Drawn By	JBW	10/91
Checked By	JVG/RER	10/91
F.H.W.A. Approved:		

Approved By _____
State Roadway Design Engineer

Revision No.	Sheet No.	Index No.
92	1 of 4	439

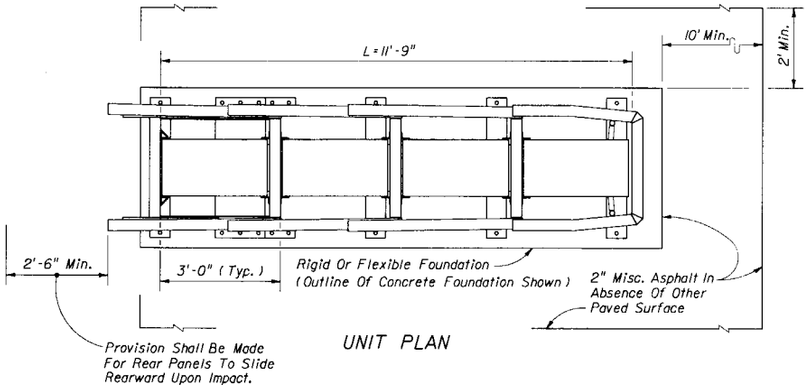

UNIT PLAN

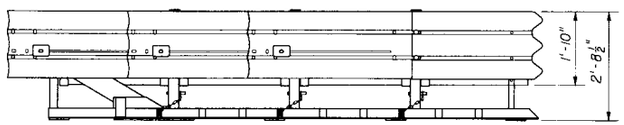

UNIT ELEVATION

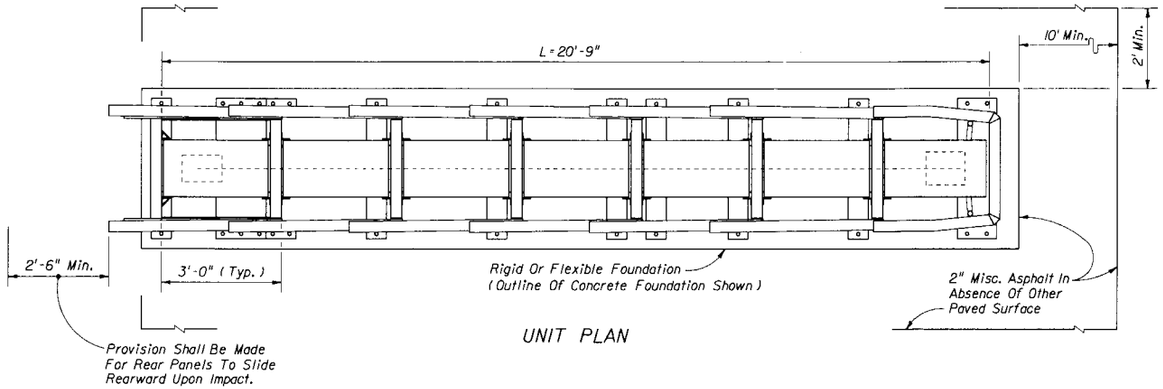

UNIT PLAN

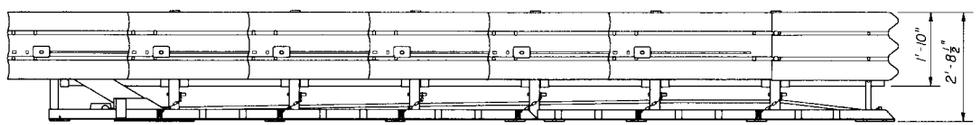

UNIT ELEVATION

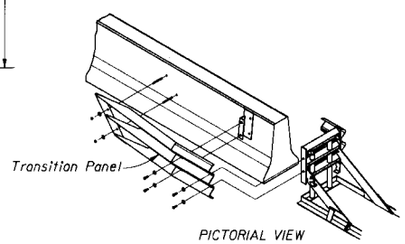

PICTORIAL VIEW

INSET

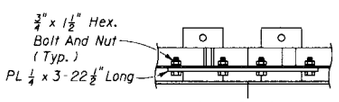

Chain Rail Splice

DETAIL A

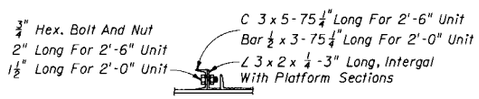

Channel Splice

DETAIL B

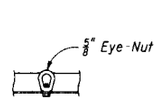

Lifting Lug

DETAIL C

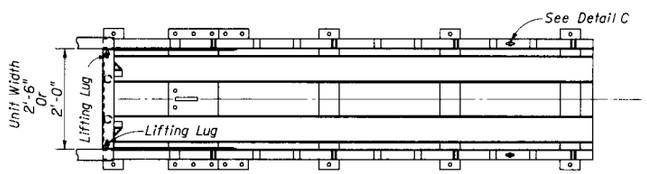

STRUT AND RAIL PLAN

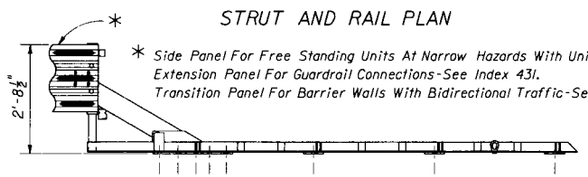

* Side Panel For Free Standing Units At Narrow Hazards With Unidirectional Traffic.
Extension Panel For Guardrail Connections-See Index 431.
Transition Panel For Barrier Walls With Bidirectional Traffic-See INSET.

STRUT AND RAIL ELEVATION

3 BAY UNIT

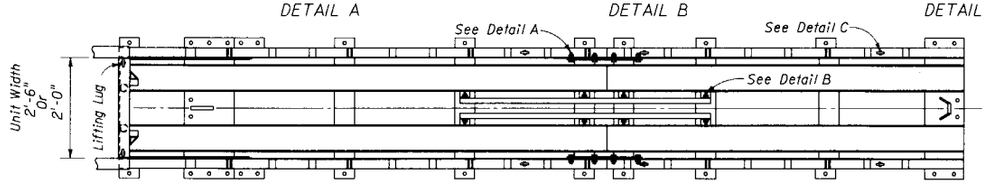

STRUT AND RAIL PLAN

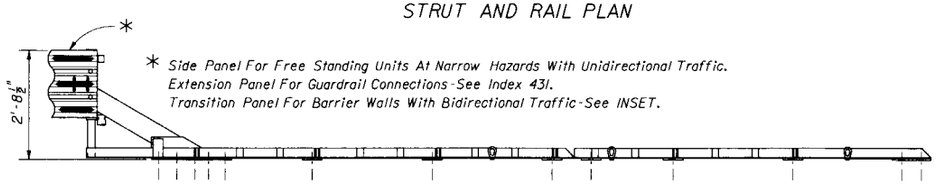

* Side Panel For Free Standing Units At Narrow Hazards With Unidirectional Traffic.
Extension Panel For Guardrail Connections-See Index 431.
Transition Panel For Barrier Walls With Bidirectional Traffic-See INSET.

STRUT AND RAIL ELEVATION

6 BAY UNIT

TENSION STRUT BACKUP ASSEMBLY

STATE OF FLORIDA DEPARTMENT OF TRANSPORTATION
ROAD DESIGN

CONSTRUCTION ZONE
G-R-E-A-T

	Names	Dates
Designed By	MFG/JVG	11/91
Drawn By	JBW	11/91
Checked By	JVG/RER	11/91
F.H.W.A. Approved:		

Approved By
State Roadway Design Engineer

Revision No.	Sheet No.	Index No.
92	2 of 4	439

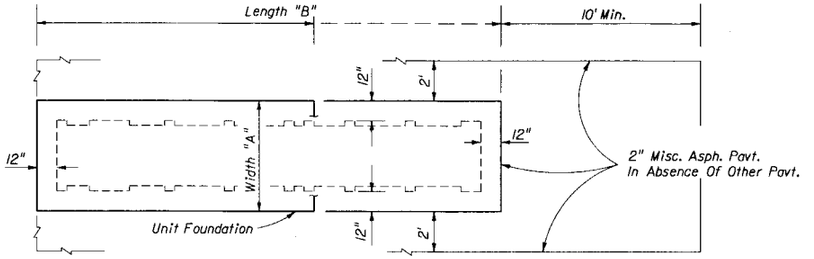

PLAN

FOUNDATION DIMENSIONS			
UNIT		Width "A"	Length "B"
Bays	Width		
3	2'-0"	5'-0"	14'-2¼"
	2'-6"	5'-6"	14'-2¼"
6	2'-0"	5'-0"	23'-2¼"
	2'-6"	5'-6"	23'-2¼"

FOUNDATION PAD & MISCELLANEOUS ASPHALT PAVEMENT

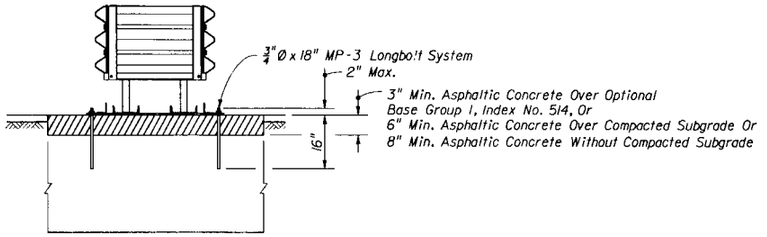

SECTION CC

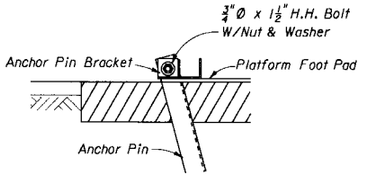

DETAIL A

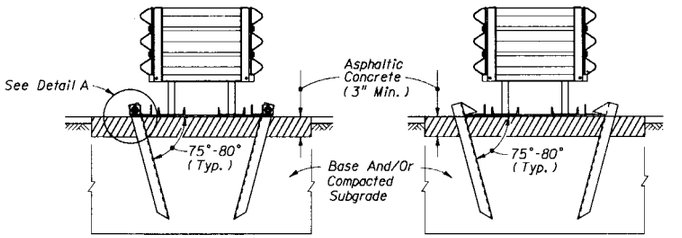

SECTION AA

SECTION BB

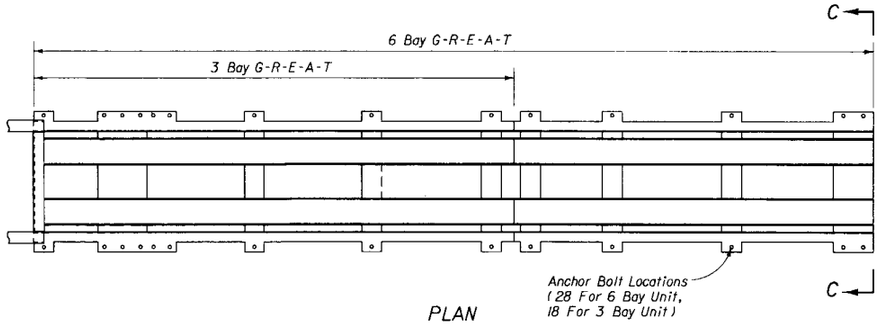

PLAN

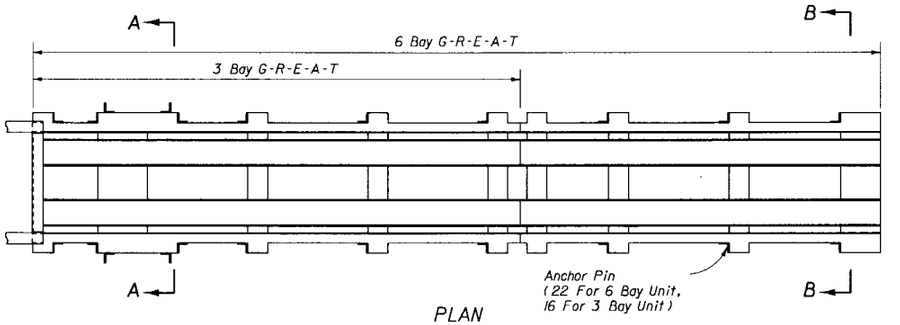

PLAN

MP-3 LONGBOLT ANCHOR SYSTEM

ANCHOR PIN SYSTEM

FLEXIBLE FOUNDATIONS

STATE OF FLORIDA DEPARTMENT OF TRANSPORTATION
ROAD DESIGN

CONSTRUCTION ZONE G-R-E-A-T

	Names	Dates
Designed By	MFG/JVG	11/91
Drawn By	JBW	11/91
Checked By	JVG/RER	11/91

F.H.W.A. Approved:

Approved By: State Roadway Design Engineer

Revision No.	Sheet No.	Index No.
92	3 of 4	439

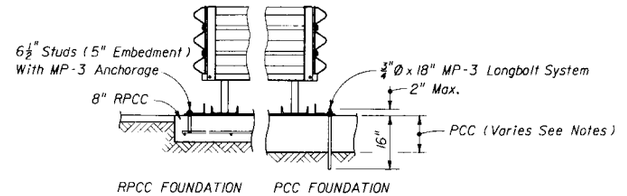

SECTIONS CC (HALF SECTIONS)

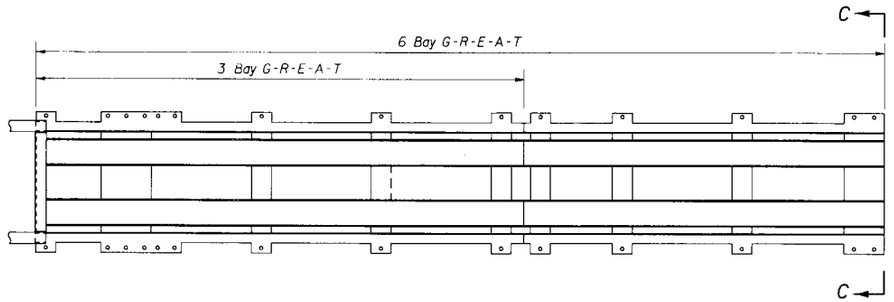

PLAN

MP-3 ANCHOR SYSTEM

RIGID FOUNDATION NOTES

1. The reinforced portland cement concrete (RPCC) foundation is designed to make the G-R-E-A-T_{CZ} a transportable system. The slab foundation shall be constructed with 4000 psi min. compressive strength concrete. The slab shall be seated so the top of the slab is flush with the surface intended for approaching vehicles. The surrounding surface shall be paved as shown in this index on the 'Unit Plan' for the 'Tension Strut Backup Assembly'. The G-R-E-A-T_{CZ} shall be anchored exclusively with the 6½" MP-3 anchor system supplied with the G-R-E-A-T_{CZ} unit, unless another anchor is supplied or approved by the G-R-E-A-T_{CZ} manufacturer.

2. The nonreinforced portland cement concrete (PCC) foundation shall be Class I concrete, having plan dimensions equal to or greater than those for the RPCC foundation . The PCC foundation utilization options are as follows: (a) Poured in place as an expendable slab, having a thickness of not less than 6"; disposal of the slab will be as approved by the Engineer, (b) Project constructed roadway PCC pavement, or, (c) Existing 9" PCC roadway pavement.

   The utilization option applied shall be as approved by the Engineer on a site specific basis. The top of the PCC foundation shall be flush with the surface intended for approaching vehicles. In absence of surrounding pavement the surrounding surface shall be paved as shown in this index on the 'Unit Plan' for the 'Tension Strut Backup Assembly'.

   The G-R-E-A-T_{CZ} installed on PCC pavement shall be anchored only with the MP-3 Longbolt system supplied with the G-R-E-A-T_{CZ} unit. Holes for the 18" anchors shall be drilled through both existing and new pavements. When the G-R-E-A-T_{CZ} is removed from the project pavement or from existing pavement that is to remain in place, the longbolt anchor shall be cut off flush with the top of the pavement, unless the plans call for other treatment.

3. For additional information see the General Notes.

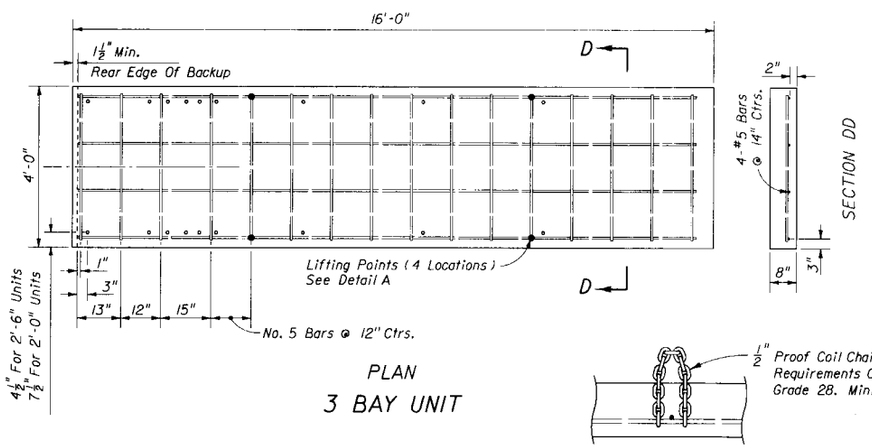

PLAN

3 BAY UNIT

DETAIL A

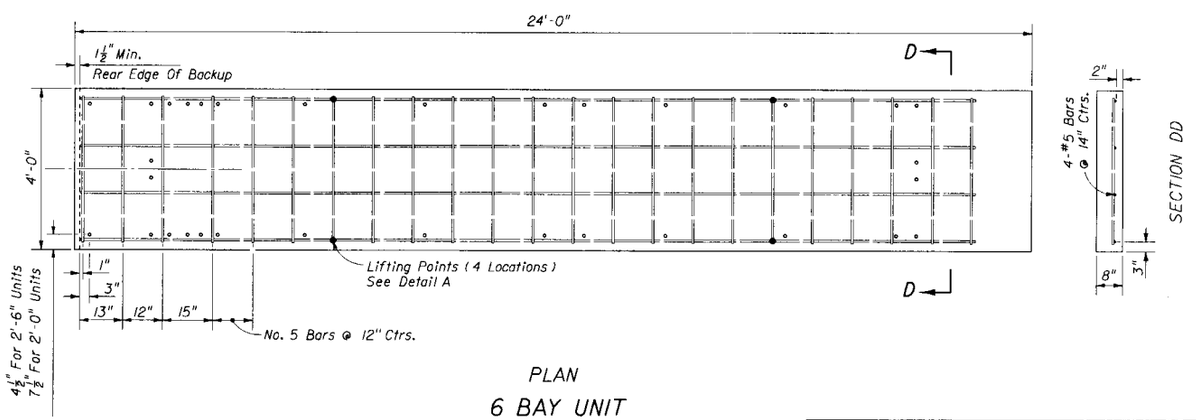

PLAN

6 BAY UNIT

REINFORCED CONCRETE PAD SYSTEM (RPCC)

RIGID FOUNDATIONS

STATE OF FLORIDA DEPARTMENT OF TRANSPORTATION
ROAD DESIGN

CONSTRUCTION ZONE G-R-E-A-T

	Names	Dates
Designed By	MFG/JMG	11/91
Drawn By	JBW	11/91
Checked By	JMG/RER	11/91
F.H.W.A. Approved:		

Approved By
State Roadway Design Engineer

Revision No.	Sheet No.	Index No.
92	4 of 4	439

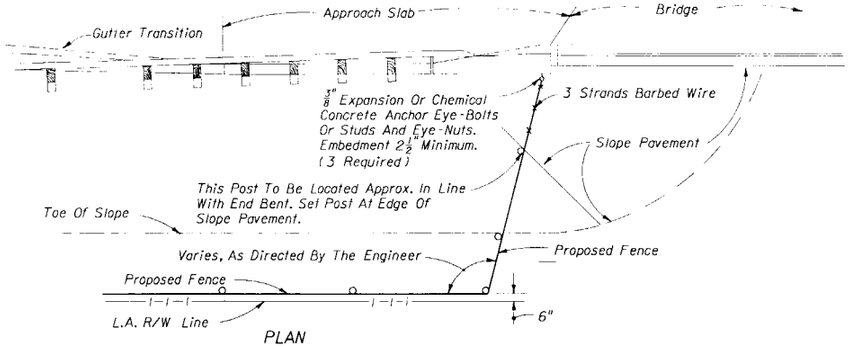

FENCING TERMINALS AT BRIDGE ENDS
(ROADWAY)

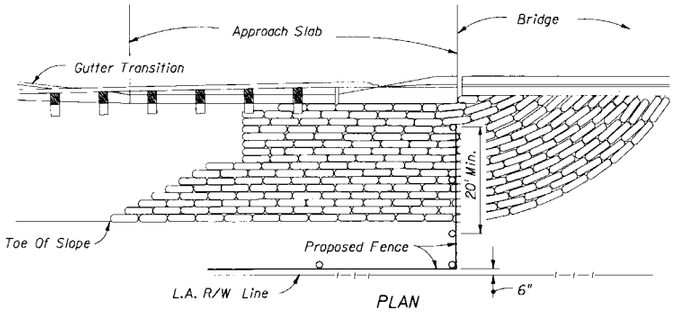

FENCING TERMINALS AT BRIDGE ENDS
(STREAM CROSSING)

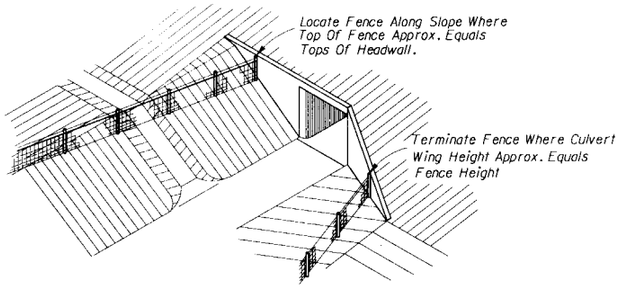

PICTORIAL VIEW

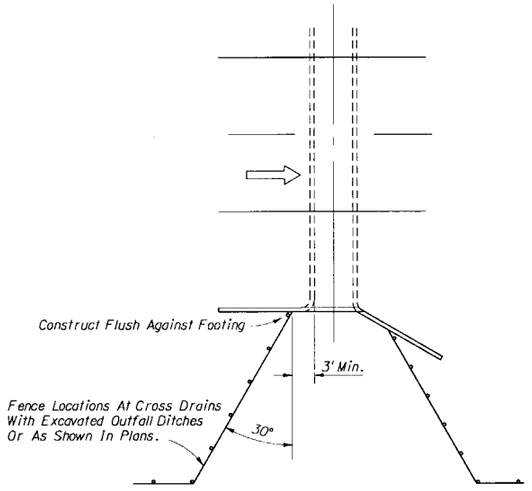

(For Heights Of Headwall Greater Than 4')
FENCING TERMINALS AT BOX CULVERTS

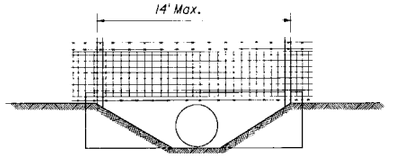

FENCING DETAIL AT CULVERT
(For Heights Of Headwalls 4' Or Less.)

Note: When height of headwall is 4' or less (drainage pipe 36" or less) the fence shall not be tied to the headwall, but shall span the lateral ditch.

STATE OF FLORIDA DEPARTMENT OF TRANSPORTATION
ROAD DESIGN

FENCE LOCATION

	Names	Dates
Designed By	HFW	02/65
Drawn By	HFW	02/65
Checked By	RLO	02/65

Approved By _____
State Roadway Design Engineer

Revision No.	Sheet No.	Index No.
92	1 of 2	450

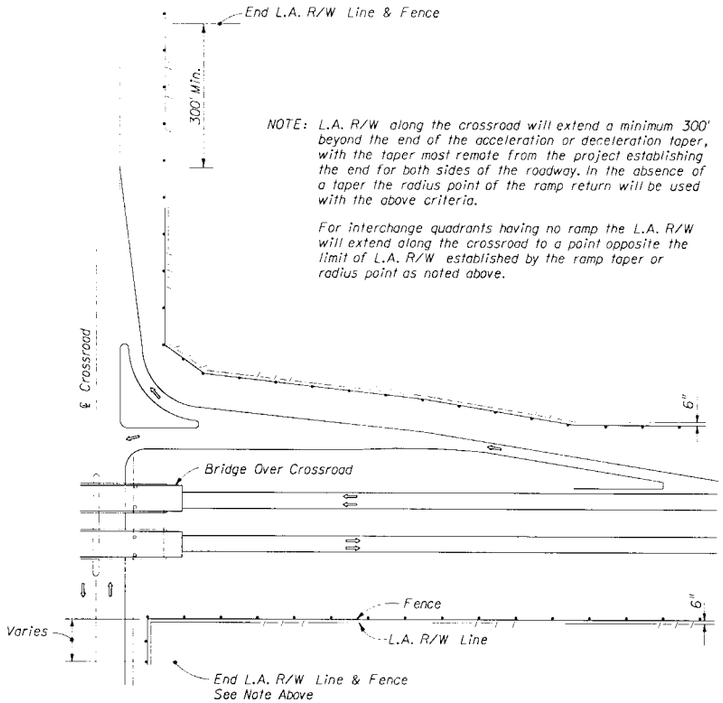

APPLIES TO BRIDGE OVER CROSSROAD AND CROSSROAD OVER FREEWAY (BRIDGE OVER CROSSROAD SHOWN)

FENCING TERMINALS AT RURAL INTERCHANGES

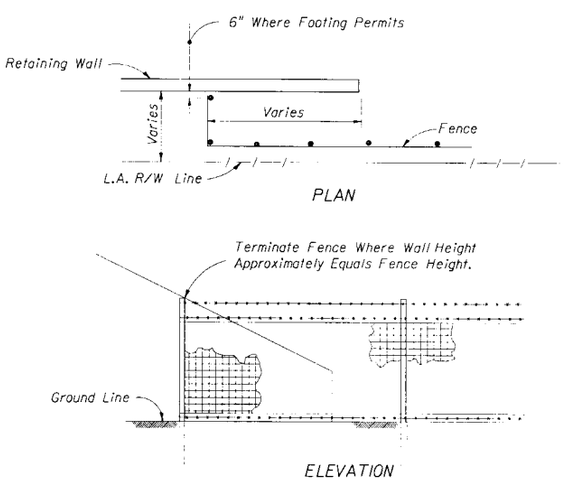

FENCING TERMINALS AT RETAINING WALLS

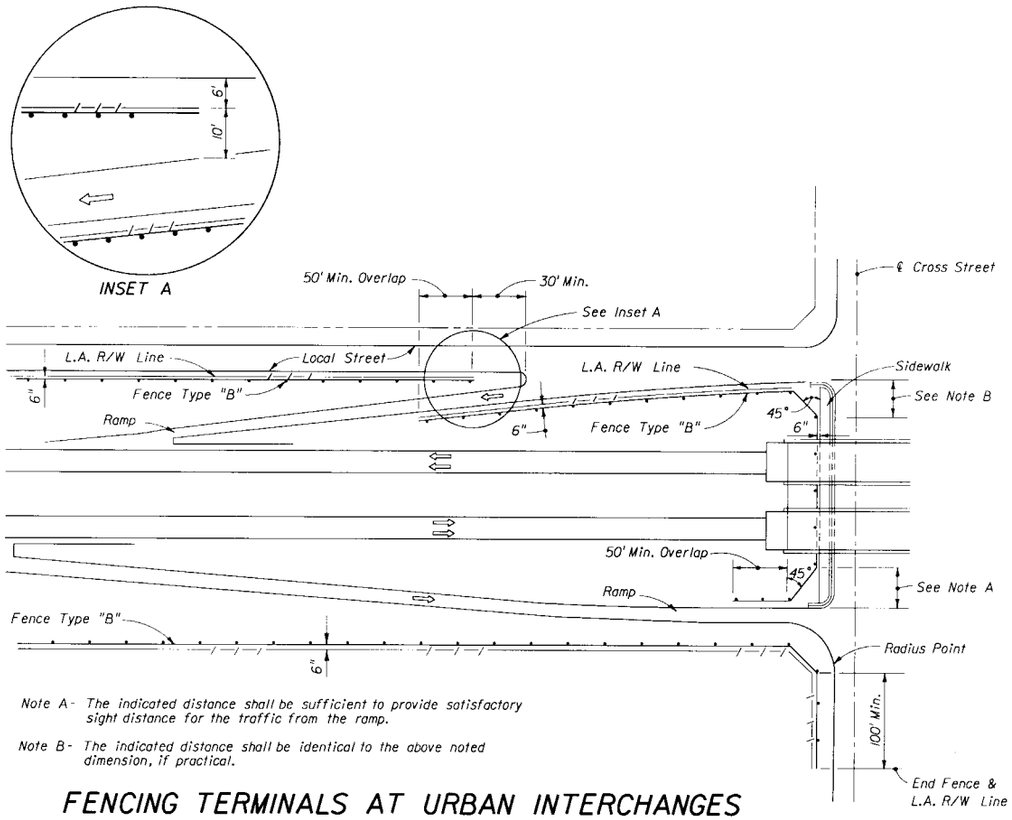

Note A - The indicated distance shall be sufficient to provide satisfactory sight distance for the traffic from the ramp.

Note B - The indicated distance shall be identical to the above noted dimension, if practical.

FENCING TERMINALS AT URBAN INTERCHANGES

STATE OF FLORIDA DEPARTMENT OF TRANSPORTATION
ROAD DESIGN

FENCE LOCATION

	Names	Dates
Designed By	HFW	02/65
Drawn By	HFW	02/65
Checked By	RLO	02/65
F.H.W.A. Approved:		06/18/74

Approved By _____
State Roadway Design Engineer

Revision No.	Sheet No.	Index No.
92	2 of 2	450

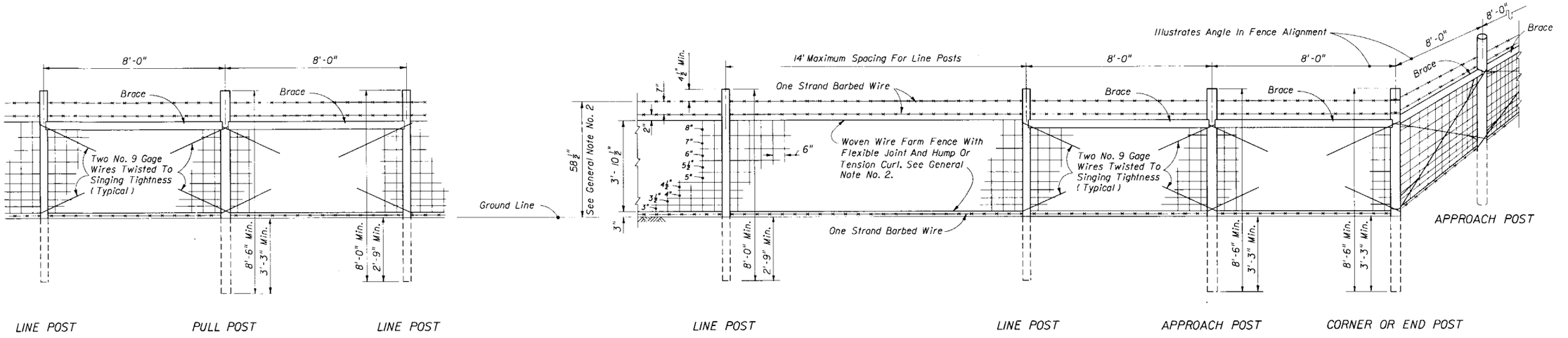

TIMBER POSTS ILLUSTRATED

GENERAL NOTES

1. This fence to be provided generally in rural areas. For supplemental information see Section 550 of the FDOT Specifications.
2. Fabric shall be woven wire, either galvanized steel, meeting the requirements of ASTM A116, No. 9 Farm, Design Number 1047-6-9, with Class 3 zinc coating, or aluminum coated steel, meeting the requirements of ASTM A584, No. 9 Farm, Design Number 1047-6-9, with a minimum coating weight of 0.40 ounces per square foot. For additional information see payment note below.
3. Fence shall be installed with wire side to private property except on horizontal curves greater than 3° the fence shall be installed so as to pull against all posts.
4. Posts and braces may be either steel, timber or concrete. Unless a specific post material is called for in the plans, the Contractor may elect to use either a single material or a combination of steel, timber or concrete materials. Line posts of one material may be used with corner, pull and end post assemblies of a different material. Line posts of only one optional material and pull post assemblies of only one optional material will be permitted between corner and end post assemblies. Within individual corner and end post assemblies only one optional material will be permitted.
5. Timber line posts are to be minimum 4" diameter. Timber corner, pull, approach and end posts are to be minimum 5" diameter. Timber braces are to be minimum 4" diameter.
   (A) Staples for line posts to be 1¼" minimum length; for approach, corner and pull posts 1½" minimum length. At approach, corner and pull posts, staple every line wire. At line posts, staple every line wire in top half and alternate line wires in bottom half. Staples shall be driven diagonally across the line wire with the points in separate grains.
   (B) Connections between timber posts and braces to be provided by dowels as shown in fastener details.
   (C) Wire to be wrapped and tied, as shown in the splice details, at the following locations:
      (a) All end posts (b) Corner post, including the assemblies at veritcal breaks of 15° or more
      (c) Pull posts where the wire is not spliced and pulled through the assembly; see General Note 16.
   (D) For supplemental information see Section 954 of the Specifications.
6. Steel posts and braces shall be standard steel posts, galvanized at the rate of 2 oz. per sq. ft., together with necessary hardware and wire clamps and meeting the following requirements:
   (A) Line posts: 8' long; 1.33 lbs. per lin. ft.; studded; anchor plate attached; with necessary clamps, etc.
   (B) Approach posts: 2½" x 2½" x ¼" angles, 8' long; fabricated for attaching brace; with necessary hardware, clamps, etc.
   (C) Pull, end and corner posts: 2½" x 2½" x ¼" angles, 8' long; fabricated for attaching brace; with necessary hardware, clamps, etc.
   (D) Braces: 2" x 2" x ¼" angles with necessary hardware and fabricated for attaching to post.
   (E) The pull, corner, approach and end posts are to be set in concrete as per detail. (Also see Note No. 13)
   (F) For supplemental information see Section 966 of the Specifications.
7. The Contractor, at his option, may use any suitable precast or prestressed concrete posts; however, approval by the Engineer, of posts not shown on this index, will be required prior to construction of the fence. Precast posts shall be Class I concrete. Prestressed posts shall be Class III concrete. Lengths of concrete posts to be as indicated for timber posts.
8. Aluminum post, braces and accessory framing hardware shall not be used unless the plans specifically detail their application or the Engineer specifically approves their incorporation in fence construction or repair. Aluminum framed gates are permitted as described in General Note 17.
9. The woven wire shall be attached to steel and concrete posts by a minimum of five tie wires. The single wire ties shall be applied to the top, bottom and three intermittent line wires. The ends of each tie wire shall have a minimum of two tight turns around the line wire. Tie wires shall be steel wire not less than 0.120" diameter, zinc coating Class 3, soft temper, in accordance with ASTM A641.
10. The woven wire shall be stretched only until one-half the tension curl has been pulled out of the line wires.
11. Posts to be set by driving or digging. If by digging, the posts shall be set at the center of the hole and the soil tamped securely on all sides.
12. Longer posts than those indicated above may be required by the plans or for deeper installations.
13. Concrete bases for angular steel posts (pull, corner, end and approach) shall be Class I as specified in Section 345 except that the requirements of 345-5.1, 10 & 11 shall not apply. Materials for Class I concrete may be proportioned by volume and/or by weight.
14. Pull post assemblies shall be installed at approximately 330' centers except that this maximum interval may be reduced by the Engineer on curves where the degree of curvature is greater than 3 degrees.
15. Corner post assemblies are to be installed at all horizontal and vertical breaks in fence of 15° or more.
16. A maximum length of 1320' of wire may be installed as a unit. For pulls through a pull post assembly the fabric shall be spliced by crimping sleeves only. Pulls through a corner post assembly will not be permitted.
17. Unless otherwise called for in the plans gates shall be commercially available metal swing gates assembled and installed in accordance with the manufacturers specifications as approved by the Engineer. Chain link swing gates in accordance with Index No. 452 may be substituted for metal swing gates as approved by the Engineer. Gate size is full opening width whether single leaf or double leaves. Payment for gates shall include the gate, single or double, all necessary hardware for installation and any additional length and/or size for posts at the opening. Gates shall be paid for under the contract unit price for Fence Gates, Type A, each.
18. For construction and pay purposes assemblies are defined as follows: End post assemblies shall consist of: one end post, one approach post, two braces, four diagonal tension wires and all necessary fittings and hardware. Pull post assemblies shall consist of: one pull post, two braces, four diagonal tension wires and necessary fittings and hardware. Corner post assemblies shall consist of: one corner post, two approach posts, four braces, eight diagonal tension wires and all necessary fittings and hardware.
19. This index details fencing that is constructed with farm fabric 46 3/4" (47" nominal) in height and with specific ground clearance and specific barbed wire spacings, and, is to be paid for under the contract unit price for Fencing, Type A, LF. When the plans detail other combinations of materials or variation in dimensions, the fence shall be paid for under the contract unit price for Fencing, Type A, (x ') Height, LF. Fencing Type A, LF, shall be inclusive of the lengths of pull, end and corner post assemblies but exclusive of gate widths.

Assemblies shall be paid for as follows:
Corner Post Assemblies Each.
Pull and End Post Assemblies, Each.

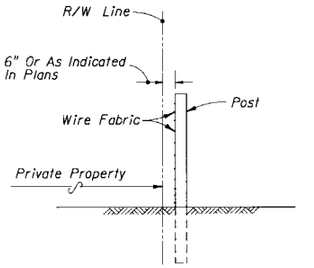

FENCE POSITION AT LOCATIONS WITHOUT FRONTAGE ROADS
(REFER TO DETAIL PLANS FOR FENCE POSITION AT LOCATIONS WITH FRONTAGE ROADS)

STATE OF FLORIDA DEPARTMENT OF TRANSPORTATION
ROAD DESIGN

FENCE TYPE A

	Names	Dates
Designed By		
Drawn By		
Checked By		
F.H.W.A. Approved:		09/03/76

Approved By: _____
State Roadway Design Engineer

Revision No.	Sheet No.	Index No.
92	1 of 2	451

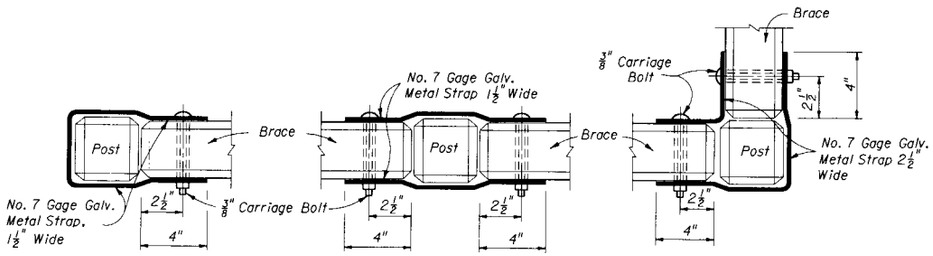

BRACE AND POST BRACE TO BRACE ON LINE BRACE TO BRACE AT CORNER

FASTENER FOR CONCRETE POST AND BRACES

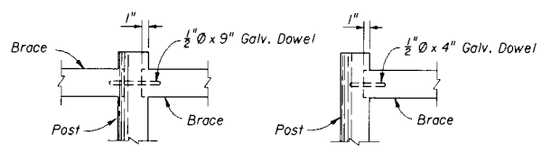

FASTENER FOR TIMBER POST AND BRACE

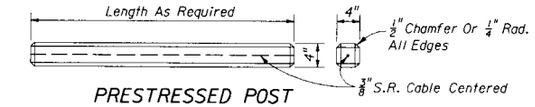

PRESTRESSED POST

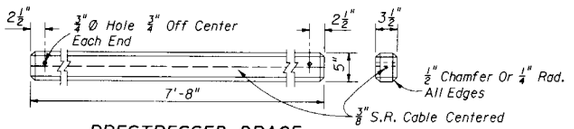

PRESTRESSED BRACE

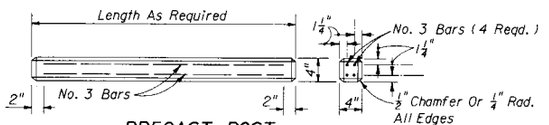

PRECAST POST

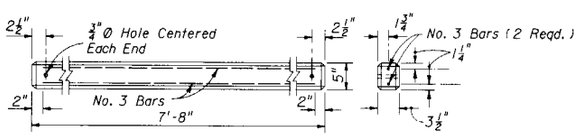

PRECAST BRACE

ALTERNATE CONCRETE POSTS AND BRACES

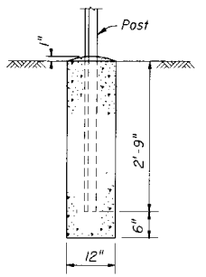

(Pull, Corner, End And Approach Posts)

CONCRETE BASE FOR ANGULAR STEEL POST

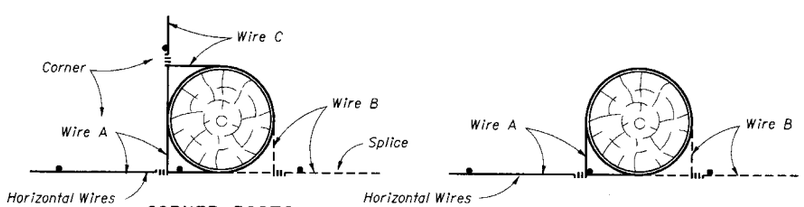

CORNER POSTS END AND PULL POSTS

Each horizontal wire to be wrapped around corner, end and pull posts and tied to same wire. See General Notes 5 and 15. Timber post illustrated. These methods also apply to steel and concrete post illustrations.

SPLICES

STATE OF FLORIDA DEPARTMENT OF TRANSPORTATION
ROAD DESIGN

FENCE TYPE A

	Names	Dates
Designed By		
Drawn By		
Checked By		
F.H.W.A. Approved:		

Approved By: Bennett K. Mayfield
State Roadway Design Engineer

Revision No.	Sheet No.	Index No.
90	2 of 2	451

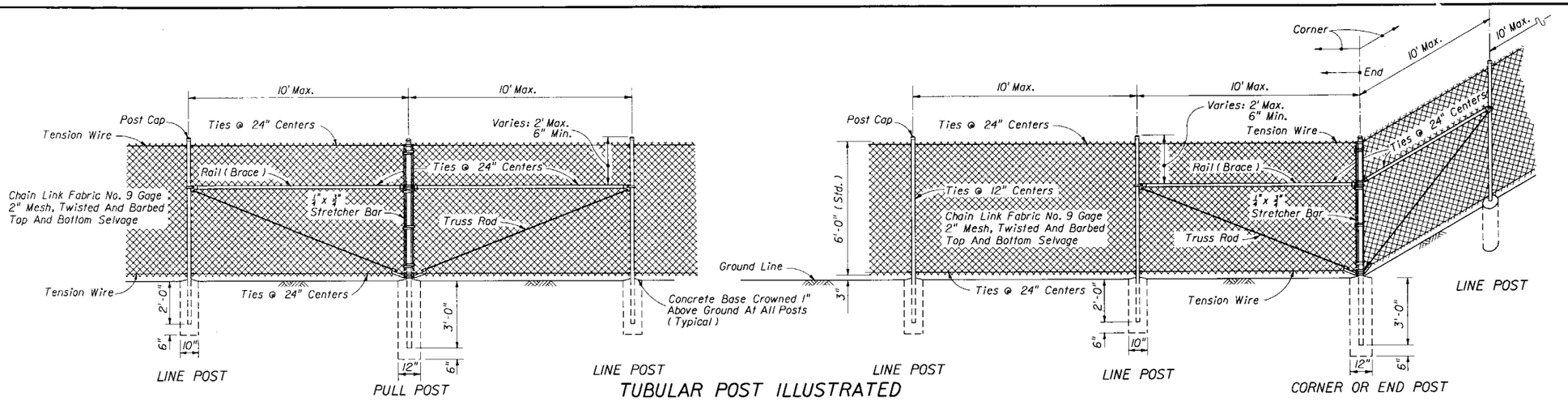

TUBULAR POST ILLUSTRATED

GENERAL NOTES

1. This fence to be used generally in urban areas.
2. For supplemental information refer to Sections 550 and 966 of FDOT Standard Specifications.
3. Chain link fabric, posts, rails, truss rods, tension wires, tie wires, stretcher bars, gates and all miscellaneous fittings and hardware shall meet the requirements of AASHTO M181 unless otherwise specified by this index. Stipulated AASHTO and ASTM signify current reference.
4. Fence Component Options:
   - A. Line post options:
     - (1) Galvanized steel pipe, Schedule 40 - 1 1/2" nominal dia. galvanized at the rate of 1.8 oz/sf: ASTM A53 Table X2, ASTM F1083, and AASHTO M111.
     - (2) Aluminum coated steel pipe - 1 1/2" nominal dia. coated at the rate of 0.40 oz/sf: Spec. Subarticle 966-1.5.
     - (3) Aluminum alloy pipe - 2" nominal dia.: ASTM B241 or B221, Alloy 6063, T6.
     - (4) Steel H-Beam - 1 7/8" x 1 7/8": Galv. 1.8 oz/sf: AASHTO M111 and Detail.
     - (5) Aluminum alloy H-Beam - 1 7/8" x 1 5/8": Detail.
     - (6) Steel C - 1 7/8" x 1 5/8": Galv. 1.8 oz/sf: AASHTO M111 and Detail.
     - (7) Resistance welded steel pipe - 1 1/2" nominal dia.: ASTM F669 light industrial fence and ASTM F1234.
   - B. Corner, end, and pull post options:
     - (1) Galvanized steel pipe, Schedule 40 - 2" nominal dia. galvanized at the rate of 1.8 oz/sf: ASTM A53 Table X2, ASTM F1083, and AASHTO M111
     - (2) Aluminum coated steel pipe - 2" nominal dia. coated at the rate of 0.40 oz/sf: Spec. Subarticle 966-1.5.
     - (3) Aluminum alloy pipe - 2 1/2" nominal dia.: ASTM B241 or B221, Alloy 6063, T6.
     - (4) Resistance welded steel pipe - 2" nominal dia.: ASTM F669 light indusrial fence and ASTM F1234.
   - C. Rail options:
     - (1) Galvanized steel pipe, Schedule 40 - 1 1/4" nominal dia. galvanized at the rate of 1.8 oz/sf: ASTM A53 Table X2, ASTM F1083, and AASHTO M111.
     - (2) Aluminum coated steel pipe - 1 1/4" nominal dia. coated at the rate of 0.40 oz/sf: Spec. Subarticle 966-1.5.
     - (3) Aluminum alloy pipe - 1 1/4" nominal dia.: ASTM B241 or B221, Alloy 6063, T6.
     - (4) Resistance welded steel pipe - 1 1/4" nominal dia.: ASTM F669 light industrial fence and ASTM F1234.
   - D. Chain link fabric options (2" mesh with twisted and barbed selvage top and bottom for all options):
     - (1) AASHTO M181 Type I - Zinc Coated Steel, No. 9 gage (coated wire diameter), galvanized at the rate of 1.8 oz/sf (M181 Class D 2.0 oz/sf modified to 1.8 oz/sf).
     - (2) AASHTO M181 Type II - Aluminum Coated Steel, No. 9 gage (coated wire diameter), coated at the rate of 0.40 oz/sf.
     - (3) AASHTO M181 Type IV - Polyvinyl Chloride (PVC) Coated Steel, No. 9 gage (coated core wire diameter), core wire-zinc coated steel. PVC coating: M181 Class A (either extruded or extruded and bonded) or Class B (bonded). See table right.
   - E. Tension wire options:
     - (1) No. 7 gage steel wire galvanized at the rate of 1.8 oz/sf: AASHTO M181.
     - (2) Aluminum alloy wire conforming to the requirements of ASTM B211, Alloy 6061, Temper T89 or T94, with a wire diameter of 0.1875" or larger.
     - (3) No. 7 gage aluminum coated steel wire coated at the rate of 0.40 oz/sf: AASHTO M181.
   - F. Tie wire and hog ring options:
     - (1) No. 9 gage steel wire galvanized at the rate of 1.8 oz/sf.
     - (2) Aluminum alloy wire conforming to the requirements of ASTM B211, Alloy 6061, Temper T89 or T94, with a wire diameter of 0.1443" or larger.
     - (3) No. 7 gage aluminum coated steel wire coated at the rate of 0.40 oz/sf.
5. Unless a specific material is called for in the plans the Contractor may elect to use either a single type of material or a combination of material types from the component options listed above. Combinations of optional materials are restricted as follows: (a) Only one fabric optional material will be permitted between corner and/or end post assemblies. (b) Only one line post optional material will be permitted between corner and/or end post assemblies. (c) Pull post assemblies shall be optional materials identical to either the line post optional material or the corner and end post assembly optional material; but, pull post assemblies shall be the same optional material between any set of corner and/or end post assemblies.
6. Concrete for bases shall be Class I as specified in Section 345 of the Standard Specifications except that the requirements contained in 345-5.1, 345-10 and 345-11 shall not apply. Materials for Class I concrete may be proportioned by volume and/or by weight.
7. Line posts are to be set in concrete as detailed above or by the following methods:
   - (a) In accordance with special details and/or as specifically described in the contract plans and specifications.
   - (b) In accordance with ASTM F567 Subsections 4.4 through 4.7 and 4.9 and 4.10 as approved by the Engineer.
   - (c) In soils that are firm, well drained and suitable for full stable embedment any of the optional steel posts may be driven in locations approved by the Engineer. Driving will not be permitted in sandy soils. Driven posts shall be set to a minimum depth of 3' for fences up through 6' in height, and, for each 1' of fence height above 6' the posts shall be set an additional 6" in depth. Posts shall be protected to prevent damage from driving. Damaged posts shall be repaired or removed and replaced as directed by the Engineer without additional cost to the Department.
   - (d) Posts mounted on concrete structure or solid rock shall be mounted in accordance with the base plate detail "Fence Mounting On Concrete Endwalls And Retaining Wall", Sheet 2; or, by embedment in accordance with ASTM F567 Subsection 4.5.

   End, pull and corner post assemblies shall be set in concrete as detailed above for all soil conditions other than solid rock. Posts within assemblies that are located on concrete structures or solid rock shall be set by base plate or by embedment as prescribed under (d) above for line posts.

   Line and assembly posts set in concrete bases shall be set an additional 3" in depth for each 1' of fence height greater than 6'.
8. Pull posts shall be used at breaks in vertical grades of 15° or more, or at approximately 350' centers except that this maximum interval may be reduced by the Engineer on curves where the degree of curvature is greater than 3°.
9. Corner posts are to be installed at all horizontal breaks in fence at 15° or more and as required at vertical breaks over 15° as determined by the Engineer.
10. Unless sliding gates or special gates are called for in the plans, all gates shall be chain link swing gates meeting the material requirements described above as approved by the Engineer. Payment shall include the gates, single or double, all necessary hardware for installation and any additional length and/or size for posts at the opening. Gates shall be paid for under the contract unit price for Fence Gates, Type B, Each.
11. Line posts, tension wires, chain link fabric, tie wires, all miscellaneous fittings and hardware, and Class I concrete to be included in the cost for Fencing Type B, LF. The standard 6' high fence shall be paid for under the contract unit price for Fencing Type B, LF. Fence having other height and/or line components and barbed wire attachments shall be paid for under the contract unit price for Fencing Type B ( ), LF.

    Corner post assemblies shall consist of one corner post, two braces, two truss rods, and all necessary fittings and hardware as detailed above and shall be paid for under the contract unit price for Corner Post Assembly (Type B Fence), Each.

    Pull post assemblies shall consist of one pull post, two braces, two truss rods and all necessary fittings and hardware as detailed above and shall be paid for under the contract unit price for Pull Post Assembly (Type B Fence), Each.

    End post assemblies shall consist of one end post, one brace, one truss rod and all necessary fittings and hardware as detailed above and shall be paid for under the contract unit price for End Post Assembly (Type B Fence), Each.

TYPE IV VINYL COATED FABRIC

Specification Section 966 And AASHTO M181 Table 4 Redefined As Follows

Specified Diameter Of Metallic Coated Core Wire			Minimum Weight Of Zinc Coating		PVC Thickness Range			
					M181 Class A (Extruded Or Extruded And Bonded Coating)		M181 Class B (Bonded Coating)	
in.	mm.	gage	oz/ft.^{2}	g/m^2	in.	mm.	in.	mm.
0.148	3.76	9	0.30	92	0.015 to 0.025	0.38 to 0.64	0.006 to 0.010	0.15 to 0.25

STATE OF FLORIDA DEPARTMENT OF TRANSPORTATION
ROAD DESIGN

FENCE TYPE B

	Names	Dates
Designed By		
Drawn By		
Checked By		

Approved By: State Roadway Design Engineer

F.H.W.A. Approved: 10/06/83

Revision No.	Sheet No.	Index No.
92	1 of 2	452

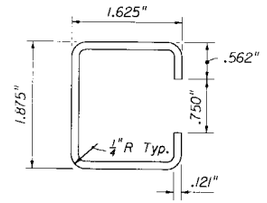

Galv. Wt. Per. Ft. = 2.34# ±5%
Yeild P.S.I. (Min.) 45,000

OPTIONAL "C" LINE POST FOR TYPE B FENCE

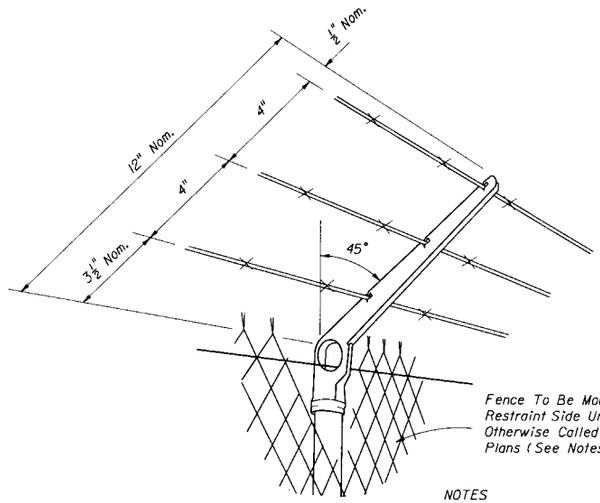

NOTES

Attachments to be used only when called for in the plans.
Attachments to extend in direction of restraint. Unless otherwise called for in plans, direction of restraint will be as follows:

(a.) Outward on limited access right of way line.
(b.) Outward on controlled access right of way line.
(c.) Outward from utilities and hazardous facilities located within highway right of way.
(d.) Outward from lateral ditches, outfalls, retention basins, canals, borrow areas and similar support facilities.
(e.) Inward on pedestrian ways.

The cap-arm shall be designed to provide a drive fit over the top of posts and to exclude moisture in posts with tubular sections.

Attachments to be paid for under the contract unit price for Fencing, Type B (With Barb Wire Attachment) LF.

BARB WIRE ATTACHMENT

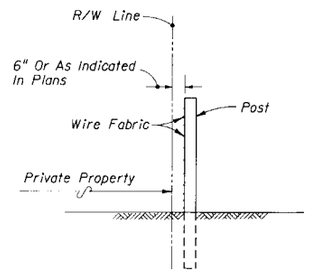

FENCE POSITION AT LOCATIONS WITHOUT FRONTAGE ROADS

(REFER TO DETAIL PLANS FOR FENCE POSITION AT LOCATIONS WITH FRONTAGE ROADS)

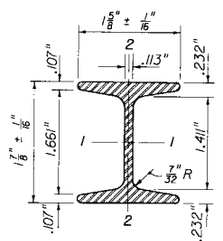

1 7/8" x 1 5/8" H-BEAM (STEEL)			(ALUM)	
Area = 724 Sq. In.				
Galv. Wt. Per. Ft. = 2.72# ±5%			0.91# ±5%	
	Axes		Axes	
	1-1	2-2	1-1	2-2
Moment Of Inertia	.428	.101	.428	.101
Section Modulus	.456	.124	.456	.124
Rad. Of Gyration	.779	.373	.779	.373
Surface Area	.776 SF/Ft		.776 SF/Ft	
Tensile Strength PSI (Min.)	80,000		30,000	
Yielding Point PSI (Min.)	48,000		25,000	

OPTIONAL H-BEAM LINE POST FOR TYPE B FENCE

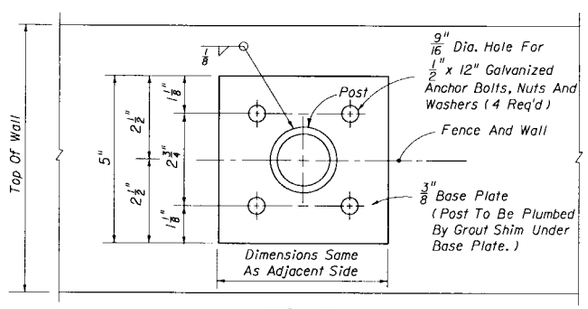

TOP VIEW

BASE PLATE IDENTICAL FOR LINE, PULL, END AND CORNER POSTS AND SHALL BE CONSIDERED AN INTERGAL PART OF THE RESPECTIVE POSTS FOR BASIS OF PAYMENT

FENCE MOUNTING ON CONCRETE ENDWALL AND RETAINING WALLS

STATE OF FLORIDA DEPARTMENT OF TRANSPORTATION
ROAD DESIGN

FENCE TYPE B

	Names	Dates
Designed By		
Drawn By		
Checked By		

Approved By
State Roadway Design Engineer

F.H.W.A. Approved:

Revision No.	Sheet No.	Index No.
90	2 of 2	452

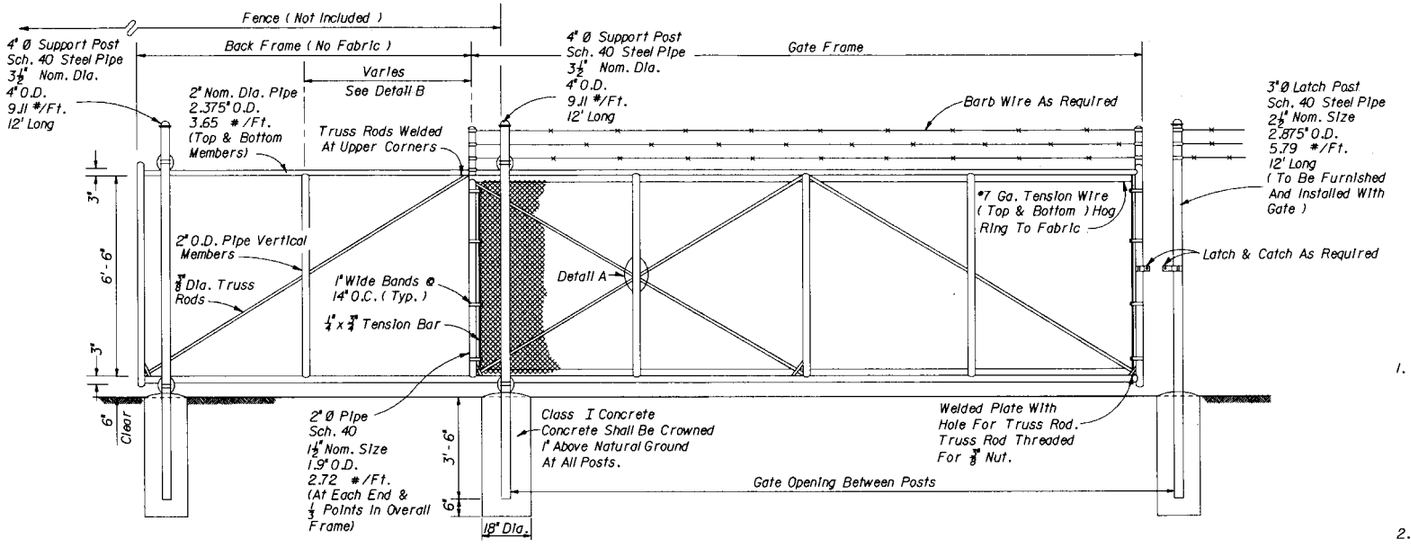

FRONT ELEVATION

GENERAL NOTES

1. The Contractor may substitute any equivalent cantilever slide gate approved by the Engineer.

   Extruded, rolled or formed components that provide equal strength and stability may be used in lieu of the pipe components shown; and, internal rollers may be used in lieu of the external roller units shown.

   Gate components shall meet or exceed the material requirements specified on Index No. 452.

2. Steel gate frame shall be fabricated prior to galvanizing, except that truss rods and truss rod plates may be fabricated following frame galvanizing provided surfaces damaged during welding are galvanized in accordance with Section 24 of AASHTO M36.

3. All fabric shall be knuckled top & bottom selvages.

4. Cost of all gate components shall be included in the contract unit price for Sliding Fence Gate (Cantilever), Each.

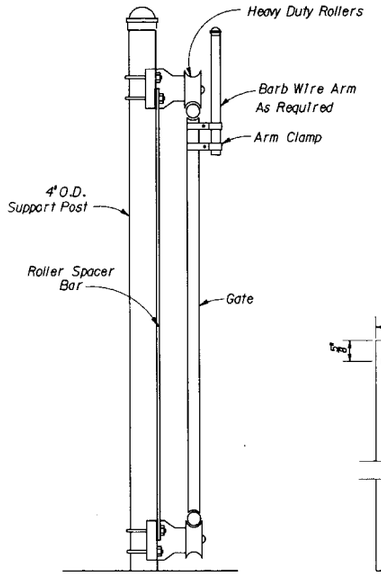

SUPPORT POST DETAIL

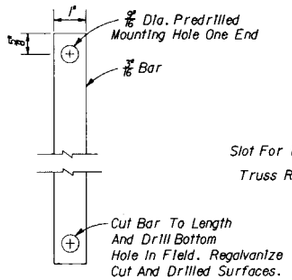

ROLLER SPACER BAR

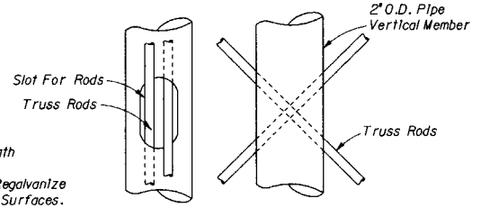

DETAIL A

GATE OPENING	GATE FRAME	BACK FRAME
12'	12'-3"	6'
16'	16'-3"	8'
20'	20'-3"	10'
24'	24'-3"	12'

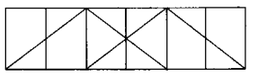

TYPICAL FRAME - 12',16',& 20' Opening

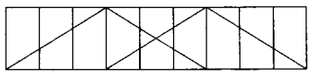

TYPICAL FRAME - 24' Opening

DETAIL B

STATE OF FLORIDA DEPARTMENT OF TRANSPORTATION
ROAD DESIGN

CANTILEVER SLIDE GATE TYPE B FENCE

	Names	Dates
Designed By		
Drawn By	HDD	09/78
Checked By	LMF	09/78
F.H.W.A. Approved:		10/26/78

Approved By _____
State Design Engineer, Roadways

Revision No.	Sheet No.	Index No.
88	1 of 1	453

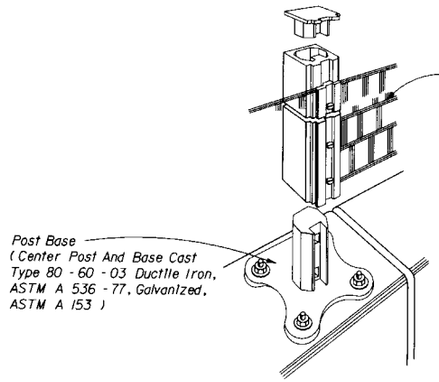

CONCRETE BARRIER WALL MOUNT

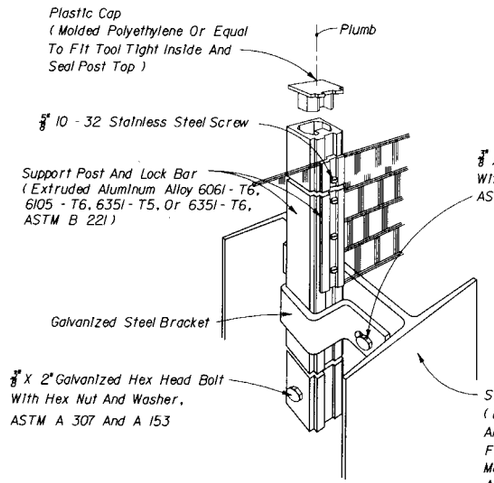

STEEL POST MOUNT

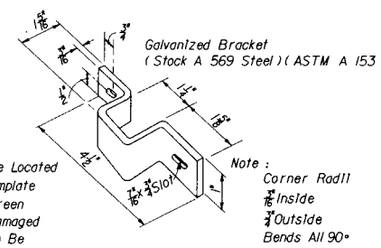

MOUNTING BRACKET

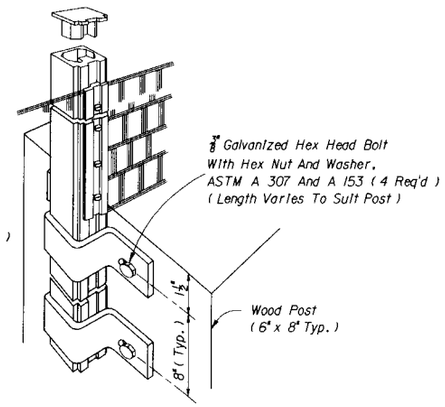

GUARDRAIL WOOD POST MOUNT

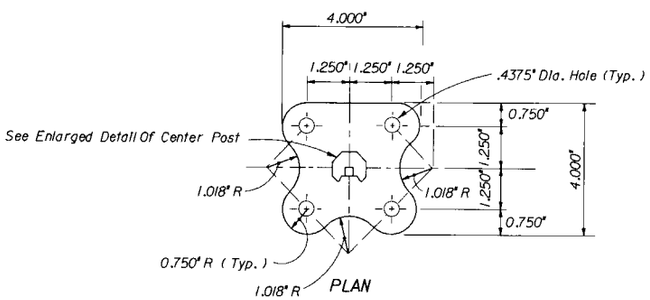

PLAN

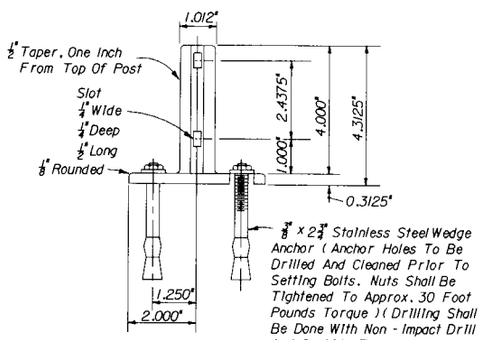

FRONT VIEW

CENTER POST AND BASE

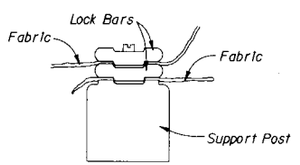

TOP VIEW

GLARE SCREEN SPLICE

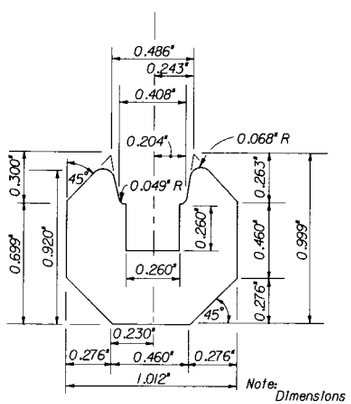

SECTION DETAIL

CENTER POST

Note:
Dimensions shown are casting requirements. Allowance has been made for galvanizing casting and fit. Break sharp corners 0.010" R

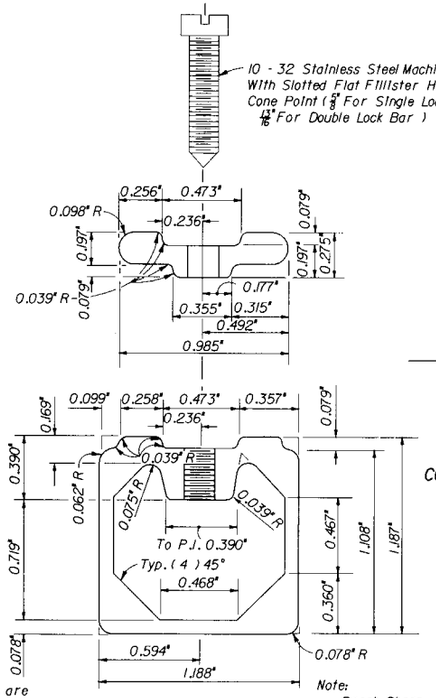

SECTIONS

SUPPORT POST AND LOCK BAR

Note:
Break Sharp Corners 0.010" R

Note:
Chain and accessories shall be galvanized in accordance with section 962 - 7 of the Standard Specifications. Damaged galvanized areas, including guardrail posts, shall be repaired in accordance with Sections 562 and 971 - 15 of the Standard Specifications.

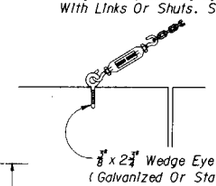

CONCRETE BARRIER WALL

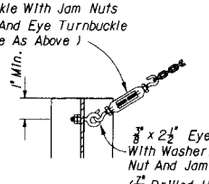

STEEL GUARDRAIL POST

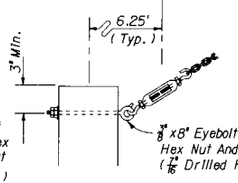

WOOD GUARDRAIL POST

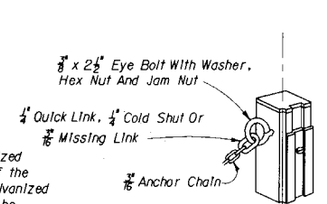

CHAIN END ANCHORAGE

GENERAL NOTES

1. Cost of installation of screen, support posts, lock bars, leading and trailing end anchorages and all accessories shall be included in the contract unit price for Glare Screen (Knitted Polyester) LF.

STATE OF FLORIDA DEPARTMENT OF TRANSPORTATION
ROAD DESIGN

GLARE SCREEN KNITTED POLYESTER

	Names	Dates
Designed By		
Drawn By	HSD	02/80
Checked By	JVG	02/80
F.H.W.A. Approved:		10/07/80

Approved By _____
State Design Engineer, Roadways

Revision No.	Sheet No.	Index No.
86	1 of 1	460

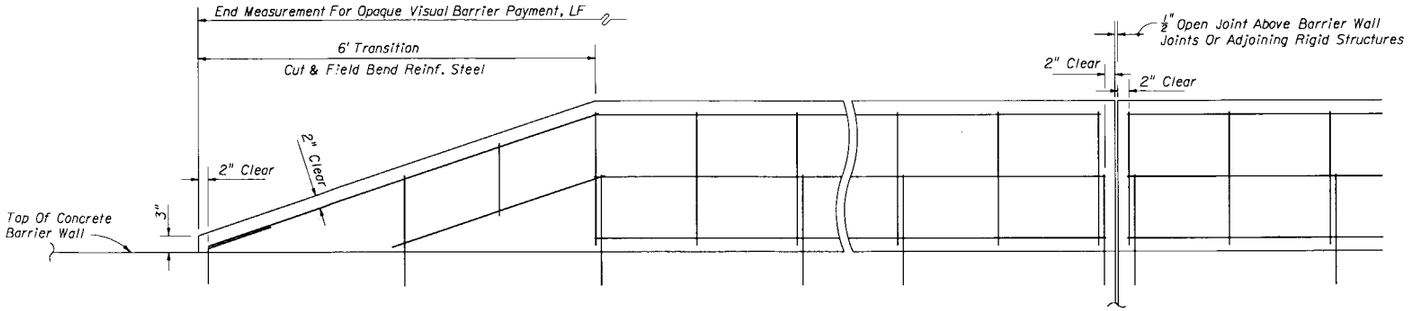

ELEVATION OF REINFORCEMENT AND DOWELING

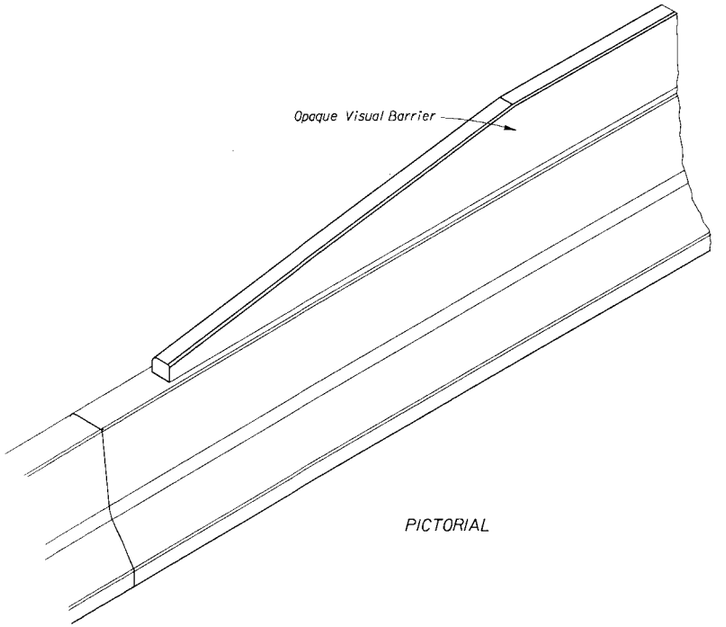

PICTORIAL

ESTIMATED QUANTITIES, LF	
Concrete	0.042 CY
Reinforcing Steel	3.27 Lbs*
*3.38 Lbs. With 2'-2" Dowels	

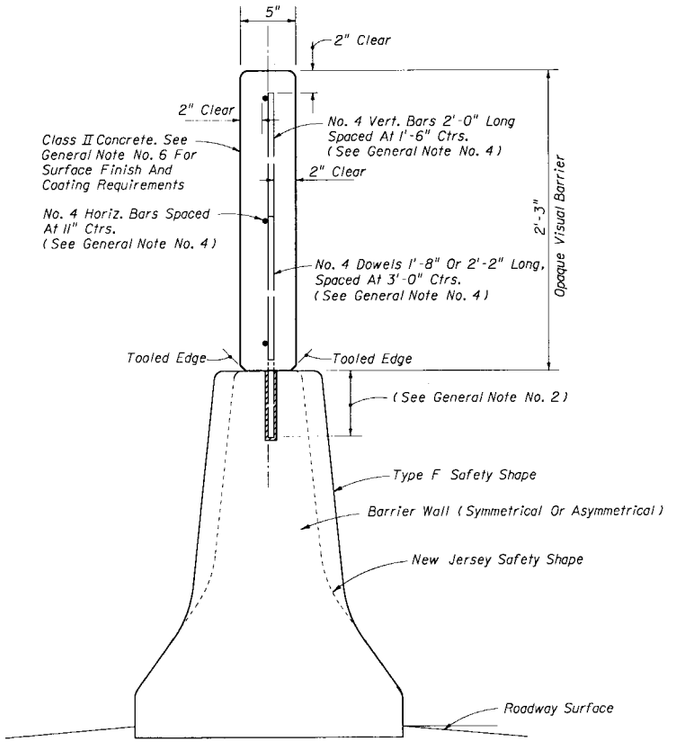

END VIEW

GENERAL NOTES

1. The opaque visual barrier is intended to function as a visual screen, and is not intended to resist vehicle impact loads nor to restrain, contain or redirect vehicles or cargo. The barrier is designed to withstand zone wind loading and strikes by light debris; and, designed to yield to exceptional strikes by vehicles or cargo, and to contain ruptured segments of the screen when yielding to such strikes.

2. When the opaque visual barrier is constructed on an existing barrier wall, dowels shall be 1'-8" in length, embedded 6" into the barrier wall and set with an approved chemical grout. Embedment holes shall be $\frac{3}{8}$" diameter, drilled to a depth $\frac{1}{4}$" below the tip of the dowel unless greater depth is required to accept manufactured grout capsules.

   When the opaque visual barrier is constructed in conjunction with project concrete barrier walls, dowels may be set as described above, in either the drilled or preformed holes; or, placed when the barrier wall is cast. For dowels that are placed when the wall is cast, the dowel shall be 2'-2" in length and embedded to a depth of 12".

3. For both double and single faced concrete barrier walls the opaque visual barrier is to be located in the center of the top of the wall.

   For single faced barrier walls that are constructed around other vertical structure, the opaque visual barrier shall follow the alignments of only one of the walls and be centered atop that wall.

   For dual median barrier walls that follow differential profiles, the opaque visual barrier shall be constructed atop the wall with the higher elevation, unless conditions dictate otherwise. Lateral transitions or end overlaps for opaque visual barriers that alternate between dual walls shall be detailed in the plans.

   For median barrier walls that are divided when connecting to separated bridges, the opaque visual barrier shall be constructed atop the approach side barrier wall, unless differential profiles dictate locating the opaque visual barrier on the departure side barrier wall.

   Opaque visual barriers to be located on capped fills between dual barrier walls shall be detailed in the plans.

4. In lieu of the reinforcement shown the Contractor may substitute welded wire fabric equal to or better than that shown, when approved by the Engineer. Details shall be submitted with requests for substitution.

5. The Contractor may construct contiguous precast concrete panels in lieu of the cast-in-place opaque screen when approved by the Engineer. Panel design and method for anchorage to the barrier wall shall be detailed by shop drawings when requesting the Engineers approval.

   The Contractor may construct the opaque screen monolithically with the barrier wall, however, the screen design shall not be modified so as to cause the wall to be dynamically active from strikes on the screen; see design considerations in Note No. 1 above.

6. Exposed concrete surfaces shall have a Class 3 surface finish in accordance with Section 521 of the Standard Specification, unless other finish called for in the plans. The surfaces shall have a Class 5 Applied Finish Coating in accordance with Section 400 only when called for in the plans.

7. Payment for opaque visual barrier shall be full compensation for concrete, reinforcement, dowels, casting, placement, drilling, grouting, tooling, finishing and work incidental thereto, and shall be paid for under the contract unit price for Opaque Visual Barrier (Concrete) (2'-3" Height), LF.

STATE OF FLORIDA DEPARTMENT OF TRANSPORTATION
ROAD DESIGN

OPAQUE VISUAL BARRIER

	Names	Dates
Designed By	DCB/JVG	9/87
Drawn By	JBW	9/87
Checked By	DCB/JVG	9/87
F.H.W.A. Approved: 10/27/87		

Approved By
State Roadway Design Engineer

Revision No.	Sheet No.	Index No.
92	1 of 1	461

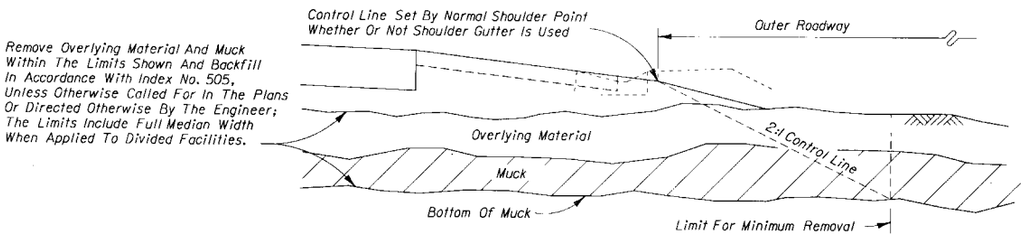

WITH OVERBURDEN - HALF SECTION

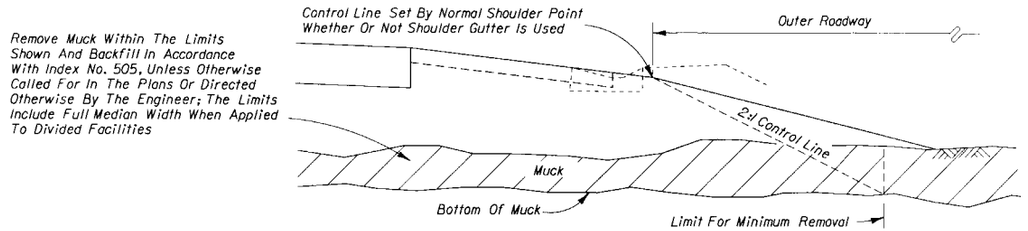

WITHOUT OVERBURDEN - HALF SECTION

IN RURAL CONSTRUCTION

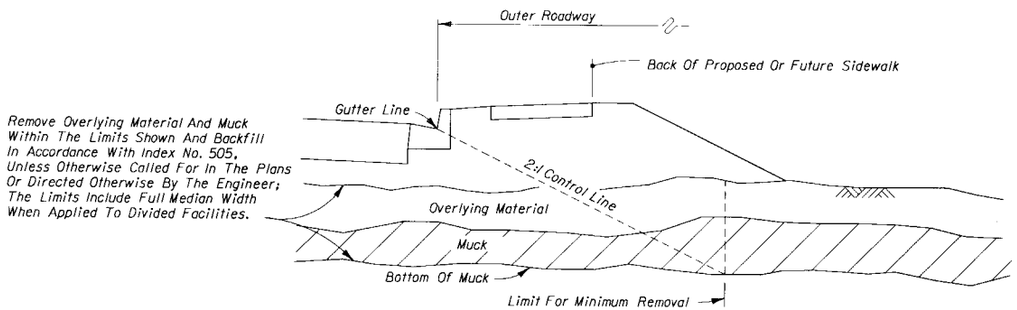

WITH OVERBURDEN - HALF SECTION

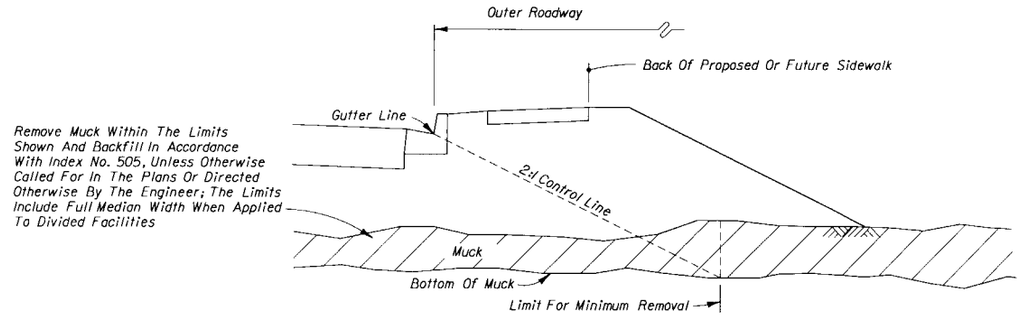

WITHOUT OVERBURDEN - HALF SECTION

IN MUNICIPAL CONSTRUCTION

REMOVAL OF MUCK

GENERAL NOTES

1. All details shown on this index for the removal of muck and plastic material apply unless otherwise shown on the plans.
2. Utilization of excavated materials shall be in accordance with Index No. 505.
3. Where muck or plastic material is undercut, backfill shall be made of suitable material in accordance with Index No. 505, unless otherwise shown on the plans.
4. The term "Plastic Material" used in this index in conjunction with removal of plastic material is as defined under soil classifications for Plastic (P) and High Plastic (H) on Index No. 505.
5. The term "Muck" as used on this index is defined as any material which has an average organic content greater than five (5.0) percent, or an individual organic content test result which exceeds seven (7.0) percent. Organic material shall be removed as shown on this index unless directed otherwise by the Engineer.

   Average organic content shall be determined from the test results from a minimum of three randomly selected samples from each stratum. Tests shall be performed in accordance with FM 1-T267 on the portion of a sample passing the No. 4 sieve.
6. The normal depth of side ditches shall be 3.5 feet below the shoulder point except in special cases.
7. In municipal areas, where underdrain is to be constructed beneath the proposed pavement, the grade of the underdrain is to be such that the underdrain filter material will not extend above the bottom of the stabilized section of the subgrade. Whether located in non-plastic or plastic soils the underdrain will be located in accordance with the detail "Removal Of Plastic Material And Location Of Underdrain In Municipal Construction", on Sheet 2, unless shown otherwise on the plans. Gradation of the filter material shall conform to FDOT specifications. Minimum grade on underdrain pipe shall be 0.2%.
8. See Index No. 506 for miscellaneous earthwork details.

STATE OF FLORIDA DEPARTMENT OF TRANSPORTATION
ROAD DESIGN

REMOVAL OF MUCK AND PLASTIC MATERIAL

	Names	Dates
Designed By	RER	05/91
Drawn By	HKH	05/91
Checked By	RER	05/91

Approved By
State Roadway Design Engineer

F.H.W.A. Approved:

Revision No.	Sheet No.	Index No.
92	1 of 2	500

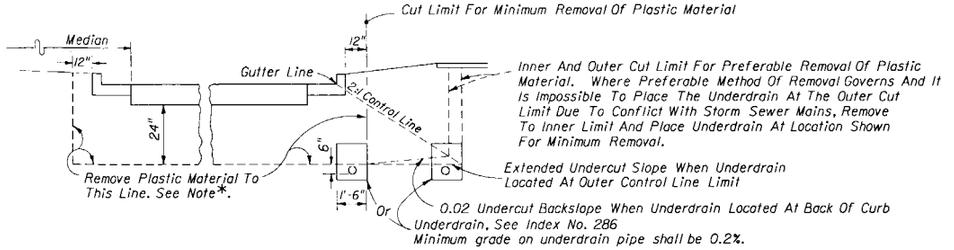

HALF SECTION

NOTES: Refer to roadway cross sections to determine whether minimum or preferable removal is used.

*Where frequency of median breaks indicates that it is impractical to leave plastic material in the median, the designer may elect to indicate total removal of this material. If during construction it becomes apparent, due to normal required construction procedures, that it is impractical to leave the plastic material in the median, total removal of this material shall be approved by the Engineer.

REMOVAL OF PLASTIC MATERIAL AND LOCATION OF UNDERDRAIN IN MUNICIPAL CONSTRUCTION



At locations where plastic material is being removed, the side ditches must be at least as deep as the undercut plane.



Where paved side ditches are used in areas of removal of plastic material, the top of the ditch pavement must be no higher than the undercut plane.

MISCELLANEOUS DETAILS

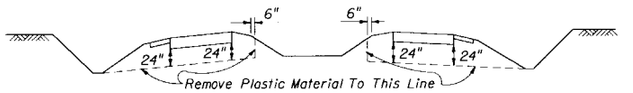

TYPICAL CUT SECTION ON TANGENT

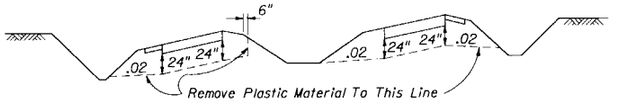

TYPICAL CUT SECTION ON SUPERELEVATION

REMOVAL OF PLASTIC MATERIAL ON INTERSTATE FACILITIES, FREEWAYS, DIVIDED PRINCIPAL AND MINOR ARTERIALS AND MAJOR COLLECTORS HAVING DEPRESSED MEDIANS

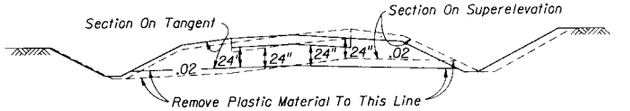

TYPICAL CUT SECTION

Note: When this detail is applied to minor collectors and local facilities, the undercut may be reduced to 18".

REMOVAL OF PLASTIC MATERIAL ON DIVIDED FREEWAYS, PRINCIPAL AND MINOR ARTERIALS AND MAJOR COLLECTORS HAVING FLUSH MEDIANS, AND, ON UNDIVIDED PRINCIPAL AND MINOR ARTERIALS AND MAJOR COLLECTORS

REMOVAL OF PLASTIC MATERIAL

Note: For GENERAL NOTES see Sheet 1.

STATE OF FLORIDA DEPARTMENT OF TRANSPORTATION
ROAD DESIGN

REMOVAL OF MUCK AND PLASTIC MATERIAL

	Names	Dates
Designed By	KHH/WNL	05/91
Drawn By	HKH	05/91
Checked By	JVG/WNL	05/91
F.H.W.A. Approved:		

Approved By _____
State Roadway Design Engineer

Revision No.	Sheet No.	Index No.
92	2 of 2	500

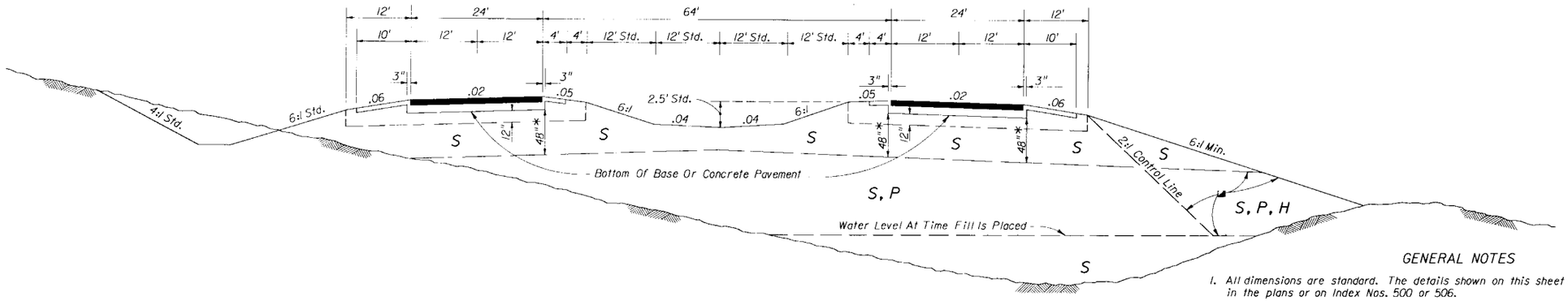

FOUR - LANE ROADWAY

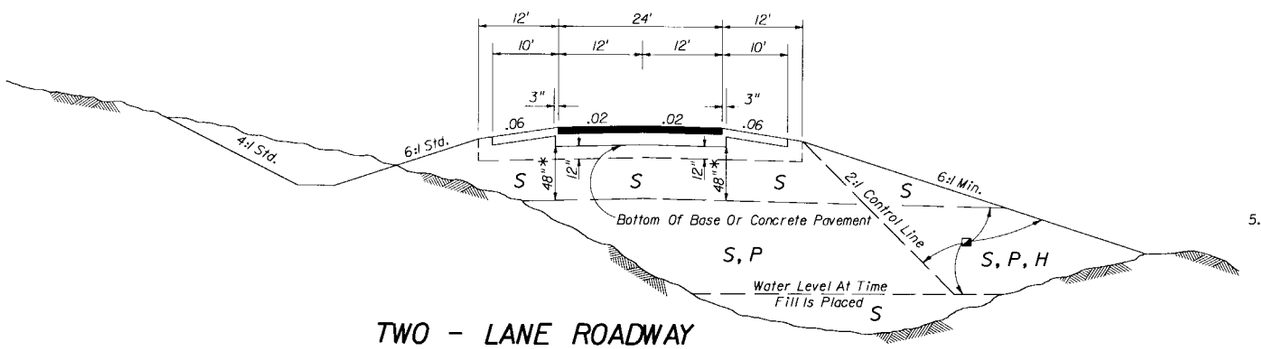

TWO - LANE ROADWAY

SYMBOL	SOIL	CLASSIFICATION (AASHTO M-145)
S	Select	A-1, A-3, A-2-4 **
P	Plastic	A-2-5, A-2-6, A-2-7, A-4, A-5, A-6, A-7 (ALL WITH LL < 50)
H	High Plastic	A-2-5, A-2-7, A-5 Or A-7 (ALL WITH LL > 50)
M	Muck	A-8

Classification listed left to right in order of preference.

■ See General Notes Nos. 4 & 5 for utilization of soils classified as muck.

** Certain types of A-2-4 material are likely to retain excess moisture and may be difficult to dry and compact. They should be used in the embankment above the water level existing at time of construction.

* For cut sections this dimension may be reduced to 24"; see Index No. 500. For minor collectors and local facilities this dimension may be reduced to 18".

GENERAL NOTES

1. All dimensions are standard. The details shown on this sheet do not supersede the details shown in the plans or on Index Nos. 500 or 506.
2. Plastic (P) soils may be placed above the existing water level (at the time of construction) to within 4 feet of the proposed base. It should be placed uniformly in the lower portion of the embankment for some distance along the project rather than full depth for short distances.
3. High Plastic (H) soils excavated within the project limits may be used in embankment construction as indicated on this index. High plastic soils are not to be used for embankment construction when obtained from outside the project limits.
4. Select (S) soils having an average organic content of more than two and one-half (2.5) percent, or having an individual test value which exceeds four (4) percent, shall not be used in the subgrade portion of the roadbed.

   Select (S), Plastic (P), or High plastic (H) soils having an average organic content of more than five (5) percent, or an organic content individual test result which exceeds seven (7) percent, shall be classified as muck and shall not be used in the portion of embankment inside the control line; these soils may be used for embankment construction outside the control line, unless restricted by the plans or otherwise specified in the plans, provided they can be compacted sufficently to sustain a drivable surface for operational vehicles as approved by the Engineer.

   Average organic content shall be determined from the test results from a minimum of three randomly selected samples from each stratum or stockpile of a particular material. Tests shall be performed in accordance with FM 1-T267 on the portion of a sample passing the No. 4 sieve.
5. Highly organic soils, composed primarily of partially decayed organic matter, often dark brown or black in color with an oder of decay, and sometimes fibrous, shall be designated as muck. Further, any stratum or stockpile of soil which containes pockets of highly organic material may be designated as muck (M).

   Highly Organic Soils shall not be used within the subgrade or embankment portion of the roadbed, with the exception of muck used as top soil as described in Section 162 of the FDOT Standard Specifications.

DESIGN NOTES

1. The designer shall take into consideration the expectancy of roadway widening to the outside, and where widening is anticipated, specify in the plans the utilization of Select(S), Plastic (P) and /or High Plastic (H) soils classified as muck, in the embankment outside the control line.

STATE OF FLORIDA DEPARTMENT OF TRANSPORTATION
ROAD DESIGN

EMBANKMENT UTILIZATION

	Names	Dates
Designed By	RER	06/91
Drawn By	HSD	06/91
Checked By	RER	06/91
F.H.W.A. Approved:		04/23/74

Approved By _____
State Roadway Design Engineer

Revision No.	Sheet No.	Index No.
92	1 of 1	505

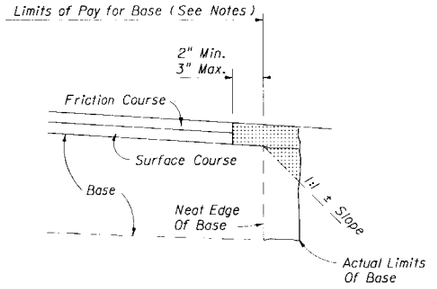

NOTES

1. All base material in the shadded area is excess base to be removed.
2. The cost for removal of excess base material shall be included in the contract unit price for base.
3. Payment for base shall be calculated using normal width.

REMOVAL OF EXCESS BASE MATERIAL

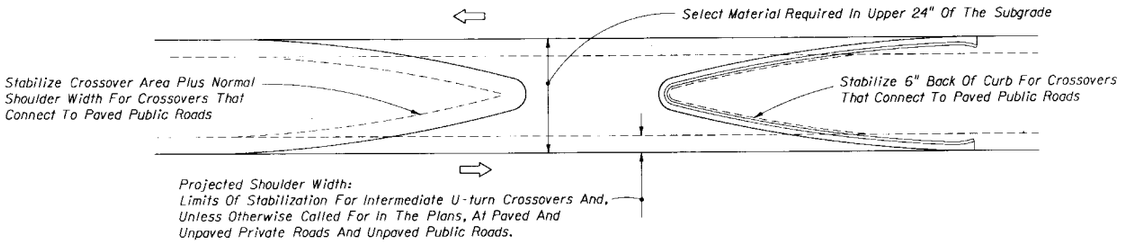

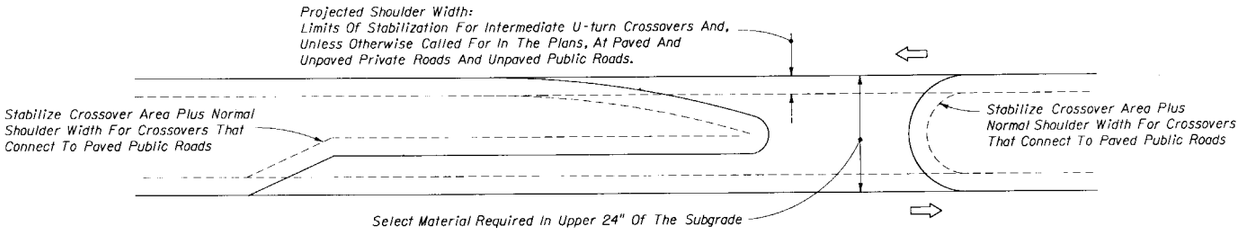



NOTES

1. When the median has curb or curb and gutter, stabilize 6" back of curb.
2. When the median has shoulder with no curb or curb and gutter, stabilize to normal shoulder width.
3. See the details above for stabilizing requirements at crossroads.
4. Stabilize entire area under all paved traffic islands.
5. Stabilize full width under all traffic separators.

MEDIAN STABILIZING DETAILS

STATE OF FLORIDA DEPARTMENT OF TRANSPORTATION
ROAD DESIGN

MISCELLANEOUS EARTHWORK DETAILS

	Names	Dates
Designed By	RL/WNL	05/91
Drawn By	HKH	05/91
Checked By	JVG/WNL	05/91
F.H.W.A. Approved:		

Approved By: _____ State Roadway Design Engineer

Revision No.	Sheet No.	Index No.
92	1 of 1	506

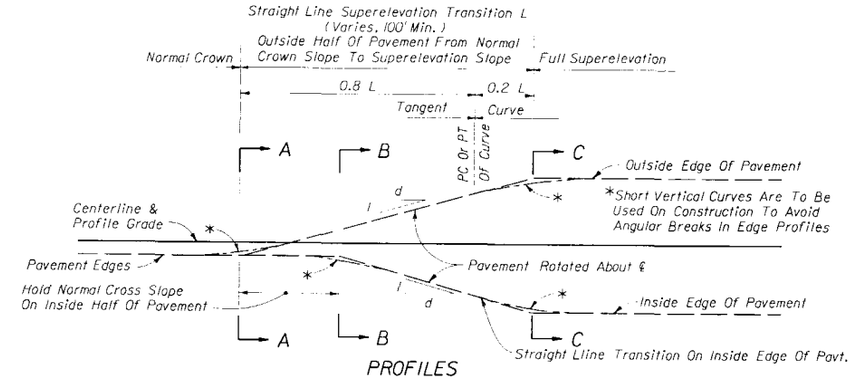

SLOPE RATIOS FOR SUPERELEVATION TRANSITIONS			
SECTION	DESIGN SPEED, MPH		
	45-50	55-60	65-70
	l: d		
2 Lane & 4 Lane	l: 200	l: 225	l: 250
6 Lane	l: 160	l: 180	l: 200
8 Lane	l: 150	l: 170	l: 190

The length of superelevation transition is to be determined by the relative slope between the travel way edge of pavement and the profile grade, except that the minimum length of transition shall be 100 ft.

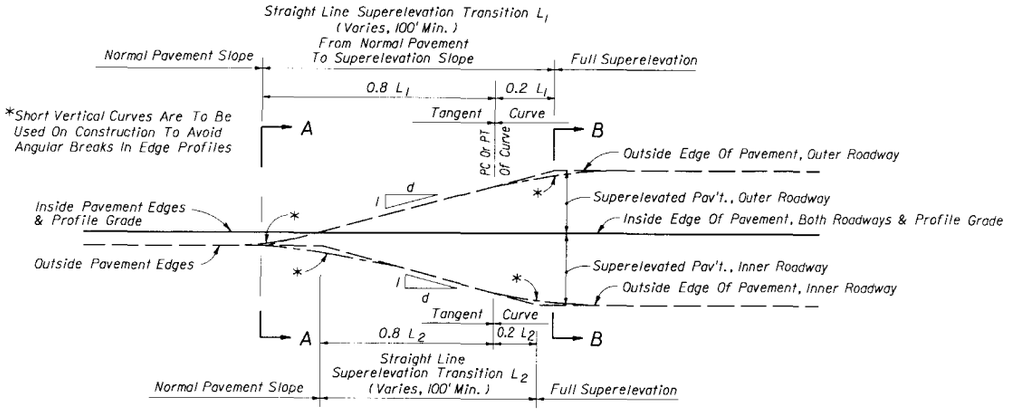

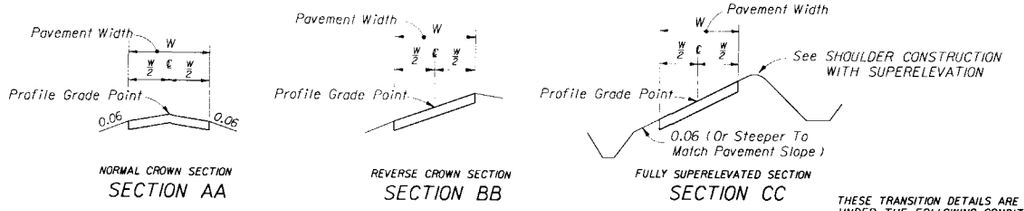

2-LANE, 4-LANE OR 6-LANE PAVEMENT, NO MEDIAN

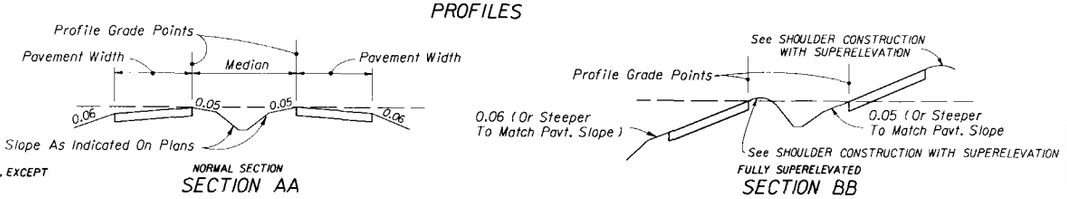

4-LANE OR 6-LANE PAVEMENT WITH MEDIAN

THESE TRANSITION DETAILS ARE TO APPLY IN ALL CASES, EXCEPT UNDER THE FOLLOWING CONDITIONS:

1. Curves of insufficient length.
2. Insufficient tangent length between curves.
3. Deficient transition distance between a curve and other control point(s).
4. At PCC's or PRC's (Runoff rates are applicable).

Transitions for these exceptions are to be as detailed in the plans.

SUPERELEVATION TRANSITIONS

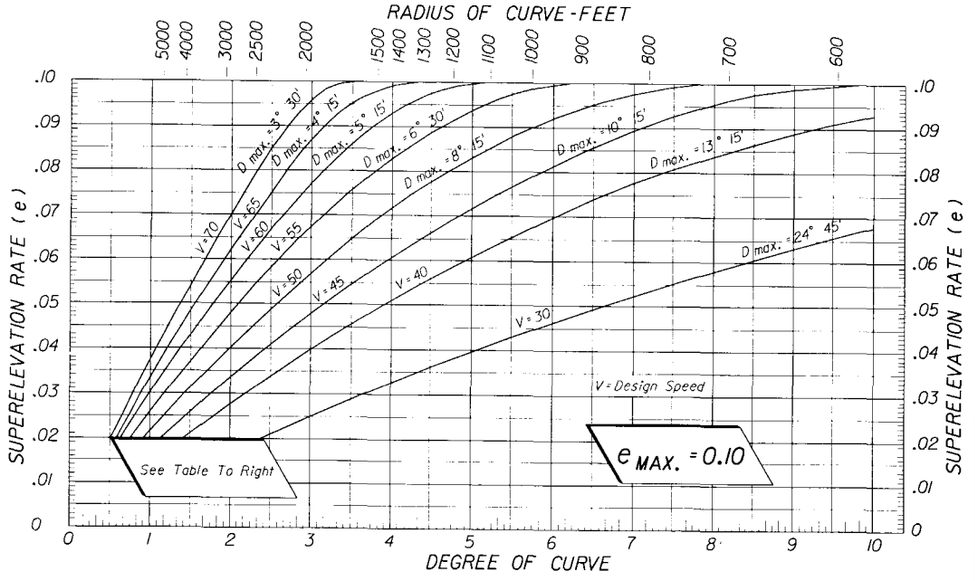

DEGREE OF CURVE (D)	DESIGN SPEED, V MPH						
	30	40	45/50	55	60	65	70
0°15'	NC	NC	NC	NC	NC	NC	NC
0°30'	NC	NC	NC	NC	RC	RC	RC
0°45'	NC	NC	RC	RC			
1°00'	NC	NC	0.21				
1°30'	NC	0.21	SEE DESIGN SUPERELEVATION RATE TO LEFT				
2°00'	RC						

DESIGN SUPERELEVATION RATES FOR RURAL HIGHWAYS, URBAN FREEWAYS AND HIGH SPEED URBAN HIGHWAYS

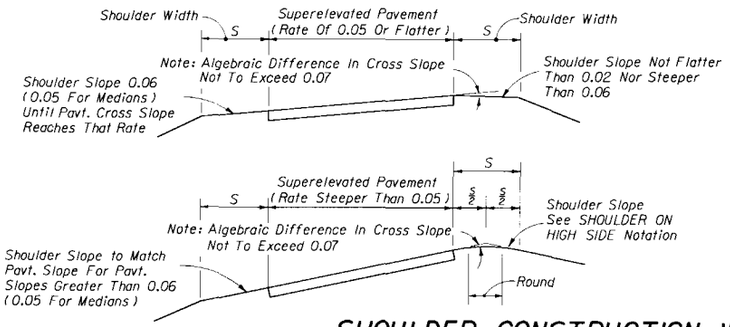

SHOULDER CONSTRUCTION WITH SUPERELEVATION

SHOULDER ON HIGH SIDE A shoulder slope of 0.06 downward from the edge of pavement will be maintained until a 0.07 break in slope at the pavement edge is reached due to superelevation of the pavement. As the pavement superelevation increases, the 0.07 break in slope will be maintained and the shoulder flattened until the shoulder slope reaches the minimum of 0.02 downward from the edge of pavement. Any further increase in pavement superelevation will necessitate sloping the inside half of the shoulder toward the pavement and the outer half outward, both at 0.02.

These slopes will be held with further increase in pavement superelevation until the maximum break of 0.07 at the pavement edge is again reached. This maximum break will then be held and shoulder slopes steepened with additional superelevation.

SHOULDER ON LOW SIDE Maintain 0.06 drop across inside shoulder until pavement cross slope reaches 0.06. For pavement cross slopes greater than 0.06, shoulder to have same slope as pavement.

NOTE These details apply to both paved and grassed shoulders. For median shoulders use 0.05 in lieu of 0.06.

GENERAL NOTES

1. For curves in municipal areas, see Index No. 511.

STATE OF FLORIDA DEPARTMENT OF TRANSPORTATION
ROAD DESIGN

SUPERELEVATION

	Names	Dates
Designed By		
Drawn By	HFW	5/65
Checked By	LMF	10/74
F.H.W.A. Approved: 7/7/75		

Approved By: State Roadway Design Engineer

Revision No.	Sheet No.	Index No.
92	1 of 2	510

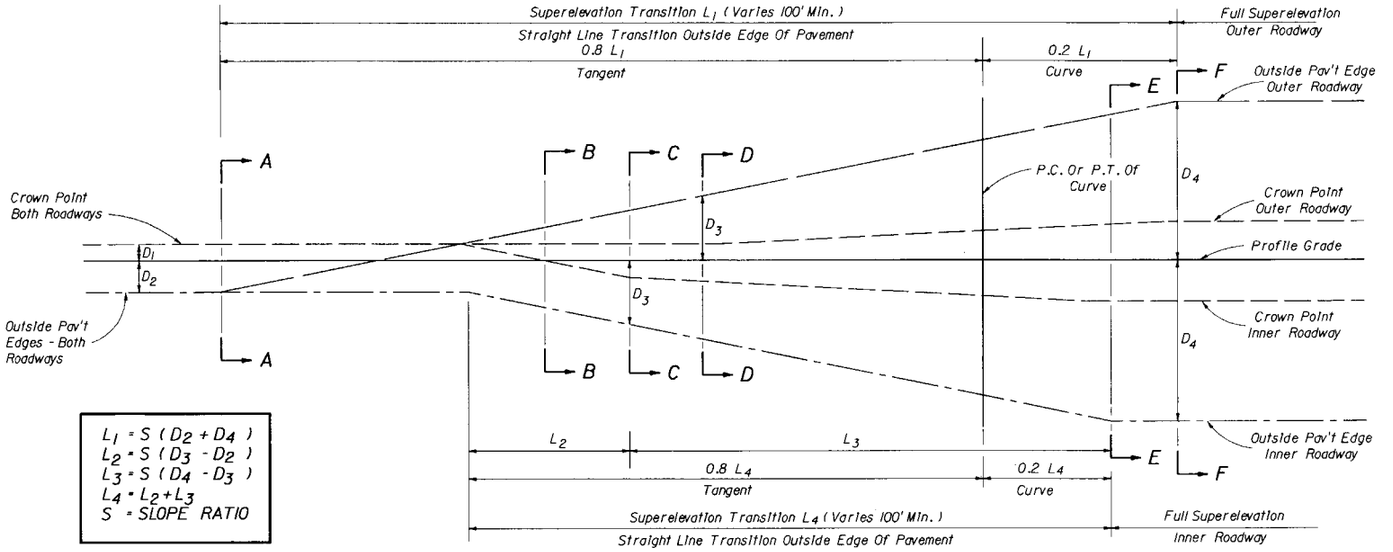

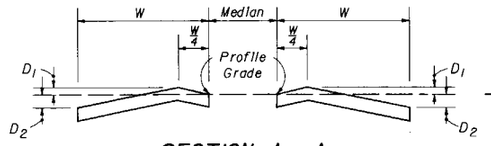

SECTION A - A

NORMAL CROWNED SECTION

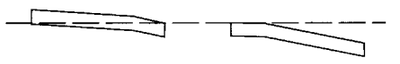

SECTION B - B

SUPERELEVATION SECTION LT. & RT.



SECTION C - C

SUPERELEVATION SECTION LT.
PLANE INCLINED SECTION RT.

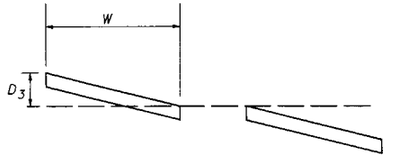

SECTION D - D

PLANE INCLINED SECTION LT.
SUPERELEVATION TRANSITION RT.

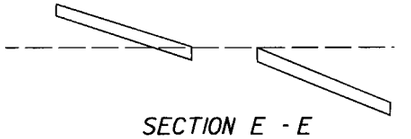

SECTION E - E

SUPERELEVATION TRANSITION LT.
FULL SUPERLEVATION RT.

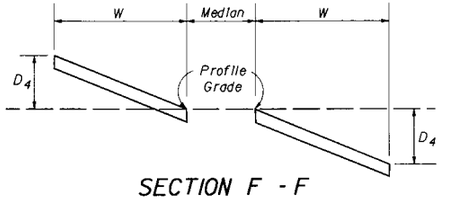

SECTION F - F

FULL SUPERELEVATION LT. & RT.

8 - LANE PAVEMENT WITH ONE LANE SLOPED TO MEDIAN

STATE OF FLORIDA DEPARTMENT OF TRANSPORTATION
ROAD DESIGN

SUPERELEVATION

	Names	Dates
Designed By	WAL	08/77
Drawn By	LMF	08/77
Checked By	WAL	08/77
F.H.W.A. Approved:		11/02/77

Approved By
State Design Engineer, Roadways

Revision No.	Sheet No.	Index No.
81	2 of 2	510

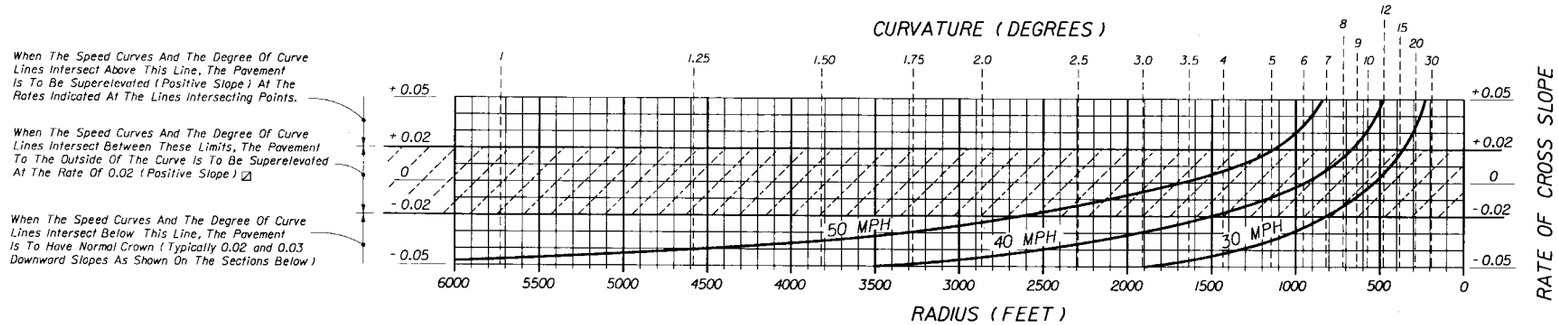

REMOVAL OF CROWN AND/OR SUPERELEVATION FOR CURVATURE AT VARIOUS DESIGN SPEEDS

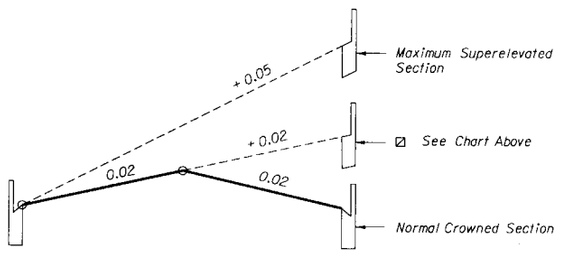

TWO TRAVEL LANES EACH DIRECTION

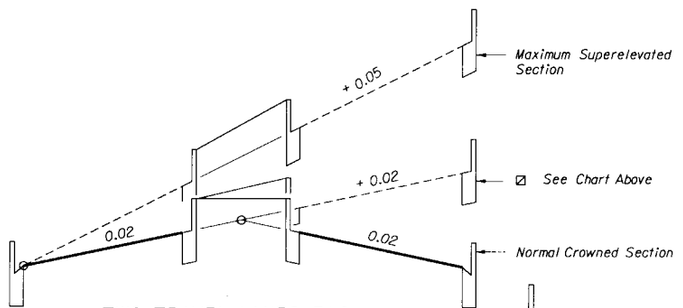

TWO TRAVEL LANES EACH DIRECTION WITH MEDIAN

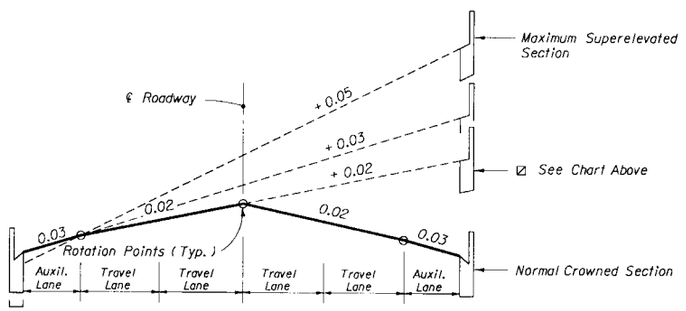

TWO TRAVEL LANES EACH DIRECTION WITH AUXILIARY LANES

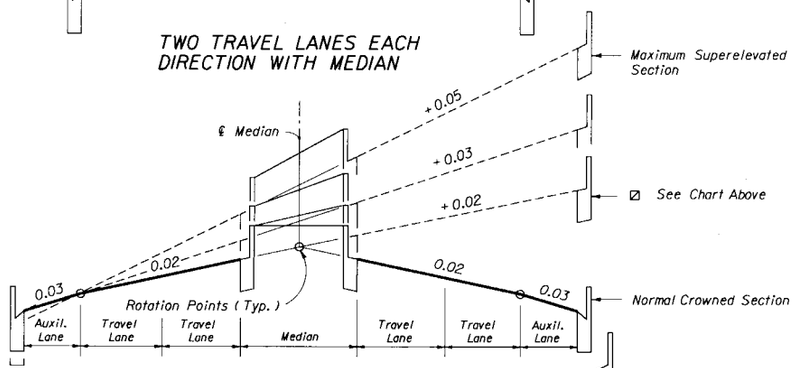

TWO TRAVEL LANES EACH DIRECTION WITH MEDIAN AND AUXILIARY LANES

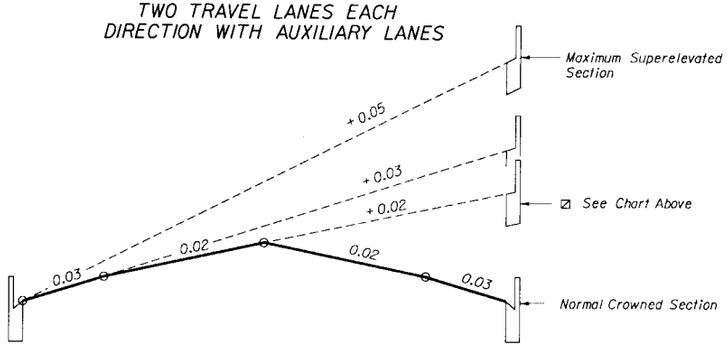

THREE TRAVEL LANES EACH DIRECTION

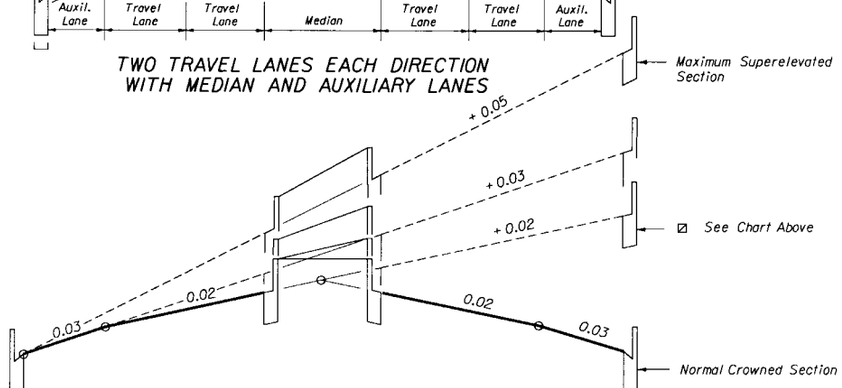

THREE TRAVEL LANES EACH DIRECTION WITH MEDIAN

GENERAL NOTES

1. Maximum rate of superelevation (In Municipal Construction) shall be 0.05.
2. Superelevation shall be obtained by rotating the plane successively about the break points of the section until the plane has attained a slope equal to that required by the chart. Should the rotation traverse the entire section and further superelevation be required, the remaining rotation of the plane shall be about the low edge of the inside travel lane.

   Crown is to be removed in the auxiliary lane to the outside of the curve only when the adjoining travel lanes require positive superelevation.
3. When positive superelevation is required, the slope of the gutter on the high side shall be a continuation of the slope of the superelevated pavement.
4. In construction, short vertical curves shall be placed at all angular profile breaks within the limits of the superelevation transition.
5. Minimum gutter grades within the limits of the superelevation transition shall be 0.2%.
6. The variable superelevation transition length "L" shall have a minimum value of 50 feet for design speeds under 40 MPH and 75 feet for design speeds of 40 MPH or greater.
7. Municipal sections having lane arrangements different from those shown, but composed of a series of planes, shall be superelevated in a similar manner.
8. For curves on rural highways, urban freeways and high speed urban highways, see Index No. 510.

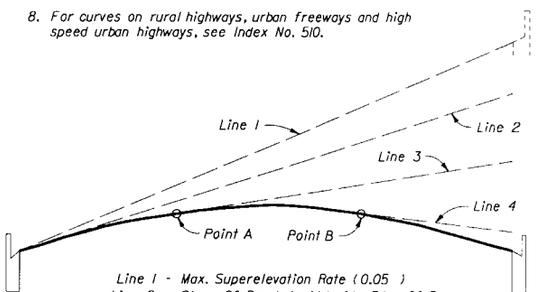

Line 1 - Max. Superelevation Rate (0.05)
Line 2 - Slope Of Parabola At Inside Edge Of Pavt.
Line 3 - Positive Superelevation Rate Less Than Max. Slope Of Parabola.
Line 4 - Adverse Superelevation.

Values obtained from the chart are also applicable to a parabolic crown section. When this type section is used, superelevation is established by rotating a tangent about the arc of the parabolic crown until the desired slope is attained (points A & B on sketch). The normal parabolic crown will be maintained outside the limits of the plane thus formed.

PARABOLIC SECTION

STATE OF FLORIDA DEPARTMENT OF TRANSPORTATION
ROAD DESIGN

SUPERELEVATION
MUNICIPAL CONSTRUCTION

	Names	Dates
Designed By	WLB/JVG	66 & 90
Drawn By	CDR/HSD	67 & 90
Checked By	RLO/JVG	67 & 90
F.H.W.A. Approved:		5/20/77

Approved By _____
State Roadway Design Engineer

Revision No.	Sheet No.	Index No.
92	1 of 2	511

LINE	DESCRIPTION
A	Inside Travel Lane
B	Inside Lane Line
C	Inside Median Edge Pavement
D	℄ Construction
E	Outside Median Edge Pavement
F	Outside Lane Line
G	Outside Travel Lane
Inside And Outside Are Relative To Curve Center	

*d (Slope Ratio)	
30 MPH	1: 100
40 MPH	1: 125
45-50 MPH△	1: 150

△ 1: 125 May Be Used For 45 MPH Under Restricted Conditions.

D	R	V = 30mph e	V = 40mph e	V = 50mph e
0° 15'	22918'	NC	NC	NC
0° 30'	11459'	NC	NC	NC
0° 45'	7639'	NC	NC	RC
1° 00'	5730'	NC	RC	RC
1° 30'	3820'	RC	RC	.024
2° 00'	2865'	RC	.022	.028
2° 30'	2292'	RC	.026	.031
3° 00'	1910'	.020	.029	.033
3° 30'	1637'	.023	.032	.036
4° 00'	1432'	.025	.033	.038
5° 00'	1146'	.028	.036	.043
6° 00'	955'	.031	.039	.047
7° 00'	819'	.032	.041	
8° 00'	716'	.034	.044	
9° 00'	637'	.035	.046	
10° 00'	573'	.037	.048	
11° 00'	521'	.038		
12° 00'	477'	.039		
13° 00'	441'	.040		
14° 00'	409'	.043	e Max. = 0.05	
16° 00'	358'	.045		
18° 00'	318'	.047		
20° 00'	286'	.050		

The superelevation rates shown above are to be used for arterials in suburban areas where development is such that these higher rates may be uniformly applied on all curves; where successive curves and the runoff between curves are generally balanced; and, where sufficient R/W is available to make suitable connections.

SPECIAL APPLICATION SUPERELEVATION RATES

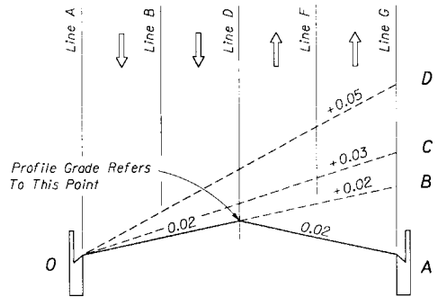

SECTION 0-A to 0-E

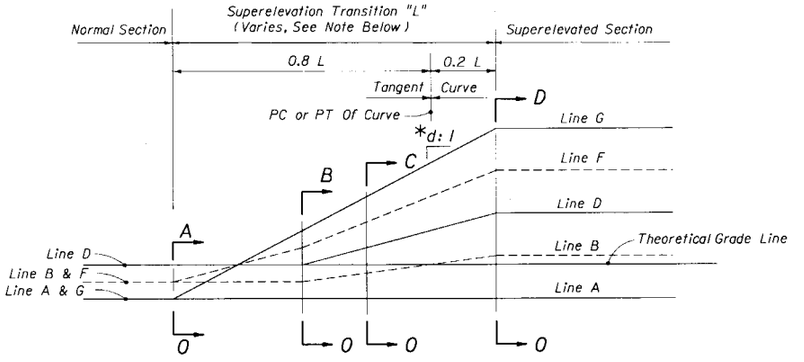

PROFILE

TWO LANES EACH DIRECTION

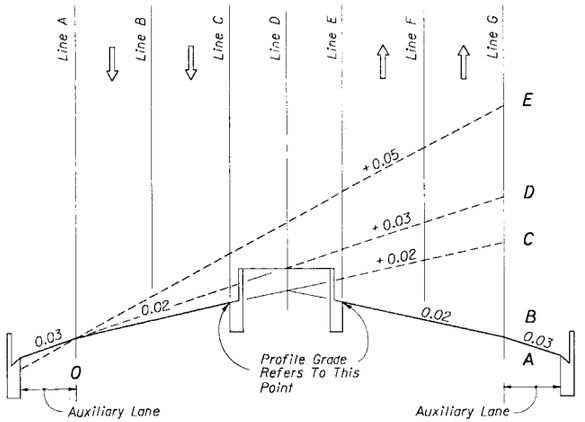

SECTION 0-A to 0-E

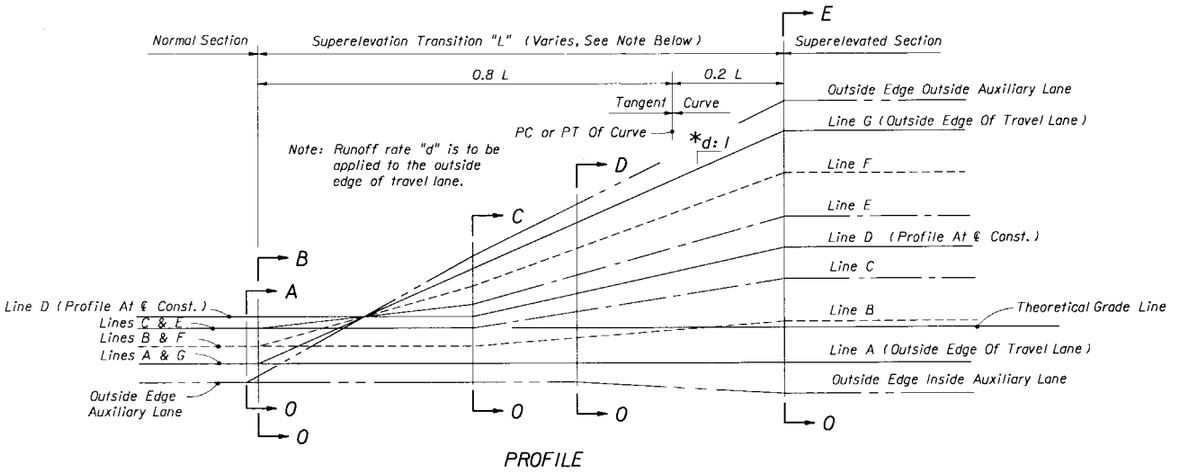

PROFILE

TWO LANES EACH DIRECTION WITH MEDIAN AND AUXILIARY LANE

Note: The sections and profiles shown are examples of superelevation transitions. Similar schemes should be used for roadways having other sections.

EXAMPLE SUPERELEVATION SECTIONS AND PROFILES

STATE OF FLORIDA DEPARTMENT OF TRANSPORTATION
ROAD DESIGN

SUPERELEVATION
MUNICIPAL CONSTRUCTION

	Names	Dates
Designed By	WLB/JVG	66 & 90
Drawn By	CDR/HSD	67 & 90
Checked By	RLO/JVG	67 & 90
F.H.W.A. Approved:		05/20/77

Approved By
State Roadway Design Engineer

Revision No.	Sheet No.	Index No.
92	2 of 2	511

LAYER THICKNESS FOR ASPHALTIC CONCRETE STRUCTURAL COURSES

(Layers Are Listed In Sequence Of Construction)

COURSE THICKNESS (Inches)	LAYER THICKNESS (Inches)																													
	Type S-II With Type S-I Top Layer				Type S-II With Type S-III Top Layer				Type S-I				Type S-I With Type S-III Top Layer				Type S-III				Type S-II 1st Layer With Type S-I 2nd And Top Layer											
	1st	2nd	3rd	4th	1st	2nd	3rd	4th	1st	2nd	3rd	4th	1st	2nd	3rd	4th	1st	2nd	3rd	4th	1st	2nd	3rd	4th	1st	2nd	3rd	4th	1st	2nd	3rd	4th
1																	1															
1 1/2									1 1/2																							
2													1 1/4	3/4																		
2 1/2									1 1/4	1 1/4			1 1/2	1																		
3					2	1			1 1/2	1 1/2			2	1																		
3 1/2	2	1 1/2							2	1 1/2			1 1/4	1 1/4	1																	
4	2	2							2	2			1 1/2	1 1/2	1																	
4 1/2	2 1/2	2							1 1/2	1 1/2	1 1/2		2	1 1/2	1																	
5					2	2	1														2	1 1/2	1 1/2									
5 1/2	2	2	1 1/2		2 1/2	2	1														2 1/2	1 1/2	1 1/2									
6	2 1/2	2	1 1/2		2 1/2	2 1/2	1														2 1/2	2	1 1/2									

DESIGN NOTES

It is desirable that the top layer of the roadway overlay and the adjacent shoulder structural course be constructed in one pass. The following apply when a four foot shoulder meeting the minimum standards is to be constructed in conjunction with an overlay of the roadway:

1. If alternate friction courses are not to be shown on the typical section, use the following:

ROADWAY COURSE THICKNESS Type S		SHOULDER Type S
1.0"	w/ any FC	1.0"
1.5"	w/ any FC	1.5"
2.0"	w/ FC 1-4	0.75"
2.25*	w/ FC 2	1.0"
2.5" up	w/ any FC	1.0"

*The increased thickness is required to insure a 1.0" thickness of Type S on the shoulder under the open graded friction course and to meet the requirements of the Min/Max criteria of this index.

2. If alternate friction courses are to be shown on the typical section, use one of the following combinations:

ROADWAY COURSE THICKNESS Type S		SHOULDER Type S
1.0"	w/ FC 1-4	1.0"
Alt. 1.5"	w/ FC 2	1.5"
1.5"	w/ FC 1-4	1.5"
Alt. 2.0"	w/ FC 2	2.0"
2.0"	w/ FC 1-4	0.75"
Alt. 2.5"	w/ FC 2	1.25"
2.5" and up	w/ FC 1-4	1.0"
Alt. (plus 0.5")	w/ FC 2	1.5"

GENERAL NOTES

1. If combinations other than those shown in the table are used, the thickness must be consistent with the following thickness ranges.

Type Mix	Min.	Max.
S-I	1 1/4"	2"
S-II	2"	2 1/2"
S-III	3/4"	1 1/4"

Multiple layers shall be used when possible. Layer combinations shall be as approved by the Engineer.

2. In addition to the Min.-Max. thickness requirements, the following restrictions are placed on the respective material when used as a structural course:

S-I	May not be used in the 1st layer of courses over 4 1/2" thick.
S-II	May not be used in the final (top) structural layer
S-III	Limited to the final (top) structural layer, one layer only.

3. When quantities are bid as tonnage items, equivalent tonnage layer thickness will be constructed (ie., 100# = one square yard inch).

4. The designer should consider stage construction for course thicknesses greater than 4 1/2".

5. When construction includes the paving of adjacent 4' wide shoulders, the layer thickness for the upper pavement layer and shoulder shall be the same and paved in a single pass. See Design Notes.

STATE OF FLORIDA DEPARTMENT OF TRANSPORTATION
ROAD DESIGN

FLEXIBLE PAVEMENT

LAYER THICKNESS FOR STRUCTURAL COURSES

	Names	Dates
Designed By		
Drawn By	WNL	09/85
Checked By	WNL	09/85
F.H.W.A. Approved:		

Approved By _____ State Pavement Design Engineer

Revision No.	Sheet No.	Index No.
92	1 of 1	513

Base Group & Structural Range	Limerock LBR 100 (.18)	Cemented Coquina LBR 100 (.18)	ABC-3 (Min. Marshall Stability 1000) (.30)	Bank Run Shell LBR 100 (.16)	Graded Aggregate Base LBR 100 (.15)	Composite Bases*: ABC-1 And 4" Limerock Subbase LBR 100 (.20) And (.16)	ABC-2 And 4" Limerock Subbase LBR 100 (.25) And (.16)	ABC-3 And 4" Limerock Subbase LBR 100 (.30) And (.16)	ABC-1 And 4" Cemented Coquina Subbase LBR 100 (.20) And (.16)	ABC-2 And 4" Cemented Coquina Subbase LBR 100 (.25) And (.16)	ABC-3 And 4" Cemented Coquina Subbase LBR 100 (.30) And (.16)	ABC-1 And 4" Bank Run Coquina Subbase LBR 100 (.20) And (.14)	ABC-2 And 4" Bank Run Shell Subbase LBR 100 (.25) And (.14)	ABC-3 And 4" Bank Run Shell Subbase LBR 100 (.30) And (.14)	ABC-1 And 4" Graded Aggr. Subbase LBR 100 (.20) And (.14)	ABC-2 And 4" Graded Aggr. Subbase LBR 100 (.25) And (.14)	ABC-3 And 4" Graded Aggr. Subbase LBR 100 (.30) And (.14)	RAP Base (TBA)
1 (.58-.62)	△ 001 4"	△ 003 4"	△ 007 4"	△ 032 4"	015 4" .60														□ 031 5"
2 (.72-.78)	999 4" .72	043 4" .72	△ 047 4"	072 4½" .72	055 5" .75														
3 (.86-.94)	998 5" .90	984 5" .90	△ 087 4"	112 5½" .88	095 6" .90														
4 (1.00-1.10)	985 6" 1.08	123 6" 1.08	△ 127 4"	152 6½" 1.04	135 7" 1.05														
5 (1.15-1.25)	997 6½" 1.17	996 6½" 1.17	167 4" 1.20	192 7" 1.20	175 8" 1.20														
6 (1.29-1.41)	201 7½" 1.35	203 7½" 1.35	207 4½" 1.35	732 8½" 1.36	215 9" 1.35	△ 216 4"			△ 219 4"			222 4" 1.36			225 4" 1.36				
7 (1.44-1.56)	994 8" 1.44	993 8" 1.44	247 5" 1.50	272 9½" 1.52	255 10" 1.50	256 4" 1.44			259 4" 1.44			262 4½" 1.46	263 4" 1.56		265 4½" 1.46	266 4" 1.56			
8 (1.58-1.72)	991 9" 1.62	283 9" 1.62	287 5½" 1.65	312 10½" 1.68	295 11" 1.65	296 5" 1.64	297 4" 1.64		299 5" 1.64	300 4" 1.64		302 5½" 1.66	303 4½" 1.69		305 5½" 1.66	306 4½" 1.69			
9 (1.73-1.87)	990 10" 1.80	989 10" 1.80	327 6" 1.80	352 11" 1.76	335 12" 1.80			338 4" 1.34			341 4" 1.84			344 4" 1.76			347 4" 1.76		
10 (1.88-2.02)	983 10½" 1.89	363 10½" 1.89	367 6½" 1.95	392 12" 1.92	Ø 375 13" 1.95			378 4½" 1.99			381 4½" 1.99			384 4½" 1.91			387 4½" 1.91		
11 (2.03-2.17)	987 11½" 2.07	403 11½" 2.07	407 7" 2.10	Ø 432 13" 2.08	Ø 415 14" 2.10			986 5" 2.14			421 5" 2.14			424 5" 2.06			427 5" 2.06		
12 (2.18-2.32)	441 12½" 2.25	443 12½" 2.25	447 7½" 2.25	Ø 472 14" 2.24				458 5½" 2.29			461 5½" 2.29			464 5½" 2.21			467 5½" 2.21		
13 (2.33-2.47)	Ø 481 13" 2.34	Ø 483 13" 2.34	487 8" 2.40					498 6" 2.44			501 6" 2.44			504 6" 2.36			507 6" 2.36		
14 (2.48-2.62)	Ø 521 14" 2.52	Ø 523 14" 2.52	527 8½" 2.55					538 6½" 2.59			541 6½" 2.59			544 6½" 2.51			547 6½" 2.51		
15 (2.63-2.77)			567 9" 2.70					982 7" 2.74			581 7" 2.74			584 7" 2.66			587 7" 2.66		
□ 16 (.60-.61)	△ 981 4"	△ 980 4"	△ 606 3"	△ 632 4"	615 4" .60														631 5"

GENERAL NOTES

1. On new construction and complete reconstruction projects where an entirely new base is to be built, the design engineer may specify just the Base Group and any of the unrestricted General Use Optional Bases shown in that Base Group may be used. Note, however, that some thick rock bases are limited to widening which prevents their general use.
2. On any type of widening project, the base options to be used must be specified by the designer and shown in the plans.
3. Where base options are specified in the plans, only those options may be bid and used.
4. The designer may require the use of a single base option, for instance ABC 3 in a high water condition. This will still be bid as Optional Base.
5. The contractor will indicate the basis for his bid by designating the three digit option code on the bid blank.

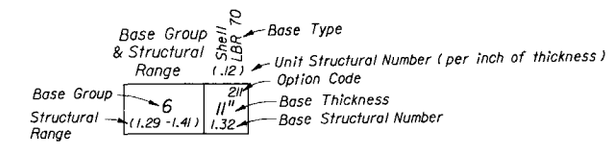

LEGEND

* For composite bases, the construction of both the subbase and ABC will be paid for under the contract unit price for Optional Base. The base thickness shown is ABC. All subbase thicknesses are 4". The base structural number shown is for the composite base.

Ø To be used for widening only, three feet or less.

△ Based on minimum practical thickness.

□ Generally restricted to shoulder base construction.

** Includes plant mixed soil cement proportioned by the Brush Loss Design Criteria Method per Article 270-3.3.

GENERAL USE OPTIONAL BASE GROUPS AND STRUCTURAL NUMBERS

STATE OF FLORIDA DEPARTMENT OF TRANSPORTATION
ROAD DESIGN

OPTIONAL BASE GROUP AND STRUCTURAL NUMBERS

	Names	Dates
Designed By	DCB	10/79
Drawn By	HSD	10/79
Checked By	KNM	10/79
F.H.W.A. Approved:		

Approved By _____ State Pavement Design Engineer

Revision No.	Sheet No.	Index No.
92	1 of 2	514

Base Group & Structural Range	Soil Cement (300 PSI) (Plant Mixed)** (.15)	Limerock Stabilized LBR 70 (.12)	Sand-Clay LBR 75 (.12)	Shell LBR 70 (.12)	Shell Stabilized LBR 70 (.10)	Soil Cement (300 PSI) (Road Mixed) (.15)	SAHM (Min. Marshall Stability 300) □ (.15)	ABC-1 (Min. Marshall Stability 500) (.20)	ABC-2 (Min. Marshall Stability 750) (.25)	Soil Cement (500 PSI) (Plant Mixed) (.20)	Econocrete (800 PSI) (.22)	Econocrete (1100 PSI) (.25)
1 (.58-.62)	008 4" .60	009 5" .60	010 5" .60	011 5" .60	012 6" .60	△ 013 6"	014 4" .60	△ 005 4"	△ 006 4"	△ 028 4"	△ 029 4"	△ 030 4"
2 (.72-.78)	048 5" .75	049 6" .72	050 6" .72	051 6" .72	052 7½" .75	△ 053 6"	054 5" .75	△ 045 4"	△ 046 4"	068 4" .80	△ 069 4"	△ 070 4"
3 (.86-.94)	088 6" .90	089 7½" .90	090 7½" .90	091 7½" .90	092 9" .90	093 6" .90	094 6" .90	085 4½" .90	△ 086 4"	108 4½" .90	109 4" .88	△ 110 4"
4 (1.00-1.10)	128 7" 1.05	129 9" 1.08	130 9" 1.08	131 9" 1.08	132 10½" 1.05	133 7" 1.05		125 5" 1.00	126 4" 1.00	148 5" 1.00	149 4½" .99	150 4" 1.00
5 (1.15-1.25)	168 8" 1.20	169 10" 1.20	170 10" 1.20	171 10" 1.20	172 12" 1.20	173 8" 1.20		995 6" 1.20	166 5" 1.25	188 5½" 1.10	189 5" 1.10	190 5" 1.25
6 (1.29-1.41)	208 9" 1.35	209 11" 1.32	210 11" 1.32	211 11" 1.32						228 6½" 1.30	229 6" 1.32	230 5½" 1.38
7 (1.44-1.56)	248 10" 1.50	249 12" 1.44	250 12" 1.44	251 12" 1.44						268 7½" 1.50	269 7" 1.54	270 6" 1.50
8 (1.58-1.72)	288 11" 1.65									308 8" 1.60	309 7½" 1.65	310 6½"
9 (1.73-1.87)											349 8" 1.76	350 7" 1.75
10 (1.88-2.02)											389 9" 1.98	390 8" 2.00
11 (2.03-2.17)											429 9½" 2.09	430 8½" 2.13
12 (2.18-2.32)											469 10" 2.20	470 9" 2.25
13 (2.33-2.47)											509 11" 2.42	510 9½" 2.38
14 (2.48-2.62)											549 11½" 2.53	550 10" 2.50
15 (2.63-2.77)											589 12" 2.64	590 11" 2.75
□ 16 (.60 -.61)	608 4" .60	609 5" .60	610 5" .60	611 5" .60	612 6" .60	△ 613 6"	614 4" .60	604 3" .60	△ 605 3"	△ 628 4"	△ 629 4"	△ 630 4"

Not Recommended For Design
Year 18 Kip Loads > 1,000,000

Note: These base materials may be used on FDOT projects when approved in writing by the District Materials Engineer and shown in the plans.

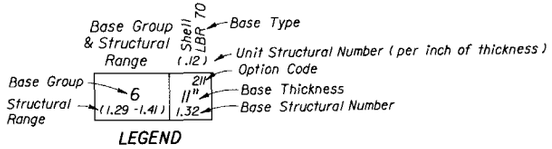

△ Based on minimum practical thickness.

□ Generally restricted to shoulder base construction.

LIMITED USE OPTIONAL BASE GROUPS AND STRUCTURAL NUMBERS

STATE OF FLORIDA DEPARTMENT OF TRANSPORTATION
ROAD DESIGN

OPTIONAL BASE GROUP AND STRUCTURAL NUMBERS

	Names	Dates
Designed By	DCB	10/79
Drawn By	HSD	10/79
Checked By	KNM	10/79
F.H.W.A. Approved:		

Approved By
State Pavement Design Engineer

Revision No.	Sheet No.	Index No.
92	2 of 2	514

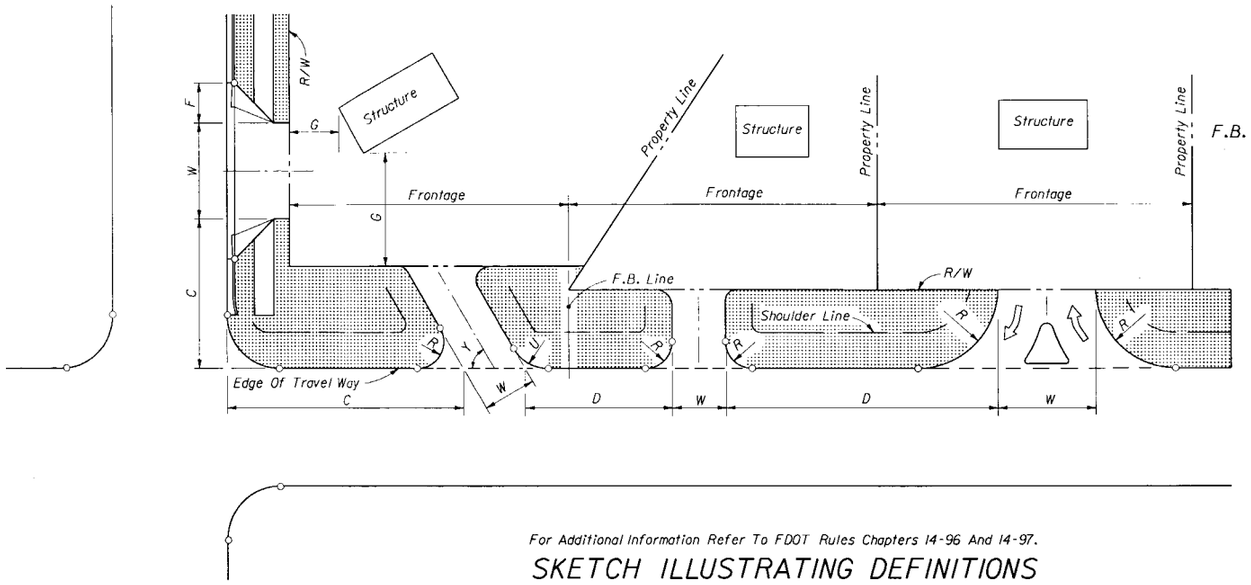

Return Radius Point Or Flare Point

Buffer Areas

F.B. Line Frontage Boundary Line

W Driveway Width

Y Driveway Angle

C Corner Clearance

G Setback

R Outside Radius

U Inside Radius

D Distance Between Connections

F Flare

LEGEND

For Additional Information Refer To FDOT Rules Chapters 14-96 And 14-97.

SKETCH ILLUSTRATING DEFINITIONS

ELEMENT DESCRIPTION	URBAN (CURB & GUTTER)			RURAL		
	1-20 Trips/Day or 1-5 Trips/Hour	21-600 Trips/Day or 6-60 Trips/Hour	601-4000 Trips/Day◪ or 61-400 Trips/Hour	1-20 Trips/Day or 1-5 Trips/Hour	21-600 Trips/Day or 6-60 Trips/Hour	601-4000 Trips/Day◪ or 61-400 Trips/Hour
		2-Way □	2-Way □		2-Way □	2-Way □
CONNECTION WIDTH W	12' Min. 24' Max.	24' Min. 36' Max.	24' Min. 36' Max.	12' Min. 24' Max.	24' Min. 36' Max.	24' Min. 36' Max.
FLARE (Drop Curb) F	10' Min.	10' Min.	N/A	N/A	N/A	N/A
RETURNS (Radius) R & U	N/A	△	25' Min. 50' Std. 75' Max.	15' Min. 25' Std. 50' Max.	25' Min. 50' Std. 75' Max.	25' Min. 50' Std. (Or 3-Centered Curves)
ANGLE OF DRIVE Y		60°-90°	60°-90°		60°-90°	60°-90°
DIVISIONAL ISLAND (Throat Median)		4'-22' Wide	4'-22' Wide		4'-22' Wide	4'-22' Wide
SETBACK G	12' Min., All categories. See General Note No. 5.					

◪ Street or road intersection design, with possible auxiliary lanes and channelization, may be necessary. Intersection design, with possible auxiliary lanes and channelization, should be considered for connections with more than 4000 trips/days.

□ "2-Way" refers to one "in" movement and one "out" movement i.e. not exclusive left or right turn lanes on the connection.

△ Small radii may be used in lieu of flares as approved by the Department.

DESIGN NOTE: 1-Way connections will be designed to effectively eliminate unpermitted movements.

NOT INTENDED FOR FULL INTERSECTION DESIGN

SUMMARY OF GEOMETRIC REQUIREMENTS FOR TURNOUTS

GENERAL NOTES

1. For definitions and descriptions of access connection "Categories" and access "Classifications" of highway segments, and for other detailed information on access to the State Highway System, refer to FDOT Rule Chapter 14-96, "State Highway Connection Permits Administrative Process" and Rule Chapter 14-97, "State Highway System Access Management Classification System And Standards"
2. For this index the term 'turnout' applies to that portion of driveways, roads or streets adjoining the outer roadway. For this index the term 'connection' encompasses a driveway, street or road and their appurtenant islands, separators, transition tapers, auxiliary lanes, travelway flares, drainage pipes and structures, crossovers, sidewalks, curb cut ramps, signing, pavement marking, required signalization, maintenance of traffic or other means of access to or from controlled access facilities. The turnout requirements set forth in this index do not provide complete intersection design, construction or maintenance requirements.
3. The location, positioning, orientation, spacing and number of connections and median openings shall be in conformance with Administrative Rule 14-97.
4. On Department construction projects all driveways not shown on the plans are to be reconstructed at their existing location in conformance to these standards, or, in conformance to permits issued during the construction project.
5. Driveways shall have sufficient length and size for all vehicular queueing, stacking, manuvering, standing and parking to be carried out completely beyond the right of way line. Except for vehicles stopping to enter the highway, the turnout areas and drives within the right of way shall be used only for moving vehicles entering or leaving the highway.
6. Connections with expected daily traffic over 4000 vpd in urban areas are to be constructed as intersecting streets with curb and gutter, and in rural areas are to be constructed as intersecting roads. The design requirement of this index and that of the local government will be used to select appropriate connection widths, radii and intersection design, subject to the approval of the Department.

   For connections in urban areas with expected daily traffic less than 4000 vpd, the Department will determine if drop curbs or radius curb returns are required in accordance with existing or planned conditions. Where radius returns apply, the design requirements of this index and that of the local government will be used to select appropriate connection widths, radii and intersection design, subject to the approval of the Department.

   For connections that are intended to daily accommodate either multi-unit vehicles or single unit vehicles exceeding 30 feet in length, returns with 50' radii are to be used, unless otherwise called for in the plans or otherwise stipulated by permit. Where large numbers of multi-unit vehicles will use the connection, the connection width and radii are to be increased and auxiliary lanes, tapers, lane flares separators and/or islands constructed, as determined by the Department to be necessary for safe turning movements.
7. Any connection on a highway having a posted or operating speed over 45 mph shall have radial returns. Any connection requiring or having a specified median opening with left turn storage and served directly by that opening shall have radial returns.
8. Where a connection is intended to align with a connection across the highway, the through lanes are to align directly with the corresponding through lanes.
9. For new connections and for connections on all new construction and reconstruction projects, pavement materials and thicknesses shall meet the requirements applicable to either that detailed for "Urban Flared Turnouts", or, that described in "Table 515-1" for connections with radial returns and/or auxiliary lanes.
10. The responsibility for the cost of construction or alteration to an access connection shall be in accordance with Administrative Rule 14-96.

DESIGN NOTES

1. Prior to the adoption of Administrative Rules 14-96 and 14-97, connections to the State Highway System were defined and permitted by Classes. Connections have been redfined by Categories under Rule 14-96; and, the term "Class" has been applied to highway segments of the State Highway System as defined under Rule 14-97.

STATE OF FLORIDA DEPARTMENT OF TRANSPORTATION
ROAD DESIGN

TURNOUTS

	Names	Dates
Designed By	COMM/JVG	90/91
Drawn By	HSD	03/91
Checked By	JVG	03/91

Approved By _____ State Roadway Design Engineer

F.H.W.A. Approved:

Revision No.	Sheet No.	Index No.
92	1 of 4	515

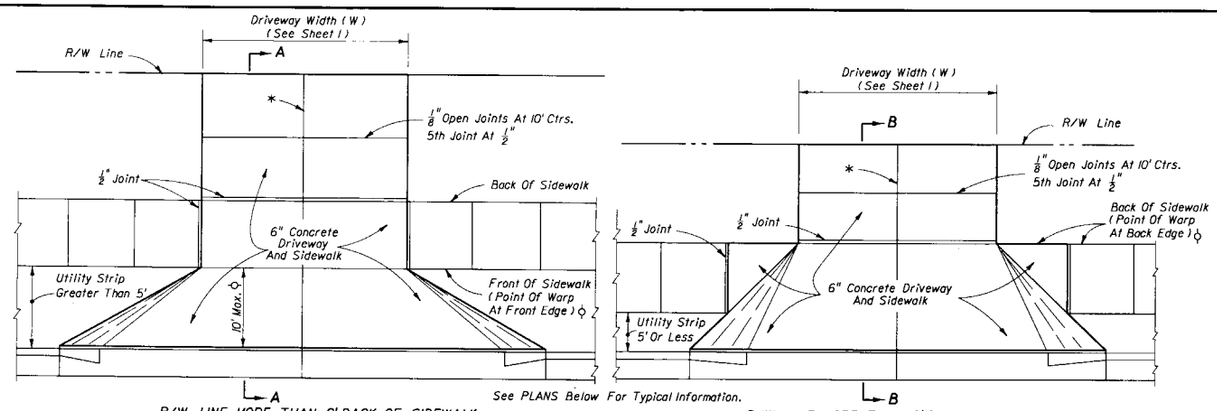

R/W LINE MORE THAN 2' BACK OF SIDEWALK
PLAN

R/W LINE MORE THAN 2' BACK OF SIDEWALK
PLAN

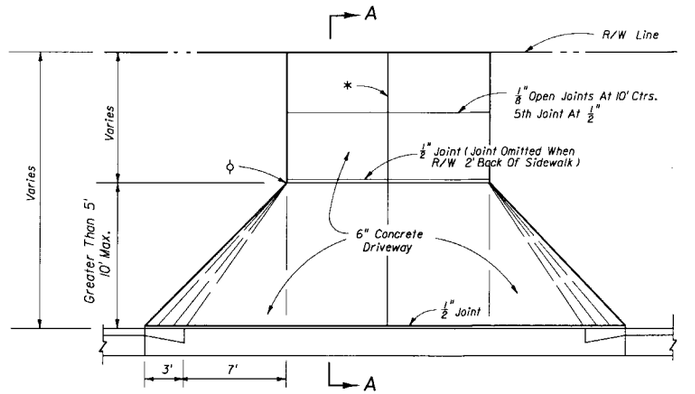

PLAN
WITHOUT SIDEWALK

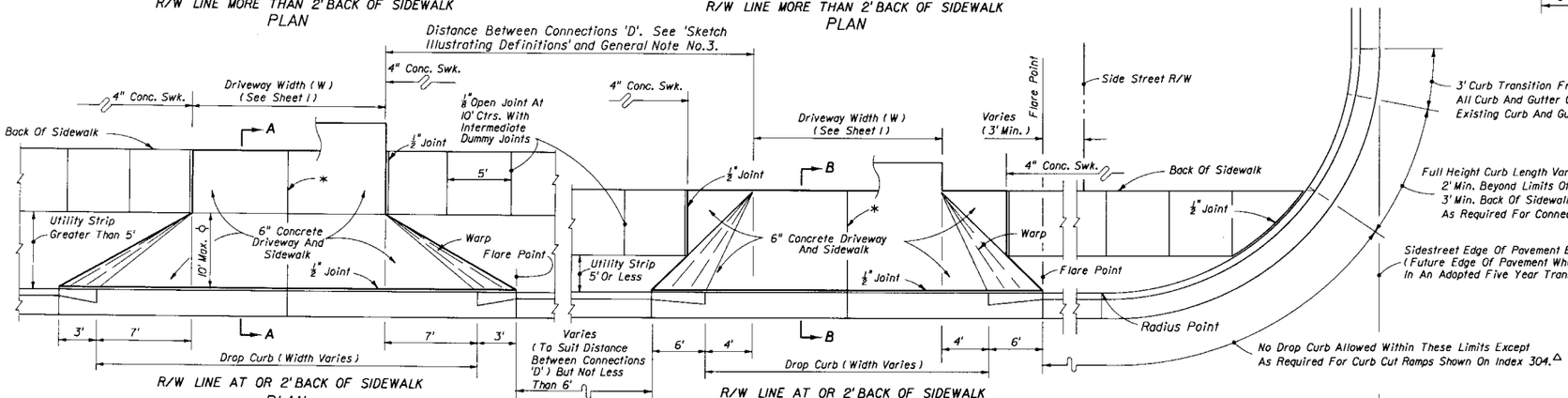

R/W LINE AT OR 2' BACK OF SIDEWALK
PLAN

R/W LINE AT OR 2' BACK OF SIDEWALK
PLAN

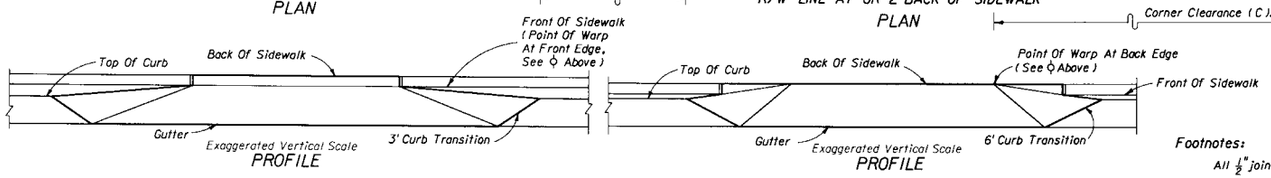

PROFILE

PROFILE

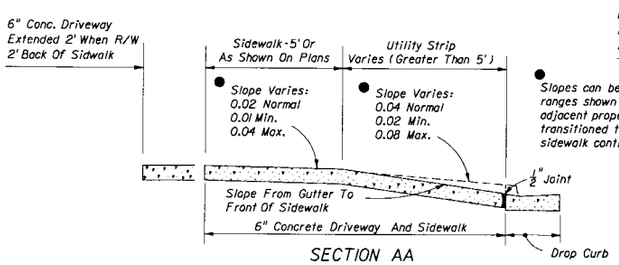

SECTION AA

WHEN DISTANCE BETWEEN CURB & SIDEWALK
IS GREATER THAN 5'

Slopes can be adjusted within the ranges shown to improved ties to adjacent properly and are to be transitioned to avoid distortion in sidewalk continunity

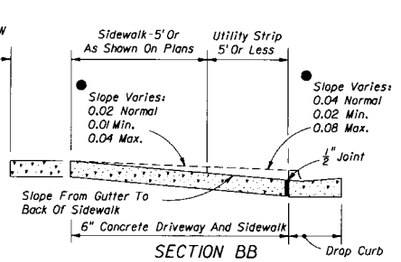

SECTION BB

WHEN DISTANCE BETWEEN CURB & SIDEWALK
IS 5' OR LESS

Footnotes:

All 1/2" joints shall be constructed with preformed joint filler.

* 1/8" Open joints placed at equal (20' max.) intervals for driveways over 20' wide. Joints in curb and gutter to match joints in driveways.

△ When connecting to sidestreet curb and gutter sections, the no drop curb limits should extend back to the sidestreet radius point. With or without curb and gutter, no driveway should encroach on the corner radius.

◊ Driveways shall be of a uniform width from the point of warp to the right of way line.

URBAN FLARED TURNOUT NOTES

1. Driveway 6" concrete pavement and drop curb shall meet the material and construction requirements of Sections 522 and 520 respectively of the FDOT Standard Specifications. The driveway foundation shall meet the requirement of Subarticle 522-4.
2. For details of drop curb and curb cut ramps refer to Indexes Nos. 300 and 304 respectively.
3. Where turnouts are constructed within existing curb and gutter, the existing curb and gutter shall be removed either to the nearest joint beyond the flare point or to the extent that no remaining section is less than 5 feet long; and, drop curb constructed in accordance with Notes Nos. 1 and 2.
4. Cost for preformed joint filler shall be included in the cost for the concrete pavement (concrete sidewalk, 6" thick).
5. For turnouts with radial returns see the requirements under the "Summary Of Geometric Requirements", the "General Notes", the details of "Rural Turnout Construction" and the detail of "Limits Of Clearing & Grubbing, Stabilization And Base At Intersections".
6. Department maintenance of pavement shall extend out to the right of way or 2 feet back of sidewalk, whichever distance is less.
7. The maintenance and operation of highway lighting, traffic signals, accociated equipment, and other necessary devices shall be the responsibility of a public agency.
8. All pavement markings on the State highways, including acceleration and deceleration lane markings, and signing installed for the operation of the State highway shall be maintained by the Department.
9. All signing and marking installed for the operation of the connection (such as stop bars and stop signs for the connection) shall be the responsibility of the permittee.

URBAN FLARED TURNOUT

STATE OF FLORIDA DEPARTMENT OF TRANSPORTATION
ROAD DESIGN

TURNOUTS

	Names	Dates
Designed By		
Drawn By	HSD/DDS	09/85
Checked By	JVG/WJR	09/85
F.H.W.A. Approved:		12/06/76

Approved By _____
State Roadway Design Engineer

Revision No.	Sheet No.	Index No.
92	2 of 4	515

Typical Half Section For Low Volume/Residential Connections

Typical Half Section For Higher Volume Connections

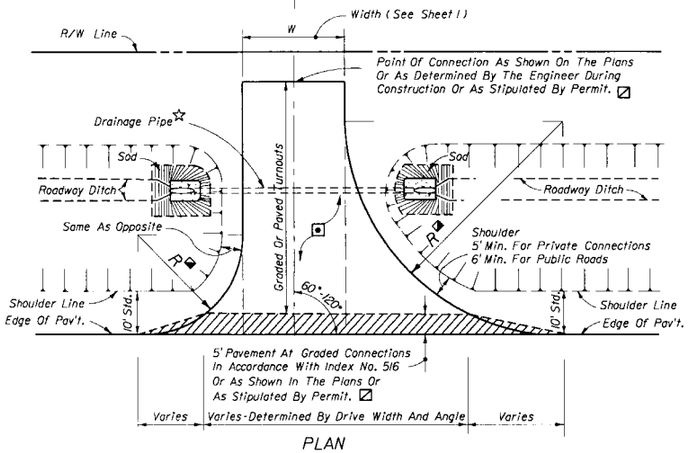

PLAN

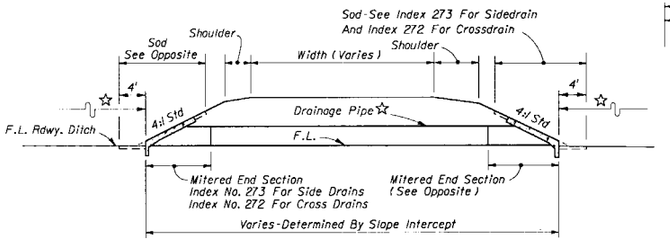

LONGITUDINAL SECTION

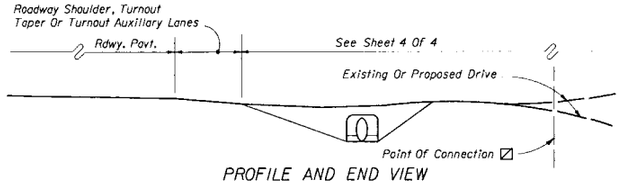

PROFILE AND END VIEW

☆ Drainage pipe size and length shall be that shown on the plans, or as stipulated by permit, or, as determined by the Engineer during construction. The size shall be at least that established by the FDOT District, but not less than 15" diameter or equivalent. For minimum cover over drainage pipe see Index No. 205. Pipe arch or elliptical pipe may be required to obtain necessary cover. At minimal cover applications a modified pavement apron is permitted. See 'PERMISSIBLE PAVEMENT MODIFICATION' Index No. 273. For spacing between adjacent pipe end treatments see Index No. 273.

◉ Stable material may be required for graded turnouts to private property as directed by the Engineer in accordance with Section 102-6 of the Standard Specifications.

▨ The 5' pavement at graded connections is not required where there is paved shoulder 4' or more in width. The 5' pavement requirement may be waived for connections serving one or two homes or field entrances with less than 20 trips per day, or 5 trips per hour as approved by permit or by the Engineer, or when not itemized in the plans.

Paved turnouts are to be constructed for all paved connecting facilities. The connecting point will be determined by the Engineer.

Paved turnouts are to be constructed for all business, commercial, industrial or high volume residential graded connecting facilities. The connecting point shall be 30' from edge of roadway pavement or at R/W line, whichever is less.

Paved turnouts are to be constructed for all connecting facilities over 4000 vehicles per day. The connecting point shall be at the R/W line.

◪ See "Summary Of Geometric Requirements For Turnouts" chart for return radii lengths and supplemental information.

RURAL TURNOUT CONSTRUCTION

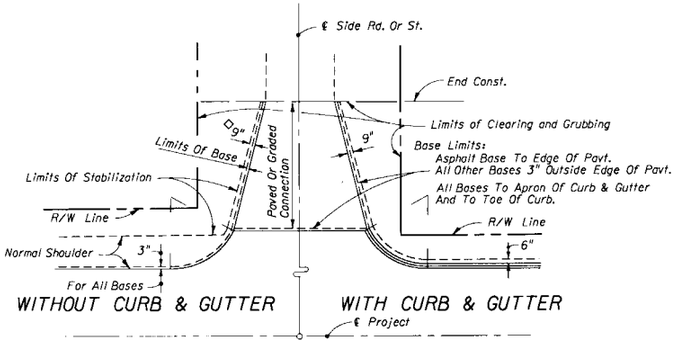

◇ 9" Or Match Exist. Stabilizing (9" Min.)

LIMITS OF CLEARING & GRUBBING, STABILIZING AND BASE AT INTERSECTIONS

MATERIAL TYPES AND THICKNESSES IN DRIVING AREAS FOR RURAL AND URBAN CONNECTIONS

COURSE	MATERIALS ②	THICKNESS (INCHES) ①	
		CONNECTIONS ③	ROADWAY ④
Structural	Ashpaltic Concrete	2	3
Bases	Limerock (LBR 100)	4	5
	Cemented Coquina (LBR 100)	4	5
	ABC-1 (Marshall 500)	4	4½
	ABC-2 (Marshall 750)	4	4
	ABC-3 (Marshall 1000)	4	4
	Soil-Cement (Plant Mix) (300 psi)	4	6
	Bank Run Shell (LBR 100)	4	5½
	Sand-Clay (LBR 75)	5	7½
	Shell (LBR 70)	5	7½
	Soil-Cement (Road Mix) (300 psi)	6	6
	Graded Aggregate	4	6

① Minimum thickness.

② All materials shall be approved by the Department prior to being placed.

③ Connection structure other than traffic lanes. See Notes 1 and 2 below.

④ Travel way flares (bypass lanes), auxiliary lanes serving more than a single connection, and all median crossovers including their auxiliary lanes and/or transition tapers. See Notes 1 and 2 below.

NOTES

1. The pavement should be structurally adequate to meet the expected traffic loads and should not be less than that shown above, except as approved by the Department for graded connections. Other Department approved pavement equivalences may be used at the discretion of the Engineer. For additional information see Index 514.
2. Auxiliary lanes and their transition tapers shall be the same structure as the abutting roadway pavement or any of the roadway structures tabulated above, whichever is thicker.
3. If an asphalt base course (ABC) is used for a turnout, its thickness may be increased to match the edge of roadway pavement in lieu of a separate structural course. Six (6) inches of Portland cement concrete will be acceptable in lieu of the asphalt base and structural courses. See Notes 4 and 5 below.
4. A structural course is required for flexible pavements when they are used for auxiliary lanes serving more than a single connection.
5. Connections paved with Portland cement concrete shall be Class I concrete at least 6" thick. The Department may require greater thickness when called for in the plans or stipulated by permit. Materials and construction are to conform with FDOT Standard Specifications Sections 345, 350 and 322.
6. The Department may require other pavement criteria where local conditions warrant.

PAVEMENT STRUCTURE FOR TURNOUTS AND AUXILIARY LANES TABLE 515-1

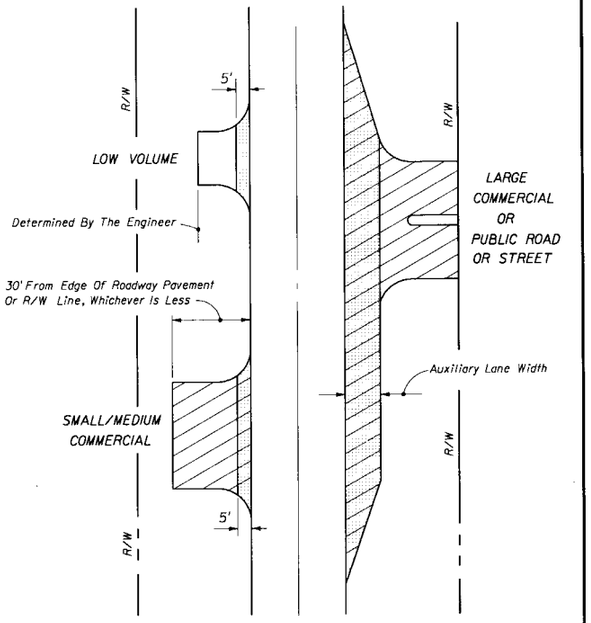

LEGEND

- Graded Or Paved
- Required Paving
- Limits Of Department Maintenance

NOTES

1. Auxiliary lane pavements and crossover pavements shall be maintained by the Department.
2. Department maintenance of turnout pavement shall extend out to 5 feet from edge of the travel way or limits of paved shoulders, and, extend to include auxiliary lanes. The remainder of any turnout paved area on the right of way shall be maintained by the owner or his authorized agent. As a function of routinely reworking shoulders, the Department may grade and shape existing material on non-paved areas beyond the maintained pavement.
3. Control and maintenance of drainage facilities within the right of way shall be solely the responsibility of the Department, unless specified differently by Department permit.
4. The maintenance and operation of highway lighting, traffic signals, associated equipment, and other necessary devices shall be the responsibility of a public agency.
5. All pavement markings on the State highways, including acceleration and deceleration lane markings, and signing installed for the operation of the State highway shall be maintained by the Department.
6. All signing and marking installed for the operation of the connection (such as stop bars and stop signs for the connection) shall be the responsibility of the permittee.

LIMITS OF CONSTRUCTION AND MAINTENANCE FOR RURAL CONNECTIONS

STATE OF FLORIDA DEPARTMENT OF TRANSPORTATION
ROAD DESIGN

TURNOUTS

	Names	Dates
Designed By		
Drawn By		
Checked By		
F.H.W.A. Approved:		

Approved By _____
State Roadway Design Engineer

Revision No.	Sheet No.	Index No.
92	3 of 4	515

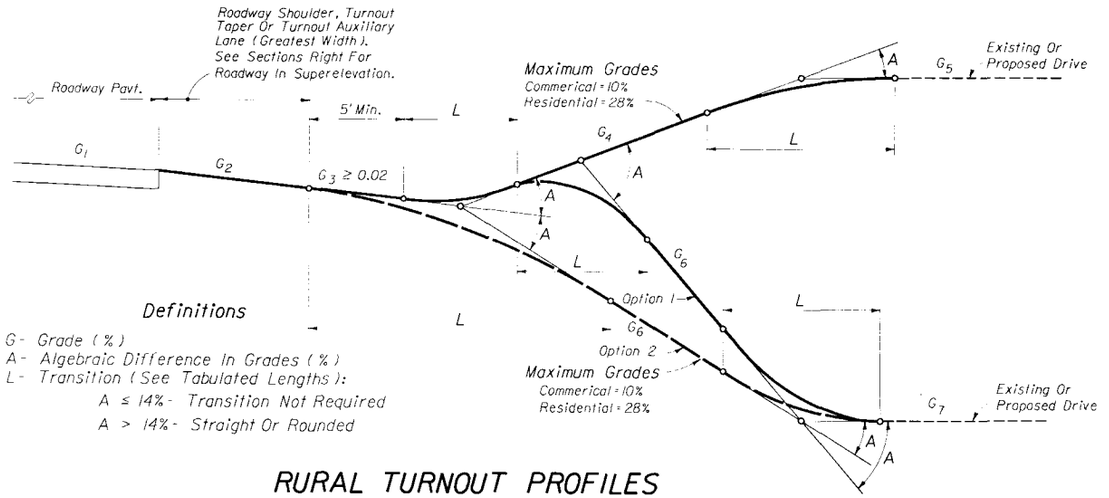

RURAL TURNOUT PROFILES

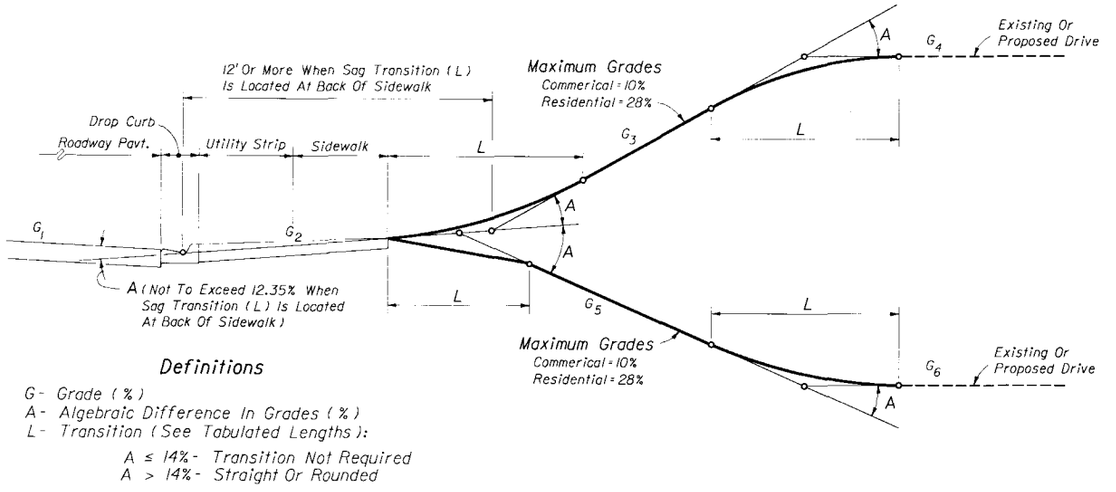

URBAN TURNOUT PROFILES

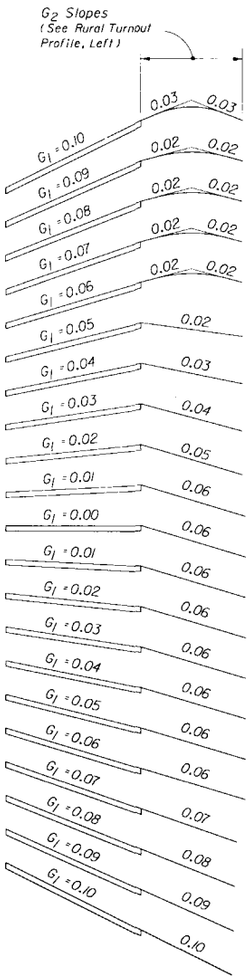

ROADWAY PAVEMENT SLOPES AND SLOPES OF ABUTTING TURNOUT SURFACES (G_2)

SUPERELEVATION SECTIONS

A	LENGTHS (L) (FT.)							
	CRESTS				SAGS			
	STRAIGHT		ROUNDED		STRAIGHT		ROUNDED	
	Desirable	Minimum	Desirable	Minimum	Desirable	Minimum	Desirable	Minimum
6-13%	3	0	5	0	3	0	5	0
14%	3	0	10	0	3	0	10	0
15%	3	2.5	10	3	5	3	10	5
16%	5	3	10	4	6	4	10	6
17%	6	3.5	10	5	8	5	10	7
18%	6	4	10	6	9	6	10	8
19%	7	4.5	10	7	11	7	12	9
20%	8	5	11	8	12	8	13	10
21%	9	5.5	12	9	13	8.5	14	11
22%	10	6	13	10	14	9	16	12
23%	10	6.5	14	10.5	14	9.5	16	12.5
24%	11	7	15	11	15	10	17	13
25%	12	7.5	15	11.5	16	10.5	18	13.5
26%	12	8	16	12	17	11	18	14
27%	13	8.5	17	12.5	17	11.5	19	14.5
28%	14	9	17	13	18	12	20	15
29%	NA	NA	22	14	NA	NA	21	17
30-31%	NA	NA	23	15	NA	NA	22	18
32-33%	NA	NA	24	16	NA	NA	23	20
34-36%	NA	NA	26	17	NA	NA	25	21
37-38%	NA	NA	27	18	NA	NA	26	22
39-41%	NA	NA	29	19	NA	NA	28	24
42-43%	NA	NA	30	20	NA	NA	29	25
44-46%	NA	NA	32	21	NA	NA	31	26
47-48%	NA	NA	33	22	NA	NA	32	27
49-51%	NA	NA	34	23	NA	NA	34	28
52-54%	NA	NA	36	24	NA	NA	35	30
55-56%	NA	NA	37	25	NA	NA	36	31

Rounded: Either circular, parabolic or spline curvature. The plans or the Engineer may specify a particular type of curvature.

Desirable: Desirable minimum lengths.
Minimum: Absolute minimum lengths.
} Greater lengths than minimum and desirable are recommended where practical for flatter and smoother profile.

RECOMMENDED TURNOUT PROFILE TRANSITION LENGTHS (L) (FT)

PROFILE AND STORMWATER RUNOFF NOTES

1. Turnouts shall neither cause water to flow on or across the roadway pavement, nor cause water ponding or erosion within the State right of way. On all rural turnouts the transition (L) nearest the roadway shall be sloped or crowned to direct stormwater runoff to the roadside ditch. Inlets, flumes or other appropriate runoff control devices shall be constructed when runoff volumes are sufficient to cause erosion of the shoulder. Similar runoff control devices shall be constructed as necessary to properly direct and control the stormwater runoff on urban turnouts.

2. The Option 1 profile is intended for locations where roadway, turnout taper and auxiliary lane stormwater runoff volumes are relatively large. The Option 2 profile is intended for locations where runoff volumes are relatively small and/or where there is no roadside ditch.

TURNOUT PROFILES

STATE OF FLORIDA DEPARTMENT OF TRANSPORTATION
ROAD DESIGN

TURNOUTS

	Names	Dates
Designed By		
Drawn By	HSD	08/82
Checked By	JVG	08/82
F.H.W.A. Approved:		09/23/82

Approved By _____
State Roadway Design Engineer

Revision No.	Sheet No.	Index No.
92	4 of 4	515

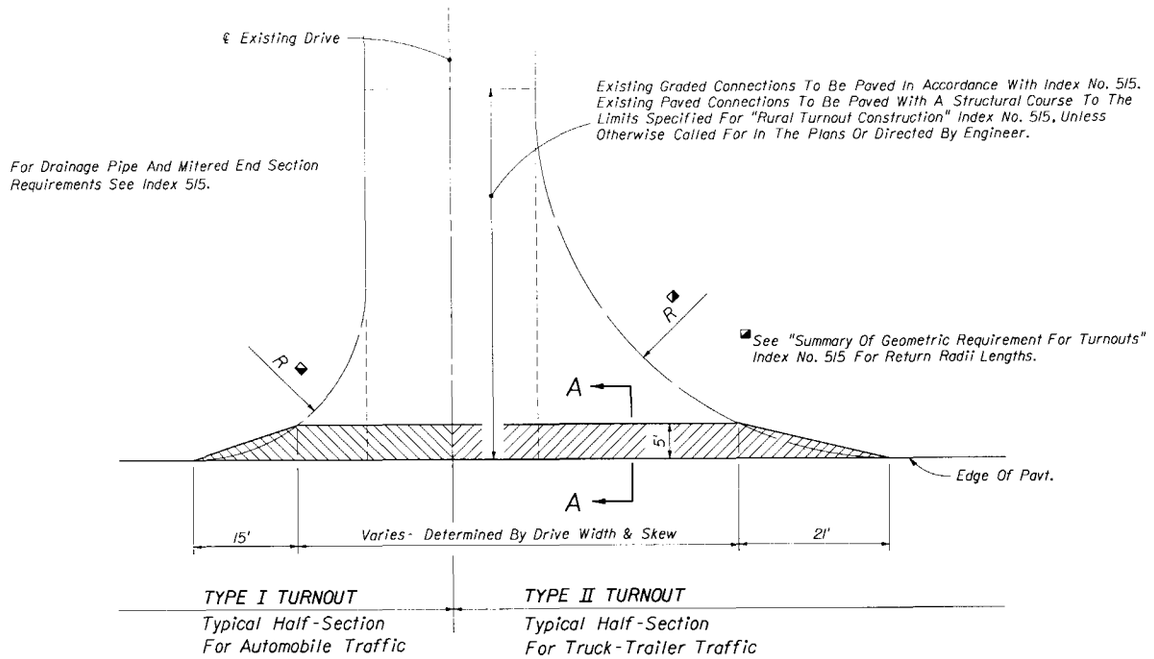

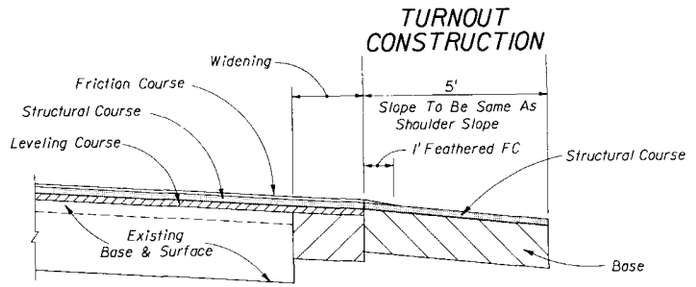

SECTION AA WITH WIDENING

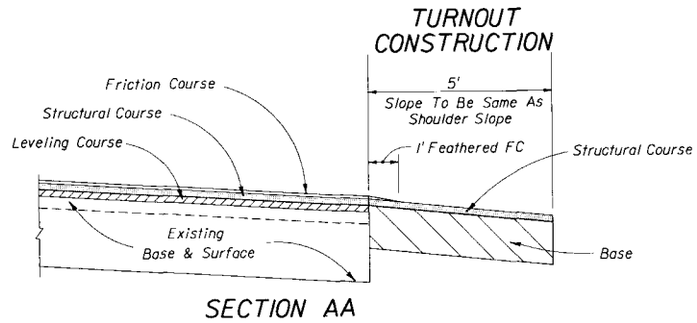

SECTION AA

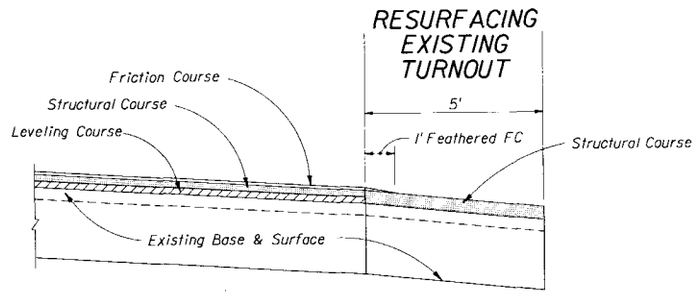

SECTION AA

AREAS FOR ONE 5' DEEP TURNOUT (SY)				
Drive Width (Ft.)	Intersection			
	Normal		Skewed	
	Type I	Type II	Type I	Type II
12	26	51	31	60
14	27	52	33	61
16	28	53	34	63
18	29	54	35	64
20	31	55	37	65
22	32	56	38	67
24	33	57	39	68
26	34	58	40	69
28	35	59	42	70
30	36	61	43	72
32	37	62	44	73
34	38	63	46	74
36	39	64	47	76
38	41	65	48	77
40	42	66	49	78
42	43	67	51	79
44	44	68	52	81
46	45	69	53	82
48	46	71	55	83
50	47	72	56	85
52	48	73	57	86
54	49	74	58	87
56	51	75	60	88
58	52	76	61	90
60	53	77	62	91

PAVEMENT STRUCTURE FOR 5' DEEP TURNOUTS		
Course	Material	Minimum Thickness
Structural	Asphaltic Concrete	1"
Base	Limerock LBR 100	4"
	Cemented Coquina (LBR 100)	4"
	ABC-1 (Marshall 500)	4"
	ABC-2 (Marshall 750)	4"
	ABC-3 (Marshall 1000)	4"
	Soil Cement (Plant Mix) (300 psi)	4"
	Bank Run Shell (LBR 100)	4"
	Sand-Clay (LBR 75)	5"
	Shell (LBR 70)	5"
	Soil Cement (Road Mix) (300 psi)	6"
	Graded Aggregate	4"

Notes:

1. Turnout structural course to be the same material as roadway leveling or structure course. Structural course not required if asphalt base course and its thickness increased to match edge of roadway pavement.
2. Any Department approved pavement structure equivalence may be used at the discretion of the Engineer.
3. Additional structural strength may be required if heavy truck loads are anticipated.

GENERAL NOTES

1. Turnouts are to be constructed or resurfaced for low volume (single family, duplex, farm, etc.) residential connections as directed by the Engineer.
2. Turnout construction not required for low volume residential connections where roadway shoulders are paved.
3. Connections outside the 5' limit are to be constructed as directed by the Engineer.
4. The contract unit price for Turnout Construction includes the cost for excavation and base.
5. Payment for structural course to be included in roadway resurfacing pay item.
6. Payment for feathering friction course to be included in the unit price for Asphaltic Concrete Fricitон Course placed on the roadway. Feathered areas will not be included in measured quantities. Feathering not required for FC-2 friction course.
7. For low volume two-lane facilities without a friction course the structural course is replaced by a surface course.

STATE OF FLORIDA DEPARTMENT OF TRANSPORTATION
ROAD DESIGN

TURNOUTS
RESURFACING PROJECTS

	Names	Dates
Designed By	DCB	11/77
Drawn By	HKH	11/77
Checked By	JVC	11/77
F.H.W.A. Approved:		09/23/82

Approved By: [signature]
State Roadway Design Engineer

Revision No.	Sheet No.	Index No.
92	1 of 1	516

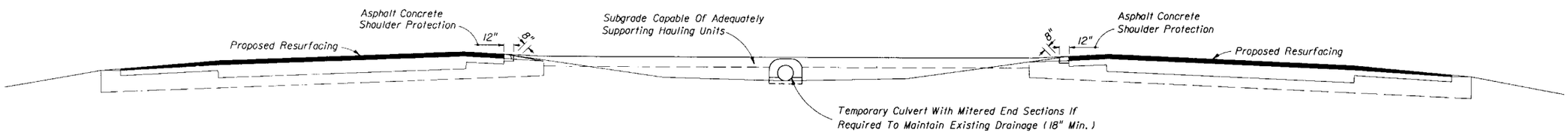

SECTION

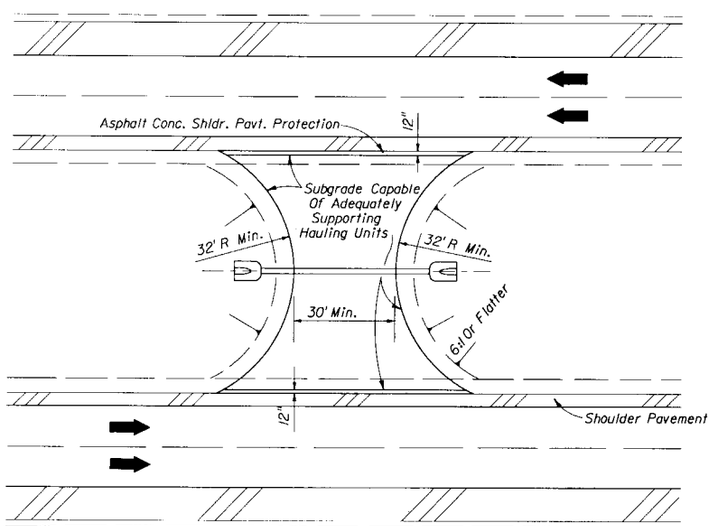

PLAN

NOTES:

1. When a crossover is no longer needed, all temporary construction shall be immediately removed and the area restored to its original condition.
2. Cost of all construction, maintenance, removal and restoration work related to temporary crossovers shall be included in the contract unit price for Maintenance of Traffic, LS.
3. Crossovers to be constructed where sight distance is adequate in both directions as directed by the Engineer.

STATE OF FLORIDA DEPARTMENT OF TRANSPORTATION
ROAD DESIGN

TEMPORARY CROSSOVER
CONSTRUCTION DETAILS
RURAL

	Names	Dates	Approved By
Designed By			State Roadway Design Engineer
Drawn By			
Checked By			Revision No. 88 / Sheet No. 1 of 1 / Index No. 517
F.H.W.A. Approved:		10/07/80	

Note: Rumble strips may be required for one or more legs of the intersection (one leg shown for spacing information). Rumble strips shall be constructed only on the legs identified in the plans. See General Note No. 1.

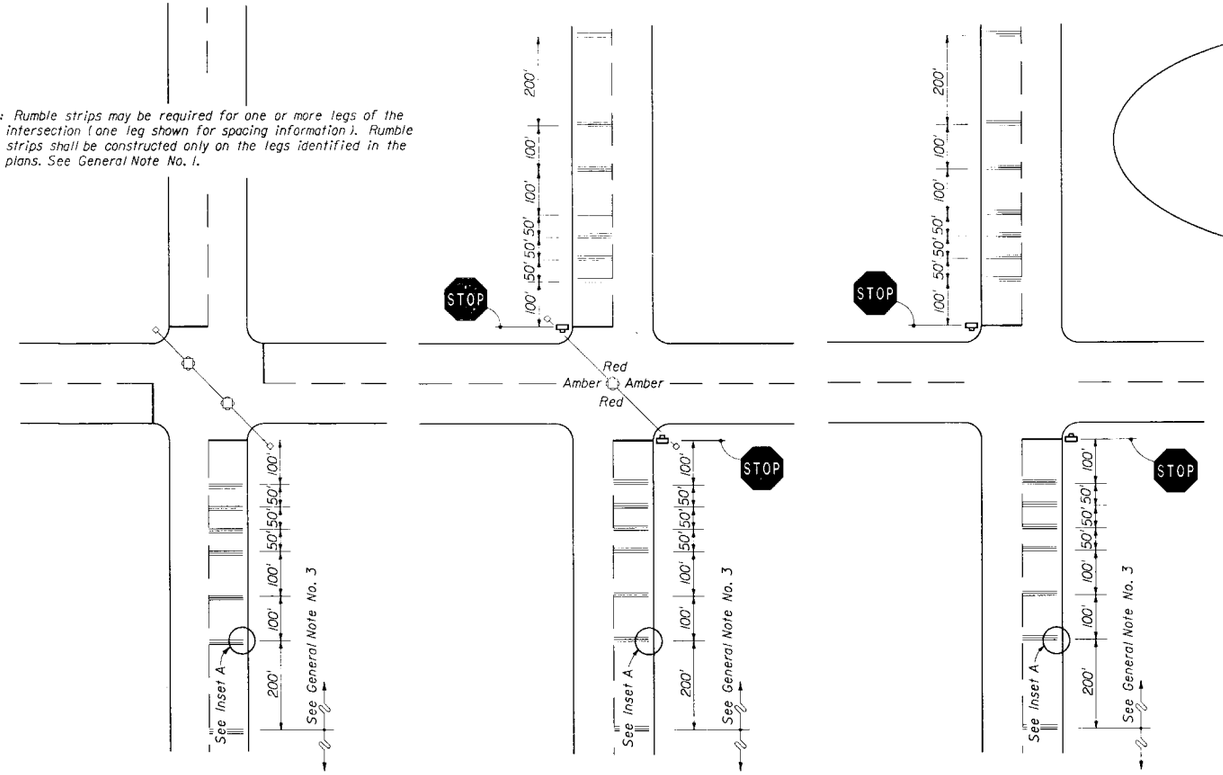

SIGNALIZED

FLASHING BEACON

TWO - WAY STOP

INTERSECTIONS

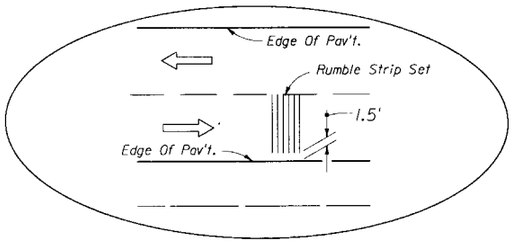

INSET A

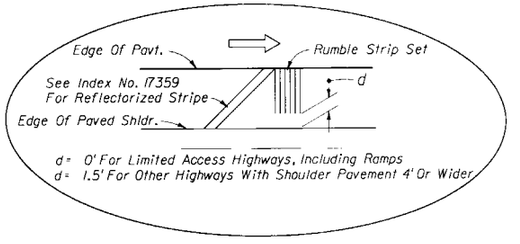

INSET B

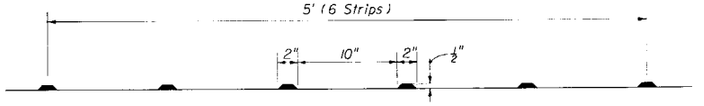

RUMBLE STRIP SET

GENERAL NOTES

1. Rumble strips shall be constructed at all structures with less than full width shoulders. Rumble strips at intersections shall be constructed only when specified in the plans.
2. Rumble strips are to be constructed in accordance with Section 546 of the Specifications.
3. When any portion of a curve falls within the limit of rumble strips shown in these details, additional rumble strip sets spaced at 200' centers shall be constructed beyond those detailed, throughout the approaching curve.
4. Rumble strips shall be paid for under the contract unit price for Rumble Strips, Per Set. Such price and payment shall be full compensation for all work and materials required.

   Rumble strips shall be paid for per set without any adjustment due to width of pavement receiving the strips or length of strips.

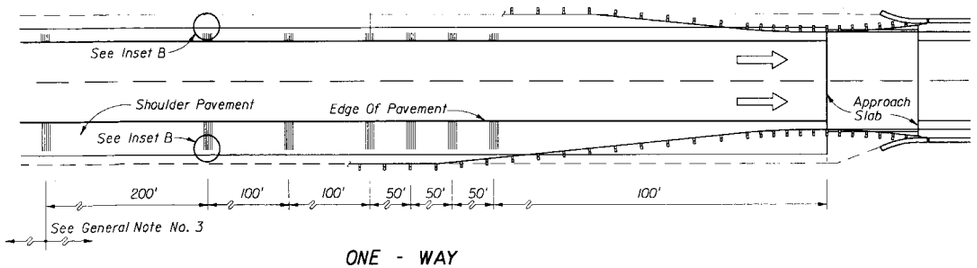

ONE - WAY

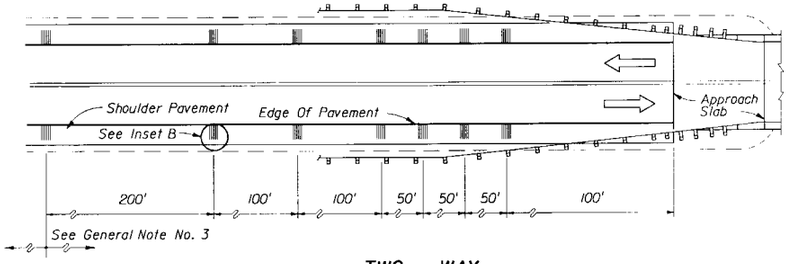

TWO - WAY

STRUCTURES WITH LESS THAN FULL WIDTH SHOULDERS

STATE OF FLORIDA DEPARTMENT OF TRANSPORTATION
ROAD DESIGN

RUMBLE STRIPS

	Names	Dates
Designed By	KNW/CAS	10/87
Drawn By	JBW	10/87
Checked By	KNW/JVG	10/87
F.H.W.A. Approved:		

Approved By
State Roadway Design Engineer

Revision No.	Sheet No.	Index No.
92	1 of 1	518

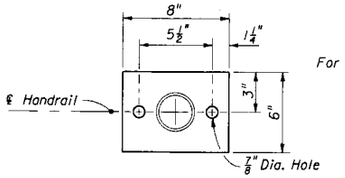

Aluminum ℄ 8" x 6" x ½" Alloy 6061-T6

BASE PLATE

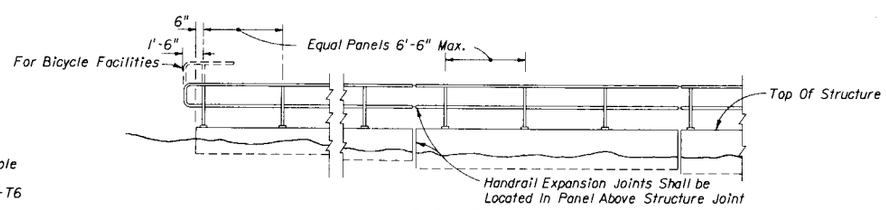

ELEVATION

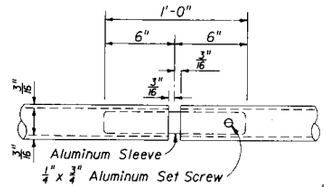

EXPANSION JOINT

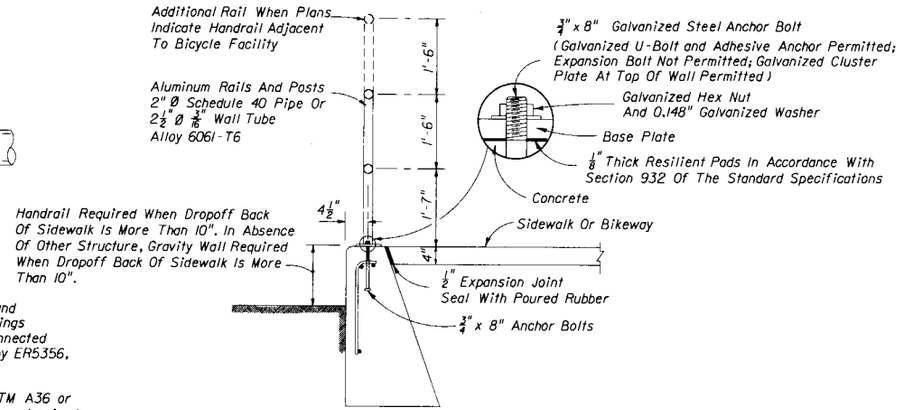

MOUNT ON GRAVITY WALL SHOWN

TYPICAL SECTION AT POST

PIPE HANDRAIL NOTES

1. All fixed joints to be either welded all around and ground smooth or standard pipe rail fittings at the contractors option. Posts shall be connected to base by weld only. Weld filler to be alloy ER5356, ER5556 or ER5183.
2. Anchor bolts shall be in accordance with ASTM A36 or A307. Nuts, washers, and bolts to be hot dip galvanized in conformance with ASTM A-153. After the nuts have been tightened, the anchor bolt threads shall be distorted or the nuts and bolts spot welded and coated with zinc compound.
3. Aluminum handrail shall be constructed in accordance with Section 515 of the Standard Specifications. Payment shall be full compensation for furnishing and installing handrail, including mounting hardware, and shall be paid for under the contract unit price for Pipe Handrail (Aluminum), L.F.

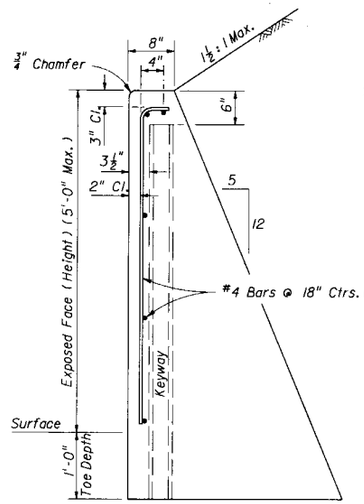

SECTION

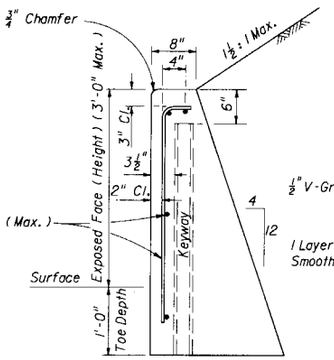

SECTION

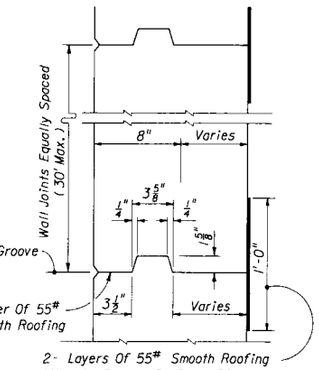

2- Layers Of 55# Smooth Roofing (Mop All Contact Surfaces Of Concrete And Roofing With Cut-Back Asphalt. Stop Roofing Paper 6" Below Top Of Wall.)

KEY DETAIL (TOP VIEW)

ESTIMATED QUANTITIES FOR WALL		
HEIGHT (EXPOSED FACED)	PER LINEAR FOOT OF WALL	
	CLASS I CONCRETE (CY)	STEEL (LB)
1'	0.07	3
2'	0.13	4
3'	0.20	5
4'	0.32	6
5'	0.43	7

GRAVITY WALL NOTES

1. Gravity walls constructed as extensions of reinforced concrete retaining walls, except walls of proprietary designs, shall have the same face texture and finish as the reinforced concrete retaining wall.
2. Cost of reinforcing steel and face texture and finish to be included in the contract unit price for Class I Concrete (Retaining Walls) CY.

GRAVITY WALL

ALUMINUM PIPE HANDRAIL

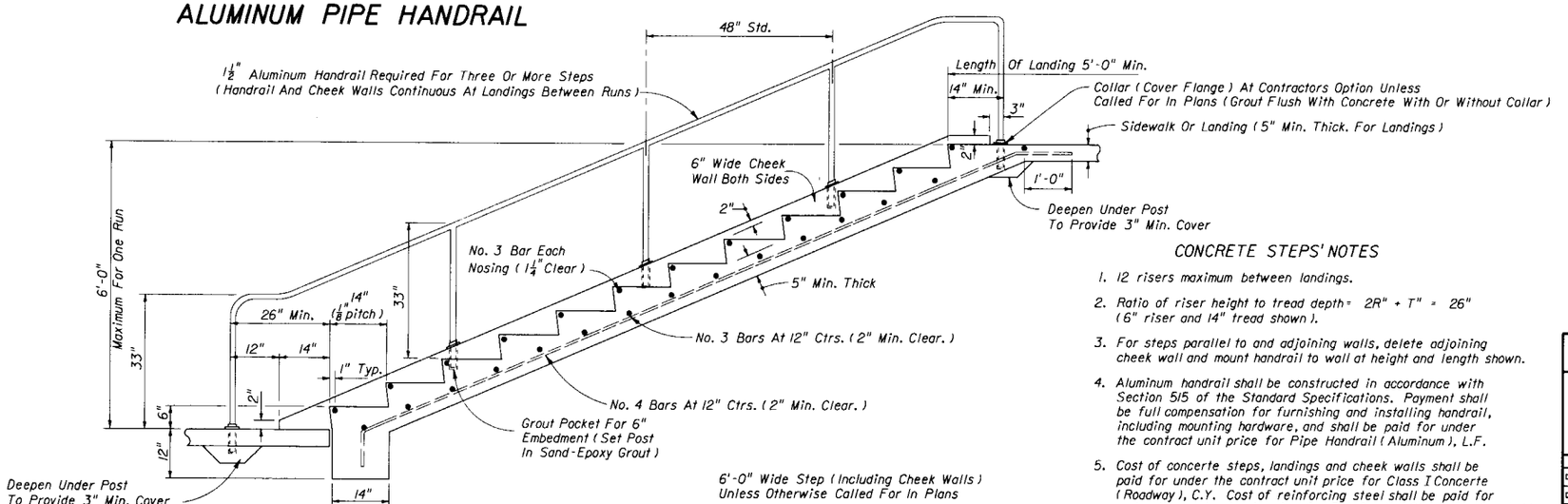

6'-0" Wide Step (Including Cheek Walls) Unless Otherwise Called For In Plans

CONCRETE STEPS

CONCRETE STEPS' NOTES

1. 12 risers maximum between landings.
2. Ratio of riser height to tread depth = 2R" + T" = 26" (6" riser and 14" tread shown).
3. For steps parallel to and adjoining walls, delete adjoining cheek wall and mount handrail to wall at height and length shown.
4. Aluminum handrail shall be constructed in accordance with Section 515 of the Standard Specifications. Payment shall be full compensation for furnishing and installing handrail, including mounting hardware, and shall be paid for under the contract unit price for Pipe Handrail (Aluminum), L.F.
5. Cost of concrete steps, landings and cheek walls shall be paid for under the contract unit price for Class I Concrete (Roadway), C.Y. Cost of reinforcing steel shall be paid for under the contract unit price for Reinforcing Steel (Roadway), Lb.

STATE OF FLORIDA DEPARTMENT OF TRANSPORTATION
ROAD DESIGN

WALLS, HANDRAILS & STEPS

	Names	Dates
Designed By		
Drawn By	CDR	02/68
Checked By	RHC	02/68
F.H.W.A. Approved:		03/20/75

Approved By Roy C. Rawn
State Roadway Design Engineer

Revision No.	Sheet No.	Index No.
92	1 of 1	520

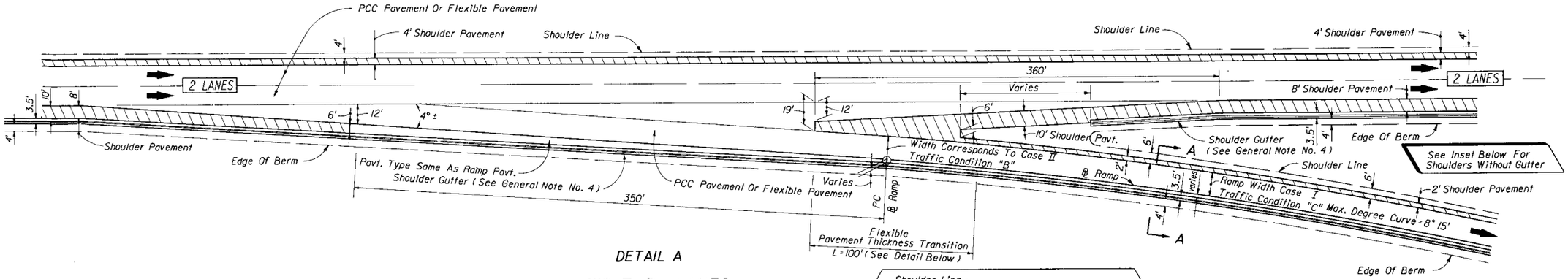

DETAIL A

TWO THRU LANES

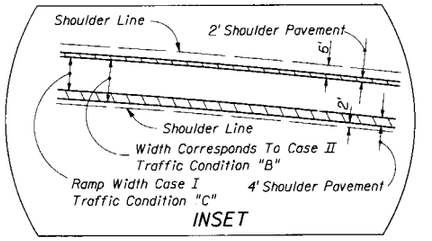

INSET

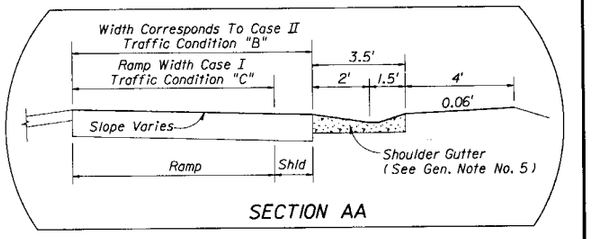

SECTION AA

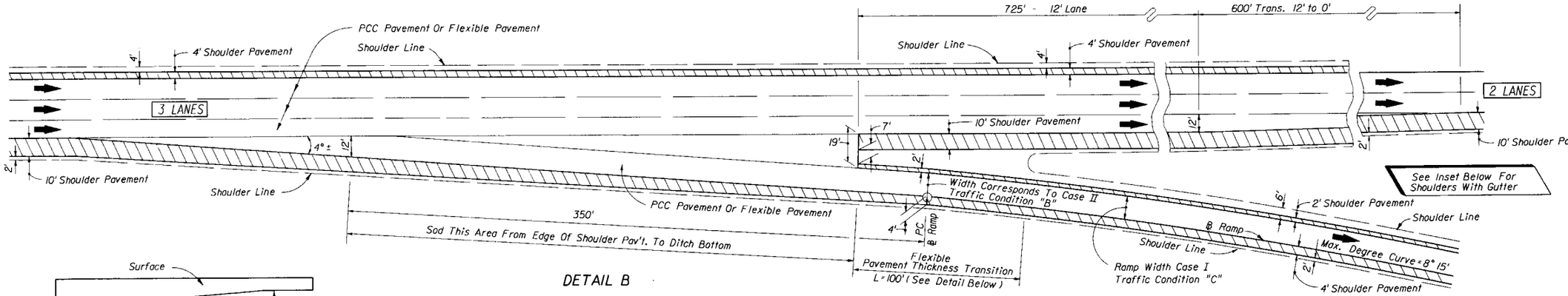

DETAIL B

THREE APPROACH LANES - TWO THRU LANES

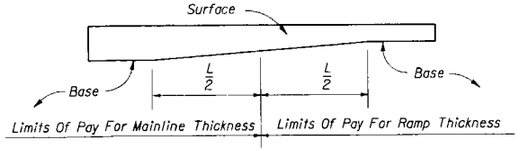

FLEXIBLE PAVEMENT THICKNESS TRANSITION

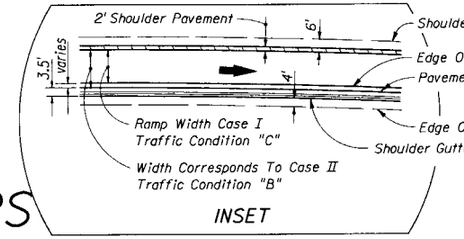

INSET

NOTE: For General Notes See Sheet No. 2

EXIT TERMINALS

SINGLE - LANE RAMPS

STATE OF FLORIDA DEPARTMENT OF TRANSPORTATION
ROAD DESIGN

RAMP TERMINALS

	Names	Dates
Designed By	EHH	01/65
Drawn By	HFW	01/65
Checked By	RLO	06/67
F.H.W.A. Approved:		07/18/75

Approved By _____
State Design Engineer, Roadways

Revision No.	Sheet No.	Index No.
92	1 of 5	525

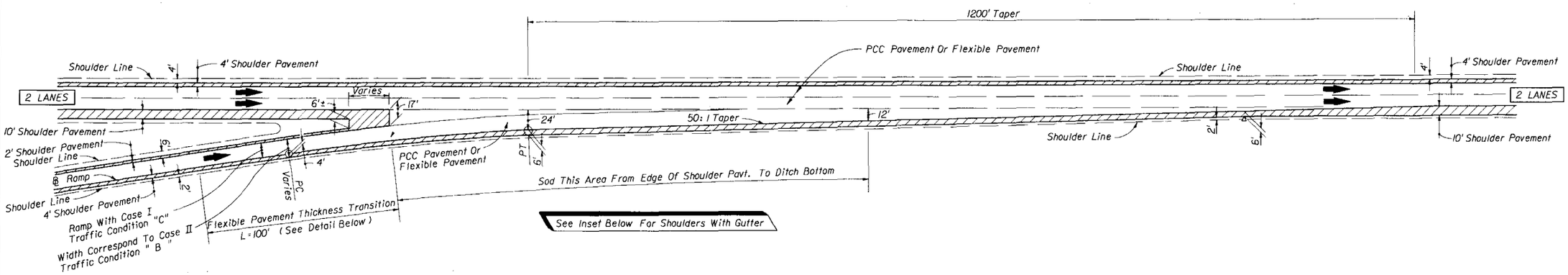

DETAIL C

TWO THRU LANES

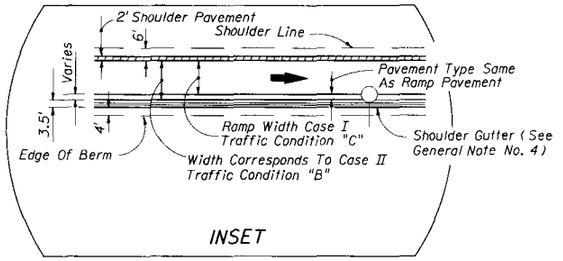

INSET

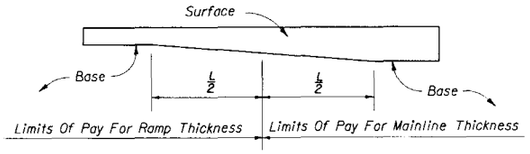

FLEXIBLE PAVEMENT THICKNESS TRANSITION

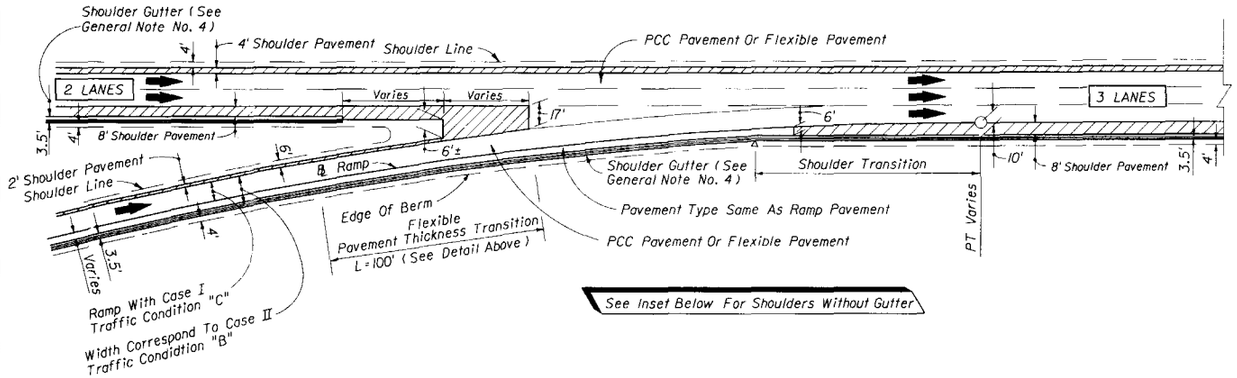

DETAIL D

WITH ADDED LANE

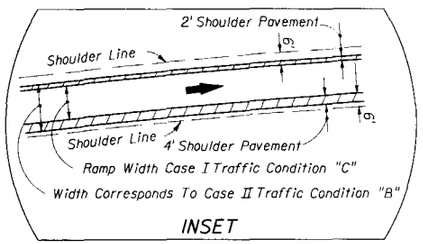

INSET

GENERAL NOTES

1. Exit and entrance terminals as detailed shall not be used on ramps for which a speed of 50 MPH or greater cannot be maintained. For such ramps, parallel deceleration and acceleration lanes shall be used in place of tapers with lengths set according to AASHTO.

2. (a.) PCC Pavement Projects:
   Where shoulder pavement adjacent to shoulder gutter is less than 6' wide, it shall be identical to the adjacent roadway pavement beginning with the tranverse joint nearest the point of 6' width.

   (b.) Flexible Pavement Projects:
   Where shoulder pavement used in conjunction with shoulder gutter is less than 6' uniform width, it shall be identical to the adjacent roadway pavement.

3. For concrete pavement joint details and layouts at entrance and exit ramp terminals see Index No. 305.

4. For shoulder gutter applications refer to the FDOT Drainage Manual.

ENTRANCE TERMINALS

SINGLE-LANE RAMPS

STATE OF FLORIDA DEPARTMENT OF TRANSPORTATION
ROAD DESIGN

RAMP TERMINALS

	Names	Dates
Designed By	EHH	01/65
Drawn By	HFW	01/65
Checked By	RLO	06/67
F.H.W.A. Approved:		07/18/75

Approved By
State Roadway Design Engineer

Revision No.	Sheet No.	Index No.
92	2 of 5	525

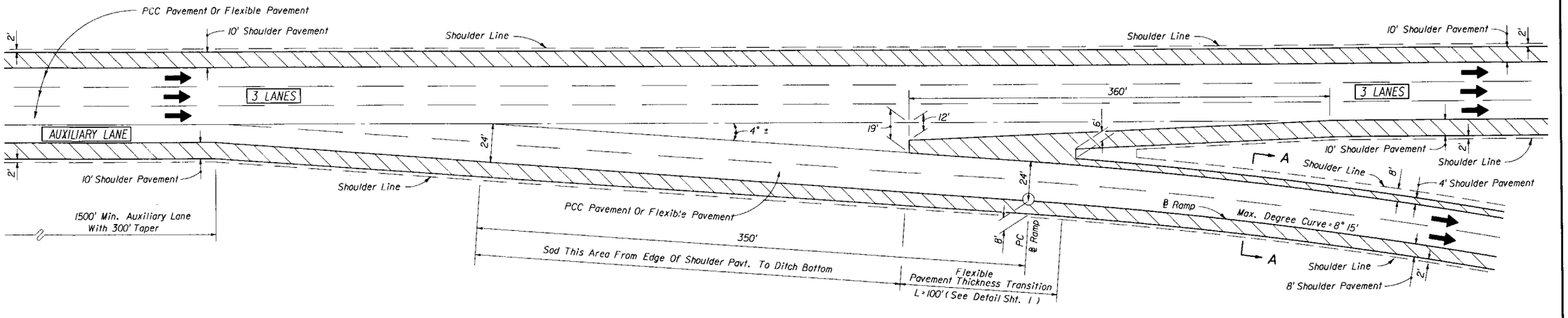

THREE THRU LANES - APPROACH AUXILIARY LANE

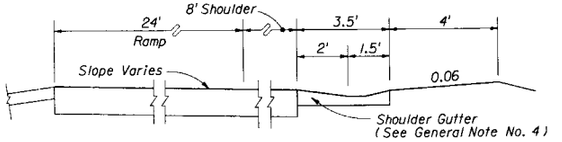

SECTION WHEN SHOULDER GUTTER USED

SECTION AA

EXIT TERMINALS

TWO-LANE RAMPS

STATE OF FLORIDA DEPARTMENT OF TRANSPORTATION
ROAD DESIGN

RAMP TERMINALS

	Names	Dates
Designed By	DCB	07/86
Drawn By	dds	07/86
Checked By	DCB	07/86
F.H.W.A. Approved:		11/07/86

Approved By
State Roadway Design Engineer

Revision No.	Sheet No.	Index No.
92	3 of 5	525

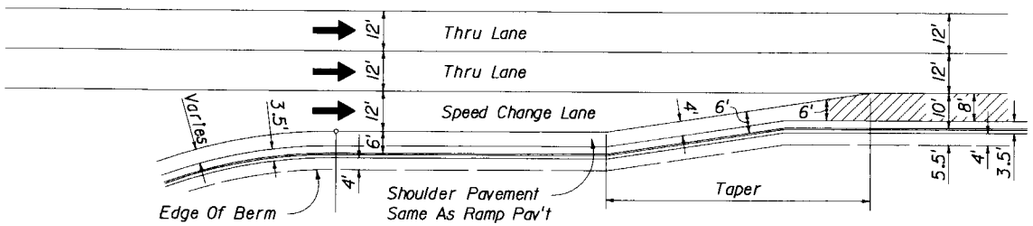

ACCELERATION LANE WITH SHOULDER GUTTER

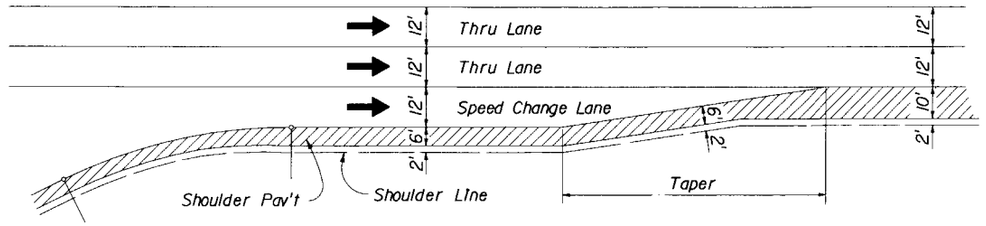

ACCELERATION LANE WITHOUT SHOULDER GUTTER

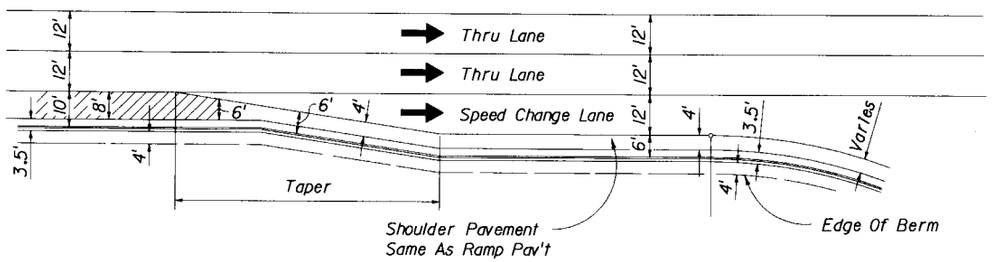

DECELERATION LANE WITH SHOULDER GUTTER

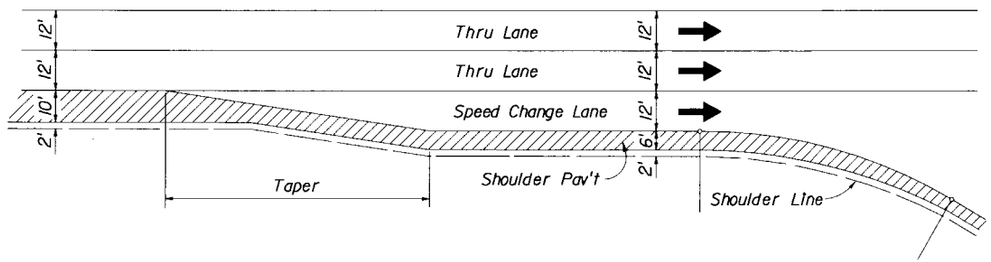

DECELERATION LANE WITHOUT SHOULDER GUTTER

SHOULDER TREATMENT
AT SPEED CHANGE LANES AT EXPRESSWAY RAMP TERMINALS

EXPRESSWAY RAMP TERMINALS

STATE OF FLORIDA DEPARTMENT OF TRANSPORTATION
ROAD DESIGN

RAMP TERMINALS

	Names	Dates
Designed By	EHH	01/65
Drawn By	HFW	01/65
Checked By	RLO	06/67
F.H.W.A. Approved:		07/18/75

Approved By
State Design Engineer, Roadways

Revision No.	Sheet No.	Index No.
87	4 of 5	525

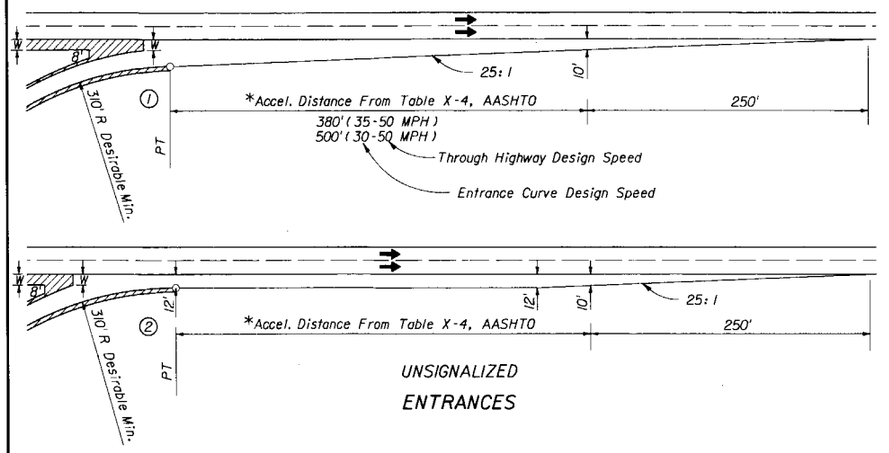

UNSIGNALIZED

ENTRANCES

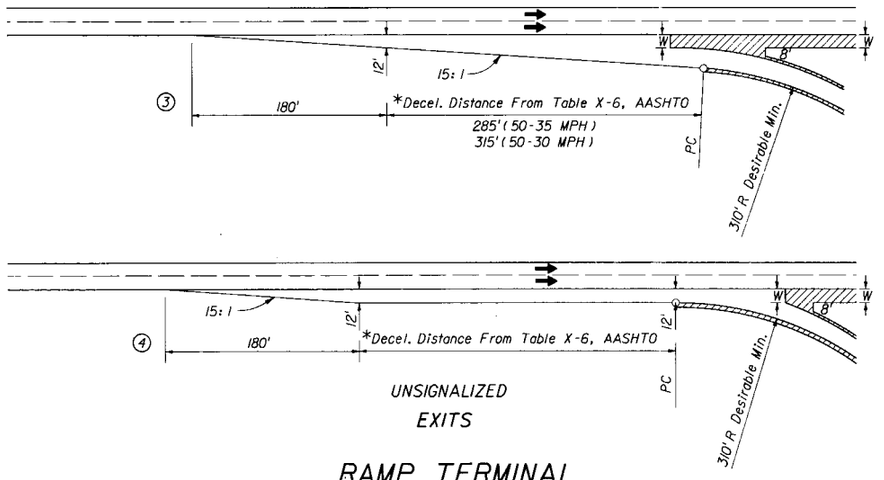

UNSIGNALIZED

EXITS

RAMP TERMINAL

FOOTNOTES:

W Normal shoulder pavement width

* Ajust for grades if greater than 2% (See Table X-5, AASHTO).

① Standard cross road entrance terminals. To be used when roadway alignment is tangent and no bridges are located within the merging lane.

② Parallel cross road entrance terminals. Recommended when a bridge is located within the merging lane, turning roadway speed is less than 60% of thru roadway speed or for the combinations of horizontal alignment shown elsewhere on this sheet.

③ Standard cross road exit terminal. To be used when roadway alignment is tangent.

④ Parallel cross road exit terminals. Recommended when exit is partially hidden over the crest of vertical curve or when turning roadway speed is less than 60% of the thru roadway speed, or for the combinations of horizontal alignment shown elsewhere on this sheet.

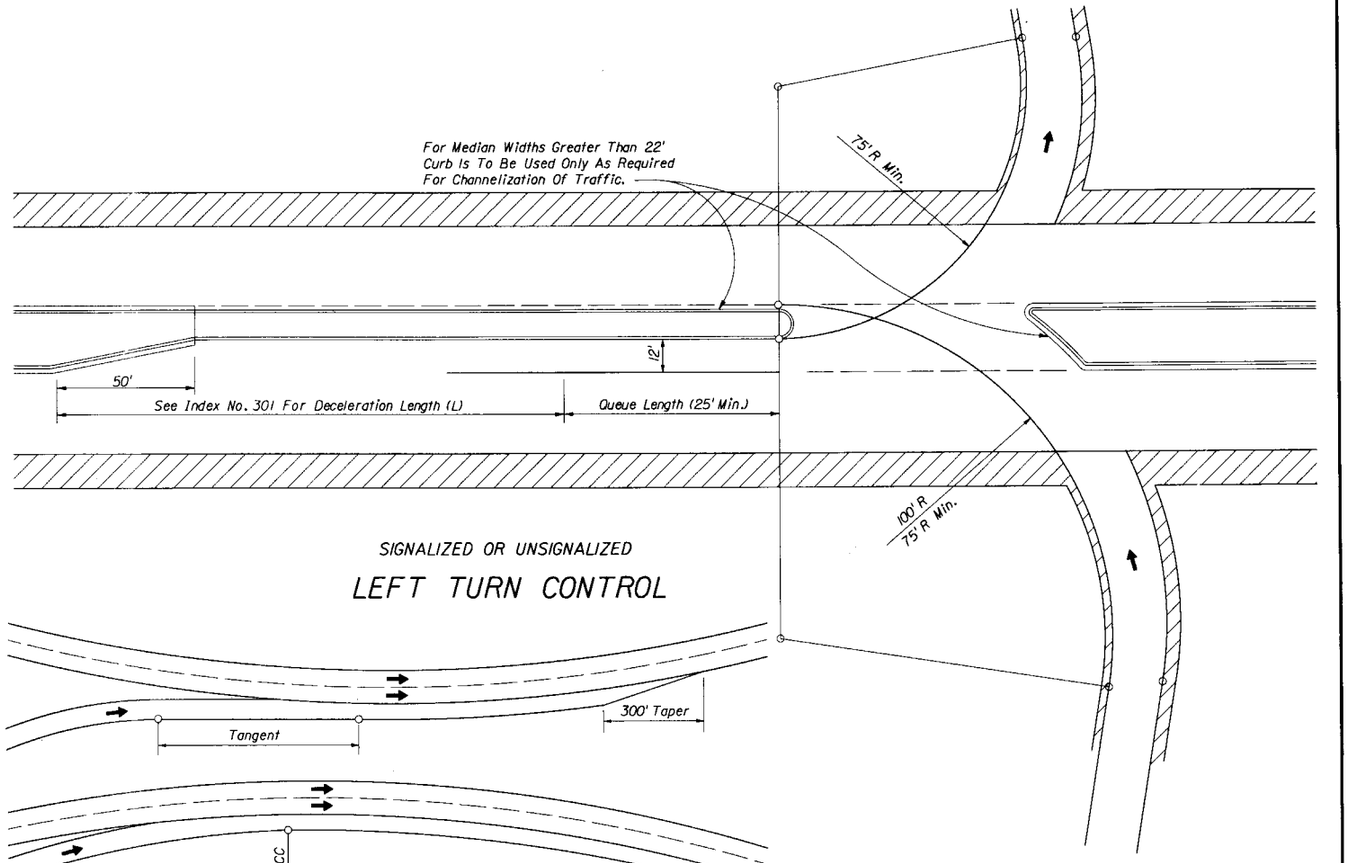

SIGNALIZED OR UNSIGNALIZED

LEFT TURN CONTROL

See Drawing ② And Footnote 2

UNSIGNALIZED

ENTRANCES

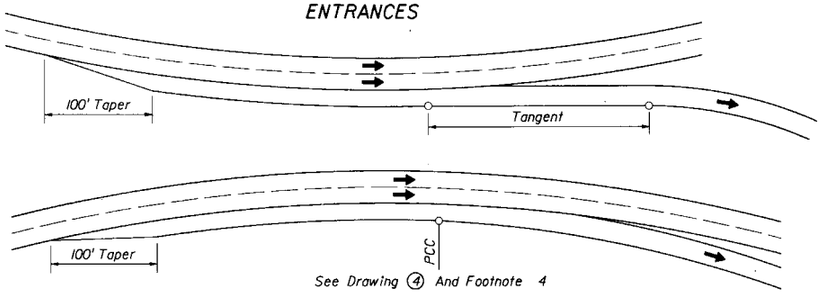

See Drawing ④ And Footnote 4

UNSIGNALIZED

EXITS

NOTE: Entrances and exits on curves should be avoided when possible.

ENTRANCES AND EXITS ON CURVES

CROSSROAD TERMINALS

STATE OF FLORIDA DEPARTMENT OF TRANSPORTATION
ROAD DESIGN

RAMP TERMINALS

	Names	Dates
Designed By	EMH	1/65
Drawn By	HFW	1/65
Checked By	RLO	6/67
F.H.W.A. Approved:		7/25/75

Approved By _____
State Roadway Design Engineer

Revision No.	Sheet No.	Index No.
92	5 of 5	525

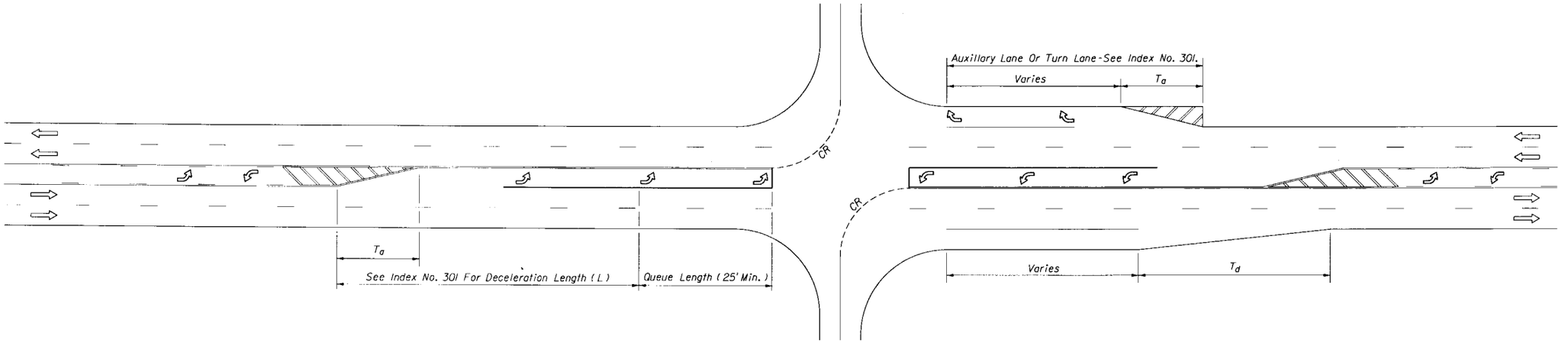

4-LANE UNDIVIDED WITH OPTIONAL LANE

DESIGN SPEED (MPH)	T_a (FEET) ADD LANE	T_d (FEET) LANE DROP
< 30	50' (±4:1)	25:1
30-45		30:1
> 45		40:1

Note: For locations with unrelocatable control points minimum taper rates for lane drop (T_d) will be 20:1.

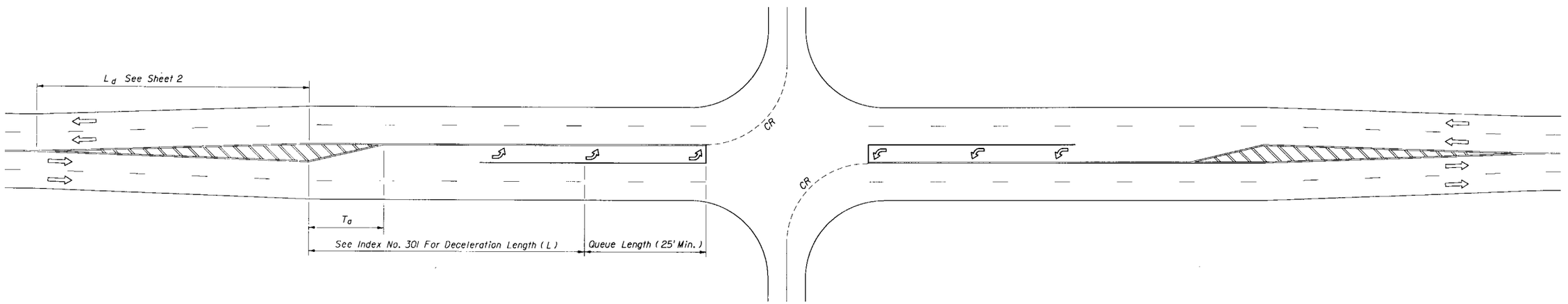

4-LANE UNDIVIDED FLARED - SYMMETRICAL

INTERSECTION TURNS AND STORAGE

STATE OF FLORIDA DEPARTMENT OF TRANSPORTATION
ROAD DESIGN

ROADWAY TRANSITIONS

	Names	Dates
Designed By	KNM	9/89
Drawn By	JBW	9/89
Checked By	KNM/JVG	9/89
F.H.W.A. Approved:		

Approved By _____
State Roadway Design Engineer

Revision No.	Sheet No.	Index No.
92	1 of 8	526

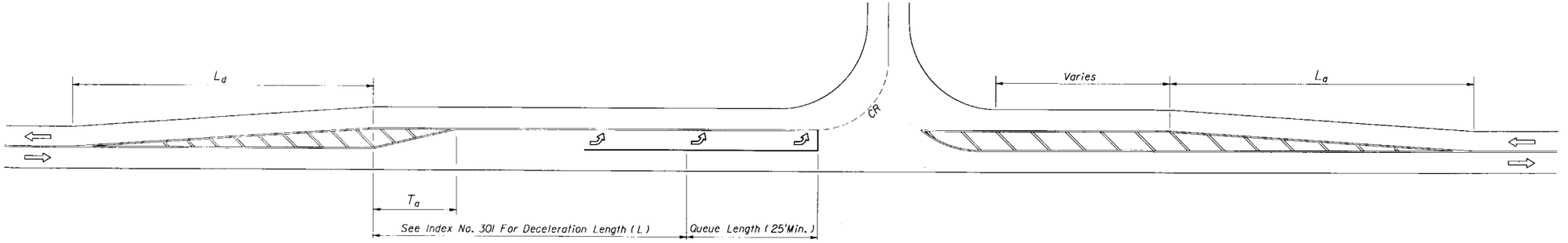

LEFT SIDE WIDENING

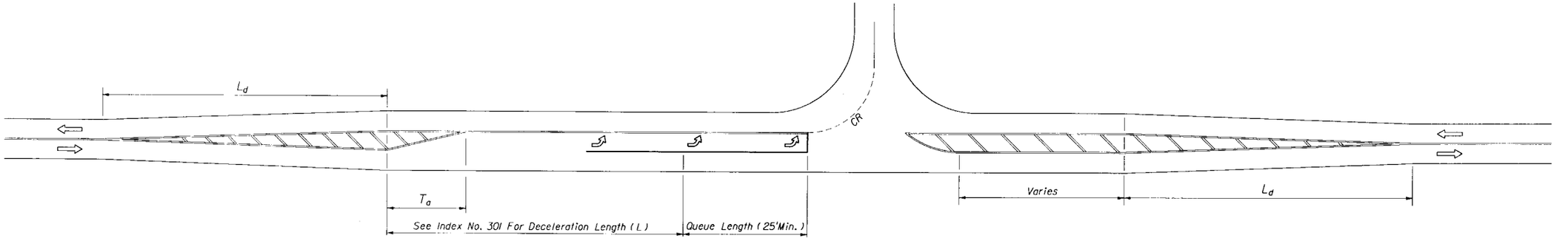

CENTERED WIDENING

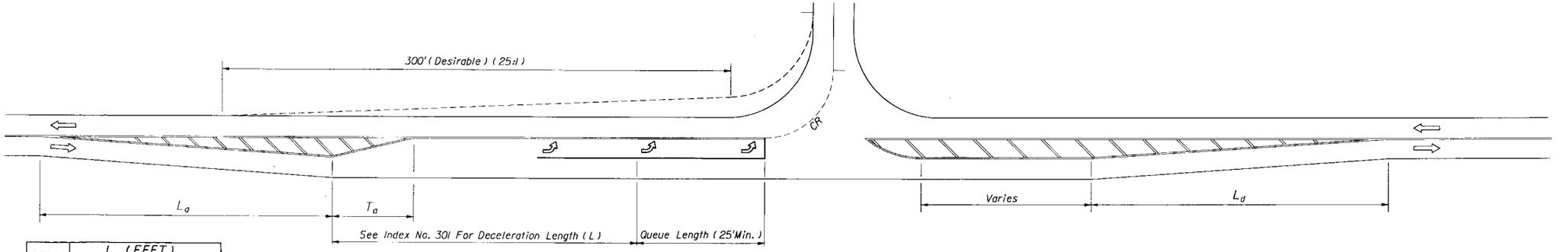

RIGHT SIDE WIDENING

DESIGN SPEED (MPH)	L_a (FEET)	
	STANDARD	MINIMUM UNDER RESTRAINTS
30	180	120
40	320	150
50	500	180
60	720	240

	L_d (FEET)	
30	180	120
40	240	150
50	360	180
60	480	240

FLARED & PAINTED LEFT TURNS FOR 2-LANE 2-WAY ROADWAYS

STATE OF FLORIDA DEPARTMENT OF TRANSPORTATION
ROAD DESIGN

ROADWAY TRANSITIONS

	Names	Dates
Designed By	RER/MG	9/89
Drawn By	JBW	9/89
Checked By	RER/MG	9/89

Approved By _____
State Roadway Design Engineer

F.H.W.A. Approved: _____

Revision No.	Sheet No.	Index No.
92	2 of 8	526

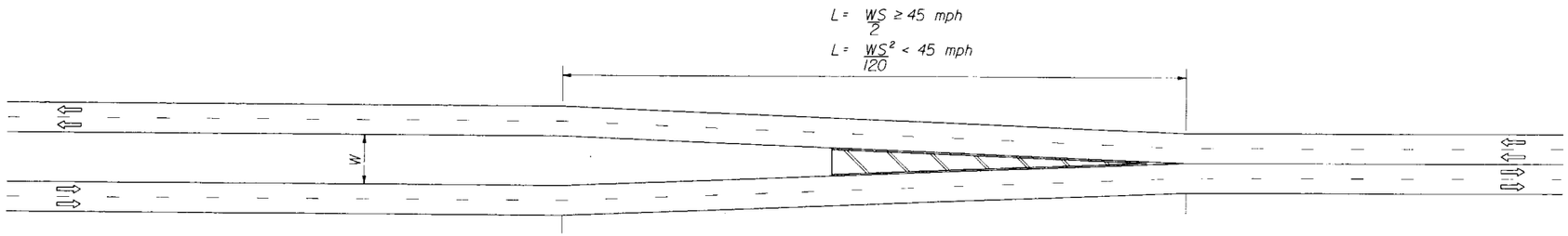

4-LANE DIVIDED TO 4-LANE UNDIVIDED

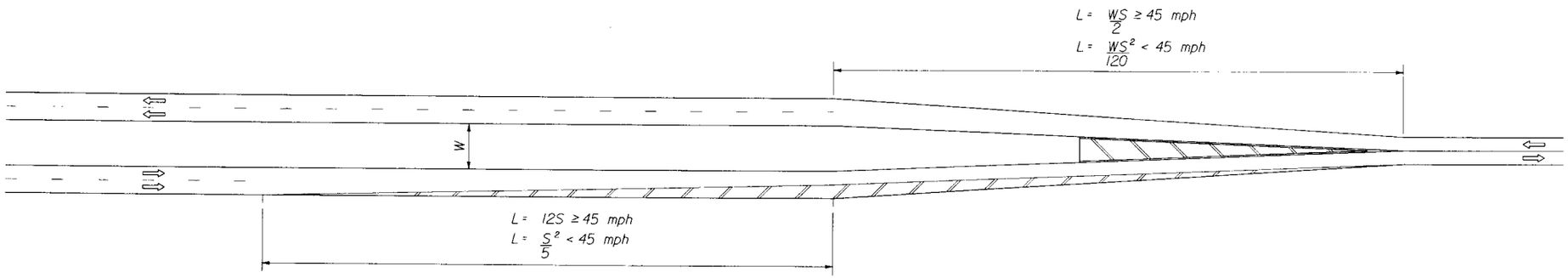

4-LANE DIVIDED TO 2-LANE UNDIVIDED

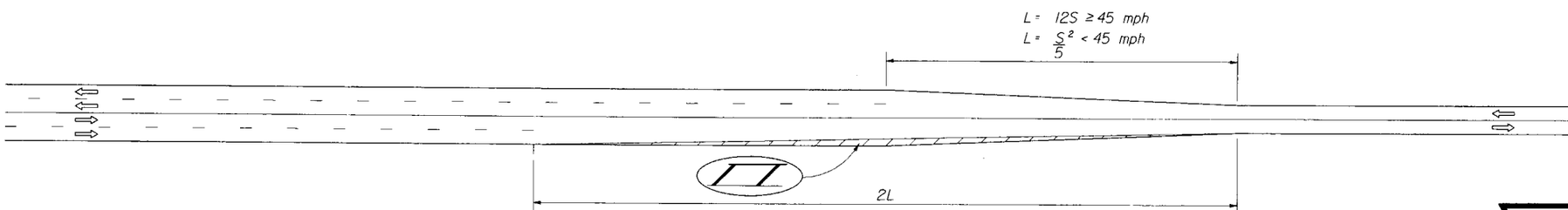

4-LANE UNDIVIDED TO 2-LANE UNDIVIDED

S = Design speed.

LANE DIVERGENCE AND CONVERGENCE FOR CENTERED ROADWAYS

STATE OF FLORIDA DEPARTMENT OF TRANSPORTATION
ROAD DESIGN

ROADWAY TRANSITIONS

	Names	Dates
Designed By	KNM	9/89
Drawn By	JBW	9/89
Checked By	KNM/JVC	9/89
F.H.W.A. Approved:		

Approved By _____
State Roadway Design Engineer

Revision No.	Sheet No.	Index No.
90	3 of 8	526

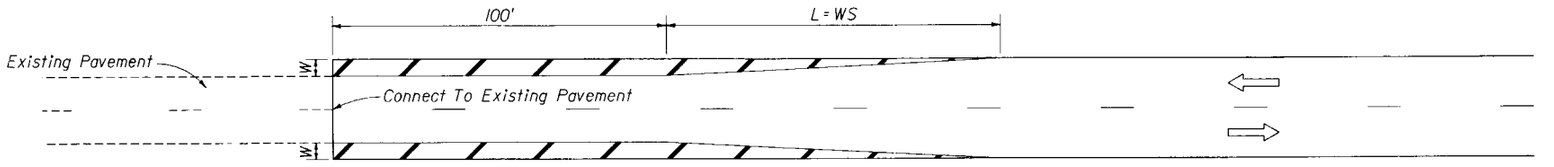

CONNECTING DIFFERENT WIDTH PAVEMENTS

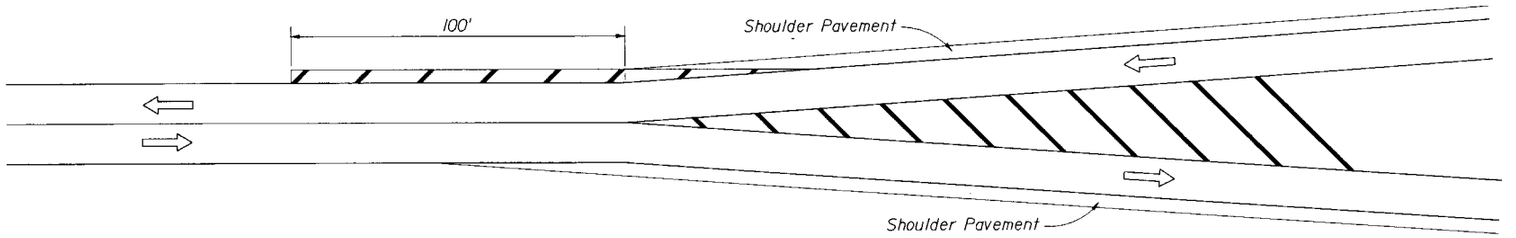

FLARED - PAVED SHOULDERS

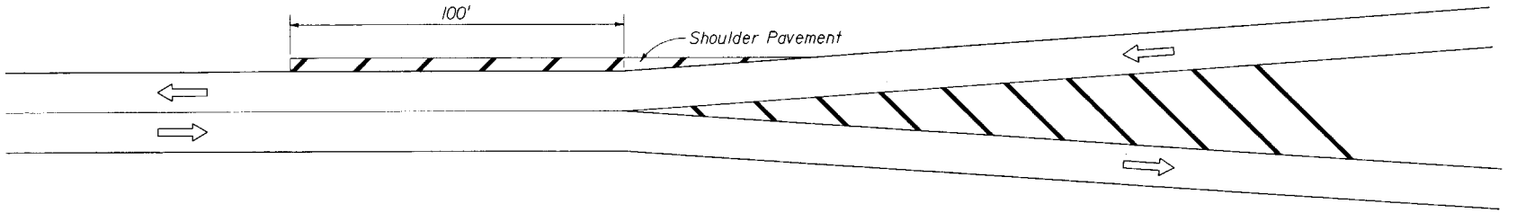

FLARED - UNPAVED SHOULDERS

S = Design speed.

SHOULDER AND PAVEMENT EDGE TREATMENT AT TRANSITIONS AND CONNECTIONS

STATE OF FLORIDA DEPARTMENT OF TRANSPORTATION
ROAD DESIGN

ROADWAY TRANSITIONS

	Names	Dates
Designed By	KNM	9/89
Drawn By	JBW	9/89
Checked By	KNM/JVG	9/89
F.H.W.A. Approved:		

Approved By
State Roadway Design Engineer

Revision No.	Sheet No.	Index No.
90	4 of 8	526

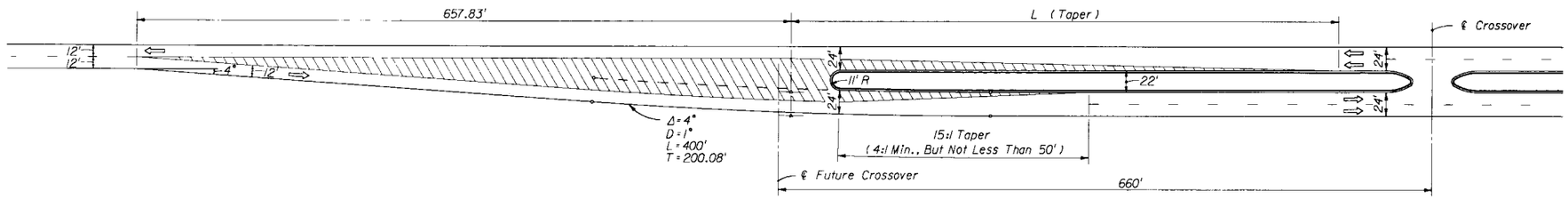

22' MEDIAN

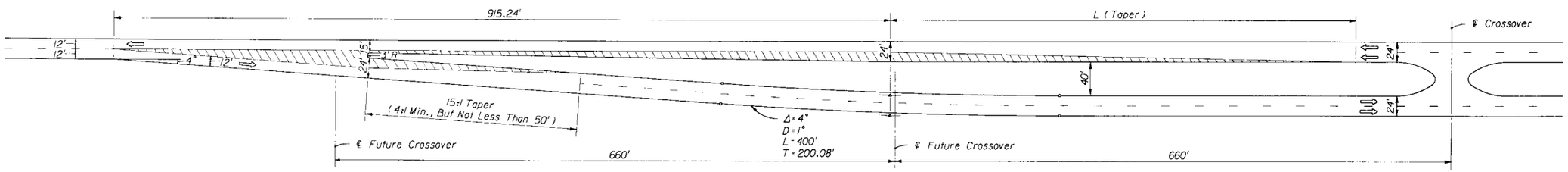

40' MEDIAN

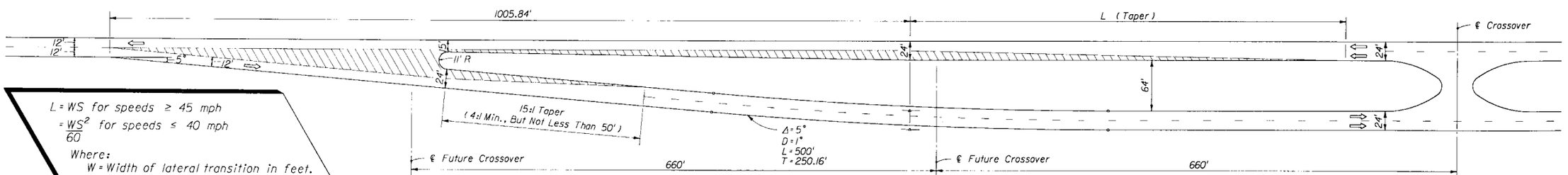

$L = WS$ for speeds $\geq$ 45 mph

$= \frac{WS^2}{60}$ for speeds $\leq$ 40 mph

Where:

W = Width of lateral transition in feet.

S = Design speed.

64' MEDIAN

GENERAL NOTES FOR SHEETS 5 THRU 8

1. The transition details as represented on these sheets are intended as guidelines only. The transition lengths, curve data, nose radii and offsets are valid only for tangent alignment and the median widths shown.
2. Approach lane departures ($\Delta = 5°$) are suitable for design speeds up to 60 mph. Interior curves ($D = 1°$) are suitable for normal crown for design speeds up to 50 mph. Merging curves ($D \geq 5°$) will require superelevation.
3. The geometrics of these schemes are associated with the standard subsectional spacing for sideroads, but in any case will require modification to accommodate sideroad location, multilane and/or divided sideroads, oblique sideroads, crossover widths, storage and speed change lane requirements, and, other related features.

LEFT ROADWAY CENTERED ON APPROACH ROADWAY
TWO LANE TO FOUR LANE TRANSITION

STATE OF FLORIDA DEPARTMENT OF TRANSPORTATION
ROAD DESIGN

ROADWAY TRANSITIONS

	Names	Dates
Designed By	KNM	9/89
Drawn By	JBW	9/89
Checked By	KNM/JVG	9/89
F.H.W.A. Approved:		

Approved By: _____
State Roadway Design Engineer

Revision No.	Sheet No.	Index No.
90	5 of 8	526

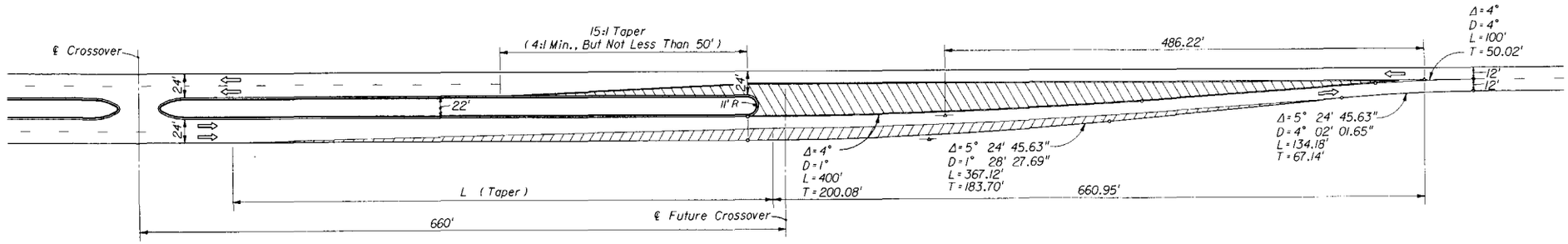

22' MEDIAN

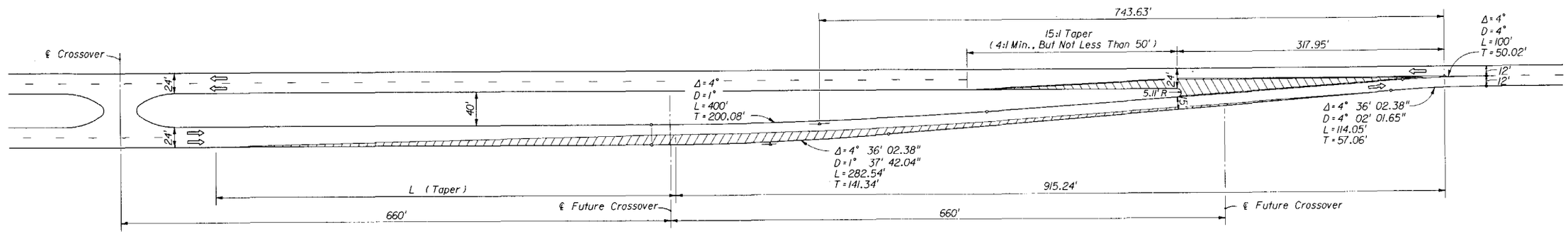

40' MEDIAN

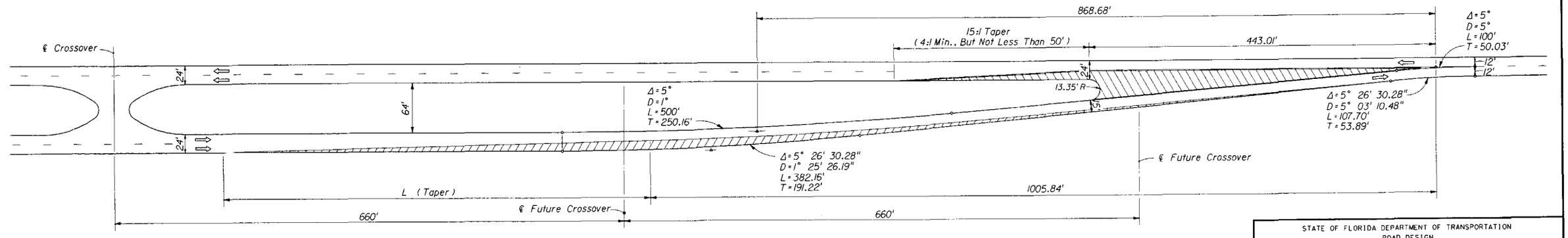

64' MEDIAN

$L = WS$ for speeds $\geq$ 45 mph

$= \frac{WS^2}{60}$ for speeds $\leq$ 40 mph

Where:

W = Width of lateral transition in feet.

S = Design speed.

LEFT ROADWAY CENTERED ON THRU ROADWAY

FOUR LANE TO TWO LANE TRANSITION

STATE OF FLORIDA DEPARTMENT OF TRANSPORTATION
ROAD DESIGN

ROADWAY TRANSITIONS

	Names	Dates
Designed By	KNM	9/89
Drawn By	JBW	9/89
Checked By	KNM/JVG	9/89
F.H.W.A. Approved:		

Approved By _____
State Roadway Design Engineer

Revision No.	Sheet No.	Index No.
90	6 of 8	526

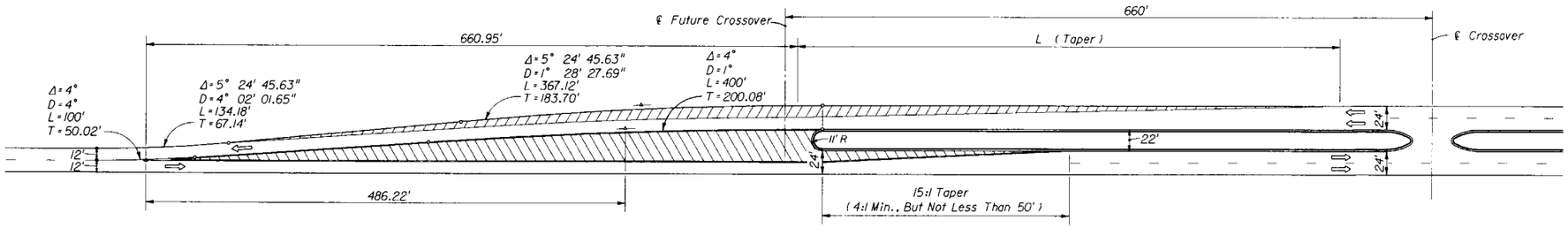

22' MEDIAN

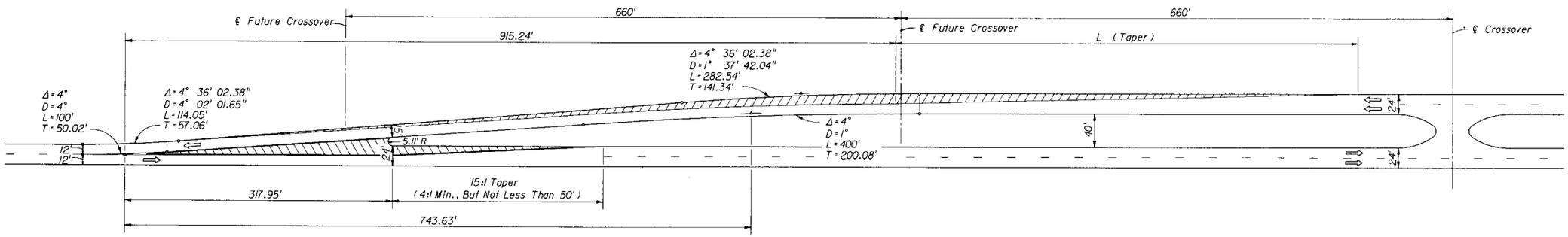

40' MEDIAN

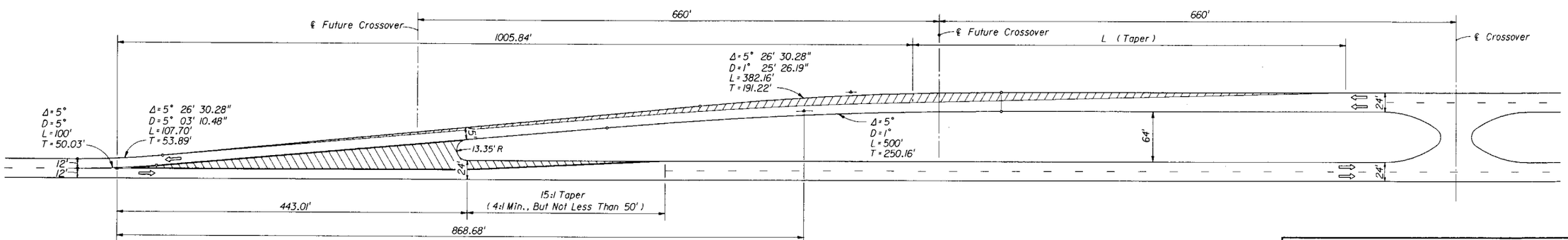

64' MEDIAN

$L = WS$ for speeds $\geq$ 45 mph

$= \frac{WS^2}{60}$ for speeds $\leq$ 40 mph

Where:
W = Width of lateral transition in feet.
S = Design speed.

RIGHT ROADWAY CENTERED ON APPROACH ROADWAY

TWO LANE TO FOUR LANE TRANSITION

STATE OF FLORIDA DEPARTMENT OF TRANSPORTATION
ROAD DESIGN

ROADWAY TRANSITIONS

	Names	Dates
Designed By	KNM	9/89
Drawn By	JBW	9/89
Checked By	KNM/JVG	9/89

Approved By [signature] State Roadway Design Engineer

F.H.W.A. Approved:

Revision No.	Sheet No.	Index No.
90	7 of 8	526

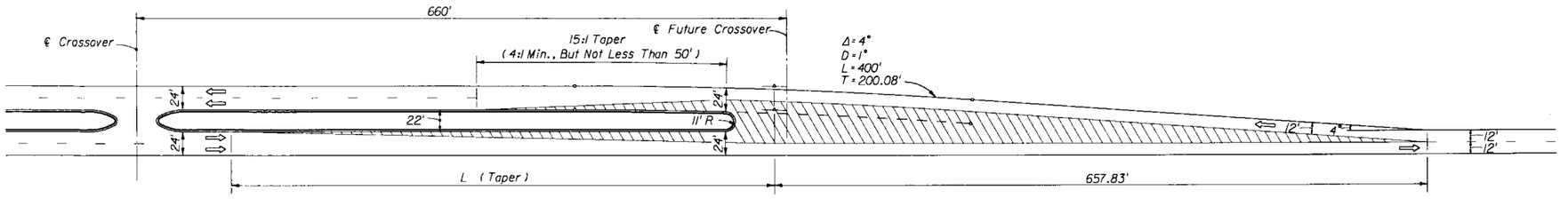

22' MEDIAN

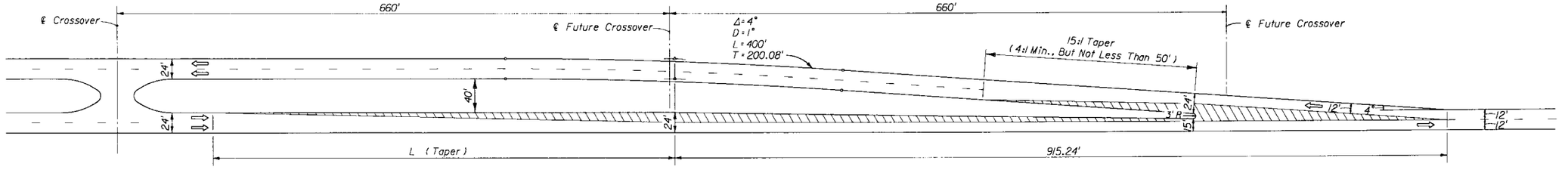

40' MEDIAN

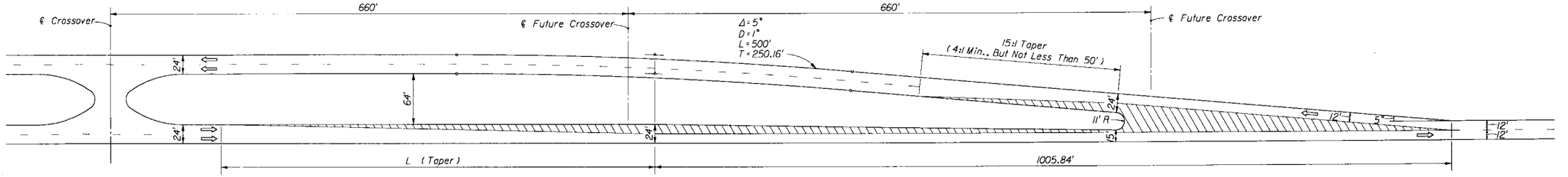

64' MEDIAN

$L = WS$ for speeds $\geq$ 45 mph

$= \frac{WS^2}{60}$ for speeds $\leq$ 40 mph

Where:
W = Width of lateral transition in feet.
S = Design speed.

RIGHT ROADWAY CENTERED ON THRU ROADWAY

FOUR LANE TO TWO LANE TRANSITION

STATE OF FLORIDA DEPARTMENT OF TRANSPORTATION
ROAD DESIGN

ROADWAY TRANSITIONS

	Names	Dates
Designed By	KNM	9/89
Drawn By	JBW	9/89
Checked By	KNM/JVG	9/89
F.H.W.A. Approved:		

Approved By _____
State Roadway Design Engineer

Revision No.	Sheet No.	Index No.
90	8 of 8	526

GENERAL NOTES

1. The location and construction of mailboxes shall conform to the rules and regulations of the United States Postal Service as modified by this design standard.

2. Mailboxes will not be permitted on Interstate highways, freeways, or other highways where prohibited by law or regulation.

3. The contractor shall give the Postmaster of the delivery route(s) written notice of project construction 7 days prior to the beginning of work, with Saturdays, Sundays and Holidays excluded.

   The Contractor shall furnish and install one mailbox in accordance with this design standard at each mail patron delivery location and maintain the box throughout the contract period. The Contractor shall apply box numbers to each patron box in accordance with identification specifications of the Domestics Mail Manual of the U. S. Postal Service; where local street names and house numbers are authorized by the Postmaster as a postal address, the Contractor shall inscribe the house number on the box; if the box is located on a different street from the patrons residence, the Contractor shall inscribe the street name and house number on the box.

   The Contractor shall coordinate removal of the patrons existing mailboxes. Immediately after installing the new mailboxes the Contractor must notify each "Mail Delivery Patron" by Certified Mail that removal of the existing mailboxes must be accomplished in 21 days after receipt of notices. Patrons shall have the option of removing their existing mailboxes or leaving the mailboxes in place for removal by the Contractor; removal by the Contractor shall be included in the contract unit price for Mailbox, Each. The Contractor shall dispose of mailboxes and supports in areas provided by him.

   Reuse of existing mailboxes by the Contractor will not be a requirement under any construction project; however where an existing mailbox meets the design requirements of this standard and is structurally and functionally sound, the Contractor at his option may elect to reuse the existing mailbox in lieu of constructing a new mailbox. Any use of existing mailboxes must be approved by the Engineer.

4. Mailboxes shall be metal construction only, in traditional style only, and only in Size 1 as prescribed by the Domestic Mail Manual of the U. S. Postal Service (DMM).

   Mailbox production standards, lists of approved manufacturers and suppliers of mailboxes, design approval and guidance may be obtained by writing to the Rural Delivery Division, Delivery Service Department, Operations Group, USPS Headquarters, Washington, DC 20260.

5. Mailboxes shall be located on the right-hand side of the roadway in the direction of the delivery route, except on one-way roads and streets where they may be placed on the left-hand side.

   Mailboxes on rural highways shall be set with the post at the shoulder point, except for shoulders less than 9' in width the face of the box shall be no closer than 8' from the edge of the driving lane except as noted below.

   Mailboxes on low volume (ADT less than 100 vpd), low speed (40 mph or less) rural highways shall be offset with the face of the box at the shoulder point but not closer than 6'-8" from the edge of the driving lane; however, on these low volume low speed highways where shoulders lack sufficient width to accommodate stopped vehicles, mailboxes shall be offset with the face of the box at the shoulder point but not closer than 2'-8" from the driving lane.

   When a mailbox is installed within the limits of guardrail it should be placed behind the guardrail whenever practical.

   Mailboxes on curbed highways, roads and streets shall be set with the face of the box between 6" and 12" back of the face of curb. If the sidewalk abuts the curb or if an unusual condition exists which makes it difficult or impractical to install or serve boxes at the curb, the Contractor with concurrence of the local postal authority may be permitted to install all mailboxes at the back edge of the sidewalk, where they can be served by the carrier from the sidewalk.

6. Mailboxes shall be set with the bottom of the box between 42" and 48" above the mail stop surface, unless the U.S. Postal Service establishes other height restrictions.

7. No more than two mailboxes may be mounted on a support structure unless the support structure and mailbox arrangements have been shown to be safe by crash testing and approved by the State Design Engineer, Roadways.

   Neighborhood Delivery and Collection Box Units (NDCBU) are a specialized multiple mailbox installation that must be located outside the highway and street clear zones. The location of NDCBUs is the sole responsibility of the Postmaster for the delivery route under consideration.

8. Lightweight newspaper receptacles may be mounted below the mailbox on the side of the support post in conformance with the USPS Domestic Mail Manual. The mail patron shall be responsible for newspaper receptacle installation and maintenance.

9. Wood and steel support posts for both single and double mailbox mountings shall be embedded no more than 24" into the ground.

   Concrete, block, brick, stone or other rigid foundation structure or encasement, either above or below the shoulder groundline, will not be permitted for mailboxes on rural highways. On urban roads and streets where mailbox support posts are set within rigid pavement back of curb, the support posts shall be separated from the pavement by a minimum of 1" of expansion material.

   Support posts shall not be fitted nor installed with surface mount base plates.

10. At driveway entrances mailboxes shall be placed on the far side of the driveway in the direction of the delivery route.

    At intersecting roads mailboxes shall be located 100' or more from the centerline of the intersecting road on the far side in the direction of the delivery route, with the distance increased to 200' when the route volume exceeds 400 vehicles per day.

11. Wood support posts shall be in conformance with the material and dimensional requirements of Section 952 and the treatment requirements of Section 955 of the Standard Specifications.

    Steel support posts shall have an external finish equal to or better than two coats of weather resistant, air dried or baked, paint or enamel. Surfaces(s) shall be cleaned of all loose scale prior to finishing. The Postal Service prefers that posts be painted white, but other colors may be used when approved by the Engineer. When galvanized posts are used painting is not required.

    Mounting brackets, plates, platforms, shelfs and accessory hardware surface finishes are to be suited to support post finish.

12. Mailboxes shall be paid for under the contract unit price for Mailboxes, Each. Payment shall be full compensation for boxes, posts and accessory items essential for installation in accordance with this standard; erection; adjustments to suit construction needs; and, for identification letters and numbers.

    Payment shall be limited to one mailbox per patron address whether the mailbox is new, reused, salvaged, reset or relocated. Payment shall be per mailbox regardless of the number of mailboxes per support or grouping arrangement.

    The above compensation shall include any work and cost incurred by the contractor for removal and disposal of existing mailboxes.

    There shall be no payment participation for NDCBU furnishing, assembly, installation, resetting or relocation.

STATE OF FLORIDA DEPARTMENT OF TRANSPORTATION
ROAD DESIGN

MAILBOXES

	Names	Dates
Designed By		
Drawn By	HSD	7/87
Checked By	JVG/JBW	7/87
F.H.W.A. Approved:		

Approved By _____
State Roadway Design Engineer

Revision No.	Sheet No.	Index No.
92	1 of 3	532

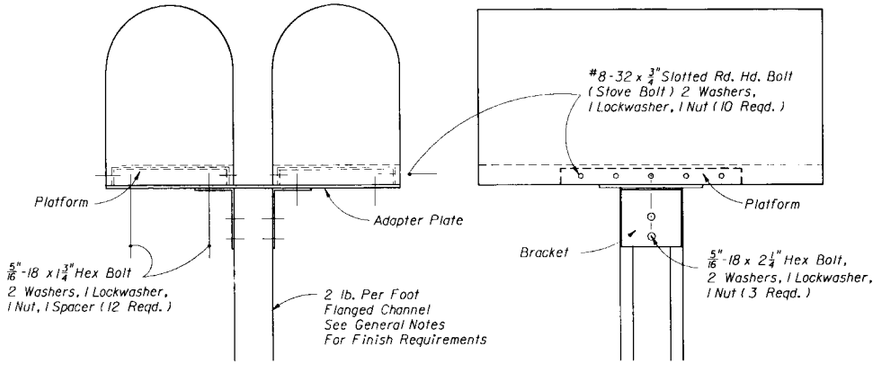

FLANGED CHANNEL

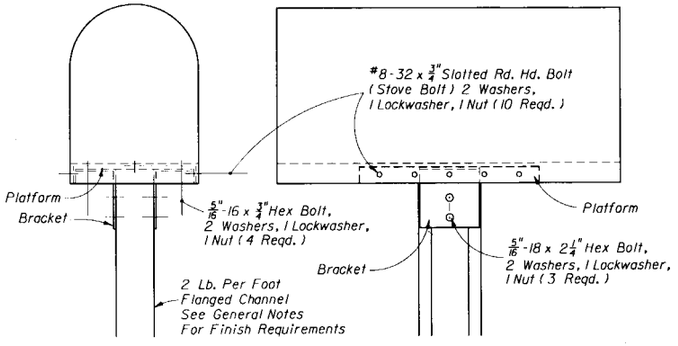

FLANGED CHANNEL

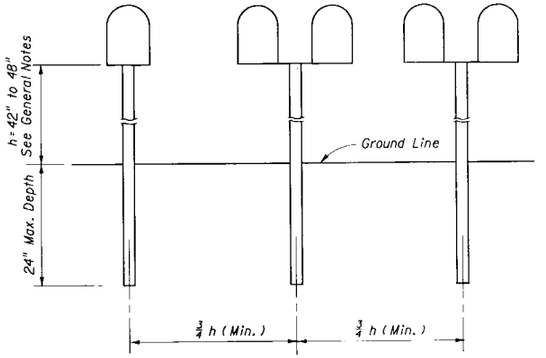

SINGLE OR COMBINED WOOD, FLANGED CHANNEL OR PIPE POST TYPES SHOWN ON THIS INDEX

POST SPACING

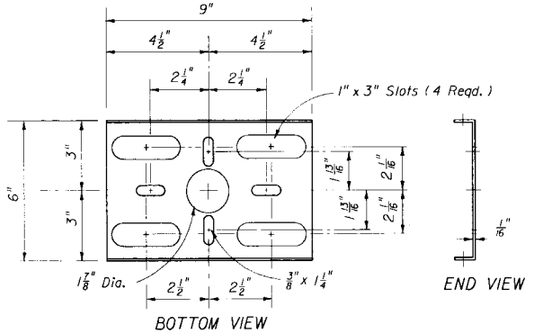

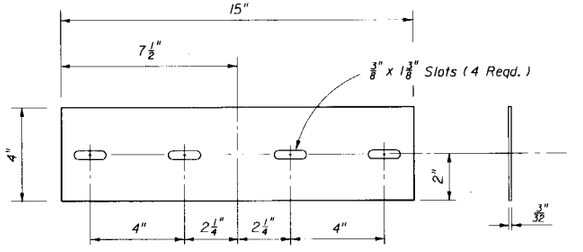

STEEL ADAPTER PLATE

Note: See General Notes for finish requirements.

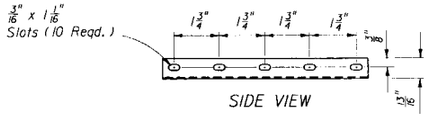

STEEL PLATFORM

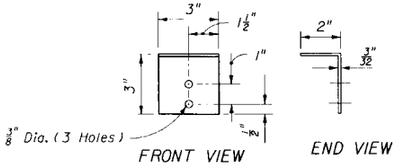

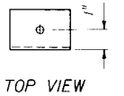

STEEL BRACKET

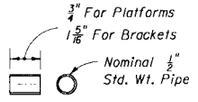

STEEL SPACER

STEEL FLANGED CHANNEL SUPPORT POSTS

STATE OF FLORIDA DEPARTMENT OF TRANSPORTATION
ROAD DESIGN

MAILBOXES

	Names	Dates
Designed By		
Drawn By	HSD	7/87
Checked By	JVG/JBW	7/87
F.H.W.A. Approved:		

Approved By: Kay E. Brown
State Roadway Design Engineer

Revision No.	Sheet No.	Index No.
90	2 of 3	532

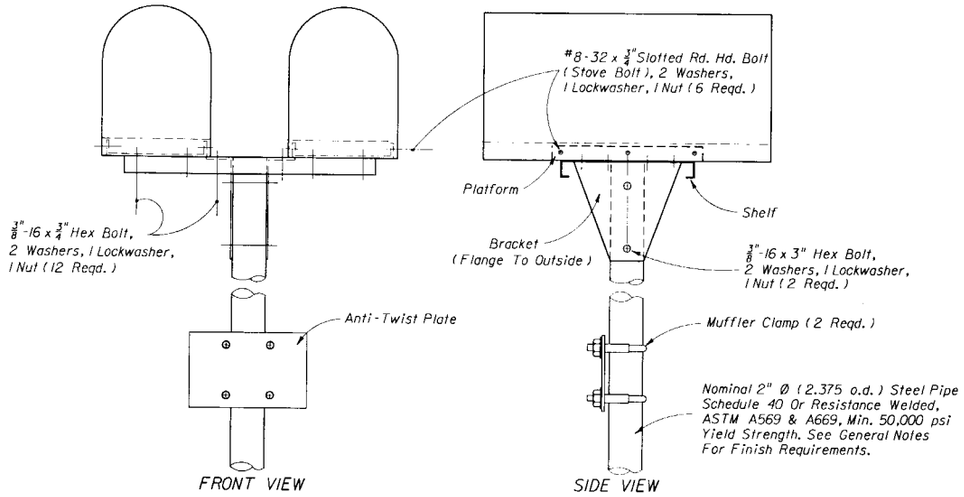

2" Ø PIPE POST

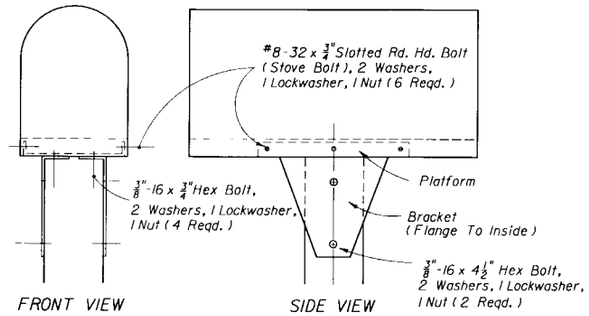

4" X 4" WOOD POST

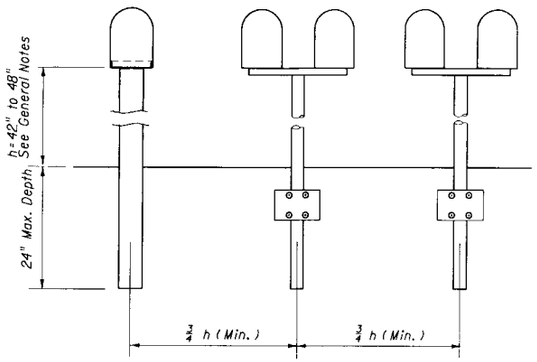

ELEVATION

SINGLE OR COMBINED WOOD, FLANGED CHANNEL OR PIPE POST TYPES SHOWN ON THIS INDEX

POST SPACING

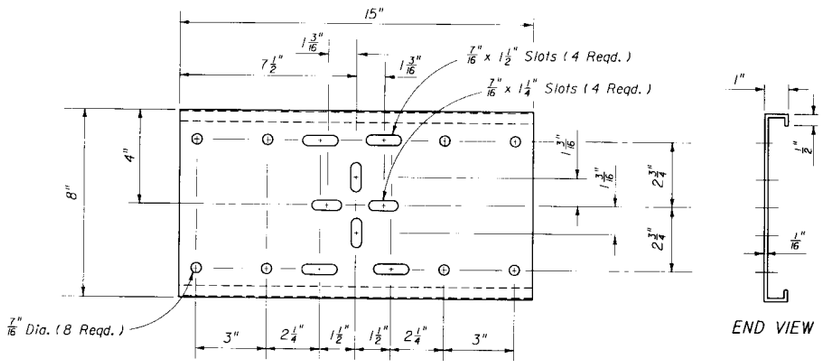

TOP VIEW

STEEL SHELF

END VIEW

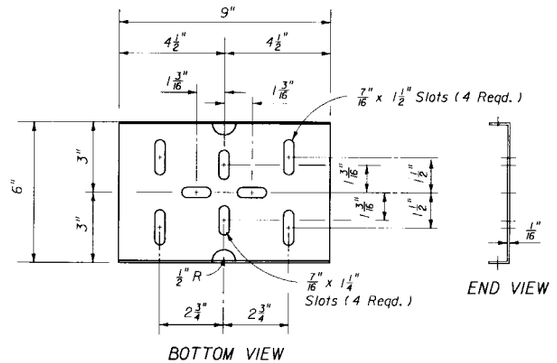

BOTTOM VIEW

END VIEW

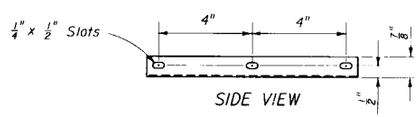

SIDE VIEW

STEEL PLATFORM

Note: See General Notes for finish requirements

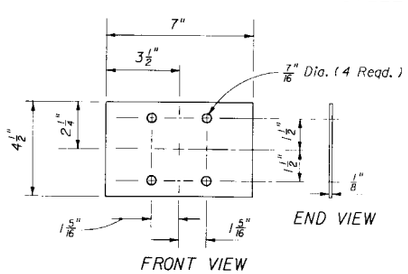

END VIEW

FRONT VIEW

STEEL ANTI-TWIST PLATE

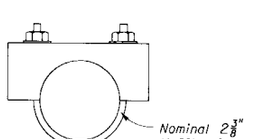

STEEL CLAMP

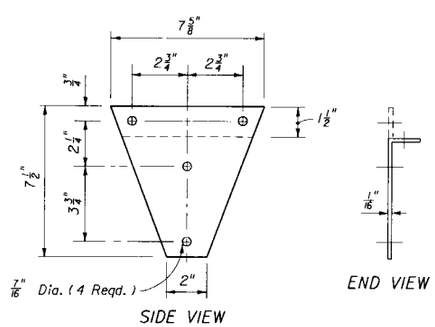

SIDE VIEW

END VIEW

STEEL BRACKET

STEEL PIPE AND WOOD SUPPORT POSTS

STATE OF FLORIDA DEPARTMENT OF TRANSPORTATION
ROAD DESIGN

MAILBOXES

	Names	Dates
Designed By		
Drawn By	HSD	7/87
Checked By	JVG/JBW	7/87
F.H.W.A. Approved:		

Approved By
State Roadway Design Engineer

Revision No.	Sheet No.	Index No.
90	3 of 3	532

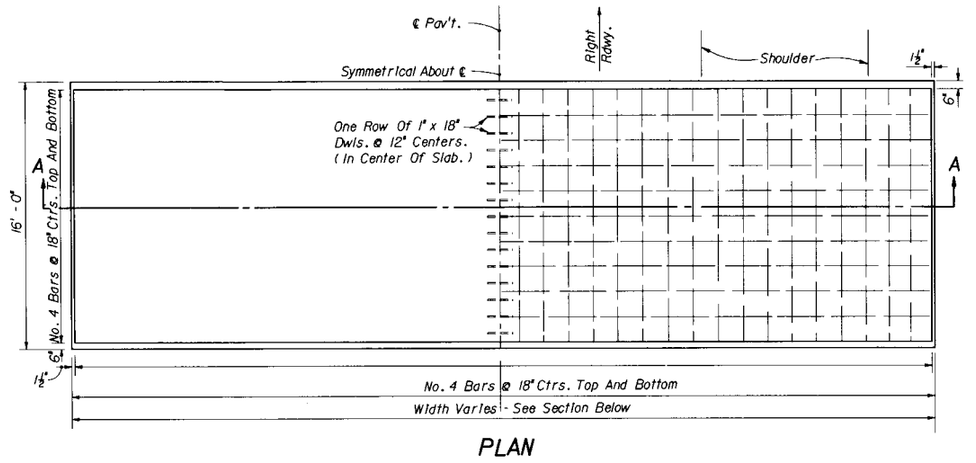

PLAN

Note
Class I concrete is to be used unless otherwise noted in plans or special provisions

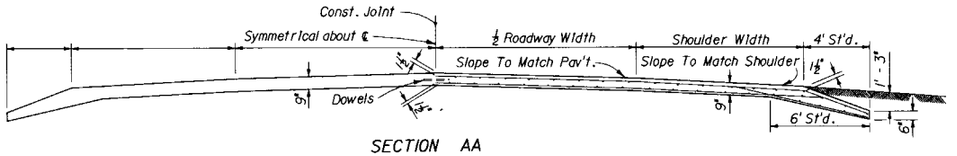

SECTION AA

TYPE A

REINFORCED CONCRETE

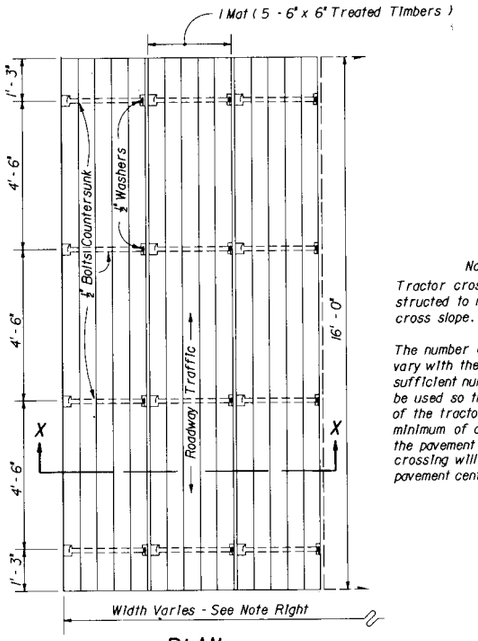

PLAN

Note
Tractor crossing to be constructed to match pavement cross slope.

The number of mats required will vary with the pavement width. A sufficient number of mats will be used so that the overall width of the tractor crossing will be a minimum of one foot greater than the pavement width. The tractor crossing will be centered on the pavement centerline.

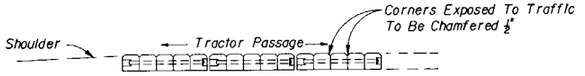

SECTION XX

TYPE B

TREATED TIMBER

STATE OF FLORIDA DEPARTMENT OF TRANSPORTATION
ROAD DESIGN

TRACTOR CROSSINGS

	Names	Dates
Designed By		
Drawn By	LH	01/61
Checked By	CDD	01/61
F.H.W.A. Approved:		03/20/75

Approved By
State Design Engineer, Roadways

Revision No.	Sheet No.	Index No.
81	1 of 1	535

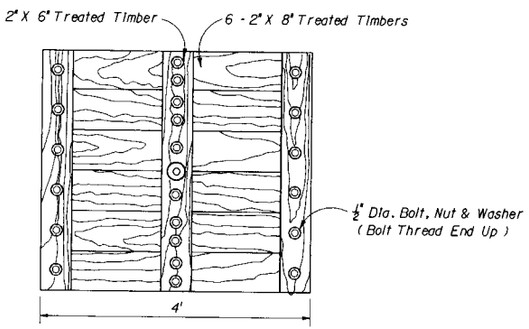

PLAN

TIMBER PLATE

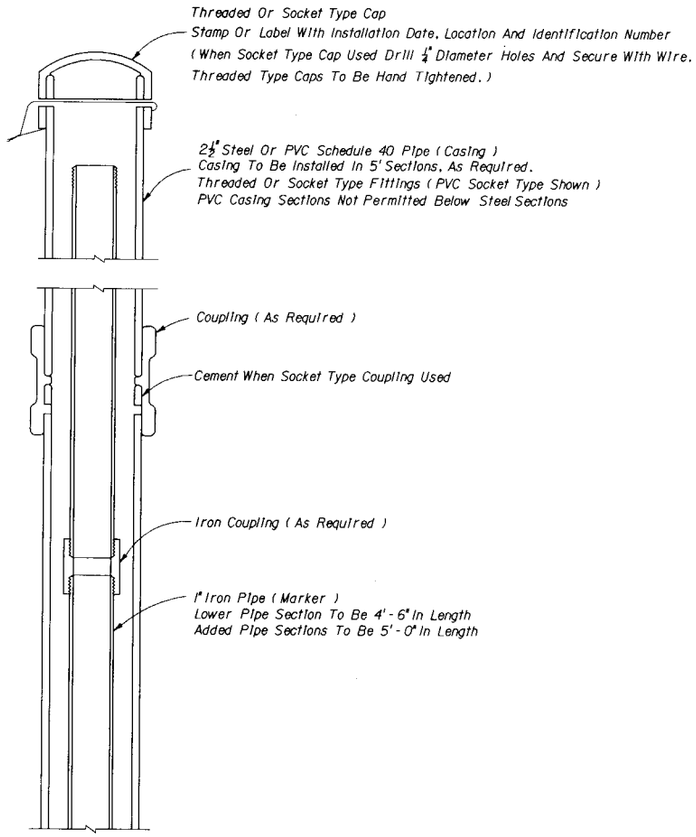

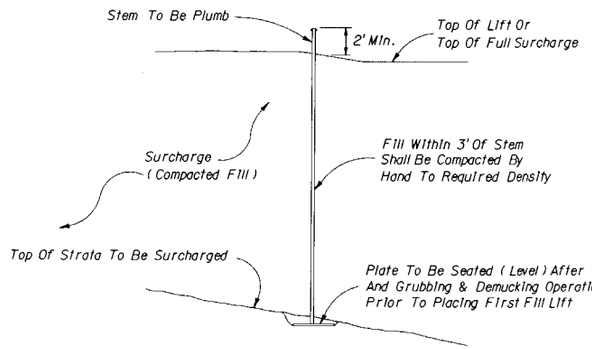

INSTALLATION

NOTES

1. Elevation of the top of each length of marker pipe shall be determined as soon as it is installed and also immediately before the next length of marker pipe is added.
2. Settlement plate locations shall be flagged and protected from construction vehicles and equipment. If settlement plates are disturbed, they shall be replaced in kind.
3. Oakum used to construct seal should not have a mesh covering (plastic or other synthetic material).

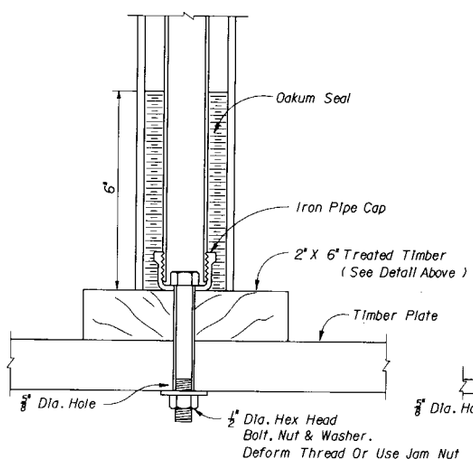

TIMBER PLATE

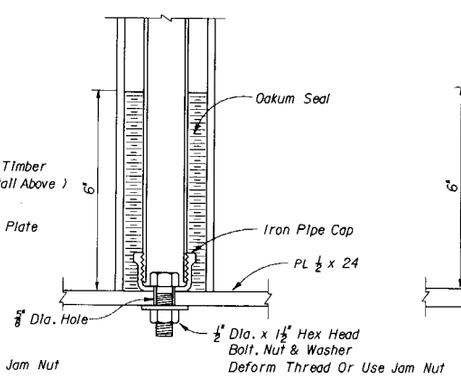

STEEL PLATE

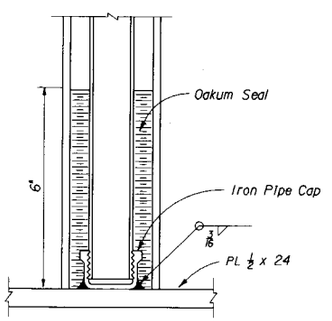

STEEL PLATE

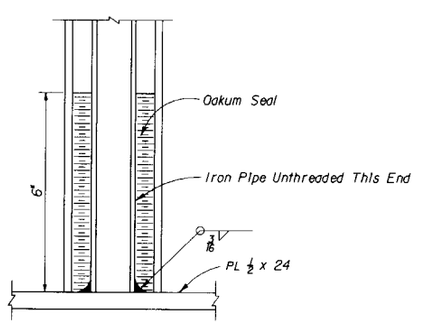

STEEL PLATE

STEM AND PLATE OPTIONS

STATE OF FLORIDA DEPARTMENT OF TRANSPORTATION
ROAD DESIGN

SETTLEMENT PLATE

	Names	Dates
Designed By	JVG	10/79
Drawn By	HSD	10/79
Checked By	JBW	10/79
F.H.W.A. Approved:		10/07/80

Approved By
State Design Engineer, Roadways

Revision No.	Sheet No.	Index No.
81	1 of 1	540

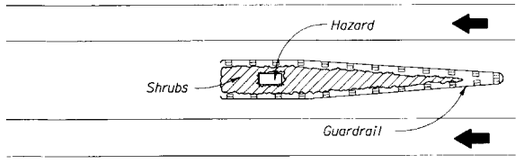

MEDIAN HAZARD - ONE WAY TRAFFIC

DETAIL A

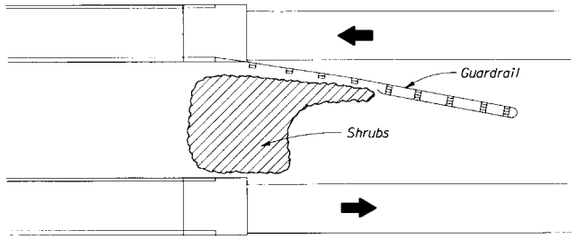

BRIDGE END - WIDE MEDIAN

DETAIL C

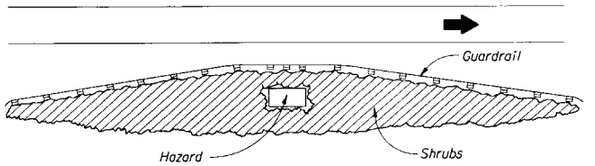

ROADSIDE HAZARD

DETAIL B

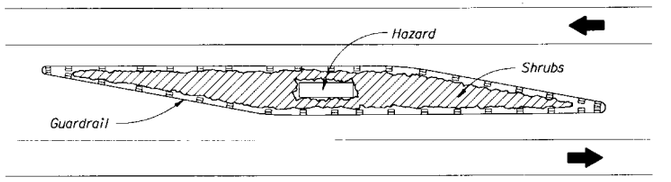

MEDIAN HAZARD - TWO WAY TRAFFIC

DETAIL D

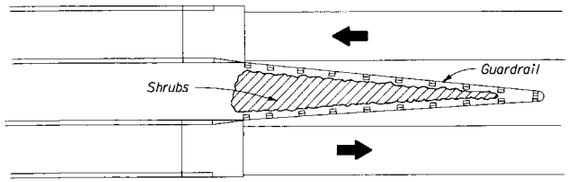

BRIDGE END - NARROW MEDIAN

DETAIL E

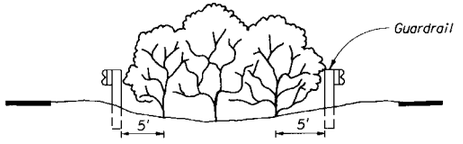

BACK TO BACK GUARDRAIL

SECTIONAL VIEW

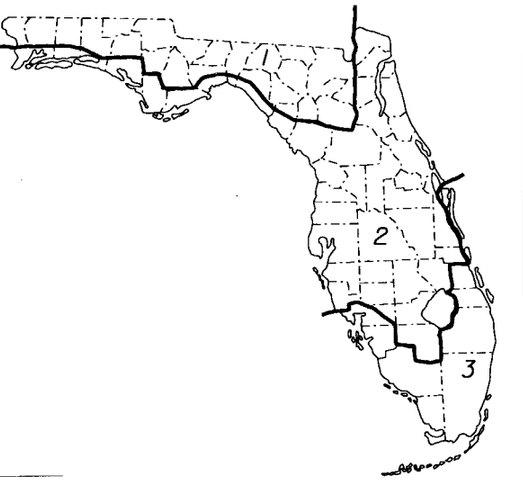

ZONE MAP

ZONE	SHRUB
1.	Wax Myrtle Pampas Grass Primrose Jasmine Russian Olive
2.	Wax Myrtle Pampas Grass Primrose Jasmine Russian Olive Jasmine Simplic Oleander
3.	Pampas Grass Russian Olive Natal Plum Jasmine Simplic Oleander Dwarf Oleander

GENERAL NOTES

1. The purpose of shrubs in areas back of guardrail is to eliminate hand maintenance in those areas.
2. Shrubs are to be planted approximately 5' back from guardrail posts and hazards. Narrow plant areas are to have at least one row of shrubs, as directed by the Engineer.
3. Shrubs are to be planted approximately 5' on centers in rows with 5' spacings.
4. Shrubs are to be offset in successive rows to create a zig-zag pattern between any two rows.
5. Shrubs shall be specified in the plans by Landscape Material Master Pay Item List numbers.
6. Only one variety of shrub shall be planted within any given contiguous area and no shrub variety is to be repeated within a distance of one mile.
7. When guardrail paving is constructed in conjunction with shrub planting, soil sterilization shall be in accordance with Section 339 of the Standard Specifications.
8. For line of clear sight limits see Index No. 546.

STATE OF FLORIDA DEPARTMENT OF TRANSPORTATION
ROAD DESIGN

LANDSCAPING
BACK OF GUARDRAIL APPLICATION

	Names	Dates
Designed By	GLH	
Drawn By		
Checked By		
F.H.W.A. Approved:		

Approved By
State Roadway Design Engineer

Revision No.	Sheet No.	Index No.
90	1 of 1	545

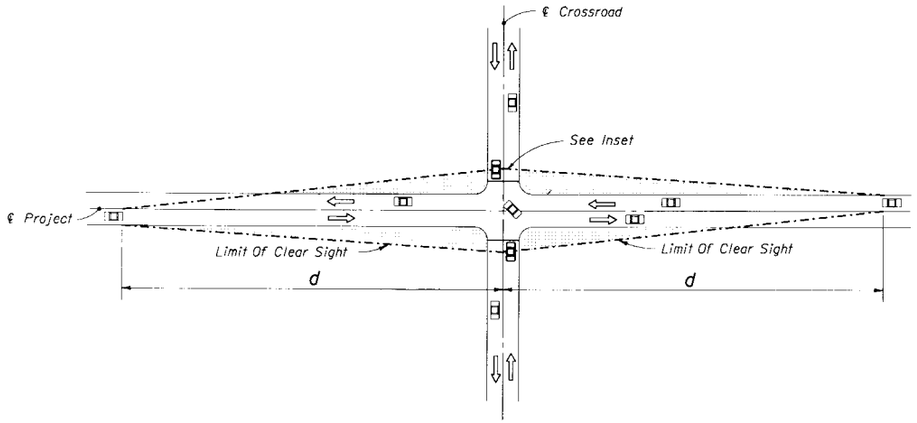

2 LANE UNDIVIDED • SIGNALIZED OR STOP SIGN CONTROLLED

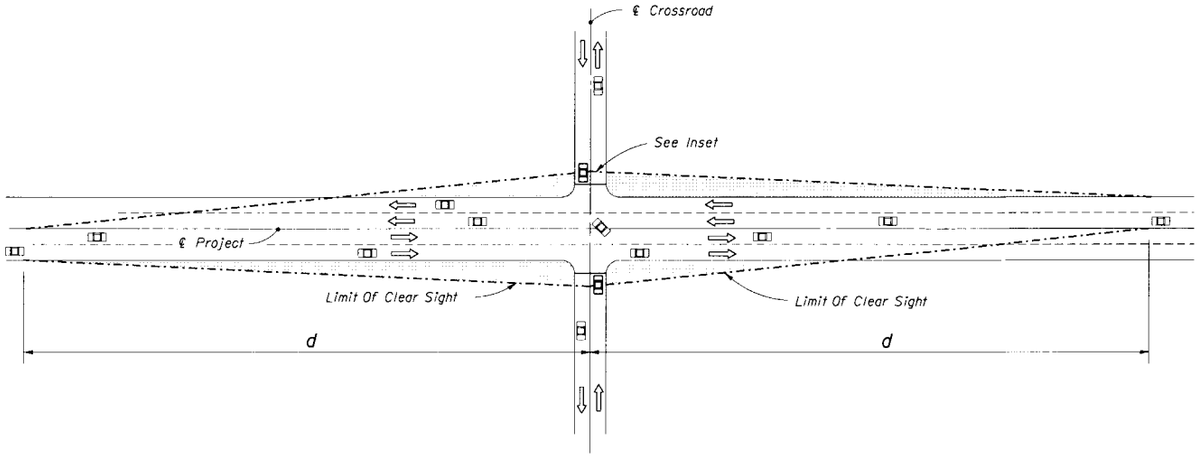

MULTILANE UNDIVIDED • SIGNALIZED OR STOP SIGN CONTROLLED

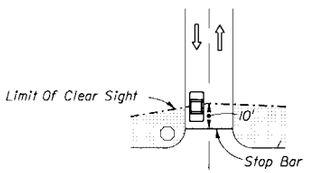

INSET

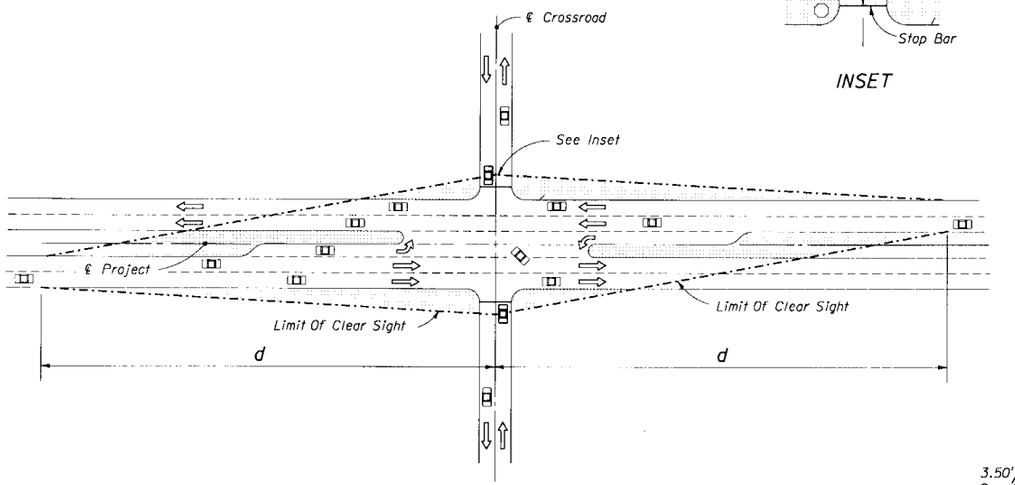

MULTILANE DIVIDED • SIGNALIZED OR STOP SIGN CONTROLLED

LEGEND

Restricted Planting Areas

DESIGN NOTES

1. The information shown on this index is intended solely for the purpose of landscape development and maintenance, and is not intended to be used to establish geometric design, right of way, speed control, signing, marking, lighting or signalization, or, to establish roadway and roadside safety except as related to landscaping.
2. Sight distance (d) is measured from the center of the intersection along the major highway.

SIGHT DISTANCE (d)	
Design Speed MPH	d
55	1450'
45	950'
35	590'

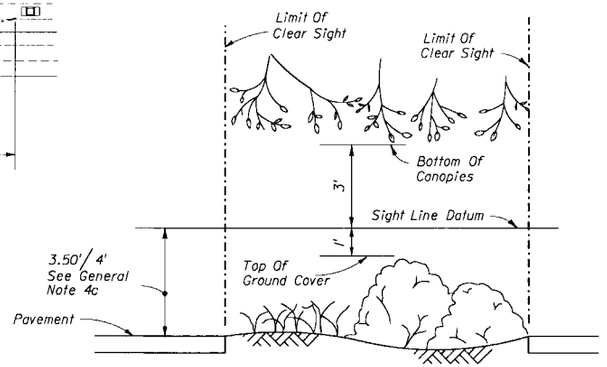

The Intent Of This Standard Is To Provide A Window With Vertical Limits 3' Above And 1' Below The Sight Line Datum, And Horizontal Limits Defined By The Limits Of Clear Sight.

WINDOW DETAIL

GENERAL NOTES

1. Details are based on the AASHTO 'A Policy On Geometric Design Of Highways And Streets', Chapter IX, Cases III and IV.
2. Details apply to rural and urban highways and streets.
3. Details also apply to skewed intersections, and where vertical and/or horizontal curves are present.
4. a. The limits of clear sight define a corridor throughout which a clear sight window must be preserved. See WINDOW DETAIL.
   b. Clear sight must be provided between vehicles at crossroad stop bars, and vehicles on the project at any point within dimension 'd'.
   c. Clear sight is provided by a sight line originating 3.50' above the pavement at the drivers eye level and ending 4' above the pavement at the vehicle observed.
5. The corridor defined by the limits of clear sight is a restricted planting area. Drivers of vehicles on the crossroad and vehicles on the project must be able to see each other clearly throughout the limits of 'd'. Plants within the restricted areas are limited to selections as follows:

   Ground Covers - Plant selection of low growing vegetation which at maturity does not attain a height greater than 1'(foot) below the sight line datum.

   Trees, Palms Or Other Trunked Plants - Plant selection of a mature trunk diameter 4" or less measured at 6" above the ground. Canopy or high borne foliage shall never be lower than 3'(feet) above the sight line datum. These selections shall be spaced no closer than 20 feet.

6. If, in the Engineers judgement, landscaping interferes with the line of sight prescribed by these standards the Engineer may rearrange, relocate or eliminate plantings.
7. Plants shall never obscure signs or signals.

STATE OF FLORIDA DEPARTMENT OF TRANSPORTATION
ROAD DESIGN

LANDSCAPING AT INTERSECTIONS

	Names	Dates
Designed By	CDP/KNM	10/89
Drawn By	MSD	10/89
Checked By	JVG/KNM	10/89
F.H.W.A. Approved: 6/11/91		

Approved By
State Roadway Design Engineer

Revision No.	Sheet No.	Index No.
92	1 of 1	546

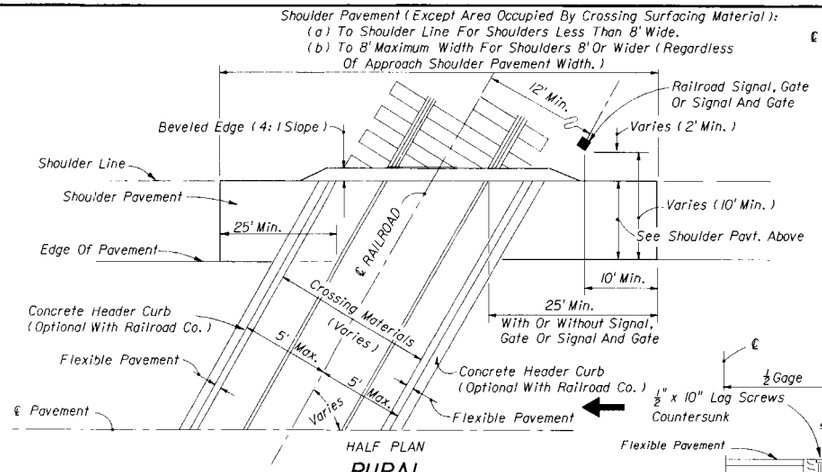

RURAL

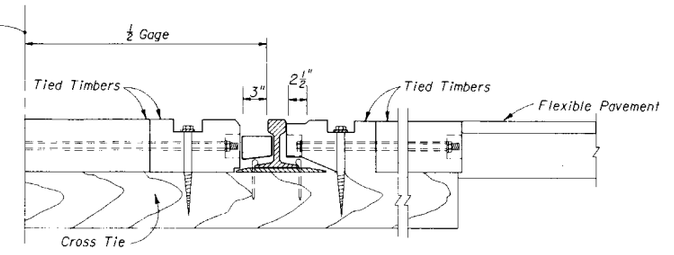

HALF SECTION TYPE D

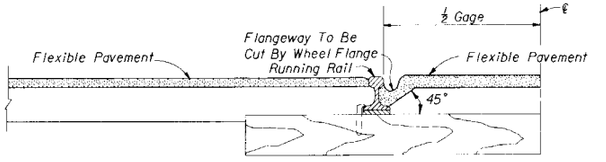

HALF SECTION TYPE E

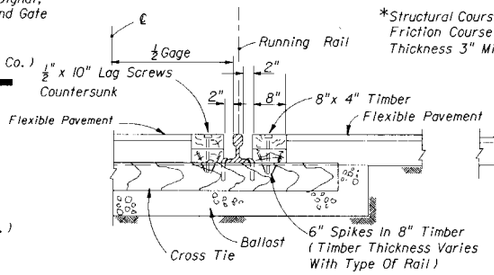

HALF SECTION TYPE G

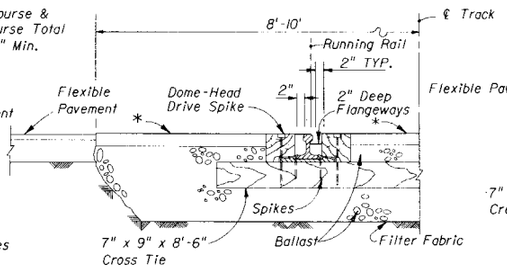

HALF SECTION TYPE G MODIFIED

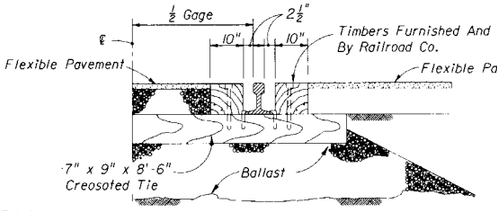

HALF SECTION TYPE H

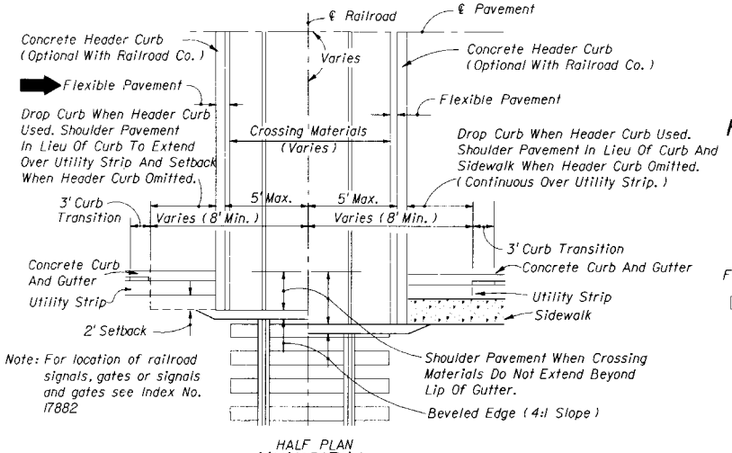

MUNICIPAL

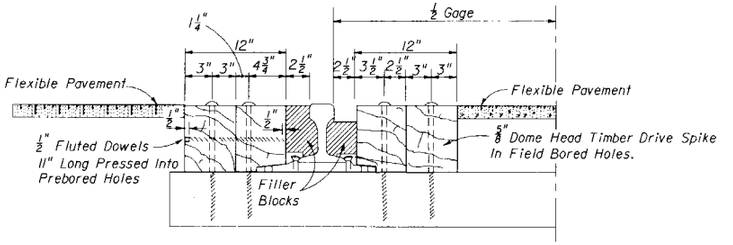

HALF SECTION TYPE L

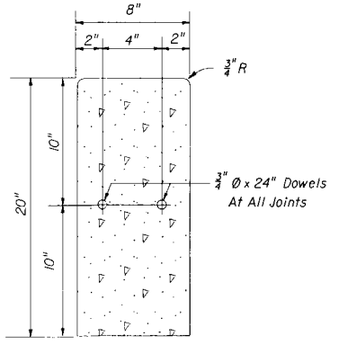

HEADER CURB
(Optional With Railroad Co.)

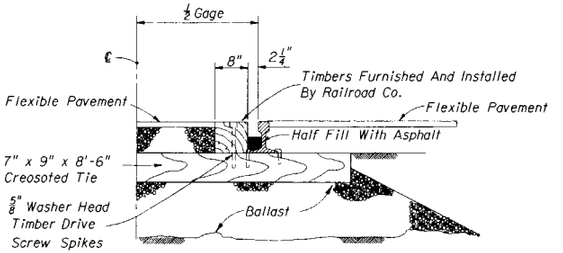

HALF SECTION TYPE S

NOTES

1. The Department will construct header curbs at locations requested by the railroad company. and construct pavement as shown for crossing types E, G, H, L, and S.
2. The Railroad Company will furnish and install all material within 5' of ℄ of tracks, except pavement, for crossing types E, G, H, L, and S.
3. Gage is standard AREA tract gage of 4'-8½" (56½").
4. Unless otherwise requested by the railroad company, the type(s) of crossing(s) used will be as follows:

	TYPE
Apalachicola Northern R.R. Co.	L
Atlanta and St. Andrews Bay Railway Co.	L
Florida East Coast Railway Co.	T-MOD. & G-MOD.
Burlington Northern Railroad	L
CSX Transportation, Inc	L
Norfolk Southern Corporation	
(a) Georgia Southern and Florida Railway Co.	G
(b) Live Oak, Perry and South Georgia Railway Co.	G
(c) St. Johns River Terminal Co.	G
(d) Georgia and Florida Railway Co.	G
(e) Southern Railway System	G

STATE OF FLORIDA DEPARTMENT OF TRANSPORTATION
ROAD DESIGN

RAILROAD CROSSINGS TYPE D,E,G,G-MOD., L & S

	Names	Dates
Designed By		
Drawn By	HW	08/69
Checked By	JKC	08/69
F.H.W.A. Approved:		03/20/75

Approved By: Kenneth M. Morfield
State Roadway Design Engineer

Revision No.	Sheet No.	Index No.
90	1 of 8	560

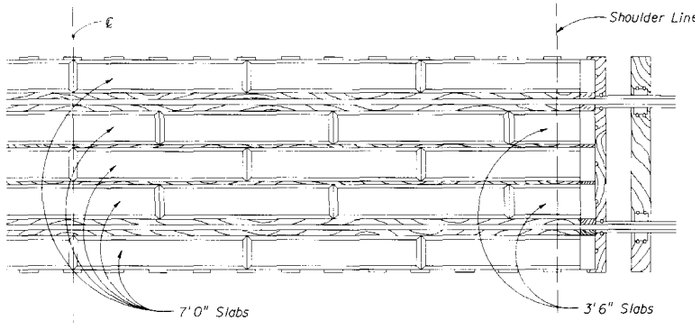

PLAN - 90° CROSSING

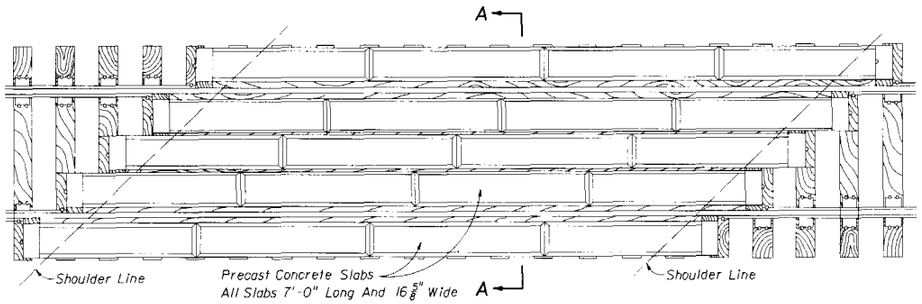

PLAN - SKEW CROSSING

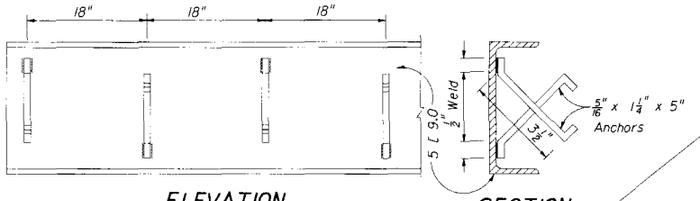

ELEVATION

SECTION

Detail of 5/16" x 1 1/4" x 5" Anchors
Anchors Staggered 18" C. to C.
Two Anchors Each End Channel
Note: 1/2" x 5" Studs May Be Used
In Lieu Of Anchors

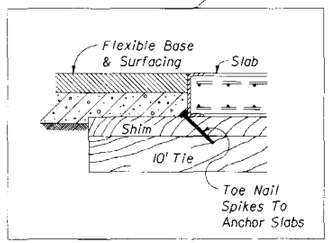

OPTIONAL DETAIL
When 10' Ties Are Used

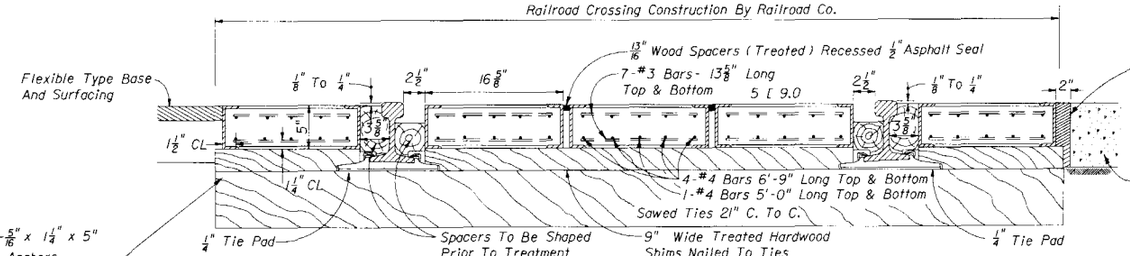

SECTION AA

Note: Thickness of shims is
dependent upon weight of rail

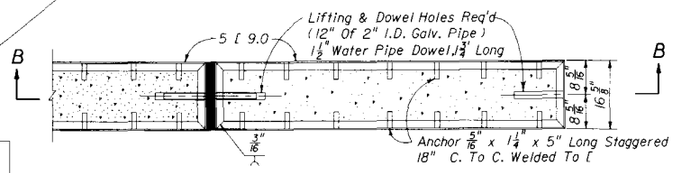

PLAN TYPICAL SLAB

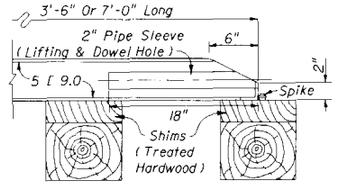

BEVELED END SECTION

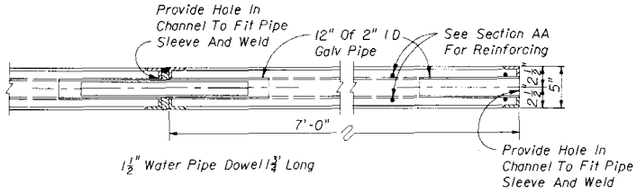

SECTION BB

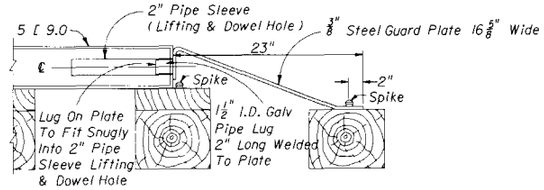

ALTERNATE END SECTION

NOTES

1. Spacers adjacent to rail to be dense structural 65 grade.
2. Spacers between slabs to be No. 1 common grade.
3. All timber to be shaped prior to treatment.
4. Class I concrete to be used in the construction of the precast concrete slabs.
5. All timber shims and spacers and precast concrete slabs will be furnished and installed by the Railroad Co. The track shall be conditioned true to line and grade by the Railroad Co. prior to installation of the crossing elements.
6. Construction of this crossing requests a stable subgrade for a minimum of 2' below the bottom of the ballast. The subgrade shall be con - structed to the same requirements as specified for the adjoining roadway.

STATE OF FLORIDA DEPARTMENT OF TRANSPORTATION
ROAD DESIGN

RAILROAD CROSSINGS TYPE J

	Names	Dates
Designed By		
Drawn By	HW	8/69
Checked By	JKC	8/69
F.H.W.A. Approved:		3/20/75

Approved By
Kenneth H. Mayfield
State Design Engineer, Roadways

Revision No.	Sheet No.	Index No.
83	2 of 8	560

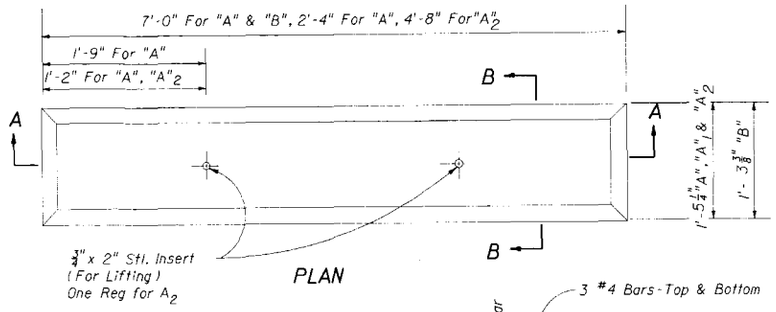

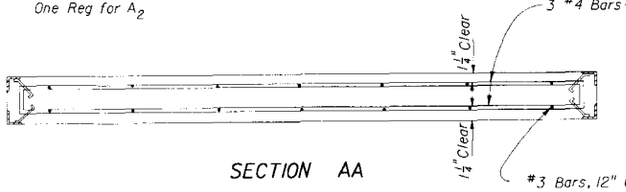

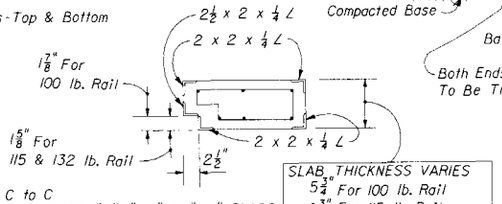

SLAB THICKNESS VARIES
5¾" For 100 lb. Rail
6⅜" For 115 lb. Rail
6⅞" For 132 lb. Rail

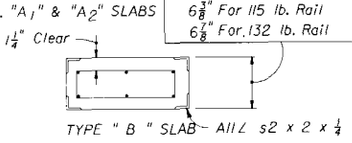

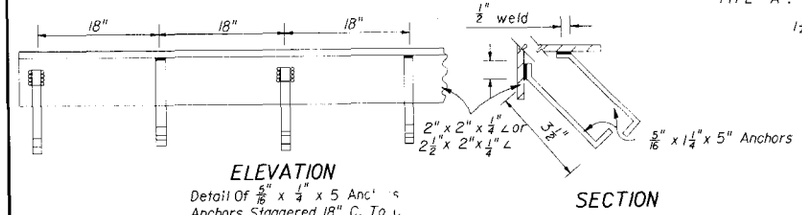

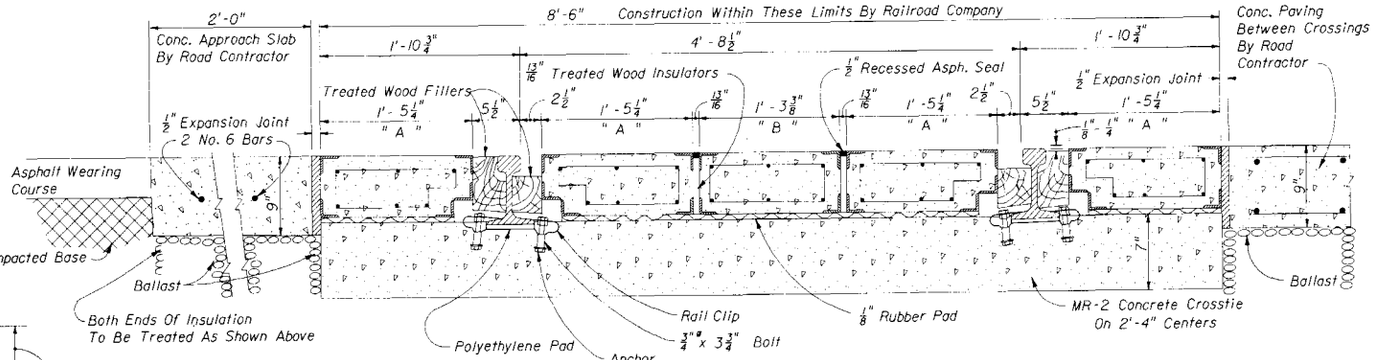

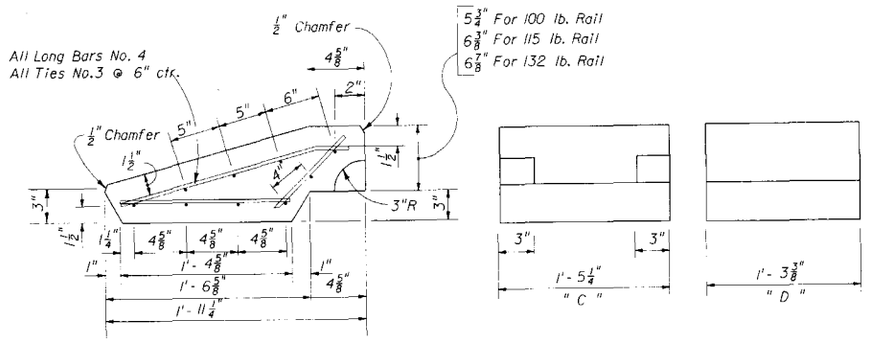

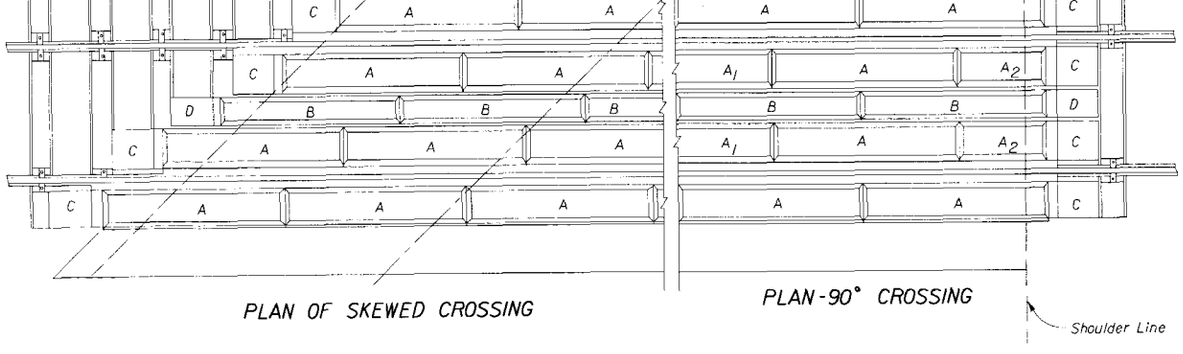

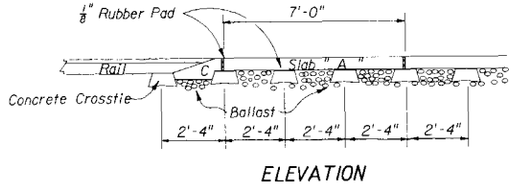

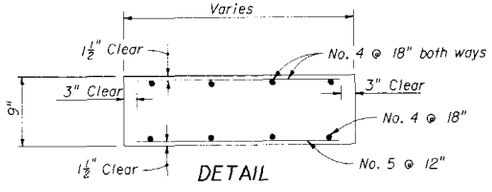

Reinforcing For Concrete Paving Between Parallel Track Crossings
(Cost Of Reinforcing To Be Included In Cost Of Class I Concrete, See Note No. 6)

GENERAL NOTES

1. The furnishing and installing of concrete crossties together with any necessary reballasting, grade adjustment and track alignment shall be done by the Railroad Company without cost to the Contractor or to the Department.
2. All concrete slabs, rubber pads for tops of ties and wood filler blocks shall be furnished and installed by the Railroad Company.
3. Concrete crossties shall be spaced on 28" centers by the Railroad Company.
4. Rubber pads shall be installed on concrete ties in field using contact cement.
5. Filler blocks shall be pressure treated pine or clear heart redwood and shall be shaped prior to treatment.
6. Class I Concrete 9" thick to be used in construction, by road contractor, of Concrete approach slabs and for paving between crossing (Cost of steel to be included in cost of Class I Concrete.)

STATE OF FLORIDA DEPARTMENT OF TRANSPORTATION
ROAD DESIGN

RAILROAD CROSSINGS TYPE K

	Names	Dates
Designed By		
Drawn By	HW	08/69
Checked By	JKC	08/69
F.H.W.A. Approved:		03/20/75

Approved By
State Design Engineer, Roadways

Revision No.	Sheet No.	Index No.
83	3 of 8	560

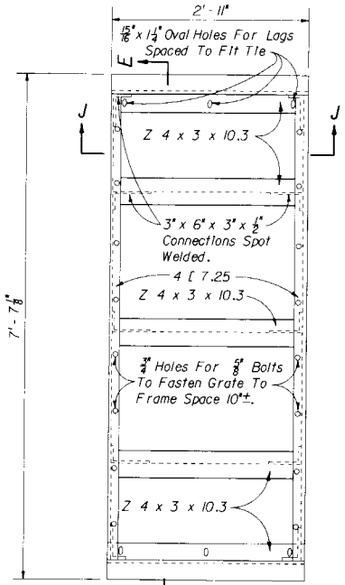

PLAN

INTER - TRACK UNIT

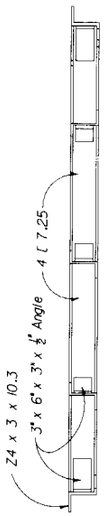

SECTION EE

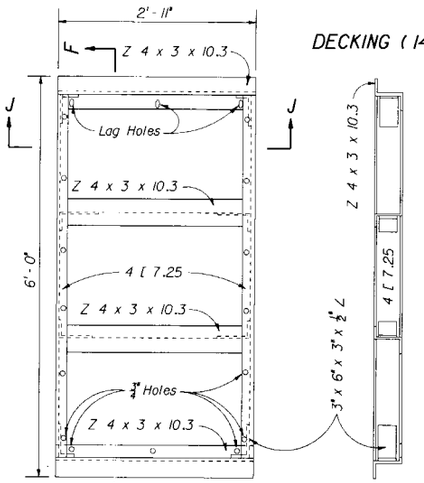

PLAN

ALTERNATE OUTER - TRACK UNIT

SECTION FF

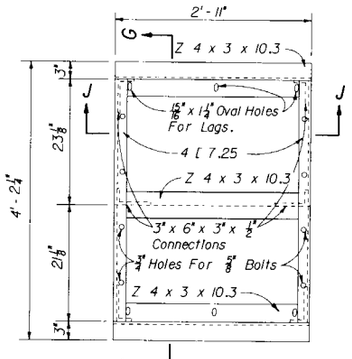

PLAN

INTER - RAIL UNIT

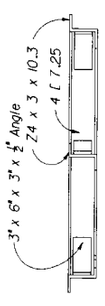

SECTION GG

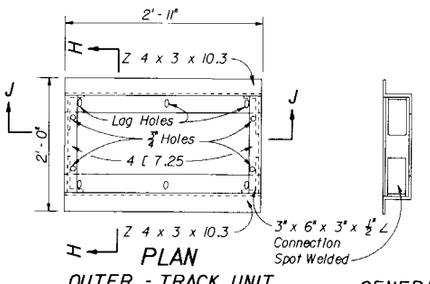

PLAN

OUTER - TRACK UNIT

SECTION HH

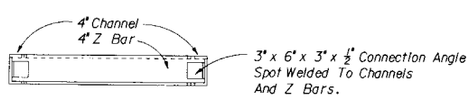

SECTION JJ

FRAME DETAILS

Scale 1" = 1'

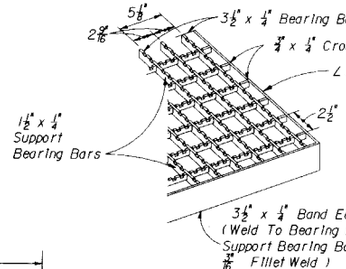

DECKING (14.81 LBS. / S.F.)

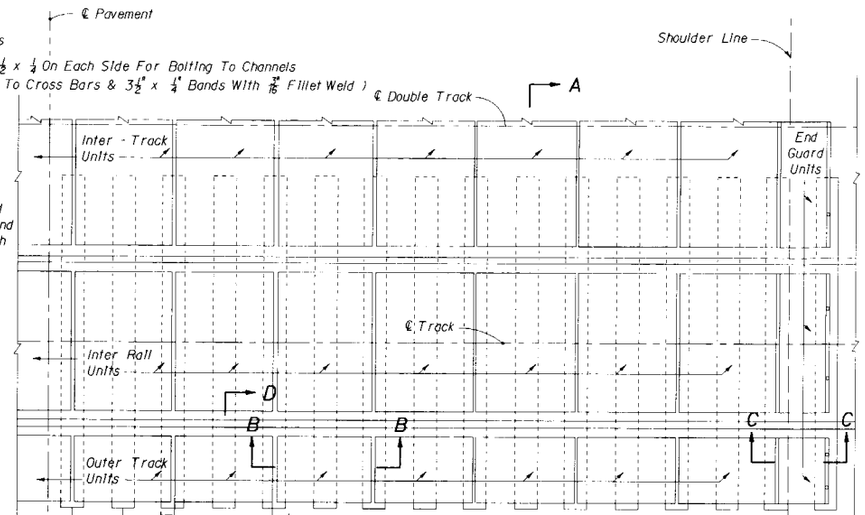

PLAN

Scale 1/2" = 1'

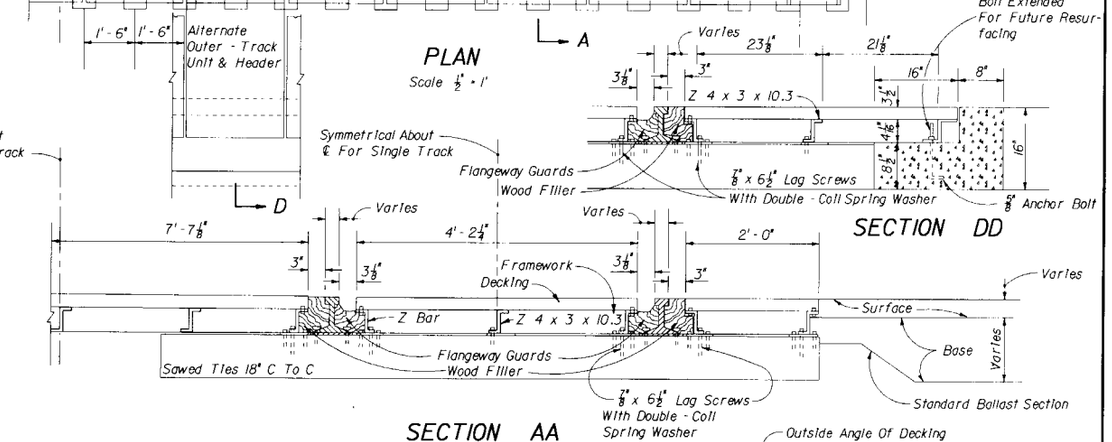

SECTION AA

SECTION DD

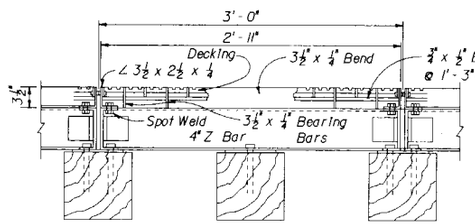

SECTION BB

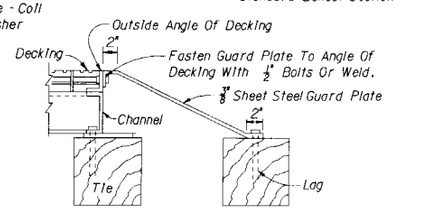

SECTION CC

GENERAL NOTES

1. This drawing is based on using 131# rail on a tangent section and decking fabricated in sections to fit the corresponding sections of the supporting frame. The depth of the Z bars and channels may be varied to fit other rail sections.
2. The framework units are attached to ties by 7/8" x 6 1/2" lag screws, and to headwall by 5/8" anchor bolts. Double - coil spring washers are used with lags to compensate for vertical motion.
3. The decking is attached to the framework with 5/8" bolts. The head of the bolt is to be spot welded to the under - side of the channel flange.
4. Flangeway and outside filler timbers to be rabbetted to assure close fit prior to treatment.
5. Ties to be sawed and spaced 18" C to C.
6. Crossing of any angle can be equipped with units of either 45° ,67°30' or 90°.
7. Decking may be as shown or equal (Submit shop drawings for approval by the Engineer).

STATE OF FLORIDA DEPARTMENT OF TRANSPORTATION
ROAD DESIGN

RAILROAD CROSSINGS TYPE M

	Names	Dates
Designed By		
Drawn By	HW	08/69
Checked By	JKC	08/69
F.H.W.A. Approved:		03/20/75

Approved By

State Design Engineer, Roadways

Revision No.	Sheet No.	Index No.
83	4 of 8	560

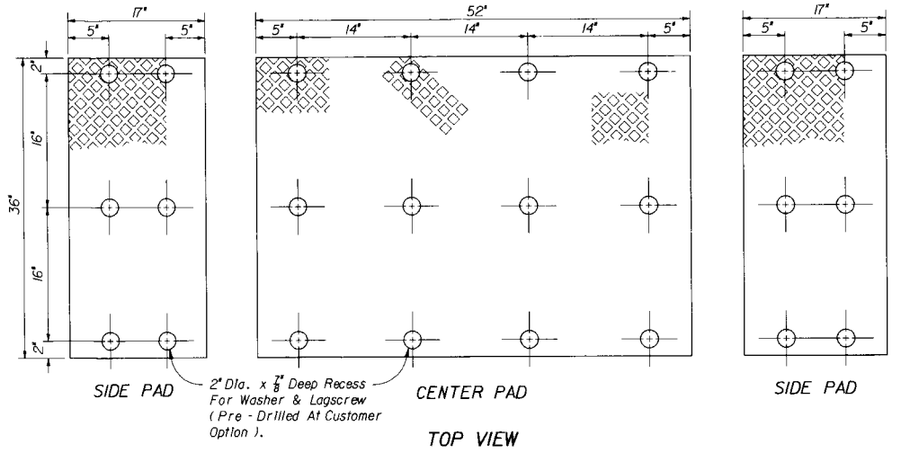

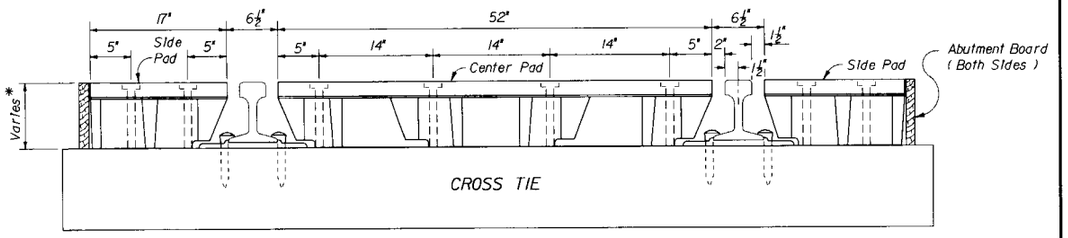

* O.A. Height 6 1/2" - Pads Typical For 90-100 Lb Rails.
O.A. Height 7 3/8" - Pads Typical For 110-130 Lb Rails.
O.A. Height 7 7/8" - Pads Typical For 131, 133 Or 136 Lb Rails.

SECTION

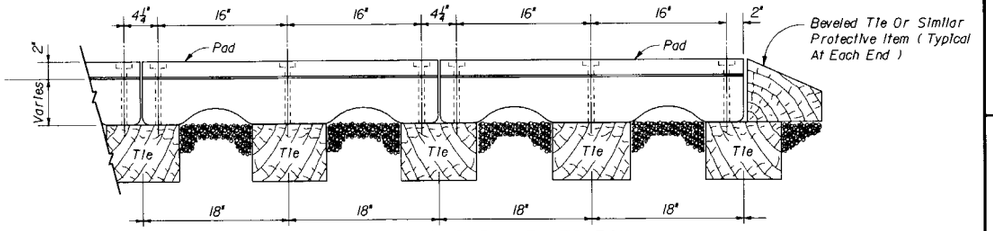

CROSSING TYPE "P" ⓘ
(POLYETHYLENE)

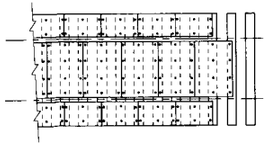

PARTIAL PLAN DEPICTING SUGGESTED PAD PLACEMENT

ⓘ Experimental - Requires Prior Approval

STOP ZONE	
Design Speed	Zone Length - Distance From Stop
45 MPH Or Less	250'
50 - 55	350'
60 - 65	500'
70	600'

GENERAL NOTES

1. The crossings shown on this sheet are NOT to be used for multiple track crossings within zones for an existing or scheduled future vehicular stop. Zone lengths are charted above.
2. Crossings on this sheet may be used for single track crossings within the zones in the chart unless engineering or safety considerations dictate otherwise.
3. Details shown are for straight track installations. Materials are also available for curved track installations.
4. For additional details, materials required and installation procedures refer to the manufacturers specifications.

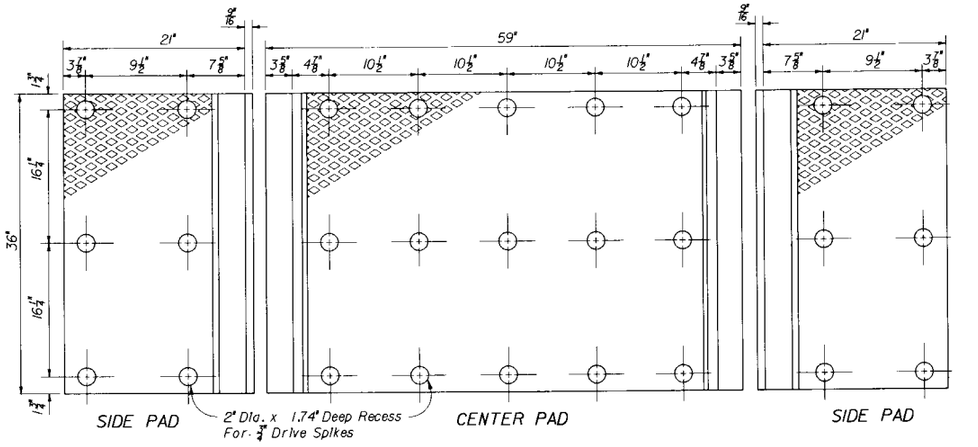

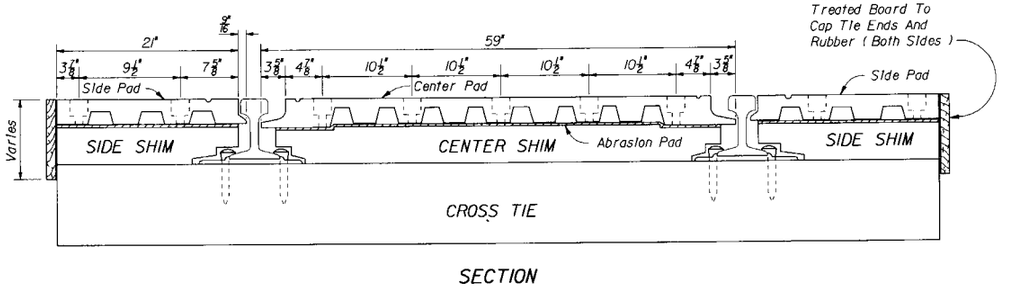

SECTION

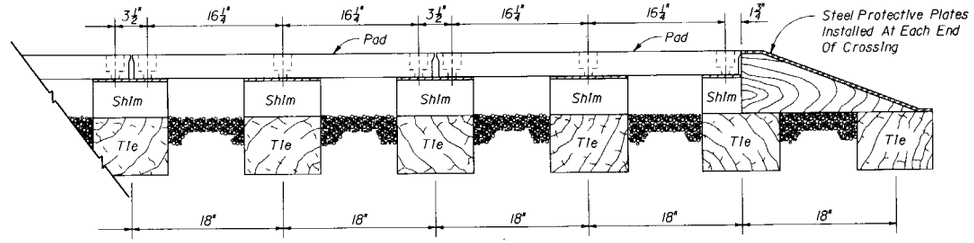

CROSSING TYPE "R"
(RUBBER)

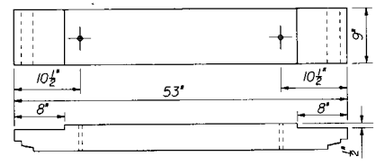

CENTER SHIM
(Treated Timber)

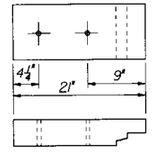

SIDE SHIM
(Treated Timber)

Shim Thickness Varies With Height Of Rail.

STATE OF FLORIDA DEPARTMENT OF TRANSPORTATION
ROAD DESIGN

RAILROAD CROSSINGS TYPE P & R

	Names	Dates
Designed By		
Drawn By	LMF	11/75
Checked By	GSB	11/75
F.H.W.A. Approved:		10/11/78

Approved By
State Design Engineer, Roadways

Revision No.	Sheet No.	Index No.
85	5 of 8	560

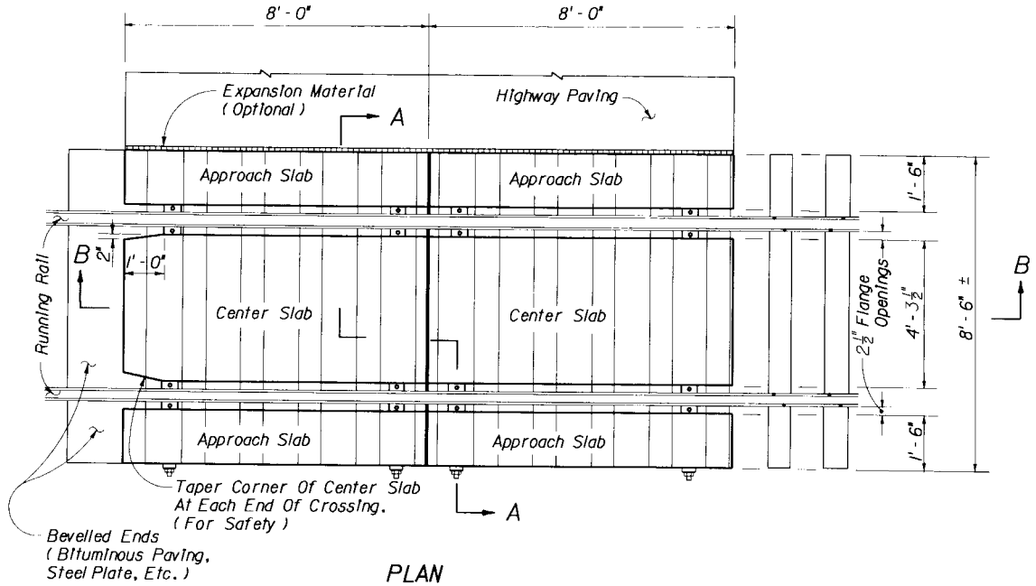

PLAN



SECTION BB

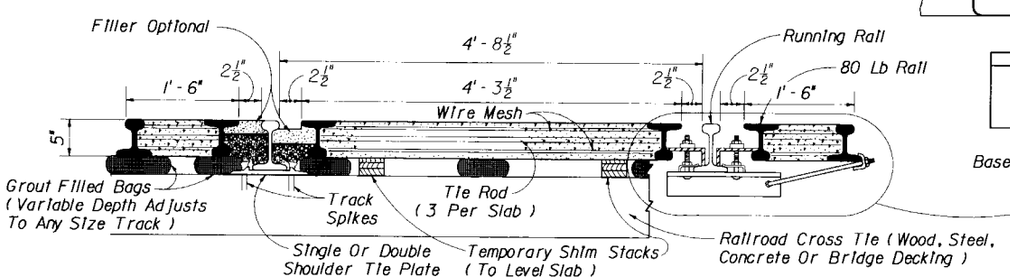

SECTION AA

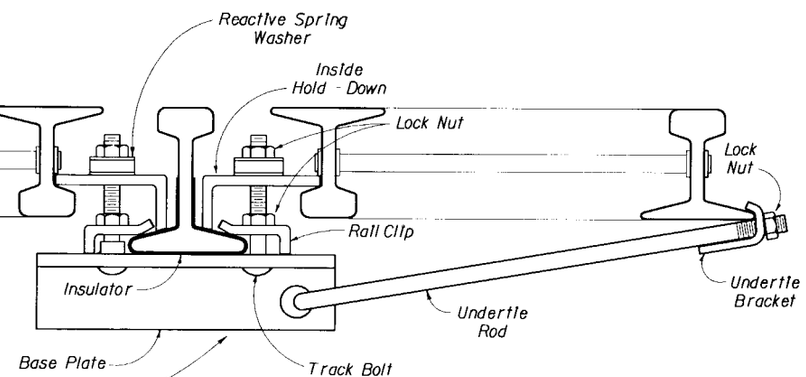

TYPICAL BOTH SIDES

GENERAL NOTES

1. The reinforced concrete slabs are manufactured in 8'-0" sections, 5" in depth to fit all rail sections 5¼" in height or heavier. Slabs are interchangeable and relocateable.
2. Center slabs are one piece construction allowing for 2½" flange opening, 80 lb. rail is used to encase, armor and reinforce slabs and is held to gage with 3 tie rods per slabs.
3. Slabs are installed by a "flotation" process, supported on non - shrinkable, non - metallic grout positioned on the ties. Slabs can be placed on wood ties, concrete ties, steel ties, bridge decks or any other type of track support. No re-spacing of ties is necessary.
4. Slabs are secured to "running rails" with specially designed hardware. Insulation is to be provided for crossing in signal territory.
5. Curved slabs are fabricated to fit curved track to 22 degrees (262.04' radius). Special slabs are available for diamond crossings, turnouts, multiple tracks, bridge decks and rapid transit systems.
6. For additional details, materials required and installation procedures refer to the manufacturers specifications.

STATE OF FLORIDA DEPARTMENT OF TRANSPORTATION
ROAD DESIGN

RAILROAD CROSSINGS
TYPE T

	Names	Dates
Designed By		
Drawn By	LMF	02/77
Checked By	GSB	02/77
F.H.W.A. Approved:		05/03/77

Approved By
State Design Engineer, Roadways

Revision No.	Sheet No.	Index No.
83	6 of 8	560

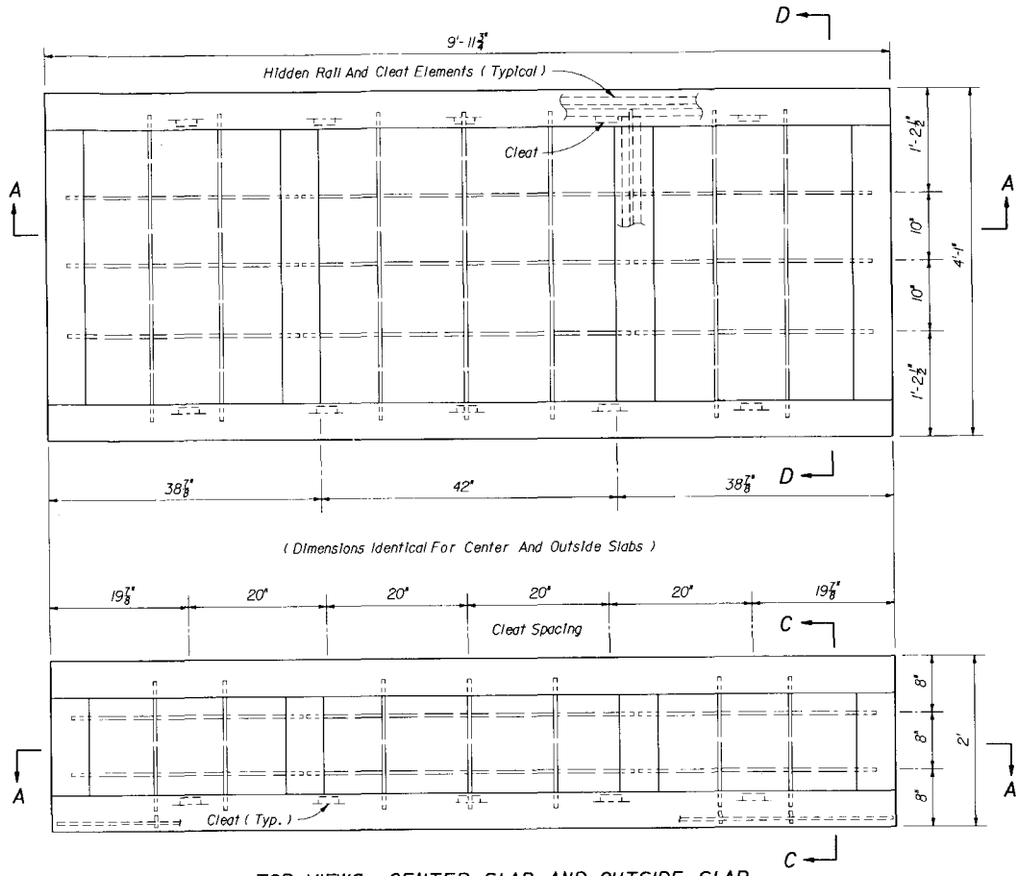

TOP VIEWS - CENTER SLAB AND OUTSIDE SLAB

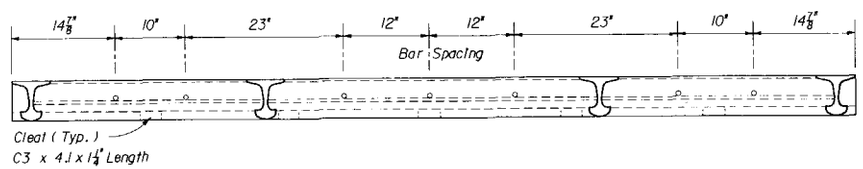

SECTION AA

STANDARD SLABS (PRECAST CONCRETE)

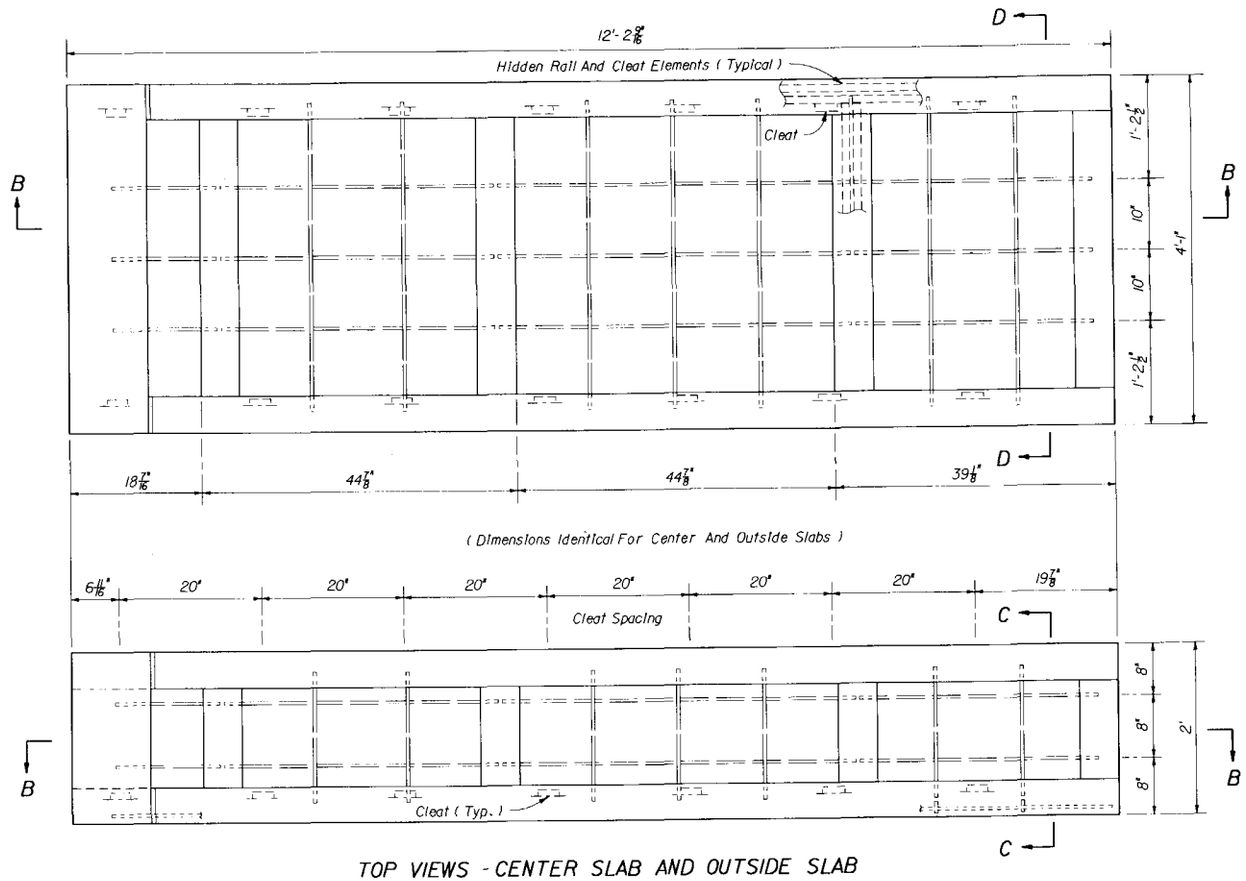

TOP VIEWS - CENTER SLAB AND OUTSIDE SLAB

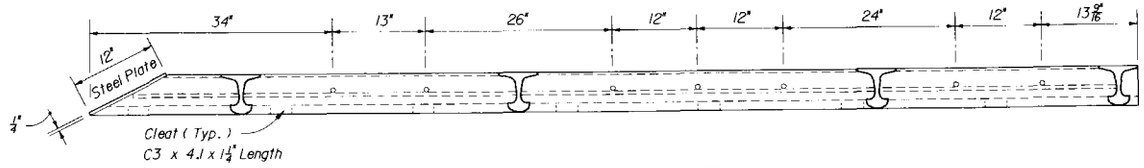

SECTION BB

RAMP SLABS (PRECAST CONCRETE)



SECTION CC

SECTION DD

STANDARD AND RAMP SLAB SECTIONS

STATE OF FLORIDA DEPARTMENT OF TRANSPORTATION
ROAD DESIGN

RAILROAD CROSSING TYPE T MODIFIED

	Names	Dates
Designed By		
Drawn By	RWR	9/82
Checked By	JVC, JBW	9/82
F.H.W.A. Approved:		9/23/82

Approved By
State Design Engineer, Roadways

Revision No.	Sheet No.	Index No.
83	7 of 8	560

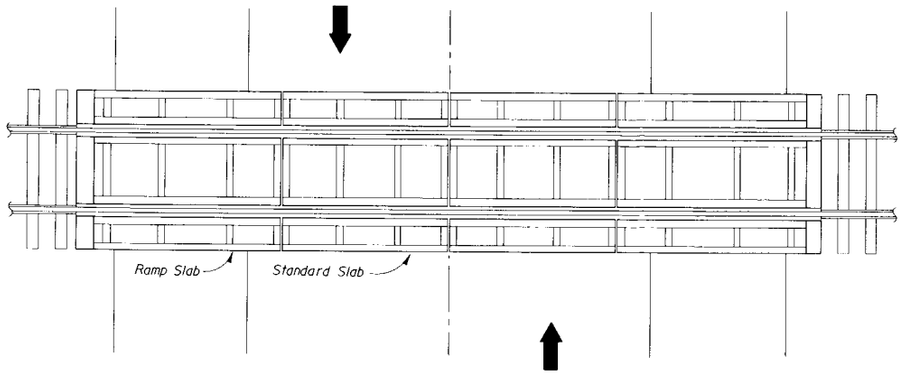

PLAN VIEW
TYPICAL 44' CROSSING

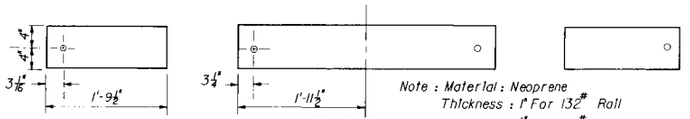

TOP VIEW
TIE PAD

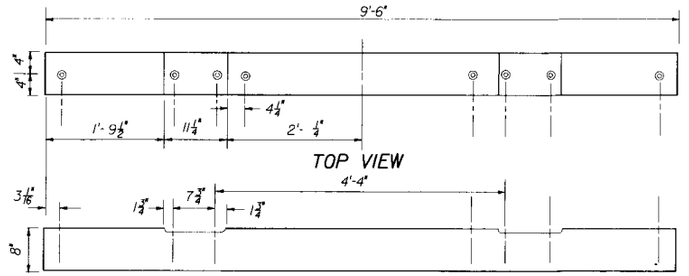

TOP VIEW

SIDE VIEW

PRECAST CONCRETE (CROSSING TIE)

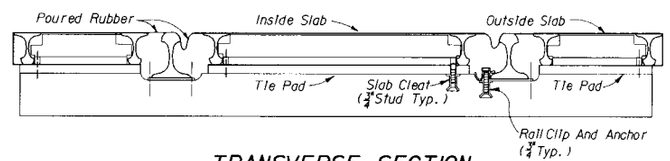

TRANSVERSE SECTION

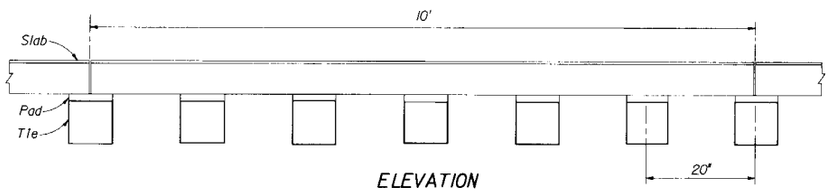

ELEVATION
TIE SPACING

GENERAL NOTES

1. Slab frames are welded 90 lb. rails.
2. Slab reinforcement all No. 4 bars.

STATE OF FLORIDA DEPARTMENT OF TRANSPORTATION
ROAD DESIGN

RAILROAD CROSSING
TYPE T MODIFIED

	Names	Dates
Designed By		
Drawn By	RWR	09/82
Checked By	JVG,JBW	09/82
F.H.W.A. Approved:		09/23/82

Approved By
State Design Engineer, Roadways

Revision No.	Sheet No.	Index No.
83	8 of 8	560

CONTENTS

Preface
Manual On Uniform Traffic Control Devices
Abbreviations
Symbols
Definitions
Regulatory Speeds In Work Zones
Adjoining And/Or Overlapping Work Zone Signing
Intersecting Road Signing And Signals
Channelizing And Lighting Devices
Dropoffs In Work Zones
Warning Lights
Sight Distance To Delineation Devices
Channelizing And Lighting Device Consistency
Pedestrians And Bicyclist
Nighttime Flagging
Reflectorized Raised Pavement Markers
Sign Covering And Intermittent Work Stoppage Signing
Removing Pavement Markings
Superelevation
Lane Widths
Length Of Construction Sign
End Construction Sign
Detours
Variable Message Signs (VMS)
Above Ground Hazards
Clear Zone Widths
Roadside Barriers
Chart-Dropoffs
Identifications-Channelizing And Lighting Devices
Barrier Wall Transitions
Signing-Commonly Used Signs

PREFACE

All projects and works on highways, roads and streets shall have a traffic control plan. All work shall be executed under the established plan and Department approved procedures. This index contains information specific to the Federal and State guidelines and standards for the preparation of traffic control plans and for the execution of traffic control in work zones, for construction and maintenance operations and utility work on highways, roads and streets.

Index 600 provides Department policy and standards. Changes are only to be made thru Department approved procedures. Indexes 602 thru 651 provide typical application for various situations. Modification can be made to these Indexes as long as the changes comply with the M.U.T.C.D. and Department standards.

The sign spacings shown on the Indexes are typical (recommended) distances. These distances may be increased or decreased based on field conditions, in order to avoid conflicts or to improve site specific traffic controls.

MANUAL ON UNIFORM TRAFFIC CONTROL DEVICES

The Florida Department of Transportation has adopted the "Manual On Uniform Traffic Control Devices For Streets And Highways" (MUTCD) and subsequent revisions and addendums, as published by the U.S. Department of Transportation, Federal Highway Administration, for mandatory use on the State Maintained Highway System whenever there exists the need for construction, maintenance operations or utility work.

ABBREVIATIONS

Abbreviations assigned to the 600 series Roadway Design Standards and applicable to traffic control plans, unless otherwise identified in the plans, are as follows:

TCP	Traffic control plan(s)
MUTCD	'Manual On Uniform Traffic Control Devices For Streets And Highways'
TCZ	Traffic control through work zones
L	Taper length, buffer length or taper length plus buffer space
W	Width of taper transition in feet, i.e., lateral offset
S	Posted speed or off-peak 85 percentile speed
RPM	Raised reflectorized pavement marker
TMA	Truck mounted attenuator
COMM	Traffic Control Standards Committee

SYMBOLS

The symbols shown are found in the Traffic Control Zone Cell Library (TCZ.cell) on the CADD system.

Symbols assigned to the 600 series Roadway Design Standards and applicable to traffic control plans, unless otherwise identified in the plans, are as follows:

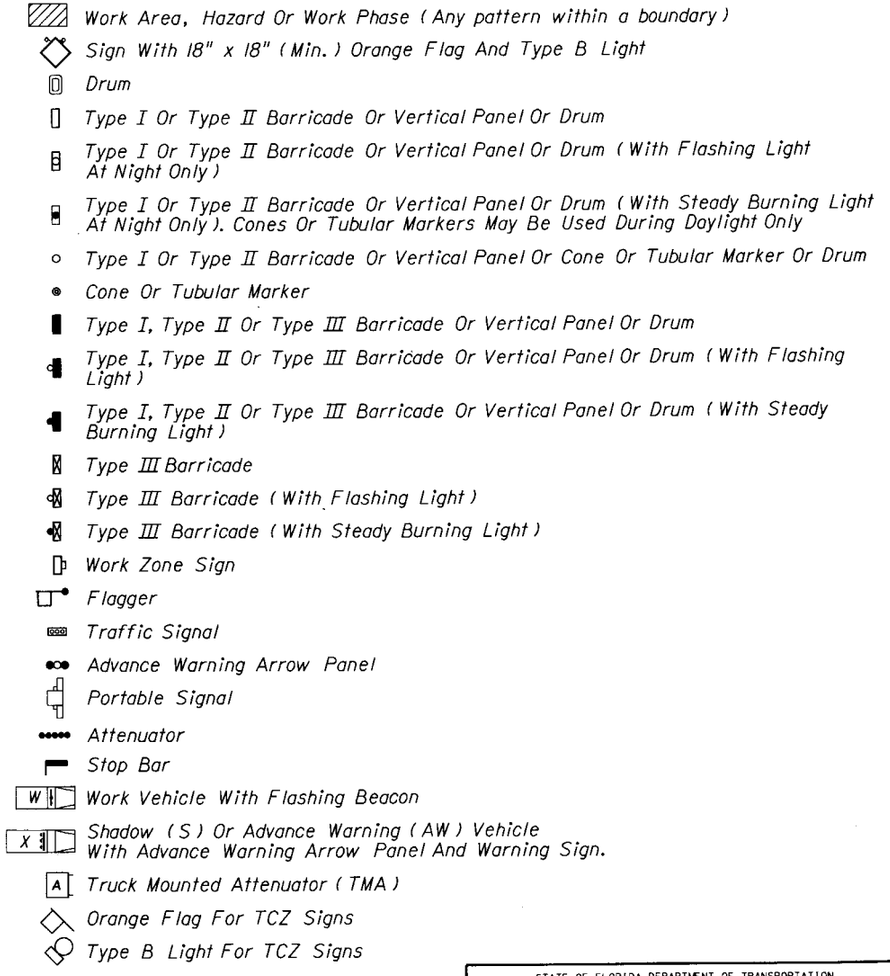

Work Area, Hazard Or Work Phase (Any pattern within a boundary)
Sign With 18" x 18" (Min.) Orange Flag And Type B Light
Drum
Type I Or Type II Barricade Or Vertical Panel Or Drum
Type I Or Type II Barricade Or Vertical Panel Or Drum (With Flashing Light At Night Only)
Type I Or Type II Barricade Or Vertical Panel Or Drum (With Steady Burning Light At Night Only). Cones Or Tubular Markers May Be Used During Daylight Only
Type I Or Type II Barricade Or Vertical Panel Or Cone Or Tubular Marker Or Drum
Cone Or Tubular Marker
Type I, Type II Or Type III Barricade Or Vertical Panel Or Drum
Type I, Type II Or Type III Barricade Or Vertical Panel Or Drum (With Flashing Light)
Type I, Type II Or Type III Barricade Or Vertical Panel Or Drum (With Steady Burning Light)
Type III Barricade
Type III Barricade (With Flashing Light)
Type III Barricade (With Steady Burning Light)
Work Zone Sign
Flagger
Traffic Signal
Advance Warning Arrow Panel
Portable Signal
Attenuator
Stop Bar
Work Vehicle With Flashing Beacon
Shadow (S) Or Advance Warning (AW) Vehicle With Advance Warning Arrow Panel And Warning Sign.
Truck Mounted Attenuator (TMA)
Orange Flag For TCZ Signs
Type B Light For TCZ Signs

STATE OF FLORIDA DEPARTMENT OF TRANSPORTATION
ROAD DESIGN

TRAFFIC CONTROL THROUGH WORK ZONES

GENERAL INFORMATION FOR TRAFFIC CONTROL THROUGH WORK ZONES

	Names	Dates
Designed By	COMM	12/87
Drawn By	HSD/JBW	12/87
Checked By	JVG/KNM	12/87
F.H.W.A. Approved:		

Approved By: Charles A. Scott
State Traffic Plans Engineer

Revision No.	Sheet No.	Index No.
92	1 of 10	600

DEFINITIONS

Regulatory Speed (In Work Zones)

The maximum permitted travel speed posted for the work zone as indicated by the regulatory speed limit signs. The work zone speed must be shown or noted in the plans. This speed should be used as a design speed to determine runout lengths, departure rates, flare rates, lengths of need, clear widths, taper lengths, crash cushion requirements, marker spacings, superelevation and other similar features.

Advisory Speed

The maximum recommended travel speed through a curve or a hazardous area.

Travel Way

The intended path for vehicular traffic through or around obstructions in construction, maintenance, utility and other work zones on highways, roads and streets. For traffic control through work zones, travel way includes auxiliary lanes, shoulders and any other permanent or temporary surface intended for the path of vehicular traffic.

Detour

A temporary travel way that branches from the direct or regular route of travel, to bypass a section of the route which is closed or blocked by construction, major maintenance, roadway damage or a traffic emergency and that rejoins the direct or regular route beyond that section.

Above Ground Hazard

An above ground hazard is any object, material or equipment other than traffic control devices that encroaches upon the travelway or that is located within the clear zone which does not meet the Departments safety criteria, i.e., anything that is greater than 4" in height and is firm and unyielding or doesn't meet breakaway requirements.

REGULATORY SPEEDS IN WORK ZONES

Traffic Control Plans (TCPs) for all projects must include specific regulatory speeds for each phase of work. This can either be the posted speed or a reduced speed. The speed shall be noted in the TCPs; this includes indicating the existing speed if no reduction is to be made. Regulatory speeds are to be uniformly established through each phase.

In general, the regulatory speed should be established to route vehicles safely through the work zone as close to normal conditions as possible. The regulatory speed should not be reduced more than 20 MPH below the posted speed and never below the minimum statutory speed for the class of facility. This reduction is to be done in 10 MPH per 500' increments.

Temporary regulatory speed signs shall be removed as soon as the conditions requiring the reduced speed no longer exist. Once the work zone regulatory speeds are removed, the regulatory speed existing prior to construction will automatically go back into effect unless new speed limit signing is provided for in the plans.

On projects with interspaced work activities speed reductions should be located in proximity to those activities which merit a reduced speed, and not "blanketed" for the entire project. At the departure of such activities, the normal highway speed should be posted to give the motorist notice that normal speed can be resumed.

If the existing regulatory speed is to be used, consideration should be given to supplementing the existing signs when the construction work zone is between existing regulatory speed signs. For projects where the reduced speed conditions exist for greater than one mile in rural areas (non-interstate) and on rural or urban interstate, additional regulatory speed signs are to be placed at no more than one mile intervals. Engineering judgement should be used in placement of the additional signs. Locating these signs beyond ramp entrances and beyond major intersections are examples of proper placement. For urban situations (non-interstate), additional speed signs are to be placed at a maximum of 1000' apart.

When field conditions warrant speed reductions greater than those shown in the TCP the contractor may submit to the project engineer for approval by the Department, a signed and sealed study to justify the need for further reducing the posted speed, or, the engineer may request the District Traffic Operations Engineer (DTOE) to investigate the need. It will not be necessary for the DTOE to issue regulations for regulatory speeds in work zones due to the revised provisions of F.S. 316.0745(2) (b). Advisory Speed plates will be used at the option of the field engineer for temporary use while processing a request to change the regulatory speed specified in the plans when deemed necessary. Advisory speed plates cannot be used alone but must be placed below the construction warning sign for which the advisory speed is required.

For additional information refer to the FDOT Roadway Plans Preparation Manual, Volume 1, Chapter 10.

ADJOINING AND/OR OVERLAPPING WORK ZONE SIGNING

Adjoining work zones may not have sufficient spacing for standard placement of signs and other traffic control devices in their advance warning areas or in some cases other areas within their traffic control zones. Where such restraints or conflicts occur or are likely to occur, one of the following methods will be employed to avoid conflicts and prevent conditions that could lead to misunderstanding on the part of the traveling public as to the intended travel way by the traffic control procedure applied:

(a) For scheduled projects the engineer in responsible charge of project design will resolve anticipated work zone conflicts during the development of the project traffic control plan. This may entail revision of plans on preceding projects and coordination of plans on concurrent projects.

(b) Unanticipated conflicts arising between adjoining in progress highway construction projects will be resolved by the Resident Engineer for projects under his residency, and, by the District Construction Engineer for in progress projects under adjoining residencies.

(c) The District Maintenance Engineer will resolve anticipated and occuring conflicts under the following work zone conditions.

1. Within scheduled maintenance operations.
2. Between scheduled maintenance operations, maintenance construction, permitted works and/or in progress highway construction projects.

(d) The Unit Maintenance Engineer will resolve conflicts that occur within routine maintenance works; between routine maintenance work, unscheduled work and/or permitted work; and, between unit controlled maintenance works and highway construction projects.

INTERSECTING ROAD SIGNING AND SIGNALS

Signing for the control of traffic entering and leaving work zones by way of intersecting highways, roads and streets shall be adequate to make drivers aware of work zone conditions. Under no condition will intersecting leg signing be less than a ROAD CONSTRUCTION AHEAD sign, including light and flag, for approaching vehicles and a END CONSTRUCTION sign for departure vehicles.

Existing traffic signal operations that require modification in order to carry out work zone traffic control shall be included in the TCP and be approved by the District Traffic Operations Engineer. The need for temporary signal loops or other methods of actuation shall be determined by the District Traffic Operations Engineer and the designer and included in the TCP.

STATE OF FLORIDA DEPARTMENT OF TRANSPORTATION
ROAD DESIGN

TRAFFIC CONTROL THROUGH WORK ZONES

GENERAL INFORMATION FOR TRAFFIC CONTROL THROUGH WORK ZONES

	Names	Dates
Designed By	COMM	12/87
Drawn By	HSD/JBW	12/87
Checked By	JVG/KNM	12/87
F.H.W.A. Approved:		

Approved By: Charles A. Scott
State Traffic Plans Engineer

Revision No.	Sheet No.	Index No.
92	2 of 10	600

CHANNELIZING AND LIGHTING DEVICES

Channelizing and lighting devices for work zone traffic control shall be as prescribed in Part VI of the MUTCD, subject to supplemental revision and certification by the office of the State Traffic Engineer.

Primary work zone traffic control devices are shown on Sheet 5 of 9 for the purpose of ready identification. Specifications for the devices are under the authority of the State Traffic Engineer.

DROPOFFS IN WORK ZONES

Acceptable warning and barrier devices for traffic control at dropoffs in work areas are detailed on Sheet 5 of 9. Unless otherwise specified in the plans, the contractor may use any of the barrier types (including optional shoulder treatment) shown in note 3 of sheet 5 of 9. The cost of such "option" shall be included under Lump Sum MOT.

WARNING LIGHTS

Warning lights shall be in accordance with Section 6E-5 of the MUTCD except for the application limitations and methods of payment stipulated below:

Flashing

Type A Low Intensity Flashing Warning Lights are to be mounted on barricades, drums, vertical panels or advance warning signs (except as noted below) and are intended to continually warn drivers that they are approaching or proceeding in a hazardous area. Flashing lights shall not be used to delineate the intended path of travel, and not placed with spacings that will form a continuous line to the drivers eye. The Type A light will be used to mark obstructions that are located adjacent to or in the intended travel way. Type A lights shall not be used in conjunction with the first advance warning sign nor the second such sign when used.

Type B High Intensity Flashing Warning Lights shall be mounted on the first advanced warning sign and on the first and second advanced warning sign where two or more signs are used; this applies to all approaches to any work zone.

Steady-Burn

Type C Steady-Burn Lights are to be mounted on barricades, drums, concrete barrier walls or vertical panels and used in combination with those devices to delineate the travel way on lane closures, lane changes, detour curves and other similar conditions. Steady-burn lights are intended to be placed in a line to delineate the traveled way through and around obstructions in the transition, buffer, work and termination areas of the traffic control zone. Their intended purpose is not for warning drivers that they are approaching or proceeding through a hazardous area.

SIGHT DISTANCE TO DELINEATION DEVICES

Transition tapers should be obvious to drivers. If restricted sight distance is a problem (e.g., a sharp vertical or horizontal curve), the taper should begin well in advance of the view obstruction. The beginning of tapers should not be hidden behind curves.

CHANNELIZING AND LIGHTING DEVICE CONSISTENCY

Barricades, vertical panels, cones, tubular markers and drums shall not be intermixed within either the lateral transition or within the tangent alignment.

PEDESTRIANS AND BICYCLISTS

When an existing pedestrian way or bicycle way is located within a traffic control work zone, accommodation must be maintained.

NIGHTTIME FLAGGING

Nighttime flagging will require proper illumination of the flagger. A well lighted flagging station and/or a reflectorized paddle or reflectorized flag, plus a flashlight, lantern or other lighted signal that will display a red warning light shall be used.

Lights, reflectorized paddles, reflectorized flags and reflectorized vests, shirts or jackets approved by the Department must be used to flag traffic at night. The STOP face of paddles shall be reflectorized red with white reflectorized letters and border, and the SLOW face shall be reflectorized orange with black letters and border. Flagger vests, shirts or jackets shall be reflectorized orange.

The flagger must be clearly visible to approaching traffic for a distance sufficient to permit proper response by the motorist to the flagging instructions, and to permit traffic to reduce speed or to stop as required before entering the work site. Flaggers shall be positioned to maintain maximum color contrast between the flaggers reflective garments and equipment and the work area background.

REFLECTORIZED RAISED PAVEMENT MARKERS

Class A or B RPM's shall be installed on the lanelines of transitions, crossovers and detours and on the edgelines of gore areas within the work zone. The spacing shall be 40 feet on tangent sections and 20 feet on transitions, curves and crossovers. It shall be the contractors responsibility to replace damaged or missing RPM's on a daily basis. This cost shall be included in the cost of the temporary RPM's substituted.

SIGN COVERING AND INTERMITTENT WORK STOPPAGE SIGNING

Existing signs that conflict with temporary work zone signing shall be removed or covered as approved by the engineer. Traffic control signs that require covers when no work is being performed in a work area shall be fully covered with a durable opaque sheet material. Plastic film and woven fabrics including burlap will not be permitted. Covering of only the legend or symbol will not be permitted. Reflective coverings will not be permitted. Hinged signs designed to cover when folded and sign blanks will be permitted.

Covers, blanks, hinged panels and intermittent work stoppage shields and plaques are incidental to work operation signs and are not to be paid for separately.

REMOVING PAVEMENT MARKINGS

Existing pavement markings that conflict with temporary work zone delineation shall be removed by any method approved by the Engineer, where operations exceed one daylight period; however, painting over existing pavement markings will not be permitted. Full pavement width overlays of either asphalt concrete Type III, FC-1 or FC-4 is a positive means to achieve obliteration.

SUPERELEVATION

Horizontal curves constructed in conjunction with work zone traffic control should have the required superelevation applied to the design radii . Under conditions where normal cross slope controls curvature, the minimum radii that can be applied are listed in the table below.

MINIMUM RADII FOR NORMAL CROSS SLOPES	
DETOUR DESIGN SPEED	MINIMUM RADIUS R
MPH	FEET
45	1080
40	830
35	620
30	450
Superelevate When Smaller Radii Used	

LANE WIDTHS

Lane widths of through roadways should be maintained through work zone travel ways wherever practical. The minimum widths for work zone travel lanes shall be as follows: 11' for Interstate and other truck network highways, with at least one 12' lane provided each direction, unless formally excepted by the Federal Highway Administration; 11' for other freeways; and, 10' for all other facilities.

LENGTH OF CONSTRUCTION SIGN

The length of construction sign (G20-1) bearing the legend ROAD CONSTRUCTION NEXT___ MILES is required for all projects of more than 2 miles in length. The sign shall be located at begin construction points.

STATE OF FLORIDA DEPARTMENT OF TRANSPORTATION
ROAD DESIGN

TRAFFIC CONTROL THROUGH WORK ZONES

GENERAL INFORMATION FOR TRAFFIC CONTROL THROUGH WORK ZONES

	Names	Dates
Designed By	COMM	12/87
Drawn By	HSD/JBW	12/87
Checked By	JVG/KNM	12/87
F.H.W.A. Approved:		

Approved By Clark A. Scott
State Traffic Plans Engineer

Revision No.	Sheet No.	Index No.
92	3 of 10	600

END CONSTRUCTION SIGNS

The END CONSTRUCTION sign (G20-2) should be erected approximately 500 feet beyond the end of a construction or maintenance project, unless other distance called for in the plans. Where other Construction or Maintenance Operations occur within one(1) mile, this sign should be omitted and signing coordinated in accordance with Index 600, ADJOINING AND/OR OVERLAPPING WORK ZONE SIGNING.

DETOURS

Detours can be located either within the direct or regular route boundary or over highways, roads or streets outside the direct or regular route boundary. Engineering judgement should be used to determine when detour signing is required for minor shift to the direct or regular route.

VARIABLE MESSAGE SIGNS (VMS)

The VMS can be used to:

(1) Supplement standard signing in construction/maintenance work zones.
(2) Reinforce static advance warning messages.
(3) Provide motorists with updated guidance information.

The message should be visible and ledgible at a minimun distance of 900 feet. All messages should be cycled so that two message cycles are displayed to a driver while approaching the sign from 900 feet at 55 mph.

VMS should be placed approx. 500 to 800 ft. in advance of the work zone conflicts or $1\frac{1}{2}$ to 2 miles in advance of complex traffic control schemes which require new and/or unusual traffic maneuvers

If VMS are to be used at night, the intensity of the flashers shall be reduced during darkness when lower intensities are desirable.

For additional information refer to the FDOT roadway Plans Preparation Manual, Volume 1, Chapter 10.

ROADSIDE BARRIERS

When connecting temporary concrete barrier wall to guardrail the connection shall be made in accordance with Index No. 410.

ABOVE GROUND HAZARD

Above ground hazards (see definitions) are to be considered work areas during working hours and treated with appropriate work zone traffic control procedures. During non-working hours, all objects, materials and equipment that constitute an above ground hazard must be stored/placed outside the travelway and clear zone or be shielded by a barrier or crash cushion.

For above ground hazards within a work zone the clear zone required should be based on the regulatory speed posted during construction.

CLEAR ZONE WIDTHS

The term 'clear zone' describes the unobstructed relatively flat area extending outward from the edge of the travel way. The table below gives clear zone widths for 6:1 or flatter slopes in work zones for medians and roadside conditions other than for roadside canals; where roadside canals are present, clear zone widths are to conform with the distances to canals described in Vol. 1, Ch. 4, Sec. 4.2 and Exhibits 1-4-C and 1-4-D of the Plans Preparation Manual.

CLEAR ZONE WIDTHS FOR WORK ZONES	
WORK ZONE SPEED (MPH)	WIDTHS (FEET)
60-70	30
55	24
45-50	18
30-40	14

STATE OF FLORIDA DEPARTMENT OF TRANSPORTATION
ROAD DESIGN

TRAFFIC CONTROL THROUGH WORK ZONES

GENERAL INFORMATION FOR
TRAFFIC CONTROL THROUGH WORK ZONES

	Names	Dates
Designed By	COMM	12/87
Drawn By	HSD/JBW	12/87
Checked By	JVG/KNM	12/87

Approved By: Clark A Scott
State Traffic Plans Engineer

F.H.W.A. Approved:

Revision No.	Sheet No.	Index No.
92	4 of 10	600

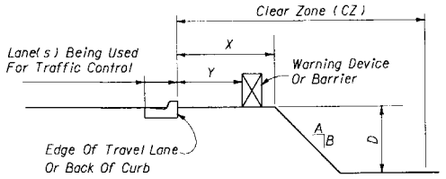

CONDITION I

SHOULDER DROPOFF

1. This condition to be used when excavating adjacent to lane(s) being used for traffic control.
2. Distance X is to be the maximum practical under project conditions.
3. Distance Y should be maximum practical for project conditions. Two(2) feet is desirable.
4. Warning devices or barriers are not to encroach on lane width(s) designated for traffic control.
5. For specific requirements use Chart A or B below, as applicable.

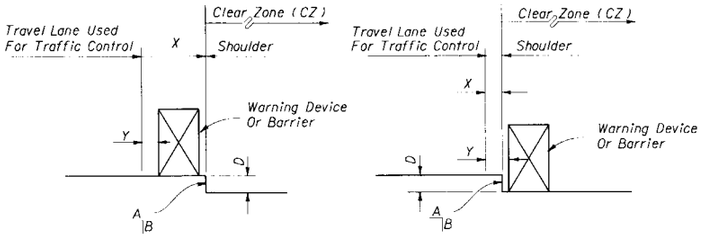

CONDITION II

DROPOFF BETWEEN TRAVEL LANE AND SHOULDER

1. This condition is to be used when resurfacing or milling travel lanes and/or adjacent shoulders.
2. Warning device or barrier must not encroach on lane width(s) designated as minimum for traffic control.
3. X and Y should be maximum practical for project conditions. May be zero.
4. For specific requirements use Chart A below.

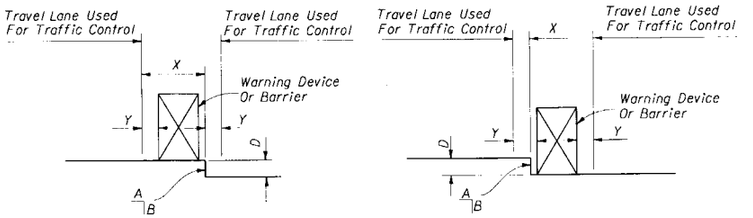

CONDITION III

DROPOFF BETWEEN TRAVEL LANES

1. This condition is to be used for resurfacing or milling travel lanes.
2. Warning device or barrier must not encroach on lane width(s) designated as minimum for traffic control.
3. X and Y should be maximum practical for project conditions. May be zero.
4. Sign W8-9A with UNEVEN PAVEMENT plaque required at intervals of ½ mile maximum throughout this condition.
5. For specific requirements use Chart C below.

CHART A

ALL SPEEDS
NO CURB AND GUTTER

X (Ft.)	D (In.)	A/B	Device Required	
			Active ☑ Work Zone	Inactive ◪ Work Zone
0-4	≤ 2	Any	None	None
0-4	> 2 to ≤ 3	Any	Warning Device(b)	Warning Device(b)
0-4	> 3	Any	Warning Device(b)	Barrier(b)
> 4-10	≤ 3	Any	None	None
> 4-10	> 3 to ≤ 12	Any	Warning Device(b)	Warning Device(b)
> 4-10	> 12	Any	Warning Device(b)	Barrier(b)
> 10-CZ(a)	≤ 12	Any	None	None
> 10-CZ(a)	> 12 to < 24	3:1 Or Flatter	None	None
> 10-CZ(a)	> 12 to < 24	Steeper Than 3:1	Warning Device(b)	Warning Device(b)
> 10-CZ(a)	≥ 24	3:1 Or Flatter	None	None
> 10-CZ(a)	≥ 24	Steeper Than 3:1	Warning Device(b)	Barrier(b)

(a) Clear Zone (CZ) is to be determined per Index No. 700.

(b) Optional shoulder treatment allowed.

CHART B

45 MPH OR LESS (c,d,e)
CURB AND GUTTER

X (Ft.)	D (In.)	A/B	Device Required	
			Active ☑ Work Zone	Inactive ◪ Work Zone
0-10	≤ 12	Any	None	None
0-10	> 12	Any	Warning Device(f)	Warning Device(f)
> 10	Any	Any	None	None

(c) This chart to be used with Condition I only.

(d) This chart to be used for curb heights ≥ 6". For curb heights < 6" use Chart A.

(e) For requirements of dropoffs behind curb and gutter, when curb and gutter has not been constructed, use Chart A.

(f) Optional shoulder treatment allowed.

CHART C

ALL SPEEDS
CURB AND GUTTER OR NO CURB AND GUTTER

X (Ft.)	D (In.)	A/B	Device Required	
			Active ☑ Work Zone	Inactive ◪ Work Zone
0-CZ	≤ 1½	Any	None	None
0-CZ	> 1½ to ≤ 3	Any	Warning Device(g)	Warning Device(g)
0-CZ	> 3	Any	Warning Device	Barrier

(g) Optional travel lane treatment allowed.

☑ An active work zone is defined as those hours when the contractor's crew, permitted work force or Department forces are performing work operations which affect or relate to dropoffs, either day or night.

◪ An inactive work zone is defined as those periods when the contractor's crew, permitted work force or Department forces have left the work site or are performing tasks which do not affect or relate to dropoffs.

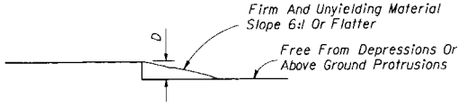

OPTIONAL SHOULDER TREATMENT

1. This optional method may be used in lieu of warning devices or barriers when required by Charts A or B.

NOTES

1. These conditions and treatments can be applied only in work areas that fall within a properly signed work zone.
2. The following are defined as acceptable warning devices:
   For further details, see Part VI of the MUTCD.
   a. Vertical Panel
   b. Type I Or Type II Barricades
   c. Drum
   d. Cone
   e. Tubular Marker
3. Where barrier is specified either of the types below may be used.
   a. Temporary barrier wall installed in accordance with Standard Index No. 415 and Standard Specifications.
   b. Temporary guardrail installed in accordance with the Standard Specifications and Standard Index No. 400. Materials may be new and/or used, but used material must be structurally and functionally sound as determined by the Engineer. End anchorages per Standard Index No. 400 will also be required.
   c. Temporary Curb installed in accordance with standard Index 600.
4. When warning devices are used for a dropoff condition, a minimum number of four devices is required.
5. Warning device spacing shall be as follows:
   A. <u>On Taper</u>
   Maximum spacing between devices (feet) to be equal to the legal posted speed limit (MPH), but not greater than 25 feet for cones or tubular markers or 50 feet for Type I Or Type II barricades, drums or vertical panels.

   B. <u>On Tangents</u>
   Maximum spacing for cones or tubular markers is 25' centers and maximum spacing for Type I or Type II barricades, drums or vertical panels is 50' centers for first 250'; thereafter cones or tubular markers at 50' centers and Type I or Type II barricades, drums or vertical panels at 100' centers.

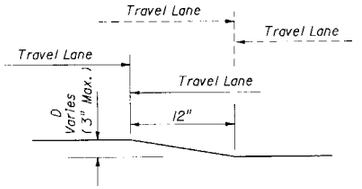

MILLING OR SURFACING

OPTIONAL TRAVEL LANE TREATMENTS

1. This optional method may be used in lieu of warning devices when required by Chart C.
2. Optional treatment allowed only when D is 3" or less.

DROPOFFS IN WORK ZONES

STATE OF FLORIDA DEPARTMENT OF TRANSPORTATION
ROAD DESIGN

TRAFFIC CONTROL THROUGH WORK ZONES

GENERAL INFORMATION FOR
TRAFFIC CONTROL THROUGH WORK ZONES

	Names	Dates
Designed By	COMM	12/87
Drawn By	HSD/JBW	12/87
Checked By	JMG/KNM	12/87
F.H.W.A. Approved:		

Approved By: Charles Scott
State Traffic Plans Engineer

Revision No.	Sheet No.	Index No.
92	5 of 10	600

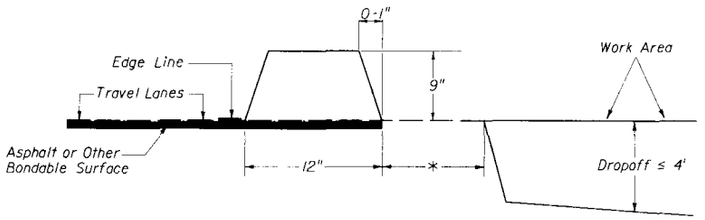

Alternate #1 is a temporary curb (Asphalt or Concrete) which should provide necessary channelization capabilities to protect a low speed motorist from a dropoff condition.

ALT. #1 (NARROW CURB)

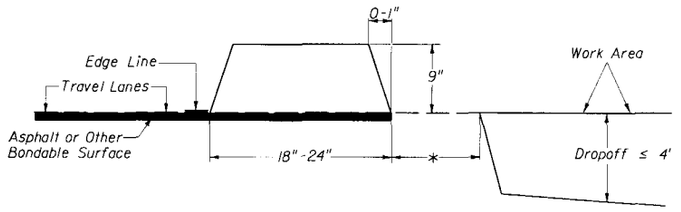

Alternate #2 is a wide temporary curb (Asphalt or Concrete) which should provide somewhat greater visibility/awareness of the barrier curb.

ALT. # 2 (WIDE CURB)

* 12 inches (or more) is desirable in order to enhance/improve stability. However it is recognized that there may be cases where 12 inches (or more) is not feasible or obtainable. In these instances, engineering judgement must be used to balance this offset distance with the depth of dropoff, soil type and etc.

TEMPORARY CURB

1. Application: Temporary curb shall not be used on facilities with posted speeds greater than 45 mph and dropoffs greater than four (4') feet deep. It shall not be used on interstate or limited access facilities.

2. Vertical panels, tubular markers or barricades shall also be used to delineate the work area. These devices could be placed on top of the temporary curb or on the outside (between the curb and the dropoff).

3. Edgelines shall be provided, as well as, painting the face of the curb (white or yellow as appropriate) to further delineate it's presence (asphalt curb only). The paint shall be in accordance with the traffic striping specifications, including reflective beads.

4. The temporary curb is to be bonded to the existing surface by use of a tack coat, or other methods approved by the engineer. It is important that the curb adhere to the base material in order to provide the strength necessary to redirect errant vehicles.

5. Temporary curb is to be paid for under Lump Sum Maintenance of Traffic (Item 102-1). The designer should include a pay item note to state this fact and to include the estimated number of linear feet to be used. Payment for the curb is to include all materials and work necessary to construct, (including painting of the curb) maintain and remove the temporary curb. Traffic striping (lane lines only) and warning devices are to be paid for separately. Any damage to existing pavement caused by the removal of existing curb shall be satisfactorily repaired and the cost of such repairs are to be included in the cost of the temporary curb .

6. The temporary curb is to be constructed of miscellaneous asphalt or class I concrete. The type of material (asphalt or concrete) is up to the contractor, unless otherwise noted by the engineer.

7. The designer must specify, in the plans , which alternate is to be used - alternate 1 or 2. The choice is strictly up to the designer. At this time, there is no preference or guidelines on the use of one versus the other. However, the designer should consider speed, volume, offset space available, dropoff depth, etc. Obviously, increasing the offset between the travel lane and the dropoff will increase safety.

8. If concrete is used to construct the temporary curb, joints must be made every 10 feet in order to control cracking.

9. The designer must also consider drainage needs when using temporary curb. If driveways or other accesses are not frequent enough to allow for water runoff, the designer may need to specify the need for "drainage slots" at an appropriate spacing based on grades, number of lanes , etc. Typically, a drainage slot should be 12 inches wide (a break in the curb) at 50 foot spacings.

10. At openings such as driveways and business accesses, the temporary curb should be transitioned in height from 4 inches up to 9 inches at a 4:1 slope in order to eliminate a potential hazard at the end points.

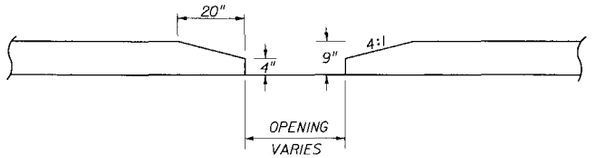

LONGITUDINAL SECTION

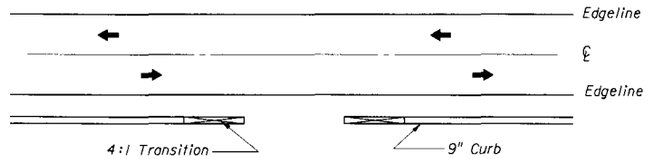

PLAN VIEW

TEMPORARY CURB OPENINGS

STATE OF FLORIDA DEPARTMENT OF TRANSPORTATION
ROAD DESIGN

TEMPORARY CURB FOR WORK ZONES

	Names	Dates
Designed By	L.T.B.	
Drawn By		
Checked By		

Approved By
State Traffic Ops Engineer

F.H.W.A. Approved:	Revision No.	Sheet No.	Index No.
	92	6 of 10	600

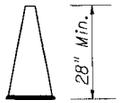

CONES TO BE USED DURING DAYLIGHT ONLY

CONES

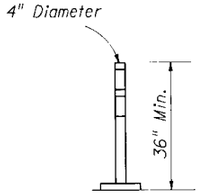

TUBULAR MARKER TO BE USED DURING DAYLIGHT ONLY EXCEPT WHEN USED IN CONJUNCTION WITH TEMPORARY CURB.

TUBULAR MARKER

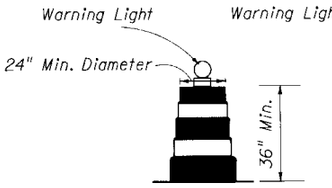

STEEL DRUMS NOT PERMITTED

PLASTIC DRUMS

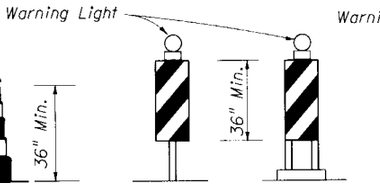

POST MOUNT

VERTICAL PANEL

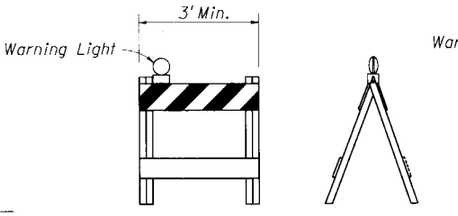

A-FRAME

TYPE I BARRICADE

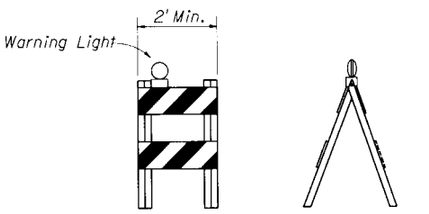

TYPE II BARRICADE

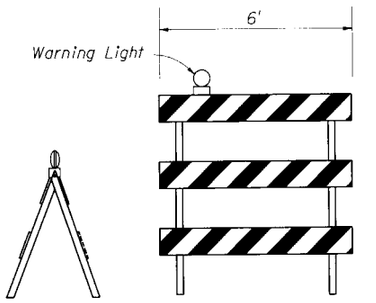

TYPE III BARRICADE

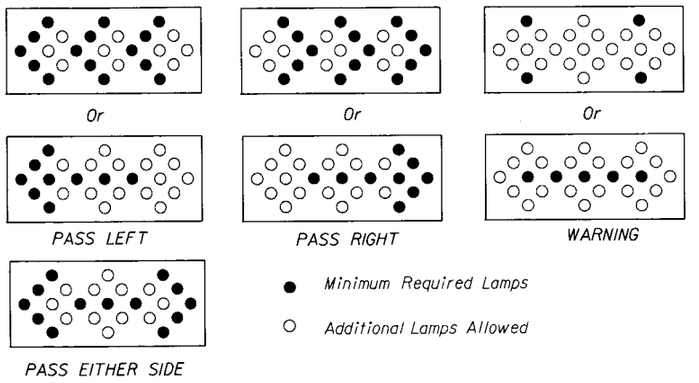

ADVANCE WARNING ARROW PANELS MODES

CHANNELIZING AND LIGHTING DEVICE NOTES

1. Only approved traffic control devices may be used on public highways, roads and streets.
2. The FDOT approval number shall be engraved on the device at a convenient and readily visible location. Where engraving is not practical a water-resistant type label may be used.
3. The details shown on this sheet are for the following purposes: (a) For ease of identification and (b) To provide information that supplements or supercedes that provided by the MUTCD.
4. The Type III Barricade shall have a unit length of 6 feet only. When barricades of greater lengths are required those lengths shall be in multiples of the 6' unit.
5. During hours of darkness warning lights shall be used.
6. Ballast shall not be placed on top rails or any striped rails or higher than 13 inches above the driving surface.
7. For rails less than 3 feet long, 4 inch stripes shall be used.
8. When Advance Warning Arrow Panels are used at night, the intensity of the flashers shall be reduced during darkness when lower intensities are desirable.

CHANNELIZING AND LIGHTING DEVICES

STATE OF FLORIDA DEPARTMENT OF TRANSPORTATION
ROAD DESIGN

TRAFFIC CONTROL THROUGH WORK ZONES
GENERAL INFORMATION FOR
TRAFFIC CONTROL THROUGH WORK ZONES

	Names	Dates
Designed By	COMM	12/87
Drawn By	HSD	12/87
Checked By	JVG/KNM	12/87
F.H.W.A. Approved:		

Approved By
State Traffic Plans Engineer

Revision No.	Sheet No.	Index No.
92	7 of 10	600

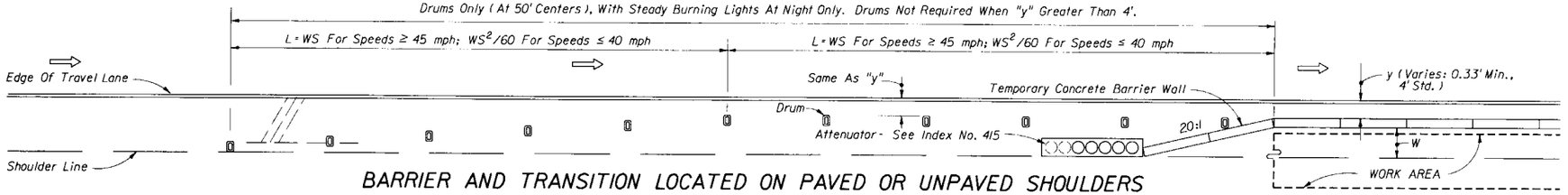

BARRIER AND TRANSITION LOCATED ON PAVED OR UNPAVED SHOULDERS
PLAN SHOWN FOR RIGHT LANE - INVERTED PLAN FOR LEFT LANE

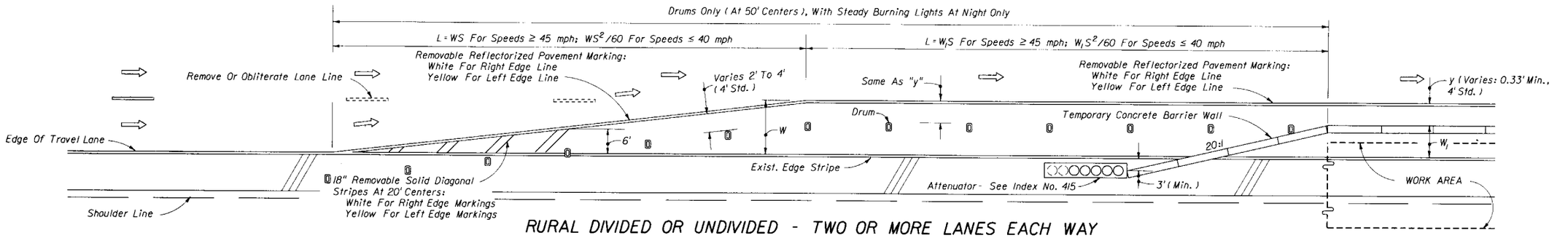

RURAL DIVIDED OR UNDIVIDED - TWO OR MORE LANES EACH WAY
LANE DROP • PLAN SHOWN FOR RIGHT LANE MERGE LEFT - INVERTED PLAN FOR LEFT LANE MERGE RIGHT

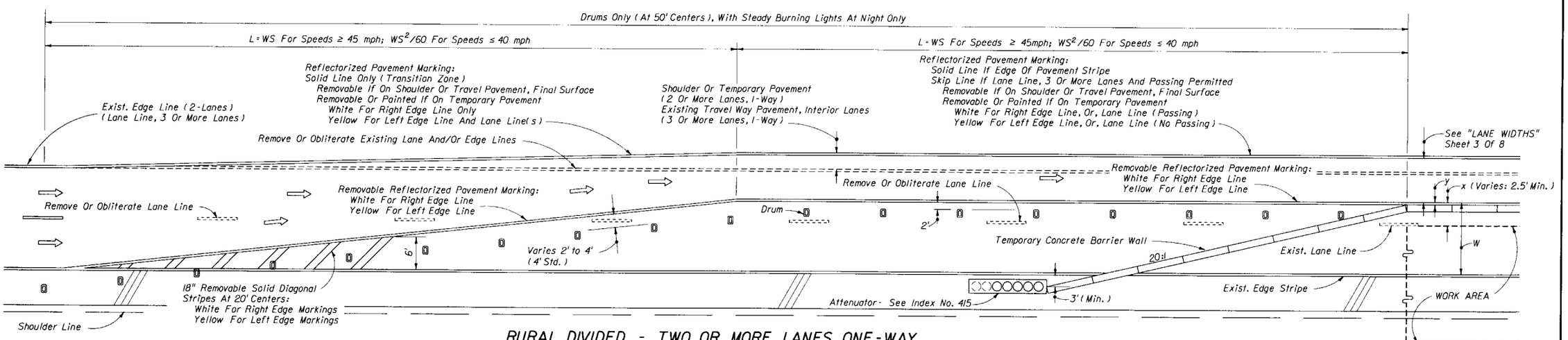

RURAL DIVIDED - TWO OR MORE LANES ONE-WAY
LANE DROP AND LANE SHIFTS - PLAN SHOWN FOR RIGHT LANE MERGE LEFT - INVERTED PLAN FOR LEFT LANE MERGE RIGHT

TRANSITION NOTES

1. Barrier wall within the transition areas shall have reflective markers mounted on the travel side of the wall, 6" below the top and on 12' centers.
2. Arrows denote direction of traffic only and do not reflect pavement markings.
3. For signing information see the Plans, Specifications, MUTCD and other TCZ Standards.

TRANSITIONS FOR TEMPORARY CONCRETE BARRIER WALL ON RURAL FACILITIES

STATE OF FLORIDA DEPARTMENT OF TRANSPORTATION
ROAD DESIGN

TRAFFIC CONTROL THROUGH WORK ZONES

GENERAL INFORMATION FOR TRAFFIC CONTROL THROUGH WORK ZONES

	Names	Dates
Designed By	JVG	4/89
Drawn By	HSD	4/89
Checked By	JVG/KNM	4/89
F.H.W.A. Approved:		

Approved By: Charles A. Scott, State Traffic Plans Engineer

Revision No.	Sheet No.	Index No.
92	8 of 10	600

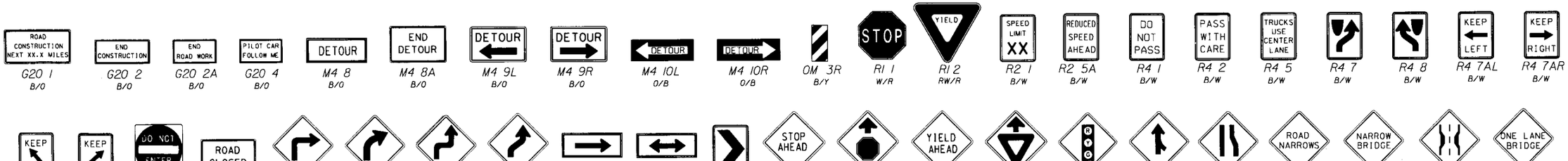

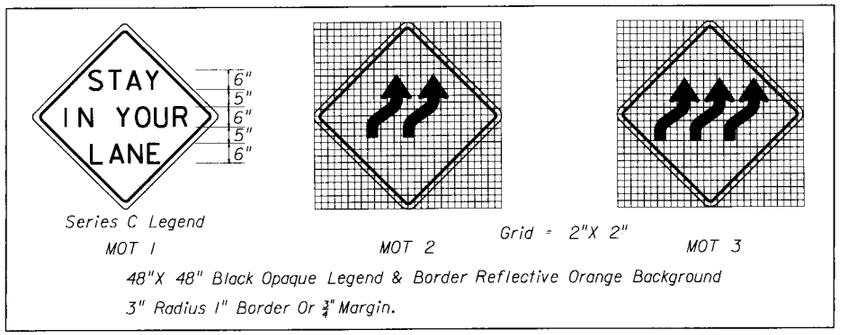

Note:

The sign shields, symbols and messages contained on this sheet are provided for ready reference to those signs used in the development of the 600 series Roadway Design Standards and are commonly used in the development of traffic control plans.

For additional signs and sign detail information refer to the STANDARD HIGHWAY SIGNS MANUAL as specified in the MUTCD. Special signs for traffic control plans will be as approved by the State Traffic Plans Engineer.

The sign codes shown on this sheet are for the purpose of identifing cell names found in the Traffic Control Cell Library (TCZ.Cell) on the CADD system. The STANDARD HIGHWAY SIGNS MANUAL should be referenced for the official sign codes for use in the development of traffic control plans.

SIGN CODES AND DESCRIPTIONS

G20 1	Length Of Construction Sign
G20 2	End Construction Sign
G20 2A	End Road Work Sign
G20 4	Pilot Car Follow Me Sign
M4 8	Detour Marker
M4 8A	End Detour Sign
M4 9L	Detour Sign Left
M4 9R	Detour Sign Right
M4 10L	Detour Arrow Sign Left
M4 10R	Detour Arrow Sign Right
OM 3R	Type 3 Object Marker
R1 1	Stop Sign
R1 2	Yeild Sign
R2 1	Speed Limit Sign
R2 5A	Reduced Speed Ahead Sign
R4 1	Do Not Pass Sign
R4 2	Pass With Care Sign
R4 5	Trucks Use Center Lane
R4 7	Keep Right Symbol
R4 7AL	Words Keep Left With Arrow
R4 8	Keep Left Symbol
R4 7AR	Words Keep Right With Arrow
R4 7BL	Words Keep Left With Diagonal Arrow
R4 7BR	Words Keep Right With Diagonal Arrow
R5 1	Do Not Enter Sign
R11 2	Road Closed
W1 1R	Turn Sign
W1 2R	Curve Sign
W1 3R	Reverse Curve Sign
W1 4R	Reverse Curve Sign
W1 6	Large Arrow Sign Single
W1 7	Large Arrow Sign Double
W1 8	Chevron Alignment Sign
W3 1	Stop Ahead Word Message
W3 1A	Stop Ahead Symbol
W3 2	Yield Ahead Word Message
W3 2A	Yield Ahead Symbol
W3 3	Signal Ahead Symbol
W4 1	Merge Sign
W4 2	Lane Reduction Transition
W5 1	A Road Narrows Sign
W5 2	Narrow Bridge Words
W5 2A	Narrow Bridge Symbol
W6 1	Divided Highway Road Sign
W6 2	Divided Highway Road Ends
W6 3	Two Way Traffic Sign
W8 1	Bump
W8 2	Dip
W8 3A	Pavement Ends Sign
W8 4	Soft Shoulder
W8 5	Slippery When Wet Sign
W8 6	Truck Crossing
W8 7	Loose Gravel
W8 8	Rough Road With Grooved
W8 9	Low Shoulder
W8 9AS	Low Shoulder Symbol
W8 9AP	Uneven Pavement Symbol
W9 1L	Left Lane Ends
W9 1R	Right Lane Ends
W9 2L	Lane Ends Merge Left
W9 2R	Lane Ends Merge Right
W10 1	Railroad Advance Warn
W12 1	Double Arrow Sign
W12 2	Low Clearance Sign
W13 1	Advisory Speed Plate
W20 1A	Advance Road Const 500 Feet
W20 1B	Advance Road Const 1000 Feet
W20 1C	Advance Road Const 1500 Feet
W20 1D	Advance Road Const Half Mile
W20 1E	Advance Road Const One Mile
W20 1F	Road Construction Ahead
W20 2A	Advance Detour Ahead
W20 2B	Advance Detour 500 Feet
W20 2C	Advance Detour 1000 Feet
W20 2D	Advance Detour 1500 Feet
W20 2E	Advance Detour Half Mile
W20 3	Advance Road Closed
W20 4	Advance One Lane Road
W20 5L	Advance Left Lane Closed
W20 5R	Advance Right Lane Closed
W20 5C	Advance Center Lane Closed
L2LC	Left Two Lanes Closed Ahead
R2LC	Rt Two Lanes Closed Ahead
W20 7	Adv Flagger Ahead Words
W20 7A	Adv Flagger Symbol
W20 7X	Supplemental Plate Flagger
W21 1	Worker Sign
W21 1A	Worker Symbol Sign
W21 4	Road Work Sign
W21 5	Shoulder Work
W21 6	Survey Crew Sign
W22 1	Blasting Zone 1000 Feet
W22 2	Turn Off 2-Way Radio
W22 3	End Blasting Zone
MOT 1	Stay In Your Lane
MOT 2	Double Lane Shift
MOT 3	Triple Lane Shift

COLOR CODES

Legend and/or Symbol / Background

- O Orange (Reflectorized)
- B Black (Non-Reflectorized)
- W White (Reflectorized)
- R Red (Reflectorized)
- Y Yellow (Reflectorized)
- G Green (Reflectorized)

COMMONLY USED WARNING AND REGULATORY SIGNS IN WORK ZONES

STATE OF FLORIDA DEPARTMENT OF TRANSPORTATION
ROAD DESIGN

TRAFFIC CONTROL THROUGH WORK ZONES

GENERAL INFORMATION FOR TRAFFIC CONTROL THROUGH WORK ZONES

	Names	Dates
Designed By		
Drawn By	HSD	12/87
Checked By	JMG/KNM	12/87
F.H.W.A. Approved:		

Approved By: Clark A. Scott
State Traffic Plans Engineer

Revision No.	Sheet No.	Index No.
92	9 of 10	600

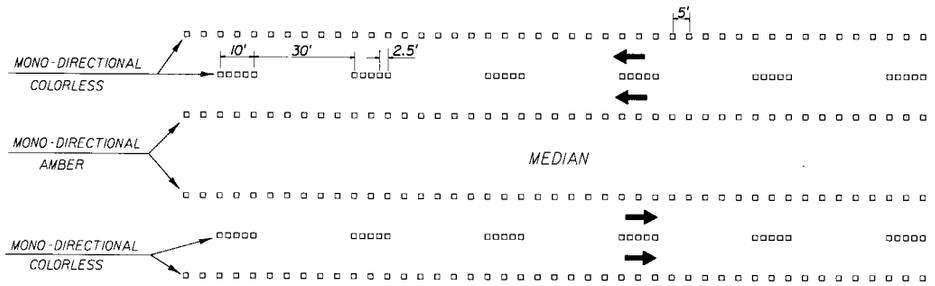

4-LANE DIVIDED

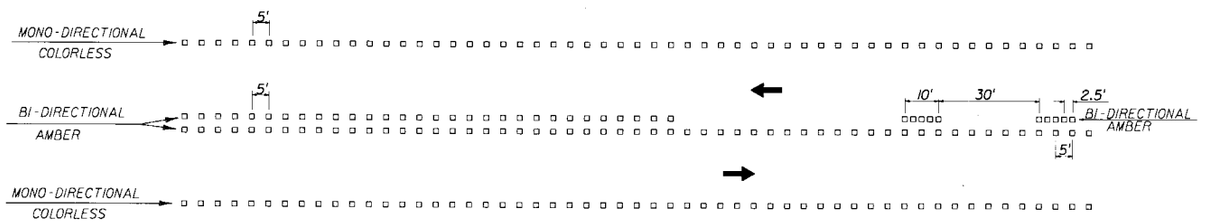

2-LANE NO PASSING

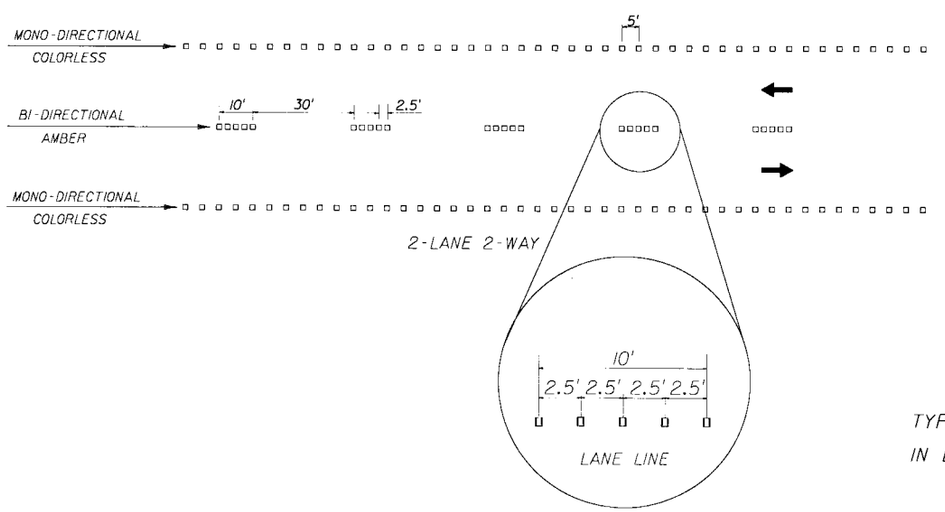

TYPICAL PLACEMENT OF REFLECTIVE PAVEMENT MARKERS
IN LIEU OF TEMPORARY TAPE OR PAINT IN WORK ZONES

REFLECTIVE PAVEMENT MARKERS

CLASS	APPLICATION
A	Permanent Applications In Non-Traffic Areas Or Can Be Used In Work Zone Applications For Traffic And Non-Traffic Areas.
B	Permanent Application In Traffic And Non-Traffic Areas Or Can Be Used In Work Zone Applications For Traffic And Non-Traffic Areas.
D	Work Zone Application Only, For Traffic And Non-Traffic Areas.
E	Temporary Work Zone Application Only, Not Exceeding Five (5) Continuous Days, For Traffic And Non-Traffic Areas.

NOTES

1. For spacing of RPM'S to supplement Temporary Tape or Paint, see index 600 sheet 3 of 10.
2. Basic color rule: colorless reflectors replace white lines and amber reflectors replace yellow lines.
3. In work zones, CLASS A,B, or D RPM'S may be used to form lane lines edge lines and temporary gore areas, in lieu of tape or paint. In short term work zones, where the RPM'S will be used for five (5) days or less, CLASS "E" RPM'S may be used to form lane or edge lines.
4. To provide contrast on Concrete Pavement, the five (5) colorless RPM'S shall be followed by five Black RPM'S. The spacing between RPM'S shall be 2.5'. Black RPM'S will not be required for contrast with Amber RPM'S.

STATE OF FLORIDA DEPARTMENT OF TRANSPORTATION
ROAD DESIGN

TRAFFIC CONTROL THROUGH WORK ZONES

GENERAL INFORMATION FOR
TRAFFIC CONTROL THROUGH WORK ZONES

	Names	Dates
Designed By	LTB	
Drawn By		
Checked By		
F.H.W.A. Approved:		

Approved By
State Traffic Plans Engineer

Revision No.	Sheet No.	Index No.
92	10 of 10	600

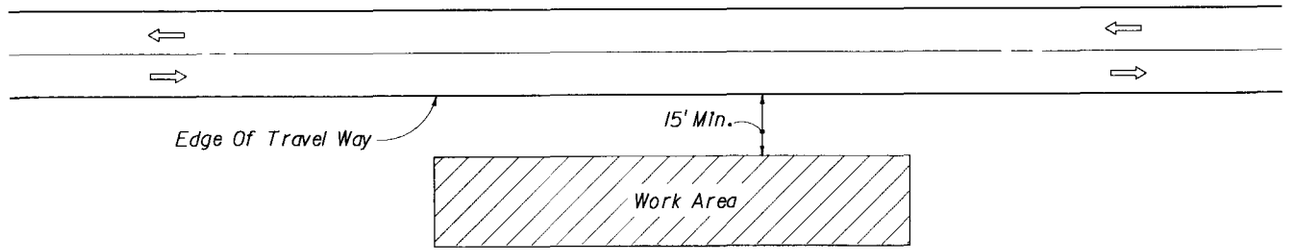

SYMBOLS

Work Area

GENERAL NOTES

1. If the work operation requires that two or more work vehicles cross the 15' zone in any one hour, traffic control will be in conformance with Index No. 602.
2. No special signing is required.
3. Arrows denote direction of traffic only and do not reflect pavement markings.
4. When a side road intersects the highway on which work is being performed additional traffic control devices shall be erected in accordance with other applicable TCZ Indexes.
5. For general TCZ requirements and additional information refer to Index No. 600.

TYPICAL APPLICATIONS

Landscaping Work
Utility Work
Fencing Work
Cleaning Drainage Structures
Reworking Ditches

CONDITIONS

WHERE ANY VEHICLE, EQUIPMENT, WORKERS AND THEIR ACTIVITIES ARE MORE THAN 15' FROM THE EDGE OF PAVEMENT

STATE OF FLORIDA DEPARTMENT OF TRANSPORTATION
ROAD DESIGN

TRAFFIC CONTROL THROUGH WORK ZONES

TWO-LANE, TWO-WAY • RURAL DAY OR NIGHT OPERATIONS

	Names	Dates
Designed By		
Drawn By	HSD/JBW	12/87
Checked By	JVG/KNM	12/87
F.H.W.A. Approved:		

Approved By
Deputy State Design Engineer, Roadways

Revision No.	Sheet No.	Index No.
88	1 of 1	601

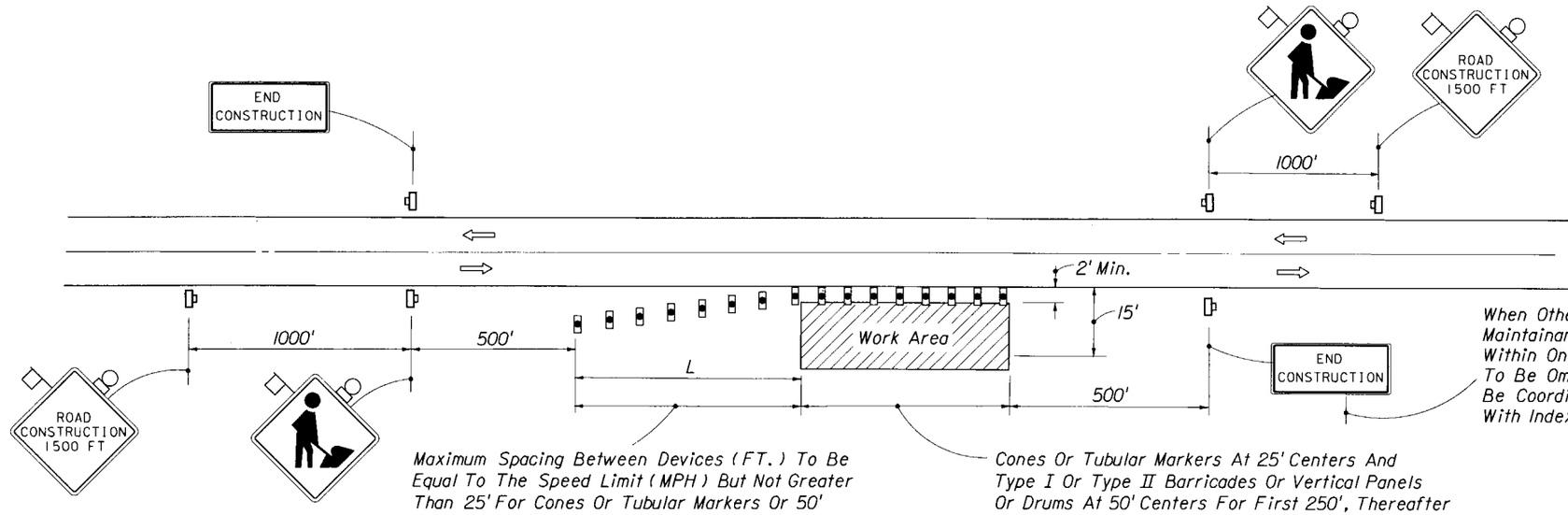

SYMBOLS

- Work Area
- Sign With 18" x 18" (Min.) Orange Flag And Type B Light
- Type I Or Type II Barricade Or Vertical Panel Or Drum (With Steady Burning Light At Night Only). Cones Or Tubular Markers May Be Used During Daylight Only.
- Work Zone Sign

GENERAL NOTES

1. All vehicles, equipment, workers (except flaggers) and their activities are restricted at all times to one side of the roadway.
2. If the work operation does not exceed 60 minutes, traffic control will be in conformance with Index No. 607.
3. If the work operation encroaches on the through traffic lanes or when four or more work vehicles enter the through traffic lanes in a one hour period a flagger shall be provided and the advanced FLAGGER sign shall be substituted for the WORKERS sign. For location of flaggers and FLAGGER signs see Index No. 603.
4. The first two warning signs shall have a 18" x 18" (min.) orange flag and a Type B light attached and operating at all times.

   Mesh signs may be used for (Daylight Only) operations Type B Lights and Orange Flags are not required.
5. The WORKERS legend sign may be substituted for the symbol sign.
6. All signs shall be post mounted if the closure time exceeds 12 hours.
7. $L\ (min) = \frac{WS}{2}$ for speeds $\geq$ 45 mph

   $= \frac{WS^2}{120}$ for speeds $\leq$ 40 mph

   Where:
   W = Width of shoulder in feet, 8' minimum.
   S = Posted speed limit (MPH).
8. Arrows denote direction of traffic only and do not reflect pavement markings.
9. Longitudinal dimensions are to be adjusted to fit field conditions. See Index No. 600.
10. WORKERS sign to be removed or fully covered when no work is being performed.
11. END CONSTRUCTION signs required only when work exceeds one daylight period.
12. When a side road intersects the highway on which work is being performed additional traffic control devices shall be erected in accordance with other applicable TCZ Indexes.
13. For general TCZ requirements and additional information refer to Index No. 600.

TYPICAL APPLICATIONS

Utility Work
Culvert Extensions
Side Slope Work
Guardrail Work
Landscaping Work
Cleaning Drainage Structures
Reworking Ditches
Sign Installation And Maintenance
Shoulder Repair

CONDITIONS

WHERE ANY VEHICLE, EQUIPMENT, WORKERS OR THEIR ACTIVITIES ENCROACH THE AREA CLOSER THAN 15' BUT NOT CLOSER THAN 2' TO THE EDGE OF PAVEMENT

STATE OF FLORIDA DEPARTMENT OF TRANSPORTATION
ROAD DESIGN

TRAFFIC CONTROL THROUGH WORK ZONES

TWO-LANE, TWO-WAY • RURAL DAY OR NIGHT OPERATIONS

	Names	Dates
Designed By	COMM	12/87
Drawn By	HSD/JBW	12/87
Checked By	JVG/KNM	12/87

Approved By: Charles Scott
State Traffic Plans Engineer

F.H.W.A. Approved:

Revision No.	Sheet No.	Index No.
92	1 of 1	602

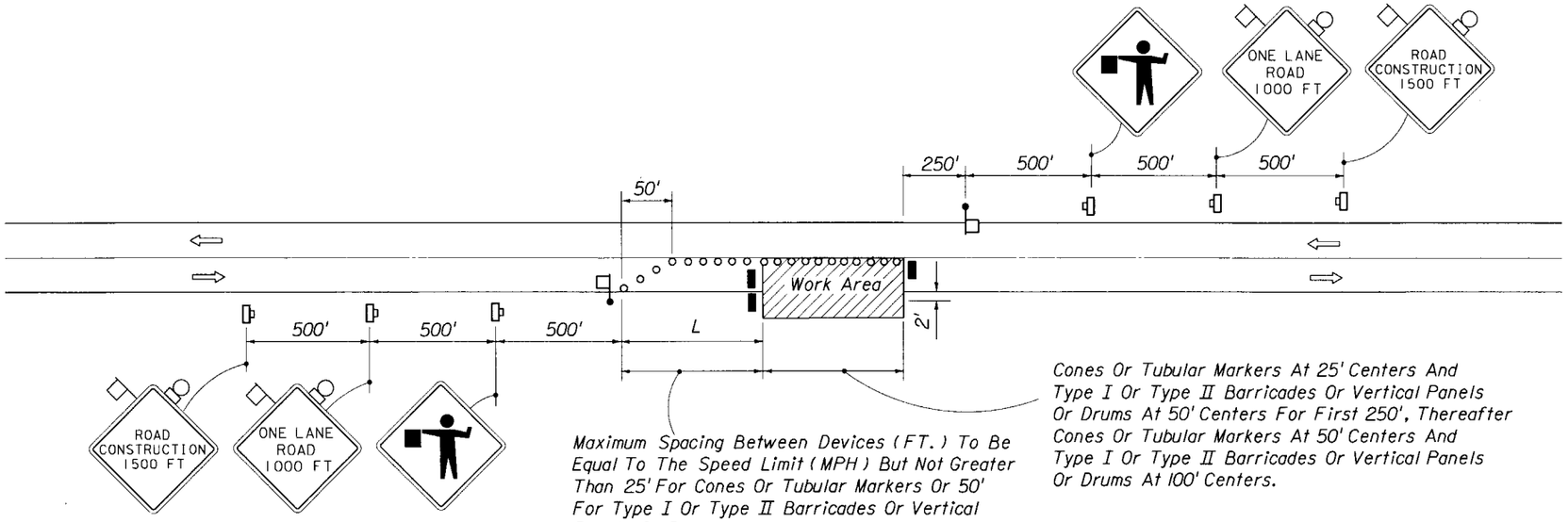

Maximum Spacing Between Devices (FT.) To Be Equal To The Speed Limit (MPH) But Not Greater Than 25' For Cones Or Tubular Markers Or 50' For Type I Or Type II Barricades Or Vertical Panels Or Drums.

Cones Or Tubular Markers At 25' Centers And Type I Or Type II Barricades Or Vertical Panels Or Drums At 50' Centers For First 250', Thereafter Cones Or Tubular Markers At 50' Centers And Type I Or Type II Barricades Or Vertical Panels Or Drums At 100' Centers.

SYMBOLS

- Work Area
- Sign With 18" x 18" (Min.) Orange Flag And Type B Light
- Type I, Type II Or Type III Barricade Or Vertical Panel Or Drum
- Type I Or Type II Barricade Or vertical Panel Or Cone Or Tubular Marker Or Drum
- Work Zone Sign
- Flagger

GENERAL NOTES

1. Work operations shall be confined to one traffic lane, leaving the opposite lane open to traffic.
2. All venicles, equipment, workers (except flaggers) and their activities are restricted at all times to one side of the pavement.
3. If the work operation does not exceed 60 minutes, traffic control will be in conformance with Index No. 607.
4. Additional one-way control may be effected by the following means:
   (1) Flag-carrying vehicle (2) Official vehicle
   (3) Pilot vehicles (4) Traffic signals

   When flaggers are the sole means of one-way control the flaggers shall be in sight of each other or in direct communication at all times.
5. The first two warning signs shall have a 18" x 18" (min.) orange flag and a Type B light attached and operating at all times.
6. Mesh signs may be used for (Daylight Only) operations Type B Lights and Orange Flags are not required.
7. The FLAGGER legend sign may be substituted for the symbol sign.
8. $L\ (min) = \frac{WS}{2}$ for speeds ≥ 45 mph

   $= \frac{WS^2}{120}$ for speeds ≤ 40 mph

   Where:
   W = Width of lateral transition in feet.
   S = Posted speed limit (MPH).
9. The ONE-LANE ROAD signs are to be fully covered and the FLAGGER signs either removed or fully covered when no work is being performed and the highway is open to two-way traffic.
10. Arrows denote direction of traffic only and do not reflect pavement markings.
11. Longitudinal dimensions are to be adjusted to fit field conditions. See Index No. 600.
12. When a side road intersects the highway on which work is being performed additional traffic control devices shall be erected in accordance with other applicable TCZ Indexes.
13. For general TCZ requirements and additional information refer to Index No. 600.

TYPICAL APPLICATIONS

Pavement Resurfacing
Pavement Repair
Utility Work
Bridge Repair
Guardrail Work

CONDITIONS

WHERE ANY VEHICLE, EQUIPMENT, WORKERS OR THEIR ACTIVITIES ENCROACH THE AREA BETWEEN THE CENTERLINE AND A LINE 2' OUTSIDE THE EDGE OF PAVEMENT

STATE OF FLORIDA DEPARTMENT OF TRANSPORTATION
ROAD DESIGN

TRAFFIC CONTROL THROUGH WORK ZONES

TWO-LANE, TWO-WAY • RURAL OPERATIONS ONE DAYLIGHT PERIOD OR LESS

	Names	Dates
Designed By	COMM	12/87
Drawn By	HSD/JBW	12/87
Checked By	JVG/KNM	12/87
F.H.W.A. Approved:		

Approved By: Charles A. Pratt, State Traffic Plans Engineer

Revision No.	Sheet No.	Index No.
92	1 of 1	603

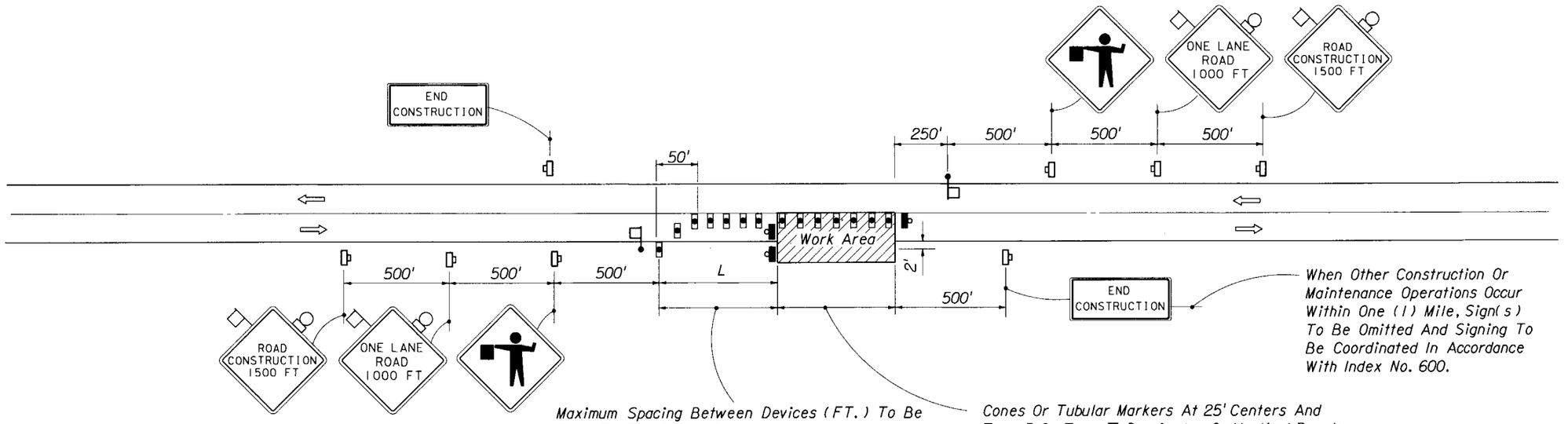

SYMBOLS

- Work Area
- Sign With 18" x 18" (Min.) Orange Flag And Type B Light
- Type I Or Type II Barricade Or Vertical Panel Or Drum (With Steady Burning Light At Night Only). Cones Or Tubular Markers May Be Used During Daylight Only.
- Type I, Type II Or Type III Barricade Or Vertical Panel Or Drum (With Flashing Light)
- Work Zone Sign
- Flagger

GENERAL NOTES

1. Construction operations shall be confined to one traffic lane, leaving the opposite lane open to traffic.
2. All vehicles, equipment, workers, (except flaggers) and their activities are restricted at all times to one side of the pavement.
3. Additional one-way control may be effected by the following means:
   (1) Flag-carrying vehicle (2) Official vehicle
   (3) Pilot vehicles (4) Traffic signals

   When flaggers are the sole means of one-way control the flaggers shall be in sight of each other or in direct communication at all times.
4. The first two warning signs shall have a 18" x 18" (min.) orange flag and a Type B light attached and operating at all times.
5. The FLAGGER legend sign may be substituted for the symbol sign.
6. All signs shall be post mounted if the closure time exceeds 12 hours.
7. $L\ (min) = \frac{WS}{2}$ for speeds ≥ 45 mph
   $= \frac{WS^2}{120}$ for speeds ≤ 40 mph

   Where:
   W = Width of lateral transition in feet.
   S = Posted speed limit (MPH).
8. The ONE-LANE ROAD signs are to be fully covered and the FLAGGER signs either removed or fully covered when no work is being performed and the highway is open to two-way traffic.
9. Arrows denote direction of traffic only and do not reflect pavement markings.
10. Longitudinal dimensions are to be adjusted to fit field conditions. See Index No. 600.
11. When a side road intersects the highway on which work is being performed additional traffic control devices shall be erected in accordance with other applicable TCZ Indexes.
12. For general TCZ requirements and additional information refer to Index No. 600.

TYPICAL APPLICATIONS

Pavement Repair
Culvert Construction
Utility Work
Bridge Repair

CONDITIONS

WHERE ANY VEHICLE, EQUIPMENT WORKERS OR THEIR ACTIVITIES ENCROACH THE AREA BETWEEN THE CENTERLINE AND A LINE 2' OUTSIDE THE EDGE OF PAVEMENT

STATE OF FLORIDA DEPARTMENT OF TRANSPORTATION
ROAD DESIGN

TRAFFIC CONTROL THROUGH WORK ZONES

TWO-LANE, TWO-WAY • RURAL NIGHT OPERATIONS OR OPERATIONS EXCEEDING ONE DAYLIGHT PERIOD

	Names	Dates
Designed By	COMM	12/87
Drawn By	HSD/JBW	12/87
Checked By	JMG/KNM	12/87
F.H.W.A. Approved:		

Approved By
State Traffic Plans Engineer

Revision No.	Sheet No.	Index No.
92	1 of 1	604

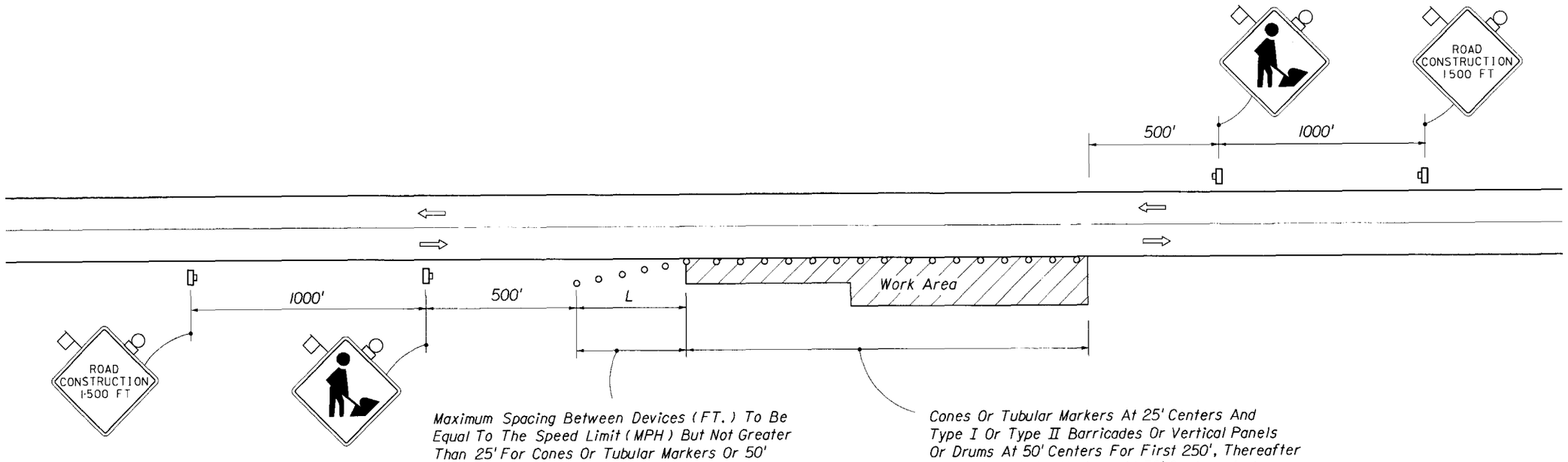

TYPICAL APPLICATIONS

Shoulder And Slope Work
Utility Work
Guardrail Work
Landscape Work
Delineator Installation And Maintenance
* Mowing
* Litter Removal

CONDITIONS

WHERE ANY VEHICLE, EQUIPMENT, WORKERS OR THEIR ACTIVITIES REQUIRE AN INTERMITTENT OR CONTINUOUS MOVING OPERATION ON THE SHOULDER OR SHOULDER AND SLOPES

SYMBOLS

- Work Area
- Sign With 18" x 18" (Min.) Orange Flag And Type B Light
- ○ Type I Or Type II Barricade Or vertical Panel Or Cone Or Tubular Marker Or Drum
- Work Zone Sign

GENERAL NOTES

1. All vehicles, equipment, workers (except flaggers) and their activities are restricted at all times to one side of the roadway.
2. If the work operation does not exceed 60 minutes, traffic control will be in conformance with Index No. 607.
3. If the work operation encroaches on the through traffic lanes or when four or more work vehicles enter the through traffic lanes in a one hour period flaggers shall be provided and the advanced FLAGGER sign shall be substituted for the WORKERS sign. For location of flaggers and FLAGGER signs see Index No. 603.
4. The first two signs shall have a 18" x 18" (min.) orange flag and a Type B light attached and operating at all times.

   Mesh signs may be used for (Daylight Only) operations Type B Lights and Orange Flags are not required.
5. The WORKERS legend sign may be substituted for the symbol sign.

* 6. Where work activities within 2' of the edge of pavement is incidental (ie Mowing, Litter Removal) the engineer may delete requirements for cones and signs provided a vehicle with flashing warning lights is present.

7. $L\ (min.) = \frac{WS}{2}$ for speeds ≥ 45 mph

   $= \frac{WS^2}{120}$ for speeds ≤ 40 mph

   Where:
   W = Width of shoulder in feet, 8' minimum.
   S = Posted speed limit (MPH).
8. Arrows denote direction of traffic only and do not reflect pavement markings.
9. Longitudinal dimensions are to be adjusted to fit field conditions. See Index No. 600.
10. When a side road intersects the highway on which work is being performed additional traffic control devices shall be erected in accordance with other applicable TCZ Indexes.
11. For general TCZ requirements and additional information refer to Index No. 600.

STATE OF FLORIDA DEPARTMENT OF TRANSPORTATION
ROAD DESIGN

TRAFFIC CONTROL THROUGH WORK ZONES

TWO-LANE, TWO-WAY • RURAL MOVING OPERATIONS-DAYLIGHT ONLY

	Names	Dates
Designed By	COMM	12/87
Drawn By	HSD/JBW	12/87
Checked By	JVG/KNM	12/87
F.H.W.A. Approved:		

Approved By
State Traffic Plans Engineer

Revision No.	Sheet No.	Index No.
92	1 of 1	605

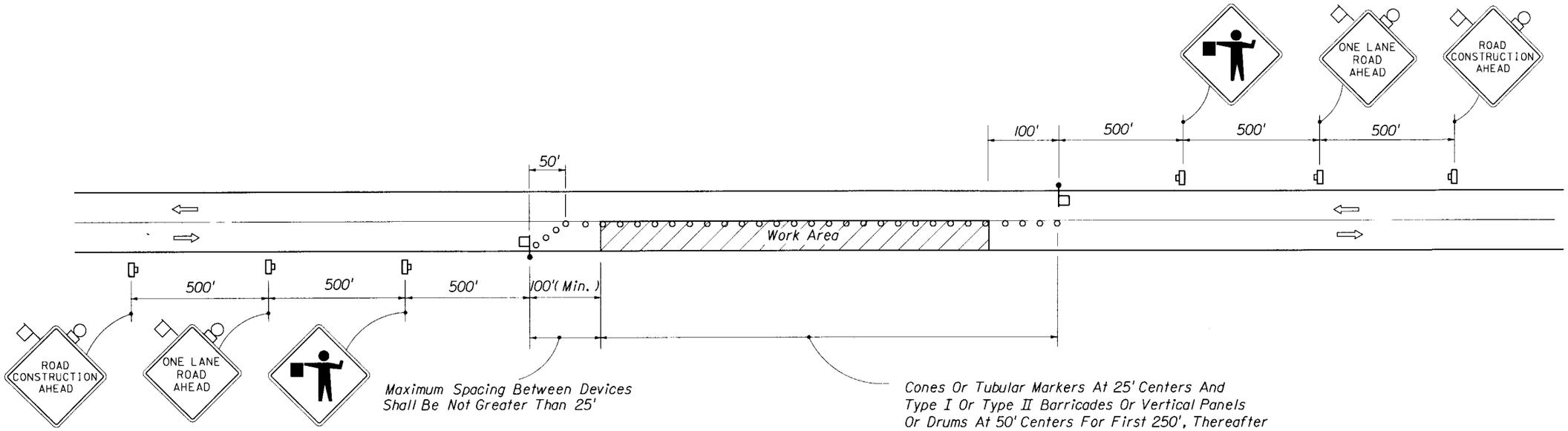

GENERAL NOTES

1. All vehicles, equipment, workers (except flaggers) and their activities are restricted at all times to one side of the pavement.
2. Minimum length of work area is 200 feet. Maximum length to be determined by the Engineer, but in no case to exceed the length of one-half ($\frac{1}{2}$) days operation or two miles whichever is less.
3. If the work operation does not exceed 60 minutes, traffic control will be in conformance with Index No. 607.
4. Additional one-way control may be effected by the following means:
   (1) Flag-carrying vehicle (2) Official vehicle
   (3) Pilot vehicles (4) Traffic signals

   When flaggers are the sole means of one-way control the flaggers shall be in sight of each other or in direct communication at all times.
5. The first two warning signs shall have a 18" x 18" (min.) orange flag and a Type B light attached and operating at all times.
6. Mesh signs may be used for (Daylight Only) operations Type B Lights and Orange Flags are not required.
7. The FLAGGER legend sign may be substituted for the symbol sign.
8. The ONE LANE ROAD AHEAD and FLAGGER signs are to be removed or fully covered when no work is being performed and the highway is open to two-way traffic.
9. Arrows denote direction of traffic only and do not reflect pavement markings.
10. Longitudinal dimensions are to be adjusted to fit field conditions. See Index No. 600.
11. When a side road intersects the highway on which work is being performed additional traffic control devices shall be erected in accordance with other applicable TCZ Indexes.
12. For general TCZ requirements and additional information refer to Index No. 600.

SYMBOLS

- Work Area
- Sign With 18" x 18" (Min.) Orange Flag And Type B Light
- Type I Or Type II Barricade Or vertical Panel Or Cone Or Tubular Marker Or Drum
- Work Zone Sign
- Flagger

TYPICAL APPLICATIONS

Pavement Repair
Pavement Surfacing
Utility Work
Delineator Maintenance
Crack Sealing
Core Boring

CONDITIONS

WHERE ANY VEHICLE, EQUIPMENT, WORKERS OR THEIR ACTIVITIES REQUIRE AN INTERMITTENT OR CONTINUOUS MOVING OPERATION ON THE PAVEMENT WHERE THE AVERAGE SPEED OF MOVEMENT IS LESS THAN FOUR MILES PER HOUR

STATE OF FLORIDA DEPARTMENT OF TRANSPORTATION
ROAD DESIGN

TRAFFIC CONTROL THROUGH WORK ZONES

MOVING OPERATIONS • RURAL
TWO-LANE TWO-WAY DAYLIGHT ONLY

	Names	Dates
Designed By	COMM	12/87
Drawn By	HSD/JBW	12/87
Checked By	JVG/KNM	12/87
F.H.W.A. Approved:		

Approved By _____ State Traffic Plans Engineer

Revision No.	Sheet No.	Index No.
92	1 of 1	606

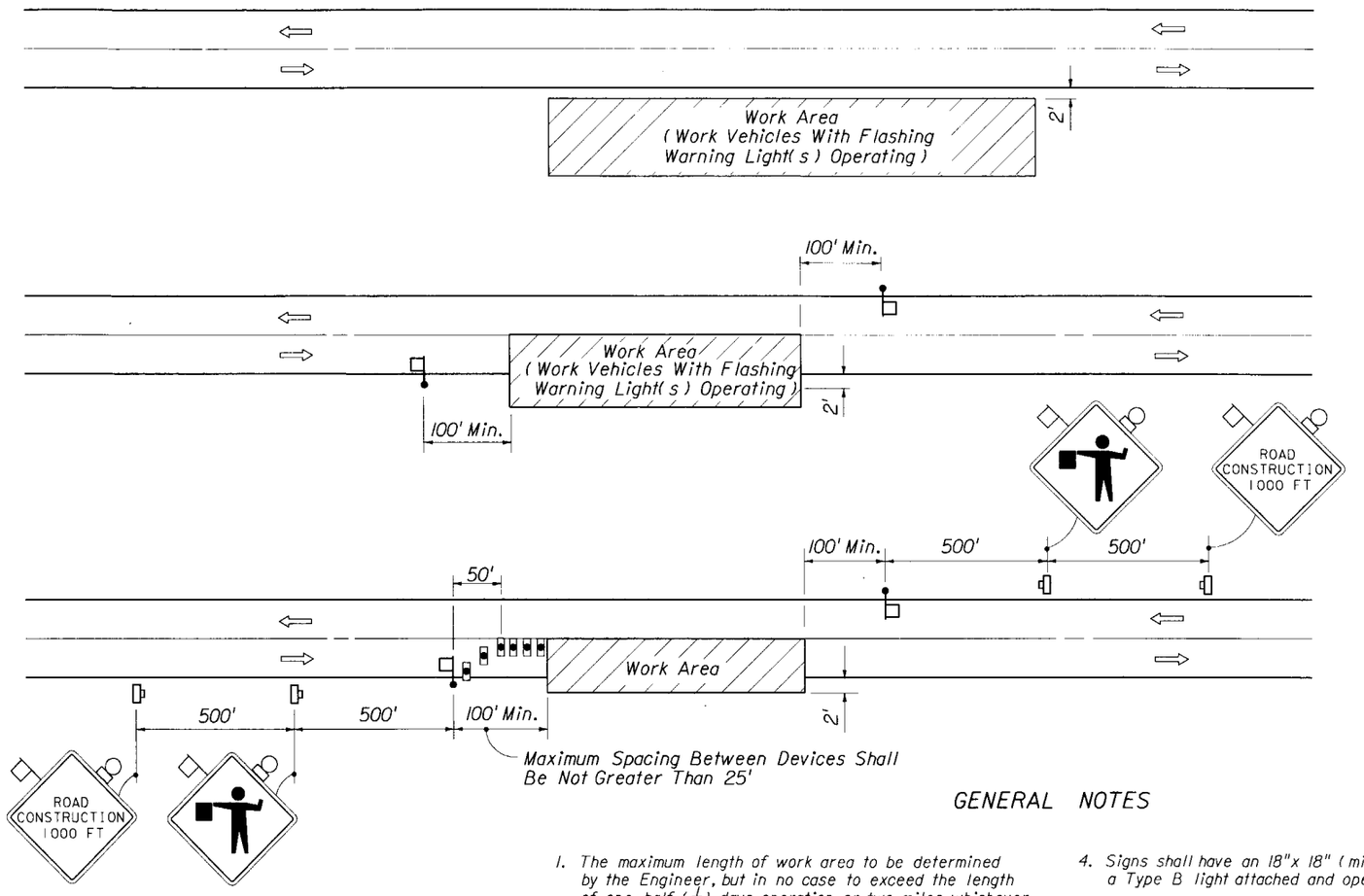

CONDITIONS

FOR ANY OPERATION THAT IS 2' OR MORE OUTSIDE THE EDGE OF THE PAVEMENT FOR A PERIOD OF LESS THAN 60 MINUTES.

CONDITIONS

FOR ANY OPERATION THAT ENCROACHES IN THE AREA BETWEEN THE CENTERLINE AND A LINE 2' OUTSIDE THE EDGE OF THE PAVEMENT FOR A PERIOD OF 15 MINUTES OR LESS

CONDITIONS

FOR ANY OPERATION THAT ENCROACHES IN THE AREA BETWEEN THE CENTERLINE AND A LINE 2' OUTSIDE THE EDGE OF THE PAVEMENT FOR A PERIOD IN EXCESS OF 15 MINUTES BUT LESS THAN 60 MINUTES.

SYMBOLS

- Work Area
- Sign With 18"x 18" (Min.) Orange Flag And Type B Light
- Type I Or Type II Barricade Or Vertical Panel Or Drum (With Steady Burning Light At Night Only). Cones Or Tubular Markers May Be Used During Daylight Only.
- Work Zone Sign
- Flagger

GENERAL NOTES

1. The maximum length of work area to be determined by the Engineer, but in no case to exceed the length of one-half ($\frac{1}{2}$) days operation or two miles whichever is less.
2. All vehicles, equipment, workers (except flaggers) and their activities are restricted at all times to one side of the pavement.
3. Additional one-way control may be effected by the following means:
   (1) Flag-carrying vehicle (2) Official vehicle
   (3) Pilot vehicles (4) Traffic signals

   When flaggers are the sole means of one-way control the flaggers shall be in sight of each other or in direct communication at all times.
4. Signs shall have an 18"x 18" (min.) orange flag and a Type B light attached and operating at all times.

   Mesh signs may be used for (Daylight Only) operations Type B Lights and Orange Flags are not required.
5. The FLAGGER legend sign may be substituted for the symbol sign.
6. Arrows denote direction of traffic only and do not reflect pavement markings.
7. Longitudinal dimensions are to be adjusted to fit field conditions. See Index No. 600.
8. When a side road intersects the highway on which work is being performed additional traffic control devices shall be erected in accordance with other applicable TCZ Indexes.
9. For general TCZ requirements and additional information refer to Index No. 600.

TYPICAL APPLICATIONS

Marking Patches
Field Patches
String Line
Utility Work
Cleaning Up Debris On Pavement
Pavement Coring And Straight Edging

STATE OF FLORIDA DEPARTMENT OF TRANSPORTATION
ROAD DESIGN

TRAFFIC CONTROL THROUGH WORK ZONES
TWO-LANE TWO-WAY • RURAL SHORTTIME DAY OR NIGHT OPERATIONS

	Names	Dates
Designed By	COMM	12/87
Drawn By	HSD/JBW	12/87
Checked By	JVG/KNM	12/87
F.H.W.A. Approved:		

Approved By Clark A Scott
State Traffic Plans Engineer

Revision No.	Sheet No.	Index No.
92	1 of 1	607

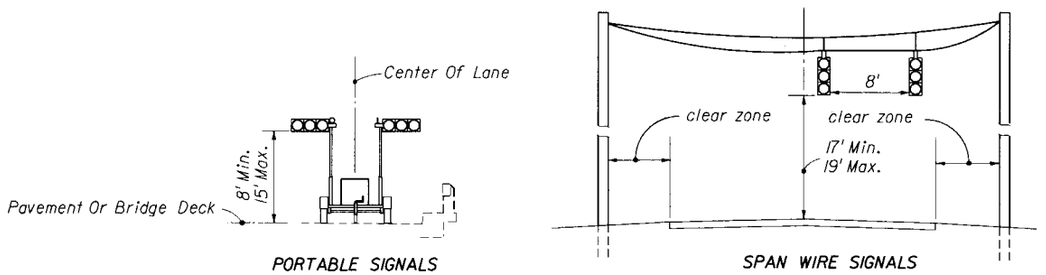

SIGNAL MOUNT DETAILS

GENERAL NOTES

SYMBOLS

- Work Area
- Sign With 18" x 18" (Min.) Orange Flag And Type B Light
- Work Zone Sign
- Traffic Signal
- Type I Or Type II Barricade Or Vertical Panel Or Drum (With Steady Burning Light At Night Only). Cones Or Tubular Markers May Be Used During Daylight Only.
- Type III Barricade
- Stop Bar
- Flagger
- Portable Signal

1. Work operations shall be confined to one traffic lane, except for haul road crossings, leaving the opposite lane open to traffic.
2. All vehicles, equipment, workers (except flaggers) and their activities are restricted at all times to one side of the pavement, except for haul road crossings.
3. The installation and timing of signals shall be approved by the District Traffic Operations Engineer prior to signals being placed in operation.

   Where sight distance to the signal is limited, the signals may be mounted on span wire at the discretion of the Engineer.

   The maximum distance between portable traffic signals (receiver/controllers) shall be $\frac{1}{4}$ mile, however, in no case shall the distance exceed the maximum distance at which the remote operator (transmitter) can positively and safely operate both portable signals.
4. Flaggers to supplement the signal operator/flagger shall be used when needed to assure safe movements between traffic and operating equipment, as determined by the Engineer.
5. The first two signs shall have a 18" x 18" (min.) orange flag and a Type B light attached and operating at all times.
6. When needed, an additional warning sign may be installed in advance of the ROAD CONSTRUCTION AHEAD sign. The distance between successive signs shall be 500 ft.
7. The SIGNAL AHEAD legend sign may be substituted for the symbol sign.
8. All signs shall be post mounted if the closure time exceeds 12 hours.
9. SIGNAL AHEAD and EQUIPMENT CROSSING AHEAD signs are to be removed or fully covered when no work is being performed and the highway is open to two-way traffic. Type III Barricades shall be in place to block haul road access when the haul road is not in operation and a flagger/signal operator is not on duty, except when the haul road is an existing properly marked road.
10. Arrows denote direction of traffic only and do not reflect pavement markings.
11. Longitudinal dimensions are to be adjusted to fit field conditions. See Index No. 600.
12. When a side road intersects the highway on which work is being performed additional traffic control devices shall be erected in accordance with other applicable TCZ Indexes.
13. For general TCZ requirements and additional information refer to Index No. 600.

TYPICAL APPLICATION

Pavement Repair
Shoulder & Roadside Work
Bridge Work
Box Culvert Work
Drainage Work
Utility Work
Haul Road Crossing

CONDITIONS

WHERE ANY VEHICLE, EQUIPMENT, WORKERS OR THEIR ACTIVITIES WILL ENCROACH ON ONE LANE OR MOMENTARILY ENCROACH ON BOTH LANES OF A TWO-LANE TWO-WAY ROADWAY AND TRAFFIC SIGNALS ARE NEEDED.

STATE OF FLORIDA DEPARTMENT OF TRANSPORTATION
ROAD DESIGN

TRAFFIC CONTROL THROUGH WORK ZONES

TWO-LANE, TWO-WAY LANE CLOSURE BY SIGNAL CONTROL DAY OR NIGHT OPERATIONS

	Names	Dates
Designed By	COMM	12/87
Drawn By	HSD/JBW	12/87
Checked By	JVG/KNW	12/87
F.H.W.A. Approved:		

Approved By: Clark G. Scott
State Traffic Plans Engineer

Revision No.	Sheet No.	Index No.
92	1 of 4	608

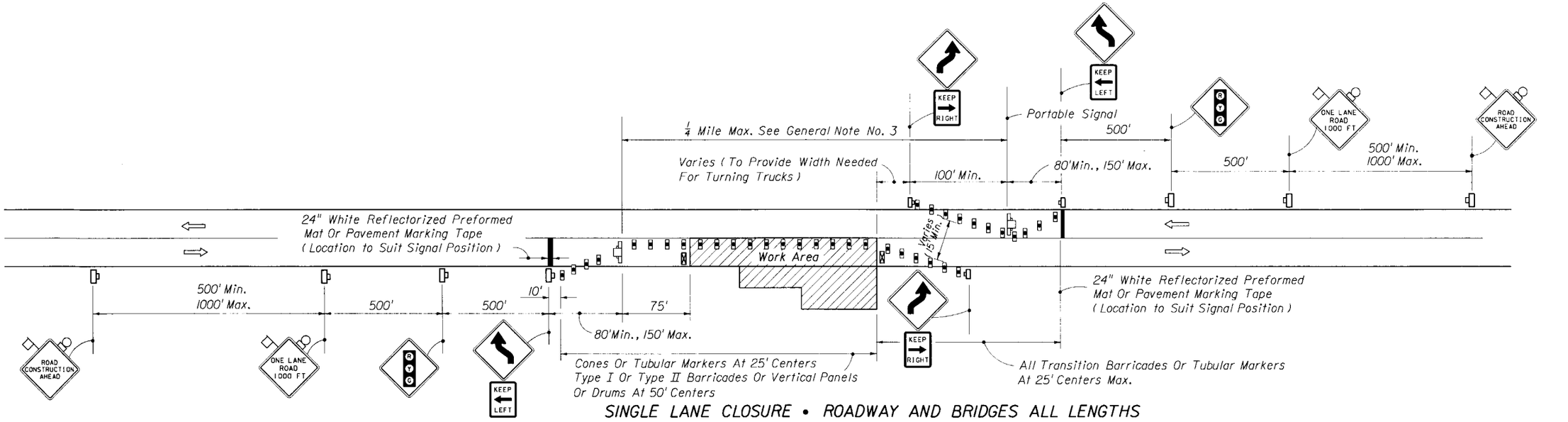

SINGLE LANE CLOSURE • ROADWAY AND BRIDGES ALL LENGTHS

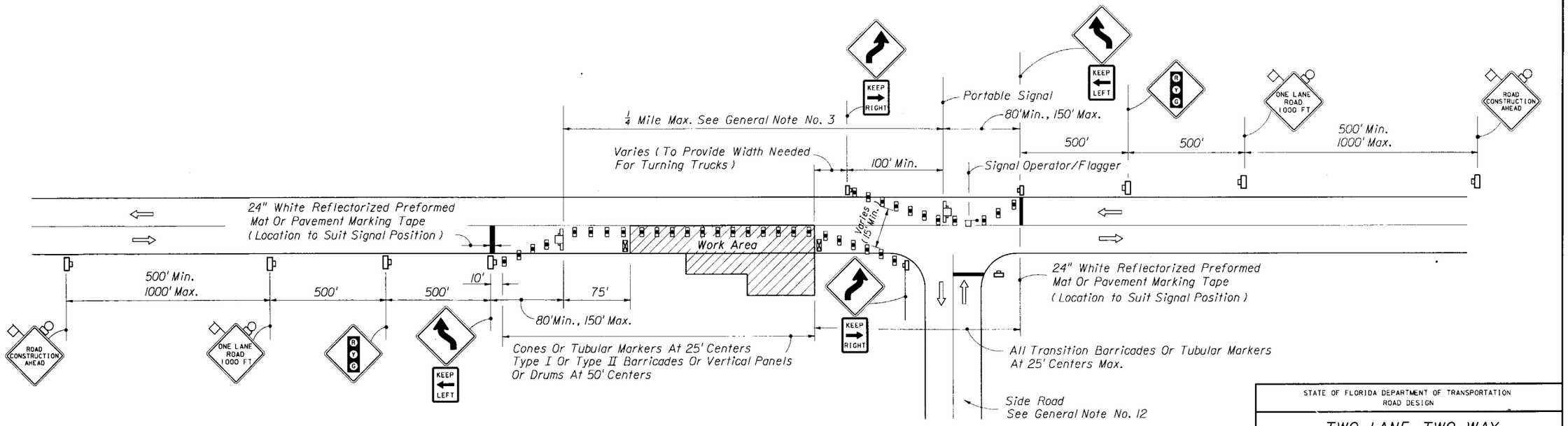

SINGLE LANE CLOSURE • ROADWAY AND BRIDGES ALL LENGTHS

STATE OF FLORIDA DEPARTMENT OF TRANSPORTATION
ROAD DESIGN

TWO-LANE, TWO-WAY LANE CLOSURE BY SIGNAL CONTROL DAY OR NIGHT OPERATIONS

	Names	Dates
Designed By	COMM	5/89
Drawn By	HSD	5/89
Checked By	JVG/KNM	5/89
F.H.W.A. Approved:		

Approved By: Clark A. Scott
State Traffic Plans Engineer

Revision No.	Sheet No.	Index No.
92	2 of 4	608

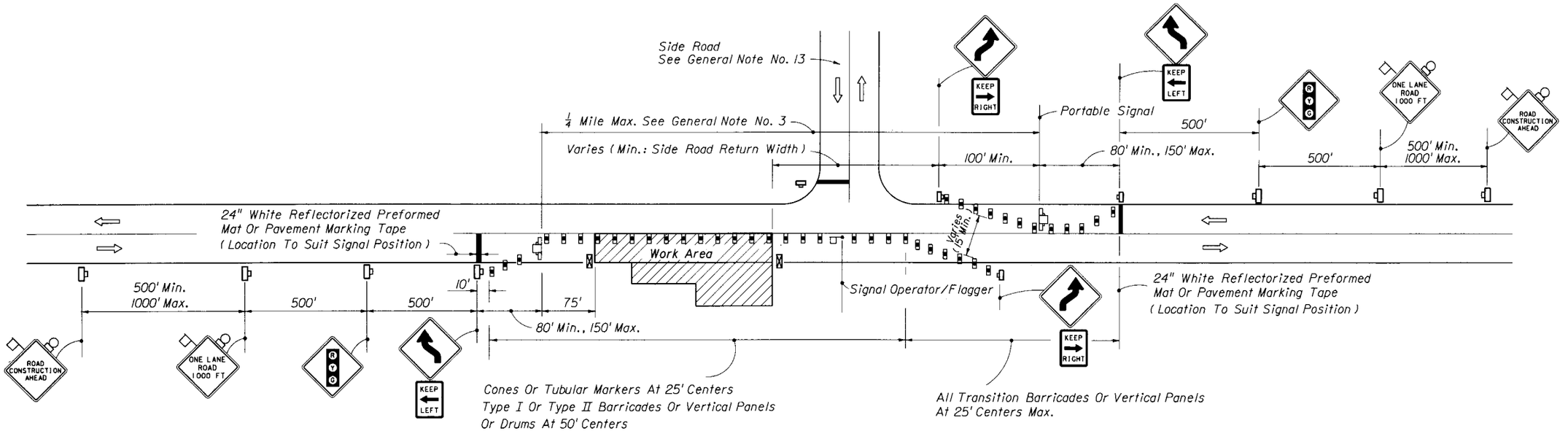

SINGLE LANE CLOSURE • ROADWAY AND BRIDGES ALL LENGTHS

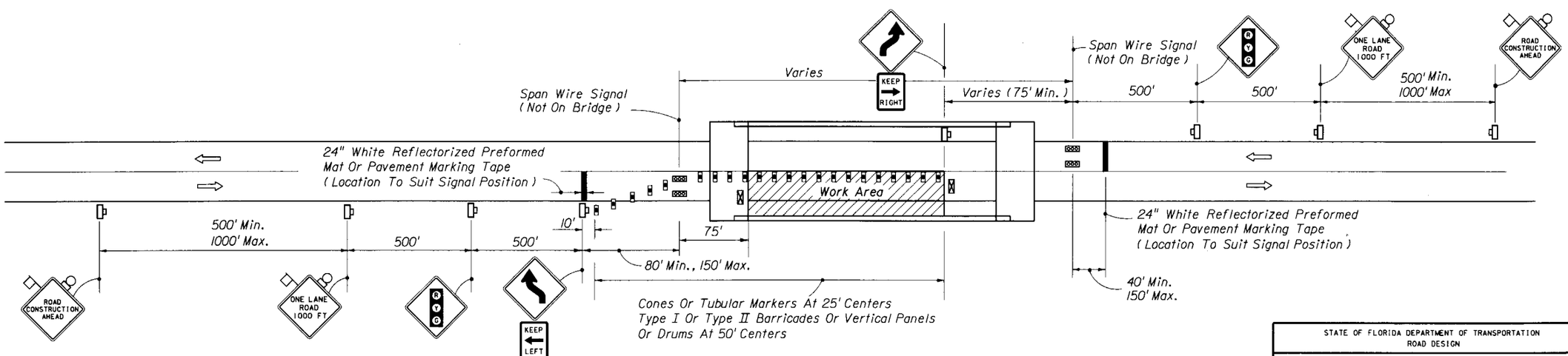

SINGLE LANE CLOSURE • SHORT BRIDGES

STATE OF FLORIDA DEPARTMENT OF TRANSPORTATION
ROAD DESIGN

TWO-LANE, TWO-WAY LANE CLOSURE BY SIGNAL CONTROL DAY OR NIGHT OPERATIONS

	Names	Dates
Designed By	COMM	5/89
Drawn By	HSD	5/89
Checked By	JVG/KNM	5/89

Approved By _____
State Traffic Plans Engineer

F.H.W.A. Approved:

Revision No.	Sheet No.	Index No.
92	3 of 4	608

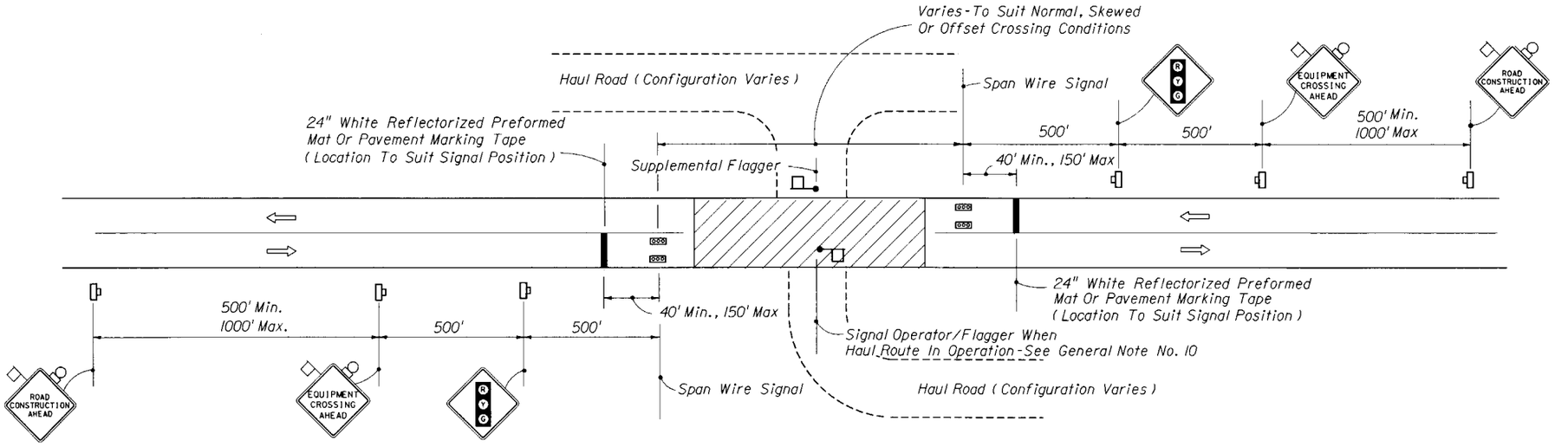

MOMENTARY ROADWAY CLOSURE • HAUL ROUTE CROSSING

STATE OF FLORIDA DEPARTMENT OF TRANSPORTATION
ROAD DESIGN

TWO-LANE, TWO-WAY LANE CLOSURE BY SIGNAL CONTROL DAY OR NIGHT OPERATIONS

	Names	Dates
Designed By	COMM	5/89
Drawn By	HSD	5/89
Checked By	JVG/KNM	5/89

Approved By
State Roadway Design Engineer

F.H.W.A. Approved:

Revision No.	Sheet No.	Index No.
90	4 of 4	608

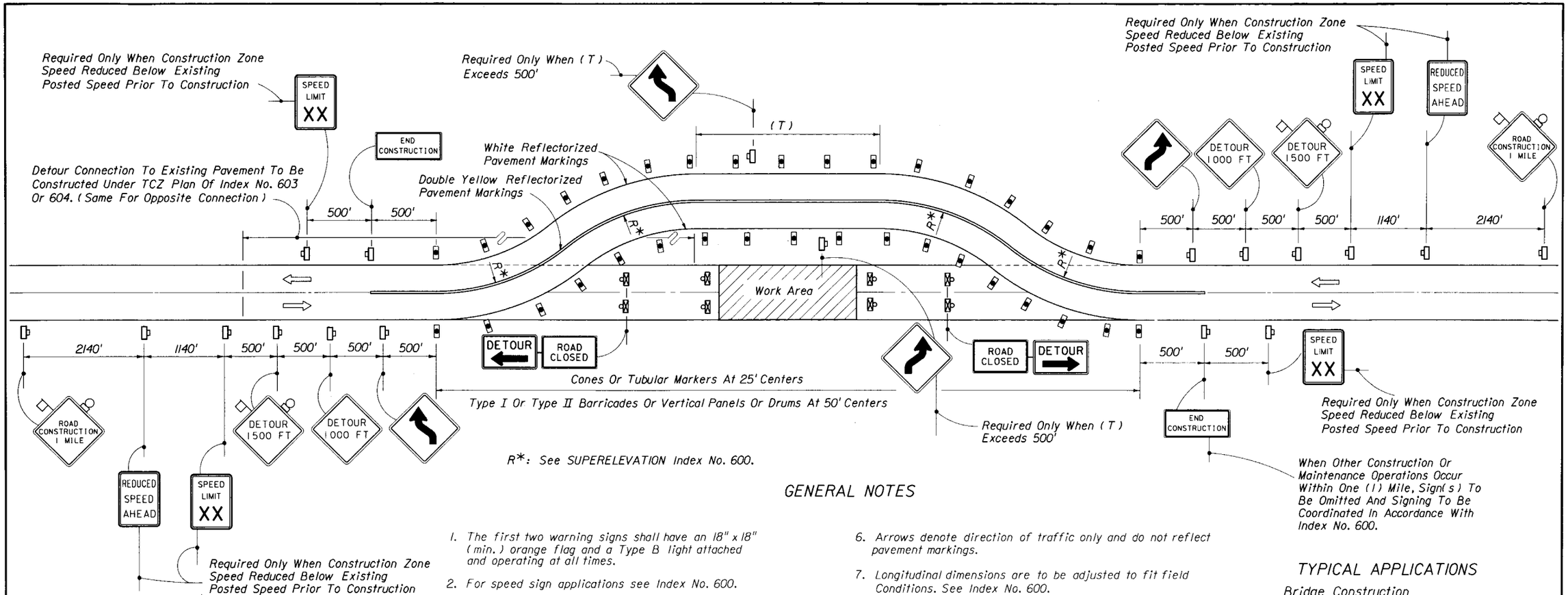

R*: See SUPERELEVATION Index No. 600.

GENERAL NOTES

1. The first two warning signs shall have an 18" x 18" (min.) orange flag and a Type B light attached and operating at all times.
2. For speed sign applications see Index No. 600.
3. Where the tangent distance (T) exceeds 600 feet, spacing between cones or tubular markers may be increased to 50 feet or spacing beteen Type I or Type II barricades, or vertical panels or drums may be inceased to 100 feet within limits of the tangent, or, post mounted delineators at 50 foot centers may be substituted for the barricades, vertical panels or drums.
4. On the existing pavement all existing markings within the realignment which conflict with the revised traffic pattern are to be removed and removable pavement markings used for marking a new centerline and edge lines.
5. Where the tangent distance (T) exceeds 600 feet and no passing or stopping sight distance restrictions exist, the yellow reflectorized markings used to indicate the centerline of the traveled way may be replaced with yellow reflectorized marking in a broken pattern. For raised pavment marker application see Index No. 600 and Index No. 17352.
6. Arrows denote direction of traffic only and do not reflect pavement markings.
7. Longitudinal dimensions are to be adjusted to fit field Conditions. See Index No. 600.
8. When a side road intersects the highway on which work is being performed additional traffic control devices shall be erected in accordance with other applicable TCZ Indexes.
9. If temporary structures are required on the detour traffic control will be in conformance with Index No. 650.
10. For general TCZ requirements and additional information refer to Indexes Nos. 600 and 17352.
conditions. See Index No. 600.

SYMBOLS

- Work Area
- Sign With 18" x 18"(Min.) Orange Flag And Type B Light
- Type I Or Type II Barricade Or Vertical Panel Or Drum (With Steady Burning Light At Night Only). Cones Or Tubular Markers May Be Used During Daylight Only.
- Type III Barricade (With Flashing Light)
- Work Zone Sign

TYPICAL APPLICATIONS

Bridge Construction
Subgrade Restoration
Culvert Repair Or Construction

CONDITIONS

WHERE ANY VEHICLE, EQUIPMENT, WORKERS OR THEIR ACTIVITIES REQUIRE THE CLOSURE OF BOTH LANES AND A TEMPORARY DETOUR IS CONSTRUCTED

STATE OF FLORIDA DEPARTMENT OF TRANSPORTATION
ROAD DESIGN

TRAFFIC CONTROL THROUGH WORK ZONES

TWO-LANE, TWO-WAY • RURAL TEMPORARY DETOUR DAY OR NIGHT OPERATIONS

	Names	Dates
Designed By	COMM	12/87
Drawn By	HSD/JBW	12/87
Checked By	JVG/KNM	12/87

Approved By: Clark A. Scott
State Traffic Plans Engineer

F.H.W.A. Approved:

Revision No.	Sheet No.	Index No.
92	1 of 1	609

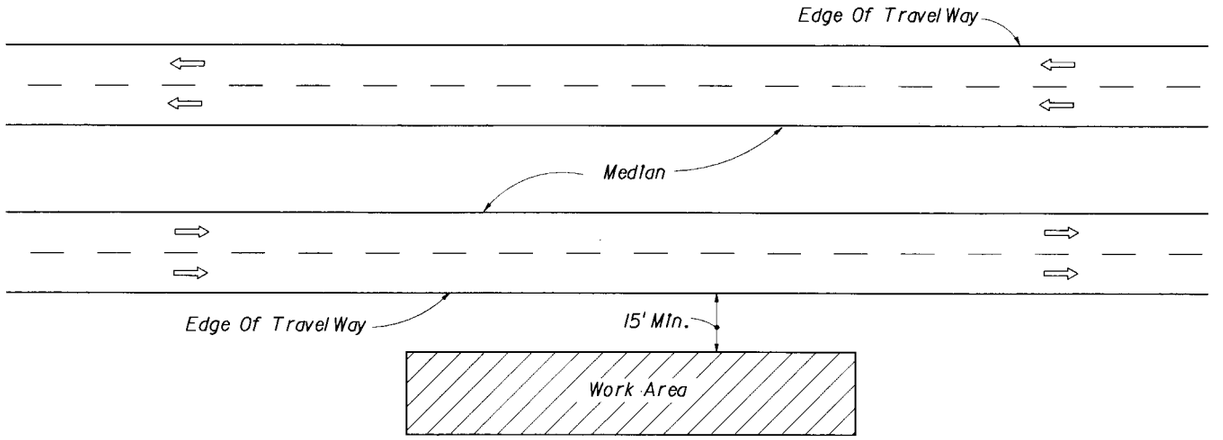

SYMBOLS

Work Area

GENERAL NOTES

1. If the work operation requires that two or more work vehicles cross the 15' zone in any one hour, traffic control will be in conformance with Index No. 602.
2. No special signing is required.
3. This Index also applies when work is being performed on a multilane undivided highway.
4. This Index also applies to work performed in the median more than 15 ft. from edge of travel way, both roadways.
5. Arrows denote direction of traffic only and do not reflect pavement markings.
6. When a side road intersects the highway on which work is being performed additional traffic control devices shall be erected in accordance with other applicable TCZ Indexes.
7. For general TCZ requirements and additional information refer to Index No. 600.

TYPICAL APPLICATIONS

Landscaping Work
Utility Work
Fencing Work
Cleaning Drainage Structures
Reworking Ditches

CONDITIONS

WHERE ALL VEHICLES, EQUIPMENT, WORKERS AND THEIR ACTIVITIES ARE MORE THAN 15' FROM THE EDGE OF PAVEMENT

STATE OF FLORIDA DEPARTMENT OF TRANSPORTATION
ROAD DESIGN

TRAFFIC CONTROL THROUGH WORK ZONES

MULTILANE DIVIDED OR UNDIVIDED RURAL • DAY OR NIGHT OPERATIONS

	Names	Dates
Designed By	COMM	12/87
Drawn By	HSD/JBW	12/87
Checked By	JMG/KNM	12/87
F.H.W.A. Approved:		

Approved By
Deputy State Design Engineer, Roadways

Revision No.	Sheet No.	Index No.
88	1 of 1	610

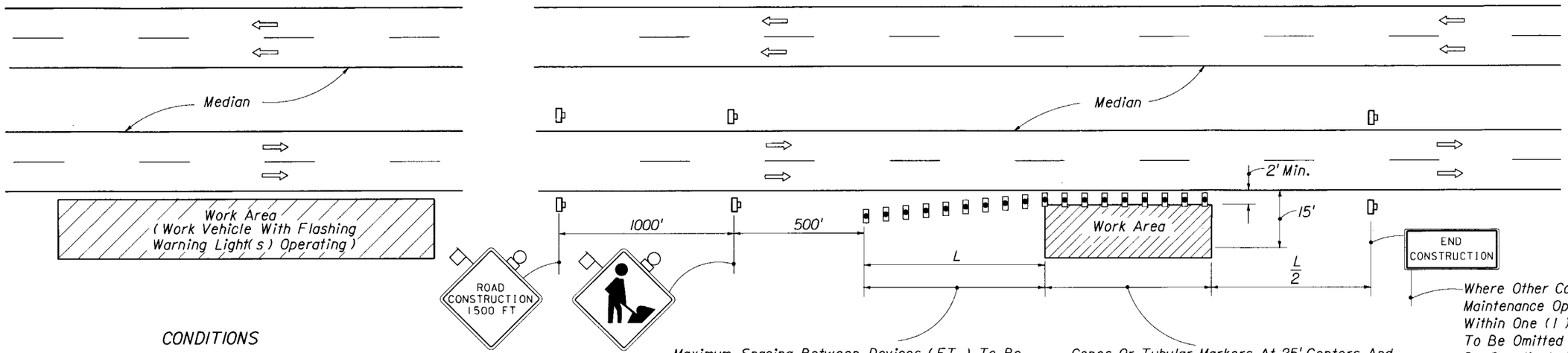

Where Other Construction Or Maintenance Operations Occur Within One (1) Mile, Sign(s) To Be Omitted And Signing To Be Coordinated In Accordance With Index No. 600.

CONDITIONS

WHERE ANY VEHICLE, EQUIPMENT, WORKERS OR THEIR ACTIVITIES ENCROACH THE AREA CLOSER THAN 15' BUT NOT CLOSER THAN 2' TO THE EDGE OF PAVEMENT FOR A PERIOD OF LESS THAN 60 MINUTES

Maximum Spacing Between Devices (FT.) To Be Equal To The Speed Limit (MPH) But Not Greater Than 25' For Cones Or Tubular Markers Or 50' For Type I Or Type II Barricades Or Vertical Panels Or Drums.

Cones Or Tubular Markers At 25' Centers And Type I Or Type II Barricades Or Vertical Panels Or Drums At 50' Centers For First 250', Thereafter Cones Or Tubular Markers At 50' Centers And Type I Or Type II Barricades Or Vertical Panels Or Drums At 100' Centers.

CONDITIONS

WHERE ANY VEHICLE, EQUIPMENT, WORKERS OR THEIR ACTIVITIES ENCROACH THE AREA CLOSER THAN 15' BUT NOT CLOSER THAN 2' TO THE EDGE OF PAVEMENT FOR A PERIOD OF 60 MINUTES OR GREATER

SYMBOLS

- Work Area
- Sign With 18" x 18" (Min.) Orange Flag And Type B Light
- Type I Or Type II Barricade Or Vertical Panel Or Drum (With Steady Burning Light At Night Only). Cones Or Tubular Markers May Be Used During Daylight Only.
- Work Zone Sign

GENERAL NOTES

1. All vehicles, equipment, workers and their activities are restricted at all times to one side of the roadway.
2. If the work operation encroaches on the through traffic lanes or when four or more work vehicles enter the through traffic lanes in a one hour period a flagger shall be provided and a FLAGGER sign shall be substituted for the WORKERS sign. The flagger shall be positioned at the point of vehicle entry or departure from the work area.
3. This TCZ plan also applies to work performed in the median more than 2 feet but less than 15 feet from the edge of either pavement.
4. The first two warning signs, each side, shall have a 18" x 18" (min.) orange flag and a Type B light attached and operating at all times.

   Mesh signs may be used for (Daylight Only) operations Type B Lights and Orange Flags are not required.
5. The WORKERS legend sign may be substituted for the symbol sign.
6. L (min) = $\frac{WS}{2}$ for speeds ≥45 mph

   = $\frac{WS^2}{120}$ for speeds ≤ 40 mph

   Where:
   W = Width of lateral transition in feet
   S = Posted speed limit (MPH).
7. Arrows denote direction of traffic only and do not reflect pavement markings.
8. Longitudinal dimensions are to be adjusted to fit field conditions. See Index No. 600.
9. When work is being performed on a multilane undivided roadway the signs normally mounted in the median (as shown) shall be omitted.
10. WORKERS signs to be removed or fully covered when no work is being performed.
11. END CONSTRUCTION signs required only when work exceeds one daylight period.
12. When a side road intersects the highway on which work is being performed additional traffic control devices shall be erected in accordance with other applicable TCZ Indexes.
13. If the work operation does not exceed 15 minutes, signs, barricades, vertical panels, cones, tubular markers, or drums will not be required provided vehicles in the work area have warning light(s) operating.
14. For general TCZ requirements and additional information refer to Index No. 600.

TYPICAL APPLICATIONS

Utility Work
Culvert Extensions
Side Slope Work
Guardrail Work
Landscaping Work
Cleaning Drainage Structures
Reworking Ditches
Sign Installation And Maintenance
Shoulder Repair

STATE OF FLORIDA DEPARTMENT OF TRANSPORTATION
ROAD DESIGN

TRAFFIC CONTROL THROUGH WORK ZONES

MULTILANE DIVIDED OR UNDIVIDED RURAL • DAY OR NIGHT OPERATIONS

	Names	Dates
Designed By	COMM	12/87
Drawn By	HSD/JBW	12/87
Checked By	JVG/KNM	12/87
F.H.W.A. Approved:		

Approved By
State Traffic Plans Engineer

Revision No.	Sheet No.	Index No.
92	1 of 1	611

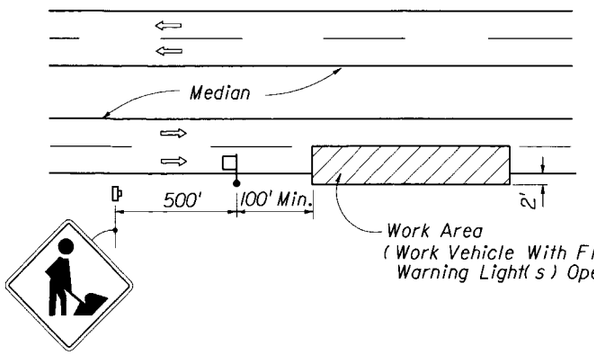

CONDITIONS

WHERE ANY VEHICLE, EQUIPMENT, WORKERS OR THEIR ACTIVITIES ENCROACH ON THE LANE ADJACENT TO EITHER SHOULDER AND THE AREA 2' OUTSIDE THE EDGE OF PAVEMENT FOR A PERIOD OF 15 MINUTES OR LESS

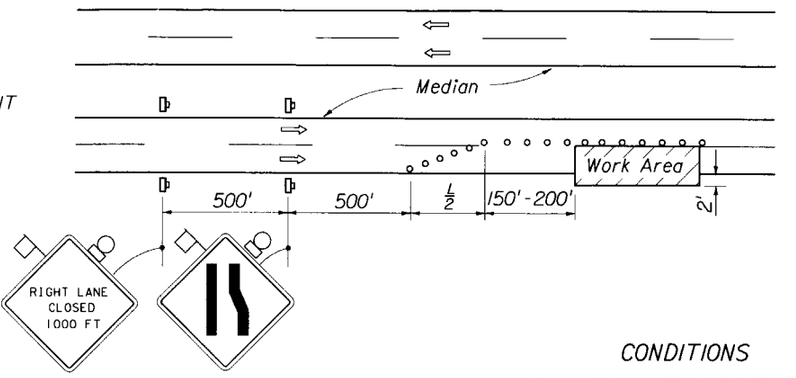

CONDITIONS

WHERE ANY VEHICLE, EQUIPMENT, WORKERS OR THEIR ACTIVITIES ENCROACH ON THE LANE ADJACENT TO EITHER SHOULDER AND THE AREA 2' OUTSIDE THE EDGE OF PAVEMENT FOR A PERIOD OF MORE THAN 15 MINUTES BUT LESS THAN 60 MINUTES

CONDITIONS

WHERE ANY VEHICLE, EQUIPMENT, WORKERS OR THEIR ACTIVITIES ENCROACH ON THE LANE ADJACENT TO EITHER SHOULDER AND THE AREA 2' OUTSIDE THE EDGE OF PAVEMENT FOR A PERIOD OF 60 MINUTES OR GREATER

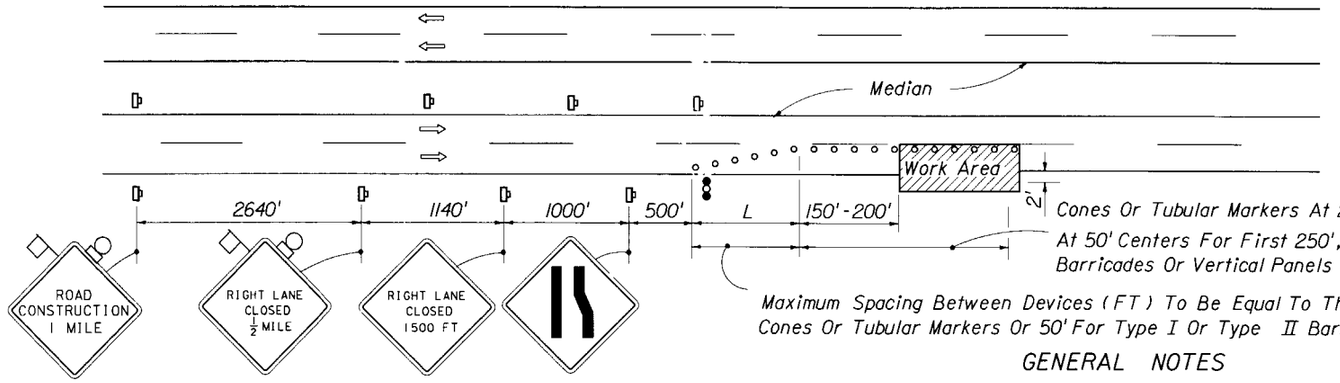

Cones Or Tubular Markers At 25' Centers And Type I Or Type II Barricades Or Vertical Panels Or Drums At 50' Centers For First 250', Thereafter Cones Or Tubular Markers At 50' Centers And Type I Or Type II Barricades Or Vertical Panels Or Drums At 100' Centers.

Maximum Spacing Between Devices (FT) To Be Equal To The Speed Limit (MPH) But Not Greater Than 25' For Cones Or Tubular Markers Or 50' For Type I Or Type II Barricades Or Vertical Panels Or Drums.

GENERAL NOTES

1. Work operations shall be confined to one traffic lane, leaving the adjacent lane open to traffic.
2. All vehicles, equipment, workers and their activities are restricted at all times to one side of the pavement.
3. The first two warning signs, each side, shall have an 18"x 18" (min.) orange flag and a Type B light attached and operating at all times.
4. Mesh signs may be used for (Daylight Only) operations Type B Lights and Orange Flags are not required.
5. On undivided highways the median signs as shown are to be omitted.
6. When work is performed in the median lane on divided highways the barricading plan is inverted and left lane closed and lane reduction signs substituted for the right lane closed and lane reduction signs.

   The same applies to undivided highways with the following exceptions: (a) Work shall be confined within one median lane. (b) Additional barricades, cones or drums shall be placed along the centerline abutting the work area and across the trailing end of the work area.

   When work on undivided highways occurs across the centerline so as to encroach on both median lanes, the inverted plan is applied to the approach of both roadways.
7. The RIGHT (LEFT) LANE CLOSED signs are to be removed or fully covered when no work is being performed and the highway is open to traffic.
8. L (min.) = Length of taper in feet :
   = WS for speeds ≥ 45 mph
   = $\frac{WS^2}{60}$ for speeds ≤ 40 mph

   Where:
   W = Width of lateral transition in feet
   S = Posted speed limit (MPH).
9. Arrows denote direction of traffic only and do not reflect pavement markings.
10. Longitudinal dimensions are to be adjusted to fit field conditions. See Index No. 600.
11. When work is being performed on a multilane undivided roadway the signs normally mounted in the median (as shown) shall be omitted.
12. This TCZ plan does not apply when work is being performed in the middle or inside lane(s) of a six or more lane highway. See Indexes Nos. 616 and 617.
13. When a side road intersects the highway on which work is being performed additional traffic control devices shall be erected in accordance with other applicable TCZ Indexes.
14. For general TCZ requirements and additional information refer to Index No. 600.

SYMBOLS

- Work Area
- Sign With 18"x 18" (Min.) Orange Flag And Type B Light
- Type I Or Type II Barricade Or vertical Panel Or Cone Or Tubular Marker Or Drum
- Work Zone Sign
- Flagger
- Advance Warning Arrow Panel

TYPICAL APPLICATIONS

- Pavement Resurfacing
- Pavement Repair
- Utility Work
- Bridge Repair
- Guardrail Work
- Pavement Coring And Straight Edging

STATE OF FLORIDA DEPARTMENT OF TRANSPORTATION
ROAD DESIGN

TRAFFIC CONTROL THROUGH WORK ZONES

MULTILANE, DIVIDED AND UNDIVIDED RURAL • OPERATIONS ONE DAYLIGHT PERIOD OR LESS

	Names	Dates
Designed By	COMM	12/87
Drawn By	HSD/JBW	12/87
Checked By	JVG/KNM	12/87
F.H.W.A. Approved:		

Approved By: Charles A. Hall
State Traffic Plans Engineer

Revision No.	Sheet No.	Index No.
92	1 of 1	612

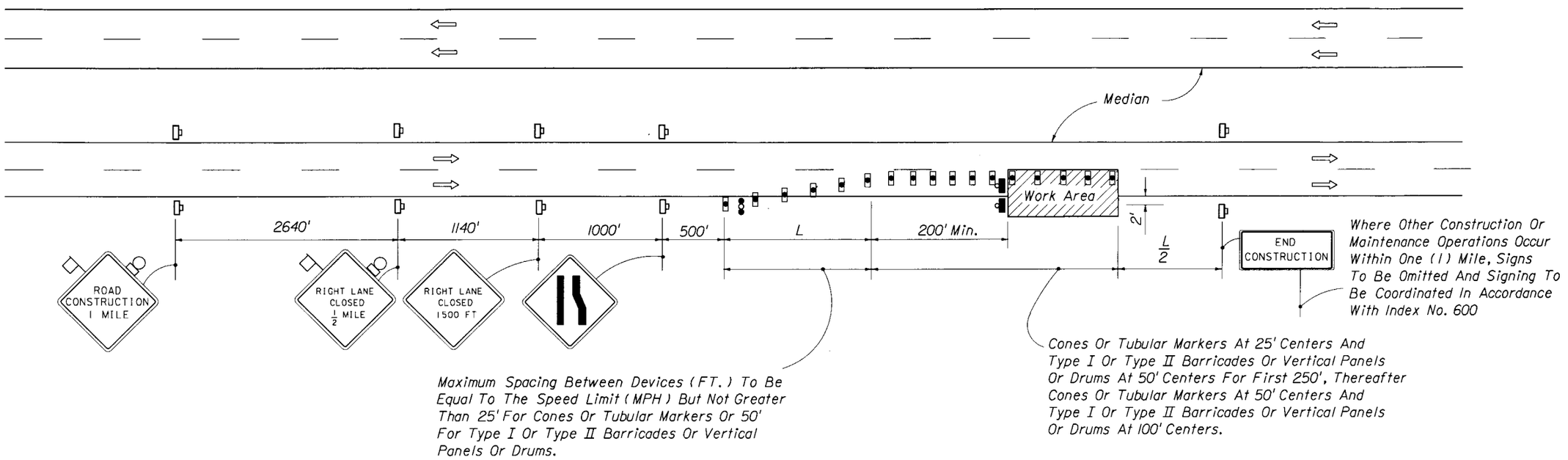

SYMBOLS

- Work Area
- Sign With 18" x 18" (Min.) Orange Flag And Type B Light
- Type I Or Type II Barricade Or Vertical Panel Or Drum (With Steady Burning Light At Night Only). Cones Or Tubular Markers May Be Used During Daylight Only.
- Type I, Type II Or Type III Barricade Or Vertical Panel Or Drum (With Flashing Light)
- Work Zone Sign
- Advance Warning Arrow Panel

GENERAL NOTES

1. Work operations shall be confined to one traffic lane, leaving the adjacent lane open to traffic.
2. All vehicles, equipment, workers and their activities are restricted at all times to one side of the pavement.
3. The first two warning signs, each side, shall have a 18" x 18" (min.) orange flag and a Type B light attached and operating at all times.
4. All signs shall be post mounted if the closure time exceeds 12 hours.
5. On undivided highways the median signs as shown are to be omitted.
6. When work is performed in the median lane on divided highways the barricading plan is inverted and left lane closed and lane reduction signs substituted for the right lane closed and lane reduction signs.

   The same applies to undivided highways with the following exceptions: (a) Work shall be confined within one median lane. (b) Additional barricades, cones, or drums shall be placed along the centerline abutting the work area and across the trailing end of the work area.

   When work on undivided highways occurs across the centerline so as to encroach on both median lanes, the inverted plan is applied to the approach of both roadways.
7. Signs and traffic control devices are to be modified in accordance with INTERMITTENT WORK STOPPAGE details (sheet 2 of 2) when no work is being performed and the highway is open to traffic.
8. L (min.) = Length of taper in feet:
   = WS for speeds ≥ 45 mph
   = $\frac{WS^2}{60}$ for speeds ≤ 40 mph

   Where:
   W = Width of lateral transition in feet
   S = Posted speed limit (MPH).
9. Arrows denote direction of traffic only and do not reflect pavement markings.
10. Longitudinal dimensions are to be adjusted to fit field conditions. See Index No. 600.
11. When work is being performed on a multilane undivided roadway the signs normally mounted in the median (as shown) shall be omitted.
12. When a side road intersects the highway on which work is being performed, additional traffic control devices shall be erected in accordance with other applicable TCZ Indexes.
13. For general TCZ requirements and additional information refer to Index No. 600.

TYPICAL APPLICATIONS

Pavement Resurfacing
Pavement Repair
Utility Work
Bridge Repair
Guardrail Work

CONDITIONS

WHERE ANY VEHICLE, EQUIPMENT, WORKERS OR THEIR ACTIVITIES ENCROACH ON THE LANE ADJACENT TO EITHER SHOULDER AND THE AREA 2' OUTSIDE THE EDGE OF PAVEMENT

STATE OF FLORIDA DEPARTMENT OF TRANSPORTATION
ROAD DESIGN

TRAFFIC CONTROL THROUGH WORK ZONES

MULTILANE, DIVIDED AND UNDIVIDED • RURAL NIGHT OPERATIONS OR OPERATIONS EXCEEDING ONE DAYLIGHT PERIOD

	Names	Dates
Designed By	COMM	12/87
Drawn By	HSD/JBW	12/87
Checked By	JVG/KNM	12/87
F.H.W.A. Approved:		

Approved By: Charles A. Scott
State Traffic Plans Engineer

Revision No.	Sheet No.	Index No.
92	1 of 2	613

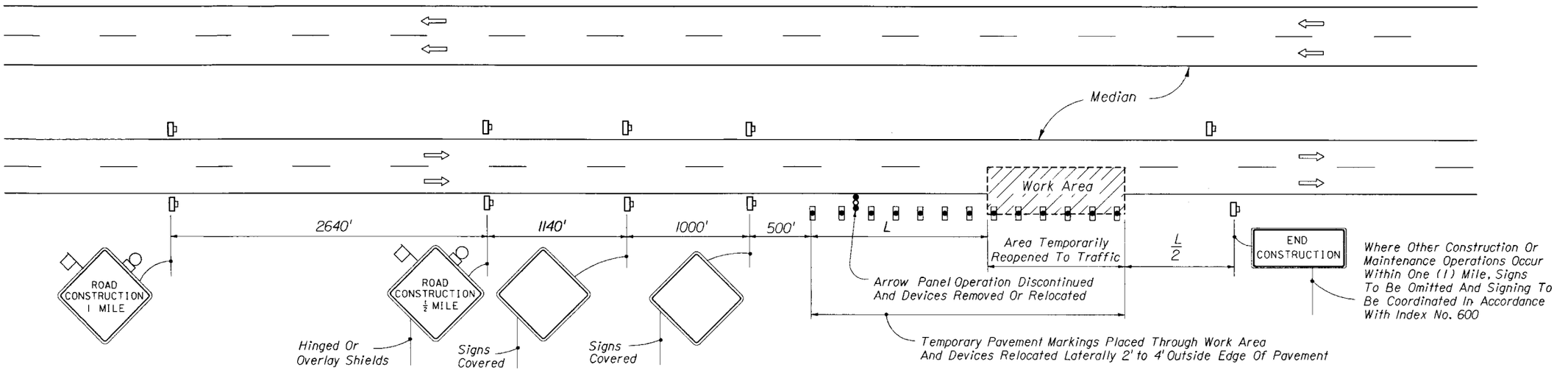

EVEN PAVEMENT

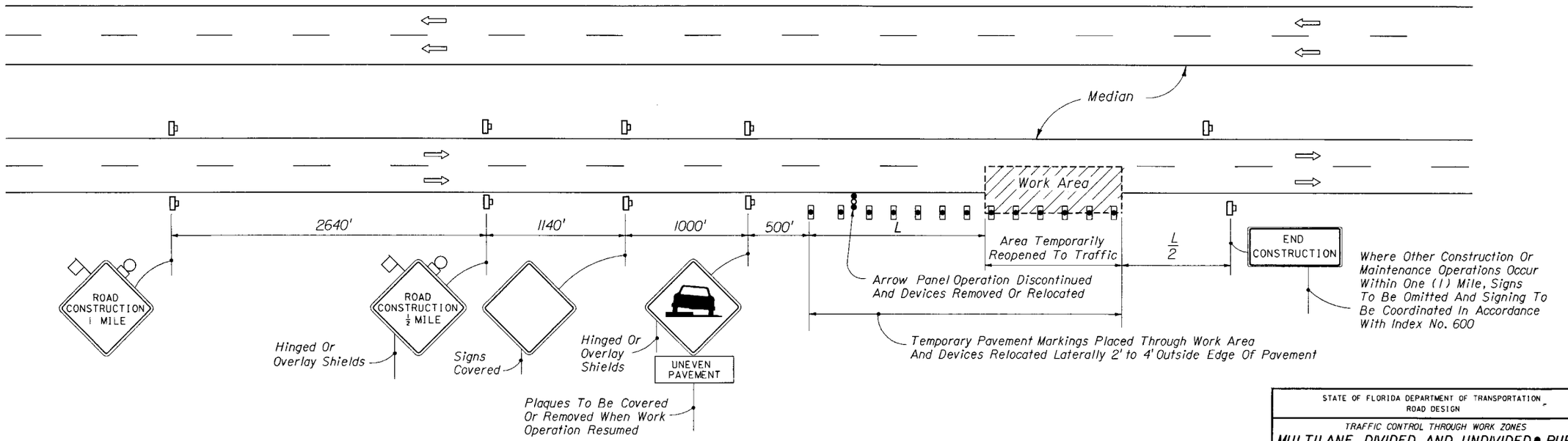

UNEVEN PAVEMENT

INTERMITTENT WORK STOPPAGE • RIGHT LANE REOPENED TO TRAFFIC • DAYTIME OR NIGHTIME

STATE OF FLORIDA DEPARTMENT OF TRANSPORTATION
ROAD DESIGN

TRAFFIC CONTROL THROUGH WORK ZONES

MULTILANE, DIVIDED AND UNDIVIDED • RURAL
NIGHT OPERATIONS OR OPERATIONS
EXCEEDING ONE DAYLIGHT PERIOD

	Names	Dates
Designed By	COMM	12/87
Drawn By	HSD/JBW	12/87
Checked By	JVG/KNM	12/87

Approved By
State Roadway Design Engineer

Revision No.	Sheet No.	Index No.
90	2 of 2	613

F.H.W.A. Approved:

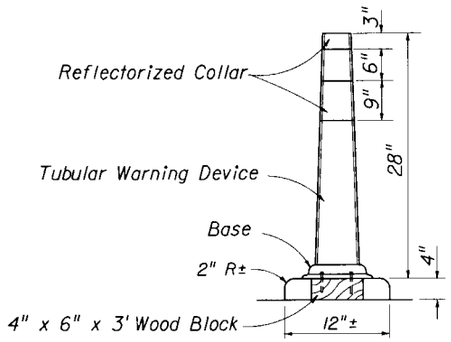

SECTION AA

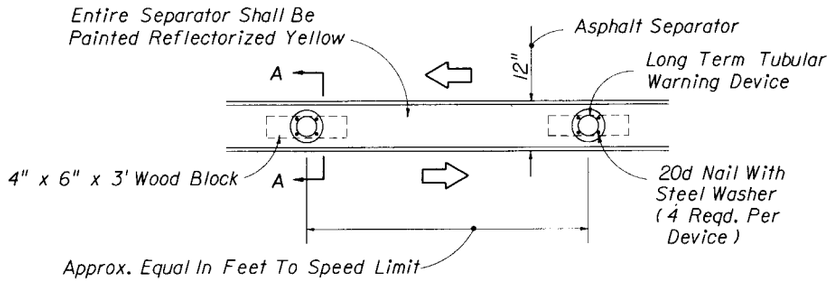

PLAN

Notes: (a) The tubular device is to be made of a flexible material or have a flexible joint at the base such that it will not cause damage to vehicles upon impact and will return to its original shape after being struck by a 5000 pound vehicle at a velocity of 75 ft./sec..

(b) The tubular device shall be orange with two white reflectorized collars.

(c) Reflectorized materials shall have a smooth sealed outer surface which will display the same approximate color day and night.

(d) Twelve inch (12") openings for drainage will be constructed in the separator island every 25' in areas of grades of 1% or less or every 50' in areas of grades over 1% as directed by the Engineer.

DETAIL OF TEMPORARY ASPHALT SEPARATOR

SYMBOLS

- Work Area
- Sign With 18" x 18" (Min.) Orange Flag And Type B Light
- Type I Or Type II Barricade Or Vertical Panel Or Drum (With Steady Burning Light At Night Only). Cones Or Tubular Markers May Be Used During Daylight Only.
- Work Zone Sign
- Advance Warning Arrow Panel

GENERAL NOTES

1. All vehicles, equipment, workers and their activities are restricted at all times to one side of the highway.
2. The first two warning signs, each side, shall have a 18" x 18" (min) orange flaglag and a Type B light attached and operating at all times.
3. All signs shall be post mounted.
4. TWO-WAY TRAFFIC sign(s) shall be repeated every one-quarter ($\frac{1}{4}$) mile, in each direction, throughout the tangent distance (T).
5. L (min.) = WS for speeds ≥ 45 mph
   $= \frac{WS^2}{60}$ for speeds ≤ 40 mph
   Where:
   W = Width of lateral transition in feet
   S = Posted speed limit (MPH).
6. Where the tangent distance (T) exceeds 250 feet, spacing between cones or tubular markers may be increased to 50 feet or spacing between Type I or II barricades or vertical panels or drums may be increased to 100 feet within the limits of the tangent, or post mounted delineators at 50 foot centers may be substituted for the barricades, vertical panels, cones, tubular markers or drums.
7. All existing pavement markings within the realignment which conflict with the revised traffic pattern are to be removed and removable pavement marking used for marking new edge lines.
8. Arrows denote direction of traffic only and do not reflect pavement markings.
9. Longitudinal dimensions are to be adjusted to fit field conditions. See Index No. 600.
10. When side roads, cross roads or interchanges are located within the limits for work zone traffic control additional traffic control devices shall be erected in accordance with other applicable TCZ Indexes.
11. For general TCZ requirements and additional information refer to Index No. 600.

APPLICATIONS

Scheme 1: Restricted Construction Limits

Scheme 2: Unrestricted Construction Limits And Light To Moderate Traffic

Scheme 3: Unrestricted Construction Limits And Moderate To Heavy Traffic

Where: Construction Limits Are The Outward Beginning Or Ending Of Lane Reductions

Where: Unless A Specific Scheme Is Called For In The Plans, Scheme Selection Shall Be At The Contractors Option And As Approved By The Engineer

CONDITIONS

WHERE ANY VEHICLE, EQUIPMENT, WORKERS OR THEIR ACTIVITIES REQUIRE THE CLOSURE OF ONE ROADWAY AND THE OPPOSING ROADWAY IS CONVERTED TO TEMPORARY TWO-WAY TRAVEL BY WAY OF CROSSOVERS

STATE OF FLORIDA DEPARTMENT OF TRANSPORTATION
ROAD DESIGN

TRAFFIC CONTROL THROUGH WORK ZONES

MULTILANE DIVIDED • RURAL DAY OR NIGHT OPERATIONS

	Names	Dates
Designed By	COMM	12/87
Drawn By	HSD/JBW	12/87
Checked By	JVG/KNM	12/87
F.H.W.A. Approved:		

Approved By: Clark G. Scott
State Traffic Plans Engineer

Revision No.	Sheet No.	Index No.
92	1 of 2	614

BUFFER LENGTH (FT)		
Construction Zone Speed MPH	X	Z
60 - 70	560	630
55	360	510
≤ 50	180	380

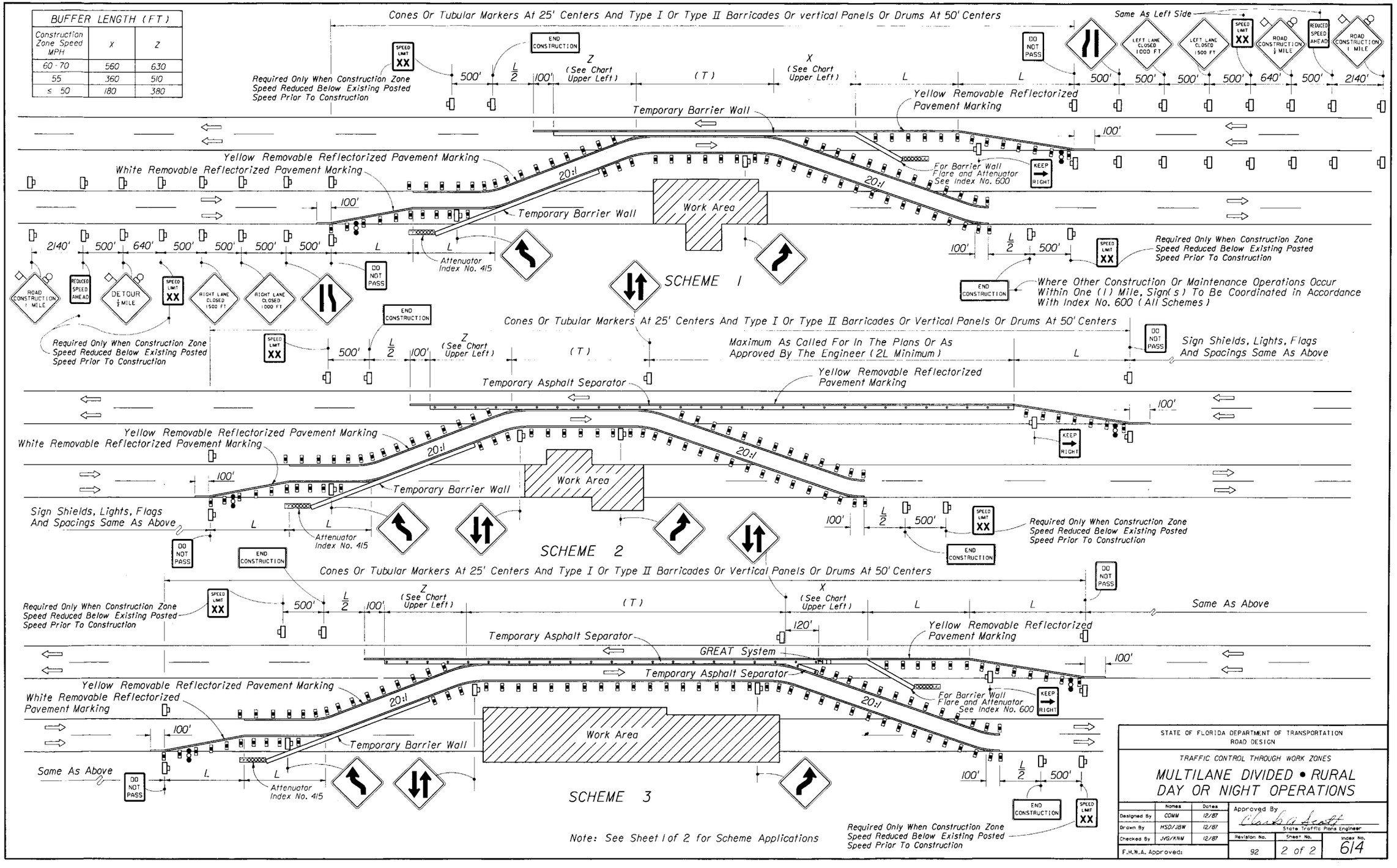

STATE OF FLORIDA DEPARTMENT OF TRANSPORTATION
ROAD DESIGN

TRAFFIC CONTROL THROUGH WORK ZONES

MULTILANE DIVIDED • RURAL DAY OR NIGHT OPERATIONS

	Names	Dates
Designed By	COMM	12/87
Drawn By	MSD/JBW	12/87
Checked By	JVG/KNW	12/87
F.H.W.A. Approved:		

Approved By Clarke Scott
State Traffic Plans Engineer

Revision No.	Sheet No.	Index No.
92	2 of 2	614

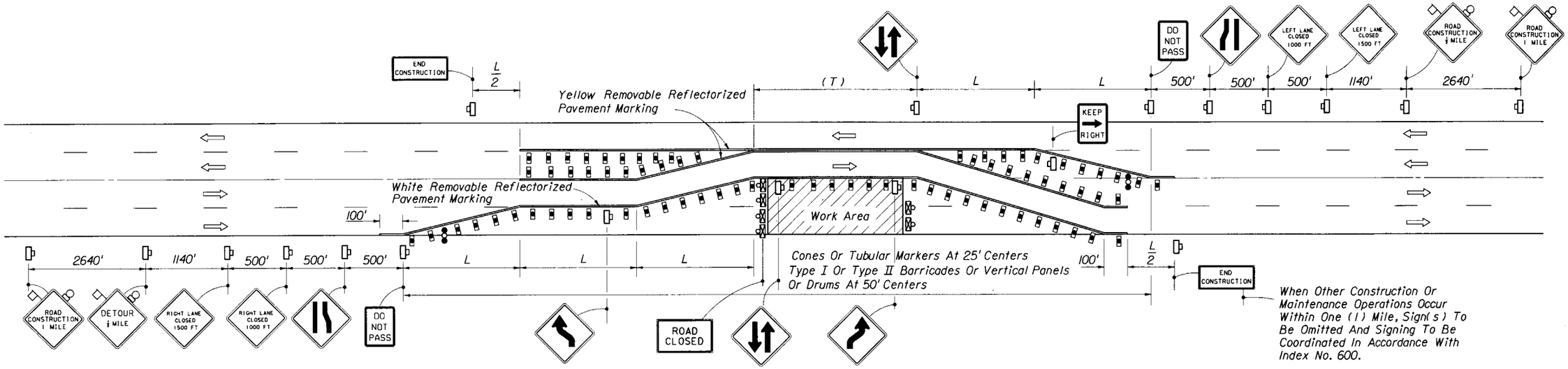

GENERAL NOTES

1. All vehicles, equipment, workers and their activities are restricted at all times to one side of the pavement.
2. The first two warning signs shall have a 18" x 18" (min.) orange flag and a Type B light attached and operating at all times.
3. All signs, except those required in paved areas, shall be post mounted if the closure time exceeds 12 hours.
4. TWO-WAY TRAFFIC signs shall be repeated every one-quarter ($\frac{1}{4}$) mile, in each direction, through the tangent distance (T).
5. L (min.) = WS for speeds ≥ 45 mph
   = $\frac{WS^2}{60}$ for speeds ≤ 40 mph
   Where:
   W = Width of lateral transition in feet.
   S = Posted speed limit (MPH).
6. Where the tangent distance (T) exceeds 250' feet, spacing between cones or tubular markers may be increased to 50 feet or spacing between Type I or Type II barricades or vertical panels or drums may be increased to 100 feet within the limits of the tangent.
7. This index does not apply when work is being performed in the middle lane(s) of a six or more lane highway. Special maintenance of traffic details will be required.
8. Arrows denote direction of traffic only and do not reflect pavement markings.
9. Longitudinal dimensions are to be adjusted to fit field conditions. See Index No. 600.
10. When a side road intersects the highway on which work is being performed additional traffic control devices shall be erected in accordance with other applicable TCZ Indexes.
11. For general TCZ requirements and additional information refer to Index No. 600.

SYMBOLS

- Work Area
- Sign With 18" x 18" (Min.) Orange Flag And Type B Light
- Type I Or Type II Barricade Or Vertical Panel Or Drum (With Steady Burning Light At Night Only). Cones Or Tubular Markers May Be Used During Daylight Only.
- Type III Barricade (With Flashing Light)
- Work Zone Sign
- Advance Warning Arrow Panel

CONDITIONS

WHERE ANY VEHICLE, EQUIPMENT WORKERS OR THEIR ACTIVITIES REQUIRE THE CLOSURE OF THE LANES IN ONE DIRECTION AND A DETOUR IS PROVIDED BY UTILIZING ONE LANE OF THE OPPOSING TRAFFIC LANES

STATE OF FLORIDA DEPARTMENT OF TRANSPORTATION
ROAD DESIGN

TRAFFIC CONTROL THROUGH WORK ZONES

MULTILANE UNDIVIDED • RURAL DAY OR NIGHT OPERATIONS

	Names	Dates
Designed By	COMM	12/87
Drawn By	HSD/JBW	12/87
Checked By	JVG/KNM	12/87
F.H.W.A. Approved:		

Approved By Charles A. Scott
State Traffic Plans Engineer

Revision No.	Sheet No.	Index No.
92	1 of 1	615

EXISTING POSTED SPEED	PROPOSED WORK ZONE SPEED	REMARKS
MPH	MPH	The 'Proposed Work Zone Speeds' are recommended speeds for the traffic control plan detailed below; however, where the Engineer deems other speeds are appropriate, the applicable speeds are to be shown on the plans.
65	45	
55	35 or 45	
45	35	

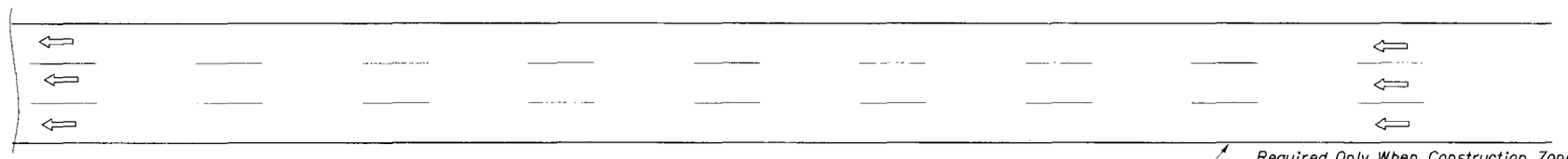

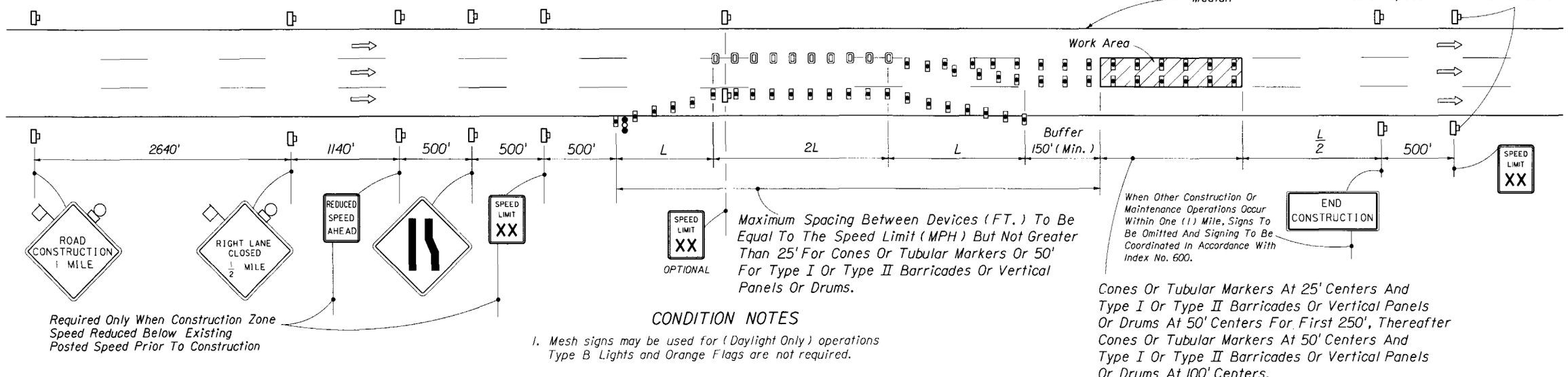

Maximum Spacing Between Devices (FT.) To Be Equal To The Speed Limit (MPH) But Not Greater Than 25' For Cones Or Tubular Markers Or 50' For Type I Or Type II Barricades Or Vertical Panels Or Drums.

When Other Construction Or Maintenance Operations Occur Within One (1) Mile, Signs To Be Omitted And Signing To Be Coordinated In Accordance With Index No. 600.

Cones Or Tubular Markers At 25' Centers And Type I Or Type II Barricades Or Vertical Panels Or Drums At 50' Centers For First 250', Thereafter Cones Or Tubular Markers At 50' Centers And Type I Or Type II Barricades Or Vertical Panels Or Drums At 100' Centers.

CONDITION NOTES

1. Mesh signs may be used for (Daylight Only) operations Type B Lights and Orange Flags are not required.
2. The RIGHT LANE CLOSED and lane reduction signs are to be removed or fully covered when no work is being performed and the center lane is opened to traffic.
3. For work performed in the outside lane refer to Indexes Nos. 612 and 613.
4. When the lane closure exceeds a continuous 24 hour period all existing pavement markings within the realignment which conflict with the revised traffic pattern are to be removed and removable pavement marking used for marking new edge lines and centerline.

SYMBOLS

- Work Area
- Sign With 18" x 18" (Min.) Orange Flag And Type B Light
- Type I Or Type II Barricade Or Vertical Panel Or Drum (With Steady Burning Light At Night Only). Cones Or Tubular Markers May Be Used During Daylight Only.
- Work Zone Sign
- Advance Warning Arrow Panel
- Drum

GENERAL NOTES

1. All vehicles, equipment, workers, and their activities are restricted at all times to one side of the highway.
2. The first two warning signs each side shall have a 18" x 18" (min.) orange flag and a Type B light attached and operating at all times.
3. All signs shall be post mounted if closure time exceeds 12 hours.
4. L (min.) $= WS$ for speeds ≥ 45 mph
   $= \frac{WS^2}{60}$ for speeds ≤ 40 mph
   Where:
   W = Width of lateral transition in feet.
   S = Posted speed limit (MPH).
5. Arrows denote direction of traffic only and do not reflect pavement markings.
6. Longitudinal dimensions are to be adjusted to fit field conditions. See Index No. 600.
7. END CONSTRUCTION signs required only when work exceeds one daylight period.
8. When a side road intersects the highway on which work is being performed additional traffic control devices shall be erected in accordance with other applicable TCZ Indexes.
9. For general TCZ requirements and additional information refer to Index No. 600.

TYPICAL APPLICATIONS

Pavement Resurfacing
Pavement Repair

CONDITIONS

WHERE ANY VEHICLE, EQUIPMENT, WORKERS OR THEIR ACTIVITIES ENCROACH ON ANY PORTION OF A CENTER LANE OF A MULTILANE HIGHWAY, AND TWO DRIVING LANES ARE MAINTAINED ON THE TRAVEL WAY.

STATE OF FLORIDA DEPARTMENT OF TRANSPORTATION
ROAD DESIGN

MULTILANE DIVIDED • RURAL

	Names	Dates
Designed By		
Drawn By	HSD/JBW	12/87
Checked By	JVG/KNM	12/87
F.H.W.A. Approved:		

Approved By: Charles A. Scott
State Traffic Plans Engineer

Revision No.	Sheet No.	Index No.
92	1 of 2	616

EXISTING POSTED SPEED	PROPOSED WORK ZONE SPEED
MPH	MPH
65	45
55	35 or 45
45	35

REMARKS

The 'Proposed Work Zone Speeds' are recommended speeds for the traffic control plan detailed below; however, where the Engineer deems other speeds are appropriate, the applicable speeds are to be shown on the plans.

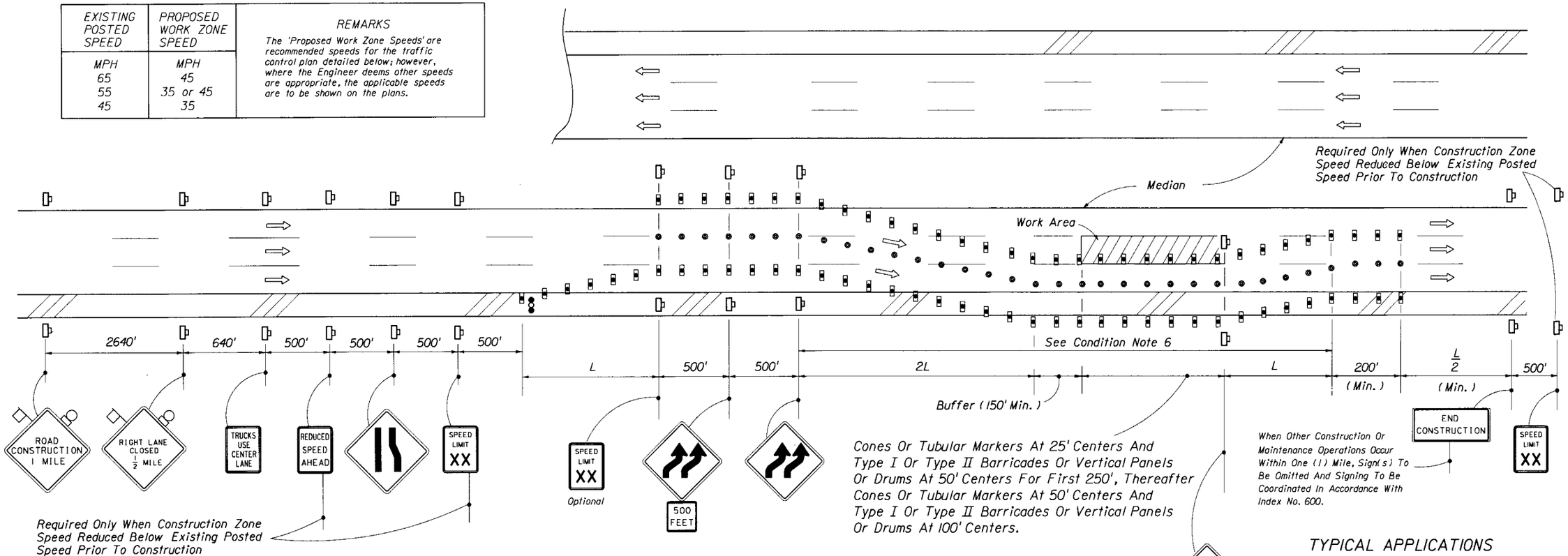

SYMBOLS

- Work Area
- Sign With 18" x 18" (Min.) Orange Flag And Type B Light
- Type I Or Type II Barricade Or Vertical Panel Or Drum (With Steady Burning Light At Night Only). Cones Or Tubular Markers May Be Used During Daylight Only.
- Work Zone Sign
- Advance Warning Arrow Panel
- Cone Or Tubular marker (Except At Night Use Vertical Panels)

CONDITION NOTES

1. See General Notes, Sheet 1 of 2.
2. Maximum spacing between devices (ft.) to be equal to the speed limit (mph) but not greater than 25' for cones or tubular markers or 50' for Type I or Type II barricades or vertical panels or drums.

   Barricades, vertical panels or drums shall be used to delineate the edge lines of the transition areas (i.e. L and 2L). Beyond the transition area, any of the above noted devices may be used to delineate the edge lines.

   Cones or tubular markers shall be used to delineate the center line. (Except at night use vertical panels)
3. Length of time that traffic is using shoulder should be minimized. For example, remove lane closure and lane shift at night (unless performing nightwork) if practical.
4. The RIGHT LANE CLOSED, lane reduction and reverse curve signs are to be removed or fully covered when no work is being performed and the travel way is open to traffic.
5. When the lane closure exceeds a continuous 24 hour period all existing pavement markings within the realignment which conflict with the revised traffic pattern are to be removed and removable pavement marking used for marking new edge lines and centerline.
6. For general TCZ requirements and additional information refer to Index No. 600.

TYPICAL APPLICATIONS

Pavement Resurfacing
Pavement Repair

CONDITIONS

WHERE ANY VEHICLE, EQUIPMENT, WORKERS OR THEIR ACTIVITIES ENCROACH ON ANY PORTION OF A CENTER LANE OF A MULTILANE HIGHWAY, AND TWO DRIVING LANES ARE MAINTAINED, AND, THE OUTSIDE SHOULDER PAVEMENT IS TEMPORARILY USED AS A TRAVEL LANE.

STATE OF FLORIDA DEPARTMENT OF TRANSPORTATION
ROAD DESIGN

MULTILANE DIVIDED • RURAL

	Names	Dates
Designed By	COMM	6/89
Drawn By	HSD	6/89
Checked By	GAZ	6/89

Approved By: Charles A. Scott
State Traffic Plans Engineer

F.H.W.A. Approved:

Revision No.	Sheet No.	Index No.
92	2 of 2	616

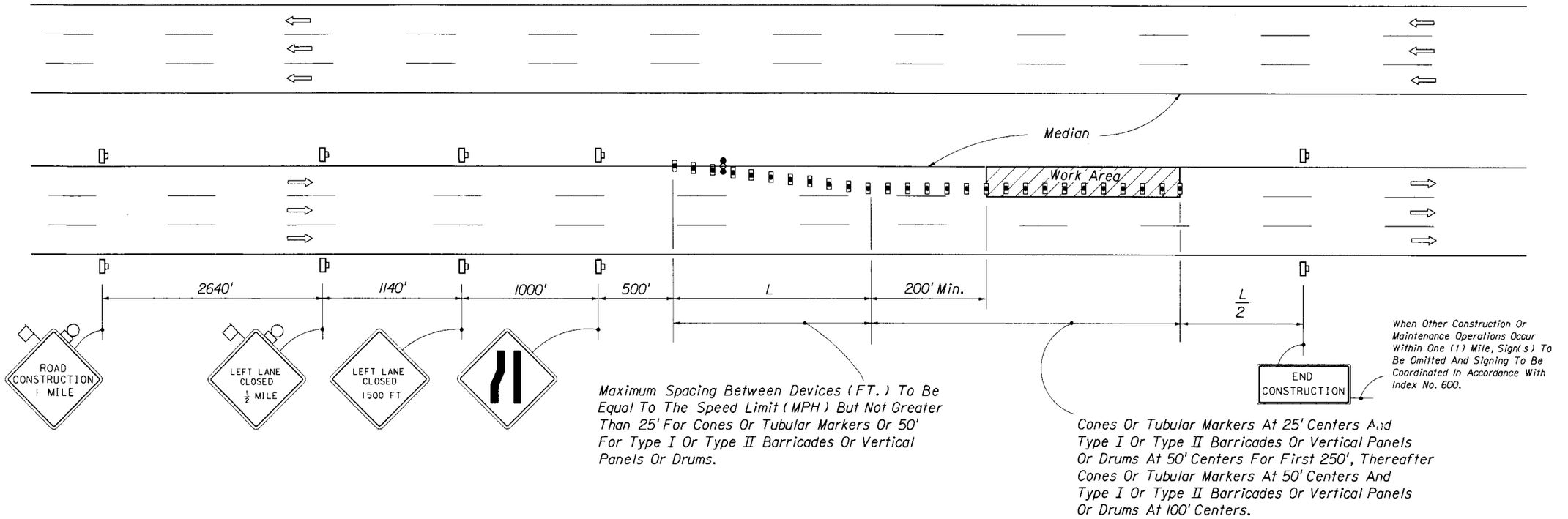

SYMBOLS

- Work Area
- Sign With 18" x 18" (Min.) Orange Flag And Type B Light
- Type I Or Type II Barricade Or Vertical Panel Or Drum (With Steady Burning Light At Night Only). Cones Or Tubular Markers May Be Used During Daylight Only.
- Work Zone Sign
- Advance Warning Arrow Panel

GENERAL NOTES

1. All vehicles, equipment, workers and their activities are restricted at all times to one side of the highway.
2. The first two warning signs, each side, shall have a 18" x 18" (min.) orange flag and a Type B light attached and operating at all times.
3. Mesh signs may be used for (Daylight Only) operations Type B Lights and Orange Flags are not required.
4. All signs shall be post mounted if closure time exceeds 12 hours.
5. L (min.) = WS for speeds ≥ 45 mph
   $= \frac{WS^2}{60}$ for speeds ≤ 40 mph

   Where:
   W = Width of lateral transition in feet.
   S = Posted speed limit (MPH).
6. The LEFT LANE CLOSED and lane reduction signs are to be removed or fully covered when no work is being performed and the inside lane is open to traffic.
7. Advance warning arrow panels are required for both day and night operation. Either the right flashing arrow or the right sequential arrow modes may be used; the caution mode shall not be used.
8. Arrows denote direction of traffic only and do not reflect pavement marking.
9. Longitudinal dimensions are to be adjusted to fit field conditions. See Index No. 600.
10. When a side road intersects the highway on which work is being performed additional traffic control devices shall be erected in accordance with other applicable TCZ Indexes.
11. For work performed in the outside lane refer to Indexes Nos. 612 and 613.
12. For general TCZ requirements and additional information refer to Index No. 600.

CONDITIONS

WHERE ANY VEHICLE, EQUIPMENT, WORKERS OR THEIR ACTIVITIES WILL ENCROACH ON ANY PORTION OF THE INSIDE LANE OF A MULTILANE HIGHWAY

STATE OF FLORIDA DEPARTMENT OF TRANSPORTATION
ROAD DESIGN

TRAFFIC CONTROL THROUGH WORK ZONES

MULTILANE DIVIDED • RURAL

	Names	Dates
Designed By	COMM	12/87
Drawn By	HSD/JBW	12/87
Checked By	JVG/KNM	12/87

Approved By Clark A. Scott
State Traffic Plans Engineer

F.H.W.A. Approved:

Revision No.	Sheet No.	Index No.
92	1 of 1	617

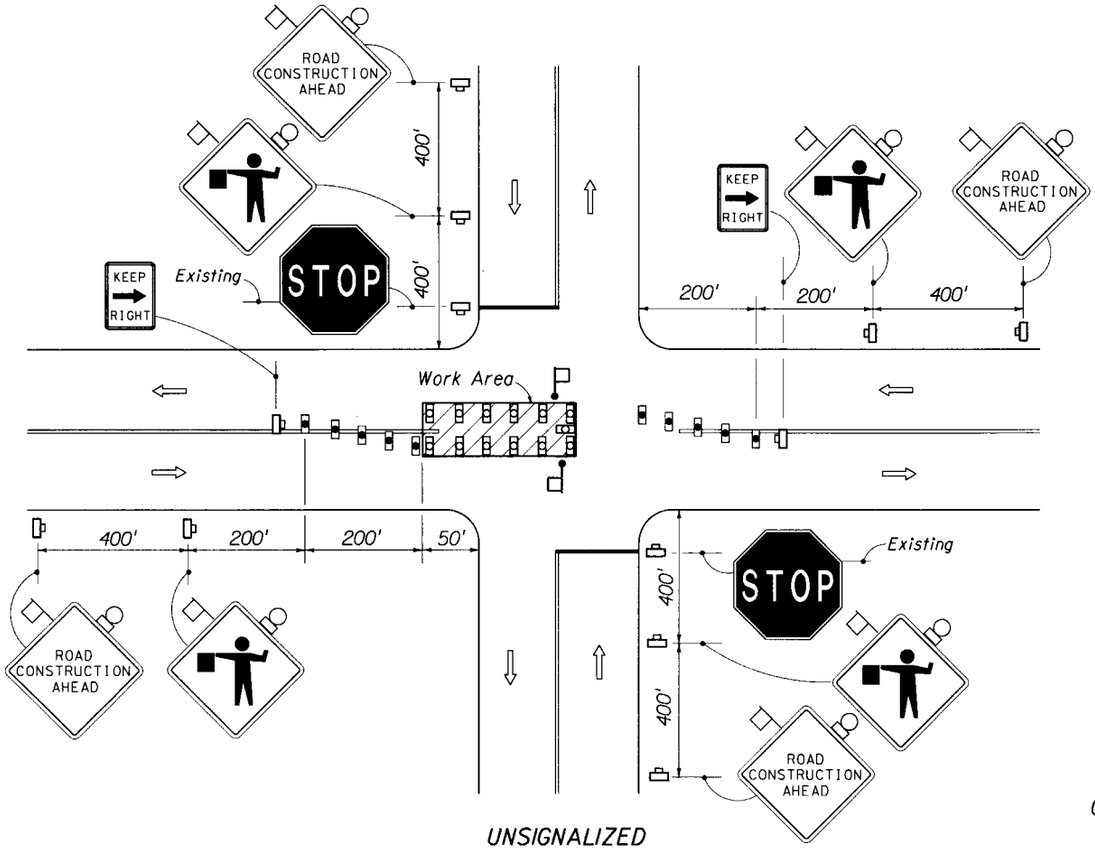

UNSIGNALIZED

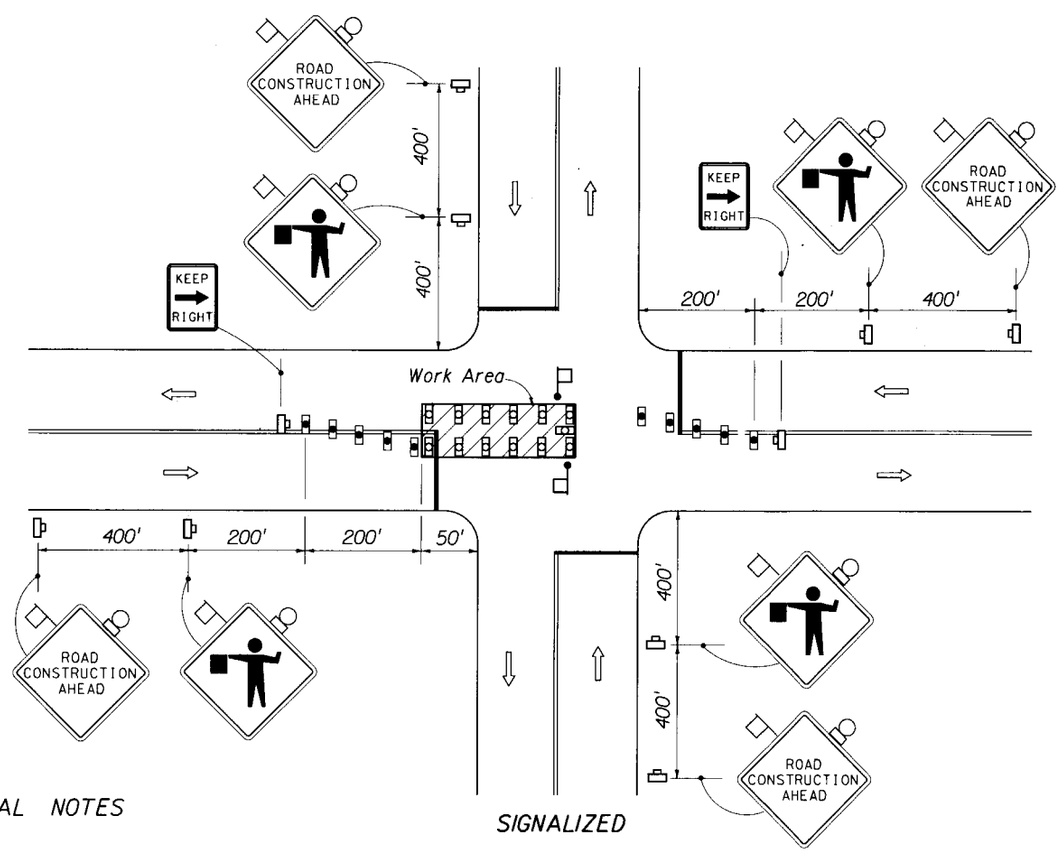

SIGNALIZED

SYMBOLS

- Work Area
- Sign With 18" x 18" (Min.) Orange Flag And Type B Light
- Type I Or Type II Barricade Or Vertical Panel Or Drum (With Steady Burning Light At Night Only). Cones Or Tubular Markers May Be Used During Daylight Only.
- Type I Or Type II Barricade Or Vertical Panel Or Drum (with Flashing Light At Night Only)
- Work Zone Sign
- Flagger
- Stop Bar

GENERAL NOTES

1. All vehicles, equipment, workers(except flaggers) and their activities are forbidden in lane and intersection areas reserved for traffic.
2. The first two warning signs shall have a 18" x 18" (min) orange flag and a Type B light attached and operating at all times.

   Mesh signs may be used for (Daylight Only) operations Type B Lights and Orange Flags are not required.
3. The FLAGGER legend sign may be substituted for the symbol sign.
4. All signs shall be post mounted if closure time exceeds 12 hours.
5. When vehicles in a parking zone block the line of sight to TCZ signs or when TCZ signs encroach on a normal pedestrian walkway, the signs shall be post mounted and located in accordance with Index No. 17302.
6. Flaggers shall be located where they can control more than one direction of traffic.

   Flaggers shall be in sight of each other or in direct communication at all times.
7. Maximum spacing between barricades, vertical panels, cones, tubular markers and drums shall be not greater than 25'.
8. Arrows denote direction of traffic only and do not reflect pavement markings.
9. Longitudinal dimensions are to be adjusted to fit field conditions. See Index No. 600.
10. Temporary signal phasing modifications are to be approved by the District Traffic Operations Engineer prior to the beginning of work.
11. Work performed for a period of 60 minutes or less is to be conducted in accordance with Index No. 607 or emergency condition procedures as described in Index No. 600, whichever applies.
12. For general TCZ requirements and additional information refer to Index No. 600.

TYPICAL APPLICATIONS

Utility Work

Pavement Repair

CONDITIONS

WHERE ANY VEHICLE, EQUIPMENT, WORKERS OR THEIR ACTIVITIES ENCROACH ON THE PAVEMENT REQUIRING THE CLOSURE OF A PORTION OF ONE OR MORE TRAFFIC LANES IN AN INTERSECTION FOR A PERIOD OF MORE THAN 60 MINUTES

STATE OF FLORIDA DEPARTMENT OF TRANSPORTATION
ROAD DESIGN

TRAFFIC CONTROL THROUGH WORK ZONES

TWO-LANE, TWO-WAY • URBAN DAY OR NIGHT OPERATIONS

	Names	Dates
Designed By	COMM	12/87
Drawn By	HSD/JBW	12/87
Checked By	JVG/KNM	12/87

Approved By: Clark A Scott
State Traffic Plans Engineer

F.H.W.A. Approved:

Revision No.	Sheet No.	Index No.
92	1 of 1	620

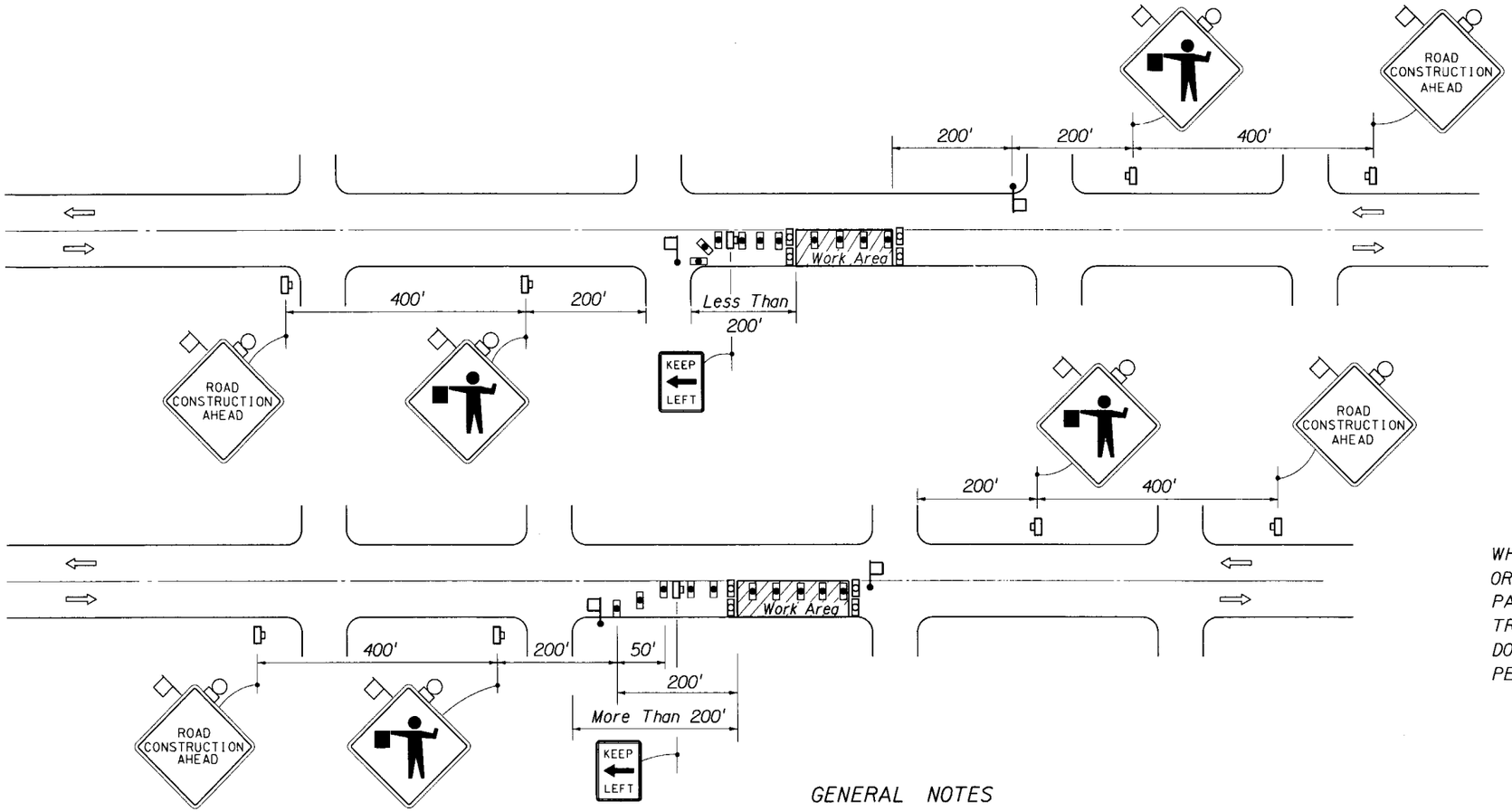

CONDITIONS

WHERE ANY VEHICLE, EQUIPMENT, WORKERS OR THEIR ACTIVITIES ENCROACH ON THE PAVEMENT REQUIRING THE CLOSURE OF ONE TRAFFIC LANE, FOR WORK AREA LESS THAN 200' DOWNSTREAM FROM INTERSECTION, FOR A PERIOD OF MORE THAN 60 MINUTES.

CONDITIONS

WHERE ANY VEHICLE, EQUIPMENT, WORKERS OR THEIR ACTIVITIES ENCROACH ON THE PAVEMENT REQUIRING THE CLOSURE OF ONE TRAFFIC LANE, FOR WORK AREA 200' OR MORE DOWNSTREAM FROM INTERSECTION, FOR A PERIOD OF MORE THAN 60 MINUTES.

SYMBOLS

- Work Area
- Sign With 18" x 18" (Min.) Orange Flag And Type B Light
- Type I Or Type II Barricade Or Vertical Panel Or Drum (With Steady Burning Light At Night Only). Cones Or Tubular Markers May Be Used During Daylight Only.
- Type I Or Type II Barricade Or Vertical Panel Or Drum (with Flashing Light At Night Only)
- Work Zone Sign
- Flagger

GENERAL NOTES

1. Work operations shall be confined to one travel lane, leaving the opposing travel lane open to traffic.
2. All vehicles, equipment, workers (except flaggers) and their activities are restricted at all times to one side of the roadway.
3. For work operations of 60 minutes or less see Index No. 607
4. When vehicles in a parking zone block the line of sight to TCZ signs or when TCZ signs encroach on a normal pedestrian walkway, the signs shall be post mounted and located in accordance with Index No. 17302.
5. If work area is confined to an outside auxiliary lane the work area shall be barricaded and the FLAGGER signs replaced by ROAD CONSTRUCTION AHEAD signs. Flaggers are not required.
6. Flaggers shall be in sight of each other or in direct communication at all times.
7. The ROAD CONSTRUCTION AHEAD and FLAGGER signs shall have a 18" x 18" (min.) orange flag and a Type B light attached and operating at all times.

   Mesh signs may be used for (Daylight Only) operations Type B Lights and Orange Flags are not required.
8. The FLAGGER legend sign may be substituted for the symbol sign.
9. All signs shall be post mounted if the closure time exceeds 12 hours.
10. The maximum spacing between devices shall be not greater than 25'.
11. Arrows denote direction of traffic only and do not reflect pavement markings.
12. Longitudinal dimensions are to be adjusted to fit field conditions See Index No. 600.
13. For general TCZ requirements and additional information refer to Index No. 600.

TYPICAL APPLICATIONS

Utility Work
Pavement Repair
Structure Adjustments

STATE OF FLORIDA DEPARTMENT OF TRANSPORTATION
ROAD DESIGN

TRAFFIC CONTROL THROUGH WORK ZONES

TWO-LANE, TWO-WAY • URBAN DAY OR NIGHT OPERATIONS

	Names	Dates
Designed By	COMM	12/87
Drawn By	HSD/JBW	12/87
Checked By	JVG/KNM	12/87
F.H.W.A. Approved:		

Approved By Clark D. Scott
State Traffic Plans Engineer

Revision No.	Sheet No.	Index No.
92	1 of 1	621

SYMBOLS

- Work Area
- Sign With 18" x 18" (Min.) Orange Flag And Type B Light
- Type I Or Type II Barricade Or Vertical Panel Or Drum (With Steady Burning Light At Night Only). Cones Or Tubular Markers May Be Used During Daylight Only.
- Type I Or Type II Barricade Or Vertical Panel Or Drum (with Flashing Light At Night Only)
- Work Zone Sign
- Stop Bar
- Advance Warning Arrow Panel

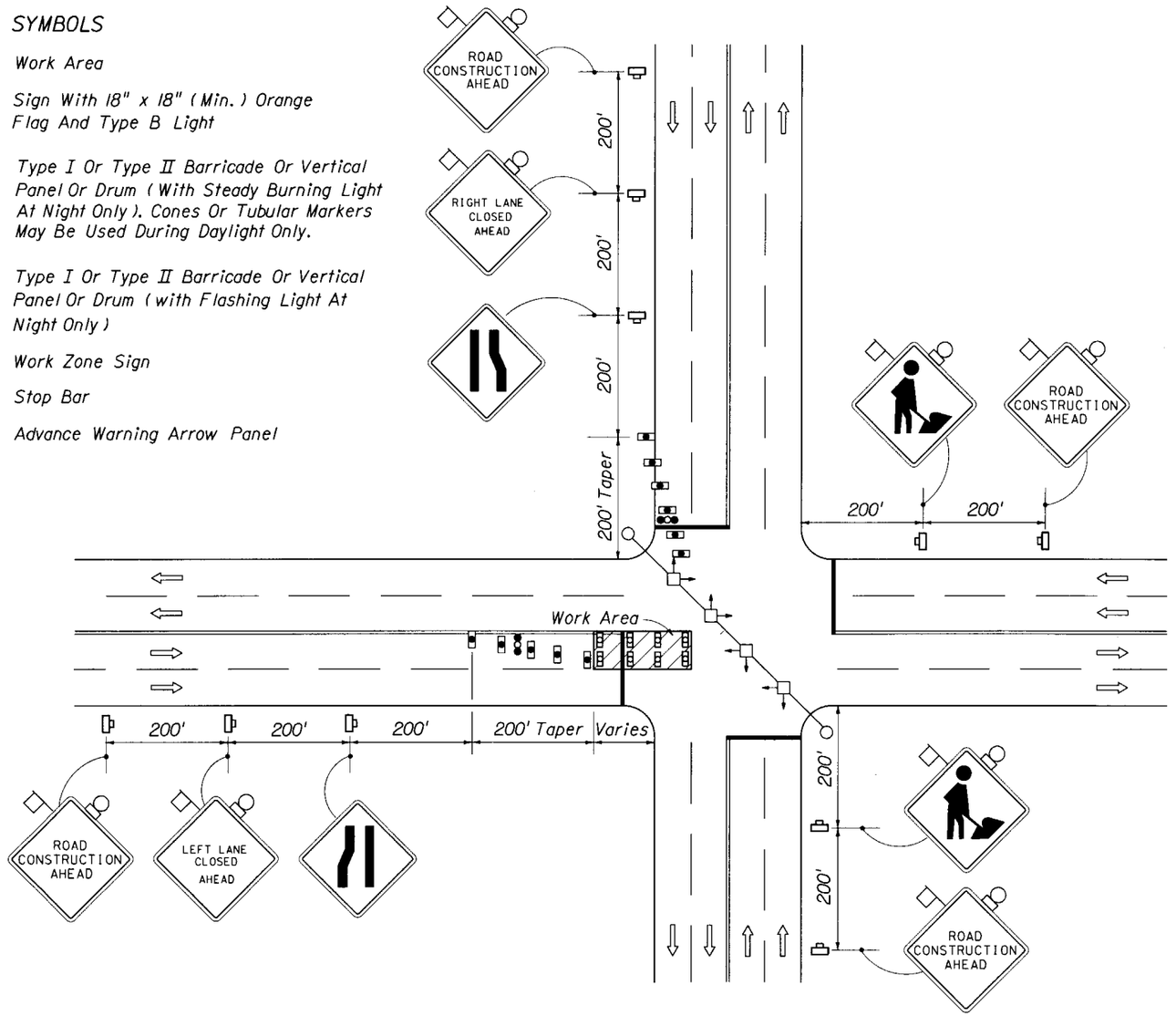

SIGNALIZED

GENERAL NOTES

1. All vehicles, equipment, workers (except flaggers) and their activities are forbidden in lane and intersection areas reserved for traffic.
2. For work operations of 60 minutes or less see Index No. 607.
3. The first two warning signs shall have a 18" x 18" (min.) orange flag and a Type B light attached and operating at all times.

   Mesh signs may be used for (Daylight Only) operations Type B Lights and Orange Flags are not required.
4. All signs shall be post mounted if closure time exceeds 12 hours.
5. The WORKERS legend sign may be substituted for the symbol sign.
6. Dual signs are required for divided roadways.
7. Arrows denote direction of traffic only and do not reflect pavement markings.
8. Maximum spacing between barricades, vertical panels, cones, tubular markers and drums shall be not greater than 25'.
9. Temporary signal phasing modifications are to be approved by the District Traffic Operations Engineer prior to the beginning of work.
10. Work performed for a period of 60 minutes or less is to be conducted in accordance with Index No. 607 or emergency condition procedures as described in Index No. 600, whichever applies.
11. Longitudinal dimensions are to be adjusted to fit field conditions. See Index No. 600.
12. For general TCZ requirements and additional information refer to Index No. 600.

TYPICAL APPLICATIONS

Utility Work
Pavement Repair
Structure Adjustments

CONDITIONS

WHERE ANY VEHICLE, EQUIPMENT, WORKERS OR THEIR ACTIVITIES ENCROACH ON THE PAVEMENT REQUIRING THE CLOSURE OF AT LEAST ONE MEDIAN TRAFFIC LANE FOR A PERIOD OF MORE THAN 60 MINUTES

STATE OF FLORIDA DEPARTMENT OF TRANSPORTATION
ROAD DESIGN

TRAFFIC CONTROL THROUGH WORK ZONES

MULTILANE, TWO-WAY • URBAN DIVIDED OR UNDIVIDED DAY OR NIGHT OPERATION

	Names	Dates
Designed By	COMM	12/87
Drawn By	HSD/JBW	12/87
Checked By	JVG/KNM	12/87
F.H.W.A. Approved:		

Approved By Charles A. Scott
State Traffic Plans Engineer

Revision No.	Sheet No.	Index No.
92	1 of 1	622

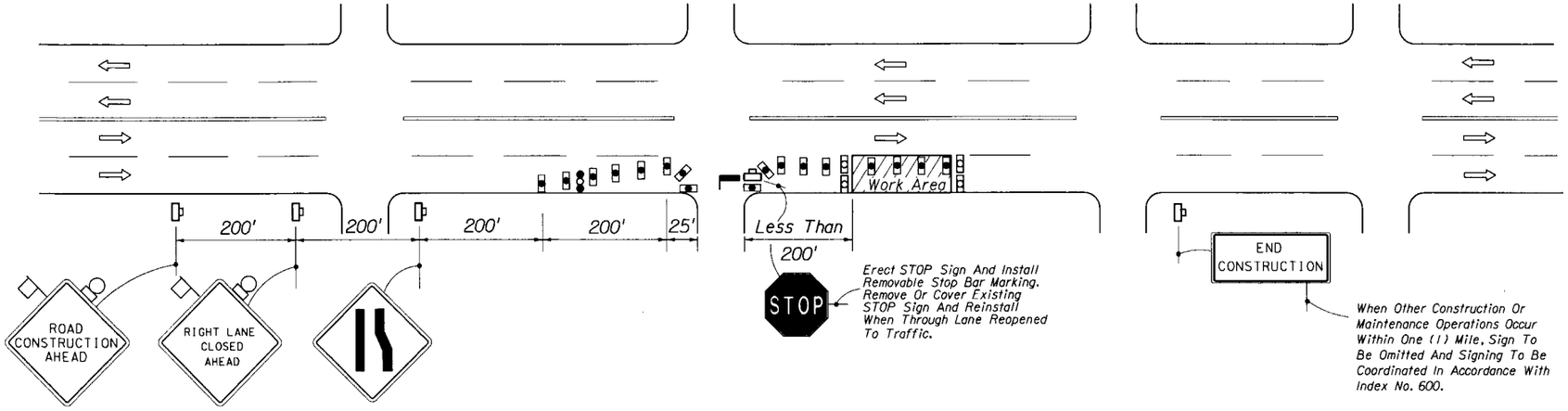

CONDITIONS

WHERE ANY VEHICLE, EQUIPMENT, WORKERS OR THEIR ACTIVITIES ENCROACH ON THE PAVEMENT REQUIRING THE CLOSURE OF THE OUTSIDE TRAVEL LANE, AND/OR ADJOINING AUXILIARY LANE, FOR WORK AREA LESS THAN 200' FROM INTERSECTION, FOR A PERIOD OF MORE THAN 60 MINUTES.

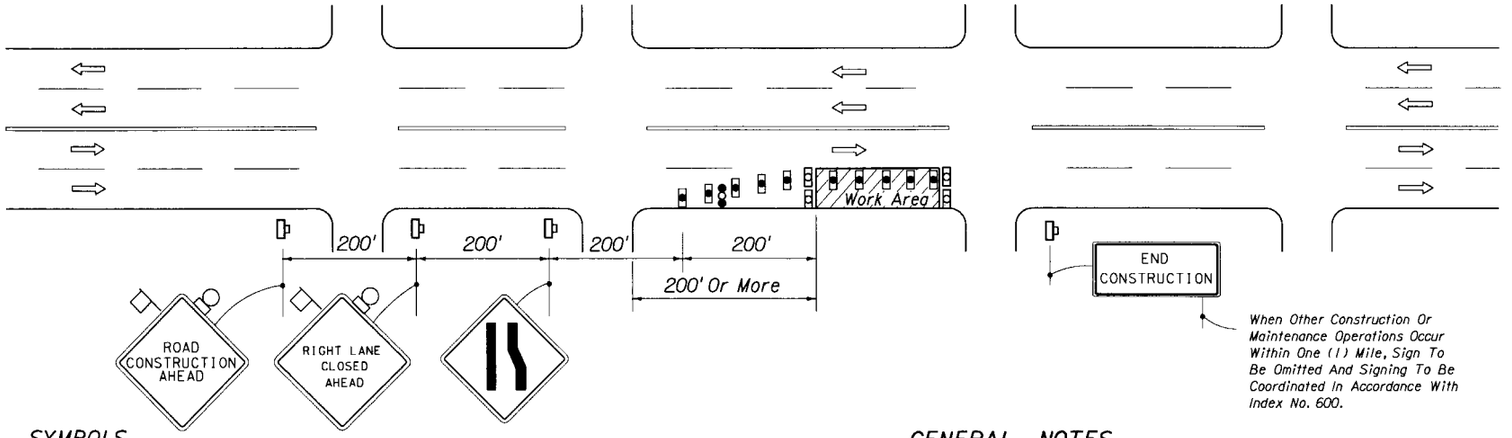

CONDITIONS

WHERE ANY VEHICLE, EQUIPMENT, WORKERS OR THEIR ACTIVITIES ENCROACH ON THE PAVEMENT REQUIRING THE CLOSURE OF THE OUTSIDE TRAVEL LANE AND/OR ADJOINING AUXILIARY LANE, FOR WORK AREA 200' OR MORE FROM INTERSECTION, FOR A PERIOD OF MORE THAN 60 MINUTES.

SYMBOLS

- Work Area
- Sign With 18" x 18" (Min.) Orange Flag And Type B Light
- Type I Or Type II Barricade Or Vertical Panel Or Drum (With Steady Burning Light At Night Only). Cones Or Tubular Markers May Be Used During Daylight Only.
- Type I Or Type II Barricade Or Vertical Panel Or Drum (with Flashing Light At Night Only)
- Work Zone Sign
- Advance Warning Arrow Panel
- Stop Bar

GENERAL NOTES

1. All vehicles, equipment, workers (except flaggers) and their activities are restricted at all times to one side of the roadway.
2. Work operations shall be confined to either one lane or lane combinations as follows:
   (a) Outside travel lane (b) Outside auxiliary lane
   (c) Outside travel lane and adjoining auxiliary lane
   (d) Inside travel lane$^{\Delta}$ (e) Inside auxiliary lane$^{\Delta}$
   (f) Inside travel lane and adjoining auxiliary lane$^{\Delta}$
   $^{\Delta}$ See Sheet 2 Of 2

   If the work area is confined to an auxiliary lane the work area shall be barricaded and the RIGHT (LEFT) LANE CLOSED AHEAD signs replaced by ROAD CONSTRUCTION AHEAD signs, and the merge symbol signs eliminated.
3. For work operations of 60 minutes or less see Index No. 612.
4. When vehicles in a parking zone block the line of sight to TCZ signs or when TCZ signs encroach on a normal pedestrian walkway, the signs shall be post mounted and located in accordance with Index No. 17302.
5. The first two warning signs shall have a 18" x 18" (min.) orange flag and a Type B light attached and operating at all times.

   Mesh signs may be used for (Daylight Only) operations Type B Lights and Orange Flags are not required.
6. All signs shall be post mounted if the closure times exceeds 12 hours.
7. Dual signs are required for divided roadways.

(Continued)

TYPICAL APPLICATIONS

Utility Work
Pavement Repairs
Structure Adjustments

STATE OF FLORIDA DEPARTMENT OF TRANSPORTATION
ROAD DESIGN

TRAFFIC CONTROL THROUGH WORK ZONES

MULTILANE, TWO-WAY • URBAN DIVIDED OR UNDIVIDED DAY OR NIGHT OPERATIONS

	Names	Dates
Designed By	COMM	12/87
Drawn By	HSD/JBW	12/87
Checked By	JVG/RNM	12/87
F.H.W.A. Approved:		

Approved By: Clark A. Scott
State Traffic Plans Engineer

Revision No.	Sheet No.	Index No.
92	1 of 2	623

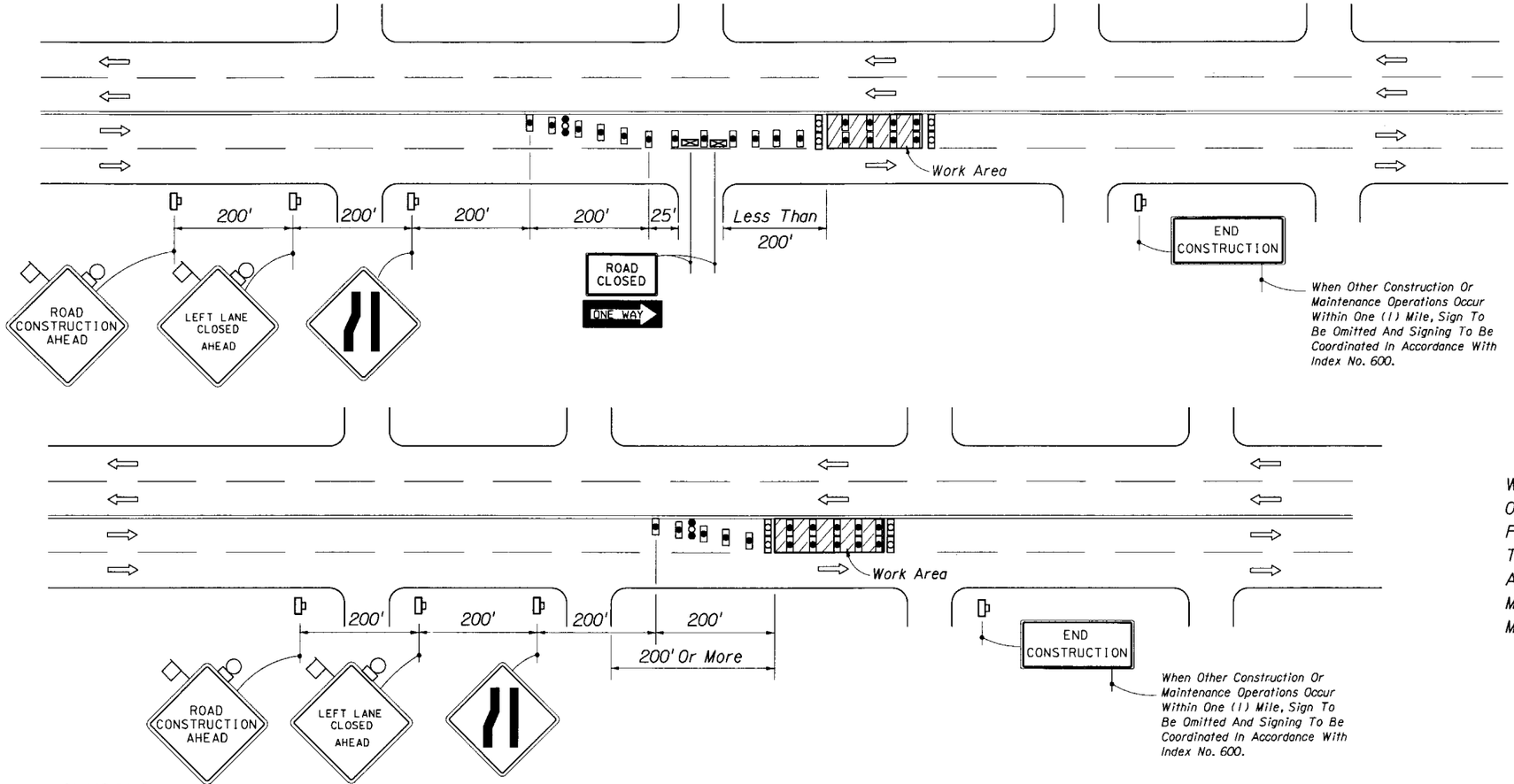

CONDITIONS

WHERE ANY VEHICLE, EQUIPMENT, WORKERS OR THEIR ACTIVITIES ENCROACH ON THE PAVEMENT REQUIRING THE CLOSURE OF THE INSIDE TRAVEL LANE AND/OR ADJOINING AUXILIARY LANE, FOR WORK AREA LESS THAN 200' FROM INTERSECTION, FOR A PERIOD OF MORE THAN 60 MINUTES.

CONDITIONS

WHERE ANY VEHICLE, EQUIPMENT, WORKERS OR THEIR ACTIVITIES ENCROACH ON THE PAVEMENT REQUIRING THE CLOSURE OF THE INSIDE TRAVEL LANE AND/OR ADJOINING AUXILIARY LANE, FOR WORK AREA 200' OR MORE FROM INTERSECTION, FOR A PERIOD OF MORE THAN 60 MINUTES.

SYMBOLS

- Work Area
- Sign With 18" x 18" (Min.) Orange Flag And Type B Light
- Type I Or Type II Barricade Or Vertical Panel Or Drum (With Steady Burning Light At Night Only). Cones Or Tubular Markers May Be Used During Daylight Only.
- Type I Or Type II Barricade Or Vertical Panel Or Drum (with Flashing Light At Night Only)
- Type III Barricade
- Work Zone Sign
- Advance Warning Arrow Panel

GENERAL NOTES (CONT.)

8. The maximum spacing between devices (ft.) within lateral transitions shall be equal to the speed limit (MPH) but no greater than 25' for cones or tubular markers or 50' for Type I or Type II barricades or vertical panels or drums.
   Spacing for devices parallel to the travel lanes shall be 25' centers for cones or tubular markers and 50' centers for Type I or Type II barricades or vertical panels or drums for 250', thereafter cones or tubular markers at 50' centers and type I or Type II barricades or vertical panels or drums at 100' centers.
9. Arrows denote direction of traffic only and do not reflect pavement markings.
10. Longitudinal dimensions are to be adjusted to fit field conditions. See Index No. 600.
11. For general TCZ requirements and additional information refer to Index No. 600.

TYPICAL APPLICATIONS

Utility Work
Pavement Repairs
Structure Adjustments

STATE OF FLORIDA DEPARTMENT OF TRANSPORTATION
ROAD DESIGN

TRAFFIC CONTROL THROUGH WORK ZONES

MULTILANE, TWO-WAY • URBAN DIVIDED OR UNDIVIDED DAY OR NIGHT OPERATIONS

	Names	Dates
Designed By	COMM	12/87
Drawn By	HSD/JBW	12/87
Checked By	JVG/KNM	12/87
F.H.W.A. Approved:		

Approved By Charles A. Scott
State Traffic Plans Engineer

Revision No.	Sheet No.	Index No.
92	2 of 2	623

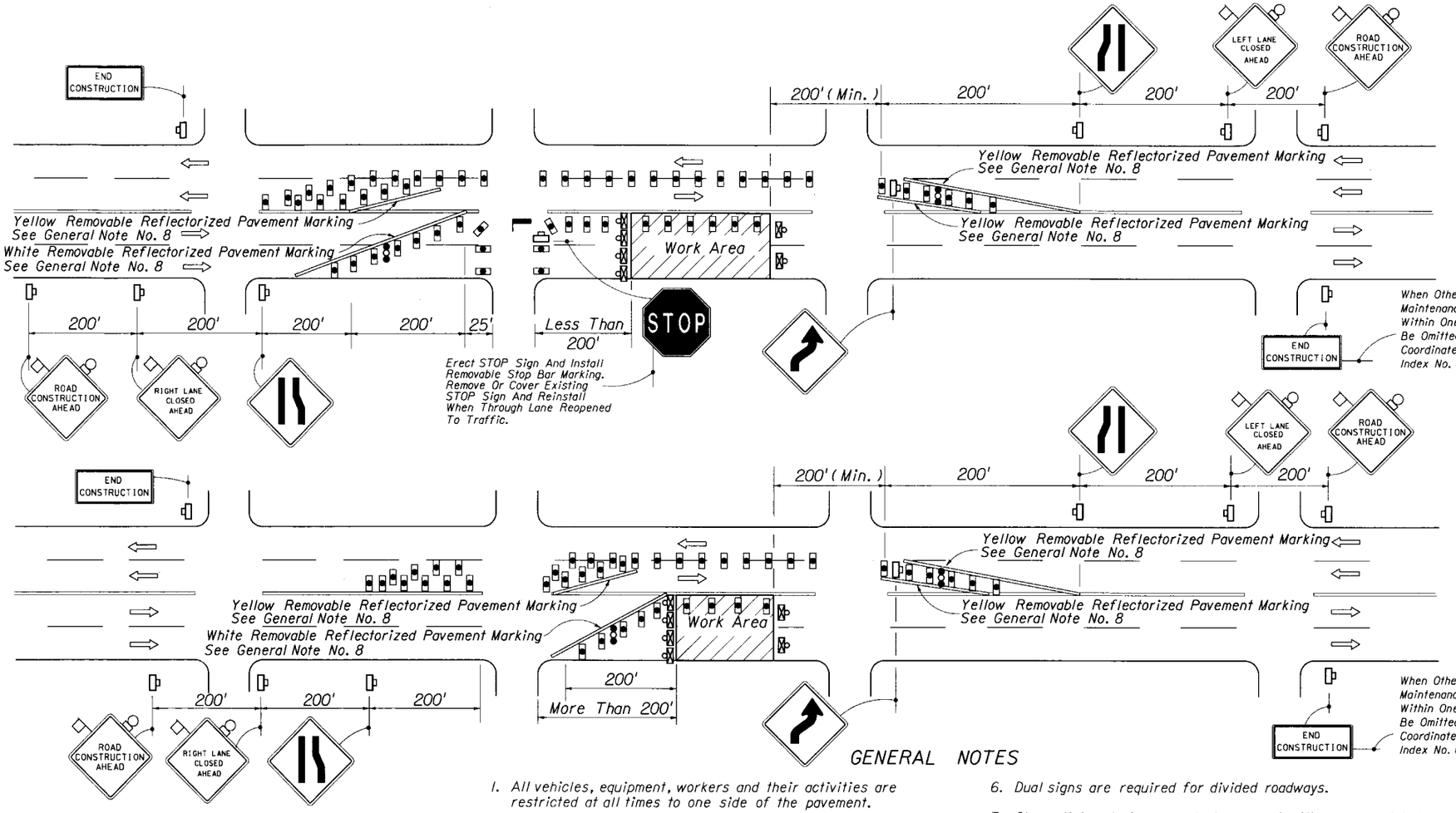

CONDITIONS

WHERE ANY VEHICLE, EQUIPMENT, WORKERS OR THEIR ACTIVITIES ENCROACH ON THE PAVEMENT REQUIRING THE CLOSURE OF TRAFFIC LANES IN ONE DIRECTION AND THE USE OF ONE OPPOSING TRAFFIC LANE TO MAINTAIN TWO-WAY TRAFFIC, FOR WORK AREA LESS THAN 200' FROM INTERSECTION, FOR A PERIOD OF MORE THAN 60 MINUTES.

CONDITIONS

WHERE ANY VEHICLE, EQUIPMENT, WORKERS OR THEIR ACTIVITIES ENCROACH ON THE PAVEMENT REQUIRING THE CLOSURE OF TRAFFIC LANES IN ONE DIRECTION AND THE USE OF ONE OPPOSING TRAFFIC LANE TO MAINTAIN TWO-WAY TRAFFIC, FOR WORK AREA 200' OR MORE FROM INTERSECTION, FOR A PERIOD OF MORE THAN 60 MINUTES.

SYMBOLS

- Work Area
- Sign With 18" x 18" (Min.) Orange Flag And Type B Light
- Type I Or Type II Barricade Or Vertical Panel Or Drum (With Steady Burning Light At Night Only). Cones Or Tubular Markers May Be Used During Daylight Only.
- Type III Barricade (With Flashing Light)
- Work Zone Sign
- Advance Warning Arrow Panel
- Stop Bar

GENERAL NOTES

1. All vehicles, equipment, workers and their activities are restricted at all times to one side of the pavement.
2. For work operations of 60 minutes of less (daylight only) see Index No. 607.
3. When vehicles in a parking zone block the line of sight to TCZ signs or when TCZ signs encroach on a normal pedestrian walkway, the signs shall be post mounted and located in accordance with Index No. 17302.
4. The first two warning signs shall have a 18" x 18" (min.) orange flag and a Type B light attached and operating at all times.

   Mesh signs may be used for (Daylight Only) operations Type B Lights and Orange Flags are not required.
5. All signs shall be post mounted if the closure time exceeds 12 hours.
6. Dual signs are required for divided roadways.
7. Channelizing devices are to be spaced with cones or tubular markers at 25' centers and Type I or Type II barricades or vertical panels or drums at 50' centers, except in tangent work areas spacing may be increased to 50' centers for cones or tubular markers and 100' for barricades or vertical panels or drums after the first 250' when approved by the Engineer.
8. Removable reflectorized pavement markings shall be used when closure time exceeds one daylight period.
9. Arrows denote direction of traffic only and do not reflect pavement markings.
10. Longitudinal dimensions are to be adjusted to fit field conditions. See Index No. 600.
11. For general TCZ requirements and additional information refer to Index No. 600.

TYPICAL APPLICATIONS

Utility Work
Pavement Repair
Structure Adjustments

STATE OF FLORIDA DEPARTMENT OF TRANSPORTATION
ROAD DESIGN

TRAFFIC CONTROL THROUGH WORK ZONES

MULTILANE DIVIDED WITH TRAVERSABLE MEDIAN OR UNDIVIDED • URBAN DAY OR NIGHT OPERATIONS

	Names	Dates
Designed By	COMM	12/87
Drawn By	HSD/JBW	12/87
Checked By	JVG/KNM	12/87
F.H.W.A. Approved:		

Approved By _____ State Traffic Plans Engineer

Revision No.	Sheet No.	Index No.
92	1 of 1	624

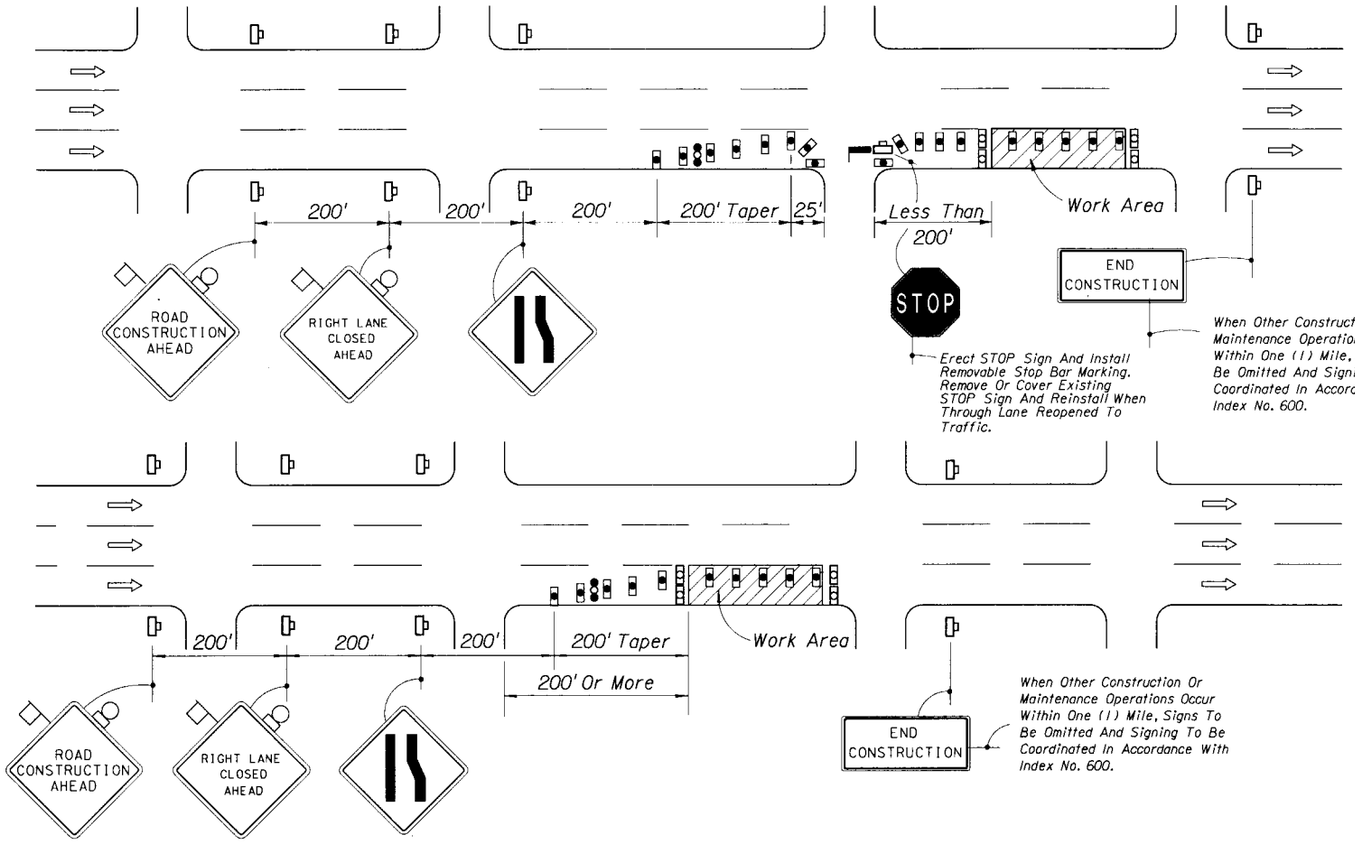

CONDITIONS

WHERE ANY VEHICLE, EQUIPMENT, WORKERS OR THEIR ACTIVITIES ENCROACH ON THE PAVEMENT REQUIRING THE CLOSURE OF EITHER THE OUTSIDE OR THE MEDIAN TRAVEL LANE AND/OR ADJOINING AUXILIARY LANE, FOR WORK AREA LESS THAN 200' FROM INTERSECTION, FOR A PERIOD OF MORE THAN 60 MINUTES.

CONDITIONS

WHERE ANY VEHICLE, EQUIPMENT, WORKERS OR THEIR ACTIVITIES ENCROACH ON THE PAVEMENT REQUIRING THE CLOSURE OF EITHER THE OUTSIDE OR THE MEDIAN TRAVEL LANE AND/OR ADJOINING AUXILIARY LANE, FOR WORK AREA 200' OR MORE FROM INTERSECTION, FOR A PERIOD OF MORE THAN 60 MINUTES.

SYMBOLS

- Work Area
- Sign With 18" x 18" (Min.) Orange Flag And Type B Light
- Type I Or Type II Barricade Or Vertical Panel Or Drum (With Steady Burning Light At Night Only). Cones Or Tubular Markers May Be Used During Daylight Only.
- Type I Or Type II Barricade Or Vertical Panel Or Drum (with Flashing Light At Night Only)
- Work Zone Sign
- Advance Warning Arrow Panel
- Stop Bar

GENERAL NOTES

1. All vehicles, equipment, workers and their activities are restricted at all times to one side of the roadway.

2. Work operations shall be confined to either one lane or a combination of lanes as follows:
   (a) Outside travel lane (b) Outside auxiliary lane
   (c) Outside travel lane and adjoining auxiliary lane
   (d) Outside travel lane and adjoining center lane
   (e) Outside travel lane and adjoining auxiliary and center lanes
   (f) Median travel lane$^{\Delta}$ (g) Median auxiliary lane$^{\Delta}$
   (h) Median travel lane and adjoining auxiliary lane$^{\Delta}$
   (i) Median travel lane and adjoining center lane$^{\Delta}$
   (j) Median travel lane and adjoining auxiliary and center lanes$^{\Delta}$
   $^{\Delta}$See Sheet 2 Of 2

   If the work area is confined to an auxiliary lane the work area shall be barricaded and the RIGHT LANE CLOSED AHEAD signs replaced by ROAD CONSTRUCTION AHEAD signs and the merge left symbol signs eliminated.

3. For work operations, that require a single lane closure only, of 60 minutes or less see Index No. 612.

4. When vehicles in a parking zone block the line of sight to TCZ signs or when TCZ signs encroach on a normal pedestrian walkway, the signs shall be post mounted and located in accordance with Index No. 17302.

5. When work is performed in the median lane or the median and adjoining center lanes the barricading plans are inverted and LEFT LANE CLOSED AHEAD and merge right symbol signs shall be substituted for the RIGHT LANE CLOSED AHEAD and merge left symbol signs.

   If work is confined to the median auxiliary lane the work area shall be barricaded and the LEFT LANE CLOSED AHEAD signs replaced by ROAD CONSTRUCTION AHEAD signs and the merge right symbol signs eliminated.

6. The first two warning signs, each side, shall have a 18" x 18" (min.) orange flag and a Type B light attached and operating at all times.

   Mesh signs may be used for (Daylight Only) operations Type B Lights and Orange Flags are not required.

(Continued)

TYPICAL APPLICATIONS

Utility Work
Pavement Repair
Structure Adjustments

STATE OF FLORIDA DEPARTMENT OF TRANSPORTATION
ROAD DESIGN

TRAFFIC CONTROL THROUGH WORK ZONES

MULTILANE ONE-WAY OR MULTILANE DIVIDED WITH NON-TRAVERSABLE MEDIAN • URBAN DAY OR NIGHT OPERATIONS

	Names	Dates
Designed By	COMM	12/87
Drawn By	HSD/JBW	12/87
Checked By	JVG/KNM	12/87
F.H.W.A. Approved:		

Approved By Clark A. Scott
State Traffic Plans Engineer

Revision No.	Sheet No.	Index No.
92	1 of 2	625

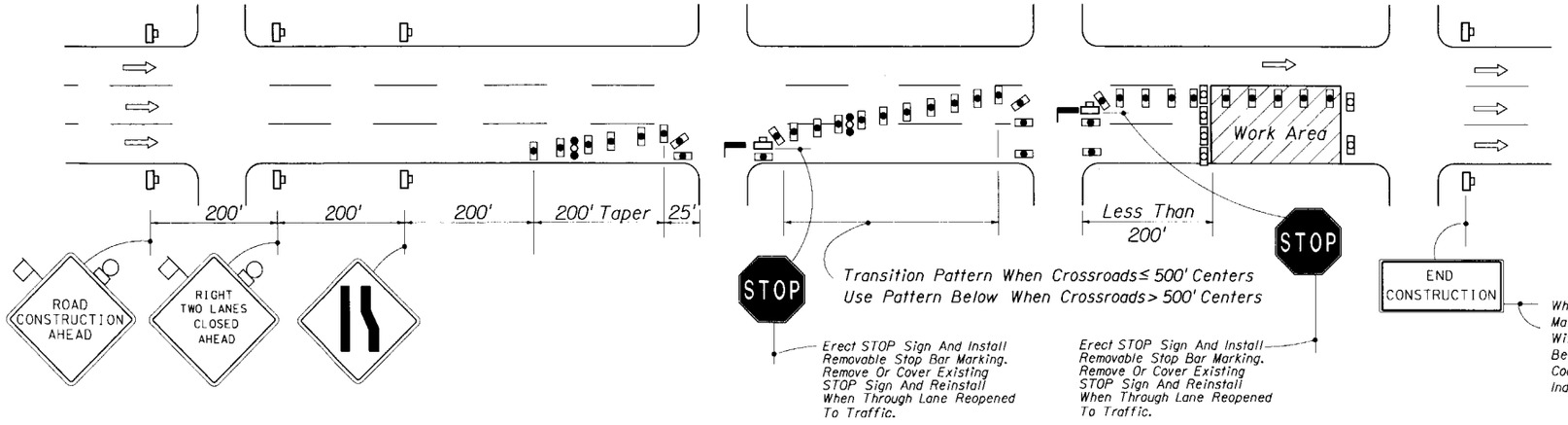

CONDITIONS

WHERE ANY VEHICLE, EQUIPMENT, WORKERS OR THEIR ACTIVITIES ENCROACH ON THE PAVEMENT REQUIRING THE CLOSURE OF EITHER THE OUTSIDE AND CENTER TRAVEL LANES OR THE MEDIAN AND CENTER TRAVEL LANES, WITH OR WITHOUT CLOSURE OF ADJOINING AUXILIARY LANES, FOR WORK AREA LESS THAN 200' FROM INTERSECTION, FOR A PERIOD OF MORE THAN 60 MINUTES.

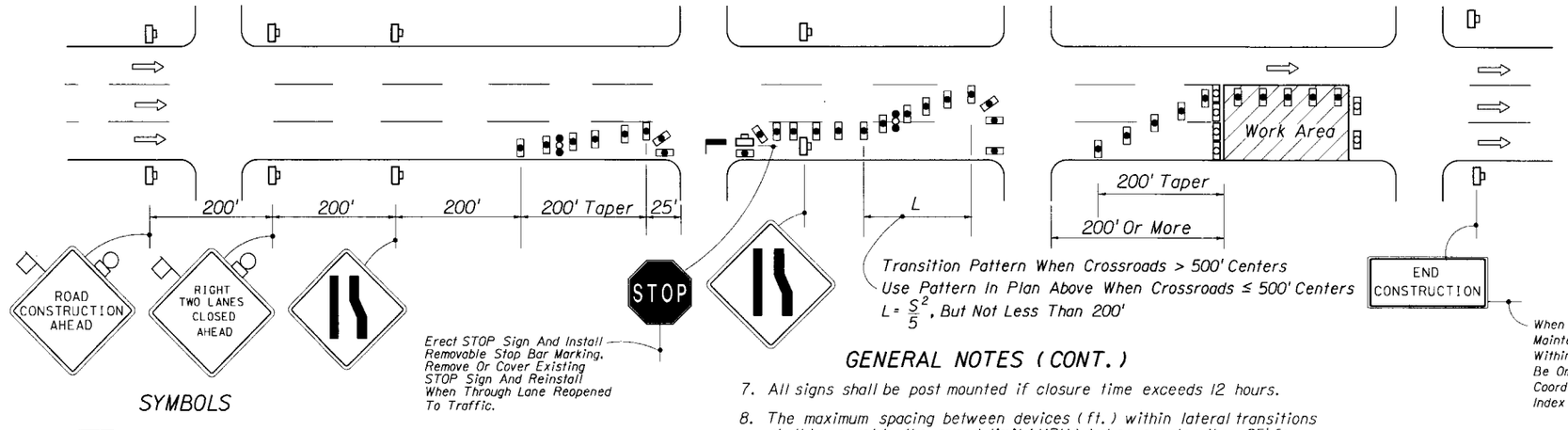

CONDITIONS

WHERE ANY VEHICLE, EQUIPMENT, WORKERS OR THEIR ACTIVITIES ENCROACH ON THE PAVEMENT REQUIRING THE CLOSURE OF EITHER THE OUTSIDE AND CENTER TRAVEL LANES OR THE MEDIAN AND CENTER TRAVEL LANES, WITH OR WITHOUT CLOSURE OF ADJOINING AUXILIARY LANES, FOR WORK AREA 200' OR MORE FROM INTERSECTION, FOR A PERIOD OF MORE THAN 60 MINUTES.

SYMBOLS

- Work Area
- Sign With 18" x 18" (Min.) Orange Flag And Type B Light
- Type I Or Type II Barricade Or Vertical Panel Or Drum (With Steady Burning Light At Night Only). Cones Or Tubular Markers May Be Used During Daylight Only.
- Type I Or Type II Barricade Or Vertical Panel Or Drum (with Flashing Light At Night Only)
- Work Zone Sign
- Advance Warning Arrow Panel
- Stop Bar

GENERAL NOTES (CONT.)

7. All signs shall be post mounted if closure time exceeds 12 hours.
8. The maximum spacing between devices (ft.) within lateral transitions shall be equal to the speed limit (MPH) but no greater than 25' for cones or tubular markers or 50' for Type I or Type II barricades or vertical panels or drums.
   Spacing for devices parallel to the travel lanes shall be 25' centers for cones or tubular markers and 50' centers for Type I or Type II barricades or vertical panels or drums for 250', thereafter cones or tubular markers at 50' centers and type I or Type II barricades or vertical panels or drums at 100' centers.
9. Arrows denote direction of traffic only and do not reflect pavement markings.
10. Longitudinal dimensions are to be adjusted to fit field conditions. See Index No. 600.
11. For general TCZ requirements and additional information refer to Index No. 600.

TYPICAL APPLICATIONS

Utility Work
Pavement Repair
Structure Adjustments

STATE OF FLORIDA DEPARTMENT OF TRANSPORTATION
ROAD DESIGN

TRAFFIC CONTROL THROUGH WORK ZONES

MULTILANE ONE-WAY OR MULTILANE DIVIDED WITH NON-TRAVERSABLE MEDIAN • URBAN DAY OR NIGHT OPERATIONS

	Names	Dates
Designed By	COMM	12/87
Drawn By	MSD/JBW	12/87
Checked By	JVG/KNM	12/87
F.H.W.A. Approved:		

Approved By: Clarke Scott
State Traffic Plans Engineer

Revision No.	Sheet No.	Index No.
92	2 of 2	625

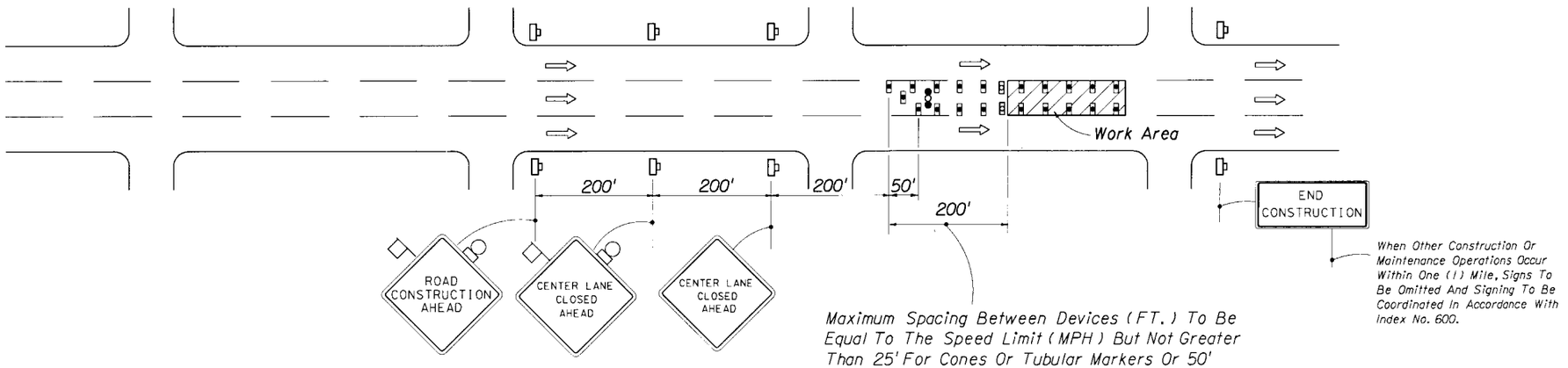

When Other Construction Or Maintenance Operations Occur Within One (1) Mile, Signs To Be Omitted And Signing To Be Coordinated In Accordance With Index No. 600.

Maximum Spacing Between Devices (FT.) To Be Equal To The Speed Limit (MPH) But Not Greater Than 25' For Cones Or Tubular Markers Or 50' For Type I Or Type II Barricades Or Vertical Panels Or Drums.

SYMBOLS

- Work Area
- Sign With 18" x 18" (Min.) Orange Flag And Type B Light
- Type I Or Type II Barricade Or Vertical Panel Or Drum (With Steady Burning Light At Night Only). Cones Or Tubular Markers May Be Used During Daylight Only.
- Type I Or Type II Barricade Or Vertical Panel Or Drum (with Flashing Light At Night Only)
- Work Zone Sign
- Advance Warning Arrow Panel

GENERAL NOTES

1. All vehicles, equipment, workers and their activities are prohibited at all times from the lane areas reserved for traffic.
2. Work operations shall be confined to one center travel lane, leaving the adjacent travel lanes open to traffic.
3. For work operations of 60 minutes or less see Index No. 612
4. When vehicles in a parking zone block the line of sight to TCZ signs or when TCZ signs encroach on a normal pedestrian walkway, the signs shall be post mounted and located in accordance with Index No. 17302.
5. The first two warning signs, each side, shall have a 18" x 18" (min.) orange flag and a Type B light attached and operating at all times.

   Mesh signs may be used for (Daylight Only) operations Type B Lights and Orange Flags are not required.
6. All signs shall be post mounted if the closure time exceeds 12 hours.
7. Advance warning arrow panel is required for both day and night operations.
8. Channelizing devices are to be spaced with cones or tubular markers at 25' centers Type I or Type II barricades or vertical panels or drums at 50' centers for the first 250', thereafter cones or tubular markers at 50' centers and Type I or Type II barricades or vertical panels or drums at 100' centers.
9. Arrows denote direction of traffic only and do not reflect pavement markings.
10. Longitudinal dimensions are to be adjusted to fit field conditions. See Index No. 600.
11. For general TCZ requirements and additional information refer to Index No. 600.

TYPICAL APPLICATIONS

Utility Work
Pavement Repair
Structure Adjustments

CONDITIONS

WHERE ANY VEHICLE, EQUIPMENT, WORKERS OR THEIR ACTIVITIES ENCROACH ON THE PAVEMENT REQUIRING THE CLOSURE OF THE CENTER LANE.

STATE OF FLORIDA DEPARTMENT OF TRANSPORTATION
ROAD DESIGN

TRAFFIC CONTROL THROUGH WORK ZONES

MULTILANE ONE-WAY OR MULTILANE DIVIDED WITH NON-TRAVERSABLE MEDIAN • URBAN DAY OR NIGHT OPERATIONS

	Names	Dates
Designed By	COMM	12/87
Drawn By	HSD/JBW	12/87
Checked By	JVG/KNM	12/87
F.H.W.A. Approved:		

Approved By
State Traffic Plans Engineer

Revision No.	Sheet No.	Index No.
92	1 of 1	626

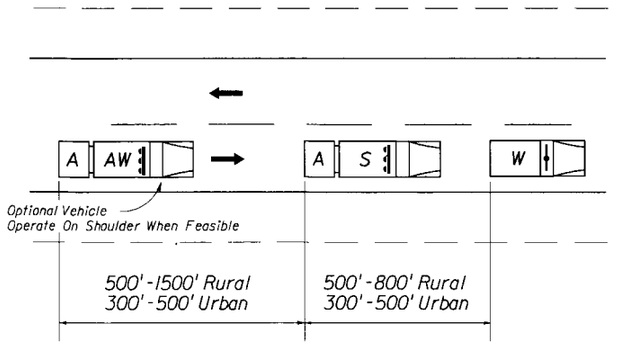

MODE • WARNING

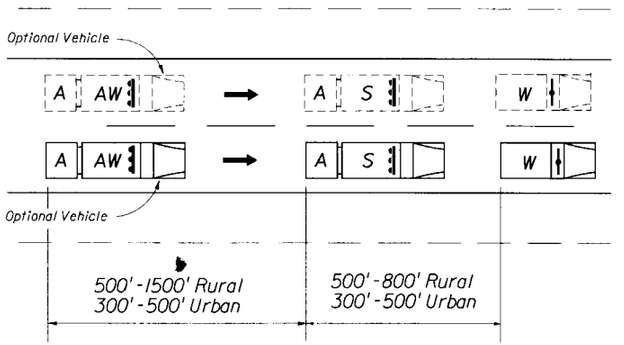

MODE • PASS LEFT RIGHT

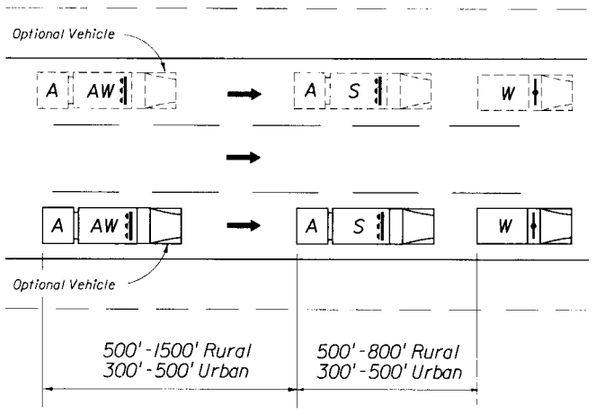

MODE • PASS LEFT RIGHT

MOVING OPERATIONS

GENERAL NOTES

1. These illustrations are representative of general conditions. Conditions differing from those shown shall be treated as directed by the Engineer.
2. The intensity of light and the position of panels shall be as specified in Index No. 600.
3. The Advance Warning Vehicle (Optional) may be used at the direction of the Engineer. If an Advance Warning Vehicle is operated within the travel way, an approved Truck Mounted Attenuator will be required on the Advance Warning Vehicle but not required on the Shadow Vehicle. The Advance Warning Arrow Panel and Warning Sign are required on both the Advance Warning and Shadow Vehicles.
4. For general TCZ requirements and additional information refer to Index No. 600.
5. If the work vehicle speed exceeds the minimum legal speed limit on limited access facilities and one half the posted speed limit on other facilities the engineer in charge may delete requirements for shadow vehicle and attenuators. The work vehicle will be required to have an advance warning arrow panel and warning sign.

SYMBOLS

- W — Work Vehicle With Flashing Beacon
- X — Shadow (S) Or Advance Warning (AW) Vehicle With Advance Warning Arrow Panel And Warning Sign.
- A — Truck Mounted Attenuator (TMA)
- ➡ Lane Identification And Direction Of Traffic

TYPICAL APPLICATIONS

Striping
RPM Placement
Vegetation Control

CONDITIONS

MOVING OPERATION

STATE OF FLORIDA DEPARTMENT OF TRANSPORTATION
ROAD DESIGN

TRAFFIC CONTROL THROUGH WORK ZONES

MOVING OPERATIONS

	Names	Dates
Designed By	COMM	12/87
Drawn By	HSD/JBW	12/87
Checked By	JVG/KNM	12/87
F.H.W.A. Approved:		

Approved By: Clark A. Scott
State Traffic Plans Engineer

Revision No.	Sheet No.	Index No.
92	1 of 1	627

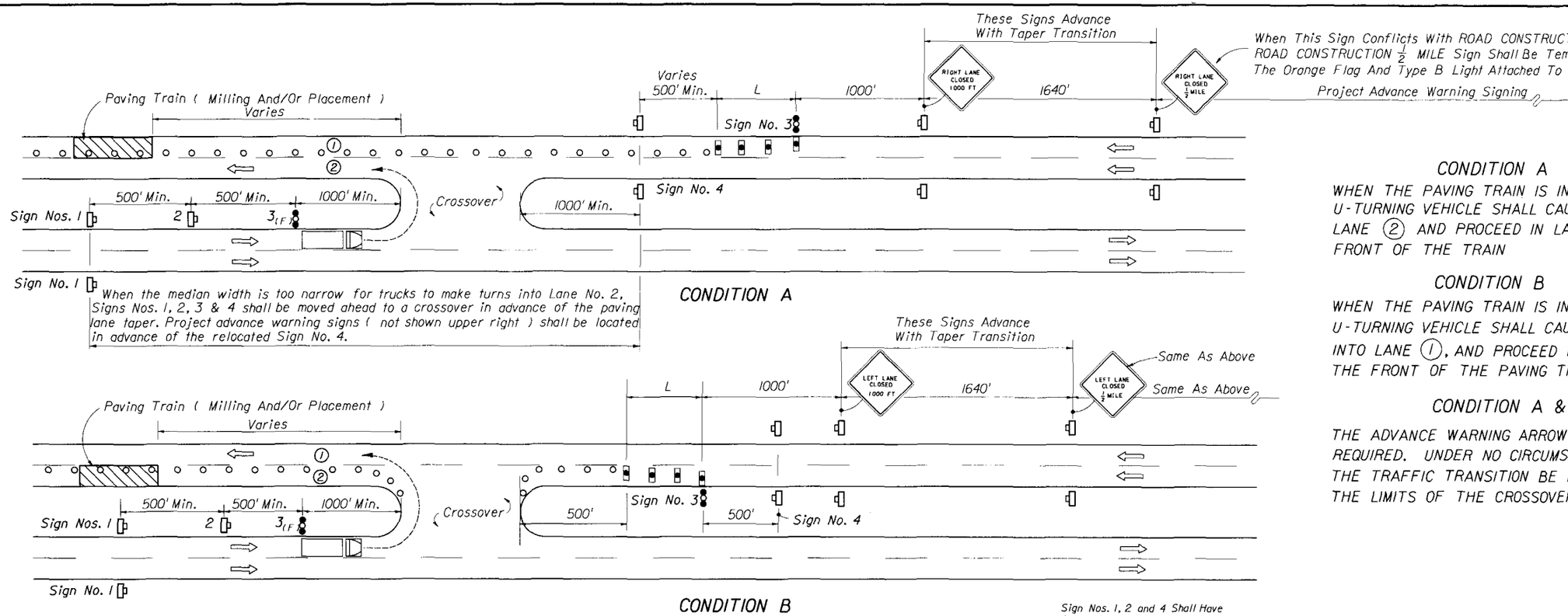

CONDITION A

WHEN THE PAVING TRAIN IS IN LANE (1) THE U-TURNING VEHICLE SHALL CAUTIOUSLY TURN INTO LANE (2) AND PROCEED IN LANE (2) TO THE FRONT OF THE TRAIN

CONDITION B

WHEN THE PAVING TRAIN IS IN LANE (2) THE U-TURNING VEHICLE SHALL CAUTIOUSLY TURN INTO LANE (1), AND PROCEED IN LANE (1) TO THE FRONT OF THE PAVING TRAIN

CONDITION A & B

THE ADVANCE WARNING ARROW PANELS ARE REQUIRED. UNDER NO CIRCUMSTANCES WILL THE TRAFFIC TRANSITION BE LOCATED WITHIN THE LIMITS OF THE CROSSOVER

SYMBOLS

- Work Area
- Type I Or Type II Barricade Or Vertical Panel Or Drum (With Steady Burning Light At Night Only). Cones Or Tubular Markers May Be Used During Daylight Only.
- Type I Or Type II Barricade Or vertical Panel Or Cone Or Tubular Marker Or Drum
- Work Zone Sign
- Advance Warning Arrow Panel
- Work Vehicle
- (X) Lane Number

TRAFFIC TRANSITION AREA UPSTREAM FROM CROSSOVER

CASE I

GENERAL NOTES

1. When crossovers do not exist, the contractor will consrtuct temporary crossovers in accordance with Index No. 517.
2. L = Length of taper in feet:
   = WS for speeds ≥ 45 mph
   = $\frac{WS^2}{60}$ for speeds ≤ 40 mph
   Where:
   W = Width of lateral transition in feet.
   S = Posted speed limit (MPH).
3. The maximum spacing between devices (ft.) within the lateral transitions shall be equal to the speed limit (MPH) but not greater than 25' for cones or tubular markers or 50' for Type I or Type II barricades or vertical panels or drums.

   Spacing for devices parallel to the travel lanes shall be 25' centers for cones or tubular markers and 50' for Type I or Type II barricades or vertical panels or drums.
4. Arrows denote direction of traffic only and do not reflect pavement markings.

Sign Nos. 1, 2 and 4 Shall Have Orange Reflective Backgrounds With 6" Series D Black Opaque Legends And 1" Black Opaque Borders. Orange flags and Type B lights are required.

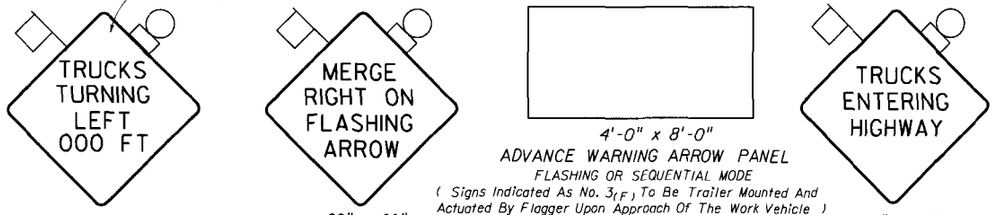

60" x 60" SIGN NO. 1

60" x 60" SIGN NO. 2

4'-0" x 8'-0"
ADVANCE WARNING ARROW PANEL
FLASHING OR SEQUENTIAL MODE
(Signs Indicated As No. 3(F) To Be Trailer Mounted And Actuated By Flagger Upon Approach Of The Work Vehicle)
See Index No. 600 For Advance Warning Arrow Panel Details.
SIGN NO. 3

60" x 60" SIGN NO. 4

STATE OF FLORIDA DEPARTMENT OF TRANSPORTATION
ROAD DESIGN

TRAFFIC CONTROL THROUGH WORK ZONES

TEMPORARY CROSSOVER FOR PAVING TRAIN OPERATIONS • RURAL

	Names	Dates
Designed By		
Drawn By	HSD/JBW	12/87
Checked By	JVG/KNM	12/87
F.H.W.A. Approved:		

Approved By: Clark A. Scott, State Traffic Plans Engineer

Revision No.	Sheet No.	Index No.
92	1 of 2	630

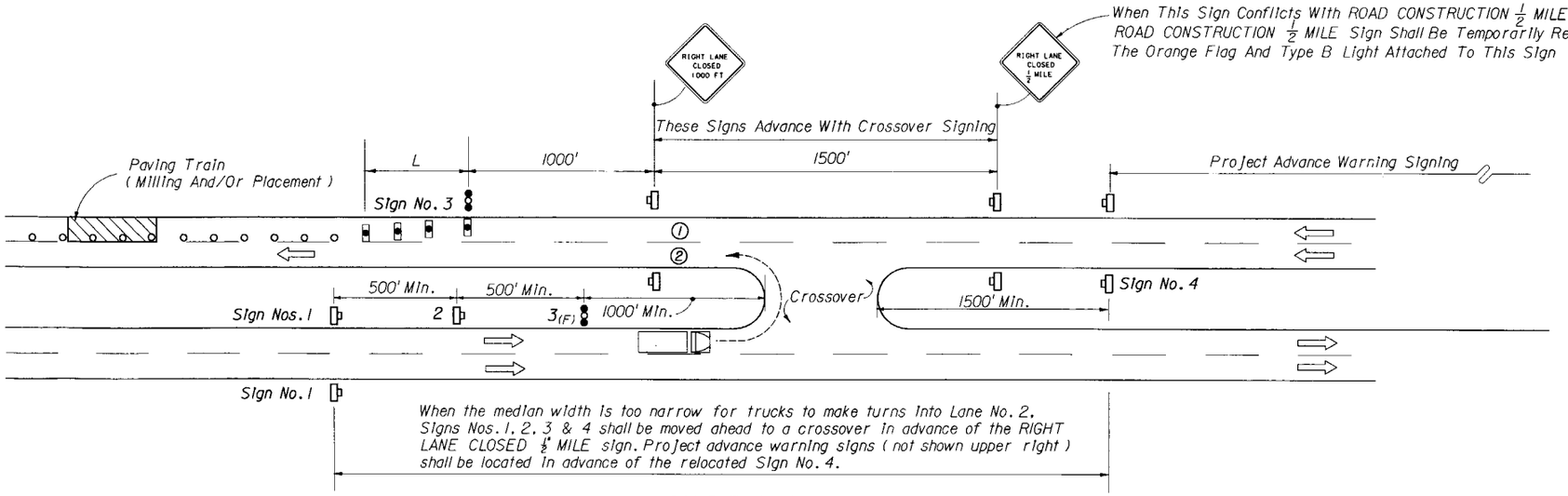

CONDITION A

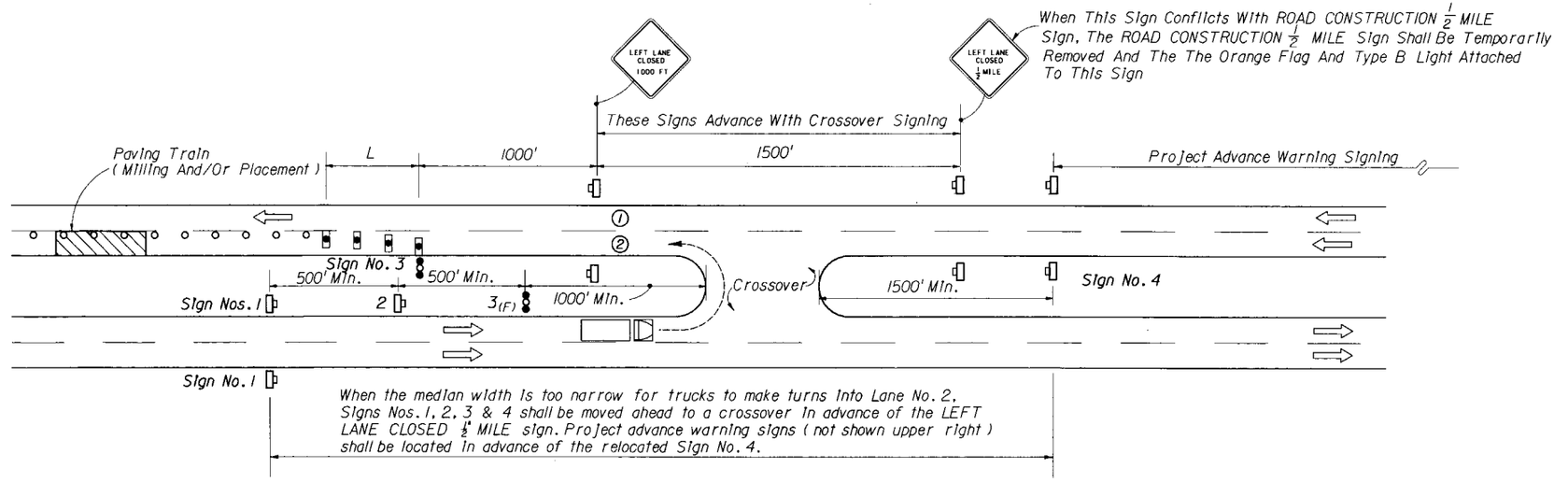

CONDITION B

TRAFFIC TRANSITION AREA DOWNSTREAM FROM CROSSOVER

CASE II

CONDITION A

WHEN THE PAVING TRAIN IS IN LANE (1) THE U-TURNING VEHICLE SHALL CAUTIOUSLY TURN INTO LANE (2) AND PROCEED IN LANE (2) TO THE FRONT OF THE TRAIN

CONDITION B

WHEN THE PAVING TRAIN IS IN LANE (2) THE U-TURNING VEHICLE SHALL TURN INTO LANE (2) CAUTIOUSLY MERGE INTO LANE (1) AND PROCEED TO THE FRONT OF THE PAVING TRAIN

CONDITION A & B

THE ADVANCE WARNING ARROW PANEL IS REQUIRED. UNDER NO CIRCUMSTANCES WILL THE TRAFFIC TRANSITION BE LOCATED WITHIN THE LIMITS OF THE CROSSOVER

Note: See Sheet 1 of 2 For General Notes, Sign No. Details, And Conditions.

STATE OF FLORIDA DEPARTMENT OF TRANSPORTATION
ROAD DESIGN

TRAFFIC CONTROL THROUGH WORK ZONES

TEMPORARY CROSSOVER FOR PAVING TRAIN OPERATIONS • RURAL

	Names	Dates
Designed By		
Drawn By	HSD/JBW	12/87
Checked By	JVG/KNM	12/87
F.H.W.A. Approved:		

Approved By: Kenneth N. Mayfield
Deputy State Design Engineer, Roadways

Revision No.	Sheet No.	Index No.
88	2 of 2	630

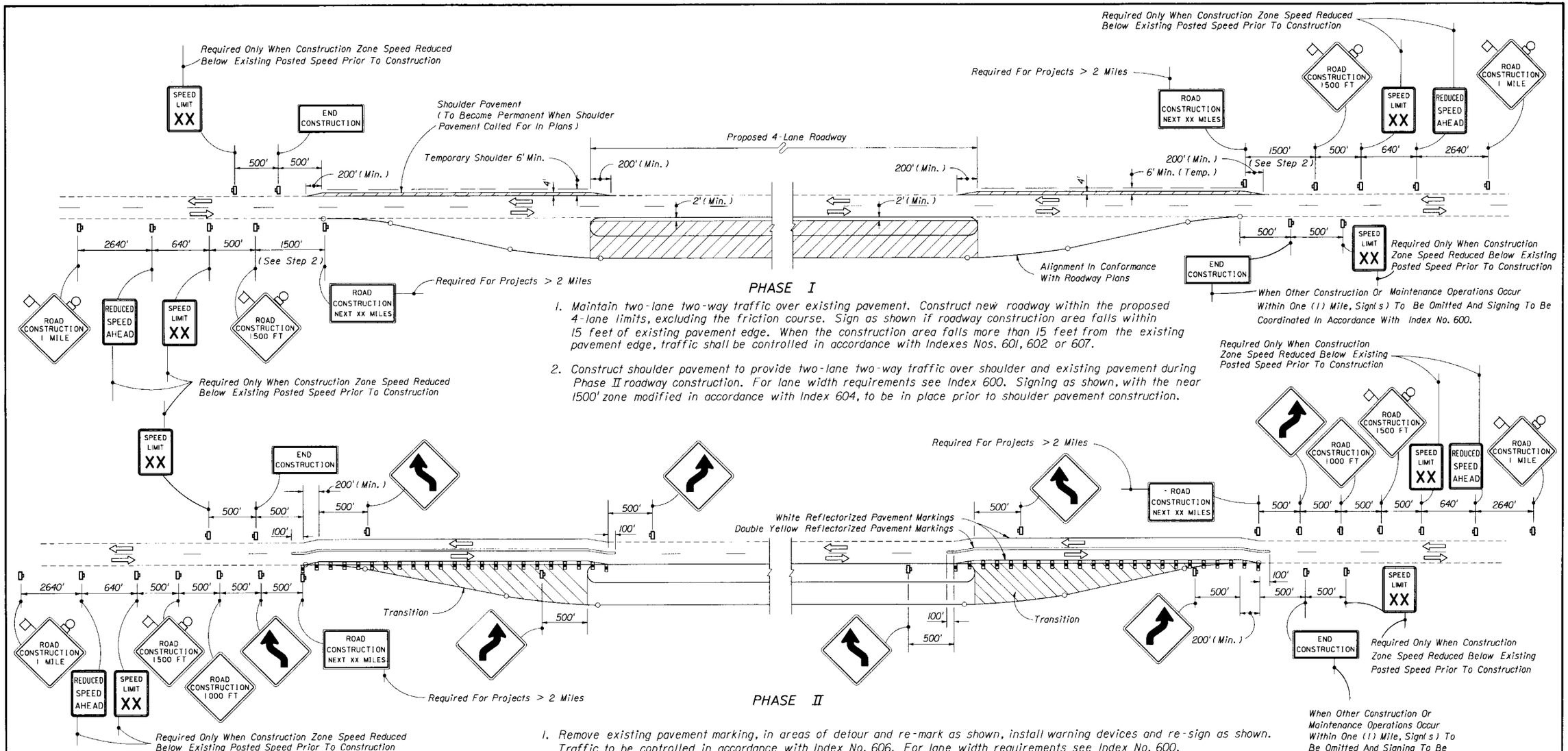
Required Only When Construction Zone Speed Reduced Below Existing Posted Speed Prior To Construction
SPEED LIMIT XX
END CONSTRUCTION
500'
500'
200' (Min.)
Shoulder Pavement (To Become Permanent When Shoulder Pavement Called For In Plans)
Temporary Shoulder 6' Min.
Proposed 4-Lane Roadway
200' (Min.)
2' (Min.)
4'
2640'
640'
500'
1500'
(See Step 2)
ROAD CONSTRUCTION 1 MILE
REDUCED SPEED AHEAD
ROAD CONSTRUCTION 1500 FT
ROAD CONSTRUCTION NEXT XX MILES
Required For Projects > 2 Miles
PHASE I
1. Maintain two-lane two-way traffic over existing pavement. Construct new roadway within the proposed 4-lane limits, excluding the friction course. Sign as shown if roadway construction area falls within 15 feet of existing pavement edge. When the construction area falls more than 15 feet from the existing pavement edge, traffic shall be controlled in accordance with Indexes Nos. 601, 602 or 607.
2. Construct shoulder pavement to provide two-lane two-way traffic over shoulder and existing pavement during Phase II roadway construction. For lane width requirements see Index 600. Signing as shown, with the near 1500' zone modified in accordance with Index 604, to be in place prior to shoulder pavement construction.
Alignment In Conformance With Roadway Plans
6' Min. (Temp.)
When Other Construction Or Maintenance Operations Occur Within One (1) Mile, Sign(s) To Be Omitted And Signing To Be Coordinated In Accordance With Index No. 600.
ROAD CONSTRUCTION 1000 FT
White Reflectorized Pavement Markings
Double Yellow Reflectorized Pavement Markings
Transition
100'
PHASE II
1. Remove existing pavement marking, in areas of detour and re-mark as shown, install warning devices and re-sign as shown. Traffic to be controlled in accordance with Index No. 606. For lane width requirements see Index No. 600.
2. Route through traffic to temporary and existing pavement.
3. Construct transitions, excluding friction course.
SYMBOLS
Sign With 18" x 18" (Min.) Orange Flag And Type B Light
Type I Or Type II Barricade Or Vertical Panel Or Drum (With Steady Burning Light At Night Only). Cones Or Tubular Markers May Be Used During Daylight Only.
Work Zone Sign
LEGEND
Phase I
Phase II
Phase III
Note: See Sheet 2 of 2 for General Notes.
STATE OF FLORIDA DEPARTMENT OF TRANSPORTATION
ROAD DESIGN
TRAFFIC CONTROL THROUGH WORK ZONES
CONVERTING TWO LANES TO FOUR LANES DIVIDED • RURAL
Designed By KNM
Drawn By HSD
Checked By JVG
F.H.W.A. Approved: 5/5/80
Approved By
State Traffic Plans Engineer
Revision No. 92
Sheet No. 1 of 2
Index No. 640

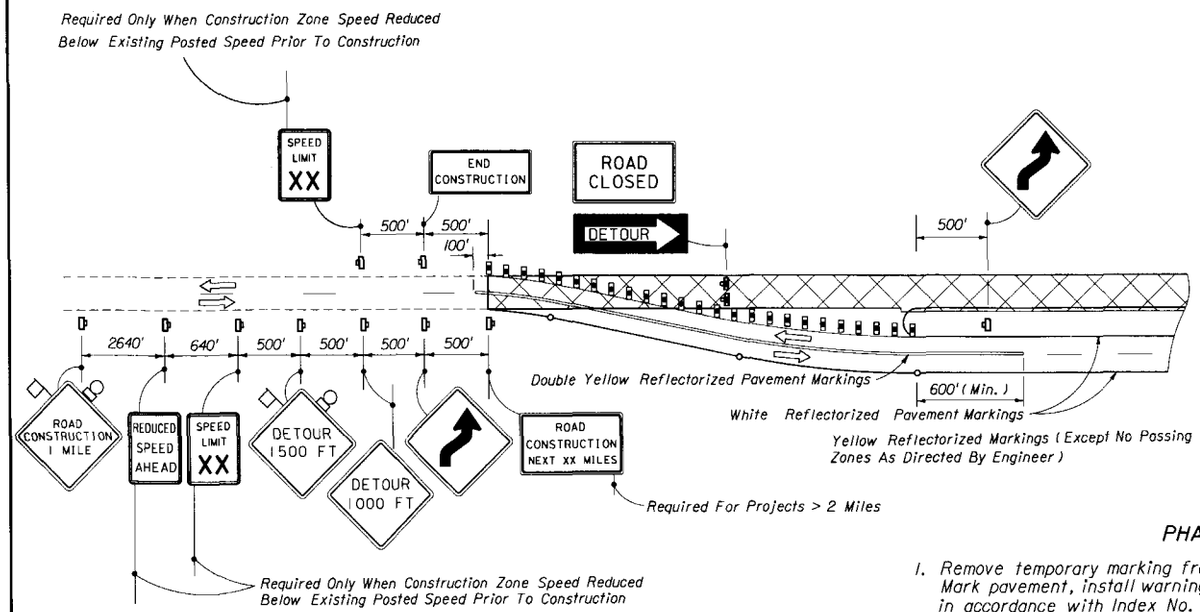

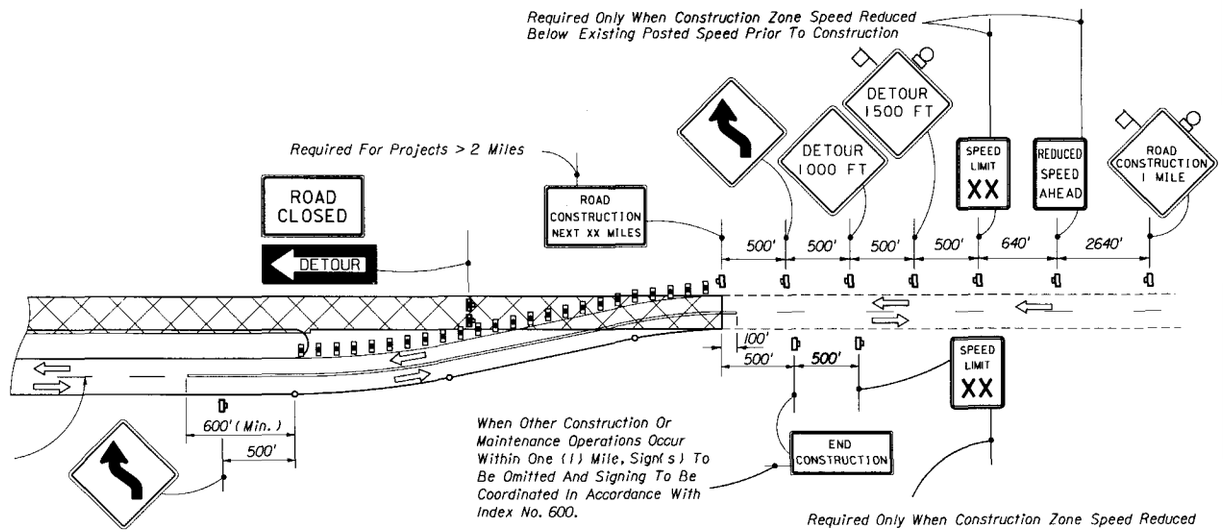

PHASE III

1. Remove temporary marking from the existing pavement and temporary shoulder pavement. Mark pavement, install warning devices and re-sign as shown. Traffic to be controlled in accordance with Index No. 606. For lane width requirements see Index No. 600.
2. Route through traffic to newly constructed roadway.
3. Resurface or reconstruct existing pavement including required shoulder pavement and friction course.

PHASE IV

1. Reroute through traffic as shown in Phase II. Signing to be as shown in Phase II.
2. Construct friction course over pavement constructed in Phases I and II.

GENERAL NOTES

1. The first two warning signs shall have a 18" x 18" (min.) orange flag and a Type B light attached and operating at all times.
2. Existing signs and pavement markings that conflict with construction signing and marking shall be obliterated or removed.
3. Lane widths for maintenance of two-way traffic should desirably be equal to lane widths of the existing facility, but lanes shall be not less than 10 feet in width. When one-lane one-way operations are necessary, a minimum width of 12 feet shall be maintained and traffic controlled in accordance with Indexes Nos. 603, 604, 606 and 607. Minimum width for the temporary shoulders is 6 feet.
4. The maximum spacing between warning devices within lateral transitions (Ft) to be equal to the speed limit (MPH) but not greater than 25' for cones or tubular markers or 50' for Type I or Type II barricades or vertical panels or drums.
   The maximum spacing between warning devices used for delineation between the travel way and construction area to be 25' for cones or tubular markers and 50' for Type I or Type II barricades or vertical panels or drums.
5. Barricading shall be in conformance with 'Protection Requirement For Dropoffs' Index No. 600.
6. For speed sign applications see Index No. 600.
7. For reflectorized raised pavement marker application see Index no 600 and Index no 17352.
8. Additional barricades, signing, lighting or other traffic controls shall be provided for limited work areas in accordance with other applicable TCZ Indexes.
9. Arrows denote direction of traffic only and do not reflect pavement markings.
10. Longitudinal dimensions are to be adjusted to fit field conditions. See Index No. 600.
11. When a side road intersects the highway on which work is being performed additional traffic control devices shall be erected in accordance with other applicable TCZ Indexes.
12. Provisions approved by the Engineer shall be made for the removal of storm water from the roadway(s) during construction.
13. For general TCZ requirements and additional information refer to Index No. 600.

SYMBOLS

- Sign With 18" x 18" (Min.) Orange Flag And Type B Light
- Type I Or Type II Barricade Or Vertical Panel Or Drum (With Steady Burning Light At Night Only). Cones Or Tubular Markers May Be Used During Daylight Only.
- Type III Barricade (With Flashing Light)
- Work Zone Sign

LEGEND

- Phase I
- Phase II
- Phase III

STATE OF FLORIDA DEPARTMENT OF TRANSPORTATION
ROAD DESIGN

TRAFFIC CONTROL THROUGH WORK ZONES

CONVERTING TWO LANES TO FOUR LANES DIVIDED • RURAL

	Names	Dates
Designed By	KNM	
Drawn By	HSD	
Checked By	JVG	
F.H.W.A. Approved:		05/05/80

Approved By
State Traffic Plans Engineer

Revision No.	Sheet No.	Index No.
92	2 of 2	640

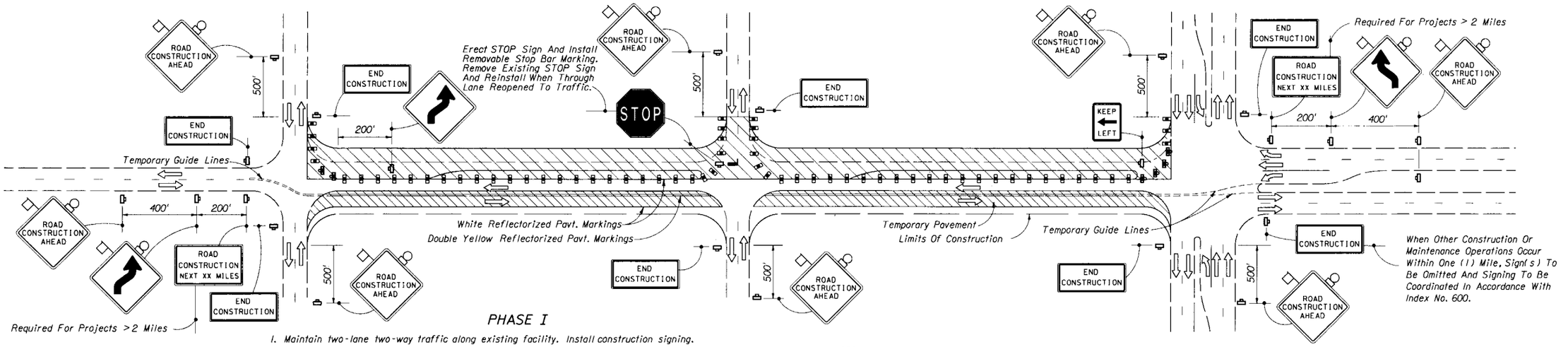

PHASE I

1. Maintain two-lane two-way traffic along existing facility. Install construction signing.
2. Remark existing pavement to facilitate temporary pavement construction. For lane width requirements see Index No. 600.
3. Construct temporary pavement of sufficient width to accommodate two-lane two-way traffic on the temporary pavement and a portion of the existing pavement during Phase I roadway construction. When two-lane two-way traffic can not be maintained during temporary pavement construction one-lane operations shall be maintained in accordance with Index No. 621. Channelizing devices shall be in conformance with 'Dropoffs in Work Zones' of Index No. 600.
4. Mark the pavement in accordance with the Phase I diagram. Reroute through traffic to the temporary pavement and a portion of the existing pavement. For lane width requirements see Index No. 600.
5. Construct two lanes of the proposed roadway, excluding the friction course. Side street traffic to be maintained. Through and cross traffic to be controlled in accordance with Indexes Nos. 620,621 and 622. Barricading shall be in conformance with 'Dropoffs in Work Zones', Index No. 600. When work extends through an intersection, temporarily reroute the cross traffic to other cross streets. When rerouting is not possible, provide one-lane access (minimum) for two-lane two-way cross streets and one-lane access (minimum) each direction for four-lane two-way cross streets, in accordance with Indexes Nos. 620, 621 and 622.

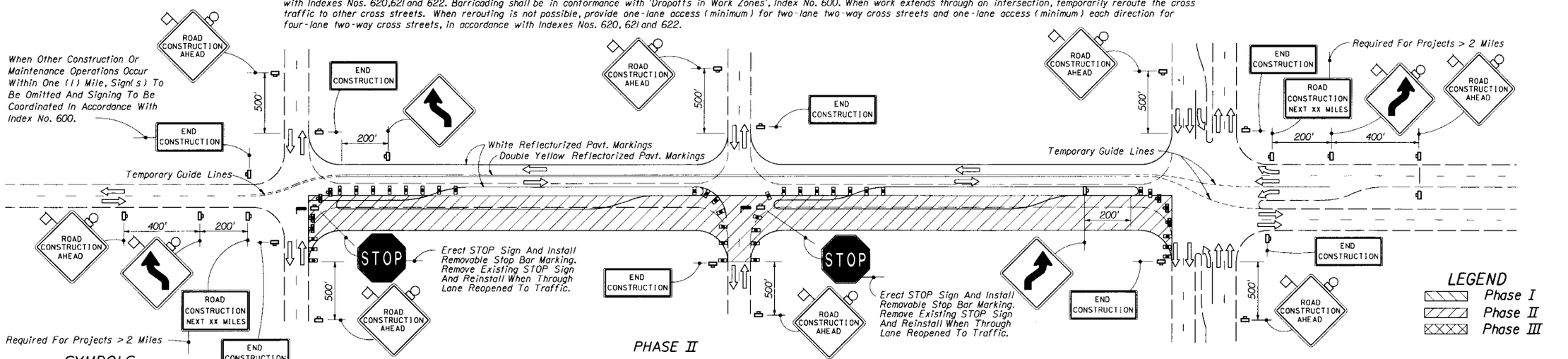

PHASE II

1. Sign and mark Phase I pavement in accordance with the Phase II diagram. For lane width requirements see Index No. 600.
2. Reroute through traffic to Phase I pavement.
3. Complete all Phase II construction, including the friction course. Side street traffic to be maintained. Through and cross traffic to be controlled in accordance with Indexes Nos. 620, 621 and 622. Channelizing devices shall be in conformance with 'Dropoffs in Work Zones' of Index No. 600. When work extends through an intersection, temporarily reroute cross traffic to other cross streets. When rerouting is not possible, provide one-lane access (minimum) for two-lane two-way cross streets and one-lane access (minimum) each direction for four-lane two-way cross streets, in accordance with Indexes Nos. 620, 621 and 622.

LEGEND

- Phase I
- Phase II
- Phase III

SYMBOLS

- Sign With 18" x 18" (Min.) Orange Flag And Type B Light
- Type I Or Type II Barricade Or Vertical Panel Or Drum (With Steady Burning Light At Night Only). Cones Or Tubular Markers May Be Used During Daylight Only.
- Type III Barricade (With Flashing Light)
- Work Zone Sign
- Stop Bar

See Sheet 2 of 2 for General Notes.

STATE OF FLORIDA DEPARTMENT OF TRANSPORTATION
ROAD DESIGN

TRAFFIC CONTROL THROUGH WORK ZONES

CONVERTING TWO LANES TO FOUR LANES DIVIDED • URBAN

	Names	Dates
Designed By	KNM	08/79
Drawn By	SHM	08/79
Checked By	JVG	08/79
F.H.W.A. Approved:		05/05/80

Approved By: Clark Hoyt
State Traffic Plans Engineer

Revision No.	Sheet No.	Index No.
92	1 of 2	641

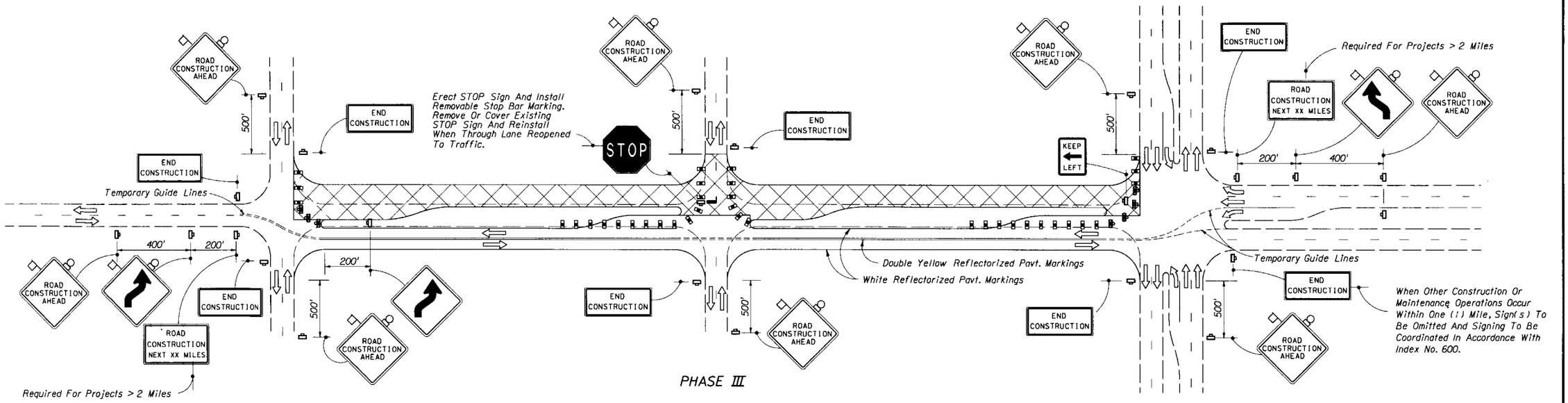

PHASE III

1. Sign and mark Phase II pavement in accordance with the Phase III diagram.
2. Reroute through traffic to Phase II pavement.
3. Construct friction course over Phase I pavement. Side street traffic to be maintained. Through and cross traffic to be controlled in accordance with Indexes Nos. 620, 621 or 622. When work extends through an intersection, temporarily reroute cross traffic to other cross streets. When rerouting is not possible, provide one-lane access (minimum) for two-lane two-way cross streets and one-lane access (minimum) each direction for four-lane two-way cross streets.

GENERAL NOTES

1. All signing, pavement marking, barricades and warning lights necessary for maintenance of traffic shall conform to Index No. 600.
2. The first two warning signs shall have a 18" x 18" (min.) orange flag and a Type B light attached and operating at all times.
3. Lane widths for maintenance of two-way traffic should desirably be equal to lane widths of the existing facility, but lanes shall not be less than 10 feet in width. When one-lane one-way operations are necessary, a minimum width of 12 feet should be maintained and traffic controlled in accordance with Indexes Nos. 620, 621 or 622.
4. At signalized intersections, signals shall be directed or relocated as required to the center of relocated lanes.
5. For reflectorized raised pavment marker application see index No. 600 and index No. 17352.
6. Additional barricades, signing, lighting or other traffic controls for limited work areas shall be provided in accordance with other applicable TCZ indexes as conditions warrant in each phase.
7. Provisions approved by the Engineer shall be made for the removal of storm water from the roadway(s) during construction.
8. Arrows denote direction of traffic only and do not reflect pavement markings.
9. Longitudinal dimensions are to be adjusted to fit field conditions. See Index No. 600.
10. For general TCZ requirements and additional information refer to Index No. 600.

SYMBOLS

- Sign With 18" x 18" (Min.) Orange Flag And Type B Light
- Type I Or Type II Barricade Or Vertical Panel Or Drum (With Steady Burning Light At Night Only). Cones Or Tubular Markers May Be Used During Daylight Only.
- Type III Barricade (With Flashing Light)
- Work Zone Sign
- Stop Bar

LEGEND

- Phase I
- Phase II
- Phase III

STATE OF FLORIDA DEPARTMENT OF TRANSPORTATION
ROAD DESIGN

TRAFFIC CONTROL THROUGH WORK ZONES

CONVERTING TWO LANES TO FOUR LANES DIVIDED • URBAN

	Names	Dates
Designed By	KNM	08/79
Drawn By	SHM	08/79
Checked By	JVG	08/79
F.H.W.A. Approved:		5/5/80

Approved By: Clarke Scott, State Traffic Plans Engineer

Revision No.	Sheet No.	Index No.
92	2 of 2	641

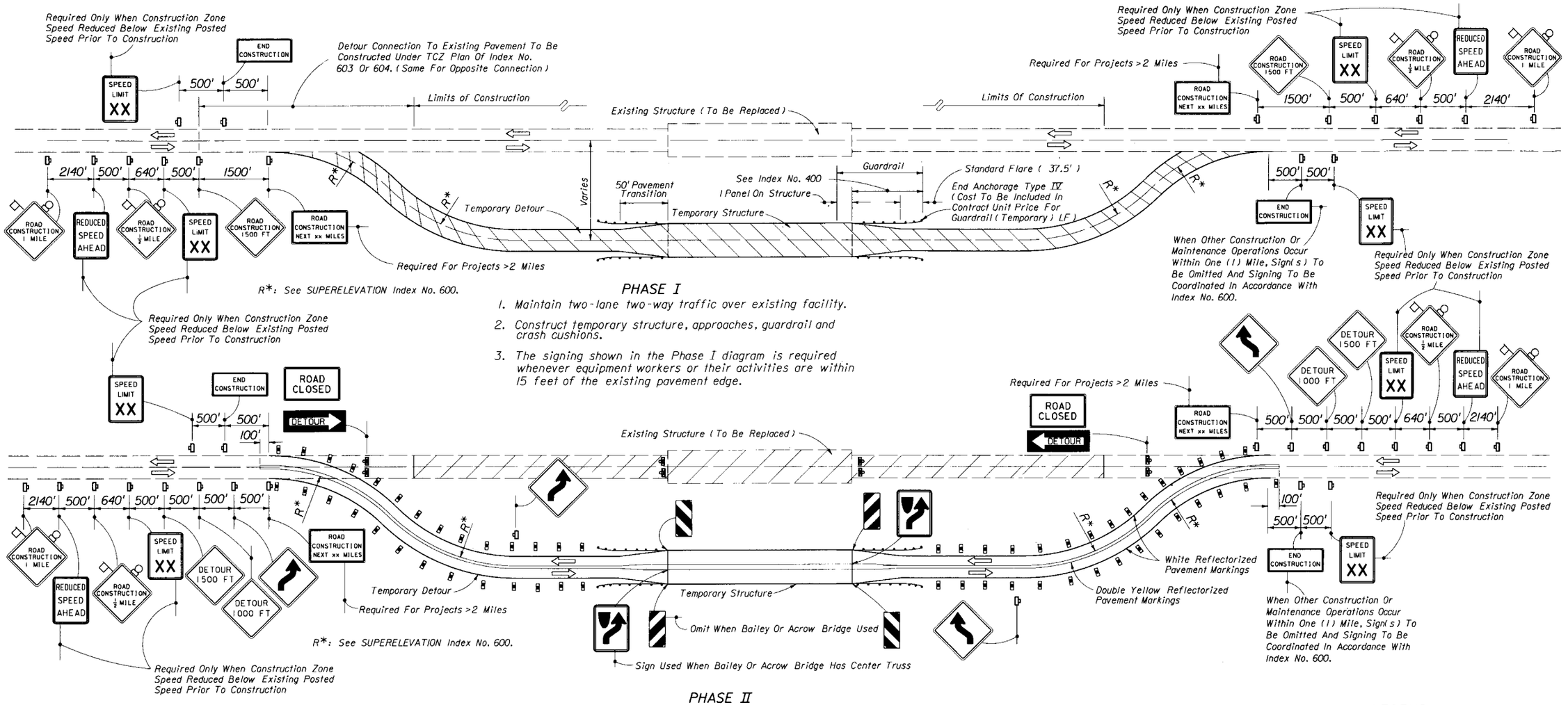

STATE OF FLORIDA DEPARTMENT OF TRANSPORTATION
ROAD DESIGN

TRAFFIC CONTROL THROUGH WORK ZONES

TWO-LANE, TWO-WAY • RURAL STRUCTURE REPLACEMENT

	Names	Dates
Designed By	KNM	08/19
Drawn By	SHM	08/19
Checked By	JVG	08/19
F.H.W.A. Approved:		09/11/19

Approved By: Charles A. Scott
State Traffic Plans Engineer

Revision No.	Sheet No.	Index No.
92	1 of 2	650

PHASE III

1. Reroute traffic to existing alignment and maintain two-way traffic.
2. Remove all temporary construction items.

GENERAL NOTES

1. All signing, pavement marking, barricades and warning lights necessary for maintenance of traffic shall conform to Index No. 600.
2. The first two warning signs shall have a 18" x 18" (min.) orange flag and a Type B light attached and operating at all times.
3. For speed sign applications see Index No. 600.
4. For lane width requirements see Index No. 600. When one-way one-lane operations are necessary, a minimum width of 12 feet shall be maintained and traffic controlled in accordance with Indexes Nos. 603, 604, 606, 607 or 608. Minimum width for the detour shoulders is 6 feet.
5. Method of attaching temporary guardrail to the detour structure to be approved by the Engineer.
6. Provisions approved by the Engineer shall be made for the removal of storm water from the roadway(s) during construction.
7. Temporary crash cushions shall be the inertial type in accordance with Index No. 415 or others as called for in the plans.
8. Arrows denote direction of traffic only and do not reflect pavement markings.
9. Longitudinal dimensions are to be adjusted to fit field conditions. See Index No. 600.
10. Where the temporary structure is not required the detour may be constructed in accordance with Index No. 609, unless otherwise stipulated in the plans.
11. For reflective raised pavment marker application see Index No. 600 and Index No. 17352.
12. For general TCZ requirements and additional information refer to Index No. 600.

STATE OF FLORIDA DEPARTMENT OF TRANSPORTATION
ROAD DESIGN

TRAFFIC CONTROL THROUGH WORK ZONES

TWO-LANE, TWO-WAY • RURAL STRUCTURE REPLACEMENT

	Names	Dates
Designed By	KNM	08/79
Drawn By	SHM	08/79
Checked By	JVG	08/87

Approved By Clark A. Scott
State Traffic Plans Engineer

F.H.W.A. Approved:

Revision No.	Sheet No.	Index No.
92	2 of 2	650

BUFFER LENGTH (FT)		
Construction Zone Speed MPH	X	Z
60-70	540	550
55	350	430
≤ 50	170	300

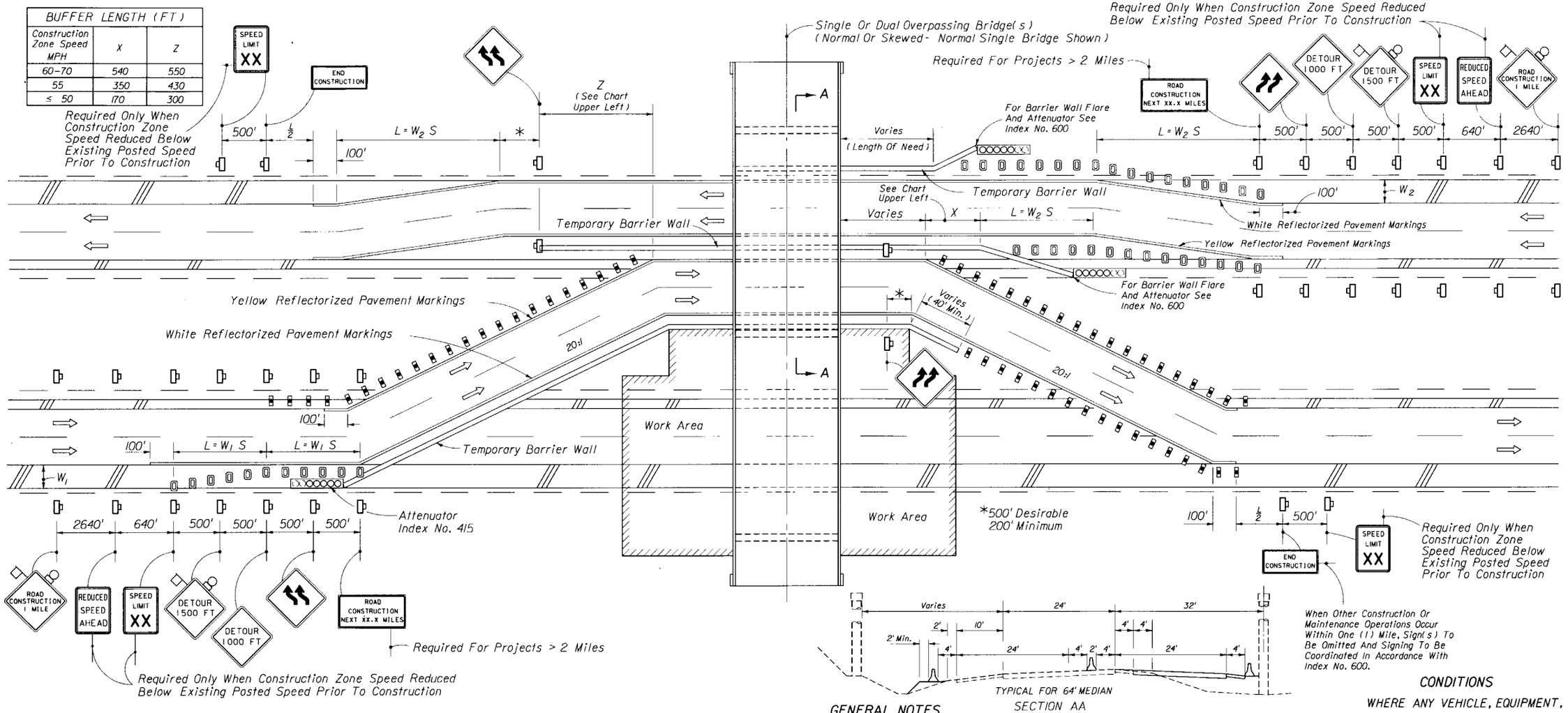

SYMBOLS

- Work Area
- Sign With 18" x 18" (Min.) Orange Flag And Type B Light
- Type I Or Type II Barricade Or Vertical Panel Or Drum (With Steady Burning Light At Night Only). Cones Or Tubular Markers May Be Used During Daylight Only.
- Work Zone Sign
- Drum

GENERAL NOTES

1. All vehicles, equipment, workers and their activities are restricted at all times to one side of the highway.
2. The first two warning signs, each side, shall have a 18" x 18" (min.) orange flag and a Type B light attached and operating at all times.
3. All signs shall be post mounted.
4. S = Posted speed limit (MPH).
5. The maximum spacing between warning devices within lateral transitions (Ft) to be equal to the speed limit (MPH) but not greater than 25' for cones or tubular markers or 50' for Type I or Type II barricades or vertical panels or drums. Barricades, vertical panels, cones, tubular markers and drums shall not be intermixed in lateral transition.
6. For speed sign applications see Index No. 600.
7. All existing pavement markings within the realignment which conflict with the revised traffic pattern are to be removed and new pavement markings used for marking edge lines and lane lines.
8. Arrows denote direction of traffic only and do not reflect pavement markings.
9. Longitudinal dimensions are to be adjusted to fit field conditions. See Index No. 600.
10. When side roads, cross roads or interchanges are located within the limits for work zone traffic control additional traffic control devices shall be erected in accordance with other applicable TCZ Indexes.
11. For general TCZ requirements and additional information refer to Index No. 600.

CONDITIONS

WHERE ANY VEHICLE, EQUIPMENT, WORKERS OR THEIR ACTIVITIES REQUIRE THE CLOSURE OF ONE ROADWAY AND THE OPPOSING ROADWAY IS CONVERTED TO TEMPORARY TWO-WAY TRAVEL BY WAY OF CROSSOVERS

STATE OF FLORIDA DEPARTMENT OF TRANSPORTATION
ROAD DESIGN

MULTILANE DIVIDED MAINTENANCE AND CONSTRUCTION

	Names	Dates
Designed By	JVG/JBW	10/89
Drawn By	HSD/JBW	10/89
Checked By	JVG/KNW	10/89
F.H.W.A. Approved:		

Approved By: Clark G. Scott, State Traffic Plans Engineer

Revision No.	Sheet No.	Index No.
92	1 of 2	651

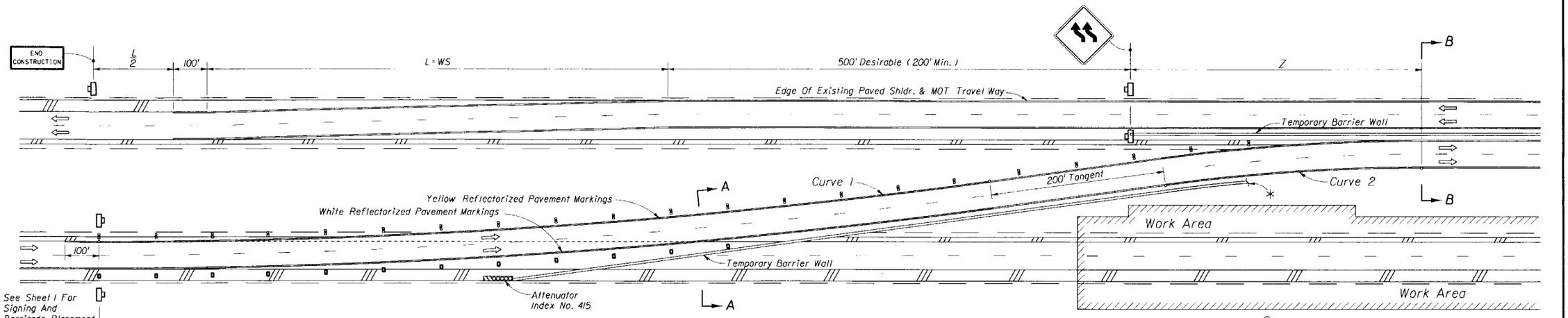

APPROACH END

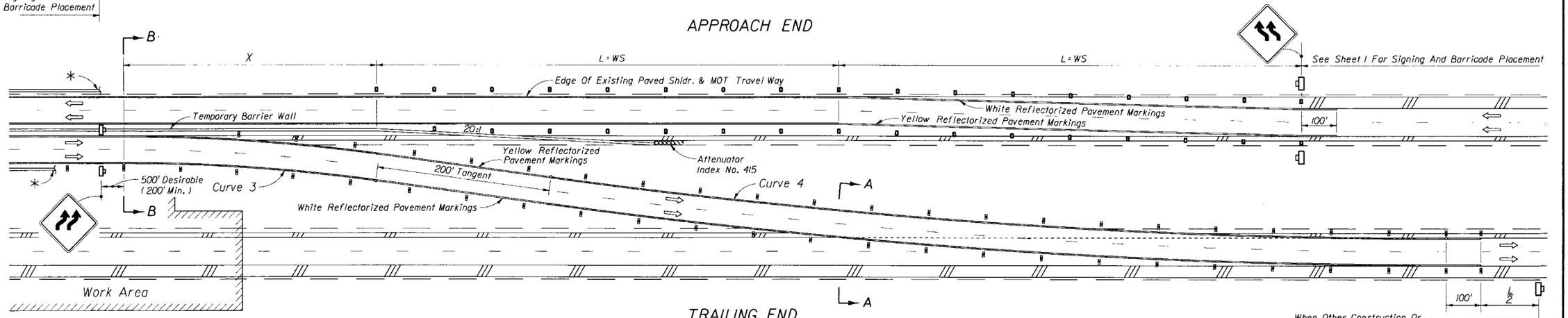

TRAILING END

CURVILINEAR ALIGNMENT CROSSOVER

When Other Construction Or Maintenance Operations Occur Within One (1) Mile, Sign(s) To Be Omitted And Signing To Be Coordinated In Accordance With Index No. 600.

* Length of barrier wall needed for protection of work area and/or other hazards to be shown in the plans. For complimentary information on barrier walls and work area see Sheet 1. See Index No. 600 for clear zone requirements.

BUFFER LENGTH (FT)				
Construction Zone Speed	64' Median		88' Median	
MPH	X	Z	X	Z
70	607	588	582	545
65	581	562	552	514
60	562	543	531	492
55	337	369	330	350
50	201	286	200	276
45	115	164	115	163
40	104	149	104	148
35	91	134	91	132
30	78	118	78	115

MINIMUM RADII FOR NORMAL CROSS SLOPES		
Construction Zone Speed	Minimum Radius (Ft.) R	
MPH	Curves 1 & 4	Curves 2 & 3
70	22,918 (0° 15')	4,584 (1° 15')
65	22,918 (0° 15')	3,820 (1° 30')
60	22,918 (0° 15')	3,274 (1° 45')
55	11,459 (0° 30')	2,546 (2° 15')
50	11,459 (0° 30')	2,292 (2° 30')
45	1,080 (5° 18')	700 (8° 11')
40	830 (6° 54')	550 (10° 25')
35	620 (9° 14')	410 (13° 58')
30	450 (12° 44')	285 (20° 06')

NOTE: Detours with speeds of 50 mph or greater are considered high speed facilities; curvature and superelevation criteria for open highway conditions apply.

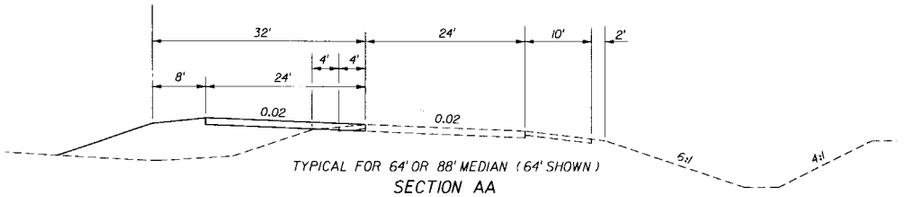

TYPICAL FOR 64' OR 88' MEDIAN (64' SHOWN)

SECTION AA

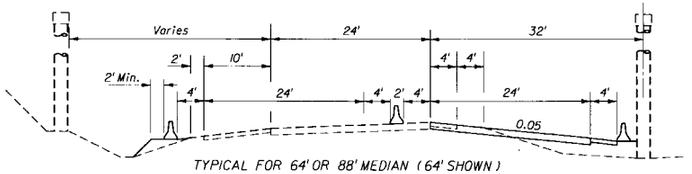

TYPICAL FOR 64' OR 88' MEDIAN (64' SHOWN)
(WITH OR WITHOUT OVERPASSING ROADWAY-OVERPASSING SHOWN)

SECTION BB

STATE OF FLORIDA DEPARTMENT OF TRANSPORTATION
ROAD DESIGN

MULTILANE DIVIDED MAINTENANCE AND CONSTRUCTION

	Names	Dates
Designed By		
Drawn By	JBW	
Checked By	JVG	
F.H.W.A. Approved:		

Approved By: Clark A. Scott
State Traffic Plans Engineer

Revision No.	Sheet No.	Index No.
92	2 of 2	651

DESIGN CRITERIA RELATED TO HIGHWAY SAFETY

September 1991

TYPE OF FACILITY	RURAL & URBAN FREEWAYS AND RURAL ARTERIALS & COLLECTORS: DESIGN SPEED OF 45 MPH OR GREATER AND PROJECTED ADT (20 YR) OF 1500 OR GREATER	RURAL ARTERIALS & COLLECTORS: DESIGN SPEED OF 45 MPH OR GREATER AND PROJECTED ADT (20 YR) LESS THAN 1500	RURAL COLLECTORS: DESIGN SPEED OF 40 MPH OR LESS AND RURAL LOCALS-ALL SPEEDS	URBAN ARTERIALS & COLLECTORS: DESIGN SPEEDS OF 30-50 MPH (WITHOUT CURB AND GUTTER)	URBAN ARTERIALS & COLLECTORS: DESIGN SPEED OF 45 MPH OR LESS (CURB AND GUTTER)
EMBANKMENT SLOPE	Fill Ht. 0'-5' 6:l 5'-10' 6:l to edge of CZ & 4:l 10'-20' 6:l to edge of CZ & 3:l > 20' 2:l (with guardrail) R/W cost must be considered in urban areas in using these slopes.	Fill Ht. 0'-5' 6:l except where R/W is insufficient then 6:l to edge of CZ & 3:l will be permitted. 5'-20' 6:l to edge of CZ & 3:l except where R/W is insufficient then 2:l with guardrail will be permitted.	Fill Ht. 0'-5' 6:l except where R/W is insufficient then 6:l to edge of CZ & 3:l will be permitted. 5'-20' 6:l to edge of CZ & 3:l except where R/W is insufficient then 2:l with guardrail will be permitted.	Fill Ht. 0'-5' 6:l except where R/W is insufficient then 6:l to edge of CZ & 3:l will be permitted. 5'-20' 6:l to edge of CZ & 3:l except where R/W is insufficient then 2:l with guardrail will be permitted.	2:l or to suit property owner, not flatter than 6:l. R/W cost must be considered for high fill sections in urban areas.
CLEAR WIDTHS FOR BRIDGES ⑩	Freeways, divided arterials & collectors (4 or more lanes): Travel lanes plus 10' Rt. and 6' Lt., 10' Lt. for 6 or more lanes. Undivided arterials & collectors: Travel lanes plus approach shoulder width.	Travel lanes plus approach shoulder widths.	Travel lanes plus approach shoulder widths.	Divided: Travel lanes plus approach shoulder width Rt. and 6' Lt. unless full median section is carried across structure. Undivided: Travel lanes plus approach shoulder widths.	Full section (face to face of curb) plus sidewalk. When concrete barrier wall is placed in front of sidewalk a minimum clearance of 2.5' is required between the travel lane, wide curb lane or bicycle lane and the toe of the barrier wall.
BACKSLOPES	4:l (Normal)	4:l where R/W permits or 3:l.	4:l where R/W permits or 3:l.	4:l where R/W permits or 3:l.	2:l or to suit property owner, not flatter than 6:l.
CLEAR ZONE (CZ) ①②③⑨	Standard — Design Speed MPH / Travel Lanes / Auxil. Lanes & Ramps: 60-70 / 36' / 24' 55 / 30' / 18' 45-50 / 24' / 14'	Standard — Design Speed MPH / Travel Lanes / Auxil. Lanes & Ramps: 60-70 / 30' / 18' 55 / 24' / 14' 45-50 / 20' / 14'	14' standard; 10' minimum from edge of both travel and auxiliary lanes.	Standard — Design Speed MPH / Travel Lanes / Auxil. Lanes & Ramps: 50 / 24' / 14' 45 / 24' ⑤⑦ / 14' 30-40 / 18' ⑦ / 10' ⑧	4' from face of curb.Ø Bridge piers normally will be 16' min. from edge of travel lane.*
GUARDRAIL LOCATION	Shoulder width plus 2' to face of guardrail (at shoulder line when shoulder width is 12'). May be desirable to locate on frontslope; see Detail K, Index No. 400.	Shoulder width plus 2' to face of guardrail (8' min.). May be desirable to locate on frontslope; see Detail K, Index No. 400.	Shoulder width plus 2' to face of guardrail (8' min.). May be desirable to locate on frontslope; see Detail K, Index No. 400.	Shoulder width plus 2' to face of guardrail (8' min.).	Normally flush with face of curb.
SIGNS	Outside clear zone and not generally in median. All supports within clear zone shall be frangible or breakaway unless shielded by barrier that is justified for other reasons. Overhead sign structures located in the clear zone shall be shielded.	Outside clear zone. All supports in clear zone shall be frangible or breakaway unless shielded by barrier that is justified for other reasons. Overhead sign structures located in the clear zone shall be shielded.	Outside clear zone. All supports in clear zone shall be frangible or breakaway unless shielded by barrier that is justified for other reasons. Overhead sign structures located in the clear zone shall be shielded.	Outside clear zone. All supports in clear zone shall be frangible or breakaway unless shielded by barrier that is justified for other reasons. Overhead sign structures located in the clear zone shall be shielded.	2' min. from face of curb to inside edge of sign panel. Sign placement shall not block sidewalk.
LIGHT POLES	Not generally in median except when shielded by barrier. Outside clear zone or frangible base 20' from edge of travel lane and 14' min. from edge of auxiliary lane or behind approved barrier that is justified for other reasons.	Outside clear zone for both frangible and non-frangible bases if clear zone 20' or less. Desirably at 20' from edge of thru lane and 14' from edge of auxiliary lane or behind approved barrier that is justified for other reasons. Frangible bases may be placed at 20' from thru lane and 14' from auxiliary lane for clear zones greater than 20'.	Outside clear zone or behind approved barrier that is justified for other reasons.	Outside clear zone or behind approved barrier that is justified for other reasons. Frangible bases may be placed at 20' from thru lane and 14' from auxiliary lane for clear zones greater than 20'.	4' min. from face of curb.Ø
UTILITY POLES, FIRE HYDRANTS, ETC.	Not in median. Not within R/W of the main travel way of freeways. For other facilities outside the clear zone. Normally 6.5' inside R/W when beyond clear zone otherwise as close as practical to R/W line. ☒	Outside clear zone. Normally 6.5' inside R/W when beyond clear zone otherwise as close as practical to R/W line. ☒	Outside clear zone. Not in median. Normally 6.5' inside R/W when beyond clear zone otherwise as close as practical to R/W line. ☒	Outside clear zone. Not in median. Normally 6.5' inside R/W when beyond clear zone otherwise as close as practical to R/W line.	Not in median. 4' min. from face of curb.Ø
RAILROAD CROSSING DEVICES	Not on freeways. 10' min. from edge of travel lane or 6' min. from edge of auxiliary lane to near edge of device. No guardrail. ☆	10' min. from edge of travel lane or 6' min. from edge of auxiliary lane to near edge of device. No guardrail. ☆	Minimum from edge of travel lane to near edge of device: Greater than 45 mph-10' 35-45 mph -8' 30 mph or less -6' Minimum for auxiliary lanes-6' No guardrail ☆	Minimum from edge of travel lane to near edge of device: Greater than 45 mph-10' 35-45 mph -8' 30 mph or less -6' Minimum for auxiliary lanes-6' No guardrail ◇ ☆	2.5' min. from face of curb to near edge of device.
MEDIAN WIDTHS	Freeways 60' min.-60 mph and over (40' min. when lanes added in median) 40' min.-under 60 mph Other divided highways 40' min.-55 mph and over 22' min.-under 55 mph		22' Min.	19.5' min. - 45-50 mph 15.5' min. - 40 mph or less (greater widths desirable) For reconstruction projects the min. painted median width with provision for left turn is 10' (greater widths desirable)	19.5' min. - 45 mph 15.5' min. - 40 mph or less (greater widths desirable) For reconstruction projects the min. painted median width with provision for left turn is 10' (greater widths desirable)
TREES △ Existing Or Expected Dia. ≥ 4" Measured 6" Above The Ground	Outside clear zone. Standard criteria required for Freeways. +	Outside clear zone.	Outside clear zone.	Outside clear zone.	4' min. from face of curb where curb height is 6" or greater. □

Design speed to be established using realistic anticipated operating speed.

Preferred ditch cross sections are shown on pages 3-9 and 3-10 of the "Roadside Design Guide", 1988.

Consideration should be given to maintaining greater than the above specified clearances and/or flatter slopes where feasible and practical.

Values shown above shall be used on all new construction and on reconstruction projects to the extent that economic and environmental considerations and R/W limitations will allow. For definitions of new construction and reconstruction see "Manual Of Uniform Minimum Standards For Design, Construction And Maintenance For Streets And Highways". The values shown do not apply to RRR projects.

Driving lane is any traffic lane, travel or auxiliary.

An auxiliary lane is the portion of the roadway adjoining the traveled way for parking, speed changes, turning, storage for turning, weaving, truck climbing or for other purposes supplementary to through traffic movement.

Traveled way (Travel lanes) is the portion of the roadway for the movement of vehicles, exclusive of shoulders and auxiliary lanes.

Ø On projects where the 4 foot minimum offset cannot be reasonably obtained and other alternatives are deemed impractical, the minimum may be reduced to 2.5'.

* At locations where immediately adjacent development such as buildings, etc. provide less clearance, bridge piers can be placed to provide clearance less than 16'. Adequate sight distance for crossing maneuvers at intersections should be provided.

△ Offsets shown are for existing or newly planted trees. If existing trees are close to but less than the minimum offset indicated, other factors should be considered to determine adequacy of offset, i.e. ADT; operating speed; accident history; size, age and type of tree; protection by a barrier; etc. Newly planted trees may be placed behind barriers that are provided for other reasons. The minimum setback distance from the back of concrete barriers, walls, abutments or other rigid obstructions is 4' for newly planted trees. For W-beam guardrail the minimum setback is 6' from the face of the rail for newly planted trees. Offsets shown apply to both outside and median for divided highways unless otherwise noted. When trees are placed in median adequate sight distance at intersections, turnouts and median openings, etc, shall be maintained.

□ 10' minimum from driving lane when curb height is less than 6" or when curb height has been reduced by resurfacing.

\+ When offset established, care shall be taken to avoid blocking sight distance to roadside signs.

◇ For divided facilities with curbed medians and undivided facilities utilizing curbed separations at crossings, 2.5' from face of curb to near edge of signal device in accordance with Traffic Design Standards Index No. 17882.

☆ Not less than 2' from edge of any shoulder pavement.

☒ Avoid encroachment on adjacent private property. The 6.5' offset is to eliminate arerial encroachment.

Clear Zone Footnotes:

① Standard values are to be used for all new construction projects. These values may be reduced only where individually justified to mitigate critical social, economic, and environmental impacts or to lessen excessive right-of-way costs. Standard values are also to be used for reconstruction projects; however, values down to AASHTO minimum may be used where individually justified due to critical social, economic, and environmental impacts and/or excessive right-of-way costs or when existing roadside obstacles are not considered hazardous as evidenced by field review and by accident history or accident potential.

② Where accident history indicates need, or where specific site investigation shows definitive accident potential, clear zones for rural and urban facilities (without curb) should be adjusted on the outside of horizontal curves in accordance with Table 1 (Sht. 2 of 2).

③ The use of barriers or other safety treatment is to be considered if clear zone requirements are not provided.

④ Vacant

⑤ May be reduced to low speed condition criteria (30-40 mph) if conditions more nearly approach those for low speed.

⑥ Vacant

⑦ 10' in medians where median curb Type E is used; 4' from face of median curb where curb height is 6".

⑧ 4' from face of median curb where curb height is 6".

⑨ When a frontslope steeper than 4:l encroaches into the clear zone, a clear runout area is to be provided at the bottom of the slope in accordance with Fig. 3.2 of the "Roadside Design Guide", 1988.

⑩ See "Structures Design Guidelines", 1987, Chapter 2, for further details.

STATE OF FLORIDA DEPARTMENT OF TRANSPORTATION
ROAD DESIGN

DESIGN CRITERIA RELATED TO HIGHWAY SAFETY

	Names	Dates
Designed By		
Drawn By	HSD	06/81
Checked By	JVG	06/81
F.H.W.A. Approved:		2/5/88

Approved By [signature] State Roadway Design Engineer

Revision No.	Sheet No.	Index No.
92	1 of 2	700

TABLE I

CLEAR ZONE OF CURVED ALIGNMENT (CZ_C), FEET

D	Design Speed (Vmph) And Clear Zone (CZ, Feet)																																							
	30			35			40			45					50				55					60				65				70			
Tangent	10	14	18	10	14	18	10	14	18	10	14	18	20	24	10	14		20	24	10	14	18	24	30	18	24	30	36	18	24	30	36	18	24	30	36
0°15'	10	14	18	10	14	18	10	14	18	10	14	18	20	24	10	14		20	24	10	14	18	25	31	18	25	31	37	19	25	31	37	19	25	31	37
0°30'	10	14	18	10	14	18	10	14	18	10	14	19	21	25	10	15		21	25	10	15	19	25	31	19	25	31	38	19	25	32	38	19	26	32	39
0°45'	10	14	18	10	14	18	10	14	19	10	15	19	21	25	10	15		21	25	11	15	19	25	32	19	26	32	39	20	26	33	39	20	27	33	40
1°00'	10	14	18	10	14	18	10	14	19	10	15	19	21	25	11	15		21	25	11	15	19	26	32	20	26	33	39	20	27	33	40	20	27	34	41
1°30'	10	14	18	10	15	19	11	15	19	11	15	19	21	26	11	15		22	26	11	16	20	27	33	20	27	34	41	21	28	35	42	22	29	36	43
2°00'	10	15	19	11	15	19	11	15	19	11	15	20	22	26	11	16		22	27	12	16	21	28	35	21	28	36	43	22	29	37	44	23	30	38	46
2°30'	11	15	19	11	15	19	11	15	20	11	16	20	22	27	12	16		23	28	12	17	21	29	36	22	29	37	44	23	31	38	46	24	32	40	48
3°00'	11	15	19	11	15	20	11	16	20	12	16	21	23	28	12	17		24	28	12	17	22	29	37	23	31	38	46	24	32	40	48	25	33	42	50
3°30	11	15	19	11	15	20	11	16	20	12	16	21	23	28	12	17		24	29	13	18	23	30	38	24	32	40	48	25	33	42	50	26	35	44	53
4°00'	11	15	20	11	16	20	12	16	21	12	17	22	24	29	13	18		25	30	13	18	24	31	39	25	33	41	49	26	35	43	52				
4°15'																													26	35	44	53				
5°00'	11	16	20	11	16	21	12	17	21	12	17	22	25	30	13	18		26	31	14	19	25	33	41	26	35	44	52								
5°15'																									27	36	44	53								
6°00'	11	16	20	12	16	21	12	17	22	13	18	23	26	31	14	19		27	33	14	20	26	35	43												
6°30'																				15	21	27	36	45												
7°00'	11	16	21	12	17	21	13	18	23	13	19	24	27	32	14	20		28	34																	
8°00'	12	16	21	12	17	22	13	18	24	14	19	25	28	33	15	21		30	36																	
8°15'															15	21		30	36																	
9°00'	12	17	21	13	18	23	13	19	24	14	20	26	28	34																						
10°00'	12	17	22	13	18	23	14	19	25	15	21	26	29	35																						
10°15'										15	21	27	30	36																						
11°00'	12	17	22	13	18	24	14	20	25																											
12°00'	13	18	23	14	19	24	15	20	26																											
13°00'	13	18	23	14	19	24	15	21	27																											
13°15'							15	21	27																											
14°00'	13	18	23	14	20	25																														
16°00'	13	19	24	14	20	26																														
17°45'				15	21	27																														
18°00'	14	19	25																																	
20°00'	14	20	26																																	
22°00'	15	20	26																																	
24°00'	15	21	27																																	
24°45'	15	21	27																																	

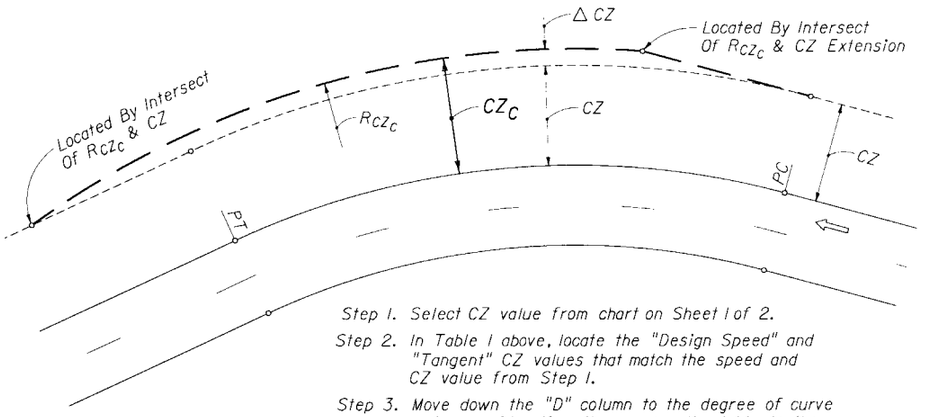

Step 1. Select CZ value from chart on Sheet 1 of 2.

Step 2. In Table I above, locate the "Design Speed" and "Tangent" CZ values that match the speed and CZ value from Step 1.

Step 3. Move down the "D" column to the degree of curve under consideration, then across the table to the column found under Step 2, to find the CZ_c value.

CZ_C

STATE OF FLORIDA DEPARTMENT OF TRANSPORTATION
ROAD DESIGN

DESIGN CRITERIA RELATED TO HIGHWAY SAFETY

	Names	Dates
Designed By		
Drawn By	HSD	1/88
Checked By	JVG	1/88
F.H.W.A. Approved:		2/5/88

Approved By: Ray E. Hunsucker
State Roadway Design Engineer

Revision No.	Sheet No.	Index No.
92	2 of 2	700

REVISIONS
TRAFFIC DESIGN STANDARDS
1992

INDEX NUMBER	SHEET NUMBER	DESCRIPTION
9535	2 of 4	Bolt keeper Washer Detail, and Base Connection Data Table - Bolt Size and Torque; revised.
9535	4 of 4	Bolt keeper Washer Detail, and Base Connection Data Table - Bolt Size and Torque; revised.
10965	1 of 1	Index deleted.
11037	1 of 1	Changed General Notes.
11201	1 of 2	Index deleted.
11201	2 of 2	Index deleted.
11226	1 of 1	Index deleted.
11860	1 of 2	Editorial changes, re-arranging sheet.
11860	2 of 2	New sheet added (Bracket Detail).
11861	1 of 1	Editorial changes, add design for I.D. 18 & 19. $3\frac{1}{2}$" And 4" Ø Tubes No Longer Frangible.
11862	1 of 1	Editorial changes, add design for I.D. 18 & 19. $3\frac{1}{2}$" And 4" Ø Tubes No Longer Frangible.
11863	1 of 1	Editorial changes, add design for I.D. 18 & 19. $3\frac{1}{2}$" And 4" Ø Tubes No Longer Frangible.
11864	1 of 1	Editorial changes, add design for I.D. 18 & 19. $3\frac{1}{2}$" And 4" Ø Tubes No Longer Frangible.
11865	1 of 1	Adding Splice details and notes. Design for $3\frac{1}{2}$" and 4" Tubes No Longer Frangible.
11962	1 of 1	Index deleted.
17302	1 of 1	Dimensions revised, Cases rearranged on sheet, General Note 5 revised, Note 6 added.
17344	1 of 6	Striping changed from 4" to 6" to comply with THE OLDER ROAD-USER PROGRAM, new Note added.
17344	2 of 6	Striping changed from 4" to 6" to comply with THE OLDER ROAD-USER PROGRAM.
17344	3 of 6	Striping changed from 4" to 6" to comply with THE OLDER ROAD-USER PROGRAM.
17345	1 of 4	Striping changed from 4" to 6" to comply with THE OLDER ROAD-USER PROGRAM, detail A revised.
17345	2 of 4	Striping changed from 4" to 6" to comply with THE OLDER ROAD-USER PROGRAM.
17345	3 of 4	Striping changed from 4" to 6" to comply with THE OLDER ROAD-USER PROGRAM.
17345	4 of 4	Striping changed from 4" to 6" to comply with THE OLDER ROAD-USER PROGRAM, Specifications change for spacing of Delineators.
17346	1 of 8	Striping changed from 4" to 6" to comply with THE OLDER ROAD-USER PROGRAM, PLACEMENT OF EDGE LINES detail revised; Arrow details revised under PAVEMENT ARROW AND MESSAGE DETAILS.
17346	2 of 8	Striping changed from 4" to 6" to comply with THE OLDER ROAD-USER PROGRAM.
17346	3 of 8	Striping changed from 4" to 6" to comply with THE OLDER ROAD-USER PROGRAM.
17346	4 of 8	Striping changed from 4" to 6" to comply with THE OLDER ROAD-USER PROGRAM, note deleted under FIGURE 1.
17346	5 of 8	Striping changed from 4" to 6" to comply with THE OLDER ROAD-USER PROGRAM.
17346	6 of 8	Striping changed from 4" to 6" to comply with THE OLDER ROAD-USER PROGRAM.
17346	7 of 8	Striping changed from 4" to 6" to comply with THE OLDER ROAD-USER PROGRAM, General Note 4 added.
17349	1 of 1	Updated notes and Modified Mounting.
17351	1 of 2	"C" arrow deleted from FTP 18, "A" arrow deleted from FTP 20.
17351	2 of 2	"A" arrow deleted from FTP 24.
17352	1 of 2	Note 5 added, dimensions of Alternating Skip Line and Skip Line details revised, note 1 revised.
17352	2 of 2	Striping changed from 4" to 6" to comply with THE OLDER ROAD-USER PROGRAM.
17353	1 of 1	Details rearranged to separate the Energite System from the Great System.
17355	1 of 4	Arrow notation deleted from FTP 31 notes revised.
17355	2 of 4	Deleted MOT 1, MOT 2, and MOT 3 added, RIGHT TURN ONLY and LEFT TURN ONLY details and note, revise dimensions on FTP 26.
17355	3 of 4	Revised arrow detail, relocate title for FTP 27, revise notes.
17355	4 of 4	Revise dimensions on details.
17356	1 of 2	New sheet (Single Point Attachment).
17356	2 of 2	Revised notes, changed to sheet 2 of 2 (Two Point Attachment).
17358	1 of 1	Striping changed from 4" to 6" to comply with THE OLDER ROAD-USER PROGRAM.
17359	1 of 1	Striping changed from 4" to 6" to comply with THE OLDER ROAD-USER PROGRAM.
17500	1 of 1	Revise Concrete Pole Wiring Detail conduit routing and notes.
17501	1 of 1	Revise note 22 and Breakaway Feature note.
17502	2 of 3	Revise notes.
17502	3 of 3	Cap screw changed to bolt on details, NCZ changed to NC on details, grout and note added.
17503	1 of 1	Pull Box Detail and notes deleted, conduit routing in pull box wiring detail changed. Conduit length changed to conduit depth on Metal Pole Concrete Foundation Detail.
17504	1 of 1	35' pole length changed to 36,' out of ground dimension changed from 28' to 29'.
17505	1 of 2	Note added.
17506	1 of 1	Index deleted.
17721	2 of 2	Section B 630-3.4 sealing of conduit ends note revised.
17727	1 of 2	New sheet (Single Point Attachment).
17727	2 of 2	Revised notes, changed to sheet 2 of 2 (Two Point Attachment).
17736	1 of 1	Note 2 added.
17784	2 of 2	Note added, dimensions changed on FTP 49.
17841	1 of 1	Note added to Metal Pole detail.
17870	2 of 2	SOP 20 added to sheet.
17882	1 of 4	Note added under Figure 1.
17882	3 of 4	Striping changed from 4" to 6" to comply with THE OLDER ROAD-USER PROGRAM.

TABLE OF CONTENTS
TRAFFIC DESIGN STANDARDS

SIGNING AND MARKINGS

9535	Standard Roadside Sign Break Away Post & Panel Detail (4 Sheets)
11037	Overhead Sign Structures, Details Of Sign Faces & Truss Connection
11860	Type "C" Single Column Ground Signs (Sign Profile & Identification Numbers) (2 Sheets)
11861	Single Column Ground Signs (60 MPH) (Columns Size, Column Height & Column Footings)
11862	Single Column Ground Signs (70 MPH) (Column Size, Column Height & Column Footings)
11863	Single Column Ground Signs (80 MPH) (Column Size, Column Height & Column Footings)
11864	Single Column Ground Signs (90 MPH) (Column Size, Column Height & Column Footings)
11865	Single Column Ground Signs (ALL WIND ZONES) (Column Size, Column Height & Column Footings)
13417	Details For Mounting Exit Numbering Panels To Highway Signs
17302	Typical sections For Single Column Sign Placement
17328	Signing For Truck Weighing & Inspection Station (3 Sheets)
17344	School Signing & Markings (6 Sheets)
17345	Interchange Markings (4 Sheets)
17346	Special Marking Areas (8 Sheets)
17349	Traffic Control For Street Terminations
17350 A	Signing For Motorist Services
17351	Typical Welcome Center Signing (2 Sheets)
17352	Typical Placement Of Reflective Pavement Markers (2 Sheets)
17353	Markings For Attenuation Systems
17355	Special Sign Details (4 Sheets)
17356	Span Wire Mounting Details (2 Sheets)
17357	Bridge Weight Restrictions
17358	Parking Restrictions
17359	Narrow Bridge Treatment

ROADWAY LIGHTING

17500	Conventional Pole Details
17501	General Notes
17502	Highmast Lighting Details (3 Sheets)
17503	Roadway Lighting Details
17504	Service Point Details
17505	External Lighting For Signs (2 Sheets)

TRAFFIC SIGNAL AND EQUIPMENT

17721	Conduit Installation Details (2 Sheets)
17727	Signal Cable And Span Wire Installation Details (2 Sheets)
17733	Aerial Interconnect
17736	Electric Power Service
17764	Pedestrian Control Signals Installation Details
17781	Vehicle Loop Installation Details (2 Sheets)
17784	Pedestrian Detector Assembly Installation Details (2 Sheets)
17841	Cabinet Installation Details
17870	Standard Signal Operating Plans (2 Sheets)
17881	Advance Warning For R/R Crossing
17882	Railroad Grade Crossing Traffic Control Devices (4 Sheets)
17890	Traffic Control Devices For Movable Span Bridge Signals (3 Sheets)

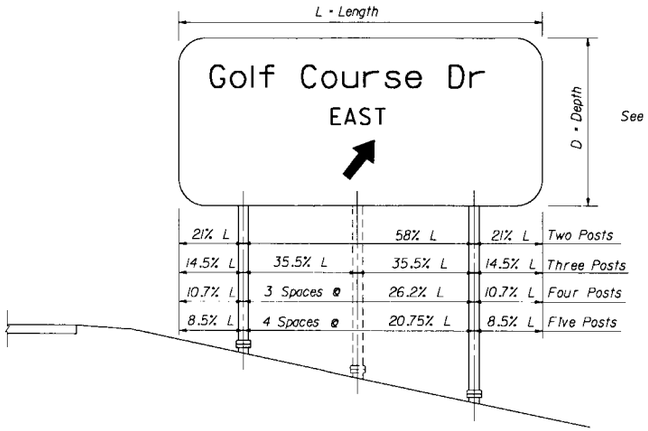

TYPICAL ELEVATION

(For Notes And Dimensions Not Shown, See Plans)

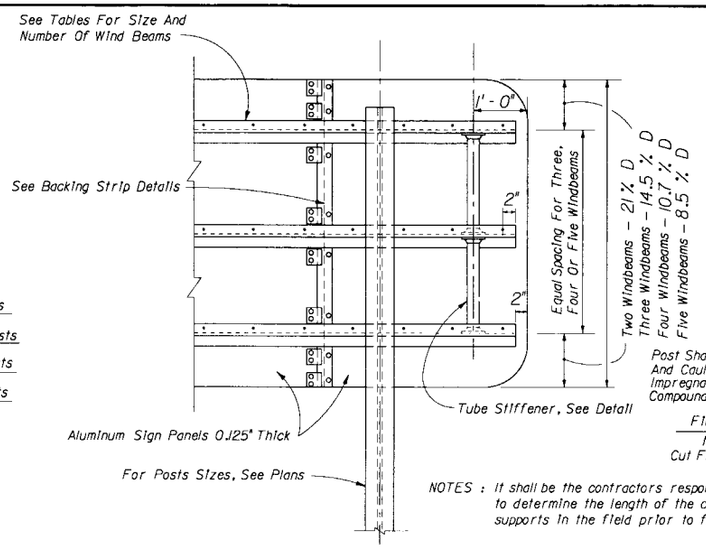

NOTES : It shall be the contractors responsibility to determine the length of the column supports in the field prior to fabrication.

PARTIAL REAR ELEVATION

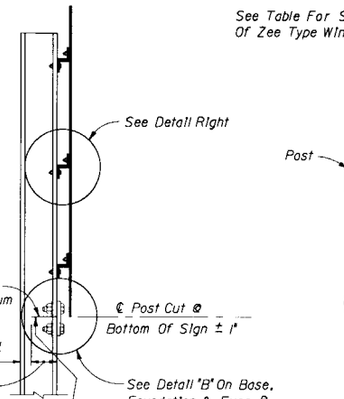

SIDE VIEW

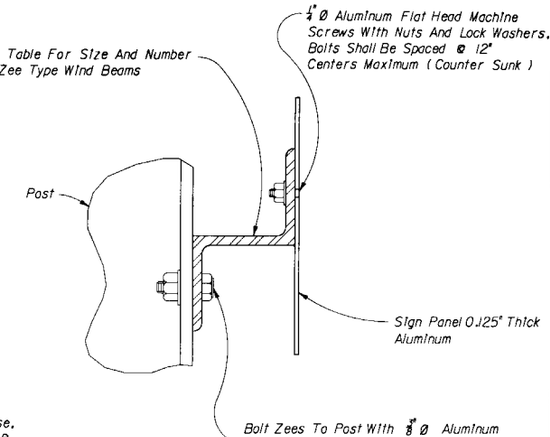

Z TYPE WIND BEAM

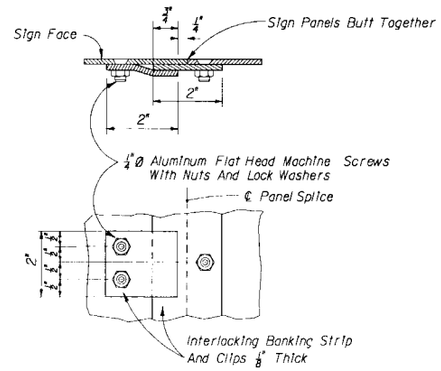

BACKING STRIP DETAIL

(Maximum Spacing Of Clips 12")

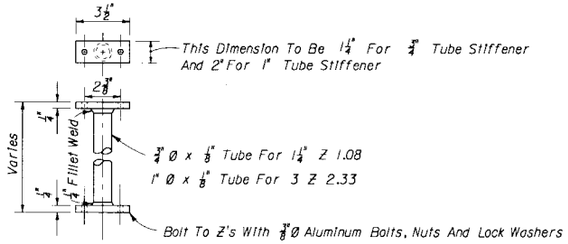

STIFFENER DETAIL

GENERAL NOTES

DESIGN SPECIFICATION: Standard specification for structural supports for highway signs, luminaries and traffic signals. A.A.S.H.O. Latest edition.

SHEET AND PLATES: Material used shall meet the requirements of Aluminum Association Alloy 6061-T6 and A.S.T.M. Specification B-209. Sheets are to be degreased, etched, neutralized and treated with Alodine 1200, Iridite 14-2, Bondrite 721, or equal. No stenciling permitted on sheets.

MATERIALS: All aluminum materials shall meet the requirements of the Aluminum Association Alloy 6061-T6 and also the following A.S.T.M. Specifications for the following: Sheets and Plates B209; Extruded Tube, Bars, Rods & Shapes B221 and Standard Structural Shapes B308.

WELDING RODS: Aluminum Association Alloy No. 5556 Filler Wire.

TOLERANCE: All above materials shall be keeping with the A.S.T.M. Specifications governing.

STEEL BOLTS, NUTS & WASHERS: All steel bolts, nuts and washers shall meet the requirements of the ASTM A235 and shall have an electroplated zinc coating type LS applied in accordance with Standard Specifications 962-7.

ALTERNATE MATERIAL: Material used for sheet and plate shall also meet the requirements of Aluminum Assoc. Alloy 5154-H38 and A.S.T.M. Specifications B209. Material used for Extruded Bars, Rods, Shapes and Tubes shall also meet the requirements of Aluminum Assoc. Alloy 6351-T5 and A.S.T.M. Specification B221.

BASE CONNECTION: High Strength Bolts in the base connection shall be tightened only to the torque shown in the table. Overtightened base connections will not be accepted.

ALUMINUM BOLTS, NUTS & LOCKWASHERS: Aluminum bolts shall meet the requirements of Aluminum Association Alloy 2024-T4 Or 6061-T6 (A.S.T.M. Spec. B-211). The bolts shall have an Anodic Coating of at least 0.0002" thick and be Chromate Sealed Lock Washers shall Meet the requirements of Aluminum Association Alloy 7075-T6 (A.S.T.M. Specification B-221). Nuts shall meet the requirements of Aluminum Association Alloy 6262-T9 Or 6061-T6.

SIGN FACE: All sign face corners shall be rounded. See Sign Layout Sheet.

MATERIAL STRESSES: All allowable stresses are in accordance with the standard specifications for structural supports for highway signs, luminaires and traffic signals. A.A.S.H.O. Latest edition for all materials shown in the plans.

DESIGN WIND LOAD: See Wind Loading Chart By Zones for wind in miles per hour on flat sign area. The allowable working stress shall be increased by 40% for combination dead load and wind load.

SHOP DRAWINGS: When ground signs supports are fabricated in accordance with these plans no shop drawings are required. In the event the column length exceeds 2ft. above the length as shown in the plans, shop drawings will be required for those signs only for approval. However, shop drawings for sign panels, messages, lettering and quantities shall be submitted to traffic plans for approval.

FABRICATOR NOTE IMPORTANT

All Stiffened Base Plate Flanges and Fuse Plates shall be bolted to posts using high strength bolts. Bolts shall be tightened in the shop following a method approved by the engineer. Tightening shall be to such a degree so as to obtain the following minimum residual tension in each bolt:

HIGH STRENGTH BOLTS (A-325) MINIMUM RESIDUAL TENSION	
BOLT SIZE	TENSION
5/8"	19,200 Lbs.
3/4"	28,400 Lbs.
7/8"	36,050 Lbs.
1"	47,250 Lbs.
1 1/8"	56,450 Lbs.
1 1/4"	71,700 Lbs.

NUMBER OF WIND BEAMS FOR GIVEN DEPTH & WIND					
WIND	NO. BEAMS	MAX DEPTH	WIND	NO. BEAMS	MAX DEPTH
60	2	10' - 3"	80	2	8' - 3"
60	3	14' - 9"	80	3	11' - 9"
60	4	20' - 0"	80	4	15' - 9"
60	5	25' - 3"	80	5	20' - 0"
70	2	9' - 0"	90	2	7' - 3"
70	3	13' - 0"	90	3	10' - 6"
70	4	17' - 6"	90	4	14' - 3"
70	5	22' - 3"	90	5	18' - 0"

SIZE OF WIND BEAMS				
SIZE OF ZEE	LENGTH OF SIGN FOR 2 POSTS	LENGTH OF SIGN FOR 3 POSTS	LENGTH OF SIGN FOR 4 POSTS	LENGTH OF SIGN FOR 5 POSTS
1 3/4" Z 1.08	0' - 14' - 0"	14' - 1" - 20' - 0"	20' - 1" - 27' - 0"	27' - 1" - 35' - 0"
3 Z 2.33	14' - 1" - 27' - 0"	20' - 1" - 38' - 0"	27' - 1" - 51' - 6"	35' - 1" - 65' - 0"
3 Z 3.38	OVER 27' - 0"	OVER 38' - 0"	OVER 51' - 6"	OVER 65' - 0"

WIND LOADING CHART BY ZONES

The Following Values For Various Sections Of The Interstate Are In general Agreement With The Isotach Map And Are Appropriate For Use In The Design Of Sign Structures.

ZONE NO. 1
(60 m.p.h.)

Alachua, Bradford, Baker, Bay, Calhoun, Clay, Columbia, Escambia, Gadsden, Gilchrist, Hamilton, Holmes, Jackson, Jefferson, Lafayette, Lake, Leon, Liberty, Madison, Marion, Okaloosa, Putnam, Santa Rosa, Sumter, Suwannee, Union, Walton And Washington Counties.

ZONE NO. 2
(70 m.p.h.)

Citrus, Desoto, Dixie, Duval, Flagler, Franklin, Glades, Gulf, Hardee, Hendry, Hernando, Highlands, Hillsborough, Levy, Nassau, Okeechobee, Orange, Osceola, Pasco, Pinellas, Polk, Seminole, St. Johns, Taylor And Wakulla Counties.

ZONE NO. 3
(80 m.p.h.)

Brevard, Charlotte, Collier, Indian River, Lee, Manatee, Martin, Palm Beach, Sarasota, St. Lucie And Volusia Counties.

ZONE NO. 4
(90 m.p.h.)

Broward, Dade And Monroe Counties.

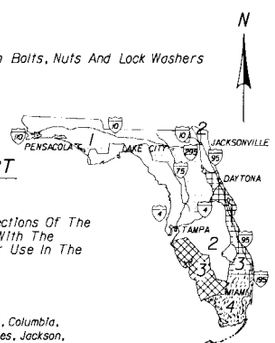

ALUMINUM

STATE OF FLORIDA DEPARTMENT OF TRANSPORTATION
STRUCTURES DESIGN

STANDARD ROADSIDE SIGN BREAK-AWAY PANEL DETAIL

	Names	Dates
Designed By	HHJ	01/67
Drawn By		
Checked By	CWB	01/67

Approved By

Revision No. | Sheet No. 1 of 4 | Index No. 9535

F.H.W.A. Approved:

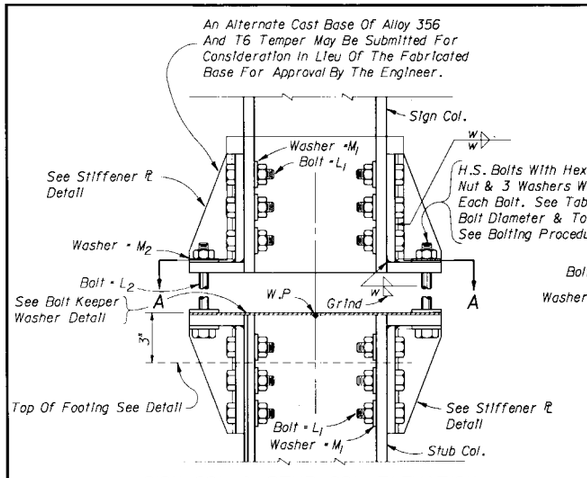

SIGN COL. & STUB COL. ELEVATION
WF SHAPES

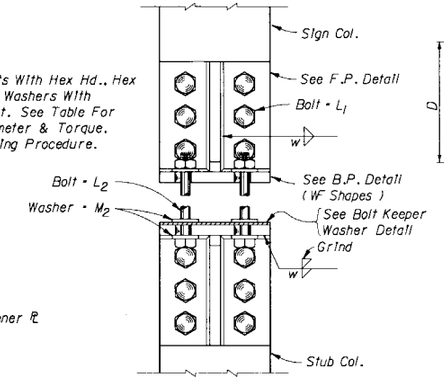

SIGN COL & STUB COL.
SIDE ELEVATION

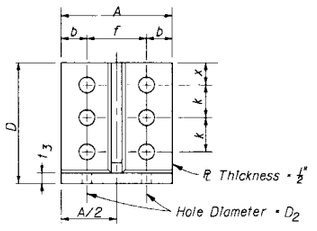

FLANGE PLATE DETAIL

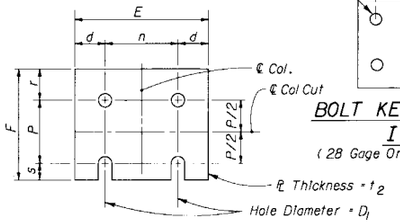

FUSE PLATE DETAIL

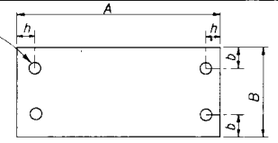

BOLT KEEPER WASHER DETAIL
I-BEAM SHAPES
(28 Gage Or .0149" Thick Aluminum 6061-T6)

NOTE: Sections shown are for installation on right shoulder and in gore. Plate slot bevels are opposite hand from that shown for installations in the median.

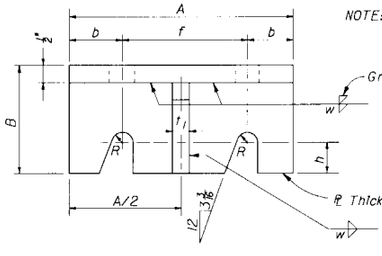

BASE PLATE DETAIL
FOR WF SHAPES

NOTE: Two Separate Beams Are Indicated As Required For Alternate Detail. For The Typical Detail A Sawcut Is Required. Extent Of This Sawcut Is Shown On The Side View Detail On Sheet 1 Of 4, Index No. 9535

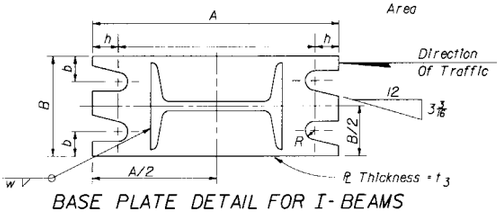

BASE PLATE DETAIL FOR I-BEAMS

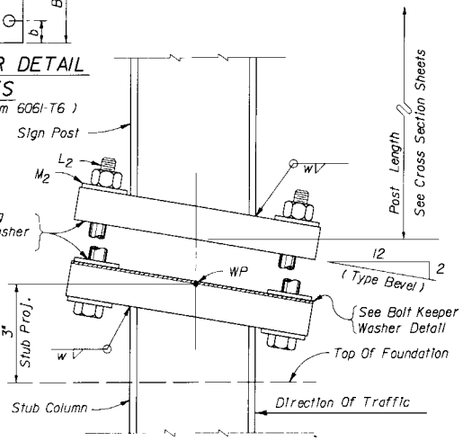

SIGN COL. & STUB COL. ELEVATION
I-BEAM SHAPES

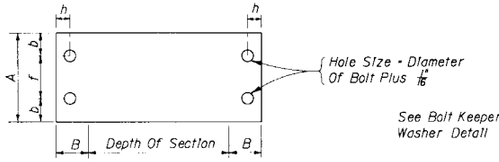

BOLT KEEPER WASHER DETAIL
WF SHAPES
(20 Gage Or .040" Thick Aluminum 6061-T6)

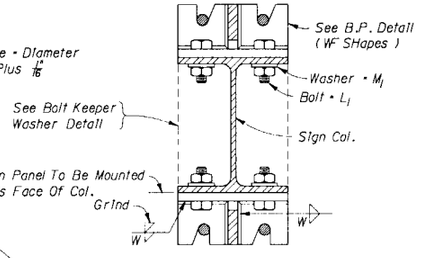

SECTION AA

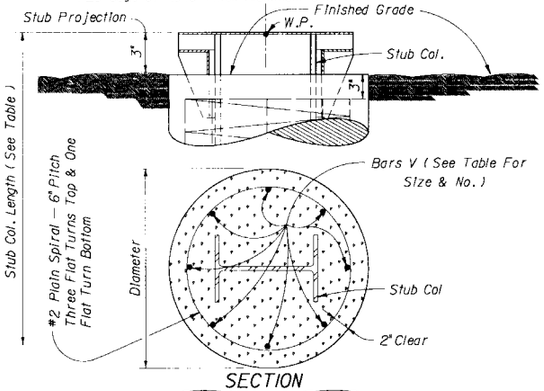

SECTION

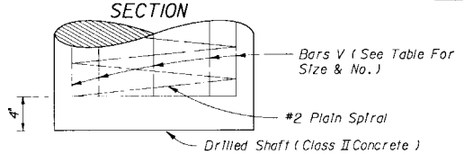

FOUNDATION DETAIL

NOTE: To prevent galvanic corrosion, reinforcing steel shall not be in contact with the aluminum stud column.

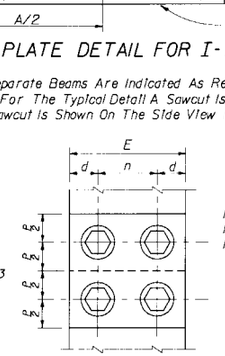

HINGE PLATE DETAIL

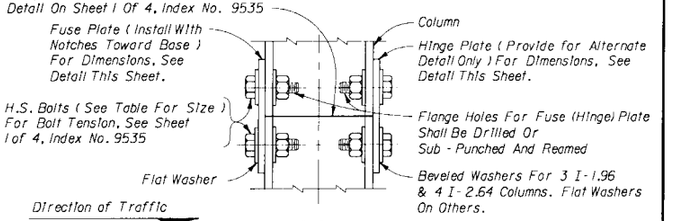

DETAIL "B" FUSE & HINGE PLATE
(See Fabricator Note On Sheet Drawing No. 3 of 4 Index No. 9535)

BASE CONNECTION DATA TABLE																				FUSE (HINGE) PLATE DATA TABLE									FOUNDATION DATA TABLE			
DIMENSION / SECTION	A	B	C	D	J	L	BOLT SIZE & TORQUE(L_2)	M_1	M_2	D_2	R	x	b	f	h	k	t_1	t_3	w	BOLT SIZE	E	P	D_1	d	n	r	s	t_2	DIA.	DEPTH	STUB LENGTH	REINFORCING BARS "V"
3 I 1.96	7½"	3"						1½"		1"		¾"		⅝"			1"	¼"	⅝"	3"		½"	1/16"	¾"	1½"	¾"	⅜"	⅜"	1'-6"	1'-6"	1'-6"	8 - #4
4 I 2.64	7½"	3"						1½"		1"		¾"		⅝"			1"	¼"	⅝"	3"		½"	1/16"	¾"	1½"	¾"	⅜"	⅜"	1'-6"	1'-6"	1'-6"	8 - #4
6 WF 4.16	4"	3½"	5"	5⅝"	2½"	⅝" Ø	⅝" Ø - 345" #	1½"	1½"	1/16"	½"	1"	¾"	2½"	⅝"	1½"	½"	⅝"	⅝"	⅝"	4"	½"	1/16"	¾"	2½"	1"	⅜"	⅜"	2'-0"	2'-3"	2'-0"	8 - #4
8 WF 5.90	5½"	3½"	5"	5⅝"	2½"	⅝" Ø		1½"	1½"	1/16"	½"	1"	1¼"	2½"	⅝"	1½"	½"	⅝"	⅝"	⅝"	5½"	½"	1/16"	1½"	2½"	1⅛"	½"	½"	2'-0"	3'-3"	2'-6"	8 - #5
8 WF 8.32	6½"	3½"	6½"	7⅛"	2½"	⅞" Ø		1½"	1½"	1/16"	½"	1½"	1½"	3½"	⅞"	2"	½"	⅝"	⅝"	⅝"	6½"	⅝"	1/16"	1½"	3½"	1½"	⅝"	⅝"	2'-0"	4'-6"	2'-6"	8 - #7
10 WF 11.41	8"	3½"	8"	8⅝"	2½"	⅞" Ø	⅞" Ø - 554" #	2"	1½"	1/16"	½"	1½"	2½"	3½"	⅞"	2½"	½"	⅝"	⅝"	⅝"	7"	⅝"	1/16"	1½"	3½"	1½"	⅝"	⅝"	2'-0"	6'-3"	3'-0"	8 - #10
12 WF 13.84	8"	3½"	8½"	9½"	3"	1" Ø		2½"	1½"	1/16"	½"	1½"	4½"	3½"	1"	2½"	½"	⅝"	⅝"	⅝"	8"	⅝"	1/16"	1½"	4½"	1½"	⅝"	⅝"	2'-0"	8'-0"	3'-6"	9 - #11
12 WF 18.34	10"	3⅝"	10"	10¾"	3⅝"	1" Ø	⅞" Ø - 640" #	2½"	2"	1/16"	½"	1½"	5½"	4"	1"	3¼"	½"	⅝"	⅝"	⅝"	9"	¼"	1/16"	1½"	5½"	1⅝"	⅝"	⅝"	2'-0"	10'-9"	4'-0"	15 - #11

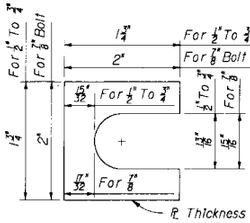

SHIM DETAIL

Furnish 2 — .012" ± Thick And 2 — .032" ± Thick Shims Per Post

PROCEDURE FOR ASSEMBLY OF BASE CONNECTION: FOR BOLTS L_2

1. Assemble post to stub with bolts and with one flat washer on each bolt between plates.
2. Shim as required to plumb post (See Shim Detail).
3. Tighten all bolts the maximum possible with 12" to 15" wrench to bed washers and shims and to clean bolt threads then loosen each bolt in turn and retighten in a Systematic order to the prescribed torque (See Table).
4. Burr threads at junction with nut using a center punch to prevent nut loosening.

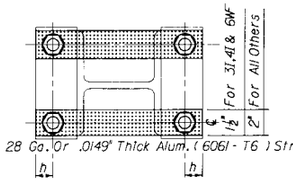

ALTERNATE BOLT KEEPER WASHER DETAIL FOR I-BEAM AND WF SHAPES

ALUMINUM — BASE, FOUNDATION & FUSE ℄ DETAILS

STATE OF FLORIDA DEPARTMENT OF TRANSPORTATION
STRUCTURES DESIGN

STANDARD ROADSIDE SIGN BREAK-AWAY POST DETAILS

	Names	Dates
Designed By		
Drawn By	H.H.J.	01/97
Checked By	C.W.B.	01/97
F.H.W.A. Approved:		

Approved By

Revision No.

Sheet No. 2 of 4

Index No. 9535

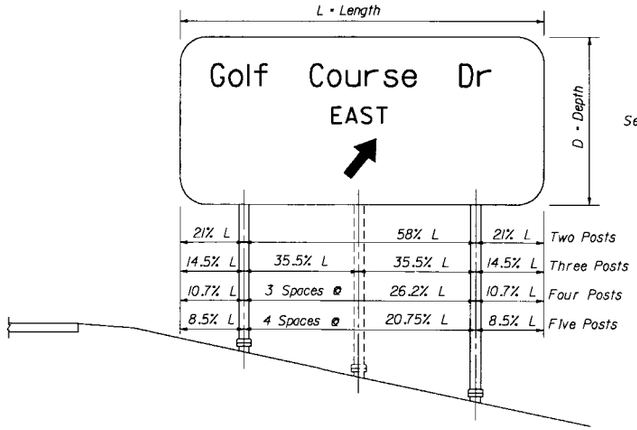

TYPICAL ELEVATION
(For Notes And Dimensions Not Shown, See Plans)

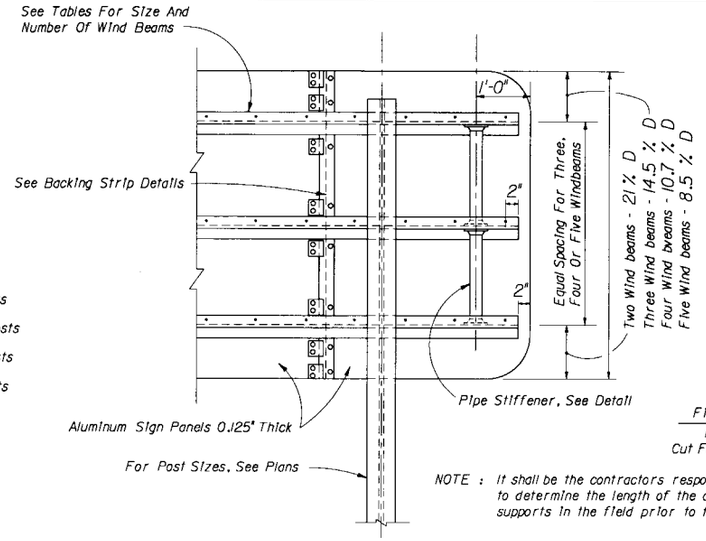

NOTE : It shall be the contractors responsibility to determine the length of the column supports in the field prior to fabrication.

PARTIAL REAR ELEVATION

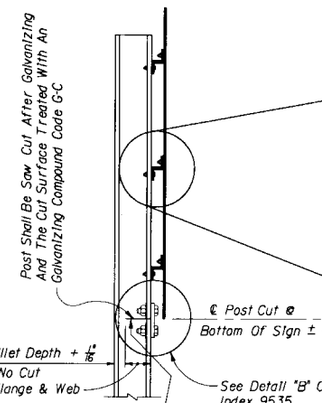

NOTE: As an alternate to this saw cut the contractor may fabricate the column from two pieces providing at this location the fuse plate and the additional hinge plate detailed on sheet 4 of 4.

SIDE VIEW

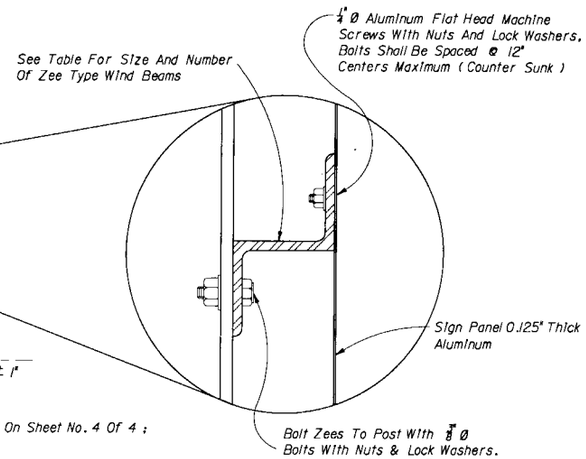

Z TYPE WIND BEAM

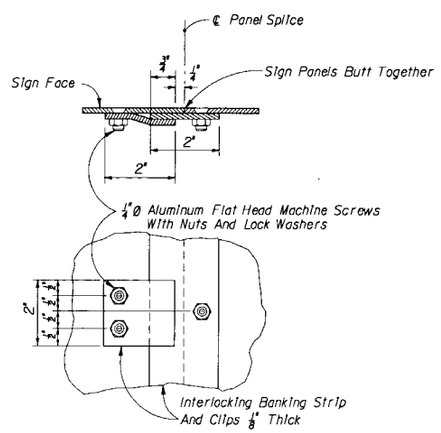

BACKING STRIP DETAIL
(Maximum Spacing Of Clips 12")

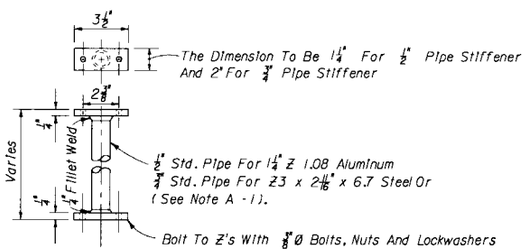

STIFFENER DETAIL

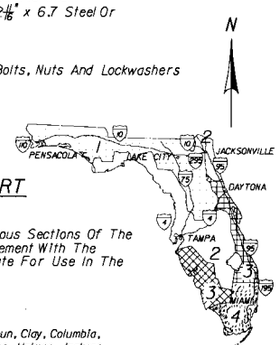

WIND LOADING CHART BY ZONES

The Following Values For Various Sections Of The Interstate Are In General Agreement With The Isotach Map And Are Appropriate For Use In The Design Of Sign Structures.

ZONE NO. 1
(60 m.p.h.)
Alachua, Bradford, Baker, Bay, Calhoun, Clay, Columbia, Escambia, Gadsden, Gilchrist, Hamilton, Holmes, Jackson, Jefferson, Lafayette, Lake, Leon, Liberty, Madison, Marion, Okaloosa, Putnam, Santa Rosa, Sumter, Suwannee, Union, Walton And Washington Counties.

ZONE NO. 2
(70 m.p.h.)
Citrus, Desoto, Dixie, Duval, Flagler, Franklin, Glades, Gulf, Hardee, Hendry, Hernando, Highlands, Hillsborough, Levy, Nassau, Okeechobee, Orange, Osceola, Pasco, Pinellas, Polk, Seminole, St. Johns, Taylor And Wakulla Counties.

ZONE NO. 3
(80 m.p.h.)
Brevard, Charlotte, Collier, Indian River, Lee, Manatee, Martin, Palm Beach, Sarasota, St. Lucie And Volusia Counties.

ZONE NO. 4
(90 m.p.h.)
Broward, Dade And Monroe Counties.

GENERAL NOTES

DESIGN SPECIFICATION: Standard specification for structural supports for highway signs, luminaries and traffic signals. A.A.S.H.O. latest edition - Welding - latest edition of A.W.S. structural welding code, latest A.A.S.H.T.O. standard specifications for welding of structural steel highway bridges and F.L.A. D.O.T. standard specifications with supplement.

DESIGN LOADS: See wind loading chart by zones for wind in miles per hour on flat sign area. The allowable working stress shall be increased by 40% for combination dead load and wind load.

STRUCTURAL STEEL: All structural steel shall meet the requirements of A.S.T.M. A-36

STEEL BOLTS, NUTS AND LOCK WASHERS: Steel bolts, nuts and lock washers shall meet the following A.S.T.M. requirements ; high strength bolts, nuts and washers A.S.T.M. A-325 ; all other steel bolts, nuts and washers, A.S.T.M. A-307.

GALVANIZING OR METALIZING: All steel shapes, angles, tees, plates, A.S.T.M. A307 bolts, nuts and washers shall be hot dip galvanized or metalized after fabrication, hot dip galvanizing shall be in accordance with the requirements of A.S.T.M. A-123 and/or A-153.

SIGN PANELS: The material used shall meet the requirements of the Aluminum Association Alloy, 6061-T6 and A.S.T.M. Specification B209. The sheets are to degreased, etched, neutralized and treated with alodine 1200, iridite 14-2, bonderite 721, or equal. No stenciling permitted on sheets.

ALUMINUM BOLTS, NUTS & LOCKWASHERS: Aluminum bolts shall meet the requirements of Aluminum Association Alloy 2024-T4 Or 6061-T6 (A.S.T.M. Spec. B-211). The bolts shall have an Anodic Coating of at least 0.0002" thick and be Chromate Sealed Lock Washers shall meet the requirements of Aluminum Association Alloy 7075-T6 (A.S.T.M. Specification B-221). Nuts shall meet the requirements of Aluminum Association Alloy 6262-T9 Or 6061-T6.

TOLERANCE: All above materials shall be keeping with the A.S.T.M. Specifications governing.

MATERIAL STRESSES: All allowable stresses are in accordance with the standard specifications for structural supports for highway signs, luminaires and traffic signals. A.A.S.H.O. latest edition for all materials shown in the plans.

SHOP DRAWINGS: See shop drawing note sheet 1 of 4, 9535.

BASE CONNECTION: High Strength Bolts in the base connection shall be tightened only to the torque shown in the table. Overtightened base connections will not be accepted.

FRICTION FUSE PLATE: Notched steel fuse plates shall conform to the requirements of A.S.T.M. Specification A-36. All holes shall be drilled. All plate cuts shall, preferably, be saw cuts; however, flame cutting will be permitted provided all edges are ground. Metal projecting beyond the plane of the plate face will not be tolerated.

SIGN FACE: All sign face corners shall be rounded. See sign layout sheet.

ALUMINUM MATERIALS: All aluminum materials other than bolts, nuts and lock washers shall meet the requirements of the Aluminum Association Alloy 6061-T6 and also the following A.S.T.M. specifications for the following; Sheet and Plates B209; Extruded Tube, Bars, Rod and Shapes B221 and Standard Structural Shapes B308.

HIGH STRENGTH BOLTS : (A.S.T.M. A325) Shall have an electroplated zinc coating type LS applied in accordance with Standard Specifications 962-7.

FABRICATOR NOTE: IMPORTANT
All friction type bolts shall be tightened in the shop following a method approved by the engineer. Tightening shall be to such a degree as to obtain the following minimum residual tension in each bolt, (see table below).

NOTE A-i At the contractors option, aluminum zees and stiffener may be used in lieu of structural steel zees and stiffeners. See drawing No. 1 of 4, Index No. 9535 for aluminum zee and stiffener.

NUMBER OF WIND BEAMS FOR GIVEN DEPTH & WIND					
WIND	NO. BEAMS	MAX DEPTH	WIND	NO. BEAMS	MAX DEPTH
60	2	10' - 3"	80	2	8' - 3"
60	3	14' - 9"	80	3	11' - 9"
60	4	20' - 0"	80	4	15' - 9"
60	5	25' - 3"	80	5	20' - 0"
70	2	9' - 0"	90	2	7' - 3"
70	3	13' - 0"	90	3	10' - 6"
70	4	17' - 6"	90	4	14' - 3"
70	5	22' - 3"	90	5	18' - 0"

* NOTE: Aluminum Zee - No steel equivalent available.

SIZE OF WIND BEAMS				
SIZE OF ZEE	LENGTH OF SIGN FOR 2 POSTS	LENGTH OF SIGN FOR 3 POSTS	LENGTH OF SIGN FOR 4 POSTS	LENGTH OF SIGN FOR 5 POSTS
* 1 3/4" Z 1.08	0' - 14' - 0"	14' - 1" - 20' - 0"	20' - 1" - 27' - 0"	27' - 1" - 35' - 0"
Z 3 x 2 11/16" x 6.7	14' - 1" - 27' - 0"	20' - 1" - 38' - 0"	27' - 1" - 51' - 6"	35' - 1" - 65' - 0"
Z 3 x 2 11/16" x 9.8	OVER 27' - 0"	OVER 38' - 0"	OVER 51' - 6"	OVER 65' - 0"

HIGH STRENGTH BOLTS (A-325) MINIMUM RESIDUAL TENSION

BOLT SIZE	TENSION
5/8"	19,200 Lbs.
3/4"	28,400 Lbs.
1"	47,250 Lbs.
1 1/8"	56,450 Lbs.
1 1/4"	71,700 Lbs.
1 3/8"	85,450 Lbs.

STEEL

STATE OF FLORIDA DEPARTMENT OF TRANSPORTATION
STRUCTURES DESIGN

STANDARD ROADSIDE SIGN BREAK-AWAY PANEL DETAIL

	Names	Dates
Designed By	HHJ	01/67
Drawn By		
Checked By	CWB	01/67
F.H.W.A. Approved:		

Approved By

Revision No. | Sheet No. 3 of 4 | Index No. 9535

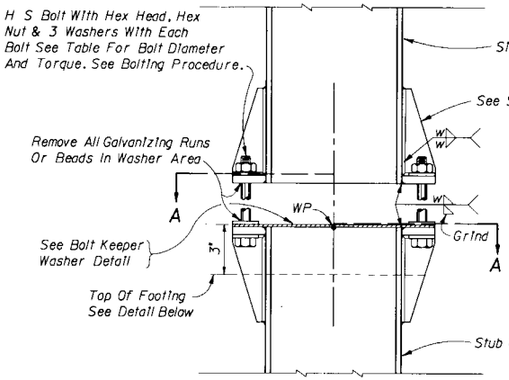

SIGN COL & STUB COL ELEVATION
WF SHAPES

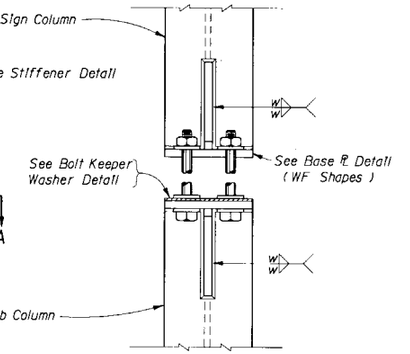

SIGN COL & STUB COL ELEVATION
WF SHAPES

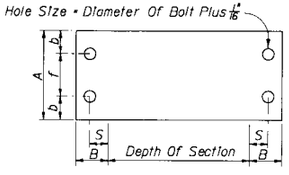

BOLT KEEPER WASHER DETAIL
(20 Gage Or .040" Thick Aluminum 6061 - T6)

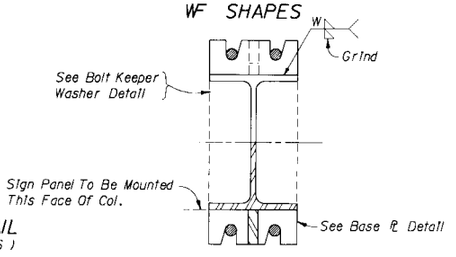

SECTION AA

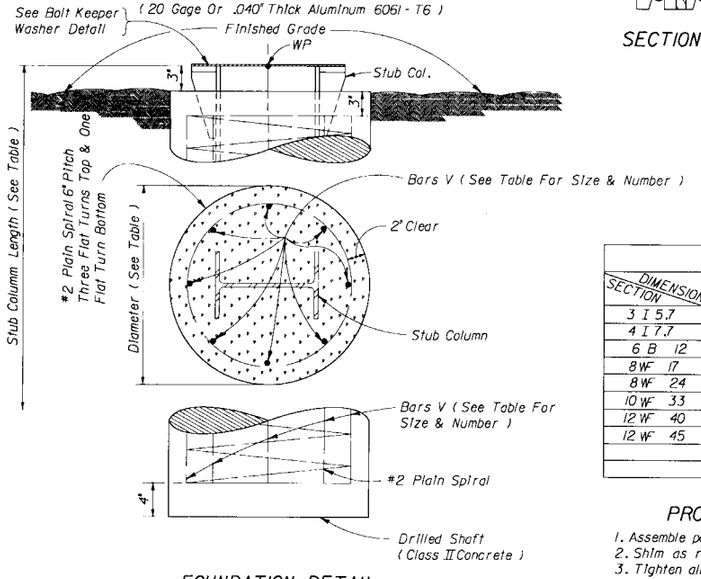

FOUNDATION DETAIL

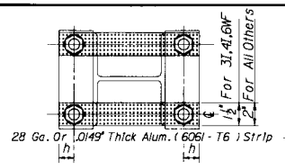

ALTERNATE BOLT KEEPER WASHER
DETAIL FOR I-BEAM AND WF SHAPES

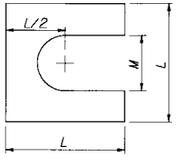

SHIM DETAIL

Furnish 2 — .012"± Thick &
2 — .032"± Thick Shims Per Column

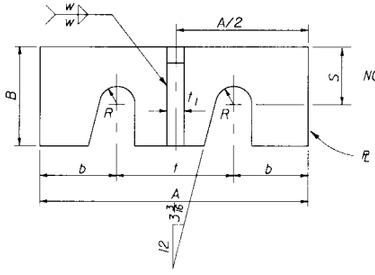

BASE PLATE DETAIL
WF SHAPES

NOTE:
Sections shown are for installation on right shoulder and in gore.
Plate slot bevels are opposite hand from that shown for installations in the median.

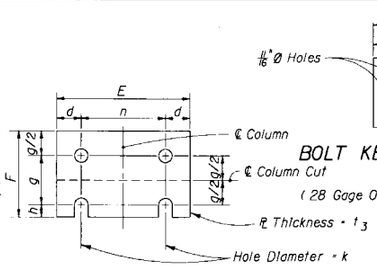

FUSE PLATE DETAIL

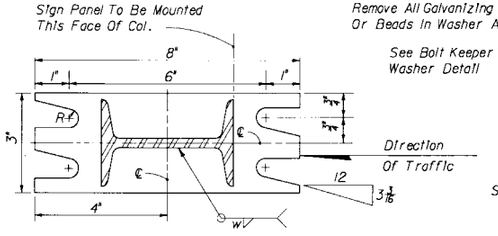

BASE PLATE I BEAMS

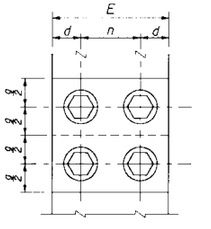

HINGE PLATE DETAIL

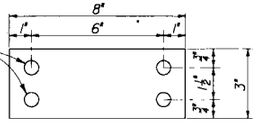

BOLT KEEPER WASHER DETAIL
I-BEAM SHAPES
(28 Gage Or .0149" Thick Aluminum 6061 - T6)

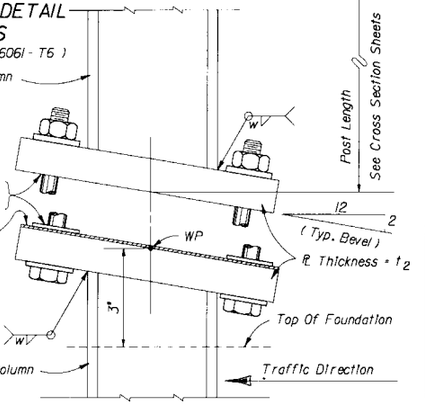

SIGN COL & STUB COL ELEVATION
I-BEAM SHAPES

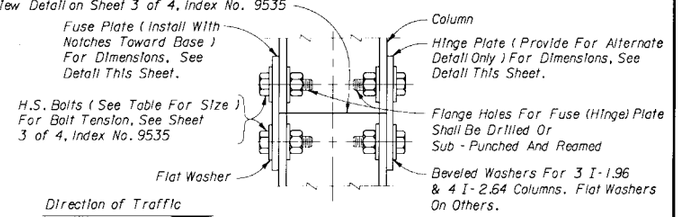

DETAIL "B" FUSE & HINGE PLATE
(See Fabricator Note On Sheet Drawing No. 3 of 4 Index No. 9535)

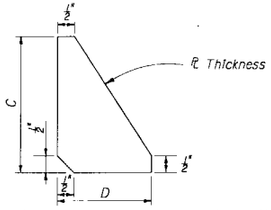

STIFFENER PLATE DETAIL

DIMENSION / SECTION	A	B	C	D	Bolt Size & Torque	R	b	f	s	t_1	t_2	W	E	n	d	g	h	k	t_3	Bolt Size	Dia.	Depth	Stub Length	Reinf. Bars V	L	M
3 I 5.7					3/4" — 345*	11/32"					1"	1/4"	3"	1 1/2"	3/4"	2 1/4"	3/4"	11/16"	1/2"	7/8"	1'-6"	1'-6"	1'-6"	8 — #4	1 3/8"	11/16"
4 I 7.7					3/4" — 345*	11/32"					1"	1/4"	3 5/8"	1 7/8"	3/4"	2 1/4"	3/4"	11/16"	1/2"	7/8"	1'-6"	2'-0"	2'-0"	8 — #4	1 3/8"	11/16"
6 B 12	4"	2"	4"	2"	3/4" — 345*#	11/32"	3/4"	2 1/2"	1 3/8"	1/2"	1/2"	1/4"	4"	2 1/4"	7/8"	2 1/4"	3/4"	11/16"	1/2"	7/8"	2'-0"	2'-9"	2'-3"	8 — #5	1 3/8"	11/16"
8 WF 17	5 1/4"	2"	5 1/4"	2"	3/4" — 345*#	11/32"	1 1/4"	2 1/2"	1 1/2"	1/2"	1/2"	1/4"	5 1/2"	2 3/8"	1 1/4"	2 1/8"	7/8"	13/16"	1/2"	7/8"	2'-0"	4'-0"	2'-9"	8 — #7	1 3/4"	15/16"
8 WF 24	6 1/2"	2 1/4"	6 1/2"	2 1/4"	7/8" — 554*#	11/32"	1 5/8"	3 1/2"	1 7/8"	1/2"	5/8"	5/16"	6 1/2"	3 1/2"	1 1/2"	3 1/2"	1 1/8"	1 1/16"	5/8"	1"	2'-0"	5'-6"	3'-3"	8 — #9	1 3/4"	1 13/16"
10 WF 33	8"	2 1/2"	8"	2 1/2"	1" — 640* #	11/32"	1 3/4"	5 1/2"	1 1/2"	1/2"	3/4"	5/16"	8"	4 1/2"	1 1/2"	4"	1 1/4"	1 1/16"	5/8"	1 1/8"	2'-0"	7'-9"	3'-9"	9 — #11	2"	1 13/16"
12 WF 40	8"	2 1/2"	8"	2 1/2"	1" — 735* #	11/32"	1 3/4"	5 1/2"	1 7/8"	1/2"	3/4"	5/16"	8"	4"	2"	4 1/2"	1 3/8"	1 1/16"	3/4"	1 1/4"	2'-0"	10'-0"	4'-6"	14 — #11	2 1/4"	1 1/16"
12 WF 45	8"	3"	8"	3"	1" — 735* #	11/32"	1 3/4"	5 1/2"	1 7/8"	1/2"	3/4"	5/16"	8"	4"	2"	4 1/2"	1 3/8"	1 1/16"	3/4"	1 1/4"	2'-0"	10'-0"	4'-6"	14 — #11	2 1/4"	1 1/16"

BASE CONNECTION DATA | FUSE (HINGE) PLATE DATA | FOUNDATION DATA | SHIM

PROCEDURE FOR ASSEMBLY OF BASE CONNECTION

1. Assemble post to stub with bolts and with one flat washer on each end bolt between plates.
2. Shim as required to plumb post (see shim detail).
3. Tighten all bolts the maximum possible with 12" to 15" wrench to bed washers and shims and to clean bolt threads then loosen each bolt in turn and retighten in a systematic order to the prescribed torque (see table).
4. Burr threads at junction with nut using a center punch to prevent nut loosening.

STEEL — BASE, FOUNDATION & FUSE ℄ DETAILS

STATE OF FLORIDA DEPARTMENT OF TRANSPORTATION
STRUCTURES DESIGN

STANDARD ROADSIDE SIGN BREAK-AWAY POST DETAILS

	Names	Dates
Designed By		
Drawn By	HHJ	01/67
Checked By	CWB	01/67
F.H.W.A. Approved:		

Approved By

Revision No.	Sheet No.	Index No.
	4 of 4	9535

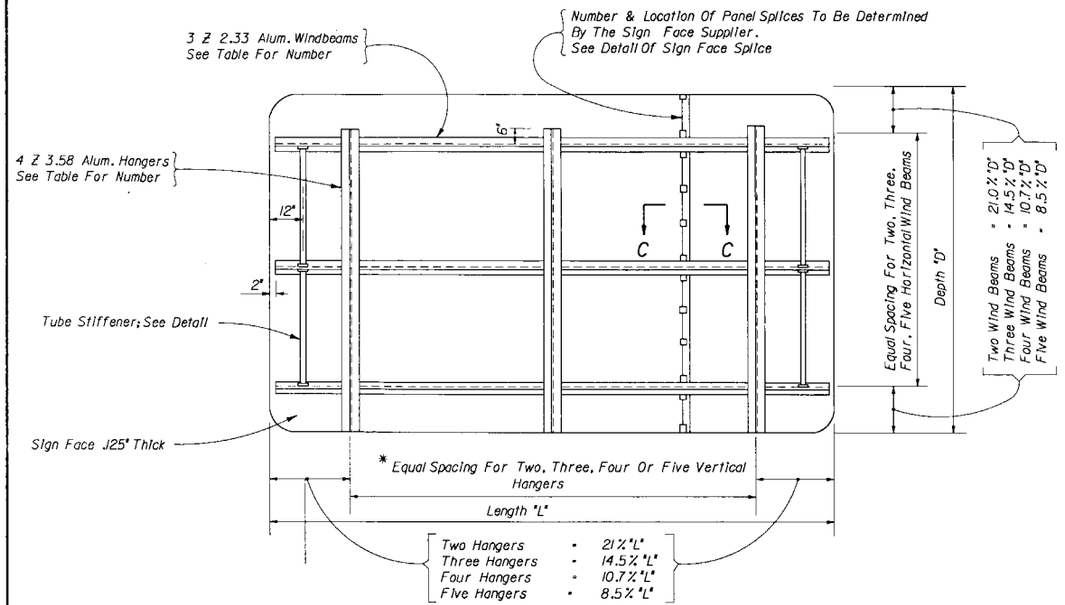

TYPICAL SIGN FACE ELEVATION FOR O.H. TRUSS

* Note: Spacing of vertical hangers may be varied slightly or as necessary to clear the truss struts and diagonals at panel points.

Number Of 3 Z 2.33 Holzontal Wind Beams For Sign Depth And Wind			Number Of 4 Z 3.58 Vertical Hanger Beams For Sign Length			
Wind M.P.H.	NO. BEAMS	MAX. DEPTH	2 HANGERS SIGN LENGTH	3 HANGERS SIGN LENGTH	4 HANGERS SIGN LENGTH	5 HANGERS SIGN LENGTH
110	2	7'-3"	0-15'-0"	15'-1"-30'-0"	30'-1"-45'-0"	
110	3	10'-6"	0-15'-0"	15'-1"-30'-0"	30'-1"-45'-0"	
110	4	14'-3"	0-13'-0"	13'-1"-18'-3"	18'-4"-24'-9"	24'-10"-31'-4"
110	5	18'-0"	0-13'-0"	13'-1"-18'-3"	18'-4"-24'-9"	24'-10"-31'-4"
100	2	8'-3"	0-15'-0"	15'-1"-30'-0"	30'-1"-45'-0"	
100	3	11'-9"	0-15'-0"	15'-1"-22'-3"	22'-4"-30'-0"	30'-1"-38'-0"
100	4	15'-9"	0-15'-0"	15'-1"-22'-3"	22'-4"-30'-0"	30'-1"-38'-0"
100	5	20'-0"	0-11'-7"	11'-8"-16'-4"	16'-5"-22'-2"	22'-3"-28'-0"
90	2	9'-0"	0-15'-0"	15'-1"-30'-0"	30'-1"-45'-0"	
90	3	13'-0"	0-15'-0"	15'-1"-27'-3"	27'-4"-37'-0"	
90	4	17'-6"	0-15'-0"	15'-1"-27'-3"	27'-4"-37'-0"	
90	5	22'-6"	0-14'-3"	14'-4"-20'-0"	20'-1"-27'-0"	27'-1"-34'-3"
80	2	10'-3"	0-15'-0"	15'-1"-30'-0"	30'-1"-45'-0"	
80	3	14'-9"	0-15'-0"	15'-1"-30'-0"	30'-1"-45'-0"	
80	4	20'-0"	0-15'-0"	15'-1"-25'-9"	25'-10"-34'-10"	

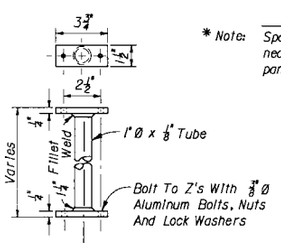

STIFFENER DETAIL

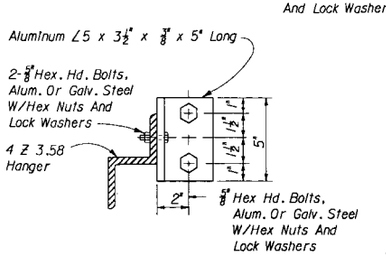

SECTION BB

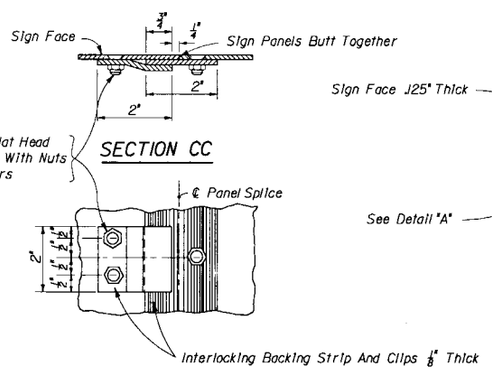

SIGN FACE SPLICE
(MAX. SPACING OF CLIPS 12")

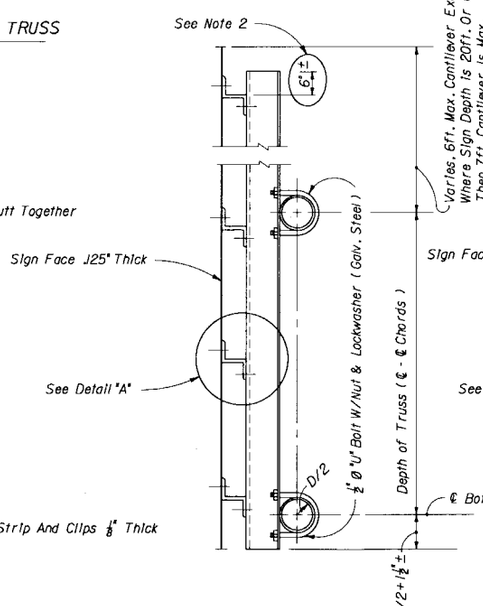

TYPICAL DETAIL OF SIGN & TRUSS CONNECTION FOR ROUND CHORD MEMBERS

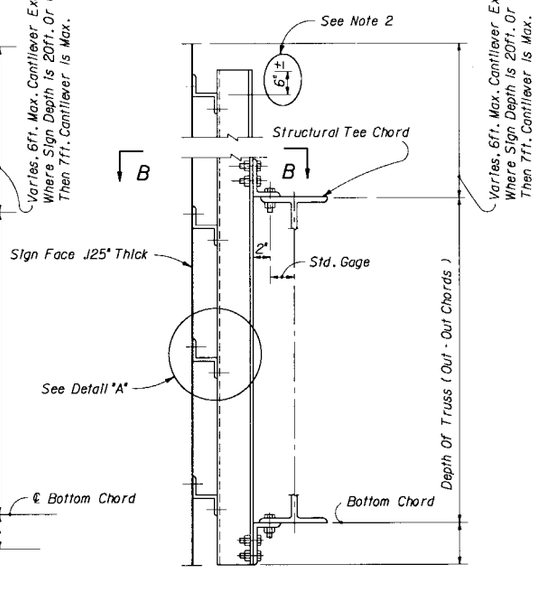

TYPICAL DETAIL OF SIGN & TRUSS CONNECTION FOR ROLLED STRUCTURAL SHAPES

(LIGHTING NOT SHOWN)

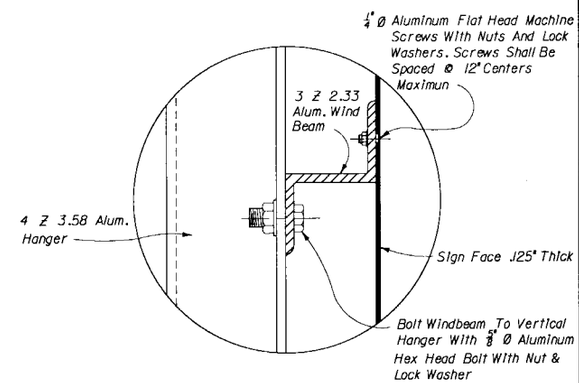

DETAIL "A"
(SHOWING ATTACHMENT OF SIGN FACE PANEL TO VERTICAL HANGER SUPPORTS)

GENERAL NOTES

(1) For "General Notes" covering Material Specifications; see Sheets 1 Of 4 And 3 Of 4, Index 9535
(2) This dimension has to be adjusted for porcelain enaminated sign panel.

DETAILS OF SIGN FACE & TRUSS CONNECTION

STATE OF FLORIDA DEPARTMENT OF TRANSPORTATION
STRUCTURES DESIGN

FOR ALUMINUM & STEEL OVERHEAD SIGN STRUCTURES

	Names	Dates
Designed By	C.W.B.	05/72
Drawn By		
Checked By	A.J.H.	05/72
F.H.W.A. Approved:		

Approved By

Revision No.	Sheet No.	Index No.
	1 of 1	11037

Sign Identification Number	SIGN PROFILE - SIZE	SQ.FT.	TYPE OF SIGN BRACKET WIND ZONE 60	70	80	90
	BID ITEM NO. 700 - 1 - 1 YIELD					
1	▽ 24 x 24	1.7	2 - I	2 - I	2 - I	2 - I
2	▽ 30 x 30	2.7	2 - I	2 - I	2 - I	2 - I
3	▽ 36 x 36	3.9	2 - I	2 - I	2 - I	2 - I
4	▽ 48 x 48	6.9	I-II & I-I	I-II & I-I	I-II & I-I	I-II & I-I
5	▽ 60 x 60		DO NOT USE SINGLE COLUMN			
	BID ITEM NO. 700 - 1 - 2 RAILROAD					
6	○ 36" Ø	7.1	2 - I	2 - I	2 - I	2 - I
7	○ 48" Ø	12.6	2 - II	2 - II	2 - II	2 - II
	BID ITEM NO. 700 - 1 - 3 STOP					
8	○ 18 x 18	1.9	2 - I	2 - I	2 - I	2 - I
9	○ 24 x 24	3.3	2 - I	2 - I	2 - I	2 - I
10	○ 30 x 30	5.2	2 - I	2 - I	2 - I	2 - I
11	○ 36 x 36	7.5	2 - I	2 - I	2 - I	2 - I
12	○ 48 x 48	13.3	2 - II	2 - II	2 - II	2 - II
	BID ITEM NO. 700 - 1 - 4 RT. MARKER SINGLE					
13	12 x 24 24 x 24	5.4	I-I 2 - I	I-I 2 - I	I-I 2 - I	I-I 2 - I
14	15 x 30 24 x 24	6.5	I-I 2 - I	I-I 2 - I	I-I 2 - I	I-I 2 - I
15	12 x 24 24 x 30	6.3	I-I 2 - I	I-I 2 - I	I-I 2 - I	I-I 2 - I
16	15 x 30 24 x 30	7.4	I-I 2 - I	I-I 2 - I	I-I 2 - I	I-I 2 - I
17	15 x 30 36 x 36	10.8	I-I 2 - I	I-I 2 - I	I-I 2 - I	I-I 2 - I
18	15 x 30 36 x 45	12.6	I-I 2 - I	I-I 2 - I	I-I 2 - II	I-I 2 - II
19	15 x 30 48 x 48	16.7	I-I 2 - II	I-I 2 - II	I-I 2 - II	I-I 2 - II
20	15 x 30 48 x 60		DO NOT USE SINGLE COLUMN			
21	12 x 24 24 x 24 15 x 21	7.6	I-I 2 - I I-I	I-I 2 - I I-I	I-I 2 - I I-I	I-I 2 - I I-I
22	15 x 30 24 x 24 15 x 21	8.7	I-I 2 - I I-I	I-I 2 - I I-I	I-I 2 - I I-I	I-I 2 - I I-I
23	12 x 24 24 x 30 15 x 21	8.5	I-I 2 - I I-I	I-I 2 - I I-I	I-I 2 - I I-I	I-I 2 - I I-I
24	15 x 30 24 x 30 15 x 21	9.6	I-I 2 - I I-I	I-I 2 - I I-I	I-I 2 - I I-I	I-I 2 - I I-I
25	12 x 24 24 x 24	6.0	I-I 2 - I	I-I 2 - I	I-I 2 - I	I-I 2 - I
26	24 x 24 15 x 21	6.2	2 - I I-I	2 - I I-I	2 - I I-I	2 - I I-I
27	15 x 30 24 x 24	7.1	I-I 2 - I	I-I 2 - I	I-I 2 - I	I-I 2 - I
28	12 x 24 24 x 30	7.0	I-I 2 - I	I-I 2 - I	I-I 2 - I	I-I 2 - I
29	24 x 30 15 x 21	7.2	2 - I I-I	2 - I I-I	2 - I I-I	2 - I I-I
30	15 x 30 24 x 30	8.1	I-I 2 - I	I-I 2 - I	I-I 2 - I	I-I 2 - I
31	15 x 21 36 x 30	9.7	I-I 2 - I	I-I 2 - I	I-I 2 - I	I-I 2 - I
32	15 x 30 36 x 30	10.6	I-I 2 - I	I-I 2 - I	I-I 2 - I	I-I 2 - I
33	12 x 24 24 x 24 15 x 21	8.2	I-I 2 - I I-I	I-I 2 - I I-I	I-I 2 - I I-I	I-I 2 - I I-I
34	15 x 30 24 x 24 15 x 21	9.3	I-I 2 - I I-I	I-I 2 - I I-I	I-I 2 - I I-I	I-I 2 - I I-I
35	12 x 24 24 x 30 15 x 21	9.2	I-I 2 - I I-I	I-I 2 - I I-I	I-I 2 - I I-I	I-I 2 - I I-I
36	15 x 30 24 x 30 15 x 21	10.3	I-I 2 - I I-I	I-I 2 - I I-I	I-I 2 - I I-I	I-I 2 - I I-I
	BID ITEM NO. 700 - 1 - 5 RT. MARKER DOUBLE					
37	12 x 24, 12 x 24 24 x 24, 24 x 24 15 x 21	13.6	I-II 2 - II I-I	I-II 2 - II I-I	I-II 2 - II I-I	I-II 2 - II I-I
38	12 x 24, 12 x 24 24 x 24, 24 x 24 15 x 21, 15 x 21	15.2	I-II 2 - II I-II	I-II 2 - II I-II	I-II 2 - II I-II	I-II 2 - II I-II
39	12 x 24, 12 x 24 24 x 24, 24 x 24 15 x 21, 15 x 21	16.4	I-II 2 - II I-II	I-II 2 - II I-II	I-II 2 - II I-II	I-II 2 - II I-II
40	15 X 30, 15 X 30 24 x 30, 24 x 15 x 21, 15 x 21		I-II DO NOT USE SINGLE COLUMN I-II	I-II I-II	I-II I-II	I-II I-II
41	12 x 24, 12 x 24 12 x 24, 12 x 24 24 x 24, 24 x 24 15 x 21, 15 x 21	20.4	I-II I-II 2 - II I-II	I-II I-II 2 - II I-II	I-II I-II 2 - II I-II	I-II I-II 2 - II I-II
42	15 x 21 24 x 24 12 x 24, 12 x 24 24 x 24, 24 x 24 15 x 21, 15 x 21	22.6	I-I 2 - I I-II 2 - II I-II	I-I 2 - I I-II 2 - II I-II	I-I 2 - I I-II 2 - II I-II	I-I 2 - I I-II 2 - II I-II
43	12 x 24 24 x 30 15 x 21 12 x 24, 12 x 24 24 x 24, 24 x 24 15 x 21, 15 x 21	25.6	I-I DO NOT USE SINGLE COLUMN I-I I-II 2 - II I-II	I-I I-I I-II 2 - II I-II	I-I I-I I-II 2 - II I-II	I-I I-I I-II 2 - II I-II
	BID ITEM NO. 700 - 1 - 10, 3 SQ. FT. OR LESS					
44	⊏ 18 X 12	1.5	I-I	I-I	I-I	I-I
45	▭ 12 x 36	3.0	I-I	I-I	I-I	I-I
46	▭ 18 x 24	3.0	2 - I	2 - I	2 - I	2 - I
47	□ 24 x 18	3.0	2 - I	2 - I	2 - I	2 - I
48	◇ 18 x 18 9 x 12	3.0	2 - I I-I	2 - I I-I	2 - I I-I	2 - I I-I
	BID ITEM NO. 700 - 1 - 11, 3 + TO 4 SQ. FT.					
49	▭ 18 x 30	3.8	2 - I	2 - I	2 - I	2 - I
50	▷ 30 x 40	3.9	2 - I	2 - I	2 - I	2 - I
51	□ 24 x 24	4.0	2 - I	2 - I	2 - I	2 - I
52	◇ 24 x 24	4.0	2 - I	2 - I	2 - I	2 - I
	BID ITEM NO. 700 - 1 - 12, 4 + TO 5 SQ. FT.					
53	▭ 18 x 36	4.5	2 - I	2 - I	2 - I	2 - I
54	⌂ 30 x 30	4.7	2 - I	2 - I	2 - I	2 - I
55	□ 30 x 24	5.0	2 - I	2 - I	2 - I	2 - I
	BID ITEM NO. 700 - 1 - 13, 5 + TO 6 SQ. FT.					
56	▷ 36 x 48	5.6	2 - II	2 - II	2 - II	2 - II
57	▭ 24 x 36	6.0	2 - I	2 - I	2 - I	2 - I
58	□ 36 x 24	6.0	2 - I	2 - I	2 - I	2 - I
	BID ITEM NO. 700 - 1 - 14, 6 + TO 6.25 SQ. FT.					
59	□ 30 x 30	6.3	2 - I	2 - I	2 - I	2 - I
60	◇ 30 x 30	6.3	2 - I	2 - I	2 - I	3 - I
	BID ITEM NO. 700 - 1 - 15, 6.25 + TO 9 SQ. FT.					
61	⌂ 36 X 36	6.75	2 - I	2 - I	2 - I	2 - I
62	□ 30 x 36	7.5	2 - I	2 - I	2 - I	2 - I
63	□ 36 x 30	7.5	2 - I	2 - I	2 - I	2 - I
64	▭ 24 x 48	8.0	2 - II	2 - II	2 - II	2 - II
65	▭○ 12 x 36 30 x 30	8.2	I-I 2 - I	I-I 2 - I	I-I 2 - I	I-I 2 - I
66	▭ 30 x 42	8.8	2 - I	2 - I	2 - I	2 - II
67	□ 36 x 36	9.0	2 - I	2 - I	2 - I	2 - I
68	◇ 36 x 36	9.0	2-I & I-II	2-I & I-II	2-I & I-II	2-I & I-II
	BID ITEM NO. 700 - 1 - 16, 9 + TO 12 SQ. FT.					
69	▭ ▭ 12 x 36 30 x 30	9.3	I-I 2 - I	I-I 2 - I	I-I 2 - I	I-I 2 - I
70	◇ ◇ 30 x 30 18 x 24	9.3	2 - I 2 - I	2 - I 2 - I	2 - I 2 - I	3 - I 2 - I
71	▷ 48 x 64		DO NOT USE SINGLE COLUMN			
72	▭ 30 x 48	10.0	2 - II	2 - II	2 - II	2 - II
73	▭○ 12 x 36 36 x 36	10.5	I-I 2 - I	I-I 2 - I	I-I 2 - I	I-I 2 - I
74	▭ 30 x 54 (2 - 6 x 4 - 0)		DO NOT USE SINGLE COLUMN			
75	▭ 36 x 48 (3 - 0 x 4 - 0)	12.0	2 - II	2 - II	2 - II	2 - II
76	□ 48 x 36 (4 - 0 x 3 - 0)	12.0	2 - I	2 - I	2 - I	2 - I
77	◇ ◇ 36 x 36 18 x 24	12.0	2-I & I-II 2 - I	2-I & I-II 2 - I	2-I & I-II 2 - I	2-I & I-II 2 - I
78	⌂ 48 x 48	12.0	I-I & I-II	I-I & I-II	I-I & I-II	I-I & I-II
	BID ITEM NO. 700 - 1 - 17, 12 + TO 16 SQ. FT.					
79	▭ 30 x 60 (2 - 6 x 5 - 0)		DO NOT USE SINGLE COLUMN			
80	□ 48 x 48 (4 - 0 x 4 - 0)	16.0	2 - II	2 - II	2 - II	2 - II
81	◇ 48 x 48 (4 - 0 x 4 - 0)	16.0	2 - I & I-II	2 - I & I-II	2 - I & I-II	2 - I & I-II
	BID ITEM NO. 700 - 1 - 18, 16 + TO 20 SQ. FT.					
82	▭ 30 x 78 (2 - 6 x 6 - 0)		DO NOT USE SINGLE COLUMN			
83	▭ 30 x 84 (2 - 6 x 7 - 0)		DO NOT USE SINGLE COLUMN			
84	▭ 48 x 54 (4 - 0 x 4 - 6)		DO NOT USE SINGLE COLUMN			
85	▭ 42 x 66 (3 - 6 x 5 - 6)		DO NOT USE SINGLE COLUMN			
86	□ 60 x 48 (5 - 0 x 4 - 0)	20.0	3 - II	3 - II	3 - II	3 - II
87	□ 66 x 48 (5 - 6 x 4 - 0)	22.0	3 - II	3 - II	3 - II	3 - II
88	▭ 60 x 72 (5 - 0 x 6 - 0)	30.0	DO NOT USE SINGLE COLUMN			
89	□ 96 x 48 (8 - 0 x 4 - 0)	32.0	DO NOT USE SINGLE COLUMN			
	BID ITEM NO. 700 - 1 - 20 DESTINATION, 1 - LINE					
90	▭ 24 x 78 (2 - 0 x 6 - 6)	13.0	DO NOT USE SINGLE COLUMN			
	BID ITEM NO. 700 - 1 - 21 DESTINATION, 2 - LINE					
91	▭ 36 x 78 (3 - 0 x 6 - 6)	19.5	DO NOT USE SINGLE COLUMN			

GENERAL NOTES

GENERAL SPECIFICATIONS: Florida Department of Transportation Standard Specifications for Road and Bridge Construction (1991) and Supplements thereto.
DESIGN SPECIFICATIONS: Standard Specifications for Structural Supports for Highway Signs, Luminaries and Traffic Signals AASHTO 1985.
ALUMINUM: Except as noted below, Aluminum Materials shall meet the requirements of Aluminum Association Alloy 6061-T6 (ASTM B209, B221, or B308)
1. Sign Brackets ---------- Alloy 6063-T6 (ASTM B221)
2. Permitted Alternate for Sheets and Plates – Alloy 5154-H38 (ASTM-B209)
CONCRETE: All concrete shall be Class II (Special), the specified compressive strength at 28 days (f'c) shall be 3,000 psi min.
SIGN PANELS: Sign Panels shall be 0.08 inches min. thick Aluminum Plate with all corners rounded. See Sign Layout Sheet. Panels are to be degreased, etched, neutralized and treated with Alodine 1200, Iridine 14-2, Bonderite 721 or equal. No stenciling permitted on panels.
ALUMINUM BOLTS, NUTS & LOCKWASHERS: Aluminum bolts shall meet the requirements of Aluminum Association Alloy 2024 T4 or 6061 T6 (ASTM B211). The Bolts shall have an Anodic Coating of at least 0.0002 inches thick and be Chromate sealed. Lockwashers shall meet the requirements of Aluminum Association Alloy 7075-T6 (ASTM B221). Nuts shall meet the requirements of Aluminum Association Alloy 6262-T9 or 6061-T6.
STAINLESS STEEL BOLTS, NUTS, AND LOCKWASHERS: Stainless Steel Bolts, Nuts and Lockwashers conforming to AISI A316 may be provided in lieu of Aluminum Bolts, Nuts and Washers.
U-BOLTS, NUTS & LOCKWASHERS: U-Bolts, Nuts and Lockwashers shall meet the requirements of ASTM A 307 and shall be galvanized in accordance with ASTM A153.
INSTALLING FRANGIBLE COLUMN SUPPORTS: Columns (Posts) may be installed by driving the columns in accordance with Index Nos. 11861 thru 11865, or as an alternate method the contractor may set the columns (posts) to the depth indicated in preformed holes backfilled with suitable material tamped in layers not thicker than 6" to provide adequate compaction.
SHOP DRAWINGS: When Type "C" ground sign supports are furnished and fabricated in accordance with these plans, shop drawings will NOT be required for approval by the Engineer.
HOW TO USE THIS TABLE: Select the appropriate Sign Profile and Size to determine the Sign Identification Number. If the exact Sign Size of all Components are not listed, select the appropriate profile and larger Component Sizes. This table also gives the Quantity and Type of Sign Brackets required for each Sign for each Wind Zone. Where the Sign Size is given as a Vertical and Horizontal Dimension, the Vertical Dimension (Depth) is given first and the Horizontal Dimension (Length) is given last. For Column Sizes, Heights and Footings see appropriate (Wind Zone or Height - 14' Max.) sheets titled "Column Sizes, Column Heights and Footings" Index Numbers 11861 thru 11865. No Shop or Field Splice is allowed in Sign Panels. All Panels shall be furnished in one piece.

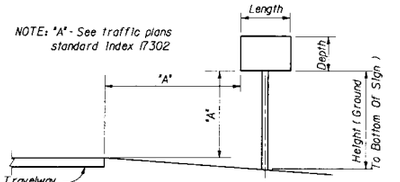

TYPICAL SECTION

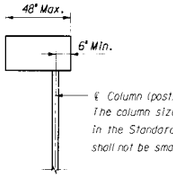

The column size shall be as tabulated in the Standard except that the size shall not be smaller than 3½" ϕ.

CANTILEVER SIGN

Note: All cantilever sign installations shall comply with standard Index 17302. The sign shall be supported by an aluminum round column with concrete footing and breakaway support. All sign brackets shall be Type II.

WIND LOADING

ZONE NO. 1 (160 M.P.H.)

Alachua, Bradford, Baker, Bay, Calhoun, Columbia, Escambia, Gadsden, Gilchrist Hamilton, Holmes, Jackson, Jefferson, Lafayette, Lake, Leon, Liberty, Madison, Marion, Okaloosa, Putnam, Santa Rosa, Sumter, Suwannee, Union, Walton, and Washington Counties.

ZONE NO. 2 (170 M.P.H.)

Citrus, De Soto, Dixie, Duval, Flagler, Franklin, Glades, Gulf, Hardee, Hendry, Hernando, Highlands, Hillsborough, Levy, Nassau, Okeechobee, Orange, Osceola, Pasco, Pinellas, Polk, Seminole, St. Johns, Taylor and Wakulla Counties.

ZONE NO. 3 (180 M.P.H.)

Brevard, Charlotte, Collier, Indian River, Lee, Manatee, Martin, Palm Beach, Sarasota, St. Lucie and Volusia Counties.

ZONE NO. 4 (190 M.P.H.)

Broward, Dade and Monroe Counties.

STATE OF FLORIDA DEPARTMENT OF TRANSPORTATION
STRUCTURES DESIGN

TYPE "C" SINGLE COLUMN GROUND SIGNS

	Names	Dates
Designed By	CK	03-96
Drawn By		
Checked By	CWB	03-96

Approved By

Revision No.	Sheet No.	Index No.
92	1 of 2	11860

F.H.W.A. Approved:

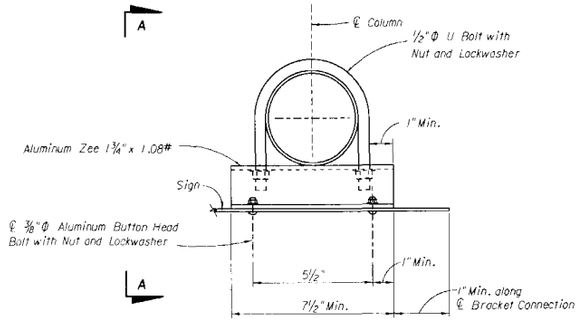

TYPE I BRACKET

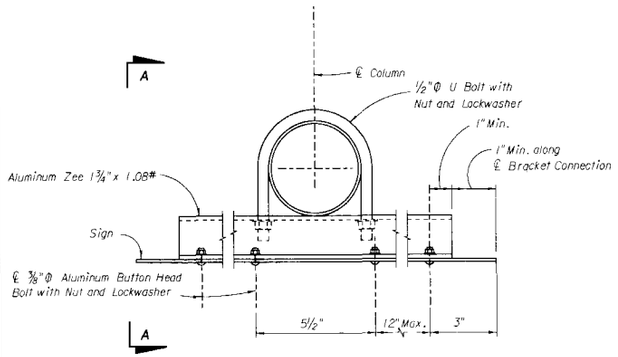

TYPE II BRACKET
(SINGLE SIGN)

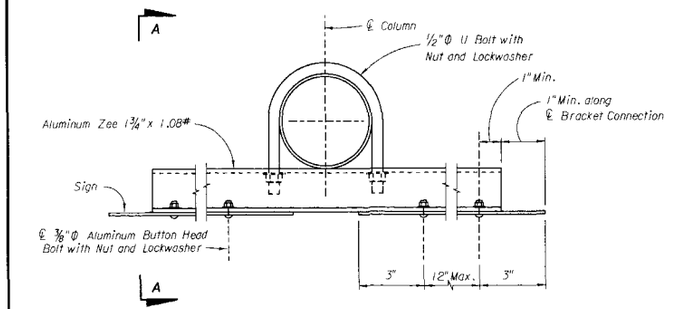

TYPE II BRACKET
(DOUBLE SIGNS)

NOTE: 5/16"Φ Stainless Steel Hex Head Bolts with Flat Washer under Head and Lockwasher under Nut may be used in lieu of ⅜"Φ Aluminum Button Head Bolts.

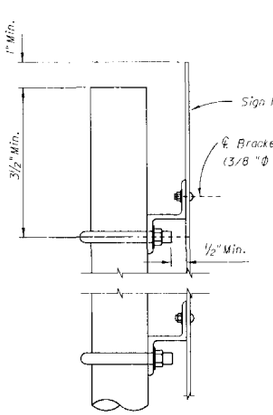

VIEW A-A

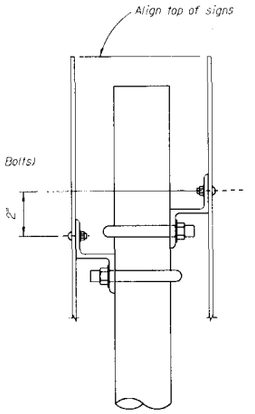

NOTE: Use profile of largest sign and height to bottom of largest sign to determine column size.

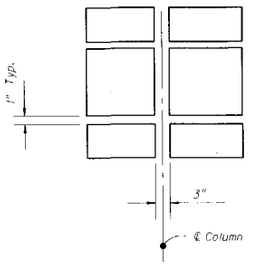

SIGN CLEARANCE

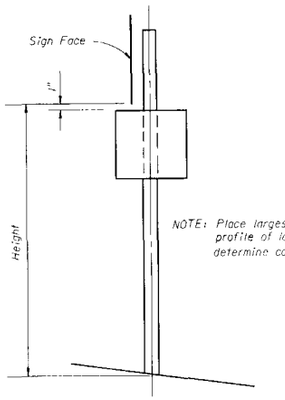

NOTE: Place largest sign on top, use profile of largest sign to determine column size.

SIGNS AT 90°

SIGNS BACK-TO-BACK

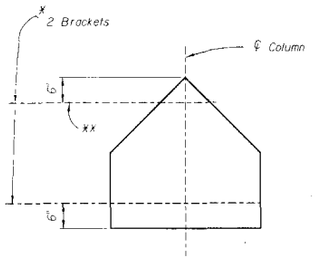

SCHOOL

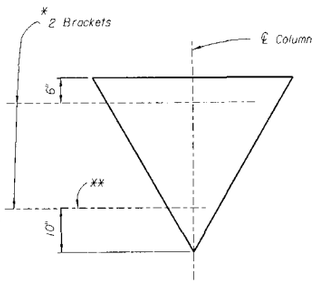

YIELD

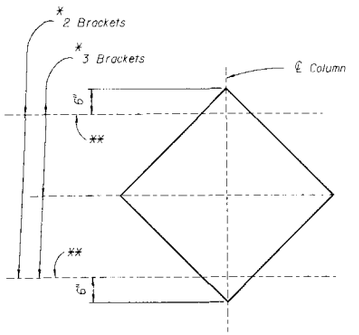

DIAMOND

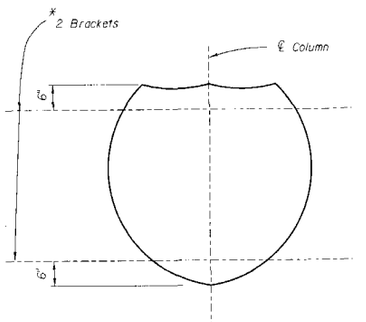

SHIELD

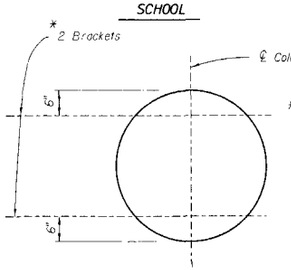

RAILROAD

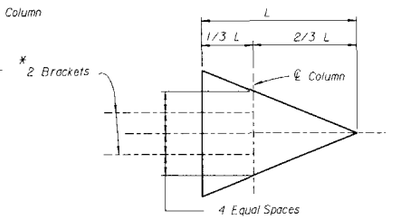

PENDANT

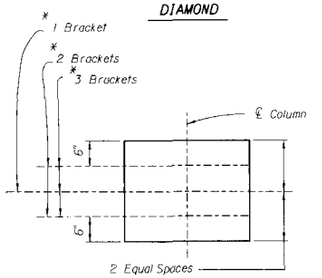

RECTANGLE

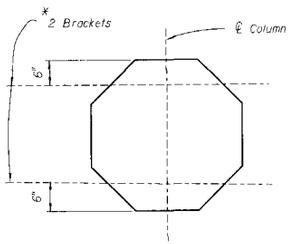

STOP

BRACKET LOCATIONS
(SEE VIEW A-A)

* NOTE: The above Bracket locations apply at the ℄ of Bracket-Sign Connection (⅜"Φ Button Head Bolts). See View A-A. The locations also apply at Double Signs configurations. When installing back-to-back signs the topmost bracket location of one of the signs will require adjustment as shown on the above detail.

** NOTE: Use Type I Bracket at the apex location (always).

STATE OF FLORIDA DEPARTMENT OF TRANSPORTATION
STRUCTURES DESIGN

TYPE "C" SINGLE COLUMN GROUND SIGNS

	Names	Dates
Designed By	AJG	9-91
Drawn By	WEH	9-91
Checked By	TJB	9-91

Approved By

F.H.W.A. Approved:

Revision No.	Sheet No.	Index No.
92	2 of 2	11860

COL. SIZE	2 x 1/8	2 1/2 x 1/8	3 x 1/8	3 1/2 x 3/16	4 x 3/16	4 x 1/4	4 1/2 x 1/4	5 x 1/4	5 1/2 x 1/4	6 x 1/4	6 1/2 x 1/4
FOOTING	0x2-0	0x2-3	0x2-6	1-6x2-6	1-6x2-6	1-6x2-6	1-6x2-6	1-6x2-9	1-6x3-0	1-6x3-3	2-0x3-0
Sign Identification Number	HEIGHT (FT.)										
1			14'— 25								
2			14'— 22	22'— 25							
3			13'— 21	21'— 25							
4	To 6	6'— 11	11'— 13	13'— 23	23'— 25						
5											
6			9'— 13	13'— 23	23'— 25						
7		To 6	6'— 10	10'— 16	16'— 21	21'— 25					
8		14'— 20	20'— 25								
9			14'— 22	22'— 25							
10			12'— 17	17'— 25							
11			9'— 13	13'— 23	23'— 25						
12			To 8	8'— 14	14'— 18	18'— 23	23'— 25				
13			12'— 17	17'— 25							
14			11'— 16	16'— 25							
15			10'— 14	14'— 24	24'— 25						
16			9'— 14	14'— 23	23'— 25						
17		To 7	7'— 10	10'— 17	17'— 21	21'— 25					
18			To 9	9'— 14	14'— 19	19'— 23	23'— 25				
19			To 7	7'— 12	12'— 16	16'— 20	20'— 25				
20											
21			6'— 12	12'— 19	19'— 25						
22		To 7	7'— 11	11'— 17	17'— 22	22'— 25					
23			6'— 12	12'— 19	19'— 25						
24		To 7	7'— 11	11'— 17	17'— 22	22'— 25					
25			11'— 15	15'— 25							
26			9'— 14	14'— 23	23'— 25						
27			9'— 14	14'— 23	23'— 25						
28			9'— 13	13'— 23	23'— 25						
29			8'— 13	13'— 22	22'— 25						
30			8'— 13	13'— 22	22'— 25						
31			6'— 12	12'— 19	19'— 23	23'— 25					
32			6'— 11	11'— 18	18'— 22	22'— 25					
33			7'— 12	12'— 20	20'— 25						
34			6'— 11	11'— 18	18'— 23	23'— 25					
35			7'— 12	12'— 20	20'— 25						
36			6'— 11	11'— 18	18'— 23	23'— 25					
37			To 7	7'— 13	13'— 17	17'— 21	21'— 25				
38			To 6	6'— 12	12'— 16	16'— 20	20'— 24	24'— 25			
39			To 6	6'— 12	12'— 15	15'— 18	18'— 23	23'— 25			
40											
41				To 10	10'— 12	12'— 14	14'— 18	18'— 23	23'— 25		
42				To 9	9'— 11	11'— 13	13'— 18	18'— 22	22'— 25		
43											
44		14'— 23	23'— 25								
45			14'— 22	22'— 25							
46			14'— 22	22'— 25							
47			14'— 22	22'— 25							
48			14'— 21	21'— 25							
49			14'— 20	20'— 25							
50	To 13	13'— 16	16'— 20	20'— 25							
51			14'— 20	20'— 25							
52			13'— 14	14'— 25							

COL. SIZE	2 x 1/8	2 1/2 x 1/8	3 x 1/8	3 1/2 x 3/16	4 x 3/16	4 x 1/4	4 1/2 x 1/4	5 x 1/4	5 1/2 x 1/4
FOOTING	0x2-0	0x2-3	0x2-6	1-6x2-6	1-6x2-6	1-6x2-6	1-6x2-6	1-6x2-9	1-6x3-0
Sign Identification Number	HEIGHT (FT.)								
53			13'— 18	18'— 25					
54			12'— 17	17'— 25					
55			12'— 17	17'— 25					
56	To 8	8'— 13	13'— 15	15'— 25					
57			10'— 15	15'— 25					
58			11'— 15	15'— 25					
59			10'— 15	15'— 25					
60			10'— 14	14'— 24	24'— 25				
61			8'— 13	13'— 22	22'— 25				
62			8'— 13	13'— 22	22'— 25				
63			9'— 13	13'— 23	23'— 25				
64	To 6	6'— 10	10'— 14	14'— 21	21'— 25				
65			8'— 13	13'— 22	22'— 25				
66		To 9	9'— 13	13'— 20	20'— 25				
67			7'— 13	13'— 20	20'— 25				
68			7'— 12	12'— 21	21'— 25				
69			7'— 13	13'— 19	19'— 25				
70			6'— 11	11'— 18	18'— 23	23'— 25			
71									
72		To 8	8'— 12	12'— 18	18'— 23	23'— 25			
73			6'— 11	11'— 18	18'— 22	22'— 25			
74									
75		To 6	6'— 10	10'— 16	16'— 20	20'— 24	24'— 25		
76		To 6	6'— 10	10'— 16	16'— 21	21'— 25			
77			To 9	9'— 15	15'— 20	20'— 25			
78		To 6	6'— 10	10'— 16	16'— 20	20'— 24	24'— 25		
79									
80			To 7	7'— 13	13'— 16	16'— 20	20'— 25		
81			To 6	6'— 12	12'— 15	15'— 19	19'— 24	24'— 25	
82									
83									
84									
85									
86				To 12	12'— 13	13'— 17	17'— 21	21'— 25	
87				To 10	10'— 12	12'— 15	15'— 19	19'— 24	24'— 25
88									
89									
90									
91									

NOTES

1. Work this Standard with Standard Index Numbers 11860 and 11865.
2. To determine column (post) size and footing requirements use the required Sign Identification Number and Sign Height (H). Designs for Heights (H) lower than those listed in the "Table" are included in Standard Index Number 11865.
3. Single Column installations are not allowed for heights (H) exceeding the maximum height shown in the "Table", and for sign profiles (Sign Identification Numbers) without any design tabulated. In this event, the sign(s) will have to be supported by multiple columns (posts) featuring breakaway devices. See Standard Index Number 9535.
4. The Column (Post) material shall be aluminum. The size is given as outside diameter times wall thickness. Columns (posts) larger than 3 x 1/8 are non-frangible and shall be installed with breakaway supports and will have concrete footings and slip bases.
5. The footing size is given as outside diameter times depth.
   a) Frangible supports : Footings for Frangible Supports do not require concrete. The Column (post) shall be driven into the ground to the depth indicated.
   b) Breakaway Supports : Footings for Breakaway Supports require concrete. The column support shall be set in a concrete footing, sized as shown in the table. The first dimension indicates the diameter and the second dimension the depth into the ground. In all cases the ground is to be considered as undisturbed earth, road material, or properly compacted fill.
6. SLIP BASE NOTES :
   a) The Inside Diameter (I.D.) of the sleeve shall be no more than 1/16" larger than the Outside Diameter (O.D.) of the Column.
   b) The sleeve bolts shall be 1/2" Ø with locknuts. The bolts shall be galvanized steel (ASTM A-307) or Aluminum Association Alloy 2024-T4 or 6061-T6 (ASTM B-211).
   c) The base bolts, nuts and washers shall be high strength ASTM A-325 and shall have an electroplated zinc coating SC3, Type II applied in accordance with ASTM B633.
   d) An alternate cast base of aluminum alloy 356 and T6 temper in lieu of the fabricated base may be submitted for approval by the Engineer. If a cast base is used the stub will be the same as the column and will be bolted to the casting.
   e) Assemble the slip base connection in the following manner :

      Connect column to sleeve using two (2) 1/2" Ø machine bolts.

      Assemble top base plate to stub base plate using high strength bolts with three (3) hardened washers per bolt. One (1) washer per bolt and two (2) bolt keeper plates go between the base plates.

      Use shim stock as required to plumb the column.

      Tighten all bolts the maximum possible with a 12" to 15" wrench to bed the washers and shims and to clear the bolt threads. Loosen each bolt one (1) turn and retighten to the prescribed torque (see table). Bolts shall be tightened with properly calibrated wrenches under the supervision of the project engineer.

      Burr threads at junction with nut using a center punch to prevent nut loosening.

   f) Use galvanized steel shims to obtain a tight fit between the column face and the sleeve. Place shims in all quadrants between the 1/2" Ø sleeve bolts. The shim length shall be one (1") shorter than the height of the sleeve.

SLIP BASE DETAILS

Note: Unless noted otherwise, all dimensions are in inches.

Column Size	Sleeve I.D. (Max)	Sleeve Wall "T"	Sleeve Height	Weld "W"	Base Plate LxLxT	Radius "R"	Base Bolt Size	Base Bolt Torque FT - lbs	Base Bolt Torque Inch - lbs	Hole Size "A"
3 1/2 x 3/16	3 9/16	1/8	6	5/8	8 x 8 x 3/4	11/32	5/8 Ø x 3	29	345	11/16
4 x 3/16	4 1/16	1/8	6	5/8	8 x 8 x 3/4	11/32	5/8 Ø x 3	29	345	11/16
4 x 1/4	4 1/16	1/8	6	5/8	8 x 8 x 3/4	11/32	5/8 Ø x 3	29	345	11/16
4 1/2 x 1/4	4 9/16	1/8	6	5/8	8 x 8 x 7/8	11/32	5/8 Ø x 3 1/4	29	345	11/16
5 x 1/4	5 1/16	1/8	7	5/8	8 x 8 x 7/8	11/32	5/8 Ø x 3 1/4	29	345	11/16
5 1/2 x 1/4	5 9/16	1/8	7	11/16	8 1/2 x 8 1/2 x 7/8	13/32	3/4 Ø x 3 1/4	46	554	13/16
6 x 1/4	6 1/16	1/8	8	11/16	9 x 9 x 1	13/32	3/4 Ø x 3 1/2	46	554	13/16
6 1/2 x 1/4	6 9/16	1/8	8	1/4	9 1/2 x 9 1/2 x 1	13/32	3/4 Ø x 3 1/2	46	554	13/16
7 x 1/4	7 1/16	1/8	9	1/4	10 x 10 x 1	13/32	3/4 Ø x 3 1/2	46	554	13/16
7 1/2 x 1/4	7 9/16	1/8	9	1/4	10 1/2 x 10 1/2 x 1	15/32	7/8 Ø x 3 3/4	53	640	15/16
8 x 1/4	8 1/16	1/8	10	3/4	11 x 11 x 1	15/32	7/8 Ø x 3 3/4	53	640	15/16

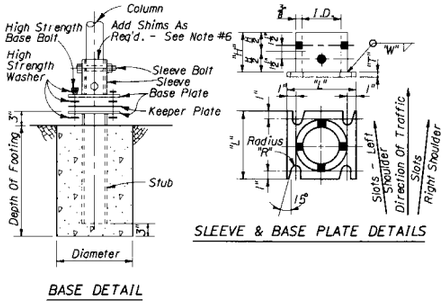

BASE DETAIL

SLEEVE & BASE PLATE DETAILS

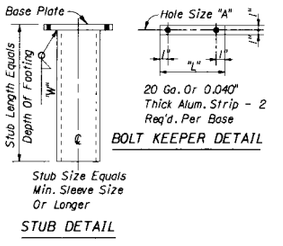

STUB DETAIL

BOLT KEEPER DETAIL

60 M.P.H. WIND LOADING

COLUMN SIZE , COLUMN HEIGHT & COLUMN FOOTINGS

STATE OF FLORIDA DEPARTMENT OF TRANSPORTATION
STRUCTURES DESIGN

SINGLE COLUMN GROUND SIGNS

	Names	Dates
Designed By	TJB	7-89
Drawn By	JSP	7-89
Checked By	AJG	9-89

Approved By

F.H.W.A. Approved:

Revision No.	Sheet No.	Index No.
92	1 of 1	11861

COL. SIZE	2 x 1/8	2 1/2 x 1/8	3 x 1/8	3 1/2 x 3/16	4 x 3/16	4 x 1/4	4 1/2 x 1/4	5 x 1/4	5 1/2 x 1/4	6 x 1/4	6 1/2 x 1/4
FOOTING	0x2-0	0x2-3	0x2-6	1-6x2-6	1-6x2-6	1-6x2-6	1-6x2-6	1-6x2-9	1-6x3-0	1-6x3-3	2-0x3-0
Sign Identification Number	HEIGHT (FT.)										
1			14+-19	19+-25							
2			14+-18	18+-25							
3			13+-16	16+-25							
4		To 8	8+-11	11+-18	18+-22	22+-25					
5											
6			9+-12	12+-18	18+-22	22+-25					
7				7+-13	13+-15	15+-19	19+-25				
8		14+-16	16+-20	20+-25							
9			14+-18	18+-25							
10			12+-13	13+-22	22+-25						
11			9+-12	12+-18	18+-22	22+-25					
12			To 6	6+-13	13+-14	14+-17	17+-21	21+-25			
13			12+-13	13+-22	22+-25						
14			11+-13	13+-21	21+-25						
15			10+-13	13+-19	19+-23	23+-25					
16			9+-12	12+-18	18+-22	22+-25					
17			To 7	7+-12	12+-16	16+-20	20+-24	24+-25			
18			To 6	6+-12	12+-14	14+-17	17+-22	22+-25			
19				To 11	11+-12	12+-15	15+-19	19+-23	23+-25		
20											
21			6+-9	9+-14	14+-18	18+-22	22+-25				
22			To 7	7+-13	13+-17	17+-21	21+-25				
23			6+-9	9+-14	14+-18	18+-22	22+-25				
24			To 7	7+-13	13+-17	17+-21	21+-25				
25			11+-13	13+-20	20+-25						
26			9+-12	12+-18	18+-22	22+-25					
27			9+-12	12+-18	18+-22	22+-25					
28			9+-12	12+-18	18+-22	22+-25					
29			8+-11	11+-17	17+-21	21+-25					
30			8+-11	11+-17	17+-21	21+-25					
31			6+-8	8+-14	14+-18	18+-22	22+-25				
32			6+-8	8+-13	13+-17	17+-21	21+-25				
33			7+-9	9+-15	15+-19	19+-23	23+-25				
34			6+-8	8+-14	14+-17	17+-22	22+-25				
35			7+-9	9+-15	15+-19	19+-23	23+-25				
36			6+-8	8+-14	14+-17	17+-22	22+-25				
37				To 11	11+-12	12+-16	16+-20	20+-24	24+-25		
38				To 10	10+-12	12+-14	14+-18	18+-22	22+-25		
39				To 9	9+-12	12+-13	13+-17	17+-21	21+-25		
40											
41				To 6	6+-9	9+-12	12+-13	13+-17	17+-20	20+-24	24+-25
42				To 6	6+-9	9+-11	11+-12	12+-16	16+-20	20+-24	24+-25
43											
44		14+-19	19+-23	23+-25							
45			14+-18	18+-25							
46			14+-18	18+-25							
47			14+-18	18+-25							
48			14+-17	17+-25							
49			14+-16	16+-25							
50	To 9	9+-13	13+-16	16+-25							
51			14+-16	16+-25							
52			13+-15	15+-24	24+-25						

COL. SIZE	2 x 1/8	2 1/2 x 1/8	3 x 1/8	3 1/2 x 3/16	4 x 3/16	4 x 1/4	4 1/2 x 1/4	5 x 1/4	5 1/2 x 1/4	6 x 1/4
FOOTING	0x2-0	0x2-3	0x2-6	1-6x2-6	1-6x2-6	1-6x2-6	1-6x2-6	1-6x2-9	1-6x3-0	1-6x3-3
Sign Identification Number	HEIGHT (FT.)									
53			13+-14	14+-23	23+-25					
54			12+-14	14+-22	22+-25					
55			12+-13	13+-22	22+-25					
56	To 6	6+-10	10+-13	13+-20	20+-25					
57			10+-13	13+-20	20+-25					
58			11+-13	13+-20	20+-25					
59			10+-13	13+-20	20+-25					
60			10+-13	13+-19	19+-23	23+-25				
61			8+-11	11+-17	17+-21	21+-25				
62			8+-11	11+-17	17+-21	21+-25				
63			9+-12	12+-18	18+-22	22+-25				
64		To 7	7+-11	11+-16	16+-20	20+-25				
65			8+-11	11+-17	17+-21	21+-25				
66		To 6	6+-10	10+-15	15+-19	19+-23	23+-25			
67			7+-10	10+-15	15+-19	19+-24	24+-25			
68			7+-10	10+-16	16+-20	20+-24	24+-25			
69			7+-9	9+-15	15+-19	19+-23	23+-25			
70			6+-8	8+-14	14+-17	17+-22	22+-25			
71										
72			To 9	9+-14	14+-18	18+-21	21+-25			
73			6+-8	8+-13	13+-17	17+-21	21+-25			
74										
75			To 7	7+-13	13+-15	15+-19	19+-23	23+-25		
76			To 7	7+-13	13+-15	15+-19	19+-24	24+-25		
77			To 6	6+-12	12+-15	15+-19	19+-23	23+-25		
78			To 7	7+-13	13+-15	15+-19	19+-23	23+-25		
79										
80				To 11	11+-13	13+-15	15+-19	19+-23	23+-25	
81				To 10	10+-12	12+-14	14+-18	18+-22	22+-25	
82										
83										
84										
85										
86				To 8	8+-11	11+-12	12+-16	16+-19	19+-23	23+-25
87				To 7	7+-10	10+-12	12+-14	14+-18	18+-21	21+-25
88										
89										
90										
91										

NOTES

1. Work this Standard with Standard Index Numbers 11860 and 11865.
2. To determine column (post) size and footing requirements use the required Sign Identification Number and Sign Height (H). Designs for Heights (H) lower than those listed in the "Table" are included in Standard Index Number 11865.
3. Single Column installations are not allowed for heights (H) exceeding the maximum height shown in the "Table", and for sign profiles (Sign Identification Numbers) without any design tabulated. In this event, the sign(s) will have to be supported by multiple columns (posts) featuring breakaway devices. See Standard Index Number 9535.
4. The Column (Post) material shall be aluminum. The size is given as outside diameter times wall thickness. Columns (posts) larger than 3 x 1/8 are non-frangible and shall be installed with breakaway supports and will have concrete footings and slip bases.
5. The footing size is given as outside diameter times depth.
   a) Frangible supports : Footings for Frangible Supports do not require concrete. The Column (post) shall be driven into the ground to the depth indicated.
   b) Breakaway Supports : Footings for Breakaway Supports require concrete. The column support shall be set in a concrete footing, sized as shown in the table. The first dimension indicates the diameter and the second dimension the depth into the ground. In all cases the ground is to be considered as undisturbed earth, road material, or properly compacted fill.
6. SLIP BASE NOTES :
   a) The Inside Diameter (I.D.) of the sleeve shall be no more than 1/16" larger than the Outside Diameter (O.D.) of the Column.
   b) The sleeve bolts shall be 1/2" Ø with locknuts. The bolts shall be galvanized steel (ASTM A-307) or Aluminum Association Alloy 2024-T4 or 6061-T6 (ASTM B-211).
   c) The base bolts, nuts and washers shall be high strength ASTM A-325 and shall have an electroplated zinc coating SC3, Type II applied in accordance with ASTM B633.
   d) An alternate cast base of aluminum alloy 356 and T6 temper in lieu of the fabricated base may be submitted for approval by the Engineer. If a cast base is used the stub will be the same as the column and will be bolted to the casting.
   e) Assemble the slip base connection in the following manner :

      Connect column to sleeve using two (2) 1/2" Ø machine bolts.

      Assemble top base plate to stub base plate using high strength bolts with three (3) hardened washers per bolt. One (1) washer per bolt and two (2) bolt keeper plates go between the base plates.

      Use shim stock as required to plumb the column.

      Tighten all bolts the maximum possible with a 12" to 15" wrench to bed the washers and shims and to clear the bolt threads. Loosen each bolt one (1) turn and retighten to the prescribed torque (see table). Bolts shall be tightened with properly calibrated wrenches under the supervision of the project engineer.

      Burr threads at junction with nut using a center punch to prevent nut loosening.

   f) Use galvanized steel shims to obtain a tight fit between the column face and the sleeve. Place shims in all quadrants between the 1/2" Ø sleeve bolts. The shim length shall be one (1") shorter than the height of the sleeve.

SLIP BASE DETAILS

Note: Unless noted otherwise, all dimensions are in inches.

Column Size	Sleeve I.D. (Max)	Sleeve Wall "T"	Sleeve Height	Weld "W"	Base Plate LxLxT	Radius "R"	Base Bolt Size	Base Bolt FT - lbs	Torque Inch - lbs	Hole Size "A"
3 1/2 x 3/16	3 9/16	3/8	6	5/8	8 x 8 x 3/4	11/32	5/8 Ø x 3	29	345	11/16
4 x 3/16	4 1/16	3/8	6	5/8	8 x 8 x 3/4	11/32	5/8 Ø x 3	29	345	11/16
4 x 1/4	4 1/16	3/8	6	5/8	8 x 8 x 3/4	11/32	5/8 Ø x 3	29	345	11/16
4 1/2 x 1/4	4 9/16	3/8	6	5/8	8 x 8 x 7/8	11/32	5/8 Ø x 3 1/4	29	345	11/16
5 x 1/4	5 1/16	3/8	7	5/8	8 x 8 x 7/8	11/32	5/8 Ø x 3 1/4	29	345	11/16
5 1/2 x 1/4	5 9/16	3/8	7	11/16	8 1/2 x 8 1/2 x 7/8	13/32	3/4 Ø x 3 1/4	46	554	13/16
6 x 1/4	6 1/16	3/8	8	11/16	9 x 9 x 1	13/32	3/4 Ø x 3 1/2	46	554	13/16
6 1/2 x 1/4	6 9/16	3/8	8	3/4	9 1/2 x 9 1/2 x 1	13/32	3/4 Ø x 3 1/2	46	554	13/16
7 x 1/4	7 1/16	3/8	9	3/4	10 x 10 x 1	13/32	3/4 Ø x 3 1/2	46	554	13/16
7 1/2 x 1/4	7 9/16	3/8	9	3/4	10 1/2 x 10 1/2 x 1	15/32	7/8 Ø x 3 3/4	53	640	15/16
8 x 1/4	8 1/16	3/8	10	3/4	11 x 11 x 1	15/32	7/8 Ø x 3 3/4	53	640	15/16

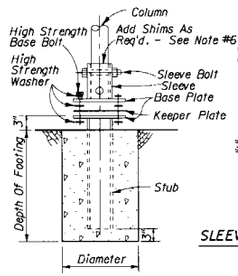

BASE DETAIL

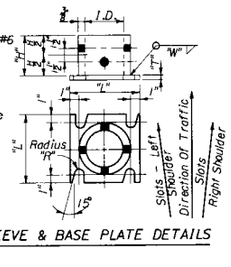

SLEEVE & BASE PLATE DETAILS

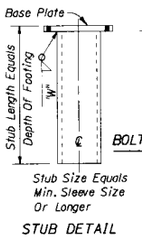

STUB DETAIL

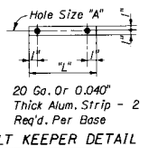

BOLT KEEPER DETAIL

70 M.P.H. WIND LOADING

COLUMN SIZE, COLUMN HEIGHT & COLUMN FOOTINGS

STATE OF FLORIDA DEPARTMENT OF TRANSPORTATION
STRUCTURES DESIGN

SINGLE COLUMN GROUND SIGNS

	Names	Dates
Designed By	TJB	7-89
Drawn By	JSP	7-89
Checked By	AJG	9-89
F.H.W.A. Approved:		

Approved By

Revision No.	Sheet No.	Index No.
92	1 of 1	11862

COL. SIZE	2 x 1/8	2 1/2 x 1/8	3 x 1/8	3 1/2 x 3/16	4 x 3/16	4 x 1/4	4 1/2 x 1/4	5 x 1/4	5 1/2 x 1/4	6 x 1/4	6 1/2 x 1/4	7 x 1/4
FOOTING	0x2-0	0x2-3	0x2-6	1-6x2-6	1-6x2-6	1-6x2-6	1-6x2-6	1-6x2-9	1-6x3-0	1-6x3-3	2-0x3-0	2-0x3-4
Sign Identification Number		HEIGHT (FT.)										
1			14⁺—16	16⁺—25								
2			14⁺—15	15⁺—23	23⁺—25							
3				13⁺—21	21⁺—25							
4			To 9	9⁺—14	14⁺—18	18⁺—21	21⁺—25					
5												
6				9⁺—14	14⁺—17	17⁺—21	21⁺—25					
7				To 11	11⁺—13	13⁺—15	15⁺—19	19⁺—23	23⁺—25			
8			14⁺—17	17⁺—25								
9			14⁺—15	15⁺—23	23⁺—25							
10			12⁺—14	14⁺—18	18⁺—22	22⁺—25						
11				9⁺—14	14⁺—17	17⁺—21	21⁺—25					
12				To 9	9⁺—13	13⁺—14	14⁺—17	17⁺—20	20⁺—24	24⁺—25		
13				12⁺—18	18⁺—21	21⁺—25						
14				11⁺—17	17⁺—20	20⁺—24	24⁺—25					
15				10⁺—15	15⁺—19	19⁺—23	23⁺—25					
16				9⁺—15	15⁺—18	18⁺—22	22⁺—25					
17				To 11	11⁺—12	12⁺—16	16⁺—19	19⁺—23	23⁺—25			
18				To 8	8⁺—11	11⁺—12	12⁺—15	15⁺—19	19⁺—23	23⁺—25		
19				To 8	8⁺—11	11⁺—12	12⁺—15	15⁺—19	19⁺—23	23⁺—25		
20												
21				6⁺—12	12⁺—14	14⁺—18	18⁺—22	22⁺—25				
22				To 12	12⁺—13	13⁺—16	16⁺—20	20⁺—24	24⁺—25			
23				6⁺—12	12⁺—14	14⁺—18	18⁺—22	22⁺—25				
24				To 12	12⁺—13	13⁺—16	16⁺—20	20⁺—24	24⁺—25			
25				11⁺—16	16⁺—20	20⁺—24	24⁺—25					
26				9⁺—15	15⁺—18	18⁺—22	22⁺—25					
27				9⁺—15	15⁺—18	18⁺—22	22⁺—25					
28				9⁺—14	14⁺—17	17⁺—21	21⁺—25					
29				8⁺—14	14⁺—17	17⁺—21	21⁺—25					
30				8⁺—13	13⁺—17	17⁺—20	20⁺—24	24⁺—25				
31				6⁺—13	13⁺—14	14⁺—17	17⁺—21	21⁺—25				
32				6⁺—12	12⁺—13	13⁺—17	17⁺—20	20⁺—24	24⁺—25			
33				7⁺—12	12⁺—15	15⁺—19	19⁺—22	22⁺—25				
34				6⁺—12	12⁺—14	14⁺—17	17⁺—21	21⁺—25				
35				7⁺—12	12⁺—15	15⁺—19	19⁺—22	22⁺—25				
36				6⁺—12	12⁺—14	14⁺—17	17⁺—21	21⁺—25				
37				To 8	8⁺—11	11⁺—12	12⁺—15	15⁺—19	19⁺—23	23⁺—25		
38				To 7	7⁺—10	10⁺—13	13⁺—16	16⁺—20	20⁺—24	24⁺—25		
39				To 7	7⁺—10	10⁺—12	12⁺—13	13⁺—16	16⁺—20	20⁺—24	24⁺—25	
40												
41					To 7	7⁺—9	9⁺—12	12⁺—13	13⁺—16	16⁺—19	19⁺—23	23⁺—25
42					To 6	6⁺—8	8⁺—11	11⁺—12	12⁺—15	15⁺—18	18⁺—22	22⁺—25
43												
44		14⁺—16	16⁺—19	19⁺—25								
45			14⁺—15	15⁺—22	22⁺—25							
46			14⁺—15	15⁺—22	22⁺—25							
47			14⁺—15	15⁺—23	23⁺—25							
48				14⁺—22	22⁺—25							
49				14⁺—21	21⁺—25							
50	To 7	7⁺—11	11⁺—13	13⁺—21	21⁺—25							
51				14⁺—20	20⁺—25							
52				13⁺—20	20⁺—25							

COL. SIZE	2 1/2 x 1/8	3 x 1/8	3 1/2 x 3/16	4 x 3/16	4 x 1/4	4 1/2 x 1/4	5 x 1/4	5 1/2 x 1/4	6 x 1/4	6 1/2 x 1/4	7 x 1/4
FOOTING	0x2-3	0x2-6	1-6x2-6	1-6x2-6	1-6x2-6	1-6x2-6	1-6x2-9	1-6x3-0	1-6x3-3	2-0x3-0	2-0x3-4
Sign Identification Number	HEIGHT (FT.)										
53			13⁺—19	19⁺—22	22⁺—25						
54			12⁺—18	18⁺—21	21⁺—25						
55			12⁺—18	18⁺—22	22⁺—25						
56	To 7	7⁺—11	11⁺—16	16⁺—20	20⁺—24	24⁺—25					
57			10⁺—16	16⁺—19	19⁺—23	23⁺—25					
58			11⁺—16	16⁺—20	20⁺—24	24⁺—25					
59			10⁺—16	16⁺—20	20⁺—23	23⁺—25					
60			10⁺—15	15⁺—19	19⁺—23	23⁺—25					
61			8⁺—13	13⁺—17	17⁺—21	21⁺—24	24⁺—25				
62			8⁺—13	13⁺—17	17⁺—21	21⁺—24	24⁺—25				
63			9⁺—14	14⁺—17	17⁺—21	21⁺—25					
64		To 8	8⁺—14	14⁺—16	16⁺—20	20⁺—24	24⁺—25				
65			8⁺—13	13⁺—16	16⁺—20	20⁺—24	24⁺—25				
66		To 7	7⁺—13	13⁺—15	15⁺—19	19⁺—23	23⁺—25				
67			7⁺—13	13⁺—15	15⁺—19	19⁺—23	23⁺—25				
68			7⁺—12	12⁺—16	16⁺—19	19⁺—23	23⁺—25				
69			7⁺—12	12⁺—15	15⁺—18	18⁺—22	22⁺—25				
70			6⁺—12	12⁺—14	14⁺—17	17⁺—21	21⁺—25				
71											
72		To 6	6⁺—13	13⁺—14	14⁺—17	17⁺—21	21⁺—25				
73			6⁺—12	12⁺—13	13⁺—17	17⁺—20	20⁺—24	24⁺—25			
74											
75			To 11	11⁺—13	13⁺—15	15⁺—18	18⁺—22	22⁺—25			
76			To 11	11⁺—13	13⁺—15	15⁺—19	19⁺—23	23⁺—25			
77			To 10	10⁺—12	12⁺—14	14⁺—18	18⁺—22	22⁺—25			
78			To 11	11⁺—13	13⁺—15	15⁺—18	18⁺—22	22⁺—25			
79											
80			To 8	8⁺—11	11⁺—13	13⁺—15	15⁺—18	18⁺—22	22⁺—25		
81			To 7	7⁺—10	10⁺—12	12⁺—14	14⁺—17	17⁺—21	21⁺—25		
82											
83											
84											
85											
86			To 6	6⁺—8	8⁺—11	11⁺—12	12⁺—15	15⁺—18	18⁺—22	22⁺—25	
87			To 7	7⁺—10	10⁺—12	12⁺—13	13⁺—17	17⁺—20	20⁺—24	24⁺—25	
88											
89											
90											
91											

SLIP BASE DETAILS

Note: Unless noted otherwise, all dimensions are in inches.

Column Size	Sleeve I.D. (Max)	Sleeve Wall "T"	Sleeve Height	Weld "W"	Base Plate LxLxT	Radius "R"	Base Bolt Size	Base Bolt Torque FT - lbs	Base Bolt Torque Inch - lbs	Hole Size "A"
3 1/2 x 3/16	3 9/16	3/8	6	5/8	8 x 8 x 3/4	11/32	5/8 Ø x 3	29	345	11/16
4 x 3/16	4 1/16	3/8	6	5/8	8 x 8 x 3/4	11/32	5/8 Ø x 3	29	345	11/16
4 x 1/4	4 1/16	3/8	6	5/8	8 x 8 x 3/4	11/32	5/8 Ø x 3	29	345	11/16
4 1/2 x 1/4	4 9/16	3/8	6	5/8	8 x 8 x 7/8	11/32	5/8 Ø x 3 1/4	29	345	11/16
5 x 1/4	5 1/16	3/8	7	5/8	8 x 8 x 7/8	11/32	5/8 Ø x 3 1/4	29	345	11/16
5 1/2 x 1/4	5 9/16	3/8	7	11/16	8 1/2 x 8 1/2 x 7/8	13/32	1/4 Ø x 3 1/4	46	554	13/16
6 x 1/4	6 1/16	3/8	8	11/16	9 x 9 x 1	13/32	1/4 Ø x 3 1/2	46	554	13/16
6 1/2 x 1/4	6 9/16	3/8	8	3/4	9 1/2 x 9 1/2 x 1	13/32	1/4 Ø x 3 1/2	46	554	13/16
7 x 1/4	7 1/16	3/8	9	3/4	10 x 10 x 1	13/32	1/4 Ø x 3 1/2	46	554	13/16
7 1/2 x 1/4	7 9/16	3/8	9	3/4	10 1/2 x 10 1/2 x 1	15/32	5/8 Ø x 3 3/4	53	640	15/16
8 x 1/4	8 1/16	3/8	10	3/4	11 x 11 x 1	15/32	5/8 Ø x 3 3/4	53	640	15/16

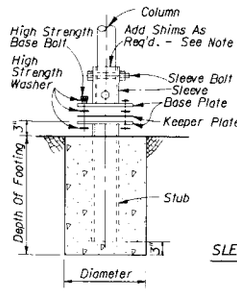

BASE DETAIL

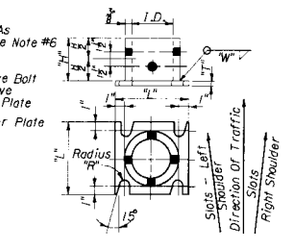

SLEEVE & BASE PLATE DETAILS

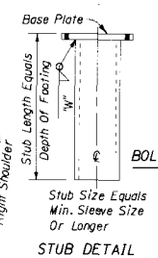

STUB DETAIL

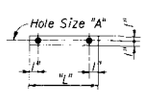

BOLT KEEPER DETAIL

NOTES

1. Work this Standard with Standard Index Numbers 11860 and 11865.
2. To determine column (post) size and footing requirements use the required Sign Identification Number and Sign Height (ht). Designs for heights (ht) lower than those listed in the "Table" are included in Standard Index Number 11865.
3. Single Column installations are not allowed for heights (ht) exceeding the maximum height shown in the "Table", and for sign profiles (Sign Identification Numbers) without any design tabulated. In this event, the sign(s) will have to be supported by multiple columns (posts) featuring breakaway devices. See Standard Index Number 9535.
4. The Column (Post) material shall be aluminum. The size is given as outside diameter times wall thickness. Columns (posts) larger than 3 x 1/8 are non-frangible and shall be installed with breakaway supports and will have concrete footings and slip bases.
5. The footing size is given as outside diameter times depth.
   a) Frangible supports : Footings for Frangible Supports do not require concrete. The Column (post) shall be driven into the ground to the depth indicated.
   b) Breakaway Supports : Footings for Breakaway Supports require concrete. The column support shall be set in a concrete footing, sized as shown in the table. The first dimension indicates the diameter and the second dimension the depth into the ground. In all cases the ground is to be considered as undisturbed earth, road material, or properly compacted fill.
6. SLIP BASE NOTES :
   a) The Inside Diameter (I.D.) of the sleeve shall be no more than 1/16" larger than the Outside Diameter (O.D.) of the Column.
   b) The sleeve bolts shall be 1/2" Ø with locknuts. The bolts shall be galvanized steel (ASTM A-307) or Aluminum Association Alloy 2024-T4 or 6061-T6 (ASTM B-211).
   c) The base bolts, nuts and washers shall be high strength ASTM A-325 and shall have an electroplated zinc coating SC3, Type II applied in accordance with ASTM B633.
   d) An alternate cast base of aluminum alloy 356 and T6 temper in lieu of the fabricated base may be submitted for approval by the Engineer. If a cast base is used the stub will be the same as the column and will be bolted to the casting.
   e) Assemble the slip base connection in the following manner :

      Connect column to sleeve using two (2) 1/2" Ø machine bolts.

      Assemble top base plate to stub base plate using high strength bolts with three (3) hardened washers per bolt. One (1) washer per bolt and two (2) bolt keeper plates go between the base plates.

      Use shim stock as required to plumb the column.

      Tighten all bolts the maximum possible with a 12" to 15" wrench to bet the washers and shims and to clear the bolt threads. Loosen each bolt one (1) turn and retighten to the prescribed torque (see table). Bolts shall be tightened with properly calibrated wrenches under the supervision of the project engineer.

      Burr threads at junction with nut using a center punch to prevent nut loosening.

   f) Use galvanized steel shims to obtain a tight fit between the column face and the sleeve. Place shims in all quadrants between the 1/2" Ø sleeve bolts. The shim length shall be one (1") shorter than the height of the sleeve.

80 M.P.H. WIND LOADING

COLUMN SIZE , COLUMN HEIGHT & COLUMN FOOTINGS

STATE OF FLORIDA DEPARTMENT OF TRANSPORTATION
STRUCTURES DESIGN

SINGLE COLUMN GROUND SIGNS

	Names	Dates
Designed By	TJB	7-89
Drawn By	JSP	7-89
Checked By	AJG	9-89
F.H.W.A. Approved:		

Approved By

Revision No.	Sheet No.	Index No.
92	1 of 1	11863

COL. SIZE	2 x 1/8	3 x 1/8	3 1/2 x 3/16	4 x 3/16	4 x 1/4	4 1/2 x 1/4	5 x 1/4	5 1/2 x 1/4	6 x 1/4	6 1/2 x 1/4	7 x 1/4	7 1/2 x 1/4	8 x 1/4
FOOTING	0x2-0	0x2-6	1-6x2-6	1-6x2-6	1-6x2-6	1-6x2-6	1-6x2-9	1-6x3-0	1-6x3-3	2-0x3-0	2-0x3-4	2-0x3-6	2-0x4-0
Sign Identification Number	HEIGHT (FT.)												
1			14⁺— 21	21⁺— 25									
2			14⁺— 19	19⁺— 22	22⁺— 25								
3			13⁺— 18	18⁺— 21	21⁺— 25								
4		To 6	6⁺— 12	12⁺— 14	14⁺— 18	18⁺— 21	21⁺— 25						
5													
6			9⁺— 13	13⁺— 14	14⁺— 18	18⁺— 21	21⁺— 25						
7			To 8	8⁺— 11	11⁺— 13	13⁺— 15	15⁺— 19	19⁺— 23	23⁺— 25				
8		14⁺— 15	15⁺— 21	21⁺— 25									
9			14⁺— 19	19⁺— 23	23⁺— 25								
10			12⁺— 15	15⁺— 18	18⁺— 22	22⁺— 25							
11			9⁺— 13	13⁺— 14	14⁺— 18	18⁺— 21	21⁺— 25						
12			To 7	7⁺— 10	10⁺— 13	13⁺— 14	14⁺— 17	17⁺— 20	20⁺— 24	24⁺— 25			
13			12⁺— 14	14⁺— 18	18⁺— 21	21⁺— 25							
14			11⁺— 14	14⁺— 17	17⁺— 20	20⁺— 24	24⁺— 25						
15			10⁺— 13	13⁺— 16	16⁺— 19	19⁺— 23	23⁺— 25						
16			9⁺— 13	13⁺— 15	15⁺— 18	18⁺— 22	22⁺— 25						
17			To 9	9⁺— 12	12⁺— 13	13⁺— 16	16⁺— 20	20⁺— 24	24⁺— 25				
18			To 7	7⁺— 10	10⁺— 12	12⁺— 14	14⁺— 17	17⁺— 21	21⁺— 25				
19			To 6	6⁺— 8	8⁺— 11	⁺— 12	12⁺— 15	15⁺— 18	18⁺— 22	22⁺— 25			
20													
21			6⁺— 10	10⁺— 12	12⁺— 14	14⁺— 18	18⁺— 22	22⁺— 25					
22			To 9	9⁺— 12	12⁺— 13	13⁺— 17	17⁺— 20	20⁺— 24	24⁺— 25				
23			6⁺— 10	10⁺— 12	12⁺— 14	14⁺— 18	18⁺— 22	22⁺— 25					
24			To 9	9⁺— 12	12⁺— 13	13⁺— 17	17⁺— 20	20⁺— 24	24⁺— 25				
25			11⁺— 13	13⁺— 17	17⁺— 20	20⁺— 24	24⁺— 25						
26			9⁺— 13	13⁺— 15	15⁺— 18	18⁺— 22	22⁺— 25						
27			9⁺— 13	13⁺— 15	15⁺— 18	18⁺— 22	22⁺— 25						
28			9⁺— 13	13⁺— 14	14⁺— 18	18⁺— 21	21⁺— 25						
29			8⁺— 13	13⁺— 14	14⁺— 17	17⁺— 21	21⁺— 25						
30			8⁺— 12	12⁺— 13	13⁺— 17	17⁺— 20	20⁺— 24	24⁺— 25					
31			6⁺— 10	10⁺— 13	13⁺— 14	14⁺— 18	18⁺— 21	21⁺— 25					
32			6⁺— 9	9⁺— 12	12⁺— 13	13⁺— 17	17⁺— 21	21⁺— 25					
33			7⁺— 11	11⁺— 12	12⁺— 15	15⁺— 19	19⁺— 23	23⁺— 25					
34			6⁺— 10	10⁺— 12	12⁺— 14	14⁺— 17	17⁺— 21	21⁺— 25					
35			7⁺— 11	11⁺— 12	12⁺— 15	15⁺— 19	19⁺— 23	23⁺— 25					
36			6⁺— 10	10⁺— 12	12⁺— 14	14⁺— 17	17⁺— 21	21⁺— 25					
37			To 6	6⁺— 9	9⁺— 11	11⁺— 12	12⁺— 15	15⁺— 19	19⁺— 23	23⁺— 25			
38				To 8	8⁺— 12	12⁺— 13	13⁺— 16	16⁺— 20	20⁺— 24	24⁺— 25			
39				To 7	7⁺— 10	10⁺— 12	12⁺— 13	13⁺— 16	16⁺— 20	20⁺— 23	23⁺— 25		
40													
41					To 7	7⁺— 9	9⁺— 12	12⁺— 13	13⁺— 15	15⁺— 18	18⁺— 22	22⁺— 25	
42					To 6	6⁺— 9	9⁺— 11	11⁺— 12	12⁺— 14	14⁺— 17	17⁺— 21	21⁺— 24	24⁺— 25
43													
44		14⁺— 17	17⁺— 24	24⁺— 25									
45			14⁺— 19	19⁺— 22	22⁺— 25								
46			14⁺— 19	19⁺— 22	22⁺— 25								
47			14⁺— 19	19⁺— 23	23⁺— 25								
48			14⁺— 19	19⁺— 22	22⁺— 25								
49			14⁺— 17	17⁺— 21	21⁺— 24	24⁺— 25							
50	To 9	9⁺— 12	12⁺— 18	18⁺— 21	21⁺— 24	24⁺— 25							
51			14⁺— 17	17⁺— 20	20⁺— 24	24⁺— 25							
52			14⁺— 17	17⁺— 20	20⁺— 24	24⁺— 25							

COL. SIZE	3 x 1/8	3 1/2 x 3/16	4 x 3/16	4 x 1/4	4 1/2 x 1/4	5 x 1/4	5 1/2 x 1/4	6 x 1/4	6 1/2 x 1/4	7 x 1/4	7 1/2 x 1/4
FOOTING	0x2-6	1-6x2-6	1-6x2-6	1-6x2-6	1-6x2-6	1-6x2-9	1-6x3-0	1-6x3-3	2-0x3-0	2-0x3-4	2-0x3-6
Sign Identification Number	HEIGHT (FT.)										
53		13⁺— 16	16⁺— 19	19⁺— 22	22⁺— 25						
54		12⁺— 15	15⁺— 18	18⁺— 21	21⁺— 25						
55		12⁺— 15	15⁺— 18	18⁺— 22	22⁺— 25						
56	To 8	8⁺— 13	13⁺— 17	17⁺— 20	20⁺— 24	24⁺— 25					
57		10⁺— 14	14⁺— 16	16⁺— 20	20⁺— 23	23⁺— 25					
58		11⁺— 13	13⁺— 17	17⁺— 20	20⁺— 24	24⁺— 25					
59		10⁺— 13	13⁺— 16	16⁺— 20	20⁺— 23	23⁺— 25					
60		10⁺— 13	13⁺— 16	16⁺— 19	19⁺— 23	23⁺— 25					
61		8⁺— 13	13⁺— 14	14⁺— 17	17⁺— 21	21⁺— 25					
62		8⁺— 13	13⁺— 14	14⁺— 17	17⁺— 21	21⁺— 25					
63		9⁺— 13	13⁺— 14	14⁺— 18	18⁺— 21	21⁺— 25					
64	To 6	6⁺— 12	12⁺— 14	14⁺— 16	16⁺— 20	20⁺— 24	24⁺— 25				
65		8⁺— 12	12⁺— 13	13⁺— 17	17⁺— 20	20⁺— 24	24⁺— 25				
66		To 11	11⁺— 13	13⁺— 15	15⁺— 19	19⁺— 23	23⁺— 25				
67		7⁺— 11	11⁺— 13	13⁺— 16	16⁺— 19	19⁺— 23	23⁺— 25				
68		7⁺— 12	12⁺— 13	13⁺— 16	16⁺— 19	19⁺— 24	24⁺— 25				
69		7⁺— 11	11⁺— 13	13⁺— 15	15⁺— 18	18⁺— 22	22⁺— 25				
70		6⁺— 10	10⁺— 12	12⁺— 14	14⁺— 17	17⁺— 21	21⁺— 25				
71											
72		To 10	10⁺— 13	13⁺— 14	14⁺— 17	17⁺— 21	21⁺— 25				
73		6⁺— 9	9⁺— 12	12⁺— 13	13⁺— 17	17⁺— 21	21⁺— 25				
74											
75		To 8	8⁺— 11	11⁺— 13	13⁺— 15	15⁺— 18	18⁺— 22	22⁺— 25			
76		To 8	8⁺— 11	11⁺— 13	13⁺— 15	15⁺— 19	19⁺— 23	23⁺— 25			
77		To 8	8⁺— 11	11⁺— 12	12⁺— 15	15⁺— 18	18⁺— 22	22⁺— 25			
78		To 8	8⁺— 11	11⁺— 13	13⁺— 15	15⁺— 18	18⁺— 22	22⁺— 25			
79											
80		To 6	6⁺— 8	8⁺— 11	11⁺— 13	13⁺— 15	15⁺— 18	18⁺— 22	22⁺— 25		
81			To 8	8⁺— 10	10⁺— 12	12⁺— 14	14⁺— 17	17⁺— 21	21⁺— 25		
82											
83											
84											
85											
86			To 6	6⁺— 8	8⁺— 11	11⁺— 12	12⁺— 15	15⁺— 18	18⁺— 21	21⁺— 25	
87				To 7	7⁺— 10	10⁺— 12	12⁺— 13	13⁺— 16	16⁺— 19	19⁺— 23	23⁺— 25
88											
89											
90											
91											

SLIP BASE DETAILS

Note: Unless noted otherwise, all dimensions are in inches.

Column Size	Sleeve I.D. (Max)	Sleeve Wall "T"	Sleeve Height	Weld "W"	Base Plate LxLxT	Radius "R"	Base Bolt Size	Base Bolt Torque FT - lbs	Base Bolt Torque Inch - lbs	Hole Size "A"
3 1/2 x 3/16	3 9/16	3/8	6	5/8	8 x 8 x 3/4	11/32	5/8 Ø x 3	29	345	11/16
4 x 3/16	4 1/16	3/8	6	5/8	8 x 8 x 3/4	11/32	5/8 Ø x 3	29	345	11/16
4 x 1/4	4 1/16	3/8	6	5/8	8 x 8 x 3/4	11/32	5/8 Ø x 3	29	345	11/16
4 1/2 x 1/4	4 9/16	3/8	6	5/8	8 x 8 x 7/8	11/32	5/8 Ø x 3 1/4	29	345	11/16
5 x 1/4	5 1/16	3/8	7	5/8	8 x 8 x 7/8	11/32	5/8 Ø x 3 1/4	29	345	11/16
5 1/2 x 1/4	5 9/16	3/8	7	11/16	8 1/2 x 8 1/2 x 7/8	13/32	3/4 Ø x 3 1/4	46	554	13/16
6 x 1/4	6 1/16	3/8	8	11/16	9 x 9 x 1	13/32	3/4 Ø x 3 1/2	46	554	13/16
6 1/2 x 1/4	6 9/16	3/8	8	3/4	9 1/2 x 9 1/2 x 1	13/32	3/4 Ø x 3 1/2	46	554	13/16
7 x 1/4	7 1/16	3/8	9	3/4	10 x 10 x 1	13/32	3/4 Ø x 3 1/2	46	554	13/16
7 1/2 x 1/4	7 9/16	3/8	9	3/4	10 1/2 x 10 1/2 x 1	15/32	7/8 Ø x 3 3/4	53	640	15/16
8 x 1/4	8 1/16	3/8	10	3/4	11 x 11 x 1	15/32	7/8 Ø x 3 3/4	53	640	15/16

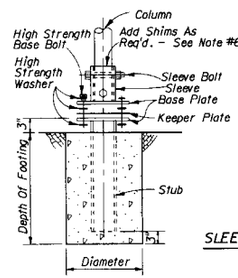

BASE DETAIL

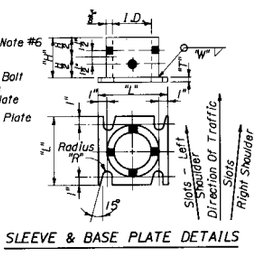

SLEEVE & BASE PLATE DETAILS

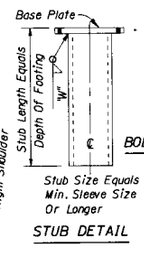

STUB DETAIL

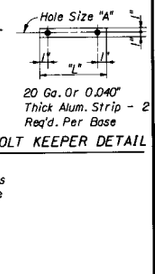

BOLT KEEPER DETAIL

NOTES

1. Work this Standard with Standard Index Numbers 11860 and 11865.
2. To determine column (post) size and footing requirements use the required Sign Identification Number and Sign Height (H). Designs for Heights (H) lower than those listed in the "Table" are included in Standard Index Number 11865.
3. Single Column Installations are not allowed for heights (H) exceeding the maximum height shown in the "Table", and for sign profiles (Sign Identification Numbers) without any design tabulated. In this event, the sign(s) will have to be supported by multiple columns (posts) featuring breakaway devices. See Standard Index Number 9535.
4. The Column (Post) material shall be aluminum. The size is given as outside diameter times wall thickness. Columns (posts) larger than 3 x 1/8 are non-frangible and shall be installed with breakaway supports and will have concrete footings and slip bases.
5. The footing size is given as outside diameter times depth.
   a) Frangible supports : Footings for Frangible Supports do not require concrete. The Column (post) shall be driven into the ground to the depth indicated.
   b) Breakaway Supports : Footings for Breakaway Supports require concrete. The column support shall be set in a concrete footing, sized as shown in the table. The first dimension indicates the diameter and the second dimension the depth into the ground. In all cases the ground is to be considered as undisturbed earth, road material, or properly compacted fill.
6. SLIP BASE NOTES :
   a) The Inside Diameter (I.D.) of the sleeve shall be no more than 1/16" larger than the Outside Diameter (O.D.) of the Column.
   b) The sleeve bolts shall be 1/2" Ø, with locknuts. The bolts shall be galvanized steel (ASTM A-307) or Aluminum Association Alloy 2024-T4 or 6061-T6 (ASTM B-211).
   c) The base bolts, nuts and washers shall be high strength ASTM A-325 and shall have an electroplated zinc coating SC3, Type II applied in accordance with ASTM B633.
   d) An alternate cast base of aluminum alloy 356 and T6 temper in lieu of the fabricated base may be submitted for approval by the Engineer. If a cast base is used the stub will be the same as the column and will be bolted to the casting.
   e) Assemble the slip base connection in the following manner :

      Connect column to sleeve using two (2) 1/2" Ø machine bolts.

      Assemble top base plate to stub base plate using high strength bolts with three (3) hardened washers per bolt. One (1) washer per bolt and two (2) bolt keeper plates go between the base plates.

      Use shim stock as required to plumb the column.

      Tighten all bolts the maximum possible with a 12" to 15" wrench to bed the washers and shims and to clear the bolt threads. Loosen each bolt one (1) turn and retighten to the prescribed torque (see table). Bolts shall be tightened with properly calibrated wrenches under the supervision of the project engineer.

      Burr threads at junction with nut using a center punch to prevent nut loosening.

   f) Use galvanized steel shims to obtain a tight fit between the column face and the sleeve. Place shims in all quadrants between the 1/2" Ø sleeve bolts. The shim length shall be one (1") shorter than the height of the sleeve.

90 M.P.H. WIND LOADING

COLUMN SIZE , COLUMN HEIGHT & COLUMN FOOTINGS

STATE OF FLORIDA DEPARTMENT OF TRANSPORTATION
STRUCTURES DESIGN

SINGLE COLUMN GROUND SIGNS

	Names	Dates
Designed By	TJB	7-89
Drawn By	JSP	7-89
Checked By	AJG	9-89
F.H.W.A. Approved:		

Approved By

Revision No.	Sheet No.	Index No.
92	1 of 1	11864

COL. SIZE	2 x 1/8	2 x 1/8	2 1/2 x 1/8	2 1/2 x 1/8	3 x 1/8			*
FOOTING	0x2-0	0x2-0	0x2-3	0x2-3	0x2-6			*
COL. SIZE	2.5 #/FT.	3.0 #/FT.	4.0 #/FT.	N/A	N/A			*
FOOTING	0X3-0	0X3-0	0X3-0	N/A	N/A			*
Sign Identification Number	HEIGHT (FT.)							
1	To 8	8 +- 10	10 +- 13	——	13 +- 14			
2	To 7	7 +- 8	8 +- 12	12 +- 13	13 +- 14			
3	To 6	6 +- 7	7 +- 11	——	11 +- 13			
4								
5								
6			To 6	——	6 +- 9			
7								
8	To 9	9 +- 10	10 +- 13	13 +- 14				
9	To 7	7 +- 8	8 +- 12	12 +- 13	13 +- 14			
10			To 9	8 +- 9	9 +- 12			
11			To 6	——	6 +- 9			
12								
13			To 8	——	8 +- 12			
14			To 7	——	7 +- 11			
15			To 7	——	7 +- 10			
16			To 6	——	6 +- 9			
17								
18								
19								
20								
21					To 6			
22								
23					To 6			
24								
25			To 7	——	7 +- 11			
26			To 6	——	6 +- 9			
27			To 6	——	6 +- 9			
28			To 6	——	6 +- 9			
29					To 8			
30					To 8			
31					To 6			
32					To 6			
33					To 7			
34					To 6			
35					To 7			
36					To 6			
37								
38								
39								
40								
41								
42								
43								
44	To 9	9 +- 10	10 +- 13	13 +- 14				
45	To 7	7 +- 9	9 +- 12	12 +- 13	13 +- 14			
46	To 7	7 +- 9	9 +- 12	12 +- 13	13 +- 14			

COL. SIZE	2 x 1/8	2 x 1/8	2 1/2 x 1/8	2 1/2 x 1/8	3 x 1/8			*
FOOTING	0x2-0	0x2-0	0x2-3	0x2-3	0x2-6			*
COL. SIZE	2.5 #/FT.	3.0 #/FT.	4.0 #/FT.	N/A	N/A			*
FOOTING	0X3-0	0X3-0	0X3-0	N/A	N/A			*
Sign Identification Number	HEIGHT (FT.)							
47	To 7	7 +- 9	9 +- 12	12 +- 13	13 +- 14			
48	To 7	7 +- 8	8 +- 12	——	12 +- 14			
49	To 6	6 +- 7	7 +- 11	——	11 +- 14			
50								
51	To 6	6 +- 7	7 +- 11	——	11 +- 14			
52		To 6	6 +- 10	——	10 +- 13			
53		To 6	6 +- 10	——	10 +- 13			
54			To 9	——	9 +- 12			
55			To 9	——	9 +- 12			
56								
57			To 7	——	7 +- 10			
58			To 7	——	7 +- 11			
59			To 7	——	7 +- 10			
60			To 7	——	7 +- 10			
61			To 6	——	6 +- 8			
62			To 6	——	6 +- 8			
63			To 6	——	6 +- 9			
64								
65					To 8			
66								
67					To 7			
68					To 7			
69					To 7			
70					To 6			
71								
72								
73					To 6			
74								
75								
76								
77								
78								
79								
80								
81								
82								
83								
84								
85								
86								
87								
88								
89								
90								
91								

ALUMINUM ROUND POST

STEEL FLANGED CHANNEL POST

* For definition of Column (Post) size and footing size see Standard Index No. 11863. Column size and installation depth (footing) are based on 80 MPH wind loading; however, the designs included in this Standard 11865 are valid for implementation in the entire State of Florida.

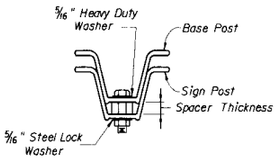

SECTION THROUGH SPLICE

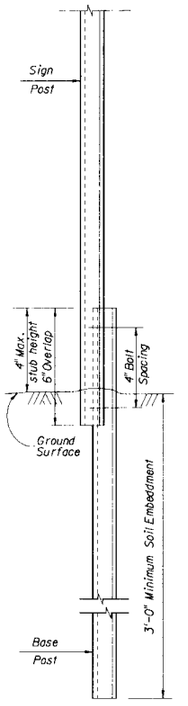

DETAIL "C"
(Approved Frangible Installation)

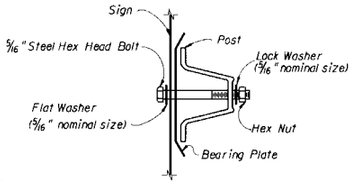

SIGN ATTACHMENT DETAIL

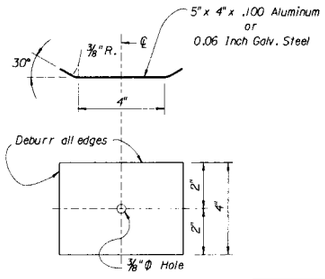

BEARING PLATE DETAIL

NOTES

1. Work this Standard with Standard Index Numbers 11860 thru 11864.
2. Specifications for Aluminum materials, Sign Panel Details, etc. are given on the above Standard Index Numbers.
3. This Standard provides designs for single driven post sign installations for use at any location in the State of Florida. The designs adhere to the following limitations:
   a. Mounting Height = 14' Max.
   b. Sign(s) Area = 25 Ft. Sq. Max.
   c. Width: Single Sign = 36" Max.
      Multiple Signs = 48" Max. (See Detail 'A')
   d. Driven Post only.
4. Designs for installations exceeding the above limits or needing concrete footings are not included in this Standard.
5. Posts shall be installed plumb.
6. Obtain Sign Bracket requirements from INDEX No. 11860. Use 80 M.P.H. Wind Zone, See Detail "B". If Steel Flanged Channel Posts are used, 2 - 5/16" Ø Bolts are required for each Type I Bracket.
7. Steel for Flanged Channel Posts shall conform with ASTM A499 Grade 60, or ASTM A576 Grade 1080.
8. Bolts, nuts and washers shall conform to ASTM A307. See Detail "C" for splice requirements.
9. All steel posts, plates, and hardware shall be galvanized per ASTM A123 or ASTM A153.
10. Steel Flanged Channel Posts weighing 4.0 lbs. per foot are non-frangible and shall be installed with approved breakaway bases. See Detail "C".
11. Steel Flanged Channel Posts weighing 2.5 and 3.0 lbs. per foot, and all Aluminium Round Posts included in this standard are frangible and do not require breakaway bases. However, the Contractor may mount frangible posts on approved breakaway bases.
12. SHOP DRAWINGS: If the Contractor proposes to utilize sign panel connections and/or breakaway devices not shown in this standard or on the above referenced standards, the Contractor shall submit details of the connections and/or devices for approval.

SPLICE NOTES
(See Detail "C")

Material Specifications :
Bolts - ASTM A354 Grade BD or SAE J429 Grade 8, 5/16" 18 UNC x 2" long.
Nuts - ASTM A563 Grade DH or SAE J995 Grade 8.
Washers & Spacers - Heavy Duty, Steel ASTM A307, or A36.

Splice Requirements :
Base and Sign Posts shall be same size & type.
Splice shall be six inches in length, fastened with two bolts four inches apart, with washers and spacer, as shown.
Bolts shall be wrench-tightened sufficiently to clamp splice assembly tightly together.

Spacer thickness shall be as follows :

Post Size (#/ft.)	Type M post (Spacer Thickness)	Type F Post (Spacer Thickness)
2 1/2	5/16"	5/16"**
3	3/8"**	5/16"**
4	5/8"**	5/16"**

** May use two 5/16" Spacers

The base post shall be installed to leave only a 4-inch stub height above ground.

All splice components and post shall be galvanized per ASTM A123 or A153. Fasteners may be mechanically galvanized to ASTM B695 Class 50.

APPROVED STEEL FLANGED CHANNEL POSTS

Lb./Ft.*	Type	A(in.)	B(in.)	C(in.)	Sx(in.^{3})
2.50	F	1.562	3.125	1.250	.310
2.50	M	1.500	3.063	1.281	.313
3.00	F	1.750	3.500	1.625	.430
3.00	M	1.875	3.500	1.313	.447
4.00	F	1.750	3.500	1.671	.560
4.00	M	1.938	3.500	1.313	.625

* ± 3 1/2%

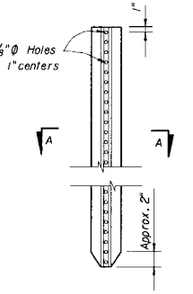

ELEVATION

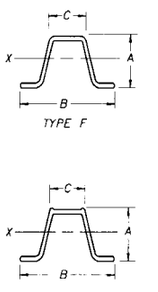

SECTION A-A

FLANGED CHANNEL POST DETAILS

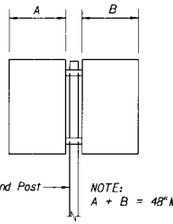

DETAIL "A"

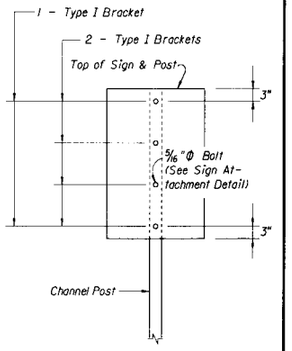

DETAIL "B"
(See Note No. 6)

COLUMN SIZE , COLUMN HEIGHT & COLUMN FOOTINGS

STATE OF FLORIDA DEPARTMENT OF TRANSPORTATION
STRUCTURES DESIGN

SINGLE COLUMN GROUND SIGNS

HEIGHT = 14' MAX (ALL WIND ZONES)

	Names	Dates
Designed By	TJB	7-89
Drawn By	JSP	7-89
Checked By	AJG	9-89
F.H.W.A. Approved:		

Approved By

Revision No.	Sheet No.	Index No.
92	1 of 1	11865

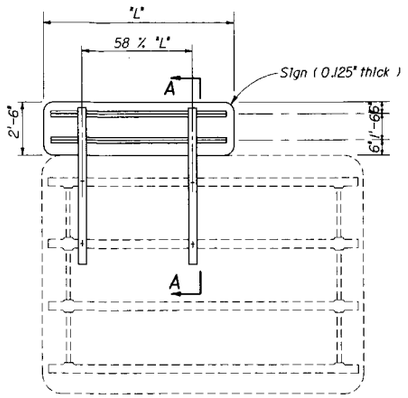

ELEVATION

Mounting of Exit Numbering Panels To Highway Signs

NOTE : Exit numbering panel shall be located to the right side for right exit and to the left for left exit.

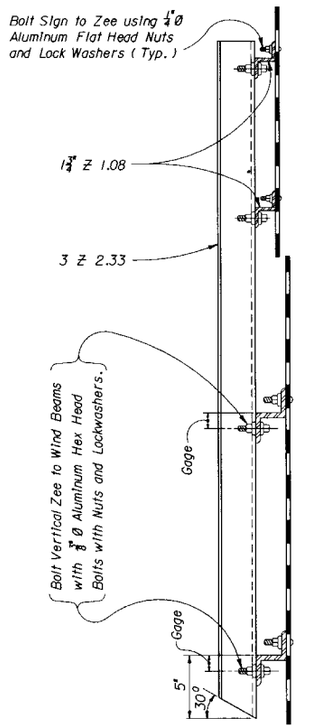

SECTION A-A

GENERAL NOTES

DESIGN SPECIFICATION : Standard specifications for structural supports for highway signs, luminaries and traffic signals, A.A.S.H.T.O.,1985.

SHEETS AND PLATES : Material used shall meet the requirements of Aluminum Association Alloy 6061-T6 and ASTM Specification B - 209. Sheets are to be degreased, etched, neutralized and treated with Alodine 1200,Iridite 14 - 2, Bonderite 721, or equal. No stenciling permitted on sheets.

MATERIALS : All aluminum materials shall meet the requirements of the Aluminum Association Alloy 6061 - T6 and also the following ASTM specifications for the following : Sheet and Plates B - 209 ; Extruded Shapes B - 221 and Standard Structural Shapes B - 308.

ALUMINUM BOLTS, NUTS & LOCKWASHERS : Aluminum bolts shall meet the requirements of the Aluminum Association Alloy 2024 - T4 or 6061 - T6 (ASTM spec. B - 211). The bolts shall have an anodic coating of at least 0.0002" thick and be chromate sealed. Lockwashers shall meet the requirement of Aluminum Association Alloy 7075 - T6 (ASTM specification B - 221). Nuts shall meet the requirement of Aluminum Association Alloy 6262 - T9 or 6061 - T6.

SIGN FACE : All sign face corners shall be rounded. See sign layout sheet for dimension "L" and sign face details.

MATERIAL STRESSES : All allowable stresses are in accordance with standard specifications for structural supports for highway signs, luminaries and traffic signals. A.A.S.H.T.O.,1985, for all materials shown in the plans.

FOR MOUNTING DETAILS REFER TO DRAWING NO. 1 OF 1, INDEX 11037.

STATE OF FLORIDA DEPARTMENT OF TRANSPORTATION
STRUCTURES DESIGN

DETAIL FOR MOUNTING EXIT NUMBERING PANELS TO HIGHWAY SIGNS

	Names	Dates
Designed By	CK/CWB	07/82
Drawn By		
Checked By	CK	07/82

F.H.W.A. Approved:

Approved By

Revision No.	Sheet No.	Index No.
	1 of 1	13417

CASE I

For use on Freeway and Expressway systems for signs on mainline.

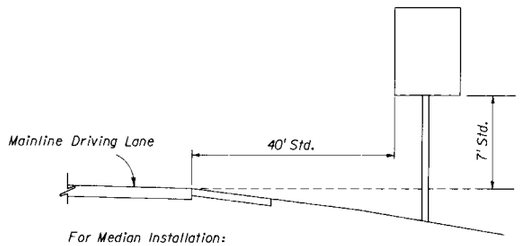

For Median Installation:
If Median Width Does Not Allow Std. Offset From Both Roadways, Center Sign In Median.

CASE II

For Use In All Rural Roads And On Freeway And Expressway Ramps.

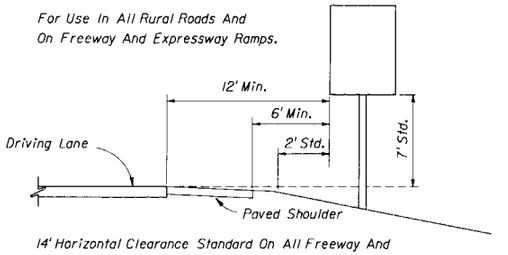

14' Horizontal Clearance Standard On All Freeway And Expressway Ramps

For sections without paved shoulder the 6' Min does not apply.

CASE III

For Use On All Roads With Signs Mounted Behind Side - Walk.

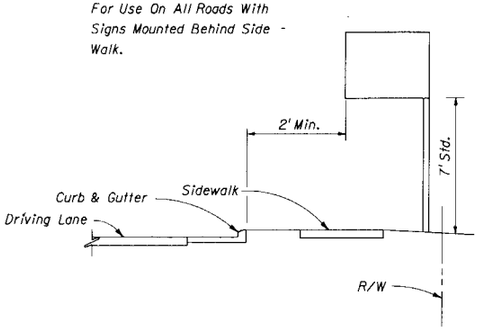

CASE IV (Merge Sign)

For Use On All Rural, Freeway And Expressway Systems.

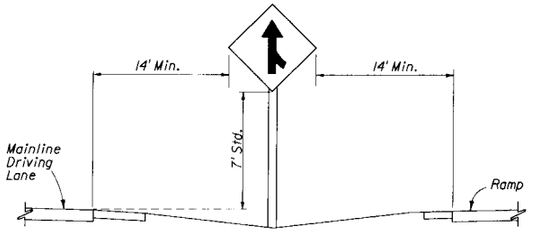

CASE V

For Use In Business Or Residential Areas Only.

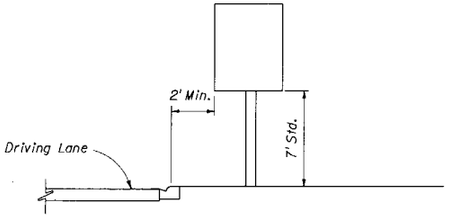

CASE VI

For Use On All Roadways With Signs Behind Guardrail.

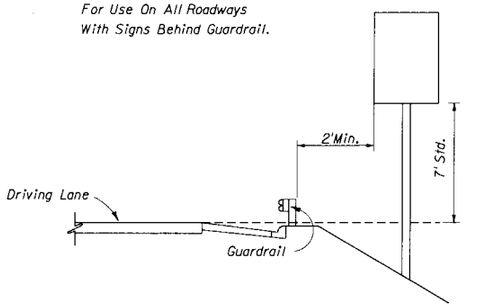

CASE VII (REST AREA & EXIT GORE SIGNS)

For Use On All Freeway And Expressway Systems

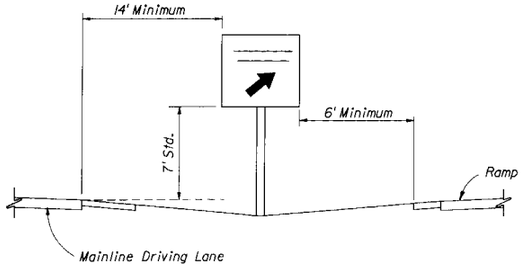

CASE VIII

Sign On Island

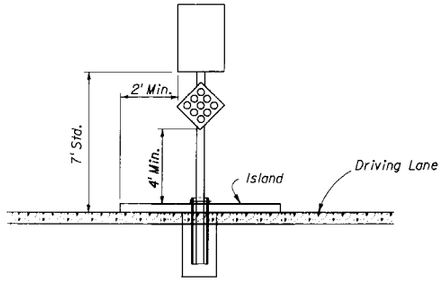

Center Sign Column On Island

CASE IX (MILE POST MARKER)

For More Information Refer To Part 2D-46 Of The Manual On Uniform Traffic Control Devices

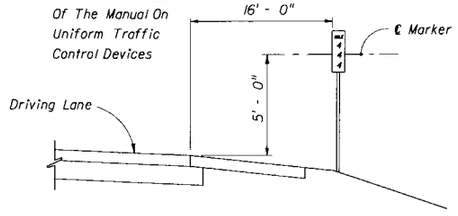

GENERAL NOTES:

1. The typical sections shown hereon serve as a guide for locating the traffic signs required under various roadside conditions. For size and details of sign construction and footing, refer to the appropriate standard index drawing for roadside sign.

2. It shall be the CONTRACTORS respon - sibility to verify the length of sign supports in the field prior to fabrication.

3. Roadside signs shall be installed at an angle of 1 to 4 degrees away from the traffic flow(see illustration). Shoulder mounted signs shall be rotated counterclockwise and median mounted signs rotated clockwise. Signs on curves shall be mounted as noted above from the perpendicular to the motorists line of sight.

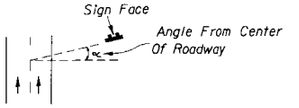

4. The setback for stop and yield signs may be reduced to 3' minimum from the driving lane if required for visibility in business or residential sections with no curb and speeds of 30 MPH or less.

5. The mounting heights are measured from the bottom of the sign panel to a horizontal line extended from the edge of the driving lane. If the standard heights cannot be met, the minimum heights are as follows:

Expressway & Freeway Systems	7'
Other Roadway Systems	
Rural	5'
Urban (including residential with parking and/or pedestrian activity)	7'

If a secondary sign is mounted below the major sign,the major sign shall be at least 8' and the secondary sign at least 5' for expressway & freeway systems and for other systems the height to the secondary sign shall be at least 4' for rural and 6' for urban sections.

6. Sign supports should never be placed in ditches where erosion might affect the proper operation of the breakaway feature. It is also possible that a vehicle entering the ditch might be guided into the support.

STATE OF FLORIDA DEPARTMENT OF TRANSPORTATION
TRAFFIC DESIGN

TYPICAL SECTIONS FOR ONE COLUMN SIGN PLACEMENT

	Names	Dates
Designed By	G.W.	03-75
Drawn By		
Checked By		
F.H.W.A. Approved:		

Approved By Clark A Scott
State Traffic Plans Engineer

Revision No.	Sheet No.	Index No.
92	1 of 1	17302

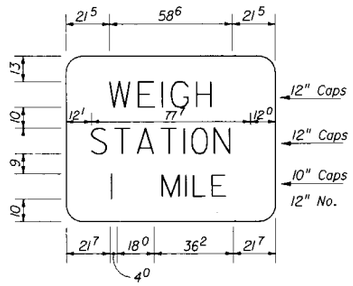

Sign No. FTP-3
8' - 6" x 6' - 6"
2" Border - 9" Radius.

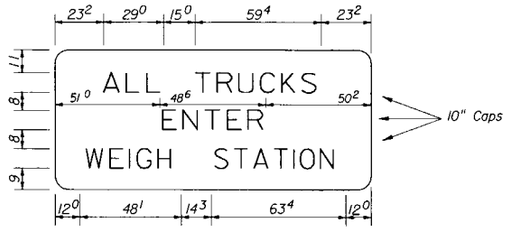

Sign No. FTP-4
12' - 6" x 5' - 6"
2" Border - 9" Radius.

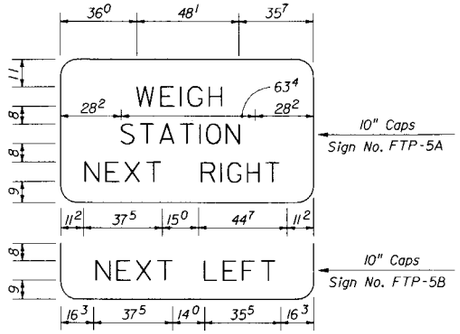

10' - 0" x 5' - 6"
2" Border - 9" Radius.

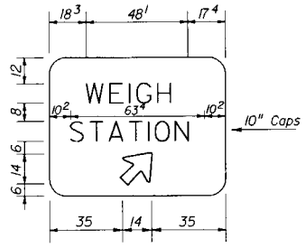

Sign No. FTP-6
7' - 0" x 5' - 6"
2" Border - 6" Radius.

NOTE :
FTP-6A ___ Right Arrow
FTP-6B ___ Left Arrow

FOR FREEWAY USE

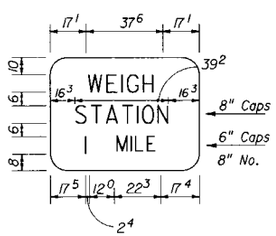

Sign No. FTP-7
6' - 0" x 4' - 6"
2" Border - 6" Radius.

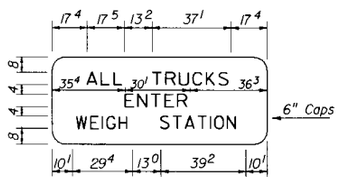

Sign No. FTP-8
8' - 6" x 3' - 6"
2" Border - 6" Radius.

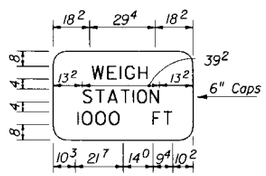

Sign No. FTP-9
5' - 6" x 3' - 6"
2" Border - 6" Radius.

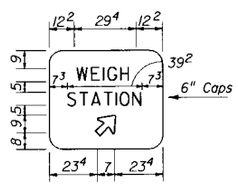

Sign No. FTP-10
4' - 6" x 4' - 0"
2" Border - 6" Radius.

NOTE :
FTP - 10A ___ Right Arrow
FTP - 10B ___ Left Arrow

FOR OTHER THAN FREEWAY USE

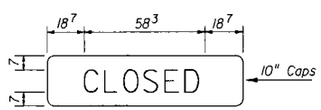

Sign No. FTP - 11
8' - 0" x 2' - 0"
2" Border. 3" Radius.

Note
Sign No. FTP-11 to be used with signs No. FTP-5A & 5B

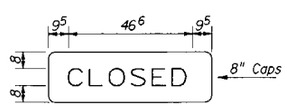

Sign No. FTP-12
5' - 6" x 2' - 0"
2" Border. 3" Radius.

Note
Sign No. FTP-12 to be used with sign No. FTP-9

NOTE:
All signs to have Green Reflective Background with Reflective White Legend and Border, except signs Nos. FTP-4 & FTP-8 which shall have Reflective White Background with Black Legend and Border.

All dimensions shown are in inches and eighths.

All signs to have Series E legend.

STATE OF FLORIDA DEPARTMENT OF TRANSPORTATION
TRAFFIC DESIGN

TYPICAL SIGNING FOR TRUCK WEIGH AND INSPECTION STATIONS

	Names	Dates
Designed By	MFM	01/75
Drawn By		
Checked By	KR	01/75
F.H.W.A. Approved:		01/75

Approved By: Clark A Scott
State Traffic Plans Engineer

Revision No.	Sheet No.	Index No.
90	1 of 3	17328

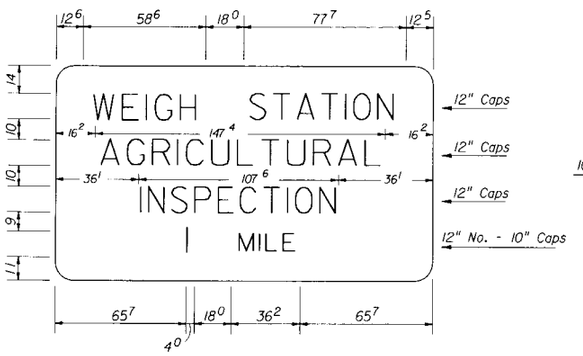

Sign No. FTP-13
15' - 0" x 8' - 6"
2" Border - 9" Radius.

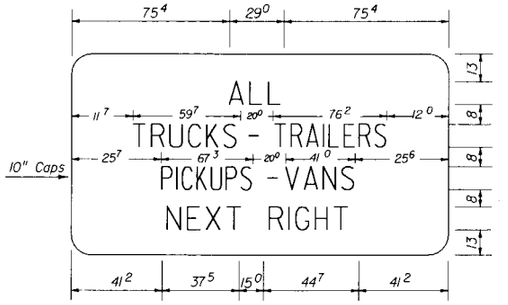

Sign No. FTP-14A
15'- 0" x 7'- 6"
2" Border - 9" Radius.

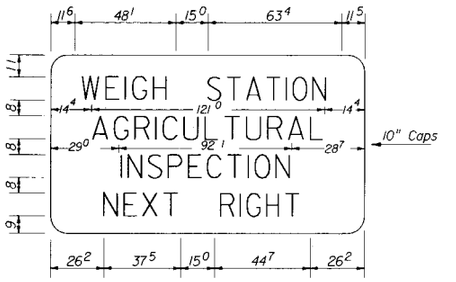

Sign No. FTP-15A
12' - 6" x 7' - 0"
2" Border - 9" Radius.

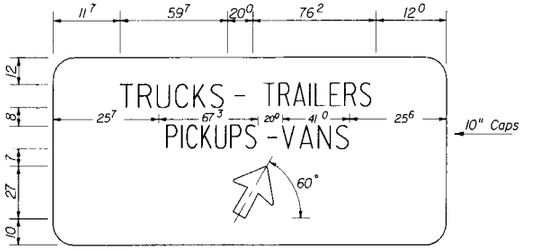

Sign No. FTP-16
15' - 0" x 7' - 0"
2" Border - 9" Radius.

NOTE :
FTP-16A - Right Arrow
FTP-16B - Left Arrow

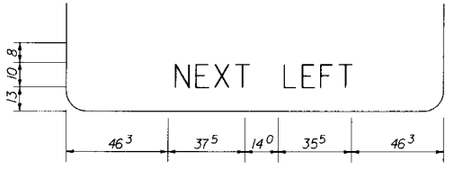

Sign No. FTP-14B
15' - 0" x 7' - 6"
2" Border - 9" Radius.

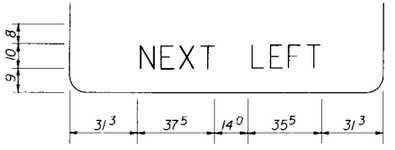

Sign No. FTP-15B
12' - 6" x 7' - 0"
2" Border - 9" Radius.

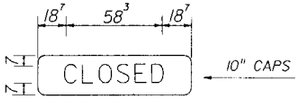

Sign No. FTP-11
8'-0" X 2'-0"
2" Border - 3" Radius

NOTE:
Sign No. FTP-11 to be used with signs FTP-15A & 15B

NOTE

All signs shall have Green Reflectorized Background with Reflective White Legend and Border, except signs FTP-14A & 14B which shall have a Reflective White Background with Black Legend and Border.

All dimensions shown are in inches and eights.

All guide sign corner radius shall have the outside corners of sign face cut concentric with border. Border to be mounted tangent to and with edge of sign.

On Interstate Station Delete, Pickups-Vans, and reduce sign height accordingly.

All signs to have Series E legend.

STATE OF FLORIDA DEPARTMENT OF TRANSPORTATION
TRAFFIC DESIGN

TYPICAL SIGNING FOR
TRUCK WEIGH AND INSPECTION STATIONS

	Names	Dates
Designed By	M.C.	10/87
Drawn By	M.C.	10/87
Checked By	K.R.	10/87

Approved By: Clark A Scott
State Traffic Plans Engineer

F.H.W.A. Approved:

Revision No.	Sheet No.	Index No.
90	2 of 3	17328

4 - LANE DIVIDED INSTALLATION

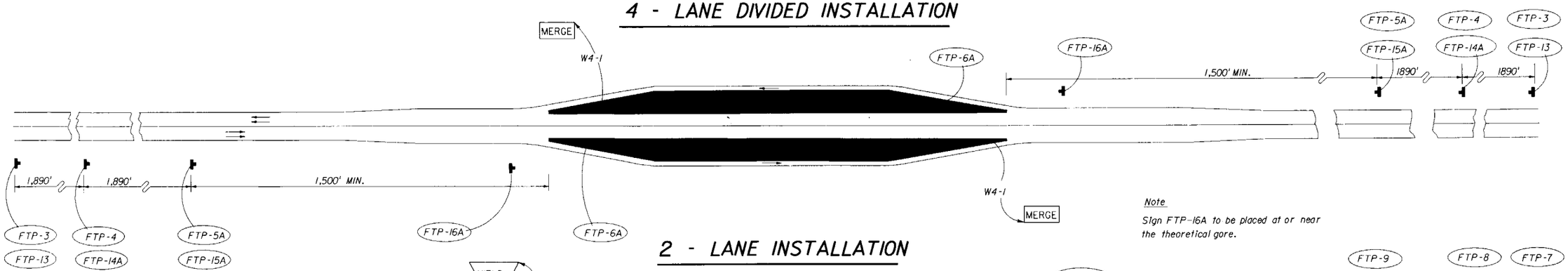

Note

Sign FTP-16A to be placed at or near the theoretical gore.

2 - LANE INSTALLATION

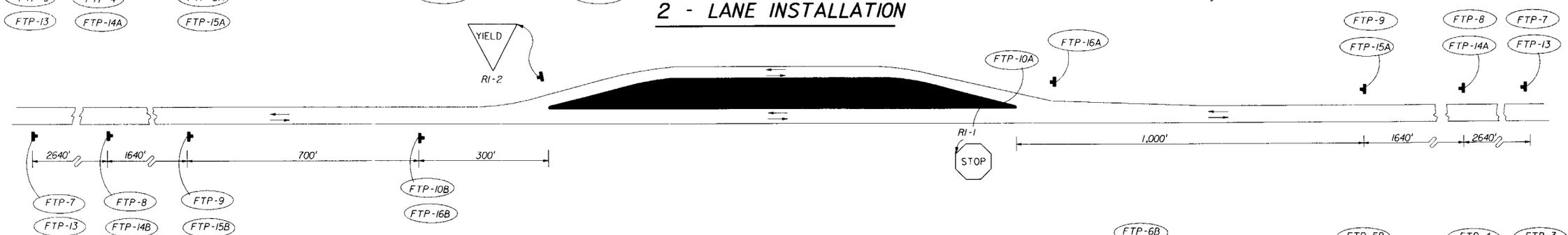

MEDIAN INSTALLATION

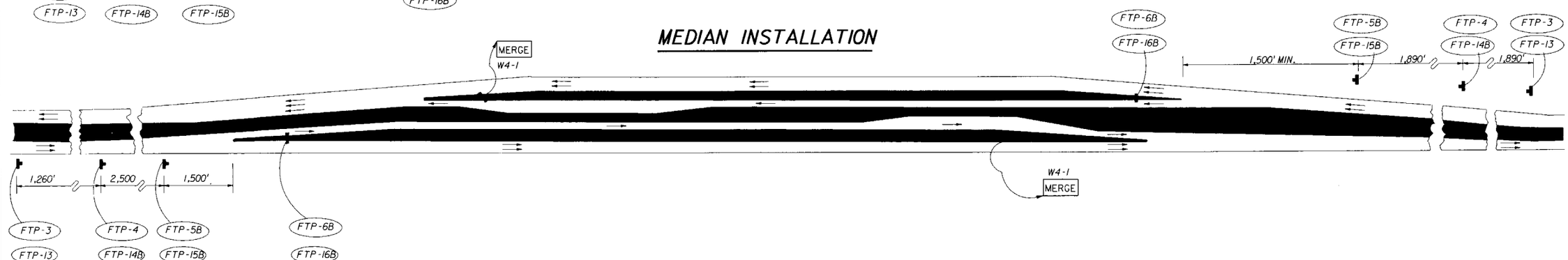

STATE OF FLORIDA DEPARTMENT OF TRANSPORTATION
TRAFFIC DESIGN

TYPICAL SIGNING FOR TRUCK WEIGH AND INSPECTION STATIONS

	Names	Dates
Designed By	M.F.M.	01/75
Drawn By		
Checked By	K.R.	01/75
F.H.W.A. Approved:		

Approved By: Clark A Lott
State Traffic Plans Engineer

Revision No.	Sheet No.	Index No.
90	3 of 3	17328

Approach Speed (MPH)	Distance A
25 To 35	200 Ft.
36 To 45	350 Ft.
46 To 55	500 Ft.

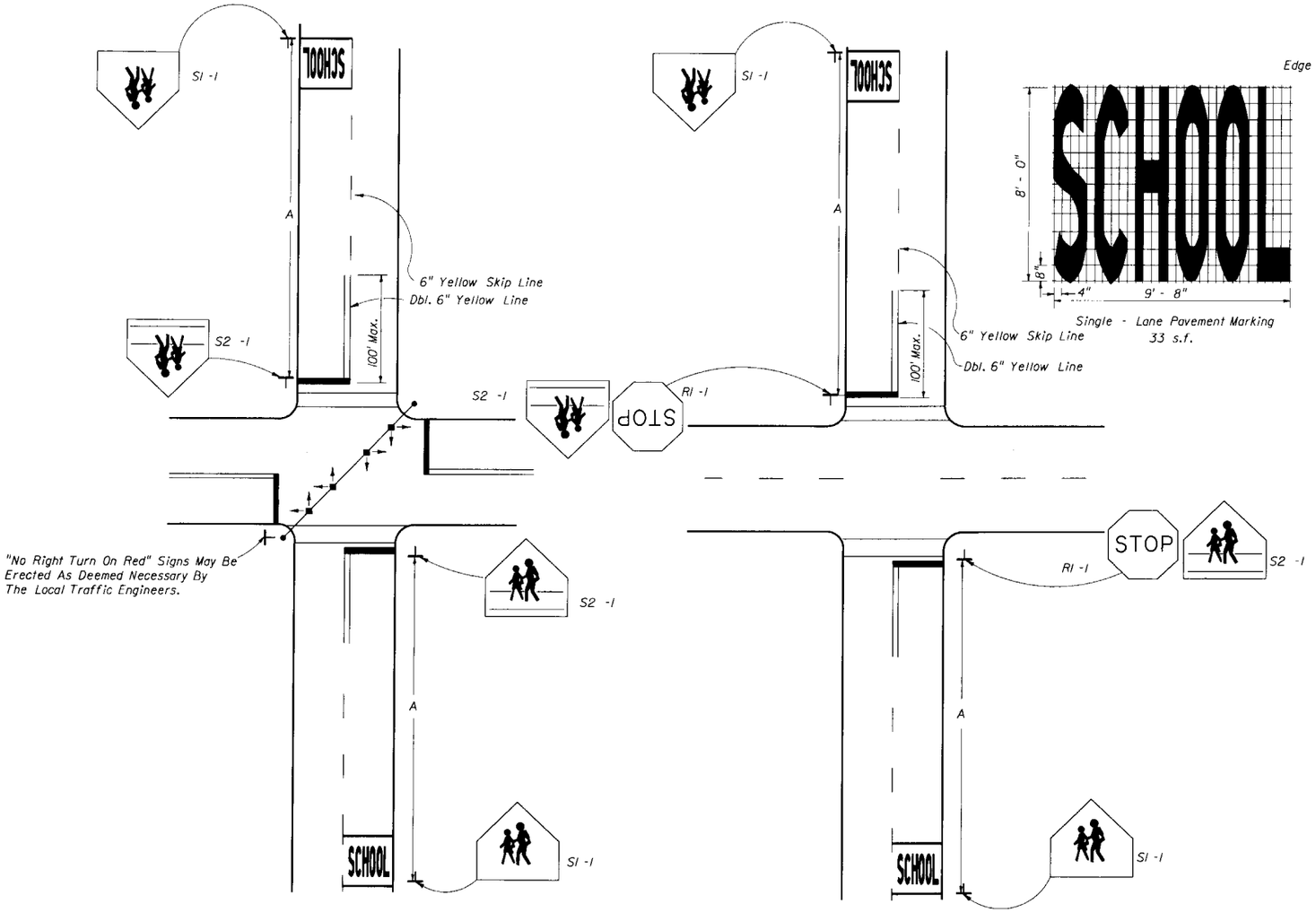

1. TRAFFIC CONTROL DEVICES FOR A SCHOOL CROSS-WALK AT A SIGNALIZED INTERSECTION

2. TRAFFIC CONTROL DEVICES FOR A SCHOOL CROSS-WALK AT A STOP CONTROLLED INTERSECTION

Note:
Special speed restrictions are not normally applicable to these two cases.

PAVEMENT MARKINGS

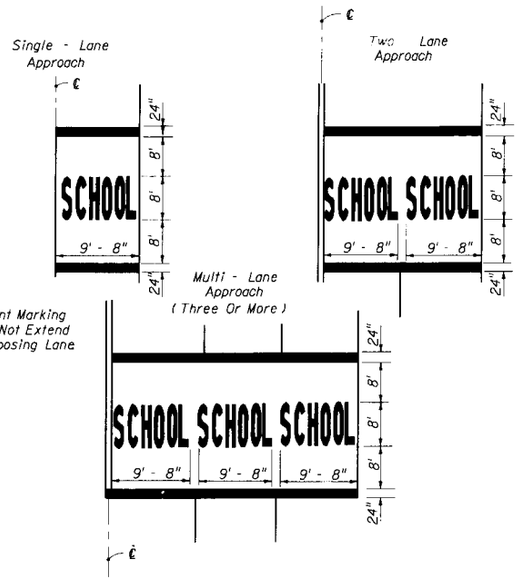

Notes

Signs shall be erected in accordance with Index No 17302.

When computing pavement messages quantities do not include transverse lines.

All school signs shall be reflective.

School cross-walk width shall be 6' min. 10' std. without curb cut ramps 10' min. with curb cut ramps. See Index 17358.

For signalized intersections or mid-block signalized crossings where flashing beacon speed limit signs (post mounted or overhead) are installed, the minimum distance from the speed limit sign to the stop line shall be 100 feet. The sign shall not block the view of the signal.

STATE OF FLORIDA DEPARTMENT OF TRANSPORTATION
TRAFFIC DESIGN

SCHOOL SIGNS & MARKINGS

	Names	Dates
Designed By	CEJ	07/16
Drawn By		
Checked By	KR	07/16
F.H.W.A. Approved:		

Approved By Clark A Scott
State Traffic Plans Engineer

Revision No.	Sheet No.	Index No.
92	1 of 6	17344

3. TRAFFIC CONTROL DEVICES WITH FLASHING BEACON FOR REDUCED SPEED ZONE AT A SCHOOL CROSS-WALK

(2 LANES - 2 WAY TRAFFIC)

(MIDBLOCK OR ON THRU STREET AT AN INTERSECTION)

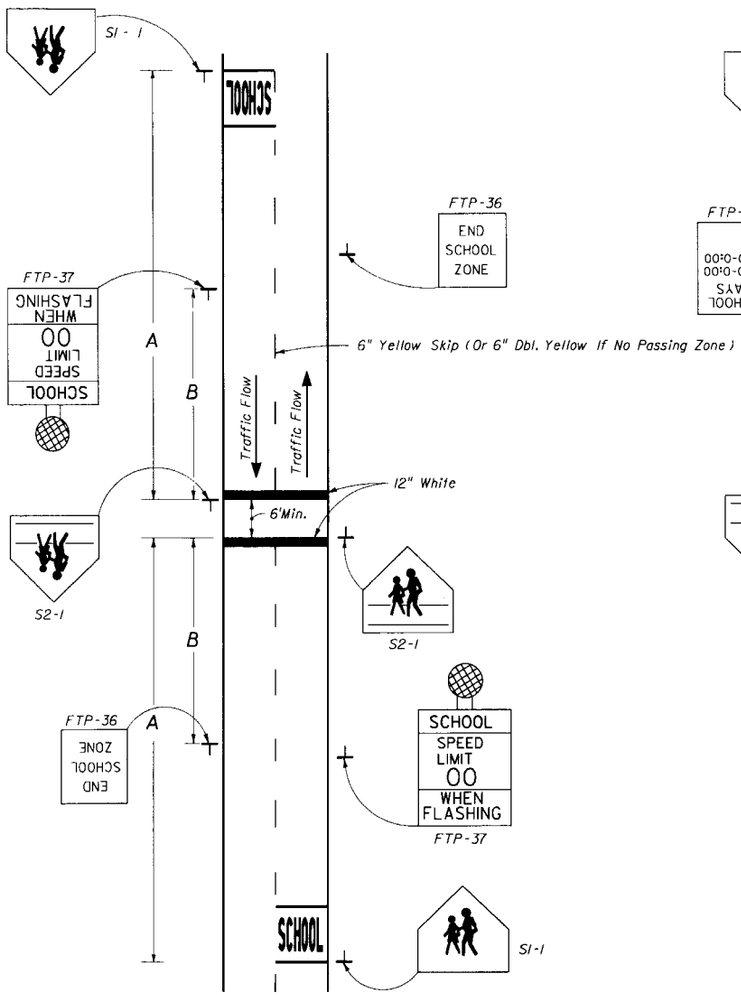

4. TRAFFIC CONTROL DEVICES FOR A REDUCED SPEED ZONE AT A SCHOOL CROSS-WALK (NO FLASHING BEACON)

(2 LANES - 2 WAY TRAFFIC)

(MIDBLOCK OR ON THRU STREET AT AN INTERSECTION)

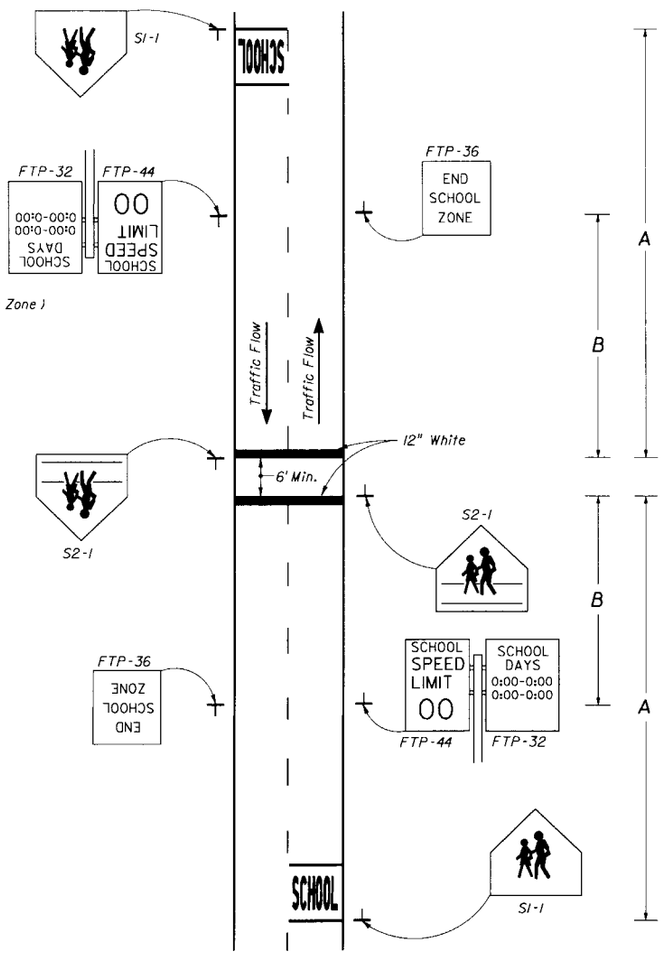

5. TRAFFIC CONTROL DEVICES FOR A REDUCED SPEED ZONE AT A SCHOOL CROSS-WALK WITH OVERHEAD FLASHING BEACON SPEED LIMIT SIGNS

(4 LANES UNDIVIDED - 2 WAY TRAFFIC)

(MIDBLOCK OR ON THRU STREET AT AN INTERSECTION)

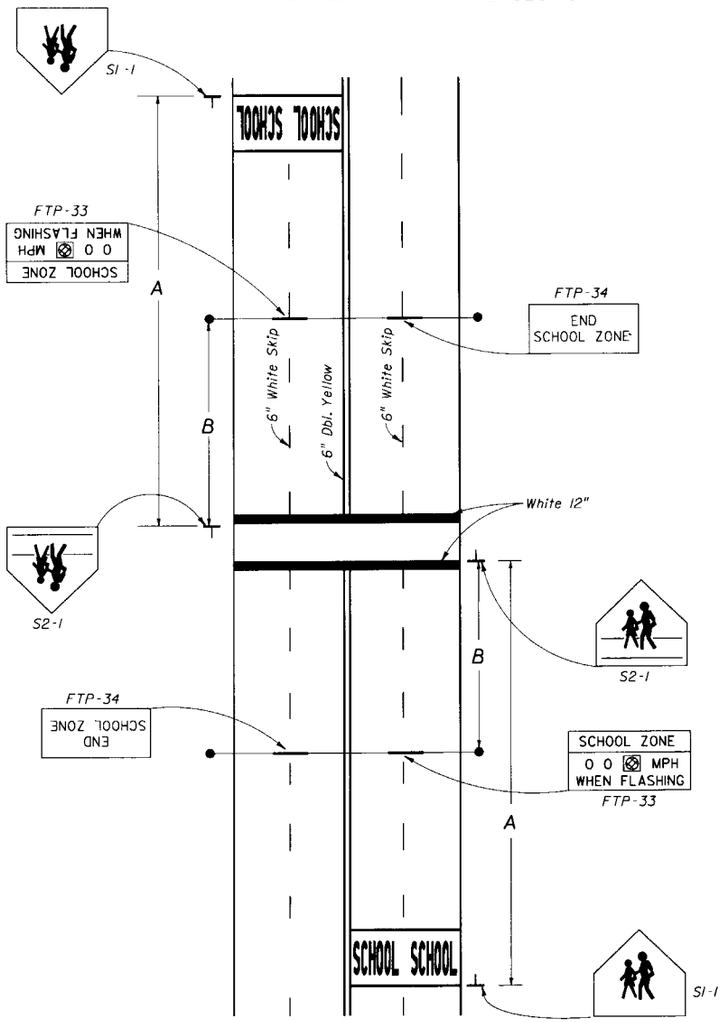

APPROACH SPEED MPH	SUGGESTED DISTANCE IN FEET	
	A	B
25 To 35	200	50
36 To 45	350	65
46 To 55	500	80

School cross-walk width shall be 6' min.
10' std. without curb cut ramps.
10' min. with curb cut ramps.
See index 17358

STATE OF FLORIDA DEPARTMENT OF TRANSPORTATION
TRAFFIC DESIGN

SCHOOL SIGNS & MARKINGS

	Names	Dates
Designed By	CEJ	76
Drawn By		
Checked By	KR	76
F.H.W.A. Approved:		

Approved By: Clark A. Scott
State Traffic Plans Engineer

Revision No.	Sheet No.	Index No.
92	2 of 6	17344

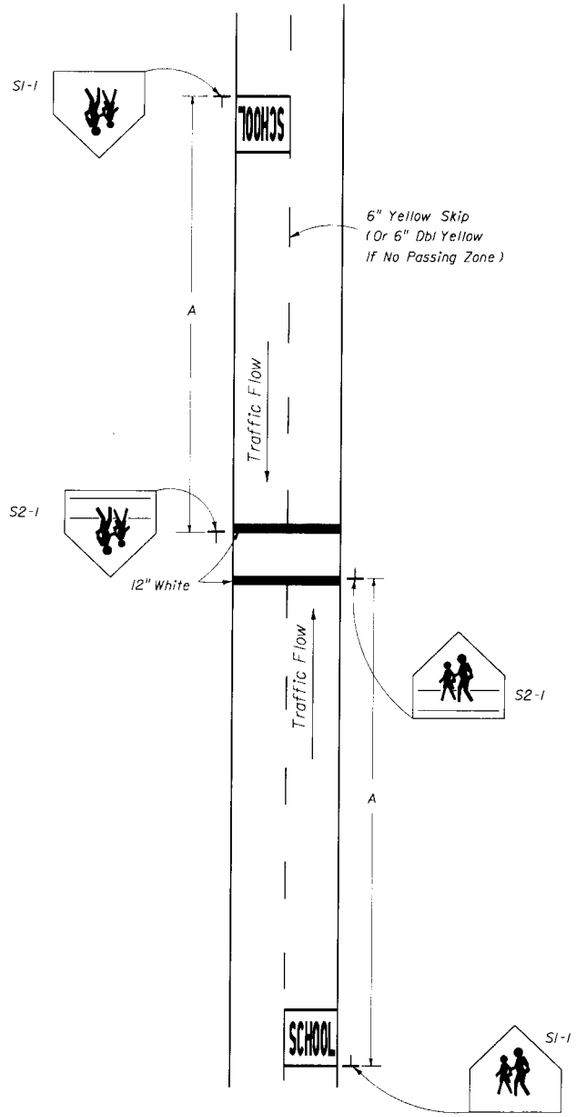

6. TRAFFIC CONTROL DEVICES FOR A SCHOOL CROSS-WALK
WITHOUT A SPEED REDUCTION
(2 LANES - 2 WAY TRAFFIC)

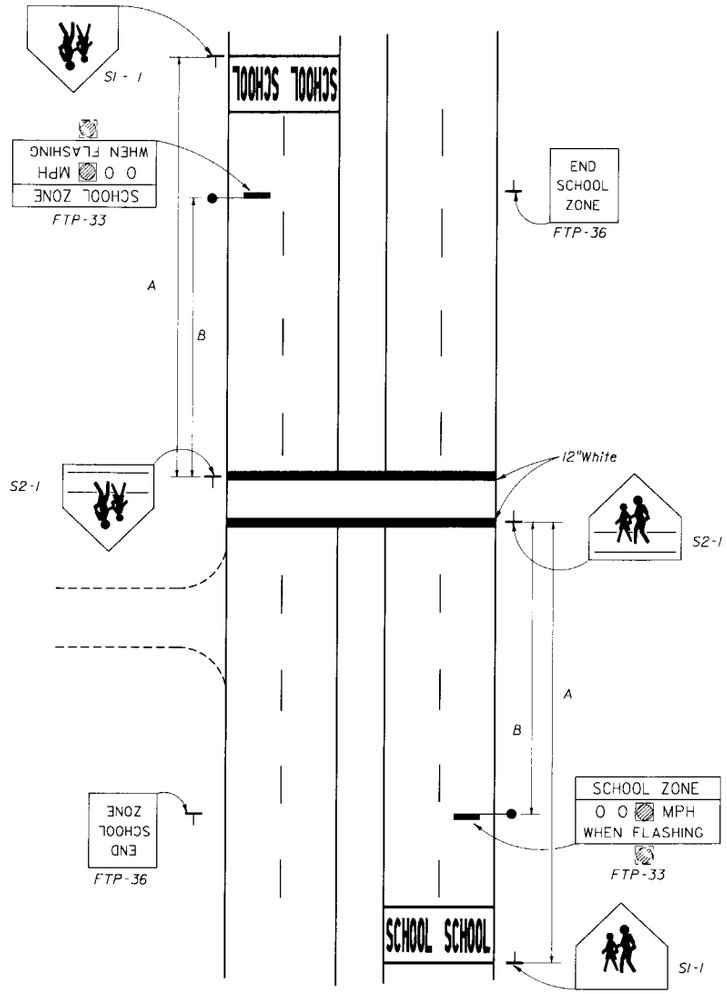

7. TRAFFIC CONTROL DEVICES FOR A REDUCED SPEED ZONE AT A SCHOOL CROSS-WALK
WITH OVERHEAD FLASHING BEACON SPEED LIMIT SIGNS
(4 LANES DIVIDED - 2 WAY TRAFFIC)

Approach Speed MPH	Suggested Distance In Feet	
	A	B
25 To 35	200	50
36 To 45	350	65
46 To 55	500	80

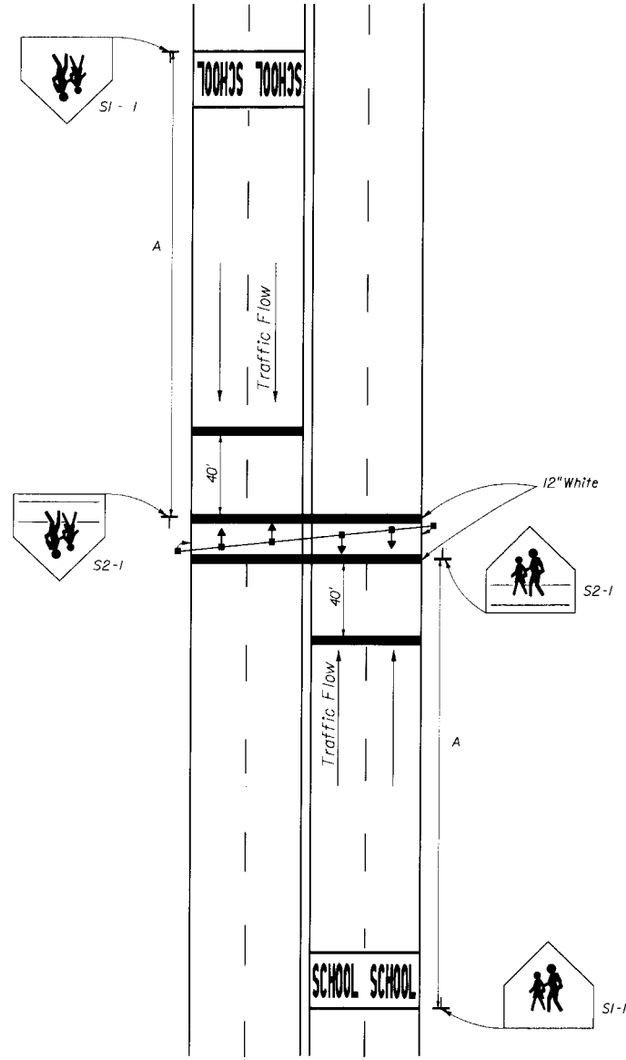

8. TRAFFIC CONTROL DEVICES FOR SIGNALIZED MIDBLOCK
SCHOOL CROSS-WALK

School cross-walk width shall be 6' min.
10' std. without curb cut ramps.
10' min. with curb cut ramps.
See index 17358

STATE OF FLORIDA DEPARTMENT OF TRANSPORTATION
TRAFFIC DESIGN

SCHOOL SIGNS & MARKINGS

	Names	Dates
Designed By	CEJ	07/76
Drawn By		
Checked By	KR	07/76
F.H.W.A. Approved:		

Approved By Clark A Scott
State Traffic Plans Engineer

Revision No.	Sheet No.	Index No.
92	3 of 6	17344

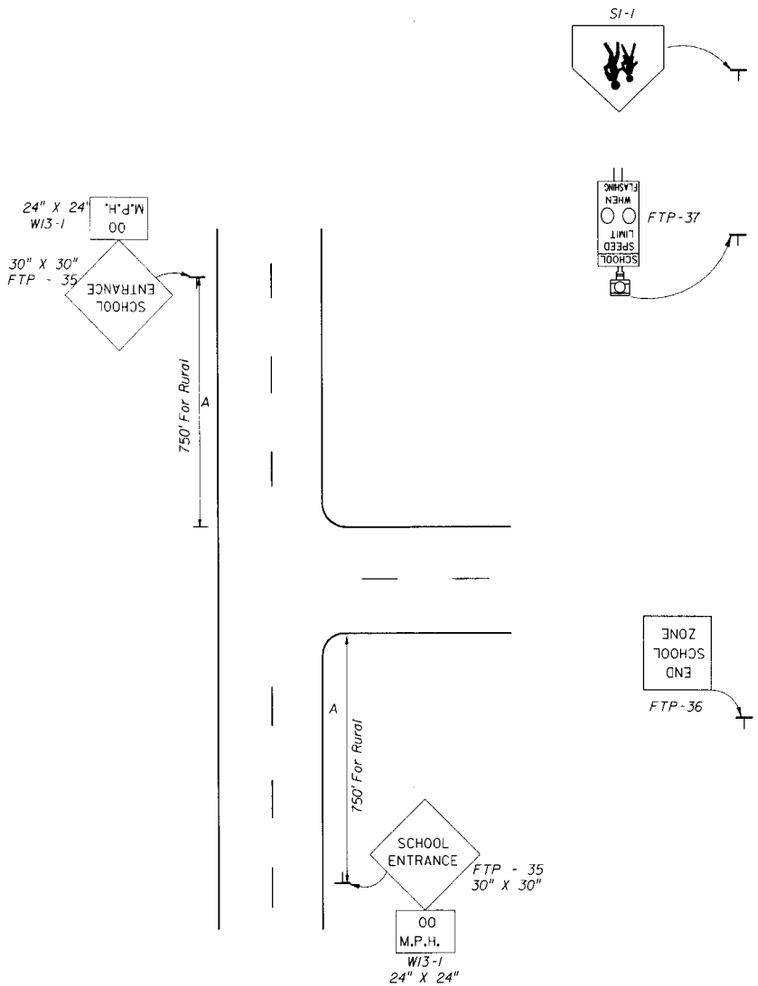

9. TRAFFIC CONTROL DEVICES AT SCHOOL ENTRANCES WHERE THERE ARE LITTLE OR NO WALKING STUDENTS

These signs are intended for use only at those few locations where the school entrance is not evident to the motorist, and must be approved in advance by the responsible traffic engineering authority.

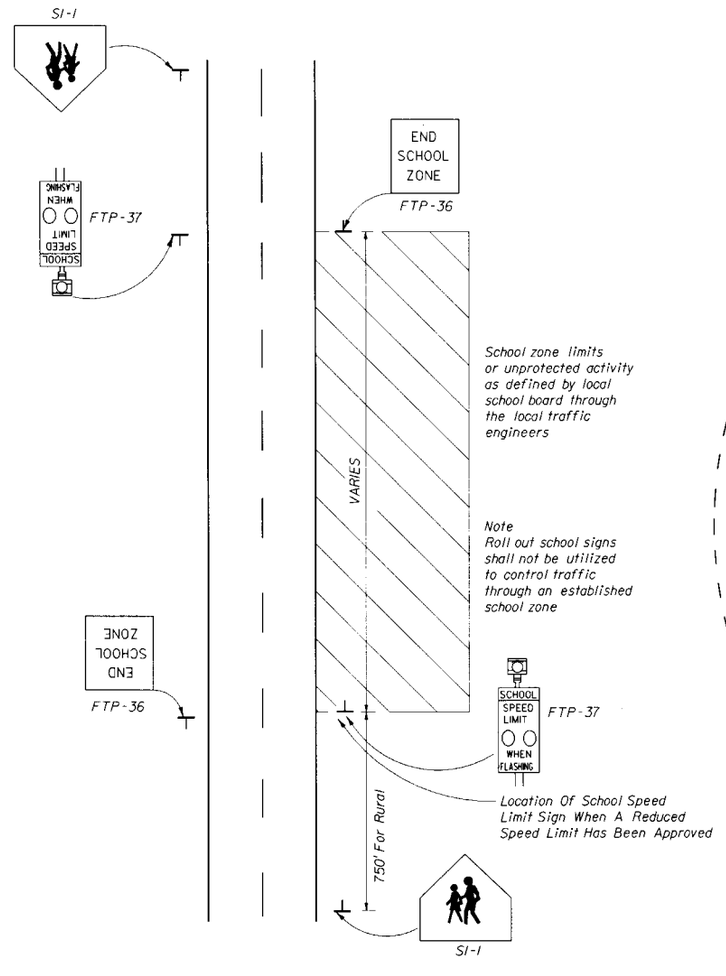

10. TRAFFIC CONTROL DEVICES FOR A TYPICAL SCHOOL ZONE FRONTING THE SCHOOL PROPERTY

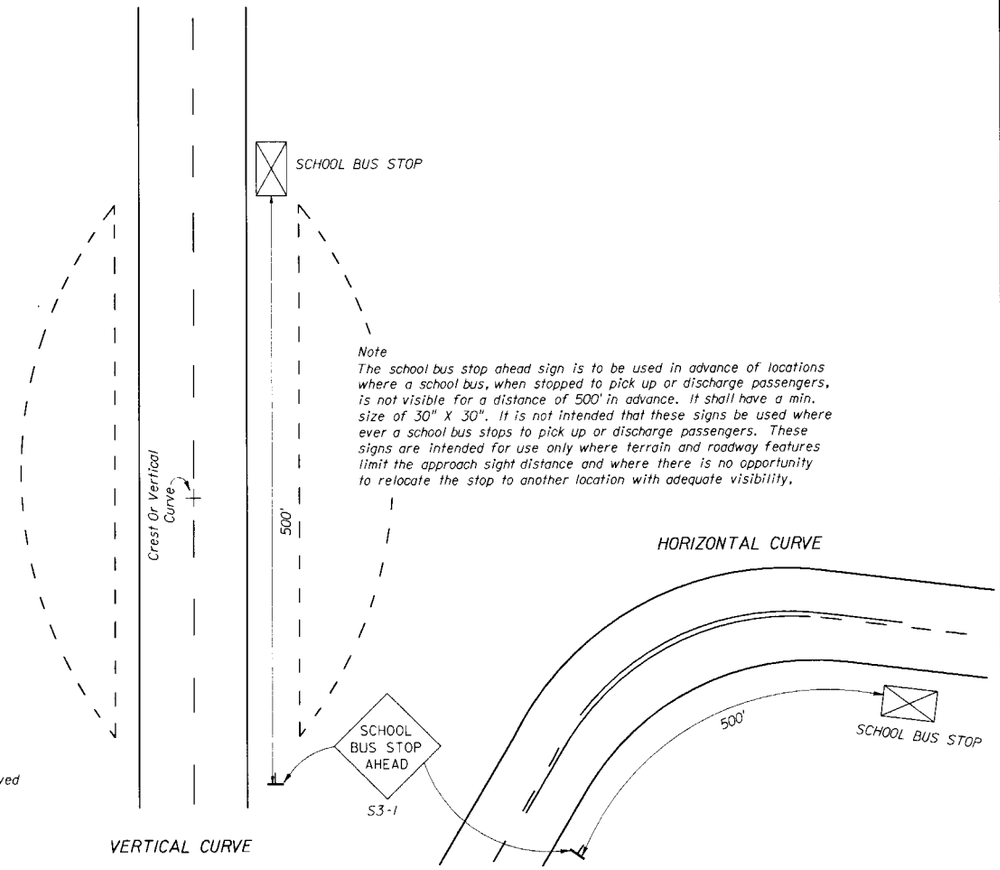

11. SCHOOL BUS STOP

STATE OF FLORIDA DEPARTMENT OF TRANSPORTATION
TRAFFIC DESIGN

SCHOOL SIGNS & MARKINGS

	Names	Dates
Designed By	CEJ	07/76
Drawn By		
Checked By	KR	07/76
F.H.W.A. Approved:		

Approved By Clark A Scott
State Traffic Plans Engineer

Revision No.	Sheet No.	Index No.
90	4 of 6	17344

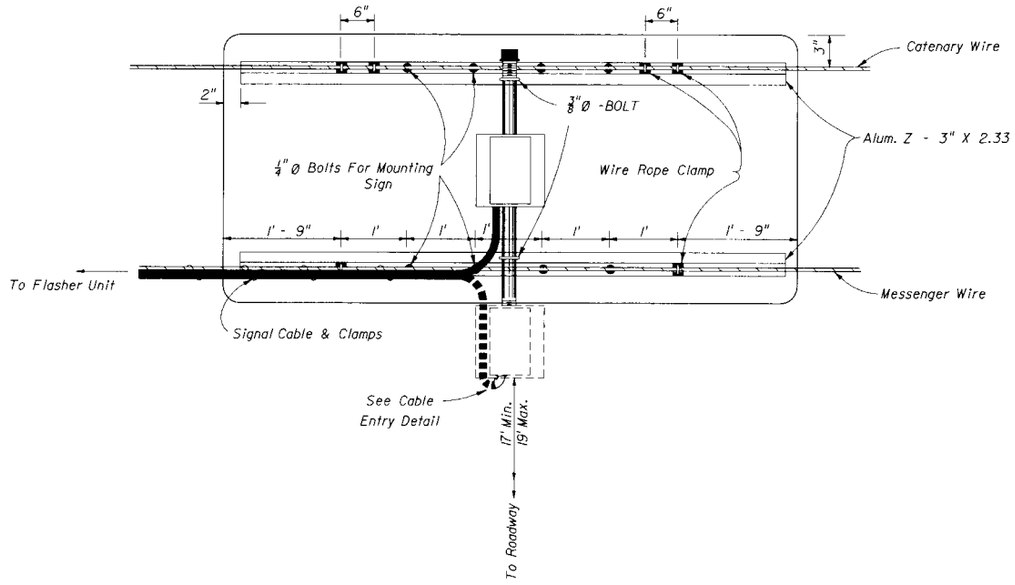

REAR VIEW

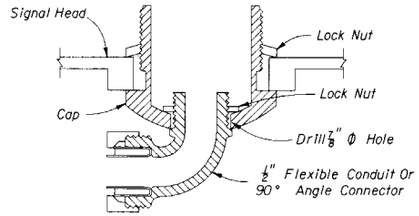

CABLE ENTRY DETAIL

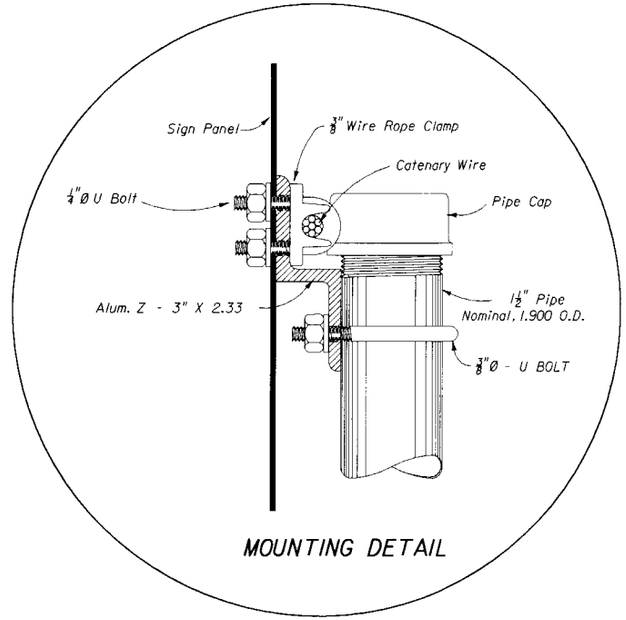

MOUNTING DETAIL

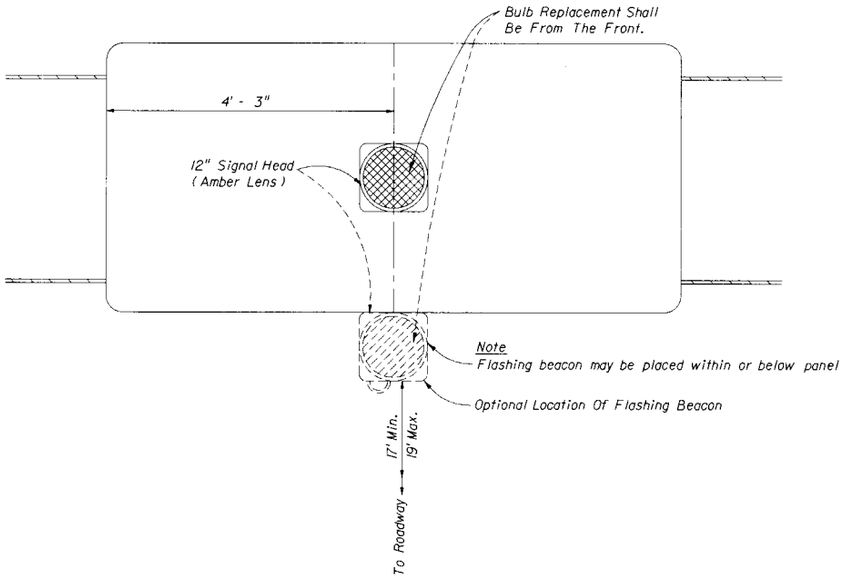

FRONT VIEW

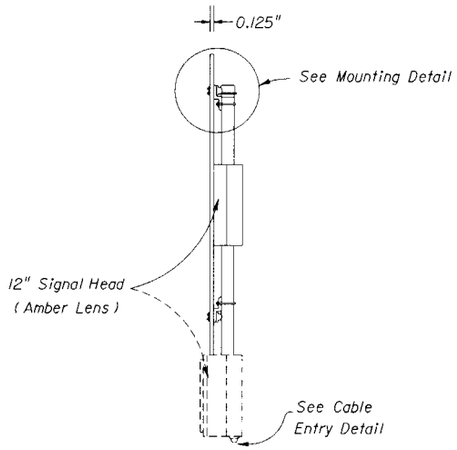

SIDE VIEW

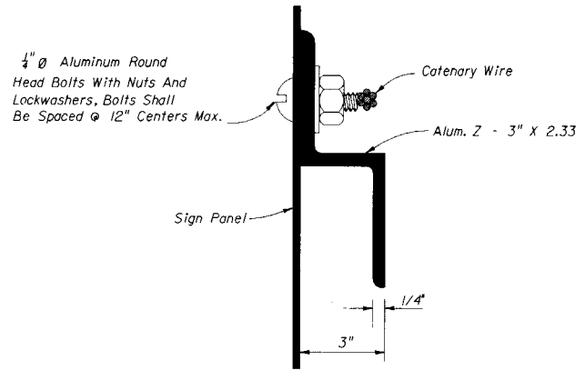

Z SECTION DETAIL

Flasher unit and cabinet to be placed on the strain pole supporting overhead sign assembly or on service pole. The flasher unit not to overhang private property or sidewalk.

STATE OF FLORIDA DEPARTMENT OF TRANSPORTATION
TRAFFIC DESIGN

SCHOOL SIGNS & MARKINGS

	Names	Dates
Designed By		
Drawn By	CEJ	07/76
Checked By	KR	07/76
F.H.W.A. Approved:		

Approved By: Clark A Scott
State Traffic Plans Engineer

Revision No.	Sheet No.	Index No.
90	5 of 6	17344

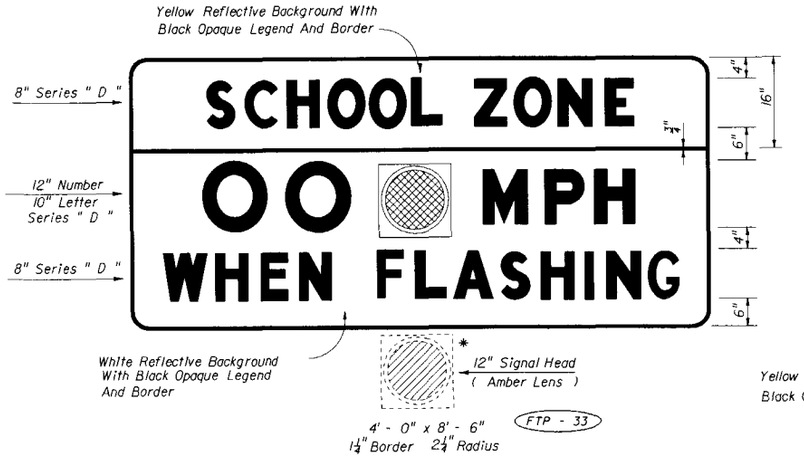

OVERHEAD STANDARD

* Flashing Beacon May Be Placed Within Or Below Panel

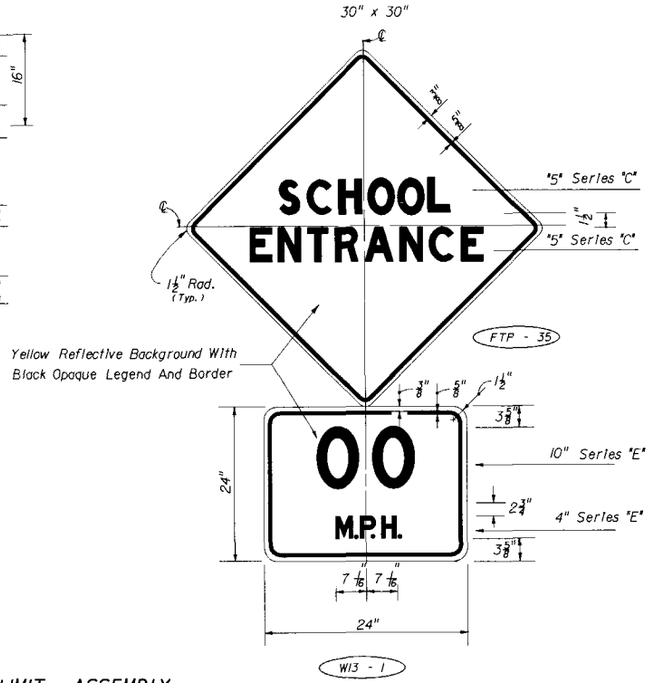

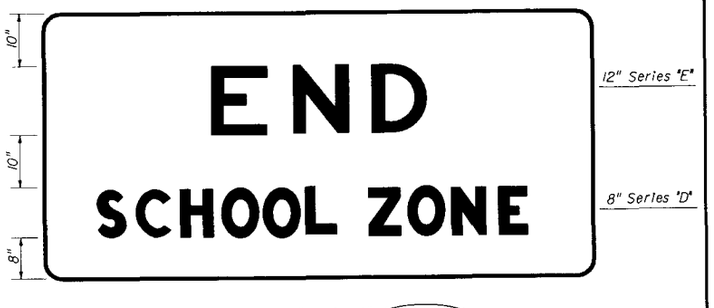

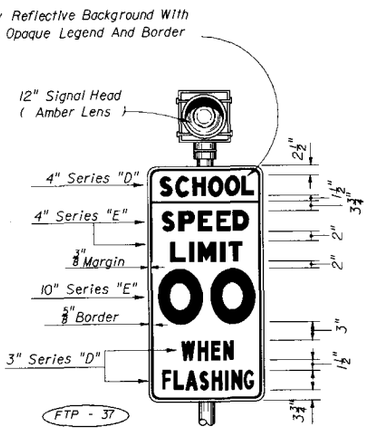

24" X 48" 3" Radius

White Reflective Background
With Black Opaque Legend And Border

Ground Mount Standard

Notes:

1. Standard size signs should be used whenever possible. Minimum sizes may be used only on low volume, low speed (less than 35 m.p.h.) streets. Special sizes should be used on expressway facilities where special emphasis is needed.
2. The value of the actual school zone speed limit shall be determined by the District Traffic Operations Engineer in cooperation with local school superintendents. In no case shall it be less than the 15 m.p.h. min. as set by law.

SPEED LIMIT ASSEMBLY

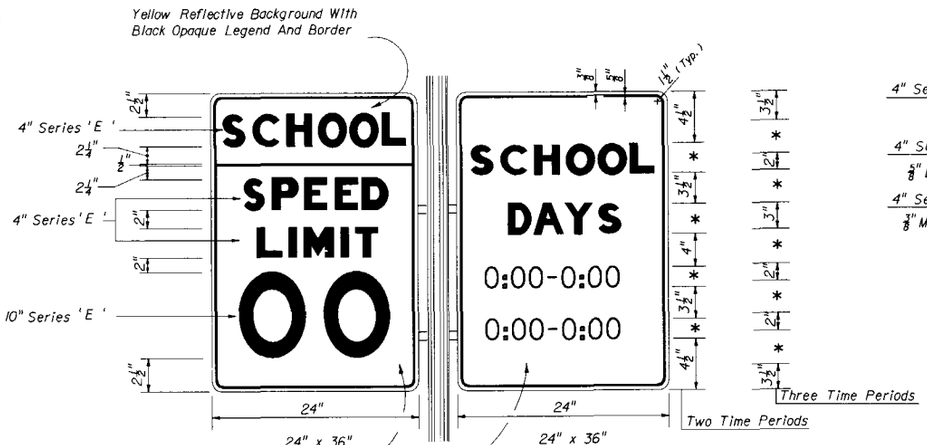

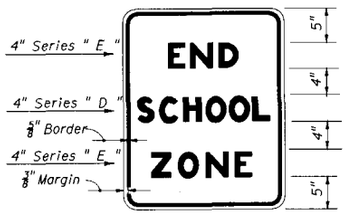

Note:
Existing ground mount school speed limit signs utilizing a single 8" min. size beacon or two 6" min. size beacons inside the sign border are considered meeting the standard. However, replacement or upgrading of these school speed limit signs shall conform to the above standard. Numerical speed limit displayed shall be established by appropriate regulatory authorities.

STATE OF FLORIDA DEPARTMENT OF TRANSPORTATION
TRAFFIC DESIGN

SCHOOL SIGNS & MARKINGS

	Names	Dates
Designed By	CEJ	07/76
Drawn By		
Checked By	KR	07/76
F.H.W.A. Approved:		

Approved By: Clark A. Scott
State Traffic Plans Engineer

Revision No.	Sheet No.	Index No.
90	6 of 6	17344

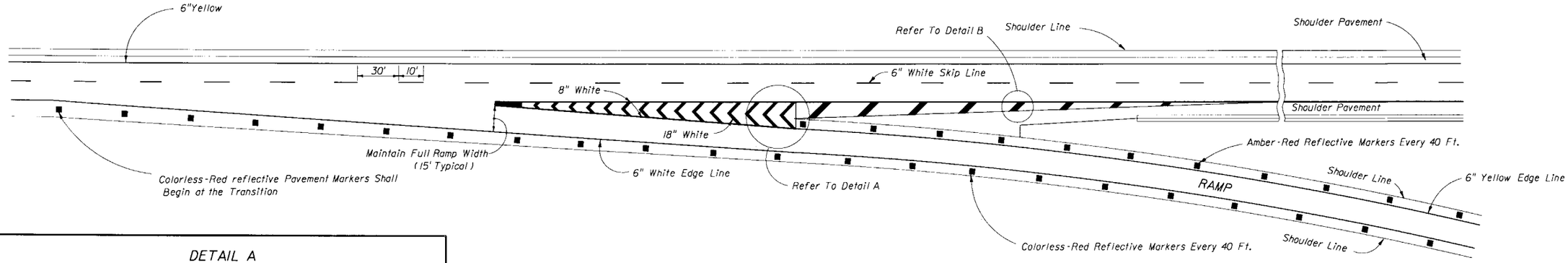

DETAIL A

For RPM Location Refer To Index 17352.

Direction Of Travel

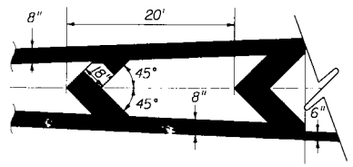

Note:
Reflective pavement markers are installed adjacent to the edge line.

NORMAL TAPERED EXIT

(TWO THRU LANES)

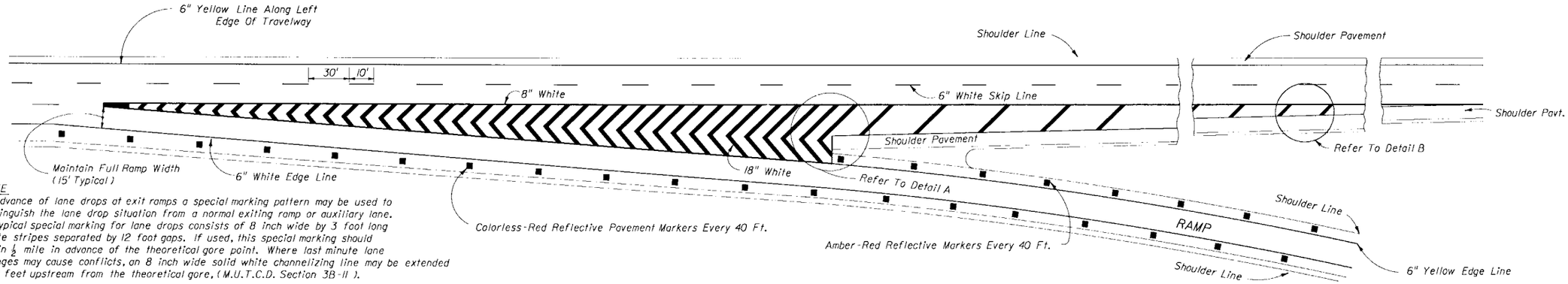

NOTE

In advance of lane drops at exit ramps a special marking pattern may be used to distinguish the lane drop situation from a normal exiting ramp or auxiliary lane. A typical special marking for lane drops consists of 8 inch wide by 3 foot long white stripes separated by 12 foot gaps. If used, this special marking should begin ½ mile in advance of the theoretical gore point. Where last minute lane changes may cause conflicts, an 8 inch wide solid white channelizing line may be extended 300 feet upstream from the theoretical gore, (M.U.T.C.D. Section 3B-11).

DETAIL B

"S"	30	35	40	45	50	55
"X"	20'	20'	40'	40'	60'	60'

Passenger Car, Daytime, Posted Speeds Or 85th Percentile (Use Higher Value)

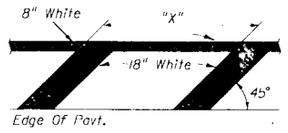

NORMAL TAPERED EXIT ONLY

(TWO THRU LANES - THREE APPROACH LANES)

STATE OF FLORIDA DEPARTMENT OF TRANSPORTATION
TRAFFIC DESIGN

INTERCHANGE MARKINGS

	Names	Dates
Designed By	PB	78
Drawn By	PB	78
Checked By	KR	78
F.H.W.A. Approved:		

Approved By
State Traffic Plans Engineer

Revision No.	Sheet No.	Index No.
92	1 of 4	17345

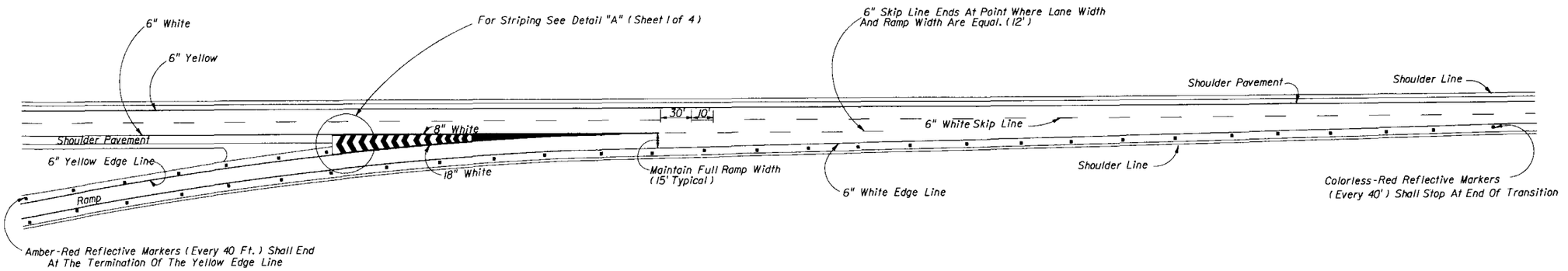

NORMAL TAPERED ENTRANCE

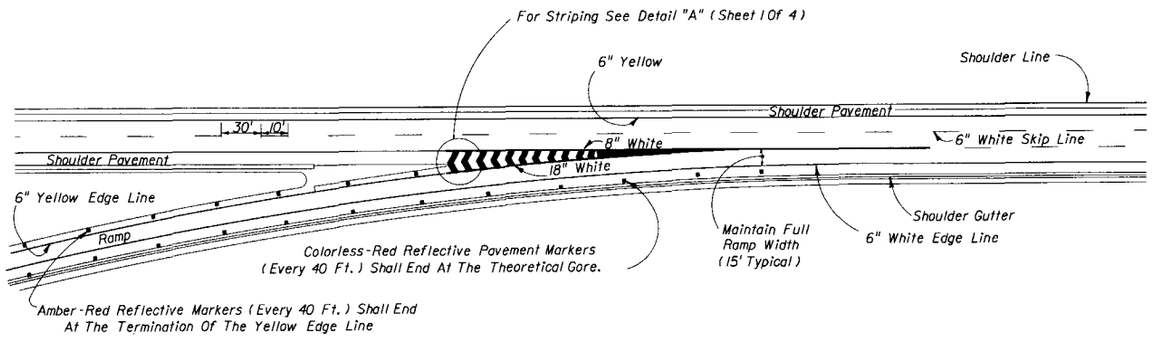

NORMAL TAPERED ENTRANCE WITH ADDED LANE

STATE OF FLORIDA DEPARTMENT OF TRANSPORTATION
TRAFFIC DESIGN

INTERCHANGE MARKINGS

	Names	Dates
Designed By	MC	87
Drawn By	MC	87
Checked By	KR	87

F.H.W.A. Approved:

Approved By
Clark A. Scott
State Traffic Plans Engineer

Revision No.	Sheet No.	Index No.
92	2 of 4	17345

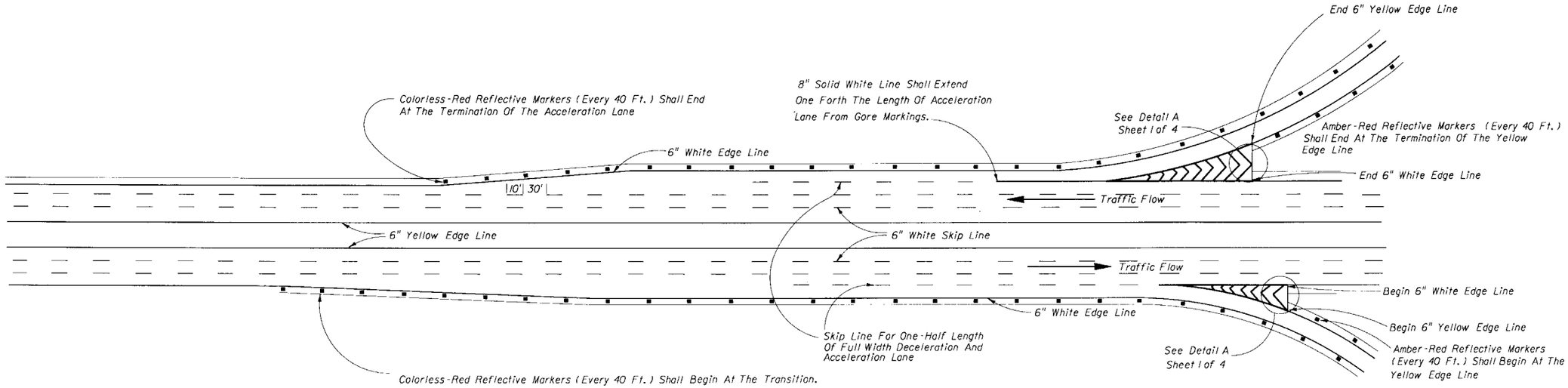

PARALLEL ACCELERATION AND DECELERATION LANE

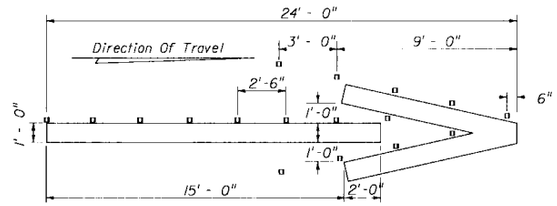

White Arrow With Colorless-Red Reflective Markers

WRONG WAY ARROW

STATE OF FLORIDA DEPARTMENT OF TRANSPORTATION
TRAFFIC DESIGN

INTERCHANGE MARKINGS

	Names	Dates
Designed By	W.R.B.	73
Drawn By	W.R.B.	73
Checked By	K.R.	73

Approved By Charles A. Scott
State Traffic Plans Engineer

Revision No.	Sheet No.	Index No.
92	3 of 4	17345

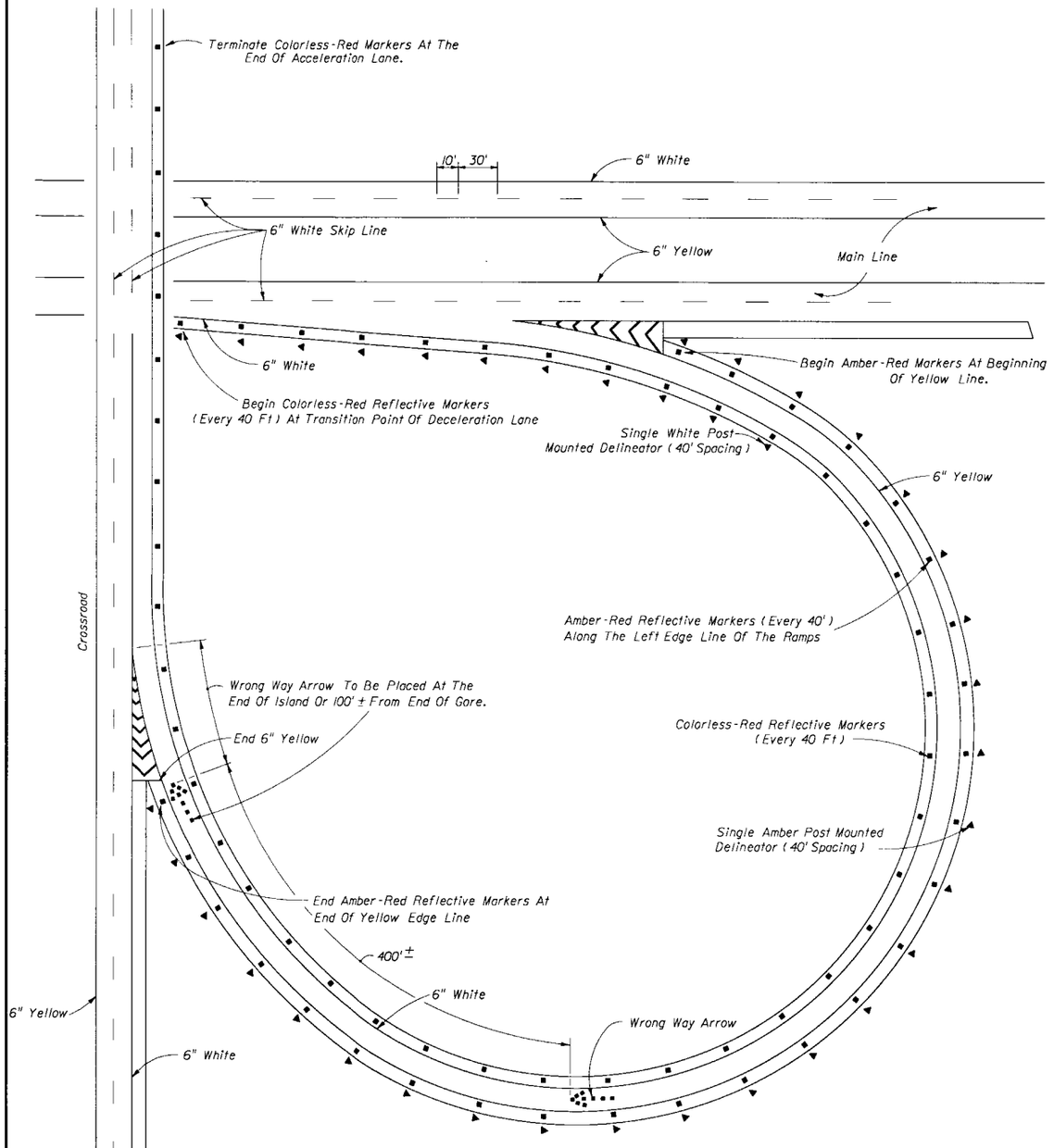

PLACEMENT OF REFLECTIVE PAVEMENT MARKERS AND DELINEATOR POSTS FOR LOOP RAMPS

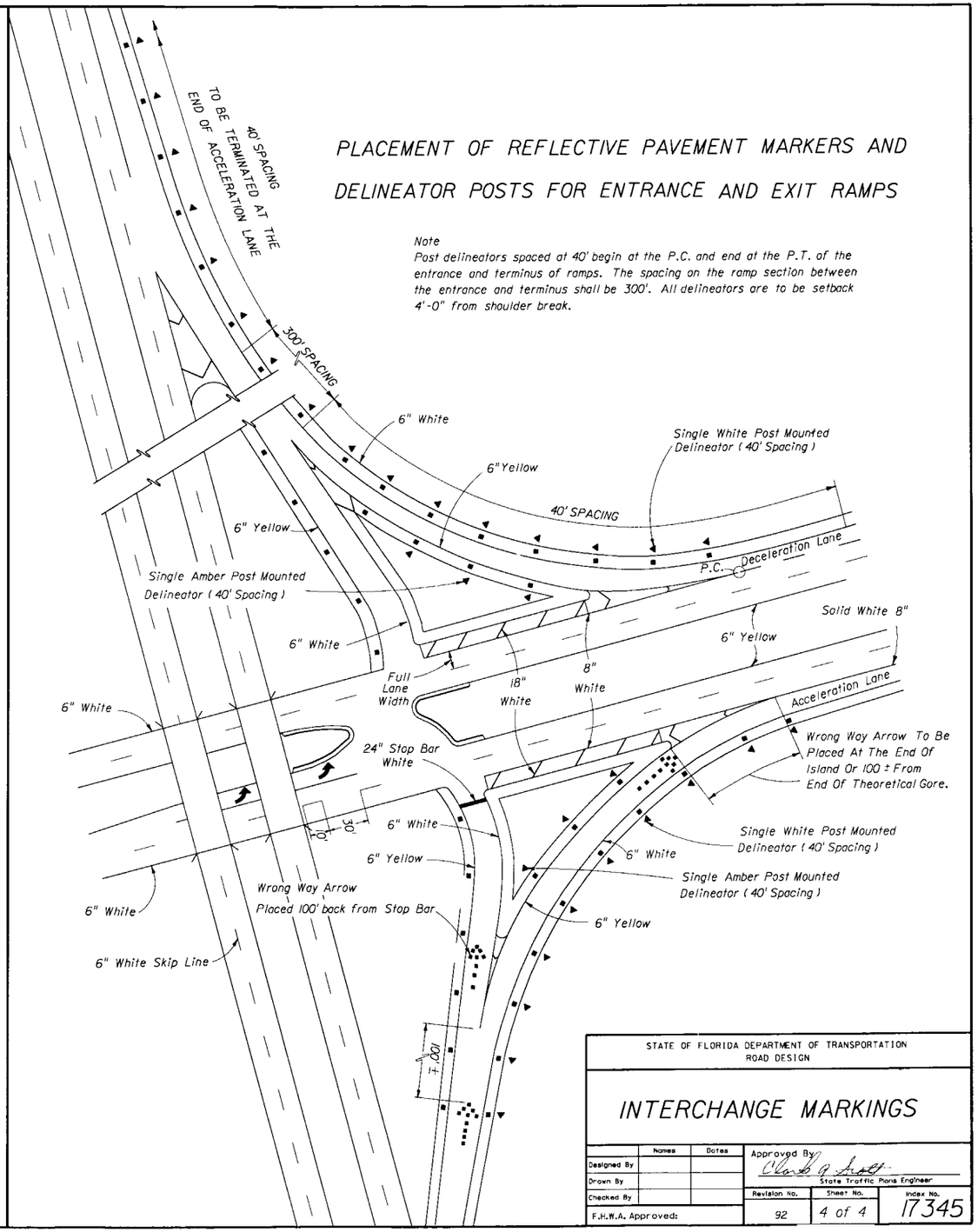

PLACEMENT OF REFLECTIVE PAVEMENT MARKERS AND DELINEATOR POSTS FOR ENTRANCE AND EXIT RAMPS

Note
Post delineators spaced at 40' begin at the P.C. and end at the P.T. of the entrance and terminus of ramps. The spacing on the ramp section between the entrance and terminus shall be 300'. All delineators are to be setback 4'-0" from shoulder break.

STATE OF FLORIDA DEPARTMENT OF TRANSPORTATION
ROAD DESIGN

INTERCHANGE MARKINGS

	Names	Dates
Designed By		
Drawn By		
Checked By		

F.H.W.A. Approved:

Approved By: Clark A. Scott
State Traffic Plans Engineer

Revision No.	Sheet No.	Index No.
92	4 of 4	17345

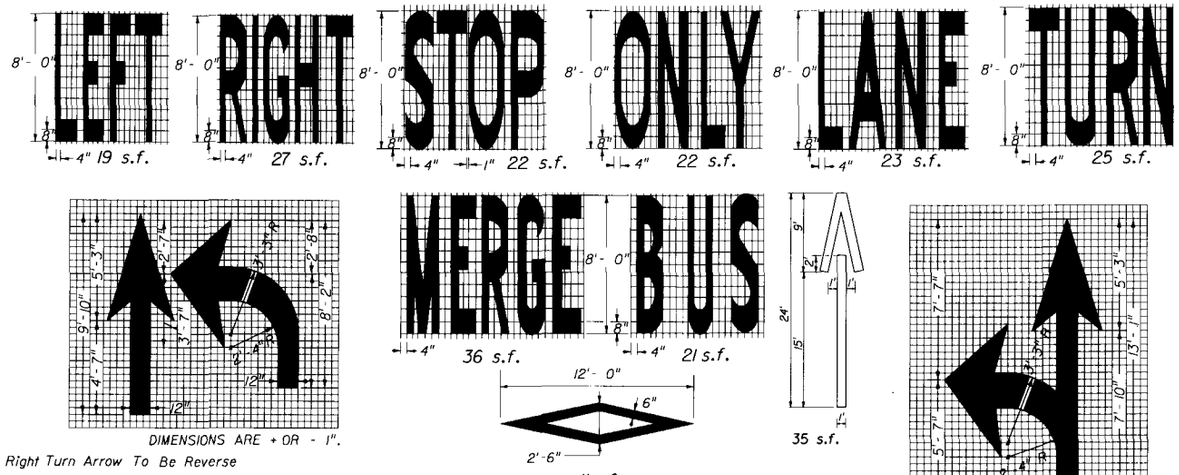

NOTE: When arrow and pavement message are used together, the arrow shall be located down stream of the pavement message and shall be seperated from the pavement message by a distance of 25' (Base of the arrow to the base of the message).

PAVEMENT ARROW AND MESSAGE DETAILS

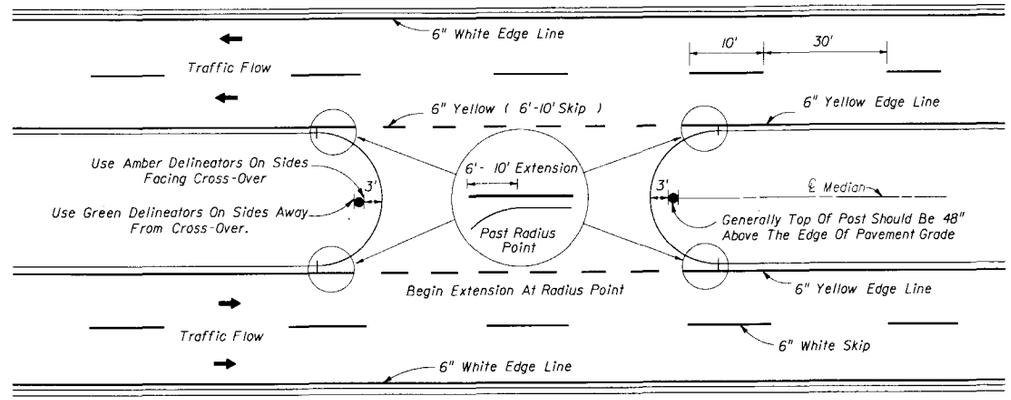

PAVEMENT MARKINGS AND DELINEATORS FOR MEDIAN CROSS-OVER

NOTE:

When markings are applied to median noses they shall be yellow in color.

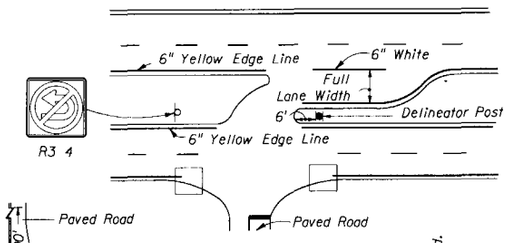

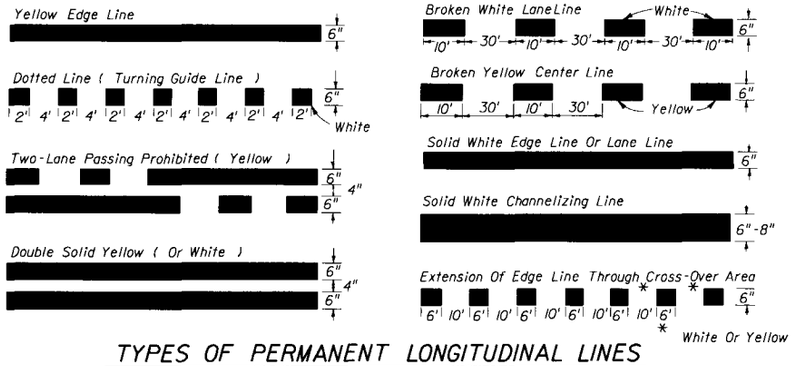

TYPES OF PERMANENT LONGITUDINAL LINES

BASIC COLOR RULE

White lines separate flows in the same direction
Yellow lines separate flows in the opposite direction
Yellow dotted lines may be used in special cases

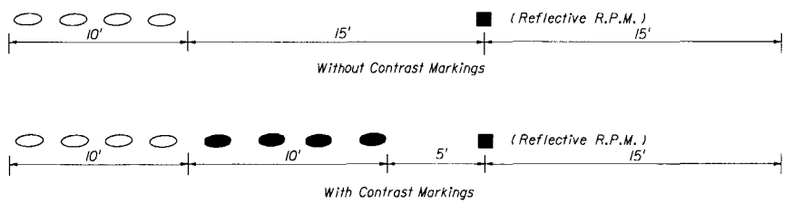

NOTE: Ceramic Markers should not be installed unless specifically called for in the plans. Use is limited to high volume sections with ADT's greater than 50,000 where lane changing is to be discouraged or other areas where channelization is required.

NON-REFLECTIVE CERAMIC PAVEMENT MARKER PLACEMENT

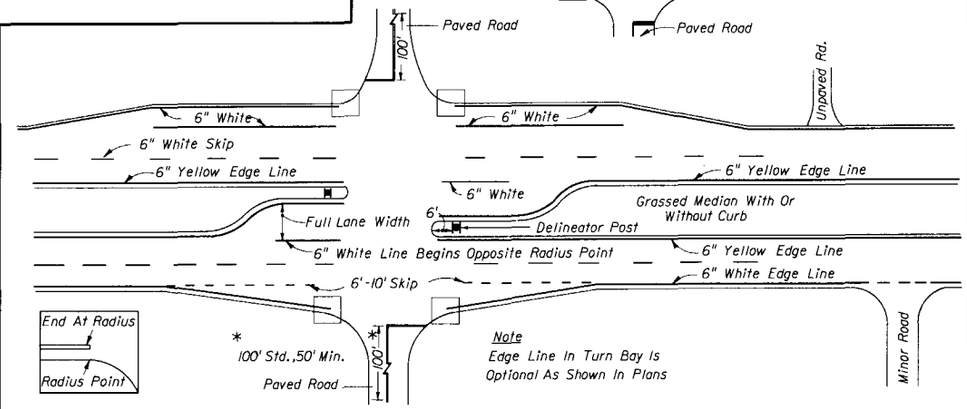

PAVEMENT MARKINGS FOR INTERSECTIONS WITH MAJOR AND MINOR ROADS

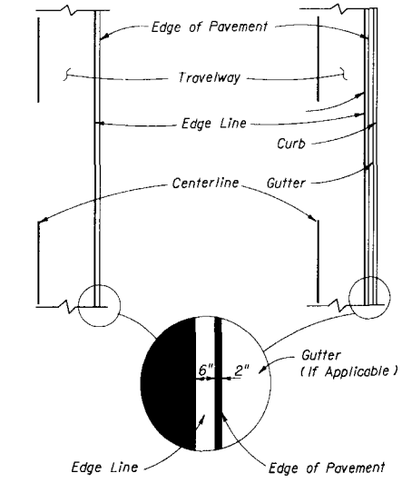

PLACEMENT OF EDGE LINES

STATE OF FLORIDA DEPARTMENT OF TRANSPORTATION
TRAFFIC DESIGN

SPECIAL MARKING AREAS

	Names	Dates
Designed By	S.W.R.	08/16/78
Drawn By		
Checked By	K.R.	08/16/78

Approved By: Chuck A Scott, State Traffic Plans Engineer

F.H.W.A. Approved:

Revision No.	Sheet No.	Index No.
92	1 of 8	17346

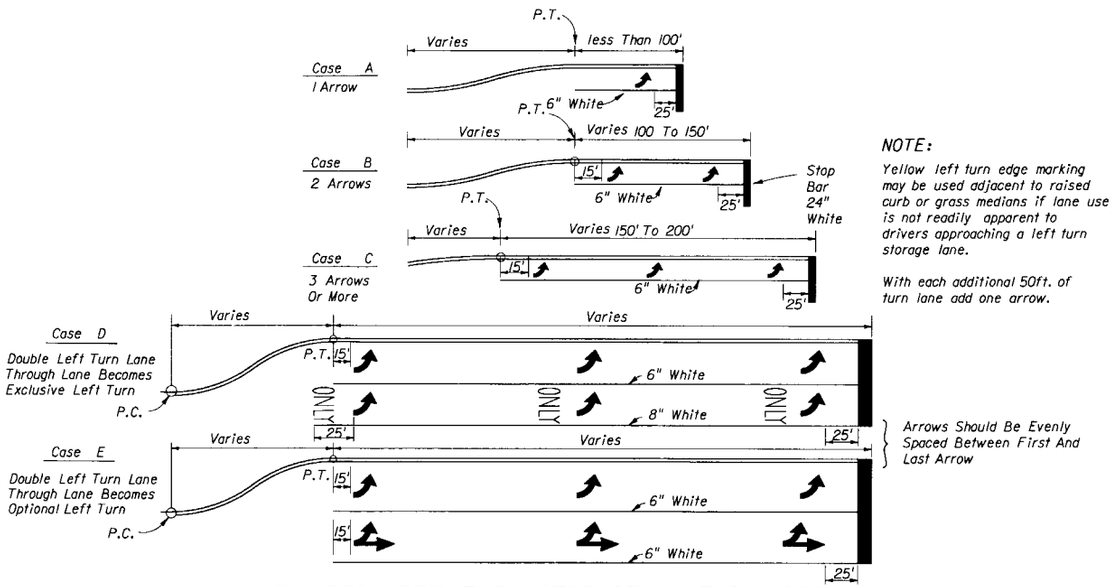

NOTE:

Yellow left turn edge marking may be used adjacent to raised curb or grass medians if lane use is not readily apparent to drivers approaching a left turn storage lane.

With each additional 50ft. of turn lane add one arrow.

PAINTED LEFT TURN STORAGE LANE(S) DETAILS

FOR STOP CONTROLLED OR SIGNALIZED INTERSECTIONS

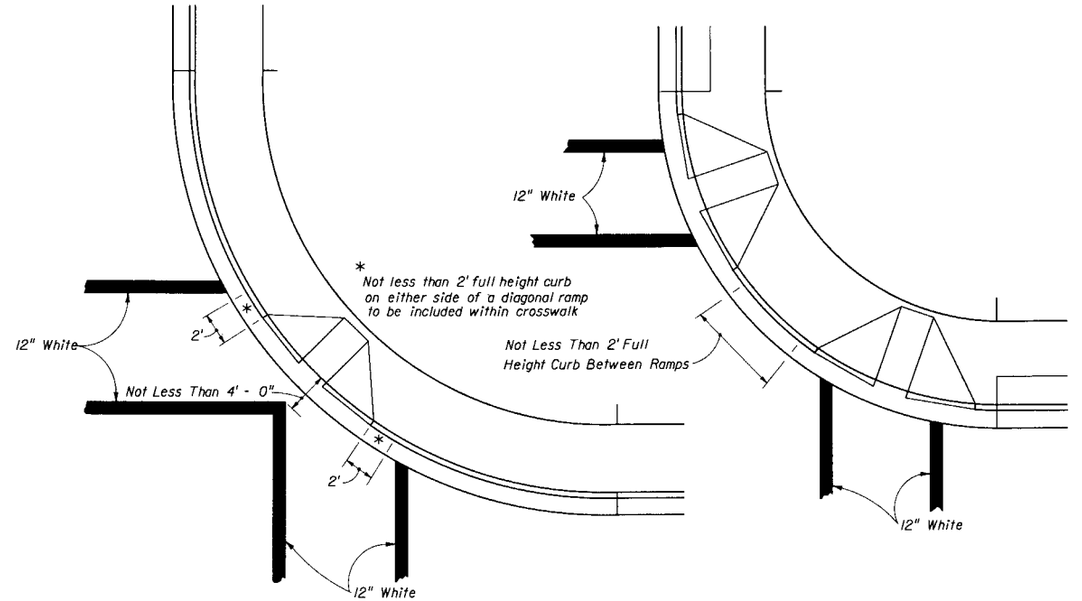

TYPICAL CROSSWALK MARKINGS FOR CURB CUT RAMPS

REFER TO INDEX NO. 17358

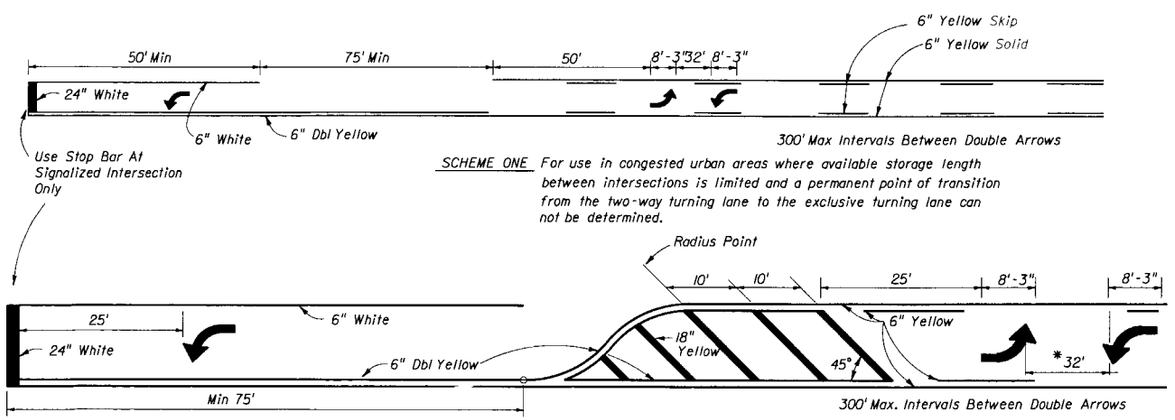

SCHEME ONE For use in congested urban areas where available storage length between intersections is limited and a permanent point of transition from the two-way turning lane to the exclusive turning lane can not be determined.

SCHEME TWO

For use in rural & suburban areas where an adequate storage lane length can be specifically determined.

* Typical spacing reference page 3B-6 in the M.U.T.C.D.

TWO WAY LEFT TURN LANE

(WITH SINGLE LANE LEFT TURN CHANNELIZATION)

STATE OF FLORIDA DEPARTMENT OF TRANSPORTATION
TRAFFIC DESIGN

SPECIAL MARKING AREAS

	Names	Dates
Designed By	TL	76
Drawn By	TL	76
Checked By	KA	76

Approved By: Clark A. Scott
State Traffic Plans Engineer

F.H.W.A. Approved:

Revision No.	Sheet No.	Index No.
92	2 of 8	17346

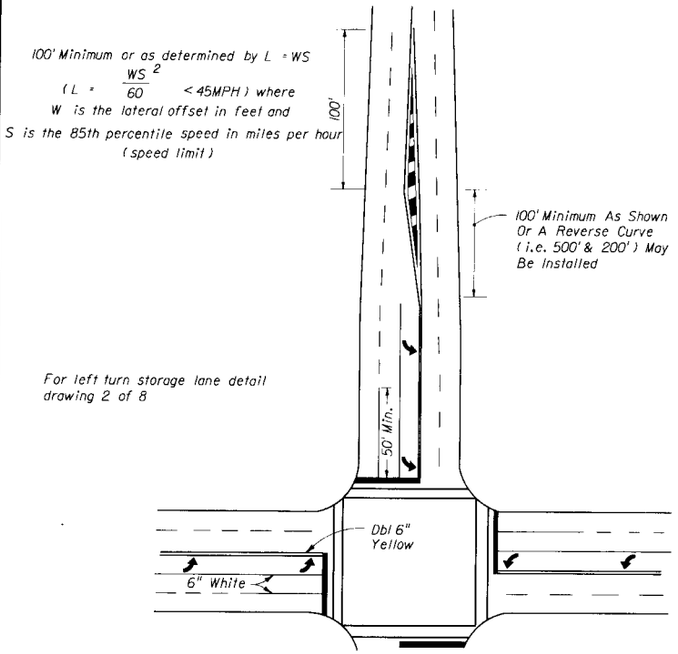

TYPICAL INTERSECTION 2 THRU LANES PLUS LEFT TURN LANE, WITH CROSS-WALK

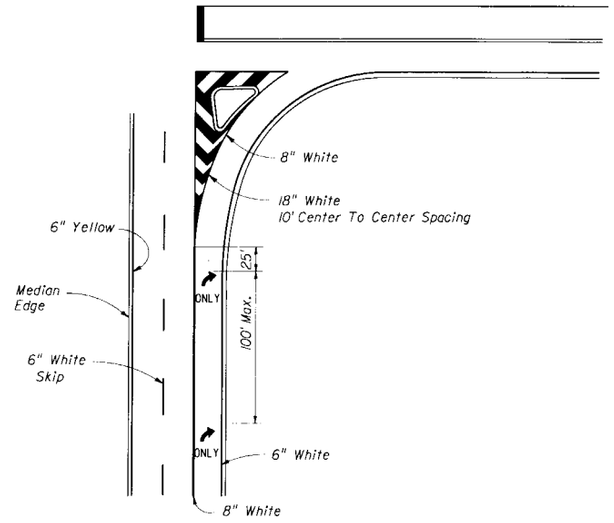

RIGHT TURN LANE DROP AND ISLAND DETAILS
LEFT TURN LANE DROP IS MIRROR IMAGE

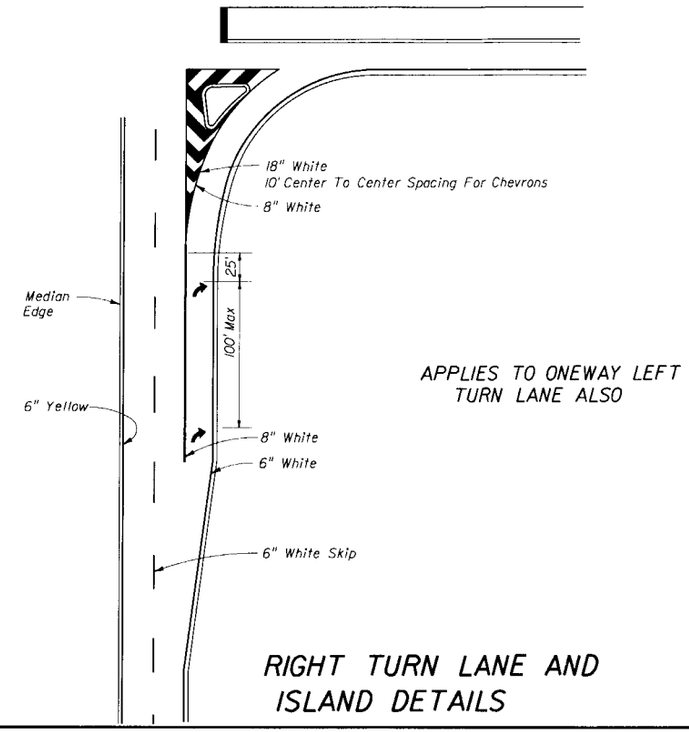

APPLIES TO ONEWAY LEFT TURN LANE ALSO

RIGHT TURN LANE AND ISLAND DETAILS

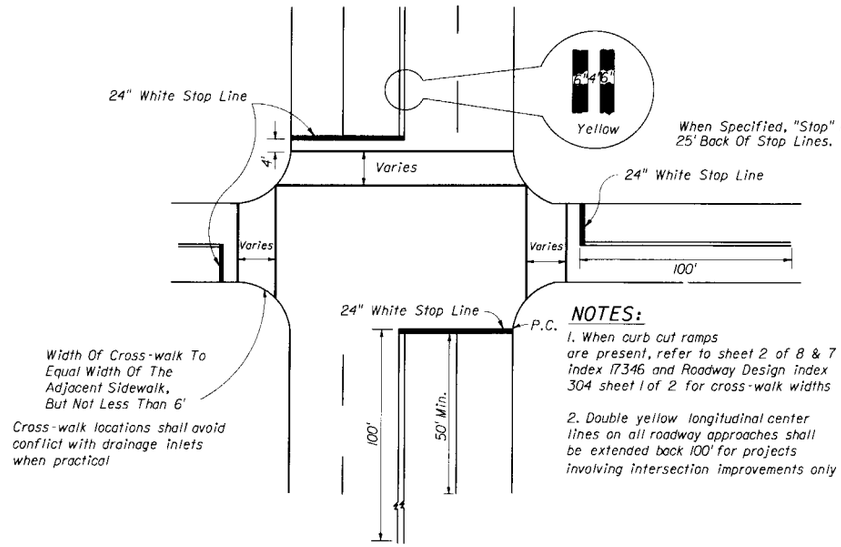

NOTES:

1. When curb cut ramps are present, refer to sheet 2 of 8 & 7 of 8 index 17346 and Roadway Design index 304 sheet 1 of 2 for cross-walk widths

2. Double yellow longitudinal center lines on all roadway approaches shall be extended back 100' for projects involving intersection improvements only

STOP BARS, CROSS-WALKS AND DOUBLE CENTER LINE DETAILS

STATE OF FLORIDA DEPARTMENT OF TRANSPORTATION
TRAFFIC DESIGN

SPECIAL MARKING AREAS

	Names	Dates
Designed By	TL	76
Drawn By	TL	76
Checked By	KR	76
F.H.W.A. Approved:		

Approved By Clark A Pratt
State Traffic Plans Engineer

Revision No.	Sheet No.	Index No.
92	3 of 8	17346

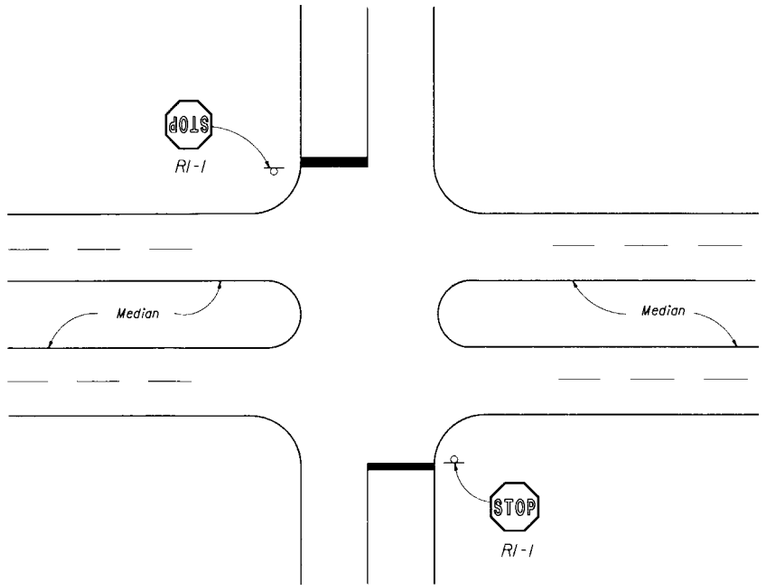

FIGURE 1

MEDIAN WIDTHS UNDER 30 FEET

ONE-WAY SIGNS ON DIVIDED HIGHWAY INTERSECTIONS

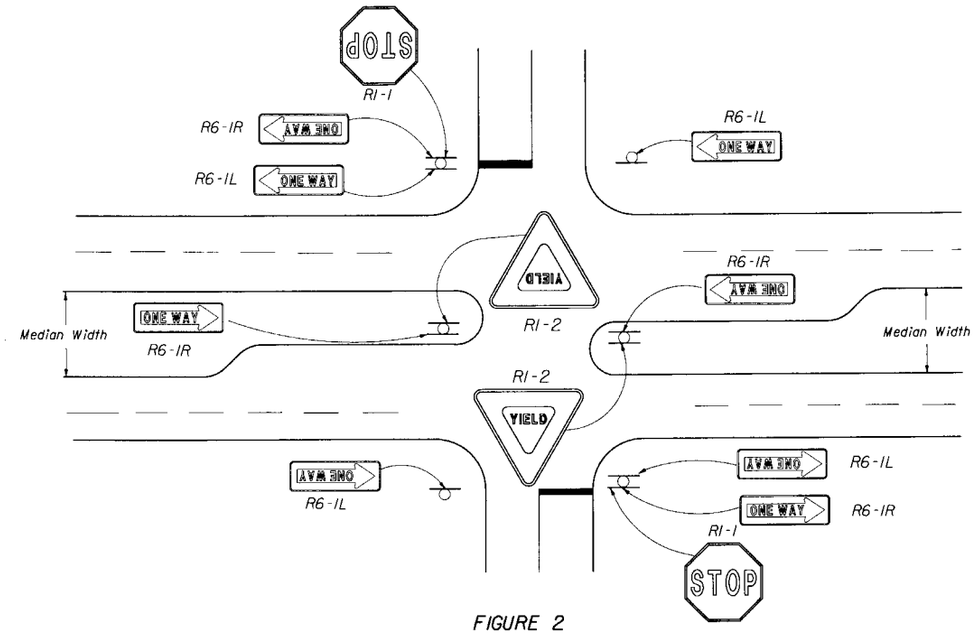

FIGURE 2

MEDIAN WIDTHS 30 FEET AND GREATER

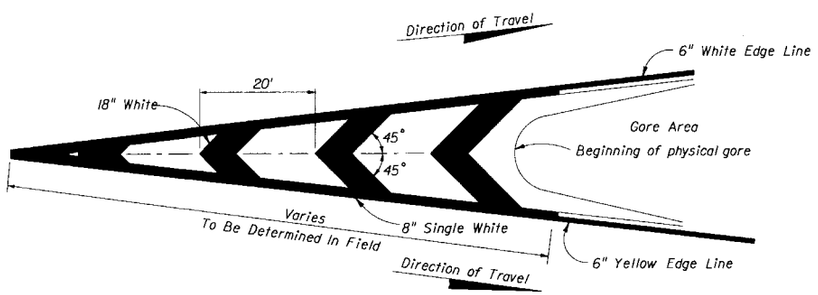

PAVEMENT MARKINGS FOR TRAFFIC CHANNELIZATION AT GORE

(TRAFFIC FLOWS IN SAME DIRECTION)

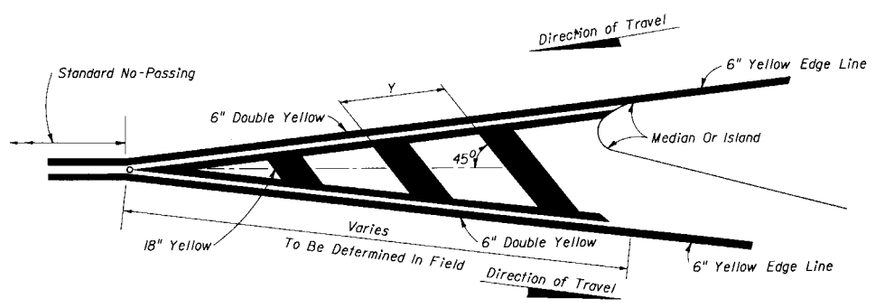

POSTED (DAY) SPEED LIMIT M.P.H.	"Y" FT.
30 OR LESS	10
35	20
40	20
45	30
50 OR MORE	40

PAVEMENT MARKING FOR TRAFFIC SEPARATION

(TRAFFIC FLOWS IN OPPOSITE DIRECTION)

STATE OF FLORIDA DEPARTMENT OF TRANSPORTATION
TRAFFIC DESIGN

SPECIAL MARKING AREAS

	Names	Dates
Designed By	SWR	78
Drawn By	SWR	78
Checked By	KR	78

F.H.W.A. Approved:

Approved By Clark A. Scott
State Traffic Plans Engineer

Revision No.	Sheet No.	Index No.
92	4 of 8	17346

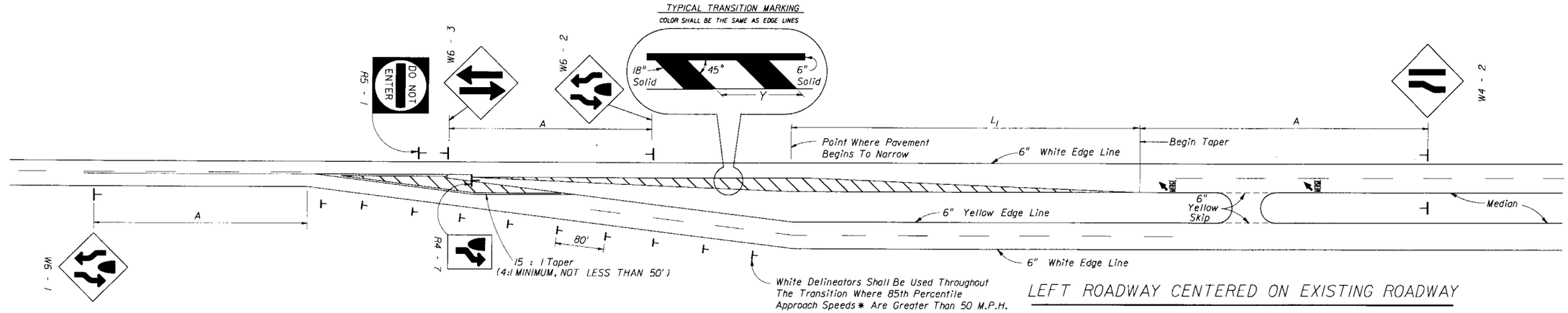

LEFT ROADWAY CENTERED ON EXISTING ROADWAY

TRANSITION DISTANCE L_1							
** W / * S	8	9	10	11	12	13	14
30	120	135	150	165	180	195	210
35	165	185	205	225	245	265	285
40	215	240	270	295	320	350	375
45	360	405	450	495	540	585	630
50	400	450	500	550	600	650	700
55	440	495	550	605	660	715	770
60	480	540	600	660	720	780	840
65	520	585	650	715	780	845	910

$L_1 = WS$

($L_1 = \frac{WS^2}{60}$ < 45 MPH)

* Passenger car, daytime, posted speeds or 85th. percentile (Use higher value)

** Lateral offset

SPEED * (M.P.H.)	"A" (FT.)
55	700
50	625
45	550
40	475
30	325

* Passenger car, daytime posted speeds or 85th percentile (Use Higher Value)

POSTED (DAY) SPEED LIMIT M.P.H.	"Y" Ft.
30 OR LESS	10
35	20
40	20
45	30
50 OR MORE	40

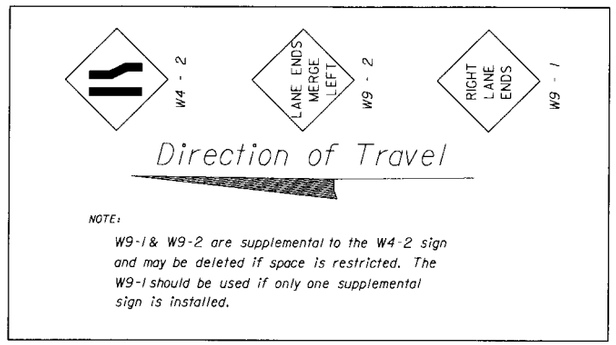

NOTE:

W9-1 & W9-2 are supplemental to the W4-2 sign and may be deleted if space is restricted. The W9-1 should be used if only one supplemental sign is installed.

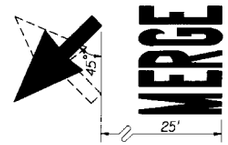

PAVEMENT MARKING DETAIL

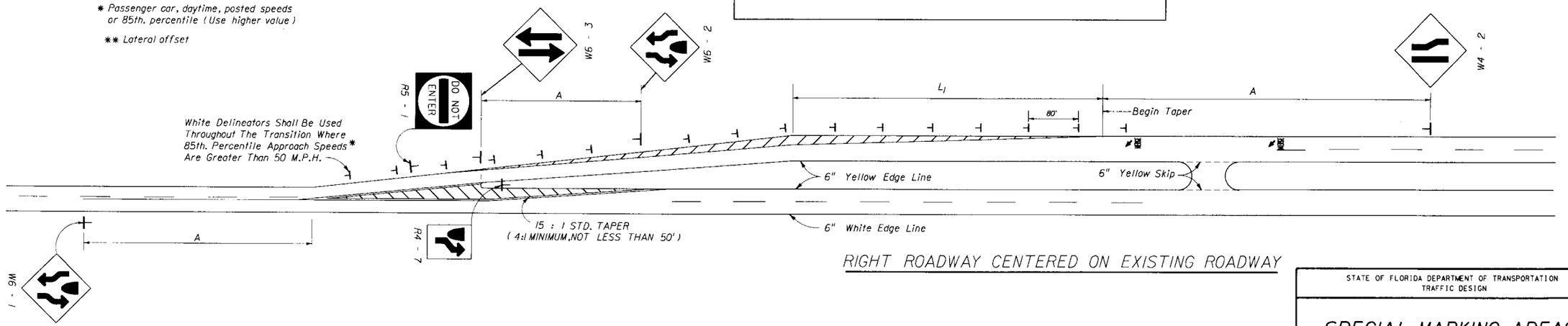

RIGHT ROADWAY CENTERED ON EXISTING ROADWAY

SCHEMES FOR TRANSITION - 2 LANE / 4 LANE ROADWAY

STATE OF FLORIDA DEPARTMENT OF TRANSPORTATION
TRAFFIC DESIGN

SPECIAL MARKING AREAS

	Names	Dates
Designed By	S.W.R.	78
Drawn By	S.W.R.	78
Checked By	K.R.	78
F.H.W.A. Approved:		

Approved By: Charles A. Scott, State Traffic Plans Engineer

Revision No.	Sheet No.	Index No.
92	5 of 8	17346

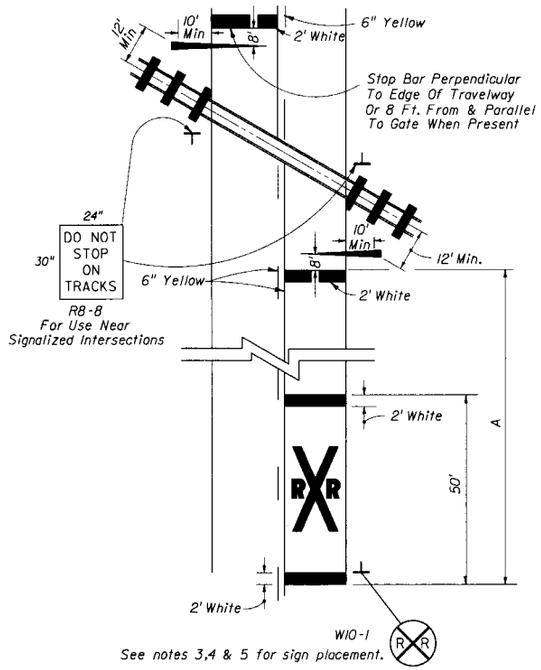

RAILROAD CROSSING AT 2-LANE ROADWAY

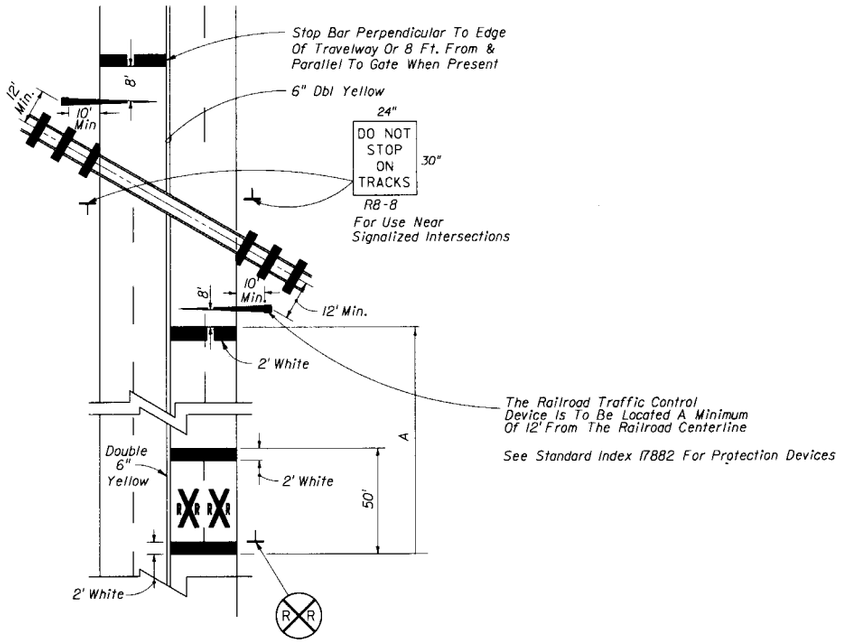

RAILROAD CROSSING AT 4-LANE ROADWAY

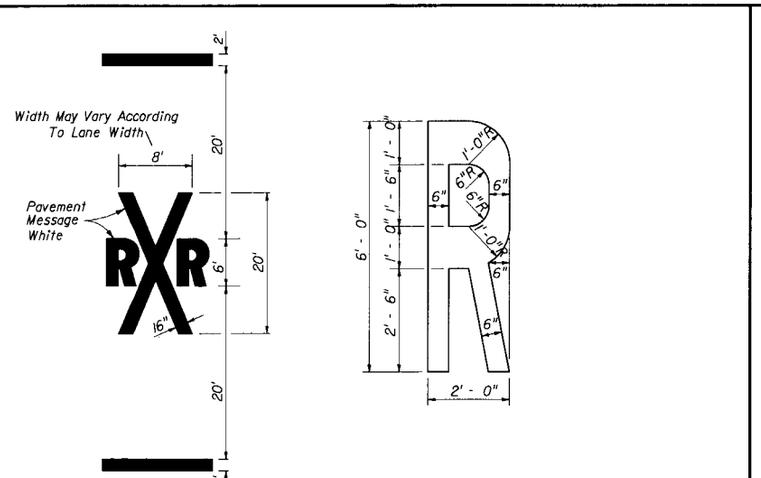

TYPICAL PAVEMENT MARKINGS FOR R/R CROSSING

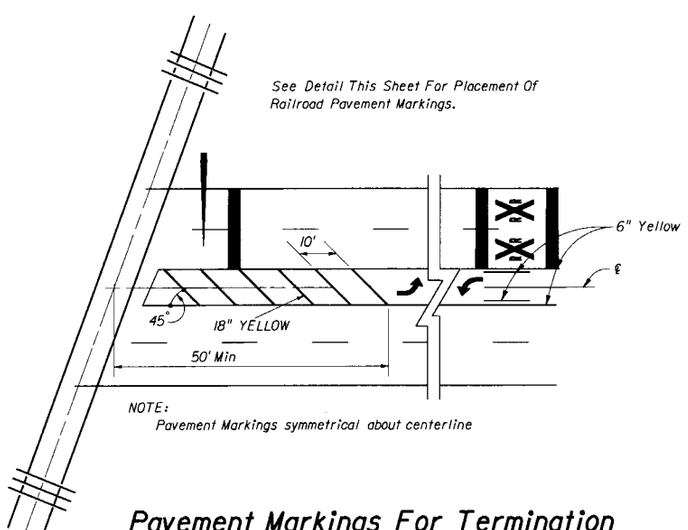

Pavement Markings For Termination Of Two Way Left Turn At R/R Crossings.

SPEED MPH	A In Ft
60	550
55	450
50	375
45	300
40	225
35	150
30	100
Urban	50 Min

NOTES:

1. When computing pavement messages, quantities do not include transverse lines.
2. When dynamic devices are not present or are to be installed, the crossbuck shall be located at the future location of the RR gate or signal and gate in accordance with index 17882.
3. Placement of sign W10-1 in a residential or business district, where low speeds are prevalent, the W10-1 sign may be placed a minimum distance of 100 feet from the crossing. Where street intersections occur between the R R pavement message and the tracks an additional W10-1 sign & additional pavement message should be used.
4. Recommended location for FTP-38 sign, 100ft. urban & 300ft. rural in advanced of the crossing.
5. A portion of the pavement marking symbol should be directly opposite the W10-1 sign.

STATE OF FLORIDA DEPARTMENT OF TRANSPORTATION
TRAFFIC DESIGN

SPECIAL MARKING AREAS

	Names	Dates
Designed By	TL	76
Drawn By	TL	76
Checked By	KR	76

Approved By: Clark A. Scott
State Traffic Plans Engineer

F.H.W.A. Approved:

Revision No.	Sheet No.	Index No.
92	6 of 8	17346

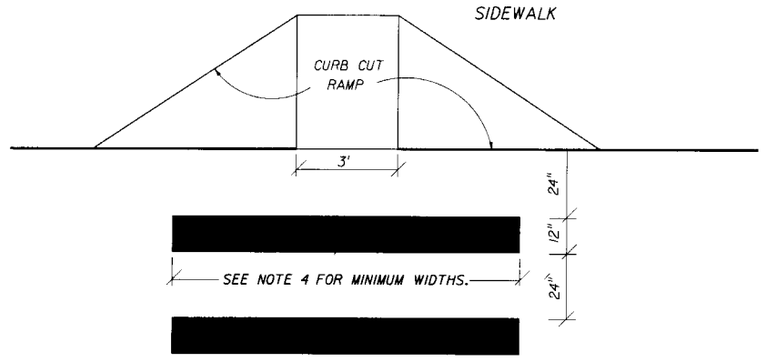

ALL CROSS-WALK MARKINGS ARE WHITE

-GENERAL NOTES-

1. For traffic and pedestrian signal installation, see Standard Indexes 17721 through 17890.
2. For handicap curb cut, See Roadway Design Standard Indexes 304 sheets 1 of 2 and 2 of 2.
3. For pavement marking and sign installation, see Traffic Design Standard Indexes 9535 through 17356.
4. Cross-walk minimum widths:
   Intersection Cross-walk 6'
   Mid Block Cross-walk 10'

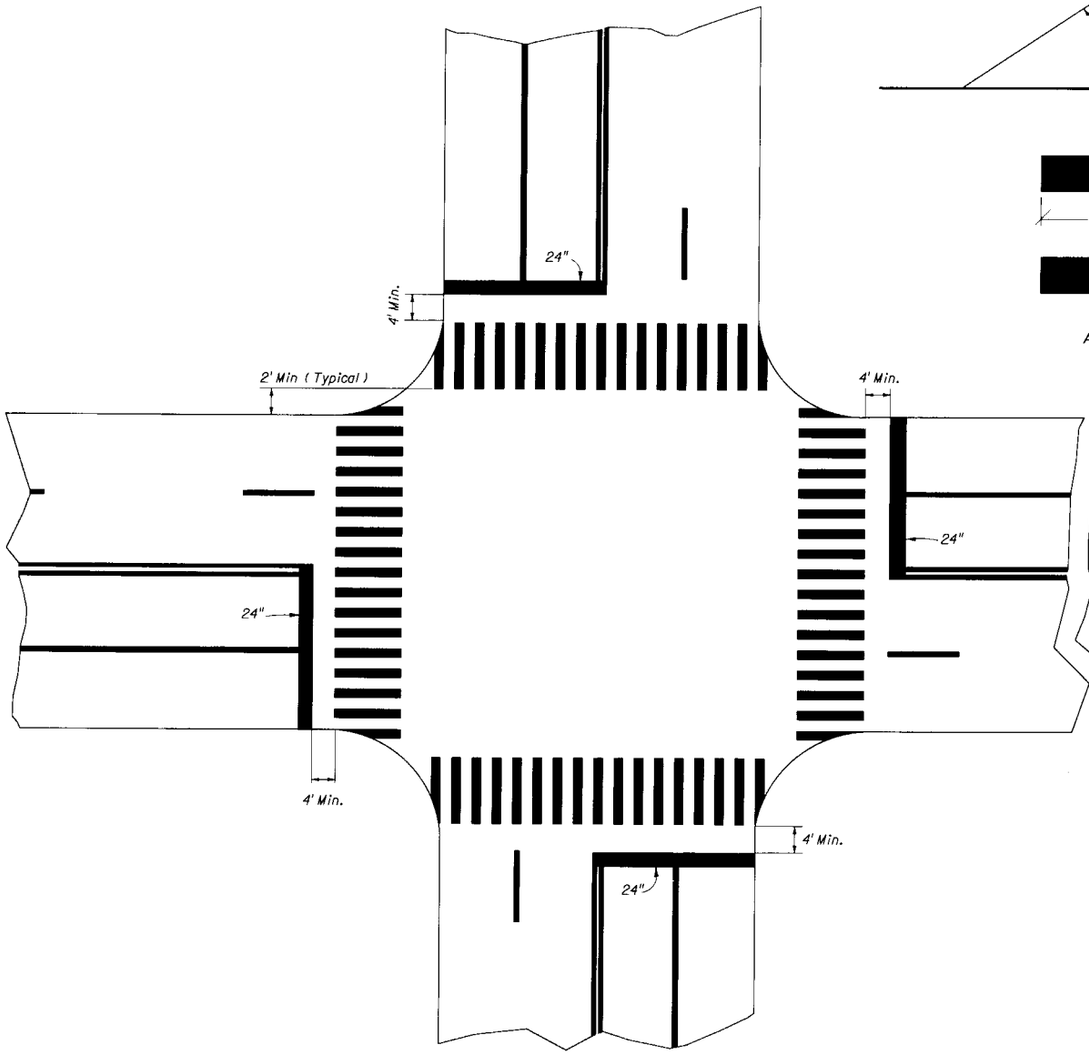

SPECIAL EMPHASIS CROSS-WALK
SIGNALIZED OR STOP SIGN CONTROLLED INTERSECTION

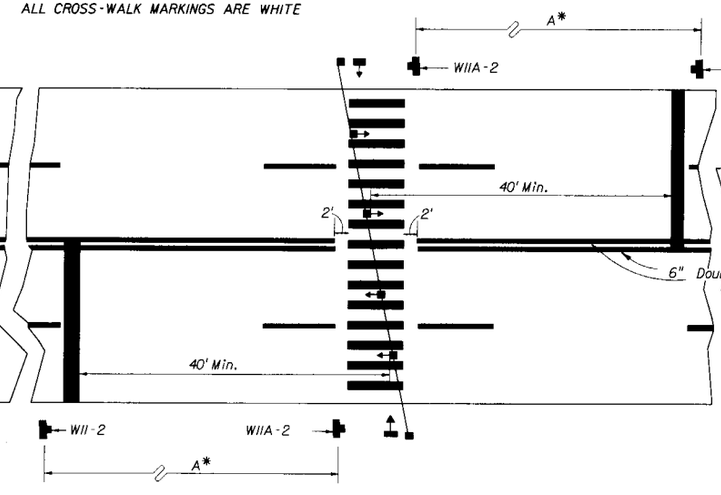

SPECIAL EMPHASIS CROSS-WALK
MIDBLOCK - SIGNALIZED

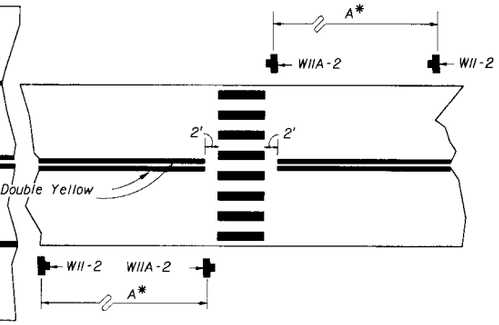

SPECIAL EMPHASIS CROSS-WALK
TWO LANE - NONSIGNALIZED

APPROACH SPEED M.P.H.	A* SUGGESTED DISTANCE IN FEET
25 To 35	275
36 To 45	350
46 To 55	500

STATE OF FLORIDA DEPARTMENT OF TRANSPORTATION
TRAFFIC DESIGN

SPECIAL MARKINGS

	Names	Dates
Designed By	MC	83
Drawn By	MC	83
Checked By	KR	83

F.H.W.A. Approved:

Approved By
Clark A. Scott
State Traffic Plans Engineer

Revision No.	Sheet No.	Index No.
92	7 of 8	17346

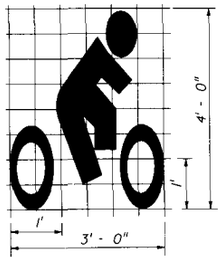

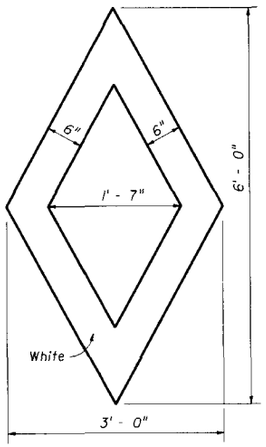

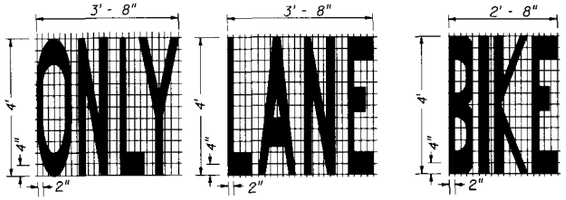

11 S.F. 11 S.F. 11.3 S.F.

PAVEMENT MESSAGE DETAILS

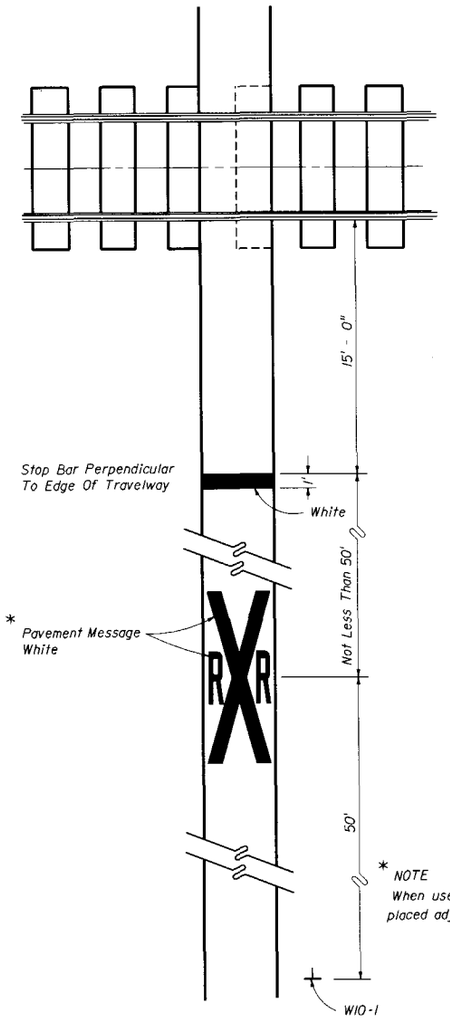

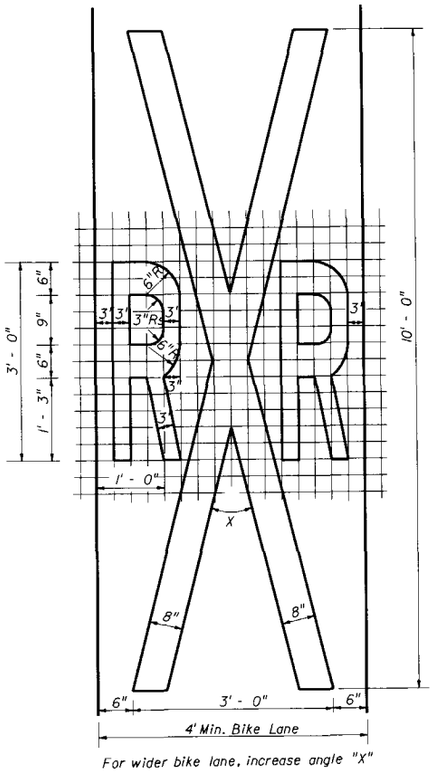

For wider bike lane, increase angle "X"

* NOTE
When used on a bike lane (adjacent to vehicle lane) markings shall be placed adjacent to markings for vehicles & WIO-1 sign shall be sized and placed for vehicles.

STATE OF FLORIDA DEPARTMENT OF TRANSPORTATION
TRAFFIC DESIGN

BICYCLE SPECIAL MARKING AREAS & DETAILS

	Names	Dates
Designed By	RICK	08/84
Drawn By	RICK	08/84
Checked By	K.R.	08/84

F.H.W.A. Approved:

Approved By: Clark A Scott
State Traffic Plans Engineer

Revision No.	Sheet No.	Index No.
90	8 of 8	17346

Aluminum Post: $\frac{3}{8}$" Ø Aluminum Button Head Bolt with Nut and Lockwasher or $\frac{5}{16}$" Ø Stainless Steel Hex Head Bolt with Flat Washer under Head and Lockwasher under Nut.

Channel Post: Provide Attachement in Accordance with the "Sign Attachment Detail" on Index No. 11865.

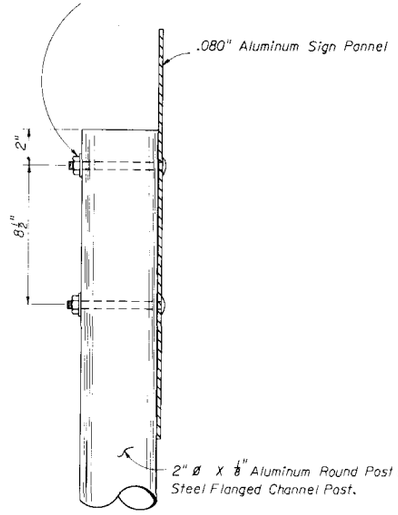

CASE I
Yellow Reflectors

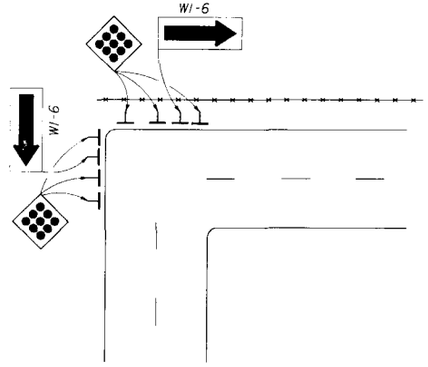

CASE I
Yellow Reflectors

CASE I ... Object Markers (Type I) shall have a Yellow Reflective Background, and Yellow Reflective Buttons.

CASE II ... End of Road Markers shall have a Red Reflective Background, and Red Reflective Buttons.
Payment shall be under Pay Item for Type I Object Marker.

NOTE: For pavement marking see index no. 17346
No guardrail is required unless special field conditions require its use

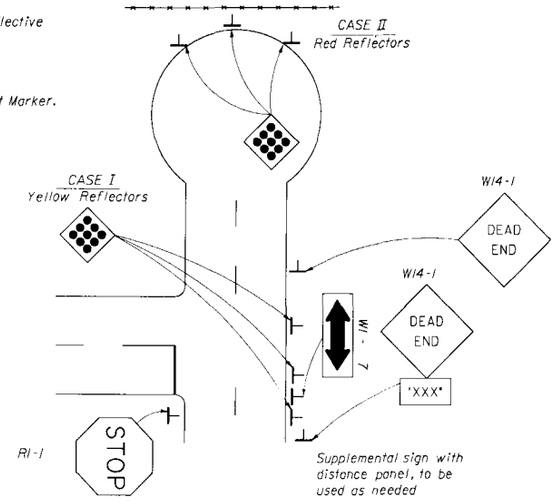

Supplemental sign with distance panel, to be used as needed

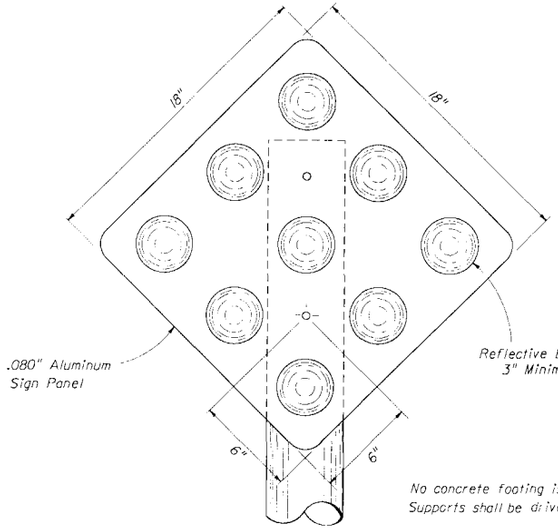

No concrete footing is required for delineator supports. Supports shall be driven 3' into the ground.

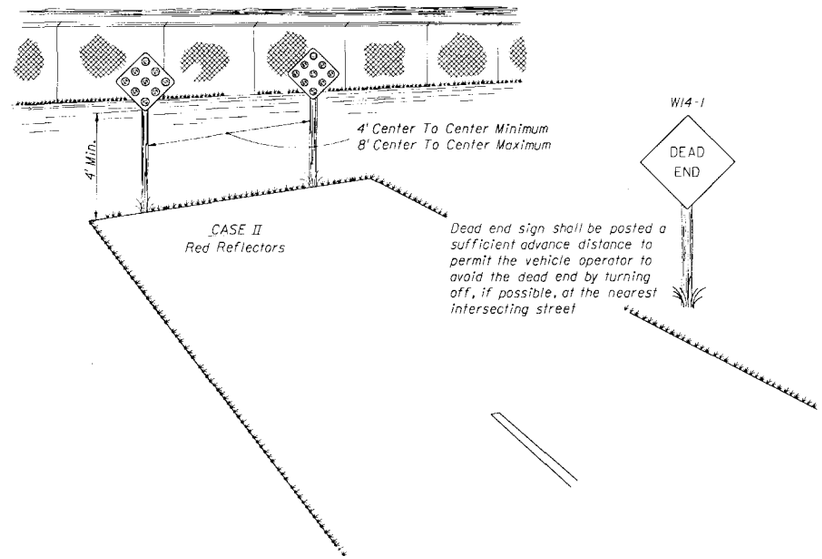

NOTES:

1. THIS INDEX APPLICABLE TO RESIDENTIAL AND MINOR STREETS ONLY MAJOR STREETS TO BE EVALUATED ON A CASE BY CASE BASIS.
2. "T"-INTERSECTION - TWO-WAY ARROWS AND REFLECTORS ARE OPTIONAL. THE NEED SHOULD BE BASED ON A REVIEW OF EACH LOCATION.
3. FOR ADDITIONAL DETAILS ON ALUMINUM ROUND POST, STEEL FLANGED CHANNEL POST, SIGN PANNEL MATERIAL AND BOLTS, NUTS AND WASHERS SEE INDEX NOS. 11860 AND 11865.

STATE OF FLORIDA DEPARTMENT OF TRANSPORTATION
TRAFFIC DESIGN

TRAFFIC CONTROLS FOR STREET TERMINATIONS

	Names	Dates
Designed By		
Drawn By	GW	11/74
Checked By	HR	11/74
F.H.W.A. Approved:		

Approved By Clark A Scott
State Traffic Plans Engineer

Revision No.	Sheet No.	Index No.
92	1 of 1	17349

** Note:

Two assemblies are required; one for each side of the ramp, showing those services in each particular direction from the ramp terminal.

Ramp mounted signs shall be installed to avoid conflict with existing signs and in no case should they be placed within 100' of another sign.

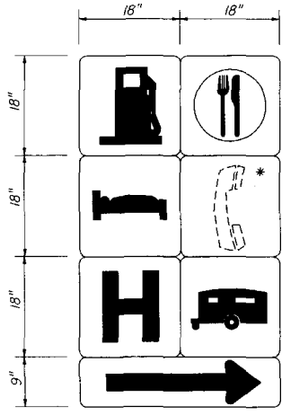

DETAIL "D"

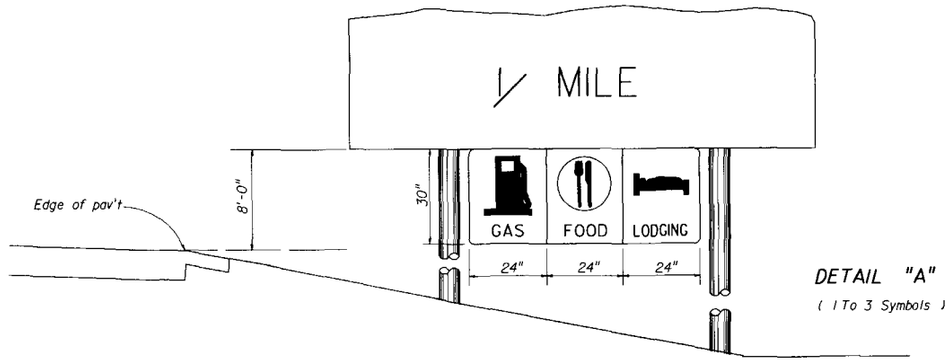

DETAIL "A"

(1 To 3 Symbols)

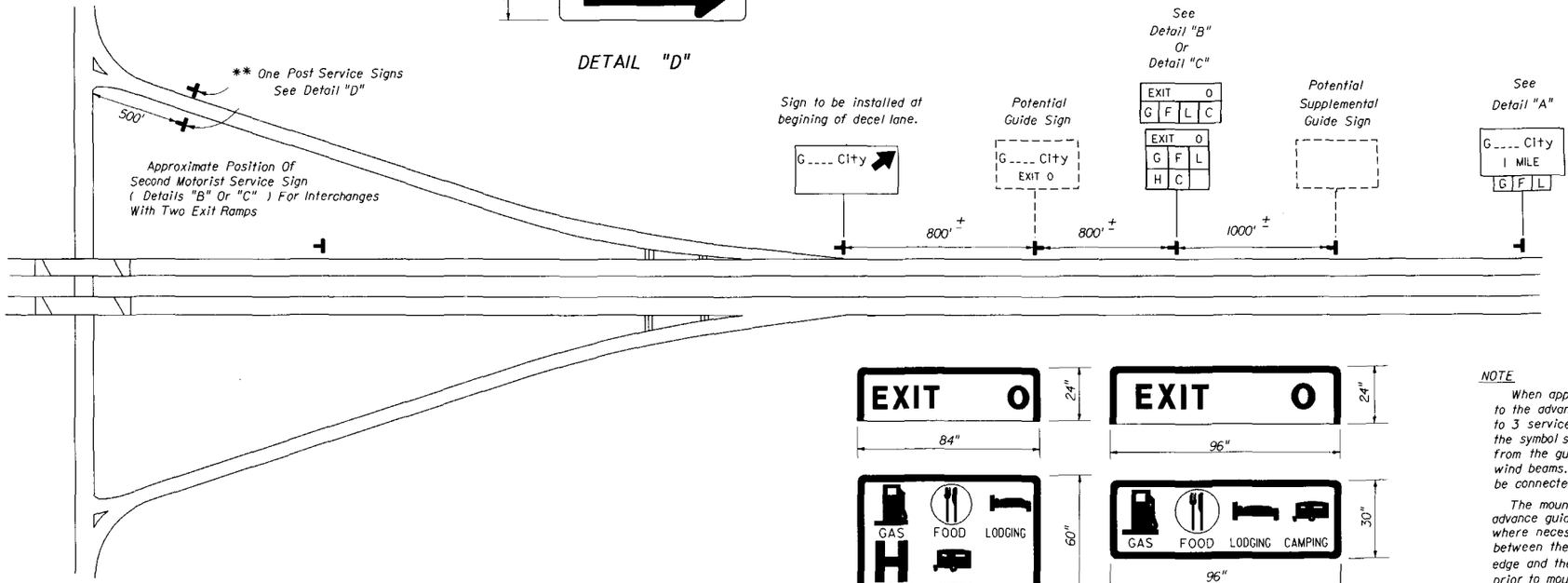

DETAIL "B"

(4 To 6 Symbols)

DETAIL "C"

(4 Symbols)

NOTE

When approved for attachment to the advance guide signs, up to 3 services may be used for an exit, the symbol signs shall be suspended from the guide sign panel or existing wind beams. Symbol signs are not to be connected to existing sign posts.

The mounting height of the advance guide sign shall be increased, where necessary, to provide 8 feet between the level of the pavement edge and the bottom of the guide sign, prior to mounting the supplementary panel.

GENERAL NOTES

1 - Only those services meeting criteria established by the Department and approved by the State Traffic Operations Engineer for each interchange shall be shown. Symbol signs for motorist services shall always appear in the following order reading from left to right and top to bottom: Gas, Food, Lodging, Phone *, Hospital, Camping.

* The phone symbol shall not be shown whenever any Gas, Food, Lodging or Camping symbol appears.

2 - Symbols shall appear consecutively on the sign with no positions left blank or reserved for intermediate symbols not currently approved for a particular interchange.

3 - All motorist service signs to have White Reflective Legend and Border with Blue Reflective Background.

4 - Full size drawings of symbol signs are available from Traffic Plans and Standards, Dept. Of Transportation, Tallahassee , Fla.

5 - For mounting details see Index 9535 for Type "A" breakaway or Index 11860 for Type "C" Frangible.

STATE OF FLORIDA DEPARTMENT OF TRANSPORTATION
TRAFFIC DESIGN

SIGNING FOR MOTORIST SERVICES

	Names	Dates
Designed By	W.B.	03/76
Drawn By		
Checked By	K.R.	03/76
F.H.W.A. Approved:		09/27/76

Approved By: Clark A Scott
State Traffic Plans Engineer

Revision No.	Sheet No.	Index No.
90	1 of 1	17350A

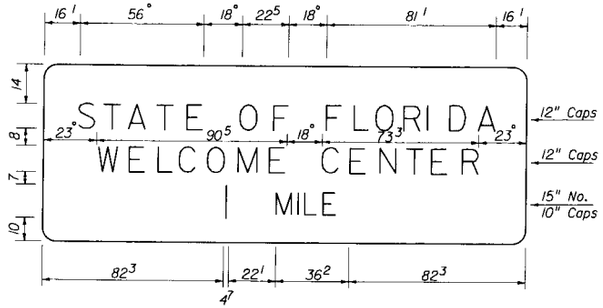

Sign No. FTP-17
6' - 6" x 19' - 0"
3" Bor. 9" Rad.

Blue Refl. Background
White Refl. Legend & Border

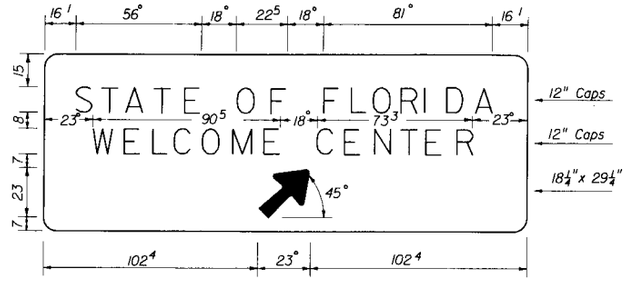

Sign No. FTP-18
7' - 0" x 19' - 0"
3" Bor. 9" Rad.

Blue Refl. Background
White Refl. Legend & Border

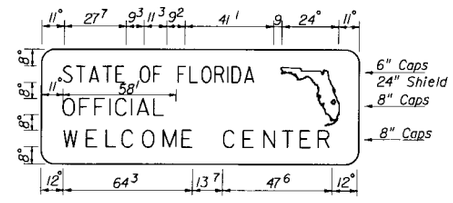

Sign No. FTP-19
4' - 6" x 12' - 6"
2" Bor. 9" Rad.

Blue Refl. Background
White Refl. Legend & Border
Orange Refl. State Silhouette
(Sign No. FTP - 19 To Be Paid By The Dept. Of Tourism)

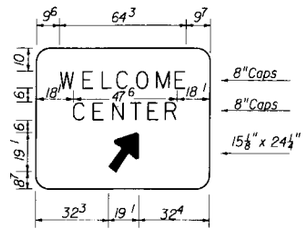

Sign No. FTP-20
5' - 6" x 7' - 0"
2" Bor. 9" Rad.

Blue Refl. Background
White Refl. Legend & Border

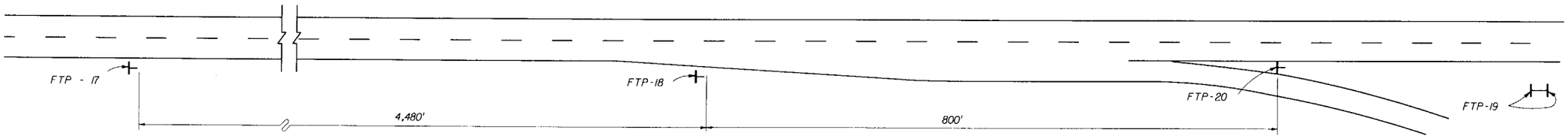

Note : Roadway not drawn to scale
Distances shown are appropriate for adequate driver communication but may be altered slightly if field conditions require.

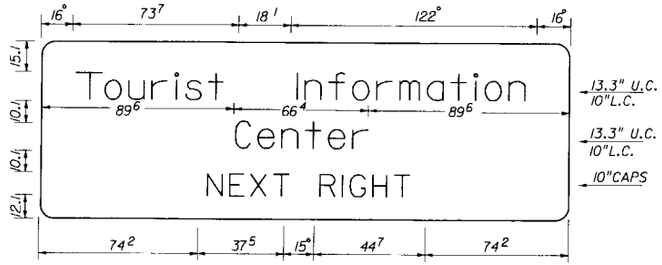

Sign No. FTP-21
7' - 0" x 20' - 6"
3" Bor. - 9" Rad.

Note : Sign shall have Blue Reflective Background with White Reflective Legend & Border. Sign FTP-21 shall be used as a supplemental guide sign at interchanges which have a Tourist Information Center approved for such signing (locate half-way between normal guide signs)

Notes :

(1) Signs and sign structures shall be erected in accordance with the details shown on Index 9535.

(2) Sign FTP-19 shall be located on the Welcome Center grounds in proximity to the building and as far from the main line roadways as possible (2 signs back to back).

(3) Sign FTP-17, 18, 19 shall be located on limited access highways only.

(4) Detail of Florida symbol is available on request from Traffic Plans & Standards Office of D.O.T.

(5) All legend to be Series E.

STATE OF FLORIDA DEPARTMENT OF TRANSPORTATION
TRAFFIC DESIGN

WELCOME CENTER SIGNING FOR LIMITED ACCESS HIGHWAYS

	Names	Dates
Designed By		
Drawn By	W.B.	06/75
Checked By	K.R.	06/75
F.H.W.A. Approved:		

Approved By Charles A Scott
State Traffic Plans Engineer

Revision No.	Sheet No.	Index No.
92	1 of 2	17351

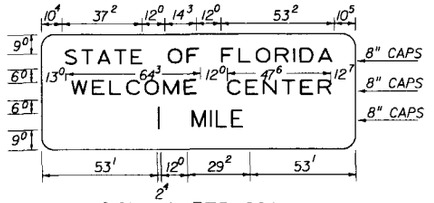

SIGN NO. FTP-22A

4'-6" x 12'-6"

2" BOR.-9" RAD.

BLUE REFL. BACKGROUND
WHITE REFL. LEGEND & BORDER

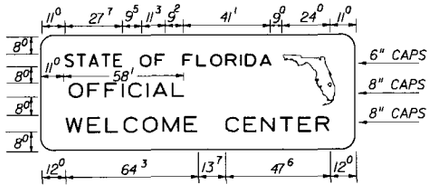

SIGN NO. FTP-19

4'-6" x 12'-6"

2" BOR.-9" RAD.

BLUE REFL. BACKGROUND
WHITE REFL. LEGEND & BORDER
ORANGE REFL. STATE SILHOUETTE
(SIGN NO. FTP-19 TO BE PAID FOR BY THE DEPT. OF TOURISM).

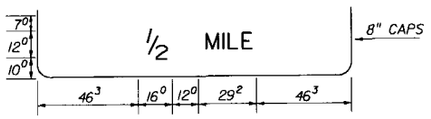

SIGN NO. FTP-22B

5'-0" x 12'-6"

2" BOR.-9" RAD.

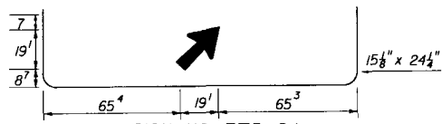

SIGN NO. FTP-24

5'-6" x 12'-6"

2" BOR.-9" RAD.

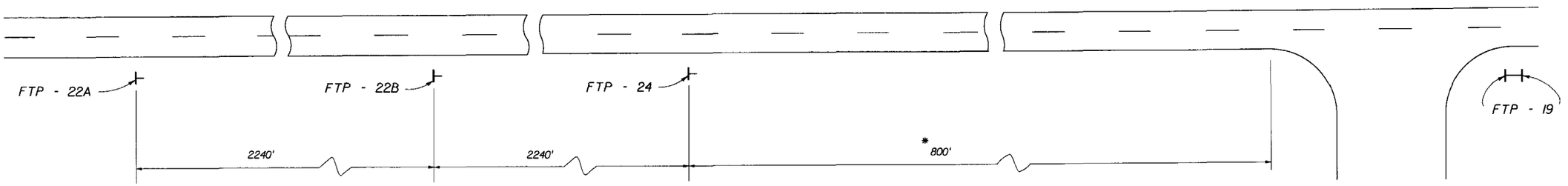

Note :

One sign FTP-22A or 22B should be used depending on speed, roadside development & geometric conditions.

NOTE :

Roadway not drawn to scale

*800' Maximum For Rural Conditions
50' Minimum For Congested Areas

Notes

(1) Signs and sign structures shall be erected in accordance with the details shown on Index 9535.

(2) Sign FTP-19 shall be located on the Welcome Center grounds in proximity to the building and as far from the Main Line Roadway as possible (2 signs back to back)

(3) Detail of Florida symbol is available on request from Traffic Plans & Standards Office of D.O.T.

(4) All legend to be Series E.

STATE OF FLORIDA DEPARTMENT OF TRANSPORTATION
TRAFFIC DESIGN

WELCOME CENTER SIGNING FOR PRIMARY HIGHWAYS

	Names	Dates
Designed By		
Drawn By		
Checked By		
F.H.W.A. Approved:		

Approved By
State Traffic Plans Engineer

Revision No.	Sheet No.	Index No.
92	2 of 2	17351

Alternating Skip Line

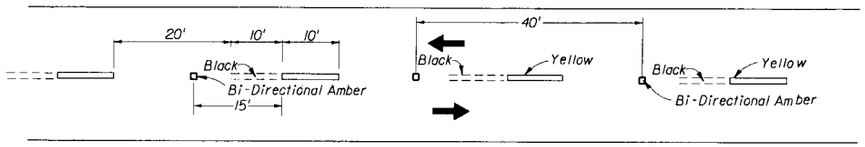

Skip Line

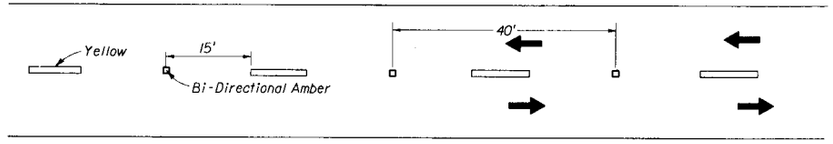

Solid Line With Alternating Skip

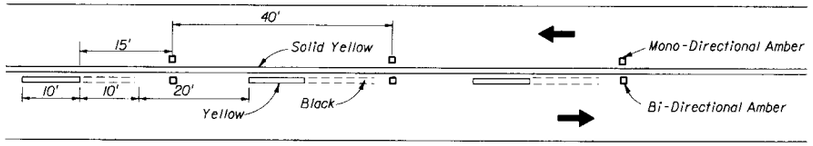

Double Solid Line

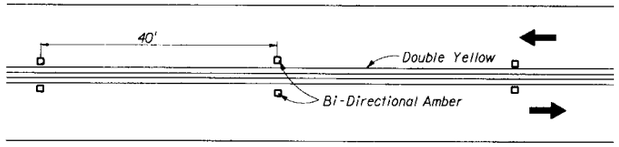

Solid Line With Skip

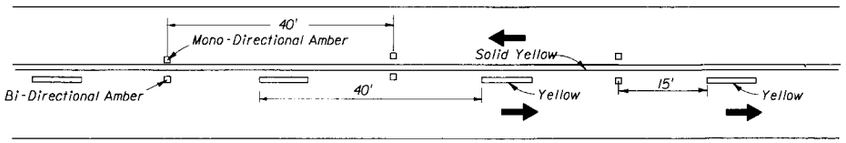

Skip Line With Two Way Left Turn Lane

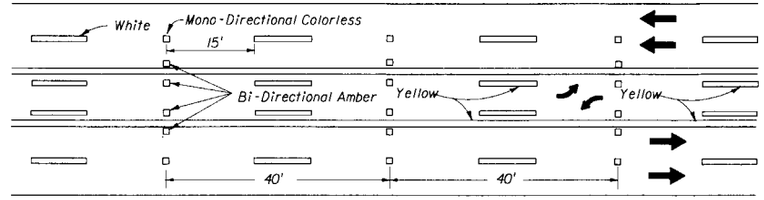

Alternating Skip Line With Two Way Left Turn Lane

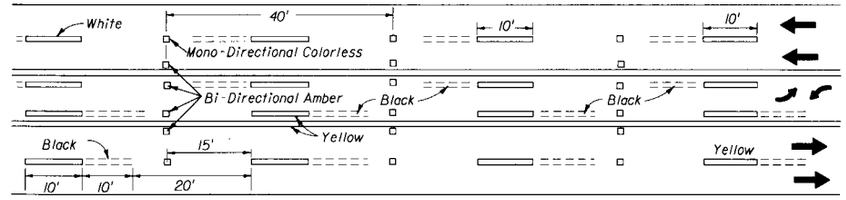

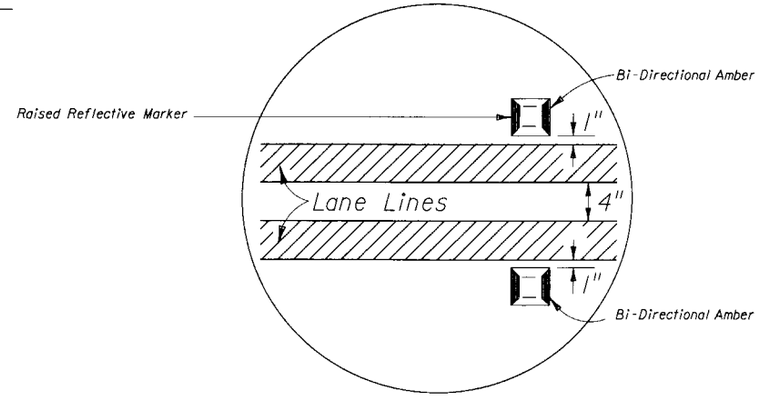

1. Reflective Pavement Markers shall be spaced at 40' feet on all skip lane lines and skip center lines. This spacing may be reduced to 20' feet if specifically called for in the plans.
2. The spacing on solid lines and solid/skip combination lines shall be 40'feet.
3. All R.P.M.s shall be offset 1" from solid lines.
4. These spacings may be reduced if required for sharp curves.
5. All R.P.M.s shall be class "B".

STATE OF FLORIDA DEPARTMENT OF TRANSPORTATION
ROAD DESIGN

TYPICAL PLACEMENT OF REFLECTIVE PAVEMENT MARKERS

	Names	Dates
Designed By	MC	10/87
Drawn By	MC	10/87
Checked By	KR	10/87
F.H.W.A. Approved:		

Approved By
State Traffic Plans Engineer

Revision No.	Sheet No.	Index No.
92	1 of 2	17352

NOTE

Raised pavement markers shall be set one (1) inch outside of line.

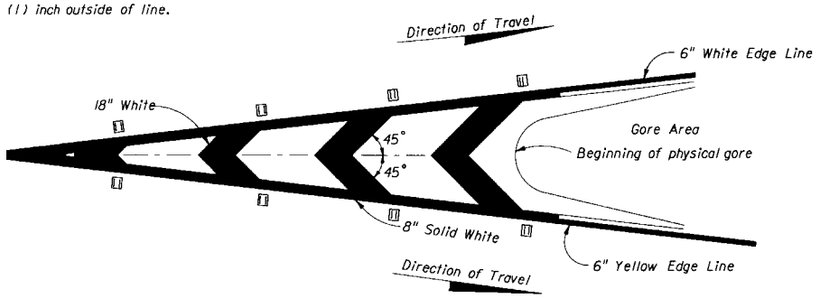

RPM PLACEMENT FOR TRAFFIC CHANNELIZATION AT GORE
(TRAFFIC FLOWS IN SAME DIRECTION)

NOTE

Raised pavement markers (Bi-Directional Red and Colorless) should be used in all gores of this type

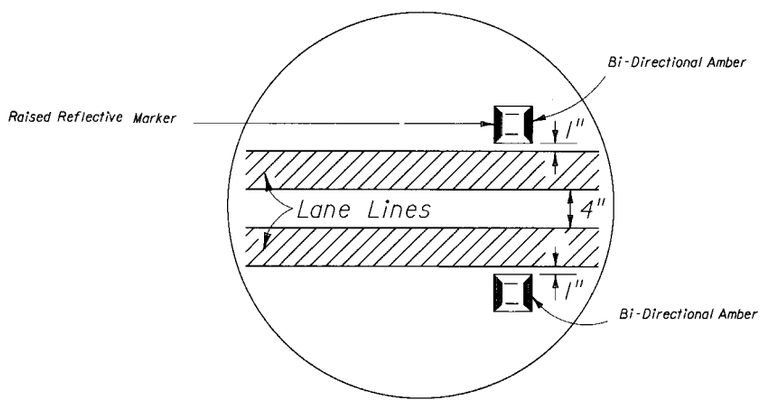

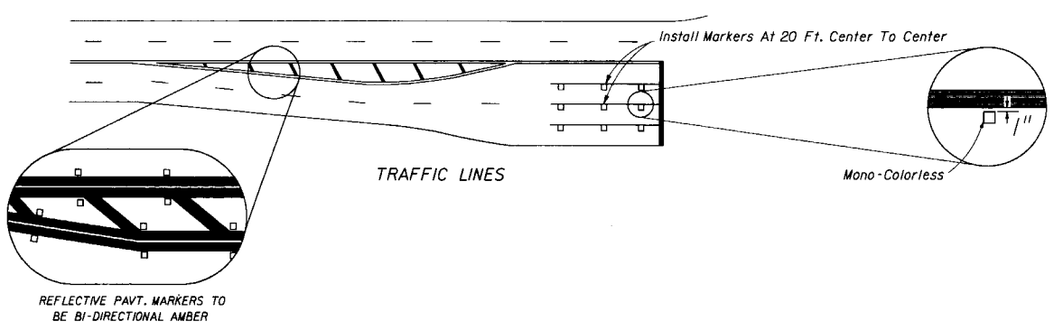

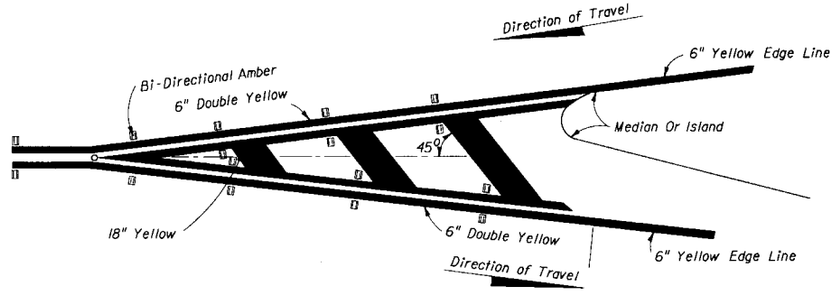

RPM PLACEMENT FOR TRAFFIC SEPARATION
(TRAFFIC FLOWS IN OPPOSITE DIRECTION)

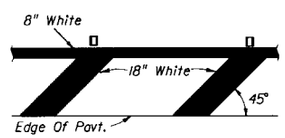

PLACEMENT OF RPMS ON SHOULDER MARKINGS

Shoulder Markings For Left Side Of Roadway Shall Be Yellow.

For Placement Of RPMS On Ramps See Index 17345.

STATE OF FLORIDA DEPARTMENT OF TRANSPORTATION
TRAFFIC DESIGN

TYPICAL PLACEMENT OF REFLECTIVE PAVEMENT MARKERS

	Names	Dates
Designed By	G.W.	10/75
Drawn By		
Checked By	K.R.	10/75
F.H.W.A. Approved:		

Approved By Charles A. Scott
State Traffic Plans Engineer

Revision No.	Sheet No.	Index No.
92	2 of 2	17352

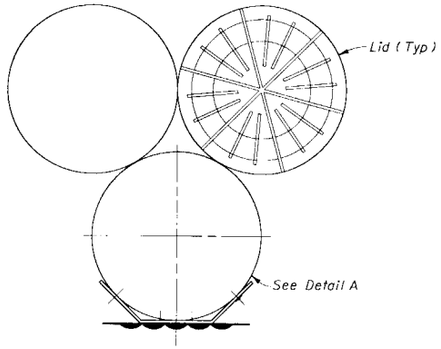

COST FOR OBJECT MARKER TO BE INCLUDED IN CONTRACT UNIT PRICE FOR ATTENUATORS.

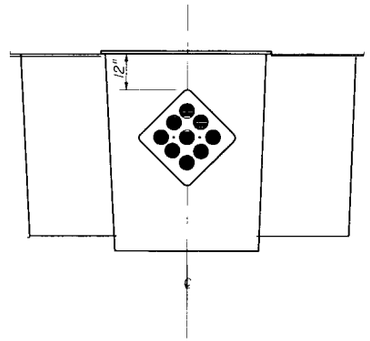

PLACEMENT OF OBJECT MARKER

ENERGITE SYSTEM

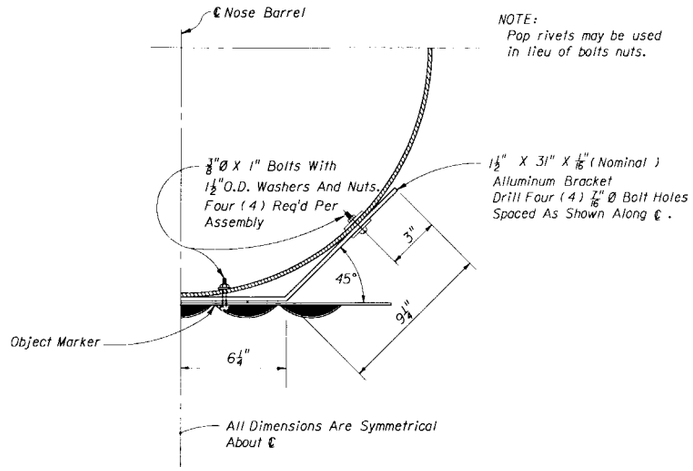

DETAIL A

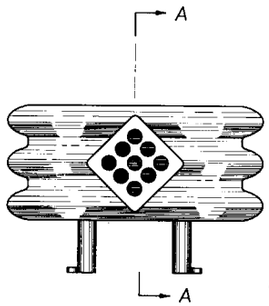

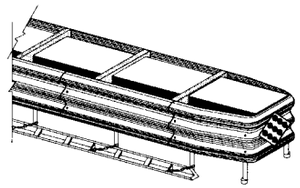

COST FOR OBJECT MARKER TO BE INCLUDED IN CONTRACT UNIT PRICE FOR ATTENUATORS.

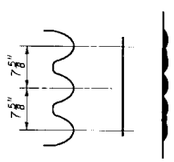

SECTION AA

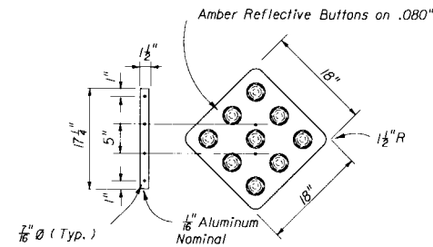

BRACKET AND OBJECT MARKER DETAIL

G-R-E-A-T SYSTEM

COST FOR OBJECT MARKER TO BE INCLUDED IN CONTRACT UNIT PRICE FOR ATTENUATORS.

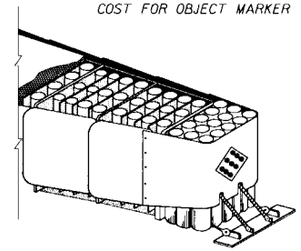

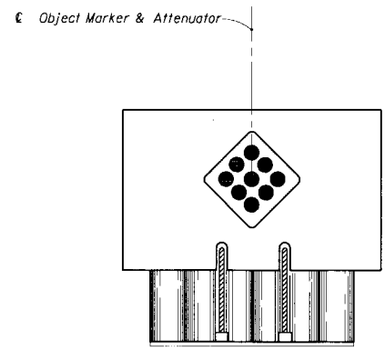

HI - DRO SYSTEM

STATE OF FLORIDA DEPARTMENT OF TRANSPORTATION
TRAFFIC DESIGN

MARKINGS FOR ATTENUATION SYSTEMS

	Names	Dates
Designed By		
Drawn By	R.G.L.	09/81
Checked By		
F.H.W.A. Approved:		

Approved By Charles A. Scott
State Traffic Plans Engineer

Revision No.	Sheet No.	Index No.
92	1 of 1	17353

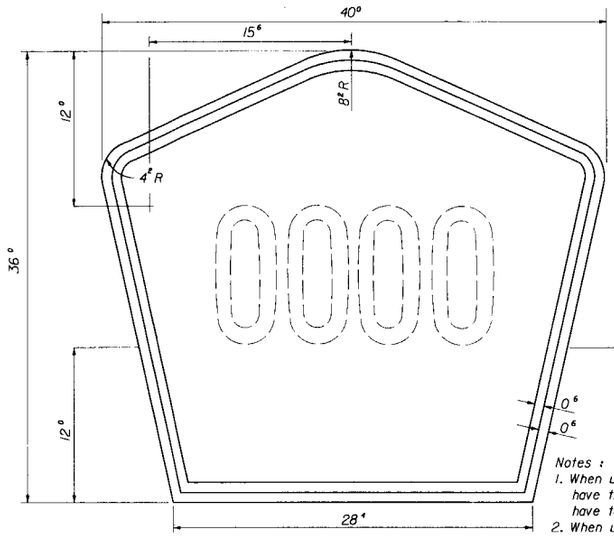

Notes :
1. When used independently the county shield shall have the county name; the numeral size may have to be adjusted.
2. When used on a guide sign, shield must be overlayed on a 38" x 42" White Reflective Background.

COUNTY ROUTE MARKER DETAIL
(3 & 4 DIGIT MARKER)

Color : Yellow Reflective Legend and Border on Blue Reflective Background.

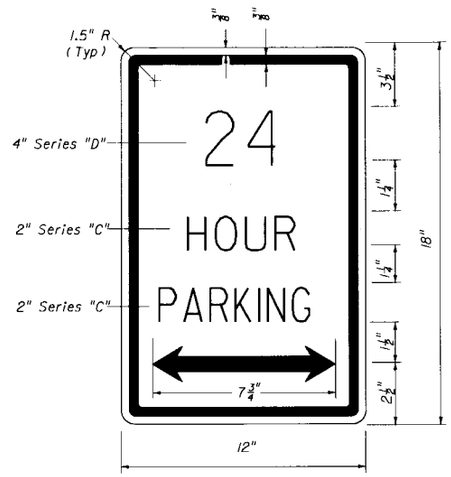

FTP - 24

Color = Reflective Green Legend & Border on White Reflective Background

Sign FTP 24 To Be Used In Rest Areas

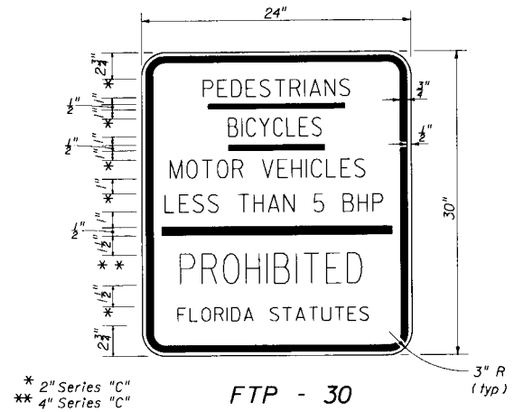

FTP - 30

The color of the sign shall be White Reflective Background with Black Opaque Border and Legend.

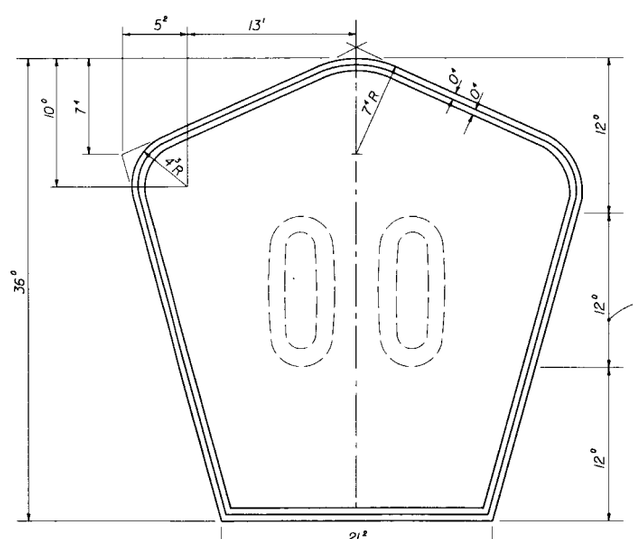

Notes :
1. Signs for 1 - 4 digits are to be used on guide signs.
2. When used on a guide sign, shield must be overlayed on a 38" x 38" White Reflective Background.

FTP - 29

COUNTY ROUTE MARKER DETAIL
(1 & 2 DIGIT MARKER)

Color : Yellow Reflective Legend And Border On Blue Reflective Background.

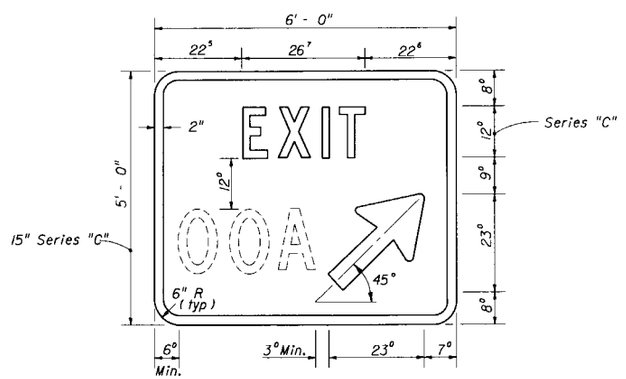

FTP - 31

EXIT PANEL
(GORE INSTALLATION)

Color is Reflective Green Background with Reflective White Legend and Border.

Notes :
1. The exit number shall be centered in the space provided on sign panel.
2. Reduce size of the numbers when 3 or more digits are used. Example: 100A.

STATE OF FLORIDA DEPARTMENT OF TRANSPORTATION
TRAFFIC DESIGN

SPECIAL SIGN DETAILS

	Names	Dates
Designed By		
Drawn By		
Checked By		
F.H.W.A. Approved:		

Approved By Charles A. Scott
State Traffic Plans Engineer

Revision No.	Sheet No.	Index No.
92	1 of 4	17355

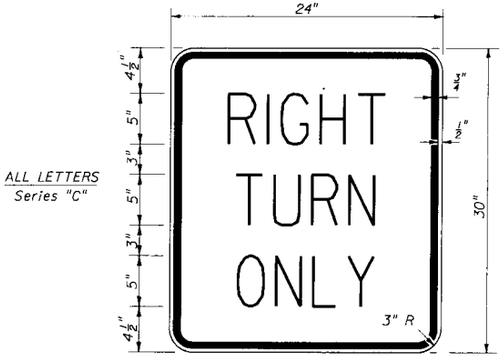

FTP - 47

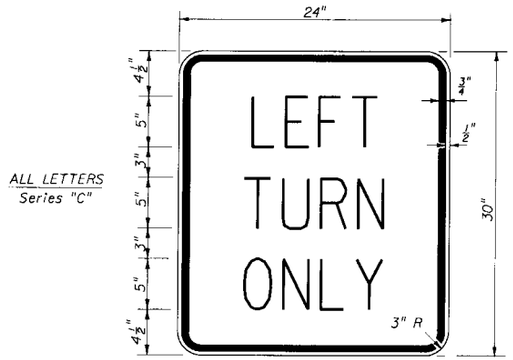

FTP - 48

Color of Sign Shall be White Reflective Background with Black Opaque Border & Legend.



FTP - 25



FTP - 26

SIGNS USED AS PER FLORIDA STATUTES

FTP 25, FTP 26 Per FS 316.1955, FS 316.1956

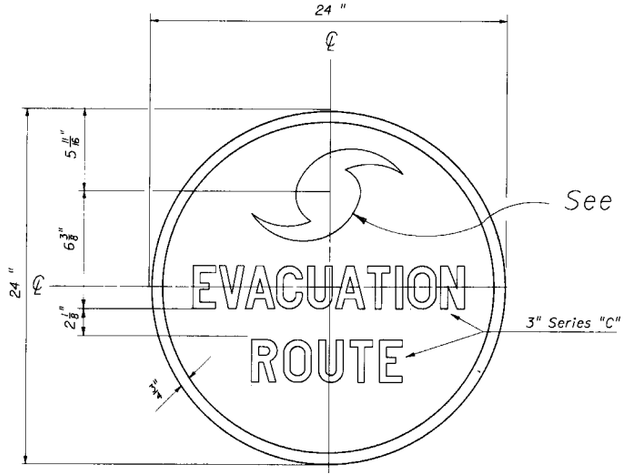

FTP - 911

Sign Shall Have A Reflective Blue Background With Reflective White Legend Symbol & Border.

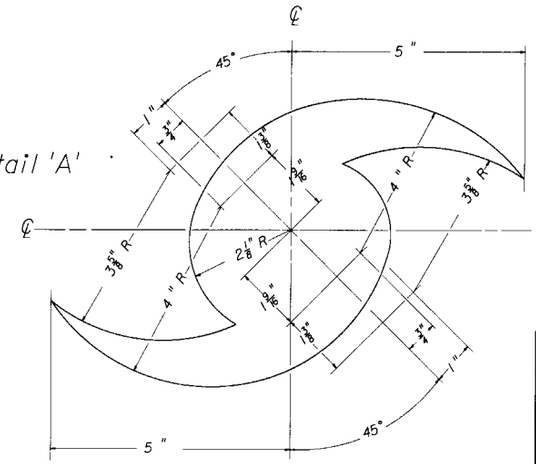

DETAIL 'A'

NOTES

1. Top portion of FTP 25 & 26 shall have a reflective blue background with white reflective symbol and border.

2. Bottom portion shall have a reflective white background with black opaque legend and border.

3. FTP 25 & 26 may be fabricated on one panel or two.

4. FTP 25 may be substituted for the FTP 26 in areas where space is limited.

5. Signs are to be mounted at standard height. (7' from pavment to bottom of sign).

STATE OF FLORIDA DEPARTMENT OF TRANSPORTATION
TRAFFIC DESIGN

SPECIAL SIGN DETAILS

	Names	Dates
Designed By	RL	86
Drawn By	MC	88
Checked By	KR	88
F.H.W.A. Approved:		

Approved By Charles A Scott
State Traffic Plans Engineer

Revision No.	Sheet No.	Index No.
92	2 of 4	17355

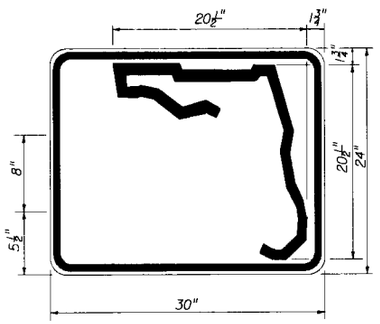

4 OR MORE DIGITS

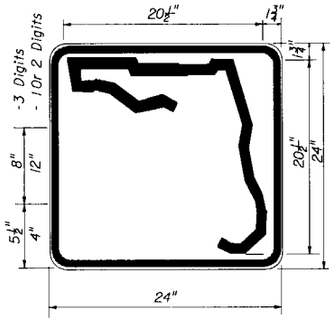

UP TO 3 DIGITS

FLORIDA ROUTE MARKER FOR INDEPENDENT USE

FTP - 28

NUMERAL SIZE

1 Or 2 Digits	12"	Series "C" - 24" x 24"
3 Digits	8"	Series "B" - 24" x 24"
4 Digits	8"	Series "B" - 24" x 30"
More Than 4 Digits	8"	Series "B" - 24" x 30"

Notes : 1. All state route markers and auxiliaries shall have Black Opaque Legend and Border with White Reflective Background.

2. Stroke width of State outline to be 1".

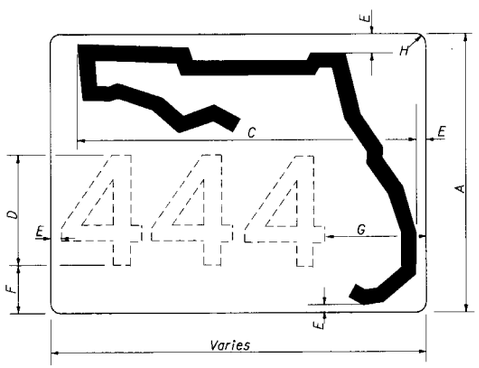

3 OR MORE DIGITS

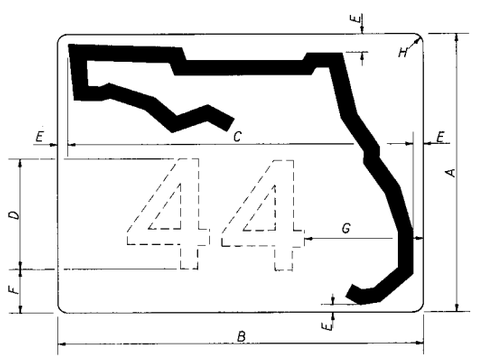

1 OR 2 DIGITS

Notes: 1. Florida shield shall have Black Opaque Legend with White Reflective Background.

2. Stroke width of State outline 1¼".

	A	B	C	D	E	F	G	H
24"	24"	28"	26"	10"	1"	4¾"	10"	1½"
30"	30"	38"	36"	12"	1"	5"	11"	1½"
36"	36"	45"	41"	15"	2"	7"	12"	2"

FLORIDA SHIELD FOR GUIDE SIGN USE

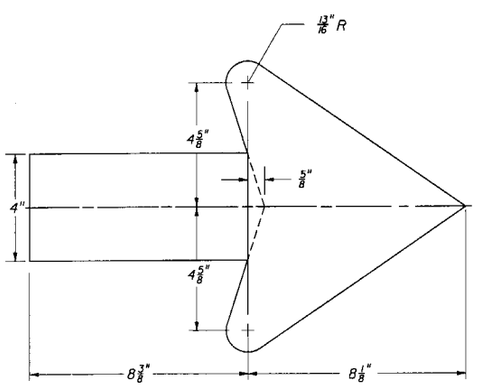

ARROW DETAIL FOR SIGN FTP-27



Arrow Vertical
Arrow Left
Arrow 45° Left
Arrow Right
Arrow 45° Right

Green Reflective Background with White Reflective Legend and Border.

DETAIL LAYOUT OF
FLORIDA TURNPIKE TRAILBLAZER

FTP - 27

STATE OF FLORIDA DEPARTMENT OF TRANSPORTATION
TRAFFIC DESIGN

SPECIAL SIGN DETAILS

	Names	Dates
Designed By	K.H.	08/80
Drawn By		
Checked By	K.R.	08/80
F.H.W.A. Approved:		

Approved By: Clark A. Scott
State Traffic Plans Engineer

Revision No.	Sheet No.	Index No.
92	3 of 4	17355



FTP - 38B

36"X36"

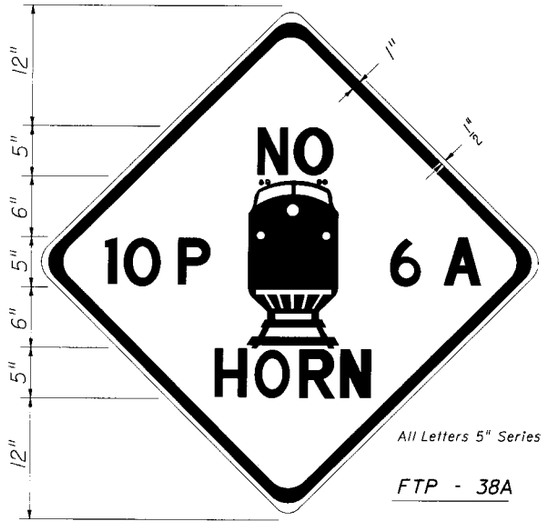

All Letters 5" Series 'C'

FTP - 38A

36"X36"

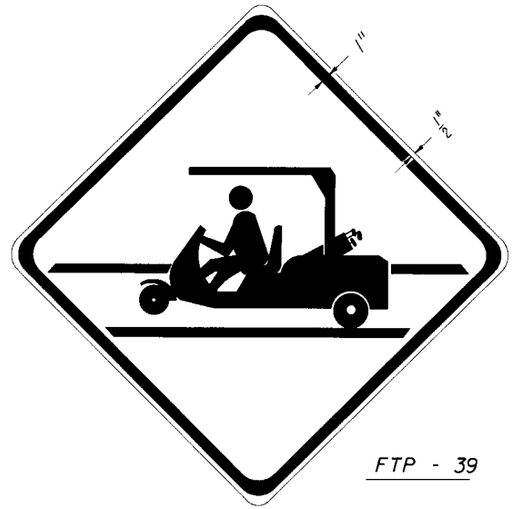

FTP - 39

36"X36"

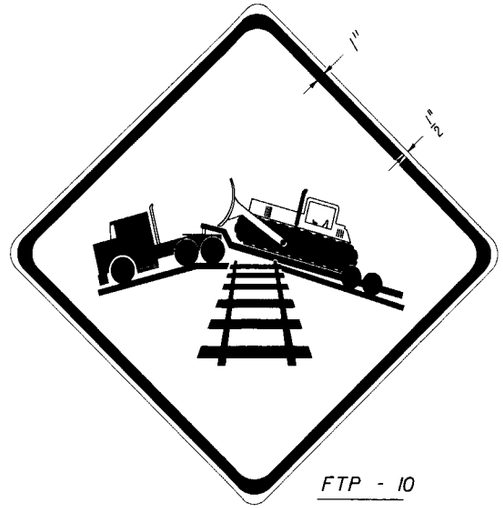

FTP - 10

36"X36"

NOTES

1. Educational plaques for FTP 38A, 39 & 10 and all diamond shaped warning signs will have a Reflective Yellow Background with Black Opaque Legend & Border.
2. For golf cart advance warning sign, remove the two cross walk stripes.

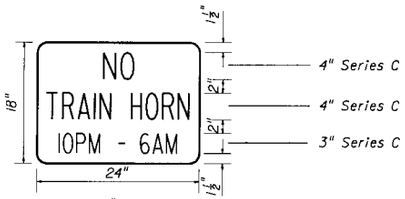

1/2" Border
1 1/2" Radius
FTP - 38A



All Letters 4" Series 'C'
1/2" Border
1 1/2" Radius
FTP - 39



All Letters 2" Series 'C'
1/2" Border
1 1/2" Radius
FTP - 10



All Letters 4" Series 'D'
1/2" Border
3" Radius
FTP - 45



All Letters 4" Series 'C'
1/2" Border
1 1/2" Radius
FTP - 41

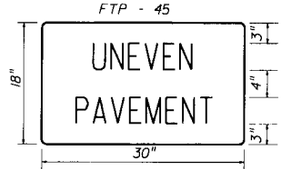

All Letters 4" Series 'C'
1/2" Border
1 1/2" Radius
FTP - 43

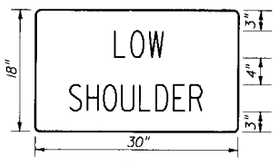

All Letters 4" Series 'C'
1/2" Border
1 1/2" Radius
FTP - 42

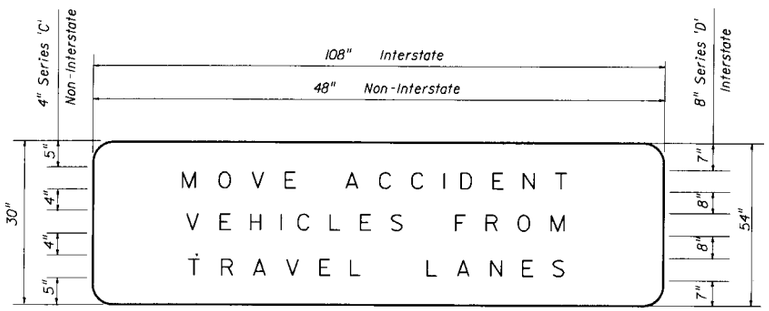

3/4" Border
6" Radius
FTP - 46
White Reflective Background With
Black Opaque Legend & Border

STATE OF FLORIDA DEPARTMENT OF TRANSPORTATION
ROAD DESIGN

SPECIAL SIGN DETAILS

	Names	Dates
Designed By	RL	86
Drawn By	MC	88
Checked By	KR	88

Approved By
State Traffic Plans Engineer

F.H.W.A. Approved:

Revision No.	Sheet No.	Index No.
92	4 of 4	17355

Notes :
1. Bottom edge of signs shall be approximately at the same elevation.
2. Span wire installations that support only signs should be provided with a minimum panel weight of 7 PSF.
3. Type B & C attachments with one hanger shall have wind beams for signs wider than 3½ feet. The beams shall extend to within 6" of the sign edge.
4. Type B & C attachments for signs 4 feet and wider shall have 2 hangers. Signs 7 feet and wider shall have wind beams that extend to within 6" of the sign edge.
5. Type D attachments shall be for signs 3½ feet wide or less.
6. Sign panels shall meet the requirements of Index 9535.
7. Refer to section 634 & 659 of the Supplemental Specifications to the Standard Specifications For Road And Bridge Construction - Traffic Signals.
8. All bolts, nuts, and washers shall be passivated stainless steel, AISI 300 series, commercial grade, type 316.

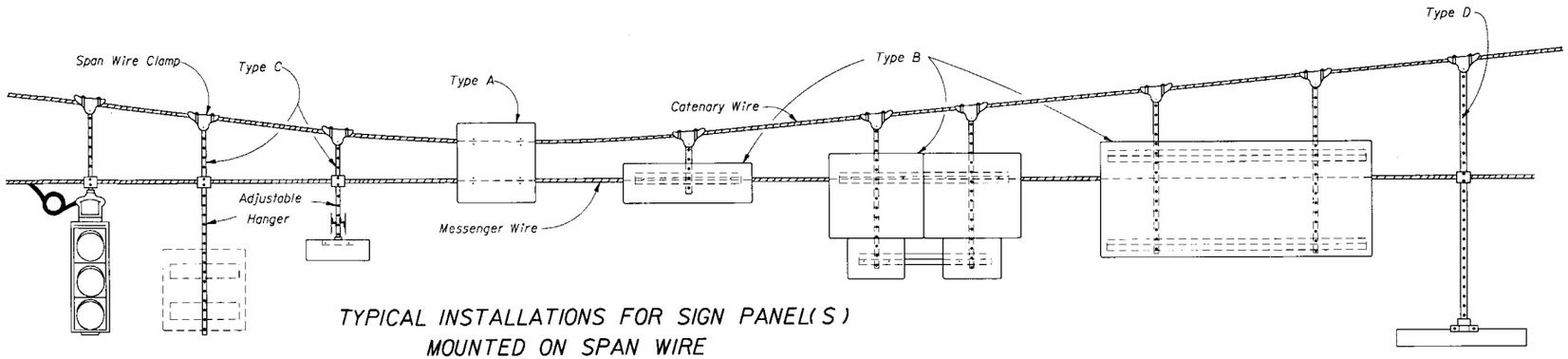

TYPICAL INSTALLATIONS FOR SIGN PANEL(S) MOUNTED ON SPAN WIRE

DETAIL OF SIGN CLAMP

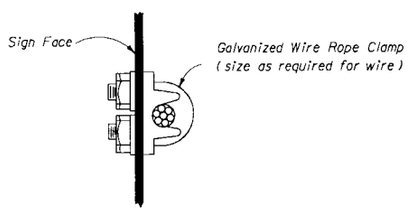

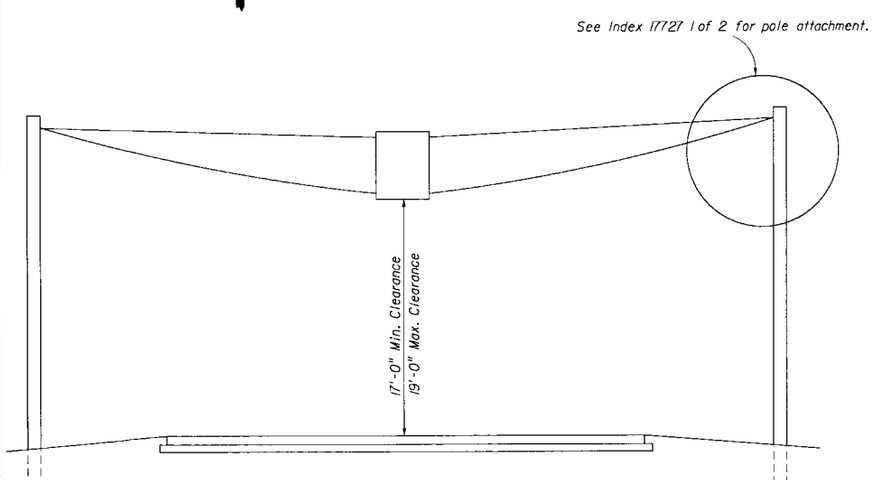

TYPICAL SPAN WIRE INSTALLATION

DETAIL OF OPPOSING SIGNS SPAN WIRE MOUNTED

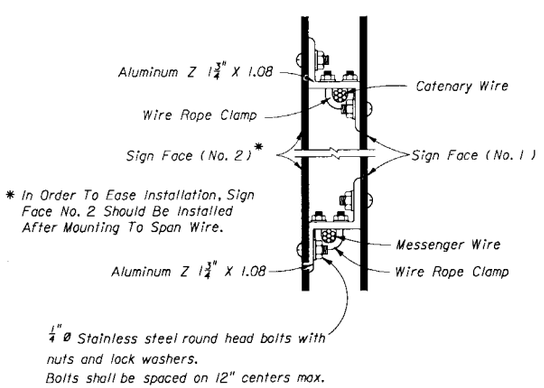

* In Order To Ease Installation, Sign Face No. 2 Should Be Installed After Mounting To Span Wire.

¼" Ø Stainless steel round head bolts with nuts and lock washers. Bolts shall be spaced on 12" centers max.

The overlapped connection of adjustable hangers shall use a minimum of 2 bolts with a minimum spacing between bolts of 2".

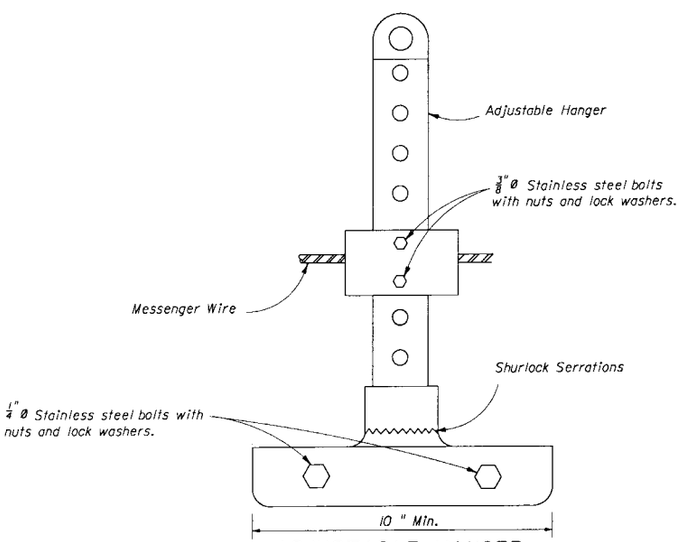

ADJUSTABLE HANGER FOR SIGN MOUNTING

STATE OF FLORIDA DEPARTMENT OF TRANSPORTATION
ROAD DESIGN

SPAN WIRE MOUNTED SIGN DETAILS SINGLE POINT ATTACHMENT

	Names	Dates
Designed By		
Drawn By		
Checked By		
F.H.W.A. Approved:		

Approved By: Clark O Scott
State Traffic Plans Engineer

Revision No.	Sheet No.	Index No.
92	1 of 2	17356

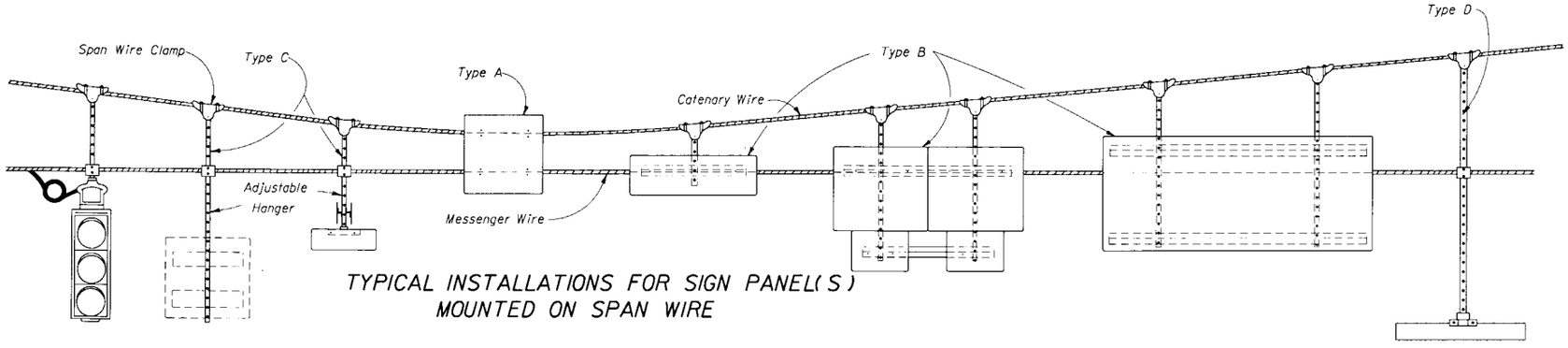

TYPICAL INSTALLATIONS FOR SIGN PANEL(S) MOUNTED ON SPAN WIRE

Notes :
1. Bottom edge of signs shall be approximately at the same elevation.
2. Type B & C attachments with one hanger shall have wind beams for signs wider than 3½ feet. The beams shall extend to within 6" of the sign edge.
3. Type B & C attachments for signs 4 feet and wider shall have 2 hangers. Signs 7 feet and wider shall have wind beams that extend to within 6" of the sign edge.
4. Type D attachments shall be for signs 3½ feet wide or less.
5. Sign panels shall meet the requirements of Index 9535.
6. Refer to section 634 & 659 of the Supplemental Specifications to the Standard Specifications For Road And Bridge Construction - Traffic Signals.
7. All bolts, nuts, and washers shall be passivated stainless steel, AISI 300 series, commercial grade, type 316.

DETAIL OF SIGN CLAMP

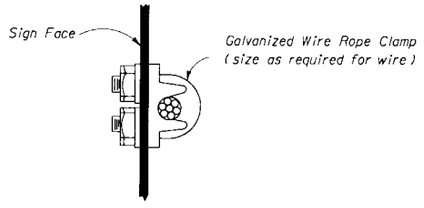

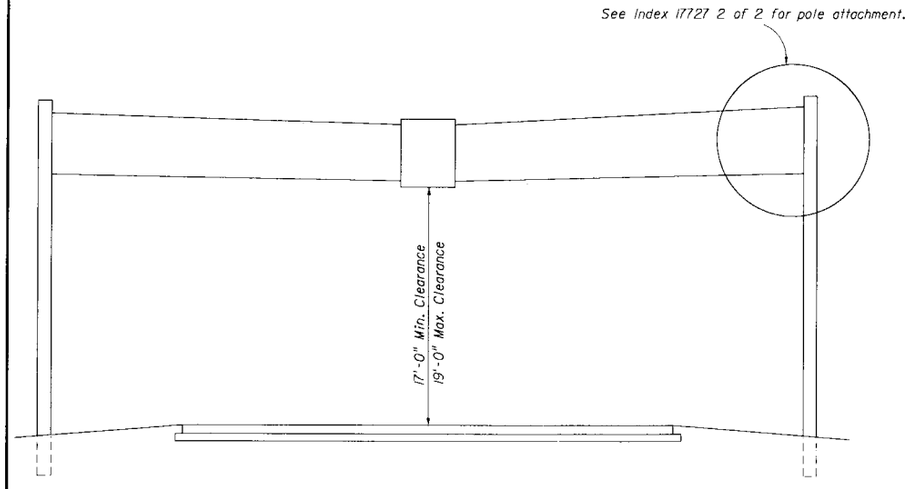

TYPICAL SPAN WIRE INSTALLATION

DETAIL OF OPPOSING SIGNS SPAN WIRE MOUNTED

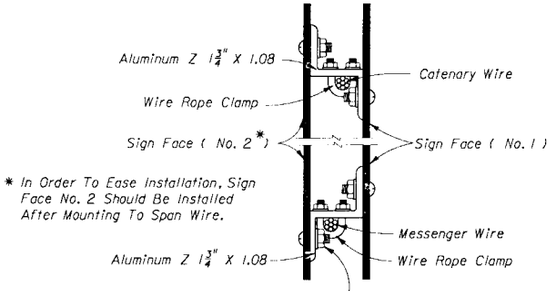

* In Order To Ease Installation, Sign Face No. 2 Should Be Installed After Mounting To Span Wire.

¼" Ø Stainless steel round head bolts with nuts and lock washers.
Bolts shall be spaced on 12" centers max.

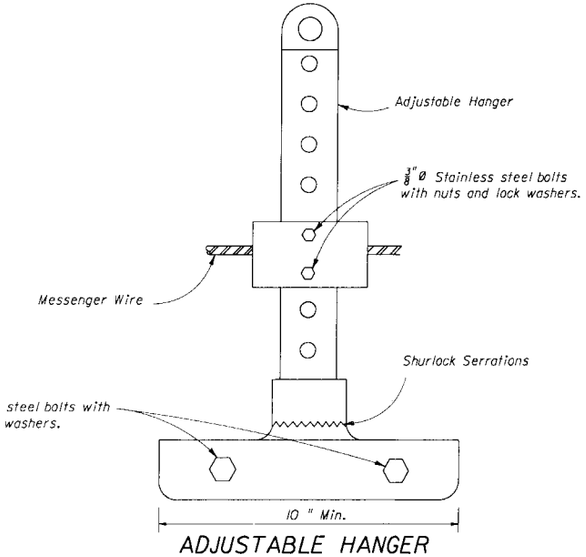

ADJUSTABLE HANGER FOR SIGN MOUNTING

STATE OF FLORIDA DEPARTMENT OF TRANSPORTATION
ROAD DESIGN

SPAN WIRE MOUNTED SIGN DETAILS TWO POINT ATTACHMENT

	Names	Dates
Designed By		
Drawn By		
Checked By		
F.H.W.A. Approved:		

Approved By Clark O Scott
State Traffic Plans Engineer

Revision No.	Sheet No.	Index No.
92	2 of 2	17356

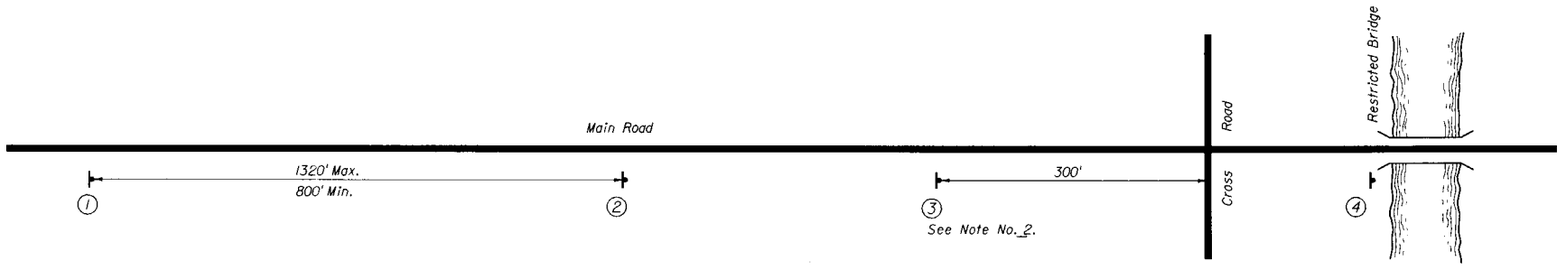

SIGN LOCATIONS TYPICAL

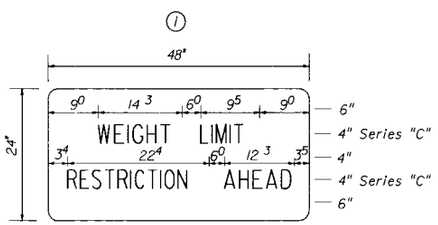

FTP - 41
24" X 48"
Black on Yellow

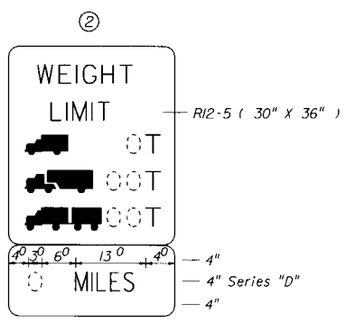

FTP - 42
12" X 30"
Black on White

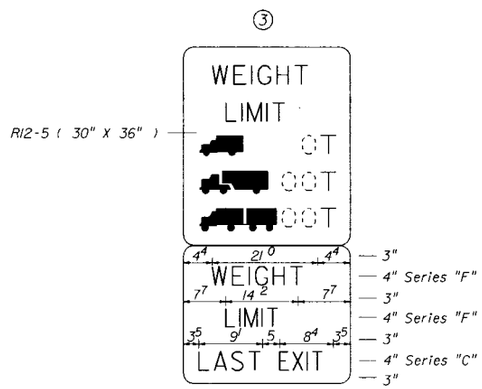

FTP - 43
24" X 30"
Black on White

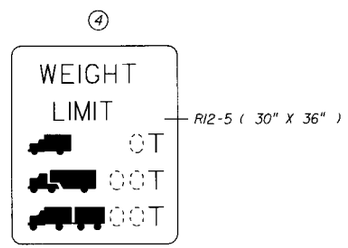

NOTE:

1. See Standard Highway Signs dated 1979 for sign RI2-5 detail.
2. Sign location No. 3 may require some field adjustment.
3. Signs FTP - 41, FTP - 42 & FTP - 43 shall have a 1/2" edge and 3/4" border with a 4" radius.
4. The Cross Road is the last detour around the restricted bridge.
5. Sign location No. 2 should be established from the Cross Road the following approximate distances; Interstate - 1 mile; Non-Interstate -1/2 mile
6. For Interstate application, contact Traffic Plans & Standards - Tallahassee for sign sizes.

SIGN DETAILS

STATE OF FLORIDA DEPARTMENT OF TRANSPORTATION
ROAD DESIGN

BRIDGE WEIGHT RESTRICTIONS

	Names	Dates
Designed By	M.C.	08/86
Drawn By	M.C.	08/86
Checked By	K.R.	08/86

Approved By: Clarke A Scott
State Traffic Plans Engineer

F.H.W.A. Approved:

Revision No.	Sheet No.	Index No.
90	1 of 1	17357

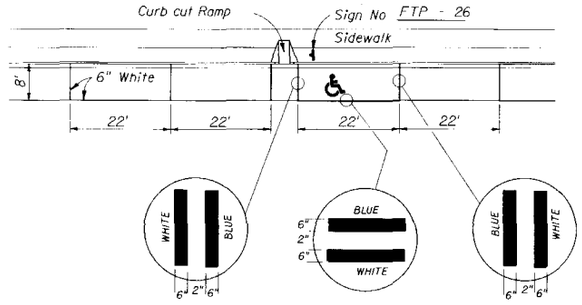

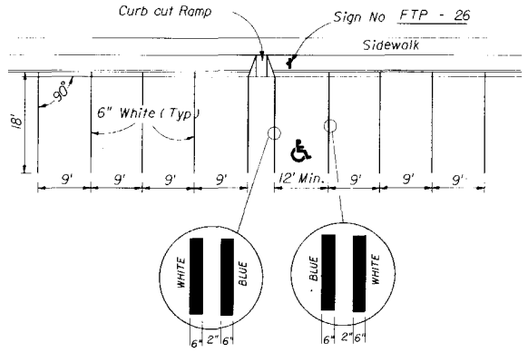

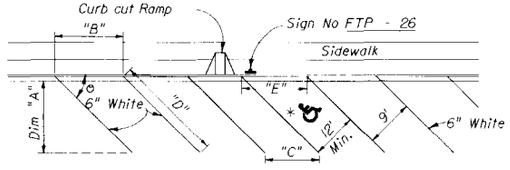

* FOR HANDICAPPED MARKINGS - SEE ABOVE

	"DIMENSIONS"				
△	"A"	"B"	"C"	"D"	"E"
45°	19'-1"	12'-9"	14'-2"	27'-0"	17'-0"
60°	20'-1"	10'-5"	11'-7"	23'-2"	14'-0"

NOTE:

Criteria for pavement markings only, not curb cut ramp locations. For ramp criteria see Roadway Design Index No. 304.

Blue pavement markings shall be tinted to match shade 15180 of Federal Standard 595a.

PAVEMENT MARKING FOR CURB CUT RAMPS IN REST AREAS



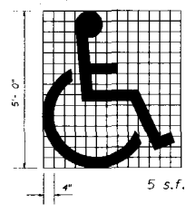

& USE OF PAVEMENT SYMBOL IN HANDICAPPED PARKING SPACES IS OPTIONAL. WHEN USED THE SYMBOL SHALL BE 3 OR 5 FT. HIGH AND WHITE IN COLOR.

HANDICAPPED PAVEMENT SYMBOL

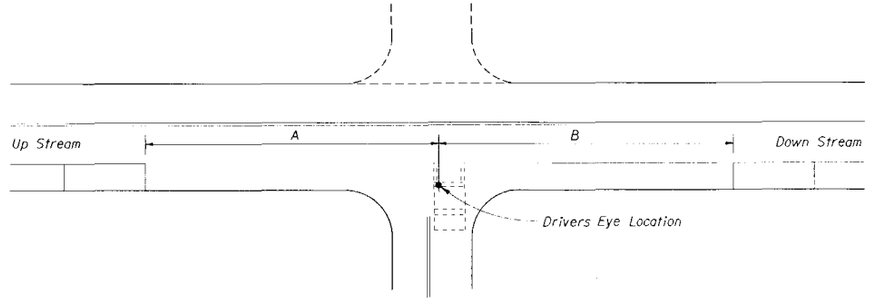

SPEED MPH	UP STREAM (A)	DOWN STREAM (B) 2 LANE	4 LANE
0-30	85'	60'	45'
35	100'	70'	50'

MINIMUM PARKING RESTRICTION (FT.) FOR NON-SIGNALIZED INTERSECTION

NOTES

1. Distances measured longitudinally along the street from driver location of entering vehicle to end of parking restriction.
2. Distances applicable to intersecting street, major driveways and other driveways to the extent practical.
3. For non-signalized intersections, the value above shall be compared with the value for signalized intersections and the maximum restriction implemented.

MINIMUM PARKING RESTRICTION FOR NON-SIGNALIZED INTERSECTIONS

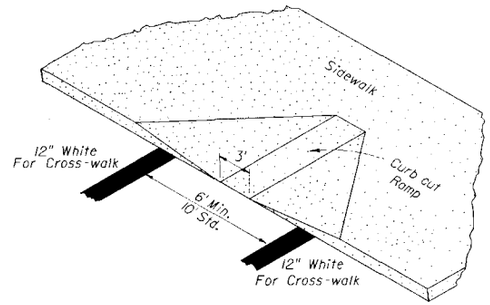

TYPICAL MARKINGS FOR CROSS-WALKS

REFER TO INDEX NO. 17346 2 OF 8

GENERAL NOTES (Signalized & Non-signalized)

1. For entrances to a one-way street, the downstream restriction may be reduced to 20 feet.
2. Parking shall not be allowed within 20 feet of a crosswalk.
3. All parking lane markings shall be 6" white.
4. Parking lane lines shall be broken at driveways.
5. Refer to Chapter 316, Fla. statutes, for laws governing parking spaces.
6. Where curb and gutter is used, the gutter pan width may be included as part of the minimum width of parking lane, but desirably the lane width should be in addition to that of the gutter pan.

TYPE I

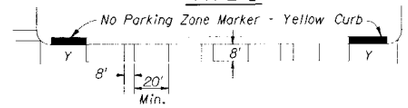

TYPE II

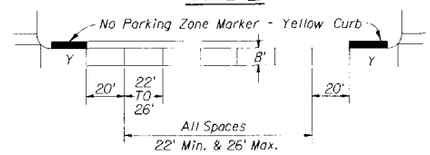

TYPE III

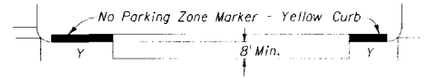

SPEED LIMIT MPH	SIGNALIZED INTERSECTIONS	
0 - 30	30'	DISTANCE FROM CURB RADIUS (Y)
35	50'	

PARKING RESTRICTION (FT.) FOR SIGNALIZED INTERSECTION

NOTE:

Parking restriction measured from curb radius point

MINIMUM PARKING RESTRICTION FOR SIGNALIZED INTERSECTION

STATE OF FLORIDA DEPARTMENT OF TRANSPORTATION
ROAD DESIGN

SPECIAL MARKING AREAS (PARKING)

	Names	Dates
Designed By	M.C.	08/86
Drawn By	M.C.	08/86
Checked By	K.R.	08/86

Approved By: Clark A. Scott
State Traffic Plans Engineer

F.H.W.A. Approved:

Revision No.	Sheet No.	Index No.
92	1 of 1	17358

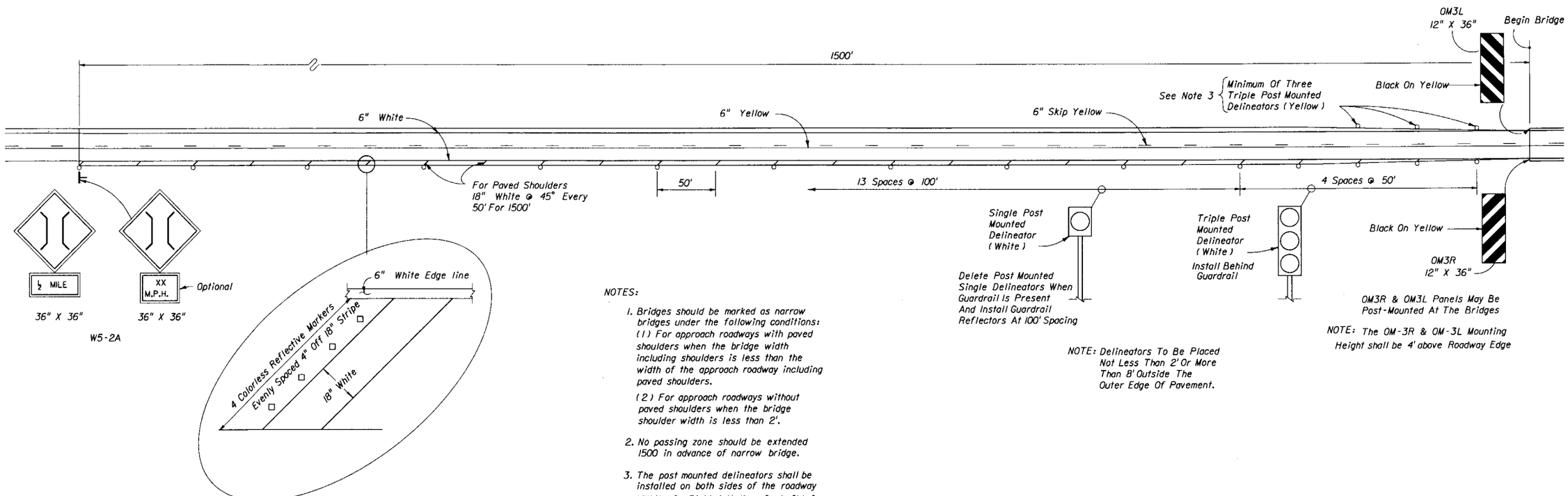

NOTES:

1. Bridges should be marked as narrow bridges under the following conditions:
   (1) For approach roadways with paved shoulders when the bridge width including shoulders is less than the width of the approach roadway including paved shoulders.
   (2) For approach roadways without paved shoulders when the bridge shoulder width is less than 2'.
2. No passing zone should be extended 1500 in advance of narrow bridge.
3. The post mounted delineators shall be installed on both sides of the roadway (White On Right / Yellow On Left) for a distance of 1500' in advance of a narrow bridge if the bridge or the approach is on a curve.
4. Delineators on both sides of roadway shall face traffic approaching bridge.

STATE OF FLORIDA DEPARTMENT OF TRANSPORTATION
ROAD DESIGN

RURAL NARROW BRIDGE TREATMENT

	Names	Dates
Designed By	R. LEE	9/86
Drawn By	R. LEE	9/86
Checked By	RANSON	9/86

F.H.W.A. Approved:

Approved By: Charles A. Scott
State Traffic Plans Engineer

Revision No.	Sheet No.	Index No.
92	1 of 1	17359

JOINT USE POLES

1. The Luminaire And Arm Shall Be Grounded
2. The Surge Protector And Fuses Shall Be Installed And Located In A Lockable Nema 3R Box (Sized By The Contractor) Attached To The Side Of The Pole

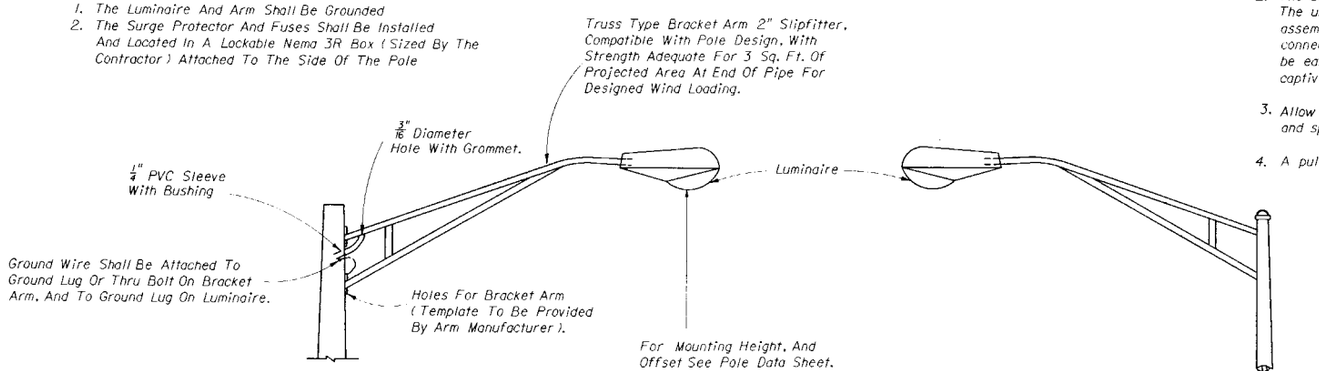

Notes :

1. Luminaire shall be supplied with a magnetic regulator type ballast.
2. The ballast shall be mounted on a hinged door or panel. The unit shall swing open to provide access to the ballast assembly by release of captive screws. The electrical connector shall be a quick disconnect plug. The unit shall be easily removed from the luminaire after release of the captive screws and quick disconnect plug.
3. Allow enough slack in wires to permit fuse holders, surge protectors, and splices to be handled one foot outside pole or pull box.
4. A pull box shall be installed at each concrete pole location.
5. All mounting heights are ± 2½' ft. unless otherwise noted in plans.
6. At All Pull Boxes And Pole Bases, Ends Of Conduit Shall Be Sealed In Accordance With Section B 630-3.4 Of The 1991 Standard Specifications For Road And Bridge Construction.

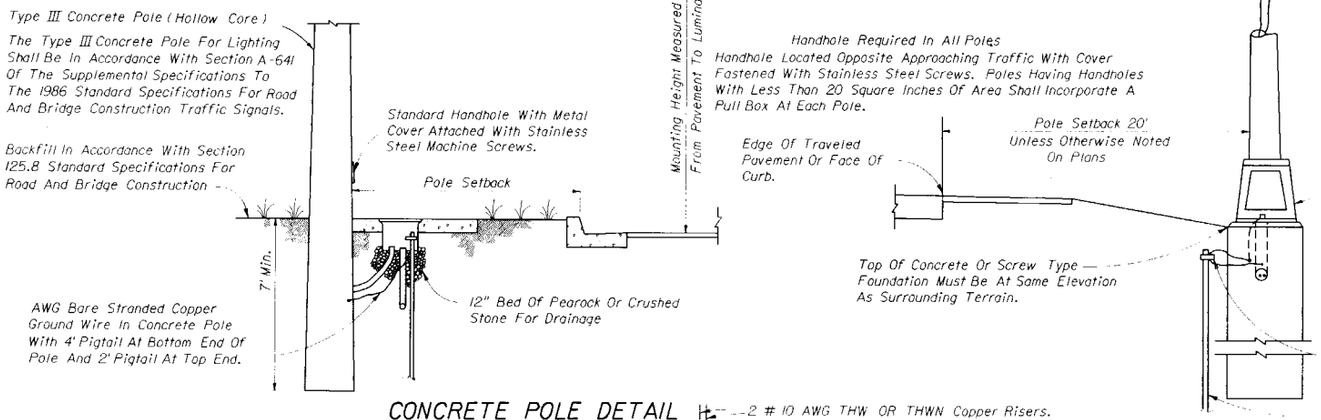

CONCRETE POLE DETAIL

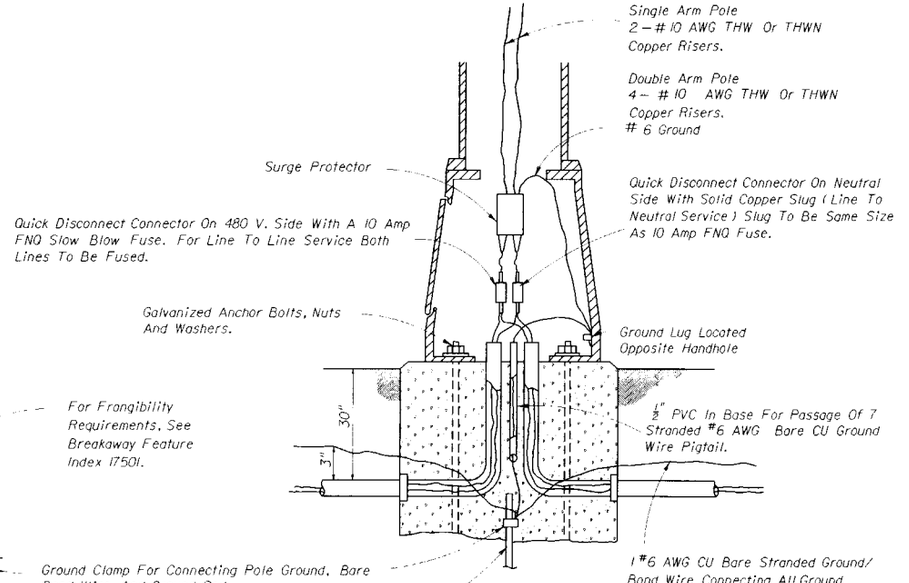

METAL POLE DETAIL

METAL POLE WIRING DETAIL

SURGE PROTECTOR SPECIFICATIONS

1. The unit shall withstand a surge current up to 20,000 Amps, and repetitive surges of 200 Amps for a minimum of 10,000 occurences.
2. The unit shall respond in less than 50 nanoseconds and within this time have a peak clamping voltage better than 1,100 Vrms.
3. The maximum allowable voltage that can pass continuously through the hot leg of the protector must be less than 550 Vrms.
4. The current drain shall be less than 100 microamps.
5. The unit shall be insulated 600 V. to ground and shall be weatherproof.
6. The unit shall not allow holdover current or conduction to ground after the surge ends.
7. Protection shall be achieved for both the 480 V. and neutral conductors with the surges being passed to ground and NOT to neutral.
8. There shall be no discharge lag in the protection of the 480 V. conductor over the neutral conductor.
9. Underwriters laboratory approval not required.

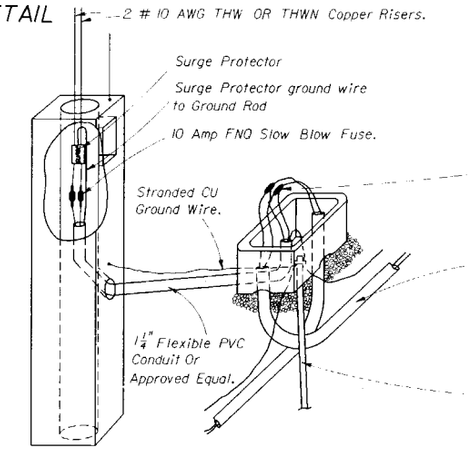

CONCRETE POLE WIRING DETAIL

All Splices Shall Be Made In Pull Boxes Only With Compression Sleeves Or Split Bolt Connectors, Properly Taped And Waterproofed.

Stranded No. 6 CU THW OR THWN Wires In Schedule 40 PVC Unless Otherwise Noted In Schematic And Plans. All Neutral Wires To Have White Insulation. Do Not Use White Or Green Insulated Wires For Ungrounded Conductors.

Pull boxes should be located 2' max. from concrete pole unless otherwise directed by the project engineer.

U.L. Approved Ground Rod ⅝" Diameter 10'-0" Long Copper Clad (At All Poles And Pull Boxes.) (Minimum Resistance To Ground Not To Exceed 25 OHMS.)

STATE OF FLORIDA DEPARTMENT OF TRANSPORTATION
TRAFFIC DESIGN

CONVENTIONAL POLE DETAILS

	Names	Dates
Designed By	C.K.	08/78
Drawn By		
Checked By		

Approved By Claude A Scott
State Traffic Plans Engineer

F.H.W.A. Approved:

Revision No.	Sheet No.	Index No.
92	1 of 1	17500

1) Ground rods shall have a resistance to ground not to exceed 25 ohms. Where the resistance is not as low as 25 ohms, two or more ground rods connected in parallel shall be used. Contractor shall have necessary test equipment (current calibration certificate required) at final inspection to insure acceptability of grounding system. Total grounding system not to exceed 10 ohms.

2) The contractor shall be responsibile for contacting all utility companies prior to any underground work. The utility company will locate and identify their facilities.

3) Contractor shall determine the service required date for the power company transformer installation at the pre-construction conference.

4) The power company reserves the right to install the riser, switch gear and weatherhead on power compnay poles at the expense of the contractor. Contact the power company for cost or for authorization for an alternate procedure.

5) Any damaged portions of galvanized steel poles and bracket arms shall be painted in accordance with section 562 of the Standard Specifications.

6) Poles and bracket arms shall be designed in accordance with the design criteria, as indicated in the plans and using the applicable equations found in "Standard Specifications For Structural Supports For Highway Signs, Luminaires And Traffic Signals" published by A.A.S.H.T.O. dated 1985.

7) The luminaire manufacturer shall place a permanent tag on the luminaire housing on which is imprinted the following information : Wattage, ballast type, lamp shown on design plans, lamp setting (position in luminaire), IES light distribution with this lamp in the position specified, input voltage and power factor. Luminaire photometric submittals required.

8) Before final acceptance, contractor shall provide 2 sets of full size as built plans to the maintaining agency.

9) Conduit routing shall be pole to pole, maintaining pole setback distance from edge of pavement. Any cable routing in locations where guardrail is proposed shall be 2' - 0" in front of the standard guardrail position.

10) Pole positions and conduit routing may be adjusted, as approved by the Engineer, to prevent conflicts with utility and drainage structures not indicated, and prevent guardrail post conflict with underground lighting circuits.

11) Where guardrail is constructed, the poles shall be placed a minimum of 4' behind the face of the guardrail.

12) Pole foundation installations shall be backfilled to the top of the foundation compacted to a firm, stable condition approximately equal to that of the adjacent soil. The fill shall conform to existing grade and be fully sodded.

13) The wires at the pole handhole and pullboxes shall be looped up in the pole and pullboxes with sufficient length to completely remove connectors to the outside of handhole and pullboxes to make connectors accessible for changing fuses and trouble shooting the system.

14) Neutral wires to have white insulation. Do not use white or green insulated wires for ungrounded conductors.

15) Unless otherwise specified, all cable shall be single conductor, 98 percent conductivity stranded copper, with THW or THWN insulation.

16) All splices shall be made in pullboxes or the pole base. No splices shall be made inside the conduit.

17) All exposed or surfaced mounted conduit shall be rigid or intermediate metal. These exposed runs of conduit shall be provided with either expansion joints or flexible metal conduit sections adequate to take care of vibrations and thermal expansions. All metal conduit shall be grounded. Steel conduit shall be hot dipped galvanized.

18) All conduit that will remain empty as spares shall be mandrel tested, cleaned inside and both ends capped. Leave the corrosion resistant pull/drag wire and place duct markers, or pullboxes to mark the location of the ends of the conduits.

19) Pull boxes shall be located at ends of conduit crossing roadways, and as necessary for the completion of the project.

20) These plans represent minimum acceptable criteria. The inspection per these drawings represent the minimum base of acceptance.

21) All material, unless otherwise specified, shall be underwriters laboratory approved.

22) Pull boxes shall meet the requirements of section 635 "Standard Specifications For Road And Bridge Construction" and CRT-635-01 "Evaluation Criteria for Traffic Control Devices".

BREAKAWAY FEATURE

All conventional mounting height poles shall be mounted on a frangible metal base or system of breakaway couplings. If couplings are used, one coupling shall be provided for each anchor bolt connection. The only continuous connection of the pole to the foundation at each anchor bolt shall be provided by the couplings. The area between the top of the pole foundation and the base of the pole including the couplings shall be enclosed with a non-structural aluminum skirt.

If a frangible metal base is used, it shall be one piece and be designed to breakaway without the aid of any slipping or sliding surfaces.

"The design of the breakaway feature shall be in accordance with the breakaway performance requirements of the 'Standard Specifications for Structural Supports for Highway Signs. Luminaires and Traffic Signals'. A. A. S. H. T. O. , Copyright 1985. The contractor (supplier) shall submit copies of test reports as evidence the breakaway feature meets the above specifications and calculations to verify the design will meet the A. A. S. H. T. O. wind loading specified in the contract plans. No poles are to be installed prior to approval of submittal data."

Poles Behind Bridge Rail Or Barrier Wall Mounted, Shall Be Non-Frangible.

STATE OF FLORIDA DEPARTMENT OF TRANSPORTATION
TRAFFIC DESIGN

HIGHWAY LIGHTING GENERAL NOTES

	Names	Dates
Designed By	G.K.	04/25/78
Drawn By		
Checked By		
F.H.W.A. Approved:		

Approved By Clark A Scott
State Traffic Plans Engineer

Revision No.	Sheet No.	Index No.
92	1 of 1	17501

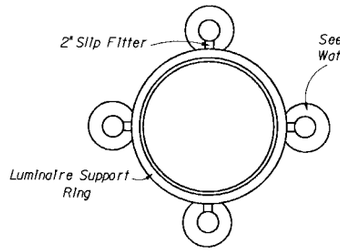



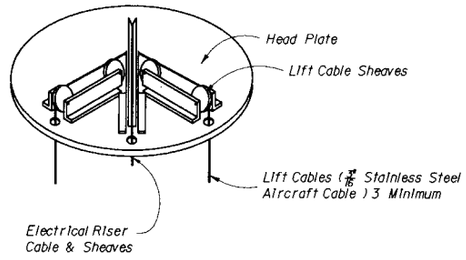

SCHEMATIC OF REMOTE AUXILIARY POWER UNIT

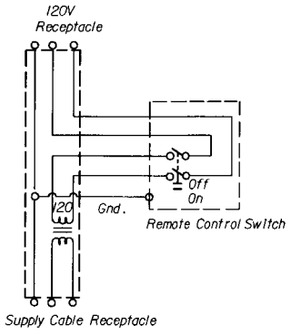

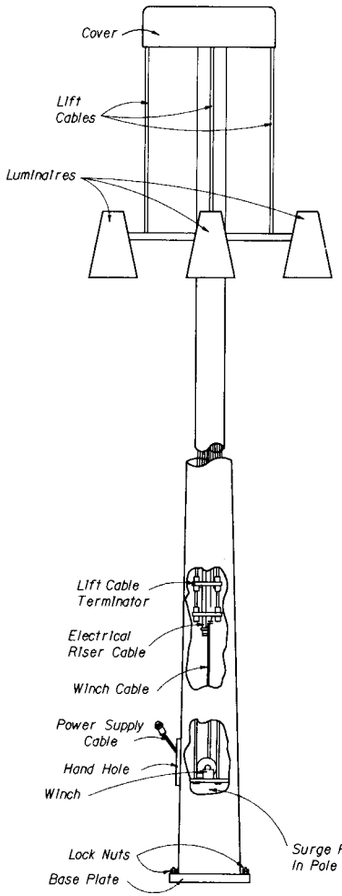

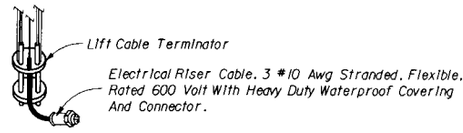

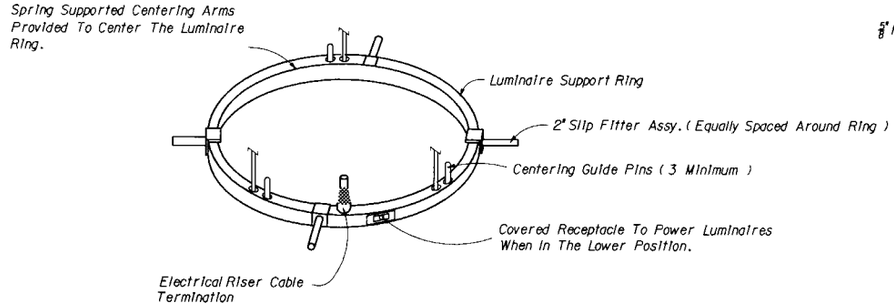

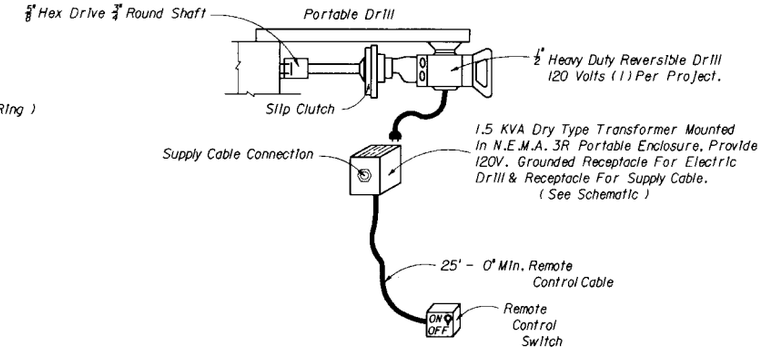

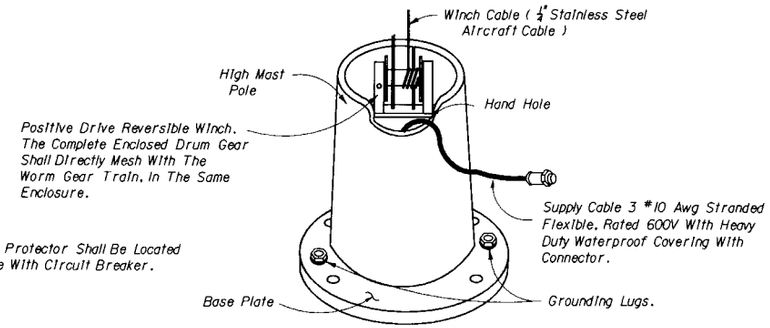

STATE OF FLORIDA DEPARTMENT OF TRANSPORTATION
TRAFFIC DESIGN

HIGHMAST LIGHTING DETAILS

	Names	Dates
Designed By		
Drawn By		
Checked By		
F.H.W.A. Approved:		

Approved By Clark A. Scott

Revision No.	Sheet No.	Index No.
84	1 of 3	17502

LUMINAIRE SPECIFICATIONS

The reflector with its aluminum cover shall be firmly attached to a cast ring. This ring shall have keyhole slots in its upper surface such that the reflector/refractor assembly may be readily attached to, or detached from, the luminaire bracket entry and lamp support assembly without completely removing the support bolts.

Each luminaire shall contain an integral auto-regulator type ballast connected for 480 volts input ± 10% and a power factor of more than 90 %. The luminaire ballast shall be enclosed within an aluminum housing which integrally attaches to the luminaire bracket entry and lamp support assembly. It shall be readily removable without removing the luminaire from the bracket arm.

The luminaire shall be attached to the bracket arm by means of a bracket entry and lamp support assembly. The assembly shall include a side entry slipfitter designed for two (2) inch pipe with provision for 3 ° adjustment for leveling the luminaire. An enclosed terminal block shall be included such that all electrical connections shall be protected from exposure to weather.

All electrical connections shall be made waterproof or be made inside a weather resistant enclosure. All luminaires shall be ANSI/ IES light distribution as indicated in plans. Each luminaire shall be labeled with a permanent label which states the type of lamp, voltage input, power input, power factor, ballast type, socket position, ANSI/IES light distibution, and such other catalog information that a complete replacement can be readily ordered.

The contractors attention is directed to those plan sheets detailing the mounting of luminaires at the pole top. Particular attention is directed to alignment of luminaire light distributions. Special attention must be exercised in the physical alignment of these luminaires to insure that the approved photometric layout is physically produced at each lighting standard in the field. A marking shall be placed on the external face of the refractor to implement visual inspection of alignment. The marking shall correspond to the 0° axis of the refractor.

FOOTING

The high mast foundations shall be constructed in accordance with the details shown in the plans.

Anchor bolts per manufacturers Specifications. Submittals shall be supplied to the engineer of record prior to purchase.

One leveling nut, one hold-down nut, and one locking/jam nut shall be supplied per anchor bolt. All small metal parts, (nuts, screws, washers, etc.) Shall be rustproofed either by galvanizing per ASTM A143 or by the nature of the material used in their fabrication.

LOWERING SYSTEM SPECIFICATIONS

The lowering system shall consist of the following:

A. Head frame and cover
B. Luminaire ring
C. Cables
D. Winch
E. Portable power unit (1 per project)

The head frame unit shall rigidly mate the top of the pole to the head frame platform. The platform with its associated sheaves, etc. shall be covered and raintight. The head frame structure shall be zinc coated steel, attached to the pole by means of a steel slipfitter. Head frame shall encompass six five (5) inch nominal steel cable sheaves grooved to the exact cable diameter, for 180° cable bearing surface. The sheave shall be zinc electroplated to ASTM 164 and dipped in yellow chromate for corrosion resistance. Bearings and cable keepers shall have permanent lubrication. Three (3) stainless steel 7 x 19 aircraft cables of $\frac{3}{16}$" inch or greater diameter shall be provided.

The power riser cable shall be attached to the luminaire ring with a waterproof connector capable of withstanding the pull of the weight of the power riser cable. Where the wire ropes are required to bend over sheaves or over the winch drum, the maximum working stress in the outer fibers of wire rope shall not exceed one fifth ($\frac{1}{5}$) the wire rope manufacturer's rated ultimate stress.

Drum design shall cause level wind of wire rope. The power cord shall travel on sheave (s) or a combination of rollers providing a radius for the cord of six (6) inches or larger. Each end of the sheave (s) or rollers shall have a keeper to prevent the cable from jumping out of the roller track.

The head frame shall also include three (3) latching devices to support the luminaire ring assembly when the lowering device is not in operation. The latches shall be actuated by alternate raising and lowering of the hoisting cables. Locking of luminaire ring shall be signaled by indicators visible from ground. All moving parts of the latch mechanism shall be serviceable from the ground. Each of the three latches shall be strong enough, by itself, to support twice the weight of the ring and all the luminaires. Latching mechanisms which depend primarily upon spring operation or contain dissimilar metals are not acceptable. The latching mechanism shall not require adjustment after the original installation.

The luminaire ring shall be constructed of a minimum of 6" x 2" x 7 gauge hot dipped galvanized ASTM 386 Class "B" steel channel with the appropriate number of two (2) inch steel pipe mounting arms. The luminaire ring shall be prewired with Type "W" or specially reinforced Type "SO" power cable with suitable conductor quantity and size for proper operation and Type "ST" distribution wiring with insulation suitable for at least 105°C. All power cables should be attached to the aluminum weathertight wiring chamber with weathertight cable connectors. A 600 volt terminal block, completely prewired shall be included in the weathertight wiring chamber. A weather-tight twistlock power inlet shall be provided on the luminaire ring to allow testing of the luminaire while in the lowered position. The power inlet shall face away from the pole for easy access.

The ultimate support of the luminaire ring shall not be dependent upon the lowering and raising cables.

The system shall be provided with circuit-breaker switches and twistlock disconnects in the pole base. Raising speed of luminaire ring shall be a minimum of twelve (12) feet per minute.

The winch shall be a reversible worm gear self locking type with an integral friction drag brake to prevent freespooling. The winch shall be designated for hand operation or for operation by means of a $\frac{1}{2}$" heavy duty reversing electric drill motor, remote controlled to enable the operator to stand twenty five (25) ft. from the pole, Stainless Steel 7 x 19 aircraft cables of $\frac{1}{4}$" inch or greater diameter equal to MIL-W-5424 shall be supplied on the winch. The winch shall be provided with keepers above the drum to force the cable away from the ends of the drum for spooling. The drum shall have a wire guard to prevent the cable from coming off.

The winch shall be mounted in such a way that the cable terminator and the riser cable connector may be reached and worked on by a person with his arm through the handhole.

Roller contact spring-loaded centering arms shall be provided to center the luminaire ring while ascending or descending the pole. The rollers for the centering arm shall be made of a water resistant non-marking composition material. All shafts and washers shall be #304 stainless steel. The spring-loading mechanism shall consist of an oil-tempered steel compression spring over an aluminum rod. The rollers shall be in contact with the pole at all times.

POLE SPECIFICATIONS

The pole shaft may be jointed or single piece, polygon or round, high strength steel having a minimum yield strength of 50 ksi. All material shall be single thickness steel plate with no laminations. Steel shall be as specified.

All poles shall be equipped with a reinforced handhole approximately 1.0' above the base plate. The handhole shall be ten (10) inches wide by twenty (20) inches high minimum.

All poles and hardware will be adequately packed to assure protection to the finish during shipping and handling, poles shall not be shipped pre-assembled.

Drawings shall be provided with the equipment which show assembly sequence, lift point, and recommended erection procedure. A permanent decal or card shall be fixed on the inside of the handhole cover which describes the sequence for lowering the luminaires and the cautions.

The proportioning of weld details and the operation of welding shall be in accordance with the current edition of the AASHTO Standard Specifications for Welding of Structural Steel Highway Bridges, and The Referenced American Welding Society Structural Welding Code.

Shop drill two (2) $\frac{5}{8}$" diameter holes 180 degrees apart through total thickness of base plate. Tap top of hole for $\frac{5}{8}$" x $\frac{3}{4}$" 11 NC stainless steel hexhead bolt.

Finished poles shall have a protective coating of hot galvanizing applied in accordance with ASTM A123.

Note : It is the responsibility of the contractor to coordinate the anchor bolt design with foundation design.

STATE OF FLORIDA DEPARTMENT OF TRANSPORTATION
TRAFFIC DESIGN

HIGHMAST LIGHTING DETAILS

	Names	Dates
Designed By	G.K.	08/78
Drawn By		
Checked By		

Approved By: Clark A. Scott
State Traffic Plans Engineer

F.H.W.A. Approved:

Revision No.	Sheet No.	Index No.
92	2 of 3	17502

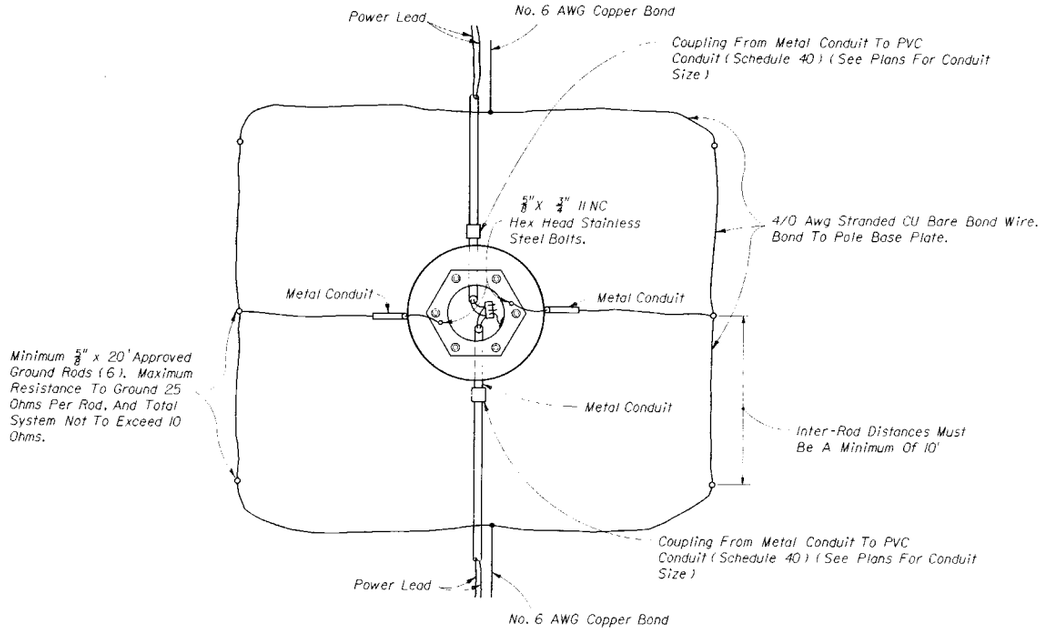

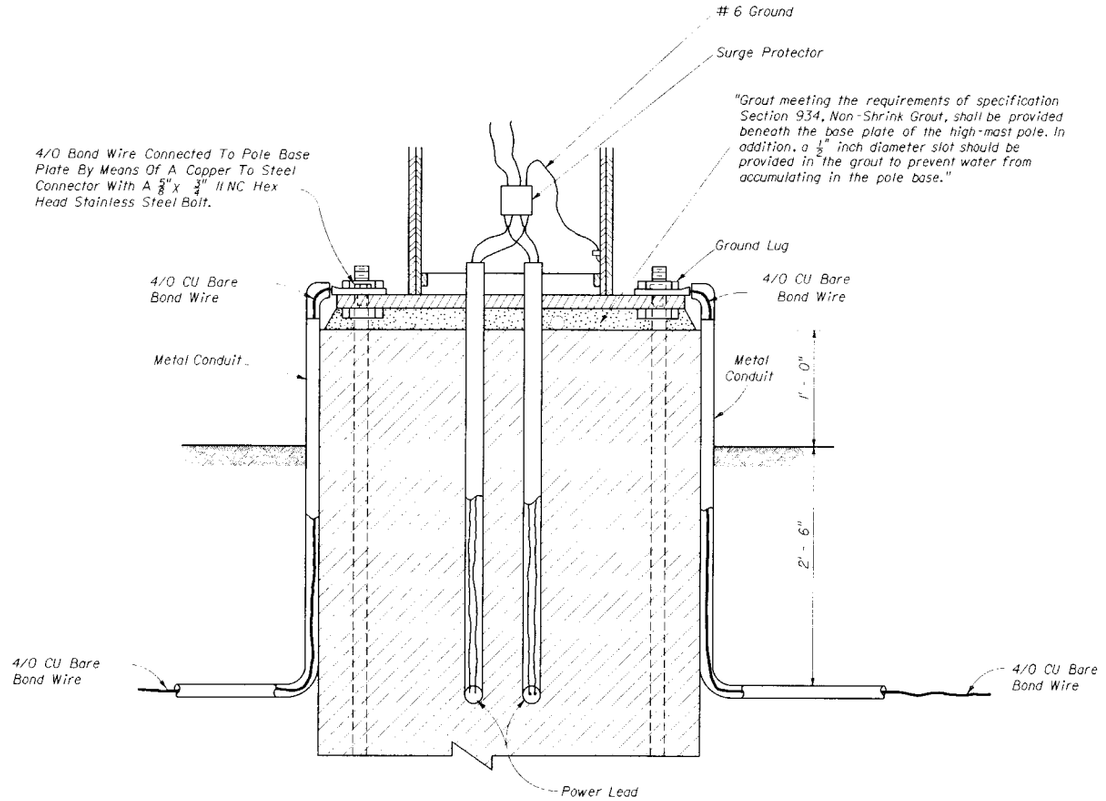

Note:

(1) At All Pull Boxes And Pole Bases, Ends Of Conduit Shall Be Sealed In Accordance With Section 630-3.4 of The Standard Specifications For Road And Bridge Construction Dated 1991.

(2) A No. 6 AWG CU Bare Stranded Ground / Bond Wire Shall Be Run From The Service Connecting All Poles. The Bond Wire Is To Be 3" Directly Above The Conduit.

STATE OF FLORIDA DEPARTMENT OF TRANSPORTATION
TRAFFIC DESIGN

HIGHMAST LIGHTING DETAILS

	Notes	Dates
Designed By	G.K.	08/78
Drawn By		
Checked By		
F.H.W.A. Approved:		

Approved By: Charles A. Scott
State Traffic Plans Engineer

Revision No.	Sheet No.	Index No.
92	3 of 3	17502

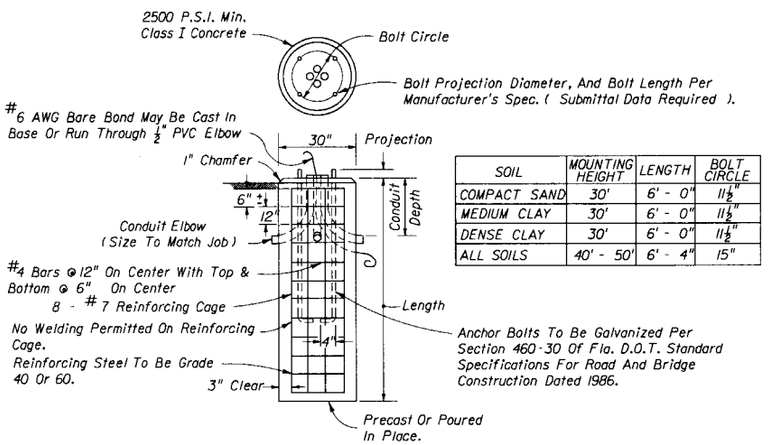

SOIL	MOUNTING HEIGHT	LENGTH	BOLT CIRCLE
COMPACT SAND	30'	6' - 0"	11½"
MEDIUM CLAY	30'	6' - 0"	11½"
DENSE CLAY	30'	6' - 0"	11½"
ALL SOILS	40' - 50'	6' - 4"	15"

METAL POLE CONCRETE FOUNDATION DETAIL

SCREW TYPE FOUNDATION SPECIFICATIONS

1 The foundation shaft and base plate shall be ASTM A-36 structural steel, or better.
2 The anchor bolts shall be ASTM A-325, or better.
3 All welds shall be sufficient to withstand 10,000 ft.-lbs. of torque, applied about the axis of the foundation.
4 The foundation shall have a handhole in the base plate at least 6" in diameter.
5 The base plate shall be notched to indicate the orientation of the shaft cableways.
6 Drainage shall be provided in the bottom of the foundation by means of an opening of at least 3 square inches.
7 The foundation shall be designed for installation using a right hand turning movement with a slight down pressure. The maximum installation torque shall not exceed 10,000 ft.-lbs. or be less than 3,500 ft.-lbs.
8 The whole foundation shall be hot dip galvanized after fabrication to ASTM A-123.

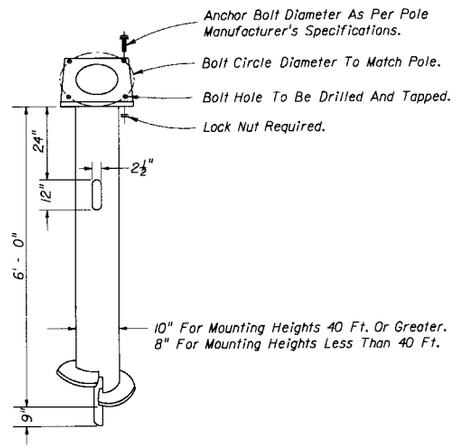

SCREW TYPE FOUNDATION DETAIL

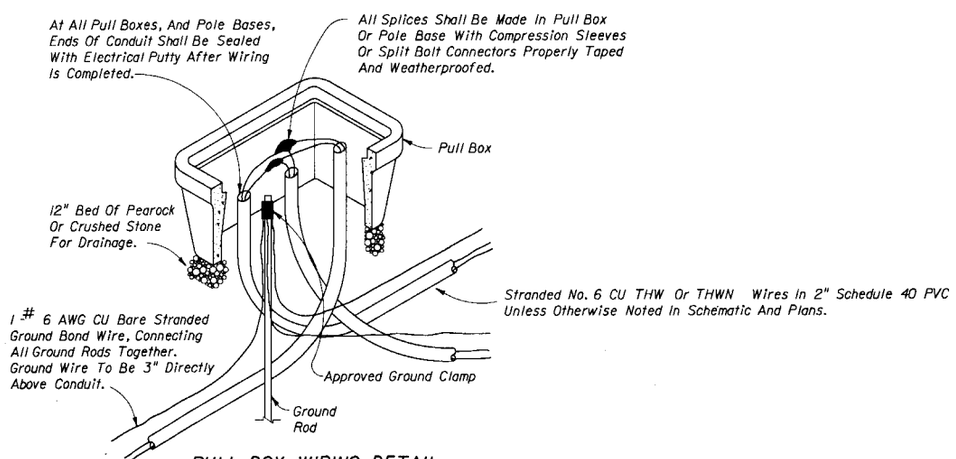

PULL BOX WIRING DETAIL

STATE OF FLORIDA DEPARTMENT OF TRANSPORTATION
TRAFFIC DESIGN

ROADWAY LIGHTING DETAILS

	Names	Dates
Designed By	G.K.	08/78
Drawn By		
Checked By	-	
F.H.W.A. Approved:		

Approved By Charles A. Scott
State Traffic Plans Engineer

Revision No.	Sheet No.	Index No.
92	1 of 1	17503

NOTE :
It Shall Be The Contractors Responsibility To Provide a Complete Service Assembly As Per The Plans And Service Specifications.
The Service Installation Shall Meet The Requirements Of The National Electric Code And Applicable Local Codes.
Shop Drawings Are Not Required For Service Equipment, Unless Noted In The Plans.

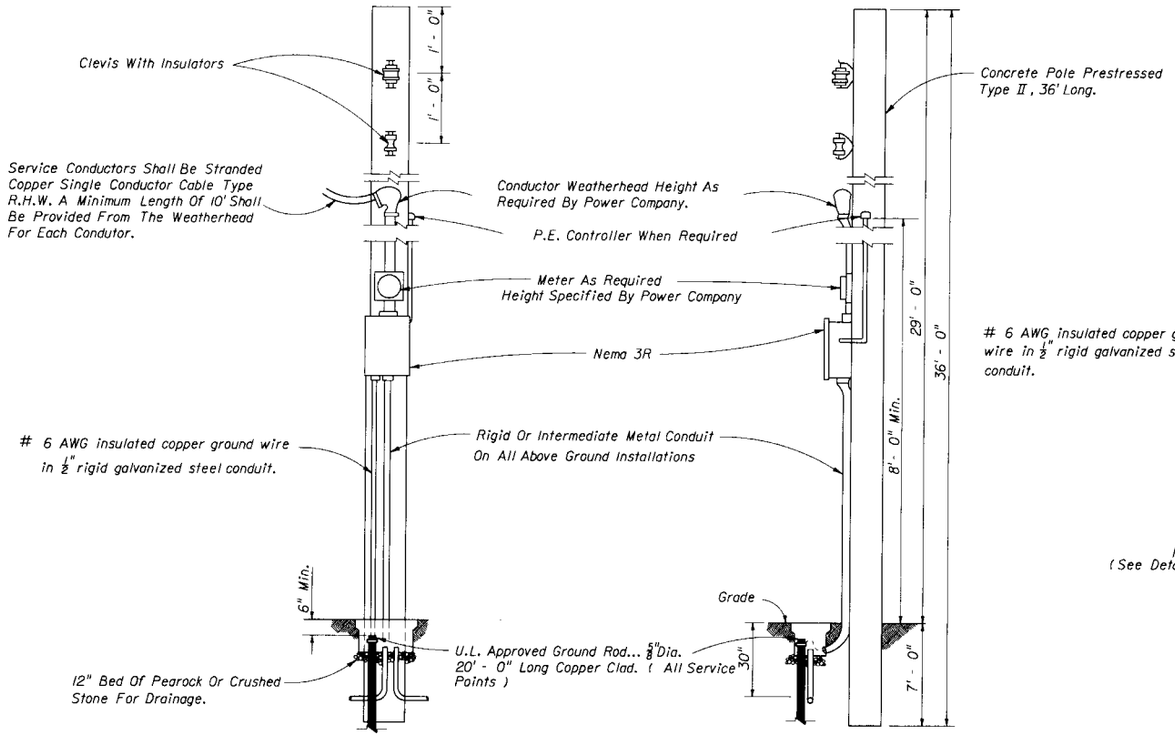

DETAIL "A"

AERIAL FEED

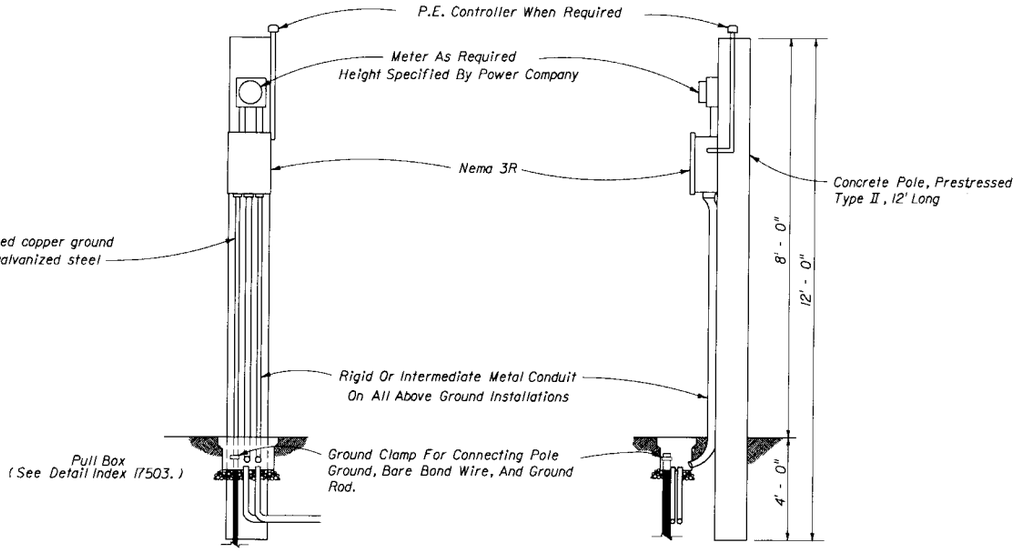

DETAIL "B"

UNDERGROUND FEED

Notes:

1. Photo electric control as required.
2. All neutral wires to have white insulation, do not use white or green insulated wires for ungrounded conductors.
3. A pull box is required at each service point.

SERVICE SPECIFICATIONS

1. The enclosure shall be NEMA 3R, pole mounted, rain-tight.
2. The enclosure door shall be lockable by padlock and four keys provided to the maintaining agency. The door shall have a minimum of three hinges and be latchable. No screws to be used to attach door.
3. 480 V minimum rating bolt-in type breakers shall be used.
4. Busbar to be copper coated and have a minimum rating of 100 amps. When main breaker exceeds 100 amps busbar to match breaker amperage.
5. Locate contactor, transformer, and H.O.A. switch inside enclosure. The enclosure to be sized to accomodate as many breakers as called for and all other service equipment.
6. The Enclosure to be rigidly attached to the pole face.
7. A 600 V lightning protector shall be wired inside the enclosure.
8. A main breaker is required in all service panels with 2 or more feeder breakers.
9. All service equipment shall be U.L. approved.

STATE OF FLORIDA DEPARTMENT OF TRANSPORTATION
TRAFFIC DESIGN

SERVICE POINT DETAILS

	Names	Dates
Designed By	G.K.	8-78
Drawn By		
Checked By		

Approved By Clark A Scott
State Traffic Plans Engineer

Revision No.	Sheet No.	Index No.
92	1 of 1	17504

F.H.W.A. Approved:

SIGN LIGHTING INSTALLATION

The roadway lighting contractor shall provide a means for sign service entry into a pole base or a pull-box installed in the lighting circuit, and loop 2' of lighting circuit conductors for connection by sign contractor.

The sign contractor shall furnish and install Luminaires, Nema 3R Enclosure, 30 Amp Breaker, Conduit, Conductors, and all other electrical equipment necessary for connection to roadway lighting circuit as provided by the roadway lighting contractor.

When roadway lighting circuits are not available the designer shall include pay item numbers in the plans to Furnish and Install Conduit, Conductor, Pull-Box, and Service Point Equipment.

Compression type connectors properly taped and waterproof shall be used.

See Roadway Lighting Plans for sign service locations.

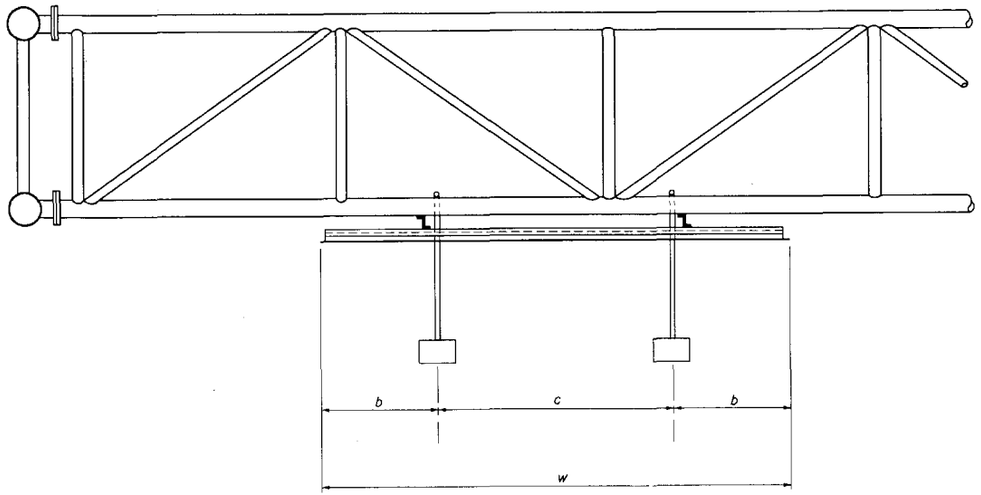

WIDTH OF SIGN FACE	10'-0" Or LESS	10'-1" To 21'-0"	21'-1" To 32'-0"	32'-1" To 43'-0"
NUMBER OF FIXTURES	ONE	TWO	THREE	FOUR
EQUATIONS FOR PLACING FIXTURES ALONG SIGN WIDTH	W = 2b	W = 2b + c	W = 2b + 2c	W = 2b + 3c
	c = 0	c = 2.2b	c = 2.2b	c = 2.2b

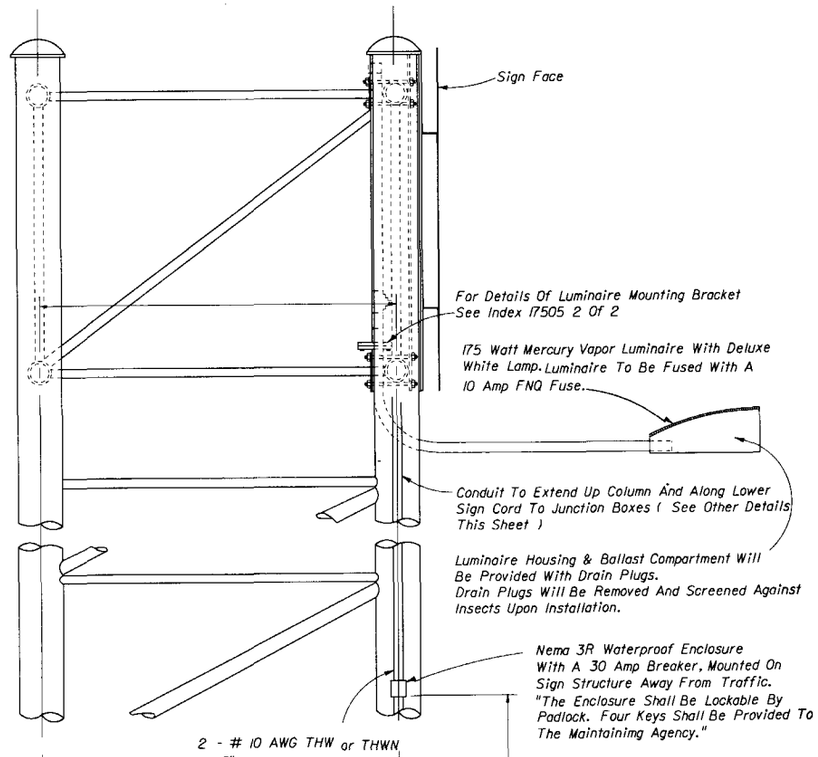

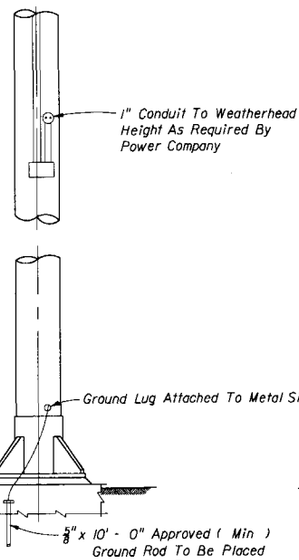

PLACEMENT OF SIGN LIGHTS

1- Luminaire shall be mounted so that the lamp center is 4' - 0" in front of the sign face.
2- Luminaire shall be mounted so that the back of the fixture is placed 1' - 0" below the bottom edge of the sign face.
3- Luminaires from manufacturers who recommended that their fixture be tilted shall be mounted on a bracket which provides this recommended tilt.
4- Photometric data for mercury vapor luminaire proposed for sign lighting shall be submitted for approval to the Lighting Engineer, Florida Department Of Transportation.

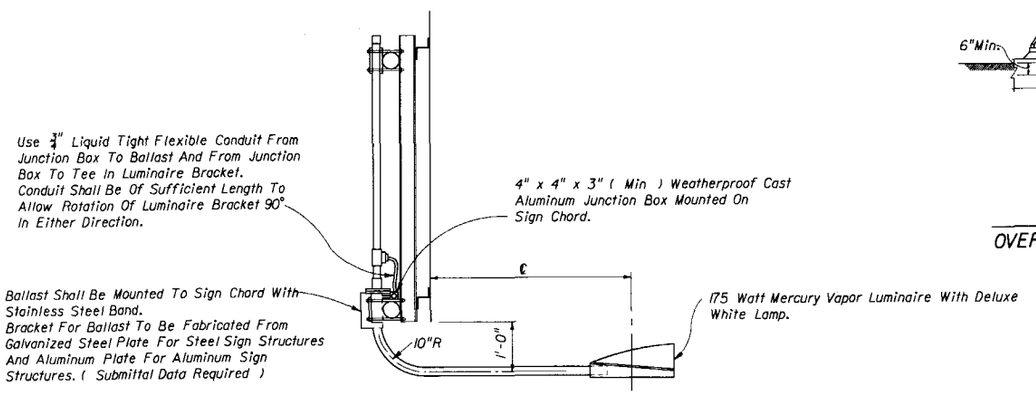

PLAN
OVERHEAD POWER SUPPLY

STATE OF FLORIDA DEPARTMENT OF TRANSPORTATION
TRAFFIC DESIGN

EXTERNAL LIGHTING FOR SIGN (MERCURY VAPOR)

	Names	Dates
Designed By		
Drawn By		
Checked By		
F.H.W.A. Approved:		

Approved By Clark A Stott
State Traffic Plans Engineer

Revision No.	Sheet No.	Index No.
92	1 of 2	17505

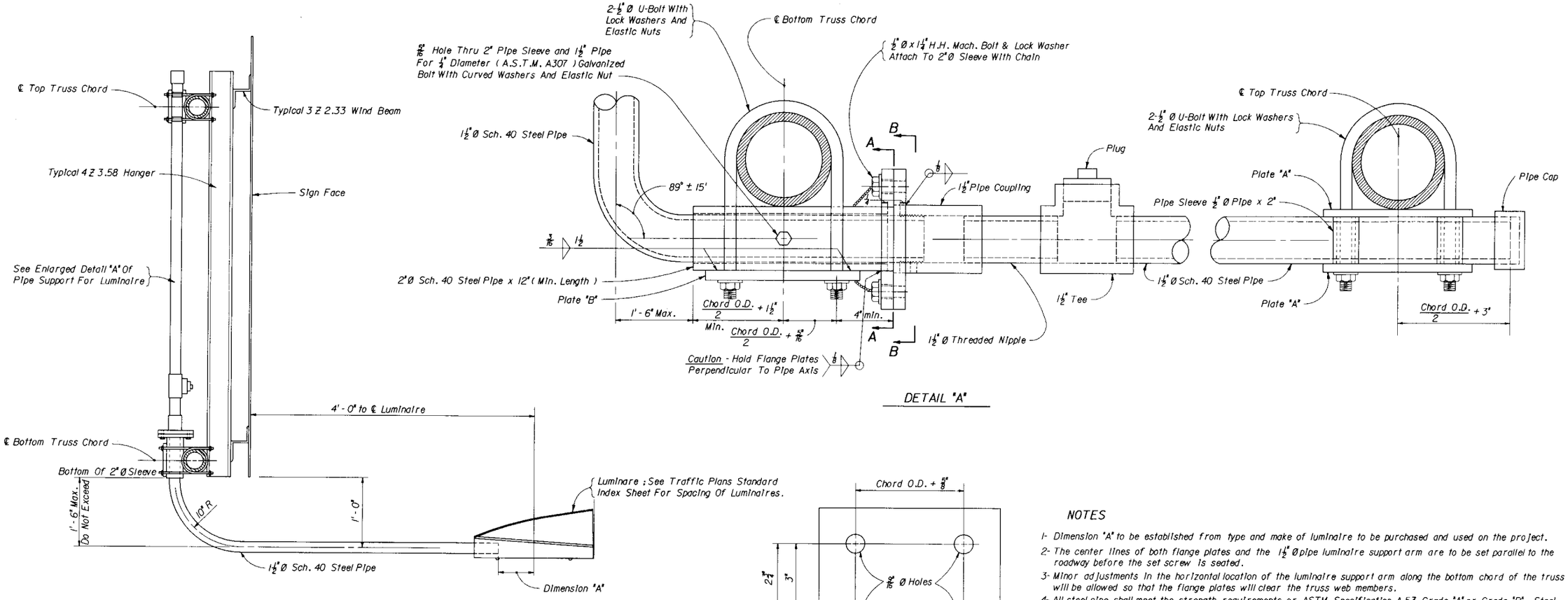

SECTION THROUGH SIGN SUPPORT AT LUMINAIRE

DETAIL "A"

Plate "A" Chord O.D. +2½" x ¼" x 4¾"
Plate "B" Chord O.D. +2½" x ⅜" x 5"

NOTES

1- Dimension "A" to be established from type and make of luminaire to be purchased and used on the project.

2- The center lines of both flange plates and the 1½" Ø pipe luminaire support arm are to be set parallel to the roadway before the set screw is seated.

3- Minor adjustments in the horizontal location of the luminaire support arm along the bottom chord of the truss will be allowed so that the flange plates will clear the truss web members.

4- All steel pipe shall meet the strength requirements or ASTM Specification A-53 Grade "A" or Grade "B". Steel plates shall meet the requirements of A-36 and bolts, nuts and washers shall meet the requirements of ASTM A307.

5- All items shall be hot dip galvanized after fabrication in accordance with the requirements of ASTM A123 and/or A153.

6- Luminaire support arm shall be free to rotate in a clockwise or counter clockwise direction. When service or maintenance is required for sign face or vertical face of truss; Support arm shall be capable of being locked in a position 90° from parallel to the roadway for unobstructed working clearance.

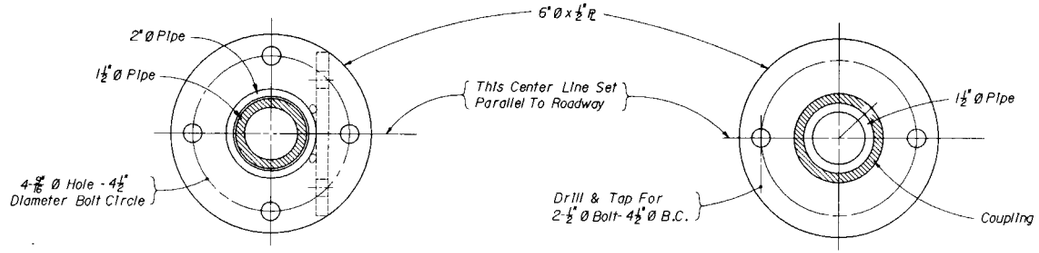

SECTION AA

SECTION BB

STATE OF FLORIDA DEPARTMENT OF TRANSPORTATION
TRAFFIC DESIGN

EXTERNAL LIGHTING FOR SIGNS (MERCURY VAPOR)

	Names	Dates
Designed By	CK	
Drawn By		
Checked By	CWB	
F.H.W.A. Approved:		

Approved By Charles A. Scott

Revision No.	Sheet No.	Index No.
88	2 of 2	17505

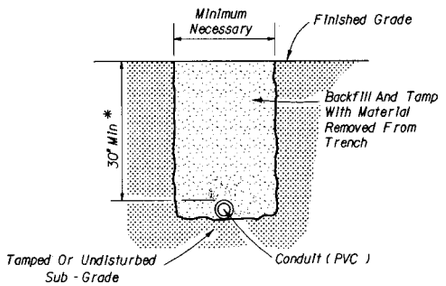

FIGURE A

FOR USE IN AREAS NOT EXPOSED TO VEHICULAR TRAFFIC AND UNDER DRIVEWAYS

* May be adjusted in field due to field conditions upon approval of project engineer.

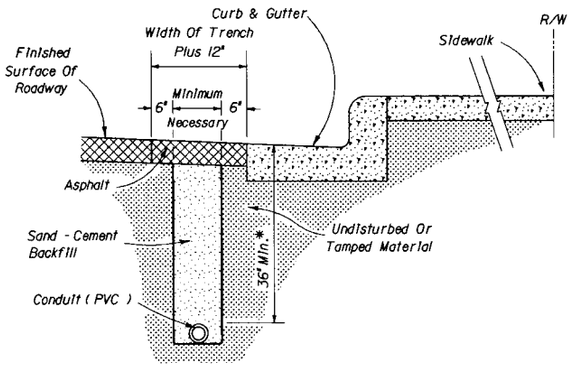

FIGURE B

FOR USE IN ASPHALT ROADWAY ADJACENT TO GUTTER WHEN PLACEMENT OUTSIDE OF THE PAVEMENT IS NOT FEASIBLE.

Note

1. Trench not to be open more than 250' at a time when construction area is subject to vehicular of pedestrian traffic.
2. Asphalt to be sawcut and removed to leave neat lines on both sides of the 12" pavement cut.
3. See note 3 figure C.

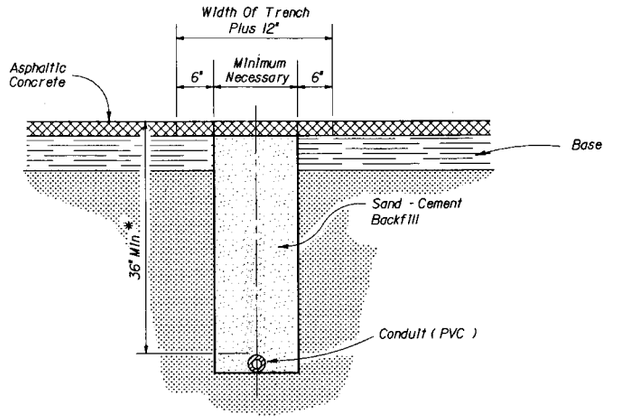

FIGURE C

FOR USE IN INSTALLING CONDUIT UNDER EXISTING ASPHALT PAVEMENT NOT ADJACENT TO GUTTER WHEN JACKING IS NOT FEASIBLE

Note:

1. Rigid conduit must be used when jacking under existing pavement at 3 ft. minimum depth.
2. Asphalt to be sawcut at the edges of the trench.
3. The removal and replacement of the additional pavement width (6') will not be required when the trench can be constructed without disturbing the asphalt surface on either side.

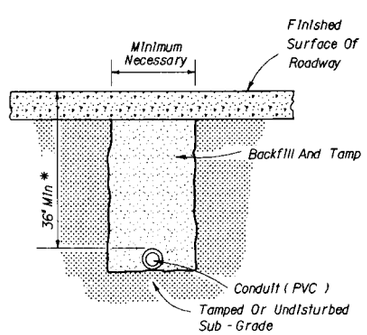

FIGURE D

FOR USE INSTALLING CONDUIT UNDER A NEW ROADWAY PRIOR TO INSTALLATION OF CURBS, BASE AND PAVEMENT

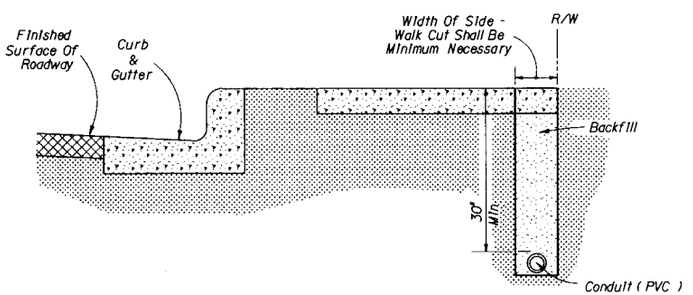

FIGURE E

FOR USE IN INSTALLING CONDUIT UNDER SIDEWALK

Note:

1. Sidewalk patches to match existing joints.
2. Entire sidewalk slab must be replaced when specified in the plans.
3. Backfill and tamp with material from trench except at driveways. At driveways, backfill a length of trench within the driveway entirely with Class I concrete.

STATE OF FLORIDA DEPARTMENT OF TRANSPORTATION
TRAFFIC DESIGN

CONDUIT INSTALLATION DETAILS

	Names	Dates
Designed By	CG	02/75
Drawn By		
Checked By	RK	02/75
F.H.W.A. Approved:		

Approved By: Clark A. Scott

Revision No.	Sheet No.	Index No.
	1 of 2	17721

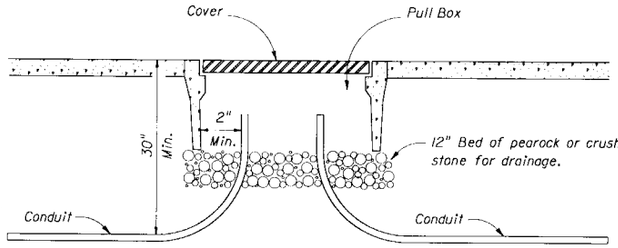

FIGURE A

PULL BOX ENTRY OF CONDUIT UNDER SIDEWALKS

Note:
Ends of conduit shall be sealed in accordance with section B 630-3.4 of the 1991 Standard Specifications for Road and Bridge Construction.

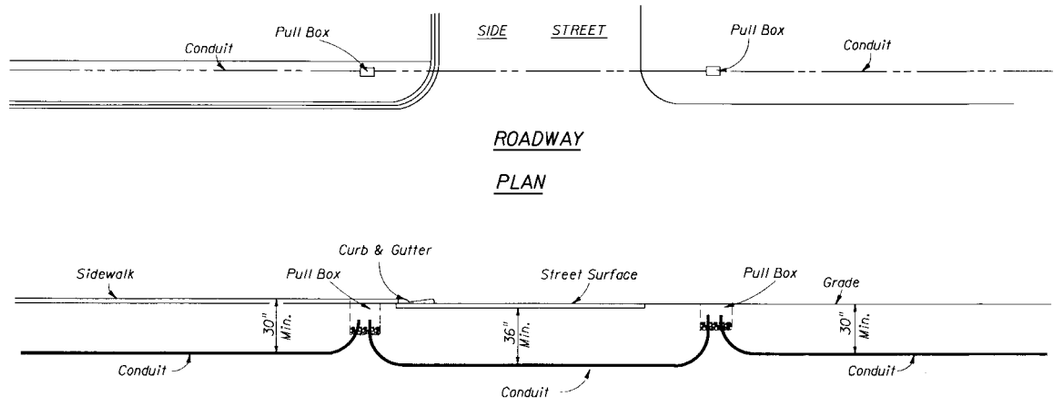

SECTION

FIGURE B

Note:
One run of conduit (between pull boxes) shall not contain more than 360° of bend including pull box bends.

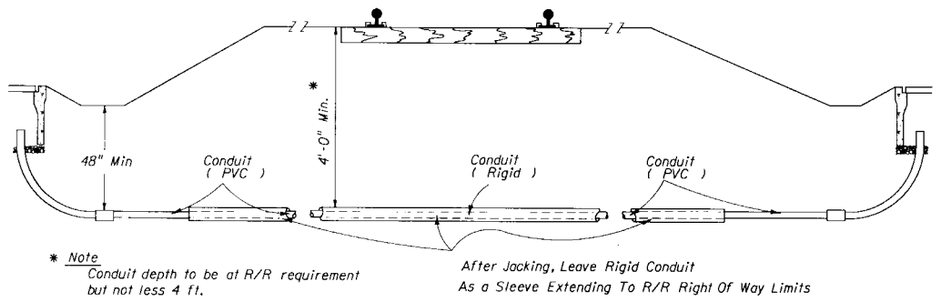

FOR USE UNDER RAILROADS

FIGURE C

STATE OF FLORIDA DEPARTMENT OF TRANSPORTATION
TRAFFIC DESIGN

CONDUIT INSTALLATIONS DETAILS

	Names	Dates
Designed By		
Drawn By		
Checked By		
F.H.W.A. Approved:		

Approved By
State Traffic Plans Engineer

Revision No.	Sheet No.	Index No.
92	2 of 2	17721

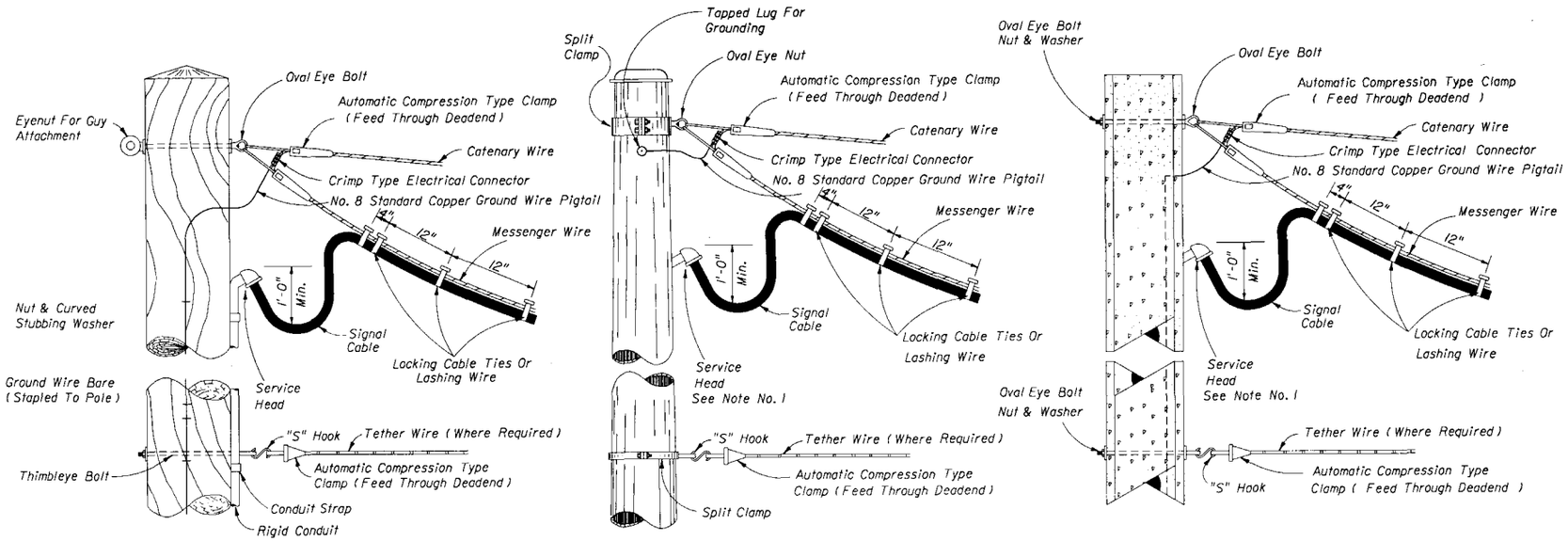

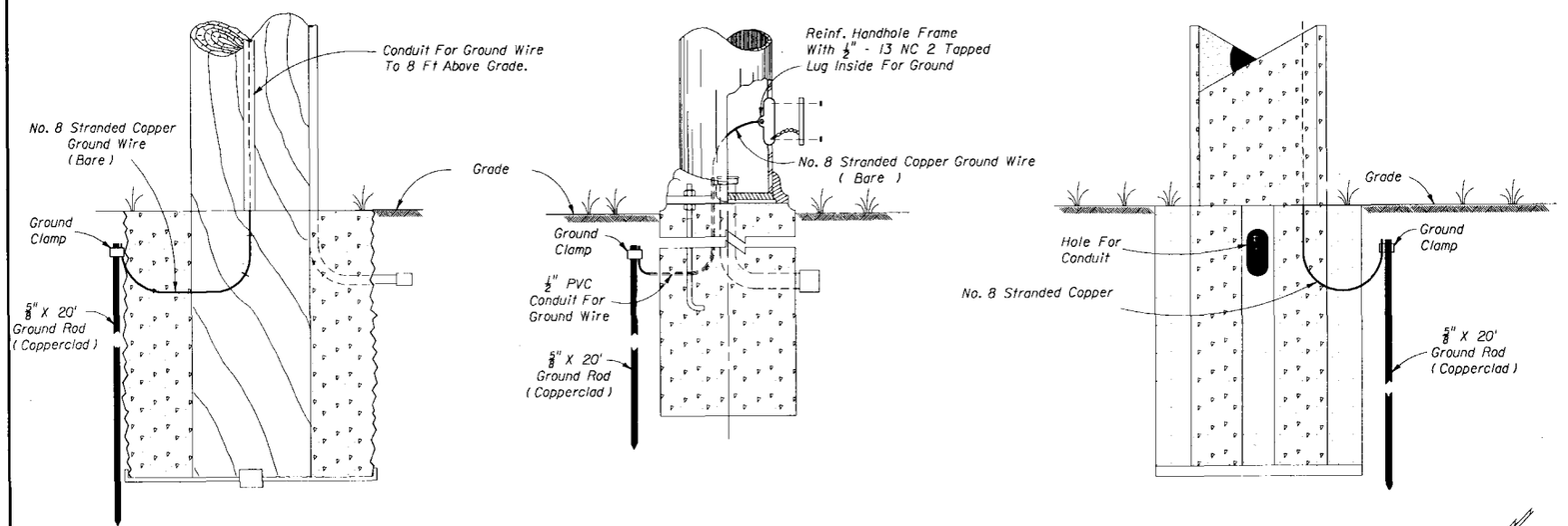

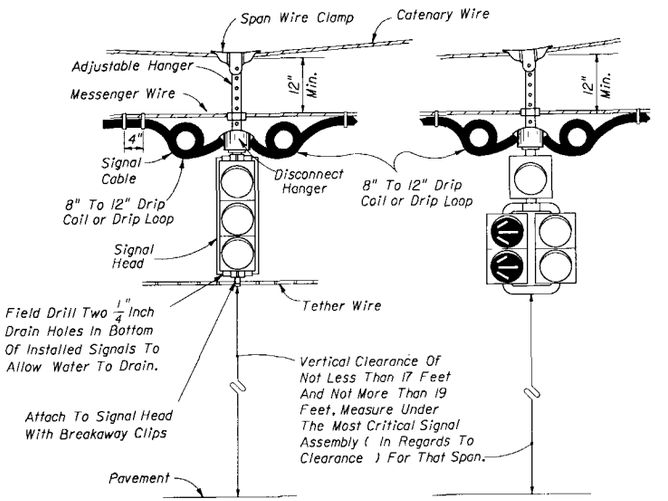

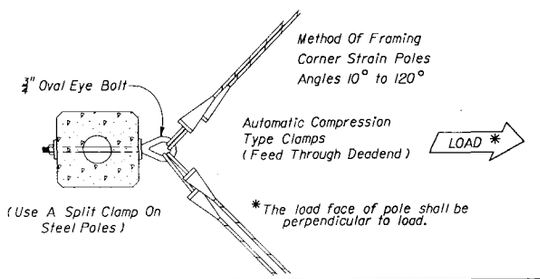

Notes:

1. With the approval of the resident engineer, the service head hole for joint use poles may be drilled by the utility company at an angle of 90° but not less than 45° to the face of the pole.
2. Lashing wire should normally be used for distances of 12' feet or greater.
3. The overlapped connection of adjustable hangers shall use a minimum of 2 bolts with a minimum spacing between bolts of 2".

STATE OF FLORIDA DEPARTMENT OF TRANSPORTATION
TRAFFIC DESIGN

SIGNAL CABLE & SPAN WIRE INSTALLATION DETAILS SINGLE POINT ATTACHMENT

	Names	Dates
Designed By		
Drawn By		
Checked By		

Approved By: Clark A Hartt
State Traffic Plans Engineer

F.H.W.A. Approved:

Revision No.	Sheet No.	Index No.
92	1 of 2	17727

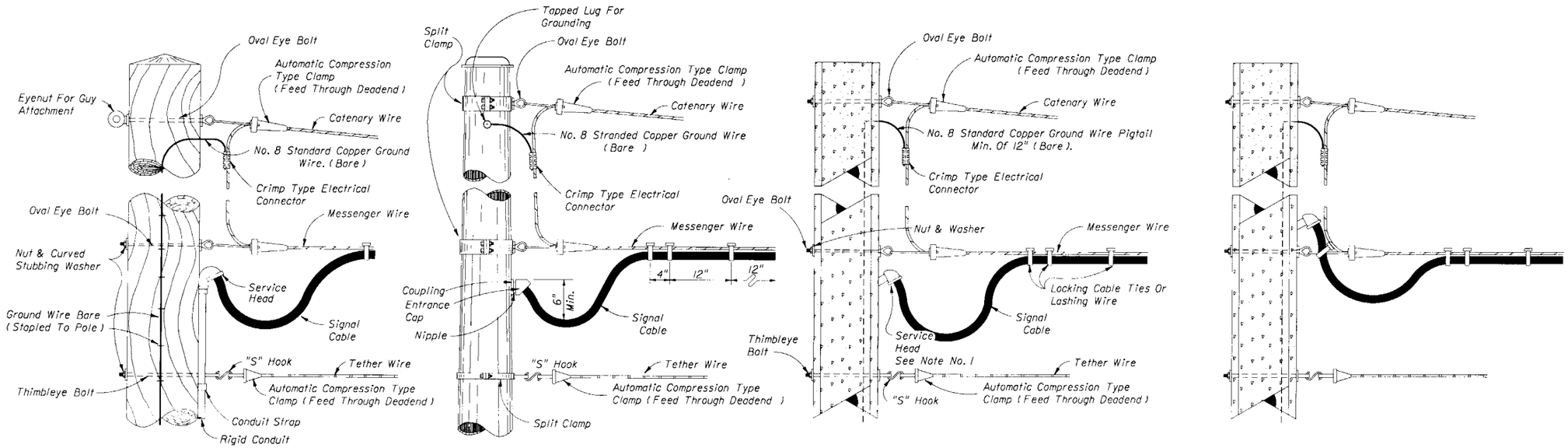

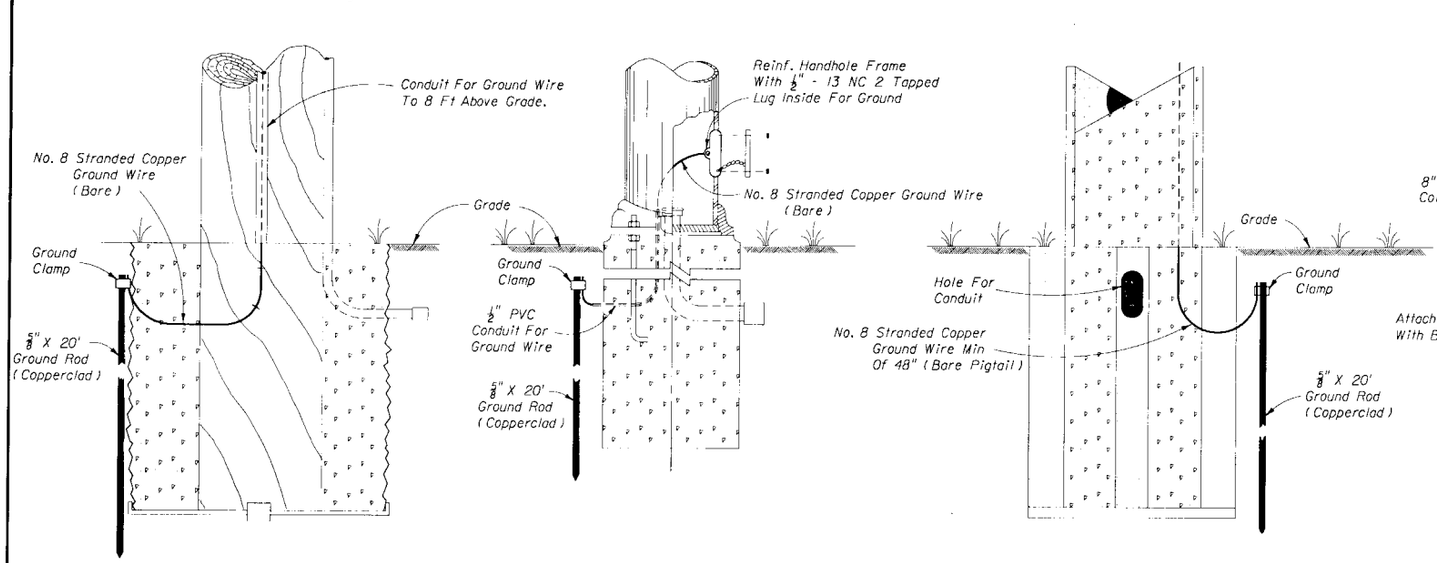

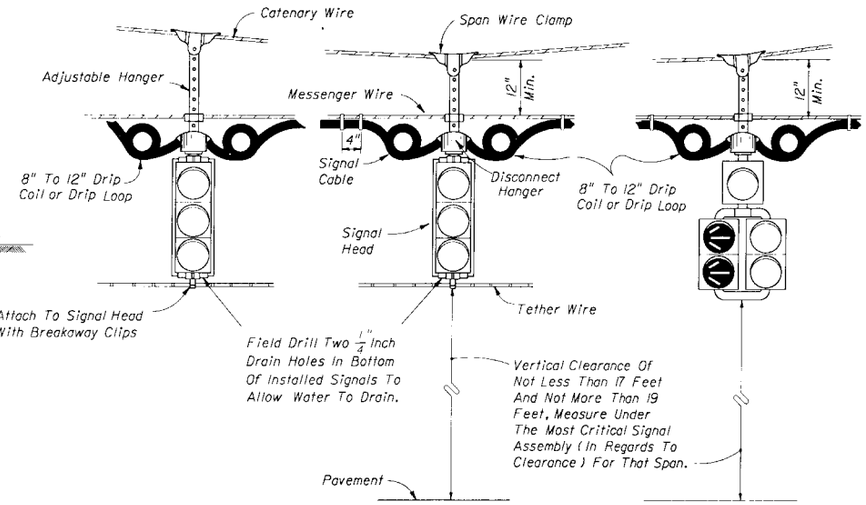

Notes:

1. The service head hole for joint use poles may be drilled by the utility company at an angle of 90° but not less than 45° to the face of the pole.
2. Lashing wire should normally be used for distances of 12' feet or greater.
3. The overlapped connection of adjustable hangers shall use a minimum of 2 bolts with a minimum spacing between bolts of 2".

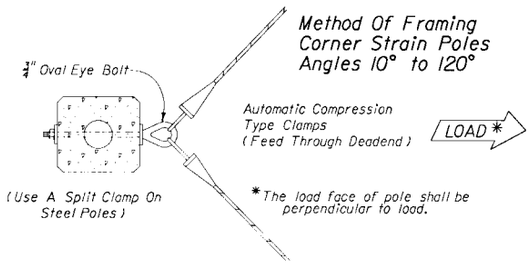

Method Of Framing Corner Strain Poles Angles 10° to 120°

STATE OF FLORIDA DEPARTMENT OF TRANSPORTATION
TRAFFIC DESIGN

SIGNAL CABLE & SPAN WIRE INSTALLATION DETAILS
TWO POINT ATTACHMENT

	Names	Dates
Designed By		
Drawn By		
Checked By		
F.H.W.A. Approved:		

Approved By: Clark A Hott
State Traffic Plans Engineer

Revision No.	Sheet No.	Index No.
92	2 of 2	17727

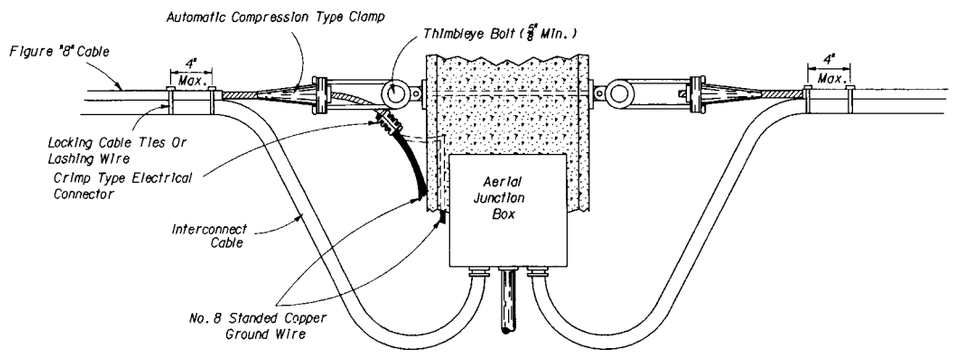

FIGURE A

CABLE DROP AND TERMINATION DETAIL
AERIAL INTERCONNECT FIGURE "8"

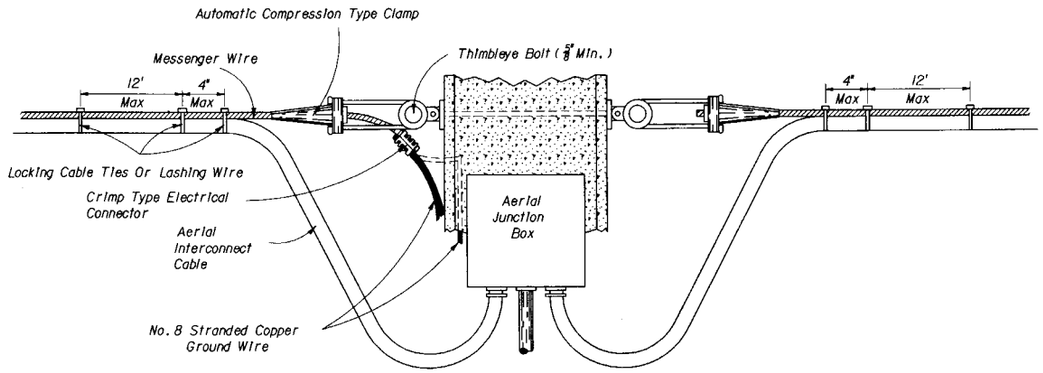

FIGURE B

CABLE DROP AND TERMINATION DETAIL
AERIAL INTERCONNECT MESSENGER WIRE WITH CLAMPS

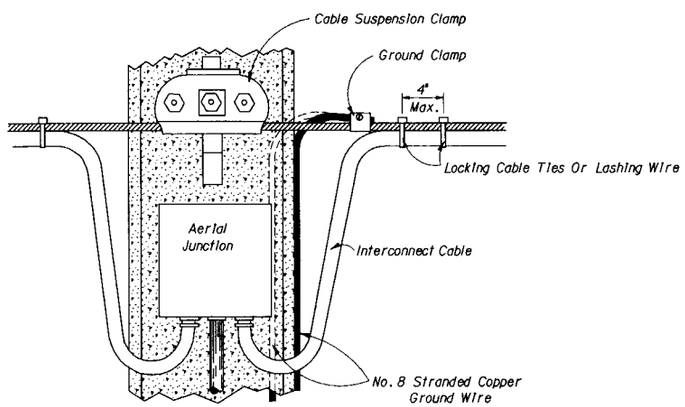

FIGURE C

CABLE DROP DETAIL
AERIAL INTERCONNECT MESSENGER WIRE WITH CLAMPS

Notes:

1. The messenger wire of the interconnect cables shall be grounded to the copper ground wire of the pole or to the external wire extending down the pole.
2. When utilizing the external ground wire to the pole, a piece of 1/2" rigid conduit shall extend up the pole externally to a point eight (8) feet above finish grade to protect the ground wire connecting the messenger wire to the ground rod.
3. Locking cable ties or lashing wire when used shall be placed no further than one (1) foot apart except at the point of cable drop or terminations where one (1) shall be placed at the point where the cables separate from the messenger wire and another placed four (4) inches (max) from that tie. When using figure "8" interconnect cable only the locking cable ties shall be used.
4. If accessible the internal ground wire of the support pole may be used to ground the messenger wire.
5. Lashing wire should normally be used for distances of 12 feet or greater.

STATE OF FLORIDA DEPARTMENT OF TRANSPORTATION
TRAFFIC DESIGN

AERIAL INTERCONNECT

	Names	Dates
Designed By		
Drawn By		
Checked By		
F.H.W.A. Approved:		

Approved By: Clark A. Scott

Revision No.	Sheet No.	Index No.
	1 of 1	17733

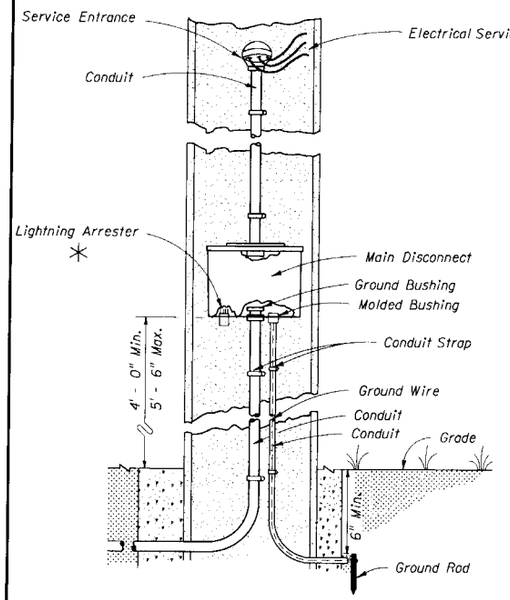

FIGURE A

AERIAL FEED
(NO METER USED)

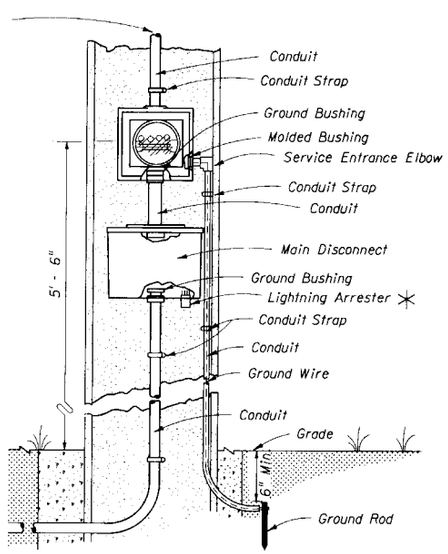

FIGURE B

AERIAL FEED
(METER USED)

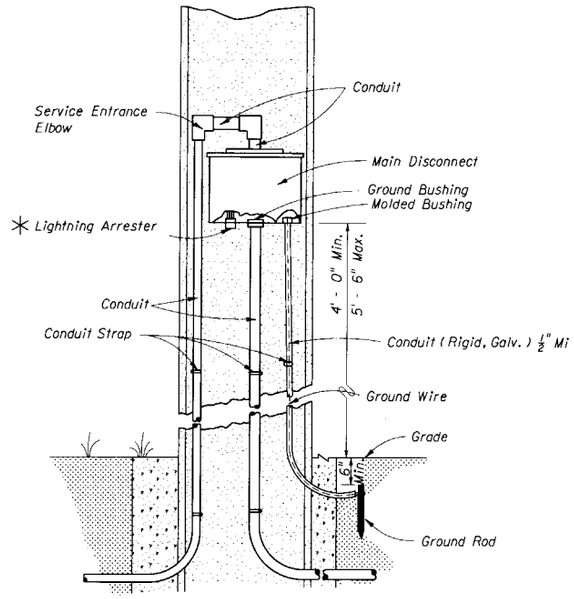

FIGURE C

UNDERGROUND FEED
(NO METER USED)

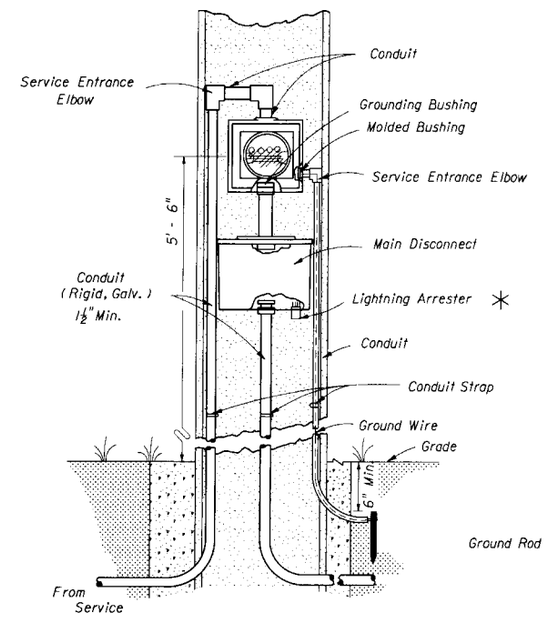

FIGURE D

TYPE "B" UNDERGROUND FEED
(METER USED)

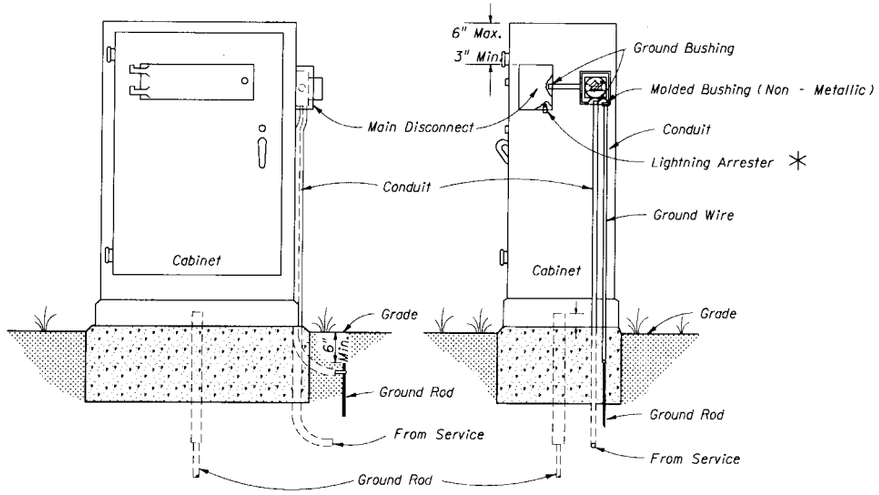

FIGURE E

UNDERGROUND CABINET MOUNTED
(METER USED)

NOTES:

1. The lightning arrester can be located on the side or bottom of the main disconnect enclosure at the Contractors Option.
2. Liquidtight flexible conduit is approved for use from the electrical disconnect to the cabinet when both are installed on the same pole.

STATE OF FLORIDA DEPARTMENT OF TRANSPORTATION
TRAFFIC DESIGN

ELECTRIC POWER SERVICE

	Names	Dates
Designed By		
Drawn By	Mick	09/80
Checked By	J.R.M.	
F.H.W.A. Approved:		

Approved By: Charles A. Scott
State Traffic Plans Engineer

Revision No.	Sheet No.	Index No.
92	1 of 1	17736

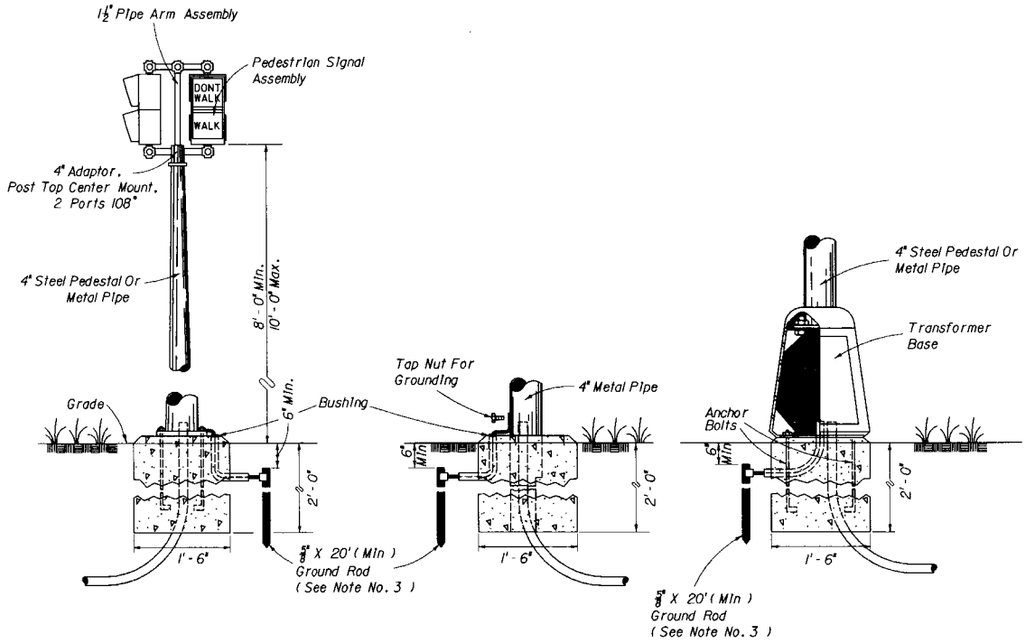

FIGURE A

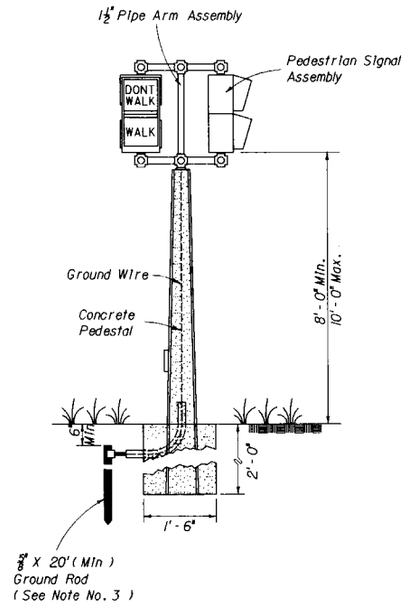

FIGURE B

Notes:

1. As an option, the contractor will be allowed to install pedestrian signals on concrete poles and pedestals with the use of lead anchors (two bolts same size per hub.) in lieu of the standard steel bands.
2. Holes drilled or punched in metal poles or pedestals shall be thoroughly reamed, cleaned of all burrs and covered with two (2) coats of zinc rich paint. As specified in the standard specifications for road and bridge constuctions. Grommets or bushings shall be installed in holes.
3. Grounding to be in accordance with section 620 of the standard specifications.

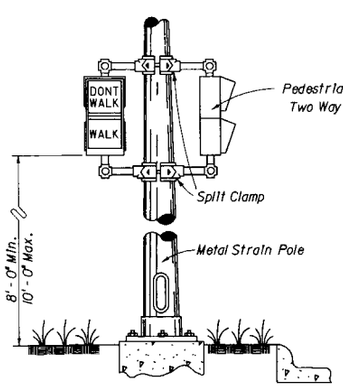

FIGURE C

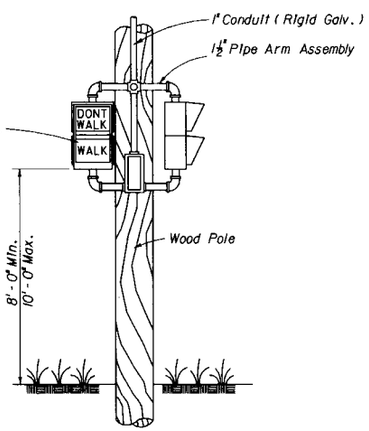

FIGURE D

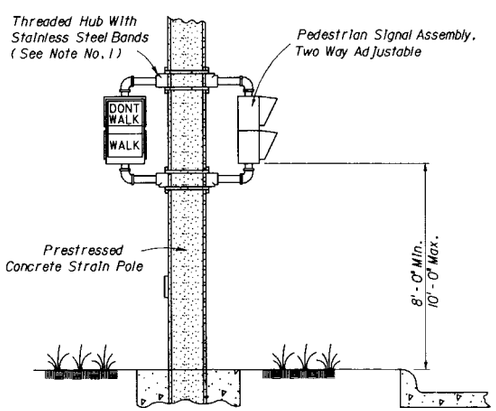

FIGURE E

STATE OF FLORIDA DEPARTMENT OF TRANSPORTATION
TRAFFIC DESIGN

PEDESTRIAN CONTROL SIGNAL INSTALLATION DETAIL

	Names	Dates
Designed By		
Drawn By	Mick	09/80
Checked By		
F.H.W.A. Approved:		

Approved By: Clark A Scott

Revision No.	Sheet No.	Index No.
	1 of 1	17764

DETAILS FOR SPLICING LOOP WIRE TO LEAD-IN WIRE

STEP 1

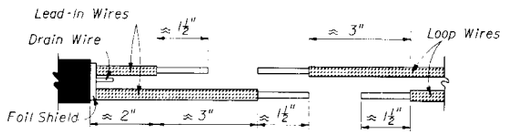

Strip Loop And Lead-In Cable Conductors. If Heat Shrinkable Silicone Lined, Cross Linked Polyethylene Insulating Tubing Is To Be Used, Slip Tubing Over Lead-In Cable And Individual Conductors.

STEP 2

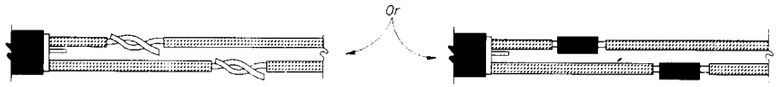

Twist The Bare Conductors Together.

Crimp The Bare Conductors Together With An Uninsulated Butt Connector.

STEP 3



Solder Each Splice Using Resin-Core Solder.

Solder Each Splice Using Resin-Core Solder.

STEP 4

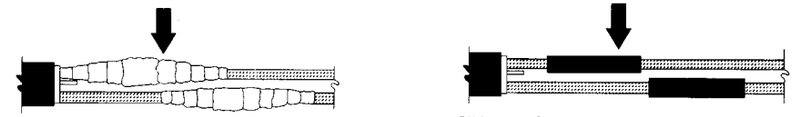

Wrap Each Splice With Silicone Tape. Half Lap Starting At Center Of Splice And Proceeding To The Right (Or Left) ≈ ¾" Past End Of Splice. Then Proceeding To The Left (Or Right) ≈ ¾" Past Other End Of Splice And Returning To Center. Wrap Each Splice, With An All Weather Heavy Duty Electrical Tape In The Same Manner ≈ ¼" Past Each End Of Silicone Tape.

Slide Heat Shrinkable Tubing Over Splices. The Tubing Shall Cover ≈ 1" Of Conductor Insulation At Each End Of Splice. Heat Tubing As Specified By Manufacturer

STEP 5

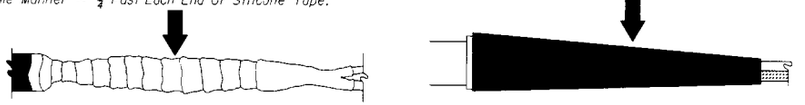

Half Lap The Two Splices Together With An All Weather Heavy Duty Electrical Tape ≈ 1" Past The End Of The Lead-In Cable Outside Cover And ≈ 1" Past Farther Most Wrap Of Step 4.

Slide Outer Heat Shrinkable Tubing Over Entire Splice Area. The Tubing Shall Cover ≈ ½" Of The Lead-In Cable Outside Cover And ≈ 1" Of The Loop Conductor Insulation.

TWISTED PAIR AND LOOP LEAD-IN INSTALLATION WITH CURB & GUTTER

ALTERNATIVE 1

Drill A Hole Through The Curb At The Point Which The Required Saw-Cut Depth Is Obtained Just Prior To Cutting The Top Inside Edge Of The Curb. Slide A Section Of Flexible Conduit At Least 6" Into The Hole From The Back Side Of The Curb But Not Within 2" Of The Top Of The Hole. The Conduit Shall Fit Snug Within The Drilled Hole. Fill The Top Of The Hole With Loop Sealant To The Level Of The Curb Surface. A Non-metalic Material Should Be Used To Prevent Excessive Loop Sealant From Entering The Flexible Conduit.

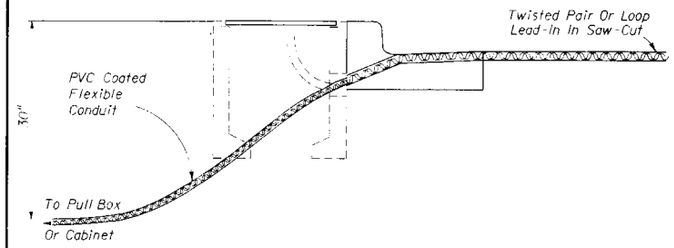

ALTERNATIVE 2

Drill A Hole ½" To 1" Larger In Diameter Than The Rigid Conduit To Be Used Through The Roadway Asphalt (Or Concrete) Surface And Base At An Appropriate Angle To Intercept The Trench Or Pull Box Hole. Place A Predetermined Length Of Rigid Conduit In The Hole And Drive The Conduit Into The Trench Or Hole. Install A Molded Bushing (Nonmetallic) On The Roadway End Of The Rigid, Conduit. The Top Of The Rigid Conduit Shall Be Approximately 2" Below The Roadway Surface. Fill The Hole With Loop Sealant To The Level Of The Roadway Surface. A Nonmetallic Material Should Be Used To Prevent Excessive Loop Sealant From Entering The Rigid Conduit.

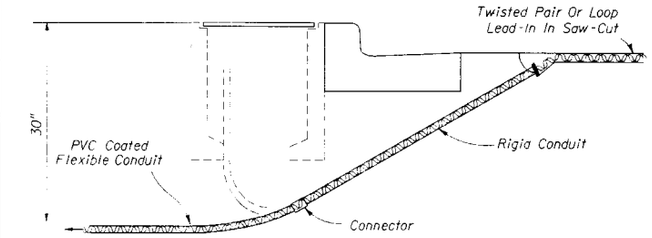

Note
Other alternatives may be approved by the State Traffic Operations Engineer.

TWISTED PAIR AND LOOP LEAD-IN INSTALLATION WITHOUT CURB & GUTTER

Cut A Slot In The Edge Of The Roadway Of Sufficient Size And Depth To Snugly Place The End Of The Flexible Conduit. The End Of The Conduit Shall Be At Least 6" Into The Roadway And ≈ 2" Below The Top Of The Roadway Surface. The Departure Angle Of The Conduit From The Roadway Shall Be 30° To 45°.

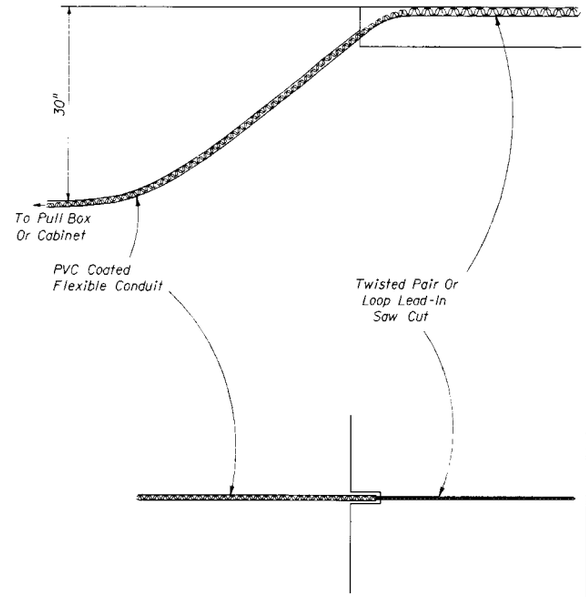

Note
Other alternatives may be approved by the State Traffic Operations Engineer.

GENERAL NOTES

1. If the loop lead-in is 75' or less from the edge of the loop to the detector or controller cabinet, continue the twisted pair to the cabinet. If the loop lead-in is greater than 75', continue the twisted pair to the specified pull box, splice to shielded lead-in wire and continue to the detector or controller cabinet.

2. The depth of all saw-cuts (except across expansion joints) shall not exceed 2.00 inches nor be less than 1.75 inches with 2.00 inches being standard. The width of all saw-cuts shall be sufficient to allow unforced placement of loop wires or lead-in cables into the saw-cut.

3. On resurfacing or new roadway construction projects, the loops and lead-in cables may be installed in the asphalt structural course prior to the placement of the final asphalt wearing course provided that the loop wire is not installed greater than two inches below the final wearing surface. In order to protect the wire during construction, the loops and lead-in cables shall be placed in a saw-cut deep enough (.50 to .75 inch below the surface of the structural course) to allow the final wearing course to be laid over the loops.

4. A nonmetallic hold down material shall be used to secure loop wires and lead-ins to the bottom of saw-cuts. Hold down material shall be placed at approximately one foot intervals around loops and two foot intervals on lead-ins.

5. The minimum distance between the twisted pairs of loop lead-in wire is 6" from the loop to one foot from the pavement edge or curb.

STATE OF FLORIDA DEPARTMENT OF TRANSPORTATION
TRAFFIC DESIGN

VEHICLE LOOP INSTALLATION DETAILS

	Names	Dates
Designed By		
Drawn By		
Checked By		
F.H.W.A. Approved:		

Approved By
Clark A Smith
State Traffic Plans Engineer

Revision No.	Sheet No.	Index No.
90	1 of 2	17781

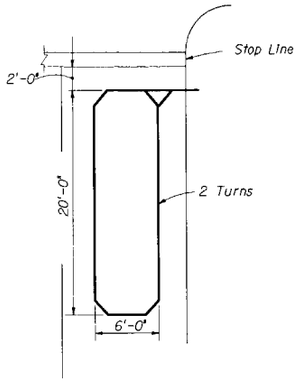

TYPE A

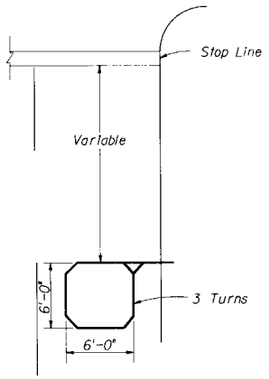

TYPE B

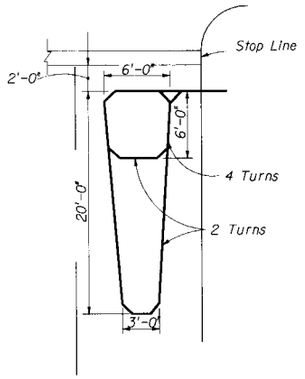

TYPE C

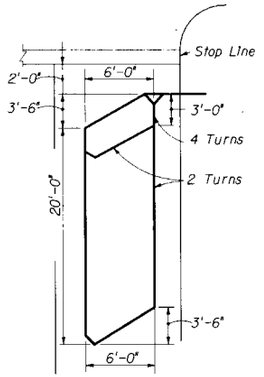

TYPE D

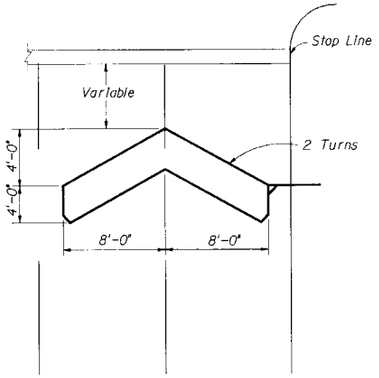

TYPE E

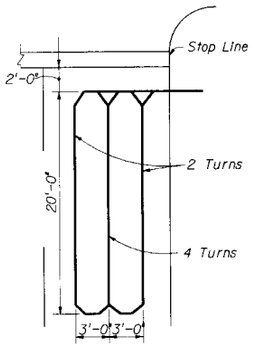

TYPE F

Note: Loop conductors must follow saw-cut to bottom forming slack section at joint.

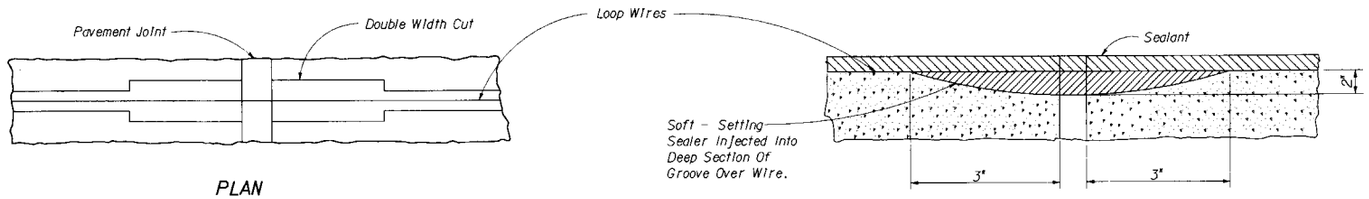

PLAN

VERTICAL SECTION

CONCRETE PAVEMENT EXPANSION JOINTS

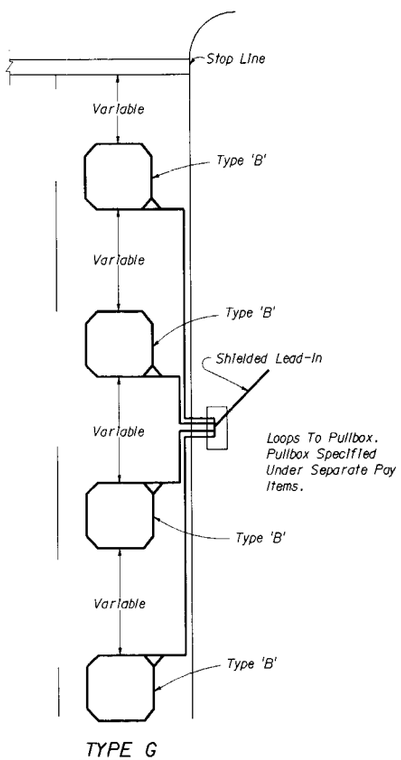

TYPE G

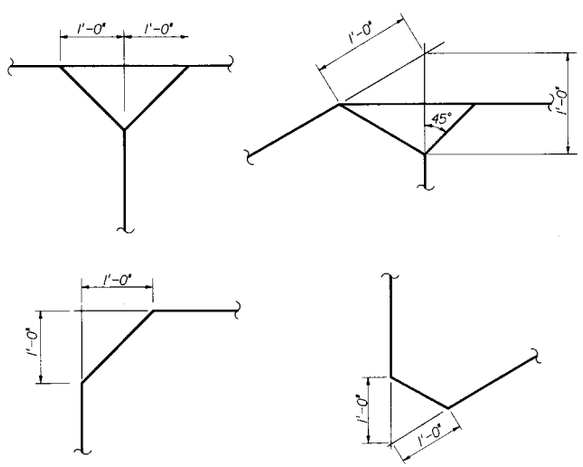

LOOP CORNER AND LEAD-IN DETAILS

Notes:

1. The "number of turns" indicated at the specified point on the loop refers to the number of passes of loop wires which are placed in the saw-cut forming the complete loop.
2. Loop types or details not drawn to scale.
3. Loop Types are centered in a single lane except Type E which is centered on two lanes.
4. The number of individual loops in the Type G loop may vary up to a maximum of four (4).
5. Lead-In may be connected to either end of loop.
6. The leading edge of loop Types A,C,D,& F may extend past the stop line a maximum of 10 feet. The length of these loops may be extended to a maximum of 60 feet. Each intersection should be individually designed and if the modifications noted above is required it must be noted or detailed in the plans.

STATE OF FLORIDA DEPARTMENT OF TRANSPORTATION
TRAFFIC DESIGN

VEHICLE LOOP INSTALLATION DETAILS

	Names	Dates
Designed By		
Drawn By		
Checked By		
F.H.W.A. Approved:		

Approved By: Clark A Scott
State Traffic Plans Engineer

Revision No.	Sheet No.	Index No.
90	2 of 2	17781

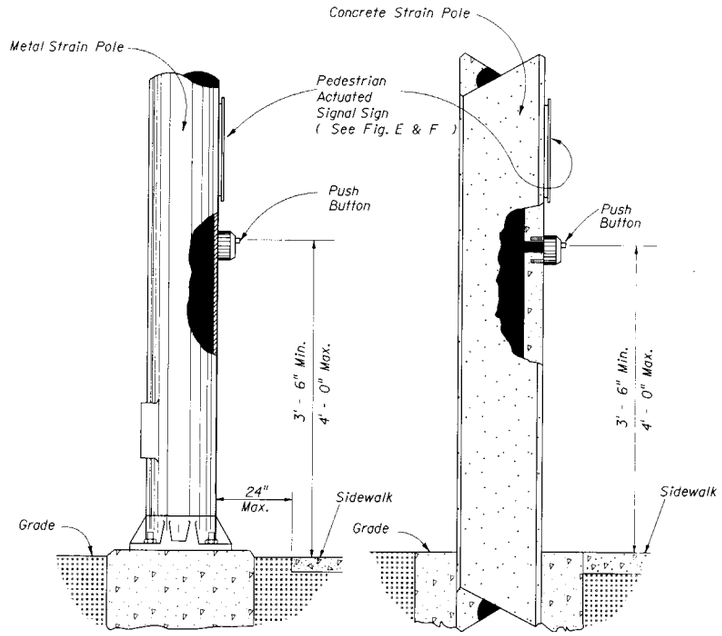

FIGURE A
POLE MOUNTED
DETECTOR STATION

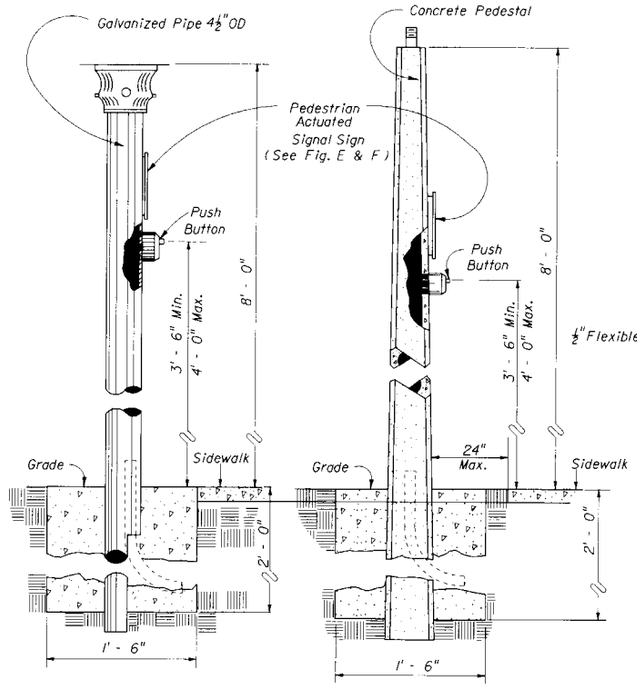

FIGURE B
PEDESTAL STATION
DETECTOR STATION

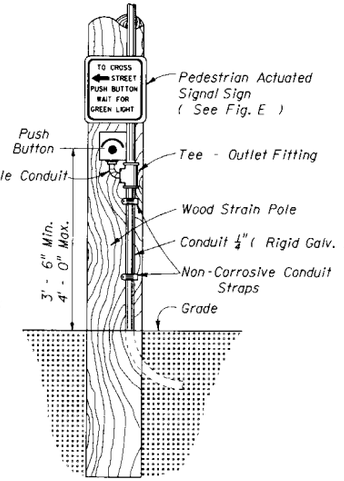

(Underground Feed)

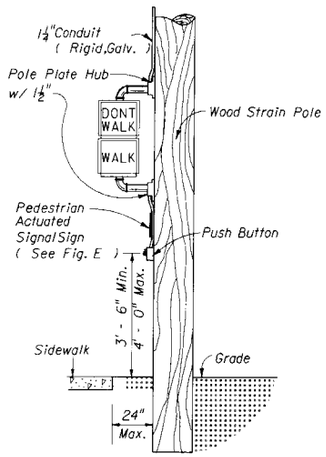

(Aerial Feed)

FIGURE C
WOOD POLE MOUNTED
DETECTOR STATION

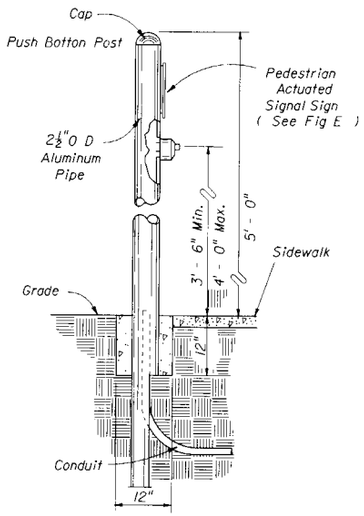

FIGURE D
POST DETECTOR STATION
DETECTOR STATION

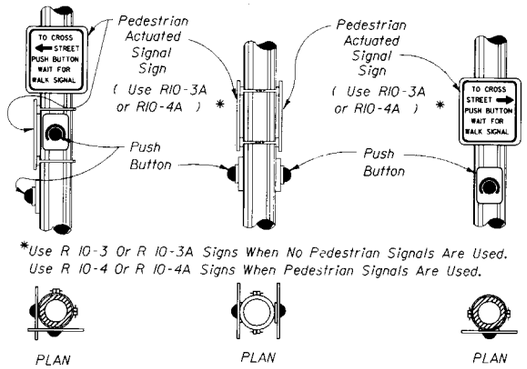

*Use R 10-3 Or R 10-3A Signs When No Pedestrian Signals Are Used.
Use R 10-4 Or R 10-4A Signs When Pedestrian Signals Are Used.

FIGURE E

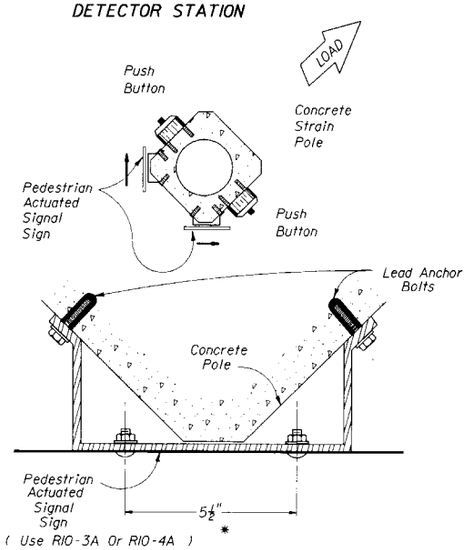

FIGURE F

Notes

1 Signs (R10-3A & R10-4A) shall be mounted above detectors, explaining their purpose and use.

2 The positioning of pedestrian push button should clearly indicate which cross-walk signal is actuated by each push button.

3 Push buttons and signs are to be mounted in accordance with Standard Specifications.

4 Ground to be in accordance with section B620 of Standard Specifications.

STATE OF FLORIDA DEPARTMENT OF TRANSPORTATION
TRAFFIC DESIGN

PEDESTRIAN DETECTOR ASSEMBLY INSTALLATION DETAILS

	Names	Dates
Designed By	J.M.C.	
Drawn By		
Checked By		
F.H.W.A. Approved:		

Approved By: Clark A. Scott
State Traffic Plans Engineer

Revision No.	Sheet No.	Index No.
90	1 of 2	17784

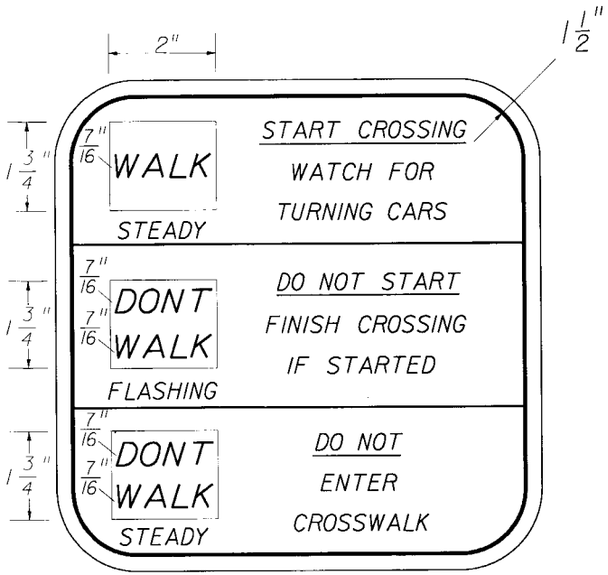

FTP-49 12" X 12"

3/8" MARGIN 3/8" BORDER

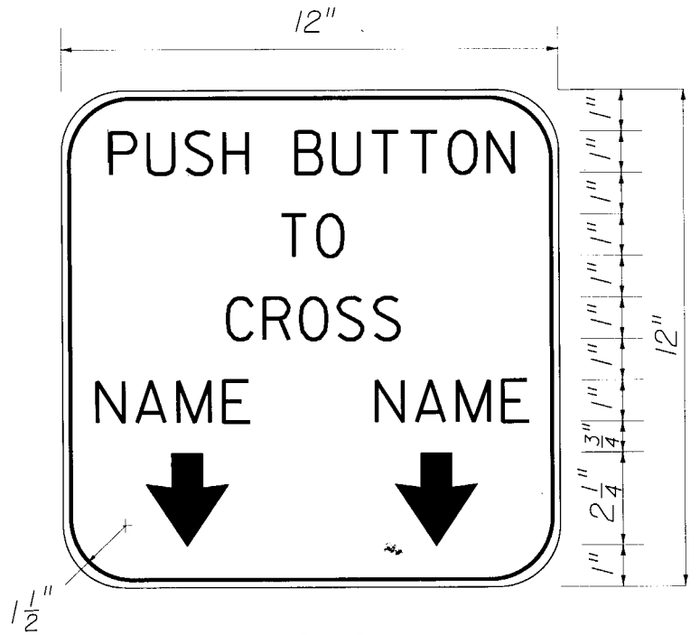

FTP-48

1" SERIES "D"

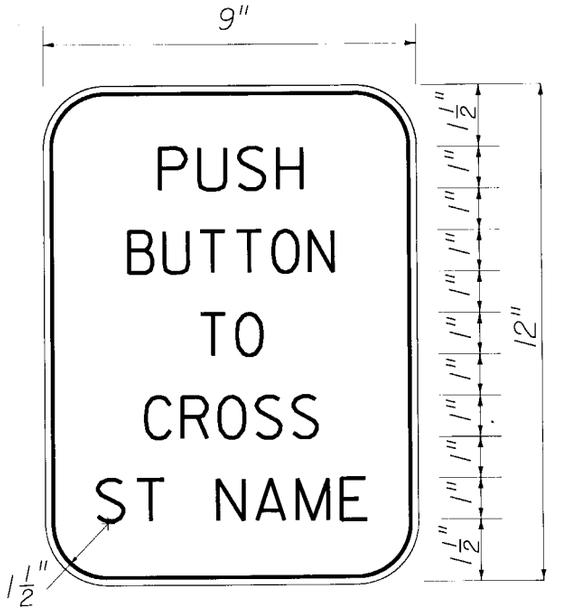

FTP-47

1" SERIES "D"

WHITE BACKGROUND WITH BLACK LEGEND AND BORDER

WALK PLAQUE - WHITE LEGEND ON BLACK BACKGROUND

DONT WALK PLAQUE - ORANGE LEGEND ON BLACK BACKGROUND

THE INTERNATIONAL SYMBOLS MAY BE USED FOR WALK AND DONT WALK.

ALL LETTERS SHALL BE 1/2" EXCEPT "WALK AND "DONT WALK" WHICH SHALL BE 7/16"

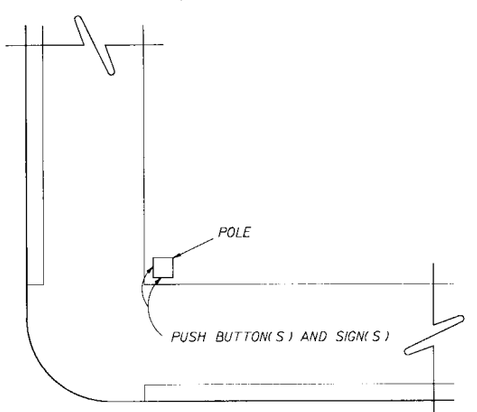

CASE I

POLE PARALLEL TO CURBLINE

ALTERNATE TO FIGURE F

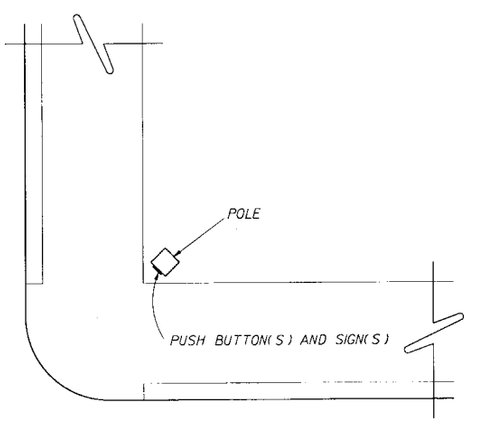

CASE II

POLE DIAGONAL TO CURBLINE

STATE OF FLORIDA DEPARTMENT OF TRANSPORTATION
TRAFFIC DESIGN

PEDESTRIAN DETECTOR ASSEMBLY INSTALLATION DETAILS

	Names	Dates
Designed By	J.M.C.	
Drawn By		
Checked By		
F.H.W.A. Approved:		

Approved By Clark A. Scott
State Traffic Plans Engineer

Revision No.	Sheet No.	Index No.
92	2 of 2	17784

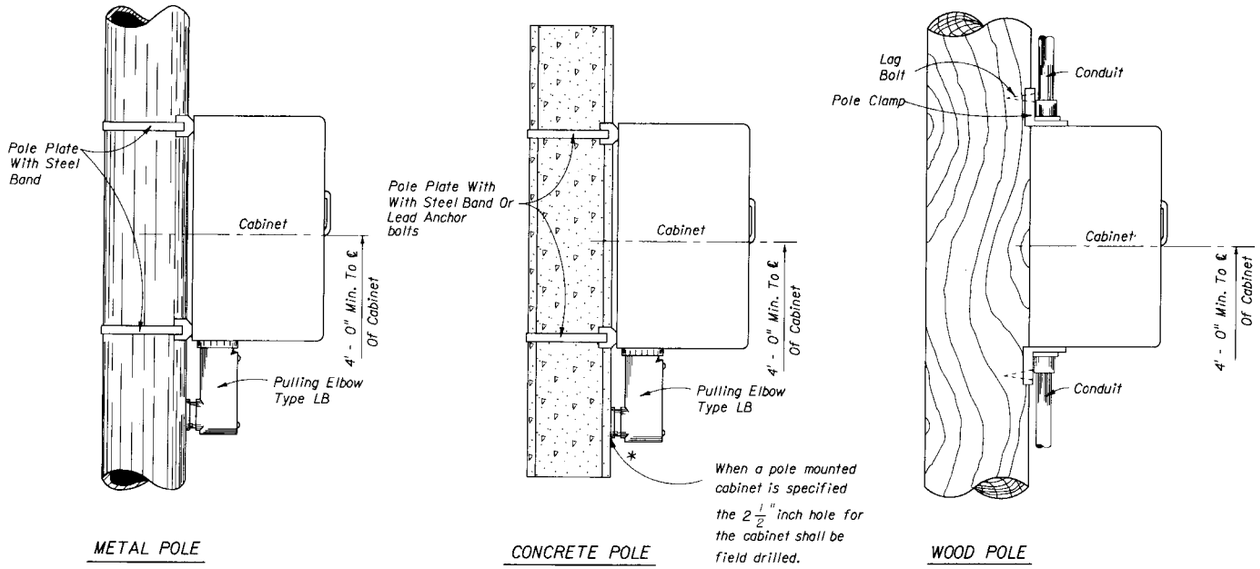

METAL POLE

CONCRETE POLE

WOOD POLE

Liquidtight flexible conduit is approved for use from the electrical disconnect to the cabinet when both are installed on the same pole.

POLE MOUNTED CABINET

* If holes for cabinet mounting require relocation, original holes shall be filled in with concrete or covered with a non corrosive cover plate.

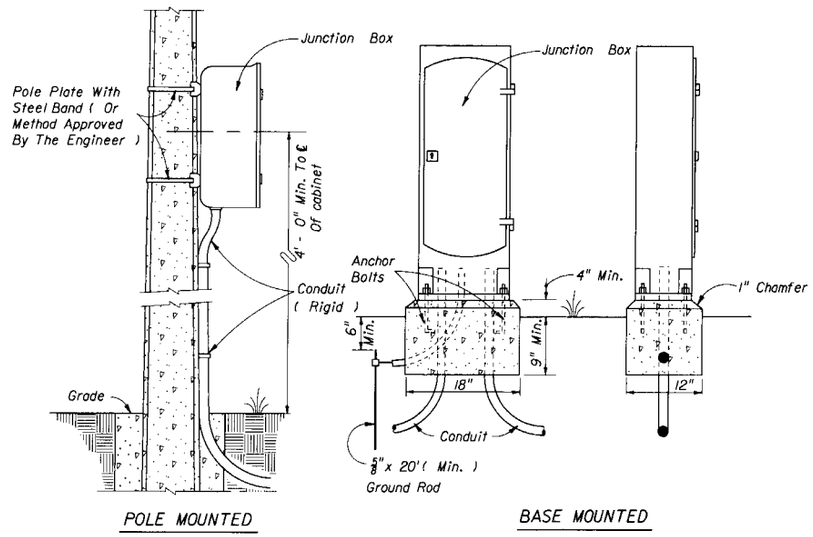

POLE MOUNTED

BASE MOUNTED

INTERCONNECT JUNCTION BOX

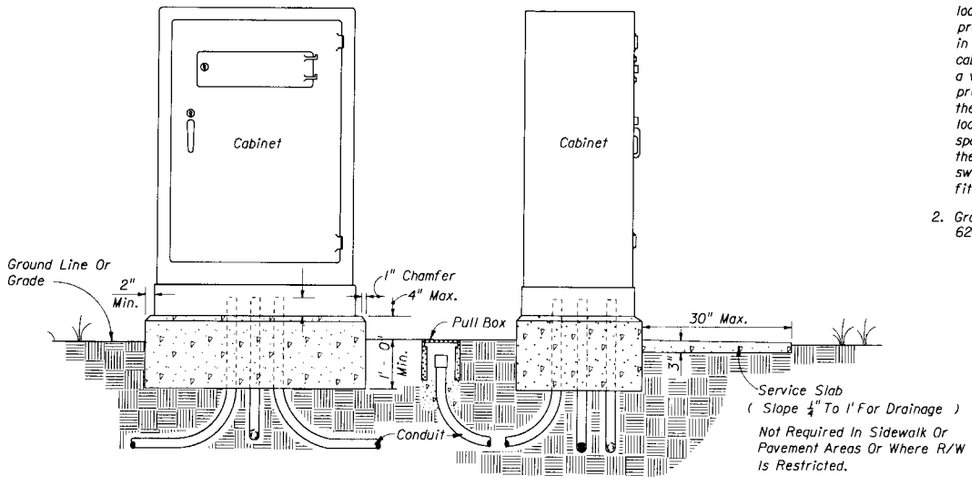

Notes:

1. The number, size and orientation of conduit sweep will vary according to site condition or locations. Two spare 2" PVC conduits shall be provided in all bases. The spares shall exit in the direction of the center rear of the cabinet base, into a pull box and capped with a weather tight fitting. If obstructions prevent the spare conduit from exiting to the rear, or the rear of the cabinet is located on the R/W line, a side exit of the spare conduits will have to be approved by the project engineer. All spare conduit sweeps shall be capped with a weather proof fitting.
2. Grounding to be in accordance with section 620 of the Standard Specifications.

BASE MOUNTED CABINET

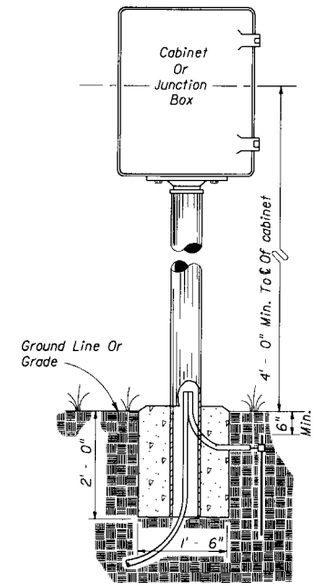

PEDESTAL MOUNTED

STATE OF FLORIDA DEPARTMENT OF TRANSPORTATION
TRAFFIC DESIGN

CABINET INSTALLATION DETAIL

	Names	Dates
Designed By	MICK	09/17/80
Drawn By	MICK	08/24/81
Checked By		

Approved By: Charles A. Scott
State Traffic Plans Engineer

F.H.W.A. Approved:

Revision No.	Sheet No.	Index No.
92	1 of 1	17841

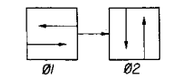

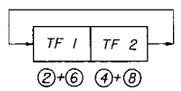

SOP 1



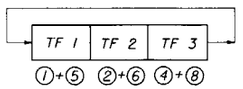

SOP 2

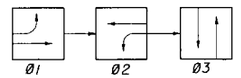

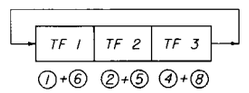

SOP 3

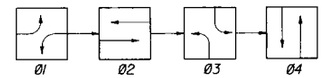

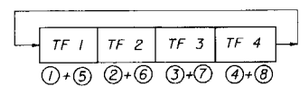

SOP 4

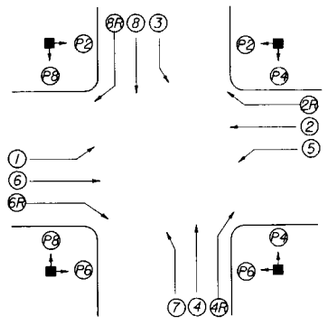

SIGNALIZED INTERSECTION

Vehicle movements & signal head number assignments are not directionally oriented but shall maintain their relative orientation about the intersection (I.E. movements 7 and 4 are always to the right of movements 1 and 6 etc.)

LEGEND

- (X) Vehicle Movement Number
- (PX) Pedestrian Movement Number
- TF X Timing Function Number
- ØX Phase Number
- Green Arrow (Left or Right)
- Red Arrow
- Yellow Arrow

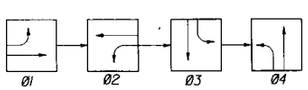

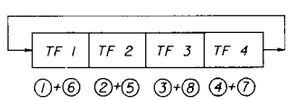

SOP 5

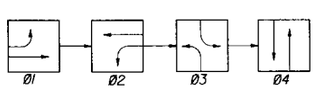

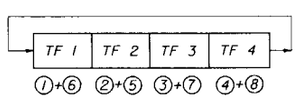

SOP 6

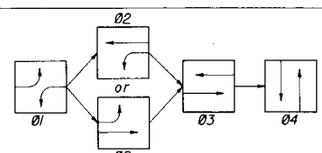

SOP 7

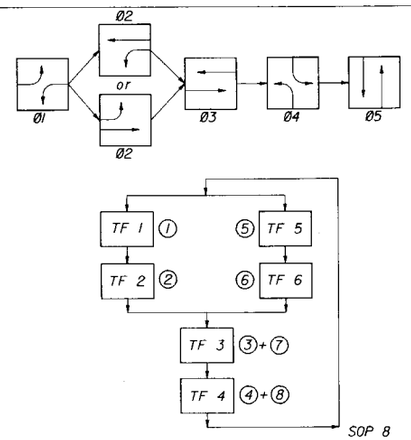

SOP 8

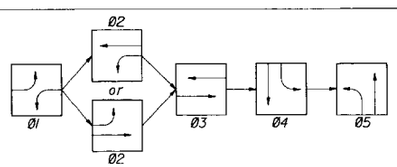

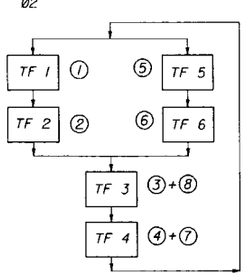

SOP 9

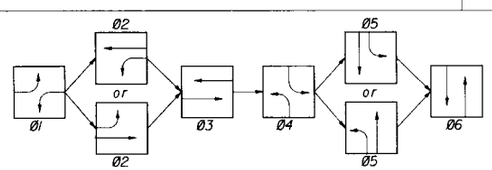

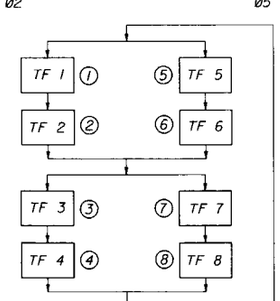

SOP 10

SIGNAL CLEARANCE TABLE

(Blank Indicates No Clearance Required)

From / To		R	~~R~~	G	~~G~~	~~G~~*	~~G~~	WALK	DONT WALK
SIGNAL INDICATIONS	R			Y	Y	~~Y~~	Y		
	~~R~~			Y	Y	~~Y~~	Y		
	G				Y	~~Y~~			
	~~G~~								
	~~G~~*								
	~~G~~								
	WALK								
	DONT WALK							Flash DONT WALK	

* Clearance Indication When Yellow Arrow Is Used.

STATE OF FLORIDA DEPARTMENT OF TRANSPORTATION
ROAD DESIGN

STANDARD SIGNAL OPERATING PLANS

	Names	Dates
Designed By		
Drawn By	J.M.C.	04/26/79
Checked By	J.W.J	

Approved By: Clark A. Scott

F.H.W.A. Approved:

Revision No.

Sheet No. 1 of 2

Index No. 17870

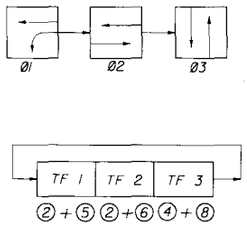

SOP 11

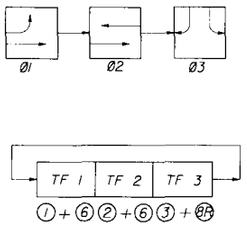

SOP 12

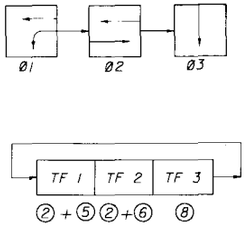

SOP 13
(ONE-WAY STREET INTERSECTION)

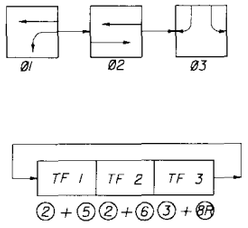

SOP 14
(DIAMOND INTERCHANGE OPERATION)

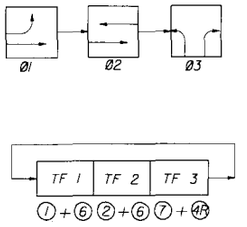

SOP 15
(DIAMOND INTERCHANGE OPERATION)

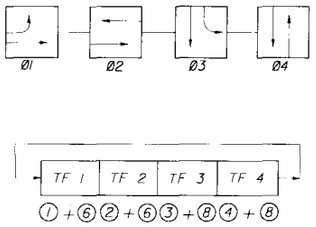

SOP 16

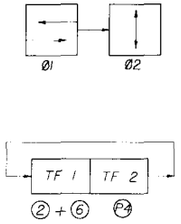

SOP 17
(MID - BLOCK)

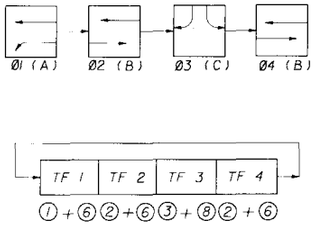

NOTE:
Only Ø2 Or Ø4 Used, Not Both To Obtain ABC, Or ACB Operation.

SOP 18
(DIAMOND INTERCHANGE OPERATIONS)

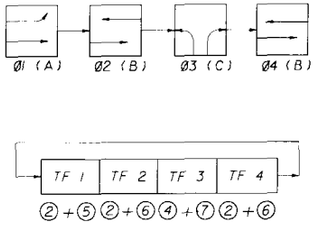

NOTE:
Only Ø2 Or Ø4 Used, Not Both To Obtain ABC, Or ACB Operation.

SOP 19
(DIAMOND INTERCHANGE OPERATIONS)

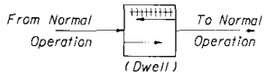

POP 1

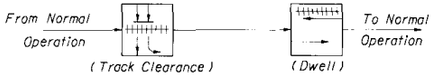

POP 2

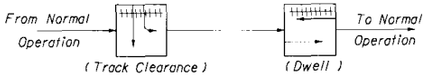

POP 3

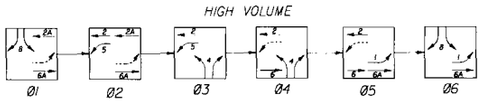

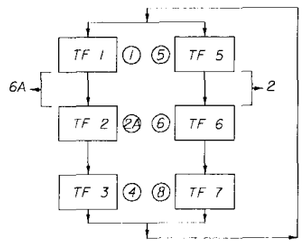

SOP 20
(DIAMOND INTERCHANGE OPERATIONS)

STATE OF FLORIDA DEPARTMENT OF TRANSPORTATION
ROAD DESIGN

STANDARD SIGNAL OPERATING PLANS

	Names	Dates
Designed By		
Drawn By	J.M.C.	09/28/79
Checked By	J.W.J	
F.H.W.A. Approved:		

Approved By C. Clark Scott
State Traffic Plans Engineer

Revision No.	Sheet No.	Index No.
92	2 of 2	17870

PASSIVE STATE
(TRAIN CIRCUIT NOT ACTUATED)

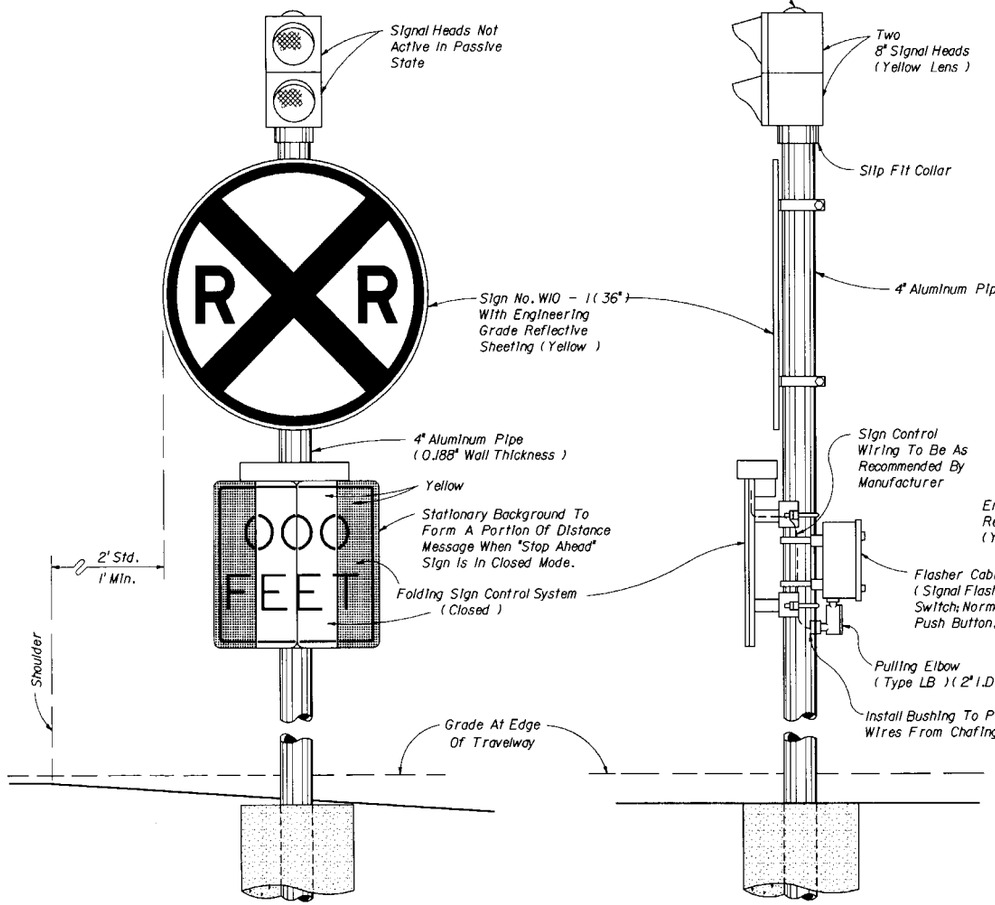

FRONT VIEW

SIDE VIEW

ACTIVE STATE
(TRAIN CIRCUIT ACTUATED)

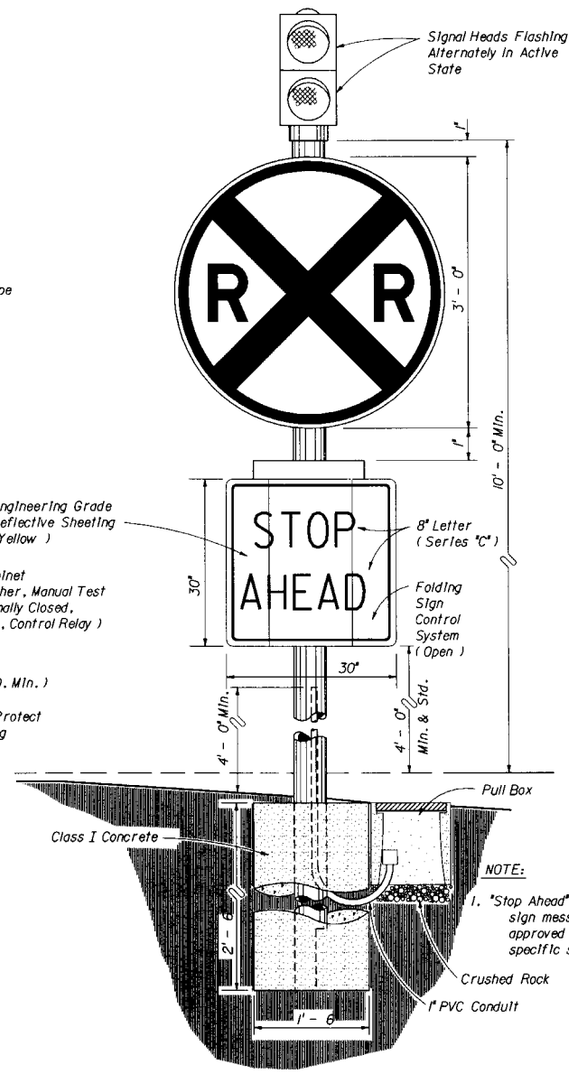

FRONT VIEW

LOCATION OF THE ADVANCE WARNING SIGN

SPEED M.P.H.	DISTANCE FEET
30	200
40	275
50	350
55	425

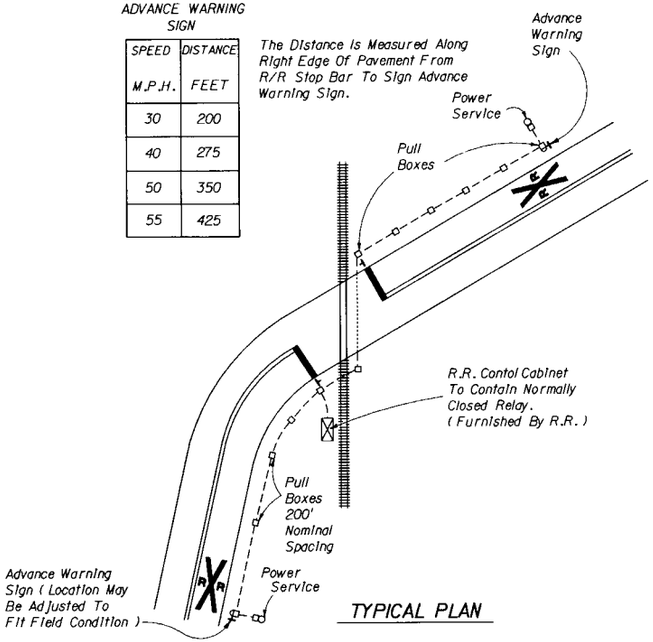

TYPICAL PLAN

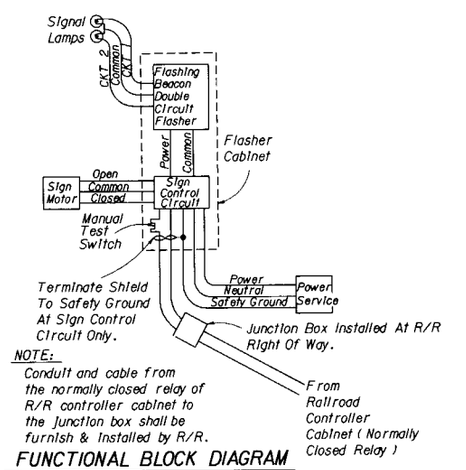

NOTE:
Conduit and cable from the normally closed relay of R/R controller cabinet to the junction box shall be furnish & installed by R/R.

FUNCTIONAL BLOCK DIAGRAM

STATE OF FLORIDA DEPARTMENT OF TRANSPORTATION
TRAFFIC DESIGN

ADVANCE WARNING FOR R.R. CROSSING

	Names	Dates
Designed By	CG	12/12/75
Drawn By		
Checked By		12/12/75
F.H.W.A. Approved:		

Approved By: Clark A Scott

Revision No.	Sheet No.	Index No.
	1 of 1	17881

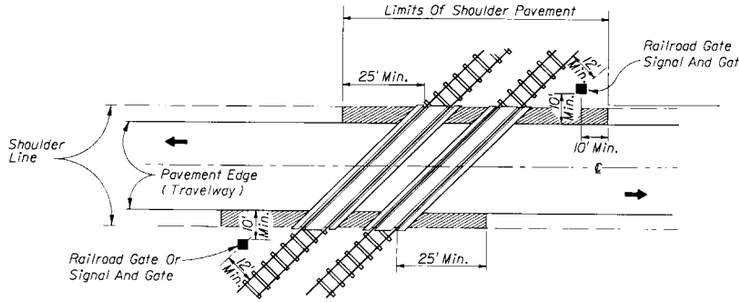

TRACK CLEARANCE FOR ACUTE OR RIGHT ANGLE CROSSINGS

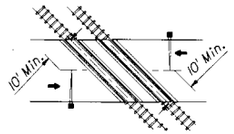

Typical Location Plan For Gate Or Flashing Signal With Gate When Tracks Are At Obtuse Angle.

SIGNAL PLACEMENT AT RAILROAD CROSSING
(2 - LANE DESIGN)

Note :
It is intended that the full shoulder width of the existing roadway be paved, where an existing shoulder is substantially substandard for the facility involved, the shoulder width should be upgraded to meet current standards.

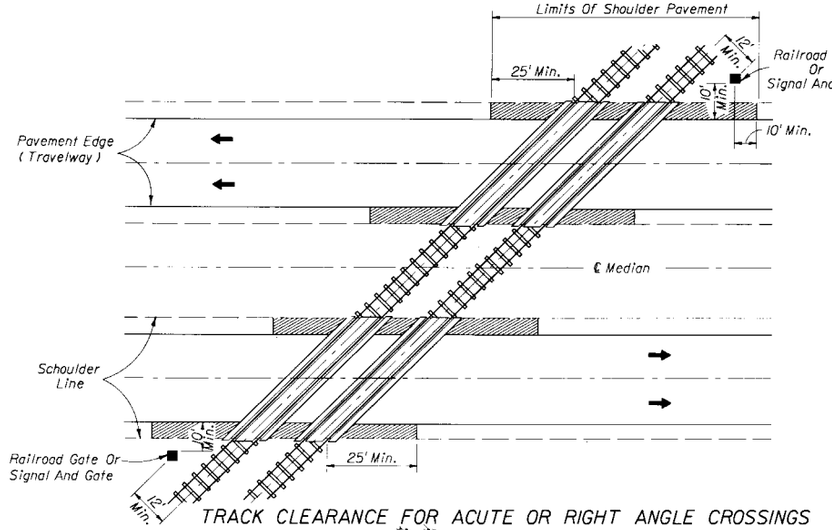

TRACK CLEARANCE FOR ACUTE OR RIGHT ANGLE CROSSINGS

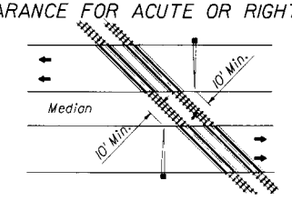

Typical Location Plan For Gate Or Flashing Signal With Gate When Tracks Are At Obtuse Angle.

SIGNAL PLACEMENT AT RAILROAD CROSSING
(4 - LANE DESIGN)

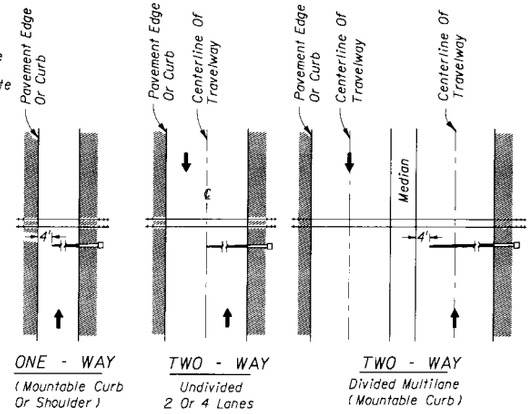

Note :
Arrows denote direction of travel not lane indication

FIGURE I
Gate Length Requirements
See Note 6 Sheet 3

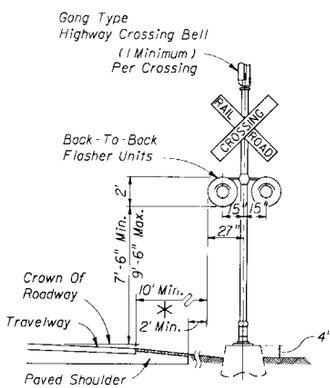

TYPE I

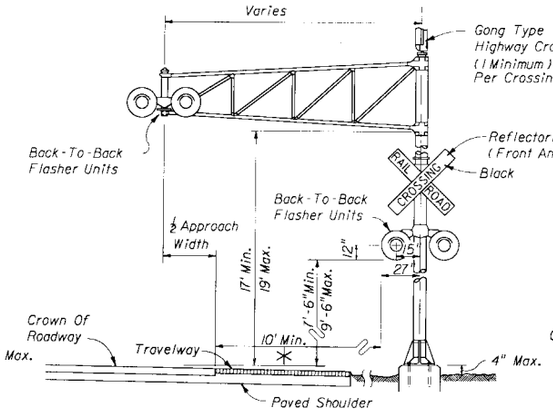

TYPE II

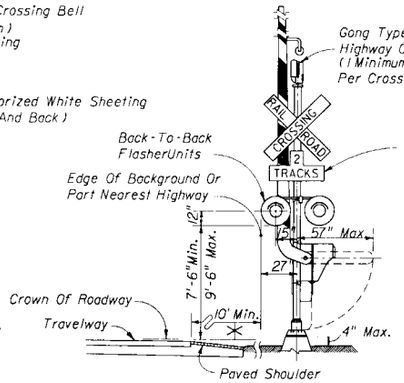

TYPE III

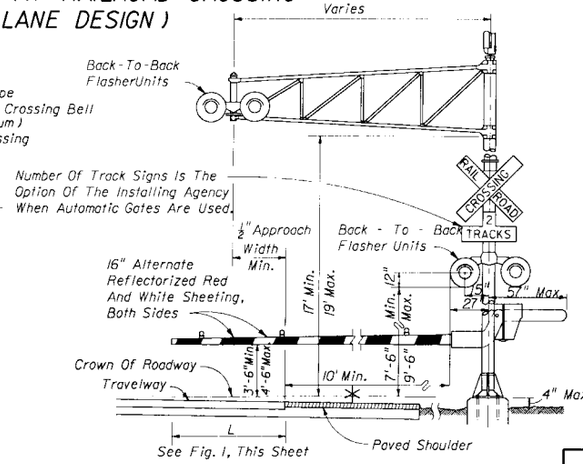

TYPE IV

* Desireable minimum - where field conditions dictate absolute minimum may be as per Index 700.

Note :
Two separate foundations may be required (one for signals, one for gate), depending on type of equipment used.

General Notes

1. No guardrail is proposed for signals; however, some form of impact attention device may be specified for certain locations.
2. Advance flasher to be installed when and if called for in plans or specifications.
3. Top of foundation shall be no greater than 4" above finished shoulder grade.

4. Type of traffic control device
   - I Flashing signals
   - II Flashing signals with cantilever
   - III Flashing signals with gate
   - IV Falshing signals with cantilever & gate
   - V Gate
5. Class of traffic control devices
   - I Flashing signals - one track
   - II Flashing signals - multiple tracks
   - III Flashing signals and gates - one track
   - IV Flashing signals and gates - multiple tracks

STATE OF FLORIDA DEPARTMENT OF TRANSPORTATION
TRAFFIC DESIGN

RAILROAD GRADE CROSSING TRAFFIC CONTROL DEVICES

	Names	Dates
Designed By	CG	04/08/76
Drawn By		
Checked By	RM	04/08/76
F.H.W.A. Approved:		

Approved By: Clark G. Scott
State Traffic Plans Engineer

Revision No.	Sheet No.	Index No.
92	1 of 4	17882

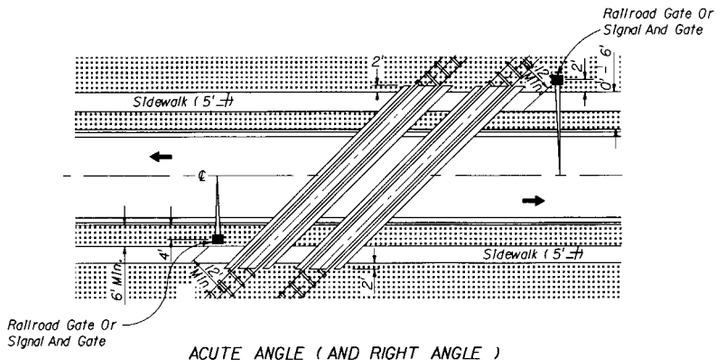

ACUTE ANGLE (AND RIGHT ANGLE)

SIGNAL PLACEMENT AT RAILROAD CROSSING (2 LANES, CURB & GUTTER)

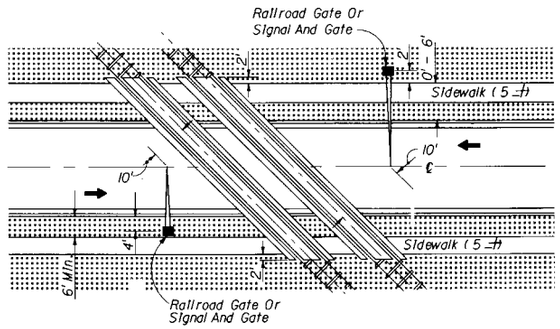

OBTUSE ANGLE

SIGNAL PLACEMENT AT RAILROAD CROSSING (2 LANES, CURB & GUTTER)

GENERAL NOTES

7. The location of flashing signals and stop lines shall be established based on future (or present) installation of gate with appropriate track clearances.
8. Where plans call for railroad traffic control devices to be installed in curbed medians, the minimum median width shall be 12.5 feet.
9. Location of railroad traffic control device is based on the distance available between face of curb & sidewalk.
   0' to 6' - Locate device outside sidewalk.
   Over 6' - Locate device between face of curb and sidewalk.
10. Stop line to be perpendicular to edge of roadway, approx. 15' from nearest rail; or 8' from and parallel to gate when present.

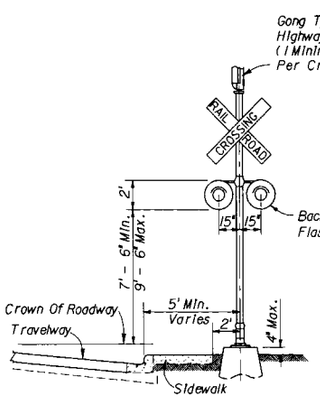

TYPE I

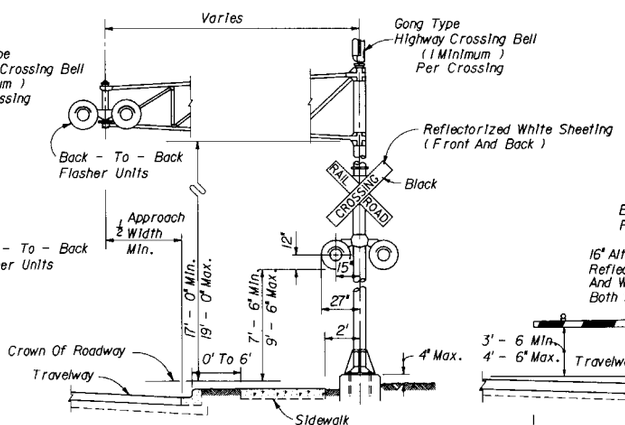

TYPE II

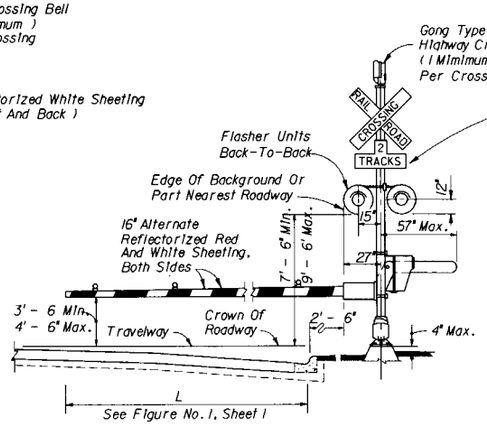

TYPE III

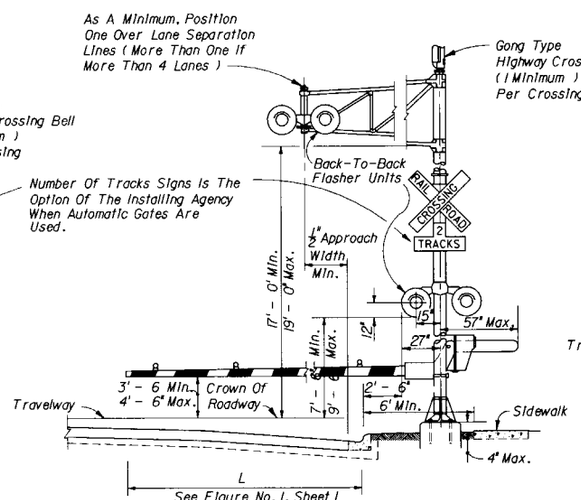

TYPE IV

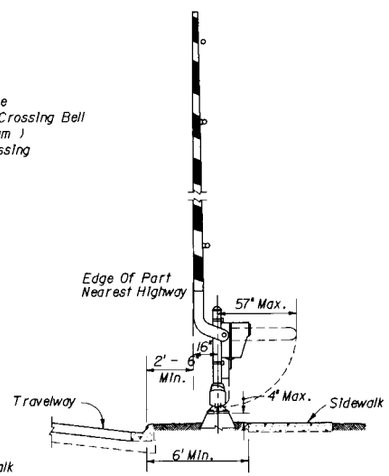

TYPE V

STATE OF FLORIDA DEPARTMENT OF TRANSPORTATION
TRAFFIC DESIGN

RAILROAD GRADE CROSSING TRAFFIC CONTROL DEVICES

	Names	Dates
Designed By	CG	04/08/76
Drawn By		
Checked By	RW	04/08/76
F.H.W.A. Approved:		

Approved By Clark A Scott

Revision No.	Sheet No.	Index No.
	2 of 4	17882

RAILROAD CROSSING AT TWO (2) - LANE ROADWAY

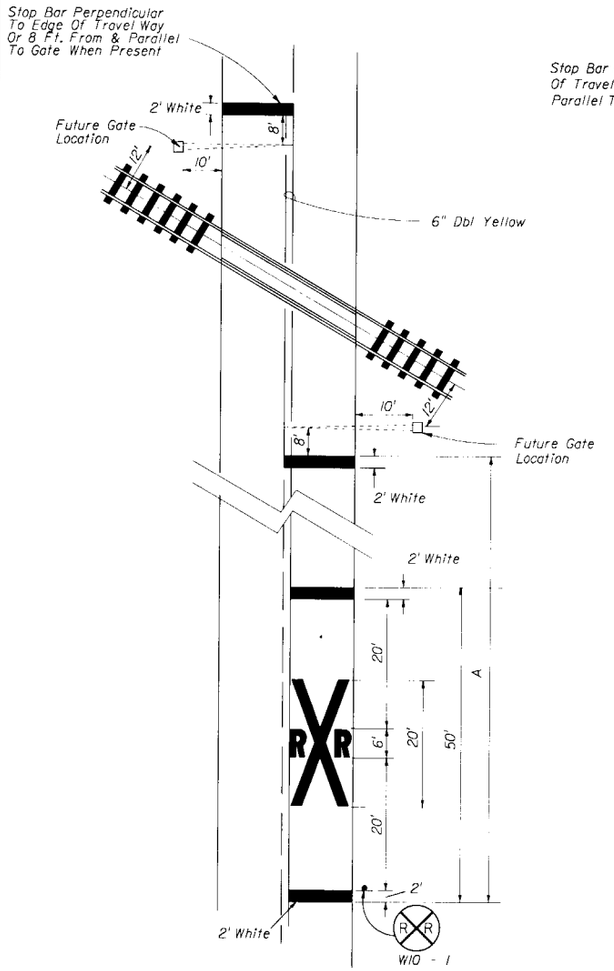

RAILROAD CROSSING AT MUTI-LANE ROADWAY

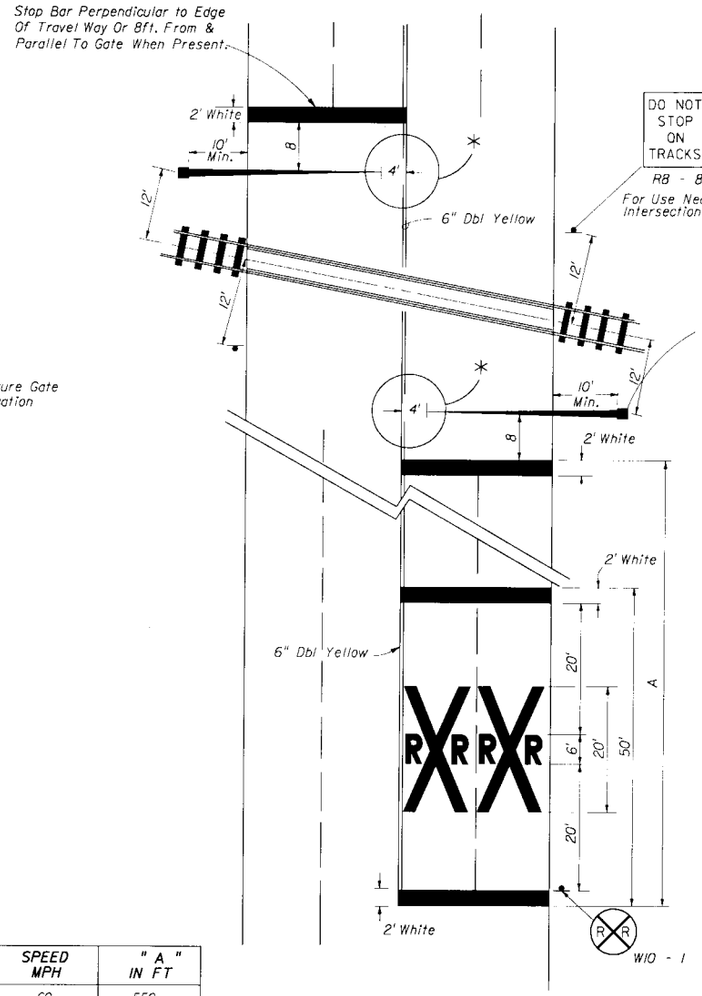

RELATIVE LOCATION OF CROSSING TRAFFIC CONTROL DEVICES

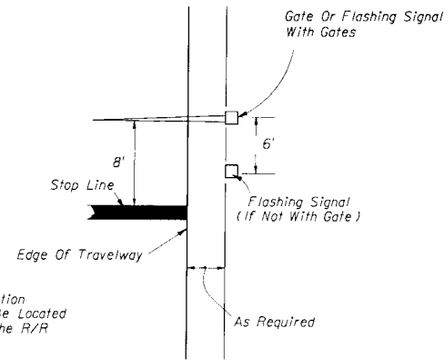

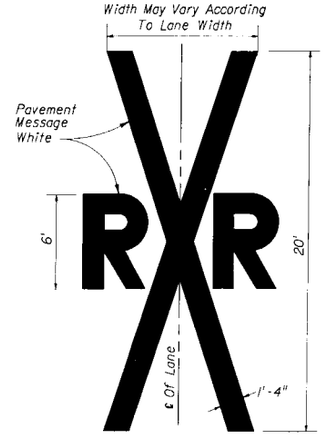

NOTES:

1. When computing pavement message, quantities do not include transverse lines.
2. Placement of sign W10-1 in a residential or business district, where low speeds are prevalent, the W10-1 sign may be placed a minimum distance of 100 feet from the crossing. Where street intersection occur between the R R pavement message and the tracks an additional W10-1 sign and additional pavement message should be used
3. Recommended location for sign FTP-38, 100 ft. Urban & 300 ft. Rural in advance of the crossing.
4. A portion of the pavement markings symbol should be directly opposite the W10-1 sign.
5. Recommended location for FTP-38 A or B signs, 100' urban and 300' rural. See index 17355 for sign details.

* 6. Gate Length Requirements

For two-way undivided sections:
The gate should extend to within 1' of the center line. On multilane approaches the maximum gate length may not reach to within 1' of the center line. For those cases, the distance from the gate to the center line shall be a maximum of 4'.

For one-way or divided sections:
The gate shall be of sufficient length such that the distance from the gate tip to the inside edge of pavement is a maximum of 4'.

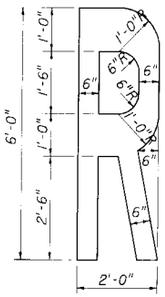

SPEED MPH	" A " IN FT
60	550
55	450
50	375
45	300
40	225
35	150
30	100
URBAN	50 MIN.

STATE OF FLORIDA DEPARTMENT OF TRANSPORTATION
TRAFFIC DESIGN

RAILROAD GRADE CROSSING TRAFFIC CONTROL DEVICES

	Names	Dates
Designed By	J.M.C.	10/26/77
Drawn By		
Checked By		
F.H.W.A. Approved:		

Approved By: Clark A. Hoyt
State Traffic Plans Engineer

Revision No.	Sheet No.	Index No.
92	3 of 4	17882

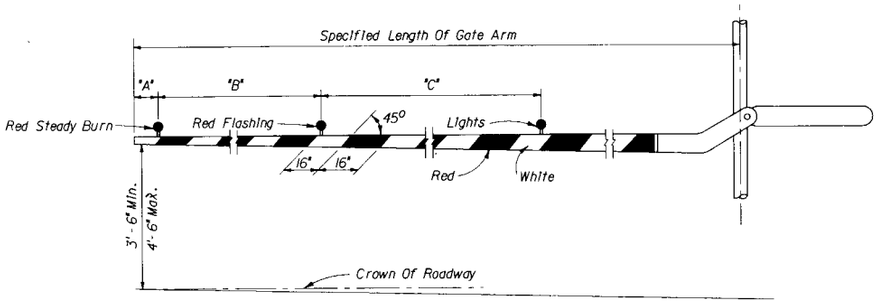

RAILROAD GATE ARM LIGHT SPACING

Specified Length Of Gate Arm	Dimension "A"	Dimension "B"	Dimension "C"
14 Ft.	6"	36"	5'-0"
15 Ft.	18"	36"	5'-0"
16 - 17 Ft.	24"	36"	5'-0"
18 - 19 Ft.	28"	41"	5'-0"
20 - 23 Ft.	28"	4'-0"	5'-0"
24 - 28 Ft.	28"	5'-0"	5'-0"
29 - 31 Ft.	36"	6'-0"	6'-0"
32 - 34 Ft.	36"	7'-6"	7'-0"
35 - 37 Ft.	36"	9'-0"	9'-0"
38 And Over	36"	10'-0"	10'-0"

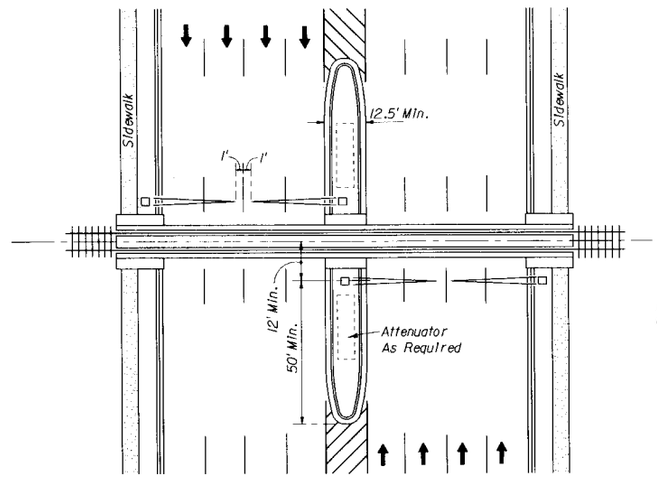

PLAN

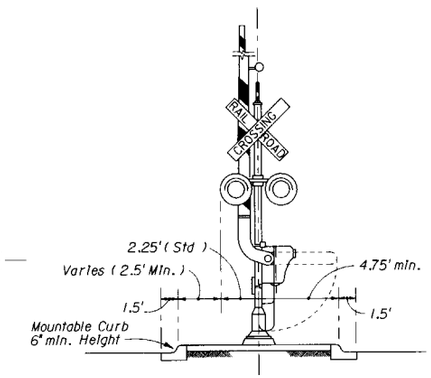

MEDIAN SECTION AT SIGNAL GATES

NOTE :

For additional information see the "Manual On Uniform Traffic Control Devices", Part VIII; The "Traffic Control Devices Handbook", Part VIII; and AASHTO "A Policy On Geometric Design Of Streets And Highways", 1984.

MEDIAN SIGNAL GATES FOR MULTI LANE UNDIVIDED URBAN SECTIONS

(FOUR OR MORE DRIVING LANES IN ONE DIRECTION, 45 MPH OR LESS)

STATE OF FLORIDA DEPARTMENT OF TRANSPORTATION
TRAFFIC DESIGN

RAILROAD GRADE CROSSING TRAFFIC CONTROL DEVICES

	Names	Dates
Designed By	JG	10/15/85
Drawn By	JG	10/15/85
Checked By		
F.H.W.A. Approved:		

Approved By: Charles A. Scott

Revision No.	Sheet No.	Index No.
88	4 of 4	17882

TYPICAL BRIDGE MOUNTS

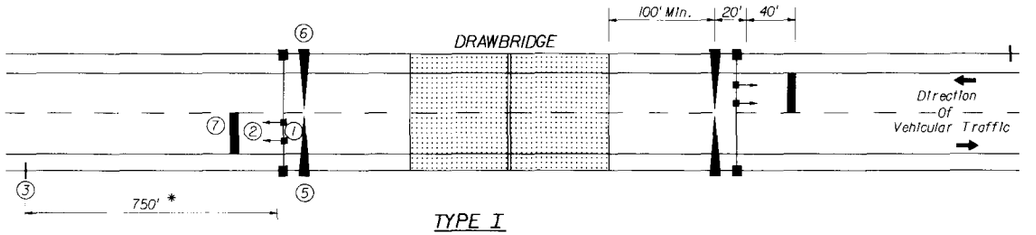

TYPE I

TO BE USED WHERE BRIDGE OPERATORS ARE FULL TIME OR A DAILY BASIS

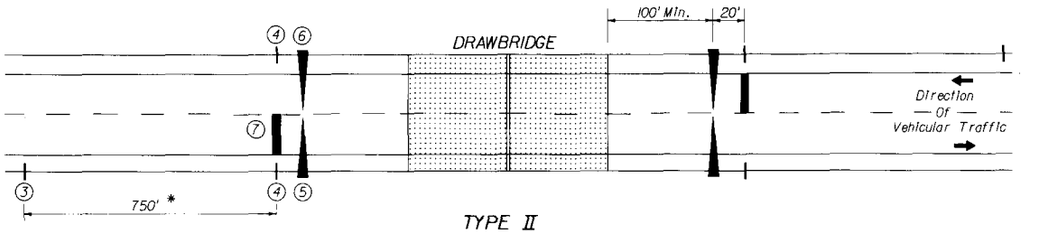

TYPE II

TO BE USED WHERE TYPE I IS NOT APPLICABLE (USUALLY WHEN THE BRIDGE OPERATOR IS "ON CALL")

* Field conditions may require adjustment of this standard distance.

SEQUENCE CHART

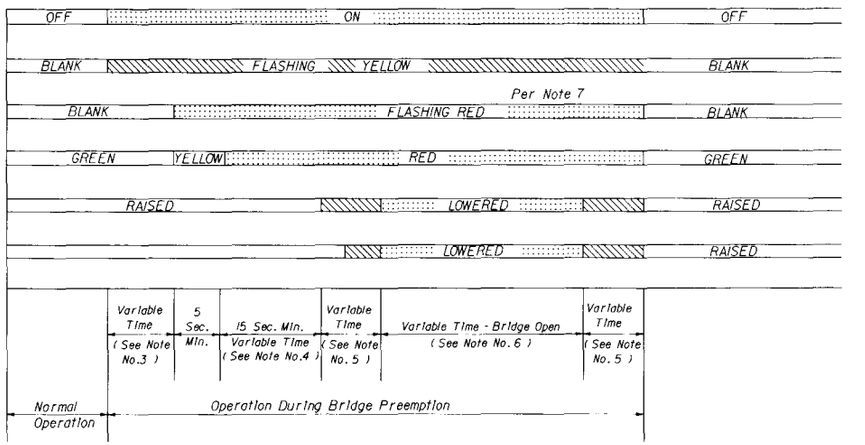

LEGEND

- (1) TRAFFIC SIGNALS — Mast Arm Mounted (Off Bridge)
- (2) DRAWBRIDGE SIGN — Monotube Support Mounted (On Bridge)
- (3) DRAWBRIDGE AHEAD SIGN — Ground Mounted
- (4) STOP HERE ON RED SIGN — Ground Mounted
- (5) ENTRANCE GATE
- (6) EXIT GATE
- (7) 24" THERMOPLASTIC STOP BAR

NOTES:

1. A bypass switch shall be installed to override each timing interval in case of a malfunction.
2. "STOP HERE ON RED" is omitted in Type I operation and "TRAFFIC SIGNALS" are omitted in Type II operation.
3. The time between beginning of flashing yellow on "Drawbridge Ahead" sign and the clearance of traffic signal to red, or beginning of flashing red, should not be less than the travel time of a passenger car, from the sign location to the stop line, traveling at the 85 percentile approach speed.
4. Beginning of operation of drawbridge gates shall not be less than 15 seconds after steady red or 20 seconds after flashing red (Actual time may be determined by the bridge tender.)
5. Time of gate lowering and raising is dependent upon gate type.
6. Time of bridge opening is determined by the bridge tender.
7. Each gate shall be operated by a separate switch.
8. On each approach (Type II), all four red signals shall be on the same two circuit flasher, with the two top signals on one circuit, and the two bottom signals on the alternately flashing circuit.
9. A drawbridge ahead sign is required for both types of signal operation. However a flashing beacon shall be added to the sign when physical conditions prevent a driver traveling at the 85% approach speed from having continous view of at least one signal indication for approximately 10 secs.
10. Requirements on gate installation are contained in Section 4E - 14 through 4E - 17 of the Manual on Uniform Traffic Control Devices as revised by Official Rulings, Volume VII Ruling sg 67.

STATE OF FLORIDA DEPARTMENT OF TRANSPORTATION
TRAFFIC DESIGN

TRAFFIC CONTROL DEVICES FOR MOVEABLE SPAN BRIDGE SIGNALS

	Names	Dates
Designed By	CG	04/07/75
Drawn By	RK	04/07/75
Checked By		
F.H.W.A. Approved:		

Approved By: Clark G. Scott

Revision No.	Sheet No.	Index No.
	1 of 3	17890

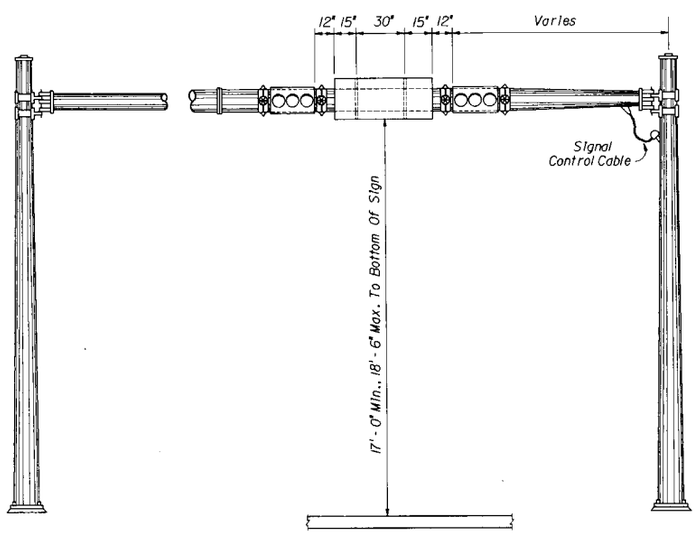

FIGURE - A

MONOTUBE SUPPORT MOUNTING

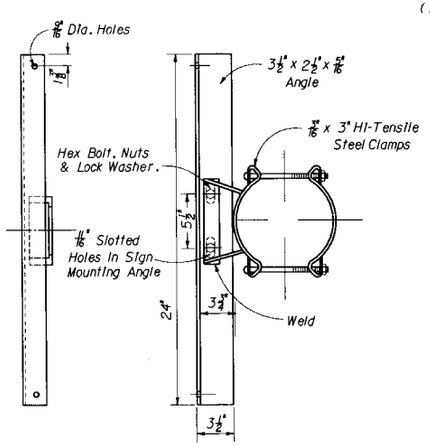

SIGN PANEL MOUNTING ASSEMBLY

FIGURE - B

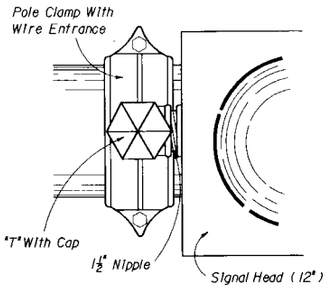

FIGURE - C

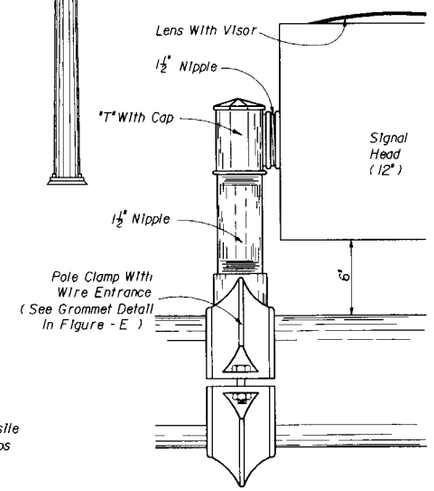

FIGURE - D

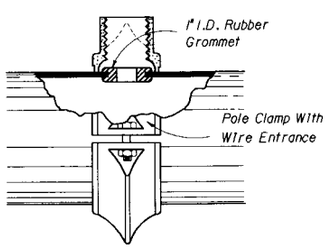

FIGURE - E

SIGNAL HEAD MOUNTING ASSEMBLY

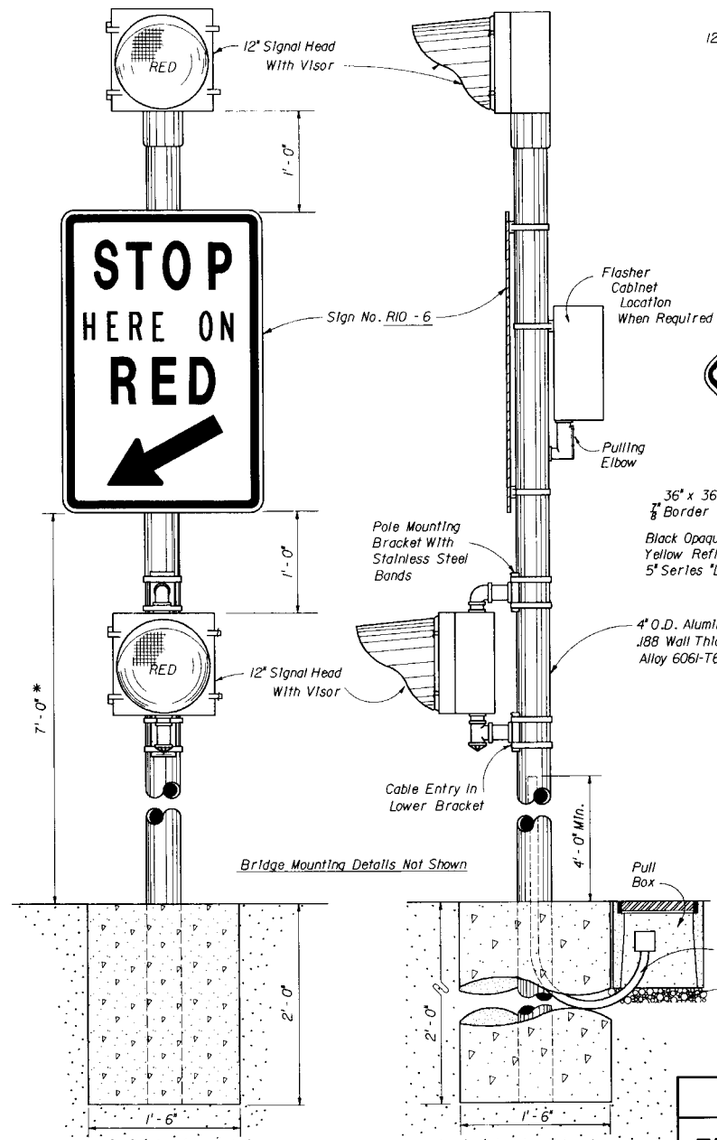

FIGURE - F

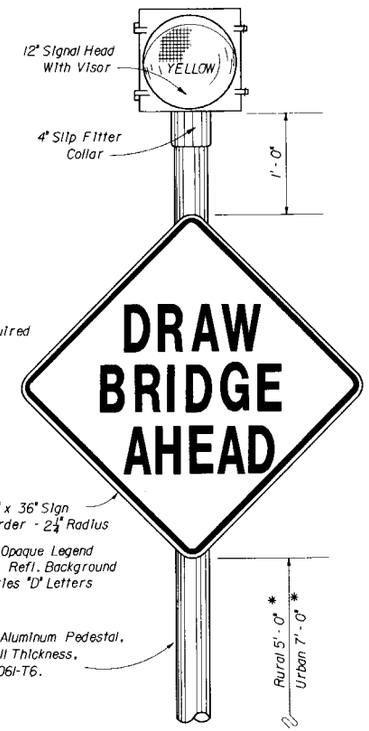

FIGURE - G

* Measured from the bottom of the sign to the near edge of the pavement. Horizontal distance between edge of the pavement and inside edge of sign will vary with condition at job site.

STATE OF FLORIDA DEPARTMENT OF TRANSPORTATION
TRAFFIC DESIGN

TRAFFIC CONTROL DEVICES FOR MOVEABLE SPAN BRIDGE SIGNALS

	Names	Dates
Designed By	CG	04-07-75
Drawn By		
Checked By	RK	04-07-75

F.H.W.A. Approved:

Approved By [signature]

Revision No.	Sheet No.	Index No.
	2 of 3	17890

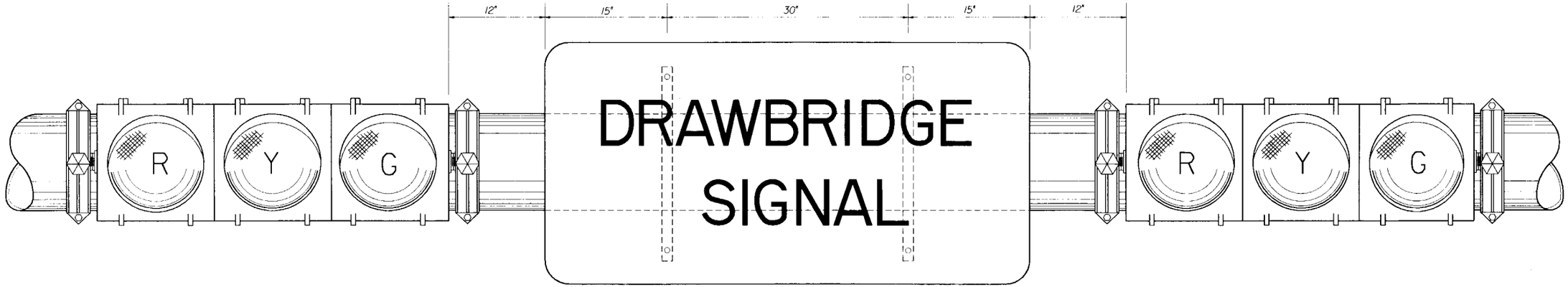

DRAWBRIDGE SIGNAL

2' - 6" x 5' - 0"
2" Border - 4" Radius
6" Series "D" Letters

BLACK OPAQUE LEGEND AND BORDER ON REFLECTORIZED YELLOW BACKGROUND

TO BE USED WITH TYPE I OPERATION, AS SHOWN ON PREVIOUS SHEET

MONOTUBE SUPPORT MOUNTING

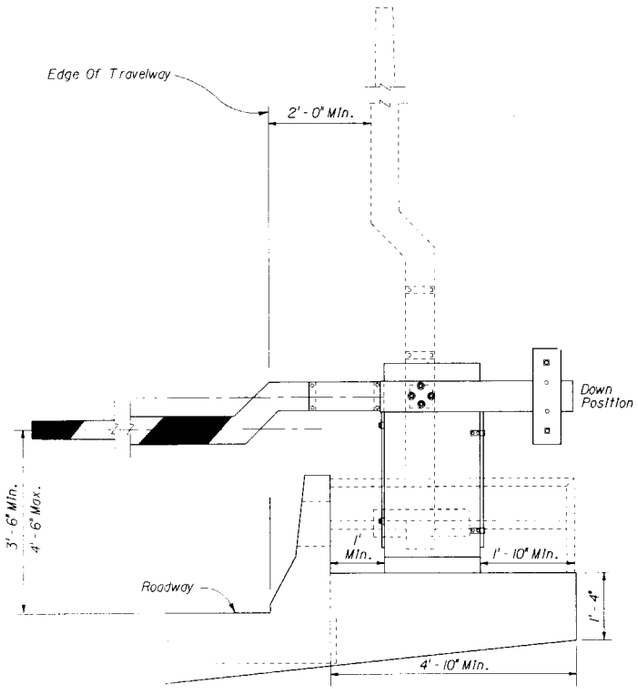

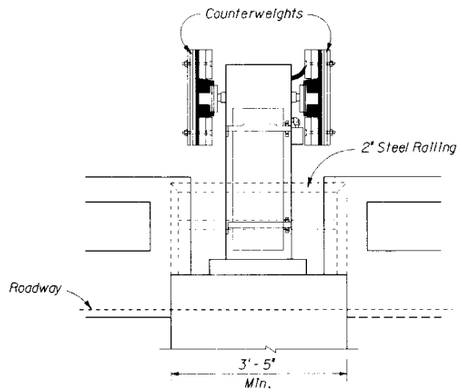

GATE & ARM DETAIL

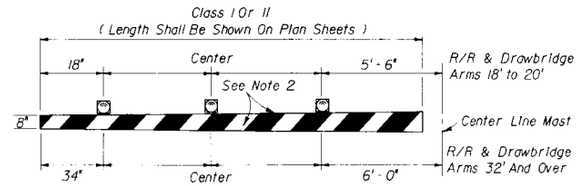

Note :
1. 12 volt flashing red light shall be mounted atop gate arm and shall operate in the flashing mode only when gate arm is in the lower position or in the process of being lowered. The number of lights shall vary accordingly to length of the gate arm.
2. 16" alternate diagonal fully reflectorized red and white stripes.

TYPICAL LAMP PLACEMENT

STATE OF FLORIDA DEPARTMENT OF TRANSPORTATION - TRAFFIC DESIGN

TRAFFIC CONTROL DEVICES FOR MOVEABLE SPAN BRIDGE SIGNALS

	Names	Dates
Designed By	J.M.C.	
Drawn By		
Checked By		
F.H.W.A. Approved:		

Approved By

Revision No.	Sheet No.	Index No.
	3 of 3	17890