STRUCTURES STANDARDS

JANUARY 1988

This document was promulgated at an annual cost of $8.71 per copy to provide Standards and criteria for the design, construction and maintenance of highway transportation facilities by governmental agencies, consultants, contractors and the citizens of the State of Florida.

TABLE OF CONTENTS

STANDARDS

INDEX	TITLE
	APPROACH SLABS
11463	APPROACH SLAB
11905	APPROACH SLAB (SIDEWALK)
	BEARING PADS
12037 CADD	COMPOSITE NEOPRENE BEARING PADS
	GRAVITY WALLS
11290	GRAVITY WALL
	LIGHT POLE PILEASTER
14302	LIGHT POLE PILEASTER DETAILS (SHEET 1 OF 2)
14302	LIGHT POLE PILEASTER DETAILS (SHEET 2 OF 2)
	NAVIGATIONAL LIGHTING
10616	VANDAL GUARD FOR NAVIGATION LIGHT
N/A	NAVIGATION SYSTEM DETAILS
N/A	FIXED BRIDGE NAVIGATION LIGHTING DETAILS
	PILES
14305	12" AND 14" PRESTRESSED CONCRETE PILES
14306	18" AND 20" PRESTRESSED CONCRETE PILES
14307	24" AND 30" PRESTRESSED CONCRETE PILES
	REINFORCING STEEL
10587 CADD	STANDARD BAR BENDING DETAILS
	RETAINING WALLS
14051	CANTILIVER RETAINING WALLS (SHEETS 1 THRU 23)
	TRAFFIC RAILING
14102 CADD	CONCRETE HANDRAIL (PARAPET TYPE-ALUMINUM)
14286	TRAFFIC RAILING (BARRIER)(SHEET 1 OF 2)
14286	TRAFFIC RAILING (SIDEWALK BARRIER TYPE AND BICYCLE TYPE) (SHEET 2 OF 2)

SEMI - STANDARDS

	AASHTO PRESTRESSED BEAMS
N/A	TYPICAL NOTES AND DETAILS FOR AASHTO TYPE II, III, AND IV PRESTRESSED BEAMS
N/A	PRESTRESSED BEAMS TYPE II
N/A	PRESTRESSED BEAMS TYPE III
N/A	PRESTRESSED BEAMS TYPE IV
	TIMBER BENTS FOR ACROW DETOUR BRIDGE
N/A	ONE AND TWO LANE SINGLE SINGLE EXTRA WIDE
N/A	TWO LANE SINGLE SINGLE DOUBLE WIDE
	TIMBER BENTS FOR BAILEY BRIDGE
N/A	ONE LANE SINGLE SINGLE (M-1 BAILEY)
N/A	ONE LANE SINGLE SINGLE (M-2 BAILEY)
N/A	TWO LANE SINGLE SINGLE (TYPE M-1 AND M-2)

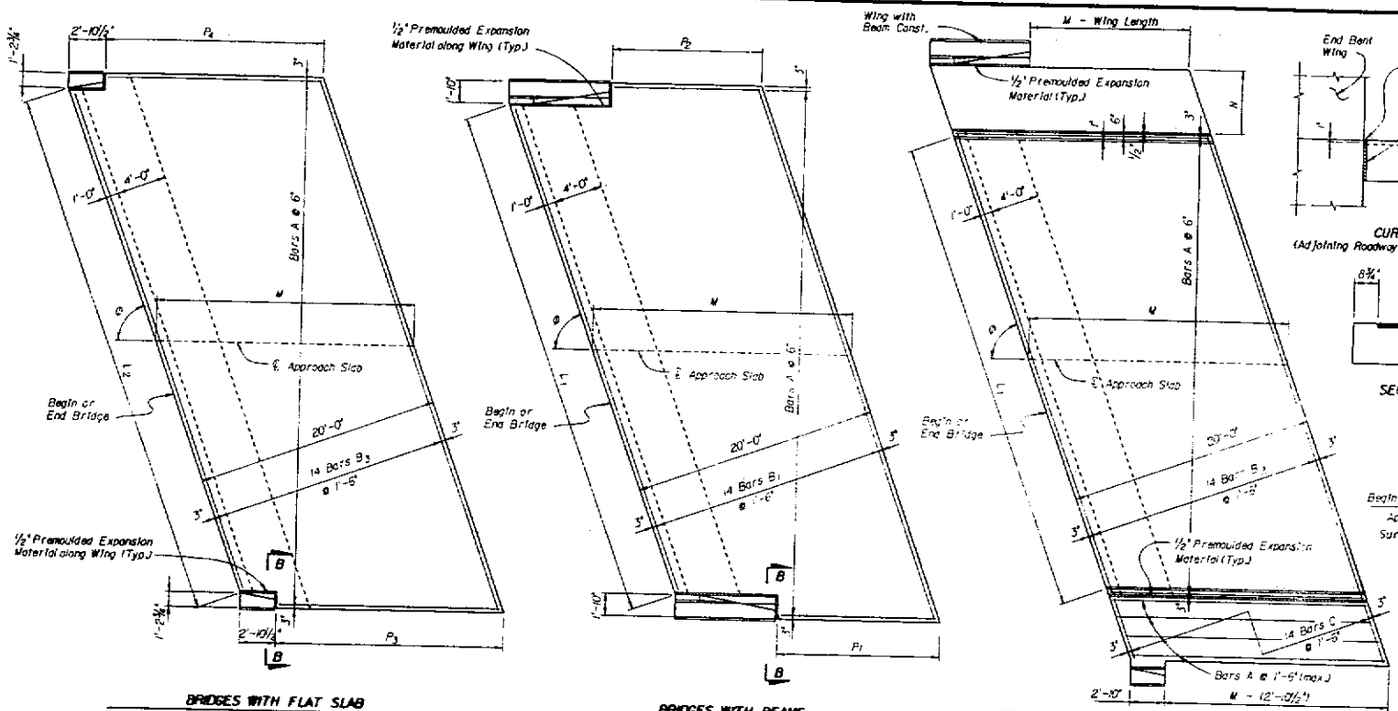

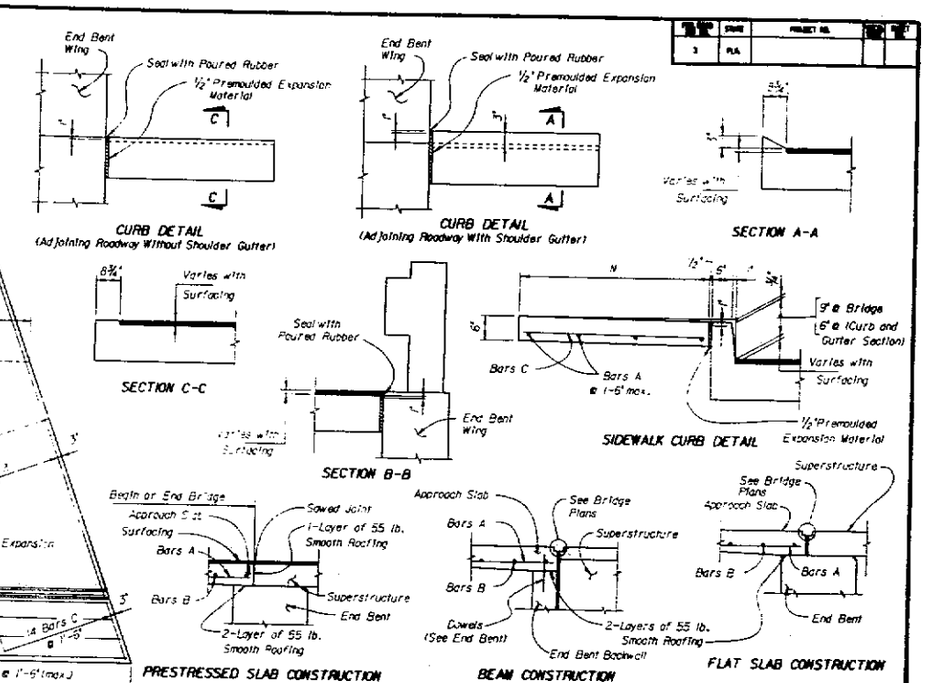

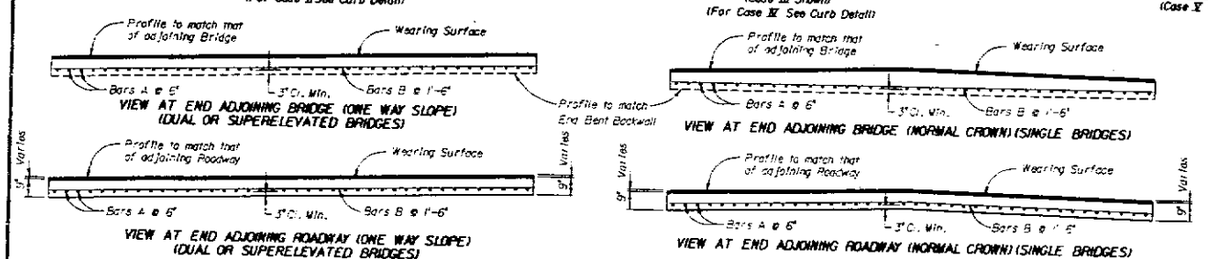

TABLE OF CASES	
Case I	Flat Slab Construction and adjoining Roadway with no Shoulder Gutter or Sidewalk
Case II	Flat Slab Construction and adjoining Roadway with Shoulder Gutter
Case III	Beam Construction and adjoining Roadway with no Shoulder Gutter or Sidewalk
Case IV	Beam Construction and adjoining Roadway with Shoulder Gutter
Case V	Flat Slab Construction and adjoining Roadway with Sidewalk
Case VI	Beam Construction and adjoining Roadway with Sidewalk

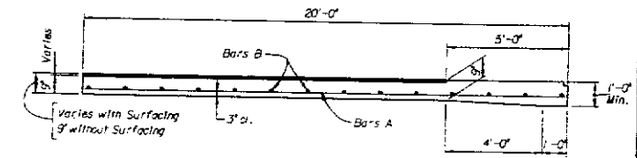

TYPICAL SECTION THRU SLAB
(Normal to End Bent)

NOTES

Concrete shall be Class II, fc =1360 psi., f'c =3400 psi.

Reinforcing Steel shall be Grade 60, fs =24,000 psi.

Bars A & B shall be cut to clear concrete by 2" min. where necessary due to wings, etc.

Concrete & Steel Quantities are for one Approach Slab only.

Wearing Surface is omitted where Approach Roadway Paving consists of Surface Treatment or Concrete.

Surfacing Quantity on Approach Slab where applicable should be included in Roadway Paving Quantity. Thickness of surfacing shall match the final Roadway Surface Course.

MARK	A	B1	B2	B3	C	Reinforcing Steel Weight (Lbs.) 40' RDWY	44' RDWY	48' RDWY	Skew Angle φ	Concrete Volume (Cu. Yd.) 40' RDWY	44' RDWY	48' RDWY
SIZE	5	4	4	4	4							
LENGTH	19.5000 / Sin φ	L1 + (3.1667 / Sin φ)	L1 + (.6667 / Sin φ)	L2 + (1.9167 / Sin φ)	N - .5000 / Sin φ	2138	2340	2591	90°	24.40	26.84	29.32
						2156	2399	2601	85°	24.49	26.94	29.39
						2222	2427	2631	80°	24.78	27.25	29.73
						2265	2474	2682	75°	25.26	27.79	30.31
						2328	2543	2757	70°	25.97	28.56	31.16
						2414	2637	2859	65°	26.92	29.61	32.31
						2526	2760	2992	60°	28.17	30.99	33.81
						2671	2918	3163	55°	29.79	32.77	35.74
						2856	3120	3392	50°	31.85	35.04	38.22
						3094	3390	3664	45°	34.51	37.96	41.41
						3404	3718	4031	40°	37.96	41.76	45.55
						3815	4167	4517	35°	42.54	46.79	51.05
						4376	4780	5182	30°	48.80	53.68	58.56

Additional Quantities Concrete (Cu. Yd.) Case I	Case II	Case III	Case IV	Case V	Case VI	Steel (Lbs.) Case V or VI
(2.0310 / Sin φ) - .2059	.1008H + (2.0310 / Sin φ) - .2059	.0145 + (.0569H1 + P2)	.0045 + (.0569H1 + P2) + .0068H	.0569 + (2M(.0314 + .0185N))	2M(.0314 + .0185N)	(31.923 + (6.1040 N) / Sin φ)

TABLE OF DIMENSIONS	
L	Roadway Width / Sin φ
L2	Roadway Width ÷ .2588 / Sin φ
M	20 / Sin φ or arc length, see Bridge Plan & Elevation
N	Match Superstructure
P1	M - Wing Length + .8333 / Tan φ - .0417
P2	M - Wing Length - .8333 / Tan φ - .0417
P3	M + 1.2292 / Tan φ - 2.8750
P4	M - 1.2292 / Tan φ - 2.8750
R	(P1 & or P2 & or P3 & or P4) on sides of slabs with shoulder gutter
φ	See Bridge End Bents

APPROACH SLABS

REVISIONS		
Date	Description	
12-87	Redrawn on CADD. Revised Concrete Quantities.	

STATE OF FLORIDA DEPARTMENT OF TRANSPORTATION
BUREAU OF STRUCTURES

	Name	Date
Drawn by	DCP	2-87
Checked by	WEH	12-87
Reviewed by	DCP	12-87
Checked by	WEH	12-87
Submitted by		

CHIEF, BUREAU OF STRUCTURES

Sheet No. 1 of 1 — Dwgs. No. 11463

STR120JS12APPRSLAB1.DGN

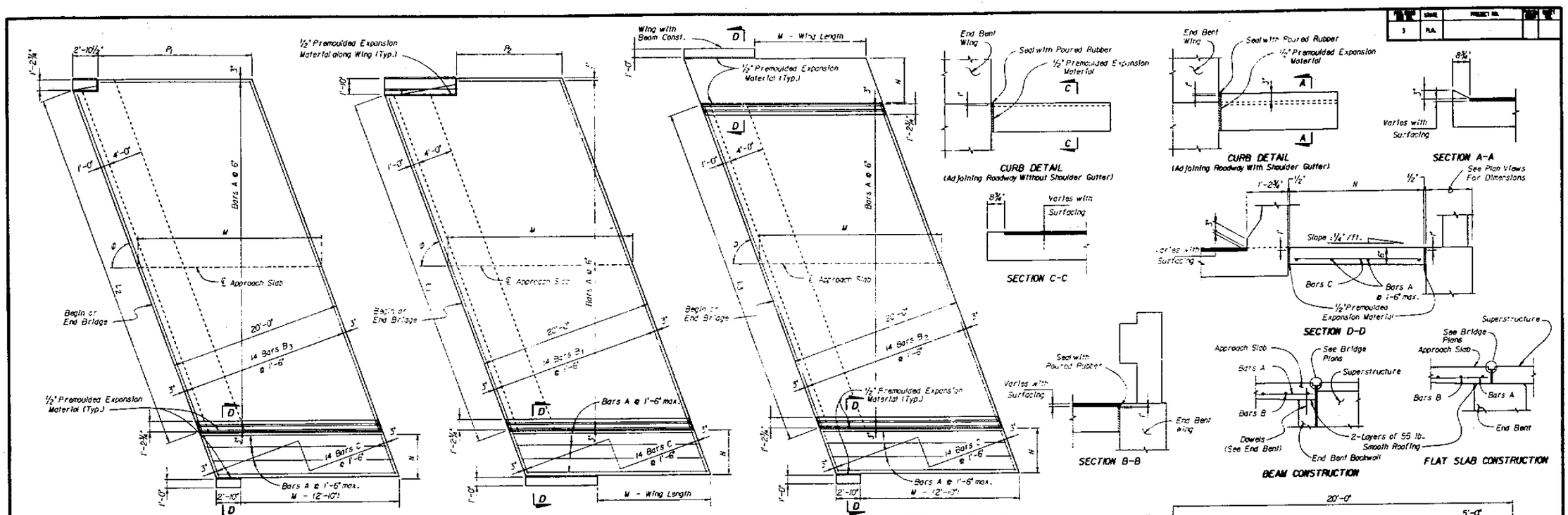

TABLE OF CASES

Case I	Flat Slab Construction and adjoining Roadway with Sidewalk on one side and no Shoulder Gutter
Case II	Flat Slab Construction and adjoining Roadway with Sidewalk on one side Shoulder Gutter on the opposite side
Case III	Flat Slab Construction and adjoining Roadway with sidewalk on both sides
Case IV	Beam Construction and adjoining Roadway with Sidewalk on one side and no Shoulder Gutter
Case V	Beam Construction and adjoining Roadway with Sidewalk on one side and Shoulder Gutter on opposite side
Case VI	Beam Construction and adjoining Roadway with Sidewalk on both sides

NOTES

Concrete shall be Class II, fc =1360 psi., fc =3400 psi.

Reinforcing Steel shall be Grade 60, fs =24,000 psi.

Bars A & B shall be cut to clear concrete by 2" min. where necessary due to wings, etc.

Concrete & Steel Quantities are for one Approach Slab only.

Wearing Surface is omitted where Approach Roadway Paving Consists of Surface Treatment or Concrete.

Surfacing Quantity on Approach Slab where applicable shall be included in Roadway Paving Quantity. Thickness of surfacing shall match the final Roadway Surface Course.

REINFORCING STEEL

MARK	A	B_1	B_2	B_3	C
SIZE	5	4	4	4	4
LENGTH	$\frac{19.5000}{\sin\phi}$	$L_1+\left(\frac{1.8333}{\sin\phi}-.5000\right)$	$L_3-\left(\frac{.5000}{\sin\phi}\right)$	$L_2+\left(\frac{1.2292}{\sin\phi}-.5000\right)$	$\frac{N-.5000}{\sin\phi}$

BAR LENGTH (FT)	WEIGHT (Lbs.) 40' ROWY	44' ROWY	48' ROWY	SKEW ANGLE φ	CONCRETE VOLUME (CU. YD.) 40' ROWY	44' ROWY	48' ROWY
19.5000	2147	2347	2547	90°	24.40	26.84	29.28
19.4333	2155	2356	2557	85°	24.49	26.94	29.39
19.3000	2180	2393	2555	80°	24.78	27.25	29.73
19.1667	2222	2429	2637	75°	25.26	27.79	30.31
19.0000	2284	2497	2710	70°	25.97	28.56	31.16
18.8333	2368	2589	2810	65°	26.92	29.61	32.31
18.6667	2479	2710	2941	60°	28.17	30.99	33.81
18.5000	2620	2865	3109	55°	29.79	32.77	35.74
18.3333	2802	3063	3325	50°	31.86	35.04	38.22
18.1667	3036	3319	3602	45°	34.51	37.96	41.41
18.0000	3339	3651	3962	40°	37.96	41.76	45.55
17.8333	3742	4091	4440	35°	42.54	46.79	51.05
17.6667	4293	4693	5093	30°	48.80	53.68	58.56

ADDITIONAL QUANTITIES

CONCRETE (CU. YD.) Case I	Case II	Case III	Case IV	Case V	Case VI	STEEL (Lbs.) Case I, II, IV, V	Case III & VI
M(.0862 + .0184H) + .1005	M(.0862 + .0184H) + .1005	2M(.0351 + .0184H)	(.0504H₁ + M(.0151 + .0184H))	(.0504H₂ + M(.0351 + .0184H) + .0068H)	2M(.0351 + .0184H)	(29.6805M − 4.6760) / sin φ	(19.0425M − 14.0280) / sin φ

TABLE OF DIMENSIONS

L_1	(Rdwy Width + 1.2292) / Sin φ
L_2	(Rdwy Width + 1.2292 − .6042) / Sin φ
L_3	(Rdwy Width + 2(1.2292)) / Sin φ
M	20 / Sin φ or (Span Length, see Bridge Plan & Elevation)
N	Match Superstructure
P_1	M − 1.2292 / Tan φ − 2.8750
P_2	M − Wing Length − 1.8333 / Tan φ − .0417
R	P_1 or P_2 on side with Shoulder Gutter
φ	See Bridge End Bents

APPROACH SLABS (SIDEWALK)

REVISIONS	
Date	Description
12-87	Approved on 2400. Revised Concrete Quantities

STATE OF FLORIDA DEPARTMENT OF TRANSPORTATION
BUREAU OF STRUCTURES

	Name	Date
Drawn by	DCP	12-87
Checked by	WEH	12-87
Quantities by	DCP	12-87
Checked by	WEH	12-87
Supervised by		

APPROVED BY
CHIEF BUREAU OF STRUCTURES

Sheet No. 1 of 1
Index No. 11905

ST6\120\501\APPRSLAB2.DGN
Version 1-12-88

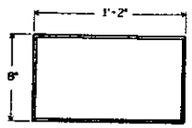

PLAN

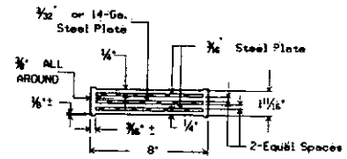

TYPICAL SECTION

COMPOSITE PAD
FOR TYPE II BEAMS

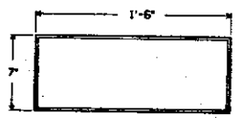

PLAN

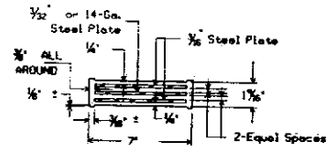

TYPICAL SECTION

COMPOSITE PAD
FOR TYPE III BEAMS

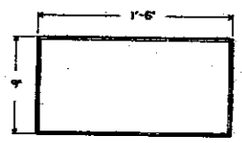

PLAN

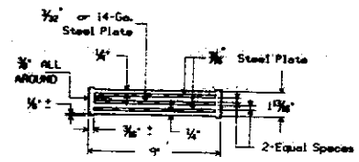

TYPICAL SECTION

COMPOSITE PAD
FOR TYPE IV BEAMS

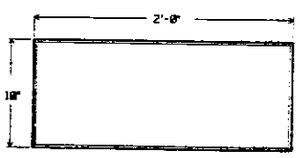

PLAN

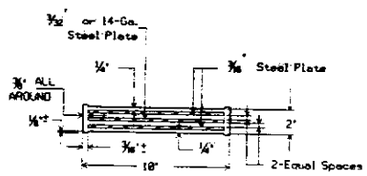

TYPICAL SECTION

COMPOSITE PAD
FOR TYPE V & VI BEAMS

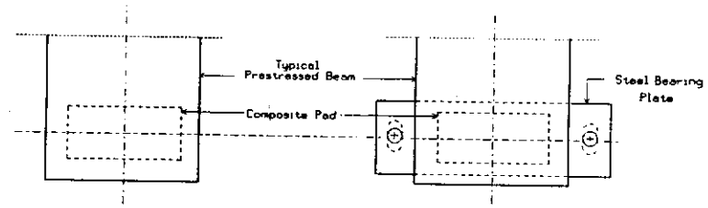

STRAIGHT BRIDGE

STRAIGHT BRIDGE

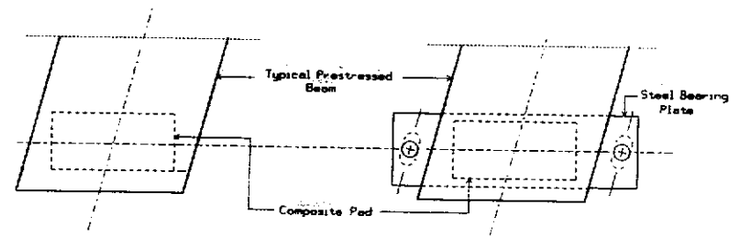

SKEWED BRIDGE

SKEWED BRIDGE

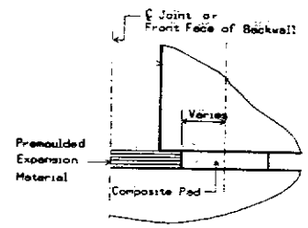

TYPICAL PAD DETAIL
INTERIOR BEAM

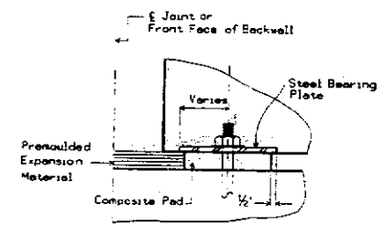

TYPICAL PAD DETAIL
EXTERIOR BEAM

GENERAL NOTES

Neoprene in all Bearing Pads shall have a Grade 50 durometer hardness.

Steel Plates in composite pads shall conform to A.S.T.M. A-36, A-245 Grade C or D, A-570 Grade C, or SAE 1010 or SAE 1020.

Variations in pad dimensions will be allowed provided revised pads will meet the current specifications and are approved by the Engineer.

Bearing seat shall be finished parallel to the bottom of Beam.

Steel Bearing Plates, Anchor Bolts, Nuts and Washers shall be hot dip galvanized in accordance with A.S.T.M. Specification A-123. Payment for steel bearing plate assemblies shall be included in the Contract Unit Price for Prestressed Beams or Structural Steel. For location and details of Bearing Plates see Beam sheets.

3	N/A		

REVISIONS

STATE OF FLORIDA DEPARTMENT OF TRANSPORTATION
BUREAU OF STRUCTURES

COMPOSITE NEOPRENE BEARING PADS

Drawn by	H.R.F.	11-85
Checked by	R.D.S.	1-86
Approved by		
Checked by		
Approved by	A.G.M.	

APPROVED BY
Chief Engineer, Bureau of Structures

Drawing No. 1 of 1

Index No. 12037 CADD

ST1:120.1:1\BEAMPAD2.DGN

3	F.A.		74	A-5

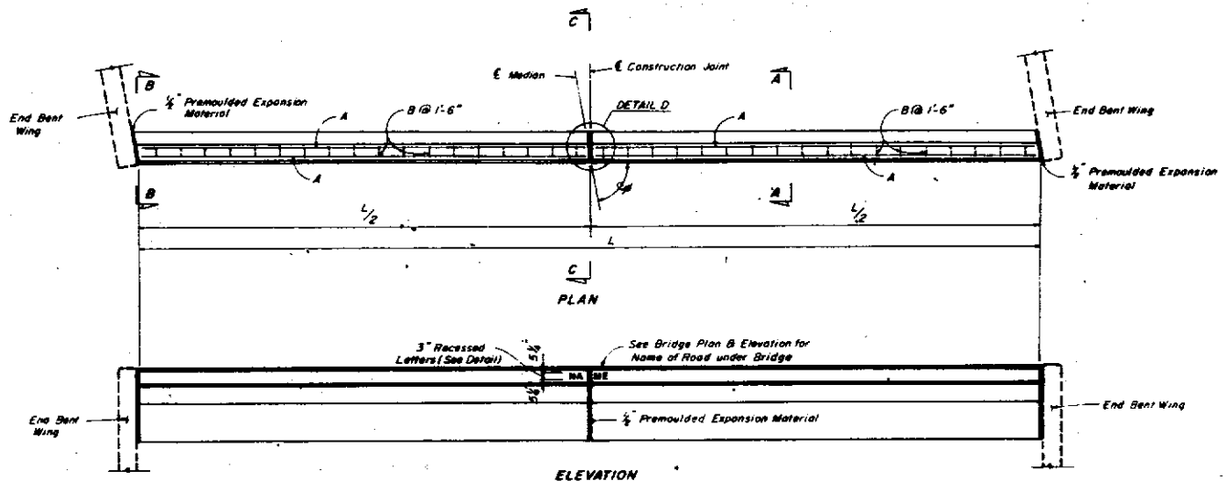

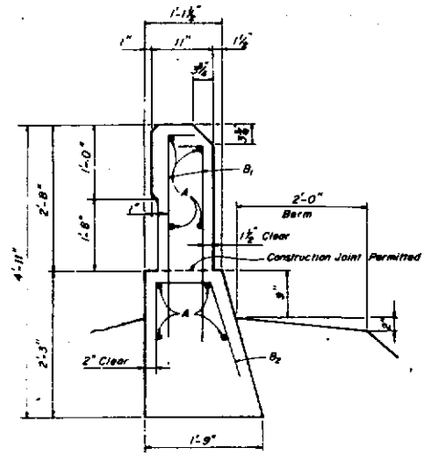

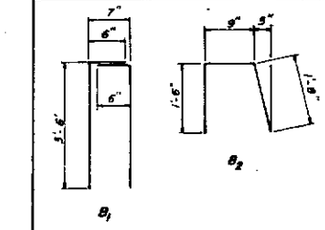

BILL OF REINFORCING STEEL				
MARK	SIZE	NO. REQ'D.	LENGTH	BENDING
A	5	16	½ - 5"	Straight
B_1	5	VARIES	8'-0"	See Diagram
B_2	5	VARIES	3'-11"	" "
C	6	4	1'-6"	Straight

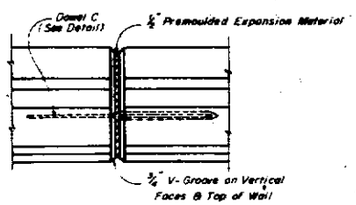

DETAIL D

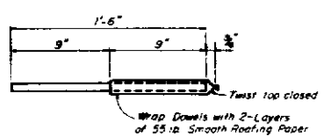

DOWEL BAR DETAIL

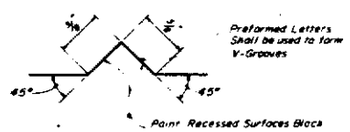

LETTER DETAIL

NOTE: Imbedded Black Plastic Letters & Figures 3" in height, Approved by the Engineer, may be used in lieu of preformed letters & figures formed by V-Grooves.

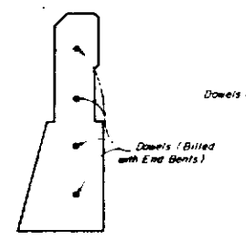

SECTION B-B

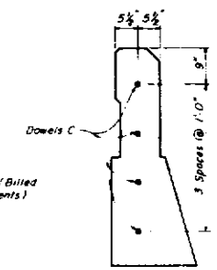

SECTION C-C

DIMENSIONS			
CASE I	$L = \frac{49.6667}{\sin \phi}$		
CASE II	$L = \frac{73.6667}{\sin \phi}$		

NOTES

Bill of Reinforcing Steel and Concrete & Steel Quantities are for one Gravity Wall only.

Concrete shall be Class II, $f_c = 1360$ psi, $f'_c = 3400$ psi. Payment shall be included in the Contract Unit Price for Class II Concrete (Substructure).

Reinforcing Steel shall be Grade 60, $f_s = 24{,}000$ psi. Payment shall be included in the Contract Unit Price for Reinforcing Steel (Substructure).

See Bridge Plan & Elevation for ϕ.

ESTIMATED QUANTITIES				
SKEW	CASE I		CASE II	
ϕ	CONCRETE CU. YD.	STEEL LBS.	CONCRETE CU. YD.	STEEL LBS.
90°	10.09	816	14.97	1,238
85°	10.13	940	15.03	1,240
80°	10.25	946	15.20	1,249
75°	10.45	854	15.50	1,284
70°	10.74	891	15.93	1,303
65°	11.14	908	16.52	1,352
60°	11.66	954	17.29	1,432
55°	12.33	1,005	18.29	1,500
50°	13.18	1,089	19.55	1,601
45°	14.28	1,185	21.18	1,741
40°	15.71	1,294	23.30	1,881
35°	17.60	1,447	26.11	2,144
30°	20.19	1,652	29.95	2,430

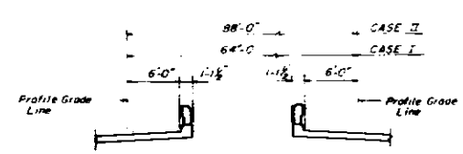

MEDIAN WIDTH

STATE OF FLORIDA DEPARTMENT OF TRANSPORTATION
STRUCTURES

GRAVITY WALL

	Name	Date
Designed by	JAO	1-73
Checked by	WEH	7-73
Quantities by	JAO	1-73
Checked by	WEH	7-73
Recommended by	SHN	

APPROVED BY

Drawing No. 1 of 1

Index No. 11290

FED. ROAD DIST. NO.	STATE	PROJECT NO.	TOTAL SHEETS	SHEET NO.
3	FLA.			

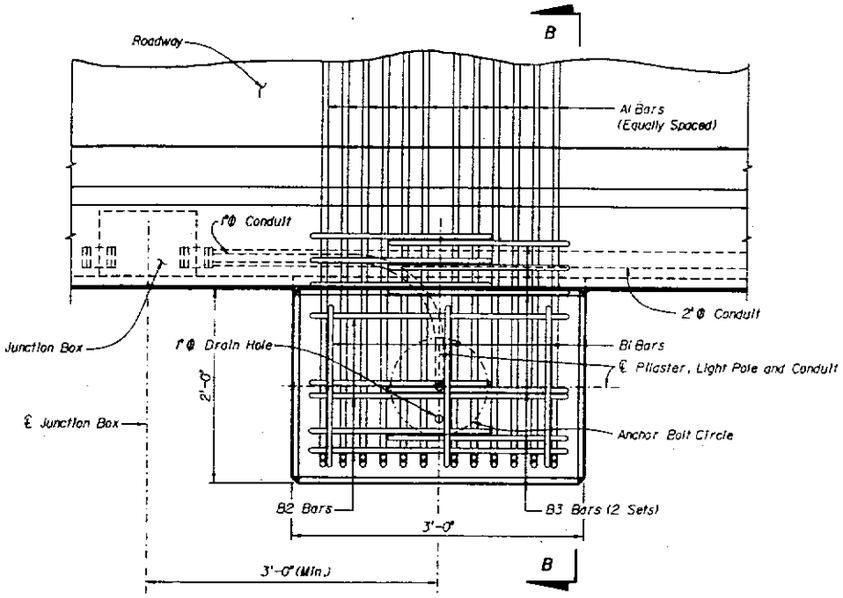

PLAN

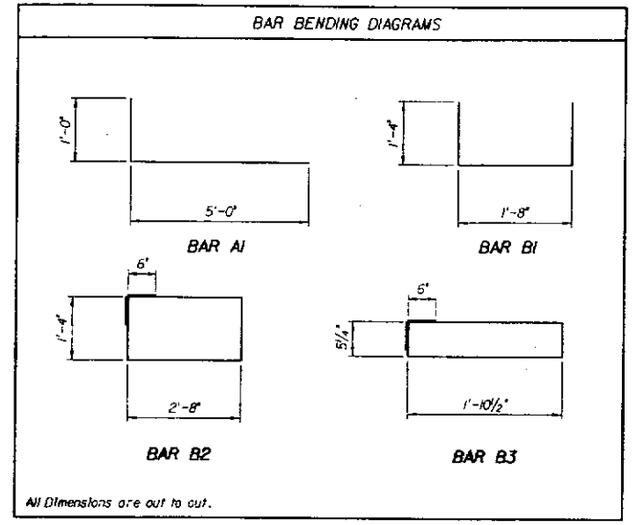

BILL OF REINFORCING STEEL				
MARK	SIZE	NO. REQ'D	LENGTH	BENDING
A1	#6	24	6'-0"	See Diagram
B1	#5	3	4'-4"	" "
B2	#5	3	9'-0"	" "
B3	#5	10	5'-7"	" "

* Quantities and Bill of Reinforcing Steel are for one Pilaster.

NOTES

1. Material Requirements for Concrete and Reinforcing Steel for Pilaster shall meet the same requirements as that for the Bridge Superstructure. Except Concrete shall have a minimum f'c = 3400 psi and Reinforcing Steel shall be Grade 60.
2. A1 Bars shall be Spaced with a Minimum of 1 1/2" Clearance and shall be tied to the Main Superstructure Steel prior to placing the Concrete.
3. Top of the Pilaster shall be finished Level.
4. Light Pole Pilasters are designed to resist the following Working Loads applied at the top of the Pilaster:

Longitudinal Moment	=	30,000 Ft. Pounds
Transverse Moment	=	6,000 Ft. Pounds
Longitudinal Shear	=	1,000 Pounds
Transverse Shear	=	200 Pounds
Torsion	=	3,000 Ft. Pounds
Axial	=	400 Pounds

5. If the Light Pole provided applies greater Loads than the Design Loads in note #4 the Contractor shall submit a Design for the Pilaster to the Department for Review and Approval. This Design Shall be Signed and Sealed by a Professional Engineer Registered in the State of Florida, Qualified to perform the work.
6. The Contractor is responsible for providing Anchor Bolts that Effectively transmit the Light Pole Loads into the Pilaster and Fit within the Reinforcing cage. The Contractor shall submit Calculations Signed and Sealed by a Professional Engineer Registered in the State of Florida to the Department for Review and Approval showing that these Requirements have been met prior to Construction.
* 7. Quantities Required
   Concrete = .39 Cu. Yds.
   Reinforcing Steel = 316 Lbs.

Concrete and Reinforcing Steel shall conform to the following Environmental Requirements:

Environment	Concrete	Reinforcing Steel
Slightly Aggressive	II	Black
Moderately Aggressive	IV	Black
Extremely Aggressive	IV	Epoxy

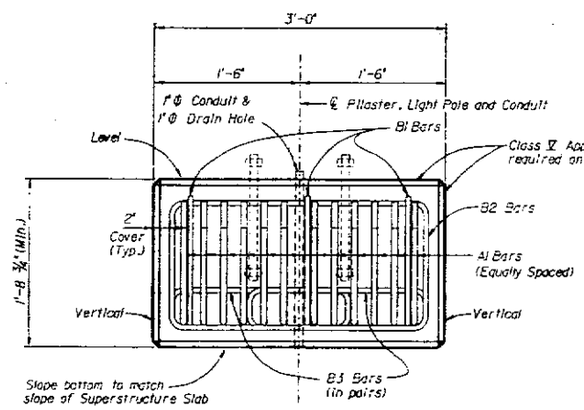

VIEW A-A

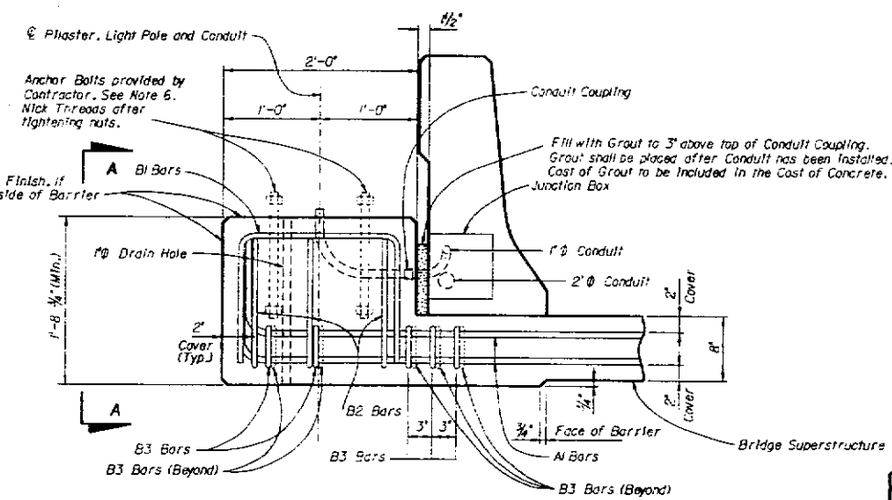

SECTION B-B

LIGHT POLE PILASTER

LIGHT POLE PILASTER DETAILS

REVISIONS	
Date	Description

STATE OF FLORIDA DEPARTMENT OF TRANSPORTATION
BUREAU OF STRUCTURES

Drawn by	DCP	1-88	
Checked by	MHA	1-88	
Submitted by	DCP	1-88	
Checked by	MHA	1-88	
Supervised by			

Approved by: Larry J. Bellmann
CHIEF, BUREAU OF STRUCTURES

Drawing No. 1 of 2 | Index No. 14302

ST14(120.15)LIGHT.DGN

FED. ROAD DIV. NO.	STATE	PROJECT NO.	SHEET NO.	TOTAL SHEETS
3	FLA.			

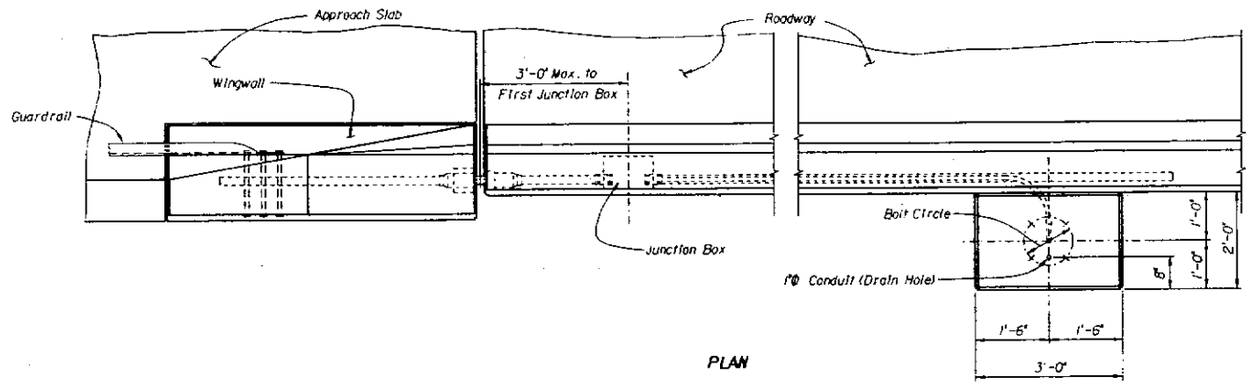

PLAN

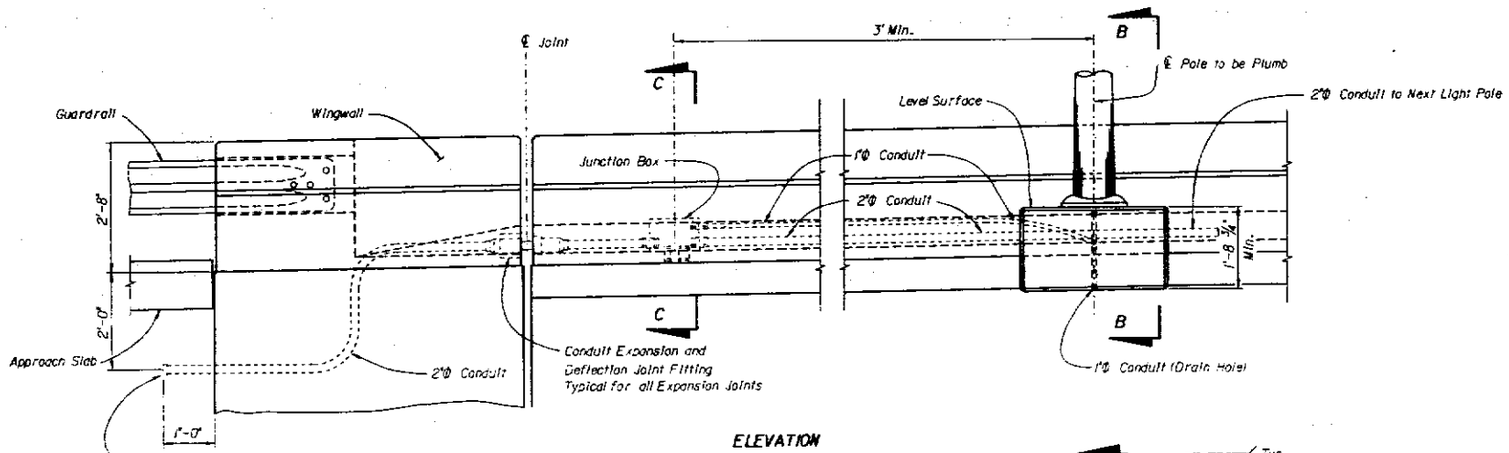

ELEVATION

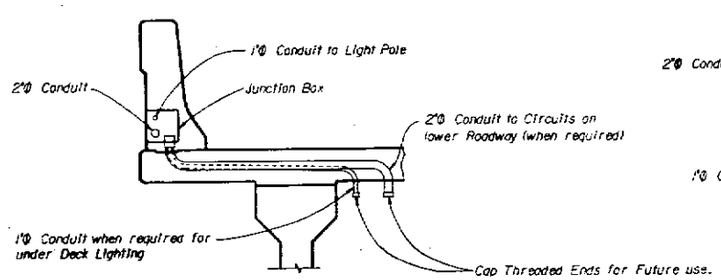

SECTION C-C

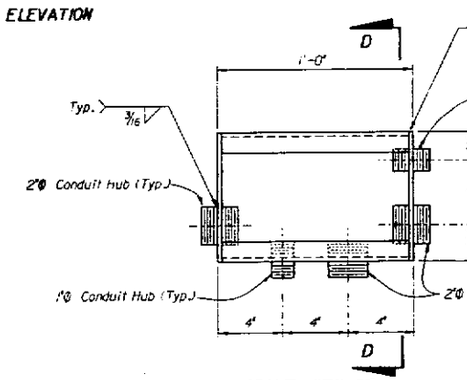

FRONT VIEW OF JUNCTION BOX
(Cover removed)

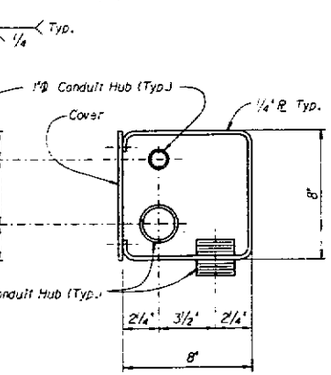

SECTION D-D

NOTE: Cap all unused Conduit.

NOTES

1. Junction Boxes are to be Fabricated from Steel conforming to A.S.T.M. A-36 and Hot Dipped Galvanized after Fabrication, or be Molded P.V.C.
2. The Bid Price for Concrete Superstructure shall Included all Electrical Conduit, Conduit Expansion Couplings, Junction Boxes and miscellaneous Mounting Hardware necessary for complete Installation of Electrical work on the Abutment or Slab where such Items occur.
3. Payment: Concrete and Reinforcing Steel to be Included in the Contract Unit Price for the Concrete (Superstructure) and Reinforcing Steel (Superstructure) Required. See Sheet 1 of 2 for Quantities for one Pilaster. Class of Concrete and Requirement for Epoxy-Coated Reinforcing Steel.
4. For Location of additional Junction Boxes required for under deck Lighting, Etc: See Roadway Lighting Plans.
5. For Section B-B, See Sheet 1 of 2.
6. For Details not shown, See Sheet 1 of 2.
7. Anchor Bolts shall be Included in the Cost of the Light Poles.
8. A Junction Box shall be mounted a Maximum of 3' from the Wingwall on each end of the Bridge.
9. Install Junction Boxes at each Light Pole on Structure. (Detail this Sheet)
10. Conduit shall be Rigid Galvanized Steel or Schedule 40 P.V.C.

LIGHT POLE PILASTER DETAILS

REVISIONS	
Date	Description

STATE OF FLORIDA DEPARTMENT OF TRANSPORTATION
BUREAU OF STRUCTURES

	Name	Date
Drawn by	DCP	12-87
Checked by	MHA	12-87
Quantities by		
Checked by		
Supervised by		

APPROVED BY: Gary L. Gallimore
CHIEF, BUREAU OF STRUCTURES

Drawing No. 2 of 2
Index No. 14302

STN0120 J51 LIGHT2.DGN

FED. ROAD DIV. NO.	STATE	PROJECT NO.	FISCAL YEAR	SHEET NO.
3	FLA.			

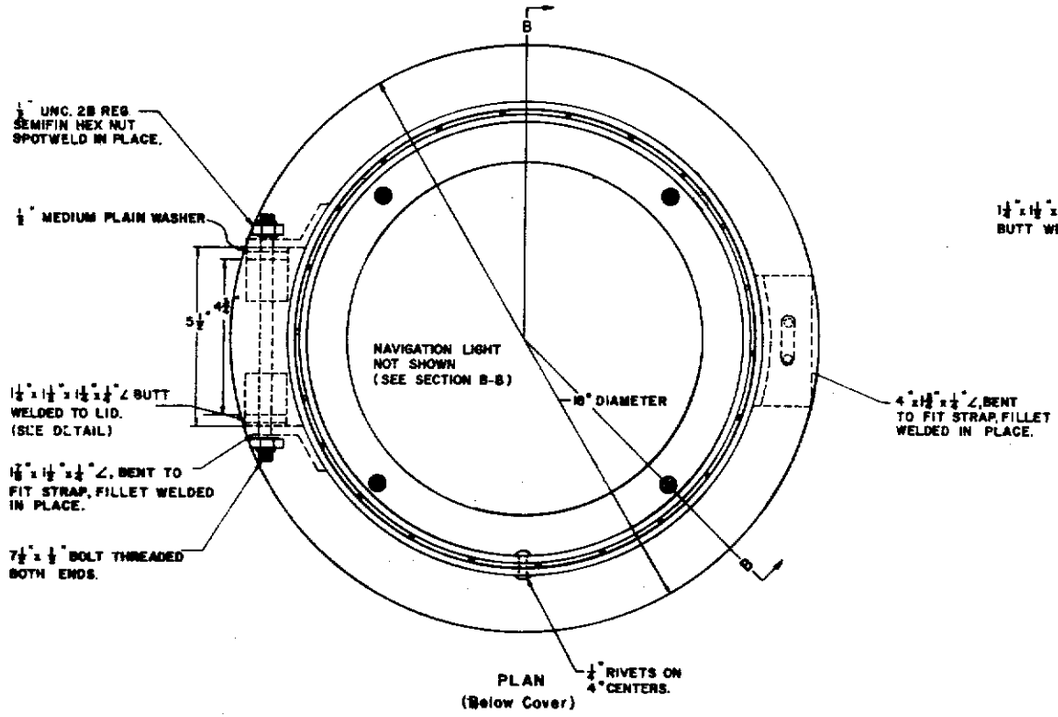

PLAN
(Below Cover)

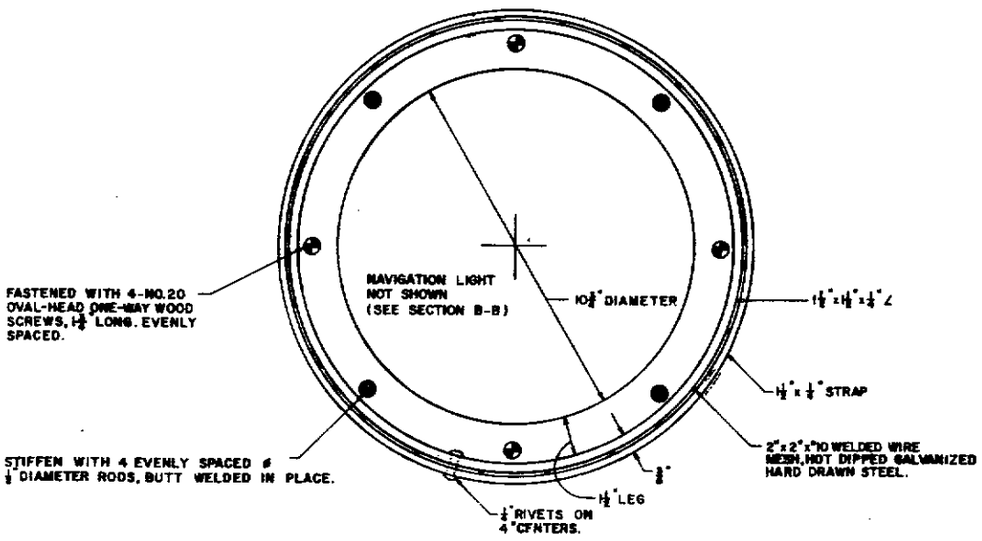

SECTION A-A

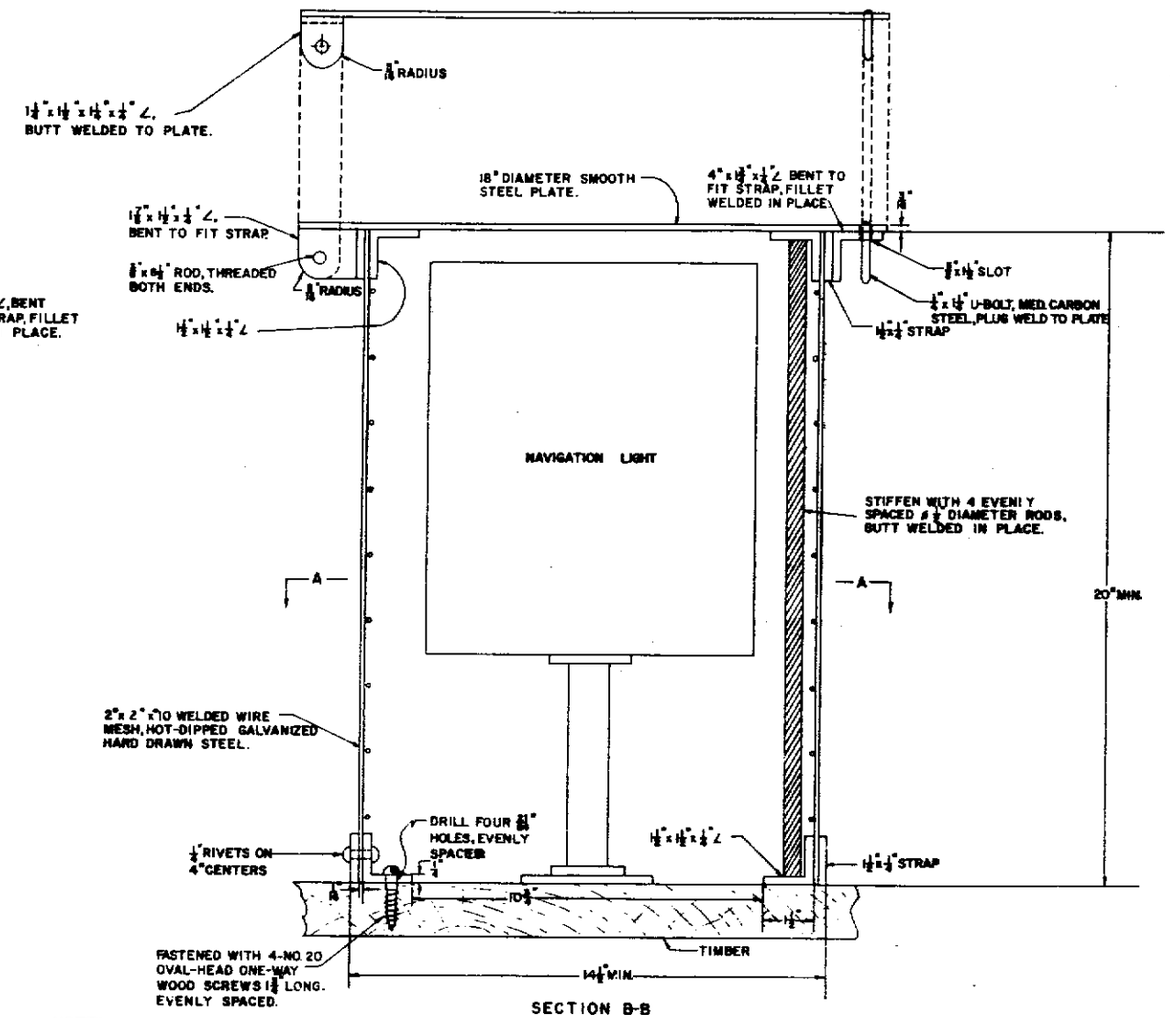

SECTION B-B

NOTE: ANGLES, STRAPS, PLATE, AND RODS SHALL CONFORM TO A.S.T.M. SPECIFICATION A-36.

BOLT, NUTS, WASHERS, AND U-BOLT SHALL CONFORM TO A.S.T.M. SPECIFICATION A-36 OR A-307.

ALL MATERIALS LISTED ABOVE SHALL BE HOT DIPPED GALVANIZED IN ACCORDANCE WITH REQUIREMENTS OF A.S.T.M. SPECIFICATION DESIGNATION A-123.

B AND D TYPE MS 53 PM-VR PIER LIGHT MAY BE USED IN LIEU OF GUARD SHOWN

REVISIONS	
Date	Descriptions
8-72	ALTERNATE ADDED

STATE OF FLORIDA DEPARTMENT OF TRANSPORTATION
STRUCTURES

VANDAL GUARD FOR NAVIGATION LIGHT

ROAD NO.	COUNTY	PROJECT NO.

	Name	Date
Designed by	WHD	9/21/70
Checked by	PB	9/21/70
Quantities by		
Checked by		
Recommended by	R.C.R.	

APPROVED BY: Assoc. Design Engineer, Structures

Drawing No. 1 of 1

Index No. 10616

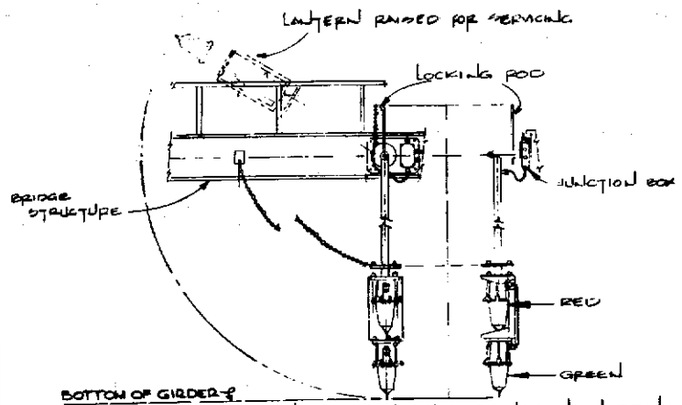

TYPICAL VERTICAL CLEARANCE LANTERNS

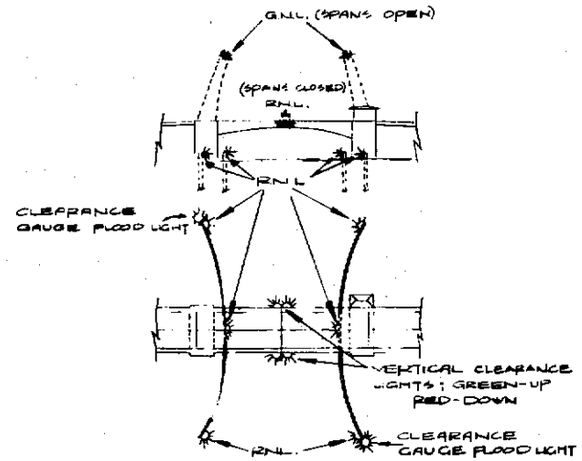

TYPICAL NAVIGATIONAL LIGHTING SYSTEM

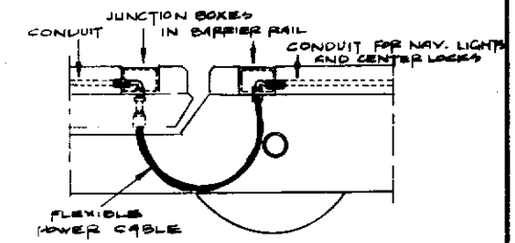

BASCULE BRIDGE FLEXIBLE CABLE ARRANGEMENT

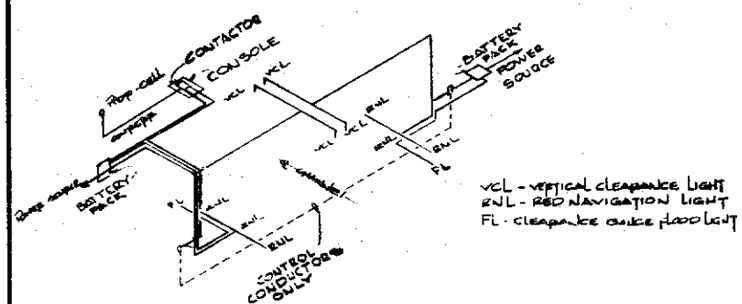

VCL - VERTICAL CLEARANCE LIGHT
RNL - RED NAVIGATION LIGHT
FL - CLEARANCE GAUGE FLOOD LIGHT

TYPICAL LAYOUT OF NAVIGATION LIGHTS

VCL — RED 180° LENS, GREEN 180° LENS, 12 V. 55 AMP FIXTURES EQUIPPED WITH SIX PLACE MOTOR-DRIVEN LAMP CHANGER. THIS LANTERN SHALL BE EQUIPPED WITH A PIVOT MOUNT AND A RETRIEVAL CHAIN. HANGER STEM SHALL BE LONG ENOUGH SO THAT LANTERN IN LOWERED POSITION HANGS NEAR BOTTOM OF GIRDER. LANTERN SHALL BE LATCHABLE IN DOWN POSITION.
APPROVED UNITS ARE TIDELAND SIGNAL CORP DUAL ML 155TF-3B, AUTOMATIC POWER CORP MOD FA 143081 OR B & B ELECTMATIC MS66-BS-LC-A-G180-2180

RNL — RED 180° LENS 12 V. 55 AMP, 155 MM LENS. FIXTURES SHALL BE EQUIPPED WITH SIX PLACE MOTOR-DRIVEN LAMP CHANGER. EACH UNIT SHALL BE MOUNTED ON A STAINLESS STEEL POST WITH A TOTAL HEIGHT OF 24" ABOVE THE FENDER.
APPROVED UNITS ARE TIDELAND SIGNAL CORP. MOD. ML155TF-3B AUTOMATIC POWER CORP. MODEL FA-249, OR B & B ELECTROMATIC MSC-301-LK-LC-A-G-G 50-2180

BULBS - ALL BULBS SHALL BE RATED MIN 1000 HOUR EXTENDED LIFE

CLEARANCE GAUGE SHALL BE B & B ELECTROMATIC NO GL 35-12
ALL EXTERNAL CONDUIT TO BE PVC SCHEDULE 80. CONTROL HOUSE CONDUIT MAY BE EMT

EXTERNAL CONDUIT MAY BE PVC SCHEDULE 80. CONTROL HOUSE CONDUIT MAY BE RIGID GAL CONDUIT CLEARANCE GAUGE TO BE RIGID GALV STEEL. ALL WIRE TO BE COPPER, NO. 12 WITH THW OR THWN INSULATION

PVC TO BE ULTRAVIOLET TREATED

CLEARANCE GAUGE LIGHT TO BE B & B ELECTROMATIC GL-35-12 OR EQUAL

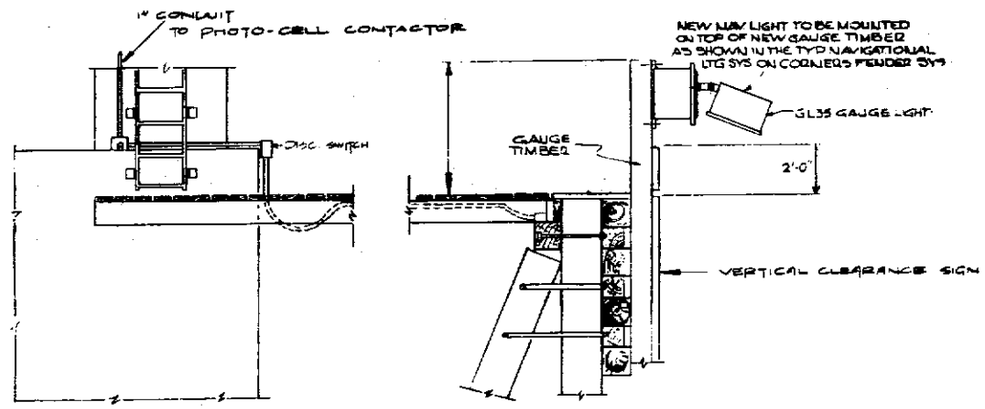

TYPICAL CONDUIT AND LIGHTS AT CLEARANCE GAUGE

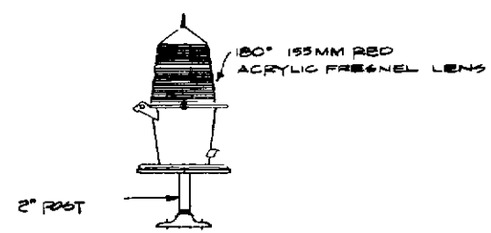

FENDER LIGHTS
(RNL)

CLEARANCE GAUGE

NUMBERED CLEARANCE GAUGES TO BE FURNISHED BY THE DEPT. OF TRANSPORTATION. CONTRACTOR SHALL VERIFY IN FIELD THAT THE CLEARANCE OF THE BRIDGE AGREES WITH READING OF TARGET. IF NOT THE TARGET WILL BE RESET.

NAVIGATION SYSTEM DETAILS

STATE OF FLORIDA DEPARTMENT OF TRANSPORTATION
STRUCTURES

Date	Revisions
7/17/89	CHANGED GAUGE LGT 2.9.

	Name	Date
Designed by	KW	2-89
Checked by	GDS	2-89
Quantities by	—	—
Checked by	—	—
Recommended by	W. Stowe Jr.	

3	FLA

FED. ROAD DIST. NO.	STATE	PROJECT NO.	SHEET NO.	TOTAL SHEETS
3	FLA.			

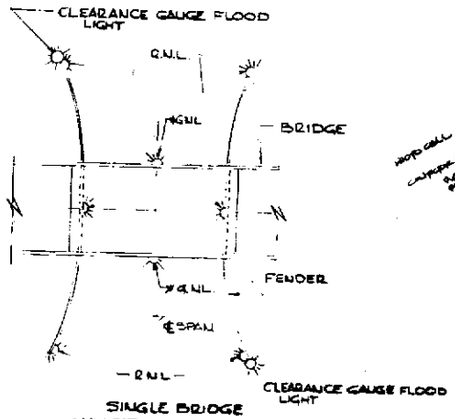

SINGLE BRIDGE
NAVIGATIONAL LIGHTING SYSTEM

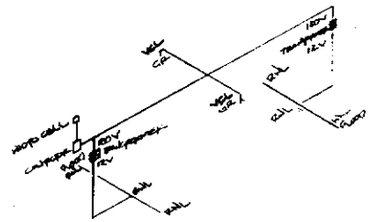

SINGLE LINE SCHEMATIC

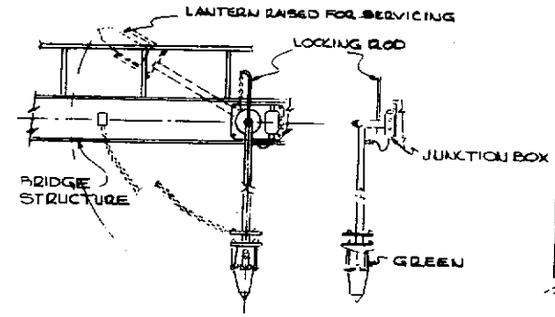

TYPICAL VERTICAL CLEARANCE LANTERNS

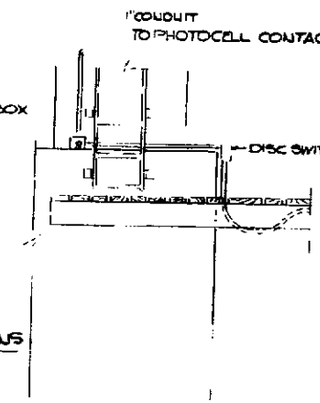

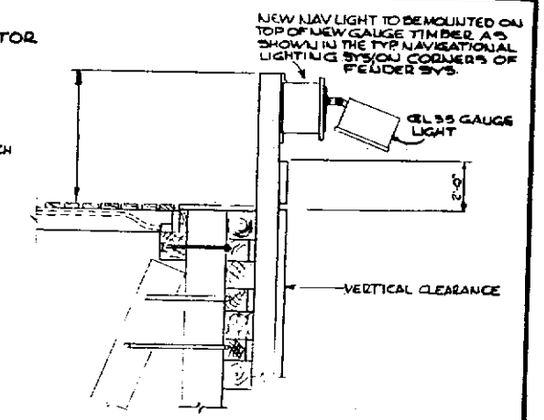

TYPICAL NAVIGATIONAL
LIGHTING SYSTEM

NOTES
VCL-GREEN 360° LENS, 120V LONG LIFE LAMPS
LANTERN SHALL BE LATCHABLE IN DOWN POSITION.
MOUNT LANTERNS JUST BELOW OUTERMOST EDGE OF STRUC.
SO AS TO BE VISIBLE FROM APPROACHING VESSEL. "B&B"
ELECTROMATIC NL 66048-LK OR EQUAL

R.N.L - RED 180° LENS 12V, .85 AMP 155 MM LENS, FIXTURES SHALL BE EQUIPPED WITH SIX PLACE MOTOR-DRIVEN LAMP CHANGER. EACH UNIT SHALL BE MOUNTED ON A GALV. STEEL POST WITH A TOTAL HEIGHT OF 24" ABOVE THE FENDER. EACH UNIT SHALL HAVE A 240/11V TRANSFORMER. APPROVED UNITS ARE TIDELAND SIGNAL CORP MOD ML 166 TF-3PC AUTOMATIC POWER CORP MODEL FA-243, OR B&B ELECTROMATIC MBC-301-LK-LCA-6-630-2180

BULBS - ALL BULBS SHALL BE RATED MIN 1000 HOUR EXTENDED LIFE.
CLEARANCE GAUGE SHALL BE B&B ELECTROMATIC NO GL 35-12

ALL CONDUIT TO BE SCHEDULE 80 PVC EXCEPT POLES TO BE RIGID GALV STEEL. ALL WIRE TO BE COPPER #12 THW OR THWN

PVC TO BE ULTRAVIOLET TREATED

CLEARANCE GAUGE LIGHT TO BE B&B ELECTROMATIC GL-35-12V OR EQUAL (WITHOUT OC TO AC INVERTER)

NOTE:
GNL = GREEN NAVIGATIONAL LIGHT
RNL = RED NAVIGATIONAL LIGHT
CL = CLEARANCE GAUGE FLOOD LIGHT
TRANSF. 0.5KVA W/ MOUNTED ON PIER

LIGHTNING ARRESTERS, FUSED CUTOUTS, INSULATORS, MISCELLANEOUS POLE LINE HARDWARE BY POWER CO

EXISTING PRIMARY H.T. LINES

DISTANCE PER POWER CO. AGREEMENT

TRANSFORMER 240/120 VOLT SERVICE BY POWER CO WITH NEUTRAL CENTER TAP GROUNDED ESTIMATED LOAD = 1500 W

240 V.A.C. SECONDARY AND RACKS BY POWER CO

35 FT CLASS FULL TREATED TIMBER POLE BY CONTRACTOR

PHOTO ELECTRIC CONTROLLER ORIENTED TO THE NORTH SKY

240 VAC SERVICE CONSISTING OF A COMBINATION FUSED SAFETY SWAND CONTACTOR IN NEMA 4X CAST ENCLOSURE AND #W.P.0.5 KV.A 120/12V TRANSFORMER MOUNTED ON 3½"X4½" CROSS ARMS BY CONTRACTOR

LIGHTNING ARRESTERS

2"Φ GALVANIZED RIGID CONDUIT AND SERVICE HEAD BY CONTRACTOR. SUPPORT AT NOT OVER 6 FT. INTERVALS BY 2-HOLE STAPS OR CLAMPS

METER SOCKET AND WIRING BY CONTRACTOR

3½"X4½" TIMBER CROSS ARMS TREAT AFTER CUTTING

NO 6 AWG BARE COPPER CONDUCTOR FOR EQUIPMENT GROUND

5'-0" OF MOULDING TO PROTECT GROUND WIRE MOULDING, WIRE AND GROUND ROD, BY CONTRACTOR

GROUND LINE

METER FURNISHED BY POWER CO. NO 14 GA STEEL U CABLE GUARD GALVANIZED

GROUND WIRE AND MOULDING BY POWER CO.

GROUND ROD BY POWER CO

SERVICE TO BE RUN IN PVC 1" CONDUIT UNDERGROUND TO BARRIER RAIL (SHOWN AT RIGHT)

TAMP BACKFILL IN NOT OVER 4" LAYERS

⅝"Φ COPPER CLAD GROUND ROD WITH APPROVED CLAMP BY CONTRACTOR

SERVICE POLE EQUIPMENT POLE

TYPICAL SERVICE ARRANGEMENT

* NOTE: IF OTHER THAN 240/120 VOLT SECONDARY SERVICE AVAILABLE, THE CONTRACTOR SHALL PROVIDE A 0.5 KVA DRY TYPE TRANSFORMER WITH PRIMARY POTECTION ON EQUIPMENT POLE

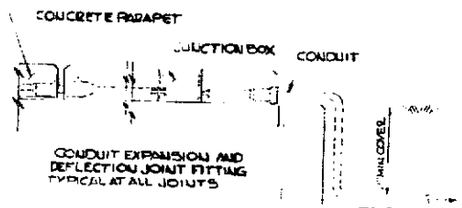

CONDUIT IN PARAPET

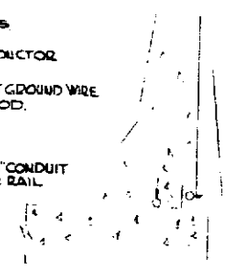

TYPICAL BARRIER RAIL INSTALLATION

4"X4"X2" PVC FLUSH MTD PULL BOX EVERY FIFTH SPAN WITH 1" PVC CONDUIT FITTINGS. BONDING JUMPER AT EACH OPEN BARRIER JOINT INSTALL AS PER DETAIL. INSTALL #6 12 STEEL AWG PULLWIRE IN ALL CONDUITS.

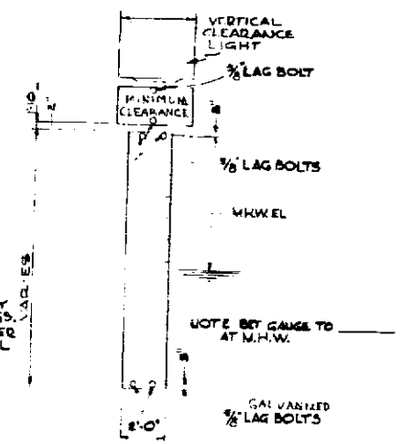

CLEARANCE GAUGE DETAILS

NUMBERED CLEARANCE GAUGE TO BE FURNISHED BY THE DEPARTMENT OF TRANSPORTATION. CONTRACTOR SHALL VERIFY IN FIELD THAT THE CLEARANCE OF THE BRIDGE AGREES WITH READING OF TARGET. IF NOT, THE TARGET WILL BE RESET

REVISIONS		
Date	By	Description

FIXED BRIDGE
NAVIGATION LIGHTING DETAILS

FLORIDA DEPARTMENT OF TRANSPORTATION
BUREAU OF STRUCTURES DESIGN

	Name	Date
Designed by	R.W.	8/87
Checked by	GDS	8/87
Quantities by		
Checked by		
Supervised by	L.W. BLWER	

COUNTY: PROJECT NO.

APPROVED BY: Chief, Bureau of Structures Design

Drawing No. 1 OF 1 | Index No. 13238

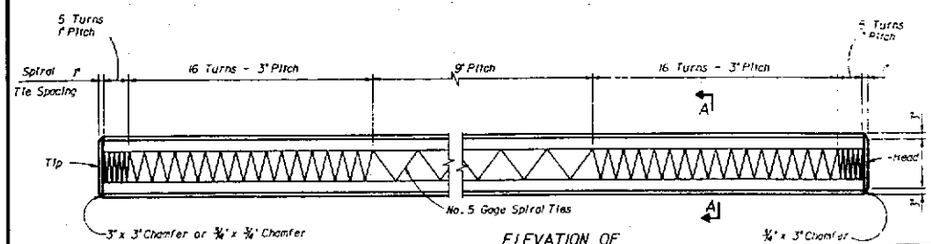

ELEVATION OF 12" X 12" PILE

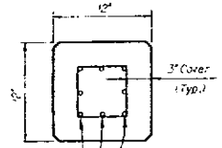

SECTION A-A

8 ~ 7/16"Φ L.R.S.-As = 0.115in² - 270K at 21.700# ea. spaced 2 9/16" ctrs.
8 ~ 1/2"Φ S.R.-As = 0.144in² - 250K at 24.100# ea. spaced 2 1/2" ctrs.
12 ~ 3/8"Φ L.R.S.-As = 0.085in² - 270K at 14.800# ea. spaced 1 11/16" ctrs.
12 ~ 3/8"Φ S.R.-As = 0.085in² - 270K at 15.600# ea. spaced 1 11/16" ctrs.

Maximum Length - 50' Single Point Pick-up
Maximum Length - 70' Double Point Pick-up
Over 70' Triple Point Pick-up
See Pile Pick-up Details

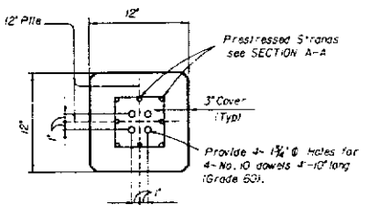

SECTION B-B
(See Splice Details)

DETAILS FOR 12" X 12" PRESTRESSED CONCRETE PILE

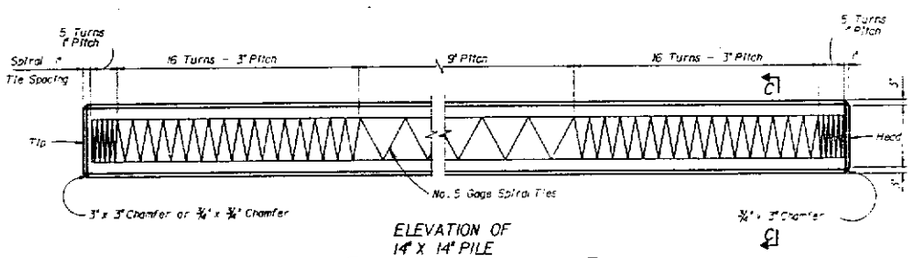

ELEVATION OF 14" X 14" PILE

Maximum Length - 55' Single Point Pick-up
Maximum Length - 75' Double Point Pick-up
Over 75' Triple Point Pick-up
See Pile Pick-up Details.

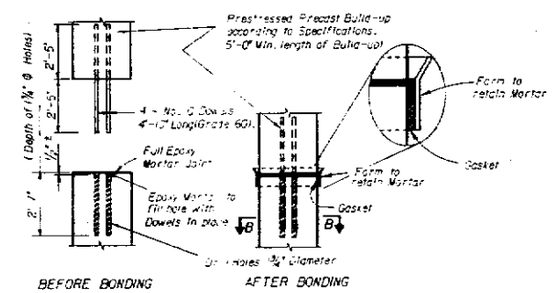

EPOXY BONDED SPLICE DETAILS FOR 12" AND 14" PILES

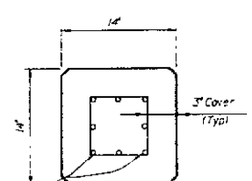

SECTION C-C

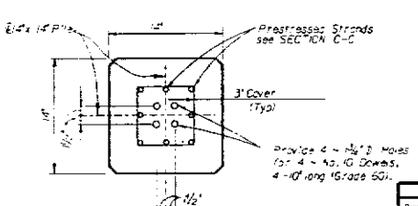

SECTION B-B
(See Splice Details)

8 ~ 1/2"Φ (Spec.)L.R.S. - As=0.167 in² - 270K at 30,000# ea. spaced 3 1/2" ctrs.
8 ~ 1/2"Φ (Spec.)S.R. - As=0.167 in² - 270K at 31,570# ea. spaced 3 1/2" ctrs.
8 ~ 1/2"Φ L.R.S. - As=0.153 in² - 270K at 29,500# ea. spaced 3 1/2" ctrs.
12 ~ 7/16"Φ S.R. - As=0.115 in² - 270K at 21,200# ea. spaced 2 5/8" ctrs.
12 ~ 1/2"Φ S.R. - As=0.144 in² - 250K at 22,600# ea. spaced 2 5/8" ctrs.
16 ~ 3/8"Φ S.R. - As=0.085 in² - 270K at 16,070# ea. spaced 1 3/4" ctrs.

DETAILS FOR 14" X 14" PRESTRESSED CONCRETE PILE

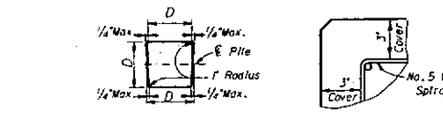

TYPICAL PILE SHAPE FOR MOLD FORMS

TYPICAL DETAIL SHOWING COVER DIMENSION

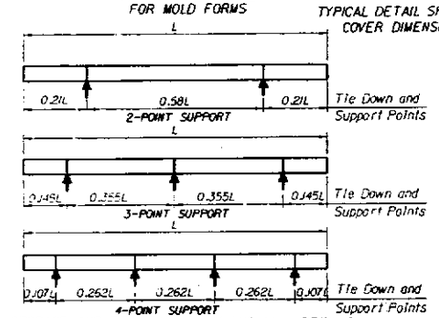

STORAGE AND TRANSPORTATION SUPPORT DETAILS

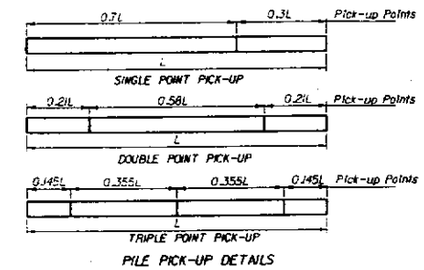

PILE PICK-UP DETAILS

GENERAL NOTES

SPIRAL TIES: Each wrap of spirals shall be tied to at least two corner strands. One turn required for spiral splices. Spirals may be manufactured from stock meeting requirements of any grade of reinforcing steel or hard drawn steel.

PILE CUT OFF: Piles required to be cut off shall be sawcut at the pile cut off elevation shown on the contract plans with an abrasive saw. Unless otherwise noted on contract plans, the cut shall be made to the depth into the pile necessary to cleanly cut through the prestressed strand.

CONCRETE CLASS: Concrete for all piles shall be Class XI(Special). Class XI(Special) Concrete shall conform to all requirements for Class X Concrete except for the 28-day strength as noted below.

CONCRETE STRENGTH: The cylinder strength shall be 6,000 p.s.i. minimum at 28 days and 4,000 p.s.i. minimum at transfer of the Prestressing Force.

SPLICED PILES: Piles may be spliced in accordance with Section 455-5J2 of the standard specifications. Precast buildups shall be prestressed and reinforced according to pile details for the "head" section of the pile shown on this sheet. Spliced piles may be driven after splice is two days old.

PICK-UP POINTS: Piles shall be marked at the pick-up points to indicate proper points for attaching handling lines.

STORAGE AND TRANSPORTATION: Piles shall be supported on adequate dunage both in the precasting yard and at the jobsite and shall be supported and tied down during transit in accordance with the following schedule:

Type Pickup Required by Pile Length	Type Storage and Transportation Support Detail
Single or Double	2,3 or 4 Point Support
Triple	3 or 4 Point Support

REINFORCING STEEL: All Reinforcing Steel shall be either Grade 40 or 60, unless otherwise noted. See Environmental Requirements Note for splice reinforcing only (Spiral ties and prestressing strand are uncoated for all environmental classes).

STRAND NOMENCLATURE:
S.R. = Stress Relieved Strand
L.R.S. = Low-Relaxation Strand

ENVIRONMENTAL REQUIREMENTS: The substructures' environmental class is shown in the "GENERAL NOTES" for the structure. Provide splice reinforcing in accordance with the following schedule for the appropriate environmental class:

	Slightly Aggressive Environment	Moderately Aggressive Environment	Extremely Aggressive Environment
Reinforcing Bonded Splice Treatment	Uncoated Black	Uncoated (Black)	Coated (Epoxy)

REVISIONS	
Date	Description

STATE OF FLORIDA DEPARTMENT OF TRANSPORTATION
BUREAU OF STRUCTURES

12" AND 14" PRESTRESSED CONCRETE PILES

BRIDGE NO.	COUNTY	PROJECT NO.

	Name	Date
Drawn by	WEK	9-87
Checked by	AGM	9-87
Quantities by	—	—
Checked by	—	—
Supervised by	NICHOLS	

APPROVED BY
CHIEF, BUREAU OF STRUCTURES

Drawing No. 1 of 1
Sheet No. 14305

ST:4120J5:31:214PILE.DGN
Version Date 1-11-88

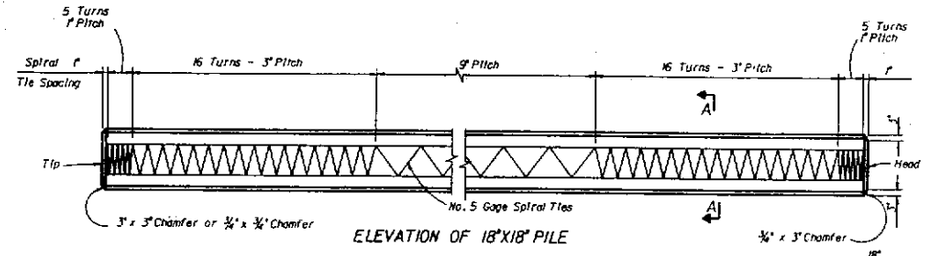

ELEVATION OF 18"X18" PILE

Maximum Length - 60' Single Point Pick-up
Maximum Length - 90' Double Point Pick-up
Over 90' Triple Point Pick-up
See Pile Pick-up Details

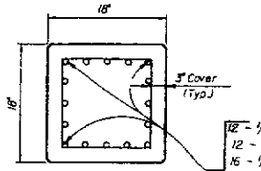

SECTION A-A

12 - 1/2"Φ (Spec.) L.R.S. -As = 0.167 in.² - 270K at 32,400# ea. spaced 3 11/16" ctrs.
12 - 9/16"Φ S.R. -As = 0.192 in.² -270K at 35,100# ea. spaced 3 5/8" ctrs.
16 - 1/2"Φ S.R. -As = 0.153 in.² -270K at 26,800# ea. spaced 2 3/4" ctrs.
20 - 7/16"Φ L.R.S.-As = 0.115 in.² -270K at 20,000# ea. spaced at 2 7/16" ctrs.
20 - 7/16"Φ S.R.-As = 0.115 in.² -270K at 21,100# ea. spaced at 2 5/16" ctrs.
24 - 3/8"Φ L.R.S.-As = 0.085 in.² -270K at 16,300# ea. spaced at 1 13/16" ctrs.

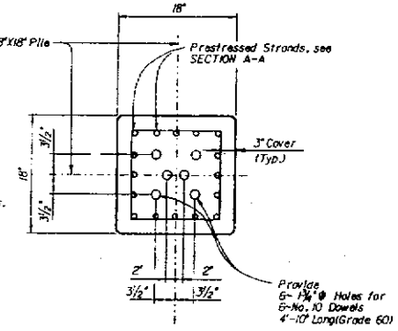

SECTION C-C
(See Pile Splice Details)

DETAILS FOR 18" X 18" PRESTRESSED CONCRETE PILE

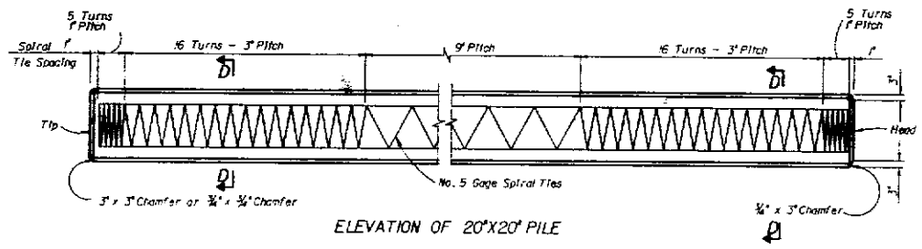

ELEVATION OF 20"X20" PILE

Maximum Length-65' - Single Point Pick-up
Maximum Length-95' - Double Point Pick-up
Over-95' - Triple Point Pick-up
See Pile Pick-up Details

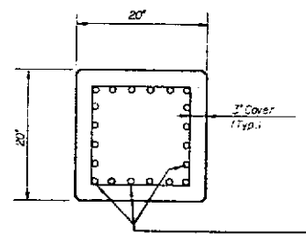

SECTION D-D

15 - 1/2"Φ L.R.S. -As = 0.153 in.² -270K at 30,000# ea. spaced at 3 1/4" ctrs.
16 - 1/2"Φ (Spec.) S.R. -As = 0.167 in.² -270K at 31,570# ea. spaced at 3 1/4" ctrs.
20 - 1/2"Φ S.R. -As = 0.153 in.² -270K at 26,500# ea. spaced at 2 9/16" ctrs.
24 - 7/16"Φ L.R.S.-As = 0.115 in.² -270K at 20,500# ea. spaced at 2 3/16" ctrs.
24 - 7/16"Φ S.R.-As = 0.115 in.² -270K at 21,240# ea. spaced at 2 1/16" ctrs.

DETAILS FOR 20"X 20" PRESTRESSED CONCRETE PILE

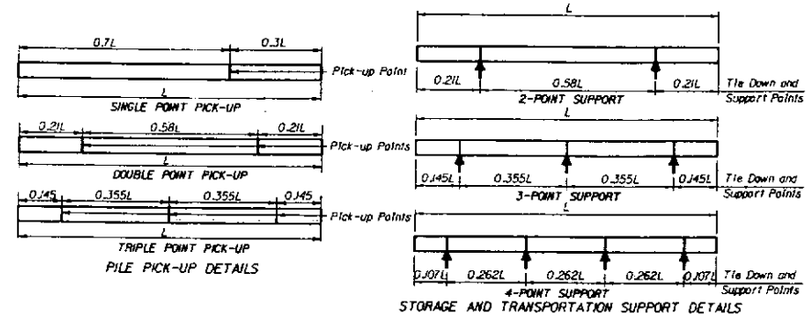

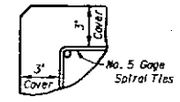

TYPICAL DETAIL SHOWING COVER DIMENSION

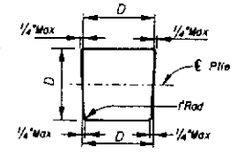

TYPICAL PILE SHAPE FOR MOLD FORMS

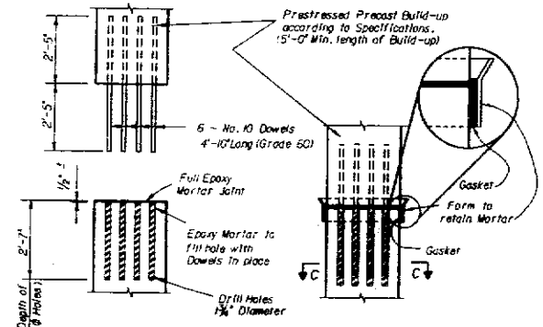

BEFORE BONDING AFTER BONDING

EPOXY BONDED SPLICE DETAILS FOR 18" AND 20" PILES

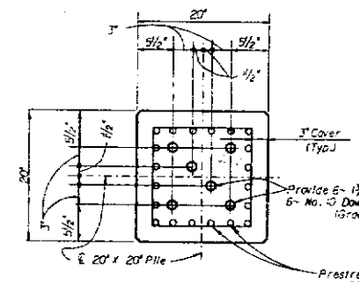

SECTION C-C
(See Pile Splice Details)

GENERAL NOTES

SPIRAL TIES: Each wrap of spirals shall be tied to at least two corner strands. One turn required for spiral splices. Spirals may be manufactured from stock meeting requirements of any grade of reinforcing steel or hard drawn steel.

PILE CUT OFF: Piles required to be cut off shall be sawcut at the pile cut off elevation shown on the contract plans with an abrasive saw. Unless otherwise noted on contract plans, the cut shall be made to the depth into the pile necessary to cleanly cut through the prestressed strand.

CONCRETE CLASS: Concrete for all piles shall be Class II(Special). Class II(Special) Concrete shall conform to the requirements for Class II Concrete except for the 28-day strength as noted below.

CONCRETE STRENGTH: The cylinder strength shall be 6,000 p.s.i. minimum at 28 days and 4,000 p.s.i. minimum at transfer of the Prestressing Force.

SPLICED PILES: Piles may be spliced in accordance with Section 455-5.12 of the standard specifications. Precast buildups shall be prestressed and reinforced according to pile details for the "head" section of the pile shown on this sheet. Spliced piles may be driven after splice is two days old.

PICK-UP POINTS: Piles shall be marked at the pick-up points to indicate proper points for attaching handling lines.

STORAGE AND TRANSPORTATION: Piles shall be supported on adequate dunage both in the precasting yard and at the jobsite and shall be supported and tied down during transit in accordance with the following schedule:

Type Pickup Required by Pile Length	Type Storage and Transportation Support Detail
Single or Double	2, 3 or 4 Point Support
Triple	3 or 4 Point Support

REINFORCING STEEL: All Reinforcing Steel shall be either Grade 40 or 60, unless otherwise noted. See Environmental Requirements Note for splice reinforcing only (Spiral ties and prestressing strand are uncoated for all environmental classes).

STRAND NOMENCLATURE:
S.R. = Stress Relieved Strand
L.R.S. = Low-Relaxation Strand

ENVIRONMENTAL REQUIREMENTS: The substructures' environmental class is shown in the "GENERAL NOTES" for the structure. Provide splice reinforcing in accordance with the following schedule for the appropriate environmental class:

	Slightly Aggressive Environment	Moderately Aggressive Environment	Extremely Aggressive Environment
Reinforcing Bonded Splice Treatment	Uncoated (Black)	Uncoated (Black)	Coated (Epoxy)

REVISIONS	
Date	Description

STATE OF FLORIDA DEPARTMENT OF TRANSPORTATION
BUREAU OF STRUCTURES

18" AND 20"
PRESTRESSED CONCRETE PILES

Drawn by	WEH	9-87	APPROVED BY
Checked by	AGM	9-87	
Quantities by	-	-	CHIEF ENGINEER OF STRUCTURES
Checked by	-	-	Drawing No. 1 of 1 / Index No. 14306
Supervised by	NICHOLS		

STI4(120.15)1820PILE.DGN
Version Date 1-11-98

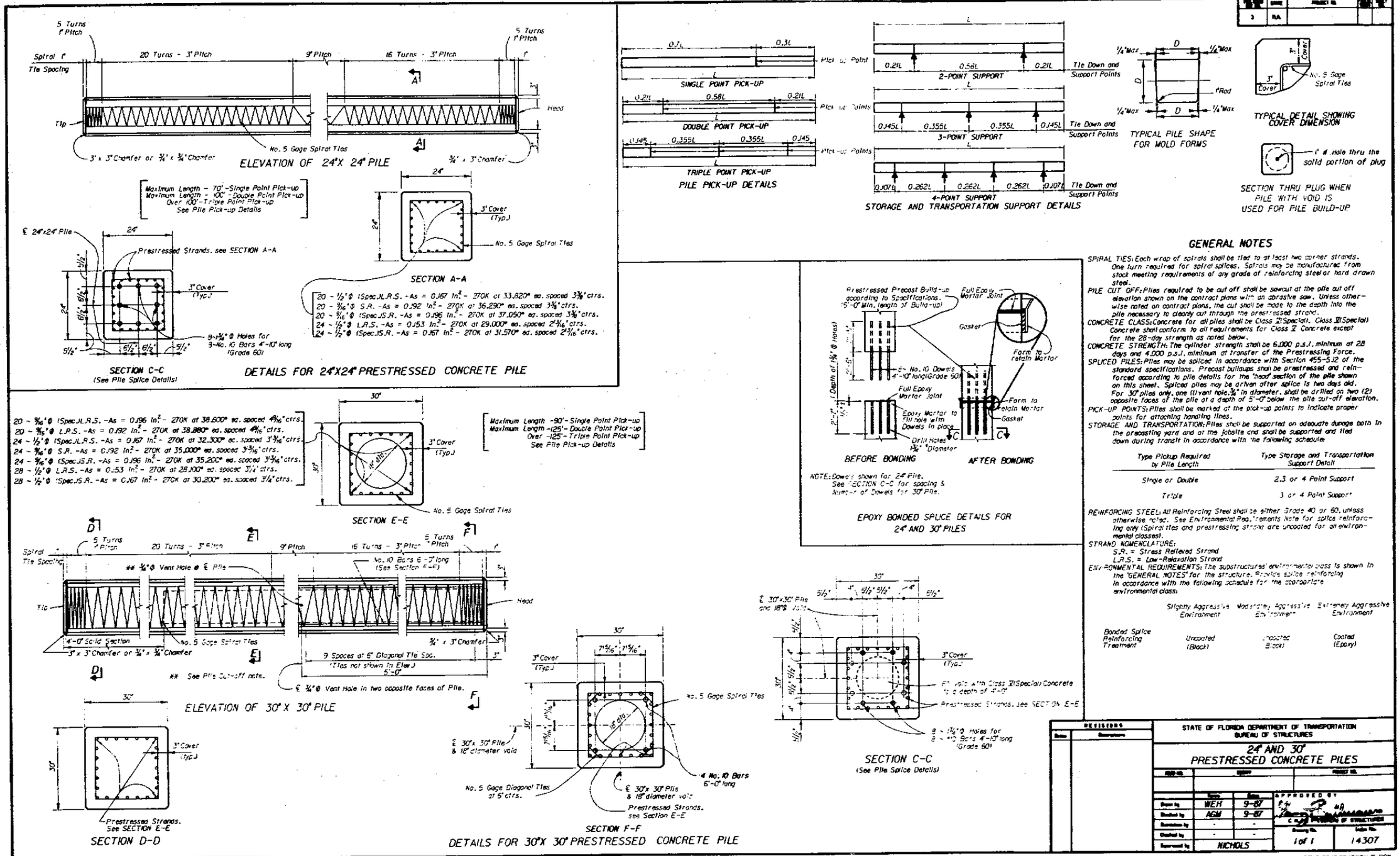

GENERAL NOTES

SPIRAL TIES: Each wrap of spirals shall be tied to at least two corner strands. One turn required for spiral splices. Spirals may be manufactured from stock meeting requirements of any grade of reinforcing steel or hard drawn steel.

PILE CUT OFF: Piles required to be cut off shall be sawcut at the pile cut off elevation shown on the contract plans with an abrasive saw. Unless otherwise noted on contract plans, the cut shall be made to the depth into the pile necessary to cleanly cut through the prestressed strand.

CONCRETE CLASS: Concrete for all piles shall be Class II (Special). Class II (Special) Concrete shall conform to all requirements for Class II Concrete except for the 28-day strength as noted below.

CONCRETE STRENGTH: The cylinder strength shall be 6,000 p.s.i. minimum at 28 days and 4,000 p.s.i. minimum at transfer of the Prestressing Force.

SPLICED PILES: Piles may be spliced in accordance with Section 455-5.12 of the standard specifications. Precast bulldups shall be prestressed and reinforced according to pile details for the "head" section of the pile shown on this sheet. Spliced piles may be driven after splice is two days old. For 30" piles only, one (1) vent hole, 3/4" in diameter, shall be drilled on two (2) opposite faces of the pile at a depth of 5'-0" below the pile cut-off elevation.

PICK-UP POINTS: Piles shall be marked at the pick-up points to indicate proper points for attaching handling ties.

STORAGE AND TRANSPORTATION: Piles shall be supported on adequate dunage both in the precasting yard and at the jobsite and shall be supported and tied down during transit in accordance with the following schedule:

Type Pickup Required by Pile Length	Type Storage and Transportation Support Detail
Single or Double	2, 3 or 4 Point Support
Triple	3 or 4 Point Support

REINFORCING STEEL: All Reinforcing Steel shall be either Grade 40 or 60, unless otherwise noted. See Environmental Requirements Note for splice reinforcing only (Spiral ties and prestressing strand are uncoated for all environmental classes).

STRAND NOMENCLATURE:
S.R. = Stress Relieved Strand
L.R.S. = Low-Relaxation Strand

ENVIRONMENTAL REQUIREMENTS: The substructures' environmental class is shown in the "GENERAL NOTES" for the structure. Provide splice reinforcing in accordance with the following schedule for the appropriate environmental class:

	Slightly Aggressive Environment	Moderately Aggressive Environment	Extremely Aggressive Environment
Bonded Splice Reinforcing Treatment	Uncoated (Black)	Uncoated (Black)	Coated (Epoxy)

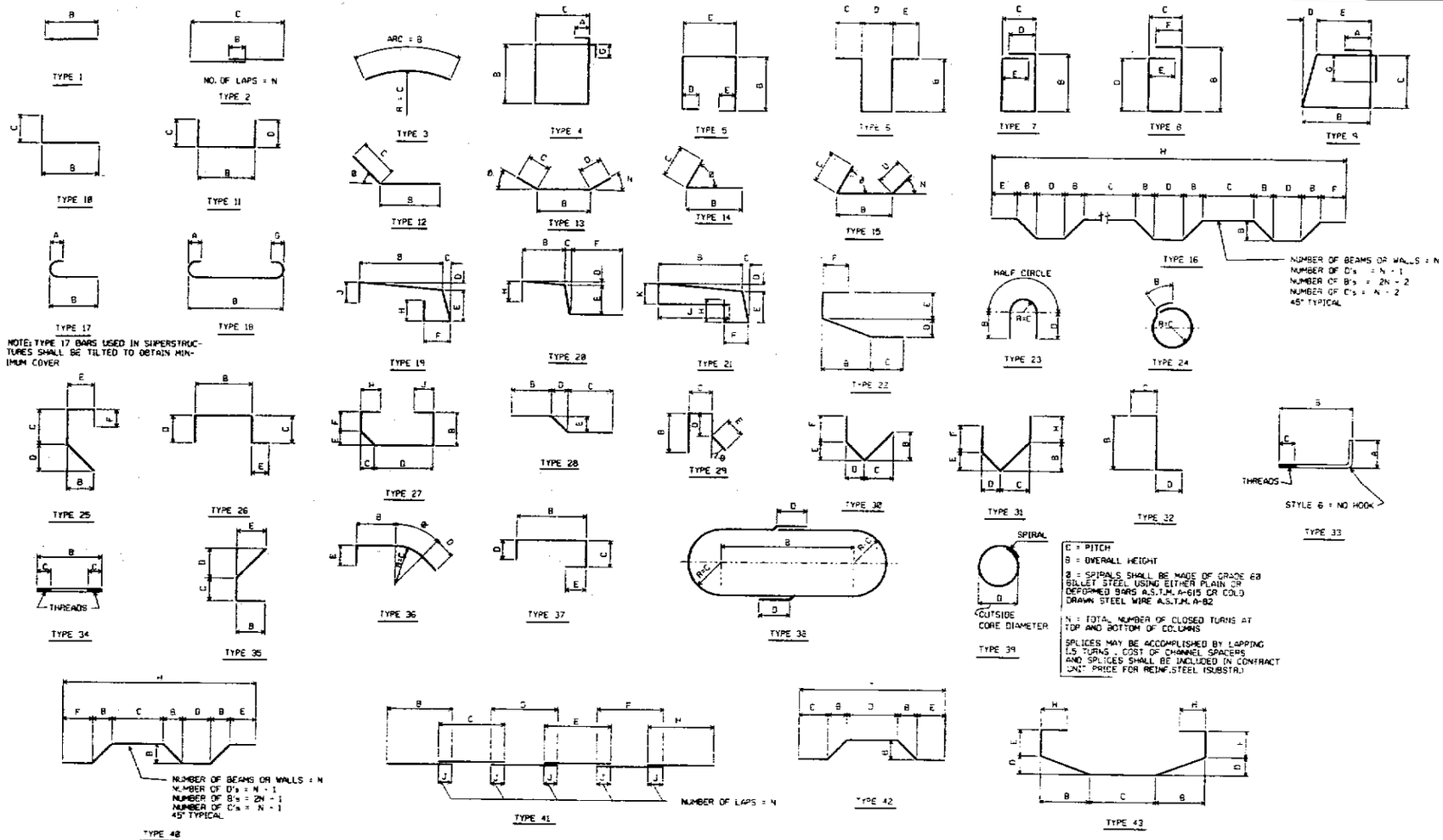

NOTE: FOR BAR DIMENSIONS SEE REINFORCING BAR LIST SHEET.

HOOK DETAILS

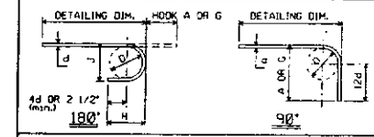

RECOMMENDED END HOOKS

ALL GRADES
D = 6d FOR #3 THRU #8
D = 8d FOR #9, #10, AND #11
D = 10d FOR #14 AND #18

BAR SIZE	180° HOOKS		90° HOOKS
	A OR G	J	A OR G
#3	5	3	6
#4	6	4	8
#5	7	5	10
#6	8	6	1-0
#7	10	7	1-2
#8	11	8	1-4
#9	1-3	11 3/4	1-7
#10	1-5	1- 1 1/4	1-10
#11	1-7	1- 2 3/4	2-0
#14	2-3	1- 9 3/4	2-7
#18	3-0	2- 4 1/2	3-6
STYLE	1		3

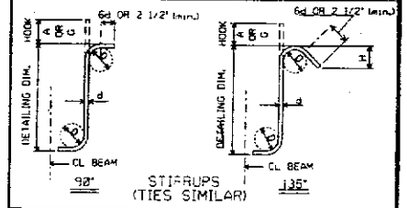

RECOMMENDED STIRRUP & TIE HOOK DIMENSIONS

BAR SIZE	D (IN.)	90° HOOK	135° HOOK	
		HOOK A OR G	HOOK A OR G	APPROX. H
#3	1 1/2	4	4	2 1/2
#4	2	4 1/2	4 1/2	3
#5	2 1/2	6	5 1/2	3 3/4
#6	4 1/2	1-0	7 3/4	4 1/2
#7	5 1/4	1-2	9	5 1/4
#8	6	1-4	10 1/4	6
STYLE		4	5	
		STYLE 6 = NO HOOK		

HOOK STYLES DETAILED ON THIS SHEET ARE FOR ILLUSTRATION ONLY. ACTUAL HOOK STYLE FOR ANY PARTICULAR BAR WILL BE SHOWN UNDER A OR G HEADING ON REINFORCING BAR LIST SHEET.
ALL BAR DIMENSIONS ARE OUT-TO-OUT.

REVISIONS	
Date	Description
4-81	GENERAL REVIEW
6-10-82	REMOVED (AND WELDING)
4-19-84	REV. BAR TYPE 38

STATE OF FLORIDA DEPARTMENT OF TRANSPORTATION
BUREAU OF STRUCTURES

STANDARD BAR BENDING DETAILS

	Name	Date
Drawn by	R.D.H.	1-86
Checked by	R.D.S.	1-86
Supervised by	A.G.H.	

APPROVED BY
Chief Engineer of Structures

Drawing No. 1 OF 1
Index No. 18587 CADD

STI&12BLIS12BARBENDGN

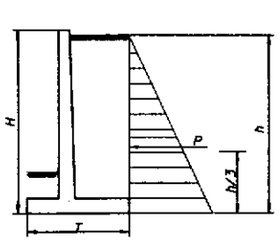

CASE I

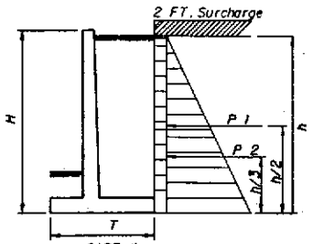

CASE II

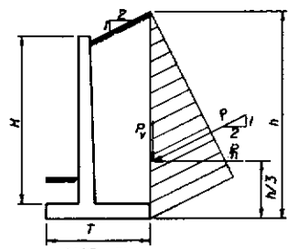

CASE III

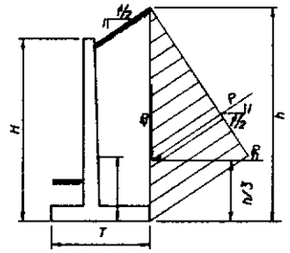

CASE IV

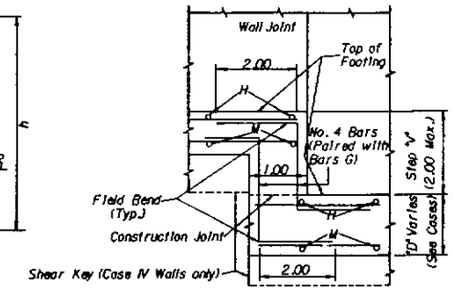

FOOTING STEP DETAIL

NOTE: Quantities for Footing Step are not included in wall Quantities.
Quantities per Step
Concrete = 0.037 V T C.Y.
Steel = (13.36)(T+1)(V+4.5) LBS.

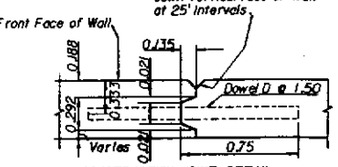

CONSTRUCTION JOINT DETAIL

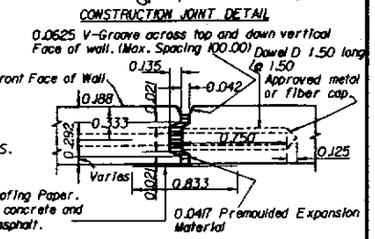

EXPANSION JOINT DETAIL

2 Layers of 55 lb. Smooth Roofing Paper. Mop all contacting surfaces of concrete and Roofing paper with cut-back asphalt.

GENERAL NOTES

GENERAL SPECIFICATIONS: Florida Department of Transportation Standard Specifications for Road and Bridge Construction, Current Edition with Approved Supplements thereto.

DESIGN SPECIFICATIONS: American Association of State Highway and Transportation Officials (AASHTO) Standard Specifications for Highway Bridges, Current Edition with Approved Revisions thereto.

MATERIAL STRESSESS: All allowable stresses are in accordance with current AASHTO Standard Specifications for all the materials shown in the plans.

MAXIMUM CONCRETE STRESSES: (fc = Maximum Working Stress; f'c = Minimum 28 Day Compressive Strength)
Class II Concrete (Retaining Wall) fc = 1360 psi (f'c = 3400 psi)
Class IV Concrete (Retaining Wall) fc = 1360 psi (f'c = 3400 psi)

CLASS OF CONCRETE: Retaining walls in a non-corrosive (slightly aggressive) environment shall use Class II Concrete reinforced with uncoated (black) reinforcing steel. Retaining walls in a non-corrosive (moderately aggressive) environment shall use Class IV Concrete reinforced with uncoated (black) reinforcing steel. Retaining walls in a corrosive (extremely aggressive) environment shall use Class IV concrete reinforced with epoxy coated reinforcing steel.

REINFORCING STEEL: All reinforcing steel shall be grade 60 (fs = 24000 psi). Retaining walls located in a corrosive (extremely aggressive) environment shall use epoxy coated reinforcing bars.

ENVIRONMENT: These plans apply to cast-in-place retaining walls located in all environments.

SURFACE FINISH: A Class 5 Applied Finish Coating shall be applied to the exposed face and top of the walls above the ground line.

RUSTICATION: Alternate Architecural treatments may be substituted for the Striated Pattern as Approved by the Engineer.

DIMENSIONS: All Dimensions are in decimals of a foot, except for bar bending diagrams.

PAYMENT: Retaining walls in a non-corrosive (slightly aggressive) environment shall be payed for at the Contract Unit Price for Class II Concrete (Retaining Walls) (Cu Yd) Item No. 400-2-11 and Reinforcing Steel (Retaining Wall) (lbs) Item No. 415-1-3.

Retaining walls in a non-corrosive (moderately aggressive) environment shall be payed for at the Contract Unit Price for Class IV Concrete (Retaining Walls) (Cu Yd) Item No. 400-4-11 and Reinforcing Steel (Retaining Wall) (lbs) Item No. 415-1-3.

Retaining walls in a corrosive (extremely aggressive) environment shall be paid for at the Contract Unit Price for Class IV Concrete (Retaining Walls) (Cu Yd) Item No. 400-4-11 and Reinforcing Steel (Retaining Wall) (lbs) Item No. 9415-1-3.

QUANTITIES: Concrete and Reinforcing Steel Quantities shall be based upon the average height (H) of each 25 ft Unit interpolating between the "PER 25' UNIT" quantities shown on the appropriate case sheet. Quantities for units less than 25' in length shall be based upon the length of the partial unit times the "PER LIN. FT" quantity for the partial unit. Interpolating between the quantities shown as applicable.

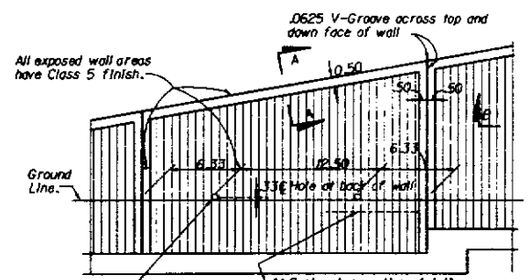

NOTE: Add 0.0021(H'-D+12)c.y. of concrete for each 25' unit to the Quantities shown for striated walls. H' is the wall height at midlength of a 25' unit.

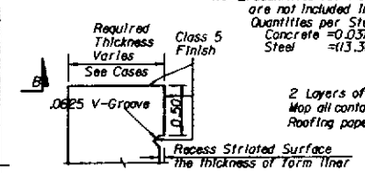

SECTION A-A

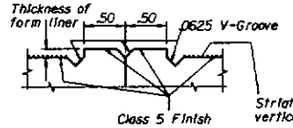

SECTION B-B

NOTE: Key to stop 0.50 from top of wall. Joint across top of wall to be a straight line. Extend V-Groove down back of wall to 0.50 min. below ground

NOTE: Number of Dowel Bars D (No. 6 Bars) required per unit for each wall height as follows:
6' & 7' J4; 8' J5; 9' & 10' J6; 11' & 12' J7; 13' & 14' J8;
15' & 16' J9; 17' & 18' J10; 19' J11; 20' & 21' J12; 22' & 23' J13; 24' J14; 25' J15.
Weight of Dowels for each 25.00 unit included in Quantities.

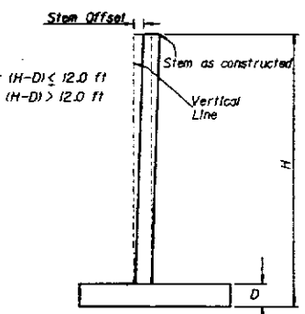

Offset = (H-D)/16, for (H-D) ≤ 12.0 ft
Offset = [(H-D)-6]/8, 0.208 max., for (H-D) > 12.0 ft

STEM OFFSET VALUES

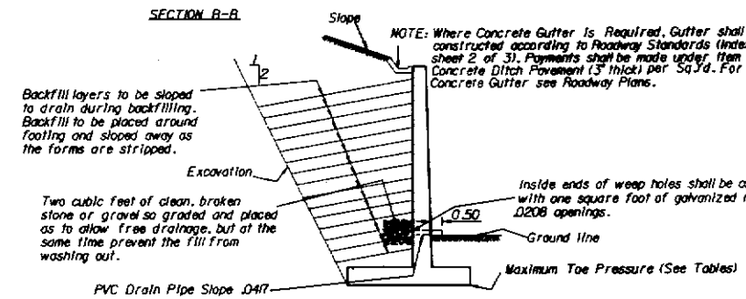

NOTE: Where Concrete Gutter is Required, Gutter shall be constructed according to Roadway Standards (Index 280 sheet 2 of 3). Payments shall be made under Item No. 524-1-1 Concrete Ditch Pavement (3" thick) per Sq.Yd. For limits of Concrete Gutter see Roadway Plans.

TYPICAL BACKFILL DETAIL

NOTE: The base of the Wall Footings and Front Face of Footing shall be poured against undisturbed material.

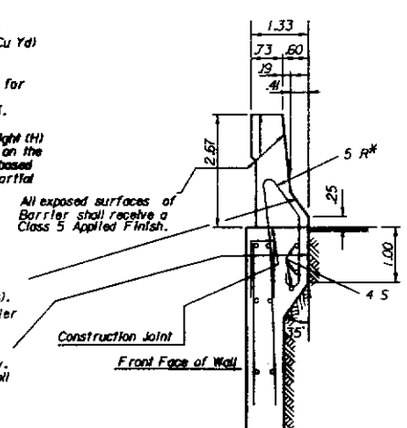

BARRIER DETAIL

* NOTE: See Sheet 1 of 2 Index 14286 for Bars 5 R

For Barrier Details see Sheet 1 of 2 Index 14286 (Bridge Plans). When Barrier is used, Concrete and Reinforcing Steel for Barrier shall be included in the bid item Quantities for Retaining Wall.

Lug at top of Wall requires an additional 0.037 and 0.026 c.y. of Concrete per Lin. Ft. of Wall for 0.75 and 0.92 top of wall widths, respectively, and an additional 2.00 lbs. per Lin.Ft. of Wall for the 3 - 4S Bars shown.

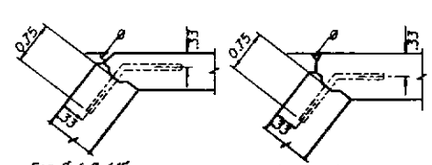

For 0° < Ø ≤ 45° For 45° < Ø ≤ 90°

TYPICAL JOINT DETAILS AT CORNERS

NOTE: See "Construction Joint Detail" For Notes and Details not shown

CANTILEVER RETAINING WALLS

REVISIONS	
Date	Description
5/86	Size Change in Vertical Grooves.
3/87	Changed to decimals.
3/87	Redraw on the CADD.
3/87	Added to General Notes.
5/87	Editorial changes.
11/87	Revised Barrier

STATE OF FLORIDA DEPARTMENT OF TRANSPORTATION
BUREAU OF STRUCTURES

RETAINING WALLS DETAILS
6 FT. TO 30 FT. HEIGHT

Drawn by	M.J.	3/87
Checked by	M.P.	3/87
Quantities by	W.E.H.	9/87
Checked by	T.D.H.	9/87
Approved by	A.G.M.	

C.M.E.F., BUREAU OF STRUCTURES

Drawing No. 1 OF 23
Index No. 14051 CADD

FILE NO.	DATE	PROJECT NO.
3	R.A.	

RETAINING WALL DATA

| WALL DIMENSIONS | | | | REINFORCING STEEL SCHEDULE | | | |

3	R/A

RETAINING WALL DATA

WALL DIMENSIONS				REINFORCING STEEL SCHEDULE																																				QUANTITIES				ACTUAL MAXIMUM BEARING PRESSURE	
				BARS J						BARS F			BARS G			BARS H				BARS M				BARS A			BARS K						BARS L						CONCRETE / 25' UNIT	STEEL / 25' UNIT	CONCRETE PER LIN.FT.	STEEL PER LIN.FT.		
H	B	D	T	SIZE	NO.	SPACING	a	b	LENGTH	SIZE	NO.	LENGTH	SIZE	NO.	LENGTH	SIZE	NO.	SPACING	LENGTH	SIZE	NO.	c	LENGTH	SIZE	NO.	LENGTH	SIZE	NO.	SPACING	a	b	LENGTH	SIZE	NO.	SPACING	a	b	LENGTH	C.Y.	LBS.	C.Y.	LBS.	KIPS/SQ.FT.	H
6	0.67	0.92	3.05	4	26	1.00	5.58	1.08	6.66	4	18	5.00	4	14	24.50	4	18	1.42	2.55	4	18	1.96	4.04																6.46	524	0.26	21	1.34	6
7	0.83	0.92	3.50	4	26	1.00	6.58	1.28	7.86	4	18	6.00	4	16	24.50	4	18	1.42	3.00	4	18	2.25	4.33																7.73	599	0.31	24	1.52	7
8	1.00	0.92	3.96	4	26	1.00	7.58	1.48	9.06	4	18	7.00	4	18	24.50	4	18	1.42	3.46	4	18	2.54	4.62																9.01	673	0.36	27	1.69	8
9	1.17	0.92	4.50	4	27	0.96	8.58	1.68	10.26	4	18	8.00	4	20	24.50	4	19	1.33	4.00	4	18	2.91	4.99																10.38	763	0.42	31	1.82	9
10	1.25	0.92	4.93	4	28	0.92	9.58	1.79	11.37	4	18	9.00	4	22	24.50	4	27	0.96	4.43	4	18	3.26	5.34																11.69	865	0.47	35	2.04	10
11	1.33	0.92	5.50	4	31	0.83	10.58	1.90	12.48	4	18	10.00	4	24	24.50	4	40	0.63	5.00	4	18	3.75	5.83																13.14	1015	0.53	41	2.20	11
12	1.50	1.00	5.93	4	38	0.67	11.58	2.10	13.68	4	18	10.92	4	26	24.50	4	39	0.67	5.43	4	18	4.01	6.09																14.88	1161	0.60	46	2.39	12
13	1.58	1.00	6.28	4	38	0.67	12.58	2.38	14.96	4	18	11.92	4	28	24.50	4	46	0.54	5.78	4	18	4.28	6.36																18.08	1277	0.72	51	2.67	13
14	1.75	1.00	6.80	4	51	0.50	13.58	2.57	16.15	4	18	12.92	4	28	24.50	4	56	0.46	6.30	4	18	4.63	6.71																19.78	1522	0.79	61	2.80	14
15	1.83	1.00	7.36	5	19	1.33	3.25	2.69	5.94	4	18	13.92	4	32	24.50	5	50	0.50	6.86	4	18	5.11	7.19	5	19	13.92	5	18	1.33	9.58	2.69	11.29							21.53	1783	0.86	71	2.96	15
16	2.08	1.00	8.16	5	17	1.50	3.25	2.97	6.22	4	18	14.92	4	34	24.50	6	44	0.58	7.66	4	18	5.66	7.74	5	17	14.92	5	16	1.50	4.75	2.97	7.22	5	16	1.50	14.75	2.97	17.72	23.54	2168	0.94	87	2.93	16
17	2.25	1.17	9.01	5	19	1.38	3.42	3.16	6.58	4	18	15.75	4	34	24.50	6	39	0.63	8.51	4	18	6.34	8.42	5	19	15.75	5	18	1.38	4.92	3.16	8.08	5	18	1.38	13.92	3.16	17.08	26.80	2303	1.07	92	2.96	17
18	2.58	1.17	9.69	6	17	1.50	4.33	3.53	7.86	4	18	16.75	4	38	24.50	6	50	0.50	9.19	4	18	6.69	8.77	5	17	16.75	6	16	1.50	6.00	3.53	9.53	6	16	1.50	14.92	3.53	18.45	28.85	2831	1.15	113	2.96	18
19	2.75	1.17	10.54	6	19	1.38	4.33	3.73	8.06	4	18	17.75	4	40	24.50	7	44	0.58	10.04	4	18	7.37	9.45	5	19	17.75	6	18	1.38	6.33	3.73	10.06	6	18	1.38	15.33	3.73	19.06	31.12	3296	1.24	132	2.99	19
20	3.08	1.17	11.41	7	17	1.50	4.33	4.09	8.42	4	18	18.75	4	42	24.50	7	51	0.50	10.91	4	18	7.91	9.99	6	17	18.75	7	16	1.50	6.67	4.09	10.76	7	16	1.50	16.33	4.09	20.42	33.44	4003	1.34	160	2.95	20
21	3.33	1.42	12.34	7	17	1.50	5.17	4.37	9.54	4	18	19.50	4	42	24.50	7	43	0.58	11.84	4	18	8.59	10.67	6	17	19.50	7	16	1.50	7.17	4.37	11.54	7	16	1.50	17.17	4.37	15.54	38.36	3848	1.53	154	2.98	21
22	3.58	1.42	13.71	8	17	1.50	5.17	4.65	9.82	4	18	20.50	4	46	24.50	7	50	0.50	12.71	4	18	9.21	11.29	6	17	20.50	8	16	1.50	8.15	4.65	12.82	8	16	1.50	12.17	4.65	16.82	40.92	4712	1.64	188	2.99	22
23	3.83	1.42	14.18	8	17	1.50	5.83	4.93	10.76	4	18	21.50	4	50	24.50	8	44	0.58	13.68	4	18	9.92	12.01	6	17	21.50	8	16	1.50	8.83	4.93	13.76	8	16	1.50	13.17	4.93	18.10	43.66	5269	1.75	211	3.00	23
24	4.17	1.42	15.01	8	19	1.38	5.83	4.29	11.12	4	18	22.50	4	52	24.50	8	50	0.50	14.51	4	18	10.42	12.50	6	19	22.50	8	18	1.38	9.83	5.29	15.12	8	18	1.38	14.17	5.29	19.46	46.24	6119	1.85	245	3.00	24
25	4.42	1.42	16.34	9	17	1.50	6.92	5.57	12.49	4	18	23.50	4	54	24.50	9	46	0.54	15.84	4	18	11.50	13.58	6	17	23.50	9	16	1.50	10.50	5.57	16.07	9	16	1.50	17.50	5.57	23.07	49.50	7300	1.98	292	2.96	25
26	4.92	1.67	17.04	9	19	1.38	8.00	6.10	14.10	4	18	24.25	4	58	24.50	9	39	0.63	16.54	4	18	11.70	13.78	6	19	24.25	9	18	1.38	11.00	6.10	17.10	9	18	1.38	18.25	6.10	24.35	55.51	7781	2.22	311	2.96	26
27	5.25	1.67	17.95	10	17	1.50	9.00	6.46	15.46	4	18	25.25	4	58	24.50	9	44	0.58	17.45	4	18	12.28	14.36	6	17	25.25	10	16	1.50	11.50	6.46	17.96	10	16	1.50	18.75	6.46	25.21	58.49	8826	2.34	353	3.97	27
28	5.58	1.67	18.78	10	19	1.38	10.00	6.82	16.82	4	18	26.25	4	62	24.50	9	50	0.50	18.28	4	18	12.78	14.86	7	19	26.25	10	18	1.38	12.00	6.82	18.82	10	18	1.38	19.75	6.82	26.57	61.37	10569	2.45	423	2.98	28
29	5.00	1.67	19.52	11	17	1.50	10.50	7.27	17.77	4	18	27.25	4	64	24.50	9	54	0.46	19.02	4	18	13.10	15.18	8	17	27.25	11	16	1.50	12.50	7.27	19.77	11	16	1.50	20.75	7.27	28.02	64.14	11996	2.57	480	2.99	29
30	6.42	1.67	20.20	11	19	1.38	11.00	7.72	18.72	4	18	28.25	4	66	24.50	10	43	0.58	19.76	4	18	13.42	15.50	8	19	28.25	11	18	1.38	13.00	7.72	20.72	11	18	1.38	21.75	7.72	29.47	66.84	13427	2.67	537	2.99	30

NOTE:
To accommodate the Variable Height of a wall Unit, vertical Bars may be field cut to fit and the number of horizontal Bars G required by the highest wall dimension within a 25' Unit shall be equally spaced at each end of the Unit.

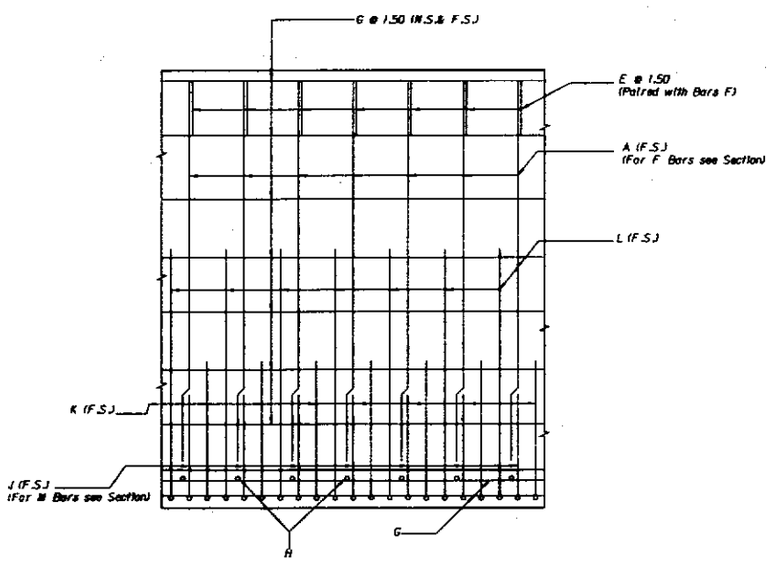

VIEW A-A

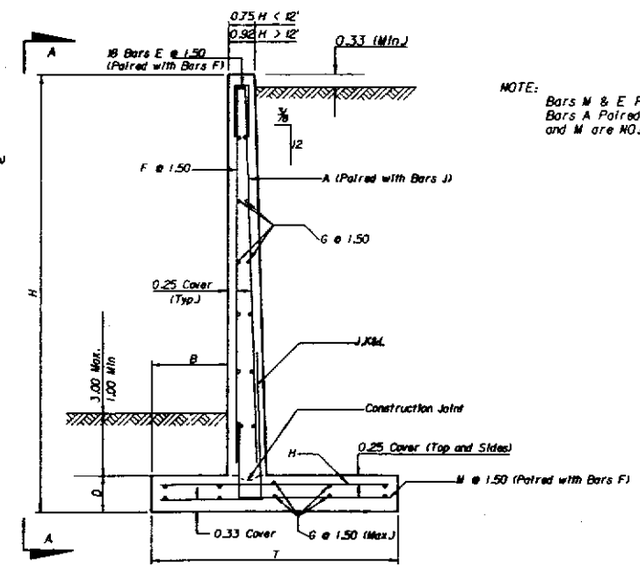

TYPICAL SECTION

NOTE:
Bars M & E Paired with Bars F and Bars A Paired with Bars J. Bars E,F and M are NO.4 Bars. Bars J are as

BENDING DIAGRAM

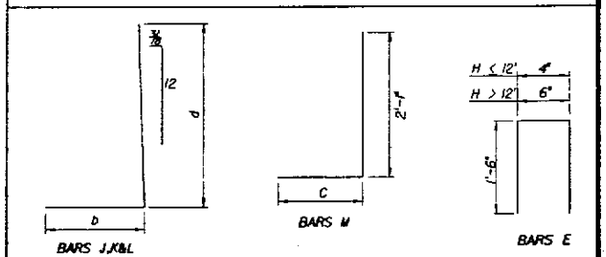

NOTE: All bar dimensions are out to out.

CANTILEVER RETAINING WALLS

Revisions	
Date	Description
3/87	Changed cover on Stem to 0.33(Min.).
3/87	Changed cover on Footing to 0.25(Typ.), and 0.33(Min.) at Joints.
3/87	Changed width of Stem to 0.75 H for H ≤ 12' and 0.92H for H > 12'.
3/87	Changed concrete volume.
3/87	Changed dimension to distinguish Bars J and L.
3/87	Added note.

STATE OF FLORIDA DEPARTMENT OF TRANSPORTATION
BUREAU OF STRUCTURES

CASE (113.0 KIPS/SQ. FT. MAX. BEARING PRESSURE)
6 FT. TO 30 FT.

	Name	Date
Drawn by	N.I.	3/87
Checked by	N.P.	3/87
Revised by	C.W.	6/85
Checked by	R.N.	6/85
Approved by	A.G.M.	

C. W. F. - BUREAU OF STRUCTURES

3 OF 23

14.051 CADD

SHEET	PROJECT NO.
3	N.A.

RETAINING WALL DATA

REINFORCING STEEL SCHEDULE

WALL DIMENSIONS				BARS J						BARS F			BARS G			BARS H				BARS M				BARS A			BARS K						BARS L						QUANTITIES				ACTUAL MAXIMUM BEARING PRESSURE	
H	B	D	T	SIZE	NO.	SPACING	a	b	LENGTH	SIZE	NO.	LENGTH	SIZE	NO.	LENGTH	SIZE	NO.	SPACING	LENGTH	SIZE	NO.	c	LENGTH	SIZE	NO.	LENGTH	SIZE	NO.	SPACING	a	b	LENGTH	SIZE	NO.	SPACING	a	b	LENGTH	CONCRETE / 25' UNIT C.Y.	STEEL / 25' UNIT LBS.	CONCRETE PER LIN.FT. C.Y.	STEEL PER LIN.FT. LBS.	KIPS/SQ.FT.	H
6	0.67	0.92	3.05	4	26	1.00	5.58	1.08	6.66	4	18	5.00	4	14	24.50	4	18	1.42	2.55	4	18	1.96	4.04																6.46	524	0.26	21	1.34	6
7	0.83	0.92	3.50	4	26	1.00	6.58	1.28	7.86	4	18	6.00	4	16	24.50	4	18	1.42	3.00	4	18	2.25	4.33																7.73	599	0.31	24	1.52	7
8	1.00	0.92	3.96	4	26	1.00	7.58	1.48	9.06	4	18	7.00	4	18	24.50	4	18	1.42	3.46	4	18	2.54	4.62																9.01	673	0.36	27	1.69	8
9	1.17	0.92	4.50	4	27	0.96	8.58	1.68	10.26	4	18	8.00	4	20	24.50	4	19	1.33	4.00	4	18	2.91	4.99																10.38	759	0.42	30	1.82	9
10	1.25	0.92	4.93	4	28	0.92	9.58	1.79	11.37	4	18	9.00	4	22	24.50	4	27	0.96	4.43	4	18	3.26	5.34																11.69	862	0.47	35	2.04	10
11	1.33	0.92	5.50	4	31	0.83	10.58	1.90	12.48	4	18	10.00	4	24	24.50	4	40	0.63	5.00	4	18	3.75	5.83																13.14	1015	0.53	41	2.20	11
12	1.50	1.00	5.93	4	38	0.67	11.58	2.10	13.68	4	18	10.92	4	26	24.50	4	39	0.67	5.43	4	18	4.01	6.09																14.88	1161	0.60	46	2.39	12
13	1.58	1.00	6.28	4	38	0.67	12.58	2.38	14.96	4	18	11.92	4	28	24.50	4	46	0.54	5.78	4	18	4.28	6.36																18.08	1277	0.72	51	2.67	13
14	1.75	1.00	6.80	4	51	0.50	13.58	2.58	16.16	4	18	12.92	4	28	24.50	4	56	0.46	6.30	4	18	4.63	6.71																19.78	1522	0.79	61	2.80	14
15	1.83	1.00	7.36	5	19	1.33	2.83	2.69	5.52	4	18	13.92	4	32	24.50	5	50	0.50	6.86	4	18	5.11	7.19	5	19	13.92	5	18	1.33	10.75	2.69	13.44							21.53	1815	0.86	73	2.96	15
16	2.00	1.00	7.69	5	17	1.50	2.83	2.89	5.72	4	18	14.92	4	34	24.50	6	39	0.63	7.19	4	18	5.28	7.36	5	17	14.92	5	16	1.50	4.75	2.89	7.64	5	16	1.50	14.75	2.89	17.64	23.11	2075	0.92	83	3.18	16
17	2.00	1.17	8.16	5	19	1.38	3.00	2.91	5.91	4	18	15.75	4	34	24.50	6	39	0.63	7.66	4	18	5.74	7.83	5	19	15.75	5	18	1.38	4.92	2.91	7.83	5	18	1.38	13.92	2.91	16.83	25.88	2223	1.04	89	3.45	17
18	2.25	1.17	8.78	6	17	1.50	4.33	3.20	7.53	4	18	16.75	4	38	24.50	6	50	0.50	8.28	4	18	6.11	8.20	5	17	16.75	6	16	1.50	5.92	3.20	9.12	6	16	1.50	14.92	3.20	18.12	27.87	2730	1.11	109	3.49	18
19	2.33	1.17	9.15	6	19	1.38	3.42	3.31	6.73	4	18	17.75	4	40	24.50	7	39	0.63	8.65	4	18	6.40	8.49	5	19	17.75	6	18	1.38	6.33	3.31	9.64	6	18	1.38	15.33	3.32	18.64	29.62	3010	1.18	120	3.74	19
20	2.50	1.17	9.68	7	17	1.50	3.42	3.51	6.93	4	18	18.75	4	42	24.50	7	39	0.63	9.18	4	18	6.76	8.84	6	17	18.75	7	16	1.50	6.33	3.51	9.84	7	16	1.50	16.33	3.51	19.84	31.57	3483	1.26	139	3.87	20
21	2.67	1.42	10.32	7	17	1.50	5.17	3.70	8.87	4	18	19.50	4	44	24.50	7	43	0.58	9.82	4	18	7.23	9.31	6	17	19.50	7	16	1.50	7.17	3.70	10.87	7	16	1.50	17.17	3.70	14.87	35.70	3620	1.43	145	3.98	21
22	2.92	1.42	11.03	8	17	1.50	4.58	3.98	8.56	4	18	20.50	4	46	24.50	7	50	0.50	10.53	4	18	7.69	9.77	6	17	20.50	8	16	1.50	8.17	3.98	12.15	8	16	1.50	12.17	3.98	16.15	38.06	4356	1.52	174	3.98	22
23	3.08	1.42	11.86	8	17	1.50	5.83	4.18	10.01	4	18	21.50	4	50	24.50	8	46	0.54	11.36	4	18	8.36	10.44	6	17	21.50	8	16	1.50	8.83	4.18	13.01	8	16	1.50	13.17	4.18	17.35	40.62	4940	1.62	198	3.99	23
24	3.42	1.42	12.55	8	19	1.38	5.83	4.54	10.37	4	18	22.50	4	50	24.50	8	50	0.50	12.05	4	18	8.71	10.79	6	19	22.50	8	18	1.38	9.83	4.54	14.37	8	18	1.38	14.17	4.54	18.71	43.01	5627	1.72	225	3.98	24
25	3.58	1.42	13.52	9	17	1.50	6.92	4.74	11.66	4	18	23.50	4	52	24.50	9	46	0.54	13.02	4	18	9.52	11.60	6	17	23.50	9	16	1.50	10.50	4.74	15.24	9	16	1.50	17.50	4.74	22.24	45.80	6665	1.83	267	3.96	25
26	4.00	1.67	14.12	9	19	1.38	7.42	5.18	12.60	4	18	24.25	4	54	24.50	9	39	0.63	13.62	4	18	9.70	11.78	6	19	24.25	9	18	1.38	11.34	5.18	16.52	9	18	1.38	18.25	5.18	23.43	51.02	7116	2.04	285	3.98	26
27	4.25	1.67	14.99	10	17	1.50	7.92	5.46	13.38	4	18	25.25	4	56	24.50	9	46	0.54	14.49	4	18	10.32	12.40	6	17	25.25	10	16	1.50	11.75	5.46	17.21	10	16	1.50	18.75	5.46	24.21	53.91	8153	2.16	326	3.97	27
28	4.58	1.67	15.72	10	19	1.38	8.42	5.83	14.25	4	18	26.25	4	60	24.50	9	50	0.50	15.22	4	18	10.72	12.80	7	19	26.25	10	18	1.38	12.25	5.83	18.08	10	18	1.38	19.75	5.83	25.58	56.64	9958	2.27	398	3.97	28
29	4.92	1.67	16.44	11	17	1.50	8.92	6.20	15.12	4	18	27.25	4	62	24.50	9	54	0.46	15.94	4	18	11.10	13.18	8	17	27.25	11	16	1.50	12.75	6.20	18.95	11	16	1.50	20.75	6.20	26.95	59.38	10974	2.38	439	3.98	29
30	5.33	1.67	17.13	11	19	1.38	9.42	6.64	16.06	4	18	28.25	4	64	24.50	10	50	0.50	16.63	4	18	11.38	13.46	8	19	28.25	11	18	1.38	13.00	6.64	19.64	11	18	1.38	21.75	6.64	28.39	62.10	12817	2.48	513	3.96	30

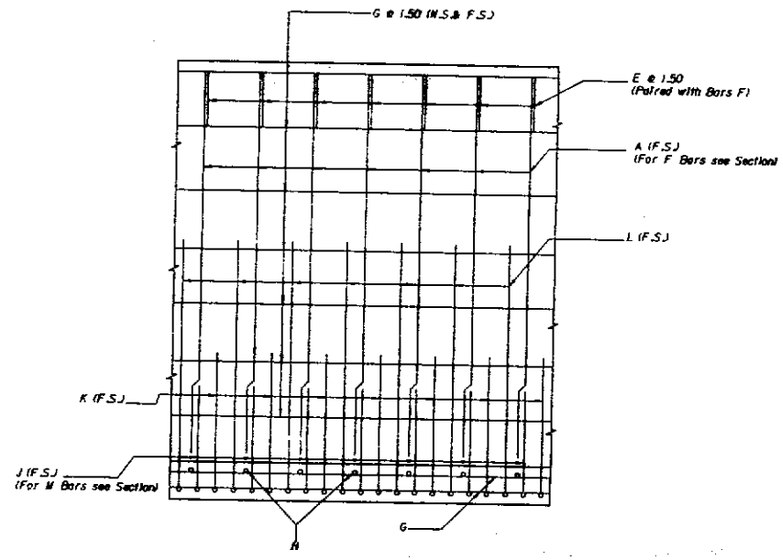

VIEW A-A

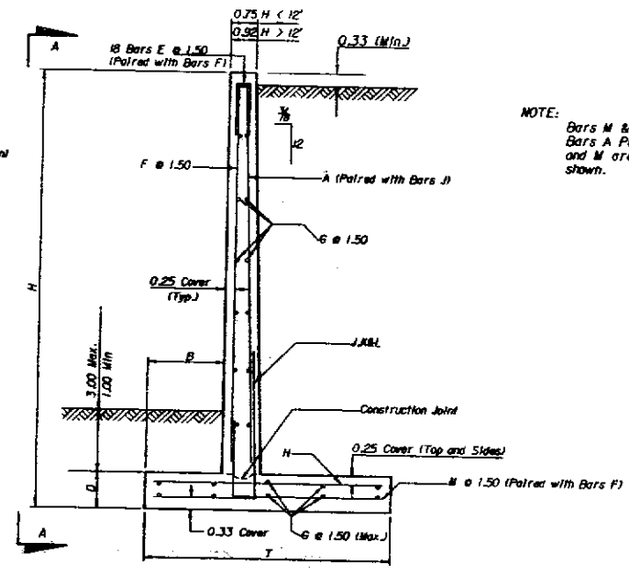

TYPICAL SECTION

NOTE:
Bars M & E Paired with Bars F and Bars A Paired with Bars J. Bars E,F and M are NO.4 Bars. Bars J are as shown.

NOTE:
To accommodate the Variable Height of a wall Unit, vertical Bars may be field cut to fit and the number of horizontal Bars G required by the highest wall dimension within a 25' Unit shall be equally spaced at each end of the Unit.

BENDING DIAGRAM

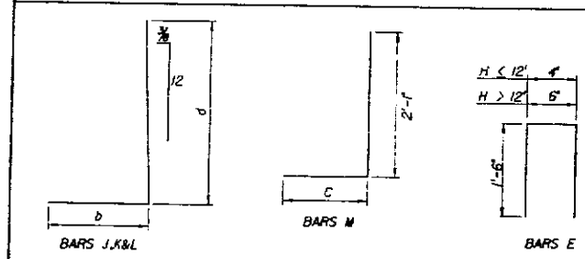

NOTE: All bar dimensions are out to out.

CANTILEVER RETAINING WALLS

REVISIONS	
Date	Description
3/87	Changed cover on Stem to 0.25(typ.).
3/87	Changed cover on Footing to 0.25(bottom) and 0.25(typ.) sides.
3/87	Changed width of Stem to 0.875 for H ≤ 6' and to 0.625 for H > 6'.
3/87	Changed opposite reference.
3/87	Changed dimension to 0.25(top) for Footing on CANTIL.

STATE OF FLORIDA DEPARTMENT OF TRANSPORTATION
BUREAU OF STRUCTURES

CASE 1 (4.0 KIPS/SQ. FT. MAX. BEARING PRESSURE)
6 FT. TO 30 FT. HEIGHT

	Name	Date
Drawn by	M.J.	3/87
Checked by	M.P.	3/87
Revisions by	C.W.	6/85
Checked by	R.N.	6/85
Approved by	A.G.M.	

PROJECT ENGINEER: Bill Hamrick
CHIEF, BUREAU OF STRUCTURES

Drawing No. 4 OF 23
Index No. 14.051 CADD

3	N.A.		

RETAINING WALL DATA

WALL DIMENSIONS				REINFORCING STEEL SCHEDULE																																		QUANTITIES				ACTUAL MAXIMUM BEARING PRESSURE	
				BARS J						BARS F			BARS G			BARS H				BARS M				BARS A			BARS K						BARS L						CONCRETE / 25' UNIT	STEEL / 25' UNIT	CONCRETE PER LIN.FT.	STEEL PER LIN.FT.		
H	B	D	T	SIZE	NO.	SPACING	a	b	LENGTH	SIZE	NO.	LENGTH	SIZE	NO.	LENGTH	SIZE	NO.	SPACING	LENGTH	SIZE	NO.	c	LENGTH	SIZE	NO.	LENGTH	SIZE	NO.	SPACING	a	b	LENGTH	SIZE	NO.	SPACING	a	b	LENGTH	C.Y.	LBS.	C.Y.	LBS.	KIPS/SQ.FT.	H
6	0.67	0.92	3.05	4	26	1.00	5.58	1.08	6.66	4	18	5.00	4	14	24.50	4	18	1.42	2.55	4	18	1.96	4.04																6.46	524	0.26	21	1.34	6
7	0.83	0.92	3.50	4	26	1.00	6.58	1.28	7.86	4	18	6.00	4	16	24.50	4	18	1.42	3.00	4	18	2.25	4.33																7.73	599	0.31	24	1.52	7
8	1.00	0.92	3.96	4	26	1.00	7.58	1.48	9.06	4	18	7.00	4	18	24.50	4	18	1.42	3.46	4	18	2.54	4.62																9.01	673	0.36	27	1.69	8
9	1.17	0.92	4.50	4	27	0.96	8.58	1.68	10.26	4	18	8.00	4	20	24.50	4	19	1.33	4.00	4	18	2.92	5.00																10.38	759	0.42	30	1.82	9
10	1.25	0.92	4.93	4	28	0.92	9.58	1.79	11.37	4	18	9.00	4	22	24.50	4	27	0.96	4.43	4	18	3.26	5.35																11.69	862	0.47	35	2.04	10
11	1.33	0.92	5.50	4	31	0.83	10.58	1.90	12.48	4	18	10.00	4	24	24.50	4	40	0.63	5.00	4	18	3.75	5.83																13.14	1015	0.53	41	2.20	11
12	1.50	1.00	5.93	4	38	0.67	11.58	2.10	13.68	4	18	10.92	4	26	24.50	4	39	0.67	5.43	4	18	4.01	6.10																14.88	1159	0.60	46	2.39	12
13	1.58	1.00	6.28	4	38	0.67	12.58	2.38	14.96	4	18	11.92	4	28	24.50	4	46	0.54	5.78	4	18	4.28	6.36																18.08	1277	0.72	51	2.67	13
14	1.75	1.00	6.80	4	51	0.50	13.58	2.58	16.16	4	18	12.92	4	28	24.50	4	56	0.46	6.30	4	18	4.64	6.72																19.78	1523	0.79	61	2.80	14
15	1.83	1.00	7.36	5	19	1.33	2.83	2.69	5.52	4	18	13.92	4	32	24.50	5	50	0.50	6.86	4	18	5.11	7.19	5	19	13.92	5	18	1.33	10.75	2.69	13.44							21.53	1815	0.86	73	2.96	15
16	2.00	1.00	7.69	5	17	1.50	2.83	2.89	5.72	4	18	14.92	4	34	24.50	6	39	0.63	7.19	4	18	5.28	7.36	5	17	14.92	5	16	1.50	4.75	2.89	7.64	5	16	1.50	14.75	2.89	17.64	23.11	2075	0.92	83	3.18	16
17	2.00	1.17	8.16	5	19	1.38	3.00	2.91	5.91	4	18	15.75	4	34	24.50	6	39	0.63	7.66	4	18	5.74	7.83	5	19	15.75	5	18	1.38	4.92	2.91	7.83	5	18	1.38	13.92	2.91	16.83	25.88	2223	1.04	89	3.45	17
18	2.25	1.17	8.78	6	17	1.50	4.33	3.20	7.53	4	18	16.75	4	38	24.50	6	50	0.50	8.28	4	18	6.11	8.20	5	17	16.75	6	16	1.50	5.92	3.20	9.12	6	16	1.50	14.92	3.20	18.12	27.87	2730	1.11	109	3.49	18
19	2.33	1.17	9.15	6	19	1.38	3.42	3.31	6.73	4	18	17.75	4	40	24.50	7	39	0.63	8.65	4	18	6.40	8.49	5	19	17.75	6	18	1.38	6.33	3.31	9.64	6	18	1.38	15.33	3.31	18.64	29.62	3010	1.18	120	3.74	19
20	2.50	1.17	9.68	7	17	1.50	3.42	3.51	6.93	4	18	18.75	4	42	24.50	7	39	0.63	9.18	4	18	6.76	8.84	6	17	18.75	7	16	1.50	6.33	3.51	9.84	7	16	1.50	16.33	3.51	19.84	31.57	3483	1.26	139	3.87	20
21	2.58	1.42	10.04	7	17	1.50	5.17	3.62	8.79	4	18	19.50	4	44	24.50	7	43	0.58	9.54	4	18	7.04	9.12	6	17	19.50	7	16	1.50	7.17	3.62	10.79	7	16	1.50	11.17	3.62	14.79	35.34	3585	1.41	143	4.16	21
22	2.83	1.42	10.56	8	17	1.50	4.58	3.90	8.48	4	18	20.50	4	46	24.50	7	50	0.50	10.06	4	18	7.31	9.40	6	17	20.50	8	16	1.50	8.17	3.90	12.07	8	16	1.50	12.17	3.90	16.07	37.46	4293	1.50	172	4.24	22
23	2.83	1.42	11.02	8	17	1.50	5.83	3.93	9.76	4	18	21.50	4	48	24.50	8	46	0.54	10.52	4	18	7.77	9.86	6	17	21.50	8	16	1.50	8.83	3.93	12.76	8	16	1.50	13.17	3.93	17.10	39.52	4764	1.58	191	4.49	23
24	3.08	1.42	11.46	8	19	1.38	5.83	4.21	10.04	4	18	22.50	4	50	24.50	8	50	0.50	10.96	4	18	7.96	10.04	6	19	22.50	8	18	1.38	9.83	4.21	14.04	8	18	1.38	14.17	4.21	18.38	41.58	5424	1.66	217	4.62	24
25	3.08	1.42	12.02	9	17	1.50	6.92	4.24	11.16	4	18	23.50	4	52	24.50	9	50	0.50	11.52	4	18	8.52	10.61	6	17	23.50	9	16	1.50	10.50	4.24	14.74	9	16	1.50	17.50	4.24	21.74	43.83	6491	1.75	260	4.82	25
26	3.42	1.67	12.45	9	19	1.38	7.42	4.60	12.02	4	18	24.25	4	54	24.50	9	39	0.63	11.95	4	18	8.62	10.70	6	19	24.25	9	18	1.38	11.34	4.60	15.94	9	18	1.38	18.25	4.60	22.85	48.44	6776	1.94	271	4.94	26
27	3.67	1.67	13.15	10	17	1.50	7.92	4.88	12.80	4	18	25.25	4	56	24.50	9	46	0.54	12.65	4	18	9.07	11.15	6	17	25.25	10	16	1.50	11.75	4.88	16.63	10	16	1.50	18.75	4.88	23.63	51.08	7728	2.04	309	4.94	27
28	4.00	1.67	13.75	10	19	1.38	8.42	5.24	13.66	4	18	26.25	4	60	24.50	9	50	0.50	13.25	4	18	9.34	11.42	7	19	26.25	10	18	1.38	12.25	5.24	17.49	10	18	1.38	19.75	5.24	24.99	53.61	9156	2.14	366	4.95	28
29	4.25	1.67	14.44	11	17	1.50	8.92	5.52	14.44	4	18	27.25	4	62	24.50	10	46	0.54	13.94	4	18	9.77	11.86	8	17	27.25	11	16	1.50	12.75	5.52	18.27	11	16	1.50	20.75	5.52	26.27	56.29	10614	2.25	425	4.96	29
30	4.67	1.67	15.05	11	19	1.38	9.42	5.97	15.39	4	18	28.25	4	64	24.50	10	50	0.50	14.55	4	18	9.96	12.05	8	19	28.25	11	18	1.38	13.00	5.97	18.97	11	18	1.38	21.75	5.97	27.72	58.88	12156	2.36	486	4.94	30

NOTE:
To accommodate the Variable Height of a wall Unit, vertical Bars may be field cut to fit and the number of horizontal Bars G required by the highest wall dimension within a 25' Unit shall be equally spaced at each end of the Unit.

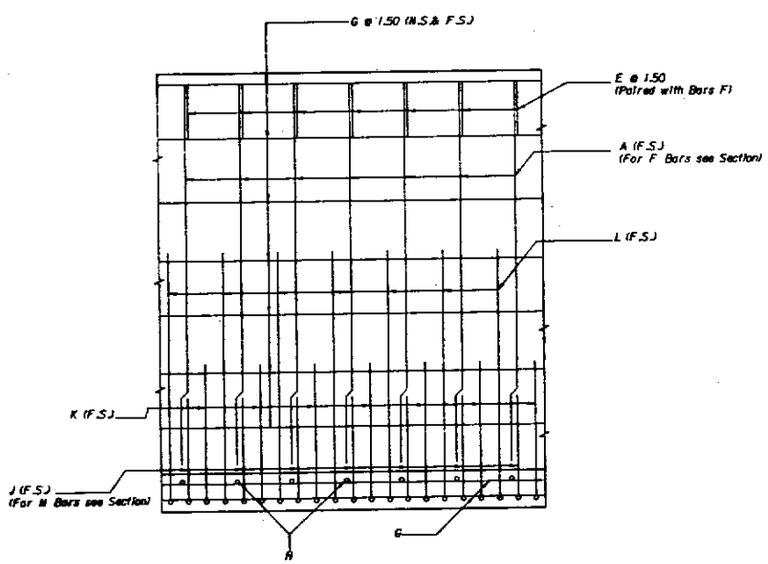

VIEW A-A

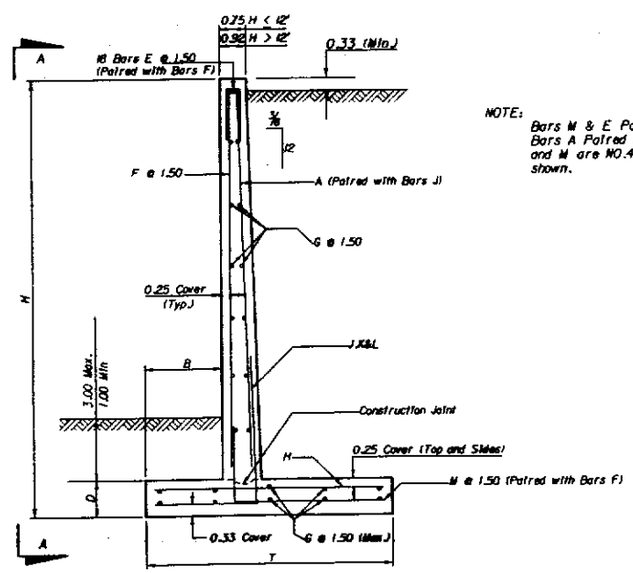

TYPICAL SECTION

NOTE:
Bars M & E Paired with Bars F and Bars A Paired with Bars J. Bars E,F and M are #0.4 Bars. Bars J are as shown.

BENDING DIAGRAM

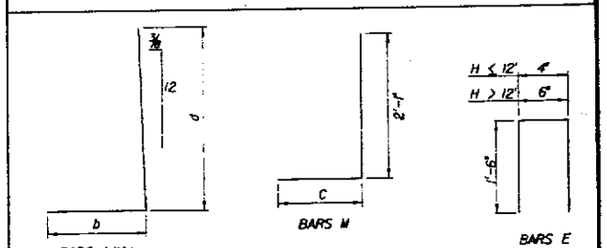

NOTE: All bar dimensions are out to out.

CANTILEVER RETAINING WALLS

REVISIONS	
Date	Description
3-97	Changed cover on Stem to 0.25(Typ.)
3-97	Changed cover on Footing to 0.25(Bottom and 0.25(Top & Sides).
3-97	Changed width of Stem to 0.625 for H ≤ 12' and to 0.833 for H > 12'.
3-97	Changed Bar Number from 4 to 5 on Section A-A.
3-97	Changed Bar Number from 5 to 6 on Section A-A.
3-97	Changed Bar Number from 6 to 7 on Section A-A.
3-97	Changed Bar Number from

3	N.A.		

RETAINING WALL DATA

WALL DIMENSIONS				REINFORCING STEEL SCHEDULE																																		QUANTITIES				ACTUAL MAXIMUM BEARING PRESSURE	
				BARS J						BARS F			BARS G			BARS H				BARS M				BARS A			BARS K						BARS L						CONCRETE / 25' UNIT	STEEL / 25' UNIT	CONCRETE PER LIN.FT.	STEEL PER LIN.FT.		
H	B	D	T	SIZE	NO.	SPACING	a	b	LENGTH	SIZE	NO.	LENGTH	SIZE	NO.	LENGTH	SIZE	NO.	SPACING	LENGTH	SIZE	NO.	c	LENGTH	SIZE	NO.	LENGTH	SIZE	NO.	SPACING	a	b	LENGTH	SIZE	NO.	SPACING	a	b	LENGTH	C.Y.	LBS.	C.Y.	LBS.	KIPS/SQ.FT.	H
6	0.67	0.92	3.05	4	26	1.00	5.58	1.08	6.66	4	18	5.00	4	14	24.50	4	18	1.42	2.55	4	18	1.97	4.05																6.46	524	0.26	21	1.34	6
7	0.83	0.92	3.50	4	26	1.00	6.58	1.28	7.86	4	18	6.00	4	16	24.50	4	18	1.42	3.00	4	18	2.25	4.33																7.73	599	0.31	24	1.52	7
8	1.00	0.92	3.96	4	26	1.00	7.58	1.48	9.06	4	18	7.00	4	18	24.50	4	18	1.42	3.46	4	18	2.54	4.62																9.01	673	0.36	27	1.69	8
9	1.17	0.92	4.50	4	27	0.96	8.58	1.68	10.26	4	18	8.00	4	20	24.50	4	19	1.33	4.00	4	18	2.92	5.00																10.38	759	0.42	30	1.82	9
10	1.25	0.92	4.93	4	28	0.92	9.58	1.79	11.37	4	18	9.00	4	22	24.50	4	26	0.96	4.43	4	18	3.26	5.35																11.69	862	0.47	35	2.04	10
11	1.33	0.92	5.50	4	31	0.83	10.58	1.90	12.48	4	18	10.00	4	24	24.50	4	40	0.63	5.00	4	18	3.75	5.83																13.14	1015	0.53	41	2.20	11
12	1.50	1.00	5.93	4	38	0.67	11.58	2.10	13.68	4	18	10.92	4	26	24.50	4	39	0.67	5.43	4	18	4.01	6.10																14.88	1159	0.60	46	2.39	12
13	1.58	1.00	6.28	4	38	0.67	12.58	2.38	14.96	4	18	11.92	4	28	24.50	4	46	0.54	5.78	4	18	4.28	6.36																18.08	1277	0.72	51	2.67	13
14	1.75	1.00	6.80	4	51	0.50	13.58	2.58	16.16	4	18	12.92	4	28	24.50	4	56	0.46	6.30	4	18	4.64	6.72																19.78	1523	0.79	61	2.80	14
15	1.83	1.00	7.36	5	19	1.33	2.83	2.69	5.52	4	18	13.92	4	32	24.50	5	50	0.50	6.86	4	18	5.11	7.19	5	19	13.92	5	18	1.33	10.75	2.69	13.44							21.53	1823	0.86	73	2.96	15
16	2.00	1.00	7.69	5	17	1.50	2.83	2.89	5.72	4	18	14.92	4	34	24.50	6	39	0.63	7.19	4	18	5.28	7.36	5	17	14.92	5	16	1.50	4.75	2.89	7.64	5	16	1.50	14.75	2.89	17.64	23.11	2075	0.92	83	3.18	16
17	2.00	1.17	8.16	5	19	1.38	3.00	2.91	5.91	4	18	15.75	4	34	24.50	6	39	0.63	7.66	4	18	5.74	7.83	5	19	15.75	5	18	1.38	4.92	2.91	7.83	5	18	1.38	13.92	2.91	16.83	25.88	2223	1.04	89	3.45	17
18	2.25	1.17	8.78	6	17	1.50	4.33	3.20	7.53	4	18	16.75	4	38	24.50	6	50	0.50	8.28	4	18	6.11	8.20	5	17	16.75	6	16	1.50	5.92	3.20	9.12	6	16	1.50	14.92	3.20	18.12	27.87	2730	1.11	109	3.49	18
19	2.33	1.17	9.15	6	19	1.38	3.42	3.31	6.73	4	18	17.75	4	40	24.50	7	39	0.63	8.65	4	18	6.40	8.49	5	19	17.75	6	18	1.38	6.33	3.31	9.64	6	18	1.38	15.33	3.31	18.64	29.62	3010	1.18	120	3.74	19
20	2.50	1.17	9.68	7	17	1.50	3.42	3.51	6.93	4	18	18.75	4	42	24.50	7	39	0.63	9.18	4	18	6.76	8.84	6	17	18.75	7	16	1.50	6.33	3.51	9.84	7	16	1.50	16.33	3.51	19.84	31.57	3483	1.26	139	3.87	20
21	2.58	1.42	10.04	7	17	1.50	5.17	3.62	8.79	4	18	19.50	4	44	24.50	7	43	0.58	9.54	4	18	7.04	9.12	6	17	19.50	7	16	1.50	7.17	3.62	10.79	7	16	1.50	17.17	3.62	14.79	35.34	3585	1.41	143	4.16	21
22	2.83	1.42	10.56	8	17	1.50	4.58	3.90	8.48	4	18	20.50	4	46	24.50	7	50	0.50	10.06	4	18	7.31	9.40	6	17	20.50	8	16	1.50	8.17	3.90	12.07	8	16	1.50	12.17	3.90	16.07	37.46	4293	1.50	172	4.24	22
23	2.83	1.42	11.02	8	17	1.50	5.83	3.93	9.76	4	18	21.50	4	48	24.50	8	46	0.54	10.52	4	18	7.77	9.86	6	17	21.50	8	16	1.50	8.83	3.93	12.76	8	16	1.50	13.17	3.93	17.10	39.52	4764	1.58	191	4.49	23
24	3.08	1.42	11.46	8	19	1.38	5.83	4.21	10.04	4	18	22.50	4	50	24.50	8	50	0.50	10.96	4	18	7.96	10.04	6	19	22.50	8	18	1.38	9.83	4.21	14.04	8	18	1.38	14.17	4.21	18.38	41.58	5424	1.66	217	4.62	24
25	3.08	1.42	12.02	9	17	1.50	6.92	4.24	11.16	4	18	23.50	4	52	24.50	9	50	0.50	11.52	4	18	8.52	10.61	6	17	23.50	9	16	1.50	10.50	4.24	14.74	9	16	1.50	17.50	4.24	21.74	43.83	6491	1.75	260	4.82	25
26	3.42	1.67	12.45	9	19	1.38	7.42	4.60	12.02	4	18	24.25	4	54	24.50	9	39	0.63	11.95	4	18	8.62	10.70	6	19	24.25	9	18	1.38	11.34	4.60	15.94	9	18	1.38	18.25	4.60	22.85	48.44	6776	1.94	271	4.94	26
27	3.58	1.67	12.89	10	17	1.50	7.92	4.80	12.72	4	18	25.25	4	56	24.50	9	46	0.54	12.39	4	18	8.89	10.97	6	17	25.25	10	16	1.50	11.75	4.80	16.55	10	16	1.50	18.75	4.80	23.55	50.68	7668	2.03	307	5.11	27
28	3.83	1.67	13.42	10	19	1.38	8.42	5.08	13.50	4	18	26.25	4	60	24.50	9	50	0.50	12.92	4	18	9.17	11.25	7	19	26.25	10	18	1.38	12.25	5.08	17.33	11	18	1.38	20.25	5.08	25.83	53.09	9607	2.12	384	5.19	28
29	4.08	1.67	13.77	11	17	1.50	8.92	5.36	14.28	4	18	27.25	4	62	24.50	10	46	0.54	13.27	4	18	9.27	11.35	8	17	27.25	11	16	1.50	12.75	5.36	18.11	11	16	1.50	20.75	5.36	26.11	55.27	10433	2.21	417	5.36	29
30	4.42	1.67	14.48	11	19	1.38	9.42	5.72	15.14	4	18	28.25	4	64	24.50	10	50	0.50	13.98	4	18	9.65	11.73	8	19	28.25	11	18	1.38	13.00	5.72	18.72	11	18	1.38	21.75	5.72	27.47	58.01	11957	2.32	478	5.31	30

NOTE:
To accommodate the Variable Height of a wall Unit, vertical Bars may be field cut to fit and the number of horizontal Bars G required by the highest wall dimension within a 25' Unit shall be equally spaced at each end of the Unit.

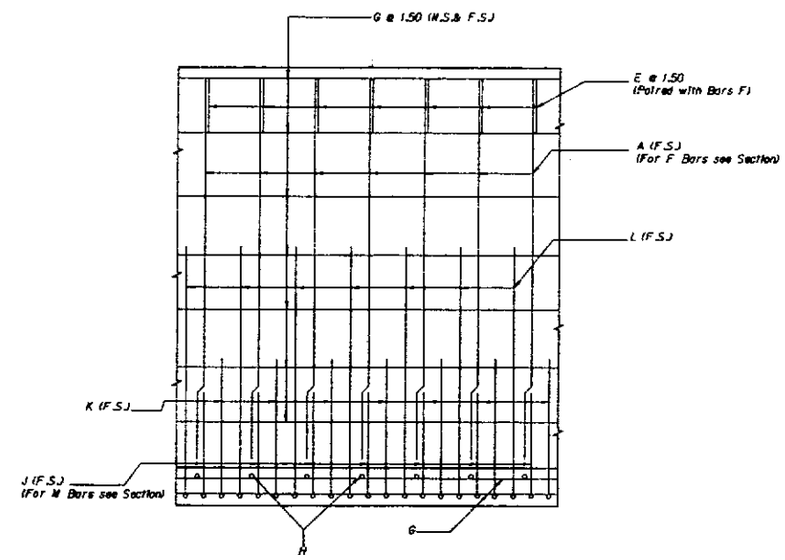

VIEW A-A

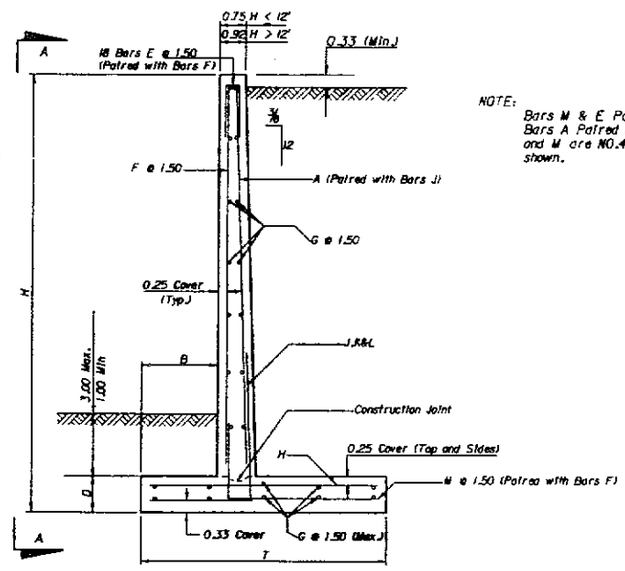

TYPICAL SECTION

NOTE:
Bars M & E Paired with Bars F and Bars A Paired with Bars J. Bars E,F and M are NO.4 Bars. Bars J are as shown.

BENDING DIAGRAM

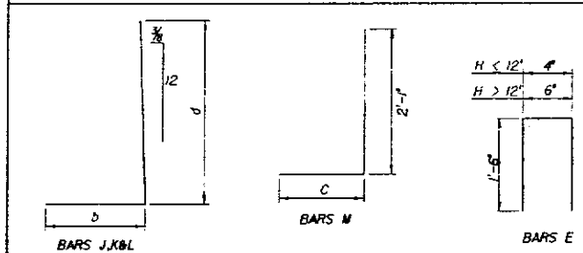

NOTE: All bar dimensions are out to out.

CANTILEVER RETAINING WALLS

REVISIONS	
Date	Description
3/97	Changed cover on Stem to 0.25(Typ.), Changed cover on Footing to 0.33(Bottom), and 0.25(Top & sides).
3/97	Changed width of Stem to 0.25 for H ≤ 12' and to 0.92 for H > 12'.
3/97	Changed concrete adjusted.
3/97	Added dimension to Bottom Mat. Refer to C.S.S.
3/97	

STATE OF FLORIDA DEPARTMENT OF TRANSPORTATION
BUREAU OF STRUCTURES

CASE 1(6.0 KIPS/SQ. FT. MAX. BEARING PRESSURE)
6 FT. TO 30 FT. HEIGHT

Drawn by	M.J.	3/87
Checked by	M.P.	3/87
Quantities by	R.H.	6/85
Checked by	C.H.	6/85
Supervised by	N.G.M.	

STATE OF FLORIDA
C. E. T., BUREAU OF STRUCTURES

Drawing No. 6 OF 23

Index No. M.051 CADD

		3	N.A.		

RETAINING WALL DATA

WALL DIMENSIONS				REINFORCING STEEL SCHEDULE																																				QUANTITIES				ACTUAL MAXIMUM BEARING PRESSURE	
				BARS J						BARS F			BARS G			BARS H				BARS M				BARS A			BARS K						BARS L						CONCRETE / 25' UNIT	STEEL / 25' UNIT	CONCRETE PER LIN.FT.	STEEL PER LIN.FT.		
H	B	D	T	SIZE	NO.	SPACING	a	b	LENGTH	SIZE	NO.	LENGTH	SIZE	NO.	LENGTH	SIZE	NO.	SPACING	LENGTH	SIZE	NO.	c	LENGTH	SIZE	NO.	LENGTH	SIZE	NO.	SPACING	a	b	LENGTH	SIZE	NO.	SPACING	a	b	LENGTH	C.Y.	LBS.	C.Y.	LBS.	KIPS/SQ.FT.	H
6	1.08	0.92	4.25	4	26	1.00	5.58	1.50	7.08	4	18	5.00	4	14	24.50	4	18	1.42	3.75	4	18	2.75	4.83																7.51	555	0.30	22	1.31	6
7	1.17	0.92	4.83	4	26	1.00	6.58	1.61	8.19	4	18	6.00	4	16	24.50	4	19	1.33	4.33	4	18	3.24	5.32																8.86	635	0.35	25	1.48	7
8	1.33	0.92	5.23	4	26	1.00	7.58	1.81	9.39	4	18	7.00	4	20	24.50	4	27	0.96	4.73	4	18	3.48	5.56																10.08	767	0.40	31	1.68	8
9	1.58	0.92	5.78	4	31	0.83	8.58	2.09	10.67	4	18	8.00	4	22	24.50	4	34	0.75	5.28	4	18	3.78	5.86																11.46	908	0.46	36	1.79	9
10	1.67	0.92	6.32	4	40	0.63	9.58	2.21	11.79	4	18	9.00	4	24	24.50	4	50	0.50	5.82	4	18	4.23	6.31																12.86	1126	0.51	46	1.96	10
11	1.83	0.92	7.19	4	26	1.00	10.58	2.41	12.99	4	18	10.00	4	26	24.50	5	43	0.58	6.69	4	18	4.94	7.02				4	25	1.00	4.58	2.41	6.99							14.57	1313	0.58	53	1.99	11
12	2.17	1.00	8.12	5	21	1.25	11.58	2.77	14.35	4	18	10.91	4	28	24.50	5	38	0.67	7.62	4	18	5.53	7.61				5	20	1.25	2.75	2.77	5.52							16.90	1452	0.68	58	1.99	12
13	2.50	1.00	9.03	5	19	1.33	12.58	3.30	15.88	4	18	11.91	4	30	24.50	5	47	0.50	8.53	4	18	6.11	8.19				5	18	1.33	5.75	3.30	9.05							20.63	1677	0.83	67	1.99	13
14	2.75	1.00	10.09	5	24	1.08	13.58	3.58	17.16	4	18	12.91	4	32	24.50	6	38	0.67	9.59	4	18	6.92	9.00				5	23	1.08	3.75	3.58	7.33							22.82	1982	0.91	79	1.98	14
15	3.00	1.00	11.23	5	28	0.92	3.25	3.86	7.11	4	18	13.91	4	34	24.50	6	50	0.50	10.73	4	18	7.81	9.89	5	28	13.91	5	27	0.92	4.17	3.86	8.03							25.12	2531	1.00	101	1.98	15
16	3.33	1.00	12.27	6	17	1.50	3.25	4.22	7.47	4	18	14.91	4	36	24.50	6	59	0.42	11.77	4	18	8.52	10.60	6	17	14.91	6	16	1.50	3.17	4.22	7.39	6	16	1.50	6.17	4.22	10.39	27.35	2979	1.09	119	1.98	16
17	3.67	1.17	13.65	6	19	1.38	3.42	4.57	7.99	4	18	15.75	4	40	24.50	6	54	0.46	13.15	4	18	9.56	11.64	6	19	15.75	6	18	1.38	3.33	4.57	7.90	6	18	1.38	6.33	4.57	10.90	31.81	3278	1.27	131	1.97	17
18	4.00	1.17	14.55	7	17	1.50	4.33	4.95	9.28	4	18	16.75	4	44	24.50	8	35	0.71	14.05	4	18	10.13	12.21	6	17	16.75	7	16	1.50	3.33	4.95	8.28	7	16	1.50	7.33	4.95	12.28	34.10	3946	1.36	158	2.00	18
19	4.33	1.17	15.80	7	19	1.38	4.33	5.31	9.64	4	18	17.75	4	46	24.50	8	40	0.63	15.30	4	18	11.05	13.13	6	19	17.75	7	18	1.38	4.92	5.31	10.23	7	18	1.38	8.92	5.31	14.23	36.81	4581	1.47	183	1.99	19
20	4.75	1.17	16.91	8	17	1.50	4.33	5.76	10.09	4	18	18.75	4	48	24.50	8	50	0.50	16.41	4	18	11.74	13.82	6	17	18.75	8	16	1.50	4.92	5.76	10.68	8	16	1.50	9.92	5.76	15.68	39.38	5473	1.58	219	1.99	20

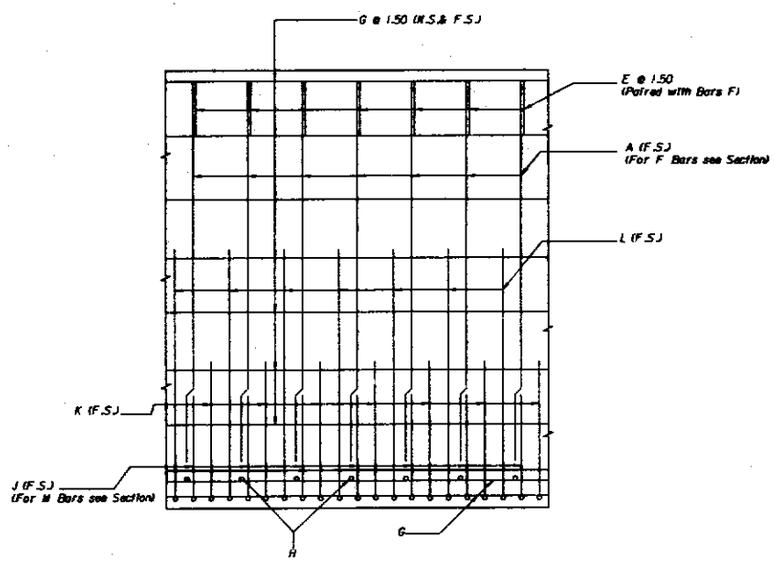

VIEW A-A

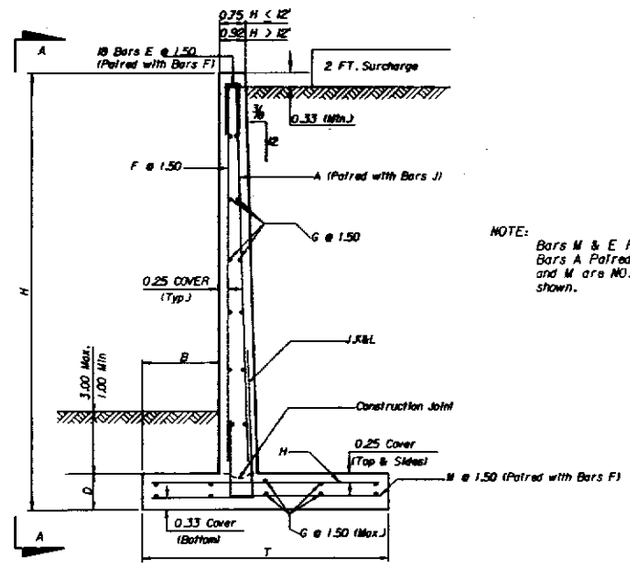

TYPICAL SECTION

NOTE: To accommodate the Variable Height of a Wall Unit, vertical Bars may be field cut to fit and the number of horizontal Bars G required by the highest wall dimension within a 25' Unit shall be equally spaced at each end of the Unit.

NOTE: Bars M & E Paired with Bars F and Bars A Paired with Bars J. Bars E,F and M are NO.4 Bars. Bars J are as shown.

BENDING DIAGRAM

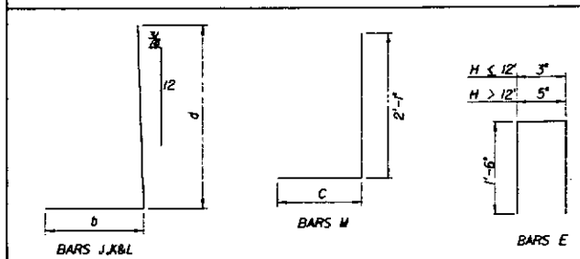

NOTE: All bar dimensions are out to out.

CANTILEVER RETAINING WALLS

REVISIONS	
Date	Description
3/87 3/87	Changed cover on Stem to 0.33(Min.), changed cover on Footing to 0.33(Min.), and 0.33(Typ.) where. Changed width of Stem to 0.75 for H ≤ 12' and to 0.92 for H > 12'.
3/87	Changed dowel details.
3/87 3/87 3/87	Revised to conform to Contractor. Revised to CADD.

STATE OF FLORIDA DEPARTMENT OF TRANSPORTATION
BUREAU OF STRUCTURES

CASE III (2.0 KIPS/SQ. FT. MAX. BEARING PRESSURE)
6 FT. TO 20 FT. HEIGHT

Drawn by	M.I.	3/87
Checked by	M.P.	3/87
Quantities by	C.W.	6/85
Checked by	R.N.	6/85
Supervised by	A.G.M.	

APPROVED
C. H. OF F. BUREAU OF STRUCTURES

Drawing No. 7 OF 23

Index No. 14.051 CADD

FILE NO.	STATE	PROJECT NO.
3	FLA.	

RETAINING WALL DATA

| WALL DIMENSIONS | | | | REINFORCING STEEL SCHEDULE | | | |

3	RA																																													

RETAINING WALL DATA

WALL DIMENSIONS				REINFORCING STEEL SCHEDULE																																								QUANTITIES				ACTUAL MAXIMUM BEARING PRESSURE	
				BARS J						BARS F			BARS G			BARS H				BARS M				BARS A			BARS K							BARS L								CONCRETE / 25' UNIT	STEEL / 25' UNIT	CONCRETE PER LIN.FT.	STEEL PER LIN.FT.		
H	B	D	T	SIZE	NO.	SPACING	a	b	LENGTH	SIZE	NO.	LENGTH	SIZE	NO.	LENGTH	SIZE	NO.	SPACING	LENGTH	SIZE	NO.	c	LENGTH	SIZE	NO.	LENGTH	SIZE	NO.	SPACING	a	b	LENGTH	SIZE	NO.	SPACING	a	b	LENGTH					C.Y.	LBS.	C.Y.	LBS.	KIPS/SQ.FT.	H
6	1.08	0.92	4.25	4	26	1.00	5.58	1.50	7.08	4	18	5.00	4	14	24.50	4	18	1.42	3.75	4	18	2.75	4.83																			7.51	555	0.30	22	1.31	6
7	1.17	0.92	4.83	4	26	1.00	6.58	1.61	8.19	4	18	6.00	4	16	24.50	4	19	1.33	4.33	4	18	3.24	5.32																			8.96	635	0.35	25	1.48	7
8	1.33	0.92	5.23	4	26	1.00	7.58	1.81	9.39	4	18	7.00	4	20	24.50	4	27	0.96	4.73	4	18	3.48	5.56																			10.08	767	0.40	31	1.68	8
9	1.58	0.92	5.78	4	31	0.83	8.58	2.09	10.67	4	18	8.00	4	22	24.50	4	34	0.75	5.28	4	18	3.78	5.86																			11.46	908	0.46	36	1.79	9
10	1.58	0.92	6.23	4	40	0.63	9.58	2.12	11.70	4	18	9.00	4	24	24.50	4	50	0.50	5.73	4	18	4.23	6.31																			12.79	1121	0.51	45	2.02	10
11	1.67	0.92	6.62	4	26	1.00	10.58	2.24	12.82	4	18	10.00	4	24	24.50	5	43	0.58	6.12	4	18	4.53	6.61				4	25	1.00	4.58	2.24	6.82										14.09	1244	0.56	50	2.26	11
12	1.92	1.00	7.11	5	21	1.25	11.58	2.51	14.09	4	18	10.92	4	26	24.50	5	37	0.67	6.61	4	18	4.77	6.85				5	20	1.25	2.75	2.51	5.26										15.97	1355	0.64	54	2.41	12
13	2.00	1.00	7.61	5	19	1.33	12.58	2.79	15.37	4	18	11.92	4	28	24.50	5	46	0.54	7.11	4	18	5.19	7.27				5	18	1.33	5.75	2.79	8.54										19.32	1537	0.77	61	2.60	13
14	2.08	1.00	8.09	5	24	1.08	13.58	2.91	16.49	4	18	12.92	4	30	24.50	6	43	0.58	7.59	4	18	5.59	7.67				5	23	1.08	3.75	2.91	6.66										20.97	1843	0.84	74	2.80	14
15	2.25	1.00	8.55	5	28	0.92	3.25	3.10	6.35	4	18	13.92	4	32	24.50	6	50	0.50	8.05	4	18	5.88	7.96	5	28	13.92	5	27	0.92	4.17	3.10	7.27										22.63	2230	0.91	89	2.97	15
16	2.42	1.00	9.07	6	17	1.50	3.25	3.31	6.56	4	18	14.92	4	34	24.50	7	46	0.54	8.57	4	18	6.23	8.31	6	17	14.92	6	16	1.50	3.17	3.31	6.48	6	16	1.50	6.17	3.31	9.48				24.38	2616	0.98	105	3.12	16
17	2.42	1.17	9.58	6	19	1.38	3.42	3.33	6.75	4	18	15.75	4	36	24.50	7	43	0.58	9.08	4	18	6.74	8.82	6	19	15.75	6	18	1.38	3.33	3.33	6.66	6	18	1.38	6.33	3.33	9.66				27.42	2808	1.10	112	3.35	17
18	2.67	1.17	9.96	7	17	1.50	4.33	3.61	7.94	4	18	16.75	4	38	24.50	7	50	0.50	9.46	4	18	6.87	8.95	6	17	16.75	7	16	1.50	3.33	3.61	6.94	7	16	1.50	7.33	3.61	10.94				29.15	3228	1.17	129	3.52	18
19	2.75	1.17	10.54	7	19	1.38	4.33	3.73	8.06	4	18	17.75	4	42	24.50	8	46	0.54	10.04	4	18	7.37	9.45	6	19	17.75	7	18	1.38	4.92	3.73	8.65	7	18	1.38	8.92	3.73	12.65				31.12	3893	1.24	156	3.67	19
20	2.92	1.17	11.05	8	17	1.50	4.33	3.93	8.28	4	18	18.75	4	42	24.50	8	54	0.46	10.55	4	18	7.71	9.79	6	17	18.75	8	16	1.50	4.92	3.93	8.85	8	16	1.50	9.92	3.93	13.85				33.05	4418	1.32	177	3.82	20
21	3.08	1.42	11.70	8	17	1.50	5.67	4.12	9.79	4	18	19.50	4	44	24.50	8	46	0.54	11.20	4	18	8.20	10.28	6	17	19.50	8	16	1.50	6.83	4.12	10.95	8	16	1.50	11.83	4.12	15.95				37.52	4587	1.50	183	3.93	21
22	3.33	1.42	12.39	9	17	1.50	5.67	4.40	10.07	4	18	20.50	4	46	24.50	8	50	0.50	11.89	4	18	8.64	10.72	7	17	20.50	9	16	1.50	5.58	4.40	9.98	9	16	1.50	10.83	4.40	15.23				39.85	5423	1.59	217	3.97	22
23	3.50	1.42	13.26	9	17	1.50	6.92	4.59	11.51	4	18	21.50	4	48	24.50	9	50	0.50	12.76	4	18	9.34	11.42	7	17	21.50	9	16	1.50	7.50	4.59	12.09	9	16	1.50	13.50	4.59	18.09				42.45	6447	1.70	258	3.98	23
24	3.83	1.42	13.92	9	21	1.25	6.92	4.96	11.88	4	18	22.50	4	50	24.50	9	54	0.46	13.42	4	18	9.67	11.75	7	21	22.50	9	20	1.25	7.50	4.76	12.26	9	20	1.25	13.50	4.79	18.29				44.80	7628	1.79	305	4.00	24
25	4.00	1.42	14.93	10	17	1.50	8.50	5.16	13.66	4	18	23.50	4	52	24.50	10	50	0.50	14.43	4	18	10.51	12.50	7	17	23.50	10	16	1.50	9.42	5.16	14.58	10	16	1.50	15.50	5.16	20.66				47.65	8673	1.91	347	3.98	25
26	4.42	1.67	15.63	10	19	1.38	9.00	5.60	14.60	4	18	24.25	4	54	24.50	9	54	0.46	15.13	4	18	10.79	12.87	7	19	24.25	10	18	1.38	9.42	5.60	15.02	10	18	1.38	15.50	5.60	21.10				53.34	9083	2.13	363	3.99	26
27	4.75	1.67	16.38	11	17	1.50	9.50	5.96	15.46	4	18	25.25	4	56	24.50	10	46	0.54	15.88	4	18	11.21	13.29	8	17	25.25	11	16	1.50	10.00	5.96	15.96	11	16	1.50	18.00	5.96	23.96				56.06	10501	2.24	420	3.99	27
28	5.08	1.67	17.25	11	19	1.38	10.00	6.33	16.33	4	18	26.25	4	58	24.50	10	50	0.50	16.75	4	18	11.75	12.83	8	19	26.25	11	18	1.38	10.00	6.33	16.33	11	18	1.38	18.00	6.33	24.33				59.00	11934	2.36	477	3.97	28
29	5.42	1.67	17.94	11	20	1.32	10.50	6.69	17.19	4	18	27.25	4	62	24.50	11	46	0.54	17.44	4	18	12.10	14.18	8	20	27.25	11	19	1.32	11.50	6.69	18.19	11	19	1.32	19.50	6.69	26.19				61.70	13579	2.47	543	3.99	29
30	5.92	1.67	18.66	11	22	1.19	11.00	7.22	17.22	4	18	28.25	4	62	24.50	11	50	0.50	18.16	4	18	12.32	14.40	8	22	28.25	11	21	1.19	11.50	7.22	18.72	11	21	1.19	19.50	7.22	26.72				64.46	15253	2.58	610	3.95	30

NOTE:
To accommodate the Variable Height of a Wall Unit, vertical Bars may be field cut to fit and the number of horizontal Bars G required by the highest wall dimension within a 25' Unit shall be equally spaced at each end of the Unit.

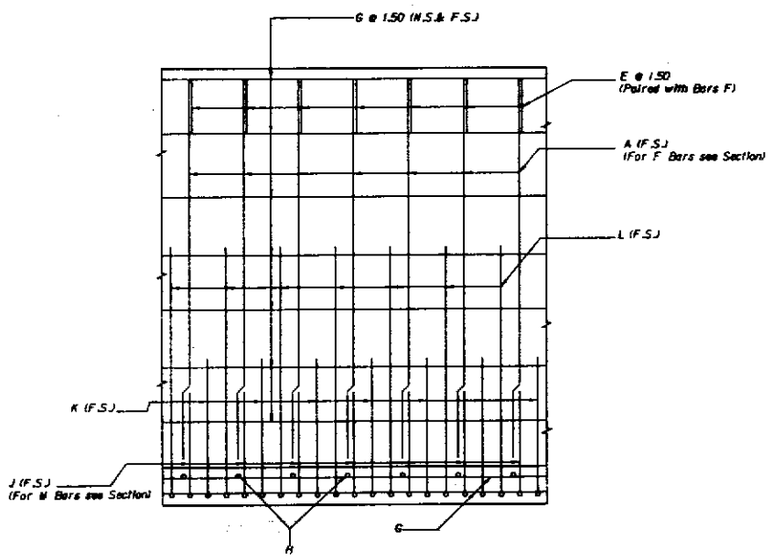

VIEW A-A

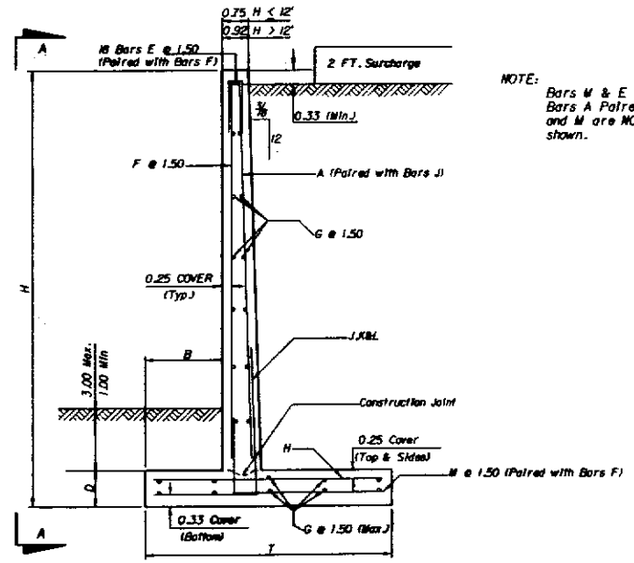

TYPICAL SECTION

NOTE:
Bars M & E Paired with Bars F and Bars A Paired with Bars J. Bars E,F and M are NO.4 Bars. Bars J are as shown.

BENDING DIAGRAM

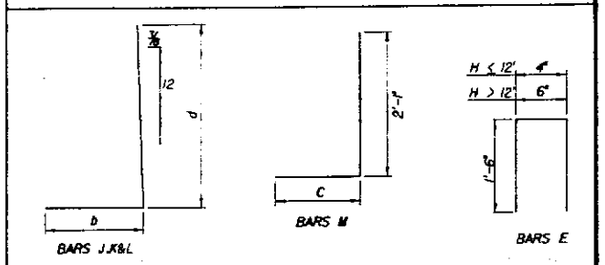

NOTE: All bar dimensions are out to out.

CANTILEVER RETAINING WALLS

REVISIONS	
Date	Description
3/87	Changed cover on Stem to 0.25(typ.), Changed cover on Footing to 0.33(bottom) and 0.25(top & sides).
3/87	Changed width of Stem to 0.75 for H ≤ 12' and to 0.92 for H > 12'.
3/87	Changed concrete volume.
3/87	Changed dimension to 0.33(bottom).
3/87	Added note.

STATE OF FLORIDA DEPARTMENT OF TRANSPORTATION
BUREAU OF STRUCTURES

CASE II (4.0 KIPS/SQ. FT. MAX. BEARING PRESSURE)
6 FT. TO 30 FT. HEIGHT

	Date
Drawn by M.L.	3/87
Checked by M.P.	3/87
Submitted by C.W.	6/85
Checked by R.N.	6/85
Approved by A.G.M.	

APPROVED BY
C. [illegible]
Bridge No.
Index No.

3	N.A.

RETAINING WALL DATA

WALL DIMENSIONS				REINFORCING STEEL SCHEDULE																																				QUANTITIES				ACTUAL MAXIMUM BEARING PRESSURE	
				BARS J						BARS F			BARS G			BARS H				BARS M				BARS A			BARS K						BARS L						CONCRETE / 25' UNIT	STEEL / 25' UNIT	CONCRETE PER LIN.FT.	STEEL PER LIN.FT.		
H	B	D	T	SIZE	NO.	SPACING	a	b	LENGTH	SIZE	NO.	LENGTH	SIZE	NO.	LENGTH	SIZE	NO.	SPACING	LENGTH	SIZE	NO.	c	LENGTH	SIZE	NO.	LENGTH	SIZE	NO.	SPACING	a	b	LENGTH	SIZE	NO.	SPACING	a	b	LENGTH	C.Y.	LBS.	C.Y.	LBS.	KIPS/SQ.FT.	H
6	1.08	0.92	4.25	4	26	1.00	5.58	1.50	7.08	4	18	5.00	4	14	24.50	4	18	1.42	3.75	4	18	2.75	4.83																7.51	555	0.30	22	1.31	6
7	1.17	0.92	4.83	4	26	1.00	6.58	1.61	8.19	4	18	6.00	4	16	24.50	4	19	1.33	4.33	4	18	3.24	5.32																8.86	635	0.35	25	1.48	7
8	1.33	0.92	5.23	4	26	1.00	7.58	1.81	9.39	4	18	7.00	4	20	24.50	4	27	0.96	4.73	4	18	3.48	5.56																10.08	767	0.40	31	1.68	8
9	1.58	0.92	5.78	4	31	0.83	8.58	2.09	10.67	4	18	8.00	4	22	24.50	4	34	0.75	5.28	4	18	3.78	5.86																11.46	908	0.46	36	1.79	9
10	1.58	0.92	6.23	4	40	0.63	9.58	2.12	11.70	4	18	9.00	4	24	24.50	4	50	0.50	5.73	4	18	4.23	6.31																12.79	1121	0.51	45	2.02	10
11	1.67	0.92	6.62	4	26	1.00	10.58	2.24	12.82	4	18	10.00	4	24	24.50	5	43	0.58	6.12	4	18	4.54	6.62				4	25	1.00	4.58	2.24	6.82							14.09	1244	0.56	50	2.26	11
12	1.92	1.00	7.11	5	21	1.25	11.58	2.52	14.10	4	18	10.91	4	26	24.50	5	37	0.67	6.61	4	18	4.77	6.85				5	20	1.25	2.75	2.52	5.27							15.97	1355	0.64	54	2.41	12
13	2.00	1.00	7.61	5	19	1.33	12.58	2.79	15.37	4	18	11.91	4	28	24.50	5	46	0.54	7.11	4	18	5.19	7.27				5	18	1.33	5.75	2.79	8.54							19.32	1537	0.77	61	2.60	13
14	2.08	1.00	8.09	5	24	1.08	13.58	2.90	16.48	4	18	12.91	4	30	24.50	6	43	0.58	7.59	4	18	5.59	7.67				5	23	1.08	3.75	2.90	6.65							20.97	1843	0.84	74	2.80	14
15	2.25	1.00	8.55	5	28	0.92	3.25	3.10	6.35	4	18	13.91	4	32	24.50	6	50	0.50	8.05	4	18	5.88	7.96	5	28	13.92	5	27	0.92	4.17	3.10	7.27							22.63	2230	0.91	89	2.97	15
16	2.42	1.00	9.07	6	17	1.50	3.25	3.30	6.55	4	18	14.91	4	34	24.50	7	46	0.54	8.57	4	18	6.23	8.31	6	17	14.92	6	16	1.50	3.17	3.30	6.47	6	16	1.50	6.17	3.30	9.47	24.38	2615	0.98	105	3.12	16
17	2.42	1.17	9.58	6	19	1.38	3.42	3.33	6.75	4	18	15.75	4	36	24.50	7	43	0.58	9.08	4	18	6.74	8.82	6	19	15.75	6	18	1.38	3.33	3.33	6.66	6	18	1.38	6.33	3.33	9.66	27.42	2808	1.10	112	3.35	17
18	2.67	1.17	9.96	7	17	1.50	4.33	3.61	7.94	4	18	16.75	4	38	24.50	7	50	0.50	9.46	4	18	6.87	8.95	6	17	16.75	7	16	1.50	3.33	3.61	6.94	7	16	1.50	7.33	3.61	10.94	29.15	3228	1.17	129	3.52	18
19	2.75	1.17	10.54	7	19	1.38	4.33	3.73	8.06	4	18	17.75	4	42	24.50	8	46	0.54	10.04	4	18	7.37	9.45	6	19	17.75	7	18	1.38	4.92	3.73	6.65	7	18	1.38	8.92	3.73	12.65	31.12	3819	1.24	155	3.67	19
20	2.92	1.17	11.05	8	17	1.50	4.33	3.93	8.26	4	18	18.75	4	42	24.50	8	54	0.46	10.55	4	18	7.71	9.80	6	17	18.75	8	16	1.50	4.92	3.93	8.85	8	16	1.50	9.92	3.93	13.85	33.05	4417	1.32	177	3.82	20
21	3.00	1.42	11.43	8	17	1.50	5.67	4.04	9.71	4	18	19.50	4	44	24.50	8	46	0.54	10.93	4	18	8.01	10.09	6	17	19.50	8	16	1.50	6.83	4.04	10.87	8	16	1.50	11.83	4.04	15.87	37.16	4541	1.49	182	4.09	21
22	3.17	1.42	11.84	9	17	1.50	5.67	4.23	9.90	4	18	20.50	4	46	24.50	8	50	0.50	11.34	4	18	8.25	10.33	7	17	20.50	9	16	1.50	5.58	4.23	9.81	9	16	1.50	10.83	4.23	15.06	39.14	5317	1.57	213	4.27	22
23	3.25	1.42	12.42	9	17	1.50	6.92	4.34	11.26	4	18	21.50	4	48	24.50	9	50	0.50	11.92	4	18	8.75	10.83	7	17	21.50	9	16	1.50	7.50	4.34	11.84	9	16	1.50	13.50	4.34	17.84	41.35	6255	1.65	250	4.43	23
24	3.50	1.42	12.82	9	21	1.25	6.92	4.62	11.54	4	18	22.50	4	50	24.50	9	54	0.46	12.32	4	18	8.90	10.98	7	21	22.50	9	20	1.25	7.50	4.62	12.12	9	20	1.25	13.50	4.62	18.12	43.37	7371	1.73	295	4.57	24
25	3.50	1.42	13.44	10	17	1.50	8.50	4.66	13.16	4	18	23.50	4	52	24.50	10	50	0.50	12.94	4	18	9.52	11.60	7	17	23.50	10	16	1.50	9.42	4.66	14.08	10	16	1.50	15.50	4.66	20.16	45.69	8236	1.83	329	4.75	25
26	3.83	1.67	13.78	10	19	1.38	9.00	5.02	14.02	4	18	24.25	4	54	24.50	10	43	0.58	13.28	4	18	9.53	11.61	7	19	24.25	10	18	1.38	9.42	5.02	14.44	10	18	1.38	15.50	5.02	20.52	50.48	8610	2.02	344	4.92	26
27	4.08	1.67	14.46	11	17	1.50	9.50	5.29	14.79	4	18	25.25	4	54	24.50	10	46	0.54	13.96	4	18	9.96	12.04	8	17	25.25	11	16	1.50	10.00	5.29	15.29	11	16	1.50	18.00	5.29	23.29	53.10	9899	2.12	396	4.94	27
28	4.42	1.67	15.20	11	19	1.38	10.00	5.66	15.66	4	18	26.25	4	56	24.50	10	50	0.50	14.70	4	18	10.36	12.44	8	19	26.25	11	18	1.38	10.00	5.66	15.66	11	18	1.38	18.00	5.66	23.66	55.85	11259	2.23	450	4.91	28
29	4.75	1.67	15.94	11	20	1.32	10.50	6.02	16.52	4	18	27.25	4	60	24.50	11	46	0.54	15.44	4	18	10.77	12.85	8	20	27.25	11	19	1.32	11.50	6.02	17.52	11	19	1.32	19.50	6.02	25.52	58.61	12835	2.34	513	4.89	29
30	5.17	1.67	16.65	11	22	1.19	11.00	6.47	17.47	4	18	28.25	4	60	24.50	11	50	0.50	16.15	4	18	11.06	13.14	8	22	28.25	11	21	1.19	11.50	6.47	17.97	11	21	1.19	19.50	6.47	25.97	61.35	14416	2.45	577	4.84	30

NOTE:
To accommodate the Variable Height of a Wall Unit, vertical Bars may be field cut to fit and the number of horizontal Bars G required by the highest wall dimension within a 25' Unit shall be equally spaced at each end of the Unit.

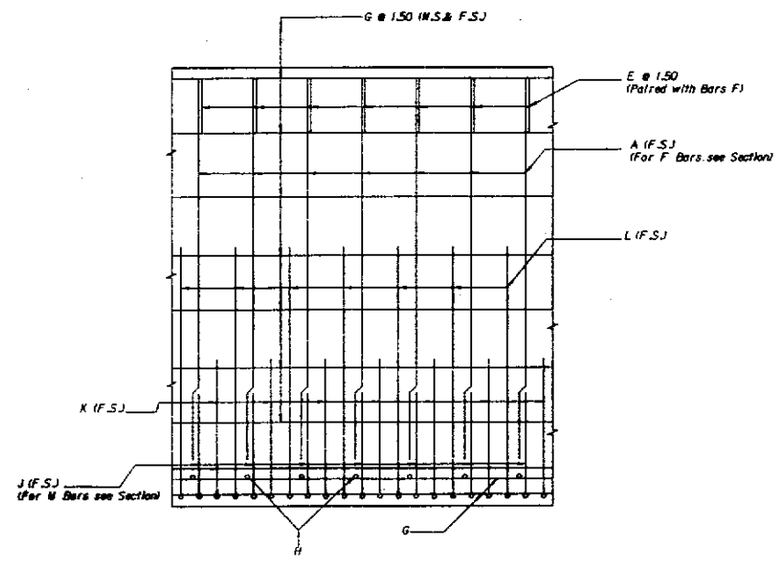

VIEW A-A

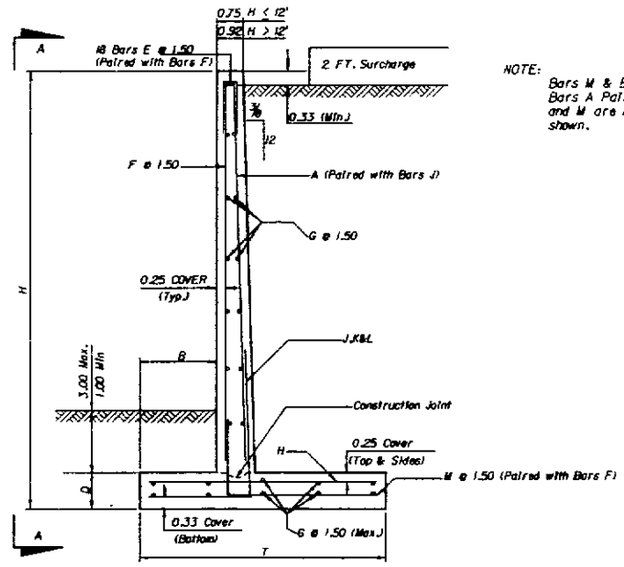

TYPICAL SECTION

NOTE:
Bars M & E Paired with Bars F and Bars A Paired with Bars J. Bars E,F and M are NO.4 Bars. Bars J are as shown.

BENDING DIAGRAM

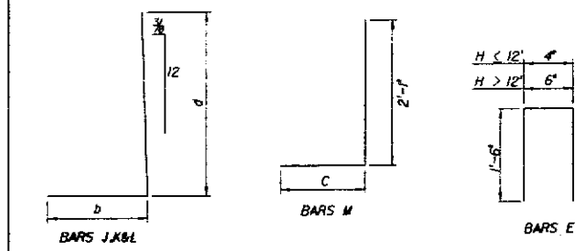

NOTE: All bar dimensions are out to out.

CANTILEVER RETAINING WALLS

REVISIONS	
Date	Description
3/88	Changed cover on Stem to 0.25(Typ.).
3/88	Changed cover on Footing to 0.33(Bottom) and 0.25(Top & sides).
3/88	Changed width of Stem to 0.25 for H ≤ 12' and to 0.92 for H > 12'.
3/88	Changed elevation values.
3/88	Changed dimension to Bottom Face Footing on CADD.
3/88	

STATE OF FLORIDA DEPARTMENT OF TRANSPORTATION
BUREAU OF STRUCTURES

CASE II (5.0 & 6.0 KIPS/SQ. FT. MAX. BEARING PRESSURE)
6 FT. TO 30 FT. HEIGHT

	Name	Date
Drawn by	M.L.	3/87
Checked by	M.P.	3/87
Quantities by	C.W.	6/85
Checked by	R.N.	6/85
Supervised by	A.G.M.	

APPROVED BY
C. H. Hobbs, Assistant State Bridge Engineer

Drawing No. 10 OF 23
Index No. 14.051 CADD

3	R.A.	

RETAINING WALL DATA

WALL DIMENSIONS				REINFORCING STEEL SCHEDULE																																		QUANTITIES				ACTUAL MAXIMUM BEARING PRESSURE	
				BARS J						BARS F			BARS G			BARS H				BARS M				BARS A			BARS K						BARS L						CONCRETE / 25' UNIT	STEEL / 25' UNIT	CONCRETE PER 1 IN.FT.	STEEL PER 1 IN.FT.		
H	B	D	T	SIZE	NO.	SPACING	a	b	LENGTH	SIZE	NO.	LENGTH	SIZE	NO.	LENGTH	SIZE	NO.	SPACING	LENGTH	SIZE	NO.	c	LENGTH	SIZE	NO.	LENGTH	SIZE	NO.	SPACING	a	b	LENGTH	SIZE	NO.	SPACING	a	b	LENGTH	C.Y.	LBS.	C.Y.	LBS.	KIPS/SQ.FT.	H
6	0.67	0.92	2.86	4	26	1.00	5.58	1.08	6.66	4	18	5.00	4	14	24.50	4	18	1.42	2.36	4	18	1.78	3.86																6.33	521	0.25	21	1.77	6
7	0.83	0.92	3.50	4	26	1.00	6.58	1.28	7.86	4	18	6.00	4	16	24.50	4	18	1.42	3.00	4	18	2.25	4.33																7.73	599	0.31	24	1.91	7
8	1.08	0.92	4.23	4	26	1.00	7.58	1.56	9.14	4	18	7.00	4	18	24.50	4	18	1.42	3.73	4	18	2.73	4.81																9.23	680	0.37	27	1.95	8
9	1.33	0.92	5.01	4	28	0.92	8.58	1.84	10.42	4	18	8.00	4	20	24.50	4	18	1.42	4.51	4	18	3.26	5.34																10.81	774	0.43	31	1.99	9
10	1.58	0.92	6.04	4	31	0.83	9.58	2.12	11.70	4	18	9.00	4	22	24.50	4	22	1.17	5.54	4	18	4.04	6.12																12.63	906	0.51	36	1.98	10
11	1.83	0.92	7.19	5	26	1.00	10.58	2.40	12.98	4	18	10.00	4	24	24.50	4	28	0.92	6.69	4	18	4.94	7.02																14.57	1115	0.58	45	1.97	11
12	2.25	1.00	8.20	5	32	0.79	11.58	2.85	14.43	4	18	10.92	4	28	24.50	4	26	1.00	7.70	4	18	5.53	7.62																16.98	1336	0.68	53	1.94	12
13	2.50	1.00	9.21	5	32	0.79	12.58	3.29	15.87	4	18	11.92	4	30	24.50	4	28	0.92	8.71	4	18	6.29	8.38																20.80	1470	0.83	59	1.98	13
14	2.83	1.00	10.36	5	40	0.63	13.58	3.58	17.16	4	18	12.92	4	32	24.50	4	29	0.88	9.86	4	18	7.11	9.19																23.07	1739	0.92	70	1.99	14
15	3.17	1.00	11.59	5	51	0.50	14.58	4.02	18.60	4	18	13.92	4	36	24.50	4	34	0.75	11.09	4	18	8.01	10.09																25.45	2160	1.02	86	2.00	15

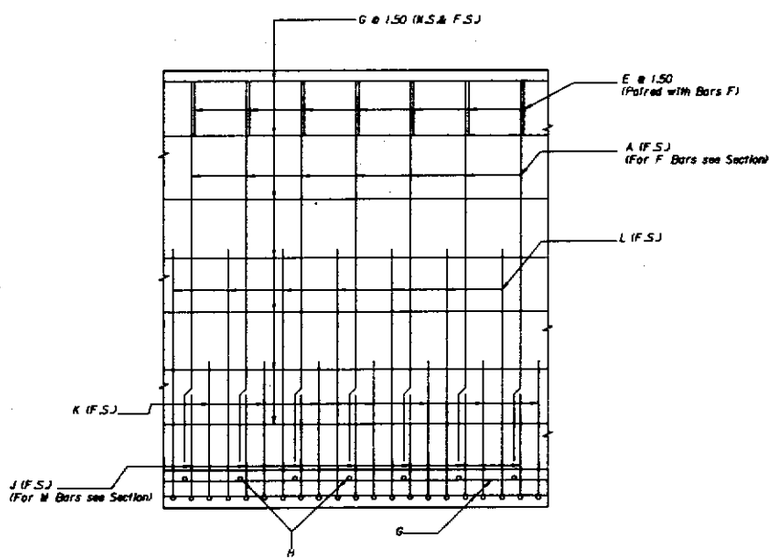

VIEW A-A

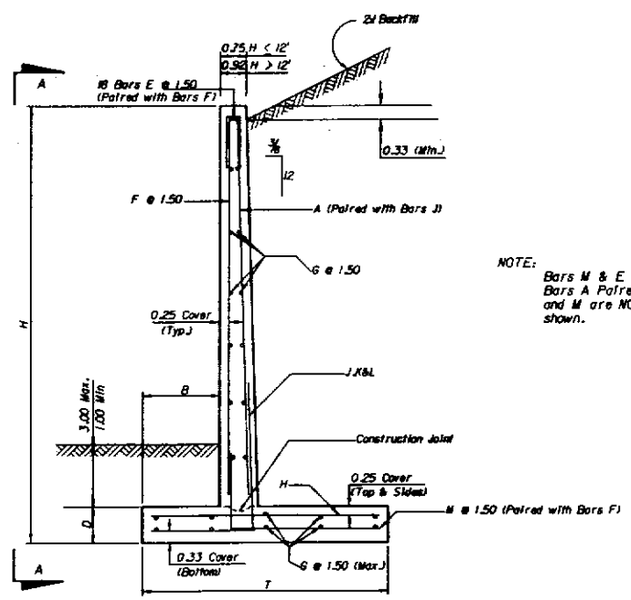

TYPICAL SECTION

NOTE: Bars M & E Paired with Bars F and Bars A Paired with Bars J. Bars E,F and M are NO.4 Bars. Bars J are as shown.

NOTE: To accommodate the Variable Height of a Wall Unit, vertical Bars may be field cut to fit and the number of horizontal Bars G required by the highest wall dimension within a 25' Unit shall be equally spaced at each end of the Unit.

BENDING DIAGRAM

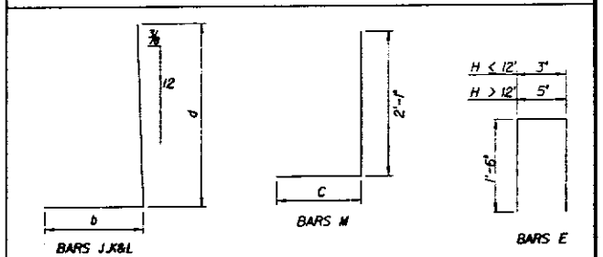

NOTE: All bar dimensions are out to out.

CANTILEVER RETAINING WALLS

REVISIONS	
Date	Description
3/07	Changed cover on Zdbs to 0.33(Min).
3/07	Changed cover on Footing to 0.25(Typical), and 0.33(Bot.) (Min).
3/07	Changed width of Zdbs to 0.25 for H ≤ 12' and to 0.33 for H > 12'.
3/07	Changed concrete volume.
3/07	Changed Dimension D (Underfoot).
3/07	Added on CADD.

STATE OF FLORIDA DEPARTMENT OF TRANSPORTATION
BUREAU OF STRUCTURES

CASE III (2.0 KIPS/SQ. FT. MAX. BEARING PRESSURE)
6 FT. TO 15 FT. HEIGHT

Drawn by	M.J.	3/87	APPROVED BY
Checked by	M.P.	3/87	
Submitted by	R.H.	6/85	
Checked by	C.W.	6/85	
Supervised by	A.G.M.		11 OF 23 — 14.051 CADD

3	R.A.																																														

RETAINING WALL DATA

| WALL DIMENSIONS | | | | REINFORCING STEEL SCHEDULE | | | | | | | | | | | | | | | | | | |

3	N/A		

RETAINING WALL DATA

WALL DIMENSIONS				REINFORCING STEEL SCHEDULE																																				QUANTITIES				ACTUAL MAXIMUM BEARING PRESSURE	
				BARS J						BARS F			BARS G			BARS H				BARS M				BARS A			BARS K						BARS L						CONCRETE / 25' UNIT	STEEL / 25' UNIT	CONCRETE PER LIN.FT.	STEEL PER LIN.FT.		
H	B	D	T	SIZE	NO.	SPACING	a	b	LENGTH	SIZE	NO.	LENGTH	SIZE	NO.	LENGTH	SIZE	NO.	SPACING	LENGTH	SIZE	NO.	c	LENGTH	SIZE	NO.	LENGTH	SIZE	NO.	SPACING	a	b	LENGTH	SIZE	NO.	SPACING	a	b	LENGTH	C.Y.	LBS.	C.Y.	LBS.	KIPS/SQ.FT.	H
6	0.67	0.92	2.86	4	26	1.00	5.58	1.08	6.66	4	18	5.00	4	14	24.50	4	18	1.42	2.36	4	18	1.77	3.86																6.33	520	0.25	21	1.77	6
7	0.75	0.92	3.41	4	26	1.00	6.58	1.20	7.78	4	18	6.00	4	16	24.50	4	18	1.42	2.91	4	18	2.25	4.33																7.66	596	0.31	24	2.02	7
8	0.92	0.92	3.87	4	26	1.00	7.58	1.39	8.97	4	18	7.00	4	18	24.50	4	18	1.42	3.37	4	18	2.54	4.63																8.93	671	0.36	27	2.26	8
9	1.17	0.92	4.33	4	28	0.92	8.58	1.68	10.26	4	18	8.00	4	20	24.50	4	18	1.42	3.83	4	18	2.74	4.82																10.23	759	0.41	30	2.43	9
10	1.17	0.92	4.85	4	31	0.83	9.58	1.71	11.29	4	18	9.00	4	22	24.50	4	26	1.00	4.35	4	18	3.26	5.34																11.61	882	0.46	35	2.77	10
11	1.33	0.92	5.50	5	26	1.00	10.58	1.90	12.46	4	18	10.00	4	22	24.50	4	36	0.71	5.00	4	18	3.75	5.83																13.14	1049	0.53	42	2.89	11
12	1.58	1.00	6.20	5	32	0.79	11.58	2.18	13.76	4	18	10.92	4	26	24.50	4	32	0.79	5.70	4	18	4.20	6.28																15.13	1253	0.61	50	2.96	12
13	1.83	1.00	6.89	5	32	0.79	12.58	2.63	15.21	4	18	11.92	4	28	24.50	4	38	0.67	6.39	4	18	4.64	6.72																18.65	1393	0.75	56	2.99	13
14	2.08	1.00	7.90	5	40	0.63	13.58	2.91	16.49	4	18	12.92	4	28	24.50	4	34	0.75	7.40	4	18	5.40	7.48																20.79	1602	0.83	64	2.94	14
15	2.33	1.00	8.82	5	26	1.00	14.58	3.19	17.77	4	18	13.92	4	32	24.50	5	36	0.71	8.32	4	18	6.07	8.15				5	25	1.00	5.75	3.19	8.94							22.89	1859	0.92	74	2.95	15
16	2.58	1.00	9.80	5	21	1.25	2.83	3.47	6.30	4	18	14.92	4	34	24.50	5	43	0.58	9.30	4	18	6.80	8.88	5	21	14.92	5	20	1.25	4.75	3.47	8.22	5	20	1.25	10.75	3.47	14.22	25.06	2235	1.00	89	2.96	16
17	2.92	1.17	10.73	6	17	1.50	3.42	3.83	7.25	4	18	15.75	4	36	24.50	5	38	0.67	10.23	4	18	7.40	9.48	6	17	15.92	6	16	1.50	5.33	3.83	9.16	6	16	1.50	8.33	3.83	12.16	28.66	2444	1.15	98	2.98	17
18	3.17	1.17	11.93	6	21	1.25	3.42	4.11	7.53	4	18	16.75	4	38	24.50	5	46	0.54	11.43	4	18	8.35	10.43	6	21	16.92	6	20	1.25	5.33	4.61	9.44	6	20	1.25	8.33	4.11	12.44	31.27	2968	1.25	119	2.97	18
19	3.67	1.67	12.81	7	17	1.50	4.83	4.63	9.46	4	18	17.25	4	40	24.50	5	31	0.83	12.31	4	18	8.73	10.81	6	17	17.25	7	16	1.50	6.42	4.63	11.05	7	16	1.50	10.42	4.63	15.05	38.83	3055	1.55	122	2.97	19
20	4.08	1.67	13.49	7	19	1.38	4.83	5.08	9.91	4	18	18.25	4	44	24.50	5	34	0.75	12.99	4	18	8.99	11.07	6	19	18.25	7	18	1.38	7.42	5.08	12.50	7	18	1.38	11.42	5.08	16.50	41.25	3548	1.65	142	2.99	20
21	4.50	1.67	14.38	8	17	1.50	5.92	5.52	11.44	4	18	19.25	4	46	24.50	5	36	0.71	13.88	4	18	9.46	11.54	6	17	19.25	8	16	1.50	9.08	5.52	14.60	8	16	1.50	13.08	5.52	18.60	44.01	4115	1.76	165	2.98	21
22	4.92	1.67	15.13	8	19	1.38	6.08	5.97	12.05	4	18	20.25	4	48	24.50	5	40	0.63	14.63	4	18	9.80	11.88	6	19	20.25	8	18	1.38	9.08	5.97	15.05	8	18	1.38	14.08	5.97	20.05	46.59	4700	1.86	188	3.00	22
23	5.50	2.17	16.20	8	21	1.25	6.58	6.57	13.15	4	18	20.75	4	52	24.50	5	43	0.58	15.70	4	18	10.28	12.36	6	21	20.75	8	20	1.25	9.58	6.57	16.15	8	20	1.25	14.58	6.57	21.15	56.45	4898	2.26	196	2.97	23
24	5.92	2.17	16.98	9	19	1.38	7.67	7.02	14.69	4	18	21.75	4	52	24.50	5	43	0.58	16.48	4	18	10.65	12.73	6	19	21.75	9	18	1.38	10.25	7.02	17.27	9	18	1.38	16.25	7.02	23.27	59.49	6098	2.38	244	2.99	24
25	6.33	2.17	17.91	9	21	1.25	7.67	7.47	15.14	4	18	22.75	4	56	24.50	5	43	0.58	17.41	4	18	11.16	13.24	6	21	22.75	9	20	1.25	11.25	7.47	18.72	9	20	1.25	17.25	7.47	24.72	62.86	6925	2.51	277	2.99	25

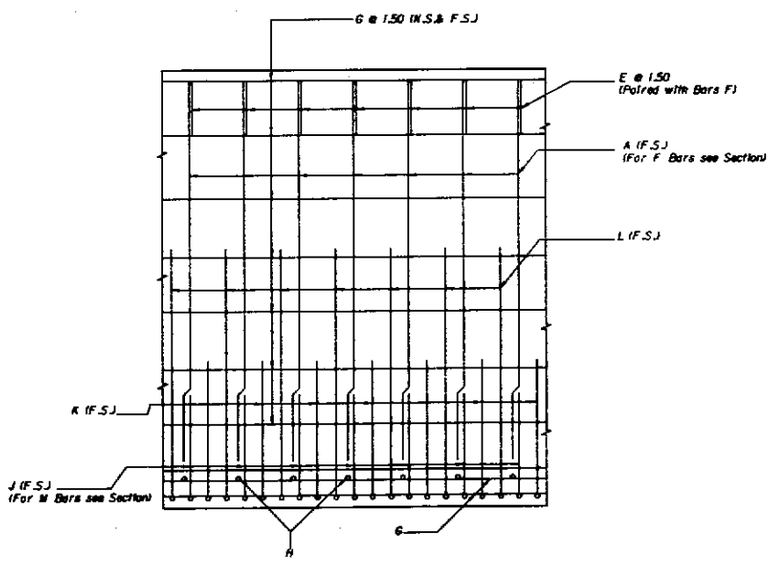

VIEW A-A

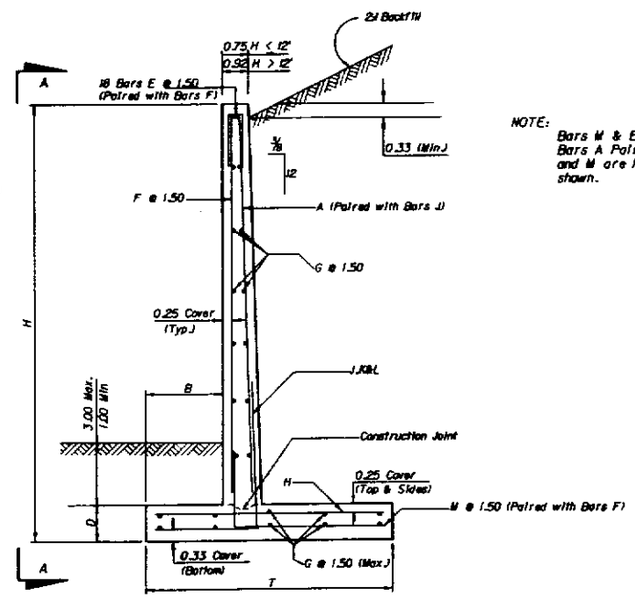

TYPICAL SECTION

NOTE: Bars M & E Paired with Bars F and Bars A Paired with Bars J. Bars E,F and M are NO.4 Bars. Bars J are as shown.

NOTE: To accommodate the Variable Height of a Wall Unit, vertical Bars may be field cut to fit and the number of horizontal Bars G required by the highest wall dimension within a 25' Unit shall be equally spaced at each end of the Unit.

BENDING DIAGRAM

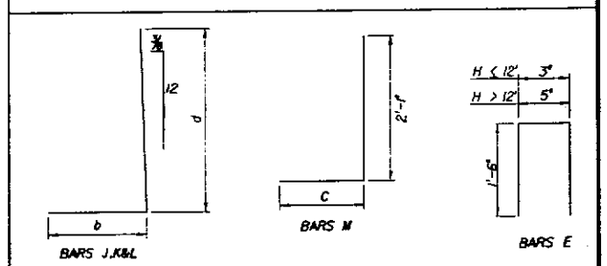

NOTE: All bar dimensions are out to out.

CANTILEVER RETAINING WALLS

REVISIONS	
Date	Description
3/97	Changed cover on Stem to 0.25(Typ.). Changed cover on Footing to 0.33(Bottom) and 0.25(Top & Sides).
3/97	Changed width of Stem to 0.625 for H ≤ 12' and to 0.833 for H > 12'.
3/97	Changed concrete volume.
3/97	Changed description to Reinforcing. Refer to C.S.S.
3/97	

STATE OF FLORIDA DEPARTMENT OF TRANSPORTATION
BUREAU OF STRUCTURES

CASE III (3.0 KIPS/SQ. FT. MAX. BEARING PRESSURE)
6 FT. TO 25 FT. HEIGHT

	Name	Date
Drawn by	M.J.	3/97
Checked by	M.P.	3/97
Developed by	R.H.	6/85
Checked by	C.W.	6/85
Supervised by	A.B.M.	

APPROVED BY
STATE STRUCTURES DESIGNER
CHIEF ENGINEER OF STRUCTURES

Drawing No. 13 OF 23

Index No. 14.051 CADD

3	N.A.		

RETAINING WALL DATA

WALL DIMENSIONS				REINFORCING STEEL SCHEDULE																																		QUANTITIES				ACTUAL MAXIMUM BEARING PRESSURE	
				BARS J						BARS F			BARS G			BARS H				BARS M				BARS A			BARS K						BARS L						CONCRETE / 25' UNIT	STEEL / 25' UNIT	CONCRETE PER LIN.FT.	STEEL PER LIN.FT.		
H	B	D	T	SIZE	NO.	SPACING	a	b	LENGTH	SIZE	NO.	LENGTH	SIZE	NO.	LENGTH	SIZE	NO.	SPACING	LENGTH	SIZE	NO.	c	LENGTH	SIZE	NO.	LENGTH	SIZE	NO.	SPACING	a	b	LENGTH	SIZE	NO.	SPACING	a	b	LENGTH	C.Y.	LBS.	C.Y.	LBS.	KIPS/SQ.FT.	H
6	0.67	0.92	2.86	4	26	1.00	5.58	1.08	6.66	4	18	5.00	4	14	24.50	4	18	1.42	2.36	4	18	1.77	3.85																6.33	520	0.25	21	1.77	6
7	0.75	0.92	3.41	4	26	1.00	6.58	1.19	7.77	4	18	6.00	4	16	24.50	4	18	1.42	2.91	4	18	2.24	4.32																7.66	596	0.31	24	2.02	7
8	0.92	0.92	3.87	4	26	1.00	7.58	1.39	8.97	4	18	7.00	4	18	24.50	4	18	1.42	3.37	4	18	2.53	4.61																8.93	671	0.36	27	2.26	8
9	1.17	0.92	4.33	4	28	0.92	8.58	1.67	10.25	4	18	8.00	4	20	24.50	4	18	1.42	3.83	4	18	2.74	4.82																10.23	759	0.41	30	2.43	9
10	1.17	0.92	4.85	4	31	0.83	9.58	1.71	11.29	4	18	9.00	4	22	24.50	4	26	0.92	4.35	4	18	3.26	5.34																11.61	882	0.46	36	2.77	10
11	1.33	0.92	5.50	5	26	1.00	10.58	1.90	12.48	4	18	10.00	4	24	24.50	4	36	0.71	4.80	4	18	3.55	5.63																12.97	1107	0.52	44	3.01	11
12	1.50	1.00	5.74	5	32	0.79	11.58	2.09	13.67	4	18	10.91	4	26	24.50	4	34	0.75	5.24	4	18	3.82	5.90																14.71	1245	0.59	50	3.28	12
13	1.67	1.00	6.36	5	32	0.79	12.58	2.46	15.04	4	18	11.91	4	28	24.50	4	40	0.63	5.86	4	18	4.27	6.35																18.16	1378	0.73	55	3.38	13
14	1.83	1.00	7.08	5	40	0.63	13.58	2.66	16.24	4	18	12.91	4	30	24.50	4	50	0.50	6.58	4	18	4.83	6.91																20.03	1669	0.80	67	3.48	14
15	2.08	1.00	7.99	5	26	1.00	14.58	2.93	17.51	4	18	13.91	4	32	24.50	5	40	0.63	7.49	4	18	5.49	7.59				5	25	1.00	5.75	2.93	8.68							22.12	1838	0.88	74	3.43	15
16	2.33	1.00	8.79	5	21	1.25	2.83	3.22	6.05	4	18	14.91	4	36	24.50	5	50	0.50	8.29	4	18	6.04	8.12	5	21	14.91	5	20	1.25	4.75	3.22	7.97	5	20	1.25	10.75	3.22	13.97	24.13	2257	0.97	90	3.45	16
17	2.58	1.17	9.66	6	17	1.50	3.42	3.50	6.92	4	18	15.75	4	36	24.50	5	46	0.54	9.16	4	18	6.66	8.74	6	17	15.75	6	16	1.50	5.33	3.50	8.83	6	16	1.50	8.33	3.50	11.91	27.50	2442	1.10	98	3.49	17
18	2.83	1.17	10.80	6	21	1.25	3.42	3.78	7.20	4	18	16.75	4	38	24.50	5	54	0.46	10.30	4	18	7.55	9.63	6	21	16.75	6	20	1.25	5.33	3.78	9.11	6	20	1.25	8.33	3.78	12.11	30.05	2955	1.20	118	3.44	18
19	3.25	1.67	11.49	7	17	1.50	4.83	4.21	9.04	4	18	17.25	4	40	24.50	5	35	0.71	10.99	4	18	7.82	9.90	6	17	17.25	7	16	1.50	6.42	4.21	10.63	7	16	1.50	10.42	4.21	14.63	36.79	3005	1.47	120	3.50	19
20	3.67	1.67	12.24	7	19	1.38	4.83	4.65	9.48	4	18	18.25	4	42	24.50	5	37	0.67	11.74	4	18	8.15	10.23	6	19	18.25	7	18	1.38	7.42	4.65	12.07	7	18	1.38	11.42	4.65	16.07	39.32	3449	1.57	138	3.48	20
21	4.08	1.67	13.02	8	17	1.50	5.92	5.10	11.02	4	18	19.25	4	46	24.50	5	43	0.58	12.52	4	18	8.52	10.60	6	17	19.25	8	16	1.50	9.08	5.10	14.18	8	16	1.50	13.08	5.10	18.18	41.92	4089	1.68	164	3.46	21
22	4.50	1.67	13.82	8	19	1.38	6.01	5.58	11.63	4	18	20.25	4	46	24.50	5	50	0.50	13.32	4	18	8.90	10.98	6	19	20.25	8	18	1.38	9.08	5.58	14.63	8	18	1.38	14.08	5.58	19.63	44.57	4679	1.78	187	3.45	22
23	4.92	2.17	14.76	8	21	1.25	6.58	5.98	12.56	4	18	20.75	4	50	24.50	5	43	0.58	14.26	4	18	9.42	11.50	6	21	20.75	8	20	1.25	9.58	5.98	15.56	8	20	1.25	14.58	5.98	20.56	53.58	5175	2.14	207	3.49	23
24	5.33	2.17	15.58	9	19	1.38	7.67	6.43	14.10	4	18	21.75	4	52	24.50	5	43	0.58	15.08	4	18	9.83	11.91	6	19	21.75	9	18	1.38	10.25	6.43	16.68	9	18	1.38	16.25	6.43	22.68	56.68	5915	2.27	237	3.48	24
25	5.75	2.17	16.40	9	21	1.25	7.67	6.88	14.55	4	18	22.75	4	56	24.50	5	46	0.54	15.90	4	18	10.23	12.31	6	21	22.75	9	20	1.25	11.25	6.88	18.13	9	20	1.25	17.25	6.88	24.13	59.83	6773	2.39	271	3.48	25
26	6.17	2.17	17.27	9	21	1.25	8.17	7.49	15.66	4	18	23.75	4	58	24.50	5	46	0.54	16.77	4	18	10.68	12.76	7	21	23.75	9	20	1.25	12.25	7.49	20.24	9	20	1.25	18.25	7.49	25.74	63.10	7499	2.52	300	3.46	26
27	6.67	2.67	18.31	9	21	1.25	8.67	8.01	16.68	4	18	24.25	4	60	24.50	5	54	0.46	17.81	4	18	11.22	13.30	7	21	24.25	9	20	1.25	12.75	8.01	20.76	9	20	1.25	18.75	8.01	26.76	74.42	7945	2.98	318	3.47	27
28	7.08	2.67	19.15	10	19	1.38	9.17	8.46	17.63	4	18	25.25	4	64	24.50	5	54	0.46	18.65	4	18	11.65	13.73	8	19	25.25	10	18	1.38	13.75	8.46	21.21	10	18	1.38	19.75	8.46	28.21	78.06	9090	3.12	364	3.48	28
29	7.50	2.67	19.99	10	21	1.25	9.67	8.91	18.58	4	18	26.25	4	64	24.50	5	43	0.46	19.49	4	18	12.07	14.15	8	21	26.25	10	20	1.25	14.75	8.91	23.66	10	20	1.25	20.75	8.91	29.66	81.74	10412	3.27	416	3.50	29
30	8.08	3.17	21.22	11	17	1.50	10.17	9.51	19.68	4	18	26.75	4	68	24.50	6	46	0.54	20.72	4	18	12.72	14.80	8	17	26.75	11	16	1.50	15.25	9.51	24.26	11	16	1.50	21.25	9.51	30.76	95.41	10755	3.82	430	3.47	30

NOTE:
To accommodate the Variable Height of a Wall Unit, vertical Bars may be field cut to fit and the number of horizontal Bars G required by the highest wall dimension within a 25' Unit shall be equally spaced at each end of the Unit.

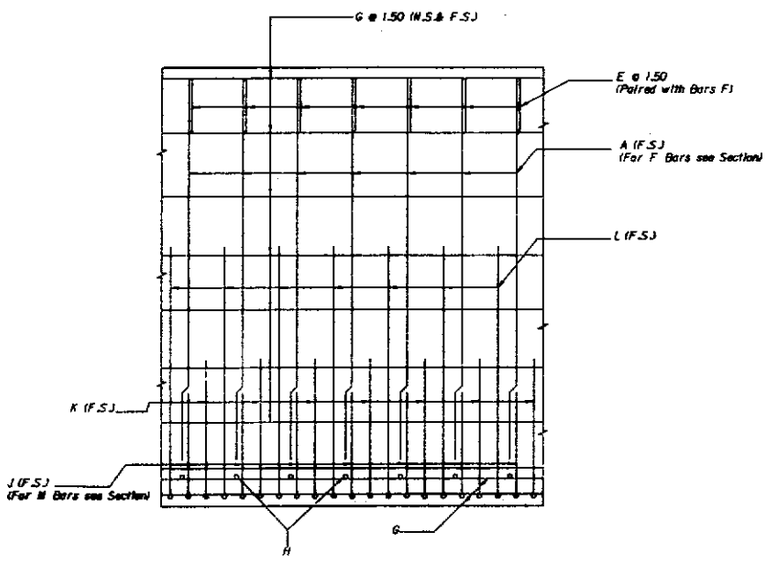

VIEW A-A

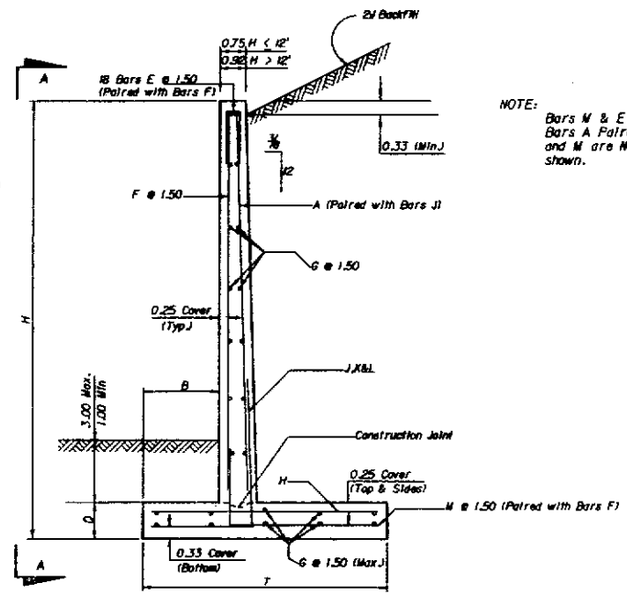

TYPICAL SECTION

NOTE:
Bars M & E Paired with Bars F and Bars A Paired with Bars J. Bars E,F and M are NO.4 Bars. Bars J are as shown.

BENDING DIAGRAM

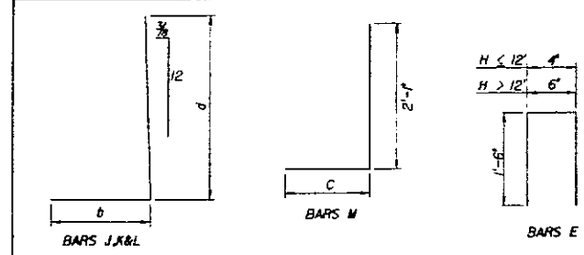

NOTE: All bar dimensions are out to out.

CANTILEVER RETAINING WALLS

REVISIONS	
Date	Descriptions
3/87	Changed cover on Stem to 0.33(Min.).
3/87	Changed cover on Footing to 0.33(Bottom), and 0.25(Top & Sides).
3/87	Changed width of Stem to 0.75 for H ≤ 12' and to 0.92 for H > 12'.
3/87	Changed concrete volume.
3/87	Changed dimension to detail that. Replace on CADD.

STATE OF FLORIDA DEPARTMENT OF TRANSPORTATION
BUREAU OF STRUCTURES

CASE III (3.5 KIPS/SQ. FT. MAX. BEARING PRESSURE)
6 FT. TO 30 FT. HEIGHT

	Name	Date
Drawn by	M.I.	3/87
Checked by	M.P.	3/87
Submitted by	C.W.	6/85
Checked by	R.N.	6/85
Supervised by	A.G.M.	

APPROVED BY
C.H. Hinson
Chief Engineer of Structures

Sheet No. 14 OF 23
Index No. 14.051 CADD

				RETAINING WALL DATA																																									
WALL DIMENSIONS				REINFORCING STEEL SCHEDULE																																				QUANTITIES				ACTUAL MAXIMUM BEARING PRESSURE	
				BARS J						BARS F			BARS G			BARS H				BARS M				BARS A			BARS K						BARS L						CONCRETE / 25' UNIT	STEEL / 25' UNIT	CONCRETE PER LINEFT.	STEEL PER LINEFT.		
H	B	D	T	SIZE	NO.	SPACING	a	b	LENGTH	SIZE	NO.	LENGTH	SIZE	NO.	LENGTH	SIZE	NO.	SPACING	LENGTH	SIZE	NO.	c	LENGTH	SIZE	NO.	LENGTH	SIZE	NO.	SPACING	a	b	LENGTH	SIZE	NO.	SPACING	a	b	LENGTH	C.Y.	LBS.	C.Y.	LBS.	KIPS/SQ.FT.	H
6	0.67	0.92	2.86	4	26	1.00	5.58	1.08	6.66	4	18	5.00	4	14	24.50	4	18	1.42	2.36	4	18	1.77	3.85																6.33	520	0.25	21	1.77	6
7	0.75	0.92	3.41	4	26	1.00	6.58	1.20	7.78	4	18	6.00	4	16	24.50	4	18	1.42	2.91	4	18	2.24	4.32																7.66	596	0.31	24	2.02	7
8	0.92	0.92	3.87	4	26	1.00	7.58	1.39	8.97	4	18	7.00	4	18	24.50	4	18	1.42	3.37	4	18	2.53	4.61																8.93	671	0.36	27	2.26	8
9	1.17	0.92	4.33	4	28	0.92	8.58	1.69	10.25	4	18	8.00	4	20	24.50	4	18	1.42	3.83	4	18	2.74	4.82																10.23	759	0.41	30	2.43	9
10	1.17	0.92	4.85	4	31	0.83	9.58	1.71	11.29	4	18	9.00	4	22	24.50	4	26	1.00	4.35	4	18	3.26	5.34																11.61	882	0.46	35	2.77	10
11	1.33	0.92	5.30	5	26	1.00	10.58	1.90	12.48	4	18	10.00	4	24	24.50	4	34	0.75	4.80	4	18	3.55	5.63																12.97	1068	0.52	43	3.01	11
12	1.50	1.00	5.74	5	32	0.79	11.58	2.10	13.68	4	18	10.92	4	26	24.50	4	34	0.75	5.24	4	18	3.82	5.90																14.71	1245	0.59	50	3.28	12
13	1.58	1.00	6.28	5	32	0.79	12.58	2.38	14.96	4	18	11.92	4	26	24.50	4	40	0.63	5.78	4	18	4.28	6.36																18.08	1341	0.72	54	3.50	13
14	1.67	1.00	6.72	5	40	0.63	13.58	2.49	16.07	4	18	12.92	4	30	24.50	4	54	0.46	6.22	4	18	4.63	6.71																19.70	1664	0.79	67	3.82	14
15	1.83	1.00	7.36	5	26	1.00	14.58	2.69	17.27	4	18	13.92	4	32	24.50	5	43	0.58	6.86	4	18	5.11	7.19				5	25	1.00	5.75	2.69	8.44							21.53	1816	0.86	73	3.95	15
16	2.08	1.00	8.16	5	21	1.25	2.83	2.97	5.80	4	18	14.92	4	34	24.50	5	54	0.46	7.66	4	18	5.66	7.74	5	21	14.92	5	20	1.25	4.75	2.97	7.72	5	20	1.25	10.75	2.97	13.72	23.54	2203	0.94	88	3.92	16
17	2.33	1.17	8.85	6	17	1.50	3.42	3.25	6.67	4	18	15.75	4	36	24.50	5	50	0.50	8.35	4	18	6.10	8.18	6	17	15.75	6	16	1.50	5.33	3.25	8.58	6	16	1.50	8.33	3.25	11.58	26.63	2411	1.07	96	4.00	17
18	2.50	1.17	9.86	6	21	1.25	3.42	3.45	6.87	4	18	16.75	4	38	24.50	5	59	0.42	9.36	4	18	6.94	9.02	6	21	16.75	6	20	1.25	5.33	3.45	8.78	6	20	1.25	8.33	3.45	11.78	29.04	2870	1.16	115	3.99	18
19	2.92	1.67	10.61	7	17	1.50	4.83	3.88	8.71	4	18	17.25	4	40	24.50	5	38	0.67	10.11	4	18	7.27	9.31	6	17	17.25	7	16	1.50	6.42	3.88	10.30	7	16	1.50	10.42	3.88	14.30	35.44	2965	1.42	119	3.99	19
20	3.33	1.67	11.24	7	19	1.38	4.83	4.33	9.16	4	18	18.25	4	44	24.50	5	43	0.58	10.74	4	18	7.49	9.57	6	19	18.25	7	18	1.38	7.42	4.33	11.75	7	18	1.38	11.42	4.33	15.75	37.77	3467	1.51	139	3.98	20
21	3.67	1.67	11.98	8	17	1.50	5.92	4.69	10.61	4	18	19.25	4	46	24.50	5	50	0.50	11.48	4	18	7.89	9.97	6	17	19.25	8	16	1.50	9.08	4.69	13.77	8	16	1.50	13.08	4.69	17.77	40.31	4065	1.61	163	4.00	21
22	4.08	1.67	12.67	8	19	1.38	6.08	5.14	11.22	4	18	20.25	4	46	24.50	5	54	0.46	12.17	4	18	8.17	10.25	6	19	20.25	8	18	1.38	9.08	5.14	14.22	8	18	1.38	14.08	5.14	19.22	42.79	4634	1.71	185	3.99	22
23	4.50	2.17	13.64	8	21	1.25	6.58	5.57	12.15	4	18	20.75	4	50	24.50	5	43	0.58	13.14	4	18	8.72	10.80	6	21	20.75	8	20	1.25	9.58	5.57	15.15	8	20	1.25	14.58	5.57	20.15	51.32	5050	2.05	202	3.98	23
24	4.92	2.17	14.34	9	19	1.38	7.67	6.02	13.69	4	18	21.75	4	52	24.50	5	46	0.54	13.84	4	18	9.00	11.08	6	19	21.75	9	18	1.38	10.25	6.02	16.27	9	18	1.38	16.25	6.02	22.27	54.21	5816	2.17	233	3.98	24
25	5.33	2.17	15.20	9	21	1.25	7.67	6.47	14.14	4	18	22.75	4	54	24.50	5	50	0.50	14.70	4	18	9.45	11.53	6	21	22.75	9	20	1.25	11.25	6.47	17.72	9	20	1.25	17.25	6.47	23.72	57.41	6650	2.30	266	3.94	25
26	5.67	2.17	16.00	9	21	1.25	8.17	6.99	15.16	4	18	23.75	4	56	24.50	5	54	0.46	15.50	4	18	9.92	12.00	7	21	23.75	9	20	1.25	12.25	6.99	19.24	9	20	1.25	18.25	6.99	25.24	60.56	7388	2.42	296	39.5	26
27	6.08	2.67	16.97	9	21	1.25	8.67	7.42	16.09	4	18	24.25	4	58	24.50	5	54	0.46	16.47	4	18	10.47	12.55	7	21	24.25	9	20	1.25	12.75	7.42	20.17	9	20	1.25	18.75	7.42	26.17	71.13	7702	2.85	308	3.99	27
28	6.50	2.67	17.71	10	19	1.38	9.17	7.88	17.05	4	18	25.25	4	60	24.50	5	54	0.46	17.21	4	18	10.79	12.87	8	19	25.25	10	18	1.38	13.75	7.88	21.63	10	18	1.38	19.75	7.88	27.63	74.51	8642	2.98	346	4.00	28
29	6.92	2.67	18.57	10	21	1.25	9.67	8.33	18.00	4	18	26.25	4	64	24.50	5	54	0.46	18.07	4	18	11.23	13.31	8	21	26.25	10	20	1.25	14.75	8.33	23.08	10	20	1.25	20.75	8.33	29.08	78.23	10170	3.13	407	3.99	29
30	7.42	3.17	19.61	11	17	1.50	10.17	8.84	18.81	4	18	26.75	4	66	24.50	6	46	0.54	19.11	4	18	11.77	13.85	8	17	26.75	11	16	1.50	15.25	8.84	24.09	11	16	1.50	21.25	8.84	30.09	90.70	10450	3.63	418	3.99	30

NOTE:
To accommodate the Variable Height of a Wall Unit, vertical Bars may be field cut to fit and the number of horizontal Bars G required by the highest wall dimension within a 25' Unit shall be equally spaced at each end of the Unit.

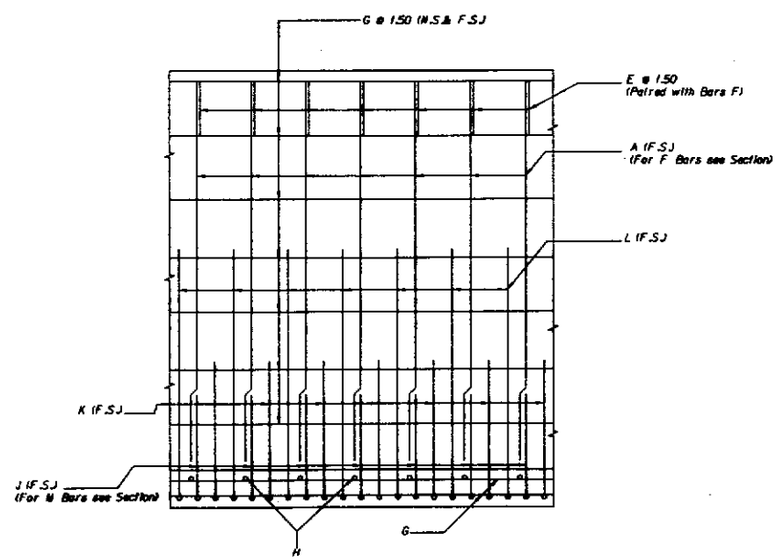

VIEW A-A

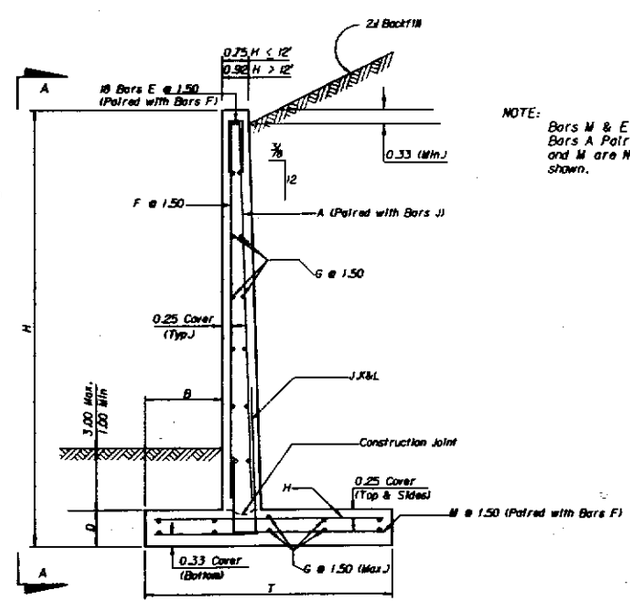

TYPICAL SECTION

NOTE:
Bars M & E Paired with Bars F and Bars A Paired with Bars J. Bars E,F and M are NO.4 Bars. Bars J are as shown.

BENDING DIAGRAM

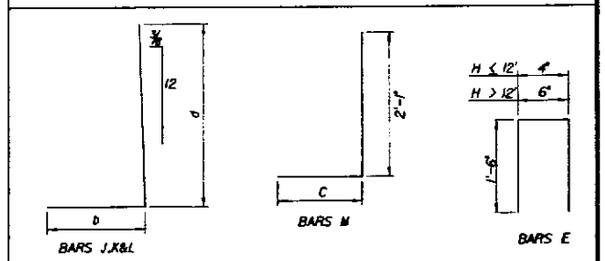

NOTE: All bar dimensions are out to out.

CANTILEVER RETAINING WALLS

STATE OF FLORIDA DEPARTMENT OF TRANSPORTATION
BUREAU OF STRUCTURES

CASE III (4.0 KIPS/SQ. FT. MAX. BEARING PRESSURE)
6 FT. TO 30 FT. HEIGHT

Drawn by	H.I.	3/87
Checked by	M.P.	3/87
Quantities by	C.W.	6/85
Checked by	R.N.	6/85
Approved by	A.G.M.	

Drawing No. 15 OF 23
Index No. H.051 CADD

| | | |

3	R.A.

RETAINING WALL DATA

WALL DIMENSIONS				REINFORCING STEEL SCHEDULE																																						QUANTITIES				ACTUAL MAXIMUM BEARING PRESSURE	
				BARS J						BARS F			BARS G			BARS H				BARS M				BARS A			BARS K						BARS L						CONCRETE / 25' UNIT	STEEL / 25' UNIT	CONCRETE PER LIN.FT.	STEEL PER LIN.FT.		
H	B	D	T	SIZE	NO.	SPACING	a	b	LENGTH	SIZE	NO.	LENGTH	SIZE	NO.	LENGTH	SIZE	NO.	SPACING	LENGTH	SIZE	NO.	c	LENGTH	SIZE	NO.	LENGTH	SIZE	NO.	SPACING	a	b	LENGTH	SIZE	NO.	SPACING	a	b	LENGTH	C.Y.	LBS.	C.Y.	LBS.	KIPS/SQ.FT.	H
6	0.67	0.92	2.86	4	26	1.00	5.58	1.08	6.66	4	18	5.00	4	14	24.50	4	18	1.42	2.36	4	18	1.77	3.85																6.33	520	0.25	21	1.77	6
7	0.75	0.92	3.41	4	26	1.00	6.58	1.19	7.77	4	18	6.00	4	16	24.50	4	18	1.42	2.91	4	18	2.24	4.32																7.66	596	0.31	24	2.02	7
8	0.92	0.92	3.87	4	26	1.00	7.58	1.39	8.97	4	18	7.00	4	18	24.50	4	18	1.42	3.37	4	18	2.53	4.61																8.93	671	0.36	27	2.26	8
9	1.17	0.92	4.33	4	28	0.92	8.58	1.68	10.26	4	18	8.00	4	20	24.50	4	18	1.42	3.83	4	18	2.74	4.82																10.23	759	0.41	30	2.43	9
10	1.17	0.92	4.85	4	31	0.83	9.58	1.71	11.29	4	18	9.00	4	22	24.50	4	27	0.96	4.35	4	18	3.26	5.34																11.61	885	0.46	35	2.77	10
11	1.33	0.92	5.30	5	26	1.00	10.58	1.90	12.48	4	18	10.00	4	22	24.50	4	36	0.71	4.80	4	18	3.55	5.63																12.97	1037	0.52	42	3.01	11
12	1.50	1.00	5.74	5	32	0.79	11.58	2.09	13.67	4	18	10.92	4	26	24.50	4	34	0.75	5.24	4	18	3.82	5.90																14.71	1245	0.59	50	3.28	12
13	1.58	1.00	6.28	5	32	0.79	12.58	2.38	14.96	4	18	11.92	4	28	24.50	4	40	0.63	5.78	4	18	4.28	6.36																18.08	1374	0.72	55	3.50	13
14	1.67	1.00	6.72	5	40	0.63	13.58	2.49	16.07	4	18	12.92	4	28	24.50	4	55	0.46	6.22	4	18	4.63	6.71																19.70	1631	0.79	65	3.82	14
15	1.83	1.00	7.16	5	26	1.00	14.58	2.69	17.26	4	18	13.92	4	32	24.50	5	43	0.58	6.66	4	18	4.91	6.99				5	25	1.00	5.75	2.69	8.44							21.35	1804	0.85	72	4.06	15
16	1.92	1.00	7.61	5	21	1.25	2.83	2.81	5.63	4	18	14.92	4	34	24.50	5	55	0.46	7.11	4	18	5.27	7.35	5	21	14.91	5	20	1.25	4.75	2.81	7.56	5	20	1.25	10.75	2.83	13.56	23.03	2164	0.92	87	4.38	16
17	2.17	1.17	8.13	6	17	1.50	3.42	3.08	6.50	4	18	15.75	4	36	24.50	5	50	0.50	7.63	4	18	5.54	7.62	6	17	15.75	6	16	1.50	5.33	3.08	8.41	6	16	1.50	8.33	3.08	11.41	25.85	2355	1.03	94	4.53	17
18	2.17	1.17	8.73	6	21	1.25	3.42	3.11	6.53	4	18	16.75	4	38	24.50	6	47	0.54	8.23	4	18	6.14	8.22	6	21	16.75	6	20	1.25	5.33	3.11	8.44	6	20	1.25	8.33	3.11	11.44	27.82	2877	1.11	115	4.82	18
19	2.50	1.67	9.29	7	17	1.50	4.83	3.46	8.29	4	18	17.25	4	40	24.50	6	31	0.83	8.79	4	18	6.37	8.45	6	17	17.25	7	16	1.50	6.42	3.46	9.88	7	16	1.50	10.42	3.46	13.88	33.40	2921	1.34	117	4.91	19
20	2.83	1.67	9.91	7	19	1.38	4.83	3.83	8.66	4	18	18.25	4	44	24.50	6	34	0.75	9.41	4	18	6.66	8.74	6	19	18.25	7	18	1.38	7.42	3.83	11.25	7	18	1.38	11.42	3.83	15.25	35.72	3431	1.43	137	4.92	20
21	3.17	1.67	10.54	8	17	1.50	5.92	4.19	10.11	4	18	19.25	4	44	24.50	6	38	0.67	10.04	4	18	6.95	9.03	6	17	19.25	8	16	1.50	9.08	4.19	13.27	8	16	1.50	13.08	4.19	17.27	38.09	3930	1.52	157	4.93	21
22	3.50	1.67	11.19	8	19	1.38	6.08	4.56	10.64	4	18	20.25	4	46	24.50	6	43	0.58	10.69	4	18	7.27	9.35	6	19	20.25	8	18	1.38	9.08	4.56	13.64	8	18	1.38	14.08	4.56	18.64	40.51	4510	1.62	180	4.95	22
23	3.92	2.17	11.92	8	21	1.25	6.58	4.99	11.57	4	18	20.75	4	48	24.50	6	32	0.79	11.42	4	18	7.58	9.66	6	21	20.75	8	20	1.25	9.58	4.99	14.57	8	20	1.25	14.58	4.99	19.57	47.88	4869	1.92	195	4.95	23
24	4.25	2.17	12.59	9	19	1.38	7.67	5.35	13.02	4	18	21.75	4	50	24.50	6	36	0.71	12.09	4	18	7.92	10.00	6	19	21.75	9	18	1.38	10.25	5.35	15.60	9	18	1.38	16.25	5.35	21.60	50.68	5634	2.03	225	4.97	24
25	4.58	2.17	13.26	9	21	1.25	7.67	5.72	13.39	4	18	22.75	4	50	24.50	6	40	0.63	12.76	4	18	8.26	10.34	6	21	22.75	9	20	1.25	11.25	5.72	16.97	9	20	1.25	17.25	5.72	22.97	53.52	6414	2.14	257	5.00	25
26	4.92	2.17	14.10	9	21	1.25	8.17	6.25	14.42	4	18	23.75	4	54	24.50	6	43	0.58	13.60	4	18	8.76	10.84	7	21	23.75	9	20	1.25	12.25	6.25	18.50	9	20	1.25	18.25	6.25	24.50	56.74	7193	2.27	288	4.93	26
27	5.33	2.67	14.97	9	21	1.25	8.67	6.68	15.35	4	18	24.25	4	56	24.50	6	38	0.67	14.47	4	18	9.22	11.30	7	21	24.25	9	20	1.25	12.75	6.68	19.43	9	20	1.25	18.75	6.68	25.43	66.19	7399	2.65	296	4.93	27
28	5.67	2.67	15.65	10	19	1.38	9.17	7.05	16.22	4	18	25.25	4	58	24.50	6	40	0.63	15.15	4	18	9.56	11.64	8	19	25.25	10	18	1.38	13.75	7.05	20.80	10	18	1.38	19.75	7.05	26.80	69.43	8639	2.78	346	4.98	28
29	6.00	2.67	16.45	10	21	1.25	9.67	7.41	17.08	4	18	26.25	4	62	24.50	6	43	0.58	15.95	4	18	10.03	12.11	8	21	26.25	10	20	1.25	14.75	7.42	22.16	10	20	1.25	20.75	7.41	28.16	73.01	9894	2.92	396	4.98	29
30	6.50	3.17	17.40	11	17	1.50	10.17	7.93	18.09	4	18	26.75	4	62	24.50	6	47	0.54	16.90	4	18	10.48	12.56	8	17	26.75	11	16	1.50	15.25	7.97	23.22	11	16	1.50	21.25	7.97	29.22	84.21	10028	3.37	401	4.94	30

NOTE:
To accommodate the Variable Height of a Wall Unit, vertical Bars may be field cut to fit and the number of horizontal Bars G required by the highest wall dimension within a 25' Unit shall be equally spaced at each end of the Unit.

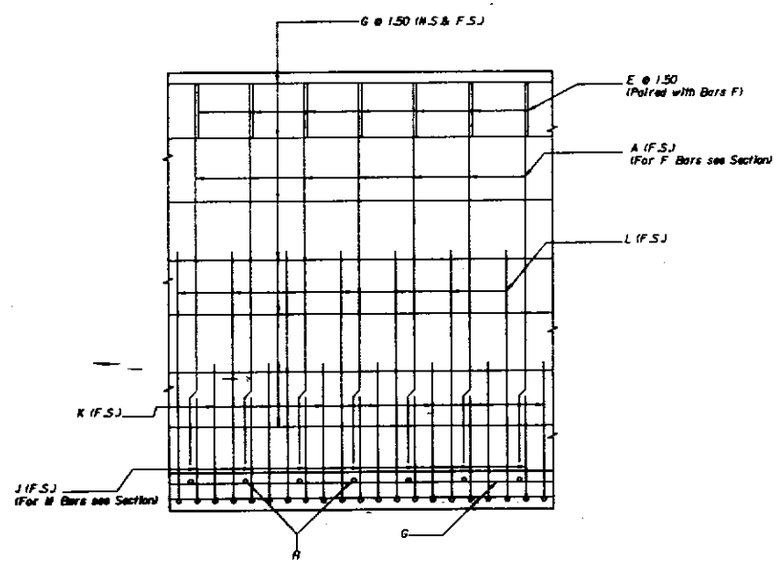

VIEW A-A

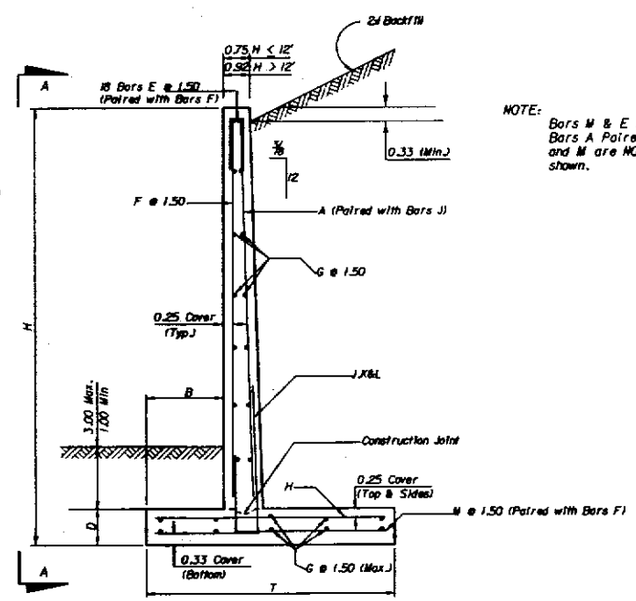

TYPICAL SECTION

NOTE:
Bars M & E Paired with Bars F and Bars A Paired with Bars J. Bars E,F and M are NO.4 Bars. Bars J are as shown.

BENDING DIAGRAM

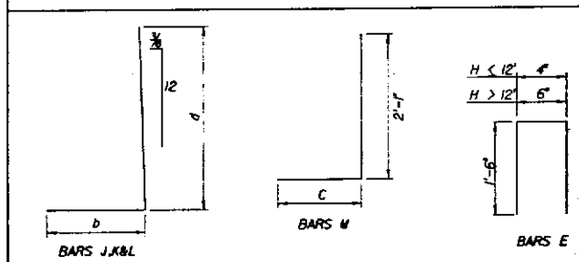

NOTE: All bar dimensions are out to out.

CANTILEVER RETAINING WALLS

REVISIONS	
Date	Description
3/97	Changed cover on Stem to 0.33(Bottom), Changed cover on Footing to 0.25(Bottom), and 0.25(Top & sides).
3/97	Changed width of Stem to 0.92h for H ≤ 12' and 0.92H for H > 12'.
3/97	Changed concrete strength.
3/97	Changed dimension in Detail Bar.
3/97	Added a note.
5/98	Editorial Changes.

STATE OF FLORIDA DEPARTMENT OF TRANSPORTATION
BUREAU OF STRUCTURES

CASE III (5.0 KIPS/SQ. FT. MAX. BEARING PRESSURE)
6 FT. TO 30 FT. HEIGHT

	Name	Date
Drawn by	M.I.	3/97
Checked by	M.P.	3/97
Quantities by	R.R.	6/85
Checked by	C.W.	6/85
Supervised by	A.G.M.	

APPROVED BY
C. W. Pfeifer, Director of Structures

Drawing No. 17 OF 23
Index No. 14.051 CADD

RETAINING WALL DATA																																														
WALL DIMENSIONS				REINFORCING STEEL SCHEDULE																																				QUANTITIES					
				BARS J						BARS F			BARS G			BARS H				BARS M				BARS A			BARS K						BARS L						CONCRETE / 25' UNIT	STEEL / 25' UNIT	CONCRETE PER LIN.FT.	STEEL PER LIN.FT.	ACTUAL MAXIMUM BEARING PRESSURE	
H	B	D	T	SIZE	NO.	SPACING	a	b	LENGTH	SIZE	NO.	LENGTH	SIZE	NO.	LENGTH	SIZE	NO.	SPACING	LENGTH	SIZE	NO.	c	LENGTH	SIZE	NO.	LENGTH	SIZE	NO.	SPACING	a	b	LENGTH	SIZE	NO.	SPACING	a	b	LENGTH	C.Y.	LBS.	C.Y.	LBS.	KIPS/SQ.FT.	H
6	0.67	0.92	2.86	4	26	1.00	5.58	1.08	6.66	4	18	5.00	4	14	24.50	4	18	1.42	2.36	4	18	1.78	3.86																6.33	521	0.25	21	1.77	6
7	0.75	0.92	3.41	4	26	1.00	6.58	1.20	7.78	4	18	6.00	4	16	24.50	4	18	1.42	2.91	4	18	2.25	4.33																7.66	596	0.31	24	2.02	7
8	0.92	0.92	3.87	4	26	1.00	7.58	1.39	8.97	4	18	7.00	4	18	24.50	4	18	1.42	3.37	4	18	2.54	4.62																8.93	671	0.36	27	2.26	8
9	1.17	0.92	4.33	4	28	0.92	8.58	1.68	10.26	4	18	8.00	4	20	24.50	4	18	1.42	3.83	4	18	2.74	4.82																10.23	759	0.41	30	2.43	9
10	1.17	0.92	4.85	4	31	0.83	9.58	1.71	11.29	4	18	9.00	4	22	24.50	4	27	0.96	4.35	4	18	3.26	5.34																11.61	906	0.46	36	2.77	10
11	1.33	0.92	5.30	5	26	1.00	10.58	1.90	12.48	4	18	10.00	4	24	24.50	4	34	0.71	4.80	4	18	3.55	5.63																12.97	1068	0.52	43	3.01	11
12	1.50	1.00	5.74	5	32	0.79	11.58	2.10	13.68	4	18	10.92	4	26	24.50	4	34	0.75	5.24	4	18	3.82	5.90																14.71	1245	0.59	50	3.28	12
13	1.58	1.00	6.28	5	32	0.79	12.58	2.38	14.96	4	18	11.92	4	26	24.50	4	40	0.63	5.78	4	18	4.28	6.36																18.08	1341	0.72	54	3.50	13
14	1.67	1.00	6.72	5	40	0.63	13.58	2.49	16.07	4	18	12.92	4	28	24.50	4	54	0.46	6.22	4	18	4.64	6.72																19.70	1631	0.79	65	3.82	14
15	1.83	1.00	7.16	5	26	1.00	14.58	2.69	17.27	4	18	13.92	4	32	24.50	5	43	0.58	6.66	4	18	4.91	6.99				5	25	1.00	5.75	2.69	8.44							21.35	1804	0.85	72	4.06	15
16	1.92	1.00	7.61	5	21	1.25	2.83	2.81	5.64	4	18	14.92	4	34	24.50	5	54	0.46	7.11	4	18	5.28	7.36	5	21	14.92	5	20	1.25	4.75	2.81	7.56	5	20	1.25	10.75	2.81	13.56	23.03	2158	0.92	86	4.38	16
17	2.17	1.17	8.13	6	17	1.50	3.42	3.08	6.50	4	18	15.75	4	36	24.50	5	50	0.50	7.63	4	18	5.54	7.62	6	17	15.75	6	16	1.50	5.33	3.08	8.41	6	16	1.50	8.33	3.08	11.41	25.85	2355	1.03	94	4.53	17
18	2.17	1.17	8.73	6	21	1.25	3.42	3.11	6.53	4	18	16.75	4	38	24.50	6	46	0.54	8.23	4	18	6.15	8.23	6	21	16.75	6	20	1.25	5.33	3.11	8.44	6	20	1.25	8.33	3.11	11.44	27.82	2865	1.11	115	4.82	18
19	2.42	1.67	9.03	7	17	1.50	4.83	3.38	8.21	4	18	17.25	4	40	24.50	5	43	0.58	8.53	4	18	6.20	8.28	6	17	17.25	7	16	1.50	6.42	3.38	9.80	7	16	1.50	10.42	3.38	13.80	33.00	3052	1.32	122	5.14	19
20	2.75	1.67	9.49	7	19	1.38	4.83	3.74	8.57	4	18	18.25	4	44	24.50	5	50	0.50	8.99	4	18	6.33	8.41	6	19	18.25	7	18	1.38	7.42	3.74	11.16	7	18	1.38	11.42	3.74	15.16	35.07	3374	1.40	135	5.24	20
21	3.00	1.67	9.91	8	17	1.50	5.92	4.02	9.94	4	18	19.25	4	44	24.50	5	54	0.46	9.41	4	18	6.49	8.57	6	17	19.25	8	16	1.50	9.08	4.02	13.10	8	16	1.50	13.08	4.02	17.10	37.11	3860	1.48	154	5.43	21
22	3.33	1.67	10.58	8	19	1.38	6.08	4.39	10.47	4	18	20.25	4	46	24.50	6	43	0.58	10.08	4	18	6.83	8.91	6	19	20.25	8	18	1.38	9.08	4.39	13.47	8	18	1.38	14.08	4.39	18.47	39.57	4441	1.58	177	5.40	22
23	3.67	2.17	11.25	8	21	1.25	6.58	4.74	11.32	4	18	20.75	4	50	24.50	5	50	0.50	10.75	4	18	7.16	9.24	6	21	20.75	8	20	1.25	9.58	4.74	14.32	8	20	1.25	14.58	4.74	19.32	46.52	4867	1.86	195	5.46	23
24	4.00	2.17	11.93	9	19	1.38	7.67	5.10	12.77	4	18	21.75	4	52	24.50	5	54	0.46	11.43	4	18	7.51	9.59	6	19	21.75	9	18	1.38	10.25	5.10	15.35	9	18	1.38	16.25	5.10	21.35	49.36	5606	1.97	224	5.45	24
25	4.33	2.17	12.61	9	21	1.25	7.67	5.47	13.14	4	18	22.75	4	50	24.50	6	43	0.58	12.11	4	18	7.86	9.94	6	21	22.75	9	20	1.25	11.25	5.47	16.72	9	20	1.25	17.25	5.47	22.72	52.23	6374	2.09	255	5.45	25
26	4.58	2.17	13.38	9	21	1.25	8.17	5.74	13.91	4	18	23.75	4	54	24.50	6	46	0.54	12.88	4	18	8.38	10.46	7	21	23.75	9	20	1.25	12.25	5.74	17.99	9	20	1.25	18.25	5.74	23.99	55.30	7094	2.21	284	5.45	26
27	5.00	2.67	14.14	9	21	1.25	8.67	6.18	14.85	4	18	24.25	4	58	24.50	6	38	0.67	13.64	4	18	8.72	10.80	7	21	24.25	9	20	1.25	12.75	6.18	18.93	9	20	1.25	18.75	6.18	24.93	64.13	7275	2.57	291	5.45	27
28	5.33	2.67	14.83	10	19	1.38	9.17	6.54	15.71	4	18	25.25	4	60	24.50	6	43	0.58	14.33	4	18	9.08	11.16	8	19	25.25	10	18	1.38	13.75	6.54	20.29	10	18	1.38	19.75	6.54	26.29	67.40	8561	2.70	342	5.48	28
29	5.67	2.67	15.64	10	21	1.25	9.67	6.91	16.58	4	18	26.25	4	62	24.50	6	46	0.54	15.14	4	18	9.56	11.64	8	21	26.25	10	20	1.25	14.75	6.91	21.66	10	20	1.25	20.75	6.91	27.66	71.00	9773	2.84	391	5.46	29
30	6.08	3.17	16.40	11	17	1.50	10.17	7.34	17.51	4	18	26.75	4	64	24.50	6	46	0.54	15.90	4	18	9.90	11.98	8	17	26.75	11	16	1.50	15.25	7.34	22.59	11	16	1.50	21.25	7.34	28.59	81.27	9800	3.25	392	5.50	30

NOTE:
To accommodate the Variable Height of a Wall Unit, vertical Bars may be field cut to fit and the number of horizontal Bars G required by the highest wall dimension within a 25' Unit shall be equally spaced at each end of the Unit.

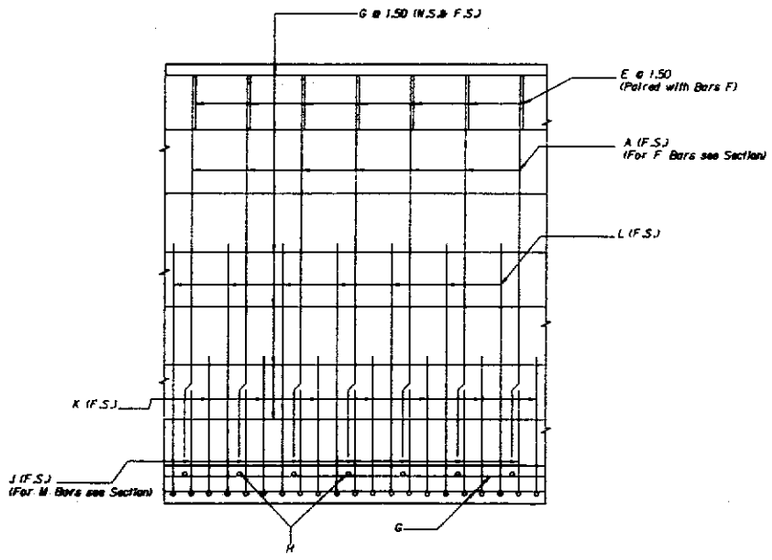

VIEW A-A

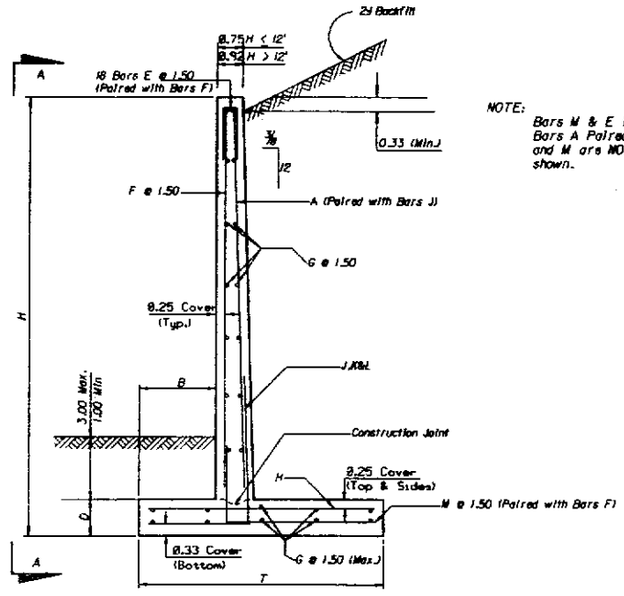

TYPICAL SECTION

NOTE:
Bars M & E Paired with Bars F and Bars A Paired with Bars J. Bars E,F and M are NO.4 Bars. Bars J are as shown.

BENDING DIAGRAM

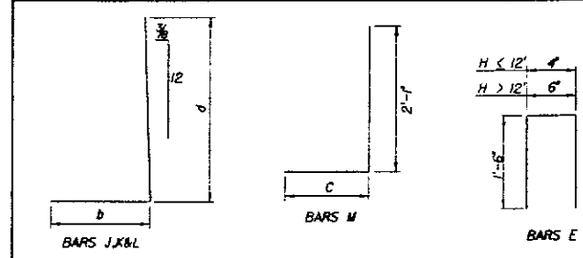

NOTE: All bar dimensions are out to out.

CANTILEVER RETAINING WALLS

REVISIONS		
Date	Description	
1/94	Changed cover on Bars J to 0.33(Min.).	
1/94	Changed cover on Footing to 0.33(Min.) and 0.25(Top & Sides).	
3/98	Changed width of Stem to 9.25 for a (4') and to 9.42' for a 3' 10".	
1/99	Changed assembly sketch.	
1/99	Changed Structure to Concrete.	
3/99	Rotated at 0.33.	

STATE OF FLORIDA DEPARTMENT OF TRANSPORTATION
BUREAU OF STRUCTURES

CASE III (5.5 KIPS/SQ. FT. MAX. BEARING PRESSURE)
6 FT. TO 30 FT. HEIGHT

	Name	Date
Drawn by	M.J.	3/98
Checked by	M.P.	3/98
Designed by	R.H.	6/85
Checked by	C.H.	6/85
Supervised by	A.G.M.	

APPROVED BY
C. H. Hobbs, BUREAU OF STRUCTURES

Drawing No. 18 OF 23
Index No. 14.051 CADD

3	R.A.		

RETAINING WALL DATA

WALL DIMENSIONS				REINFORCING STEEL SCHEDULE																																				QUANTITIES				ACTUAL MAXIMUM BEARING PRESSURE	
				BARS J						BARS F			BARS G			BARS H				BARS M				BARS A			BARS K						BARS L												
H	B	D	T	SIZE	NO.	SPACING	a	b	LENGTH	SIZE	NO.	LENGTH	SIZE	NO.	LENGTH	SIZE	NO.	SPACING	LENGTH	SIZE	NO.	c	LENGTH	SIZE	NO.	LENGTH	SIZE	NO.	SPACING	a	b	LENGTH	SIZE	NO.	SPACING	a	b	LENGTH	CONCRETE / 25' UNIT C.Y.	STEEL / 25' UNIT LBS.	CONCRETE PER LIN.FT. C.Y.	STEEL PER LIN.FT. LBS.	KIPS/SQ.FT.	H
6	0.67	0.92	2.86	4	26	1.00	5.58	1.08	6.66	4	18	5.00	4	14	24.50	4	18	1.42	2.36	4	18	1.77	3.85																6.33	520	0.25	21	1.77	6
7	0.75	0.92	3.41	4	26	1.00	6.58	1.19	7.77	4	18	6.00	4	16	24.50	4	18	1.42	2.91	4	18	2.24	4.32																7.66	596	0.31	24	2.02	7
8	0.92	0.92	3.87	4	26	1.00	7.58	1.39	8.97	4	18	7.00	4	18	24.50	4	18	1.42	3.37	4	18	2.53	4.61																8.93	671	0.36	27	2.26	8
9	1.17	0.92	4.33	4	28	0.92	8.58	1.68	10.26	4	18	8.00	4	20	24.50	4	18	1.42	3.83	4	18	2.74	4.82																10.23	759	0.41	30	2.43	9
10	1.17	0.92	4.85	4	31	0.83	9.58	1.70	11.28	4	18	9.00	4	22	24.50	4	27	0.96	4.35	4	18	3.26	5.34																11.61	885	0.46	35	2.77	10
11	1.33	0.92	5.30	5	26	1.00	10.58	1.89	12.47	4	18	10.00	4	22	24.50	4	34	0.75	4.80	4	18	3.55	5.63																12.97	1036	0.52	41	3.01	11
12	1.50	1.00	5.74	5	32	0.79	11.58	2.08	13.66	4	18	10.91	4	26	24.50	4	34	0.75	5.24	4	18	3.82	5.90																14.71	1243	0.59	50	3.28	12
13	1.58	1.00	6.28	5	32	0.79	12.58	2.35	14.93	4	18	11.91	4	28	24.50	4	40	0.63	5.78	4	18	4.28	6.36																18.08	1373	0.72	55	3.50	13
14	1.67	1.00	6.72	5	40	0.63	13.58	2.47	16.05	4	18	12.91	4	28	24.50	4	54	0.46	6.22	4	18	4.63	6.71																19.70	1639	0.79	66	3.82	14
15	1.83	1.00	7.16	5	26	1.00	14.58	2.66	17.24	4	18	13.91	4	32	24.50	5	44	0.58	6.66	4	18	4.91	6.99				5	25	1.00	5.75	2.66	8.41							21.35	1810	0.85	72	4.06	15
16	1.92	1.00	7.61	5	21	1.25	2.83	2.78	5.61	4	18	14.91	4	34	24.50	5	55	0.46	7.11	4	18	5.27	7.35	5	21	14.92	5	20	1.25	4.75	2.78	7.53	5	20	1.25	10.75	2.78	13.53	23.03	2162	0.92	86	4.38	16
17	2.17	1.17	8.13	5	17	1.50	3.42	3.06	6.48	4	18	15.75	4	36	24.50	5	51	0.50	7.63	4	18	5.54	7.62	6	17	15.75	6	16	1.50	5.33	3.06	8.39	6	16	1.50	8.33	3.06	11.39	25.85	2361	1.03	94	4.53	17
18	2.17	1.17	8.73	6	21	1.25	3.42	3.09	6.51	4	18	16.75	4	38	24.50	6	47	0.54	8.23	4	18	6.14	8.22	6	21	16.75	6	20	1.25	5.33	3.09	8.42	6	20	1.25	8.33	3.09	11.42	27.82	2874	1.11	115	4.82	18
19	2.42	1.67	9.03	7	17	1.50	4.83	3.35	8.18	4	18	17.25	4	40	24.50	5	44	0.58	8.53	4	18	6.19	8.27	6	17	17.25	7	16	1.50	6.42	3.35	9.77	7	16	1.50	10.42	3.35	13.77	33.00	2890	1.32	116	5.14	19
20	2.75	1.67	9.49	7	19	1.38	4.83	3.71	8.54	4	18	18.25	4	44	24.50	6	34	0.75	8.99	4	18	6.83	8.90	6	19	18.25	7	18	1.38	7.42	3.71	11.13	7	18	1.38	11.42	3.71	15.13	35.07	3366	1.40	135	5.24	20
21	3.00	1.67	9.91	8	17	1.50	5.92	3.99	9.91	4	18	19.25	4	44	24.50	6	38	0.67	9.41	4	18	6.49	8.57	6	17	19.25	8	16	1.50	9.08	3.99	13.07	8	16	1.50	13.08	3.99	17.07	37.11	3863	1.48	155	5.43	21
22	3.25	1.67	10.35	8	19	1.38	6.58	4.27	10.85	4	18	20.25	4	46	24.50	6	44	0.58	9.85	4	18	6.18	8.26	6	19	20.25	8	18	1.38	9.08	4.27	13.35	8	18	1.38	14.08	4.27	18.35	39.21	4441	1.57	178	5.61	22
23	3.50	2.17	10.80	8	21	1.25	6.58	4.53	11.11	4	18	20.75	4	48	24.50	6	34	0.75	10.30	4	18	6.88	8.96	6	21	20.75	8	20	1.25	9.58	4.53	14.11	8	20	1.25	14.58	4.53	19.11	46.52	4762	1.82	190	5.86	23
24	3.75	2.17	11.41	9	19	1.38	7.67	4.82	12.49	4	18	21.75	4	50	24.50	5	55	0.46	10.91	4	18	7.24	9.32	6	19	21.75	9	18	1.38	10.25	4.82	15.07	9	18	1.38	16.25	4.82	21.07	48.31	5499	1.93	220	5.94	24
25	4.08	2.17	11.97	9	21	1.25	7.67	5.18	12.85	4	18	22.75	4	50	24.50	5	60	0.42	11.47	4	18	7.47	9.55	6	21	22.75	9	20	1.25	11.25	5.18	16.43	9	20	1.25	17.25	5.18	22.43	50.93	6244	2.04	250	5.98	25
26	4.33	2.17	12.75	9	21	1.25	8.17	5.45	13.62	4	18	23.75	4	54	24.50	7	34	0.75	12.25	4	18	8.00	10.08	7	21	23.75	9	20	1.25	12.25	5.45	17.70	9	20	1.25	18.25	5.45	23.70	54.02	6991	2.16	280	5.93	26
27	4.75	2.67	13.51	9	21	1.25	8.67	5.89	14.56	4	18	24.25	4	56	24.50	6	38	0.67	13.01	4	18	8.34	10.42	7	21	24.25	9	20	1.25	12.75	5.89	18.64	9	20	1.25	18.75	5.89	24.64	62.59	7142	2.50	286	5.91	27
28	5.08	2.67	14.21	10	19	1.38	9.17	6.25	15.42	4	18	25.25	4	58	24.50	7	31	0.83	13.71	4	18	8.71	10.79	8	19	25.25	10	18	1.38	13.75	6.25	20.00	10	18	1.38	19.75	6.25	26.00	65.88	8398	2.64	336	5.91	28
29	5.42	2.67	14.91	10	21	1.25	9.67	6.62	16.29	4	18	26.25	4	62	24.50	6	47	0.54	14.41	4	18	9.07	11.15	8	21	26.25	10	20	1.25	14.75	6.62	21.37	10	20	1.25	20.75	6.62	27.37	69.20	9662	2.77	386	5.91	29
30	5.75	3.17	15.71	11	17	1.50	10.17	6.97	17.14	4	18	26.75	4	62	24.50	6	47	0.54	15.21	4	18	9.54	11.62	8	17	26.75	11	16	1.50	15.25	6.97	22.22	11	16	1.50	21.25	6.97	28.22	79.26	9642	3.17	386	5.96	30

NOTE:
To accommodate the Variable Height of a Wall Unit, vertical Bars may be field cut to fit and the number of horizontal Bars G required by the highest wall dimension within a 25' Unit shall be equally spaced at each end of the Unit.

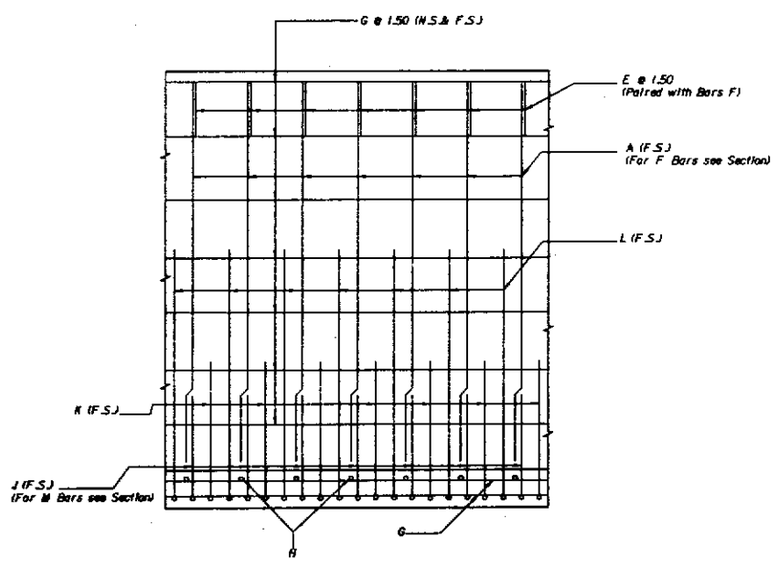

VIEW A-A

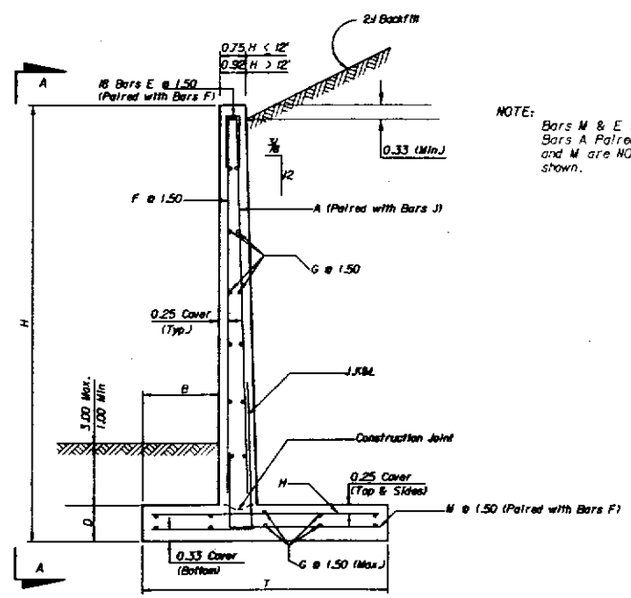

TYPICAL SECTION

NOTE:
Bars M & E Paired with Bars F and Bars A Paired with Bars J. Bars E,F and M are NO.4 Bars. Bars J are as shown.

BENDING DIAGRAM

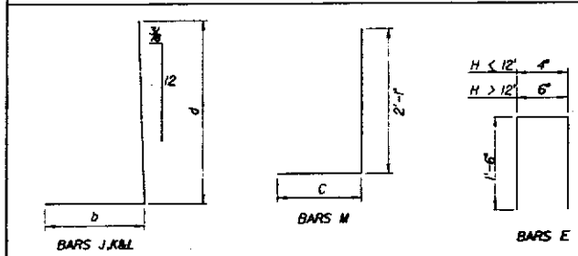

NOTE: All bar dimensions are out to out.

CANTILEVER RETAINING WALLS

REVISIONS	
Date	Description
3/87	Changed some of Bars G to 0.625 Dia.
3/87	Changed some of Footing to 0.625 Dia. and to 0.625 Dia.
3/87	Changed width of Stem to 0.75 for H ≤ 12' and to 0.92 for H > 12'.
3/87	Changed Footing widths.
3/87	Changed Stem Dia. to Rectangular.
3/87	Added to DGN.

STATE OF FLORIDA DEPARTMENT OF TRANSPORTATION
BUREAU OF STRUCTURES

CASE III (6.0 KIPS/SQ. FT. MAX. BEARING PRESSURE)
6 FT. TO 30 FT. HEIGHT

	Date	Date
Drawn by	M.I.	3/87
Checked by	M.P.	3/87
Designed by	C.V.	6/85
Checked by	R.M.	6/85
Supervised by	A.G.M.	

APPROVED BY
CHIEF ENGINEER OF STRUCTURES

Drawing No. 19 OF 23
Index No. 14.051 CADD

REVISED	BY	PROJECT NO.
3	RJA	

RETAINING WALL DATA

WALL DIMENSIONS				REINFORCING STEEL SCHEDULE																																				SHEAR KEY DIMENSIONS			QUANTITIES				ACTUAL MAXIMUM BEARING PRESSURE	
				BARS J						BARS F			BARS G			BARS H				BARS M				BARS A 1			BARS A 2				BARS A 3																
H	B	D	T	SIZE	NO.	SPACING	a	b	LENGTH	SIZE	NO.	LENGTH	SIZE	NO.	LENGTH	SIZE	NO.	SPACING	LENGTH	SIZE	NO.	c	LENGTH	SIZE	NO.	LENGTH	SIZE	NO.	SPACING	LENGTH	SIZE	NO.	SPACING	LENGTH	E	F	G	CONCRETE / 25' UNIT C.Y.	STEEL / 25' UNIT LBS.	CONCRETE PER LIN.FT. C.Y.	STEEL PER LIN.FT. LBS.	KIPS/SQ.FT.	H
6	0.83	0.92	3.91	4	26	1.00	5.58	1.25	6.83	4	18	5.00	4	14	24.50	4	18	1.42	3.41	4	18	2.66	4.49															7.23	543	0.29	22	2.26	6
7	1.25	0.92	4.69	4	26	1.00	6.58	1.70	8.28	4	18	6.00	4	16	24.50	4	18	1.42	4.19	4	18	3.02	4.85															8.74	627	0.35	25	2.35	7
8	1.25	1.00	5.31	4	27	0.96	7.58	1.75	9.33	4	18	6.92	4	18	24.50	4	24	1.08	4.81	4	18	3.64	5.47															10.48	729	0.42	29	2.91	8
9	1.67	1.00	6.25	4	21	1.25	8.58	2.17	10.75	4	18	7.92	4	24	24.50	4	24	1.08	5.75	4	18	4.17	6.00				4	20	1.25	5.67					1.00	1.00	2.09	13.19	919	0.53	37	2.96	9
10	2.25	1.17	8.20	4	28	0.92	9.58	2.75	12.33	4	18	8.75	4	26	24.50	4	30	0.83	7.70	4	18	5.53	7.36				4	27	0.92	4.92					1.00	1.00	2.70	17.05	1133	0.68	45	2.83	10
11	3.00	1.17	10.48	5	24	1.08	10.58	3.58	14.16	4	18	9.75	4	30	24.50	4	30	0.83	9.98	4	18	7.06	8.89				5	23	1.08	5.92					1.00	1.00	3.48	20.47	1452	0.82	58	2.73	11
12	3.50	1.42	11.50	5	28	0.92	11.58	4.08	15.66	4	18	10.50	4	32	24.50	5	26	1.00	11.00	4	18	7.58	9.91				5	27	0.92	6.75					1.00	1.00	4.00	24.94	1755	1.00	70	2.86	12
13	4.00	1.42	13.20	5	28	0.92	12.58	4.75	17.33	4	18	11.50	4	36	24.50	5	26	1.00	12.70	4	18	8.78	11.11				5	27	0.92	7.08					1.00	1.00	4.69	30.01	1953	1.20	78	2.93	13
14	5.00	1.67	16.22	6	26	1.00	13.57	5.85	19.40	4	18	12.25	4	40	24.50	5	30	0.83	15.72	4	18	10.80	13.13				6	25	1.00	7.50					1.00	1.00	5.72	38.63	2533	1.55	101	2.97	14
15	7.00	1.67	22.25	6	21	1.25	3.91	7.83	11.75	4	18	13.25	4	52	24.50	7	33	0.75	21.75	4	18	14.83	17.16	5	21	13.25	6	20	1.25	7.83	6	20	1.25	10.83	1.00	1.00	7.75	49.22	3947	1.97	158	3.00	15

NOTE:
Bars M & E Paired with Bars F and Bars A 1 Paired with Bars J. Bars E,F and M are NO.4 Bars. Bars J are as shown.

NOTE:
To accommodate the Variable Height of a Wall Unit, vertical Bars may be field cut to fit and the number of horizontal Bars G required by the highest wall dimension within a 25' Unit shall be equally spaced at each end of the Unit.

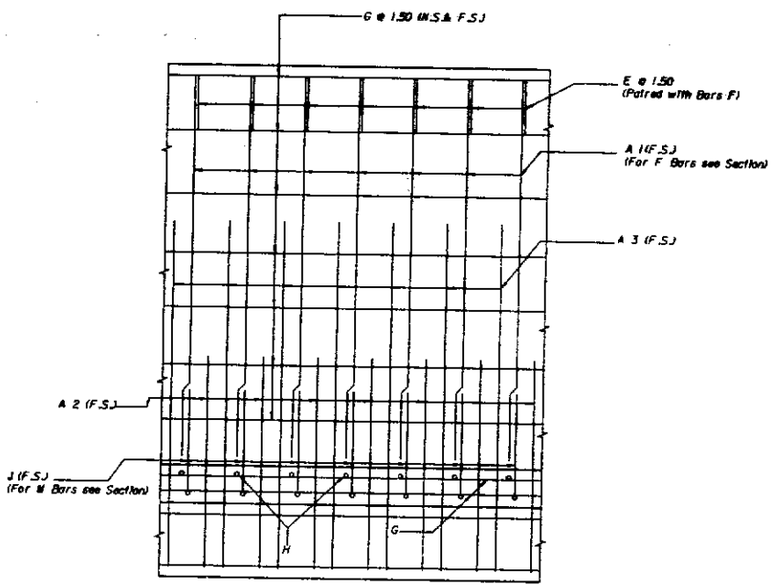

VIEW A-A

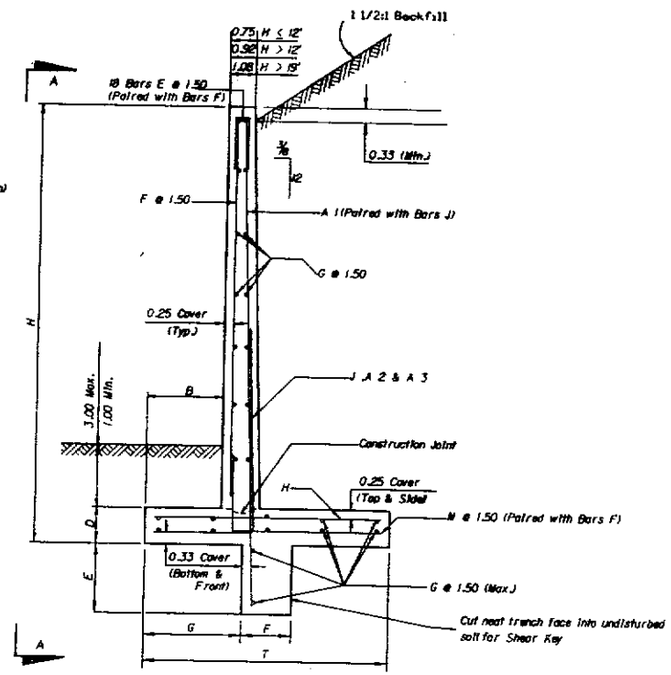

TYPICAL SECTION

BENDING DIAGRAM

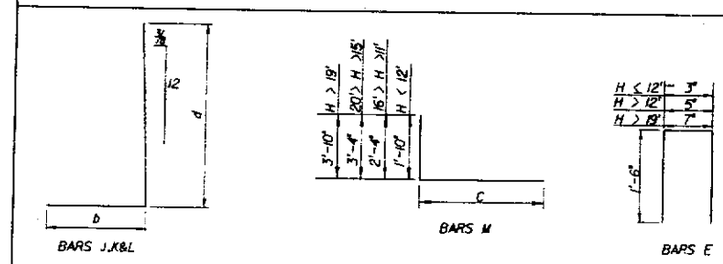

NOTE: All bar dimensions are out to out.

CANTILEVER RETAINING WALLS

REVISIONS	
Date	Description
3/97	Changed cover on Bars J to 0.33(Min.).
3/97	Changed cover on F of Bars G to 0.33(Bottom) and 0.25(Top & Side).
3/97	Changed width of Bars J to 0.83 for H ≤ 12' and to 0.92 for H > 12'.
3/97	Changed concrete volumes.
3/97	Changed dimensions to decimal feet.
3/97	Added note on CADD.

STATE OF FLORIDA DEPARTMENT OF TRANSPORTATION
BUREAU OF STRUCTURES

CASE IV (3.0 KIPS/SQ. FT. MAX. BEARING PRESSURE)
6 FT. TO 15 FT. HEIGHT

Designed by	M.J.	3/87	APPROVED BY
Checked by	M.P.	3/87	CHIEF ENGINEER
Submitted by	R.H.	6/85	
Checked by	C.H.	6/85	
Supervised by	A.G.H.		

Drawing No. 20 OF 23 — Index No. 14,059 CADD

3	R.A.		

RETAINING WALL DATA

H	WALL DIMENSIONS B	D	T	BARS J SIZE	NO.	SPACING	a	b	LENGTH	BARS F SIZE	NO.	LENGTH	BARS G SIZE	NO.	LENGTH	BARS H SIZE	NO.	SPACING	LENGTH	BARS M SIZE	NO.	c	LENGTH	BARS A 1 SIZE	NO.	LENGTH	BARS A 2 SIZE	NO.	SPACING	LENGTH	BARS A 3 SIZE	NO.	SPACING	LENGTH	SHEAR KEY DIMENSIONS E	F	G	QUANTITIES CONCRETE / 25' UNIT C.Y.	STEEL / 25' UNIT LBS.	CONCRETE PER LINEFT C.Y.	STEEL PER LINEFT. LBS.	ACTUAL MAXIMUM BEARING PRESSURE KIPS/SQ.FT.	H
6	0.83	0.92	3.91	4	26	1.00	5.58	1.25	6.83	4	18	5.00	4	14	24.50	4	18	1.42	3.41	4	18	2.66	4.50															7.23	543	0.29	22	2.26	6
7	1.25	0.92	4.69	4	26	1.00	6.58	1.67	8.25	4	18	6.00	4	16	24.50	4	18	1.42	4.19	4	18	3.02	4.85															8.74	627	0.35	25	2.35	7
8	1.25	1.00	5.31	4	27	0.96	7.58	1.75	9.33	4	18	6.92	4	18	24.50	4	24	1.08	4.81	4	18	3.64	5.47															10.48	729	0.42	29	2.91	8
9	1.50	1.00	5.84	4	21	1.25	8.58	2.00	10.58	4	18	7.92	4	22	24.50	4	24	1.08	5.34	4	18	3.92	5.75				4	20	1.25	5.67					1.00	1.00	1.88	12.81	874	0.51	35	3.23	9
10	1.67	1.17	6.61	4	28	0.92	9.58	2.17	11.75	4	18	8.75	4	24	24.50	4	28	0.88	6.11	4	18	4.53	6.36				4	27	0.92	4.92					1.00	1.00	2.07	15.33	1037	0.61	41	3.58	10
11	1.83	1.17	7.39	5	24	1.08	10.58	2.42	13.00	4	18	9.75	4	26	24.50	5	25	1.00	6.89	4	18	5.14	6.97				5	23	1.08	5.92					1.00	1.00	2.26	17.14	1314	0.69	53	3.91	11
12	2.25	1.42	9.25	5	28	0.92	11.58	2.83	14.41	4	18	10.50	4	28	24.50	5	25	1.00	8.75	4	18	6.58	8.91				5	27	0.92	6.75					1.00	1.00	2.70	22.03	1571	0.88	63	3.85	12
13	3.00	1.42	10.70	5	28	0.92	12.58	3.79	16.36	4	18	11.50	4	34	24.50	5	25	1.00	10.20	4	18	7.28	9.61				5	27	0.92	7.08					1.00	1.00	3.65	26.89	1793	1.08	72	3.56	13
14	3.50	1.67	11.72	6	26	1.00	13.58	4.30	17.88	4	18	12.25	4	36	24.50	5	32	0.79	11.22	4	18	7.80	10.13				6	25	1.00	7.50					1.23	1.08	4.16	31.99	2253	1.28	90	3.66	14
15	4.00	1.67	13.25	6	21	1.25	3.92	4.83	8.75	4	18	13.25	4	38	24.50	5	32	0.79	12.75	4	18	8.84	11.17	5	21	13.25	6	20	1.25	7.83	6	20	1.25	10.83	1.58	1.25	4.69	36.17	2510	1.45	100	3.73	15
16	4.50	2.17	14.77	7	17	1.50	5.33	5.35	10.68	4	18	13.75	4	42	24.50	5	43	0.58	14.27	4	18	9.85	12.18	5	17	13.75	6	16	1.50	8.33	6	16	1.50	12.33	1.33	1.08	5.20	45.47	2793	1.82	112	3.89	16
17	5.50	2.67	17.78	7	19	1.38	7.01	6.37	13.38	4	18	14.25	4	46	24.50	5	54	0.46	17.28	4	18	11.87	15.20	5	19	14.25	6	18	1.38	9.83	6	18	1.38	12.83	0.83	1.00	6.21	59.81	3537	2.39	141	3.86	17
18	6.50	2.67	20.82	8	17	1.50	8.75	7.40	16.15	4	18	15.25	4	52	24.50	5	54	0.46	20.32	4	18	13.90	17.23	5	17	15.25	6	16	1.50	10.83	6	16	1.50	13.83	1.00	1.00	7.24	68.75	4016	2.75	161	3.87	18
19	7.50	2.67	23.85	9	17	1.50	8.1	8.43	16.60	4	18	16.25	4	56	24.50	5	54	0.46	23.35	4	18	15.93	19.26	5	17	16.25	8	16	1.50	12.50	8	16	1.50	19.50	1.08	1.00	8.26	77.61	5383	3.10	215	3.95	19

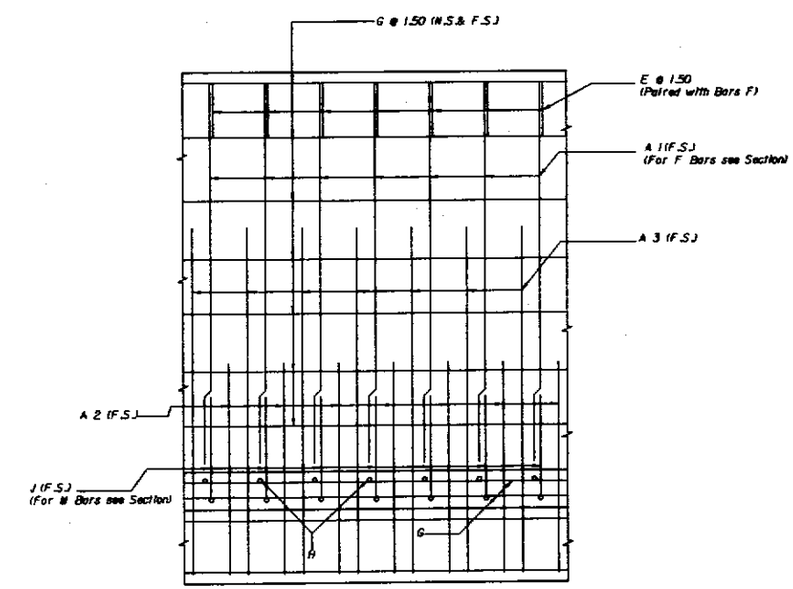

VIEW A-A

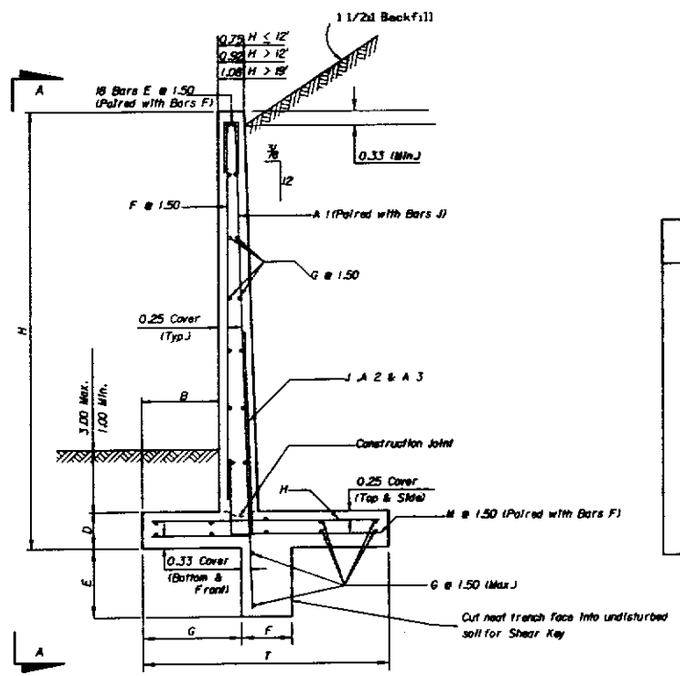

TYPICAL SECTION

NOTE:
Bars M & E Paired with Bars F and Bars A 1 Paired with Bars J. Bars E,F and M are NO.4 Bars. Bars J are as shown.

NOTE:
To accommodate the Variable Height of a Wall Unit, vertical Bars may be field cut to fit and the number of horizontal Bars G required by the highest wall dimension within a 25' Unit shall be equally spaced at each end of the Unit.

BENDING DIAGRAM

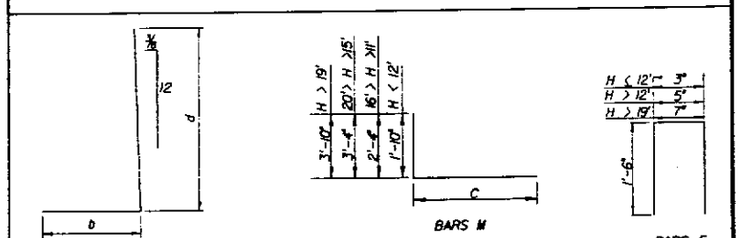

NOTE: All bar dimensions are out to out.

CANTILEVER RETAINING WALLS

REVISIONS Date	Description
3/97	Changed cover on Wall to 0.33(typ.). Changed cover on Footing to 0.33(min. and 0.33(typ.) & clear.
3/97	Changed width of Wall to 0.92 for H ≤ 12' and 1.08 for H > 12'.
3/97	Changed bends on bars.
3/97	Changed concrete to Substructure, Class or 0.33.

STATE OF FLORIDA DEPARTMENT OF TRANSPORTATION
BUREAU OF STRUCTURES

CASE IV (4.0 KIPS/SQ. FT. MAX. BEARING PRESSURE)
6 FT. TO 19 FT. HEIGHT

	Name	Date
Drawn by	M.L.	3/87
Designed by	M.P.	3/87
Computed by	C.W.	6/85
Checked by	R.N.	6/85
Supervised by	A.G.M.	

APPROVED BY
CHIEF ENGINEER

21 OF 23

14.051 CADD

3	N.A.		

RETAINING WALL DATA

WALL DIMENSIONS				REINFORCING STEEL SCHEDULE																																		SHEAR KEY DIMENSIONS			QUANTITIES				ACTUAL MAXIMUM BEARING PRESSURE	
				BARS J						BARS F			BARS G			BARS H				BARS M				BARS A 1			BARS A 2				BARS A 3										CONCRETE / 25' UNIT	STEEL / 25' UNIT	CONCRETE PER LIN.FT.	STEEL PER LIN.FT.		
H	B	D	T	SIZE	NO.	SPACING	a	b	LENGTH	SIZE	NO.	LENGTH	SIZE	NO.	LENGTH	SIZE	NO.	SPACING	LENGTH	SIZE	NO.	c	LENGTH	SIZE	NO.	LENGTH	SIZE	NO.	SPACING	LENGTH	SIZE	NO.	SPACING	LENGTH	E	F	G	C.Y.	LBS.	C.Y.	LBS.	KIPS/SQ.FT.	H
6	0.83	0.92	3.91	4	26	1.00	5.58	1.25	6.83	4	18	5.00	4	14	24.50	4	18	1.42	3.41	4	18	2.66	4.49															7.23	543	0.29	22	2.26	6
7	1.25	0.92	4.69	4	26	1.00	6.58	1.70	8.28	4	18	6.00	4	16	24.50	4	18	1.42	4.19	4	18	3.02	4.85															8.74	627	0.35	25	2.35	7
8	1.25	1.00	5.31	4	27	0.96	7.58	1.72	9.30	4	18	6.92	4	18	24.50	4	24	1.08	4.81	4	18	3.64	5.47															10.48	728	0.42	29	2.91	8
9	1.50	1.00	5.84	4	21	1.25	8.58	2.00	10.58	4	18	7.92	4	22	24.50	4	24	1.08	5.33	4	18	3.92	5.75				4	20	1.25	5.67					1.00	1.00	1.92	12.81	874	0.51	35	3.23	9
10	1.67	1.17	6.61	4	28	0.92	9.58	2.20	11.78	4	18	8.75	4	24	24.50	4	28	0.88	6.11	4	18	4.53	6.36				4	27	0.92	4.92					1.00	1.00	2.12	15.33	1038	0.61	42	3.58	10
11	1.83	1.17	7.06	5	24	1.08	10.58	2.39	12.97	4	18	9.75	4	26	24.50	5	25	1.00	6.56	4	18	4.81	6.64				5	23	1.08	5.92					1.00	1.00	2.31	16.78	1300	0.67	52	4.01	11
12	2.00	1.42	8.00	5	28	0.92	11.58	2.58	14.16	4	18	10.50	4	30	24.50	5	25	1.00	7.50	4	18	5.58	7.91				5	27	0.92	6.75					1.25	1.17	2.50	20.82	1552	0.83	62	4.32	12
13	2.25	1.42	8.45	5	28	0.92	12.58	3.03	15.61	4	18	11.50	4	30	24.50	5	27	0.92	7.94	4	18	5.78	8.11				5	27	0.92	7.08					1.42	1.17	2.95	24.40	1648	0.98	66	4.56	13
14	2.50	1.67	9.72	6	26	1.00	13.58	3.30	16.88	4	18	12.25	4	34	24.50	6	22	1.17	9.22	4	18	6.80	9.13				6	25	1.00	7.50					1.50	1.25	2.95	29.41	2101	1.18	84	4.72	14
15	3.00	1.67	10.75	6	21	1.25	3.92	3.84	7.76	4	18	13.25	4	34	24.50	6	23	1.08	10.25	4	18	7.33	9.66	5	21	13.25	6	20	1.25	7.83	6	20	1.25	10.83	1.83	1.25	3.69	32.60	2324	1.30	93	4.69	15
16	3.50	2.17	11.77	7	17	1.50	5.33	4.35	9.68	4	18	13.75	4	38	24.50	6	30	0.83	11.27	4	18	7.85	11.18	5	17	13.75	6	16	1.50	8.33	6	16	1.50	12.33	1.75	1.25	4.20	40.15	2548	1.61	102	4.76	16
17	4.00	2.67	13.28	7	19	1.38	7.08	4.87	11.95	4	18	14.25	4	40	24.50	7	29	0.88	12.78	4	18	8.86	12.19	5	19	14.25	6	18	1.38	9.83	6	18	1.38	12.83	1.33	1.33	4.74	49.57	3131	1.98	125	4.81	17
18	4.50	2.67	14.82	8	17	1.50	8.75	5.40	14.15	4	18	15.25	4	44	24.50	7	29	0.98	14.32	4	18	9.90	13.23	5	17	15.25	6	16	1.50	10.83	6	16	1.50	13.83	1.75	1.33	5.27	55.16	3459	2.21	138	4.83	18
19	5.00	2.67	16.35	9	17	1.50	8.17	5.93	14.10	4	18	16.25	4	46	24.50	7	29	0.88	15.85	4	18	10.93	14.26	5	17	16.25	8	16	1.50	12.50	8	16	1.50	19.50	2.00	1.50	5.75	60.87	4573	2.43	183	4.88	19
20	5.50	2.92	18.04	9	17	1.50	8.42	6.62	15.04	4	18	17.00	4	50	24.50	8	25	1.00	17.54	4	18	12.12	15.95	6	17	17.00	8	16	1.50	12.00	8	16	1.50	16.00	2.00	1.50	6.45	72.85	4929	2.91	197	4.93	20
21	6.50	2.92	21.07	9	19	1.38	8.42	7.65	16.07	4	18	18.00	4	54	24.50	8	25	1.00	20.57	4	18	14.15	17.98	6	19	18.00	8	18	1.38	13.33	8	18	1.38	17.33	2.17	1.50	7.48	82.79	5759	3.31	230	4.79	21
22	7.00	2.92	22.60	10	17	1.50	10.25	8.18	18.43	4	18	19.00	4	60	24.50	8	25	1.00	22.10	4	18	15.18	19.01	6	17	19.00	9	16	1.50	14.33	9	16	1.50	19.33	2.50	1.50	8.00	88.92	6623	3.56	265	4.92	22
23	8.00	3.17	25.62	10	19	1.38	10.25	9.21	19.46	4	18	19.75	4	64	24.50	8	26	0.96	25.12	4	18	17.20	21.03	7	19	19.75	10	18	1.38	15.67	10	18	1.38	20.67	2.50	1.67	9.12	104.57	8498	4.18	340	494	23

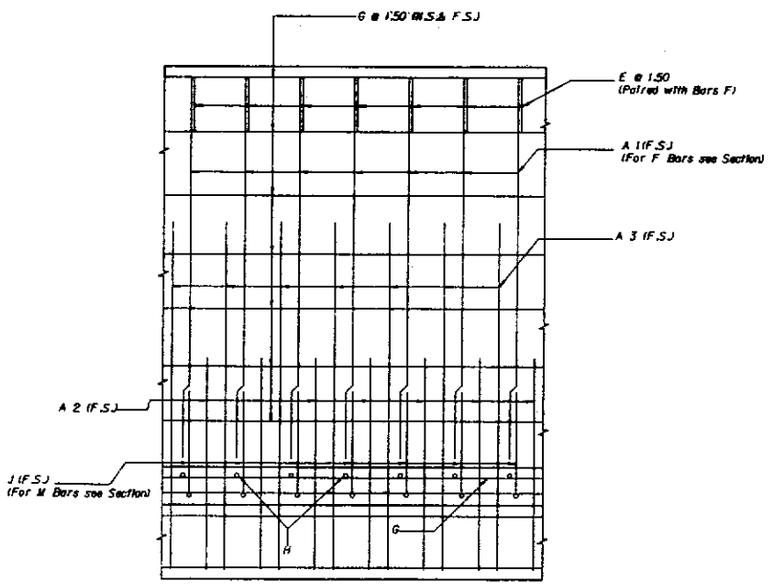

VIEW A-A

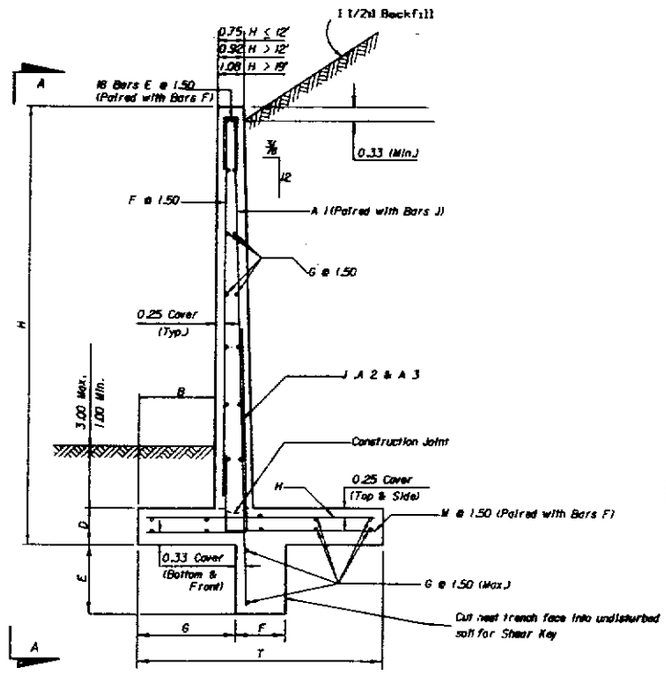

TYPICAL SECTION

NOTE:
Bars M & E Paired with Bars F and Bars A 1 Paired with Bars J. Bars E,F and M are NO.4 Bars. Bars J are as shown.

NOTE:
To accommodate the Variable Height of a Wall Unit, vertical Bars may be field cut to fit and the number of horizontal Bars G required by the highest wall dimension within a 25' Unit shall be equally spaced at each end of the Unit.

BENDING DIAGRAM

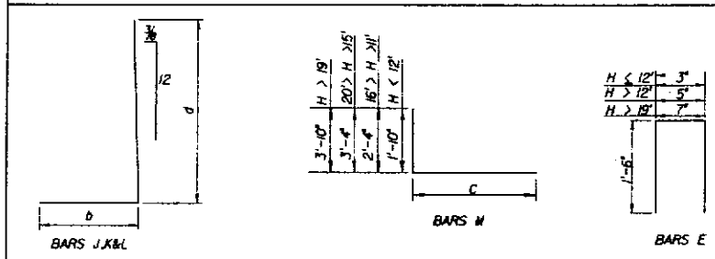

NOTE: All bar dimensions are out to out.

CANTILEVER RETAINING WALLS

REVISIONS	
Date	Description
3/97	Changed cover at Bars M & E (Bars J, A 1) to 0.33 (Min.).
3/97	Changed cover to Footing to 0.33 (Min.) and 0.25 (Top & Side).
3/97	Changed width of Bars M to 0.625 for H ≤ 12' and 0.875 for H > 12'.
3/97	Changed assembly sequence.
3/97	Changed dimension to Construction Joint.
3/97	Deleted Note on C-1.03.

STATE OF FLORIDA DEPARTMENT OF TRANSPORTATION
BUREAU OF STRUCTURES

CASE IV (5.0 KIPS/SQ. FT. MAX. BEARING PRESSURE)
6 FT. TO 23 FT. HEIGHT

FED. RD.	COUNTY	PROJECT NO.

Drawn by	W.J.	3/87
Checked by	M.P.	3/87
Quantities by	R.H.	6/85
Checked by	C.H.	6/85
Supervised by	A.G.M.	

APPROVED BY
CHIEF ENGINEER, BUREAU OF STRUCTURES

Drawing No. 22 OF 23
Index No. 14.051 CADD

3	N.A.		

RETAINING WALL DATA

WALL DIMENSIONS				REINFORCING STEEL SCHEDULE																																SHEAR KEY DIMENSIONS			QUANTITIES				ACTUAL MAXIMUM BEARING PRESSURE	
				BARS J						BARS F			BARS G			BARS H				BARS M				BARS A 1			BARS A 2				BARS A 3													
H	B	D	T	SIZE	NO.	SPACING	a	b	LENGTH	SIZE	NO.	LENGTH	SIZE	NO.	LENGTH	SIZE	NO.	SPACING	LENGTH	SIZE	NO.	c	LENGTH	SIZE	NO.	LENGTH	SIZE	NO.	SPACING	LENGTH	SIZE	NO.	SPACING	LENGTH	E	F	G	CONCRETE / 25' UNIT C.Y.	STEEL / 25' UNIT LBS.	CONCRETE PER LIN.FT. C.Y.	STEEL PER LIN.FT. LBS.	KIPS/SQ.FT.	H
6	0.83	0.92	3.91	4	26	1.00	5.58	1.25	6.83	4	18	5.00	4	14	24.50	4	18	1.42	3.41	4	18	2.66	4.49																7.23	543	0.29	22	2.26	6
7	1.25	0.92	4.69	4	26	1.00	6.58	1.70	8.28	4	18	6.00	4	16	24.50	4	18	1.42	4.19	4	18	3.02	4.85																8.74	627	0.35	25	2.35	7
8	1.25	1.00	5.31	4	27	0.96	7.58	1.72	9.30	4	18	6.92	4	16	24.50	4	24	1.08	4.81	4	18	3.64	5.47																10.48	696	0.42	28	2.91	8
9	1.50	1.00	5.84	4	21	1.25	8.58	2.00	10.58	4	18	7.92	4	22	24.50	4	24	1.08	5.34	4	18	3.92	5.75				4	20	1.25	5.67					1.00	1.00	1.88	12.74	874	0.51	35	3.23	9
10	1.67	1.17	6.61	4	28	0.92	9.58	2.20	11.78	4	18	8.75	4	24	24.50	4	29	0.88	6.11	4	18	4.52	6.35				4	27	0.92	4.92					1.00	0.92	2.07	15.26	1042	0.61	42	3.58	10
11	1.83	1.17	7.06	5	24	1.08	10.58	2.39	12.97	4	18	10.50	4	26	24.50	4	38	0.67	6.56	4	18	4.81	6.64				5	23	1.08	5.92					1.00	1.00	2.26	16.78	1305	0.67	52	4.01	11
12	2.00	1.42	8.00	5	28	0.92	11.58	2.58	14.16	4	18	11.50	4	28	24.50	4	38	0.67	7.50	4	18	5.58	7.91				5	27	0.92	6.75					1.08	1.00	2.45	20.46	1526	0.82	61	4.23	12
13	2.25	1.42	8.45	5	28	0.92	12.58	3.03	15.61	4	18	12.25	4	30	24.50	4	43	0.58	7.95	4	18	5.78	8.11				6	27	0.92	7.08					1.42	1.00	2.89	24.17	1749	0.97	70	4.56	13
14	2.25	1.67	9.47	6	26	1.00	13.58	3.05	16.63	4	18	13.25	4	32	24.50	5	32	0.79	8.97	4	18	6.80	9.13				6	25	1.00	7.50					1.50	1.08	2.91	28.78	2065	1.15	83	5.03	14
15	2.50	1.67	9.75	6	21	1.25	3.92	3.33	7.25	4	18	13.75	4	32	24.50	5	38	0.67	9.25	4	18	6.83	9.16	5	21	13.25	6	20	1.25	7.83	6	20	1.25	10.83	2.00	1.25	3.19	31.25	2287	1.25	91	5.42	15
16	3.00	2.17	10.77	7	17	1.50	5.33	3.85	9.18	4	18	14.25	4	36	24.50	5	43	0.58	10.27	4	18	7.35	10.68	5	17	13.75	6	16	1.50	8.33	6	16	1.50	12.33	1.75	1.25	3.71	38.14	2451	1.53	98	5.41	16
17	3.50	2.67	11.78	7	19	1.38	7.08	4.37	11.45	4	18	15.25	4	38	24.50	5	54	0.46	11.28	4	18	7.86	11.19	5	19	14.25	6	18	1.38	9.83	6	18	1.38	12.83	1.50	1.17	4.23	45.85	2957	1.83	118	5.44	17
18	3.50	2.67	12.82	8	17	1.50	8.75	4.40	13.15	4	18	16.25	4	40	24.50	5	54	0.46	12.32	4	18	8.90	12.23	5	17	15.25	6	16	1.50	10.83	6	16	1.50	13.83	2.00	1.25	4.26	50.39	3193	2.02	128	5.88	18
19	4.00	2.67	13.35	9	17	1.50	8.17	4.93	13.10	4	18	17.00	4	42	24.50	5	54	0.46	12.85	4	18	8.93	12.26	5	17	16.25	8	16	1.50	12.50	8	16	1.50	19.50	2.33	1.33	4.77	53.56	4219	2.14	169	5.95	19
20	4.50	2.92	15.04	9	17	1.50	8.42	5.62	14.04	4	18	18.00	4	44	24.50	6	43	0.58	14.54	4	18	10.11	13.44	6	17	17.00	8	16	1.50	12.00	8	16	1.50	16.00	2.25	1.33	5.46	64.75	4523	2.51	181	5.80	20
21	5.00	2.92	16.57	9	19	1.38	8.42	6.15	14.57	4	18	19.00	4	48	24.50	6	43	0.58	16.07	4	18	11.15	14.48	6	19	18.00	8	18	1.38	13.33	8	18	1.38	17.33	2.67	1.50	5.99	71.33	5199	2.85	208	5.79	21
22	5.50	2.92	18.10	10	17	1.50	8.42	6.68	15.10	4	18	19.75	4	52	24.50	6	43	0.58	17.60	4	18	12.18	15.51	6	17	19.00	9	16	1.50	14.33	9	16	1.50	19.33	3.00	1.58	6.51	77.68	5877	3.11	235	5.81	22
23	6.00	3.17	19.62	10	19	1.38	10.25	7.21	17.46	4	18	20.75	4	54	24.50	6	46	0.54	19.12	4	18	13.20	16.53	7	19	19.75	10	18	1.38	15.67	10	18	1.38	20.67	3.00	1.50	7.02	87.28	7706	3.49	308	5.90	23
24	6.50	3.17	21.15	11	17	1.50	11.92	7.74	19.66	4	18	21.75	4	59	24.50	6	46	0.54	20.65	4	18	14.23	17.56	7	17	20.75	10	16	1.50	15.92	10	16	1.50	21.92	3.33	1.58	7.55	94.06	8011	3.76	320	5.97	24
25	7.50	3.17	24.19	11	20	1.25	11.92	8.77	20.69	4	18	22.75	4	63	24.50	6	46	0.54	23.69	4	18	16.27	19.60	7	20	21.75	10	19	1.25	17.17	10	19	1.25	24.17	3.50	1.58	8.57	104.85	9689	4.19	388	5.78	25
26	8.00	3.42	25.71	11	20	1.25	11.92	9.29	21.21	4	18	23.75	4	65	24.50	6	49	0.50	25.21	4	18	17.29	20.62	7	20	22.75	11	19	1.25	16.92	11	19	1.25	25.42	3.58	1.58	9.10	116.60	10955	4.66	438	5.94	26

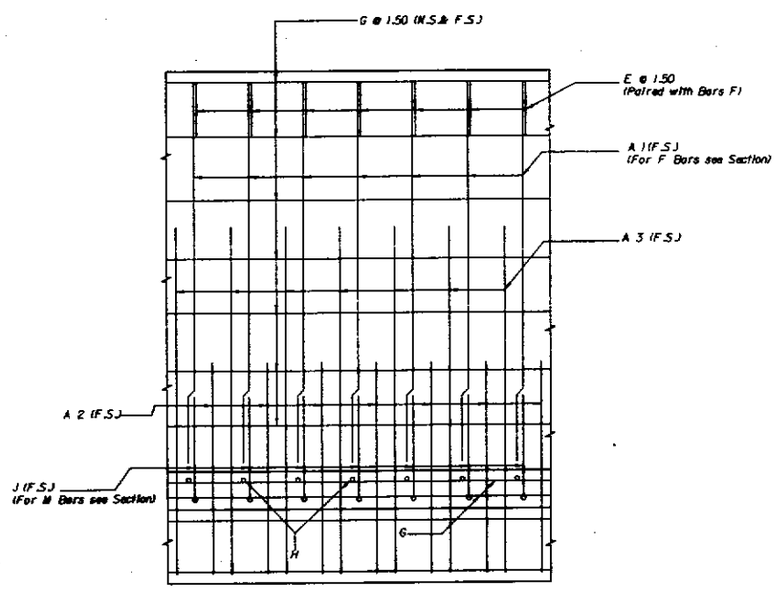

VIEW A-A

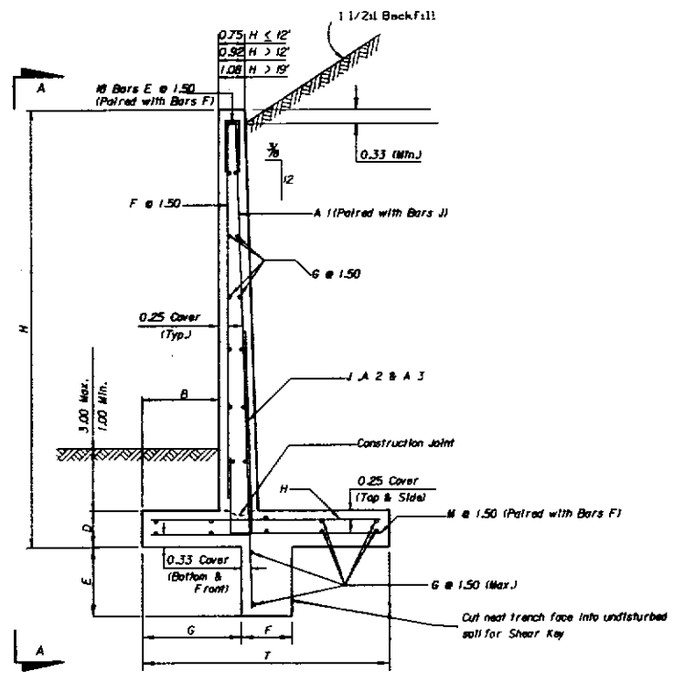

TYPICAL SECTION

NOTE:
Bars M & E Paired with Bars F and Bars A 1 Paired with Bars J. Bars E,F and M are NO.4 Bars. Bars J are as shown.

NOTE:
To accommodate the Variable Height of a Wall Unit, vertical Bars may be field cut to fit and the number of horizontal Bars G required by the highest wall dimension within a 25' Unit shall be equally spaced at each end of the Unit.

BENDING DIAGRAM

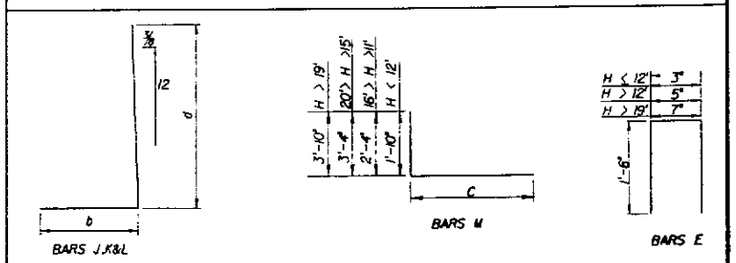

NOTE: All bar dimensions are out to out.

CANTILEVER RETAINING WALLS

REVISIONS	
Date	Description
3/87	Changed cover on Stem to 0.33(Min.).
3/87	Changed cover on Footing to 0.33(Bottom and 0.33(Top & side).
3/87	Changed width of Stem to 0.875 for H ≤ 12' and 0.992 for H > 12'.
3/87	Changed concrete strength.
3/87	Changed reinforcing to Grade 60 bar.
3/87	Added to CADD.

STATE OF FLORIDA DEPARTMENT OF TRANSPORTATION
BUREAU OF STRUCTURES

CASE IV 16.0 KIPS/SQ. FT. MAX. BEARING PRESSURE)
6 FT. TO 26 FT. HEIGHT

	Name	Date
Drawn by	M.I.	3/87
Checked by	M.P.	3/87
Submitted by	C.W.	6/85
Checked by	R.N.	6/85
Approved by	A.G.M.	

APPROVED BY
E. [illegible] P. BUREAU OF STRUCTURES

Drawing No. 23 OF 23
Index No. 14.051 CADD

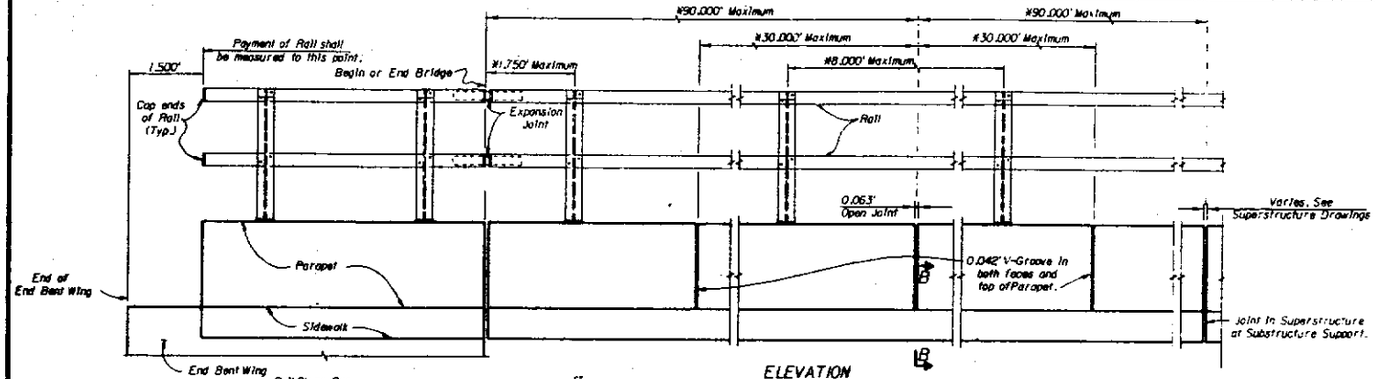

ELEVATION

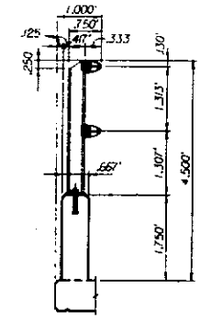

TYPICAL SECTION THRU PARAPET AND RAIL

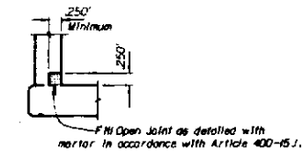

SECTION B-B

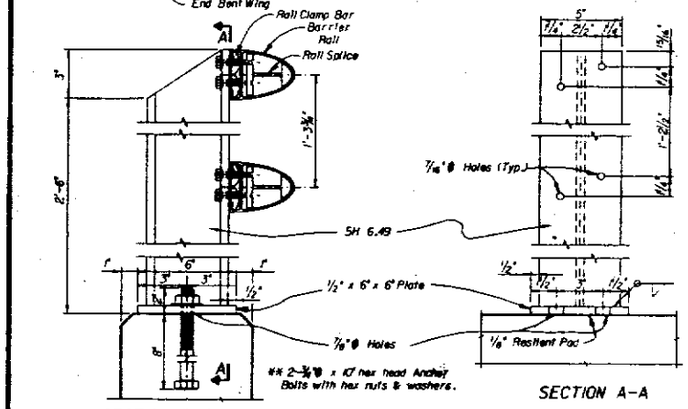

SECTION THRU RAIL

SECTION A-A

NOTE:
At Substructure Supports where Superstructure Slab is continuous, a .063' Open Joint shall be constructed as shown in Section B-B.

** NOTE: After nuts have been tightened the threads shall be nicked to prevent removal of nuts.

* NOTE: See Superstructure Drawing for actual dimensions.

NOTE: Rail shall be continuous over a minimum of three posts before splicing.

NOTES

PAYMENT: The cost of all materials in Parapet shall be included in Concrete (Superstructure) and Reinforcing Steel (Superstructure). Aluminum Rail shall be paid for per linear foot and shall be measured along the centerline of the top surface of the rail. Payment includes Anchor Bolts, Nuts, Resilient Pads, and all incidental materials and labor required to complete the installation.
DIMENSIONS: Concrete Barrier and Rail Post spacing dimensions are given in decimals of a foot. Rail components dimensions are given in feet and inches.

SPECIFICATIONS FOR BRIDGE RAIL

POST: Fabricated wrought aluminum A.S.T.M. B221, alloy 6061-T6 or alloy 6351-T5 with welding using filler wire 4043.
RAIL & RAIL SPLICE: Aluminum A.S.T.M. B221, alloy 6061-T6 or alloy 6351-T-5.
RAIL CLAMP BAR: Aluminum A.S.T.M. B221, alloy 6061-T6 or alloy 6351-T5.
ANCHOR BOLTS: Anchor Bolts shall be in accordance with A.S.T.M. A-36 or A-307. Anchor Bolts, nuts and washers shall be hot-dip galvanized in accordance with A.S.T.M. Designation A-153.
RAIL END CAP: A.S.T.M. B-26 sand cast aluminum alloy, SG 70A-F (Aluminum Association alloy designation A-356-F).
RAIL INSTALLATION: Rail Post shall be normal to Profile Grade. Posts shall be seated on 1/8" thick resilient pads in accordance with Article 932-2 J. The dimension shall be the same as the post base.
Rail expansion joints shall occur in the panel between posts on either side of Bridge expansion joints. Rail expansion joints shall be similar to rail splices with provision for movement equal to 1.5 times the bridge joint opening.
SHOP DRAWINGS: Complete details and description of materials of the proposed bridge rail shall be submitted by the contractor for the Engineers approval prior to fabrication.

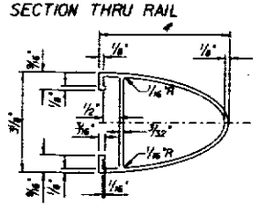

RAIL

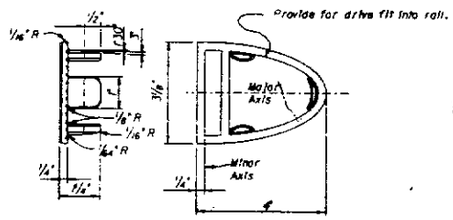

RAIL END CAP

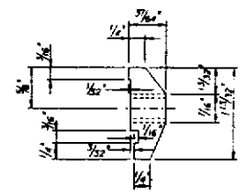

VIEW C-C

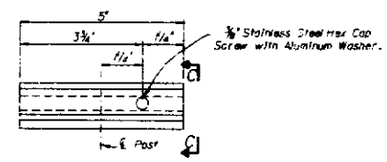

RAIL CLAMP BAR

NOTE "A" - Rough cut ends and edges of aluminum rails shall be ground or filled smooth to remove all sharp edges, nicks or burrs that would be injurious to the human touch.

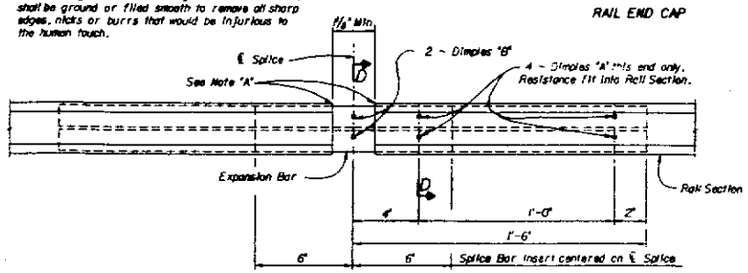

RAIL SPLICE

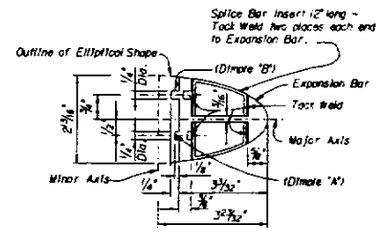

SECTION D-D

RAIL COMPONENTS

PARAPET TYPE ~ ALUMINUM

REVISIONS	
Date	Description
11/01/88	Added Post Size

STATE OF FLORIDA DEPARTMENT OF TRANSPORTATION
BUREAU OF STRUCTURES

COMCRETE HANDRAIL

Drawn by	L.F.C.	12-85
Checked by	R.D.S.	1-86
Submitted by		
Checked by		
Approved by	A.G.M.	

APPROVED BY
Chief Engineer of Structures

Sheet No. 1 of 1
Index No. 14102 CADD

OSU120J513PARABAR.DGN

NOTE: End Bent Wing Post shall be paid for at the Contract Unit Price for Concrete (Substructure) and Reinforcing Steel (Substructure).

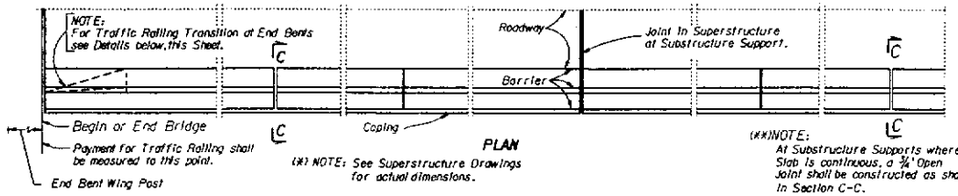

PLAN

(*) NOTE: See Superstructure Drawings for actual dimensions.

(**) NOTE: At Substructure Supports where Superstructure Slab is continuous, a ¾" Open Joint shall be constructed as shown in Section C-C.

NOTE: There shall be a ¾" Min. Open Joint at all Substructure Supports.

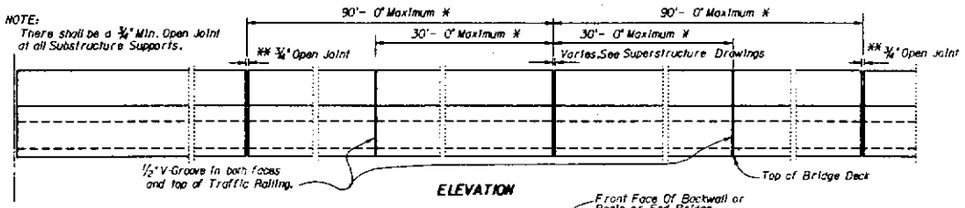

ELEVATION

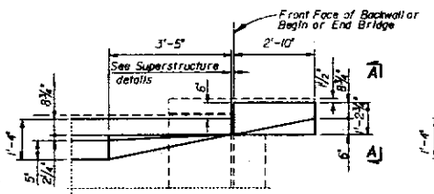

PLAN OF WING POST AND TRAFFIC RAILING TRANSITION FOR SLAB TYPE SUPERSTRUCTURE

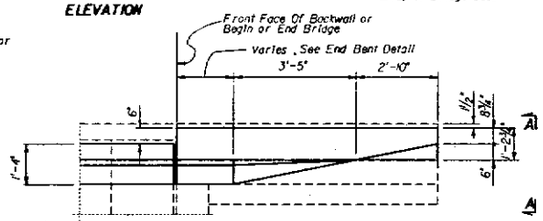

PLAN OF WING POST FOR SLAB AND GIRDER TYPE SUPERSTRUCTURE

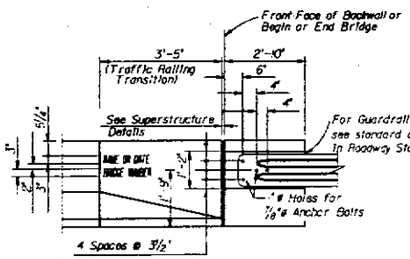

ELEVATION OF WING POST AND TRAFFIC RAILING TRANSITION FOR SLAB TYPE SUPERSTRUCTURE

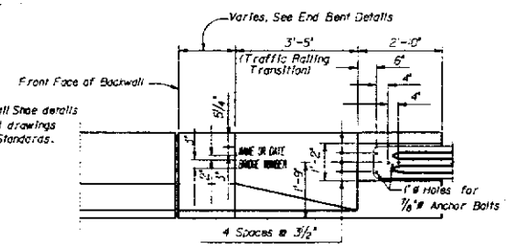

ELEVATION OF WING POST FOR SLAB AND GIRDER TYPE SUPERSTRUCTURE

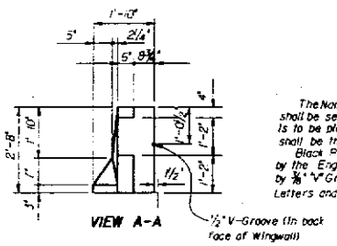

VIEW A-A

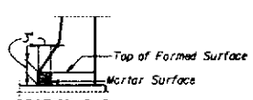

SECTION C-C

NOTE: When using fixed forms to construct the Traffic Railing, the vertical face of the gutter side shall be filled 1" above the roadway surface either by forming or by filling the bottom 3" height of the opening for a width of 3" minimum, as shown above, with mortar in accordance with Article 400-15.1.

When Traffic Railings are slip-formed the opening shall be constructed for the limits described above for forming. Formed surfaces may be continuous, or at the Contractors option spaced, provided neat lines are maintained on the finished railing.

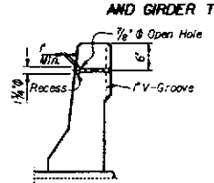

HOLES FOR INCIDENTAL SIGNING

NOTE: Holes and grooves shall be placed on barrier type Traffic Railings of divided and undivided bridges as shown in the plans for designated Type "C" Single Column, Informational, Guide, Regulatory and Warning Sign locations (see Signing Plans) and at approximately 500' intervals along the right railings of bridges between designated locations for future signs as directed by the Engineer. The cost of the extra holes and grooves shall be included in the contract unit price for Traffic Railing (Barrier). If Signing Plans are not available the Project Engineer should secure necessary information from the District Maintenance or Traffic Operations Office.

BENDING DIAGRAMS

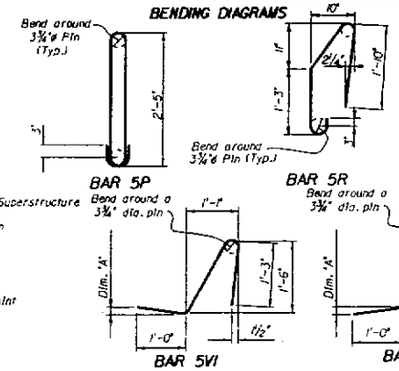

TABLE OF VARIABLE DIMENSIONS

ROADWAY CROSS-SLOPE	DIM. "A" (Bars V1 & V3)
0.00 to 0.02ft./ft.	0"
0.02¢ to 0.06ft./ft.	½"
0.06¢ to 0.10ft./ft.	1"

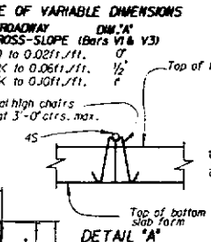

DETAIL "A"

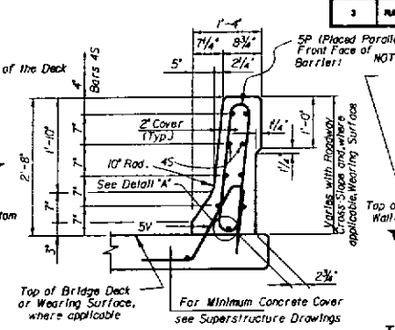

TYPICAL SECTION THRU TRAFFIC RAILING

NOTE: See TYPICAL SECTION THRU TRAFFIC RAILING for Dimensions above this line.

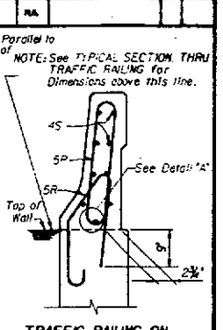

TRAFFIC RAILING ON RETAINING WALL

BAR BENDING NOTES

NOTE: Bar 5V1 is for low side gutter. Bar 5V3 is for high side gutter. Adjust or field bend Bars 5V in Traffic Railing transition on slab type Superstructure as required for minimum cover.

** Adjust length of Bars 5V as required for slab thickness. Dimensions shown are based on a 8" slab, see Superstructure Drawings. For thicker slabs adjust the (1'-6" vertical and the 1'-1" horizontal) dimensions as follows: Add the amount that the slab depth exceeds 8" to the 1'-6" vertical dimension and add .40 of this excess to the 1'-1" horizontal dimension.

EXAMPLE: 1'-0" Slab Excess = 12"-8" = 4"
Vertical Dimension = (1'-6") + (4") = 1'-10"
Horizontal Dimension = (1'-1") + (4" x .40) = 1'-3"

TYPICAL TRAFFIC RAILING QUANTITIES

NOTE: Quantities are based on 8" slab and .02'/foot roadway cross-slope.
CONCRETE: 0.0865 CY. per linear foot of Traffic Railing
REINFORCING STEEL: 22.58 lbs. per linear foot of Traffic Railing on Slab
24.03 lbs. per linear foot of Traffic Railing on Wall
NOTE: All bar dimensions are out-to-out, and the quantities above are based on the Traffic Railing dimensions shown above.

NOTES

The Name and Bridge Number to be placed on the Traffic Railing shall be seen on the drivers right when approaching bridge. The Date is to be placed on the drivers left when approaching bridge. The Date shall be the Year the Bridge is constructed.

Black Plastic Letters and Figures 3" in height, as approved by the Engineer, may be used in lieu of Letters and Figures formed by ⅜" "V" Grooves. "V" Grooves shall be formed by Preformed Letters and Figures.

SECTION THRU RECESSED "V" GROOVE TO FORM INSCRIBED LETTERS AND FIGURES

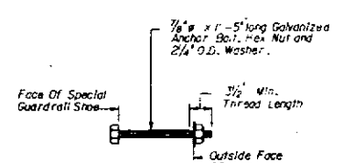

ANCHOR BOLT DETAIL

NOTE: The Cost of Anchor Bolts is to be included in the Contract Unit Price for Guardrail

REINFORCING STEEL NOTES

Place normal bottom slab longitudinal reinforcing steel at each position as shown above to facilitate tying anchor bars in Traffic Railing. Do not add reinforcing steel for tie purposes. For Precast Slab Units place Bars 5V on top of the prestressed strands and tie. For cast-in-place slabs without girders place Bars 5V on top of longitudinal reinforcing and tie.

All vertical reinforcing steel in Traffic Railing shall be No. 5 Bars spaced at 8" c.c. and all longitudinal reinforcing steel shall be No. 4 Bars. At all open joints all reinforcing shall have 2" minimum cover. At all construction joints Bars 4S may be continuous or spliced. All splices in Bars 4S shall be 1'-4" minimum. Bars 5P maybe rotated to provide minimum concrete cover.

TRAFFIC RAILING NOTES

CONCRETE AND REINFORCING STEEL: See General Notes.
PAYMENT: Traffic Railing shall be paid for per linear foot Item No. 400-148-11, which shall include all Concrete and Reinforcing Steel. Traffic Railing shall be measured along the centerline of the top surface of the Traffic Railing.
CYLINDER STRENGTH: The Cylinder Strength of the Concrete shall be 3,400 p.s.i. minimum at 28 days.
MARKERS: Markers recording the elevation shall be placed on top of the Traffic Railing at End Bents. On bridges longer than 100 ft. long, one marker shall be placed at each end of the bridge. On bridges less than 100 ft. long, one marker shall be placed at one end of the bridge only. Markers are to be furnished by the Florida Department of Transportation and installed by the Contractor. The cost of installing the markers shall be included in the Contract Unit Price for Traffic Railing (Barrier).
SLIP FORMING: At the option of the Contractor, Traffic Railing may be constructed by slip-forming subject to the following: the width shall be increased by 2" and the front face at the base of Traffic Rail shall infringe on the clear roadway width no more than ½". Additional materials required are at the expense of the Contractor. The shape of the Traffic Railing shall not be altered. If neat lines can not be maintained, Slip Forming will not be allowed.
SUPERELEVATED BRIDGES: At the option of the Contractor, Traffic Railing and End Bent Wingwalls on superelevated bridges, may be constructed perpendicular to the roadway surface. The cost of modifications shall be at the Contractors expense.
ANCHOR BOLTS: Anchor Bolts, Nuts, and Washers shall be not dip galvanized in accordance with A.S.T.M. A-123.
REINFORCING COVER: All reinforcing in Traffic Railing shall have 2" min. cover.

BARRIER

REVISIONS		
Date	By	Description
01/21/97	WEH	Editorial Changes
11/5/97	DCP	Editorial Changes
02/10/97	WEH	Revised Quantities
1/13/99	DCP	Editorial Changes

STATE OF FLORIDA DEPARTMENT OF TRANSPORTATION
BUREAU OF STRUCTURES

TRAFFIC RAILING

	Name	Date
Drawn by	WEH	9-87
Checked by	RCB	9-87
Reviewed by		
Checked by		
Supervised by	AGM	

APPROVED BY

1 of 2 | 14286

STH120.JSI\TRAFRAIL.DGN

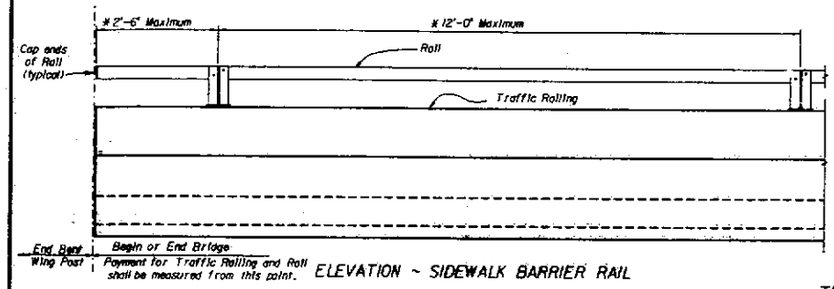

ELEVATION ~ SIDEWALK BARRIER RAIL

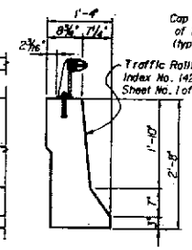

TYPICAL SECTION THRU BARRIER RAIL

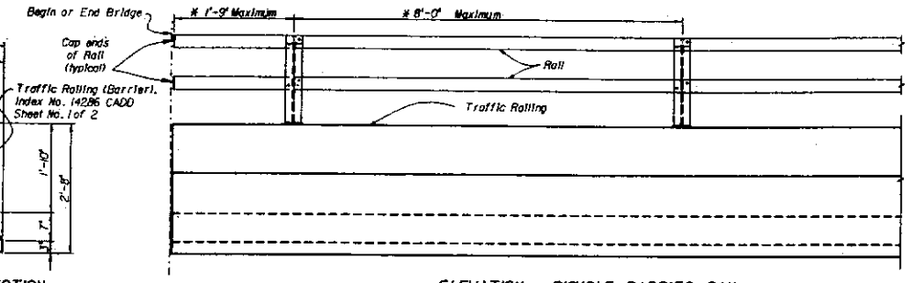

ELEVATION ~ BICYCLE BARRIER RAIL

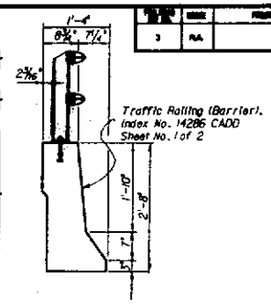

TYPICAL SECTION THRU BARRIER RAIL

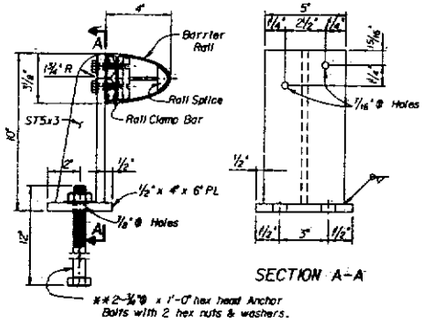

SECTION THRU RAIL

SECTION A-A

SIDEWALK BARRIER RAIL

** NOTE: After nuts have been tightened the threads shall be nicked to prevent removal of nuts.

* NOTE: See Superstructure Drawing for actual dimensions.

NOTE: Rail shall be continuous over a minimum of three posts before splicing.

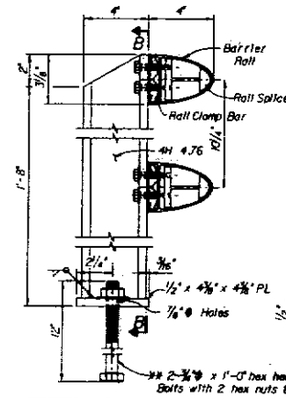

SECTION THRU RAIL

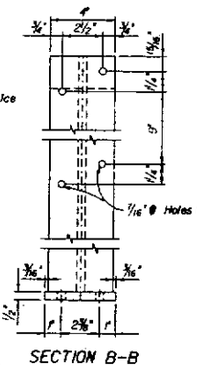

SECTION B-B

BICYCLE BARRIER RAIL

NOTES

TRAFFIC RAILING (BARRIER): For details of Traffic Railing (Barrier), See Drawing No. 1 of 2, Index 14286 CADD.

PAYMENT: Traffic Railing (Sidewalk Barrier Type) shall be paid for per linear foot Item No. 400-148-2 and Traffic Railing (Bicycle Barrier Type) shall be paid for per linear foot Item No. 400-148-3. These items shall included all Rail, Concrete and Reinforcing Steel. Railing shall be measured along the centerline of the top surface of the railing.

SPECIFICATIONS FOR BARRIER RAIL

POST: Fabricated wrought aluminum A.S.T.M. B221, alloy 6061-T6 or alloy 6351-T5 with welding using filler wire 4043.

RAIL AND RAIL SPLICE: Aluminum A.S.T.M. B221, alloy 6061-T6 or alloy 6351-T5.

RAIL CLAMP BAR: Aluminum A.S.T.M. B221, alloy 6061-T6 or alloy 6351-T5.

ANCHOR BOLTS: Anchor bolts shall be in accordance with A.S.T.M. A-36 or A-307. Anchor bolts, nuts and washers shall be hot-dip galvanized in accordance with A.S.T.M. designation A-153.

RAIL END CAP: A.S.T.M. B-26 sand cast aluminum alloy, SG 70A-F (Aluminum Association alloy designation A-356-F).

RAIL INSTALLATION: Rail Post shall be normal to Profile Grade. Post shall be seated on 1/8" resilient pads in accordance with Article 932-2.1. The dimension shall be the same as the post base. Rail expansion joints shall occur in the panel between post on either side of Bridge expansion joints. Rail expansion joints shall be similar to rail splices with provision for movement equal to 1.5 times the bridge joint opening.

SHOP DRAWINGS: Complete details and description of materials of the proposed barrier rail shall be submitted by the contractor for the Engineers approval prior to fabrication.

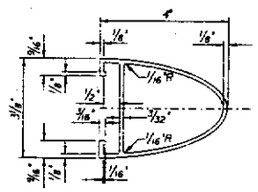

RAIL

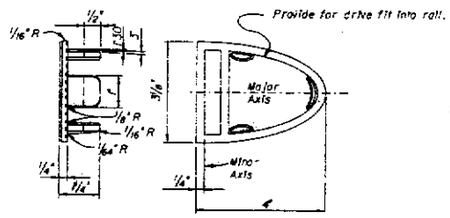

RAIL END CAP

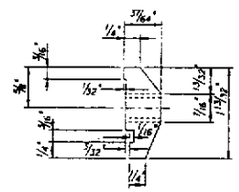

VIEW C-C

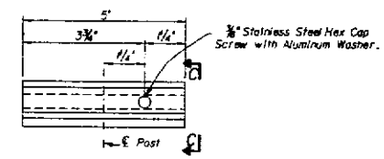

RAIL CLAMP BAR

NOTE "A" ~ Rough cut ends and edges of aluminum rails shall be ground or filed smooth to remove all sharp edges, nicks or burrs that would be injurious to the human touch.

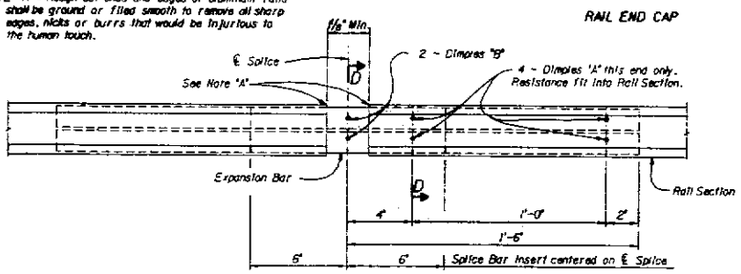

RAIL SPLICE

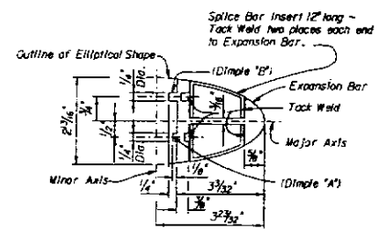

SECTION D-D

RAIL COMPONENTS

SIDEWALK BARRIER TYPE AND BICYCLE BARRIER TYPE

REVISIONS		
Date	By	Description
10/23/87	DCP	Editorial Changes

STATE OF FLORIDA DEPARTMENT OF TRANSPORTATION
BUREAU OF STRUCTURES

TRAFFIC RAILING

	Name	Date
Drawn by	LFC	12-85
Checked by	RDS	1-86
Submitted by		
Checked by		
Supervised by	AGM	

APPROVED BY
Chief Bureau of Structures

Drawing No. 2 of 2
Index No. 14286 CADD

STR(120,151)SWBARRIER.DGN

FED. ROAD DIV. NO.	STATE	PROJECT NO.	SHEET NO.
3	FLA.		

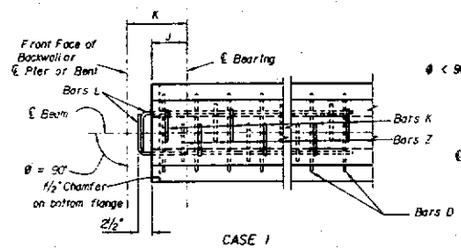

CASE 1

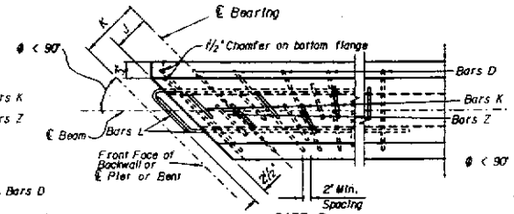

CASE 2
(See Note)

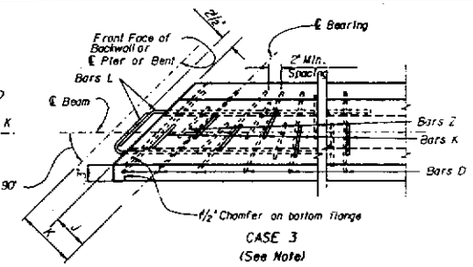

CASE 3
(See Note)

PLAN ENDS OF BEAMS

NOTE: For both Plan Views Case 2 and Case 3, the first Bar Z and the first two Bars K shall be placed parallel to the skewed end of the beam. The remainder of the Bars Z and K shall be placed so as to transition from an axis parallel to the skewed end of the beam to an axis perpendicular to the centerline of the beam by rotating successive Z or K bars about the centerline of the beam while maintaining a 2" minimum spacing along the short side of the skew until the perpendicular position is attained. Bars D in the bottom flange area shall be rotated along with Bars Z and K. The first Bar K shall be placed parallel to the beam end bevel (see details this sheet).

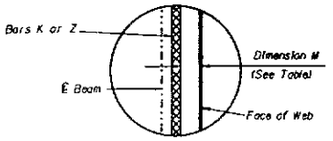

SECTION THRU BEAM WEB
(Showing Cover on Stirrups)

TABLE OF DIMENSIONS M	
BEAM TYPE	DIMENSION M
II	2"
III	2 1/2"
IV	3"

GENERAL NOTES

MORTAR LEAKAGE: Any mortar leakage that occurs and stains resulting from leakage shall be removed so that beams have a uniform appearance.

STRANDS: At the option of the Contractor, other types, sizes and/or configurations of strands may be used in lieu of the stranding shown on these sheets. Calculations shall be submitted showing the substitution meets the following requirements:
1. The strands meet all the requirements of ASTM-A416 for the grade of strands proposed.
2. The net compressive stress in the concrete due to prestressing acting alone, after all losses, is at least as large as that provided by the stranding shown on these sheets.
3. The ultimate strength of the structure with the proposed stranding is at least equal to the ultimate strength of the original design.
4. The proposed stranding complies in all respects with the Department's Structures Design Guidelines.

FINISH: 3" on each of the top outside edges of beams shall have a smooth finish. The remaining top surface of the beam shall be rough floated and then scrubbed transversely with a coarse wire brush to remove all laitance and to produce a roughened surface for bonding. All beams shall receive a Class 3 surface finish.

SHOP DRAWINGS: Shop Drawings for prestressed beams shall show a complete detensioning schedule such as to minimize tension in the concrete during release of the strands. Detailed concrete stresses during each operation of detensioning shall be submitted with the Shop Drawings. Shop Drawings shall show complete details of the prestressed beams including all reinforcing steel.

STRAND DETENSIONING: The strand detensioning schedule required to be included on the Shop Drawings shall be based upon the following priority, from first to last, of strand detensioning:
1. Top dormant strands (Bars N)
2. Fully bonded strands
3. Partially debonded (shielded) strands

FORMS AND PALLETS: All beams shall be cast on concrete based pallets and in metal forms.

HANDLING: In the handling of beams, they must be maintained in an upright position at all times and must be picked up from points located a maximum distance of 3ft. from the ends of the beam.

STORAGE AND TRANSPORTATION: Beams shall be stored on adequate dunnage and supported during transit within 18" from ends of beam.

STRAND EXTENSION: All strands shall extend 2 1/2" beyond ends of beams.

CONCRETE: Refer to Table of Beam Variables on the individual beam sheets for the class of concrete, 28-day strength (f'c) and cylinder strength at transfer of the tensioning load (f'ci).

REINFORCING STEEL: All reinforcing steel shall be Grade 60.

BEARING PADS: The composite neoprene pads at bearings will be furnished to the Contractor by the Florida Department of Transportation. The cost of installing shall be included in the contract unit price for prestressed beams.

MISCELLANEOUS: Bearing plates, anchor bolts, nuts and washers shall be hot dip galvanized in accordance with requirements of A.S.T.M. Specification A123. Bearing plates shall conform to A.S.T.M. Specification A36. Anchor bolts may be A36 or A307. The cost of bearing plates, anchor bolts, nuts, washers, premoulded expansion material at bearings and inserts for diaphragm tie bars shall be included in the contract unit prices for prestressed beams.

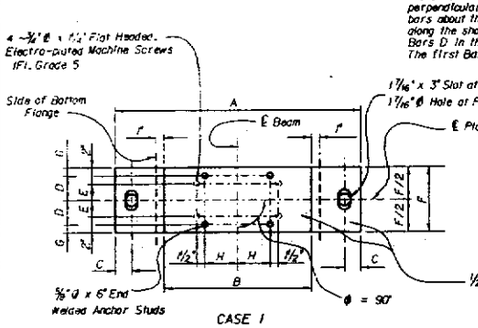

CASE 1

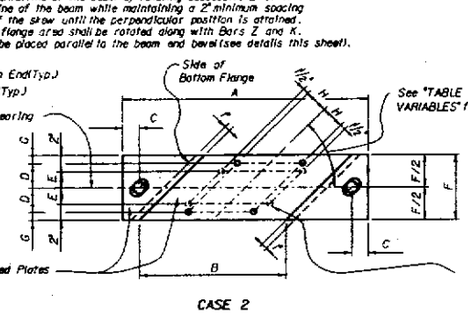

CASE 2

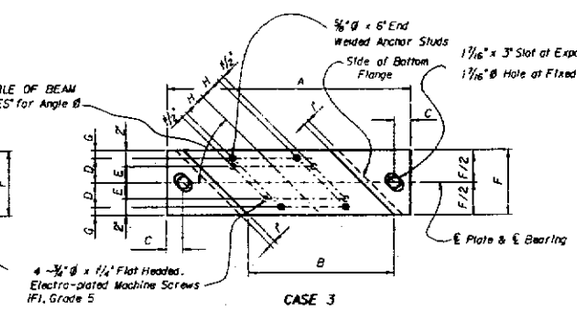

CASE 3

BEARING PLATE DETAILS

NOTE: Bearing Plates required on Beams only as scheduled in the Table of Beam Variables.

TABLE OF BEARING PLATE DIMENSIONS								
BEAM TYPE	DIMENSIONS (INCHES)							
	A	B	C	D	E	F	G	H
II	B+2C-(G/SIN Ø)	16/SIN Ø	2+0.78ICOSØ	3	2 1/2	9	1 1/2	3
III		20/SIN Ø			2	8	1	5
IV		24/SIN Ø			3	10	2	7

NOTE: Insert shall be 1"Ø, zinc-electroplated, ferrule wing nut, UNC threads, 1/10 minimum gage wire, not more than 4" in depth and shall have a minimum ultimate tensile strength of 11,400 lbs. in 4,000 p.s.i. concrete.

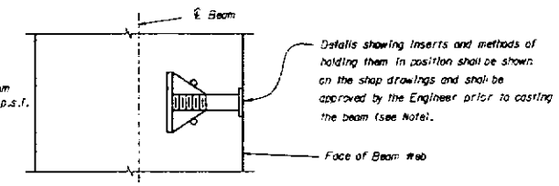

SECTION THRU BEAM WEB AT INSERT FOR DIAPHRAGM REINFORCING
(When Intermediate Diaphragms are Required)

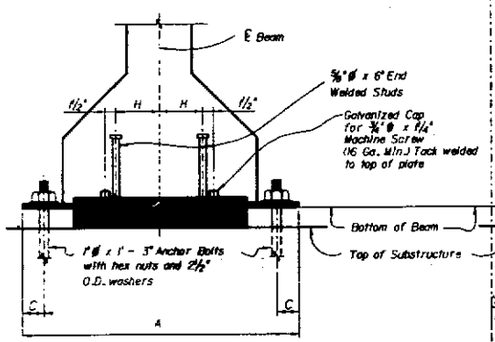

END ELEVATION-SECTION OF BEARING ASSEMBLY
(Perpendicular to ℄ Beam)

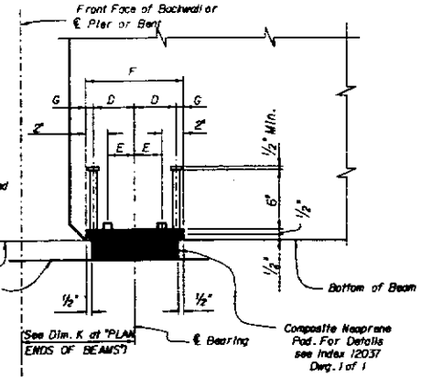

SIDE ELEVATION-SECTION OF BEARING ASSEMBLY
(Perpendicular To ℄ Bearing)

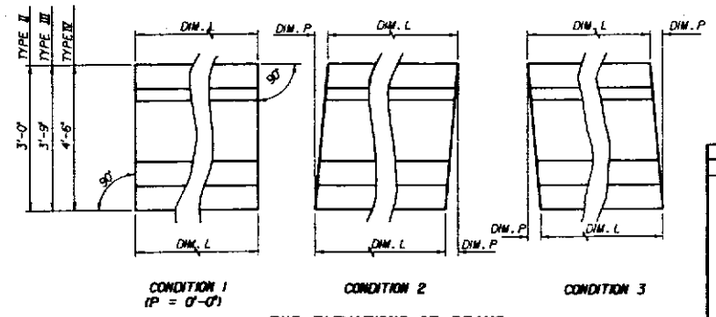

CONDITION 1
(P = 0'-0")

CONDITION 2

CONDITION 3

END ELEVATIONS OF BEAMS
(Showing Vertical Bevel of Beam End)

NOTES: 1. See Table on individual beam sheets for Dimension P.
2. Bar K adjacent to the end of the beam shall be placed parallel to the end bevel of the beam for Condition 2 and Condition 3.

NOTE: Work this sheet with individual beam sheets.

TYPICAL NOTES AND DETAILS FOR AASHTO TYPE II, III AND IV PRESTRESSED BEAMS

REVISIONS		
Dates	By	Descriptions

ENGINEER OF RECORD:

FLORIDA DEPARTMENT OF TRANSPORTATION
BUREAU OF STRUCTURES

ROAD NO.	COUNTY	PROJECT NO.

	Names	Dates
Designed by		
Checked by		
Quantities by		
Checked by		
Supervised by		

APPROVED BY

Drawing No. | Index No.

ST2K(120,5)BMCOVR.DGN
Version Date 2-6-98

FED. ROAD DIV. NO.	STATE	PROJECT NO.	FISCAL YR.	SHEET NO.
3	FLA.			

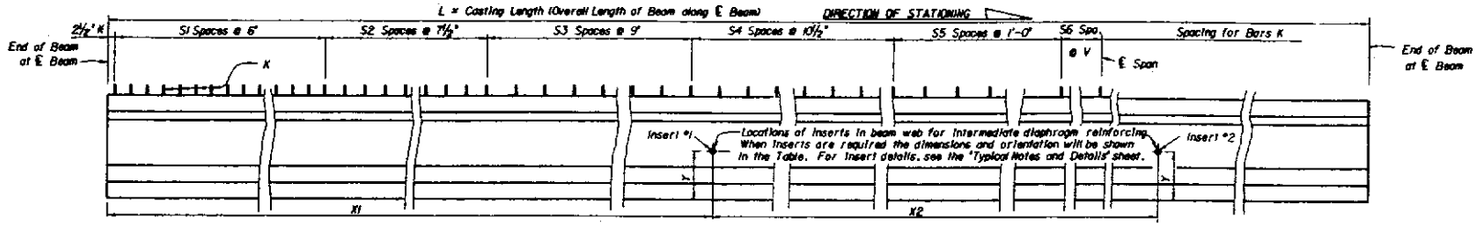

ELEVATION

NOTE: Dimension R has been included in the lengths (L) of beams to compensate for elastic and time-dependent shortening effects.

GENERAL NOTES

1. Work this sheet with the "Typical Notes and Details" sheet.

BILL OF REINFORCING STEEL FOR ONE BEAM ONLY

MARK	SIZE	NO. REQUIRED	LENGTH (1)
C (2)	½"ø Strand (2)	8	See Table
D (3)(7)	3	12	Varies(4'-2" Min.)
K (3)	4	See Table	4'-2"
L (4)(5)	4	18	3'-10"
N (6)	⅜"ø Strand (6)	2	See Table
Z (3)	4	12	3'-7"

BENDING DIAGRAMS (1)

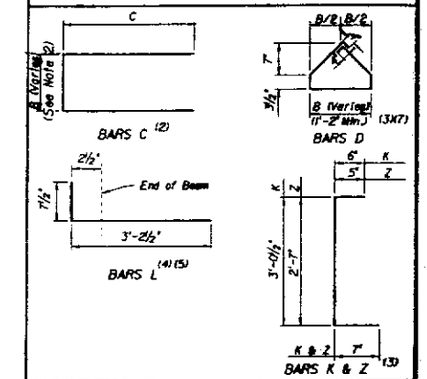

NOTES:
(1) All bar dimensions are out-to-out.
(2) Bars C shall be either ASTM A416, Grade 270, seven-wire strands, 1/2" diameter or larger, or No. 7, Grade 60 deformed bars. Dimension B, which determines the exact length of Bars C, varies with the Contractor's method of bending and placement. The dimensions, bending and placement of Bars C shall be included on the Shop Drawings.
(3) Bars D, K, and Z shall be bent around pins having the following diameters for respective sizes:

Bar Size	Pin Diameters
#3	1"
#4	2"
#5	2½"
#6	3"

(4) Bars L shall be bent prior to the beam leaving the prestressing yard. For treatment of bars L at skewed beam ends, see "Plan Ends of Beams".
(5) Caution should be used with Bars L in the ends of exterior beams to assure that the bent portion of the bar is properly oriented so that the bar will be embedded in the diaphragm concrete.
(6) Bars N shall be either ASTM A416, Grade 250 or 270, seven-wire strands 3/8" diameter or larger, stressed to 5,000 pounds each.
(7) Hooks for Bars D shall be bent so that Bars D are fabricated as a single piece of reinforcing. The minimum Dimension B and length of Bars D shown apply to Bars D placed perpendicular to the centerline of the beam. Dimension B and the length of Bars D for beams with skewed ends vary with the skew(See "Plan Ends of Beams") and shall be scheduled on the Shop Drawings.
(8) (NS) means Near Side and (FS) means Far Side, both refering to which face of the beam web is to receive the insert for the dimensioned location. (NS) and (FS) are referenced to the DIRECTION OF STATIONING shown.

(9) Black means standard finish and Epoxy means epoxy coated reinforcing steel.

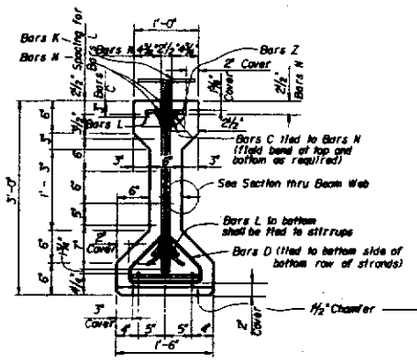

VIEW B-B

(With strands omitted, see Table for reference to strand pattern and treatment of Bars C.)

NOTE: Place Bars K and Z one (1) each space (alternate).

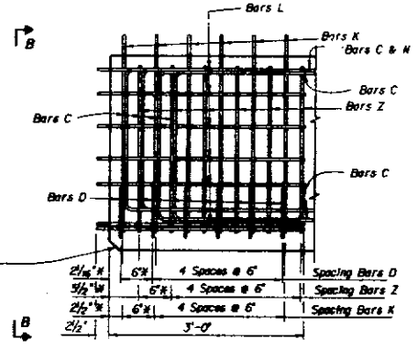

DETAIL AT END OF BEAM

NOTE: Stirrups shall be placed and tied to the top of the non-shielded prestressing strands in the bottom row.

Bars C shall be tied to Bars N in the top flange, to the vertical legs of Bars K and Z, and to non-shielded prestressing strands in the bottom flange as shown in the "Strand Pattern and Debonding Schedule".

* Note: Spacing of Bars D, K, and Z shown are measured along center line of beam, except that for skewed beam ends, all spacing dimensions shown from the end of the beam to the second Bar K (8½") are measured perpendicular to the skewed beam end.

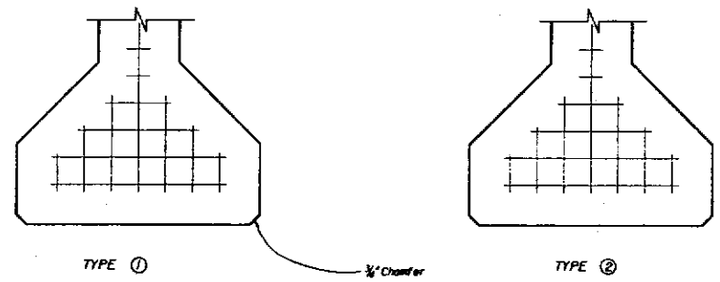

STRAND PATTERNS AND DEBONDING SCHEDULE

(Showing treatment of Bars C in Bottom flange)

NOTE: ○ - Indicates fully bonded strands.
□ - Indicates referenced pair of strands to be debonded the length shown, measured from the centerline of bearing.

TABLE OF BEAM VARIABLES

BEAM ID.	CONCRETE PROPERTIES: CLASS	STRENGTHS: REL. (f'ci)	STRENGTHS: 28-DAY (f'c)	STND PTRN TYPE	PLAN VIEW CASE	END ELEV COND.	BRG. PLATE CASE	END OF BEAM AND BRG. ℄ DIMENSIONS: ANGLE θ	DIM P	DIM J	DIM K	BEAM DIMENSIONS: DIM L	DIM R	DIM V	NUMBER OF SPACES FOR STIRRUP BARS K: S1	S2	S3	S4	S5	S6	DIAPHRAGM INSERT LOCATIONS: DIM X1	DIM X2	DIM Y	NS/FS (8): #1	#2	REINFORCING STEEL: TYPE OF (9) REINF.	C: C	C: APPROX. LENGTH	K: NO. REQ'D	N: LENGTH

PRESTRESSED BEAMS TYPE II

REVISIONS: Dates	By	Descriptions

ENGINEER OF RECORD:

FLORIDA DEPARTMENT OF TRANSPORTATION
BUREAU OF STRUCTURES

ROAD NO.	COUNTY	PROJECT NO.

	Names	Dates
Designed by		
Checked by		
Quantities by		
Checked by		
Supervised by		

APPROVED BY

Drawing No. | Index No.

STM120.FS13BMTYP2.DGN
Version Date 2-6-98

FED. ROAD DIV. NO.	STATE	PROJECT NO.	FISCAL YEAR	SHEET NO.
3	FLA.			

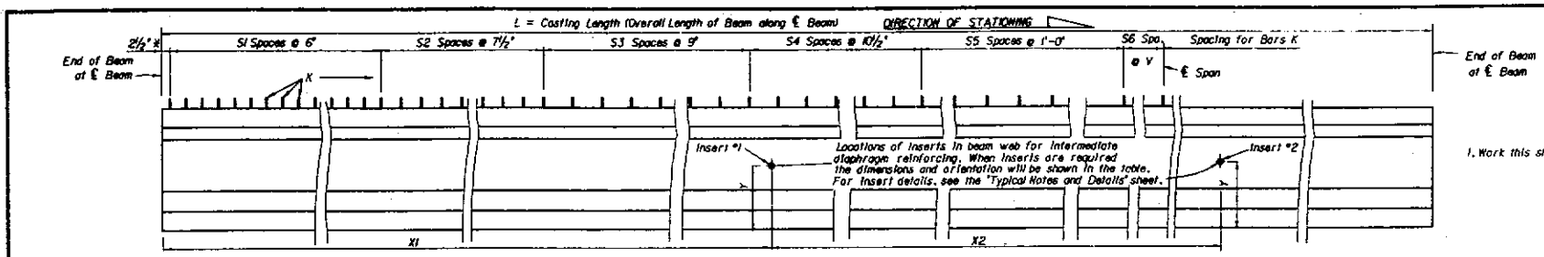

NOTE: Dimension R has been included in the lengths (L) of beams to compensate for elastic and time-dependent shortening effects.

ELEVATION

GENERAL NOTES

1. Work this sheet with the "Typical Notes and Details" sheet.

BILL OF REINFORCING STEEL FOR ONE BEAM ONLY

MARK	SIZE	NO. REQUIRED	LENGTH (1)
C (2)	½"ø strand (2)	8	See Table
D (3)(7)	3	16	Varies(4'-11" Min.)
K (3)	4	See Table	5'-1"
L (4)(5)	4	18	4'-8"
N (6)	⅜"ø Strand (6)	2	See Table
Z (3)	4	16	4'-9"

BENDING DIAGRAMS (1)

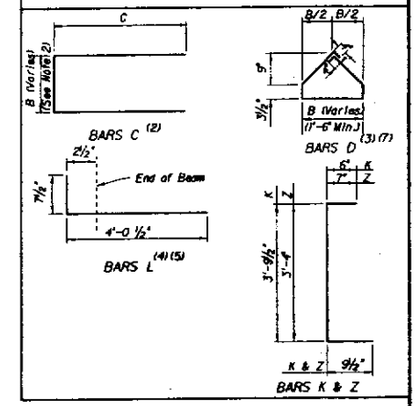

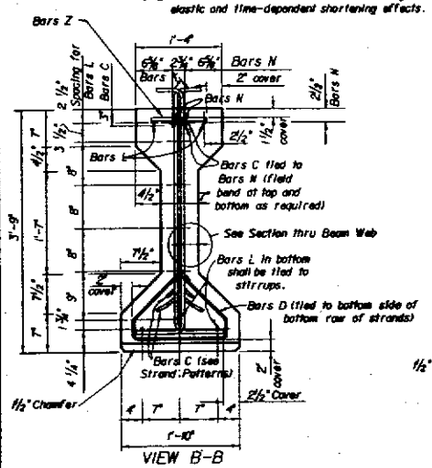

VIEW B-B

(With strands omitted, see Table for reference to strand pattern and treatment of Bars C)

NOTE: Place Bars K and Z one (1) each space (alternate).

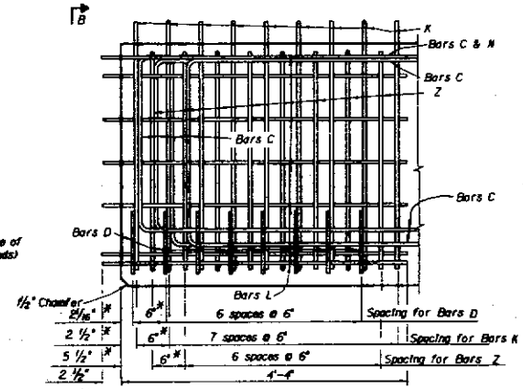

DETAIL AT END OF BEAM

NOTE: Stirrups shall be placed and tied to the top of the non-shielded prestressing strands in the bottom row.

Bars C shall be tied to Bars N in the top flange, to the vertical legs of Bars K and Z, and to non-shielded prestressing strands in the bottom flange as shown in the "Strand Pattern and Debonding Schedule".

* Note: Spacing of Bars D, K, and Z shown are measured along center line of beam, except that for skewed beam ends, all spacing dimensions shown from the end of the beam to the second Bar K (8½") are measured perpendicular to the skewed beam end.

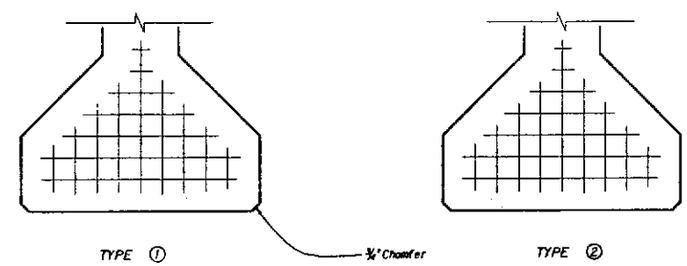

STRAND PATTERNS AND DEBONDING SCHEDULE

(Showing treatment of Bars C in Bottom flange)

NOTE: ○ -Indicates fully bonded strands.

□ -Indicates referenced pair of strands to be debonded the length shown, measured from the centerline of bearing.

NOTES:

(1) All bar dimensions are out-to-out.

(2) Bars C shall be either ASTM A416, Grade 270, seven-wire strands, 1/2" diameter or larger, or No. 7, Grade 60 deformed bars. Dimension B, which determines the exact length of Bars C, varies with the Contractor's method of bending and placement. The dimensions, bending and placement of Bars C shall be included on the Shop Drawings.

(3) Bars D, K, and Z shall be bent around pins having the following diameters for respective sizes:

Bar Size	Pin Diameters
#3	1"
#4	1½"
#5	2½"
#6	3"

(4) Bars L shall be bent prior to the beam leaving the prestressing yard. For treatment of bars L at skewed beam ends, see "Plan Ends of Beams".

(5) Caution should be used with Bars L in the ends of exterior beams to assure that the bent portion of the bar is properly oriented so that the bar will be embedded in the diaphragm concrete.

(6) Bars N shall be either ASTM A416, Grade 250 or 270, seven-wire strands 3/8" diameter or larger, stressed to 5,000 pounds each.

(7) Hooks for Bars D shall be bent so that Bars D are fabricated as a single plane of reinforcing. The minimum Dimension B and length of Bars D shown apply to Bars D placed perpendicular to the centerline of the beam. Dimension B and the length of Bars D for beams with skewed ends vary with the skew (See "Plan Ends of Beams") and shall be scheduled on the Shop Drawings.

(8) (NS) means Near Side and (FS) means Far Side, both referring to which face of the beam web is to receive the insert for the dimensioned location. (NS) and (FS) are referenced to the DIRECTION OF STATIONING shown.

(9) Black means standard finish and Epoxy means epoxy coated reinforcing steel.

TABLE OF BEAM VARIABLES

BEAM ID.	CONCRETE PROPERTIES: CLASS	STRENGTHS: REL. (f'ci)	STRENGTHS: 28-DAY (f'c)	STND PTRN TYPE	PLAN VIEW CASE	END ELEV COND.	BRG. PLATE CASE	END OF BEAM AND BRG. ℄ DIMENSIONS: ANGLE Ø	DIM P	DIM J	DIM K	BEAM DIMENSIONS: DIM L	DIM R	DIM V	NUMBER OF SPACES FOR STIRRUP BARS K: S1	S2	S3	S4	S5	S6	DIAPHRAGM INSERT LOCATIONS: DIM X1	DIM X2	DIM Y	NS/FS (8): *1	*2	REINFORCING STEEL: TYPE OF (9) REINF.	C: C	C: APPROX. LENGTH	K: NO. REQ'D	N: LENGTH

REVISIONS		
Dates	By	Descriptions

ENGINEER OF RECORD:

FLORIDA DEPARTMENT OF TRANSPORTATION
BUREAU OF STRUCTURES

ROAD NO.	COUNTY	PROJECT NO.

	Names	Dates
Designed by		
Checked by		
Quantities by		
Checked by		
Supervised by		

APPROVED BY

Drawing No. | Index No.

PRESTRESSED BEAMS TYPE III

STN(120,150)BMTYP3.DGN
Version Date: 2-6-88

FED. ROAD DIV. NO.	STATE	PROJECT NO.	FOLDER NO.	SHEET NO.
3	FLA.			

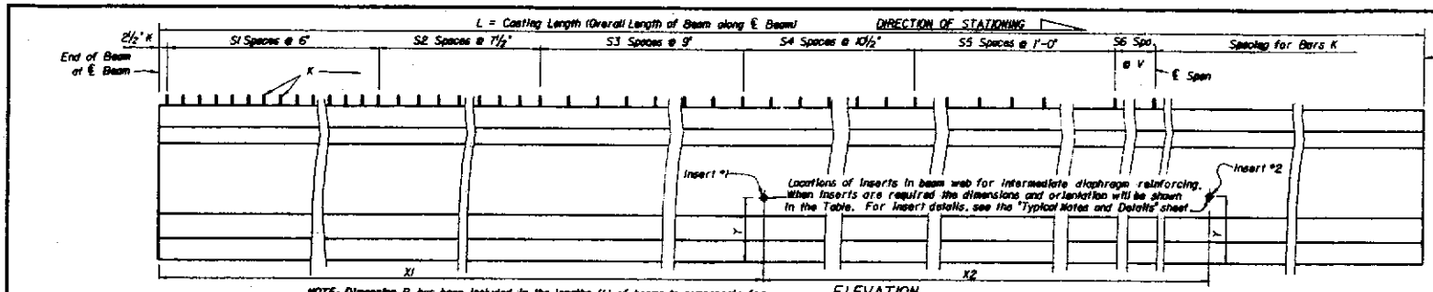

NOTE: Dimension R has been included in the lengths (L) of beams to compensate for elastic and time-dependent shortening effects.

ELEVATION

GENERAL NOTES

1. Work this sheet with the "Typical Notes and Details" sheet.

BILL OF REINFORCING STEEL FOR ONE BEAM ONLY

MARK	SIZE	NO. REQUIRED	LENGTH (1)
C (2)	½"Ø strand (2)	12	See Table
D (3)(7)	3	18	Varies(6'-1" Min.)
K (3)	4	See Table	6'-0"
L (4)(5)	4	18	5'-4"
N (6)	⅜"Ø Strand (6)	2	See Table
Z	4	18	5'-9"

(3)

BENDING DIAGRAMS (1)

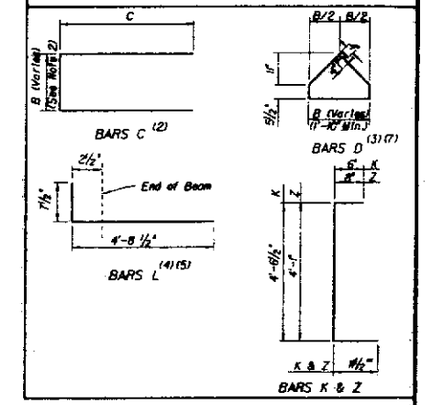

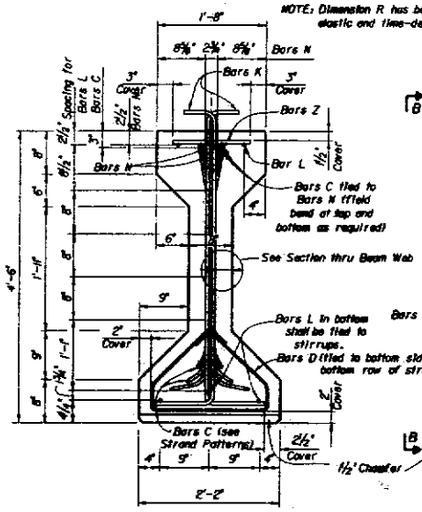

VIEW B-B

(With strands omitted, see Table for reference to strand pattern and treatment of Bars C)

NOTE: Place Bars K and Z one (1) each space (alternate).

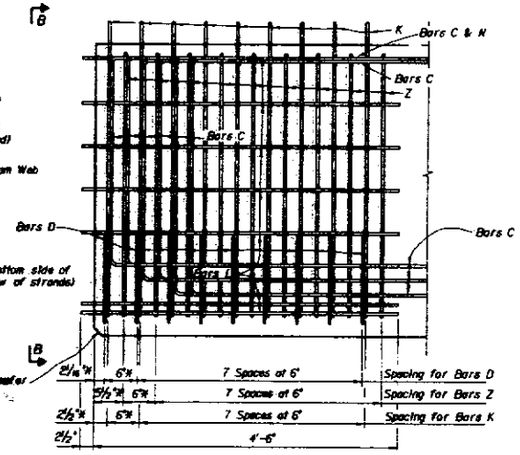

DETAIL AT END OF BEAM

NOTE: Stirrups shall be placed and tied to the top of the non-shielded prestressing strands in the bottom row.

Bars C shall be tied to Bars N in the top flange, to the vertical legs of Bars K and Z, and to non-shielded prestressing strands in the bottom flange as shown in the "Strand Pattern and Debonding Schedule".

Note: Spacing of Bars D, K, and Z shown are measured along center line of beam, except that for skewed beam ends, all spacing dimensions shown from the end of the beam to the second Bar K (8½") are measured perpendicular to the skewed beam end.

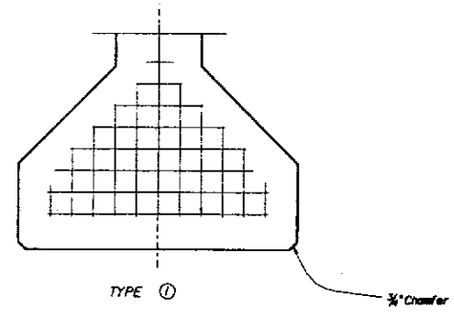

TYPE ①

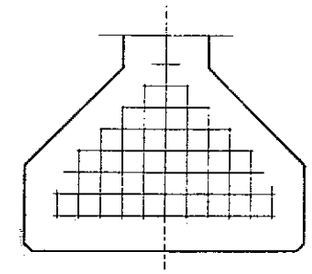

TYPE ②

STRAND PATTERNS AND DEBONDING SCHEDULE

(Showing treatment of Bars C in Bottom Flange)

NOTE: ○ -Indicates fully bonded strands.

□ -Indicates referenced pair of strands to be debonded the length shown, measured from the centerline of bearing.

NOTES:

(1) All bar dimensions are out-to-out.

(2) Bars C shall be either ASTM A416, Grade 270, seven-wire strands, 1/2" diameter or larger, or No. 7, Grade 60 deformed bars. Dimension B, (3) which determines the exact length of Bars C, varies with the Contractor's method of bending and placement. The dimensions, bending and placement of Bars C shall be included on the Shop Drawings.

(5) Bars D, K, and Z shall be bent around pins having the following diameters for respective sizes:

Bar Size	Pin Diameters
#3	r
#4	2"
#5	2½"
#6	3"

(4) Bars L shall be bent prior to the beam leaving the prestressing yard. For treatment of bars L at skewed beam ends, see "Plan Ends of Beams".

(5) Caution should be used with Bars L in the ends of exterior beams to assure that the bent portion of the bar is properly oriented so that the bar will be embedded in the diaphragm concrete.

(6) Bars N shall be either ASTM A416, Grade 250 or 270, seven-wire strands 3/8" diameter or larger, stressed to 5,000 pounds each.

(7) Hooks for Bars D shall be bent so that Bars D are fabricated as a single plane of reinforcing. The minimum Dimension B and length of Bars D shown apply to Bars D placed perpendicular to the centerline of the beam. Dimension B and the length of Bars D for beams with skewed ends vary with the skew(See "Plan Ends of Beams") and shall be scheduled on the Shop Drawings.

(8) (NS) means Near Side and (FS) means Far Side, both referring to which face of the beam web is to receive the insert for the dimensioned location. (NS) and (FS) are referenced to the DIRECTION OF STATIONING shown.

(9) Black means standard finish and Epoxy means epoxy coated reinforcing steel.

PRESTRESSED BEAMS TYPE IV

| TABLE OF BEAM VARIABLES | | |

FED. ROAD DIV. NO.	STATE	PROJECT NO.	SHEET NO.	TOTAL SHEETS	SHEET NO.
3	FLA.				

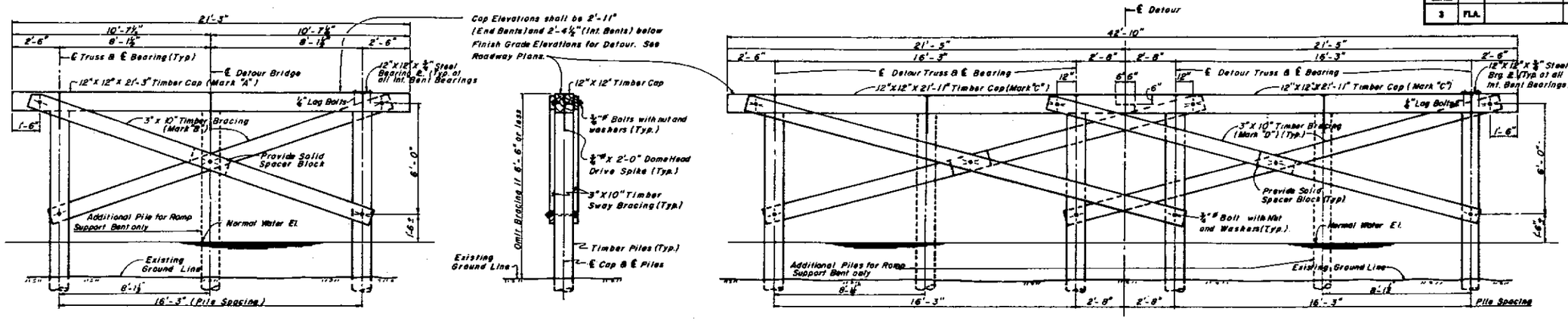

SINGLE BRIDGE — END VIEW — DUAL BRIDGE

NOTE: 3 Piles are required for Ramp Support Bents for single bridge.
6 Piles are required for Ramp Support Bents for Dual Bridge.

TIMBER PILE BENT ELEVATIONS

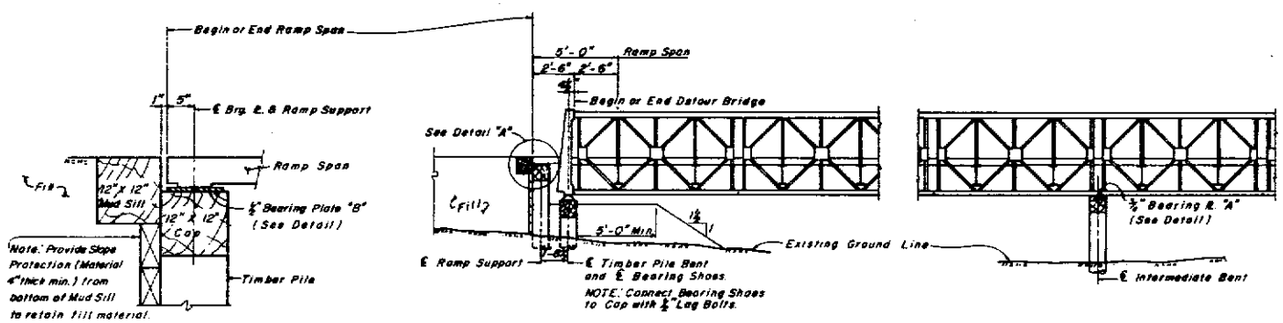

DETAIL "A" — PART ELEVATION

BILL OF STRUCTURAL TIMBER *

SINGLE BRIDGE							DUAL BRIDGE						
LOCATION	MARK	SIZE	LENGTH	NO. REQD.	F.B.M.	TOTAL F.B.M.	LOCATION	MARK	SIZE	LENGTH	NO. REQD.	F.B.M.	TOTAL F.B.M.
BENT WITH BRACING	"A"	12"X 12"	21'-3"	1	0.255	0.351	BENT WITH BRACING	"C"	12"X 12"	21'-11"	2	0.526	0.768
	"B"	3"X 10"	19'-3"	2	0.096			"D"	3"X 10"	24'-3"	4	0.242	
BENT WITHOUT BRACING	"A"	12"X 12"	21'-3"	1	0.255	0.255	BENT WITHOUT BRACING	"C"	12"X 12"	21'-11"	2	0.526	0.526
RAMP SUPPORT	"A"	12"X 12"	21'-3"	1	0.255	0.255	RAMP SUPPORT	"C"	12"X 12"	21'-11"	2	0.526	0.526

* Bill of Structural Timber is for One Bent or One Ramp Support only. Contractor shall also provide Mud Sill and Slope Protection Material as indicated in Detail "A".

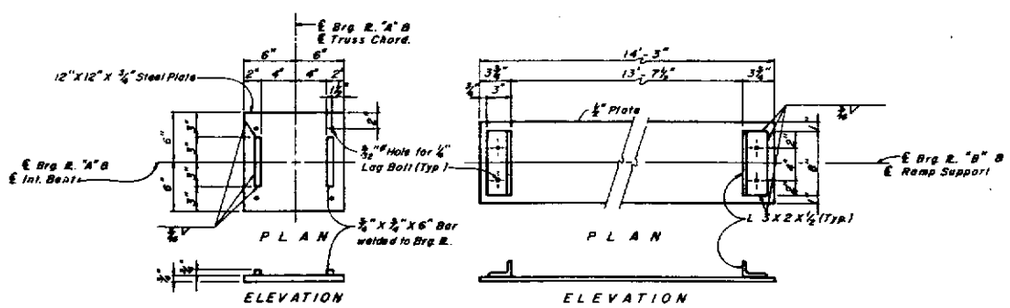

BEARING PLATE DETAILS (A-36)

NOTE: Contractor shall provide all Bearing Plates ("A" & "B")

GENERAL NOTES

DESIGN LOAD FOR PILES: 20 Tons
LOADING: H20-44
STRUCTURAL TIMBER: Timber Piles and Structural Timber may be treated or untreated at the option of the Contractor.
SPAN LENGTH: 30'-0" maximum
PAYMENT: See Roadway Plans for payment of Detour.
ERECTION: The Contractor shall erect the Detour Bridge in accordance with the Specifications, these plans, the Acrow Panel Bridge Technical Handbook.
AVAILABILITY: Acrow Panel Bridge components will be available at the Orlando D.O.T. Structural Aluminum Shop. Steel grid bridge flooring will be furnished.

ONE AND TWO LANE SINGLE SINGLE EXTRA WIDE

STATE OF FLORIDA DEPARTMENT OF TRANSPORTATION
STRUCTURES

TIMBER BENTS FOR TYPE ACROW DETOUR BRIDGE

REVISIONS	
Date	Description
2-84	Additional Ramp Support Bent Piles

FED. RD. DIV.	COUNTY	PROJECT NO.

	Name	Date
Designed by	L A L	4-79
Checked by	J R A	4-79
Quantities by	L A L	4-79
Checked by	J R A	4-79
Supervised by	S P J	

APPROVED BY: T. Ali
Deputy Design Engineer, Structures

Standard No. — Index No.

1 of 1

FED. ROAD DIV. NO.	STATE	PROJECT NO.		SHEET NO.
3	FLA.			

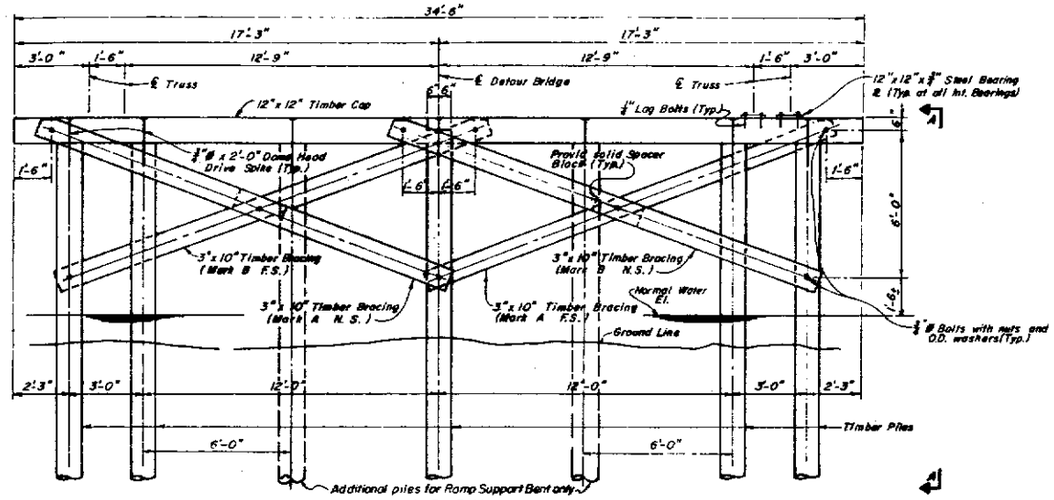

ELEVATION
(TIMBER PILE BENT)

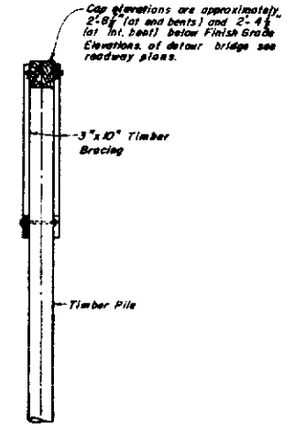

VIEW A-A

BILL OF STRUCTURAL TIMBER*

ITEM	SIZE	LENGTH	NO. REQ'D. RAMP SUP.	NO. REQ'D. END BENT	NO. REQ'D. INT. BENT	F. B. M. RAMP SUP.	F. B. M. END BENT	F. B. M. INT. BENT	CUTTING DIMENSIONS
Cap	12"x12"	17'-9"	4	2	2	852	426	426	16'-9"
Mark A **	3"x10"	18'-0"	—	—	2	—	—	90	18'-0" Field Cut as required
Mark B **	3"x10"	18'-6"	—	—	2	—	—	93	18'-6" Field Cut as required
Mark C	4"x8"	18'-0"	12	—	—	576	—	—	18'-0"
Spacer Blocks **	10"x12"	2'-0"	—	—	2	—	—	40	2'-0"
TOTAL						1,428	426	649	

* Quantities shown are for one Timber Bent only.
** No bracing required on Bents No.

NOTE: 7 Piles are required for Ramp Support Bents

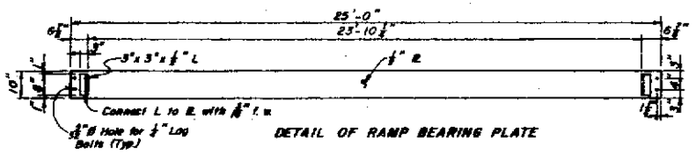

DETAIL OF RAMP BEARING PLATE

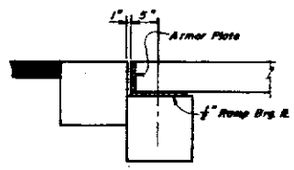

DETAIL OF END RAMP

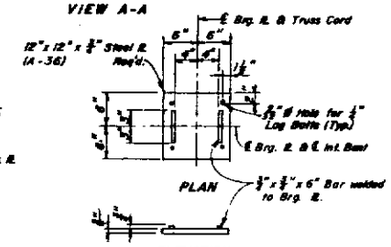

PLAN

ELEVATION
DETAIL OF BEARING ∠

GENERAL NOTES

DESIGN LOAD FOR PILES: 20 Tons.

LOADING: H20-44.

STRUCTURAL TIMBER: Timber piles and structural timber may be treated or untreated at the option of the contractor

SPAN LENGTH: 30'-0" maximum.

PAYMENT: See Roadway Plans for payment of detour bridge.

ERECTION: The contractor shall erect the detour bridge in accordance with the Specifications, these plans and the Acrow Panel Bridge Technical Handbook.

AVAILABILITY: Acrow Panel Bridge components will be available at the Orlando D.O.T. Structural Aluminum Shop. Steel grid bridge flooring will be furnished.

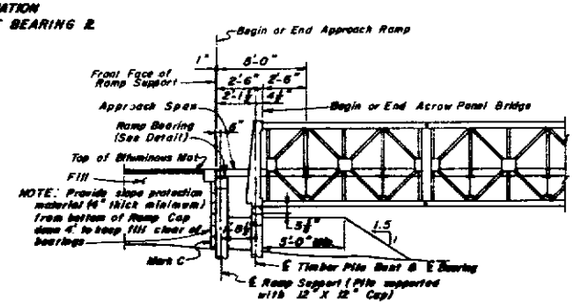

DETAIL AT BEGIN OR END BRIDGE

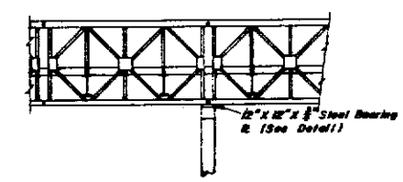

DETAIL AT INTERMEDIATE SUPPORT

TWO LANE SINGLE SINGLE DOUBLE WIDE

STATE OF FLORIDA DEPARTMENT OF TRANSPORTATION
STRUCTURES

TIMBER BENTS FOR ACROW DETOUR BRIDGE

REVISIONS	
Date	Description
5/84	Additional Ramp Support Bent Piles

ROAD NO.	COUNTY	PROJECT NO.

	Regions	Dates
Designed by		
Checked by		
Quantities by		
Checked by		
Supervised by		

APPROVED BY

Deputy Design Engineer, Structures

Drawing No. | Index No.

FED. ROAD DIV. NO.	STATE	PROJECT NO.	FISCAL YEAR	SHEET NO.
3	FLA.			

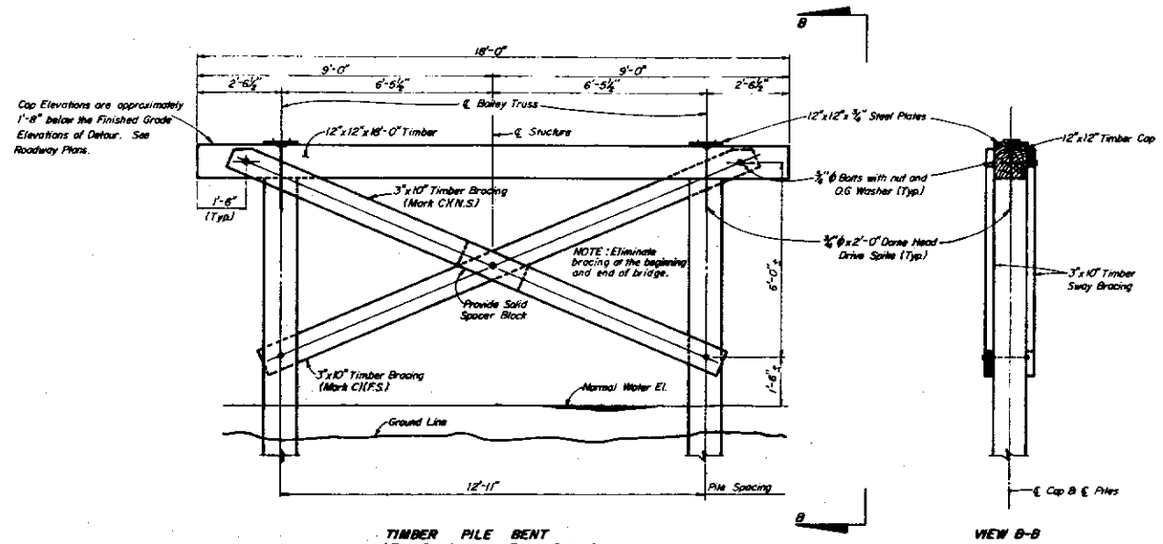

TIMBER PILE BENT
(For Single Lane Bailey Bridge)

VIEW B-B

LIST OF STRUCTURAL TIMBER *					
ITEM	SIZE	LENGTH	NO. REQ'D.	F.B.M.	CUTTING DIMENSIONS
Cap	12"x12"	18'-0"	** 1	216	18'-0"
Mark C	3"x10"	16'-0"	2	80	16'-0" Field cut as required
Spacer Block	10"x12"	2'-0"	1	20	2'-0"
			TOTAL	316	

* Quantities shown are for One Timber Bent Only.
** Two (2) additional caps of same size are required for "Mud Sills" for ends of grating approaches on fill.

GENERAL NOTES

DESIGN LOAD FOR PILES: 20 tons
LOADING: H20-44
STRUCTURAL TIMBER: Timber piles and structural timber may be treated or untreated at the option of the Contractor.
SPAN LENGTH: 30'-0" maximum
PAYMENT: See Roadway Plans for payment of detour
ERECTION: The Contractor shall erect the the detour bridge in accordance with the specifications, these plans, and the "Bailey Unitizte Handbook". Steelgrid bridge flooring will be furnished in lieu of Bailey Bridge Flooring and shall be welded to the transom. Welds shall be made and removed with care to avoid damage to the transom.
AVAILABILITY: BaileyBridge components will be available at the DeFuniak Springs, Florida D.O.T. Maintenance Yard.

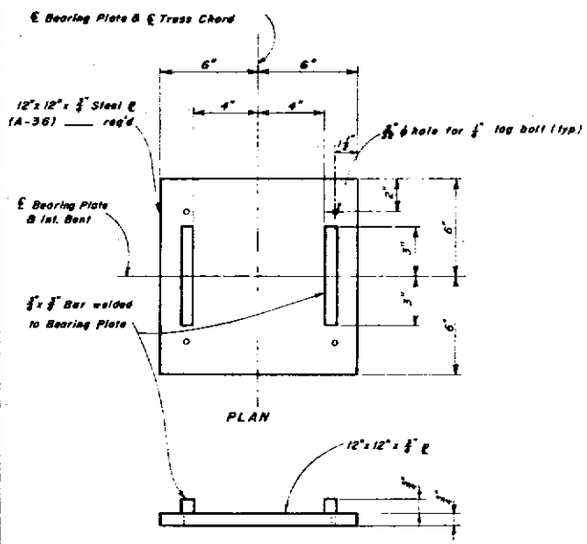

BEARING PLATE DETAILS

NOTES: Bearing Assemblies are to be furnished by the Contractor and shall become the property of the D.O.T. when the detour bridge is dismantled
The cost of the Bearing Assemblies shall be included in the Contract Lump Sum Price for Special Detour (see Roadway Plans)
The Estimated weight of each bearing assembly is approximately 32 lbs.

ONE LANE SINGLE SINGLE (M-1 BAILEY)

STATE OF FLORIDA DEPARTMENT OF TRANSPORTATION
STRUCTURES

TIMBER BENTS FOR BAILEY BRIDGES

REVISIONS	
Date	Description

ROAD NO.	COUNTY	PROJECT NO.

	Name	Date
Designed by	JDH	6-71
Checked by		
Quantities by	JDH	6-71
Checked by		
Supervised by	SHW	

APPROVED BY
Deputy State Engineer, Structures
Drawing No. 0f
Index No.

3	R.A.			

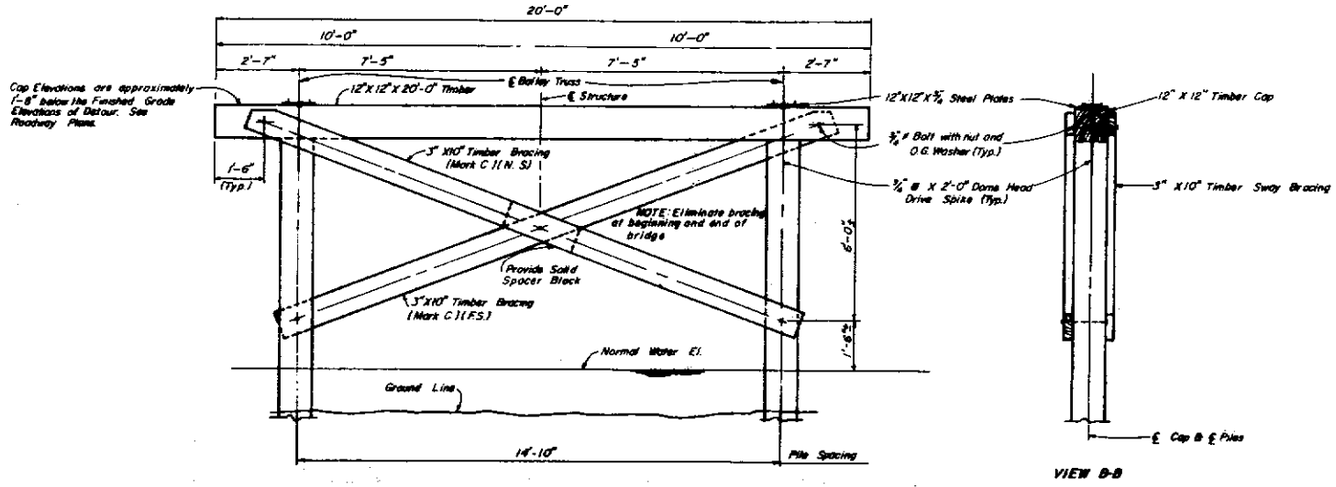

TIMBER PILE BENT
For Single Lane Bailey Bridge)

VIEW B-B

LIST OF STRUCTURAL TIMBER *					
ITEM	SIZE	LENGTH	NO. REQ'D.	F.B.M.	CUTTING DIMENSIONS
Cap	12" X12"	20'-0"	** 1	240	19'-0" 12"
Mark C	3"X10"	18'-0"	2	90	18'-0" Field cut as required
Spacer Block	10"X12"	2'-0"	1	20	2'-0" 12"
			TOTAL	338	

* Quantities shown are for One Timber Bent Only.
** Two (2) additional caps required for mud sills at ends of grating approaches.

GENERAL NOTES

DESIGN LOAD FOR PILES: 20 tons
LOADING: H20-44
STRUCTURAL TIMBER: Timber piles and structural timber may be treated or untreated at the option of the Contractor
SPAN LENGTH: 30'-0" Maximum
PAYMENT: See roadway plans for payment of detour
ERECTION: The Contractor shall erect the detour bridge in accordance with the specifications, these plans, and the "Bailey Unifloto Handbook". Steel grid bridge flooring will be furnished in lieu of Bailey Bridge flooring and shall be welded to the transom. Welds shall be made and removed with care to avoid damage to the transom.
AVAILABILITY: Bailey Bridge components will be available at the Defuniak Springs, Florida, D.O.T. Maintenance Yard.

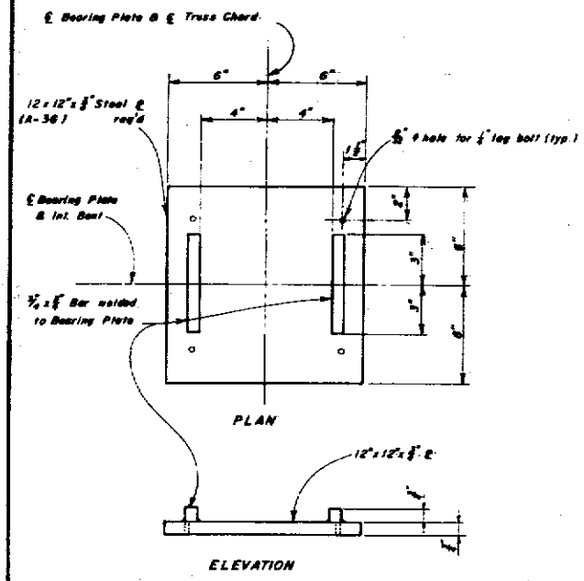

BEARING PLATE DETAILS

NOTES: Bearing Assemblies are to be furnished by the Contractor and shall become the property of the D.O.T. when the detour bridge is dismantled.
The cost of the Bearing Assemblies shall be included in the Contract Lump Sum price for Special Detour (see roadway plans)
The estimated weight of each bearing assembly is approximately 52 lbs.

ONE LANE SINGLE SINGLE (M-2 BAILEY)

STATE OF FLORIDA DEPARTMENT OF TRANSPORTATION
STRUCTURES

TIMBER BENTS FOR BAILEY BRIDGE

Designed by	H.D.B.	6-73	
Checked by			
Quantities by	H.D.B.	6-73	
Checked by			
Approved by	S.H.N.		

Sheet No. of

FED. ROAD DIV. NO.	STATE	PROJECT NO.	SHEET NO.	TOTAL SHEETS
3	FLA.			

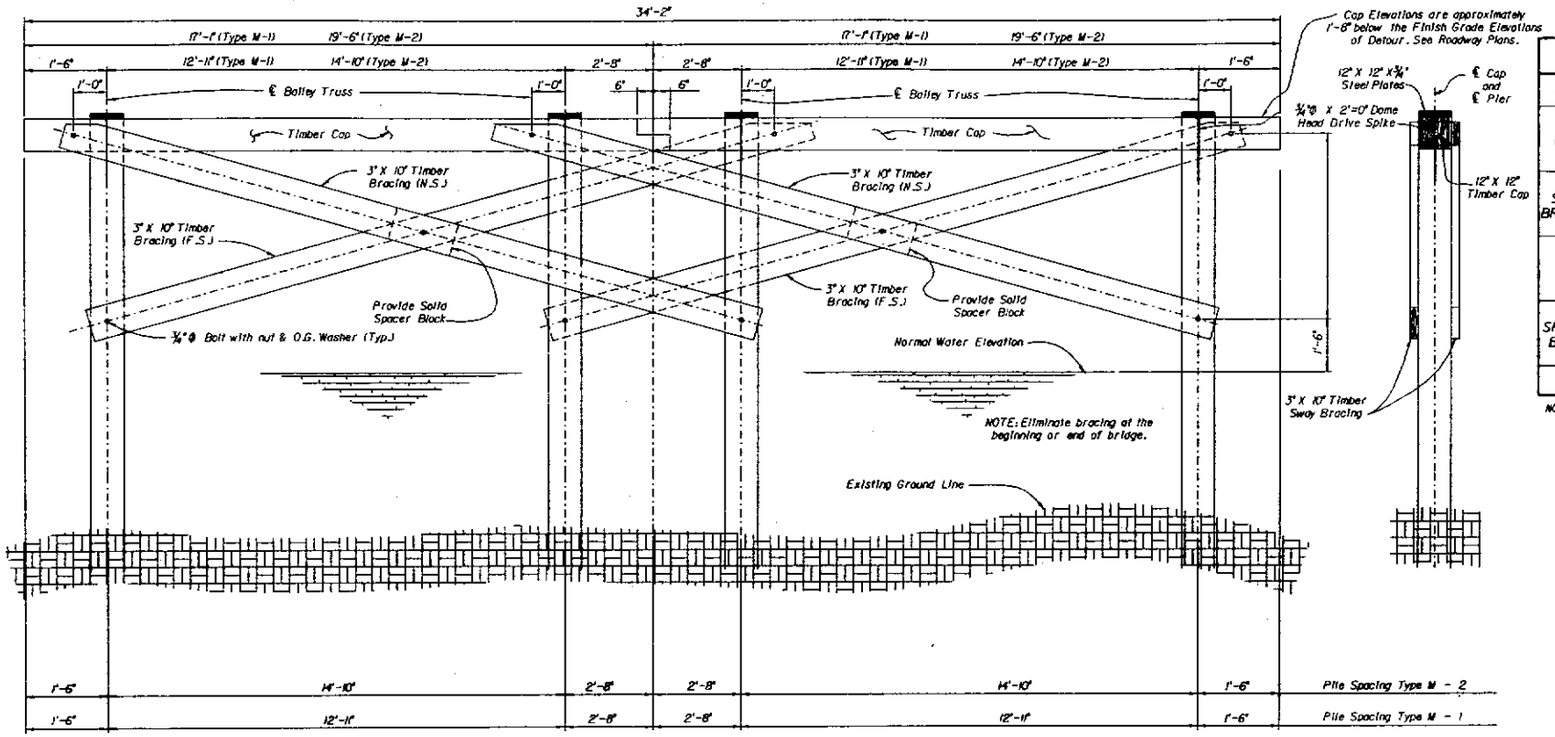

LIST OF STRUCTURAL TIMBER

ITEM	SIZE	LENGTH M-1	LENGTH M-2	No. REQ'D	F.B.M. M-1	F.B.M. M-2	CUTTING DIAGRAMS
CAP	12" X 12"	17'-1"	19'-6"	2	422	468	LENGTH 12" 12" 6"
SWAY BRACING	3" X 10"	22'-1"	24'-0"	4	222	240	LENGTH 10"
SPACER BLOCK	10" X 12"	2'-0"	2'-0"	2	40	40	2'-0" 12"
				TOTAL	684	748	

NOTE: Quantities are for one bent only.

GENERAL NOTES

DESIGN LOAD FOR PILES: 20 TONS

LOADING: HS20-44

STRUCTURAL TIMBER: Timber piles and structural timber may be treated or untreated at the option of the contractor.

SPAN LENGTH: 30'-0" Maximum

PAYMENT: See Roadway Plans for payment of detour.

ERECTION: The contractor shall erect the detour bridge in accordance with the specifications, these plans, and the 'Bailey Uniflote Handbook'. Steel grid bridge flooring will be furnished in lieu of Bailey Bridge flooring. Steel grid bridge flooring shall be brought into full contact with each transom and then securely fastened at each transom. The Engineer shall approve final assembly of Bailey Bridge components prior to placing traffic on the Bailey Bridge.

AVAILABILITY: Contractor shall pickup and return all Bailey Bridge components at the FDOT maintenance yard located in Defuniak Springs, Florida.

DAMAGE: Contractor shall be responsible for damage to the Bailey Bridge components which occurs while in his possession. FDOT inspection of the Bailey Bridge components for damage will be upon return of the Bailey Bridge components to the FDOT maintenance yard.

DETOUR BRIDGE TYPE: The contractor shall be responsible for contacting the District Structures Engineer prior to driving piles or purchasing timber to determine if a Type M-1 or a Type M-2 Bailey Bridge will be furnished for this project.

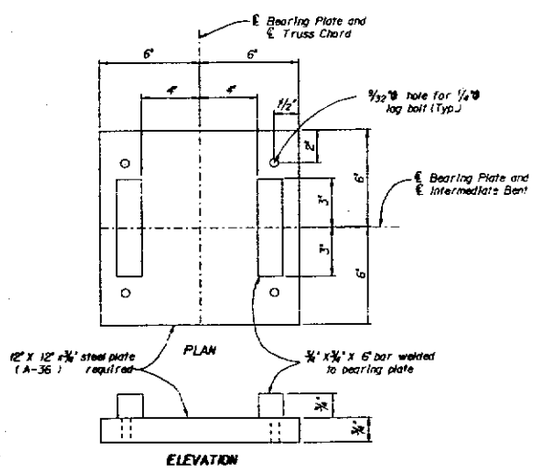

BEARING PLATE DETAILS

NOTE: The bearing assemblies are to be furnished by the Contractor. The cost of providing the bearing assemblies shall be included in the Contract Lump Sum Price for Special Detour (See Roadway Plans). Estimated weight of each bearing assembly is approximately 32 lbs.

TWO LANES SINGLE-SINGLE
(TYPE M-1 AND M-2)

STATE OF FLORIDA DEPARTMENT OF TRANSPORTATION
BUREAU OF STRUCTURES

TIMBER BENTS FOR BAILEY BRIDGE

REVISIONS	
Date	Description

ROAD NO.	COUNTY	PROJECT NO.

	Name	Date
Drawn by		
Checked by		
Quantities by		
Checked by		
Supervised by		

APPROVED BY

CHIEF, BUREAU OF STRUCTURES

Drawing No. | Index No.