FEBRUARY 1976

STATE OF FLORIDA
DEPARTMENT OF TRANSPORTATION

TRAFFIC OPERATIONS STANDARDS

INDEX NUMBERS

SIGNING.....17300 - 17499
HIGHWAY LIGHTING...17500 - 17699
TRAFFIC SIGNALS...17700 - 17899

STATE PROJ. NO.	SHEET NO.

630-ABC CONDUIT ("INCHES") — LF

A. OPERATION TO BE PERFORMED
- 1 FURNISH & INSTALL
- 2 FURNISH
- 3 INSTALL

B. CONDUIT TYPE
- 1 PVC, UNDERGROUND
- 2 RIGID LAID, UNDERGROUND
- 3 RIGID JACKED
- 4 PVC, SLEEVE JACKED
- 5 PVC, UNDER PAVEMENT
- 6 RIGID LAID, UNDER PAVEMENT
- 7 RIGID, ABOVE GROUND

C. CONDUIT SIZE
- 1 (1") 5 (5")
- 2 (2") 6 (1/2")
- 3 (3") 7 (1 1/2")
- 4 (4") 8 (2 1/2")
- 9 (1 1/4")

632-1-BC SIGNAL CABLE ("SPAN LENGTH RANGE") (FURNISH & INSTALL ONLY) — PER INTERSECTION

BC TOTAL HORIZONTAL SPAN LENGTH (SEE CODE SHEET) (SHEET 3)

632-2-DE SIGNAL CABLE (FURNISH ONLY) — LF

DE NUMBER OF CONDUCTORS

632-3-BC SIGNAL CABLE ("SPAN LENGTH RANGE") (INSTALL ONLY) — PER INTERSECTION

BC TOTAL HORIZONTAL SPAN LENGTH RANGE (SEE CODE SHEET) (SHEET 3)

632-4-E INTERCONNECT CABLE — LF

E. INSTALLATION TYPE
- 1 AERIAL, FIGURE 8
- 2 AERIAL, MESSENGER WIRE WITH CLAMPS OR WRAPPED
- 3 UNDERGROUND

634-1-ABC SPAN WIRE ASSEMBLY ("SPAN LENGTH RANGE") (FURNISH & INSTALL ONLY) — PER INTERSECTION

A ASSEMBLY TYPE
- 1 STANDARD DUAL SPAN
- 2 STANDARD DUAL SPAN AND TETHER CABLE

BC TOTAL HORIZONTAL SPAN LENGTH RANGE (SEE CODE SHEET) (SHEET 3)

634-2-D MESSENGER WIRE (FURNISH ONLY) — LF

D CABLE SIZE
- 1 3/8"
- 2 1/4"
- 3 1/8"

634-3-BC SPAN WIRE ASSEMBLY ("SPAN LENGTH RANGE") (INSTALL ONLY) — PER INTERSECTION

BC TOTAL HORIZONTAL SPAN LENGTH RANGE (SEE CODE SHEET) (SHEET 3)

635-A-B PULL BOXES — EACH

A OPERATION TO BE PERFORMED
- 1 FURNISH & INSTALL
- 2 FURNISH
- 3 INSTALL

B PULL BOX TYPE
- 1 NON-TRAFFIC
- 2 TRAFFIC BEARING
- 3 AERIAL JUNCTION BOX
- 4 INTERCONNECT JUNCTION BOX

639-1 ELECTRICAL POWER SERVICE — ASSEMBLY

641-AB-CD CONCRETE STRAIN POLE (TYPE "X") — EACH

A OPERATION TO BE PERFORMED
- 1. FURNISH & INSTALL (WITH FOUNDATION)
- 2. FURNISH
- 3. INSTALL (WITH FOUNDATION)
- 4. FURNISH & INSTALL (DIRECT BURIAL
- 5. INSTALL (DIRECT BURIAL)

B POLE TYPE
- 1. (BLANK)
- 2. (TYPE III) (SERVICE POLE)
- 3. (TYPE IV)
- 4. (TYPE V)
- 5. (TYPE VI)
- 6. (TYPE VII)

CD POLE LENGTH

642-ABC-DE STEEL STRAIN POLES (TYPE "X") — EACH

A OPERATION TO BE PERFORMED
- 1 FURNISH & INSTALL (WITH FOUNDATION)
- 2 FURNISH
- 3 INSTALL (WITH FOUNDATION)
- 4 FURNISH & INSTALL (DIRECT BURIAL)
- 5 INSTALL (DIRECT BURIAL)

BC POLE TYPE (REFER TO STEEL POLE SCHEDULE SHEET)
- 01 (TYPE "A") 08 (TYPE "H")
- 02 (TYPE "B") 09 (TYPE "I")
- 03 (TYPE "C") 10 (TYPE "J")
- 04 (TYPE "D") 11 (TYPE "K")
- 05 (TYPE "E") 12 (SPECIAL DESIGN)
- 06 (TYPE "F")
- 07 (TYPE "G")

DE POLE LENGTH

646-AB-CD MAST ARMS — EACH
647-AB-CD MAST ARM COMBINATIONS, STD. — EACH
648-AB-CD MAST ARM COMBINATIONS, SPECIAL — EACH

A OPERATION TO BE PERFORMED
- 1. FURNISH & INSTALL
- 2. FURNISH
- 3. INSTALL

B MATERIAL AND CONFIGURATION TYPE
- 1. STEEL, SINGLE ARM
- 2. ALUMINUM, SINGLE ARM
- 3. STEEL, DOUBLE ARM
- 4. ALUMINUM, DOUBLE ARM
- 5. STEEL, SINGLE ARM WITH LUMINAIRE ATTACHMENT
- 6. ALUMINUM, SINGLE ARM WITH LUMINAIRE ATTACHMENT
- 7. STEEL, DOUBLE ARM WITH LUMINAIRE ATTACHMENT
- 8. ALUMINUM, DOUBLE ARM WITH LUMINAIRE ATTACHMENT

CD LENGTH OF MAST ARM (TOTAL LENGTH WHEN DOUBLE ARM)

650-1-ABC TRAFFIC SIGNAL, 12" STD ("X-SECTION, Y-WAY") — ASSEMBLY
650-2-ABC TRAFFIC SIGNAL, 12" OPT PROG ("X-SECTION, Y-WAY") — ASSEMBLY
650-3-ABC TRAFFIC SIGNAL, 12" LIGHTWEIGHT ("X-SECTION, Y-WAY") — ASSEMBLY
650-4-ABC TRAFFIC SIGNAL, 8" STD ("X-SECTION, Y-WAY") — ASSEMBLY
650-5-ABC TRAFFIC SIGNAL, 8" LIGHTWEIGHT ("X-SECTION, Y-WAY") — ASSEMBLY

A OPERATION TO BE PERFORMED
- 1. FURNISH & INSTALL
- 2. FURNISH
- 3. INSTALL

B NUMBER OF SECTIONS ON EACH FACE

C NUMBER OF DIRECTIONS (WAYS)

653-ABC PEDESTRIAN SIGNALS ("MOUNTING TYPE") — ASSEMBLY

A OPERATION TO BE PERFORMED
- 1 FURNISH & INSTALL
- 2 FURNISH
- 3 INSTALL

B TYPE SIGNAL
- 1 INCANDESCENT 3 OPTICALLY PROGRAMED
- 2 FIBER OPTIC 4 NEON

C MOUNTING TYPE
- 1 (1-WAY PEDESTAL)
- 2 (2-WAY PEDESTAL)
- 3 (1-WAY POLE)
- 4 (2-WAY POLE)
- 5 (3-WAY PEDESTAL)
- 6 (3-WAY POLE)

659-ABC SIGNAL HEAD AUXILIARIES ("ITEM") — EACH

A OPERATION TO BE PERFORMED
- 1 FURNISH & INSTALL
- 2 FURNISH
- 3 INSTALL

BC ITEM DESCRIPTION
- 01 (BACKPLATES, 3-SECTION)
- 02 (BACKPLATES, 4 SECTION)
- 03 (DISCONNECT HANGER)
- 04 (SIGNAL LAMPS, 150 WATTS)
- 05 (SIGNAL LAMPS, 67 WATTS)
- 06 (TUNNEL VISOR)
- 07 (ALUMINUM PEDESTAL)
- 08 (STEEL PEDESTAL)
- 09 (CONCRETE PEDESTAL, TYPE II)
- 10 (LOUVERS)
- 11 (BACKPLATES, 1-SECTION)
- 12 (MOUNTING BRACKETS, 2-WAY)
- 13 (MOUNTING BRACKETS, 3-WAY)
- 14 (MOUNTING BRACKETS, 4-WAY)
- 15 (12" LENS)
- 16 (8" LENS)
- 17 (SIGNAL FRAME)

APPROVED BY FHWA, DEC. 17, 1974

FLORIDA DEPARTMENT OF TRANSPORTATION
TRAFFIC OPERATIONS

SIGNALIZATION BID ITEM NUMBERS

REVISIONS			INITIALS	DATES
DATE	DESCRIPTION	Designed by	CG	11/8/74
6-2-75	634-3-BC, 639-BC-12-13-14	Checked by	RK	11/8/74
1-20-76	ADDED 648-AB-CD; REV. 630-B, 642-BC, 653-B,C, 659-BC	Quantities by		
		Checked by		
		Supervised by	RVK	

FHWA 7-24-7
FHWA 2-3-76

Recommended for Approval by: Deputy Traffic Operations Engr.
Approved by: State Traffic Operations Engr.

DRAWING NO. 1 OF 3 | INDEX NO. 17710

660-AB VEHICLE DETECTORS, (LOOP TYPE) — EACH

A OPERATION TO BE PERFORMED
- 1 FURNISH & INSTALL
- 2 FURNISH
- 3 INSTALL

B ASSEMBLY TYPE
- 1 (BLANK)
- 2 VEHICLE DETECTOR AMPLIFIER WITH HARNESS
- 3 LOOP WITH SAW CUTS AND COMPLETE LEAD-IN
- 4 RELOCATE VEHICLE DETECTOR AMPLIFIER WITH NEW LEAD-IN AND CONNECT TO EXISTING LOOP

664-AB VEHICLE DETECTORS, (OPTICAL TYPE) — EACH

A. OPERATION TO BE PERFORMED
- 1 FURNISH & INSTALL
- 2 FURNISH
- 3 INSTALL

B ASSEMBLY TYPE
- 1 OPTICAL DETECTION UNIT COMPLETE WITH LEAD-IN AND HARNESS
- 2 PHASE SELECTOR UNIT (CONTROLLER INTERFACE)

665-AB PEDESTRIAN DETECTOR — EACH

A OPERATION TO BE PERFORMED
- 1 FURNISH & INSTALL
- 2 FURNISH
- 3 INSTALL

B ASSEMBLY TYPE
- 1 POLE OR CONTROLLER CABINET MOUNTED DETECTOR STATION
- 2 DETECTOR STATION WITH POST
- 3 DETECTOR WITH SIGN ONLY

668-AB DETECTOR CABINET (TYPE "X") — EACH

A OPERATION TO BE PERFORMED
- 1 FURNISH & INSTALL
- 2 FURNISH
- 3 INSTALL

B CABINET SIZE (MINIMUM)
- 1 (TYPE I) 27" X 15" X 12"
- 2 (TYPE II) 32" X 20" X 14"
- 3 (TYPE III) 48" X 29" X 16"
- 4 (TYPE IV) 54" X 38" X 24"
- 5 (TYPE V) 74" X 38" X 24"
- 6 (TYPE VI) 13" X 10" X 6"

671-AB-CD CONTROLLER, SOLID STATE (ACTUATED) — EACH

672-AB-CD CONTROLLER, SOLID STATE (PRE-TIMED) — EACH

A OPERATION TO BE PERFORMED
- 1 FURNISH & INSTALL COMPLETE WITH CABINET
- 2 FURNISH WITH CABINET
- 3 INSTALL
- 4 MODIFY
- 5 FURNISH CONTROLLER ONLY

B CONTROLLER TYPE
- 1 DIGITAL
- 2 ANALOG
- 3 MICRO PROCESSER

C NUMBER OF PHASES
- 1 (BLANK)
- 2 2-PHASE
- 3 3-PHASE
- 4 4-PHASE
- 5 5-PHASE
- 6 6-PHASE
- 7 7-PHASE
- 8 8-PHASE
- 9 LANE OCCUPANCY

D SPECIAL FEATURES
- 0 NO SPECIAL FEATURES
- 1 COMBINATION OF FEATURES AS SET FORTH IN PLANS OR SPECIAL PROVISIONS
- 2 R/R PRE-EMPTOR
- 3 FIRE PRE-EMPTOR
- 4 BRIDGE PRE-EMPTOR
- 5 EXPANSIBLE TO 4-PHASES BY MEANS OF 4-PHASE FRAME
- 6 EXPANSIBLE TO 8-PHASE BY MEANS OF AN 8-PHASE FRAME
- 7 COORDINATION CAPABILITIES
- 8 PEDESTRIAN FEATURES

673-AO-BC CONTROLLER, ELECTROMECHANICAL (ACTUATED) — EACH

674-AO-BC CONTROLLER, MECHANICAL (PRE-TIMED) — EACH

A OPERATION TO BE PERFORMED
- 1 FURNISH & INSTALL COMPLETE WITH CABINET
- 2 FURNISH WITH CABINET
- 3 INSTALL
- 4 MODIFY
- 5 FURNISH CONTROLLER ONLY

B NUMBER OF PHASES
- 1 (BLANK)
- 2 2-PHASE
- 3 3-PHASE
- 4 4-PHASE
- 5 5-PHASE
- 6 6-PHASE
- 7 7-PHASE
- 8 8-PHASE
- 9 LANE OCCUPANCY

C SPECIAL FEATURES
- 0 NO SPECIAL FEATURES
- 1 COMBINATION OF FEATURES AS SET FORTH IN PLANS OR SPECIAL PROVISIONS
- 2 R/R PRE-EMPTOR
- 3 FIRE PRE-EMPTOR
- 4 BRIDGE PRE-EMPTOR
- 5 EXPANSIBLE TO 4-PHASES BY MEANS OF A 4-PHASE FRAME
- 6 EXPANSIBLE TO 8-PHASES BY MEANS OF AN 8-PHASE FRAME
- 7 COORDINATION CAPABILITIES
- 8 PEDESTRIAN FEATURES

675-AB CONTROLLER, FLASHING BEACON — EACH

A OPERATION TO BE PERFORMED
- 1 FURNISH & INSTALL COMPLETE WITH CABINET
- 2 FURNISH WITH CABINET
- 3 INSTALL
- 4 MODIFY
- 5 FURNISH CONTROLLER ONLY

B CONTROLLER TYPE
- 1 SOLID STATE
- 2 (BLANK)
- 3 ELECTROMECHANICAL

676-AB-C CONTROLLER CABINET (TYPE "X") — EACH

A OPERATION TO BE PERFORMED
- 1 FURNISH & INSTALL COMPLETELY WIRED
- 2 FURNISH COMPLETELY WIRED
- 3 INSTALL
- 4 MODIFY
- 5 FURNISH UNWIRED

B CABINET SIZE (MINIMUM)
- 1 (TYPE I) 27" X 15" X 12"
- 2 (TYPE II) 32" X 20" X 14"
- 3 (TYPE III) 48" X 29" X 16"
- 4 (TYPE IV) 54" X 38" X 24"
- 5 (TYPE V) 74" X 38" X 24"
- 6 (TYPE VI) 13" X 10" X 6"

C SPECIAL FEATURES
- 0 NO SPECIAL FEATURES
- 1 COMBINATION OF FEATURES AS SET FORTH IN PLANS OR SPECIAL PROVISIONS
- 2 R/R PRE-EMPTOR
- 3 FIRE PRE-EMPTOR
- 4 BRIDGE PRE-EMPTOR
- 5 COORDINATION CAPABILITIES

677-1A CABINET MOUNTING ("TYPE") — EACH

A TYPE MOUNTING
- 1 (BASE MOUNT)
- 2 (POLE MOUNT)
- 3 (LOW PEDESTAL)

678-ABC CONTROLLER AUXILIARIES ("ITEM") — EACH

A OPERATIONS TO BE PERFORMED
- 1 FURNISH & INSTALL
- 2 FURNISH
- 3 INSTALL

BC ITEM
- 01 (FIRE PRE-EMPTOR)
- 02 (R/R PRE-EMPTOR)
- 03 (BRIDGE PRE-EMPTOR)
- 04 (EMERGENCY SWITCHBOX)
- 05 (TIME SWITCH)
- 06 (TELEMETRY TRANSMITTER)
- 07 (TELEMETRY RECEIVER)
- 08 (TELEMETRY TRANSCEIVER)
- 09 (PRE-TIMED COORDINATOR)
- 10 (2-PHASE OR FULL ACTUATED ADAPTER)
- 11 (3-PHASE THRU 8-PHASE FULL ACTUATED ADAPTER)
- 12 (UNIVERSAL ADAPTER)
- 13 (STANDBY SYSTEM RELAY)
- 14 (STANDBY SYSTEM TIMER)
- 15 (TELEPHONE CONNECTION BOX)
- 16 (PEDESTRIAN CLOCK)
- 17 (GREEN EXTENDER)

APPROVED BY FHWA, DEC 17, 1974

FLORIDA DEPARTMENT OF TRANSPORTATION
TRAFFIC OPERATIONS

SIGNALIZATION BID ITEM NUMBERS

REVISIONS			INITIALS	DATES
DATE	DESCRIPTION	Designed by	CG	11/8/74
6-2-75 (FHWA 7-2475)	660-B-1, 671-C-1, 674-B-1, 660-B-4,	Checked by	RK	11/8/74
1-20-76 (FHWP 2-3-76)	ADDED 664-AB REVISED 672-B, 678-BC	Quantities by		
		Checked by		
		Supervised by	RVK	

Recommended for Approval by [signature] Deputy Traffic Operations Engr.
Approved by [signature] State Traffic Operations Engr.

DRAWING NO 2 OF 3 — INDEX NO. 17710

STATE PROJ. NO.	SHEET NO.

679-AB-C COORDINATING UNIT ("UNIT FUNCTION") — EACH

A OPERATION TO BE PERFORMED
- 1 FURNISH & INSTALL
- 2 FURNISH
- 3 INTALL

B UNIT DESIGN
- 1 SOLID STATE DIGITAL
- 2 (BLANK)
- 3 MECHANICAL

C UNIT FUNCTIONS (FUNCTIONS SPECIFY THE MINIMUM NUMBER OF CYCLES IN THE CASE OF DIGITAL AND THE MINIMUM NUMBER OF DIALS IN THE CASE OF MECHANICAL)
- 1 (SINGLE)
- 2 (DOUBLE)
- 3 (TRIPLE)

680 ABC SYSTEM CONTROL EQUIPMENT ("ITEM") — EACH

A OPERATION TO BE PERFORMED
- 1 FURNISH & INSTALL
- 2 FURNISH
- 3 INSTALL
- 4 MODIFY

BC ITEM AS DESCRIBED
- 01 (CPU)
- 02 (CARD READER)
- 03 (KEYBOARD PRINTER)
- 04 (LINE PRINTER)
- 05 (DISC MEMORY SYSTEM)
- 06 (COMMUNICATIONS INTERFACE)
- 07 (DISPLAY MAP INTERFACE)
- 08 (MAG TYPE SYSTEM)
- 09 (KEYBOARD CRT)
- 10 (CONTROL CONSOLE)
- 11 (ROADSIDE MASTER)

681 ABC SYSTEM SOFTWARE ("ITEM") — LUMP SUM

A OPERATION TO BE PERFORMED
- 1 FURNISH & INSTALL
- 2 FURNISH
- 3 INSTALL

BC ITEM AS DESCRIBED
- 01 (CPU SOFTWARE)
- 02 (UTCS FORTRAN ROUTINES)
- 03 (UTCS ASSEMBLY LANGUAGE ROUTINE)
- 04 (DATA BASE)
- 05 (CONTROL PATTERNS)
- 06 (DATA BASE GENERATOR)
- 07 (PATTERN GENERATOR)

682-ABC SYSTEM DISPLAY ("ITEM") — LUMP SUM

A OPERATION TO BE PERFORMED
- 1 FURNISH & INSTALL
- 2 FURNISH
- 3 INSTALL
- 4 MODIFY

BC ITEMS AS DESCRIBED
- 01 (CRT DISPLAY)
- 02 (PANEL BOARD MAP)
- 03 (PROJECTED DISPLAY

683 ABC SYSTEM COMMUNICATIONS ("ITEM") — LUMP SUM

A OPERATION TO BE PERFORMED
- 1 FURNISH & INSTALL
- 2 FURNISH
- 3 INSTALL
- 4 MODIFY

BC ITEM AS DESCRIBED
- 01 (FDM)
- 02 (TDM)

685 ABC SYSTEM AUXILIARIES ("ITEM") — EACH

A OPERATION TO BE PERFORMED
- 1 FURNISH & INSTALL
- 2 FURNISH
- 3 INSTALL

BC ITEM AS DESCRIBED
- 01 (BLANK)
- 02 (BLANK)
- 03 (BLANK)
- 04 (BLANK)
- 05 (MASTER CLOCK UNIT)
- 06 (UNINTERRUPTABLE POWER SOURCE)
- 07 (TEST EQUIPMENT)

REMOVAL ITEMS

690-10	REMOVE TRAFFIC SIGNAL HEAD ASSEMBLY	EACH
690-20	REMOVE PEDESTRIAN SIGNAL ASSEMBLY	EACH
690-30	REMOVE POLES	EACH
690-31	REMOVE SIGNAL PEDESTAL	EACH
690-40	REMOVE MAST ARM ASSEMBLY	EACH
690-50	REMOVE CONTROLLER ASSEMBLY	EACH
690-60	REMOVE VEHICLE DETECTOR ASSEMBLY	EACH
690-70	REMOVE PEDESTRIAN DETECTOR ASSEMBLY	EACH
690-80	REMOVE SPAN WIRE ASSEMBLY	EACH
690-90	REMOVE CABLING AND CONDUIT	PER INTERSECTION
690-100	REMOVE MISCELLANEOUS SIGNAL EQUIP.	PER INTERSECTION

632-1-BC SIGNAL CABLE ("SPAN LENGTH RANGE") — PER INTERSECTION

634-1-BC SPAN WIRE ASSEMBLY ("SPAN LENGTH RANGE") — PER INTERSECTION

BC TOTAL HORIZONTAL SPAN LENGTH RANGE

CODE	SPAN LENGTH IN FEET
01	10 - 20
02	20 - 30
03	30 - 40
04	40 - 50
05	50 - 75
06	75 - 100
07	100 - 125
08	125 - 150
09	150 - 175
10	175 - 200
11	200 - 225
12	225 - 250
13	250 - 275
14	275 - 300
15	300 - 325
16	325 - 350
17	350 - 375
18	375 - 400
19.	400 - 425
20	425 - 450
21	450 - 475
22	475 - 500
23	500 - 525
24	525 - 550
25	550 - 575
26	575 - 600
27	600 - 625
28	625 - 650
29	650 - OR GREATER

APPROVED BY FHWA, DEC. 17, 1974

FLORIDA DEPARTMENT OF TRANSPORTATION
TRAFFIC OPERATIONS

REVISIONS			INITIALS	DATES
DATE	DESCRIPTION	Designed by	CG	11/8/74
FHWA 7-24-75 6-2-75	690-31, 679-B-3	Checked by	RK	11/8/74
FHWA 2-3-76 1-20-76	ADDED 640, 681, 682, 683 REVISED 634, 685	Quantities by		
		Checked by		
		Supervised by		

Recommended for approval by Deputy Traffic Operations Engr.

Approved by State Traffic Operations Engr.

DRAWING NO. 3 OF 3 — INDEX NO. 17710

No ground Wire for Steel!

STATE PROJ. NO.	SHEET NO.

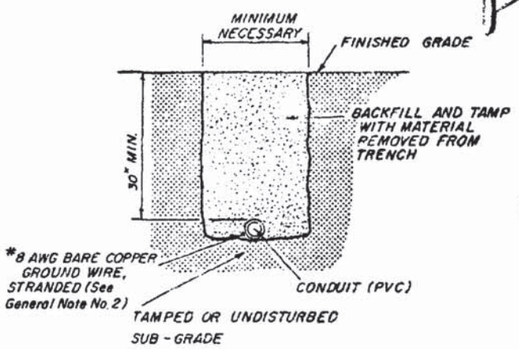

FIGURE-A

FOR USE IN AREAS NOT EXPOSED TO VEHICULAR TRAFFIC

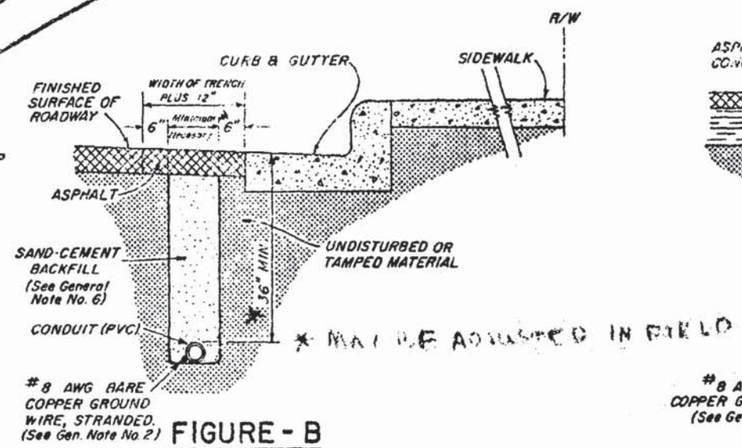

FIGURE-B

FOR USE IN ASPHALT ROADWAY ADJACENT TO GUTTER WHEN PLACEMENT OUTSIDE OF THE PAVEMENT IS NOT FEASIBLE.

NOTE:
1. TRENCH NOT TO BE OPEN MORE THAN 250' AT A TIME WHEN CONSTRUCTION AREA IS SUBJECT TO VEHICULAR OR PEDESTRIAN TRAFFIC.
2. ASPHALT TO BE SAWCUT AND REMOVED TO LEAVE NEAT LINES ON BOTH SIDES OF THE 12" PAVEMENT CUT.

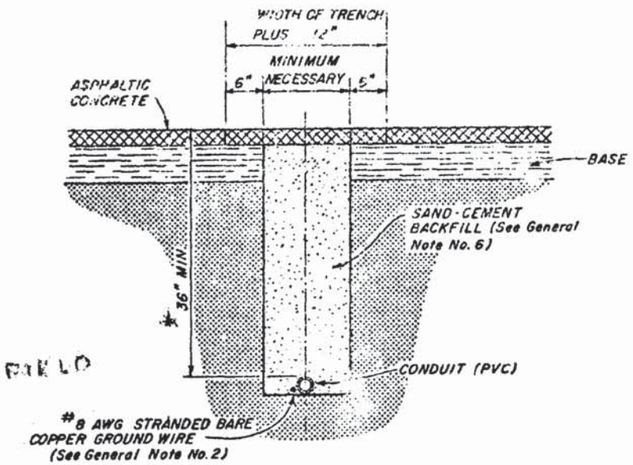

FIGURE-C

FOR USE IN INSTALLING CONDUIT UNDER EXISTING ASPHALT PAVEMENT NOT ADJACENT TO GUTTER WHEN JACKING IS NOT FEASIBLE

NOTE:
1. RIGID CONDUIT MUST BE USED WHEN JACKING UNDER EXISTING PAVEMENT AT 3 FT. MINIMUM DEPTH.
2. ASPHALT TO BE SAWCUT AT THE EDGES OF THE TRENCH.

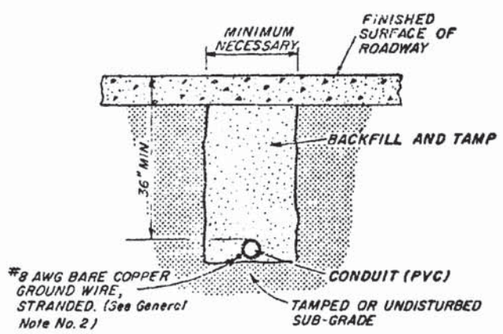

FIGURE-D

FOR USE INSTALLING CONDUIT UNDER A NEW ROADWAY PRIOR TO INSTALLATION OF CURBS, BASE AND PAVEMENT

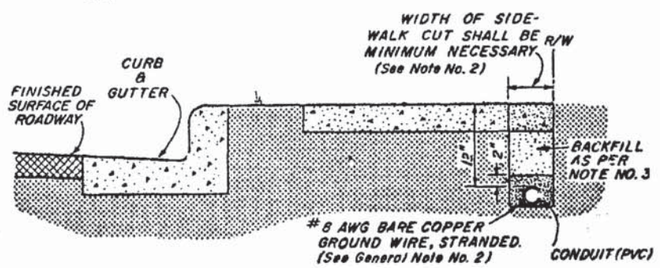

FIGURE-E

FOR USE IN INSTALLING CONDUIT UNDER SIDEWALK

NOTE:
1. SIDEWALK PATCHES TO MATCH EXISTING JOINTS.
2. ENTIRE SIDEWALK SLAB MUST BE REPLACED WHEN SPECIFIED IN THE PLANS.
3. BACKFILL AND TAMP WITH MATERIAL FROM TRENCH EXCEPT AT DRIVEWAYS. AT DRIVEWAYS, BACKFILL TWICE THE WIDTH OF THE DRIVEWAY ENTIRELY WITH CLASS I CONCRETE.

GENERAL NOTES

1. A NO. 12 AWG [illegible] WIRE SHALL BE INSTALLED IN ALL CONDUIT [illegible] ~~WHICH ARE TO RECEIVE CABLE AT A FUTURE TIME~~ [illegible] LEAST 3 FT. OF PULL WIRE SHALL BE ACCESSIBLE AT EACH CONDUIT TERMINATION
2. LOCAL CODES MAY REQUIRE USE OF A LARGER GROUND WIRE. [illegible]
3. EACH PULL BOX SHALL HAVE A 5/8" X 10' GROUND AS SHOWN
4. RECOMMENDED STANDARD CLEARANCE BETWEEN UNDERGROUND CONTROL CABLE OR ELECTRICAL SERVICE CABLE AND ANOTHER APPROXIMATELY PARALLEL UNDERGROUND ELECTRICAL SERVICE CABLE IS FOUR (4) FEET
5. WHEN EARTH BACKFILL AND TAMPING IS CALLED FOR ON THESE DETAILS, IT SHALL BE ACCOMPLISH IN APPROXIMATELY 12 INCH LAYERS WITH EACH LAYER TAMPED TO DENSITY EQUAL TO OR GREATER THAN THE ADJACENT SOIL.
6. COMMERCIALLY AVAILABLE SAND CEMENT (APPROXIMATELY 10:1 MIX RATIO) SHALL BE USED TO BACKFILL TRENCHES IN EXISTING PAVEMENT.
7. ALL PAVEMENT AND SIDEWALKS SHALL BE SAWCUT WHEN TRENCHING.
8. RIGID CONDUIT USED WHEN JACKING SHOULD BE LEFT AS A SLEEVE FOR PVC CONDUIT

[illegible] provided for future!

APPROVED BY FHWA, APR. 15, 1975

FLORIDA DEPARTMENT OF TRANSPORTATION
TRAFFIC OPERATIONS

CONDUIT INSTALLATION DETAILS

REVISIONS				INITIALS	DATES
DATE	INITIALS	DESCRIPTION	Designed by	CG	2-26-75
			Checked by	RK	2-26-75
			Quantities by		
			Checked by		
			Supervised by	RVK	

Recommended for approval by [illegible] Traffic Operations

Approved by [illegible] State Traffic Operations Engr.

DRAWING NO. 1 OF 2 | INDEX NO. 1772

STATE PROJ. NO.	SHEET NO.

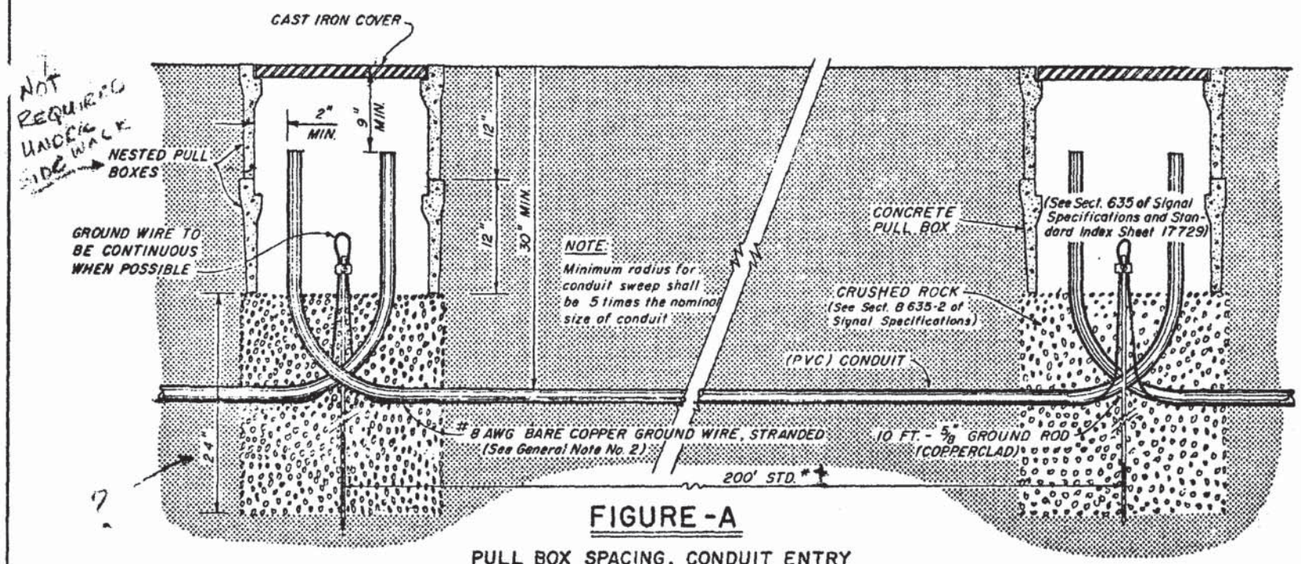

FIGURE-A

PULL BOX SPACING, CONDUIT ENTRY AND GROUNDING DETAIL

* PULL BOX SPACING SHOULD BE ADJUSTED IN THE FIELD TO AVOID PLACING BOXES IN DRIVEWAYS OR CROSS STREETS.

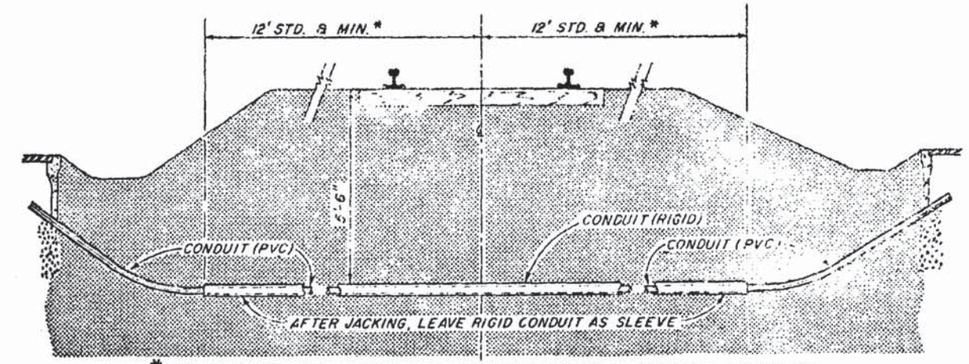

* IN CASE OF MULTIPLE TRACKS, THE MEASUREMENT IS TO BE FROM THE CENTERLINE OF THE OUTSIDE TRACK.

FIGURE-B

FOR USE UNDER RAILROADS

NOTE:
1. PVC CONDUIT TO CONTAIN 6 AWG INSULATED COPPER GROUND WIRE(TW)
2. A PULL BOX IS REQUIRED ON EACH SIDE OF THE RAILROAD, 12' TO 30' FROM THE OUTSIDE TRACK.

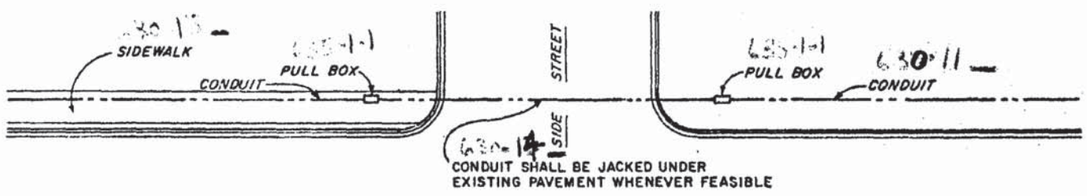

PLAN

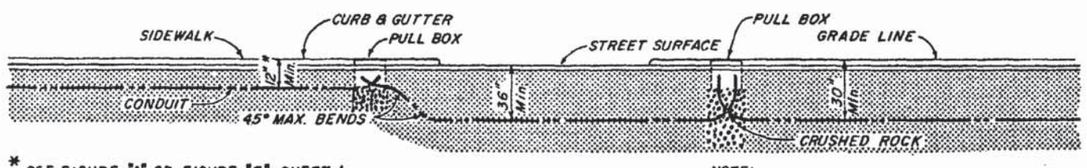

* SEE FIGURE "A" OR FIGURE "E", SHEET 1, FOR MINIMUM DEPTH UNDER SIDEWALKS OR OTHER AREAS NOT EXPOSED TO VEHICULAR TRAFFIC.

SECTION

NOTE:
ONE RUN OF CONDUIT (BETWEEN PULL BOXES) SHALL NOT CONTAIN MORE THAN 360° OF BEND INCLUDING PULL BOX BENDS.

FIGURE-C

UNDER SIDEWALK | UNDER ROADWAY | UNDER NON TRAFFIC BEARING SURFACE

NOTE: CONDUIT SHALL BE JACKED UNDER EXISTING PAVEMENT WHENEVER FEASIBLE.

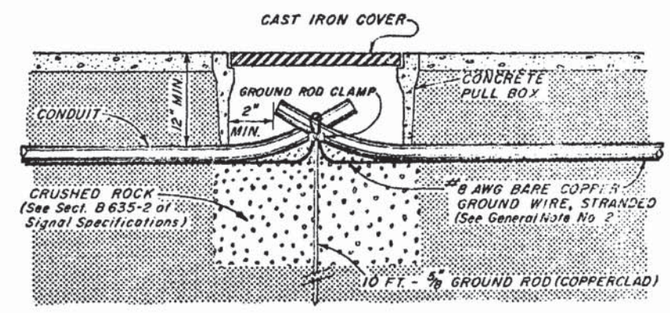

FIGURE-D

PULL BOX ENTRY OF CONDUIT UNDER SIDEWALKS

APPROVED BY FHWA, APRIL 15, 1975

FLORIDA DEPARTMENT OF TRANSPORTATION
TRAFFIC OPERATIONS

CONDUIT INSTALLATION DETAILS

REVISIONS				INITIALS	DATES
DATE	INITIALS	DESCRIPTION	Designed by	CG	2-26-75
			Checked by	RK	2-26-75
			Quantities by		
			Checked by		
			Supervised by	RVK	

Recommended for approval by [signature] Deputy Traffic Operations Engr.
Approved by [signature] State Traffic Operations Engr.

DRAWING NO.	INDEX NO.
2 OF 2	17721

use 5/8"

STATE PROJ. NO.	SHEET NO.

NOTE

1. DISTANCE BETWEEN CATENARY WIRE AND MESSENGER WIRE ATTACHMENT LOCATION ON POLE IS 5% OF SPAN PLUS 1 FT.
2. METAL COLLARS MAY BE USED INSTEAD OF EYEBOLTS WHEN ATTACHING SPAN WIRES TO CONCRETE STRAIN POLES.
3. EVERY POLE SHALL BE A GROUNDING POINT FOR SPAN WIRE ASSEMBLY.
4. POLE AND POLE FOUNDATION DETAILS ARE SHOWN FOR THE PURPOSE OF SHOWING GROUNDING AND CABLE ROUTINGS. REFER TO POLE SCHEDULE SHEET FOR THE SPECIFIC POLE AND POLE FOUNDATION DESIGN DETAILS.

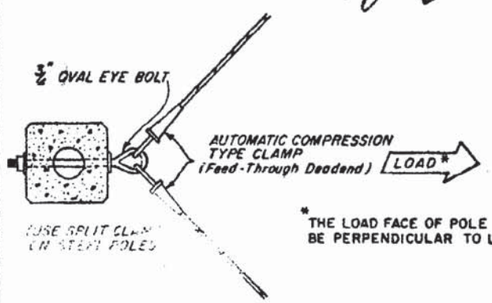

*THE LOAD FACE OF POLE SHALL BE PERPENDICULAR TO LOAD

METHOD OF FRAMING CORNER STRAIN POLES ANGLES 10° TO 120°

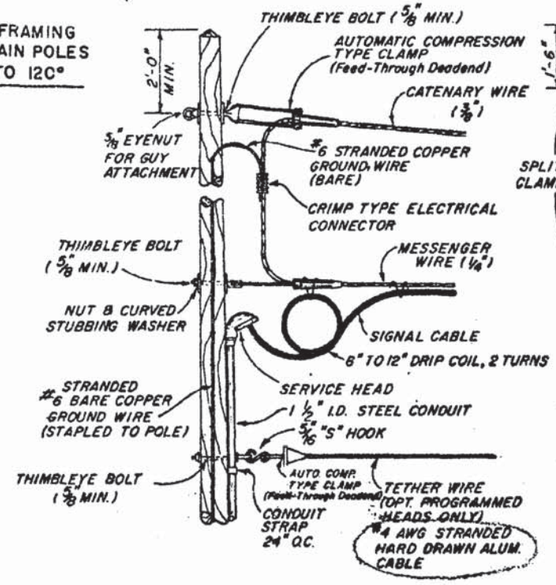

WOOD POLE

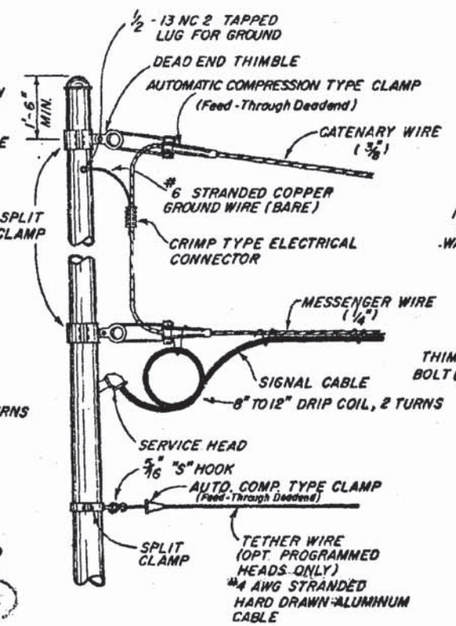

METAL POLE

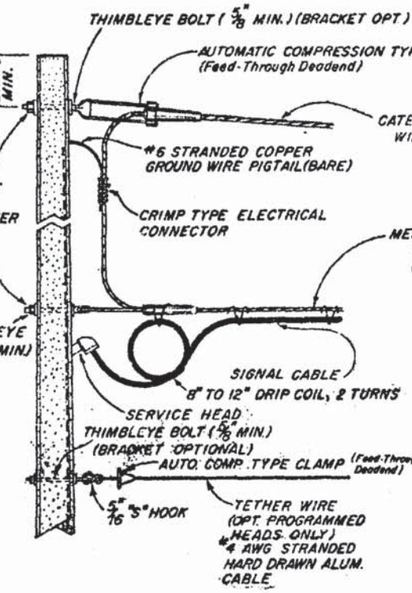

CONCRETE POLE

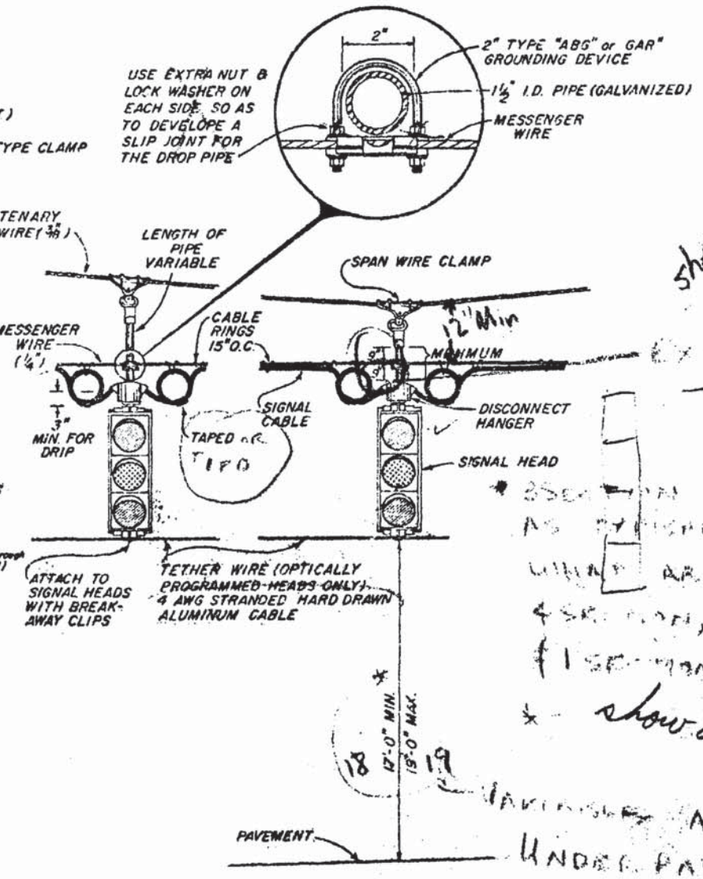

FIGURE - D

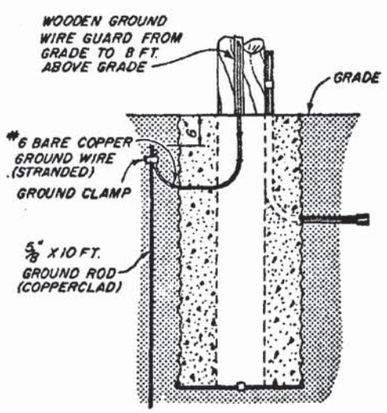

FIGURE - A

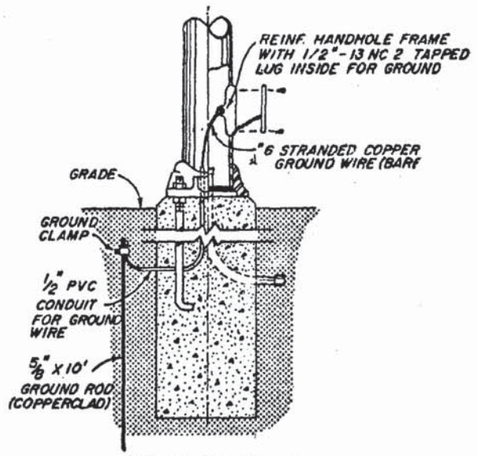

FIGURE - B

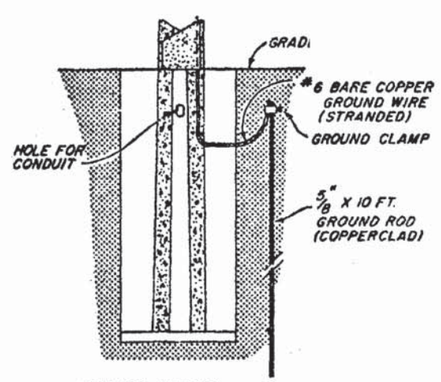

FIGURE - C

APPROVED BY FHWA APRIL 2, 1975

FLORIDA DEPARTMENT OF TRANSPORTATION
TRAFFIC OPERATIONS

SIGNAL CABLE & SPAN WIRE INSTALLATION DETAILS

REVISIONS			
	DATE	INITIALS	DESCRIPTION
FHWA 7-24-75	8-14-75	CG	SLIP JOINT FOR DROP PIPE REDESIGNED, DRIP COIL TO 2 TURNS, NOTE NO. 4 REWORDED.

	INITIALS	DATES
Designed by	CG	2/28/75
Checked by	RK	2/28/75
Quantities by		
Checked by		
Supervised by	RVK	

Recommended for approval by _____ Deputy Traffic Operations Engr.

Approved by _____ State Traffic Operations Engr.

DRAWING NO. 1 OF 1

INDEX NO. 17727

PUT Item Nos. on Index

STATE PROJ. NO.	SHEET NO.

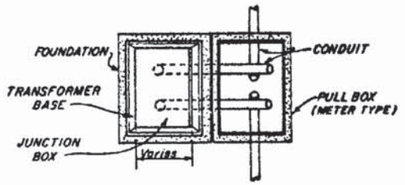

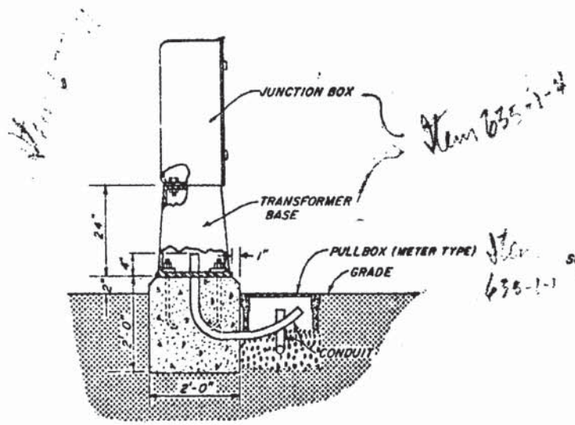

JUNCTION BOX (BASE MOUNT)

WHAT GTE IA DIMENSIONS THIS

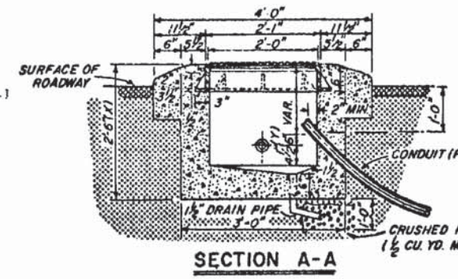

SECTION A-A

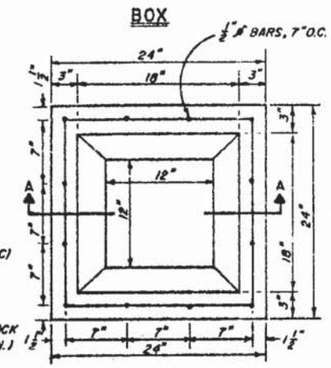

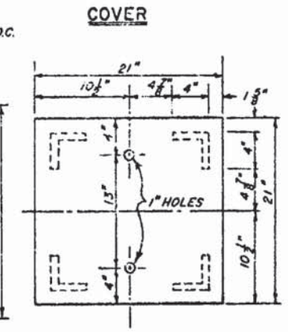

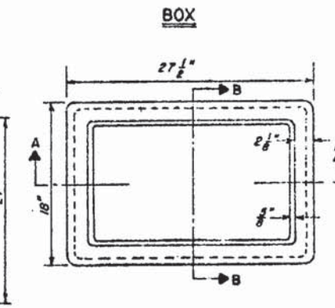

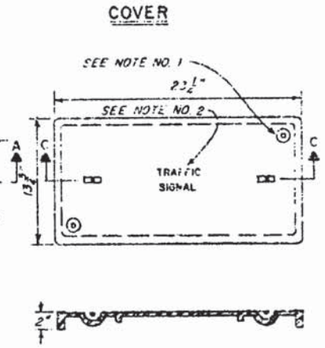

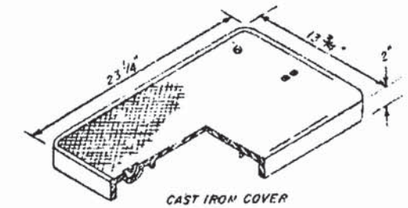

CAST IRON COVER

SECTION C-C

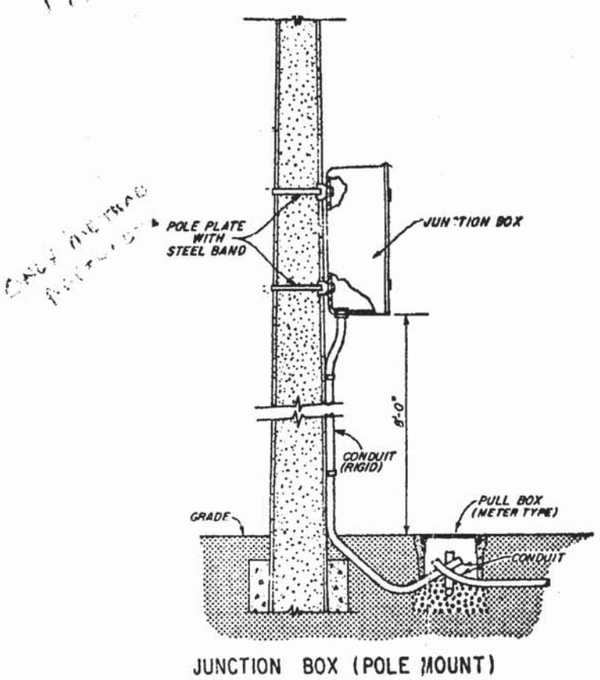

JUNCTION BOX (POLE MOUNT)

FIGURE A

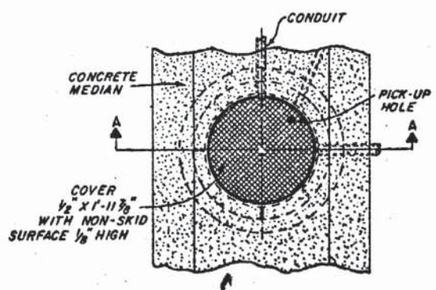

SHOULD HAVE 635-11-B NUMBER

PLAN

FIGURE B

NOTES:
1. FOR USE IN CONCRETE MEDIANS OR WHEN MANHOLE WILL NOT BE SUBJECTED TO WHEEL LOADS.
2. FOR USE AT LOCATIONS OTHER THAN CONCRETE MEDIANS, DIMENSION (X) WILL BE INCREASED TO 3'-0" AND DIMENSION (Y) TO 9".

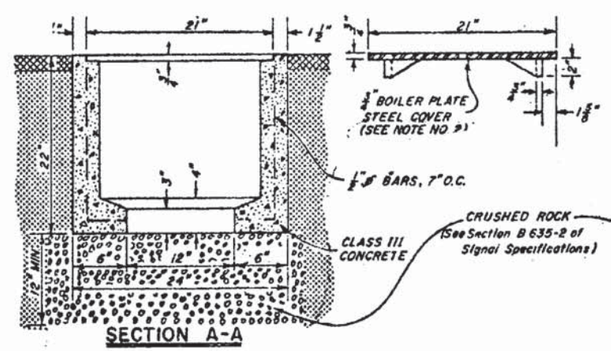

SECTION A-A

TRAFFIC TYPE PULL BOX
(Item # 635-1-2)
FIGURE C

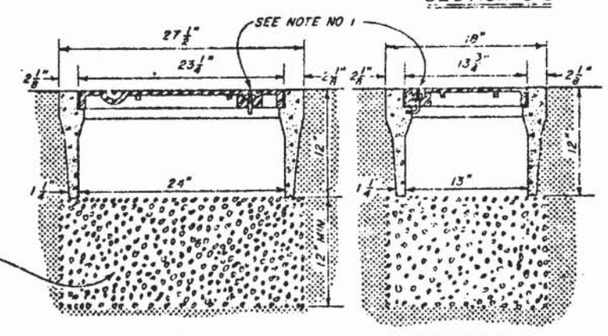

SECTION A-A SECTION B-B

METER TYPE PULL BOX (NON-TRAFFIC TYPE)

FIGURE D
(Item 635-1-1)

NOTES
1. BRASS "L" BOLTS AND NUTS IN DIAGONAL CORNERS; TWO REQUIRED.
2. COVER TO BE MARKED "TRAFFIC SIGNAL"

APPROVED BY FHWA MAY 6, 1975

FLORIDA DEPARTMENT OF TRANSPORTATION
TRAFFIC OPERATIONS

PULL BOX DETAILS

REVISIONS		
DATE	INITIALS	DESCRIPTION

	INITIALS	DATES
Designed by	CG	2-27-75
Checked by	RK	2-28-75
Quantities by		
Checked by		
Supervised by	RVK	

Recommended for approval by [signature] Deputy Traffic Operations Engr.
Approved by [signature] State Traffic Operations Engr

DRAWING NO.	INDEX NO.
1 OF 1	17730

STATE PROJ. NO.	SHEET NO.

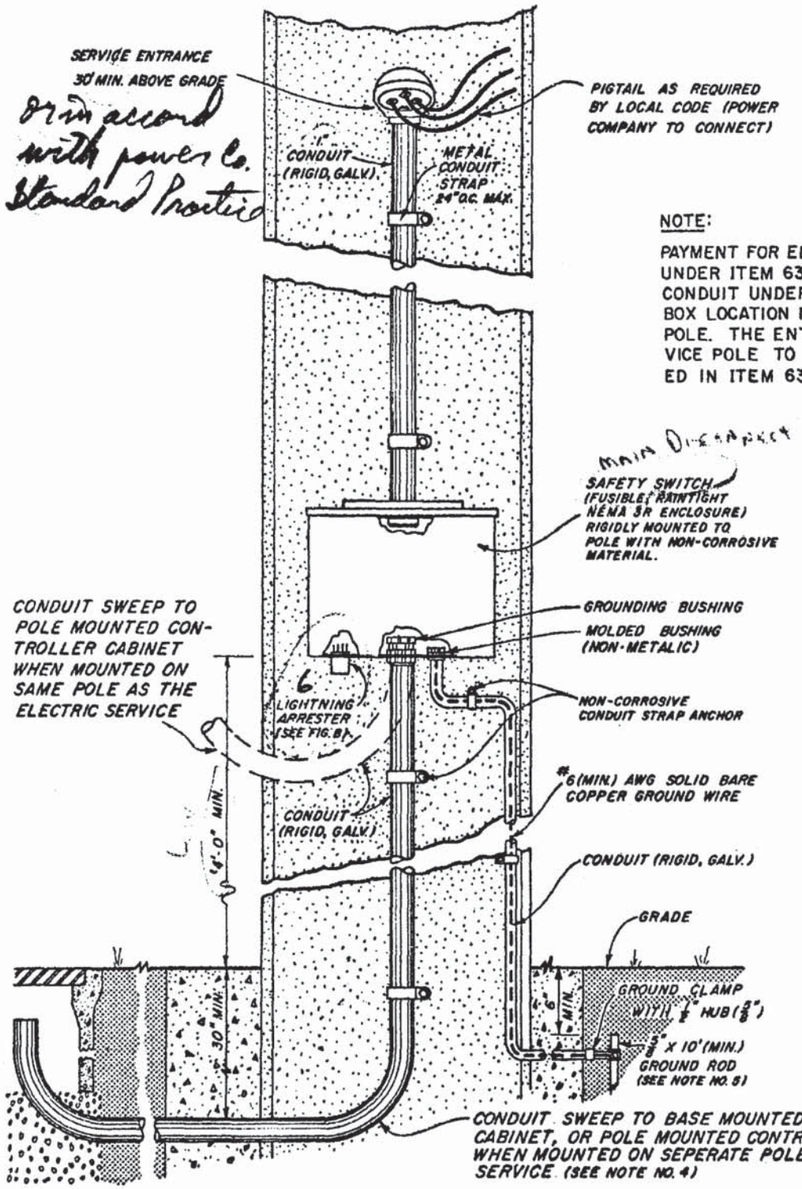

FIGURE - A

(NO METER USED)

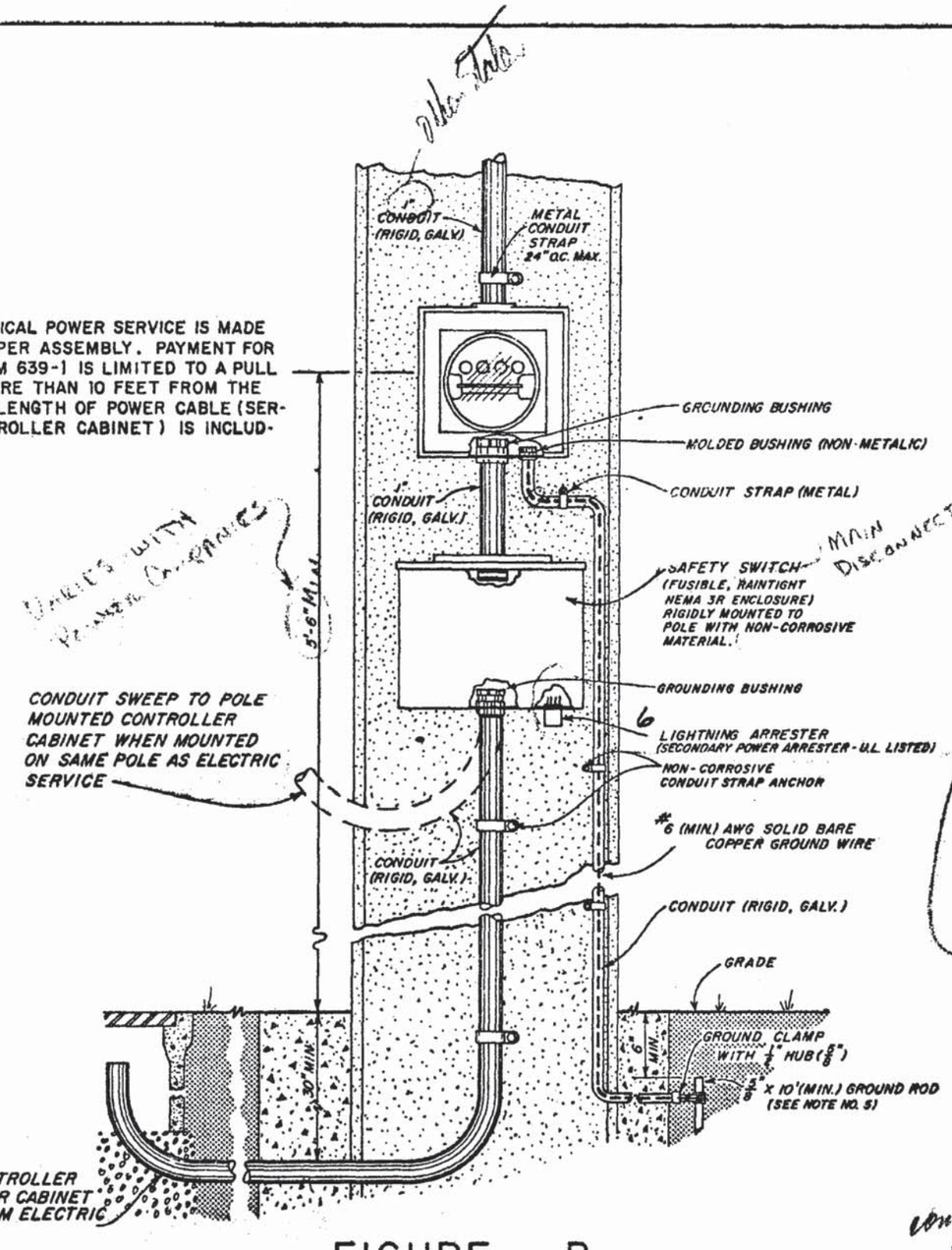

FIGURE - B

(METER USED)

NOTE:

PAYMENT FOR ELECTRICAL POWER SERVICE IS MADE UNDER ITEM 639-1, PER ASSEMBLY. PAYMENT FOR CONDUIT UNDER ITEM 639-1 IS LIMITED TO A PULL BOX LOCATION NO MORE THAN 10 FEET FROM THE POLE. THE ENTIRE LENGTH OF POWER CABLE (SERVICE POLE TO CONTROLLER CABINET) IS INCLUDED IN ITEM 639-1

General NOTES:

1. GROUND WIRE IS TO BE CONNECTED TO ELECTRIC SERVICE NEUTRAL IN ACCORDANCE WITH LOCAL CODE.
2. GROUND ROD MUST BE INSTALLED OUTSIDE THE POLE FOUNDATION.
3. THE ELECTRIC SERVICE CABLE MUST ENTER THE CONTROLLER CABINET THROUGH A SEPARATE CONDUIT FROM THE SIGNAL CONTROL CABLE.
4. THE UNDERGROUND CONDUIT SHALL BE INSTALLED SO AS TO HAVE NO SAGS THAT WILL ENTRAP OR COLLECT WATER.
5. ALL GROUND RODS SHALL CARRY THE UNDERWRITERS LABORATORY SEAL, AND SHALL BE SOLID COPPER OR COPPER BONDED STEEL. COPPER BONDED STEEL GROUND RODS SHALL HAVE A PURE COPPER JACKET OF 0.010" MINIMUM THICKNESS PERMANANTLY BONDED, ELECTRICALLY AND MECHANICAL, TO THE STEEL CORE. ALL GROUND ROD CLAMPS SHALL MEET OR EXCEED U.L. SPECIFICATIONS AND SHALL BE STAMPED WITH THE WIRE SIZE AND GROUND ROD SIZE FOR WHICH THEY WERE DESIGNED. WHERE ONE OR MORE SECTIONS ARE CONNECTED TO OBTAIN AN ADEQUATE GROUND ROD, EACH SECTION SHALL BE U.L. LISTED, AND SHALL BE SPECIFICALLY DESIGNED TO BE A SECTIONAL GROUND ROD. ALL SECTIONAL GROUND ROD COUPLING DEVICES SHALL BE U.L. LISTED.
6. Some Power Companies Require this in meter socket
6. Details for electric Power Service shown are subject to change in order to comply with local Power Co. Standard Practice for such installations.

APPROVED BY FHWA, AUG. 7, 1975

FLORIDA DEPARTMENT OF TRANSPORTATION
TRAFFIC OPERATIONS

ELECTRIC POWER SERVICE INSTALLATION DETAILS

REVISIONS				INITIALS	DATES
DATE	INITIALS	DESCRIPTION	Designed by	CG	4-10-75
FHWA 1-8-76 8-21-75	CG	ADDED NOTE NO. 5; LIGHTNING ARRESTER NOTATION;	Checked by	RK	4-10-75
			Quantities by		
			Checked by		
			Supervised by	RVK	

Recommended for approval 4/9/75
by Donald E. Brazeale
Deputy Traffic Operations Engr.
Approved
by [illegible]
State Traffic Operations Engr.

DRAWING NO.	INDEX NO.
1 OF 1	17736

STATE PROJ. NO.	SHEET NO.

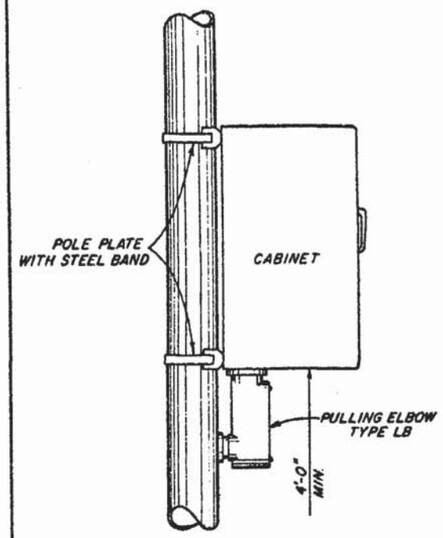

METAL POLE

No!

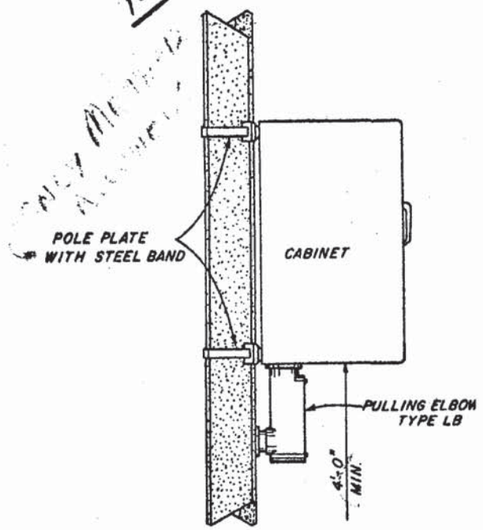

CONCRETE POLE

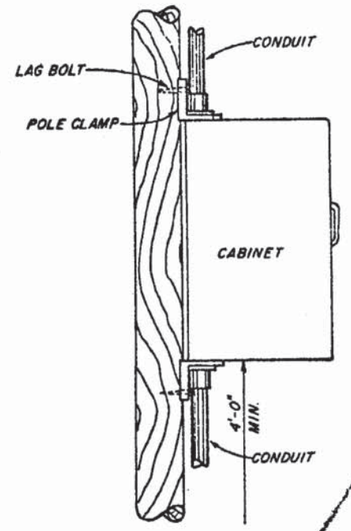

WOOD POLE

POLE MOUNT

NOTE NO. 1

NUMBER, SIZE AND ORIENTATION OF CONDUIT SWEEPS WILL VARY ACCORDING TO SITE CONDITIONS. ONE SPARE 2" PVC CONDUIT SHALL BE PROVIDED IN ALL BASES. THE SPARE SHALL EXIT IN THE DIRECTION OF THE CENTER REAR OF THE CABINET BASE.

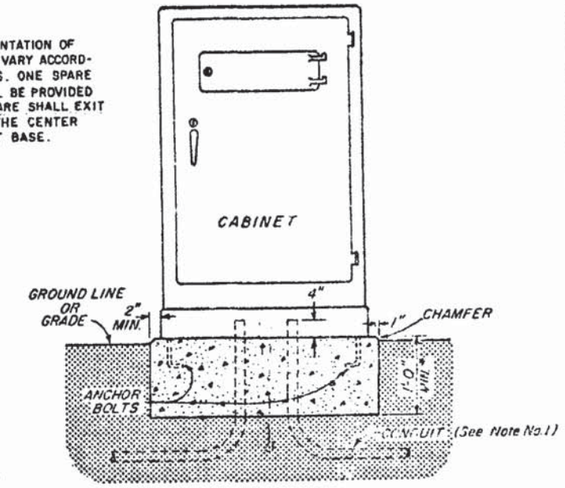

FRONT VIEW

Stay out 12" Min.

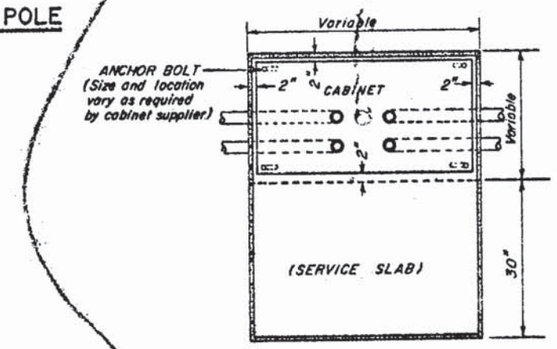

PLAN

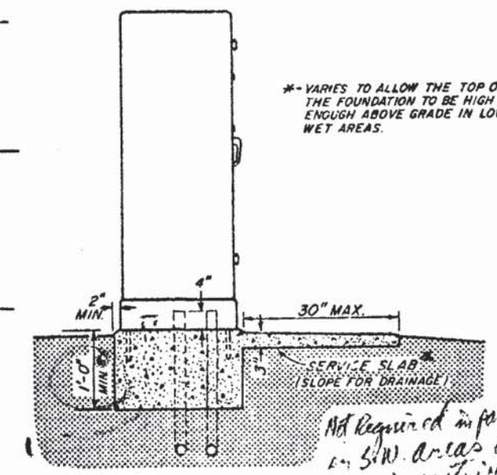

SIDE VIEW

Not Required in parcel or S/W areas or where R/W is restricted

NOTE : NO. 2

5/8" X 10' GROUND ROD (COPPERCLAD) TO BE LOCATED OUTSIDE THE CABINET FOUNDATION AND CONNECTED TO THE CABINET GROUND LUG BY A #4 BARE COPPER GROUND WIRE. TOP OF GROUND ROD TO BE A MINIMUM OF 6" BELOW GRADE.

BASE MOUNT

what is this for? check other States

1/2"

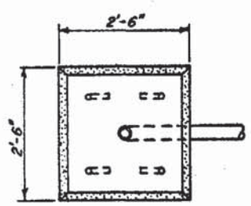

PLAN

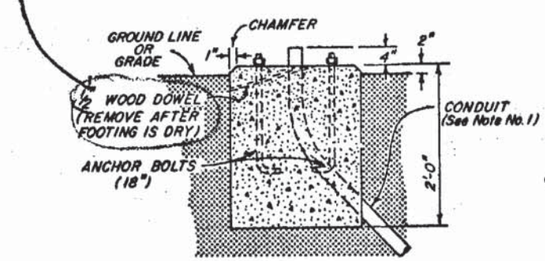

CONCRETE FOOTING FOR PEDESTALS

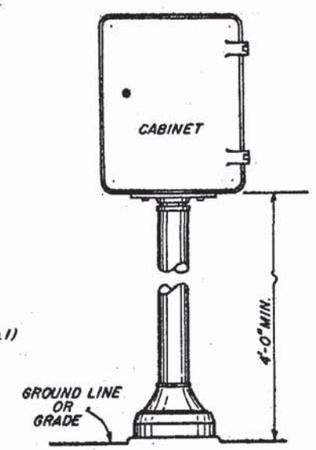

FRONT VIEW

PEDESTAL MOUNT

APPROVED BY FHWA JUNE 11, 1975

FLORIDA DEPARTMENT OF TRANSPORTATION
TRAFFIC OPERATIONS

CABINET INSTALLATION DETAILS

REVISIONS		
DATE	INITIALS	DESCRIPTION

	INITIALS	DATES
Designed by		
Checked by		
Quantities by		
Checked by		
Supervised by		

Recommended for approval 8/21/75
by Ronald E. Flagerty
Deputy Traffic Operations Engr.
Approved
by [illegible]
State Traffic Operations Engr.

DRAWING NO.	INDEX NO.
1 OF 1	17841

STATE PROJ. NO.	SHEET NO.

DRAWBRIDGE SIGNALS ARE MANDATORY AS DIRECTED BY SECTION 4E-14, 1971 MANUAL ON UNIFORM TRAFFIC CONTROL DEVICES. SINCE DRAWBRIDGE OPERATIONS COVER A WIDE RANGE OF TIME PERIODS BETWEEN OPENINGS, TWO TYPES OF SIGNALIZATION ARE APPLICABLE (TYPE 1 & TYPE 2).

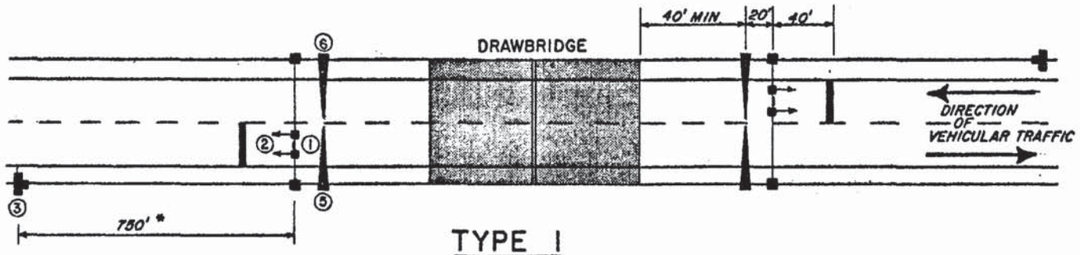

TYPE 1

TO BE USED WHERE BRIDGE OPERATORS ARE FULL TIME OR ON A DAILY BASIS

* FIELD CONDITIONS MAY REQUIRE ADJUSTMENT OF THIS STANDARD DISTANCE.

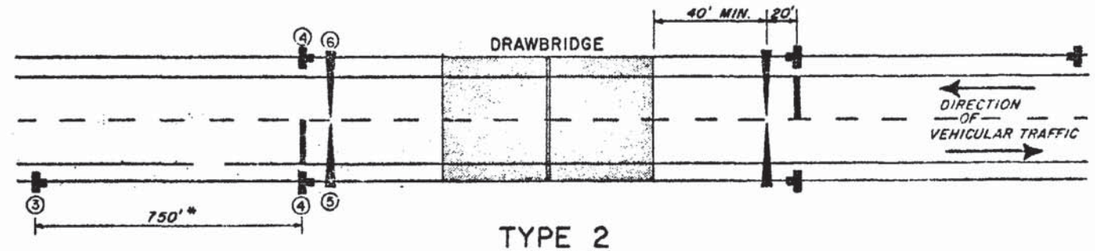

TYPE 2

TO BE USED WHERE TYPE 1 IS NOT APPLICABLE (USUALLY WHEN THE BRIDGE OPERATOR IS "ON CALL")

SEQUENCE CHART

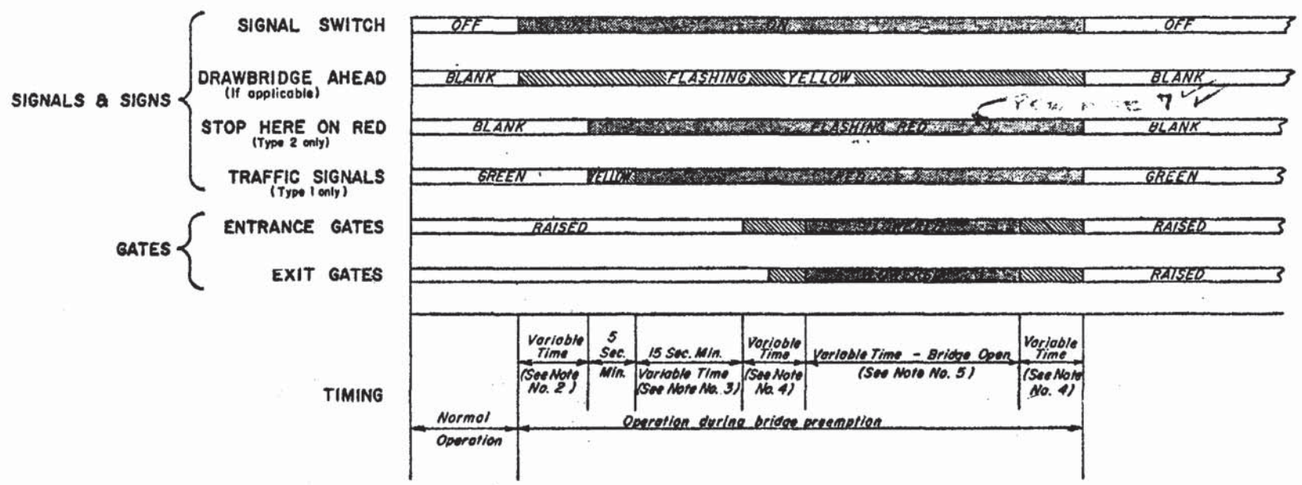

LEGEND

1 -- TRAFFIC SIGNALS } MONOTUBE SUPPORT MOUNTED
2 -- DRAWBRIDGE SIGN }
3 -- DRAWBRIDGE AHEAD SIGN } GROUND MOUNTED
4 -- STOP HERE ON RED SIGN }
5 -- ENTRANCE GATE
6 -- EXIT GATE

NOTES:

1. "STOP HERE ON RED" is omitted in Type 1 operation and "TRAFFIC SIGNALS" are omitted in Type 2 operation.
2. The time between beginning of flashing yellow on "Drawbridge Ahead" sign and the clearance of traffic signal to red, or beginning of flashing red, should not be less than the travel time of a passenger car, from the sign location to the stop line, traveling at the 85 percentile approach speed.
3. Beginning of operation of drawbridge gates shall not be less than 15 seconds after steady red or 20 seconds after flashing red (Actual time may be determined by the bridge tender).
4. Time of gate lowering and raising is dependant upon gate type.
5. Time of bridge opening is determined by the bridge tender.
6. Each gate shall be operated by a separate switch.
7. On each approach (Type 2), all four red signals shall be on the same two circuit flasher, with the two top signals on one circuit, and the two bottom signals on the alternately flashing circuit.

APPROVED BY FHWA JUNE 11, 1975

FLORIDA DEPARTMENT OF TRANSPORTATION
TRAFFIC OPERATIONS

DRAWBRIDGE SIGNING & SIGNALIZATION

REVISIONS		
DATE	INITIALS	DESCRIPTION

	INITIALS	DATES
Designed by	CG	4-7-75
Checked by	RK	4-7-75
Quantities by		
Checked by		
Supervised by	RVK	

Recommended for approval by Donald S. Hagadorn 6/12/75
Deputy Traffic Operations Engr.

Approved by E. L. Evans 6/12/75
State Traffic Operations Engr.

DRAWING NO. 1 OF 3

INDEX NO. 17890

Revise to look like

STATE PROJ. NO.	SHEET NO.

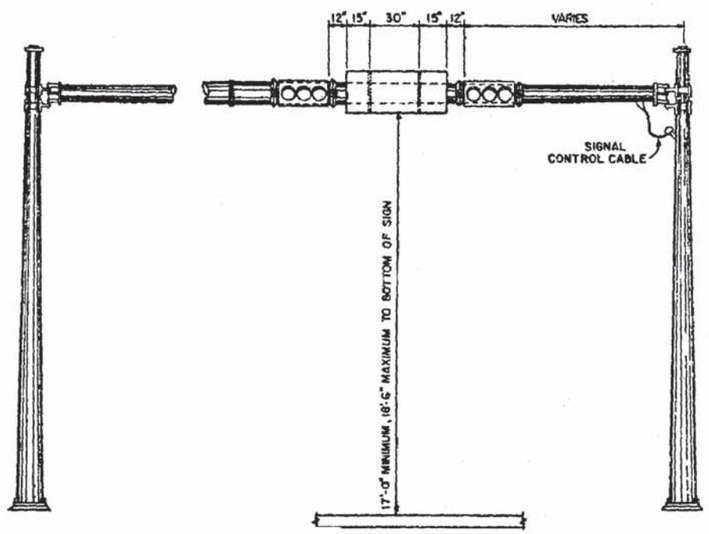

FIGURE - A

MONOTUBE SUPPORT MOUNTING

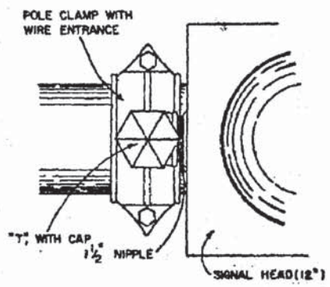

FIGURE - C

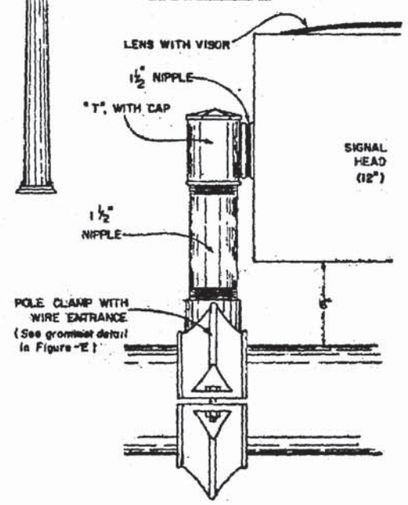

FIGURE - D

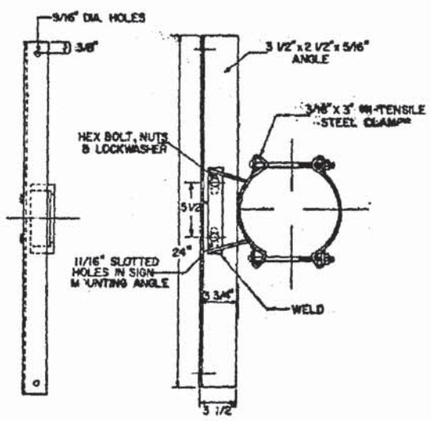

SIGN PANEL MOUNTING ASSEMBLY

FIGURE - B

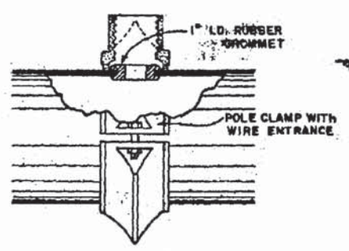

FIGURE - E

SIGNAL HEAD MOUNTING ASSEMBLY

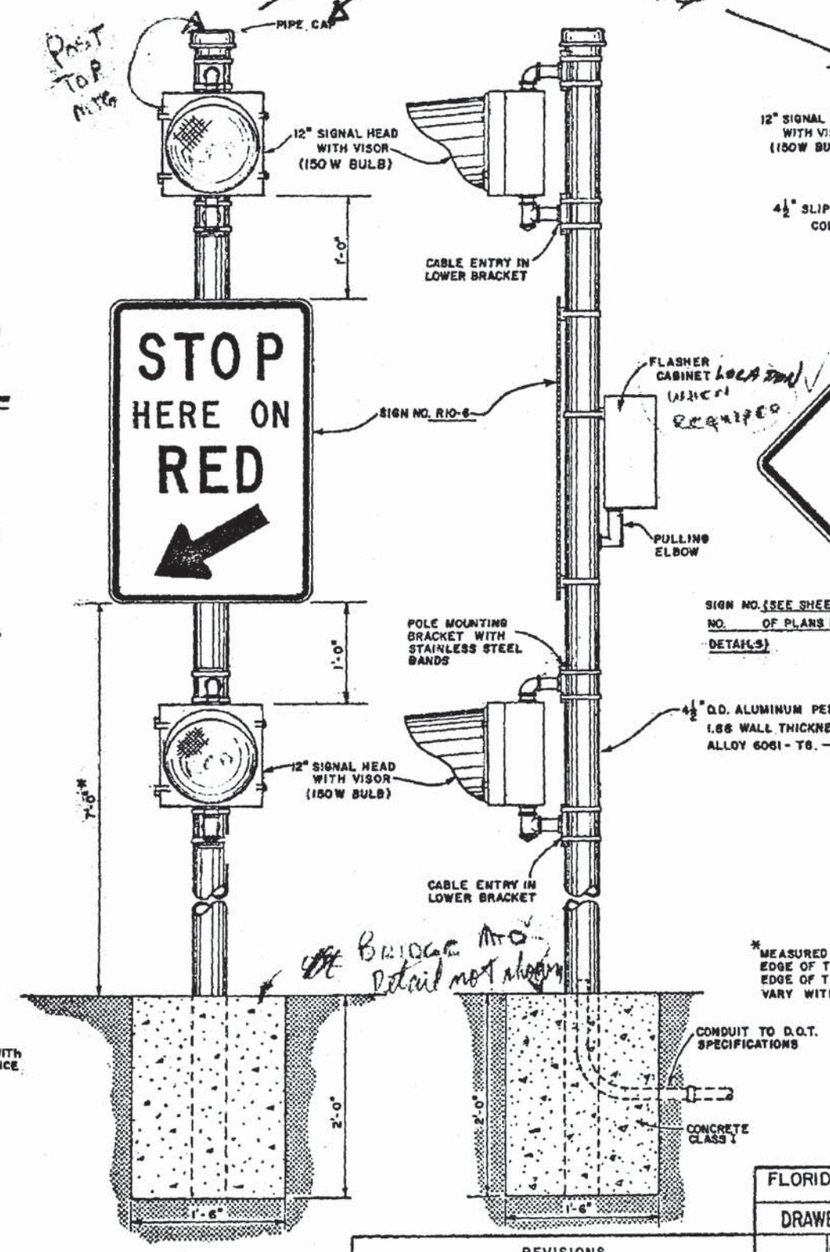

FIGURE - F

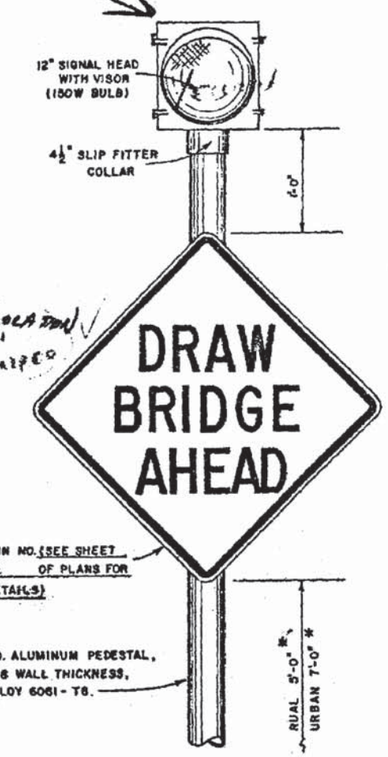

FIGURE - G

*MEASURED FROM THE BOTTOM OF THE SIGN TO THE NEAR EDGE OF THE PAVEMENT.. HORIZONTAL DISTANCE BETWEEN EDGE OF THE PAVEMENT AND INSIDE EDGE OF SIGN WILL VARY WITH CONDITION AT JOB SITE.

APPROVED BY FHWA JUNE 11, 1975

FLORIDA DEPARTMENT OF TRANSPORTATION
TRAFFIC OPERATIONS

DRAWBRIDGE SIGNING & SIGNALIZATION

REVISIONS		
DATE	INITIALS	DESCRIPTION

	INITIALS	DATES
Designed by	CG	4-7-75
Checked by	RK	4-7-75
Quantities by		
Checked by		
Supervised by	RVK	

Recommended for approval by [signature] 6/9/76 Deputy Traffic Operations Engr.

Approved by [signature] 6/11/75 State Traffic Operations Engr.

DRAWING NO.	INDEX NO.
2 OF 3	17890

STATE PROJ. NO.	SHEET NO.

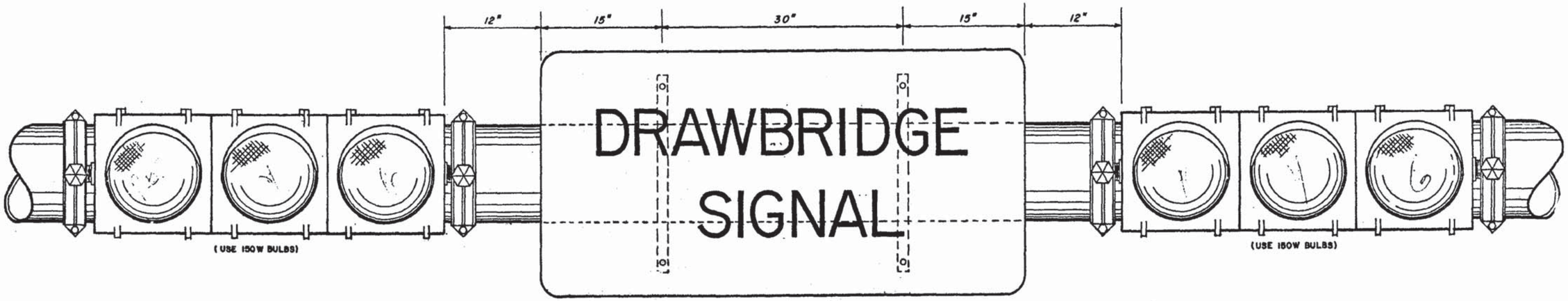

~~SIGN NO. 2-24~~
2'-6" X 5'-0"
2" BORDER - 4" RADIUS – 1' Series C letters
~~REQUIRED~~
BLACK ~~ON WHITE~~ opaque lettering + borders reflectorized yellow background

~~SEE SHEET NO. 2 OF PLANS FOR DETAILS~~
TO BE USED WITH TYPE 1 OPERATION, AS SHOWN ON PREVIOUS SHEET

MONOTUBE SUPPORT MOUNTING

3" RED REFLECTORS ON RED NON-REFLECTIVE BACKGROUND.

45°, 6" REFLECTORIZED (SILVER WHITE #1, & RED) SHEETING TO CONFORM TO SPECIFICATIONS IN THE MANUAL ON TRAFFIC CONTROLS AND SAFE PRACTICES FOR STREET AND HIGHWAY CONSTRUCTION MAINTENACE AND UTILITY OPERATIONS, FLORIDA DEPARTMENT OF TRANSPORTATION, JUNE 1972.

RED DOUBLE LENSES, TURN SIGNAL LAMP (CLASS "A"-12 VOLT SECONDARY, CAPACITY 60 VOLT AMPS.)

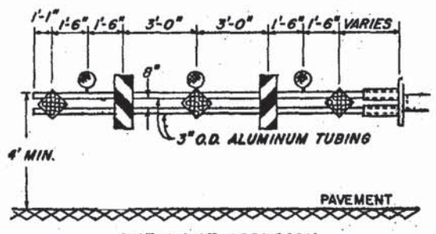

ONE LANE APPROACH

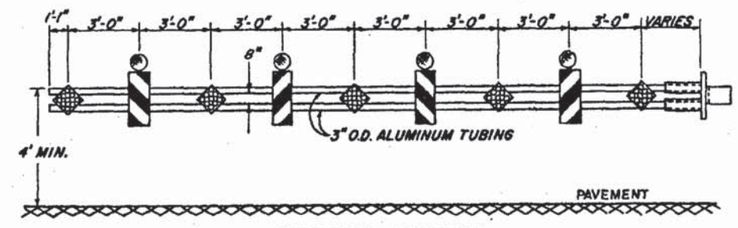

TWO LANE APPROACH

GATE ARM DETAIL

APPROVED BY FHWA JUNE 11, 1975

FLORIDA DEPARTMENT OF TRANSPORTATION
TRAFFIC OPERATIONS

DRAWBRIDGE SIGNING & SIGNALIZATION

REVISIONS		
DATE	INITIALS	DESCRIPTION
12/22/75	CG	DELETED NOTE "AVAILABLE GAINESVILLE WAREHOUSE"

	INITIALS	DATES
Designed by	CG	4-7-75
Checked by	RK	4-7-75
Quantities by		
Checked by		
Supervised by	RVK	

Recommended for approval by Donald E. Hogable 4/25/75
Deputy Traffic Operations Engr.
Approved by E. L. Rumbaugh
State Traffic Operations Engr.

DRAWING NO. 3 OF 3
INDEX NO. 17890

STATE PROJ. NO.	SHEET NO.

PASSIVE STATE
(No Train Present)

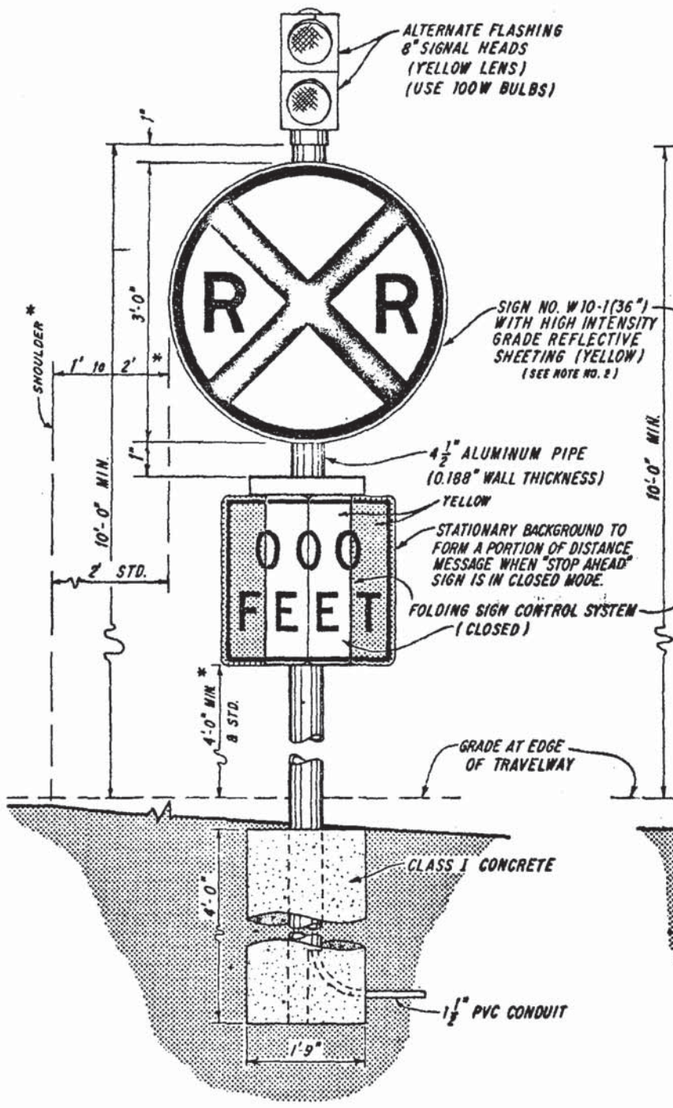

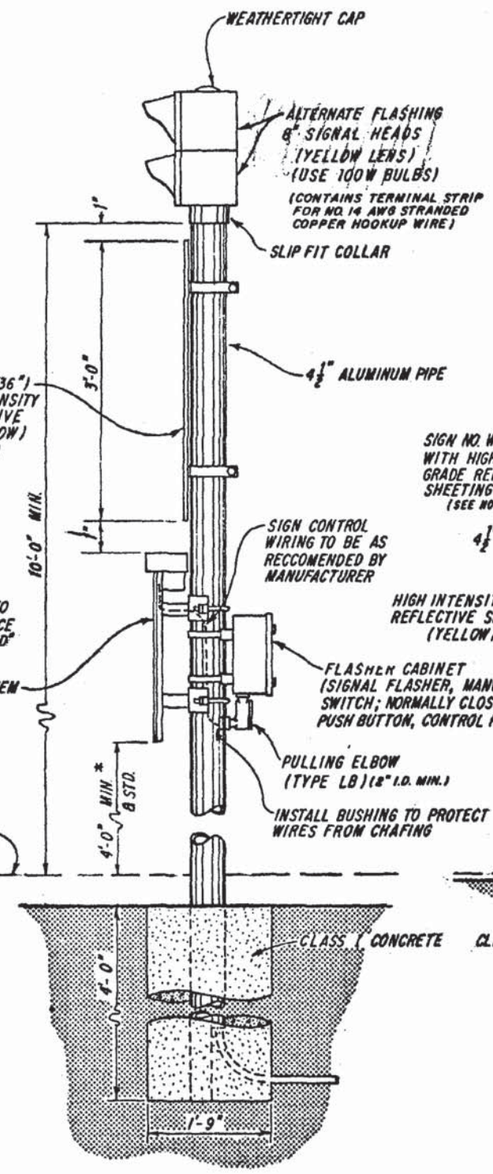

ACTIVE STATE
(Train Present)

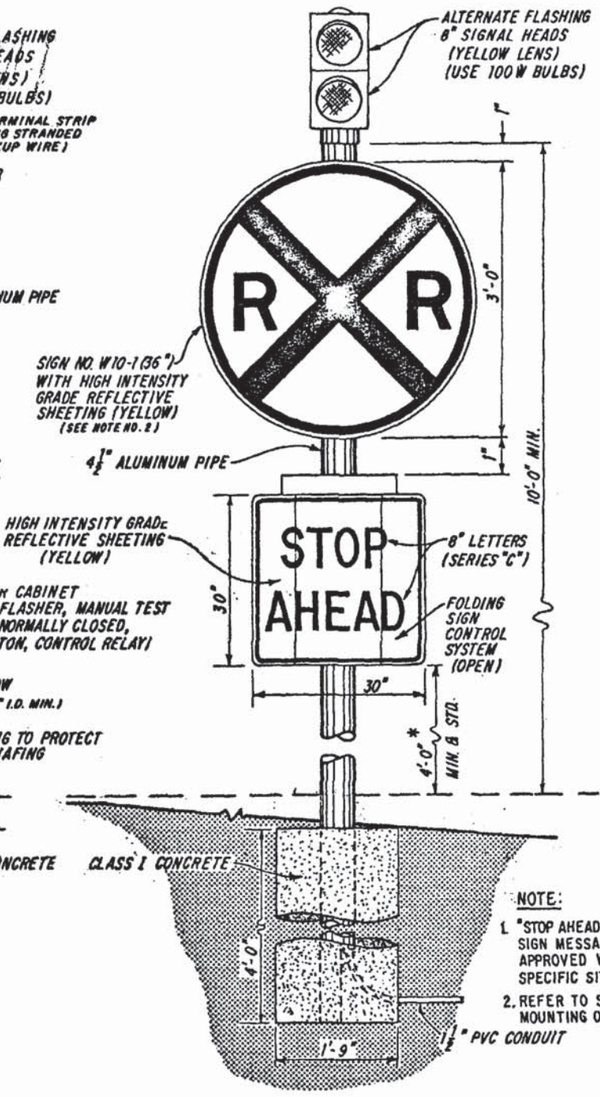

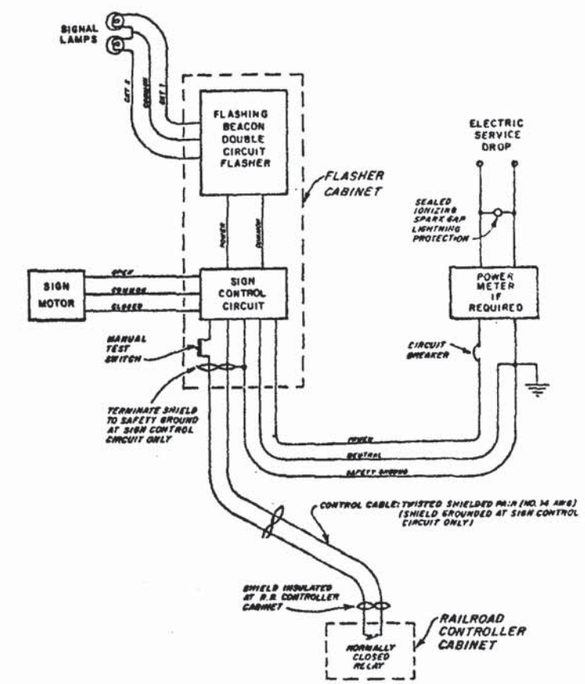

FUNCTIONAL BLOCK DIAGRAM
(TYPICAL)

NOTE:

1. "STOP AHEAD" IS STANDARD AND PREFERRED SIGN MESSAGE. ANOTHER MESSAGE MAY BE APPROVED WHEN APPROPRIATE FOR SPECIFIC SITUATIONS.
2. REFER TO STANDARD INDEX NO. 10960 FOR MOUNTING OF SIGNS ON POST.

* REFER TO CASE I, II or III IN STANDARD INDEX NO. 17302A.

APPROVED BY FHWA FEBRUARY 24, 1976

FLORIDA DEPARTMENT OF TRANSPORTATION
TRAFFIC OPERATIONS

ADVANCE WARNING FOR R.R. CROSSING

REVISIONS		
DATE	INITIALS	DESCRIPTION

	INITIALS	DATES
Designed by	CG	12/12/75
Checked by	REM-RVK	12/12/75
Quantities by		
Checked by		
Supervised by	REM	

Recommended for approval by R.E. Maxwell 2-24-76 Deputy Traffic Operations Engr.

Approved by E.O. Lindemann 2-24-76 State Traffic Operations Engr.

DRAWING NO. 1 OF 2

INDEX NO. 17881

STATE PROJ. NO.	SHEET NO.

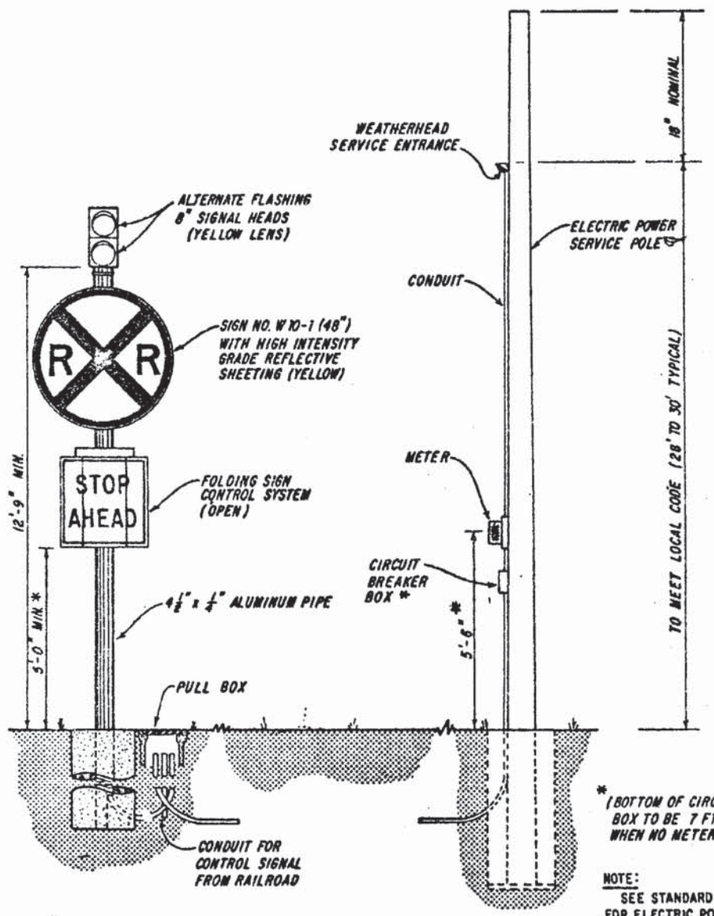

*(BOTTOM OF CIRCUIT BREAKER BOX TO BE 7 FT. ABOVE GRADE WHEN NO METER IS USED)

NOTE:
SEE STANDARD INDEX NO. 17736 FOR ELECTRIC POWER SERVICE INSTALLATION DETAILS.

*REFER TO CASE I, II, or III IN STANDARD INDEX NO. 17302A.

TYPICAL POWER SERVICE

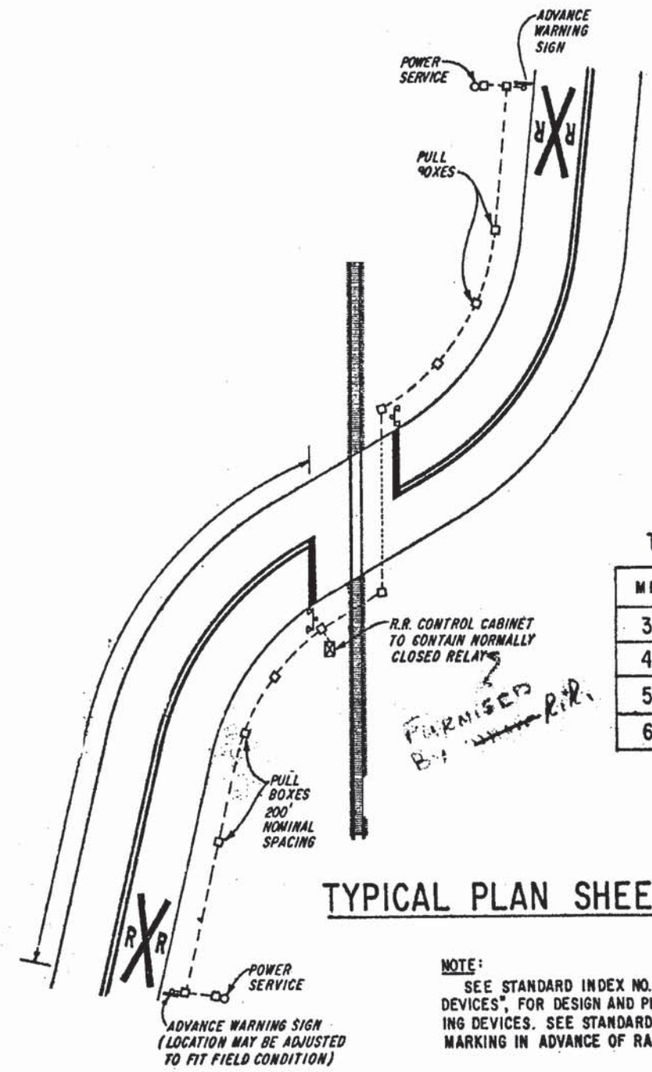

TABLE OF DIMENSION "X"

MPH	"X" (FEET) DESIRABLE	"X" (FEET) MINIMUM
30	200	200
40	300	275
50	450	350
60	650	475

TYPICAL PLAN SHEET

NOTE:
SEE STANDARD INDEX NO. GPD-01, "GRADE CROSSING WARNING DEVICES", FOR DESIGN AND PLACEMENT OF GRADE CROSSING WARNING DEVICES. SEE STANDARD INDEX NO. 17346A FOR PAVEMENT MARKING IN ADVANCE OF RAILROAD GRADE CROSSINGS.

APPROVED BY FHWAY FEBRUARY 24, 1976

FLORIDA DEPARTMENT OF TRANSPORTATION
TRAFFIC OPERATIONS

ADVANCE WARNING FOR R.R. CROSSING

REVISIONS		
DATE	INITIALS	DESCRIPTION

	INITIALS	DATES
Designed by	CG	12/15/75
Checked by	REM-RVK	12/16/75
Quantities by		
Checked by		
Supervised by	REM	

Recommended for approval by [signature] 2/24/76 Deputy Traffic Operations Engr.

Approved by [signature] 2/24/76 State Traffic Operations Engr.

DRAWING NO. 2 OF 2 | INDEX NO. 17881

STATE PROJ. NO.	SHEET NO.

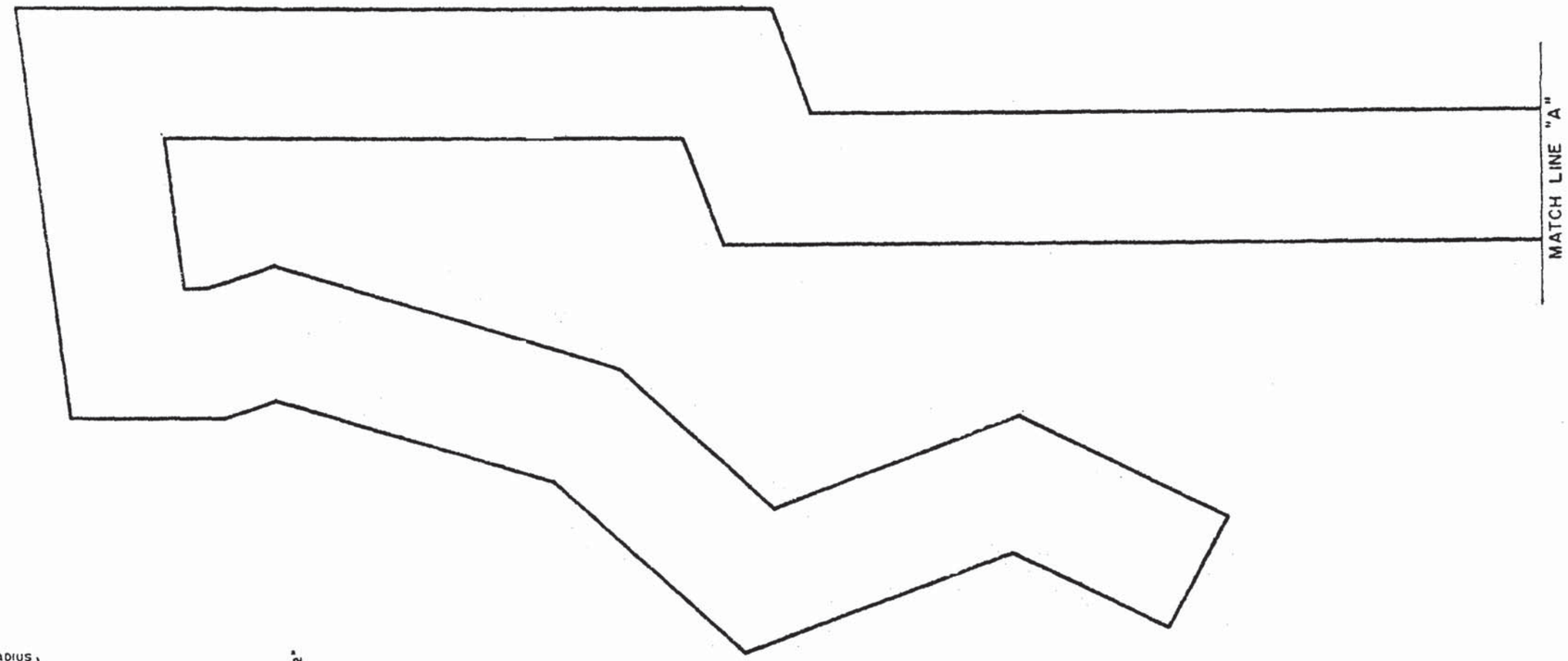

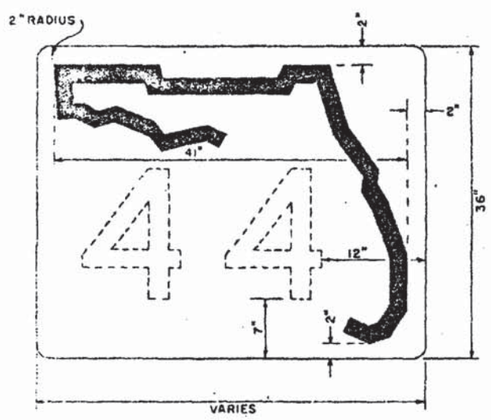

NOTE:

(1.) FLORIDA SHIELD SHALL BE BLACK OPAQUE

(2.) LEGEND SHALL BE 15" CAPS, BLACK OPAQUE

(3.) BACKGROUND SHALL BE REFLECTIVE WHITE

(4.) LENGTH OF PANEL WILL VARIE WITH LEGEND

APPROVED BY F.H.W.A. 4-15-75

FLORIDA DEPARTMENT OF TRANSPORTATION
TRAFFIC OPERATIONS

36" FLORIDA SHIELD

	INITIALS	DATES
DETAILED BY	G.W.	11-11-74
CHECKED BY	K.R.	11-74
QUANTITIES BY		
CHECKED BY		
SUPERVISED BY	K.R.	11-74

RECOMMENDED FOR APPROVAL BY Donald L. Morgan 4-10-75 DEPUTY TRAFFIC OPERATIONS ENGR.

APPROVED BY E. L. Crum 4-10-75 STATE TRAFFIC OPERATIONS ENGR.

DRAWING NO. 1 of 2

INDEX NO. 17317

REVISIONS

DATE	INITIALS	DESCRIPTION

APPROVED BY F.H.W.A. 4-15-75

FLORIDA DEPARTMENT OF TRANSPORTATION
TRAFFIC OPERATIONS

36" FLORIDA SHIELD

REVISIONS		
DATE	INITIALS	DESCRIPTION

	INITIALS	DATES
DETAILED BY	G.W.	11-11-74
CHECKED BY	K.R.	11-74
QUANTITIES BY		
CHECKED BY		
SUPERVISED BY	K.R.	11-74

RECOMMENDED FOR APPROVAL
BY Donald E. Hagada 2/25/75
DEPUTY TRAFFIC OPERATIONS ENGR.

APPROVED
BY E. L. Dunn 2/1/75
STATE TRAFFIC OPERATIONS ENGR.

DRAWING NO. 2 of 2

INDEX NO. 17317

STATE PROJ. NO.	SHEET NO.

FOR FREEWAY USE

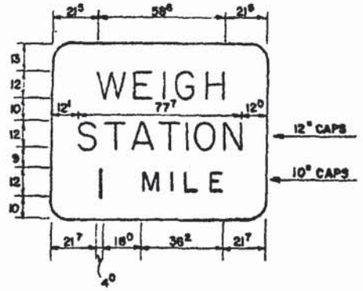

SIGN NO. 1
8'-6" X 6'-6"
2" BORDER - 9" RAD.

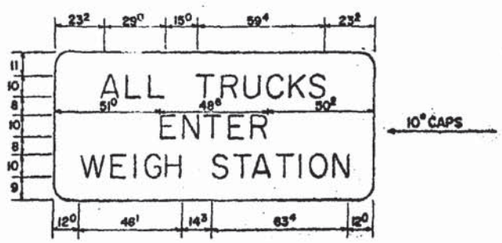

SIGN NO. 2
12'-6" X 5'-6"
2" BORDER - 9" RAD.

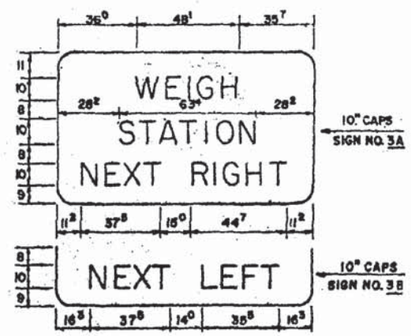

10'-0" x 5'-6"
2" BOR-9" RAD.

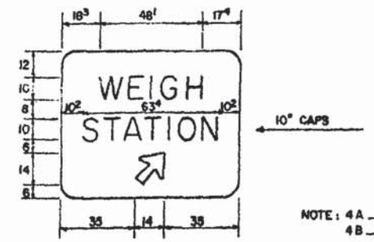

SIGN NO. 4
7'-0" X 5'-6"
2" BORDER - 6" RAD.

NOTE: 4A __ RIGHT ARROW
4B __ LEFT ARROW

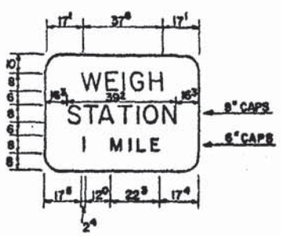

SIGN NO. 5
6'-0" X 4'-6"
2" BORDER - 6" RAD.

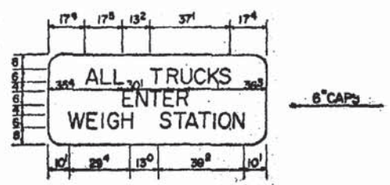

SIGN NO. 6
8'-6" X 3'-6"
2" BORDER - 6" RAD.

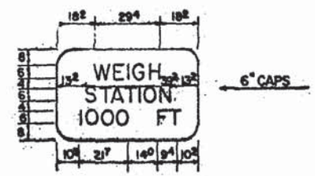

SIGN NO. 7
5'-6" X 3'-6"
2" BORDER - 6" RAD.

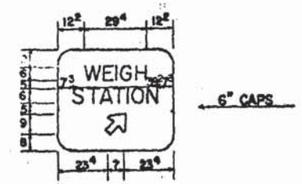

SIGN NO. 8
4'-6" X 4'-0"
2" BORDER - 6" RAD.

NOTE: 8A __ RIGHT ARROW
8B __ LEFT ARROW

FOR OTHER THAN FREEWAY USE

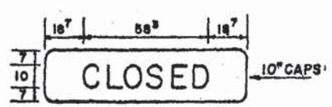

SIGN NO. 13
8'-0" x 2'-0"
2" BOR. 3" RAD

NOTE
SIGN NO. 13 TO BE USED WITH SIGNS NO. 3A, 3B, 11A AND 11B.

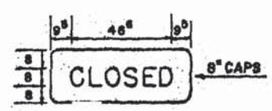

SIGN NO. 14
5'-6" x 2'-0"
2" BOR. 3" RAD.

NOTE
SIGN NO. 14 TO BE USED WITH SIGN NO. 7

NOTE:

ALL SIGNS TO HAVE GREEN REFLECTORIZED BACKGROUND
WITH WHITE LEGEND AND BORDER
EXCEPT SIGNS NOS. 2 & 6
WHICH SHALL HAVE WHITE BACKGROUND
WITH BLACK LEGEND AND BORDER

ALL DIMENSIONS SHOWN ARE IN
INCHES AND EIGHTHS

REVISIONS		
DATE	INITIALS	DESCRIPTION

APPROVED BY F.H.W.A. 7-31-75

FLORIDA DEPARTMENT OF TRANSPORTATION
TRAFFIC OPERATIONS

TYPICAL SIGNING FOR
TRUCK WEIGH AND INSPECTION STATIONS

	INITIALS	DATES
DETAILED BY	M.F.M.	1-75
CHECKED BY	K.R.	1-75
QUANTITIES BY		
CHECKED BY		
SUPERVISED BY	K.R.	1-75

RECOMMENDED FOR APPROVAL
BY Donald E. Hagadorn
DEPUTY TRAFFIC OPERATIONS ENGR.

APPROVED
BY E. L. Chamberlain 7/22/75
STATE TRAFFIC OPERATIONS ENGR.

DRAWING NO. 1 of 3

INDEX NO. 17328A

STATE PROJ. NO.	SHEET NO.

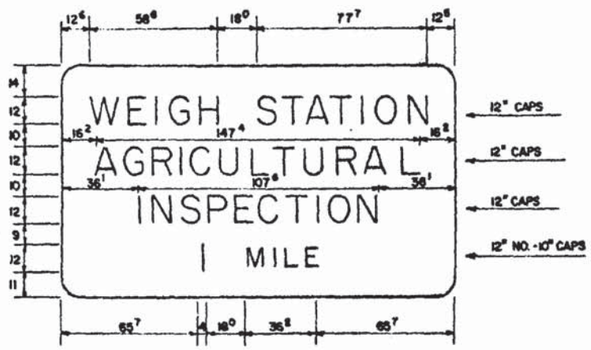

SIGN NO. 9
15'-0" X 8'-6"
2" BORDER - 9" RAD.

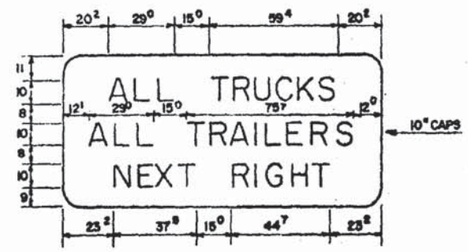

SIGN NO. 10A
12'-0" X 5'-6"
2" BORDER - 9" RAD

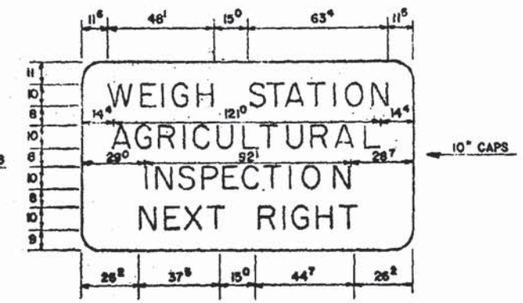

SIGN NO. 11A
12'-6" X 7'-0"
2" BORDER - 9" RAD.

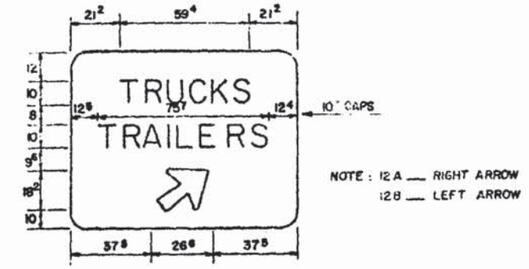

NOTE : 12 A — RIGHT ARROW
12 B — LEFT ARROW

SIGN NO. 12
8'-6" X 6'-6"
2" BORDER - 9" RAD.

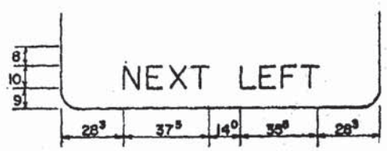

SIGN NO. 10 B
12'-0" X 5'-6"
2" BORDER - 9" RAD.

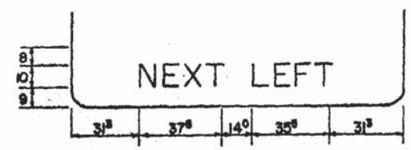

SIGN NO. 11 B
12'-6" X 7'-0"
2" BORDER - 9" RAD.

NOTE

ALL SIGNS SHALL HAVE GREEN REFLECTORIZED BACKGROUND WITH WHITE LEGEND AND BORDER, EXCEPT SIGNS 10A & 10B WHICH SHALL HAVE A WHITE BACKGROUND WITH BLACK LEGEND AND BORDER.

ALL DIMENSIONS SHOWN ARE IN INCHES AND EIGHTS

APPROVED BY F.H.W.A. 7-31-75

FLORIDA DEPARTMENT OF TRANSPORTATION
TRAFFIC OPERATIONS

TYPICAL SIGNING FOR
TRUCK WEIGH AND INSPECTION STATIONS

	INITIALS	DATES
DETAILED BY	M.F.M.	1-75
CHECKED BY	K.R.	1-75
QUANTITIES BY		
CHECKED BY		
SUPERVISED BY	K.R.	1-75

RECOMMENDED FOR APPROVAL BY Ronald E. Maggio DEPUTY TRAFFIC OPERATIONS ENGR.

APPROVED BY [illegible] STATE TRAFFIC OPERATIONS ENGR.

DRAWING NO 2 of 3

INDEX NO. 17328A

REVISIONS		
DATE	INITIALS	DESCRIPTION

STATE PROJ. NO.	SHEET NO.

4-LANE DIVIDED INSTALLATION

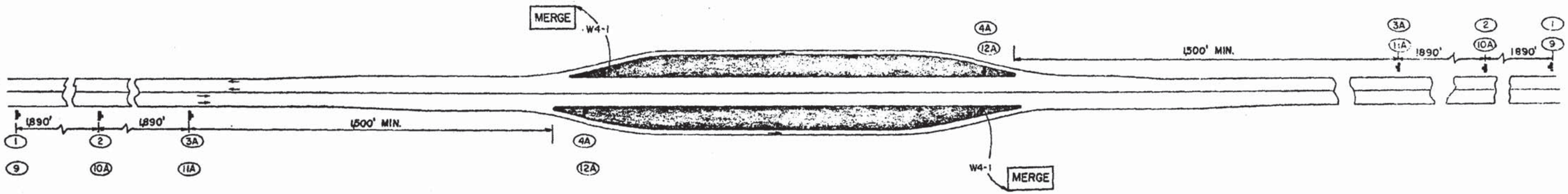

2-LANE INSTALLATION

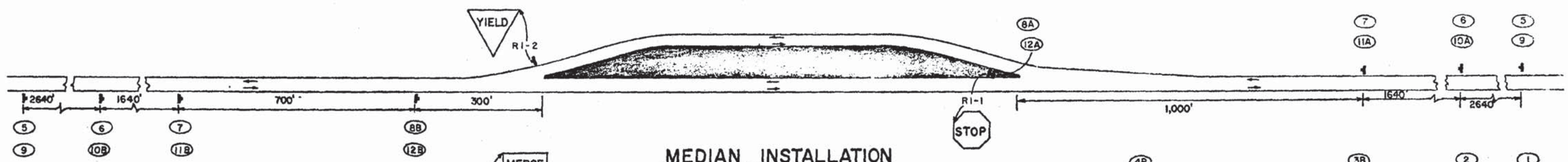

MEDIAN INSTALLATION

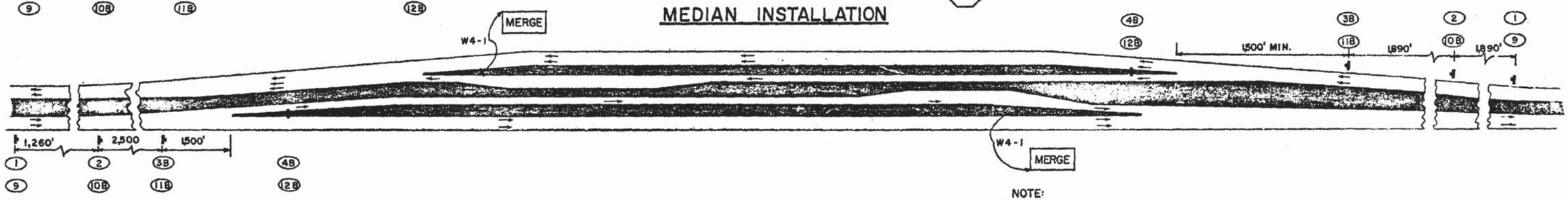

NOTE:

1) ALL SIGNS TO HAVE GREEN REFLECTORIZED BACKGROUND WITH WHITE LEGEND AND BORDER EXCEPT SIGNS NOS. R1-1, R1-2, & W4-1

APPROVED BY F.H.W.A. 7-31-75

FLORIDA DEPARTMENT OF TRANSPORTATION
TRAFFIC OPERATIONS

TYPICAL SIGNING FOR
TRUCK WEIGH AND INSPECTION STATIONS

REVISIONS		
DATE	INITIALS	DESCRIPTION

	INITIALS	DATES
DETAILED BY	M.F.M.	1-75
CHECKED BY	K.R.	1-75
QUANTITIES BY		
CHECKED BY		
SUPERVISED BY	K.R.	1-75

RECOMMENDED FOR APPROVAL
BY Lowell F. Wood
DEPUTY TRAFFIC OPERATIONS ENG.

APPROVED
BY [illegible]
STATE TRAFFIC OPERATIONS ENGR.

DRAWING NO. 3 of 3

INDEX NO. 17328A

STATE PROJ. NO.	SHEET NO.

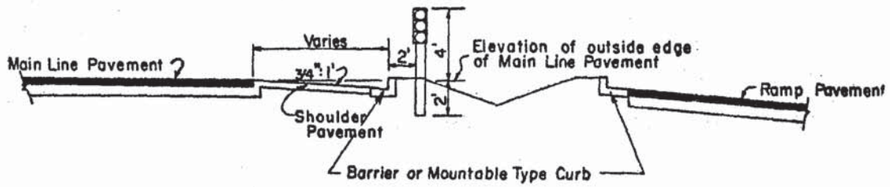

NOSE SECTION AT RAMP TERMINALS

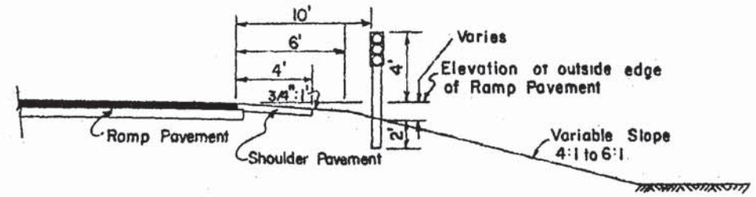

ALONG RAMP ~ SIDE SLOPES 4:1 OR FLATTER

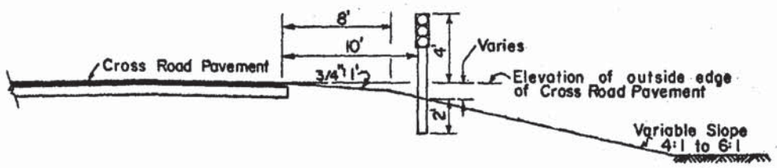

ALONG CROSS ROADS ~ SIDE SLOPES 4:1 OR FLATTER

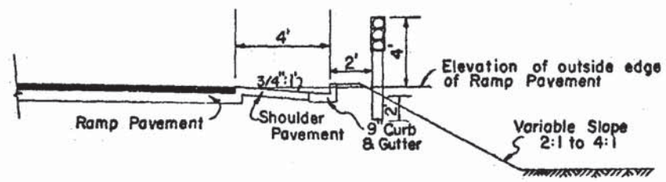

ALONG RAMP ~ SIDE SLOPES STEEPER THAN 4:1

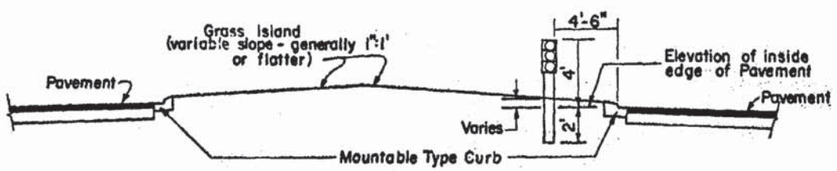

AT CHANNELIZED CONNECTIONS TO CROSS ROADS

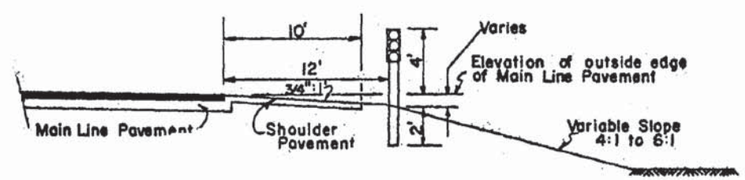

ALONG MAIN LINE ~ SIDE SLOPES 4:1 OR FLATTER

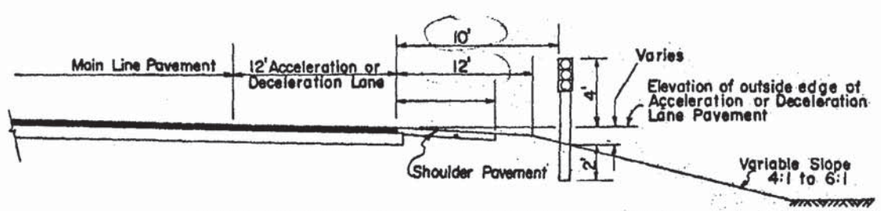

ALONG MAIN LINE WITH ACCELERATION OR DECELERATION LANE SIDE SLOPES 4:1 OR FLATTER

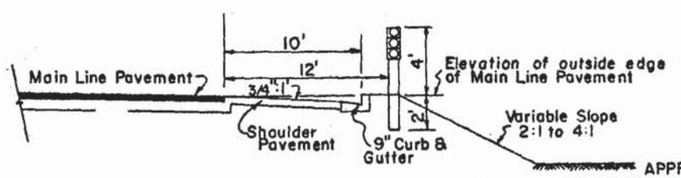

ALONG MAIN LINE ~ SIDE SLOPES STEEPER THAN 4:1

APPROVED BY F.H.W.A. 6-9-71

Notes:

1. The typical sections shown hereon serve as a guide for use in locating the delineators and in estimating the lengths of columns required under various roadside conditions
2. It shall be the Contractor's responsibility to determine the length of the delineator supports in field prior to fabrication.

REVISIONS		
DATE	INITIALS	DESCRIPTION
6-8-66		INDEX NO. CHANGE 5083-A TO 17336

FLORIDA DEPARTMENT OF TRANSPORTATION
TRAFFIC OPERATIONS

TYPICAL SECTIONS FOR ROADWAY DELINEATORS

	INITIALS	DATES
DETAILED BY	L.H.	4-11-63
CHECKED BY	E.L.K.	4-11-63
QUANTITIES BY		
CHECKED BY		
SUPERVISED BY		

RECOMMENDED FOR APPROVAL
BY _____
DEPUTY TRAFFIC OPERATIONS ENGR

APPROVED
BY _____
STATE TRAFFIC OPERATIONS ENGR

DRAWING NO. 1 of 1 | INDEX NO. 17336

STATE PROJ. NO.	SHEET NO.

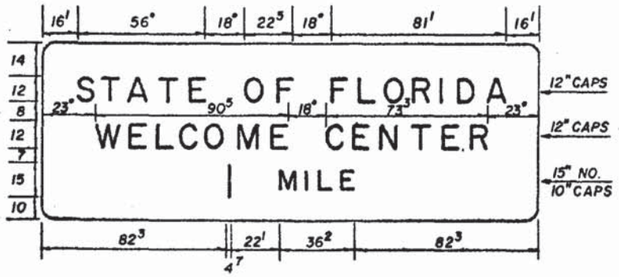

SIGN NO. 1
6'-6" x 19'-0"
3" BOR. 9" RAD.
BLUE REFL. BACKGROUND
WHITE REFL. LEGEND & BORDER

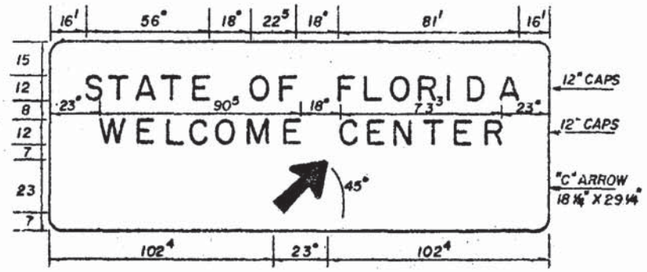

SIGN NO. 2
7'-0" x 19'-0"
3" BOR. 9" RAD.
BLUE REFL. BACKGROUND
WHITE REFL. LEGEND & BORDER

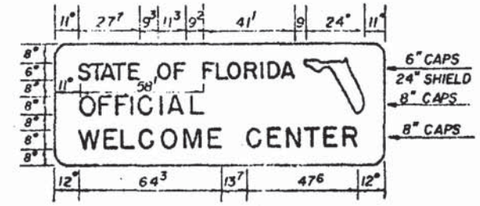

SIGN NO. 4
4'-6" x 12'-6"
2" BOR. 9" RAD.
BLUE REFL. BACKGROUND
WHITE REFL. LEGEND & BORDER
ORANGE REFL. STATE SILHOUETTE

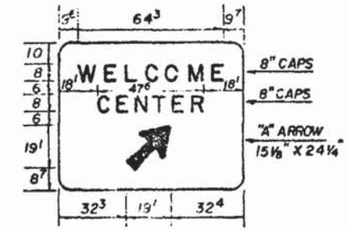

SIGN NO. 3
5'-6" x 7'-0"
2" BOR. 9" RAD.
BLUE REFL. BACKGROUND
WHITE REFL. LEGEND & BORDER

NOTE

DISTANCE MESSAGE OF 1/2 MILE MAY BE USED TO KEEP THIS SIGN WITHIN THE STATE LINE.

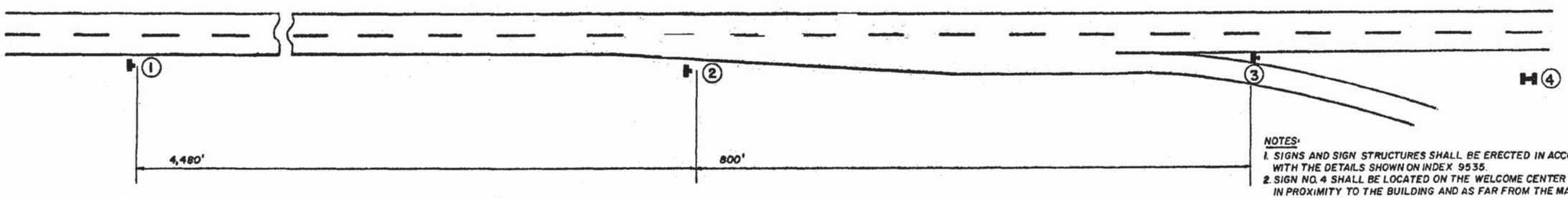

NOTES:

1. SIGNS AND SIGN STRUCTURES SHALL BE ERECTED IN ACCORDANCE WITH THE DETAILS SHOWN ON INDEX 9535.
2. SIGN NO. 4 SHALL BE LOCATED ON THE WELCOME CENTER GROUNDS IN PROXIMITY TO THE BUILDING AND AS FAR FROM THE MAIN LINE ROADWAYS AS POSSIBLE (2 SIGNS BACK TO BACK).
3. SIGN NO. 1, 2 & 3 SHALL BE LOCATED ON LIMITED ACCESS HIGHWAYS ONLY.
4. DETAIL OF FLORIDA SYMBOL IS AVAILABLE ON REQUEST FROM TRAFFIC OPERATIONS OFFICE OF D.O.T.

NOTE:

ROADWAY NOT DRAWN TO SCALE

DISTANCES SHOWN ARE APPROPRIATE FOR ADEQUATE DRIVER COMMUNICATION BUT MAY BE ALTERED SLIGHTLY IF FIELD CONDITIONS REQUIRE.

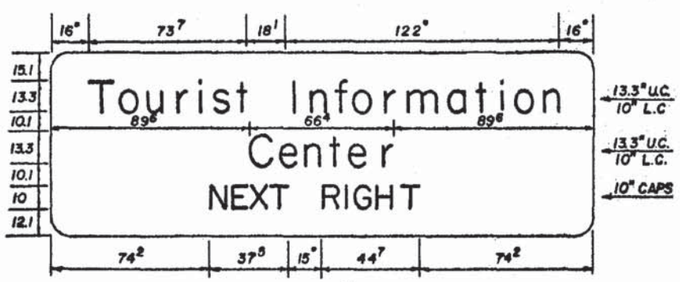

SIGN NO. 5
7'-0" x 20'-6"
3" BOR. 9" RAD.

NOTE: SIGN SHALL HAVE BLUE REFLECTORIZED BACKGROUND WITH WHITE REFLECTORIZED LEGEND & BORDER. SIGN NO. 5 SHALL BE USED AS A SUPPLEMENTAL GUIDE SIGN AT INTERCHANGES WHICH HAVE A TOURIST INFORMATION CENTER APPROVED FOR SUCH SIGNING (LOCATE HALF-WAY BETWEEN NORMAL GUIDE SIGNS)

FOR LIMITED ACCESS HIGHWAYS

REVISIONS		
DATE	INITIALS	DESCRIPTION

APPROVED BY F.H.W.A. 8-1-75

FLORIDA DEPARTMENT OF TRANSPORTATION
TRAFFIC OPERATIONS

TYPICAL WELCOME CENTER SIGNING

	INITIALS	DATES
DETAILED BY	W.B.	6-75
CHECKED BY		
QUANTITIES BY		
CHECKED BY		
SUPERVISED BY	K.R.	6-75

RECOMMENDED FOR APPROVAL
BY P. E. Mogadec 7/31/75
DEPUTY TRAFFIC OPERATIONS ENGR

APPROVED
BY [illegible] 7/31/75
STATE TRAFFIC OPERATIONS ENGR

DRAWING NO. 1 OF 2

INDEX NO. 17351

STATE PROJ. NO.	SHEET NO.

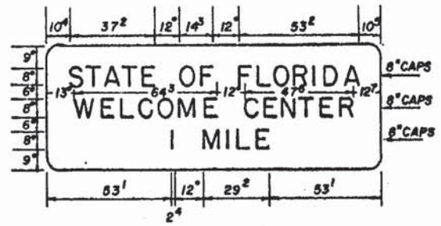

SIGN NO. 7A
4'-6" x 12'-6"
2" BOR.-9" RAD.
BLUE REFL. BACKGROUND
WHITE REFL. LEGEND & BORDER

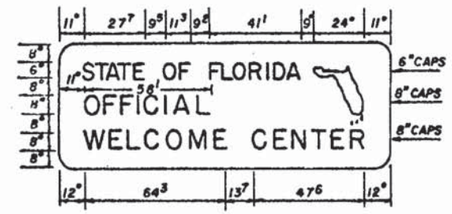

SIGN NO. 4
4'-6" x 12'-6"
2" BOR-9" RAD
BLUE REFL. BACKGROUND
WHITE REFL. LEGEND & BORDER
ORANGE REFL. STATE SILHOUETTE

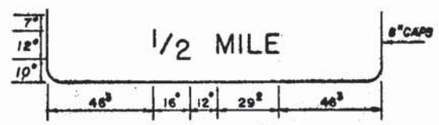

SIGN NO. 7B
5'-0" x 12'-6"
2" BOR.-9" RAD.

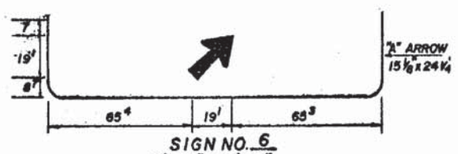

SIGN NO. 6
5'-6" x 12'-6"
2" BOR.-9" RAD.

NOTES

(1) SIGNS AND SIGN STRUCTURES SHALL BE ERECTED IN ACCORDANCE WITH THE DETAILS SHOWN ON INDEX 9535.

(2) SIGN NO. 4 SHALL BE LOCATED ON THE WELCOME CENTER GROUNDS IN PROXIMITY TO THE BUILDING AND AS FAR FROM THE MAIN LINE ROADWAYS AS POSSIBLE (2 SIGNS BACK TO BACK)

(3) DETAIL OF FLORIDA SYMBOL IS AVAILABLE ON REQUEST FROM TRAFFIC OPERATIONS OFFICE OF D.O.T.

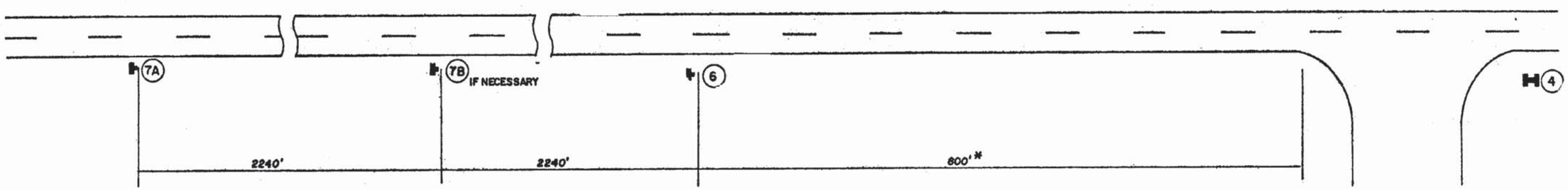

*800' MAXIMUM FOR RURAL CONDITIONS
50' MINIMUM FOR CONGESTED AREAS

NOTE
ROADWAY NOT DRAWN TO SCALE

NOTE
EITHER ONE BUT NOT BOTH OF SIGNS 7A OR 7B SHOULD BE USED DEPENDING ON SPEED, ROADSIDE DEVELOPMENT & GEOMETRIC CONDITIONS.

FOR PRIMARY HIGHWAYS

FLORIDA DEPARTMENT OF TRANSPORTATION
TRAFFIC OPERATIONS

TYPICAL WELCOME CENTER SIGNING

REVISIONS		
DATE	INITIALS	DESCRIPTION

	INITIALS	DATES
DETAILED BY	W.B.	6-75
CHECKED BY		
QUANTITIES BY		
CHECKED BY		
SUPERVISED BY	K.R.	6-75

RECOMMENDED FOR APPROVAL
BY R. E. Magada 7/16/75
DEPUTY TRAFFIC OPERATIONS ENGR.

APPROVED
BY E. L. Parsons 7/16/75
STATE TRAFFIC OPERATIONS ENGR

DRAWING NO. 2 OF 2

INDEX NO. 17351

STATE PROJ. NO.	SHEET NO.

CASE I ... REFLECTOR SHALL HAVE A YELLOW REFLECTIVE BACKGROUND, AND YELLOW REFLECTIVE BUTTONS. (SIGN SHOP #812-170)

CASE II ... REFLECTOR SHALL HAVE A RED REFLECTIVE BACKGROUND, AND RED REFLECTIVE BUTTONS. (SIGN SHOP #812-171)

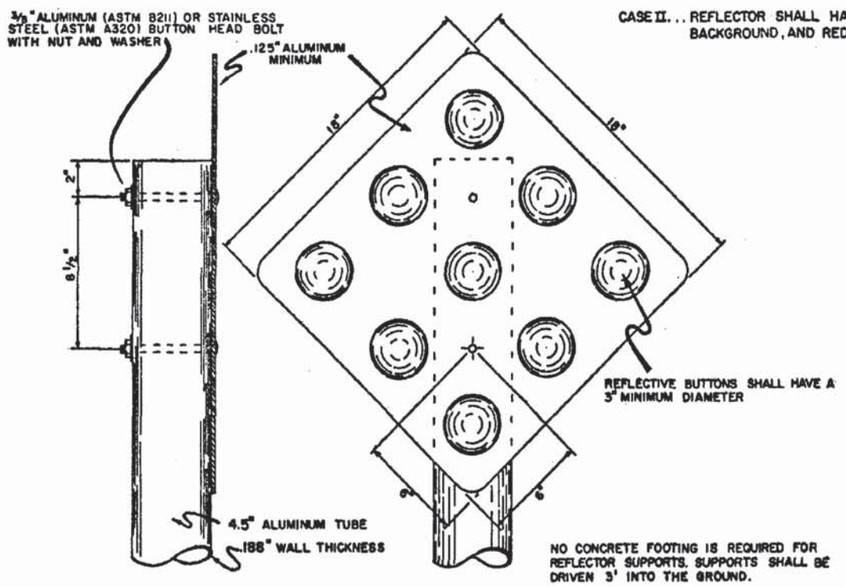

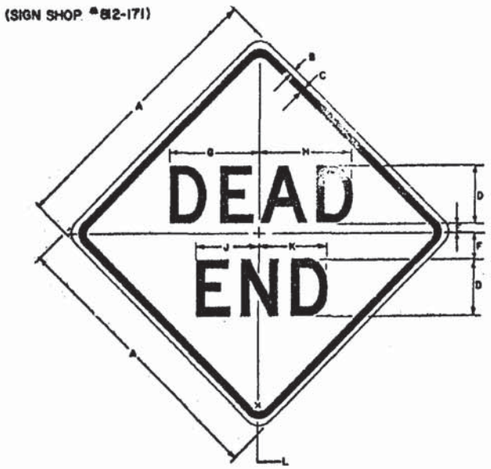

W14-1

SIGN	DIMENSIONS (INCHES)										
	A	B	C	D	E	F	G	H	J	K	L
MIN.	24	3/8	5/8	5D	1	2	5-1/4	9-9/16	5-5/8	9-1/4	1-1/2
STD.	30	1/2	3/4	6D	1-1/2	2-1/2	9-5/8	10-1/4	6-5/8	7-1/2	1-7/8
SPECIAL	36	5/8	7/8	7D	2	3	11-3/16	11-15/16	7-7/8	8-3/4	2-1/4

COLORS

LEGEND - BLACK(NON-REFL.)
BACKGROUND - YELLOW(R

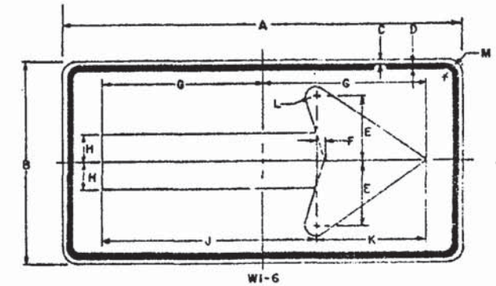

W1-6

SIGN	DIMENSIONS (INCHES)											
	A	B	C	D	E	F	G	H	J	K	L	M
MIN.	36	18	3/8	5/8	5-3/4	3/4	14-5/8	2-1/2	19-1/8	10-1/8	1	1-1/2
STD.	48	24	1/2	3/4	7-1/2	1	19-1/2	3-1/4	25-13/16	13-3/16	1-5/16	1-7/8
SPECIAL	60	30	5/8	7/8	9-3/16	1-1/4	24-3/8	4	32-1/2	16-1/4	1-5/8	2-1/4

COLORS

LEGEND - BLACK(NON-REFL.)
BACKGROUND - YELLOW(REFL.)

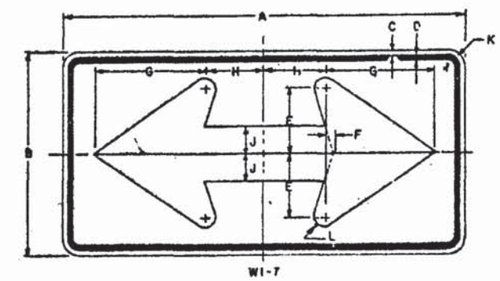

W1-7

SIGN	DIMENSIONS (INCHES)											
	A	B	C	D	E	F	G	H	J	K	L	
MIN.	36	18	3/8	5/8	5-3/4	3/4	10-1/8	5-1/2	2-1/2	1-1/2	1	
STD.	48	24	1/2	3/4	7-1/2	1	13-3/16	7-5/16	3-1/4	1-7/8	1-5/16	
SPECIAL	60	30	5/8	7/8	9-3/16	1-1/4	16-1/4	9-1/8	4	2-1/4	1-5/8	

COLORS

LEGEND - BLACK(NON-REFL.)
BACKGROUND - YELLOW(REFL.)

CASE II
RED REFLECTORS

DEAD END SIGN SHALL BE POSTED A SUFFICIENT ADVANCE DISTANCE TO PERMIT THE VEHICLE OPERATOR TO AVOID THE DEAD END BY TURNING OFF IF POSSIBLE, AT THE NEAREST INTERSECTING STREET

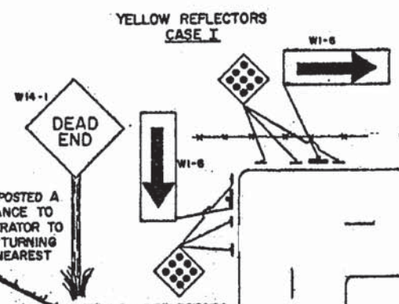

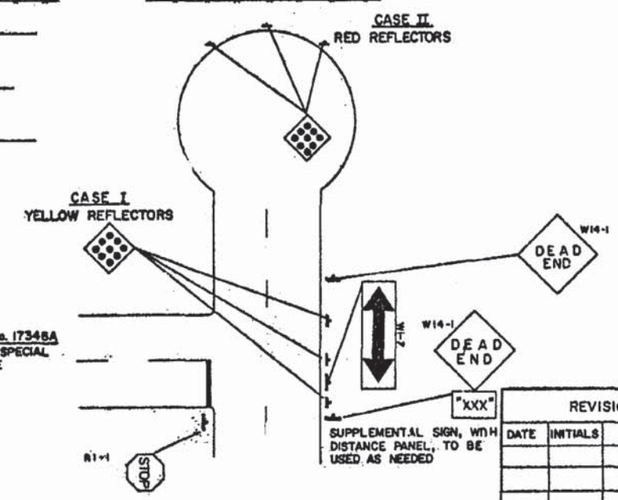

SUPPLEMENTAL SIGN, WITH DISTANCE PANEL, TO BE USED AS NEEDED

NOTE: For Pavement Marking See Index No. 17346A
NO GUARDRAIL IS REQUIRED UNLESS SPECIAL FIELD CONDITIONS REQUIRE ITS USE

REVISIONS		
DATE	INITIALS	DESCRIPTION

APPROVED BY F.H.W.A. 4-11-75

FLORIDA DEPARTMENT OF TRANSPORTATION
TRAFFIC OPERATIONS

TRAFFIC CONTROLS FOR STREET TERMINATIONS

	INITIALS	DATES
DETAILED BY	GW	11-4-74
CHECKED BY		
QUANTITIES BY		
CHECKED BY	KR	11-4-74
SUPERVISED BY	KR	11-4-74

RECOMMENDED FOR APPROVAL BY Donald E. Magaha DEPUTY TRAFFIC OPERATIONS ENGR.

APPROVED BY E. L. Dean 3/25/75 STATE TRAFFIC OPERATIONS ENGR.

DRAWING NO.	INDEX NO.
1 of 1	17349

STATE PROJ. NO.	SHEET NO.
1	

CASE I

FOR USE IN ALL RURAL ROADS AND ON FREEWAY AND EXPRESSWAY RAMPS.

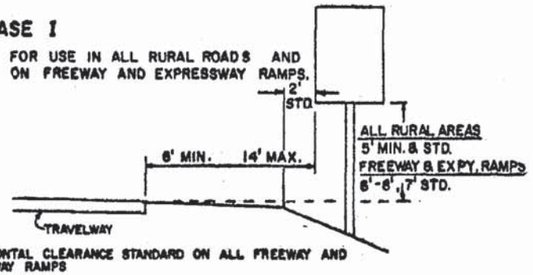

14' HORIZONTAL CLEARANCE STANDARD ON ALL FREEWAY AND EXPRESSWAY RAMPS

CASE II

FOR USE IN ALL RURAL ROADS AND ON FREEWAY AND EXPRESSWAY RAMPS.

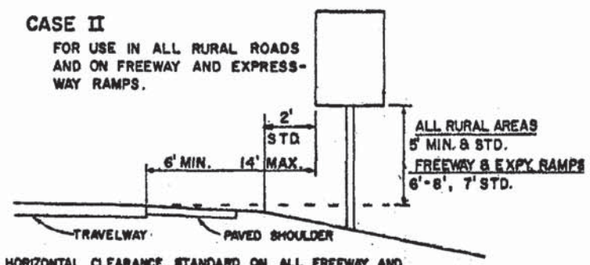

14' HORIZONTAL CLEARANCE STANDARD ON ALL FREEWAY AND EXPRESSWAY RAMPS

CASE III

FOR USE IN ALL RURAL ROADS AND ON FREEWAY AND EXPRESSWAY RAMPS

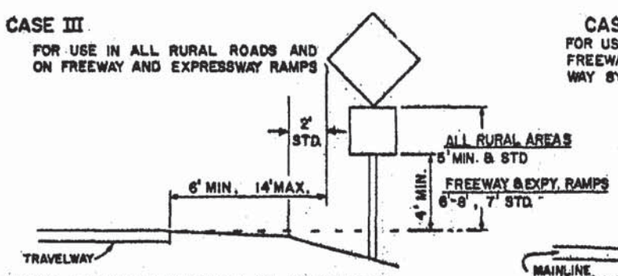

14' HORIZONTAL CLEARANCE STANDARD ON ALL FREEWAY AND EXPRESSWAY RAMPS

CASE IV

FOR USE ON ALL FREEWAY AND EXPRESSWAY SYSTEMS FOR SIGNS ON MAINLINE

* IF A SECONDARY SIGN IS MOUNTED BELOW THE MAJOR SIGN, THE MAJOR SIGN SHALL BE AT LEAST 8' AND THE SECONDARY SIGN AT LEAST 5' ABOVE THE PAVEMENT EDGE

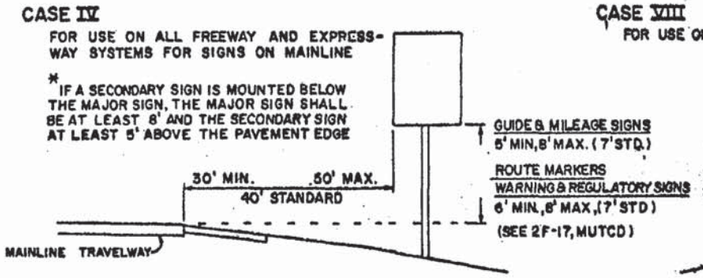

CASE V

FOR USE IN BUSINESS OR RESIDENTIAL AREAS ONLY

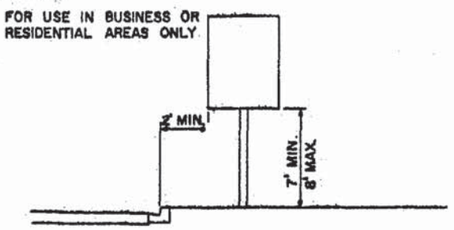

CASE VI

SIGN ON ISLAND

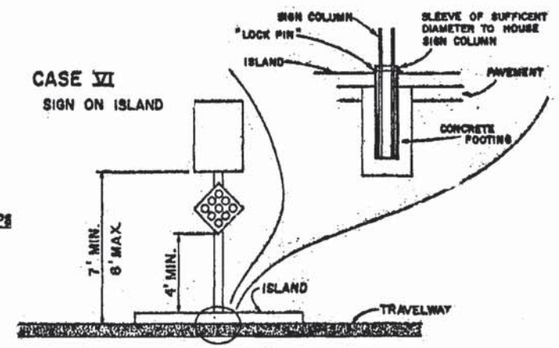

CENTER SIGN COLUMN ON ISLAND

CASE VII (MERGE SIGN)

FOR USE ON ALL RURAL, FREEWAY AND EXPRESSWAY SYSTEMS

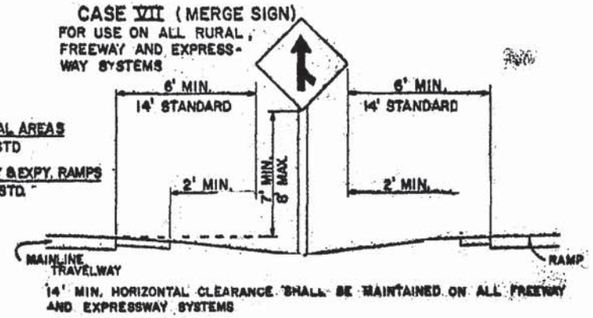

14' MIN. HORIZONTAL CLEARANCE SHALL BE MAINTAINED ON ALL FREEWAY AND EXPRESSWAY SYSTEMS

CASE VIII

FOR USE ON ALL FREEWAY AND EXPRESSWAY SYSTEMS FOR SIGNS MOUNTED IN THE MEDIAN.

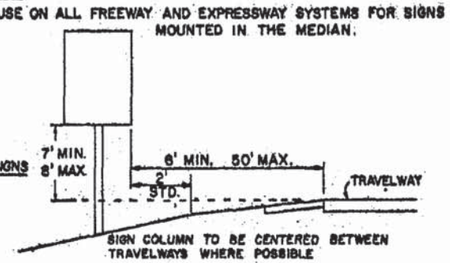

SIGN COLUMN TO BE CENTERED BETWEEN TRAVELWAYS WHERE POSSIBLE

CASE IX (REST AREA & EXIT GORE SIGNS)

FOR USE ON ALL FREEWAY AND EXPRESSWAY SYSTEMS

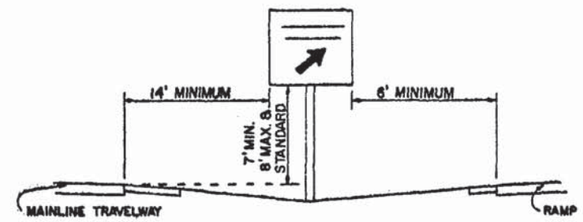

CASE X

FOR USE ON ALL FREEWAY AND EXPRESSWAY SYSTEMS WITH SIGNS BEHIND GUARDRAIL

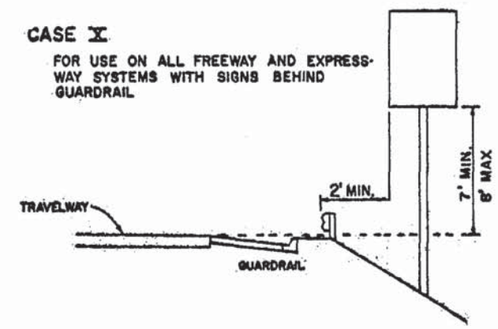

GENERAL NOTES:

1. The typical sections shown hereon serve as a guide for use in locating the traffic signs required under various roadside conditions. For size and details of sign construction and footing, refer to the appropriate standard index drawing for roadside sign.
2. It shall be the CONTRACTORS responsibility to verify the length of sign supports in the field prior to fabrication
3.

SIGN DISTANCE FROM EDGE OF ROADWAY	ANGLE α
LESS THAN 20'	0°
≤ 30'	3°
≤ 40'	4°
≤ 50'	5°

(SEE ILLUSTRATION)

Where lanes divide or on curves, sign faces shall be oriented so as to be most effective both day and night, and to avoid the possibility of specular reflection.

4. Horizontal clearance may be altered in the field by the PROJECT ENGINEER to better fit existing terrain

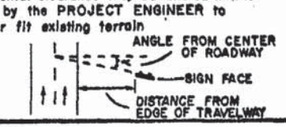

REVISIONS		
DATE	INITIALS	DESCRIPTION
11/75	WB·KR·RM	MTG. HT + OTHER CLARIFICATIONS
1-27-76	WB·KR·RM	REVISE SPACING

APPROVED BY F.H.W.A 2-12-76

FLORIDA DEPARTMENT OF TRANSPORTATION
TRAFFIC OPERATIONS

TYPICAL SECTIONS FOR ONE COLUMN SIGN PLACEMENT

	INITIALS	DATES
DETAILED BY	R.W.	3-75
CHECKED BY		
QUANTITIES BY		
CHECKED BY		
SUPERVISED BY	K.R	3-75

RECOMMENDED FOR APPROVAL BY Randall E. Pegeley 3/1/75 DEPUTY TRAFFIC OPERATIONS ENGR.

APPROVED BY E. L. Duncan 3/12/75 STATE TRAFFIC OPERATIONS ENGR.

DRAWING NO. 1 of 1 | INDEX NO. 17302 A

STATE PROJ. NO.	SHEET NO.

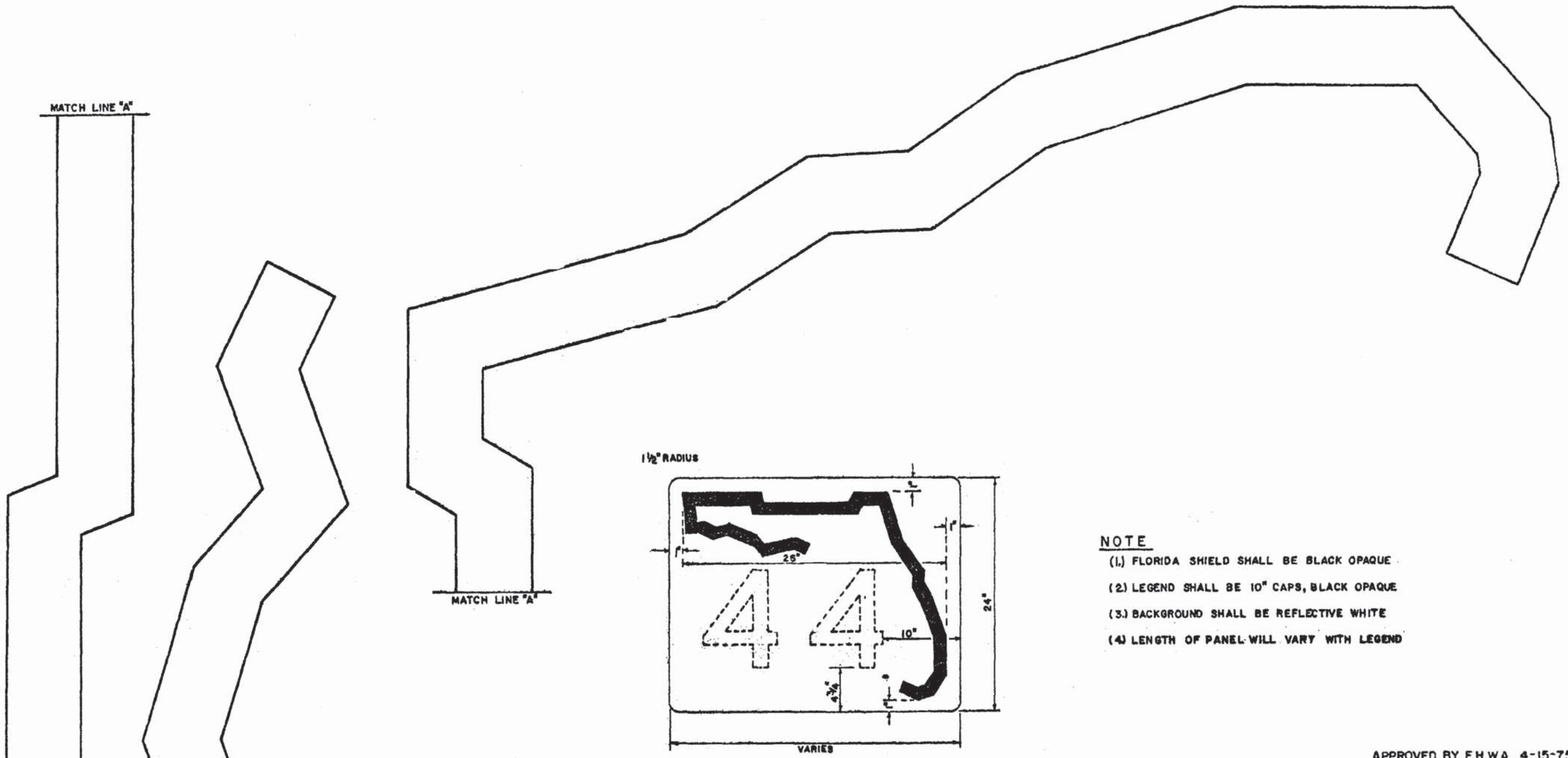

NOTE

(1.) FLORIDA SHIELD SHALL BE BLACK OPAQUE

(2.) LEGEND SHALL BE 10" CAPS, BLACK OPAQUE

(3.) BACKGROUND SHALL BE REFLECTIVE WHITE

(4.) LENGTH OF PANEL WILL VARY WITH LEGEND

APPROVED BY F.H.W.A. 4-15-75

FLORIDA DEPARTMENT OF TRANSPORTATION
TRAFFIC OPERATIONS

24" FLORIDA SHIELD

REVISIONS		
DATE	INITIALS	DESCRIPTION

	INITIALS	DATES
Detailed by	G.W	11-74
Checked by	K.R	11-74
Quantities by		
Checked by		
Supervised by	K.R	11-74

Recommended for approval
by [illegible]
Deputy Traffic Operations Engr

Approved
by [illegible]
State Traffic Operations Engr

DRAWING NO.	INDEX NO.
1 of 1	17315

STATE PROJ. NO.	SHEET NO.

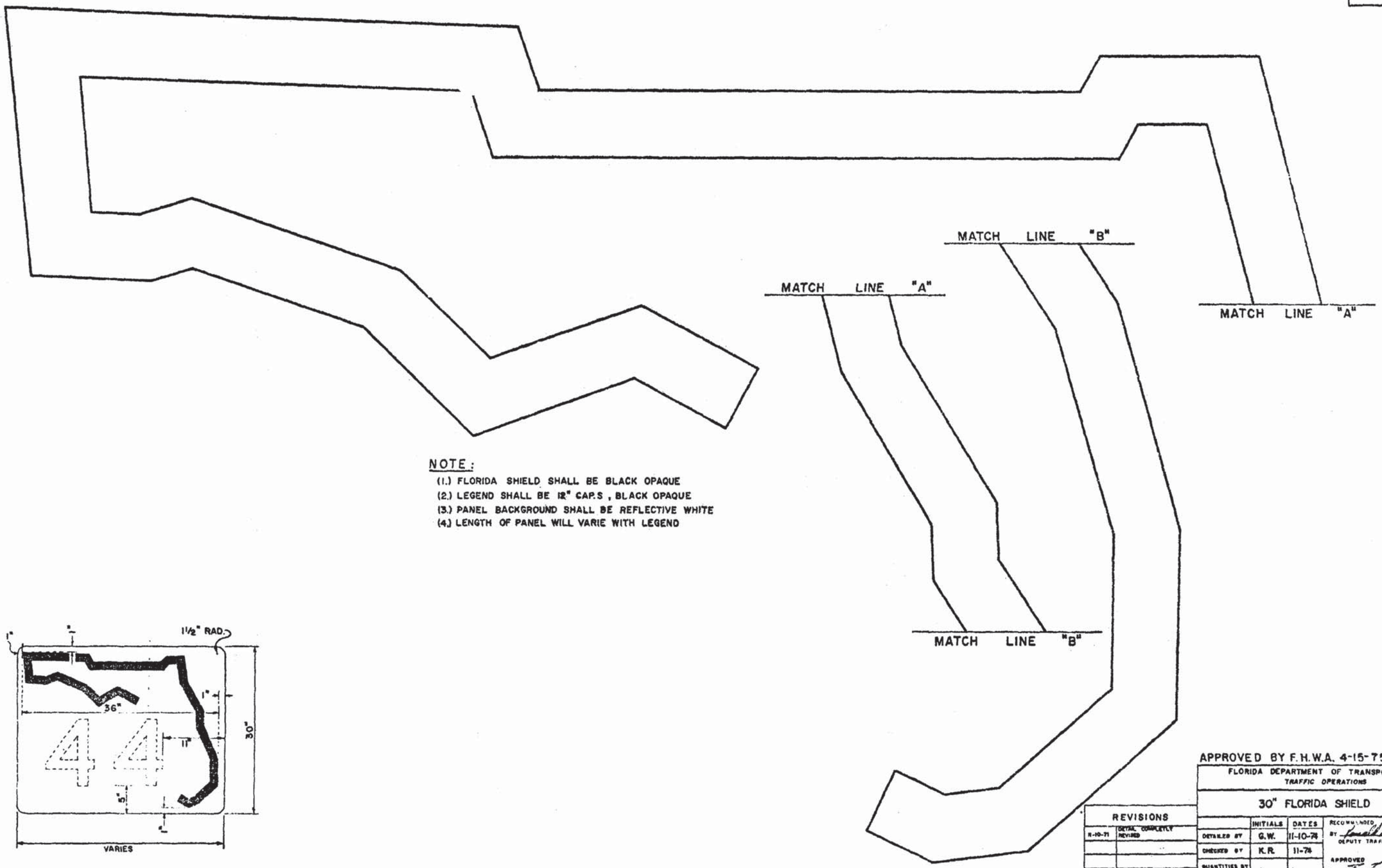

NOTE:

(1.) FLORIDA SHIELD SHALL BE BLACK OPAQUE
(2.) LEGEND SHALL BE 12" CAP.S , BLACK OPAQUE
(3.) PANEL BACKGROUND SHALL BE REFLECTIVE WHITE
(4.) LENGTH OF PANEL WILL VARIE WITH LEGEND

APPROVED BY F.H.W.A. 4-15-75

FLORIDA DEPARTMENT OF TRANSPORTATION
TRAFFIC OPERATIONS

30" FLORIDA SHIELD

REVISIONS	
8-10-71	DETAIL COMPLETLY REVISED

	INITIALS	DATES
DETAILED BY	G.W.	11-10-74
CHECKED BY	K.R.	11-74
QUANTITIES BY		
CHECKED BY		
SUPERVISED BY	K.R.	11-74

RECOMMENDED FOR APPROVAL
BY Donald E. Bagada 3/19/76
DEPUTY TRAFFIC OPERATIONS ENGR.

APPROVED
BY [illegible] 4/15/75
STATE TRAFFIC OPERATIONS ENGR.

DRAWING NO.	INDEX NO.
1 of 1	17316

(A)

QUANTITY _____

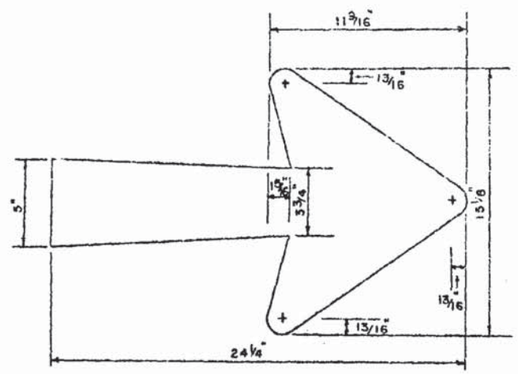

(B)

QUANTITY _____

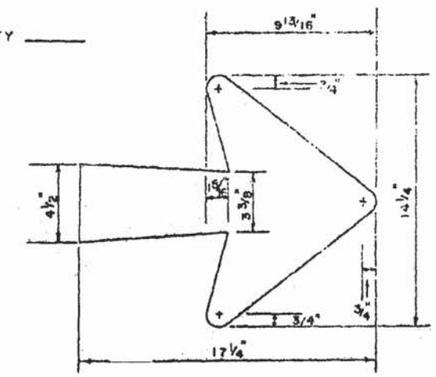

(C)

QUANTITY _____

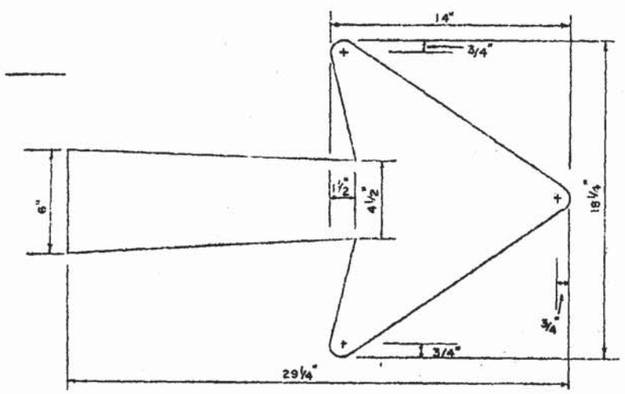

(D)

QUANTITY _____

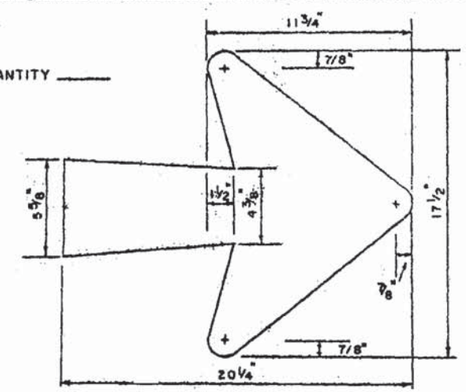

(E)

QUANTITY _____

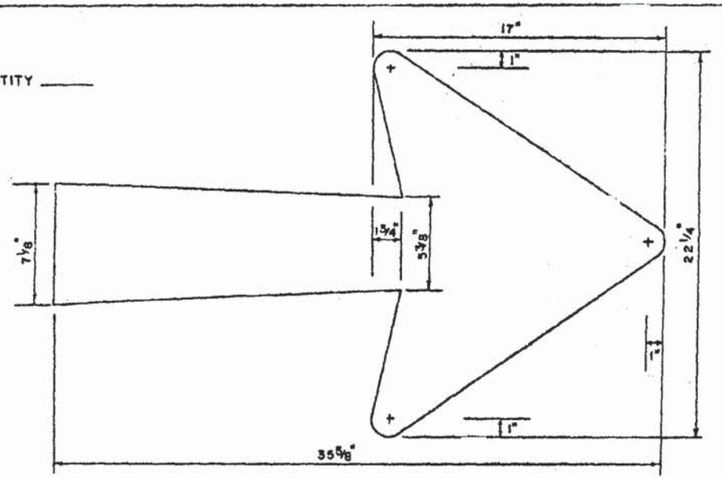

(F)

QUANTITY _____

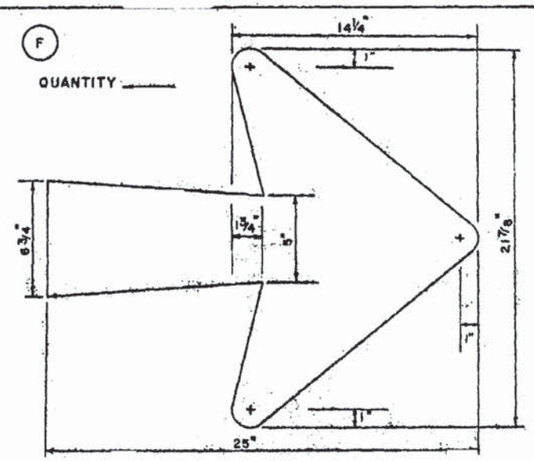

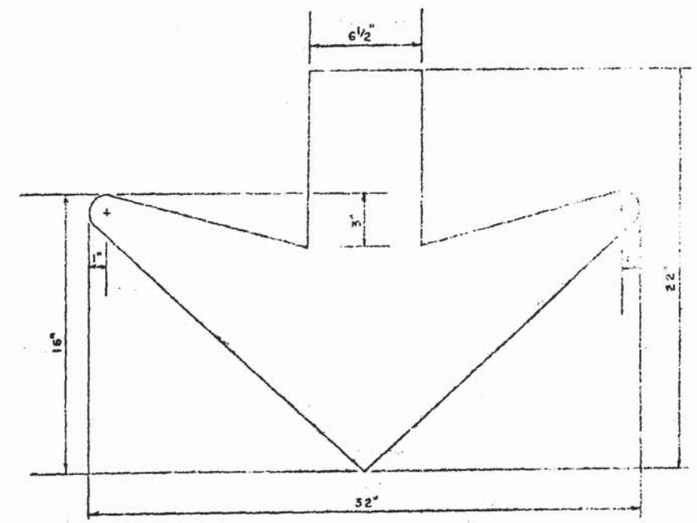

(G)

QUANTITY _____

APPROVED BY F.H.W.A. 6-9-71

STATE ROAD DEPARTMENT OF FLORIDA

ARROW LAYOUTS AND QUANTITIES FOR GROUND & OVERHEAD SIGNS

REVISIONS		ROAD No.	COUNTY	PROJECT NO.
Date	Description			
6-7-66	Index no change 7326 to 17320		Number / Dates	Resident Engineer
		Detailed by	KGR / 6-65	Approved by
		Checked by		
		Quantities by		
		Checked by		
		Traced by		Drawing No. / Index No. 17320

STATE PROJ. NO.	SHEET NO.

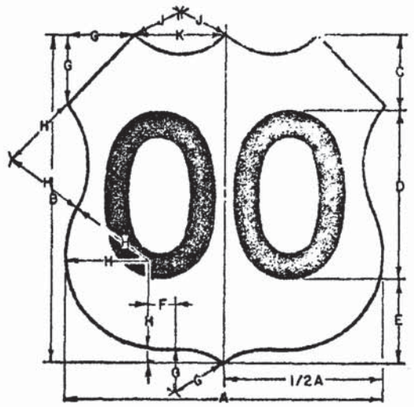

Optically space numerals about vertical centerline

MI-4 U.S. ROUTE MARKER FOR GUIDE SIGN USE

SIGN	DIMENSIONS (INCHES)										
	A	B	C	D	E	F	G	H	J	K	L
1,2-digits	24	24	5-1/2	12D	6-1/2	1	5	7	5	7	2
1,2-digits	36	36	8-1/4	18D	9-3/4	1-1/2	7-1/2	10-1/2	7-1/2	10-1/2	3
1,2-digits	48	48	11	24D	13	2	10	14	10	14	4
3-digits	30	24	5-1/2	12D	6-1/2	4	5	7	9	10	2
3-digits	45	36	8-1/4	18D	9-3/4	5-1/2	7-1/2	10-1/2	13-1/2	15	3
3-digits	60	48	11	24D	13	8	10	14	18	20	4

COLORS
LEGEND - BLACK (NON-REFL.)
BACKGROUND - WHITE (REFL.)

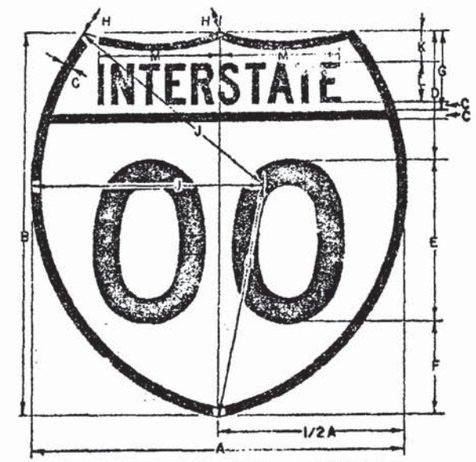

Optically space numerals about vertical centerline

MI-1 INTERSTATE SHIELD FOR GUIDE SIGN USE

SIGN	DIMENSIONS (INCHES)											
	A	B	C	D	E	F	G	H	J	K	L	M
1,2 digits	24	24	1/2	6-1/2	12D	5-1/2	5	15	15	2	2-1/2C	7-13/16
1,2 digits	36	36	3/4	9-3/4	18D	8-1/4	7-1/2	22-1/2	22-1/2	3	3-3/4C	11-11/16
1,2 digits	48	48	1	13	24D	11	10	30	30	4	5C	15-9/16
3 digits	30	24	1/2	6-1/2	12D	5-1/2	5	24	17	2	2-1/2C	7-13/16
3 digits	45	36	3/4	9-3/4	18D	8-1/4	7-1/2	36	25-1/2	3	3-3/4C	11-11/16
3 digits	60	48	1	13	24D	11	10	48	34	4	5C	15-9/16

COLORS

LEGEND	WHITE (REFL.)
TOP	RED (REFL.)
BOTTOM	BLUE (REFL.)

Approved by FHWA 7-18-74

FLORIDA DEPARTMENT OF TRANSPORTATION
TRAFFIC OPERATIONS

SHIELDS FOR USE ON GUIDE SIGNS

ROAD NO.	COUNTY

REVISIONS			INITIALS	DATES
Dates	Descriptions	Designed by	L.W	6-26-74
		Checked by		
		Quantities by		
		Checked by		
		Supervised by	KR	6-26-74

Recommended for approval by [signature] Deputy Traffic Operations Engr.

Approved by [signature] State Traffic Operations Engr.

DRAWING NO.	INDEX NO.
1 OF 1	17347

STATE PROJ. NO.	SHEET NO.

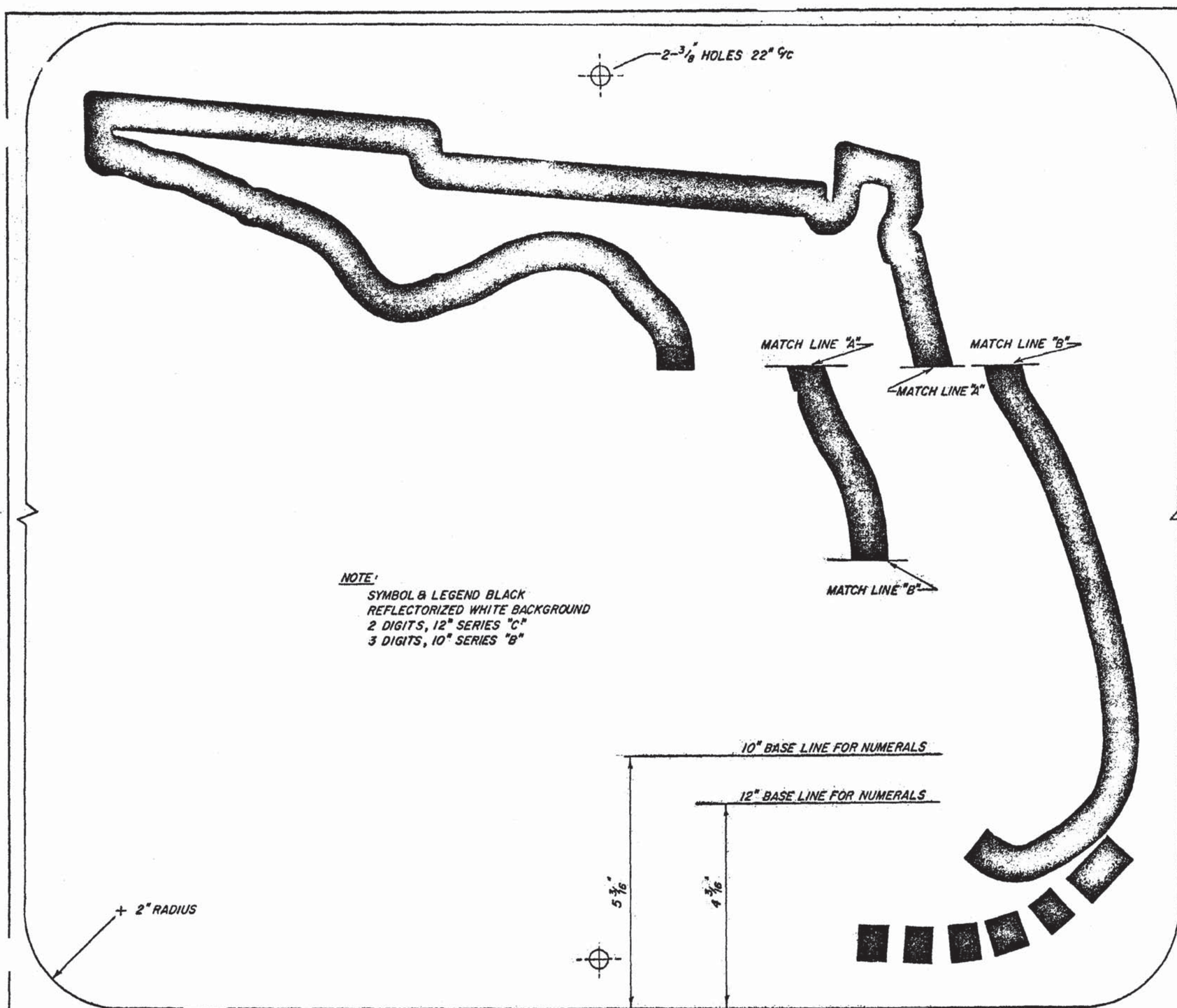

APPROVED BY F.H.W.A. 6-9-71

FLORIDA DEPARTMENT OF TRANSPORTATION
TRAFFIC OPERATIONS

24" FLORIDA ROUTE MARKER
OTHER THAN INTERSTATE

REVISIONS		
DATE	INI.	DESCRIPTION
6-7-66		INDEX NO. CHANGE 17308 to 17309

	INITIALS	DATES
DETAILED BY		5-25-61
CHECKED BY		
QUANTITIES BY		
CHECKED BY		
SUPERVISED BY		

RECOMMENDED FOR APPROVAL
BY _____
DEPUTY TRAFFIC OPERATIONS ENGR.

APPROVED
BY _____
STATE TRAFFIC OPERATIONS ENGR.

DRAWING NO.	INDEX NO.
1 of 1	17309

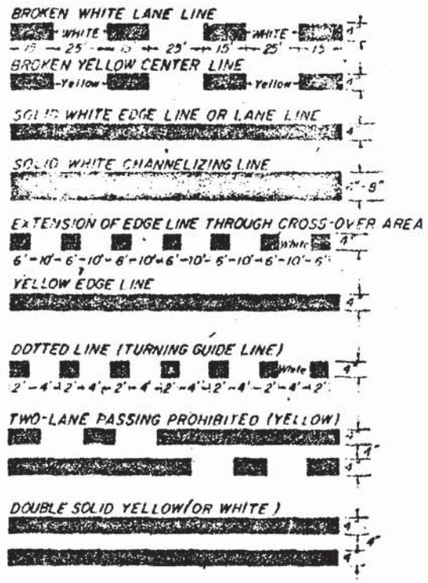

NOTE -
FOR DETAILS ON TEMPORARY LINES SEE MANUAL ON TRAFFIC CONTROLS AND SAFE PRACTICES, FIGURE 2.19

BASIC COLOR RULE:
WHITE LINES SEPARATE FLOWS IN THE SAME DIRECTION
YELLOW LINES SEPARATE FLOWS IN THE OPPOSITE DIRECTION

TYPES OF PERMANENT LONGITUDINAL LINES

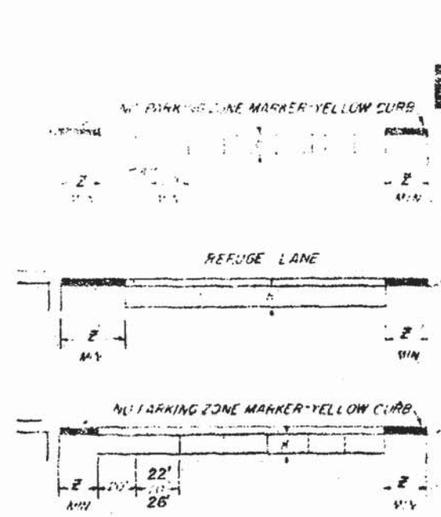

PARKING RESTRICTION DISTANCE TABLE	
SPEED LIMIT	Z
30 MPH OR LESS	30 FT.
35 MPH OR MORE	50 FT.

check color

STANDARD FOR STATE PROJECTS AND STATE MAINTENANCE

add driveway detail

KR 9-23-76

ON STREET PARKING AND REFUGE LANE
(ALL PARKING AND REFUGE LANE MARKINGS SHALL BE 4" WHITE)

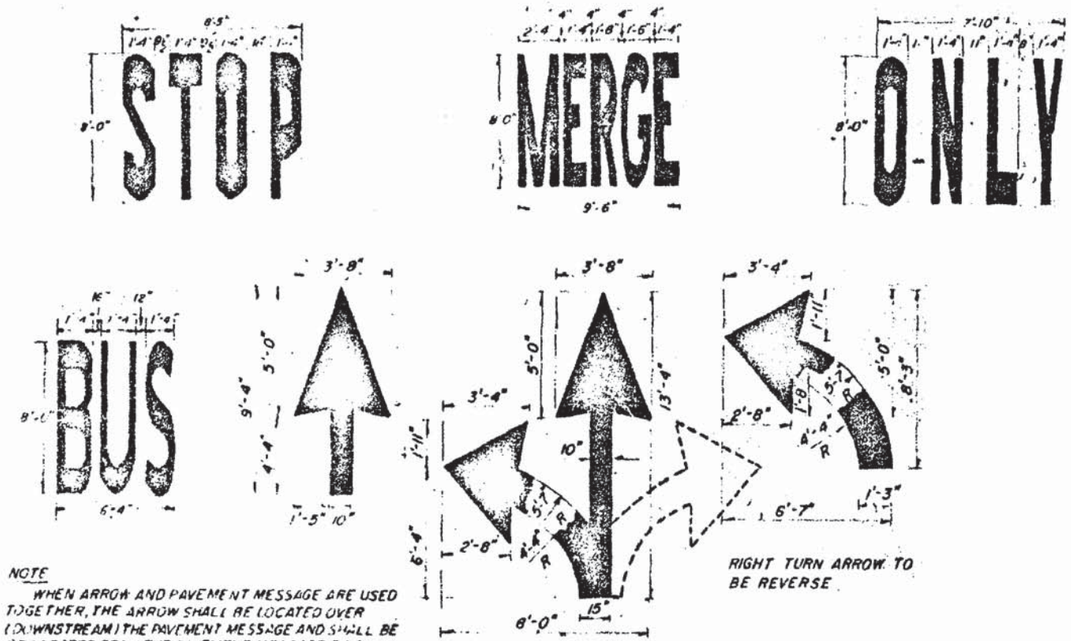

NOTE
WHEN ARROW AND PAVEMENT MESSAGE ARE USED TOGETHER, THE ARROW SHALL BE LOCATED OVER (DOWNSTREAM) THE PAVEMENT MESSAGE AND SHALL BE SEPARATED FROM THE PAVEMENT MESSAGE BY A DISTANCE OF 10 FEET

PAVEMENT ARROWS AND MESSAGES DETAILS

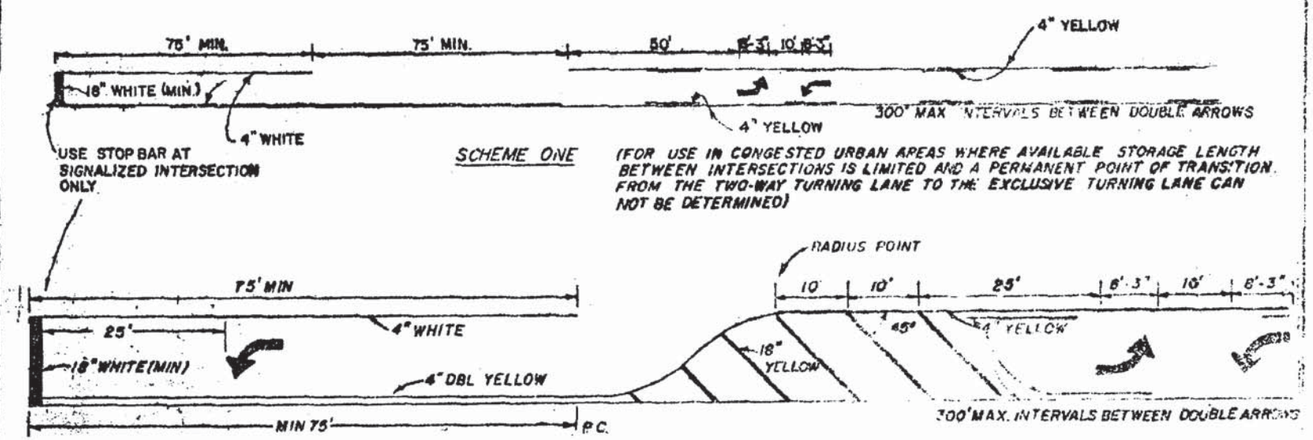

TWO WAY LEFT TURN LANE
(WITH SINGLE LANE LEFT TURN CHANNELIZATION)

APPROVED BY FHWA 6-21-74

FLORIDA DEPARTMENT OF TRANSPORTATION
TRAFFIC OPERATIONS

SPECIAL MARKING AREAS

REVISIONS			INITIALS	DATES
Dates	Descriptions	Detailed by	WE	1-4-74
4/74	CHANGE 17346 TO 17346A	Checked by	K P	1-4-74
6/74	Revised size of messages	Quantities by		
		Checked by		
		Supervised by	KR	

Recommended for approval by: Deputy Traffic Operations

Approved by: State Traffic Engineer

DRAWING NO. 1 of 6

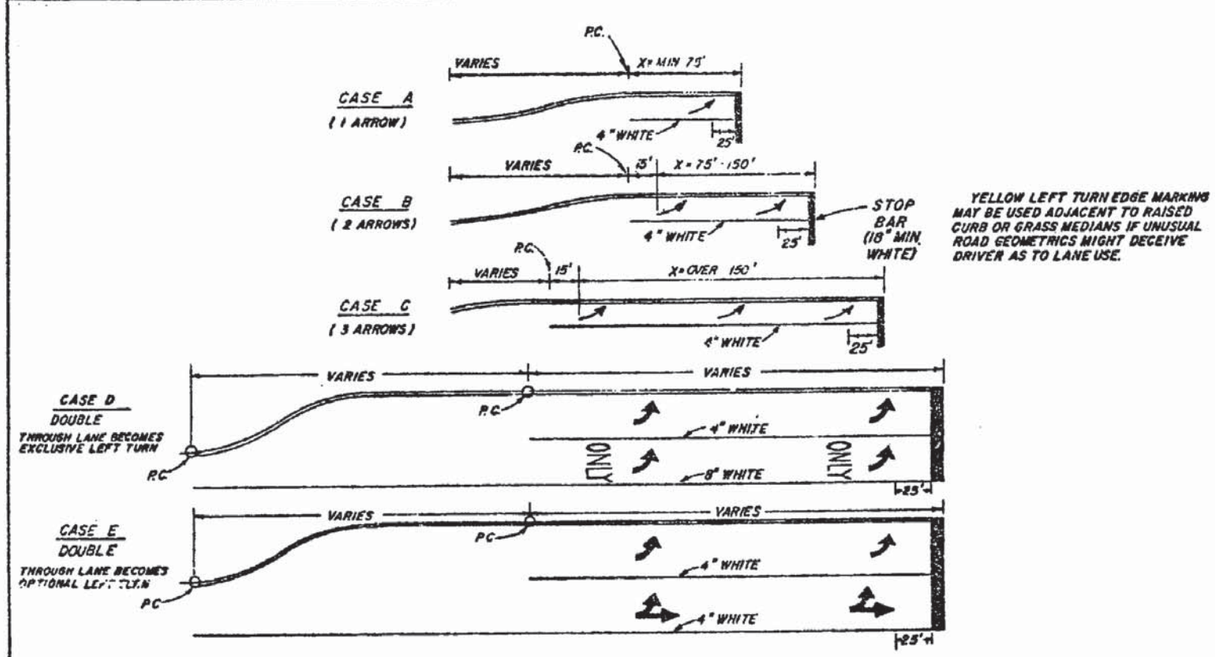

YELLOW LEFT TURN EDGE MARKING MAY BE USED ADJACENT TO RAISED CURB OR GRASS MEDIANS IF UNUSUAL ROAD GEOMETRICS MIGHT DECEIVE DRIVER AS TO LANE USE.

PAINTED LEFT TURN STORAGE LANES DETAILS
(FOR STOP CONTROLLED OR SIGNALIZED INTERSECTIONS)

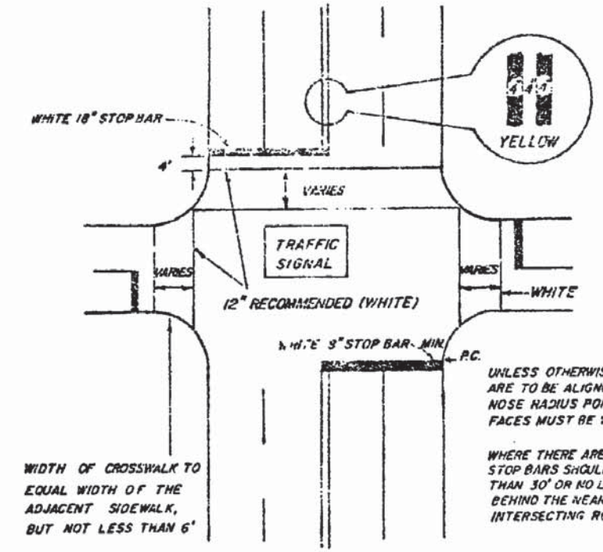

UNLESS OTHERWISE DIRECTED, STOP BARS ARE TO BE ALIGNED WITH THE MEDIAN NOSE RADIUS POINT. (DISTANCE BETWEEN STOP BAR & ONE OF SIGNAL FACES MUST BE WITHIN AT LEAST 40' TO 120', M.U.T.C.D., 4B-12)

WHERE THERE ARE NO CROSSWALKS, STOP BARS SHOULD BE NO MORE THAN 30' OR NO LESS THAN 4' BEHIND THE NEAREST EDGE OF INTERSECTING ROADWAY (MUTCD, 2B-14)

STOP BARS, CROSSWALKS AND DOUBLE CENTER LINES DETAILS

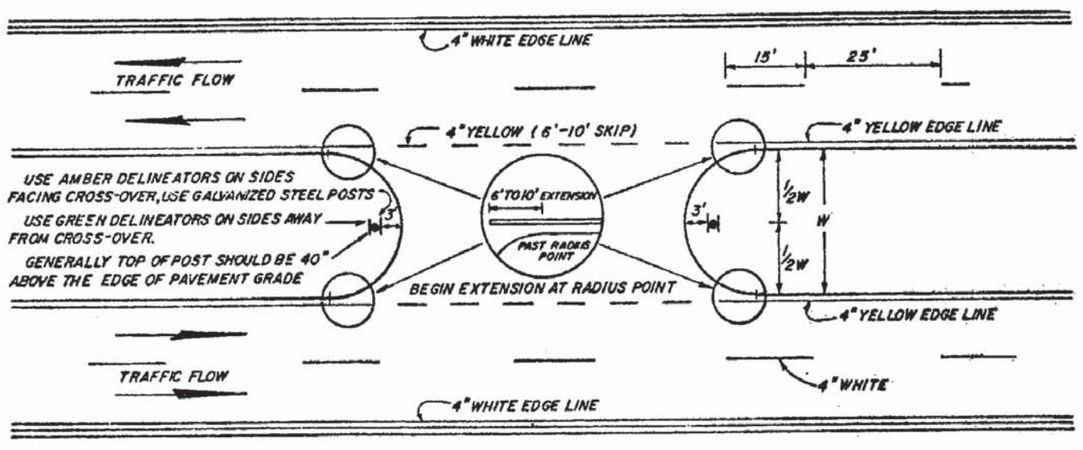

PAVEMENT MARKINGS AND DELINEATORS FOR MEDIAN CROSS-OVER

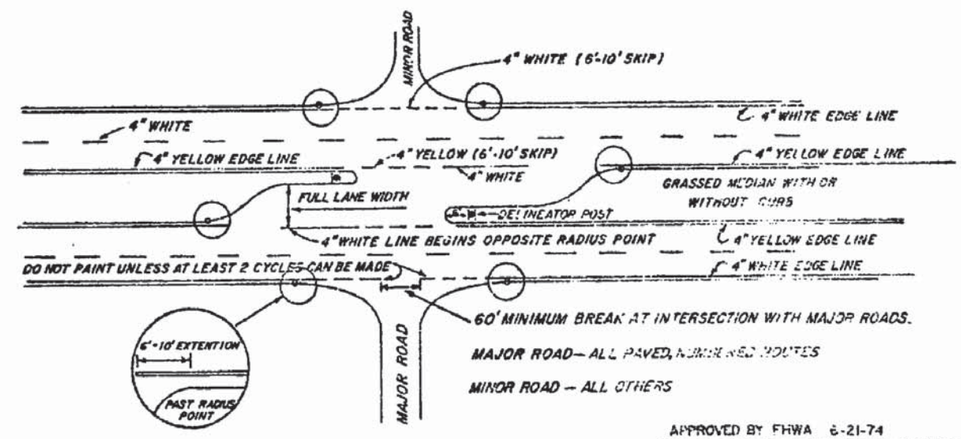

PAVEMENT MARKINGS FOR INTERSECTION WITH MAJOR AND MINOR ROADS

APPROVED BY FHWA 6-21-74

FLORIDA DEPARTMENT OF TRANSPORTATION
TRAFFIC OPERATIONS

SPECIAL MARKING AREAS

REVISIONS			INITIALS	DATES
Dates	Descriptions	Detailed by	WB	1-4-74
7-74	CHANGE 17340 TO 17346A	Checked by	KJC	1-4-74
		Quantities by		
		Checked by		
		Supervised by		

Recommended for approval by _____ Deputy Traffic Operations Engr.

Approved by _____ State Traffic Operations Engr.

DRAWING NO. 2 of 6

INDEX 173-

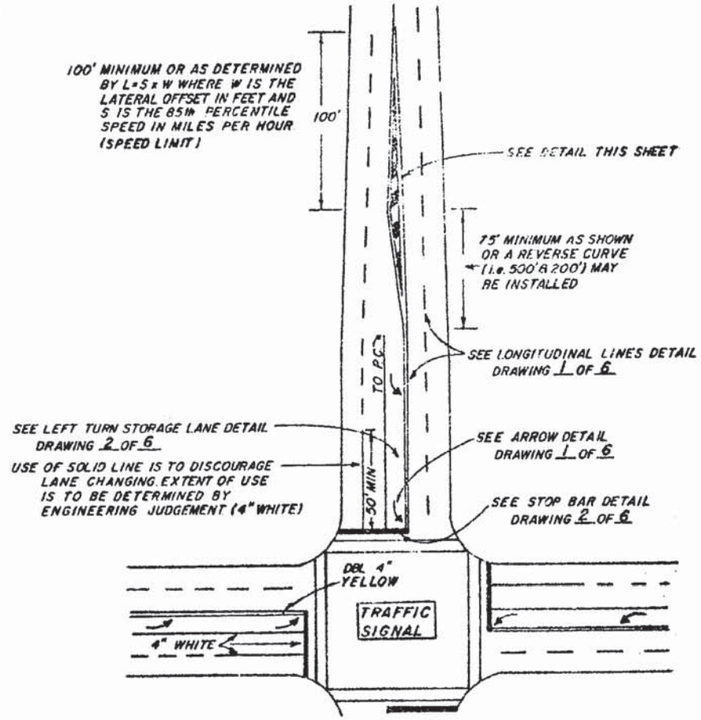

TYPICAL INTERSECTION 2 THRU LANES
PLUS LEFT TURN LANE, WITH CROSSWALK

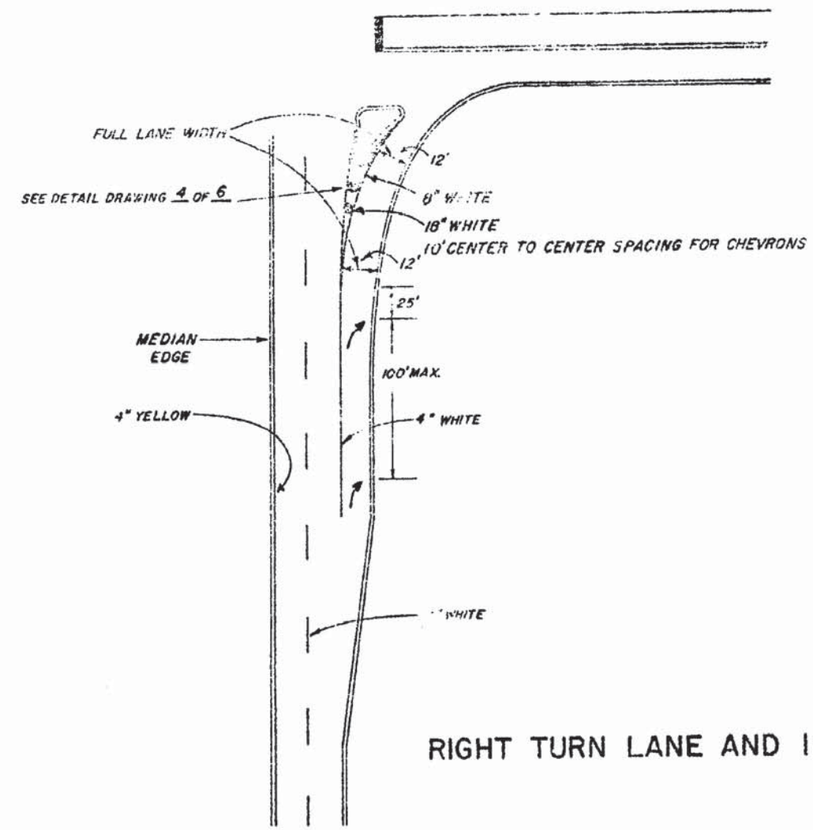

RIGHT TURN LANE AND ISLAND DETAILS

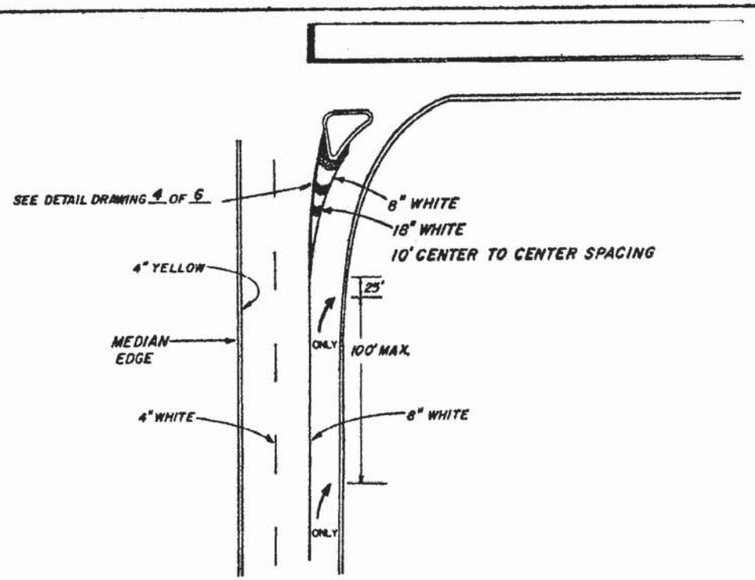

RIGHT TURN LANE (MUST TURN RIGHT)
(A LANE DROP)

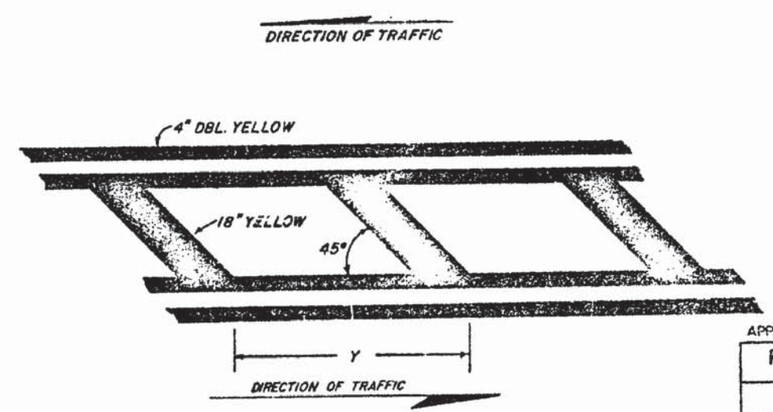

CHANNELIZATION MARKING DETAIL

POSTED WAY SPEED LIMIT M.P.H.	"Y" FT.
30 OR LESS	10
35	20
40	20
45	30
50 OR MORE	40

APPROVED BY FHWA 6-21-74

FLORIDA DEPARTMENT OF TRANSPORTATION
TRAFFIC OPERATIONS

SPECIAL MARKING AREAS

REVISIONS			INITIALS	DATES
Dates	Descriptions	Detailed by	W.G.	1-4-74
4-74	CHANGE 17346 TO 17346A	Checked by	R.R.	1-4-74
		Quantites by		
		Checked by		
		Supervised by		

Recommended for approval by [signature] Deputy Traffic Operations Engr.
Approved by [signature] State Traffic Operations Engr.

DRAWING NO. 3 of 6
INDEX NO. 17346A

TAPER LENGTH EQUATION
$TL = \frac{M}{2} \times S$
TL = TAPER LENGTH (ft)
M = MEDIAN WIDTH (ft)
S = SPEED (MPH)

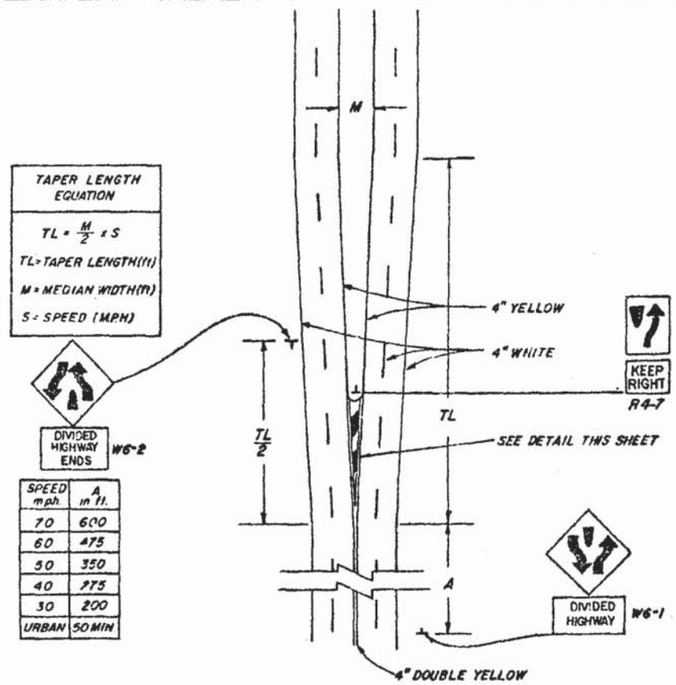

SPEED mph	A in ft.
70	600
60	475
50	350
40	275
30	200
URBAN	50 MIN

BEGINNING OF A DIVIDED HIGHWAY

POSTED(DAY) SPEED LIMIT M.P.H.	"X" FT.
25 OR LESS	10
30	20
35	20
40	40
45	40
50	60
55	60
60 OR MORE	80

TAPER LENGTH EQUATION
TL = 12S
TL = TAPER LENGTH (ft)
S = SPEED (mph)

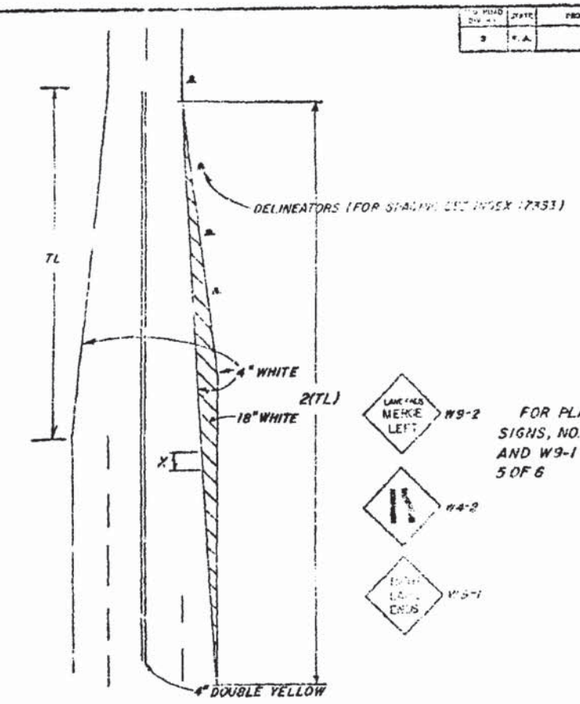

FOR PLACEMENT OF SIGNS, NO. W9-2, W4-2 AND W9-1 SEE SHEET 5 OF 6

4-LANE-2-LANE TRANSITION-NO MEDIAN

NOTE
RAISED PAVEMENT MARKERS CAN BE SET IN THERMOPLASTIC AS SHOWN BELOW, OR SET TWO (2) INCHES INSIDE PAINTED OR THERMOPLASTIC LINES AS SHOWN IN DETAIL ON THE LEFT.

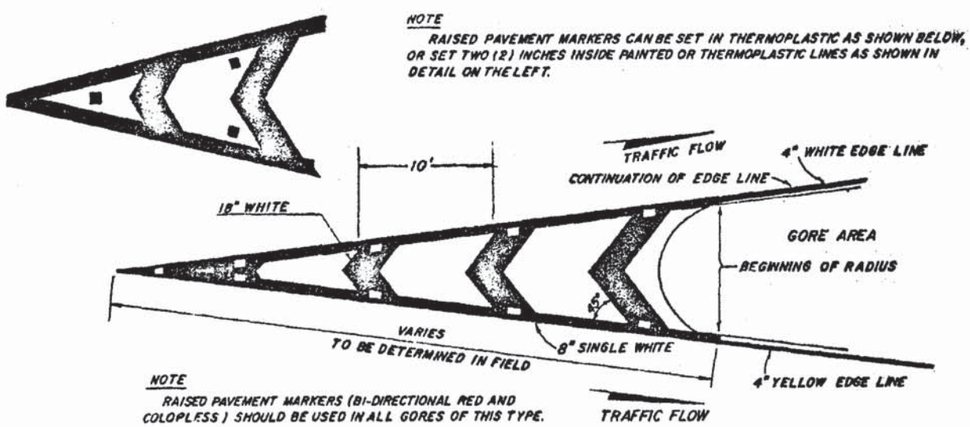

NOTE
RAISED PAVEMENT MARKERS (BI-DIRECTIONAL RED AND COLOPLESS) SHOULD BE USED IN ALL GORES OF THIS TYPE.

PAVEMENT MARKINGS FOR TRAFFIC CHANNELIZATION AT GORE
(TRAFFIC FLOWS IN SAME DIRECTION)

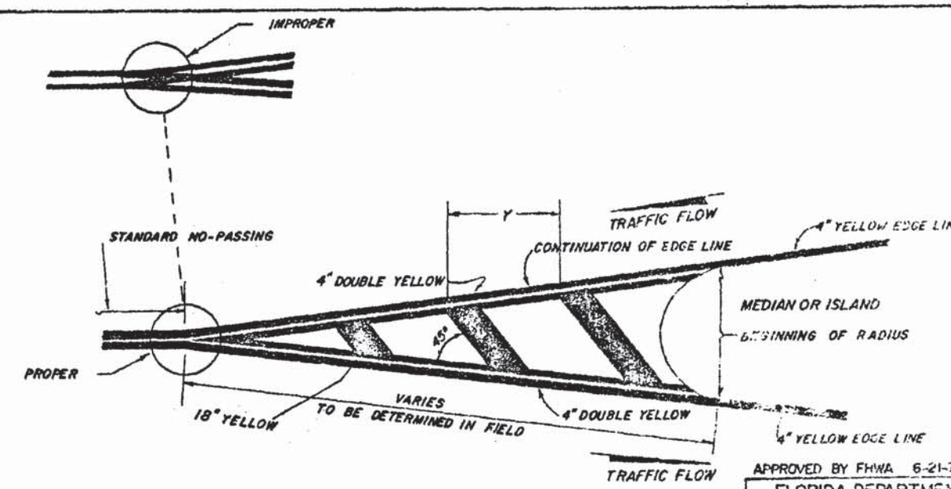

POSTED(DAY) SPEED LIMIT M.P.H.	"Y" FT.
30 OR LESS	10
35	20
40	20
45	30
50 OR MORE	40

PAVEMENT MARKING FOR TRAFFIC SEPARATION
(TRAFFIC FLOWS IN OPPOSITE DIRECTION)

APPROVED BY FHWA 6-21-74

FLORIDA DEPARTMENT OF TRANSPORTATION
TRAFFIC OPERATIONS

SPECIAL MARKING AREAS

REVISIONS			INITIALS	DATES
Dates	Descriptions	Detailed by	WB	1-4-74
4-74	CHANGE 17346 TO 17346A	Checked by	KR	1-4-74
		Quantities by		
		Checked by		
		Supervised by		

Recommended for approval by _____ Deputy Traffic Operations Engr.

Approved by _____ State Traffic Operations Engr.

DRAWING NO. 4 of 6 | INDEX NO. 17346A

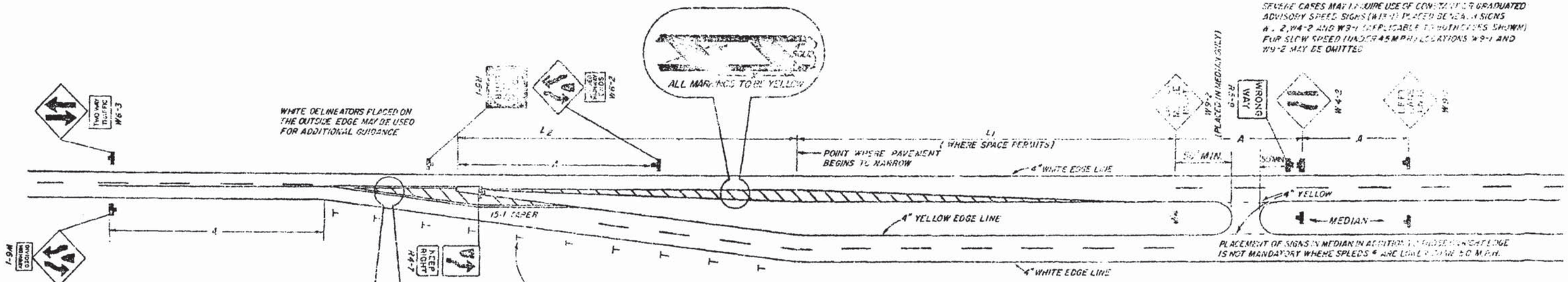

LEFT ROADWAY CENTERED ON EXISTING ROADWAY

POSTED (DAY) SPEED LIMIT M.P.H.	"Y" FT.
30 OR LESS	10
35	20
40	20
45	30
50 OR MORE	40

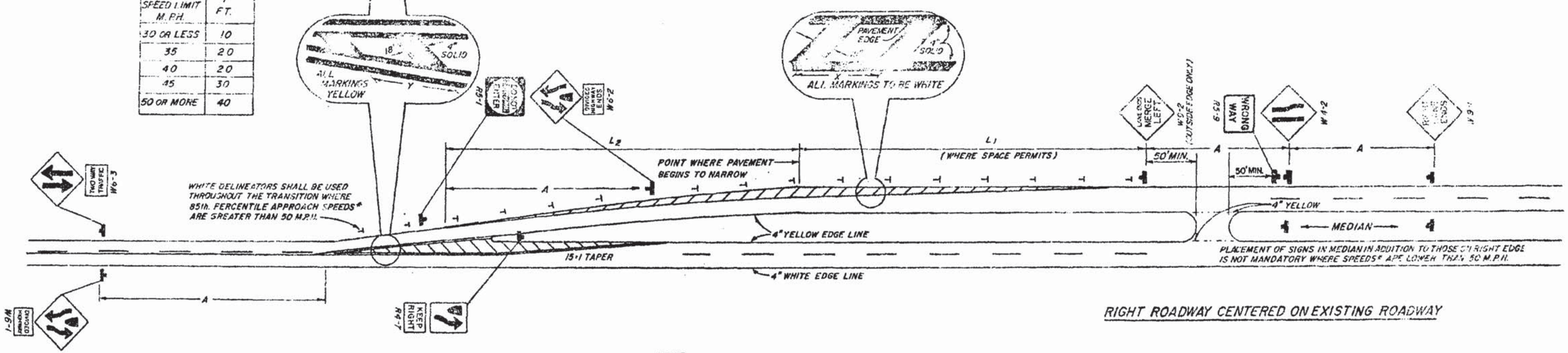

RIGHT ROADWAY CENTERED ON EXISTING ROADWAY

TRANSITION DISTANCE L_1 LATERAL OFFSET (L_1=S×W)								
S / W	8	9	10	11	12	13	14	"X"
30	240	270	300	330	360	390	420	20
35	280	315	350	385	420	455	490	20
40	320	360	400	440	480	520	560	40
45	360	405	450	495	540	585	630	40
50	400	450	500	550	600	650	700	60
55	440	495	550	605	660	715	770	60
60	480	540	600	660	720	780	840	80
65	520	585	650	715	780	845	910	80
70	560	630	700	770	840	910	980	80

* PASSENGER CAR, DAYTIME, POSTED SPEEDS OR 85th. PERCENTILE (USE HIGHER VALUE).

** LATERAL OFFSET

PAVEMENT WIDTH TRANSITION (L_2)

ENDPOINTS OF L_2 ARE THE PHYSICAL NOSE AND POINT AT WHICH PAVED SURFACE BEGINS TO TAPER TO ONE LANE. ON NEWER ROADS L_2 WILL USUALLY BE SIMILAR TO L_1, BUT ON OLDER ROADS MAY BE MUCH LESS. FOR THE RIGHT ROADWAY L_2 BEGINS AT POINT WHERE PAVEMENT WIDTH BEGINS TO NARROW AND CONTINUES TO POINT OF UNIFORM LANE WIDTH.

NOTE

RAISED PAVEMENT MARKERS ON EDGE LINES THROUGH TRANSITION AREA ARE OPTIONAL.

SPEED * (MPH)	"A" (FT.)
70	600
60	475
50	350
40	275
30	200

* PASSENGER CAR, DAYTIME POSTED SPEEDS OR 85th PERCENTILE (USE HIGHER VALUE)

SCHEMES FOR TRANSITION FROM 2-LANE TO 4-LANE ROADWAY

APPROVED BY FHWA 6-21-74

FLORIDA DEPARTMENT OF TRANSPORTATION
Traffic Operations

SPECIAL MARKING AREAS

REVISIONS			INITIALS	DATES
Dates	Descriptions	Designed by	WH	1-4-74
4-74	CHANGE 17345 TO 17346	Checked by	KR	4-74
		Computed by		
		Checked by		
		Supervised by	KR	

Recommended by approval
Director Traffic Operations

Approved by
State Traffic Operations Engr.

DRAWING NO. 5 of 6

INDEX NO. 17346