# ROAD

# DESIGN

# STANDARDS




1976

| FED. ROAD DIV. No. | STATE | PROJECT No. | FISCAL YEAR | SHEET No. |
|---|---|---|---|---|
| 9 | FLA. | | | |

# TABLE OF CONTENTS

## BARRIERS

| NEW NUMBER | TITLE | OLD NUMBER |
|---|---|---|
| BGR-01 | Guardrail Construction | 2300-S |
| BMB-01 | Median Barrier Details | 2301 |

## DRAINAGE

| | | |
|---|---|---|
| DBS-01 | Back of Sidewalk Drainage Details | (New) |
| DCS-01 | Concrete Spillway at Bridge Ends | 2836 |
| DEX-01 | Pipe Culvert Extension for 2'×2' Box Culvert | 2090-C |
| DEX-02 | Pipe Culvert Extension for 3'×2' Box Culvert | 2099-D |
| DMD-01 | Miscellaneous Drainage Details | 5061-E |
| DMO-01 | Drainage Details for Median Openings | 5062 |
| DPS-01 | Ditch Pavement and Sodding | 1101-W |
| DCI-01 | Curb Inlet - Types 1, 2, 3 and 4 | 5047-F |
| DCI-02 | Curb Inlet - Types 5 and 6 | 5047-F |
| DCI-03 | Curb Inlet - Type 7 | 2891-C |
| DCI-04 | Curb Inlet - Type 8 | 2892-A |
| DDI-01 | Ditch Bottom Inlet - Type A | 5049-A |
| DDI-02 | Ditch Bottom Inlet - Type B | 5048-A |
| DDI-03 | Ditch Bottom Inlet - Types C, D, E & H | 5046-D |
| DDI-04 | Ditch Bottom Inlet - Types F & G | 2443-B |
| DGI-01 | Gutter Inlet - Type S | 5080-A |
| DGI-02 | Gutter Inlet - Type V | 5043-B |
| DSB-01 | Inlet, Manhole, Junction Box - Types J & P | 5017-F |
| DSD-01 | Supplementary Details for Manholes & Inlets | (New) |
| DSM-01 | Safety Modification | 5085-A |
| DCE-01 | Concrete Endwalls | 1454-C |
| DCE-02 | Standard Endwalls for Pipe Culverts | 200-A |
| DCE-03 | U-Endwalls for Pipe Culverts | 1129-G |
| DCE-04 | Flared End Section for Pipe Culverts | 1455-C |
| DCE-05 | U-Endwall for 60" and 66" Pipe Culverts | 3018-A |
| DCE-06 | Standard Endwall for 60" Concrete Pipe | 2415 |
| DCE-07 | Standard Endwall for Double 60" Concrete Pipe | 2416-A |
| DCE-08 | Standard Endwall for 66" Concrete Pipe | 3225 |
| DCE-09 | Standard Endwall for 72" Concrete Pipe | 3564 |
| DCE-10 | Standard Endwall for Double 72" Concrete Pipe | (New) |
| DCE-11 | Standard Endwall for 84" Concrete Pipe | 4191-A |
| DCE-12 | Standard Endwall for 79"×49" CMP Arch | 2901 |
| DCE-13 | Standard Endwall for 76"×57" CMP Arch | 2994 |
| DCE-14 | Standard Endwall for 106"×73" CMP Arch | 3014 |
| DCE-15 | Standard Endwall for Double 106"×73" CMP Arch | 2914 |
| DCE-16 | Standard Endwall for Quadruple 106"×73" CMP Arch | 2933 |
| DCE-17 | Standard Endwall for 123"×81" CMP Arch | 3041 |
| DCE-18 | Standard Endwall for Triple 123"×81" CMP Arch | 3015 |
| DCE-19 | Standard Endwall for Triple 154"×100" CMP Arch | 2932 |
| DSE-01 | Sand-Cement Endwalls for Pipe Culverts | 2319 |
| DSE-02 | Sand-Cement Endwalls for Pipe Culverts | 2037-A |
| DSE-03 | Sand-Cement Endwall for 72" CM Pipe | 5036 |
| DSE-04 | Sand-Cement Endwall for 90" CM Pipe | 5037 |
| DSE-05 | Sand-Cement Endwall for 76"×57" CMP Arch | 5030 |
| DSE-06 | Sand-Cement Endwall for 92"×65" CMP Arch | 5031 |
| DSE-07 | Sand-Cement Endwall for 106"×73" CMP Arch | 5032 |
| DSE-08 | Sand-Cement Endwall for 123"×81" CMP Arch | 5033 |
| DSE-09 | Sand-Cement Endwall for 142"×91" CMP Arch | 5034 |
| DSE-10 | Sand-Cement Endwall for 154"×100" CMP Arch | 5035 |

## FENCES

| | | |
|---|---|---|
| FLD-01 | Fence Location Details | 5072 |
| FTA-01 | Fence, Type A | 5072 |
| FTB-01 | Fence, Type B | 5072 |

## GENERAL

| | | |
|---|---|---|
| GCG-01 | Cattle Guard | 2489-A |
| GEC-01 | Erosion Control Devices, Temporary Slope Drains | (New) |
| GEC-02 | Erosion Control Devices, Sediment Basins | (New) |
| GEC-03 | Erosion Control Devices, Sediment Check | (New) |
| GEC-04 | Erosion Control Devices, Silt Barriers | (New) |
| GEC-05 | Erosion Control Devices, Baled Hay or Straw | (New) |
| GEU-01 | Embankment Utilization Details | (New) |
| GMC-01 | Details for Municipal Construction | 1915-K |
| ~~GRR-01~~ | ~~Railroad Crossing Protective Devices~~ | ~~1467-L~~ 17882 |
| GRA-01 | Miscellaneous Rest Area Details | 4400-A |
| GRC-01 | Miscellaneous Roadway Construction Details | 1101-W |
| GRR-01 | Details of Railroad Crossings | 1466-L |
| GRT-01 | Standard Details for Ramp Terminals | 5073-L |
| GSA-01 | Standard Abbreviations | 194 |
| GSE-01 | Superelevation Details | 5010-G |
| GSE-02 | Superelevation Details for Municipal Construction | 5075-A |
| GSS-01 | Standard Symbols for Key Maps and Plan Sheets | 195 |
| GTC-01 | Tractor Crossings | 5077-B |
| GTO-01 | Turnout Details | 5016-B |
| GEC-06 | Erosion Control Details for Permanent Construction | (New) |

## PAVEMENT

| | | |
|---|---|---|
| PCG-01 | Curb, Curb and Gutter | 5080-G |
| PCR-01 | Curb Cut Ramp for Physically Handicapped | 5081 |
| PEJ-01 | Bridge Approach Expansion Joint for Concrete Pavement | 5084-C |
| PJ-01 | Concrete Pavement Joints | 5071-J |
| PMS-01 | Median Storage Lanes | 5080-G |
| PTS-01 | Traffic Separators | 5080-G |
| PEJ-02 | Bridge Approach Expansion Joint for Concrete Pavement | (New) |

Listed below are all the standard plans which are currently in use by the Florida Department of Transportation, Design Section.

| PLAN NO. | | DESCRIPTION | | PLAN DATE |
|---|---|---|---|---|
| GSA-01 -02 | 194 (2 sheets) | Standard Abbreviations | | 8-72 |
| GSS-01 -02 -03 | 195 (3 sheets) | Standard Symbols | | 8-72 |
| DCE-02 | 200-B | Endwalls | R | 3-73 |
| GRC-01 -02 | 1101-W (2 sheets) | Miscellaneous Roadway Construction Details | R | 3-73 |
| DCE-03, 04, 05 | 1129-G (3 sheets) | U-Endwalls | R | 3-73 |
| DSD-01 -02 | 1331-C | Inlet Boxes | R | 8-69 |
| DCE-01 | 1454-C | Endwalls | R | 3-73 |
| FE-01, 02 | 1455-C (2 sheets) | End Section | R | 3-73 |
| GRR-01, 02 03, 04 | 1466-L (4 sheets) | Railroad Crossings | R | 3-73 |
| GPD-01, 02 03, | 1467-A (3 sheets) | Railroad Crossing Protective Devices | R | 2-72 |
| GMC-01 | 1915-K | Details for Municipal Construction | R | 3-73 |
| DSE-01 | 2037-A | Sand-Cement Endwalls | R | 7-71 |
| DEX-01 | 2090-C | Culvert Extension | R | 3-73 |
| DEX-02 | 2099-D | Culvert Extension | R | 3-73 |
| GGR-01, 02 03, 04, 05 | 2300-R (4 sheets) | Guardrail | R | 2-73 |
| DSS-01 | 2319 | Sand-Cement Spillways | | 3-9-54 |
| DCE-07 | 2415-A | Headwall | R | 3-73 |
| DCE-08 | 2416-A | Headwall | | 3-73 |
| DDB-01 | 2443-C | Inlets | R | 3-73 |
| GCG-01 | 2489-A | Cattle Guard | R | 3-73 |
| DCS-01 | 2836 | Spillway | | 12-51 |
| DIM-01 | 2891-D | Inlet | R | 3-73 |
| DIS-01 | 2892-A | Inlet | R | 3-73 |

| PLAN NO. | DESCRIPTION | PLAN DATE |
|---|---|---|
| DCE-12 2901-A | Headwall | R 3-73 |
| DCE-15 2914-A | Headwall | R 3-73 |
| DCE-19 2932-A | Headwall | R 3-73 |
| DCE-16 2933-A | Headwall | R 3-73 |
| DCE-13 2994-A | Headwall | R 3-73 |
| DCE-14 3014-A | Headwall | R 3-73 |
| DCE-18 3015-A | Headwall | R 3-73 |
| DCE-06 3018-B | Headwall | R 3-73 |
| DCE-17 3041-A | Headwall | R 3-73 |
| DCE-09 3225-A | Headwall | R 3-73 |
| DCE-10 3564-A | Headwall | R 3-73 |
| DCE-11 4191-A | Headwall | R 3-73 |
| GRA-01 4400-A | Rest Area Details | R 2-69 |
| GSE-01 5010-~~SH~~ | Superelevation | R 1-67 |
| GTO-01 5016-B | Turnout Details | R 3-69 |
| DSE-04 5030 | Sand-Cement Headwalls | 10-22-53 |
| DSE-05 5031 | Sand-Cement Headwalls | 11-53 |
| DSE-06 5032 | Sand-Cement Headwalls | 11-53 |
| DSE-07 5033 | Sand-Cement Headwalls | 10-21-53 |
| DSE-08 5034 | Sand-Cement Headwalls | 10-20-53 |
| DSE-09 5035 | Sand-Cement Headwalls | 11-53 |
| DSE-02 5036 | Sand-Cement Headwalls | 5-54 |
| DSE-03 5037 | Sand-Cement Headwalls | 5-13-54 |
| DIV-01 5043-B | Inlet | R 7-71 |
| DDB-02 5046-D | Inlet | R 2-69 |
| DBT-01 5047-G (2 sheets)<br>DIT-01<br>-02 | Inlet | R 3-73 |

| PLAN NO. | | DESCRIPTION | PLAN DATE |
|---|---|---|---|
| DIX-01 | 5048-B | Inlet | R 3-73 |
| DIZ-01 | 5049-A | Inlet | R 3-73 |
| DMO-01 -02 | 5061-E (2 sheets) | Drainage Details | R 3-73 |
| DMO-01 | 5062 | Drainage Details | 3-26-59 |
| PJ-01, 02,03 | 5071-H (3 sheets) | Pavement Joints | R 6-71 |
| TA-01, FTB-1, FLD-01 | 5072-G (2 sheets) | Fencing | R 10-68 |
| GRT-01 -02 -03 | 5073-~~K~~L (3 sheets) | Ramp Terminals | R 1-70 |
| GSE-02 -03 | 5075-~~A~~ (2 sheets) | Superelevation | R 3-67 |
| GTC-01 | 5077-B | Tractor Crossings | R 3-73 |
| | ~~5078-E (2 sheets)~~ | ~~Signs~~ | ~~R 3-68~~ |
| CG-01, PTS-1, PMS-01 | 5080-G (2 sheets) | Curb and Gutter | R 8-71 |
| PEJ-01 | 5084-C | Expansion Joint | R 3-73 |
| DSM-01 -02 | 5085-A (2 sheets) | Safety Modifications | R 3-73 |
| DIY-01 | 5086-A | Inlet | R 6-71 |

| FED. ROAD DIV. No. | STATE | PROJECT No. | FISCAL YEAR | SHEET No. |
|---|---|---|---|---|
| 9 | Fla. | | | |

# FLORIDA ROAD DESIGN STANDARDS

## BARRIERS

- Guardrail Const'n BGR
- Median Barrier Details BMB

## DRAINAGE

- Back of Sidewalk Drain. DBS
- Concrete Spillway DCS
- Culvert Extension DEX
- Misc. Drainage Details DMD
- Median Opening Drain. DMO
- Ditch Paving & Sodding DPS

MISCELLANEOUS

INLETS, MANHOLES & JUNCTION BOXES

- Curb Inlets DCI
- Ditch Bottom Inlets DDI
- Gutter Inlets DGI
- Structure Bottoms DSB
- Supplemental Details DSD
- Safety Modifications DSM

ENDWALLS

- Concrete Endwalls DCE
- Sand-Cement Endwalls DSE

## FENCES

- Location Details FLD
- Fence Type "A" FTA
- Fence Type "B" FTB

## GENERAL

- Cattle Guard GCG
- Erosion Control Devices GEC
- Embankment Utilization GEU
- Municipal Const'n GMC
- Protective Devices (RR) GPD
- Rest Area (Misc. Details) GRA
- Roadway Const'n GRC
- Railroad Crossings GRR
- Ramp Terminals GRT
- Standard Abbreviations GSA
- Superelevation GSE
- Standard Symbols GSS
- Tractor Crossings GTC
- Turnout Details GTO

## PAVEMENT

- Curb; Curb & Gutter PCG
- Curb Cut Ramp PCR
- Br. Approach Expan. Joint PEJ
- Concrete Pavement Joints PJ
- Median Storage Lane Details PMS
- Traffic Separators PTS

## EXPLANATION OF ALPHANUMERIC INDEX NUMBERING SYSTEM

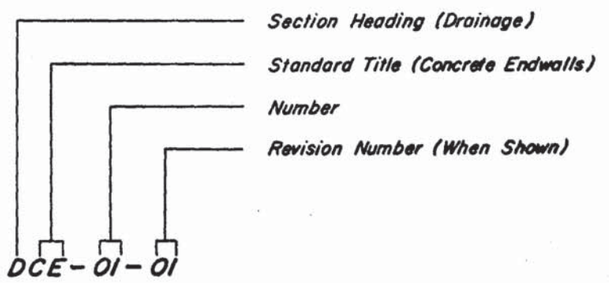

Form 281-10

# MEMORANDUM

State of Florida Department of Transportation

DATE September 12, 1975

TO All Holders of Standard Index Book

FROM E. H. Hart, Deputy Design Engineer (Roadways)

COPIES TO

SUBJECT New Standard Index Book

We have completed the new Road Design Standards Index Books and under cover of this memo are making distribution to all holders of our current standards.

These new indices are to be incorporated into all contract plans which are scheduled for the January 1976 letting or later. They are to be listed on the key sheet in the same order as shown on the "Table of Contents."

The two most obvious changes are the conversion of all the indices to the new alpha-numeric numbering system and the division into five major categories: Barriers, Drainage, General, Fences and Pavement. One of these categories, drainage, was further broken down into three groups: (1) Miscellaneous, (2) Inlets, Manholes and Junction Boxes, and (3) Endwalls. We have also made a number of long needed revisions and up-dating. Some of the drainage structures will require new bid item numbers which will be forwarded to you by October 1, 1975.

Please take time to study these new books and become familiar with the changes and the new numbering system.

All questions and/or comments should be directed to:

Mr. L. M. Filsinger
Road Design Section
Mail Sta. 32
Phone: 488-3851 (Suncom 278-3851).

EHH:jl

| FED ROAD Div No | STATE | PROJECT NO | FISCAL YEAR | SHEET NO |
|---|---|---|---|---|
| 3 | FLA. | | | |

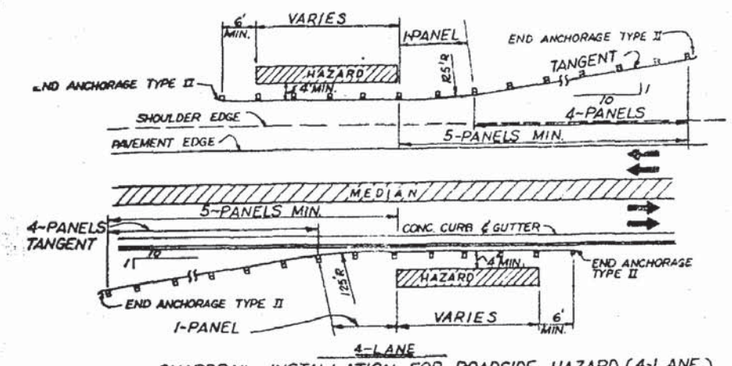


GUARDRAIL INSTALLATION FOR ROADSIDE HAZARD (4-LANE)

~DETAIL B~

NOTE: SEE GENERAL NOTES Nº 1, 2, 3, 4, 7, 11 AND 12. ON SHEET NO. 2

NOTE: SEE DETAILS J AND K FOR GUARDRAIL OFFSETS.

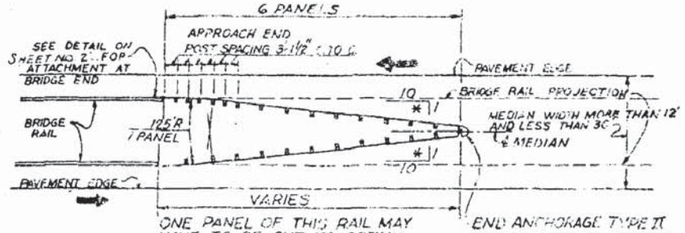


MINIMUM BRIDGE END GUARDRAIL INSTALLATION - NARROW MEDIAN (LESS THAN 30')

~DETAIL E~

NOTE: SEE GENERAL NOTES Nº 1, 2 AND 3. ON SHEET NO. 2

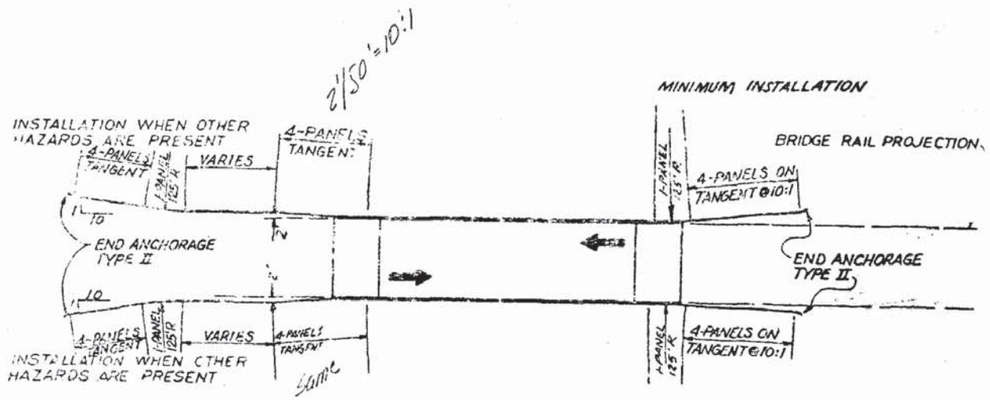


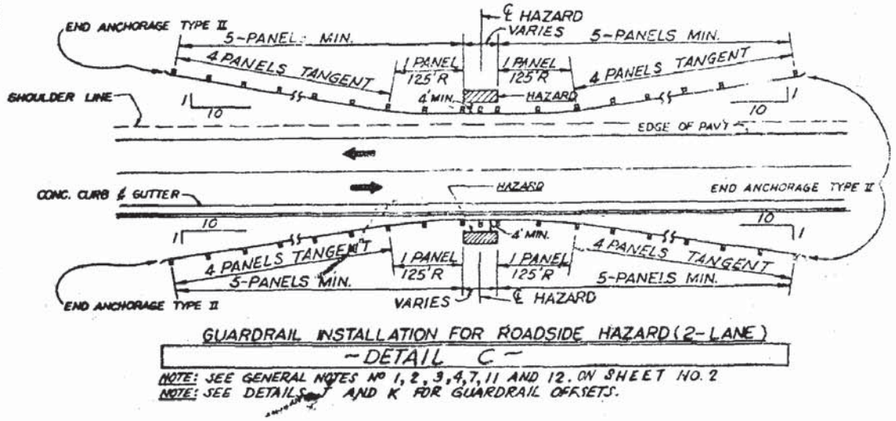


GUARDRAIL INSTALLATION FOR ROADSIDE HAZARD (2-LANE)

~DETAIL C~

NOTE: SEE GENERAL NOTES Nº 1, 2, 3, 4, 7, 11 AND 12. ON SHEET NO. 2

NOTE: SEE DETAILS J AND K FOR GUARDRAIL OFFSETS.

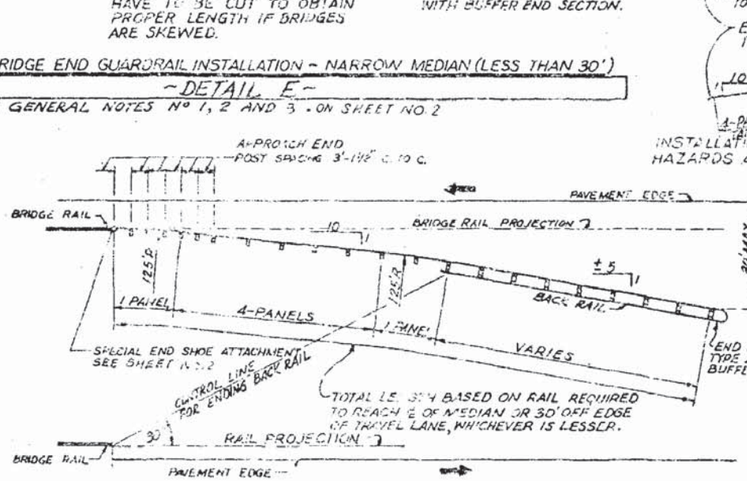


MINIMUM BRIDGE END GUARDRAIL INSTALLATION - WIDE MEDIAN (30' OR GREATER)

~DETAIL F~

NOTE: SEE GENERAL NOTES Nº 1, 3 AND 4. ON SHEET NO. 2

NOTE: BACK RAIL IS REQUIRED FOR PROTECTION OF OFF-BRIDGE TRAFFIC WHERE MEDIAN EDGE OF PAVT. FOR OFF-BRIDGE TRAFFIC PASSES LESS THAN 30' FROM END ANCHORAGE. BACK RAIL IS NOT REQUIRED WHERE MEDIAN WIDTH IS 64' OR GREATER. PAYMENT FOR BACKRAIL IS TO BE INCLUDED IN THE TOTAL LENGTH OF GUARDRAIL REQUIRED, MEASURED ALONG BOTH THE FRONT RAIL AND ALONG THE BACK RAIL.

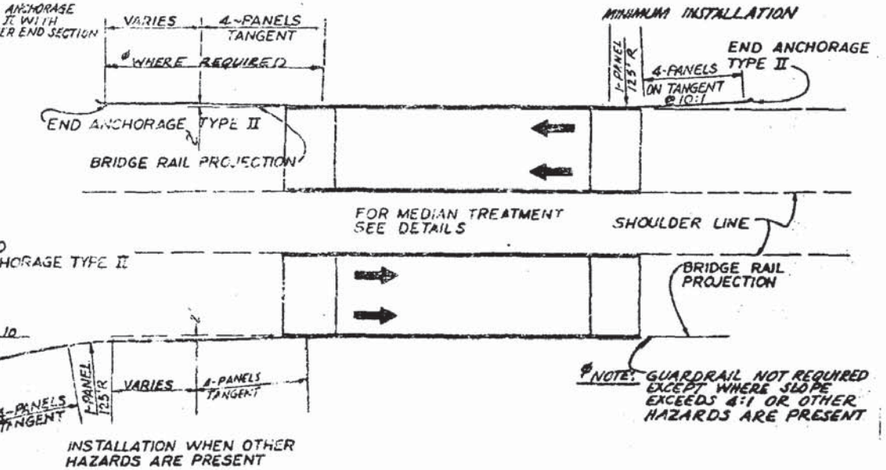


GUARDRAIL INSTALLATION FOR BRIDGE ENDS - 2 LANE

~DETAIL H~

NOTE: SEE GENERAL NOTES Nº 1, 2, 3, 4 AND 7. ON SHEET NO. 2

NOTE: SEE SHEET NO. 2, DETAIL N FOR ATTACHMENT TO BRIDGE ENDS.

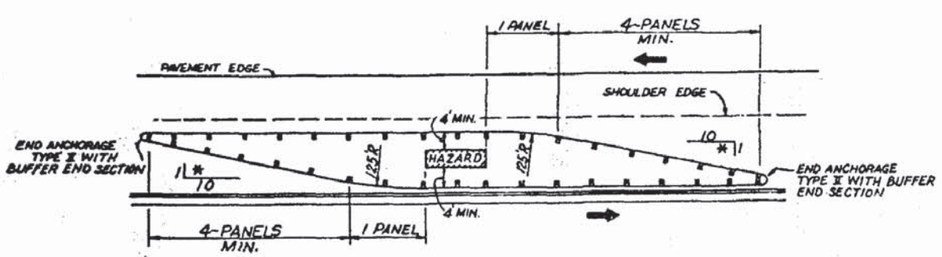


GUARDRAIL - MEDIAN INSTALLATION

~DETAIL D~

NOTE: SEE GENERAL NOTES Nº 1, 2, 3, 4, 11 AND 12. ON SHEET Nº 2

NOTE: SEE DETAILS J AND K FOR GUARDRAIL OFFSETS.

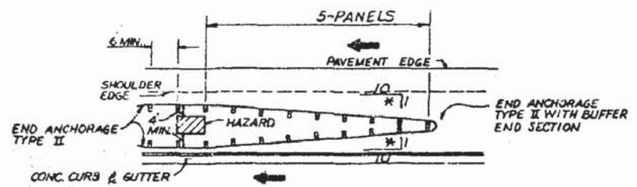


GUARDRAIL - HAZARD INSTALLATION

~DETAIL G~

NOTE: SEE GENERAL NOTES Nº 1, 2 AND 3. ON SHEET Nº 2

NOTE: SEE DETAILS J AND K FOR GUARDRAIL OFFSETS.

* 10:1 MAXIMUM DESIREABLE, MAY BE FLATTER OR SLIGHTLY STEEPER WHERE OTHER FACTORS CONTROL LENGTH OF INSTALLATION.

NOTE: FOR DETAILS D, E, F AND G ONLY ONE END ANCHOR IS REQUIRED ON EACH DOUBLE RAIL END OF THE INSTALLATION AND SHOULD BE ATTACHED TO AND IN LINE WITH THE TRAFFIC APPROACH SIDE.

GUARDRAIL INSTALLATION FOR BRIDGE ENDS - 4 LANE

~DETAIL I~

NOTE: SEE GENERAL NOTES Nº 1, 2, 3, 4 AND 7. ON SHEET NO. 2

NOTE: SEE SHEET NO. 2, DETAIL N FOR ATTACHMENT TO BRIDGE ENDS.

FHWA APPROVED: 7-27-76

**FLORIDA DEPARTMENT OF TRANSPORTATION**
ROADWAY PLANS SECTION

# ~GUARDRAIL CONSTRUCTION~

| REVISIONS | | REVISIONS | |
|---|---|---|---|
| Dates | Descriptions | Dates | Descriptions |
| 7/71 L.F | Changed number of panels required. Changed end anchor detail | 8/69 G.F | REVISED GUARDRAIL INSTALLATION DETAILS & ADDED APPROACH ENDS |
| 7/72 L.F | Changed end anchorage type | 4/71 | AND OTHER MINOR CHANGES. |
| 10-74 | Changed Index Nº | 2-70 G.F | Removed Twist from Guardrail & added Panels |

| ROAD NO | COUNTY | PROJECT NO. |
|---|---|---|

| | Names | Dates |
|---|---|---|
| Detailed by | J. Walker | 7-6-71 |
| Checked by | J.K.C | 7-69 |
| Quantities by | | |
| Checked by | | |
| Traced by | | |

Recommended for Approval by: _____ County Design Engineer - Roadways

APPROVED BY: _____ State Design Engineer

Drawing No. 1 of 5

Index No. - RGR-01-1

| FED ROAD DIV NO | STATE | PROJECT NO | FISCAL YEAR | SHEET NO |
|---|---|---|---|---|
| 3 | FLA. | | | |

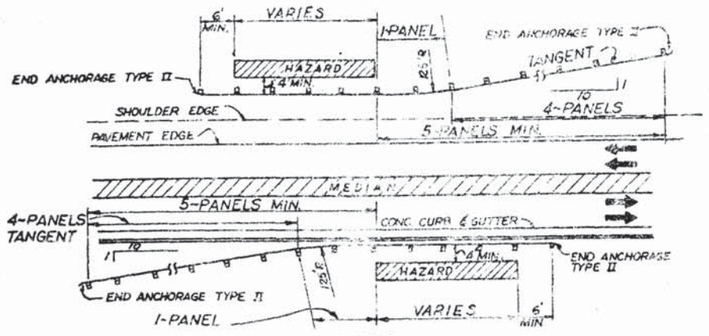


GUARDRAIL INSTALLATION FOR ROADSIDE HAZARD (4-LANE)

~DETAIL B~

NOTE: SEE GENERAL NOTES NO 1, 2, 3, 4, 7, 11 AND 12, ON SHEET NO. 2

NOTE: SEE DETAILS J AND K FOR GUARDRAIL OFFSETS.

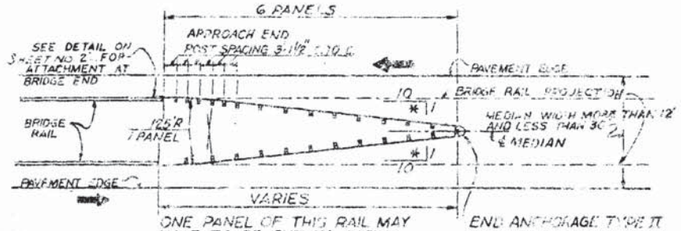


MINIMUM BRIDGE END GUARDRAIL INSTALLATION ~ NARROW MEDIAN (LESS THAN 30')

~DETAIL E~

NOTE: SEE GENERAL NOTES NO 1, 2 AND 3, ON SHEET NO. 2

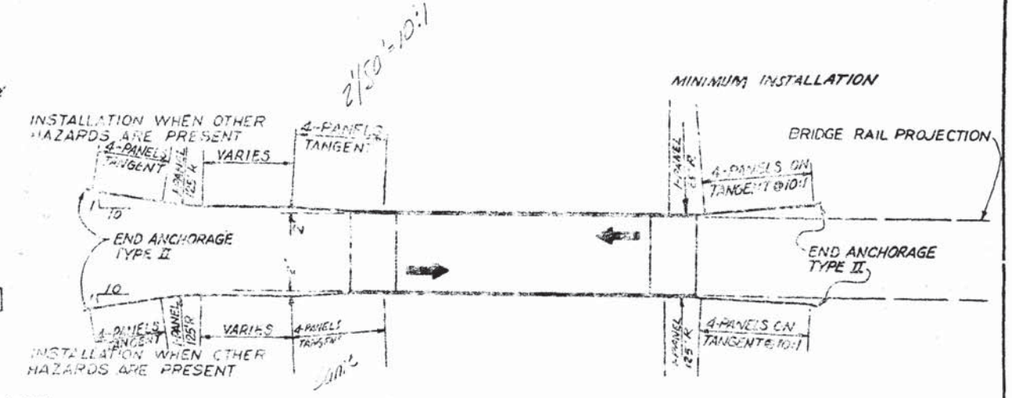


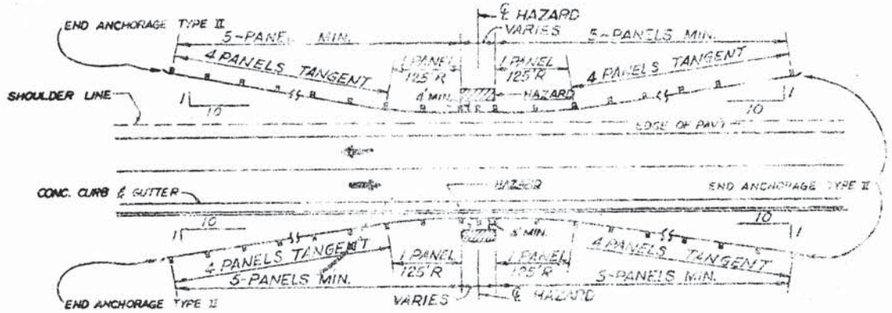


GUARDRAIL INSTALLATION FOR ROADSIDE HAZARD (2-LANE)

~DETAIL C~

NOTE: SEE GENERAL NOTES NO 1, 2, 3, 4, 7, 11 AND 12, ON SHEET NO. 2

NOTE: SEE DETAILS J AND K FOR GUARDRAIL OFFSETS.

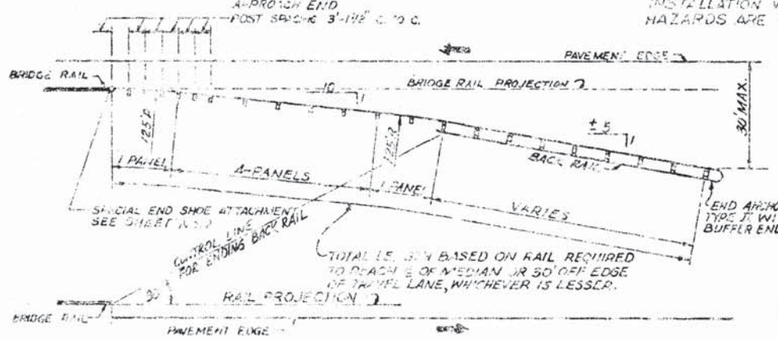


MINIMUM BRIDGE END GUARDRAIL INSTALLATION ~ WIDE MEDIAN (30' OR GREATER)

~DETAIL F~

NOTE: SEE GENERAL NOTES NO 1, 3 AND 4 ON SHEET NO. 2

NOTE: BACK RAIL IS REQUIRED FOR PROTECTION OF OFF-BRIDGE TRAFFIC WHERE MEDIAN EDGE OF PAVT. FOR OFF-BRIDGE TRAFFIC VARIES LESS THAN 20' FROM END ANCHORAGE. BACK RAIL IS ALSO REQUIRED WHERE MEDIAN WIDTH IS 60' OR GREATER. PAYMENT FOR BACKRAIL IS TO BE INCLUDED IN THE TOTAL LENGTH OF GUARDRAIL REQUIRED, MEASURED ALONG BOTH THE FRONT RAIL AND ALONG THE BACK RAIL.

GUARDRAIL INSTALLATION FOR BRIDGE ENDS ~ 2 LANE

~DETAIL H~

NOTE: SEE GENERAL NOTES NO. 1, 2, 3, 4 AND 7, ON SHEET NO. 2

NOTE: SEE SHEET NO. 2, DETAIL N FOR ATTACHMENT TO BRIDGE ENDS.

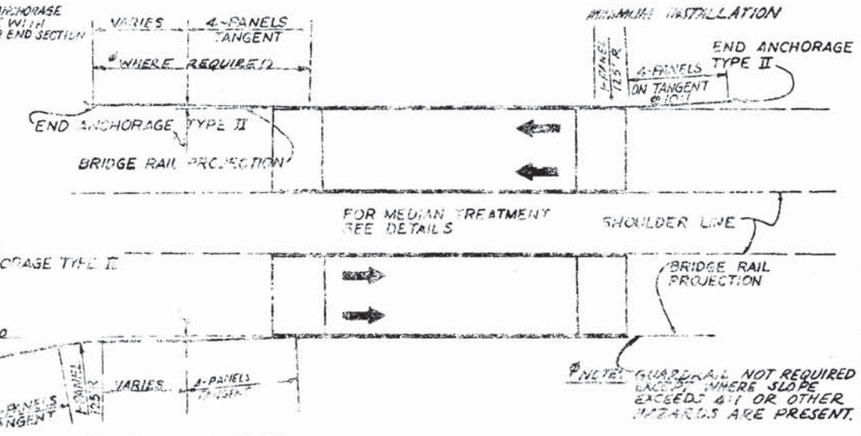


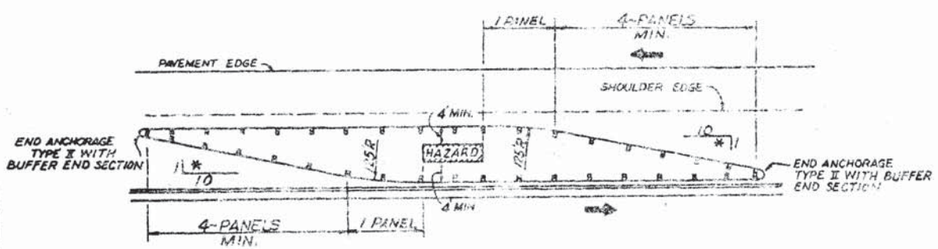


GUARDRAIL ~ MEDIAN INSTALLATION

~DETAIL D~

NOTE: SEE GENERAL NOTES NO 1, 2, 3, 4, 11 AND 12, ON SHEET NO 2

NOTE: SEE DETAILS J AND K FOR GUARDRAIL OFFSETS.

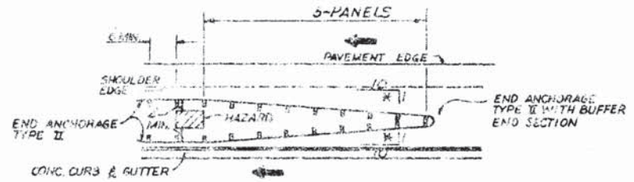


GUARDRAIL ~ HAZARD INSTALLATION

~DETAIL G~

NOTE: SEE GENERAL NOTES NO 1, 2 AND 3, ON SHEET NO 2

NOTE: SEE DETAILS J AND K FOR GUARDRAIL OFFSETS.

GUARDRAIL INSTALLATION FOR BRIDGE ENDS ~ 4 LANE

~DETAIL I~

NOTE: SEE GENERAL NOTES NO 1, 2, 3, 4 AND 7, ON SHEET NO 2

NOTE: SEE SHEET NO 2, DETAIL N FOR ATTACHMENT TO BRIDGE ENDS.

* 10:1 MAXIMUM DESIREABLE, MAY BE FLATTER OR SLIGHTLY STEEPER WHERE OTHER FACTORS CONTROL LENGTH OF INSTALLATION.

* NOTE: FOR DETAILS D, E, F AND G ONLY ONE END ANCHOR IS REQUIRED ON EACH BRIDGE RAIL END OF THE INSTALLATION AND SHOULD BE ATTACHED TO AND IN LINE WITH THE TRAFFIC APPROACH SIDE.

FHWA APPROVED: 7-27-76

FLORIDA DEPARTMENT OF TRANSPORTATION
ROADWAY PLANS SECTION

~GUARDRAIL CONSTRUCTION~

| REVISIONS | | REVISIONS | |
|---|---|---|---|
| Dates | Descriptions | Dates | Descriptions |
| 7/71 LF | Changed number of panels required, Changed end anchor appr. | 7/69 GF | Revised guard rail installation, bridge end approach ends, |
| 7/72 LF | Changes did anchor page type. | 1/70 | and other minor changes. |
| 10-73 | Changed Index No. | 2-70 GF | Removed Twist from Guardrail & added Panels |

| ROAD NO. | COUNTY | PROJECT NO. |
|---|---|---|
| | | |

| | Initials | Dates |
|---|---|---|
| Designed By | L. Valpey | 7-69 |
| Checked By | J.K.C. | 7-69 |
| Quantities By | | |
| Checked By | | |
| Traces By | | |

Recommended for Approval By: [signature] District Design Engineer-Roadways

Approved By: [signature] State Design Engineer

Index No.

Drawing No. 1 of 5 — BGR-01-1

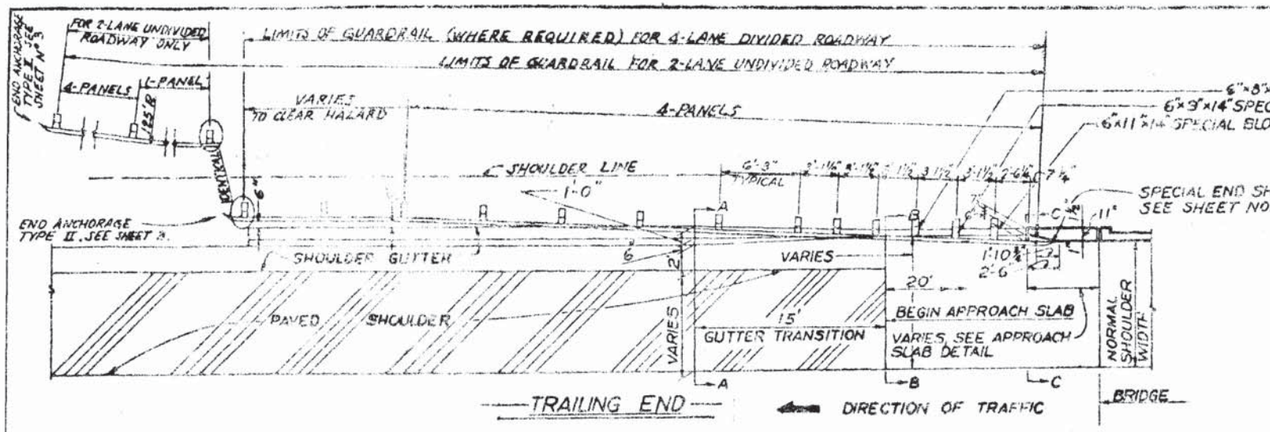


DETAIL J

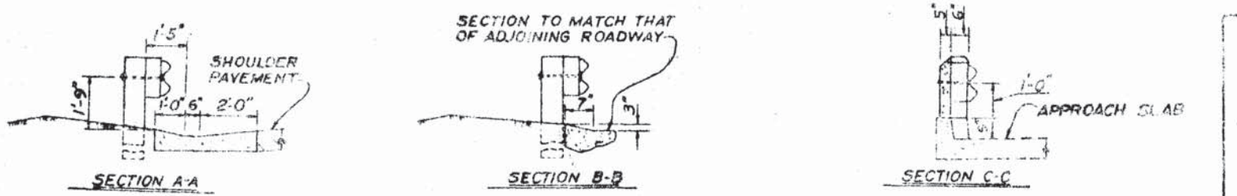


GUARDRAIL AND SHOULDER GUTTER TRANSITIONS AT BRIDGE APPROACHES

## - GENERAL NOTES -

1. The illustrated limits for guardrail installation are standard requirements, one panel equals 12.5 ft..
2. Installations shown are typical. The intent is that 62.5 ft. of rail be available approaching earliest hazard.
3. Post spacing shall be 6.25 ft. except that a reduced spacing of 3'-1½ shall be used at bridge anchorages (see Detail J). At hazards, where the face of guardrail offset from hazard is less than 4 ft., a reduced spacing shall also be provided for the length of the hazard plus one panel of approach rail.
4. Straight rail sections may be used for all radii of 125 ft. or greater. For radii less than 125 ft. the rail must be fabricated to fit.
5. For specifications of materials refer to standard specifications.
6. Design load of rail equals 80,000 pounds in tension.
7. In addition to use at conventional roadside hazards, guardrail will be required where fill slopes exceed 4:1, except that where fill heights are less than 8 ft. guardrail may be omitted (regardless of fill slope) unless in the opinion of the Engineer its use is deemed necessary due to other roadside features.
8. Undressed timber will be permitted for 6"x8"x14" nominal treated timber block. A 5"x8"x12" nominal treated timber block or a 14" section of the steel post will be permitted as an alternate. The 14" alternate steel section shall be bolted to the alternate post with one 5/8"x1½ bolt on each side of block. Blocks used with Thrie Beam rail shall be 22" long.
9. Where guardrail is constructed for street barricade no anchorage, offset blocks or terminal end panels will be required.
10. Where necessary to enlarge or add additional holes to galvanized guardrail, the work will be done by drilling or reaming. Damaged galvanized guardrail will be coated with a zinc compound. No burning of holes will be permitted.
11. Guardrail to be installed at maximum practical distance from travel lane except at locations controlled by installation of non-mountable curb (standard 6" curb is considered mountable).
12. If desirable 4 ft. minimum offset between face of rail and hazard can not be provided, a 2 ft. offset may be used. A special detail should be prepared by the designer and forwarded to the Deputy Design Engineer, Roadway Office for review and approval if minimum 2 ft. offset can not be provided.
13. Amber reflectors shall be used adjacent to auxiliary lanes and within 250 ft. of intersections; at all other locations clear reflectors shall be used.

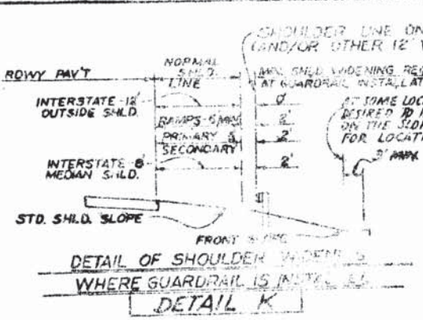


DETAIL OF SHOULDER WIDENING WHERE GUARDRAIL IS INSTALLED

DETAIL K

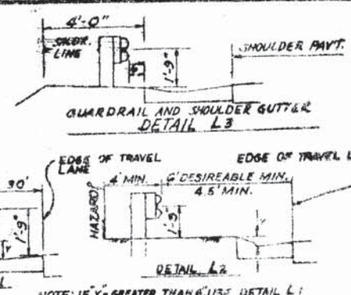


GUARDRAIL AND SHOULDER GUTTER

DETAIL L3




NOTE: IF Y'S GREATER THAN 6" USE DETAIL L1 IF Y'S 6" OR LESS, USE DETAIL L2

GUARDRAIL LOCATION AT CURB AND GUTTER SECTION

DETAIL L

NOTE: Where existing conditions prohibit obtaining minimum offset shown on detail L2, guardrail back of curb is to be constructed in accord with detail L1.

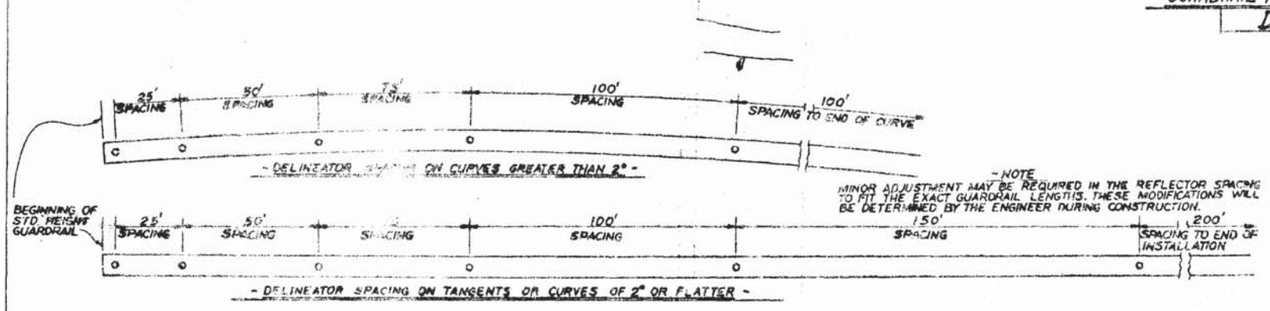


- NOTE -
MINOR ADJUSTMENT MAY BE REQUIRED IN THE REFLECTOR SPACING TO FIT THE EXACT GUARDRAIL LENGTHS. THESE MODIFICATIONS WILL BE DETERMINED BY THE ENGINEER DURING CONSTRUCTION.

- DETAIL OF REFLECTOR SPACING -

DETAIL M

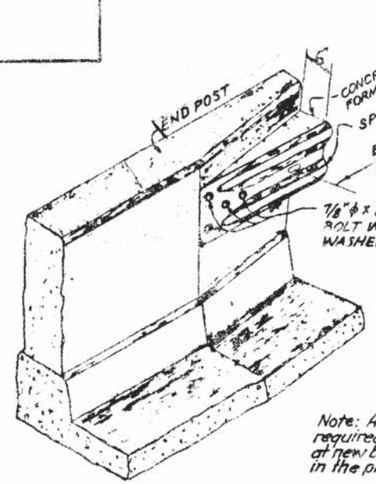


Note: All the component parts required to complete the attachment of new bridge ends shall be included in the price per linear foot of guardrail.

GUARDRAIL ATTACHMENT AT NEW BRIDGE ENDS

DETAIL N

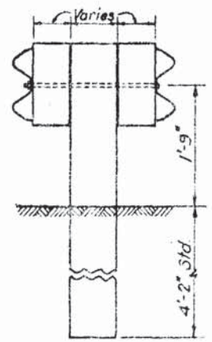


DETAIL OF DOUBLE FACED GUARDRAIL INSTALLATION IN MEDIANS

FHWA APPROVED: 7-27-76

FLORIDA DEPARTMENT OF TRANSPORTATION
ROADWAY PLANS SECTION

- GUARDRAIL CONSTRUCTION -

| REVISIONS | | ROAD NO. | COUNTY | PROJECT NO. |
|---|---|---|---|---|
| Dates | Descriptions | | | |
| 9/69 | ADDED DETAILS FOR END AND GUTTER TRANSITIONS AT BRIDGE APPROACH | | | |
| 7-71 | Changed post spacing at trailing end. Changed notes 7 & 7.1. | | | |
| 10-74 | Added note 13 | | | |
| 5-76 | Revised Note 8 | | | |

| | Names | Dates |
|---|---|---|
| Designed by | K. Wallace | 7-69 |
| Checked by | J.K.C. | 7-69 |
| Quantities by | | |
| Checked by | | |
| Traced by | | |

Recommended for Approval by: [illegible] State Roadway Design Engineer
APPROVED BY: [illegible] State Highway Engineer

Drawing No. 2 of 5 | Index No. BGR-01

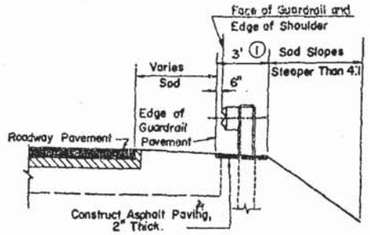


ADJACENT TO UNPAVED SHOULDER

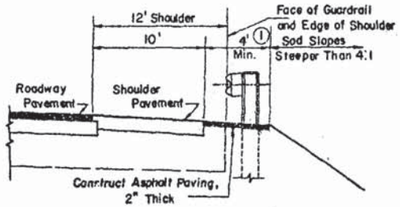


ADJACENT TO SHOULDER PAVEMENT ②

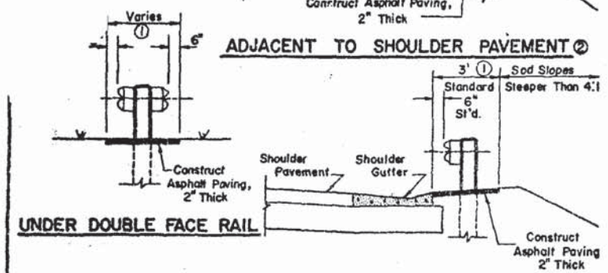


ADJACENT TO SHOULDER GUTTER ②

## DETAIL OF GUARDRAIL PAVEMENT

NOTE: ① Soil Sterilization – Cost of soil sterilization to be included in the cost of Asphalt Paving. See Special Provisions.

② Where shoulder pavement and/or shoulder gutter is present adjacent to a standard flare end the guardrail pavement shall extend out to the shoulder pavement or gutter in front of the flare.

'76 Added 3-74

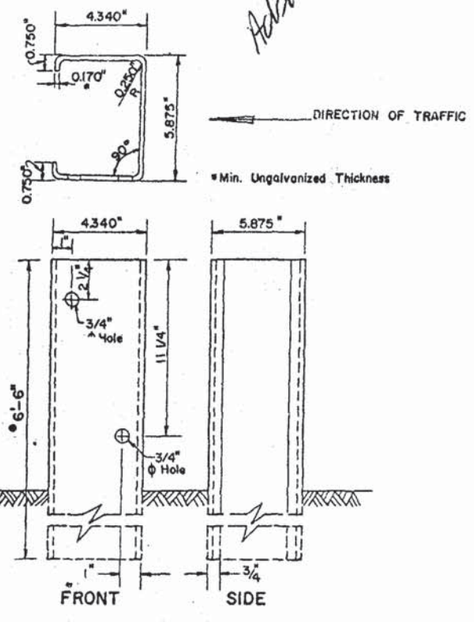


## 6"-"C" STEEL POST

NOTES: Type "C" Steel Post may be used with Double Face Guardrail.

● Type "C" Steel Post placed back of slope break point in slopes steeper than 4:1 shall be 6'9" long unless otherwise noted.

See note 8, sheet 2.

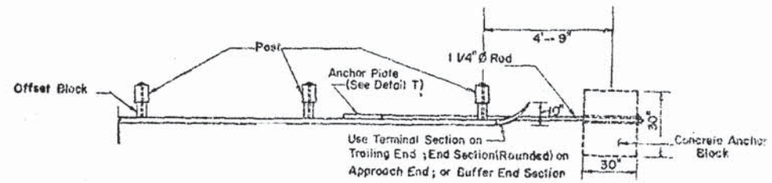


PLAN

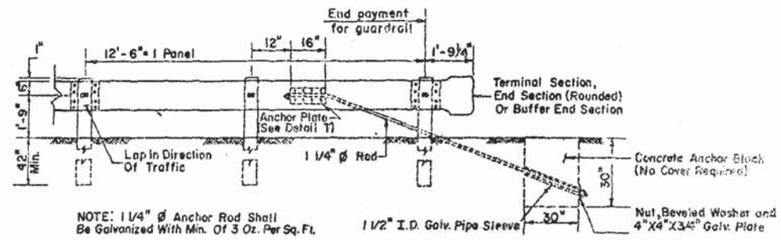


ELEVATION

END ANCHORAGE TYPE II
DETAIL R

NOTE: The payment for the items of End Anchor Assemblies Type II shall include furnishing and installing the Terminal and End Sections, Anchor Plates, Rods, Pipe Sleeves, Anchor Blocks, Pile and the necessary hardware.

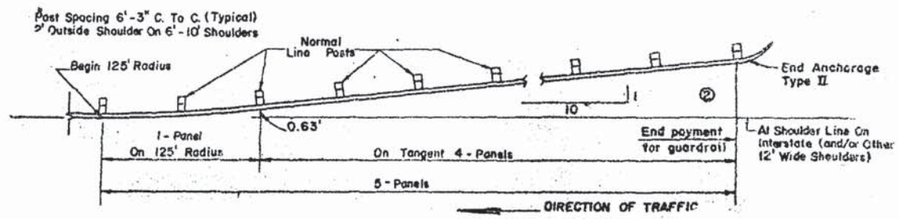


STANDARD FLARE
DETAIL P

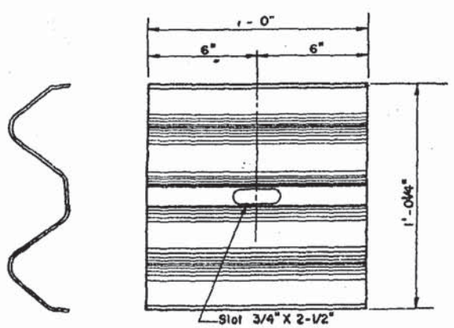


BACK-UP PLATE

NOTE: This back-up plate is placed behind rail elements at intermediate posts (non-splice posts).

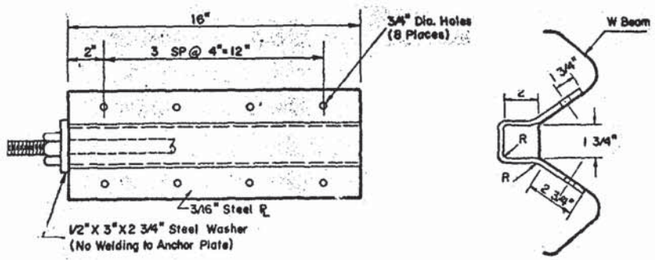


ONE-PIECE ANCHOR PLATE
(ALTERNATE)

7-27-76

FLORIDA DEPARTMENT OF TRANSPORTATION
ROADWAY PLANS SECTION

GUARDRAIL CONSTRUCTION

| ROAD NO. | COUNTY | PROJECT NO. |
|---|---|---|
| | | |

| REVISIONS | | | | |
|---|---|---|---|---|
| Dates | Descriptions | | Names | Dates |
| 7/72 LMF | Sheet redrawn - Changed type of end anchorage. | Designed by | | |
| 12/76 LMF | Moved details from top of sheet to new sheet no.4. Added details R & S. | Checked by | | |
| | | Quantities by | | |
| 10-74 LMF | Redrawn - Removed detail Q & detail B - Added new details - Changed Index No. | Checked by | | |
| 3-76 | Added notes & minor changes | Supervised by | | |

Recommended For Approval By: E. K. Hall, DEPUTY DESIGN ENGINEER
APPROVED BY: State Design Engineer

Drawing No. 3 OF 5

Index: BGR-

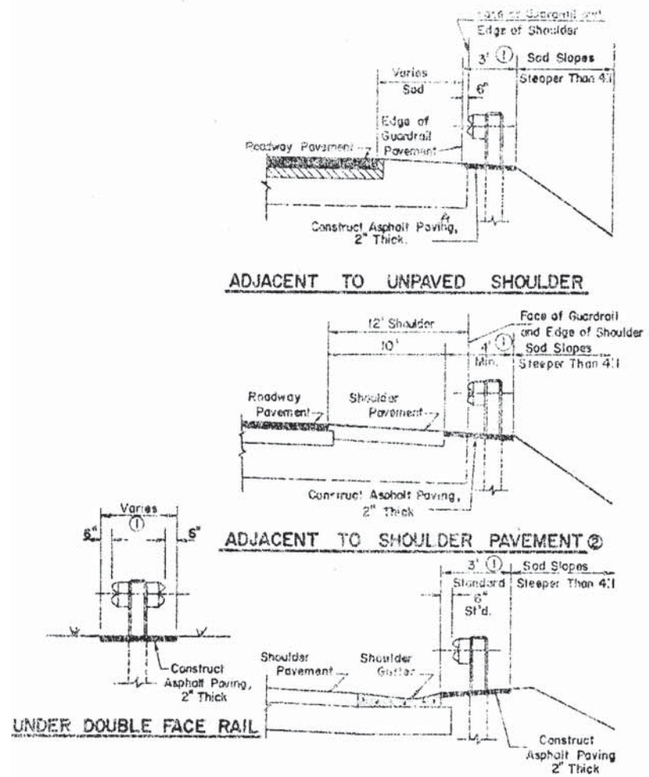


ADJACENT TO UNPAVED SHOULDER



ADJACENT TO SHOULDER PAVEMENT ②



UNDER DOUBLE FACE RAIL

ADJACENT TO SHOULDER GUTTER ②

DETAIL OF GUARDRAIL PAVEMENT

NOTE: ① Soil Sterilization – Cost of soil sterilization to be included in the cost of Asphalt Paving See Special Provisions.
② Where shoulder pavement and/or shoulder gutter is present adjacent to a standard flare and the guardrail pavement shall extend out to the shoulder pavement or gutter in front of the flare.

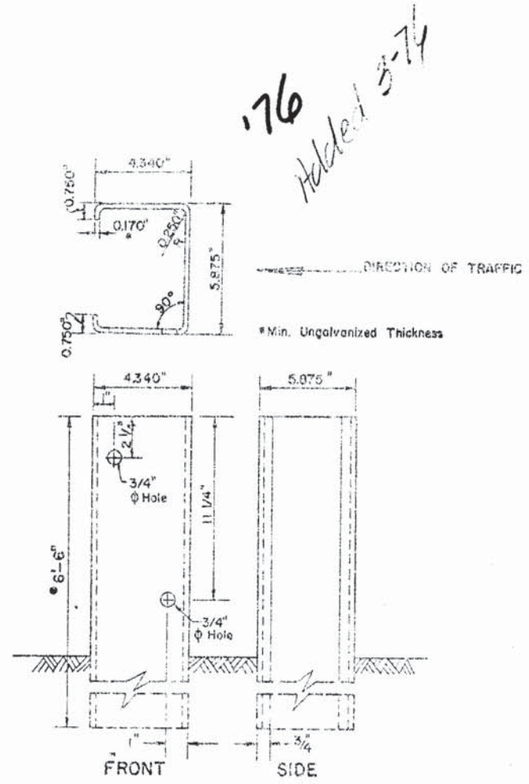


6"-"C" STEEL POST

NOTES: Type "C" Steel Post may be used with Double Face Guardrail.
* Type "C" Steel Post placed back of slope break point in slopes steeper than 4:1 shall be 6'9" long unless otherwise noted.
See note 8, sheet 2.

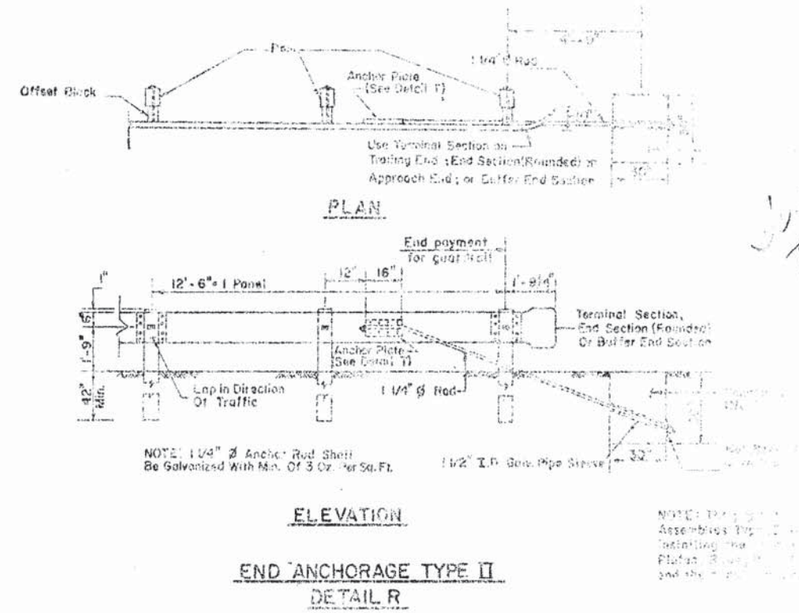


PLAN



ELEVATION

END ANCHORAGE TYPE II
DETAIL R

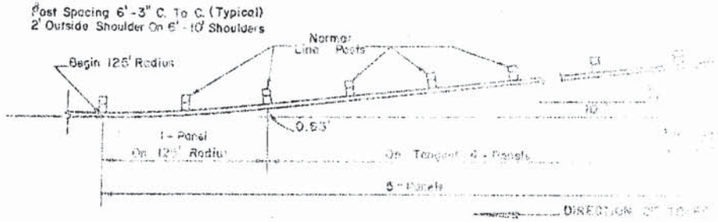


STANDARD FLARE
DETAIL P

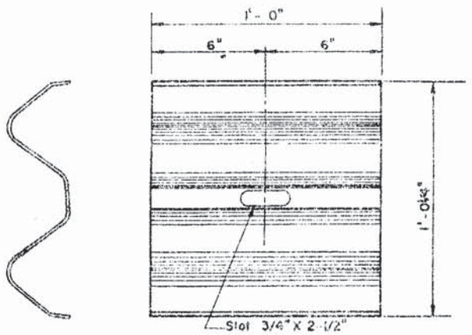


BACK-UP PLATE

NOTE: This back-up plate is placed behind rail elements at intermediate posts (non-splice posts).

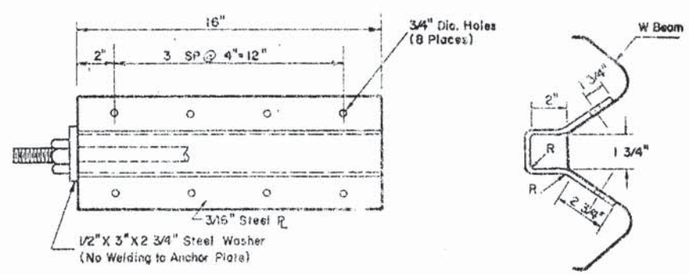


ONE-PIECE ANCHOR PLATE
(ALTERNATE)

FHWA APPROVED
FLORIDA DEPARTMENT OF TRANSPORTATION
ROADWAY
GUARDRAIL

| REVISIONS | | ROAD NO. | COUNTY |
|---|---|---|---|
| Dates | Descriptions | | |
| 7/72 LMF | Sheet redrawn – Changed type of end anchorage. | | |
| 12/73 LMF | Moved details from top of sheet to new sheet no. 4. Added details R & S. | Designed by | |
| 10/74 LMF | Redrawn – Removed detail Q & detail S – Added new details – Changed Index No. | Checked by | |
| | | Quantities by | |
| | | Checked by | |
| | | Supervised by | |

3-76 Added notes & minor changes

in direction of traffic.

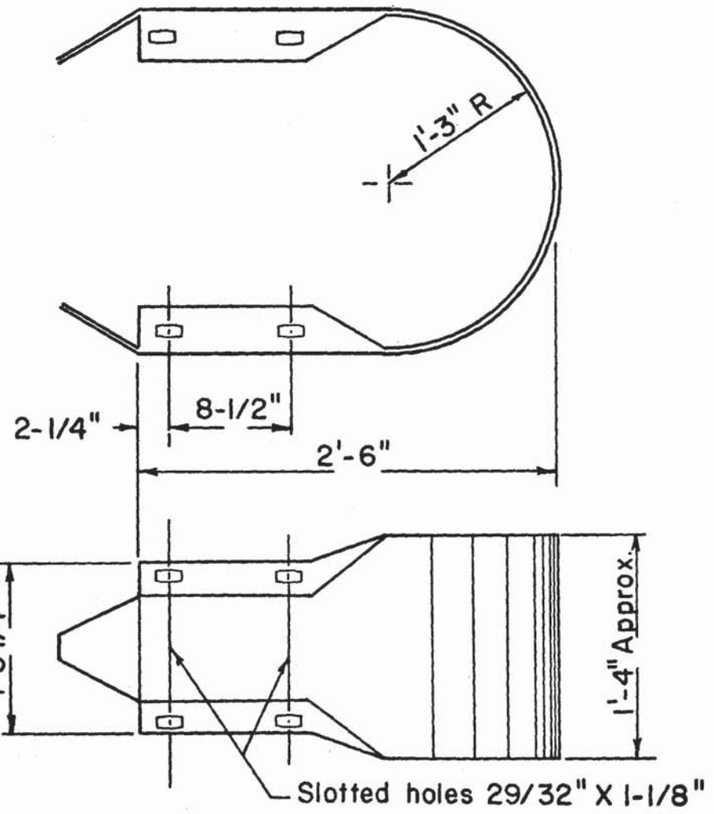


## BUFFER END SECTION

to be used with double faced rail.

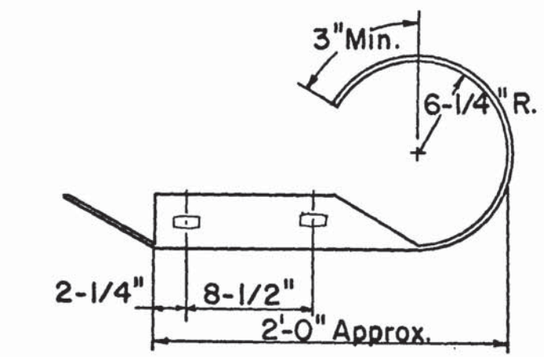


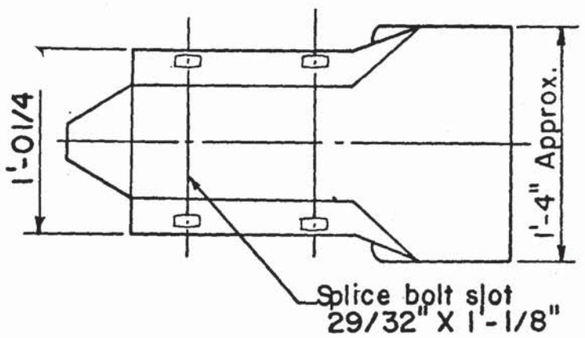


## END SECTION (ROUNDED)

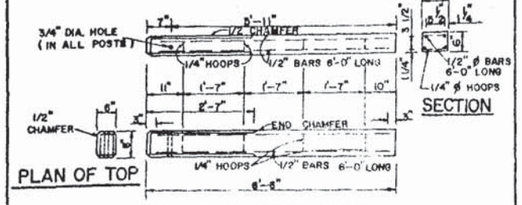


PLAN OF TOP

SECTION

DETAIL OF CONCRETE POST

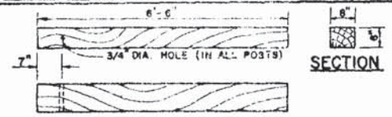


SECTION

DETAIL OF WOOD POST

NOTES:
1. POSTS ARE TO BE DRILLED AND SHAPED PRIOR TO TREATMENT.
2. POSTS SHALL BE PENTACHLOROPHENOL TREATED SOUTHERN YELLOW PINE. CHROMATED COPPER ARSENATE IS ALSO AN ACCEPTABLE PRESERVATIVE.
3. UNDRESSED TIMBER WILL BE PERMITTED.

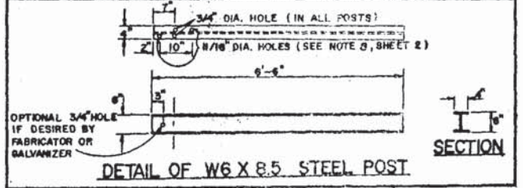


SECTION

DETAIL OF W6 X 8.5 STEEL POST

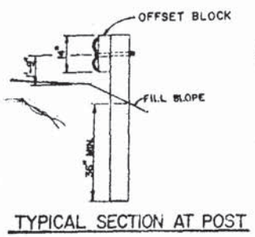


TYPICAL SECTION AT POST

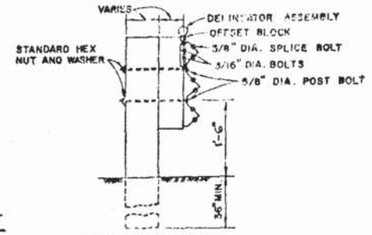


DETAIL AT POST
THRIE BEAM TYPE
GUARDRAIL

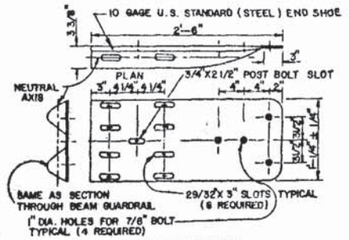


ELEVATION
SPECIAL END SHOE

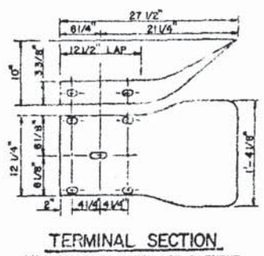


TERMINAL SECTION

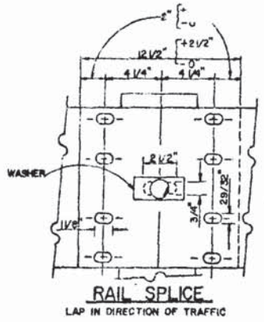


RAIL SPLICE
LAP IN DIRECTION OF TRAFFIC

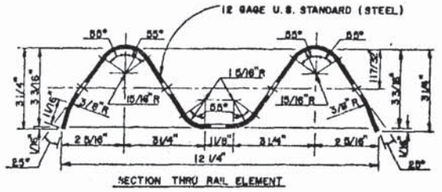


STANDARD BEAM TYPE GUARDRAIL

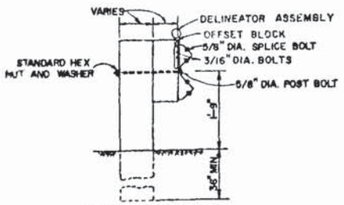


DETAIL AT POST
STANDARD BEAM TYPE
GUARDRAIL

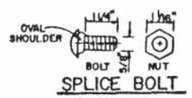


SPLICE BOLT
(8 REQUIRED)
NOTE: POST BOLT SIMILAR EXCEPT LENGTH (1 REQUIRED)

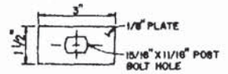


WASHER
(FOR POST BOLT ONLY)
NOTE: USE ONE WASHER AT EACH POST.

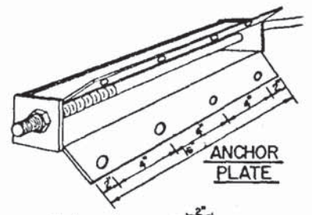

ANCHOR PLATE

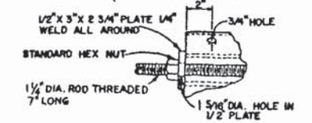


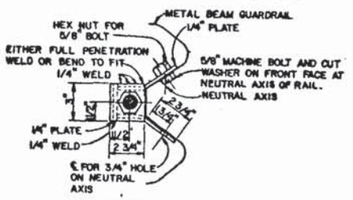


ANCHOR PLATE DETAILS
DETAIL T

NOTE:
All end sections to be lapped in direction of traffic.

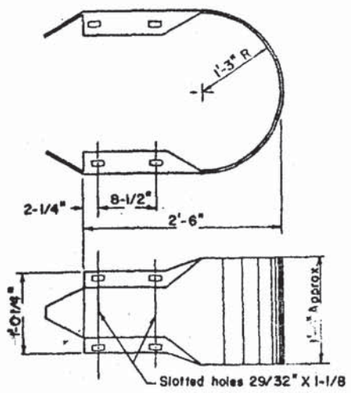


BUFFER END SECTION
to be used with double faced rail.

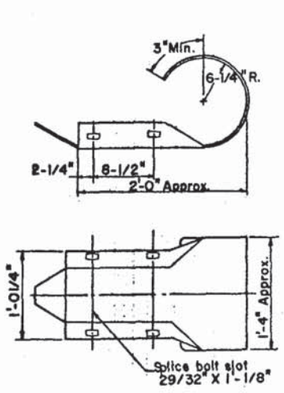


END SECTION (ROUNDED)

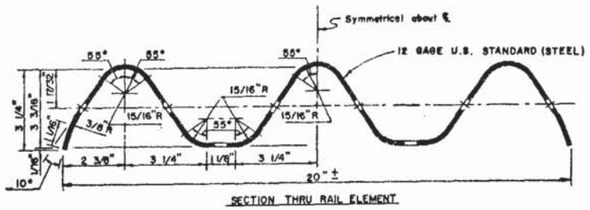


SECTION THRU RAIL ELEMENT

THRIE BEAM TYPE GUARDRAIL

NOTES:
1. THRIE BEAM GUARDRAIL SHALL BE PRIMARILY USED FOR MEDIAN INSTALLATIONS. IF DESIRED OR RECOMMENDED AT OTHER LOCATIONS, A SPECIAL DETAIL SHOULD BE PREPARED BY THE DESIGNER AND FOWARDED TO THE DEPUTY DESIGN ENGINEER, ROADWAY OFFICE FOR REVIEW AND APPROVAL PRIOR TO INCLUSION IN THE PLANS.
2. THE ANCHOR PLATE SHALL BE FASTENED TO THE LOWER PORTION OF THE THRIE BEAM (REFER TO DETAIL R, SHEET 3, INDEX NO. BGR-01-1 FOR ADDITIONAL DETAILS).

NOTES:
1. GUARDRAIL DELINEATOR ASSEMBLY IS TO BE FASTENED TO THE TRAILING SIDE OF WOOD OFFSET BLOCKS WITH TWO 10 PENNY ALUMINUM OR GALVANIZED NAILS SO AS TO FIRMLY PLACE THE TOP EDGE OF GUARDRAIL INTO THE 1/4" NOTCH ON THE MOUNTING BRACKET. THE LOWER SIDE OF THE BRACKET SHALL CONTACT THE GUARDRAIL. WHEN METAL OFFSET BLOCKS ARE USED, FASTEN THE ASSEMBLY TO THE TRAILING SIDE OF THE WEB WITH TWO 3/16" DIAMETER ALUMINUM OR GALVANIZED NUTS AND BOLTS SO THAT THE BOTTOM OF THE REFLECTOR IS RESTING ON THE WEB AND THE SIDE OF THE MOUNTING BRACKET IS FLUSH WITH THE FLANGE NEXT TO THE RAIL.
2. WHEN DELINEATOR ASSEMBLY IS PLACED ON GUARDRAIL LOCATED LEFT OF ROADWAY, REFLECTOR WILL BE FASTENED TO REVERSE SIDE OF BRACKET.
3. REFLECTOR UNITS ARE AS SPECIFIED IN ARTICLE 993-6 OF THE 1973 FLORIDA D.O.T. STANDARD SPECIFICATIONS.
4. MOUNTING BRACKET SHALL BE MANUFACTURED FROM SHEET ALUMINUM, 6061-T6 ALLOY OR EQUAL, OR GALVANIZED STEEL AND MAY BE MANUFACTURED WITH THE ALTERNATE NOTCH AND ALTERNATE HOLES AS SHOWN IN THE DETAIL. ALL GALVANIZING TO BE DONE AFTER FABRICATION.
5. FOR DELINEATOR SPACING SEE INDEX NO. BGR-01-1, SHEET 2, DETAIL M

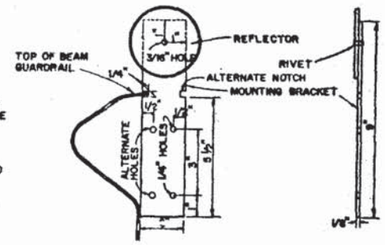


GUARDRAIL DELINEATOR ASSEMBLY

FHWA APPROVED: 7-27-76

FLORIDA DEPARTMENT OF TRANSPORTATION
ROADWAY PLANS SECTION

# GUARDRAIL CONSTRUCTION

| REVISIONS | | ROAD NO. | COUNTY | PROJECT NO. |
|---|---|---|---|---|
| Dates | Descriptions | | | |
| 12/73 LMP | New sheet. Details of top of sheet are from sh. #3, details on bottom are new. | | | |
| 10-74 | Removed Detail 'J' Anchor Plate Rod Detail. Changed Index No. Delineator Assem. | | | |
| 3-76 | Added Thrie Beam Details Added Alt. Notch & Holes to delin. Detail. | | | |

| | Names | Dates |
|---|---|---|
| Designed by | | |
| Checked by | | |
| Quantities by | | |
| Checked by | | |
| Supervised by | | |

Approved by: E. Hirst
Deputy Design Engineer - Roadways

Drawing No. 4 OF 5

Index No. BGR-01-1

| FED. ROAD DIV. No. | STATE | PROJECT NO. | FISCAL YEAR |
|---|---|---|---|
| 8 | FLA. | | |

| FED. ROAD DIV. No | STATE | PROJECT No. | FISCAL YEAR | SHEET No. |
|---|---|---|---|---|
| 9 | FLA. | | | |

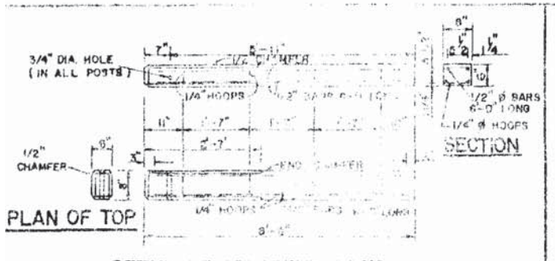


DETAIL OF CONCRETE POST

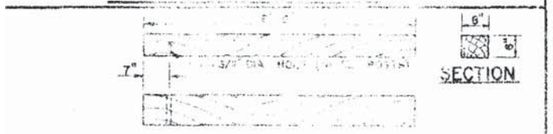


DETAIL OF WOOD POST

NOTES:
1. POSTS ARE TO BE DRILLED AND SHAPED PRIOR TO TREATMENT.
2. POSTS SHALL BE PENTACHLOROPHENOL TREATED SOUTHERN YELLOW PINE, CHROMATED COPPER ARSENATE II, ALSO AN ACCEPTABLE ALTERNATIVE.
3. UNDRESSED TIMBER WILL BE PERMITTED.




DETAIL OF W6 X 8.5 STEEL POST

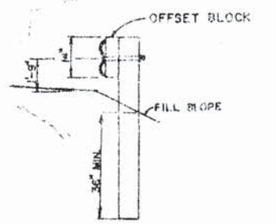


TYPICAL SECTION AT POST

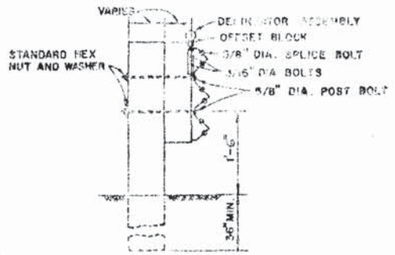


DETAIL AT POST
THRIE BEAM TYPE
GUARDRAIL

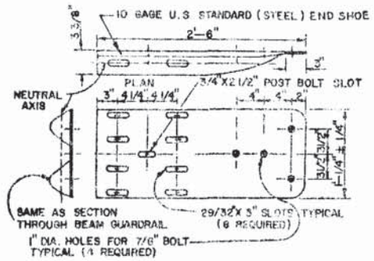


ELEVATION
SPECIAL END SHOE

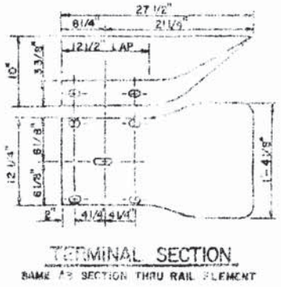


TERMINAL SECTION
SAME AS SECTION THRU RAIL ELEMENT

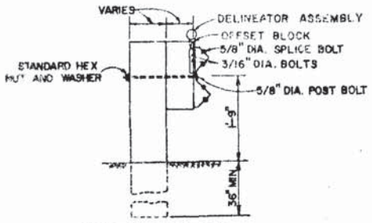


DETAIL AT POST
STANDARD BEAM TYPE
GUARDRAIL

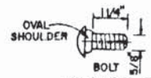


SPLICE BOLT
(8 REQUIRED)
NOTE: POST BOLT SIMILAR EXCEPT LENGTH
(1 REQUIRED)

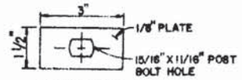


WASHER
(FOR POST BOLT ONLY)
NOTE: USE ONE WASHER AT EACH POST.

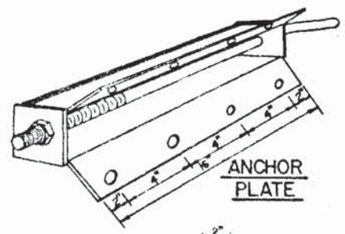

ANCHOR PLATE

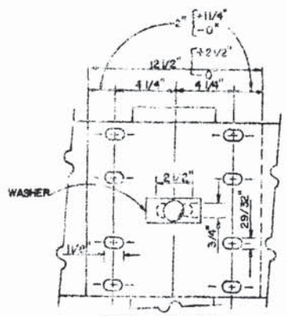


RAIL SPLICE
LAP IN DIRECTION OF TRAFFIC

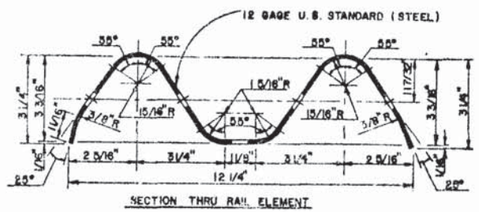


SECTION THRU RAIL ELEMENT

STANDARD BEAM TYPE GUARDRAIL

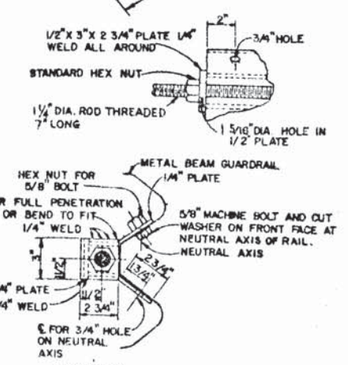


ANCHOR PLATE DETAILS
DETAIL I

NOTE:
All end sections to be lapped in direction of traffic.

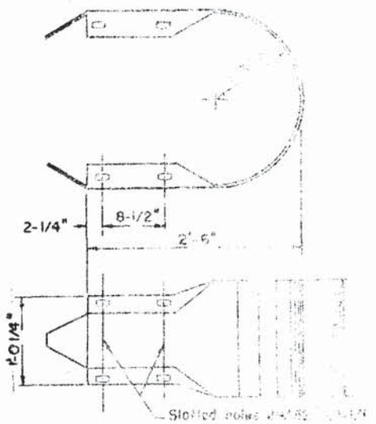


BUFFER END SECTION
to be used with double faced rail.

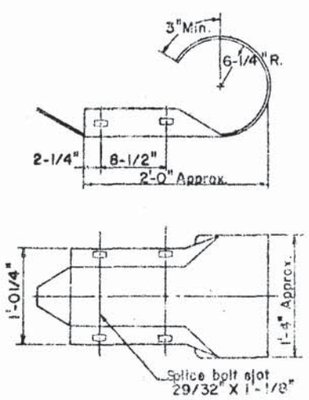


END SECTION (ROUNDED)

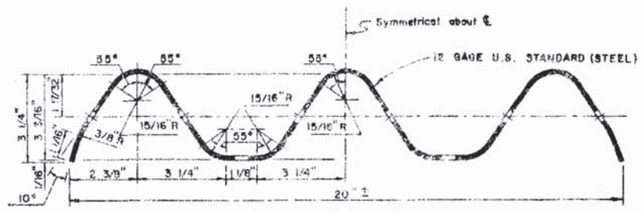


SECTION THRU RAIL ELEMENT

THRIE BEAM TYPE GUARDRAIL

NOTES:
1. THRIE BEAM GUARDRAIL SHALL BE PRIMARILY USED FOR MEDIAN INSTALLATIONS IF DESIRED OR RECOMMENDED AT OTHER LOCATIONS, A SPECIAL DETAIL SHOULD BE PREPARED BY THE DESIGNER AND FOWARDED TO THE DEPUTY DESIGN ENGINEER, ROADWAY OFFICE FOR REVIEW AND APPROVAL PRIOR TO INCLUSION IN THE PLANS.
2. THE ANCHOR PLATE SHALL BE FASTENED TO THE LOWER PORTION OF THE THRIE BEAM (REFER TO DETAIL B, SHEET 3, INDEX NO. BGR-01-1 FOR ADDITIONAL DETAILS).

NOTES:
1. GUARDRAIL DELINEATOR ASSEMBLY IS TO BE FASTENED TO THE TRAILING SIDE OF WOOD OFFSET BLOCKS WITH TWO 10 PENNY ALUMINUM OR GALVANIZED NAILS SO AS TO FIRMLY PLACE THE TOP EDGE OF GUARDRAIL INTO THE 1/4" NOTCH ON THE MOUNTING BRACKET. THE LOWER SIDE OF THE BRACKET SHALL CONTACT THE GUARDRAIL. WHEN METAL OFFSET BLOCKS ARE USED, FASTEN THE ASSEMBLY TO THE TRAILING SIDE OF THE WEB WITH TWO 3/16" DIAMETER ALUMINUM OR GALVANIZED NUTS AND BOLTS SO THAT THE BOTTOM OF THE REFLECTOR IS RESTING ON THE WEB AND THE SIDE OF THE MOUNTING BRACKET IS FLUSH WITH THE FLANGE NEXT TO THE RAIL.
2. WHEN DELINEATOR ASSEMBLY IS PLACED ON GUARDRAIL LOCATED LEFT OF ROADWAY, REFLECTOR WILL BE FASTENED TO REVERSE SIDE OF BRACKET.
3. REFLECTOR UNITS ARE AS SPECIFIED IN ARTICLE 993-6 OF THE 1973 FLORIDA D.O.T. STANDARD SPECIFICATIONS.
4. MOUNTING BRACKET SHALL BE MANUFACTURED FROM SHEET ALUMINUM, 6061-T6 ALLOY OR EQUAL, OR GALVANIZED STEEL AND MAY BE MANUFACTURED WITH THE ALTERNATE NOTCH AND ALTERNATE HOLES AS SHOWN IN THE DETAIL. ALL GALVANIZING TO BE DONE AFTER FABRICATION.
5. FOR DELINEATOR SPACING SEE INDEX NO. BGR-01-1, SHEET 2, DETAIL M.

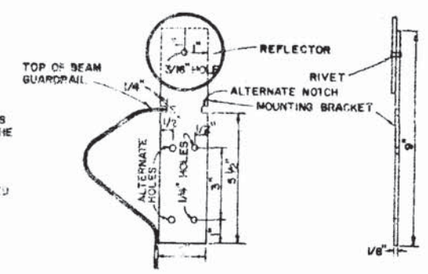


GUARDRAIL DELINEATOR ASSEMBLY

FHWA APPROVED: 7-27-76

FLORIDA DEPARTMENT OF TRANSPORTATION
ROADWAY PLANS SECTION

# GUARDRAIL CONSTRUCTION

| REVISIONS | | ROAD NO. | COUNTY | PROJECT NO. |
|---|---|---|---|---|
| Dates | Descriptions | | | |
| 12/73 LMF | New sheet. Details of top of sheet are from sh. #3, details on bottom see new. | | | |
| 10-74 | Removed Detail 'J' Anchor Plate Rod Detail. Changed Index No. & Delineator Assy. | | | |
| 3-76 | Added Thrie Beam Details Added Alt. Notch & Holes to delin. Detail. | | | |

| | Names | Dates |
|---|---|---|
| Designed by | | |
| Checked by | | |
| Quantities by | | |
| Checked by | | |
| Supervised by | | |

Approved by:
Deputy Design Engineer - Roadways

| Drawing No. | Index No. |
|---|---|
| 4 OF 5 | BGR-01-1 |

| FED. ROAD DIV. No. | STATE | PROJECT No. | FISCAL YEAR | SHEET No. |
|---|---|---|---|---|
| 8 | FLA. | | | |

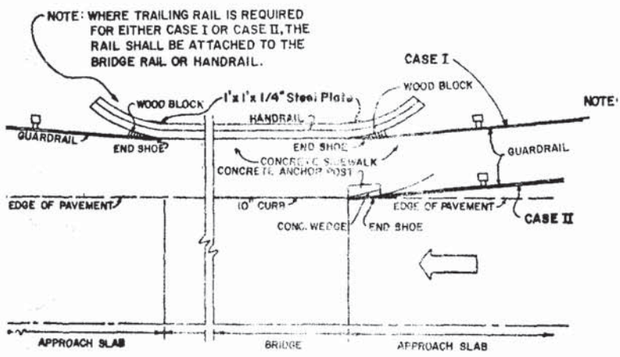


NOTE: ONE OR MORE POSTS MAY FALL ON EXISTING APPROACH SLAB. (SEE DETAIL AT RIGHT)

TYPICAL GUARDRAIL INSTALLATION AT EXISTING BRIDGE ENDS

CASE I - BRIDGERAIL WITHOUT SIDEWALK

CASE II - BRIDGERAIL WITH SIDEWALK & CURB

NOTE: DETAILS SHOWN ARE TYPICAL FOR GUARDRAIL INSTALLATION AT EXISTING BRIDGE ENDS.

NOTE: AT BRIDGE ENDS WITHOUT SIDEWALKS (CASE I) THE PENTACHLORAPHENOL TREATED WOOD BLOCK AND END SHOE SHALL BE MOUNTED TO THE EXISTING HANDRAIL AND LOCATED TO PROVIDE A 6" CLEARANCE FROM BACK OF GUARDRAIL TO THE FACE OF BRIDGE RAIL.

NOTE: AT BRIDGE ENDS WITH SIDEWALK & CURB (CASE II) THE CONCRETE ANCHOR POST IS TO BE CONSTRUCTED.

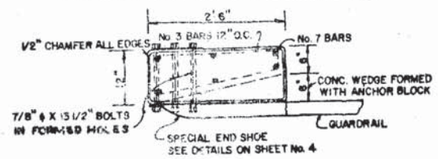


PLAN VIEW ANCHOR BLOCK CASE II

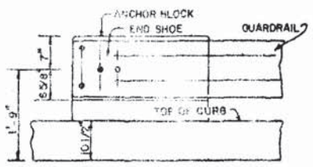


SIDE VIEW CASE II

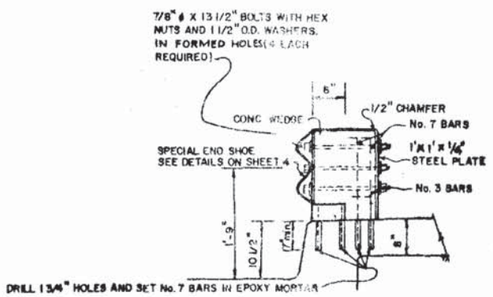


END VIEW CASE II

NOTE: When guardrail posts are not immediately set the contractor is to protect the drilled holes from water entry as directed by the Engineer.

NOTE: Drill 1 3/4" ϕ Holes with a rotary drill and set Anchor Bolt in Epoxy Mortar. The top 1" of the holes shall be drilled 2" ϕ to provide clearance for the adjusting nuts. Holes to be drilled thru existing Reinforcing Steel if encountered. After drilling, all Holes shall be thoroughly cleaned to remove all dust prior to placing Epoxy and Bolts.

After adjusting Nuts are set, place 7/8" Plate on Grout. The Grout shall be finished to the neat lines of the 7/8" Plate. Guardrail Post shall be set Plumb.

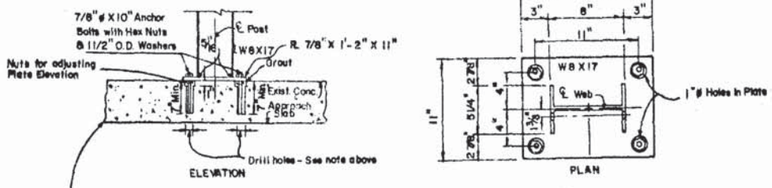


DETAIL OF GUARDRAIL POST MOUNTING TO EXIST. APPROACH SLAB

Note: All Steel Posts and Accessories To Be Galvanized.

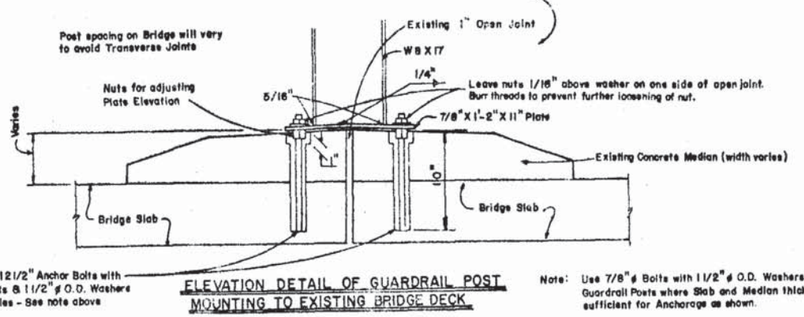


ELEVATION DETAIL OF GUARDRAIL POST MOUNTING TO EXISTING BRIDGE DECK

Note: Use 7/8" ϕ Bolts with 1 1/2" ϕ O.D. Washers for Anchoring Guardrail Posts where Slab and Median thickness is not sufficient for Anchorage as shown.

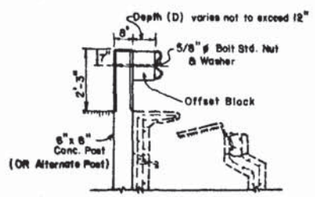


DETAIL OF GUARDRAIL POST BACK OF EXISTING INLETS

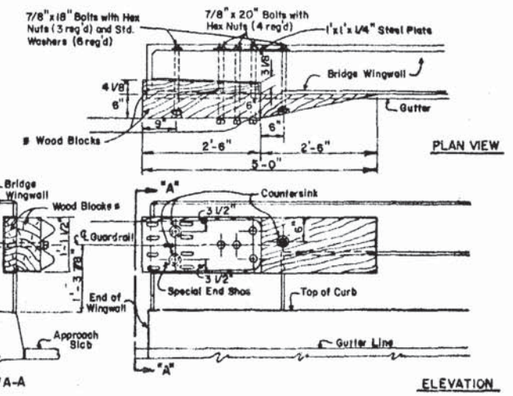


SPECIAL DETAIL "A"
GUARDRAIL ATTACHMENT AT WINGWALLS ON EXISTING BRIDGE

NOTE: FOR ALL TWO-WAY BRIDGES AND APPROACH ENDS ON ONE-WAY BRIDGES WITH THIS TYPE WINGWALLS, RAIL ON TRAILING END OF ONE-WAY BRIDGES CAN BE RECESSED INTO SLOT.

Alternate to back Wood Block. Anchor recess to be filled with Epoxy Grout.

**Where concrete block is provided on bridge handrail the wood blocks will not be required.**

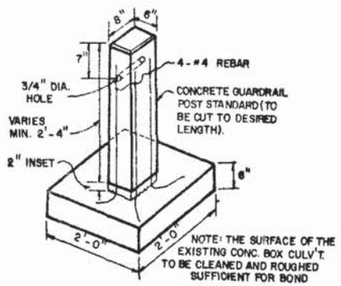


CONCRETE POST

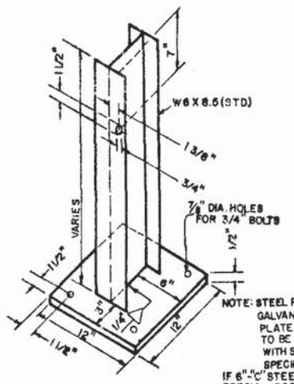


NOTE: STEEL POST ASSEMBLY TO BE GALVANIZED EXCEPT FOR BASE PLATE AND WELD AREA WHICH IS TO BE METALIZED IN ACCORDANCE WITH SECTION 562 OF STANDARD SPECIFICATIONS.

IF 6"-"C" STEEL POSTS ARE USED FOR SPECIAL POSTS THE NEUTRAL AXIS OF THE POST SHALL BE CENTERED ON THE BASE PLATE AND ATTACHED WITH A 5/16" FILLET WELD ALL AROUND ON OUTSIDE.

STEEL POST

DETAILS OF SPECIAL CONCRETE AND STEEL GUARDRAIL POSTS

NOTE: FOR CONSTRUCTION OF GUARDRAIL WHERE CULVERT, PIER FOOTING, ETC., ETC. PRECLUDES NORMAL POST INSTALLATION. WHEN WOOD POSTS ARE SELECTED AS ALTERNATES THE POST INSTALLATION FOR THE ABOVE CONDITIONS WILL BE STEEL.

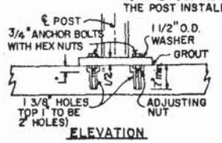


ELEVATION

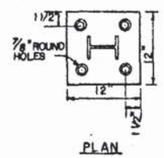


PLAN

NOTE: ALL POSTS AND ACCESSORIES TO BE GALVANIZED

DETAILS OF SPECIAL STEEL GUARDRAIL POST MOUNTING

NOTE: DRILL 1 3/8" HOLES AND SET ANCHOR BOLTS IN EPOXY MORTAR. TOP 1" OF HOLES TO BE 2" ϕ FOR ADJUSTING NUTS. DRILL THROUGH REINFORCING STEEL, IF ENCOUNTERED. CLEAN HOLES PRIOR TO PLACING EPOXY AND BOLTS. AFTER ADJUSTING NUT ARE SET PLACE 1/2" PLATE ON GROUT. FINISH GROUT TO NEAT LINES OF PLATE. SET POST PLUMB.

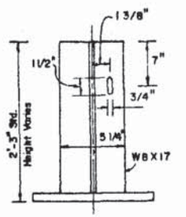


DETAIL OF BOLT LOCATION IN STEEL POST

FHWA APPROVED: 7-27-76

FLORIDA DEPARTMENT OF TRANSPORTATION
ROADWAY PLANS SECTION

GUARDRAIL CONSTRUCTION

| REVISIONS | | ROAD NO. | COUNTY | PROJECT NO. |
|---|---|---|---|---|
| Dates | Descriptions | | | |
| 9-69 | ADDED ATTACHMENT DATA ANCHOR BLOCK CASE II AND SPECIAL DETAIL "A" | | | |
| G.F. | | | | |
| 7-71 | ADDED SPEC. POSTS, ADDED ALT. TO WOOD BLOCK ON SPECIAL DETAIL "A" | | | |
| L.F. | | | | |
| 8-76 | Added 6"C Post note to Spec. Post detail | | | |
| 10-74 | Changed Index No. | | | |

| | Names | Dates |
|---|---|---|
| Detailed by | H. Walters | 7-69 |
| Checked by | J.K.C. | 7-69 |
| Quantities by | | |
| Checked by | | |
| Traced by | | |

Recommended For Approval by: E.H. Hart, District Design Engineer - Roadways

APPROVED BY: [signature], State Design Engineer

Drawing No. 5 OF 5

Index No. BGR-01-1

Form 281-10

# MEMORANDUM

State of Florida Department of Transportation

DATE June 20, 1977

TO All Holders of Standard Index Books

FROM E. H. Hart, Deputy Design Engineer (Roadways)

COPIES TO

SUBJECT Standard Index Drawings

The following index drawings have been revised:

BMB-01-1 (Sheet 1 of 3); General Note No. 1 was changed to include reflective barrier marker in the cost of the concrete barrier wall. Sheets 2 and 3 were not changed.

DMD-01-1 Supersedes DMD-01; Sheet 2 has been revised to show bituminous coating required at the junction of dissimilar types of pipe. This is shown on "Detail of Concrete Jacket" at the bottom center of the sheet. Sheets 1 and 3 were not changed.

GRR-01 (Sheet 6 of 6); This is a new index showing a new type of approved railroad crossing. We have included sheets 1 through 5 of 6 which show the change in those drawing numbers.

GSE-02-1 Supersedes GSE-02: On sheet 1 we added a note under the superelevation chart. On sheet 2 we added the superelevation chart for e Max. 0.05.

Please destroy all copies of these indices in your files and replace with the revised index drawings.

EHH/LMF/db

LMF

Form 281-10

# MEMORANDUM

State of Florida Department of Transportation

DATE October 26, 1976

TO ALL HOLDERS OF STANDARD INDEX BOOKS

FROM E. H. Hart, Deputy Design Engineer (Roadways) EHH

COPIES TO Mr. P. E. Carpenter

SUBJECT Standard Index No. BMB-01-1

The subject index drawing has been revised as follows:

Sheet No. 1

1. Removed the detail showing modified footing for grassed medians.
2. Changed depth of barrier base from 8" to 1".
3. Added General Notes Nos. 5, 6, 7, & 8.
4. If the temporary terminal shown in Detail II is within 30 feet of the edge of pavement the terminal will not be used and an impact attenuator will be substituted.
5. Detail III will not be routinely used. Some special cases may justify this detail, however, approval of this office will be required for its use. An impact attenuator should be substituted except in rare cases.

Sheet No. 2

1. Changed depth of barrier base from 8" to 1".
2. Added Details B, C. & D.
3. Changed taper on Detail I from 10:1 to 20:1.

Sheet No. 3

1. Changed depth of barrier base from 8" to 1".
2. Revised inlet throat construction.

Please destroy the copies of Index No. BMB-01 in your files and replace with the revised drawings.

EHH/LMF/hl

| FED. ROAD DIV. No. | STATE | PROJECT No. | FISCAL YEAR | SHEET No. |
|---|---|---|---|---|
| 8 | FLA. | | | |

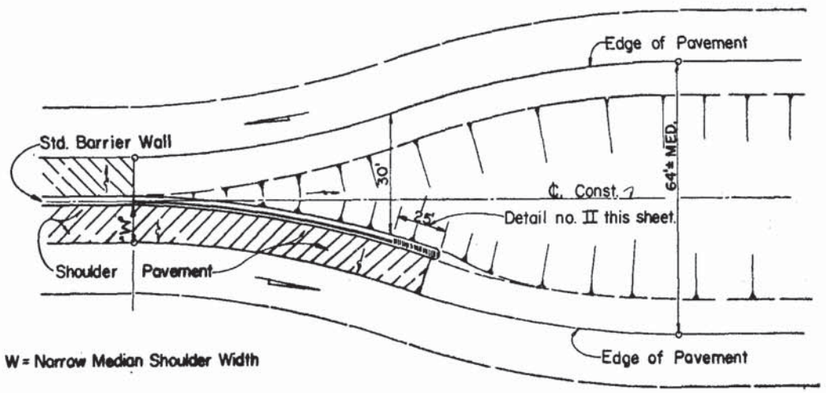


## TERMINATION OF BARRIER WALL AT APPROACH TO WIDE MEDIAN SECTION

DETAIL A

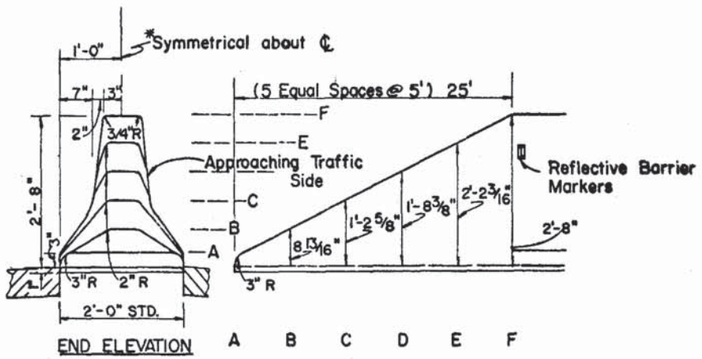


## CONCRETE MEDIAN BARRIER TERMINAL

( To be used only as a Temporary Barrier Terminal or where located 30' from edge of approach lane. See Detail A Lt. )

DETAIL II

| BARRIER MARKER SPACING ON WALL | | |
|---|---|---|
| Distance - Edge of travel lane to barrier wall. | Spacing | Number per side |
| 1' to < 4' | 40' | 1 |
| 4' to < 8' | 80' | 1 |
| > than 8' | none required | |

Use Amber Markers only.

Use 10' spacing on Terminal ends.

Hold or clamp reflective barrier markers to wall until dry or set.

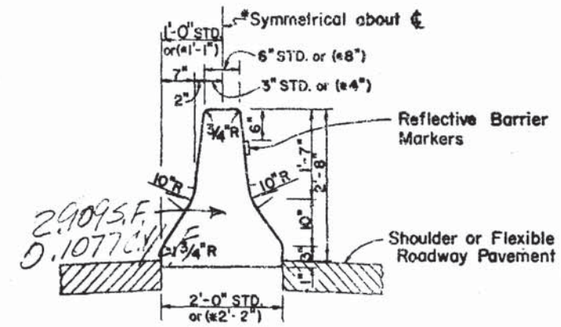


## TYPICAL BARRIER WALL SECTION

NARROW MEDIAN INSTALLATION
ADJACENT TO PAVEMENT

*Use 8" top, 2'-2" base when 10" light poles are installed within barrier wall line.

For Concrete Median Barrier Wall details at Piers, Highway Lighting and Guardrail Connections, See Sheet 2 of 3.

For Median Barrier and 'Special' Barrier Wall Inlet details see sheet 3 of 3.

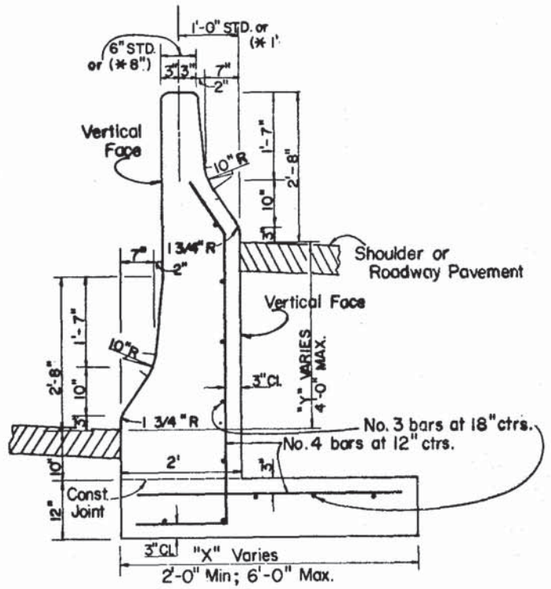


## MEDIAN BARRIER WALL
## FOR SUPERELEVATED SECTION OR VARIABLE ROADWAY PROFILE GRADES

Note: Steel not required until height "Y" is 1'-0" or more and footing width "X" is 3'-0" or more. Cost of the steel and concrete footing to be included in the Contract unit price for Concrete Barrier Wall.

| Height "Y" | 0'-0" | 0'-6" | 1'-0" | 1'-6" | 2'-0" | 2'-6" | 3'-0" | 3'-6" | 4'-0" |
|---|---|---|---|---|---|---|---|---|---|
| Width "X" | 2'-0" | 2'-6" | 3'-0" | 3'-6" | 4'-0" | 4'-6" | 5'-0" | 5'-6" | 6'-0" |

TABLE OF DIMENSIONS FOR DIFFERENCE - HEIGHT "Y" AND BARRIER WALL FOOTING - WIDTH "X"

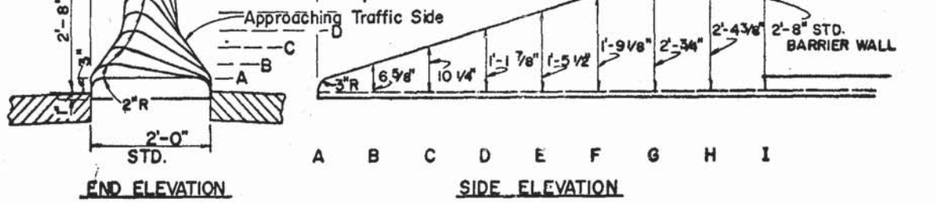


## CONCRETE MEDIAN BARRIER TERMINAL
## NARROW MEDIAN DESIGN SPEED 45 M.P.H. or LESS

DETAIL III

GENERAL NOTES:

1. Cost of installation of all conduits and utility accessories, reinforcing steel and reflective barrier markers shall be included in the contract unit price for Concrete Barrier Wall.
2. Terminal Barrier Notes for Design Speeds greater than 45 m.p.h.:
   a. Terminated in a wide median section outside recovery area of the approach traffic.- See Detail A Lt
   b. Terminated from a shielded location.
   c. Terminal protection by the use of an impact attenuator system.
   d. Terminated in conjunction with a suitably designed transition to another type median barrier that can be introduced more safely.
3. Expansion joints in wall required only at bridge ends and/or at locations where wall is an integral part of existing or proposed concrete slab to match an existing or proposed expansion joint.
4. Expansion joints in conduits shall be required only at the expansion joints in the wall.
5. When the barrier is installed adjacent to the pavement the top 12" of the subgrade shall be compacted to at least 100% of the density as defined in the AASHTO T-99 specifications.
6. Cast-in-place barrier wall normally will be a continuous pour without transverse contraction joints.
7. Cast-in-place sections with a length < 40' shall be joined to adjacent sections by doweling. See Detail 'B' on sheet 2 of 3.
8. Precast construction is allowed as a alternate to cast-in-place construction.
   a. Section lengths will not be < 20' in length.
   b. Bedding of the precast sections shall be facilitated by the use of sand-cement grout or equal method to assure uniform bearing.
   c. Reinforcement may be required for handling stresses.
   d. See detail 'C' on sheet 2 of 3 for transverse joint details.

FHWA Approved: 5-20-77

FLORIDA DEPARTMENT OF TRANSPORTATION
ROAD DESIGN SECTION

# MEDIAN BARRIER DETAILS

| REVISIONS | | | INITIALS | DATES |
|---|---|---|---|---|
| DATES | DESCRIPTIONS | DESIGNED BY | A.F. | 6-'73 |
| 8-'74 | Sheet Deleted | CHECKED BY | LMF | 7-'73 |
| 10-74 | Changed Index No | QUANTITIES BY | | |
| 4-75 | Revised Barrier Reflective Markers | CHECKED BY | | |
| 6-76 | Revised Barrier Base depth; added notes 5,6,7,8. | SUPERVISED BY | D.C.B. | |
| 5-77 | Revised Gen. Note No 1 | | | |

Recommended For Approval By:
DEPUTY DESIGN ENGINEER-ROADWAYS

Approved By:
STATE DESIGN ENGINEER

DRAWING NO. 1 of 3

INDEX NO. BMB-01-1

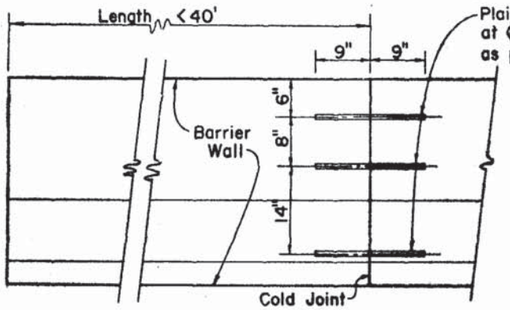


DOWELED TRANSVERSE CONSTRUCTION JOINT DETAIL B

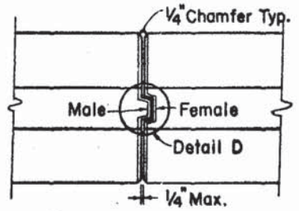


TOP VIEW

DETAIL C

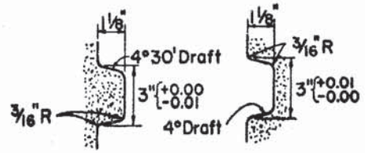


DETAIL D

## PRECAST BARRIER TRANSVERSE JOINTS

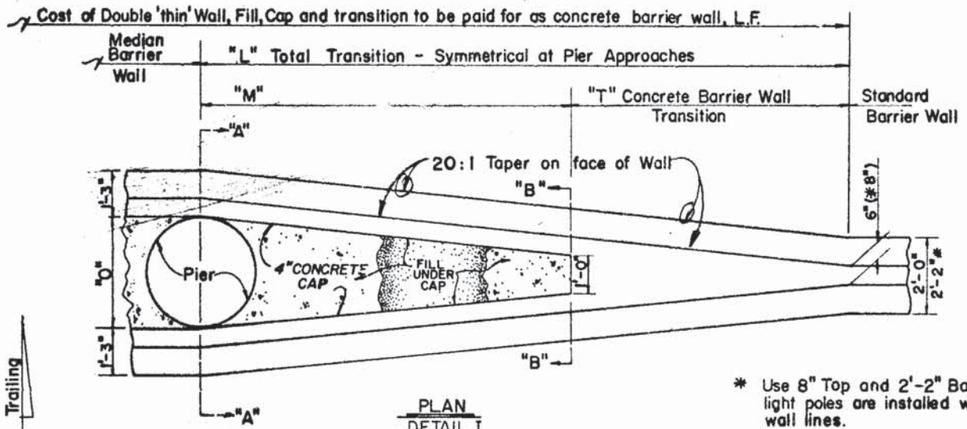


PLAN
DETAIL I

* Use 8" Top and 2'-2" Base when 10" light poles are installed within barrier wall lines.

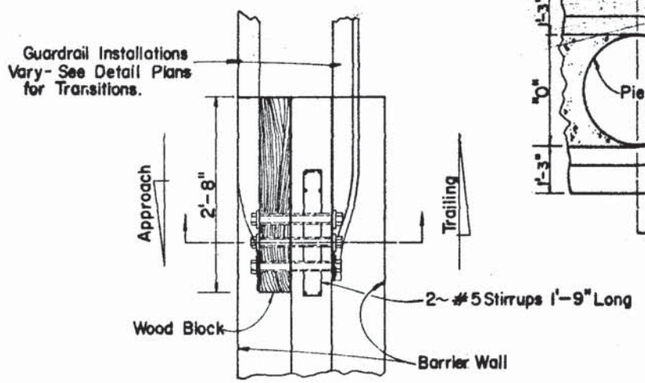


| DIMENSIONS - DETAIL I | | | | |
|---|---|---|---|---|
| "O" Varies 3' Shown | "L" Total Trans. | "M" Barrier Wall | "T" Std. to M. Trans. | WALL TYPE |
| 3' | 35.8' | 20.8' | 15.0' | STD., (6" Top, 2'-0" Base) |
| 3' | 34.2' | 20.8' | 13.4' | * (8" Top, 2'-2" Base) |

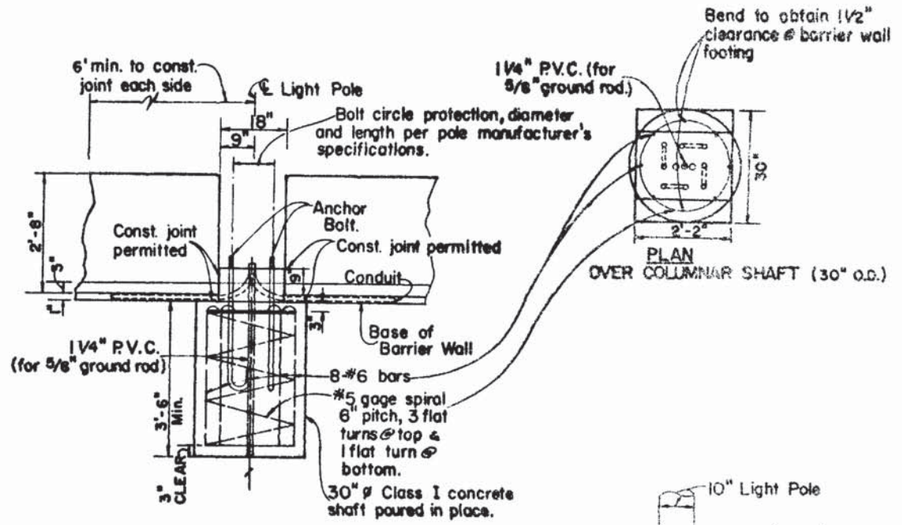


PLAN
OVER COLUMNAR SHAFT (30" O.D.)

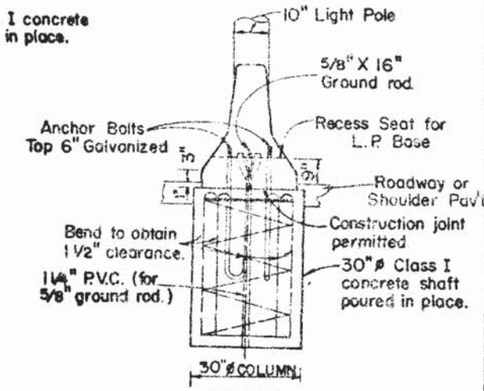


SECTION

DETAIL OF 10" LIGHT POLE MOUNTING ON MEDIAN BARRIER WALL WITH 8" TOP, 2'-2" BASE

**NOTES:**

Bolt circle; 8" pole - 11½", 10" pole - 15"

Refer to Highway Lighting Plans for size of Conduit

Payment for the 30" ø concrete column including reinforcing steel, anchor bolts and accessories shall be included in the contract unit price for Lighting Pole complete, Highway Lighting.

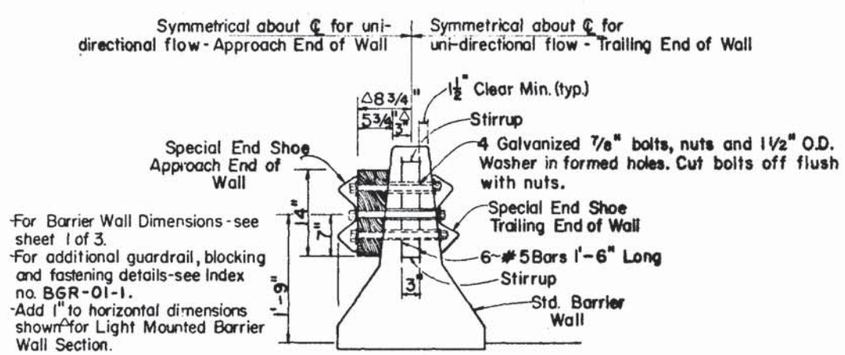


- For Barrier Wall Dimensions - see sheet 1 of 3.
- For additional guardrail, blocking and fastening details - see Index no. BGR-01-1.
- Add 1" to horizontal dimensions shown for Light Mounted Barrier Wall Section.

GUARDRAIL CONNECTION TO STD. CONCRETE BARRIER WALL

SECTION

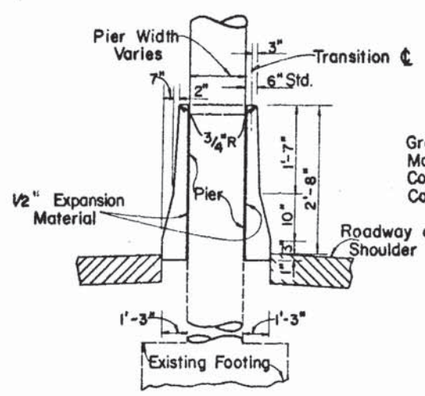


SECTION "A-A"

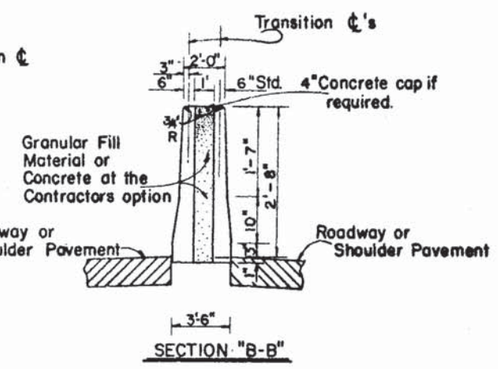


SECTION "B-B"

## CONCRETE MEDIAN BARRIER WALL

NOTE: Cost of Double 'thin' wall, Fill, Concrete Cap and Transitions are to be paid for under Concrete Barrier Wall [ Roadway ] per lin. ft. as indicated.

FHWA Approved: 10-8-76

| REVISIONS | | | INITIALS | DATES |
|---|---|---|---|---|
| Dates | Descriptions | Designed by | A.F | 6-73 |
| 6-76 | Added guardrail to Barrier wall detail | Checked by | L.M.F | 7-73 |
| 6-76 | Typo Pole Mounting Detail | Quantities by | | |
| 7-74 | Added Rebar to Wall | Checked by | | |
| 10-74 | Changed Index No. | Supervised by | D.C.B. | |
| 6-76 L.M.F | Revised Barrier Base slightly added Details B, C, & A, Changed Taper To 20:1 (Det. I) | | | |

FLORIDA DEPARTMENT OF TRANSPORTATION
Road Design Section

MEDIAN BARRIER DETAILS

Recommended For Approval By:
DEPUTY DESIGN ENGINEER-ROADWAYS

Approved By:
STATE DESIGN ENGINEER

DRAWING NO. 2 of 3

INDEX NO. BMB-01-1

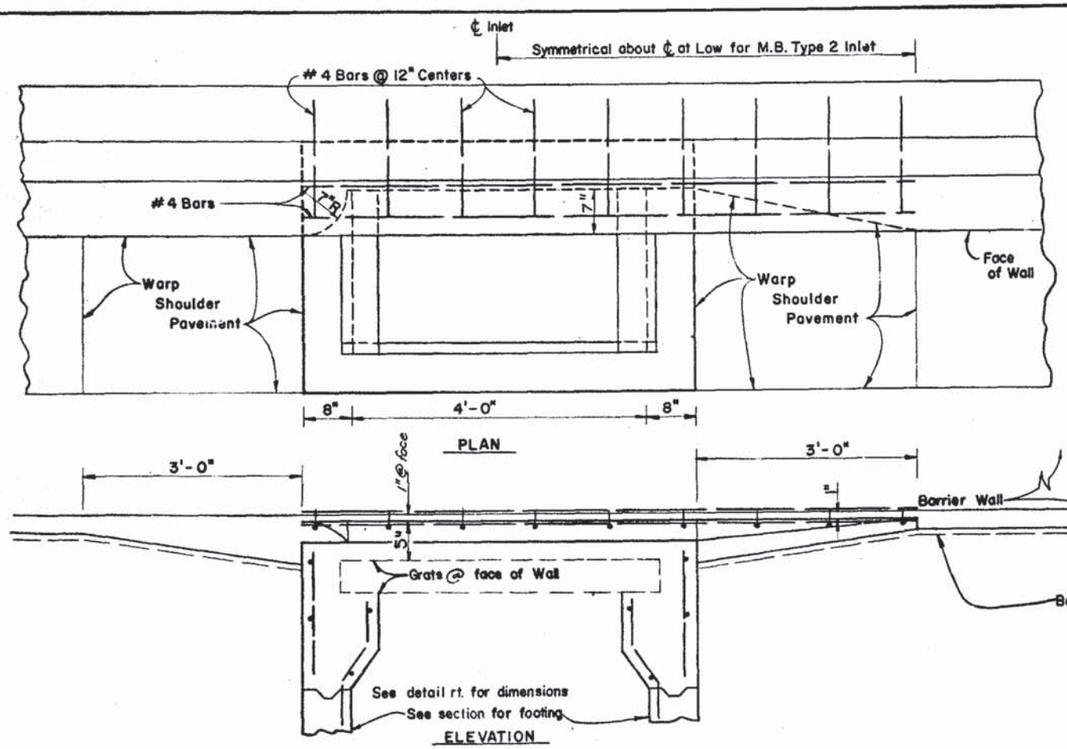


MEDIAN BARRIER INLET TYPE 1 AND 2

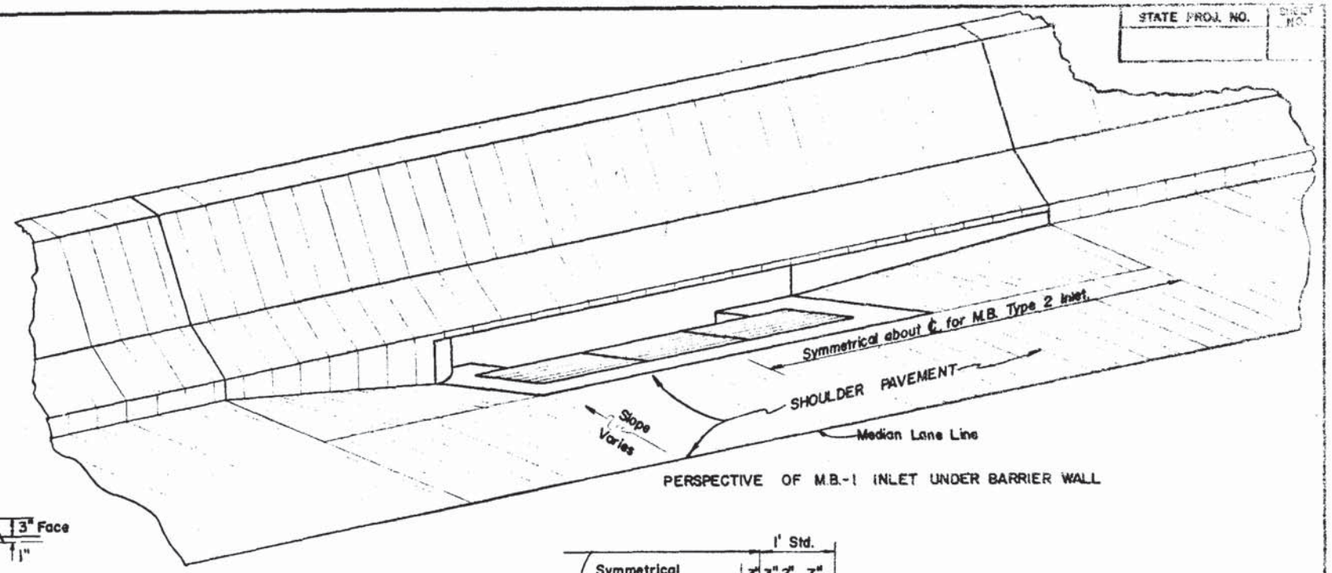


PERSPECTIVE OF M.B.-1 INLET UNDER BARRIER WALL

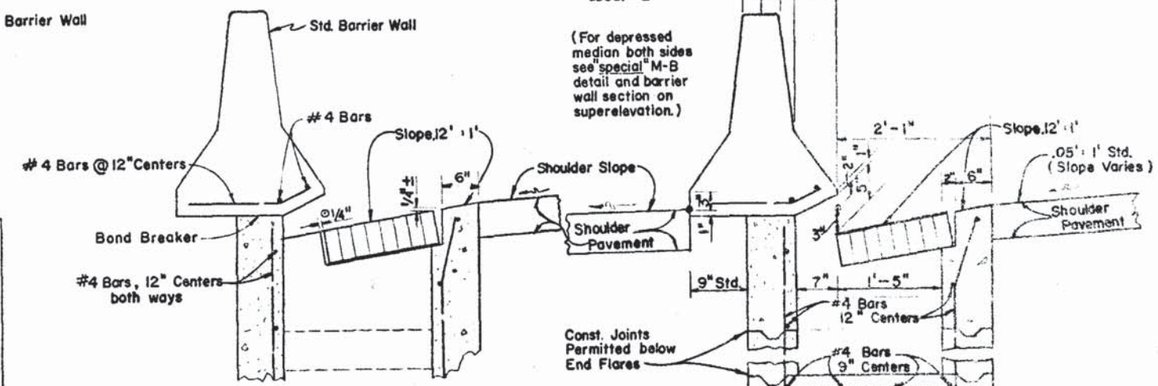


END SECTION M.B.-1 AND 2 INLETS

CENTER SECTION MB-1 AND 2 INLETS

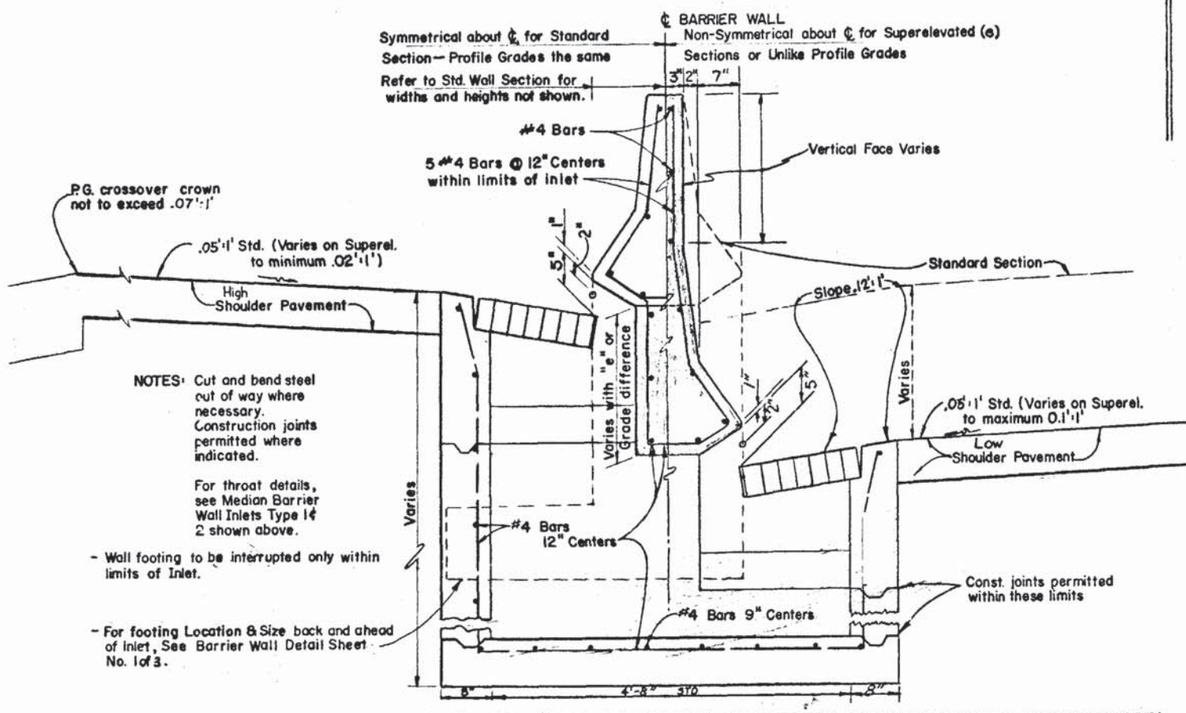


"SPECIAL" MB INLET FOR DEPRESSED MEDIANS (SHOWING GRATE SUPPORT)

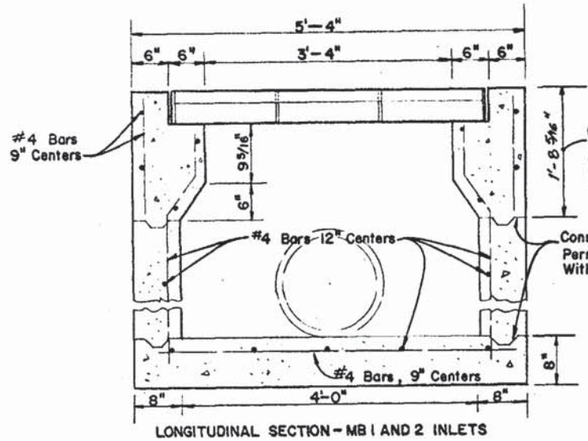


LONGITUDINAL SECTION - MB 1 AND 2 INLETS

GENERAL NOTES:

1. For standard barrier wall dimensions, see sheet 1.
2. For flow channel details see Index No. DSD-01.
3. For grate details see Index No. DG1-01. In those rare situations where bicycle traffic is anticipated, the grate type should be changed to Index No. DD1-02.
4. ℄Theoretical grade point at junction of 3" barrier wall face and pavement.
5. For barrier wall dimensions, incorporating Light Standards within wall, refer to sheet 1 and 2.
6. Minimum cover for reinforcing steel shall be 2".

FHWA Approved: 10-8-76

FLORIDA DEPARTMENT OF TRANSPORTATION
Road Design Section

MEDIAN BARRIER DETAILS

| REVISIONS | | | INITIALS | DATES |
|---|---|---|---|---|
| DATES | DESCRIPTIONS | DESIGNED BY | A.F. | 9-27-73 |
| 9-28-73 | Retraced | CHECKED BY | E.R. | 9-27-73 |
| 4-74 | Sheets renumbered, Sheet added | QUANTITIES BY | | |
| 10-74 | Changed Index No. | CHECKED BY | | |
| 6-76 | Revised Barrier Back depth & Grate Thread | SUPERVISED BY | D.C.B. | |

RECOMMENDED FOR APPROVAL
BY: DEPUTY DESIGN ENGINEER ROADWAYS
APPROVED BY: STATE DESIGN ENGINEER

DRAWING NO. 3 of 3
INDEX NO. BMB-01

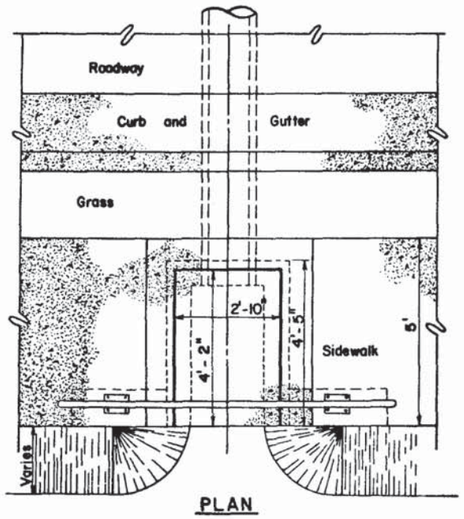


PLAN

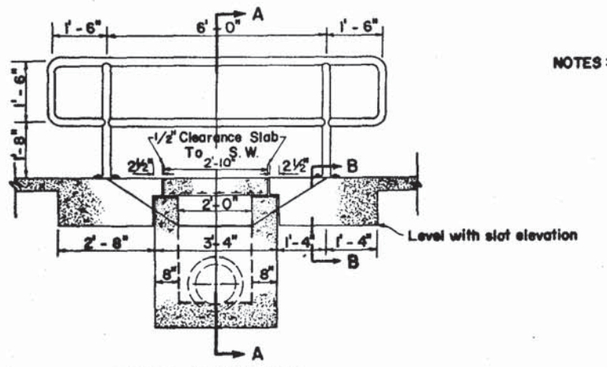


FRONT ELEVATION

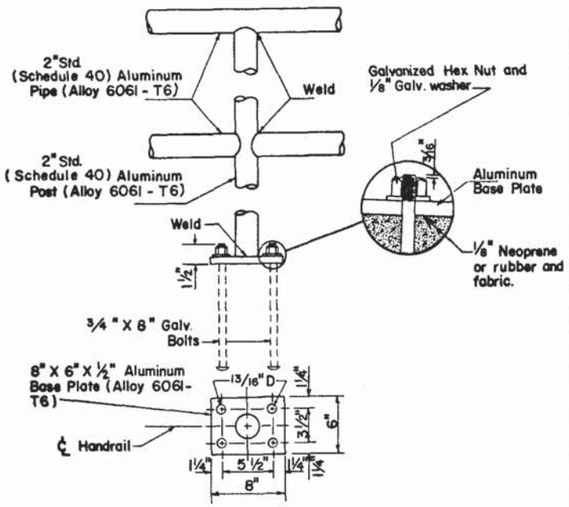


HANDRAIL DETAIL

**NOTES:**

At the option of the contractor, Standard Rail Fittings may be used where welded connections are shown.

After the nuts have been tightened the anchor bolt threads shall be nicked or the nut shall be spot welded to the bolt.

Bolts, nuts and washers shall be hot dip galv. to conform to requirements of A.S.T.M. Spec. A-153. Steel Nicks and Welds shall be repaired in accordance with Section 562, Standard Specifications.

Aluminum Weld Filler Alloy 5556 or 4043.

For additional Inlet Details see Index No. DDI-03.

Grading back of sidewalk varies and shall be done as directed by the engineer.

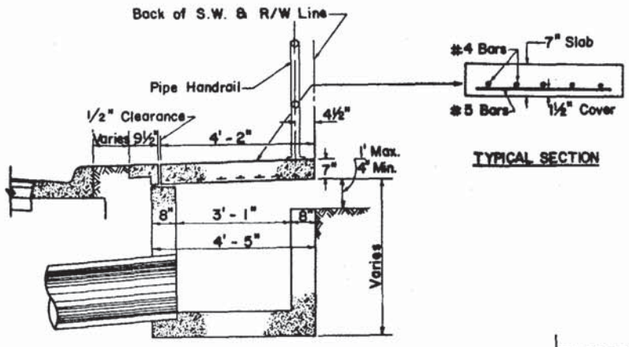


SECTION A - A




TYPICAL SECTION

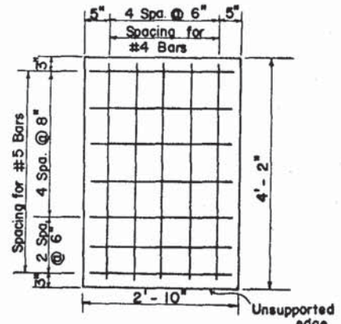


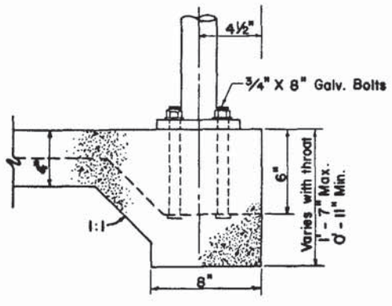


SECTION B - B

## TYPE "C" MODIFIED INLET

To be paid for as each

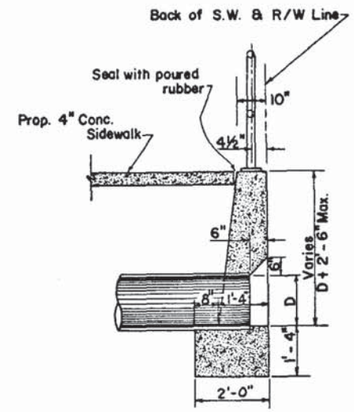


SECTION A - A

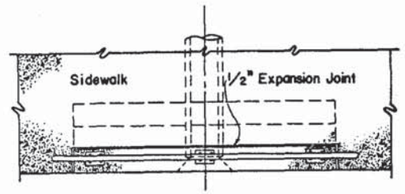


PLAN

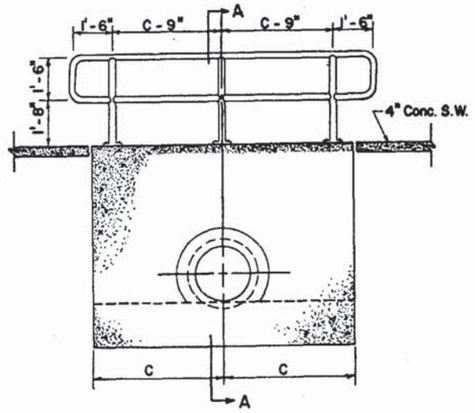


FRONT ELEVATION

## SPECIAL ENDWALL

| Pipe Size | "C" Value |
|---|---|
| 15" | = 4'-9" |
| 18" | = 5'-3" |
| 24" | = 6'-3" |
| 27" | = 6'-9" |

Maximum pipe size shall be 27".

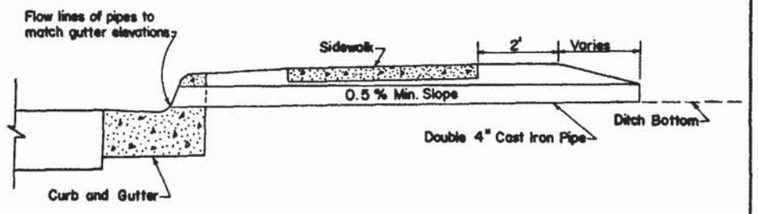


## METHOD OF DRAINING SHALLOW DITCHES BACK OF SIDEWALK

To be constructed at locations as directed by the engineer.

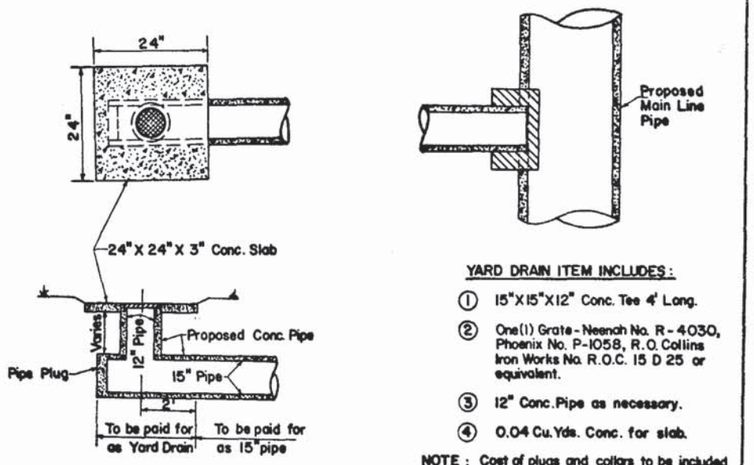


YARD DRAIN ITEM INCLUDES:

1. 15"X15"X12" Conc. Tee 4' Long.
2. One(1) Grate - Neenah No. R-4030, Phoenix No. P-1058, R.O. Collins Iron Works No. R.O.C. 15 D 25 or equivalent.
3. 12" Conc. Pipe as necessary.
4. 0.04 Cu. Yds. Conc. for slab.

NOTE: Cost of plugs and collars to be included in Bid Price for 15" Conc. Pipe. For Collar and Plug Detail see Index No. DMD-01.

## DETAILS OF YARD DRAINS

Yard Drains may be constructed at the option of the property owner as shown on the plans.

FHWA Approved: 5-1-75

FLORIDA DEPARTMENT OF TRANSPORTATION
Road Design Section

# BACK OF SIDEWALK DRAINAGE DETAILS

| REVISIONS | | | INITIALS | DATES |
|---|---|---|---|---|
| Dates | Descriptions | Designed by | | |
| | | Checked by | | |
| | | Quantities by | | |
| | | Checked by | | |
| | | Supervised by | | |

Recommended for approval by _____ Deputy Design Engineer - Roadways.

Approved by _____ State Design Engineer

DRAWING NO. 1 OF 1

INDEX NO. DBS-01

| DIV. NO. | STATE | PROJECT NO. | YEAR | NO. |
|---|---|---|---|---|
| 5 | FLA. | | | |

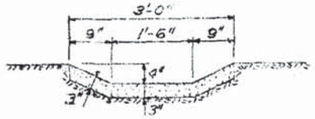


SECTION A-A

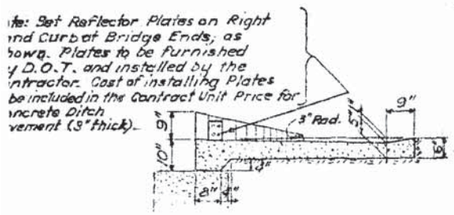


SECTION B-B

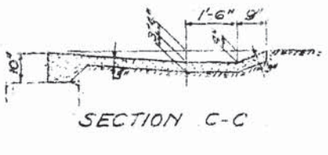


SECTION C-C

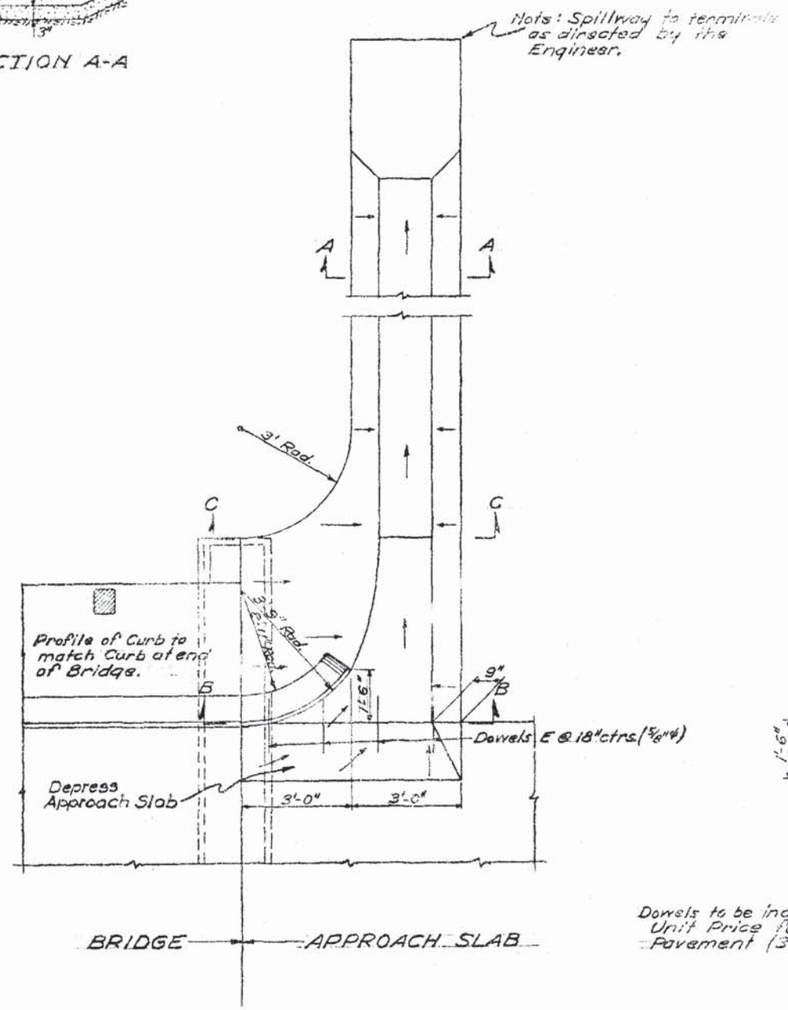


PLAN

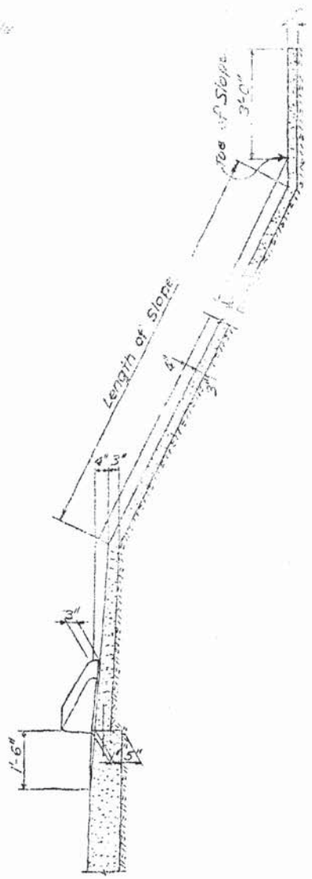


SECTION ALONG ℄ OF DRAIN

Dowels to be included in the Contract Unit Price for Concrete Ditch Pavement (3" thick).

| ESTIMATED QUANTITIES | | |
|---|---|---|
| ITEM | UNIT | QUANTITY |
| Concrete Ditch Pavement (3" thick) | Sq. Yd. | * 10.97 |
| | | |

* Quantity shown above includes pavement for 10 Ft. "Length of Slope" for each additional foot of Slope Length add 0.349 Sq. Yds.

FHWA APPROVED: 3-20-75

DEPARTMENT OF TRANSPORTATION

ROADWAY PLANS SECTION

# CONCRETE SPILLWAY AT BRIDGE ENDS

| REVISIONS | | ROAD NO. | COUNTY | | PROJECT NO. |
|---|---|---|---|---|---|
| Dates | Descriptions | | | | |
| 9-74 | Changed Index No. | | Names | Dates | Recommended For Approval by: I. M. Isaacson, Jr. Other Engineer |
| | | Detailed by | C.E.S. | 12-51 | |
| | | Checked by | | | APPROVED BY M. E. Bean |
| | | Quantities by | H.L.F. | 12-51 | |
| | | Checked by | | | Drawing No. 1 of 1 |
| | | Traced by | C.E.S. | 12-51 | DCS-01 |

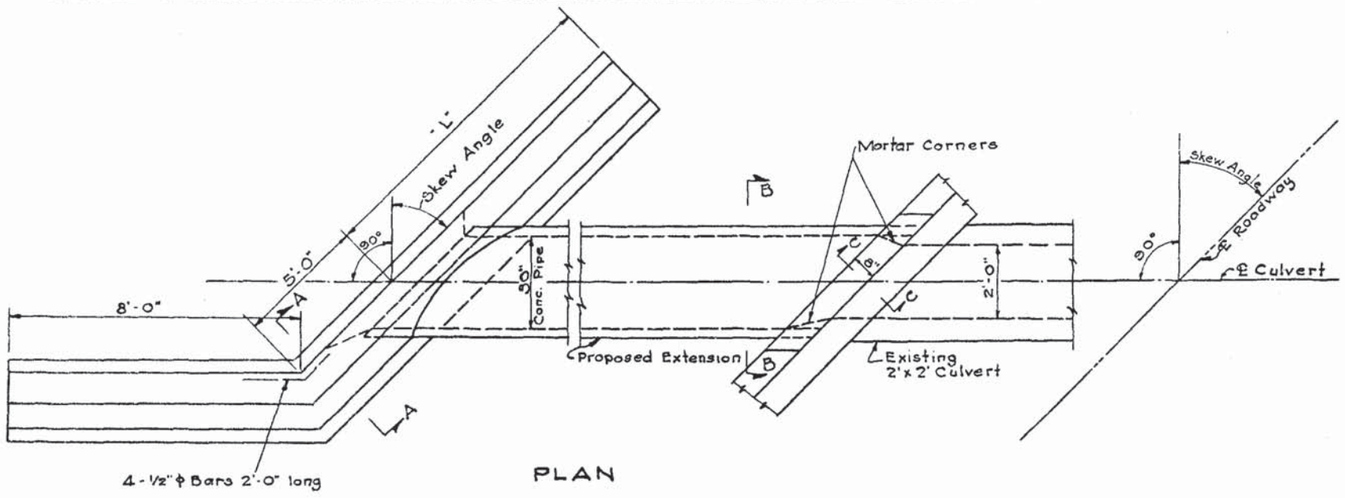


PLAN

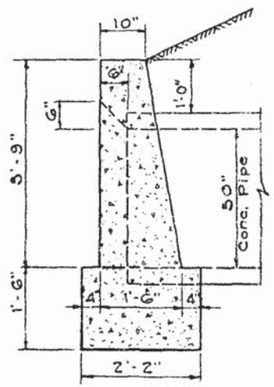


SECTION A-A

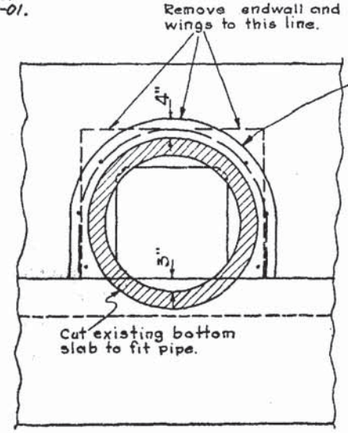


SECTION B-B

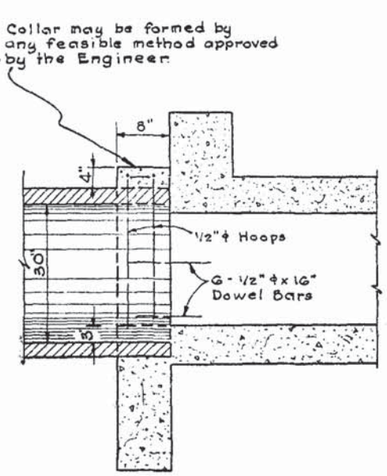


SECTION C-C

| TABLE OF DIMENSIONS AND QUANTITIES | | |
|---|---|---|
| SKEW ∠ | DIMEN."L" | CLASS I CONCRETE |
| 0° to 30° | 7'-6" | 3.6 Cu. Yd. |
| 30° to 45° | 8'-6" | 6.0 " " |
| 45° to 50° | 9'-0" | 6.2 " " |

Note: Reinforcing Steel to be included in Contract Unit Price for Concrete.

DETAILS FOR L-TYPE ENDWALLS

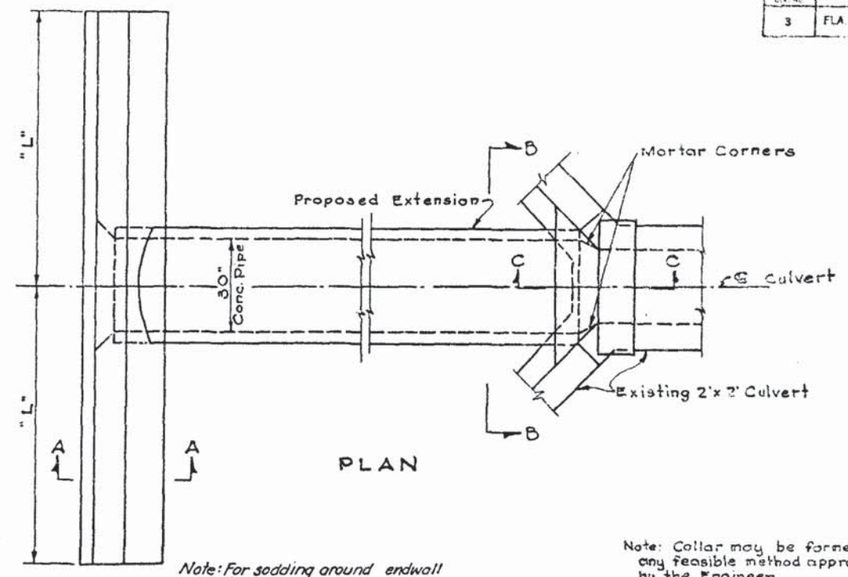


PLAN

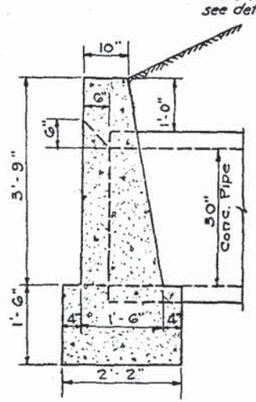


SECTION A-A

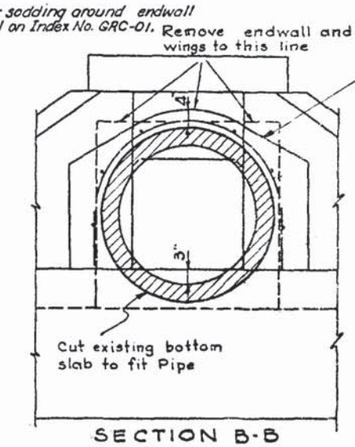


SECTION B-B

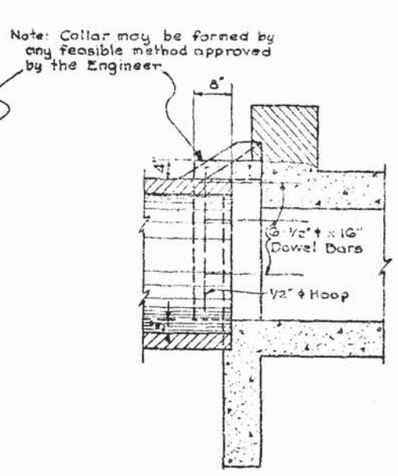


SECTION C-C

| TABLE OF DIMENSIONS AND QUANTITIES | | |
|---|---|---|
| SKEW ∠ | DIMEN."L" | CLASS I CONCRETE |
| 0° to 30° | 7'-6" | 3.9 Cu. Yd. |
| 30° to 45° | 8'-6" | 4.5 " " |
| 45° to 50° | 9'-0" | 4.8 " " |

DETAILS FOR STRAIGHT TYPE ENDWALLS

Note: Reinforcing Steel to be included in Contract Unit Price for Concrete.

| FED. ROAD DIV. NO. | STATE | SECTION | JOB NO. |
|---|---|---|---|
| 3 | FLA | | |

FHWA APPROVED: 3-20-75

FLORIDA DEPARTMENT OF TRANSPORTATION
ROADWAY PLANS SECTION

# CON. PIPE CULVERT EXTENSION FOR 2'-0"x 2'-0" BOX CULVERT

| ROAD NO. | COUNTY | SECTION | JOB NO. |
|---|---|---|---|
| | | | |

| REVISIONS | | | | Name | Date | Approved by |
|---|---|---|---|---|---|---|
| Name | Date | Descriptions | Designed by | | | |
| B.A.S. | 10-51 | Retraced | Checked by | | | |
| B.A.S. | 1-8-52 | Note- Forms for Collar | Drawn by | H.L.P. | 10-46 | |
| LWH | 4-15-66 | Removed Mortar From Pipe Invert | Checked by | T.W.J. | 10-46 | |
| LMF | 8-70 | Raised side slope to top of endwall | Quantities by | H.L.P. | 10-46 | |
| LMF | 3-73 | Added Cl. I Conc. | Checked by | T.W.J. | 10-46 | |
| LMF | 10-74 | Changed Index No. | Traced by | C.E.B. | 10-46 | |

E.P. Hart
Deputy Design Engineer-Roadway

Drawing No. 1 of 1

Index No. DEX-01

| FED. ROAD DIV. NO. | STATE | SECTION | JOB NO. | FISCAL YEAR | SHEET |
|---|---|---|---|---|---|
| 3 | FLA. | | | | |

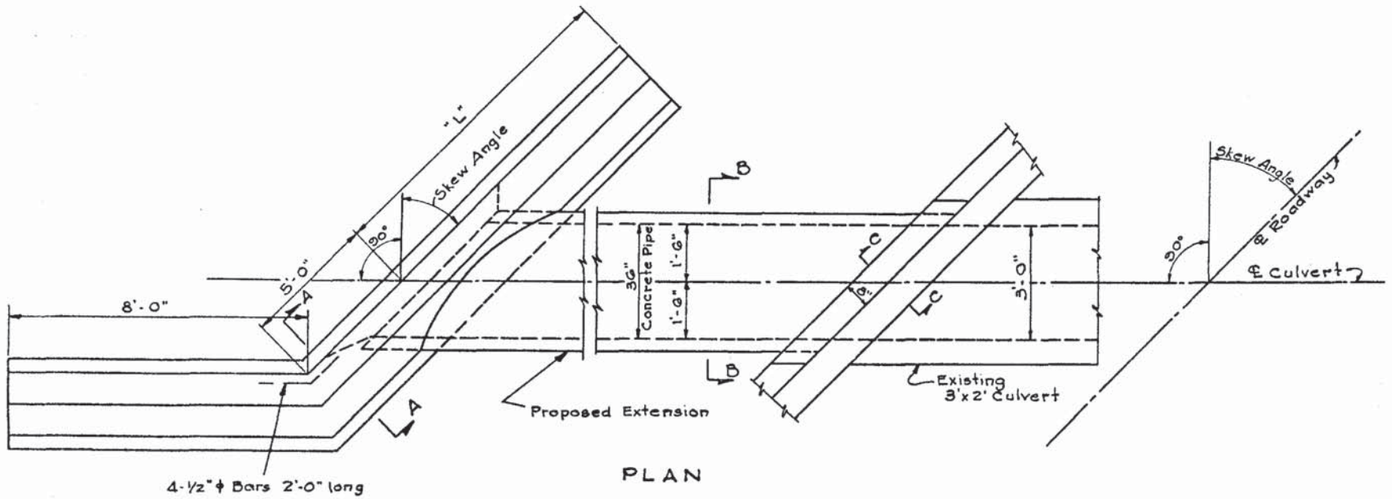


PLAN

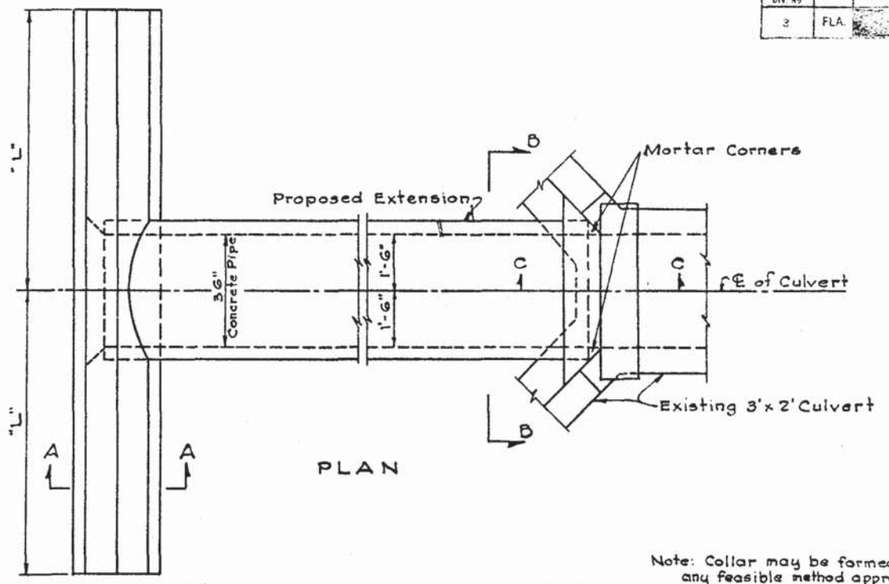


PLAN

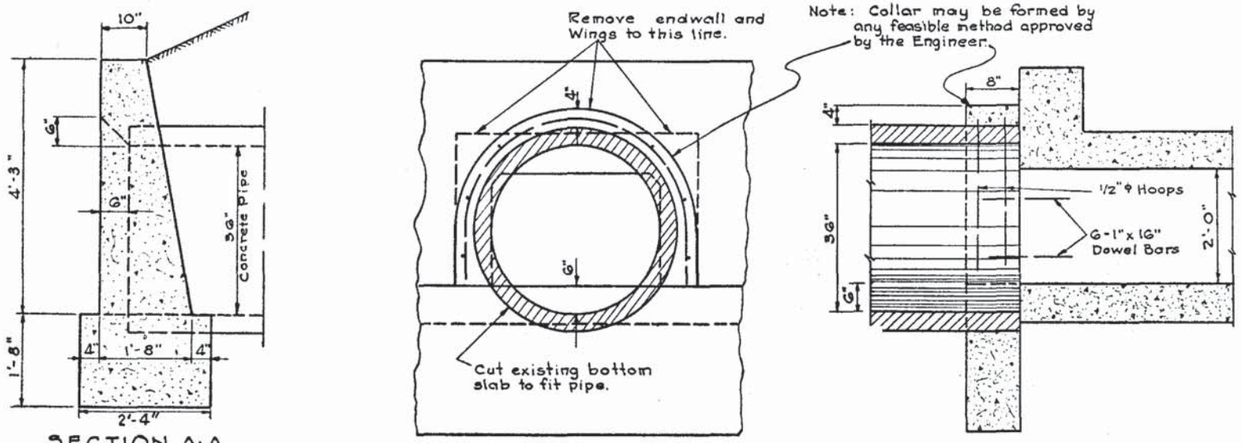


SECTION A-A

SECTION B-B

SECTION C-C

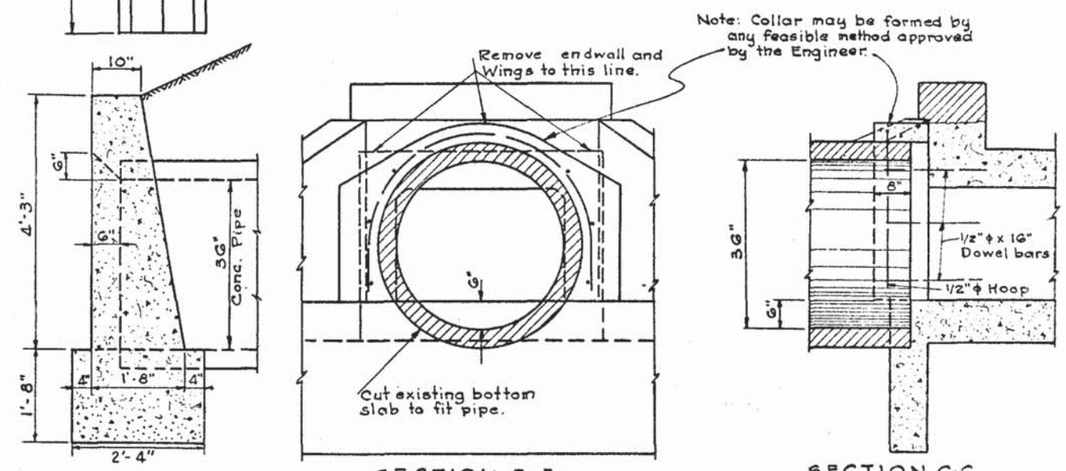


SECTION A-A

SECTION B-B

SECTION C-C

| TABLE OF DIMENSIONS AND QUANTITIES | | | |
|---|---|---|---|
| SKEW ∡ | DIMEN. "L" | CLASS I CONCRETE | |
| 0° to 30° | 8'-0" | 6.9 | Cu.Yd. |
| 30° to 45° | 9'-0" | 7.3 | " " |
| 45° to 50° | 9'-6" | 7.5 | " " |
| | | | |

Note: 1. Reinforced Steel to be included in Contract Unit Price for Concrete.

2. As an alternate to the endwalls shown the contractor may construct endwalls in accordance with Index Nº DCE-01

3. For sodding around endwall see detail on Index No. GRC-01.

DETAILS FOR L-TYPE ENDWALLS

| TABLE OF DIMENSIONS AND QUANTITIES | | | |
|---|---|---|---|
| SKEW ∡ | DIMEN. "L" | CLASS I CONCRETE | |
| 0° to 30° | 8'-0" | 5.0 | Cu.Yd. |
| 30° to 45° | 9'-0" | 5.7 | " " |
| 45° to 50° | 9'-6" | 6.1 | " " |
| | | | |

Note: Reinforcing Steel to be included in Contract Unit Price for Concrete.

DETAILS FOR STRAIGHT TYPE ENDWALLS

FHWA APPROVED: 3-20-75

FLORIDA DEPARTMENT OF TRANSPORTATION
ROADWAY PLANS SECTION

CONC. PIPE CULVERT EXTENSION FOR 3'-0"x 2'-0" BOX CULVERT

| ROAD NO. | COUNTY | SECTION | JOB NO. |
|---|---|---|---|
| | | | |

| REVISIONS | | | | Names | Dates | Approved by |
|---|---|---|---|---|---|---|
| Names | Dates | Descriptions | Designed by | | | |
| B.A.S. | 10-51 | Retraced | Checked by | | | |
| B.A.S. | 1-8-92 | Note - Forms for Collar | Drawn by | H.L.F. | 11-46 | |
| L.W.H. | 4-15-66 | Removed mortar from pipe invert. | Checked by | C.H.J. | 11-46 | E.H. Hart |
| J.K.C. | 7-22-69 | Added Note No. 2 | Quantities by | H.L.F. | 11-46 | Deputy Design Engineer-Roadways |
| LMF | 8-70 | Raised side slope to top of endwall | Checked by | C.H.J. | 11-46 | Drawing No. 1 of 1 / Index No. DEX-02 |
| LMF | 3-73 | Added Cl. I Conc. | Traced by | | | |

10-74 Changed Index Nº

Form 231-10

# MEMORANDUM

State of Florida Department of Transportation

DATE June 20, 1977

TO All Holders of Standard Index Books

FROM E. H. Hart, Deputy Design Engineer (Roadways)

COPIES TO

SUBJECT Standard Index Drawings

The following index drawings have been revised:

BMB-01-1 (Sheet 1 of 3); General Note No. 1 was changed to include reflective barrier marker in the cost of the concrete barrier wall. Sheets 2 and 3 were not changed.

DMD-01-1 Supersedes DMD-01; Sheet 2 has been revised to show bituminous coating required at the junction of dissimilar types of pipe. This is shown on "Detail of Concrete Jacket" at the bottom center of the sheet. Sheets 1 and 3 were not changed.

GRR-01 (Sheet 6 of 6); This is a new index showing a new type of approved railroad crossing. We have included sheets 1 through 5 of 6 which show the change in those drawing numbers.

GSE-02-1 Supersedes GSE-02: On sheet 1 we added a note under the superelevation chart. On sheet 2 we added the superelevation chart for e Max. 0.05.

Please destroy all copies of these indices in your files and replace with the revised index drawings.

EHH/LMF/db

LMF

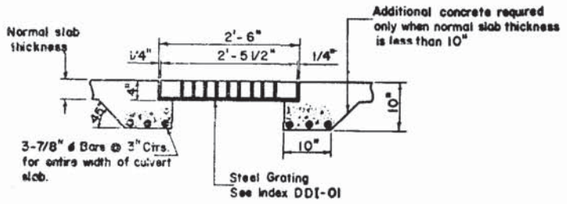


SECTION "B-B"

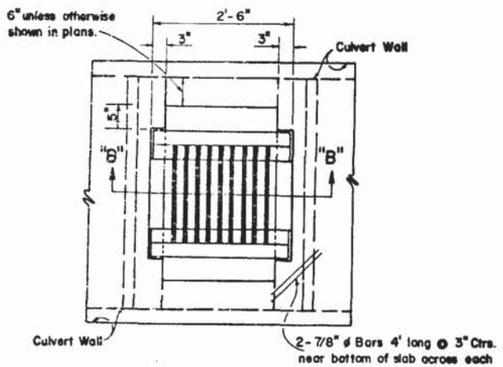


PLAN

MODIFIED TOP (TYPE "A" INLET)

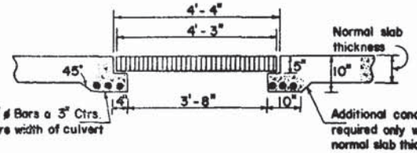


SECTION C-C

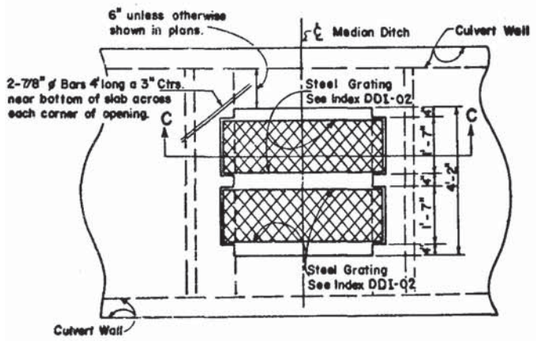


PLAN

MODIFIED TOP (TYPE "B" INLET)

## DETAIL SHOWING OPENING IN TOP OF BOX CULVERT FOR DRAINING MEDIAN DITCH

NOTE:
1. Cost of Steel Grating to be included in cost of Box Culvert.
2. All steel shall be 1 1/4" clear.

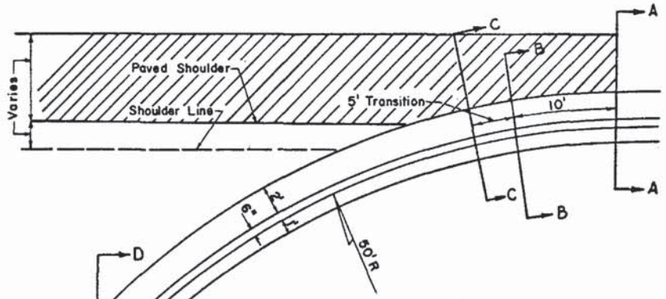


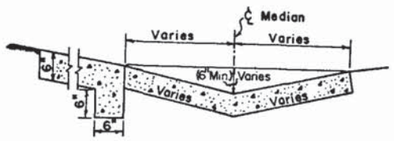


SECTION D-D

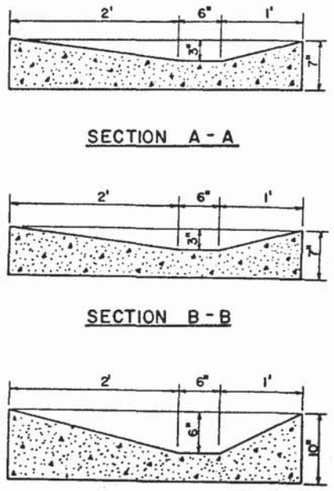


SECTION A - A

SECTION B - B

SECTION C - C

NOTES:
1. Spillway to be paid for as shoulder gutter.
2. If spillway empties into a shallow or median ditch, the detail should be modified as necessary.

## DETAIL OF CONC. SPILLWAY AT END OF SHOULDER GUTTER

(TO BE USED WHERE INLETS, PIPES & ENDWALLS ARE IMPRACTICAL)

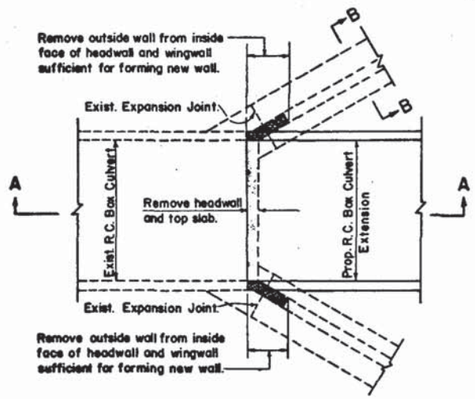


PLAN

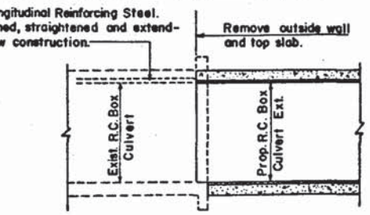


SECTION A-A

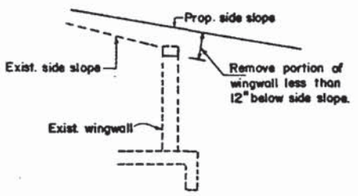


SECTION B-B

## FLARED ENDWALL

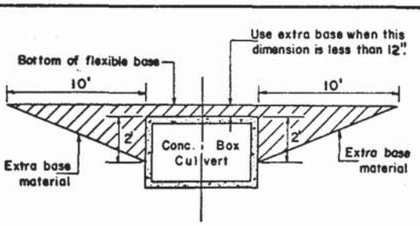


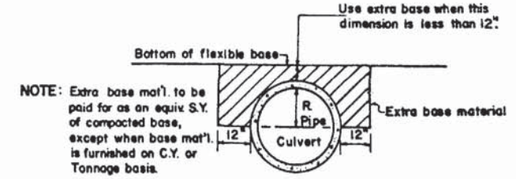


NOTE: Extra base mat'l. to be paid for as an equiv. S.Y. of compacted base, except when base mat'l. is furnished on C.Y. or Tonnage basis.

## DETAIL OF EXTRA BASE CONSTRUCTION FOR THE PROTECTION OF CULVERTS WITH LESS THAN MINIMUM COVER

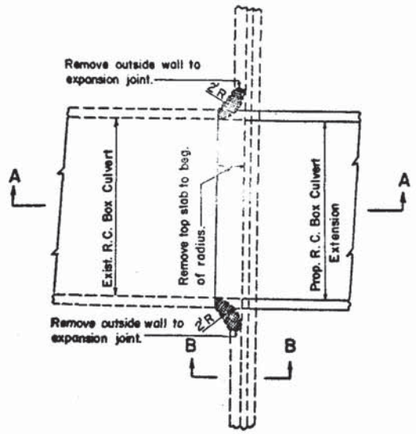


PLAN

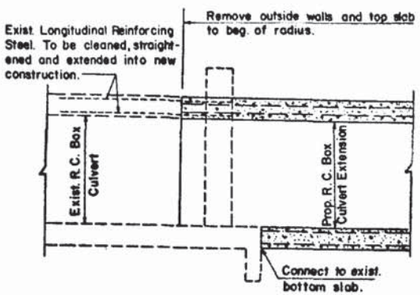


SECTION A-A

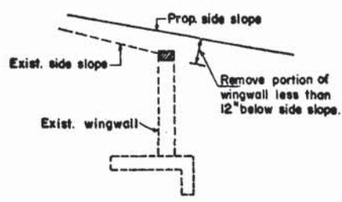


SECTION B-B

## ENDWALLS PARALLEL TO ℄ ROADWAY

## CONNECTION DETAILS R.C. BOX CULVERT EXTENSIONS

| FED. ROAD DIV. No. | STATE | PROJECT No. | FISCAL YEAR | SHEET No. |
|---|---|---|---|---|
| 2 | FLA. | | | |

FHWA Approved: 5-1-75

FLORIDA DEPARTMENT OF TRANSPORTATION
ROADWAY PLANS SECTION

# MISCELLANEOUS DRAINAGE DETAILS

| REVISIONS | | ROAD NO. | COUNTY | PROJECT NO. |
|---|---|---|---|---|
| Dates | Descriptions | | | |
| 9-76 | Changed Index No & Redrawn | | | |

| | Names | Dates |
|---|---|---|
| Detailed by | | |
| Checked by | | |
| Quantities by | | |
| Checked by | | |
| Traced by | | |

Recommended For Approval by: Engineer of Road Design

APPROVED BY: Asst. State Highway Engineer

Drawing No. 1 of 3

Index No. DMD-01-1

| FED. ROAD DIV. NO. | STATE | PROJECT NO. | SH. NO. |
|---|---|---|---|
| 3 | FLA. | | |

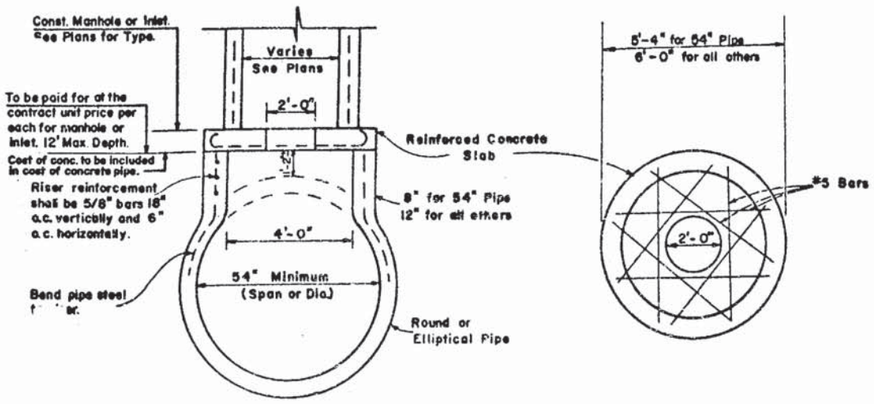


Reinforced slabs are required when inlet or manhole riser is less than 4' in diameter or when Type P, Alt. B manhole or inlet riser is used.
For optional construction joints see Index NO. DSD-01.

## DETAILS OF CONSTRUCTION OF INLETS OR MANHOLES ON INTEGRAL PRECAST CONCRETE RISER FOR CONCRETE PIPE.

Note: Cost of Concrete and Reinforcing Steel to be included in Contract Unit Price for Pipe Culvert.

Note: Collar may be formed by any feasible method approved by the Engineer.

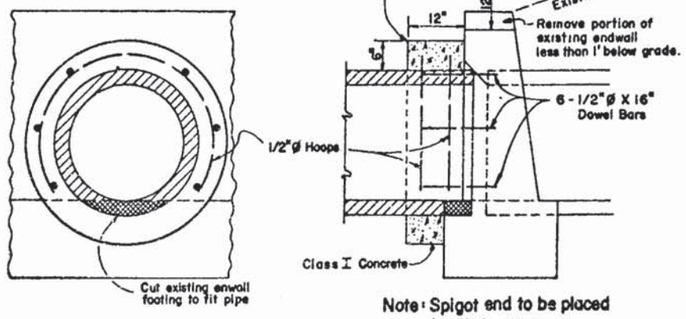


Note: Spigot end to be placed in existing Endwall regardless of direction of flow.

## DETAIL OF CONCRETE COLLAR

FOR EXTENTION OF EXISTING PIPE CULVERTS

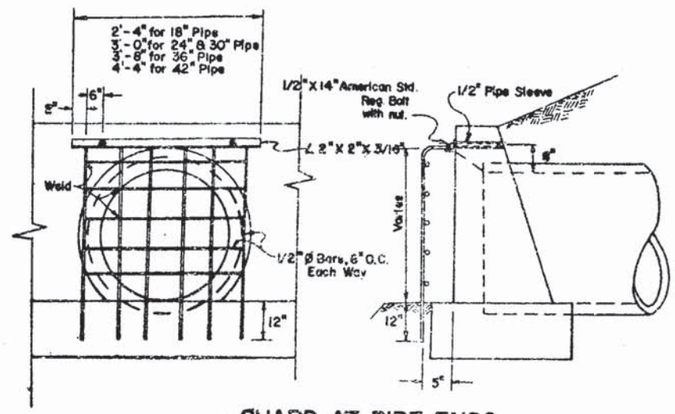


## GUARD AT PIPE ENDS

Notes: Guards to be constructed only at locations specified in detail plans.
Cost of guard bolts, nuts and sleeves to be included in the contract unit price for concrete

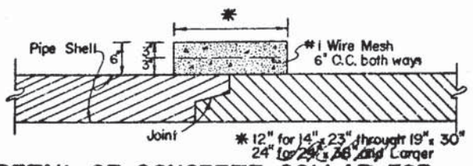


## DETAIL OF CONCRETE COLLAR FOR ELLIPTICAL CONCRETE PIPE JOINTS AND FLARED END SECTION CONNECTIONS

NOTE: Cost to be included in the cost of Elliptical concrete pipe or flared end section.
~~Cold adhesive preformed gaskets may be used in lieu of Concrete collars. See Special Provisions~~




## DETAIL FOR APPLICATION OF GASKET MATERIAL (BEFORE JOINT PULL-UP)

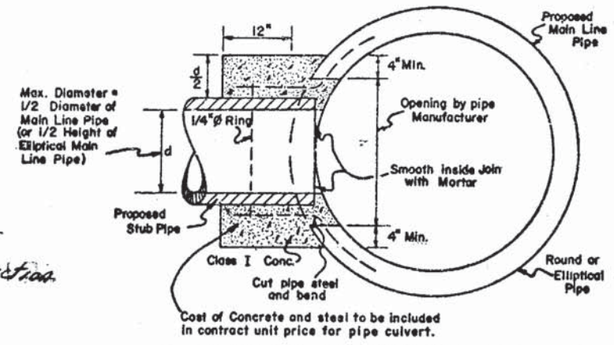


## DETAILS OF CONSTRUCTION AT JUNCTIONS OF MAINLINE PIPE AND STUB PIPE

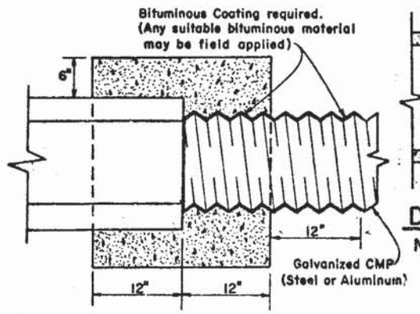


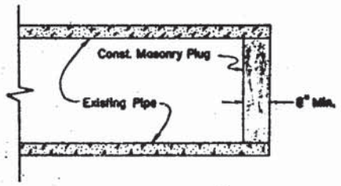


## DETAIL OF PIPE PLUG

Note: Cost of Masonry to be included in Contract Unit Price for New Pipe.

## DETAIL OF CONCRETE JACKET

REQUIRED AT JUNCTION OF DISSIMILAR TYPES OF PIPE OR JUNCTION OF EQUIVALENT SIZE CORRUGATED METAL PIPE-ARCHES HAVING DIMENSIONAL VARIATIONS

Note: COST OF CONCRETE AND BITUMINOUS COATING TO BE INCLUDED IN CONTRACT UNIT PRICE FOR NEW PIPE.

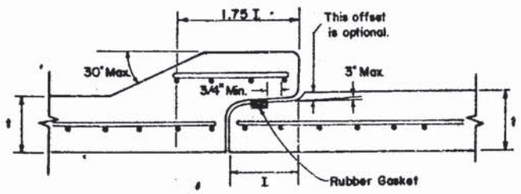


## DETAIL OF BELL & SPIGOT CONCRETE PIPE JOINT USING ROUND RUBBER GASKET

The area of circumferential steel in the bell shall not be less than that provided for an equivalent length of the pipe barrel plus an area equal to .005(D+2t) where D is the internal diameter of the pipe and t is the minimum shell thickness specified for the class and size of pipe (ASTM C-76).

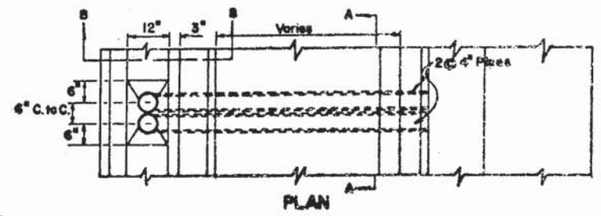


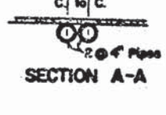


SECTION A-A

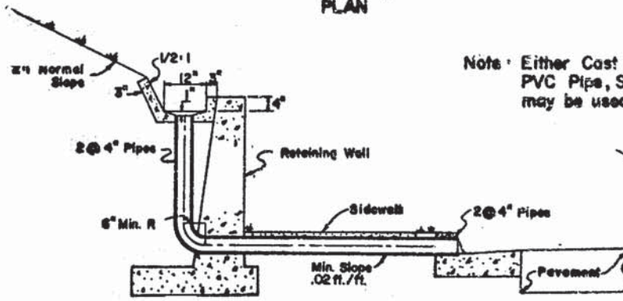


Note: Either Cast Iron Pipe or PVC Pipe, Schedule 40, may be used.

ELEVATION

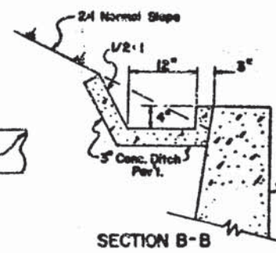


SECTION B-B

## DETAILS OF CONCRETE GUTTER AND DRAINS AT RETAINING WALLS

## GENERAL NOTE

ALL CROSS DRAIN AND SIDE DRAIN PIPE STRUCTURES TO BE CONSTRUCTED TO A LENGTH THAT WILL BE A MULTIPLE OF 4' JOINT LENGTHS FURNISHED TO THE NEAREST MULTIPLE LENGTH EQUAL TO, OR ABOVE THAT SHOWN IN PLANS.

| REVISIONS | |
|---|---|
| Date | Description |
| 10-74 | Changed Index N° |
| 2-77 | Added Bit. Coat to Conc. Jacket Detail |
| | - |

FHWA APPROVED: 4-28-77

STATE OF FLORIDA DEPARTMENT OF TRANSPORTATION
Road Design Section

# MISC. DRAINAGE DETAILS

| ROAD NO. | COUNTY | PROJECT NO. |
|---|---|---|
| | | |

| | Name | Date |
|---|---|---|
| Designed by | | |
| Checked by | | |
| Quantities by | | |
| Checked by | | |
| Supervised by | | |

Recommended for Approval By: Deputy Design Engineer
APPROVED BY: State Design Engineer

Drawing No. 2 of 3 | Index No. DMD-0

| FED. ROAD DIV. NO. | STATE | PROJECT NO. | FISCAL YEAR | SHEET NO. |
|---|---|---|---|---|
| 3 | FLA. | | | |

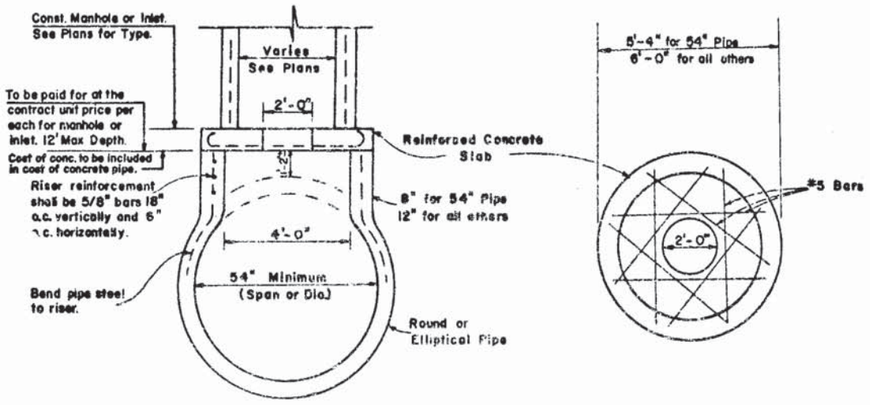


Reinforced slabs are required when inlet or manhole riser is less than 4' in diameter or when Type P, Alt. B manhole or inlet riser is used.
For optional construction joints see Index NO. DSD-01.

## DETAILS OF CONSTRUCTION OF INLETS OR MANHOLES ON INTEGRAL PRECAST CONCRETE RISER FOR CONCRETE PIPE

Note: Cost of Concrete and Reinforcing Steel to be included in Contract Unit Price for Pipe Culvert.

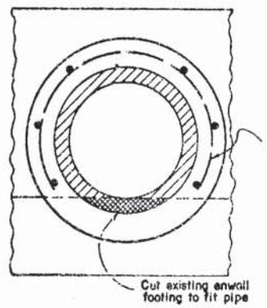


Note: Collar may be formed by any feasible method approved by the Engineer.

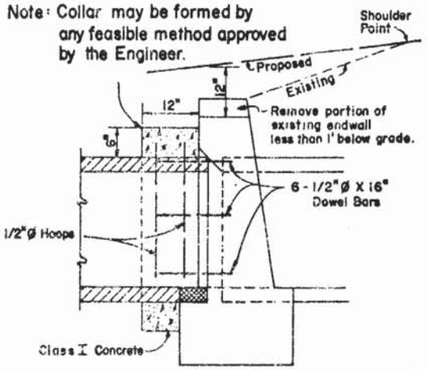


Note: Spigot end to be placed in existing Endwall regardless of direction of flow.

## DETAIL OF CONCRETE COLLAR FOR EXTENTION OF EXISTING PIPE CULVERTS

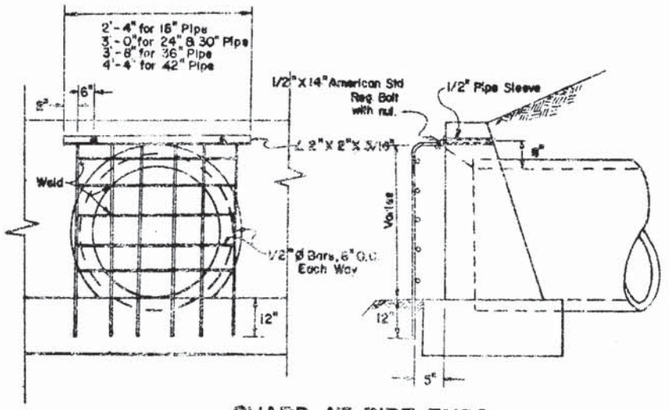


## GUARD AT PIPE ENDS

Notes: Guards to be constructed only at locations specified in detail plans.
Cost of guard bolts, nuts and sleeves to be included in the contract unit price for concrete.

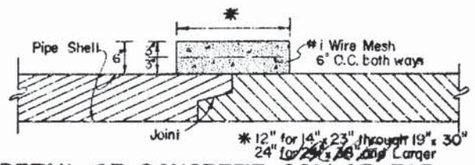


## DETAIL OF CONCRETE COLLAR FOR ELLIPTICAL CONCRETE PIPE JOINTS AND FLARED END SECTION CONNECTIONS

NOTE: Cost to be included in the cost of Elliptical concrete pipe. ~~Cold adhesive preformed gaskets may be used in lieu of Concrete collars. See Special Provisions.~~ or Flared end section

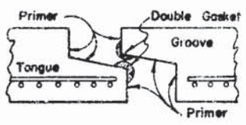


## DETAIL FOR APPLICATION OF GASKET MATERIAL (BEFORE JOINT PULL-UP)

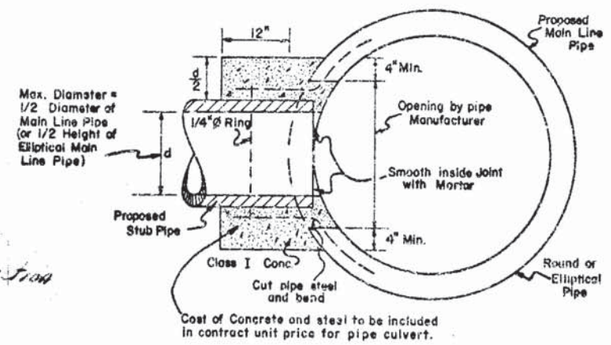


## DETAILS OF CONSTRUCTION AT JUNCTIONS OF MAINLINE PIPE AND STUB PIPE

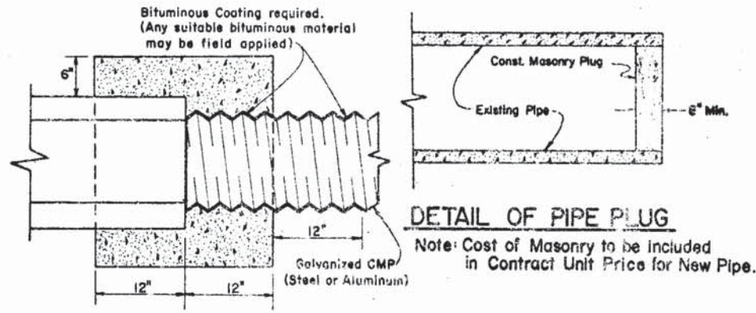


## DETAIL OF CONCRETE JACKET

REQUIRED AT JUNCTION OF DISSIMILAR TYPES OF PIPE OR JUNCTION OF EQUIVALENT SIZE CORRUGATED METAL PIPE-ARCHES HAVING DIFFERENT VENTILATIONS

Note: COST OF CONCRETE AND BITUMINOUS COATING TO BE INCLUDED IN CONTRACT UNIT PRICE FOR NEW PIPE.

## DETAIL OF PIPE PLUG

Note: Cost of Masonry to be included in Contract Unit Price for New Pipe.

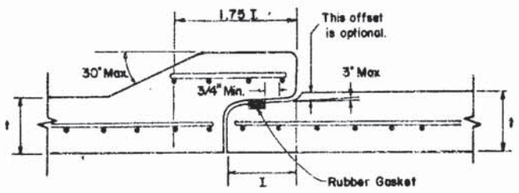


## DETAIL OF BELL & SPIGOT CONCRETE PIPE JOINT USING ROUND RUBBER GASKET

The area of circumferential steel in the bell shall not be less than that provided for an equivalent length of the pipe barrel plus an area equal to .005(D+2t) where D is the internal diameter of the pipe and t is the minimum wall thickness specifed for the class and size of pipe (ASTM C-76).

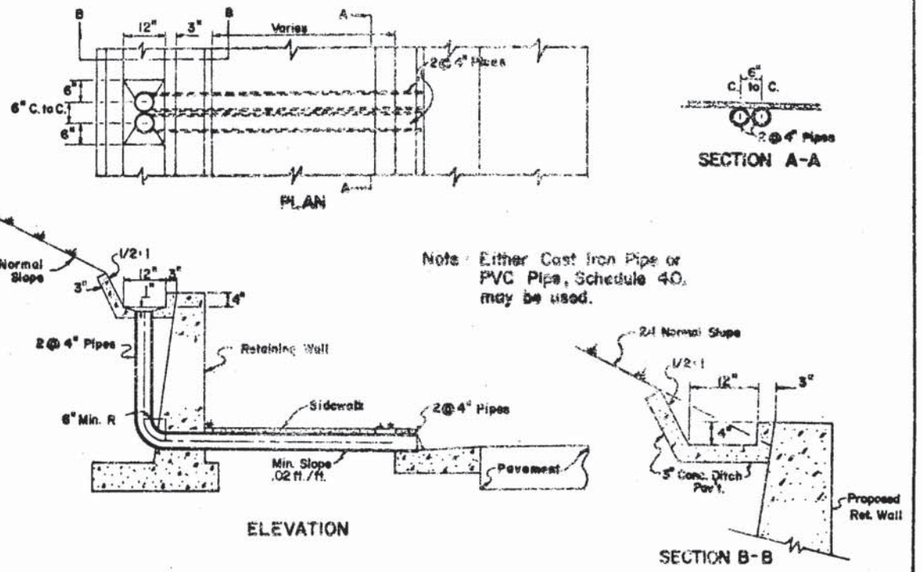


## DETAILS OF CONCRETE GUTTER AND DRAINS AT RETAINING WALLS

## GENERAL NOTE

ALL CROSS DRAIN AND SIDE DRAIN PIPE STRUCTURES TO BE CONSTRUCTED TO A LENGTH THAT WILL BE A MULTIPLE OF 4' JOINT LENGTHS FURNISHED TO THE NEAREST MULTIPLE LENGTH EQUAL TO, OR ABOVE THAT SHOWN IN PLANS.

FHWA APPROVED: 4-26-77

STATE OF FLORIDA DEPARTMENT OF TRANSPORTATION
Road Design Section

# MISC. DRAINAGE DETAILS

| REVISIONS | |
|---|---|
| Date | Description |
| 10-74 | Changed Index # |
| 6-77 | Added B.E. Detail to Spec. Index Detail |

| ROAD NO. | COUNTY | PROJECT NO. |
|---|---|---|
| | | |

| | Name | Date |
|---|---|---|
| Designed by | | |
| Detailed by | | |
| Quantities by | | |
| Checked by | | |
| Supervised by | | |

Recommended For Approval by: Deputy Design Engineer-Roadways
APPROVED BY: State Design Engineer

Drawing No. 2 of 3 | Index No. DMD-01-1

| STATE PROJ. NO. | SHEET NO. |
|---|---|
| | |

| RAILROAD COMPANY | CLEARANCE BELOW BOTTOM OF RAIL (FEET) | STRENGTH (A.S.T.M.) TABLE NO. |
|---|---|---|
| APALACHICOLA NORTHERN | 4.0 | IV |
| ATLANTA AND ST. ANDREWS BAY | 3.0 | IV |
| FLORIDA EAST COAST | 5.5 | IV |
| LOUISVILLE AND NASHVILLE | 4.5 | IV |
| ST. LOUIS SAN FRANCISCO | 4.5 | IV WELL B |
| SEABOARD COASTLINE | 5.5 | IV |
| SOUTHERN RAILWAY SYSTEM | | |
| GEORGIA SOUTHERN AND FLORIDA | 5.5 | V |
| LIVE OAK PERRY AND SOUTH GEORGIA | 5.5 | V |
| ST. JOHNS RIVER TERMINAL | 5.5 | V |

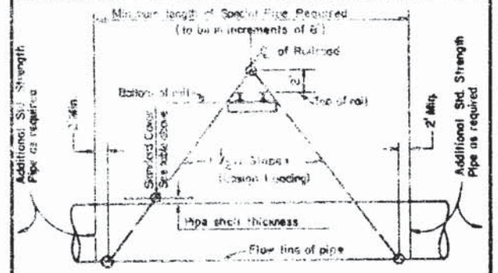


METHOD FOR DETERMINING THE LENGTH OF SPECIAL PIPE REQUIRED UNDER RAILROADS

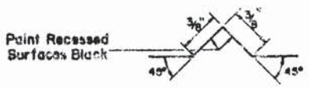


SECTION THRU RECESSED "V" GROOVE TO FORM INSCRIBED FIGURES

This number is to be placed in the center of the top surface of all BRIDGE CULVERT headwalls.
Black Plastic Figures 3" in height as approved by the Engineer may be used in lieu of Figures formed by 3/8" "V" Grooves.
"V" Grooves shall be formed by preformed Figures.

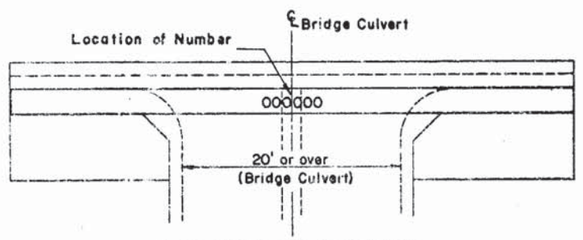


TOP VEIW OF HEADWALL
SHOWING BRIDGE CULVERT NUMBER LOCATION

For Bridge Number see Key Map

F.H.W.A. APPROVED 11-10-75

FLORIDA DEPARTMENT OF TRANSPORTATION
Road Design Section

# MISCELLANEOUS DRAINAGE DETAILS

| REVISIONS | | | INITIALS | DATES |
|---|---|---|---|---|
| Dates | Descriptions | Designed by | | |
| 11-74 | Changed Index No. | Checked by | | |
| 11-75 | Added Detail of Bridge No. Locat. | Quantities by | | |
| | | Checked by | | |
| | | Supervised by | | |

Recommended for approval
by _____
Deputy Design Engineer
Roadways

Approved
by _____
State Design Engineer

DRAWING NO. 3 of 3

INDEX NO. DMD-01-1

See GTO-01-1 For Letter

| FED. ROAD DIV. NO. | STATE | PROJECT NO. | FISCAL YEAR | SHEET NO. |
|---|---|---|---|---|
| 3 | FLA. | | | |

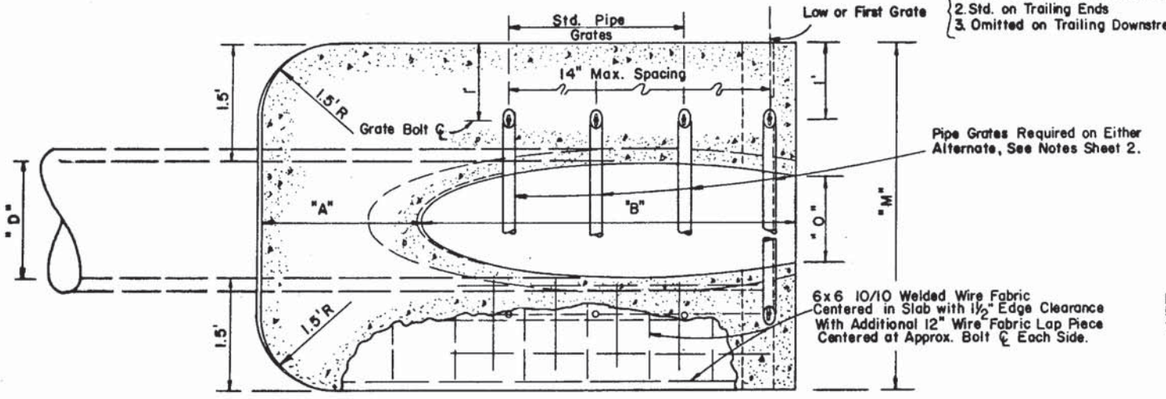


1. Extra Strong Pipe All Approach Ends
2. Std. on Trailing Ends
3. Omitted on Trailing Downstream Ends (4 Lanes Only)

## PLAN
## ROUND CONC. PIPE ALT. SHOWN

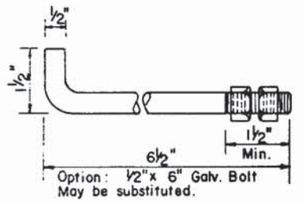


Option: ½"x 6" Galv. Bolt May be substituted.

## ANCHOR BOLT DETAIL

Required for C.M.P. only with 12" Std. spacing around Pipe Throat. Anchor Bolts to be bent, where required, to near center of conc. slab.

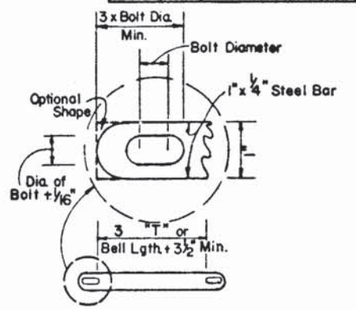


## SPLICE PLATE

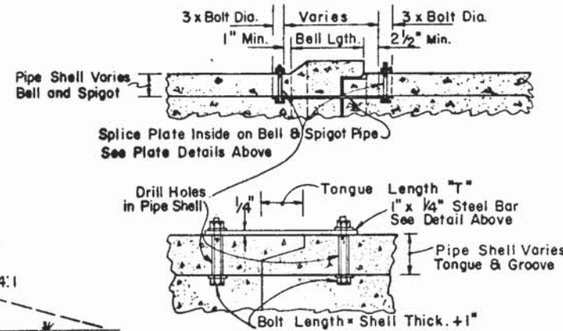


## Ø CONC. PIPE SPLICE DETAIL

All Bars, Bolts, Nuts and Washers to be Galvanized
Two Pipe Connectors Required per Joint.

NOTE: Splice Bolt Diameters shall be ⅜" for 15" to 36" Pipe and 5/8" for 42" to 60" Pipe.

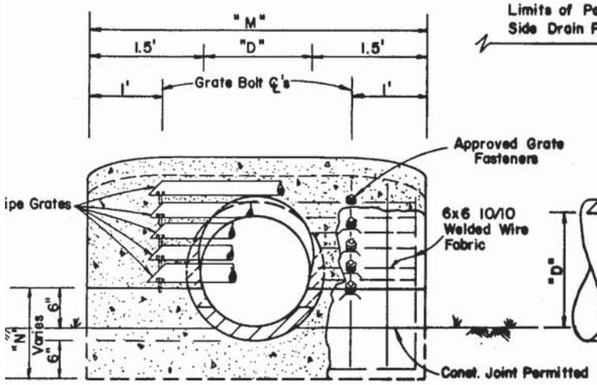


## MITERED END ELEVATION
## CONCRETE PIPE

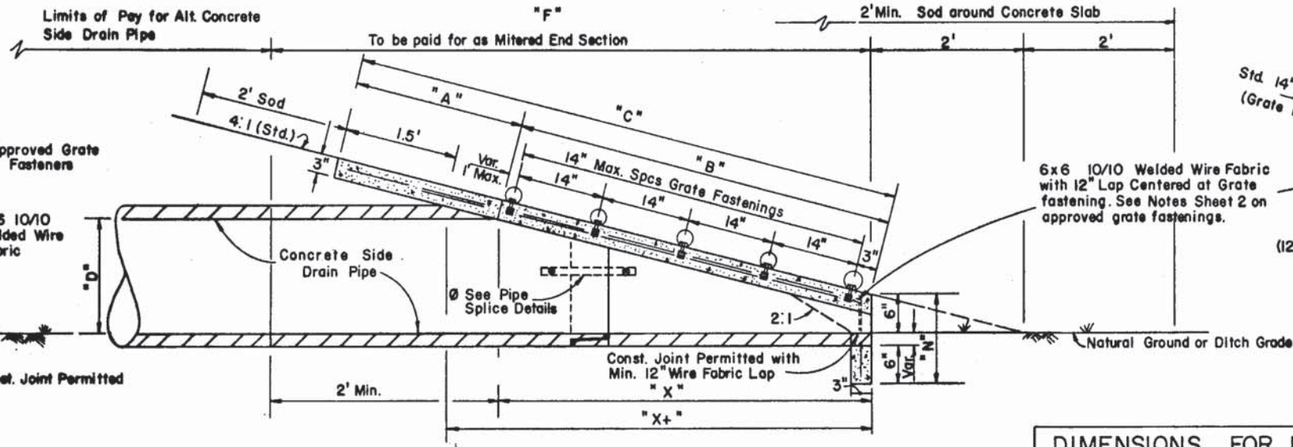


## ALT. CONCRETE PIPE MITERED END SECTION (SIDE DRAIN)

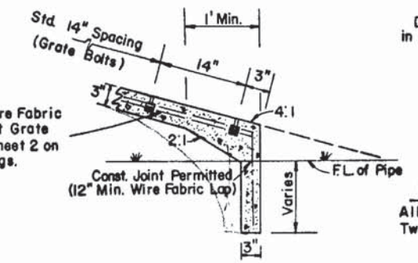


## MITERED END
## SLAB THICKENING AT LOW GRATE
## (OUTSIDES OF SIDE DRAIN PIPE)

| DIMENSIONS FOR MITERED END SECTION (CONC. PIPE) | | | | | | | | | PIPE GRATES FIRST | PIPE GRATES OTHER |
|---|---|---|---|---|---|---|---|---|---|---|
| "D" | "A" | "B" | "C" | "X+" | "F" Min. | "M" | "N" | "O" | "X" | EXTRA STR. | STANDARD |
| 15" | 2.26' | 4.09' | 6.35' | 4.71' | 8' | 4.25' | 1.17' | 1.23' | 4.03' | | |
| 18" | 2.26' | 5.12' | 7.38' | 5.71' | 9' | 4.50' | 1.17' | 1.41' | 5.03' | | |
| 24" | 2.43' | 7.18' | 9.61' | 7.87' | 11' | 5.00' | 1.21' | 1.73' | 7.03' | | |
| 30" | 2.59' | 9.25' | 11.84' | 10.03' | 13' | 5.50' | 1.25' | 2.00' | 9.03' | 3" | 2½" |
| 36" | 2.76' | 11.31' | 14.07' | 12.19' | 15' | 6.00' | 1.29' | 2.24' | 11.03' | 3" | 2½" |
| 42" | 3.13' | 13.37' | 16.50' | 14.55' | 17' | 6.50' | 1.38' | 2.45' | 13.03' | 3½" | 2½" |
| 48" | 3.13' | 15.43' | 18.56' | 16.55' | 19' | 7.00' | 1.38' | 2.65' | 15.03' | 3½" | 2½" |
| 54" | 3.46' | 17.49' | 20.95' | 18.87' | 21' | 7.50' | 1.46' | 2.83' | 17.03' | 4" | 3" |
| 60" | 3.62' | 19.55' | 23.17' | 21.03' | 23' | 8.00' | 1.50' | 3.00' | 19.03' | 4" | 3" |

| DIMENSIONS FOR MITERED END SECTION (CORRUGATED METAL PIPE) | | | | | | | | | | |
|---|---|---|---|---|---|---|---|---|---|---|
| 15" | 2.5' | 3.09' | 5.59' | 4.03' | 7.0' | 4.25' | 1.04' | 1.23' | 3.0' | | |
| 18" | 2.5' | 4.12' | 6.62' | 5.03' | 8.0' | 4.50' | 1.04' | 1.41' | 4.0' | | |
| 24" | 2.5' | 6.18' | 8.68' | 7.03' | 10.0' | 5.00' | 1.04' | 1.73' | 6.0' | | |
| 30" | 2.5' | 8.25' | 10.75' | 9.03' | 12.0' | 5.50' | 1.04' | 2.00' | 8.0' | 3" | 2½" |
| 36" | 2.5' | 10.31' | 12.81' | 11.03' | 14.0' | 6.00' | 1.04' | 2.24' | 10.0' | 3" | 2½" |
| 42" | 2.5' | 12.37' | 14.87' | 13.03' | 16.0' | 6.50' | 1.04' | 2.45' | 12.0' | 3½" | 2½" |
| 48" | 2.5' | 14.43' | 16.93' | 15.03' | 18.0' | 7.00' | 1.04' | 2.65' | 14.0' | 3½" | 2½" |
| 54" | 2.5' | 16.49' | 18.99' | 17.03' | 20.0' | 7.50' | 1.04' | 2.83' | 16.0' | 4" | 3" |
| 60" | 2.5' | 18.55' | 21.05' | 19.03' | 22.0' | 8.00' | 1.04' | 3.00' | 18.0' | 4" | 3" |

Mitered End Sections are to be used on Side Drain Installations only.
For General Notes See Sheet 2.

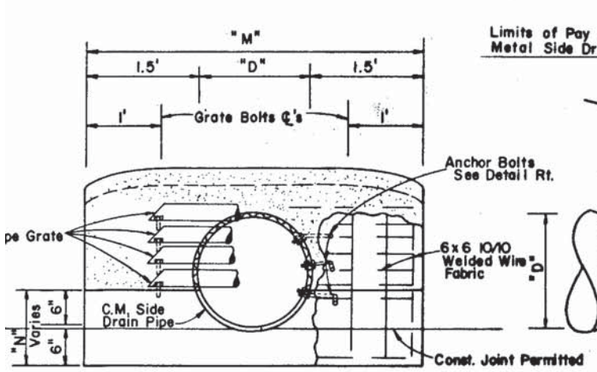


## MITERED END ELEVATION
## CORRUGATED METAL PIPE

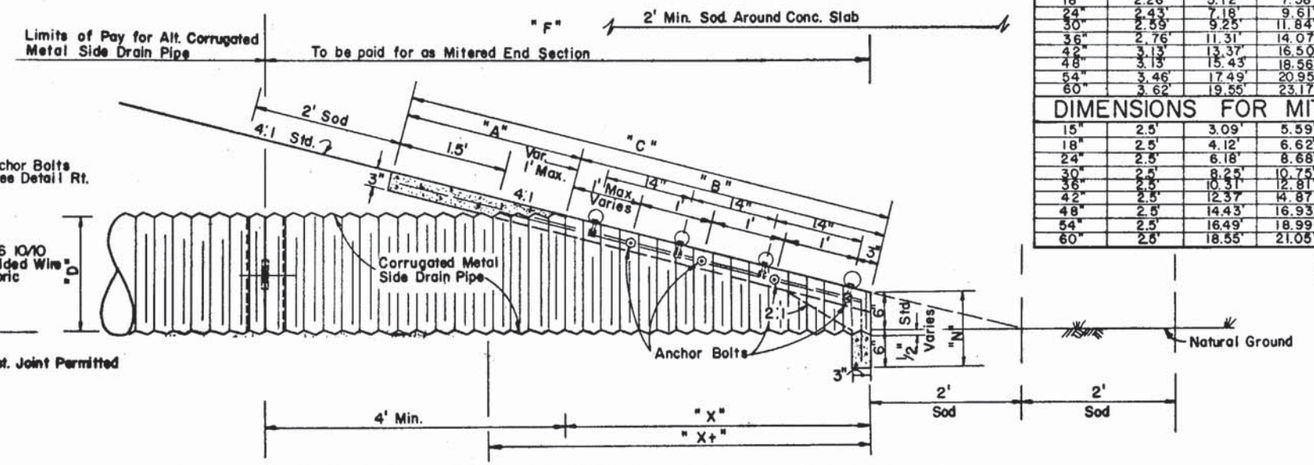


## ALT. CORRUGATED METAL PIPE MITERED END SECTION (SIDE DRAIN)

F.H.W.A. Approved: 12-6-76

| REVISIONS | |
|---|---|
| Dates | Descriptions |
| | |
| | |
| | |

STATE OF FLORIDA DEPARTMENT OF TRANSPORTATION

# MITERED END SECTION

| ROAD NO. | COUNTY | PROJECT NO. |
|---|---|---|
| | | |

| | Names | Dates |
|---|---|---|
| Designed by | A. F. | 10 76 |
| Checked by | | |
| Quantities by | A. F. | 10 76 |
| Checked by | | |
| Supervised by | | |

APPROVED BY: E. H. Hart

Drawing No. 1 of 2 | Index No. DME-01

| FED. ROAD DIV. NO. | STATE | PROJECT NO. | FISCAL YEAR | SHEET NO. |
|---|---|---|---|---|
| 3 | FLA. | | | |

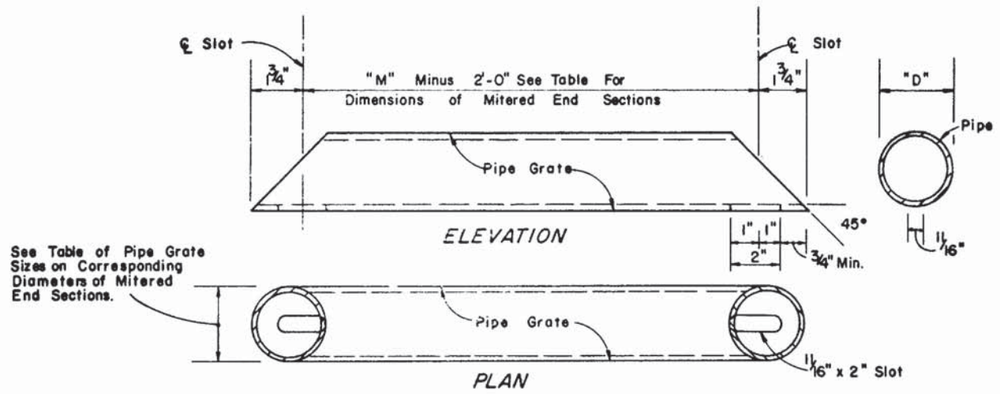


# SIDE DRAIN PIPE GRATE DETAILS FOR MITERED END SECTIONS

GENERAL NOTES: (Mitered End Section)

1. The cost of all grate, pipe and fastenings, wire mesh, anchors & concrete are to be included in the unit price for mitered end sections, ea.
2. Refer to dimension and grate element table for endwall dimensions, pipe grate sizes and related information.
3. Except when called for in the plans, pipe grates will not generally be used on side drain mitered end sections on pipe sizes 24" or smaller. All side drain mitered end sections on pipe 30" or greater shall be grated.
4. Pipe grates are to be fabricated from galvanized material. All metal surfaces exposed during fabrication shall be repaired as specified in Section 971-14, Standard Specifications and/or supplement indicated in plans. Those pipe grates to be subjected to salt water or highly corrosive environment shall be hot dipped galvanized after fabrication in accordance with A.S.T.M. A-123.
5. Suitable approved fastenings for the low or first pipe grate shall be 5/8" anchors that will provide a working load in tension of 2,000 lbs. and shear of 3,000 lbs. with this pipe (grate) being schedule 80 A.S.T.M. A-120 extra strong weight pipe. The same fasteners can be used on the remaining pipe grates with the pipe being either A.S.T.M. A-501 or A-53, grade B.
6. In critical hydraulic locations, grates shall not be used unless potential debris transport, which may impair the hydraulic function of the culvert, has been evaluated and appropriate adjustments made. Ditch grades in excess of 3% or pipe with less than 1.5' of cover and grades in excess of 1% will require such an evaluation.
7. Ø Multiple tapered-tongue and groove concrete pipe splices used in the assembly of concrete pipe mitered end sections should be of relatively uniform pipe lengths for the purpose of avoiding short splices.
8. When corrugated metal pipe is used, that portion of the corrugated metal pipe in direct contact with the concrete slab shall be bituminous coated prior to casting the concrete slab.
9. Either alternate corrugated metal or concrete mitered end section may be used with any alternate type side drain pipe except as follows: a. Existing or proposed corrugated metal pipe shall be extended with the same type of metal pipe or a concrete mitered end section.
   b. The use of corrugated pipe mitered end sections shall not be permitted in those locations where the use of those side drain pipe materials is not permitted.
10. When dissimialar pipe and / or mitered end sections are used, the use of a concrete collar is required, see Standard Index DMD-01 for details. Bituminous coating is required on all metal pipe within the collared area.
11. Alternate methods of end treatment may be substituted in lieu of the mitered end sections shown providing prior approval by shop drawing is obtained from the Engineer of Drainage. Flared End Sections may not be substituted for side drain mitered end sections.

FHWA Approved: 12-6-76

STATE OF FLORIDA DEPARTMENT OF TRANSPORTATION

MITERED END SECTION

| REVISIONS | | ROAD NO. | COUNTY | PROJECT NO. |
|---|---|---|---|---|
| Dates | Descriptions | | | |
| | | | | |

| | Names | Dates | APPROVED BY |
|---|---|---|---|
| Designed by | A.F. | 10 76 | E.H.Hart |
| Checked by | | | |
| Quantities by | A.F. | 10 76 | |
| Checked by | | | |
| Supervised by | | | |

Drawing No. 2 of 2 | Index No. DME-01

| FED. ROAD DIV. No. | STATE | PROJECT NO. | FISCAL YEAR | SHEET NO. |
|---|---|---|---|---|
| 3 | FLA. | | | |

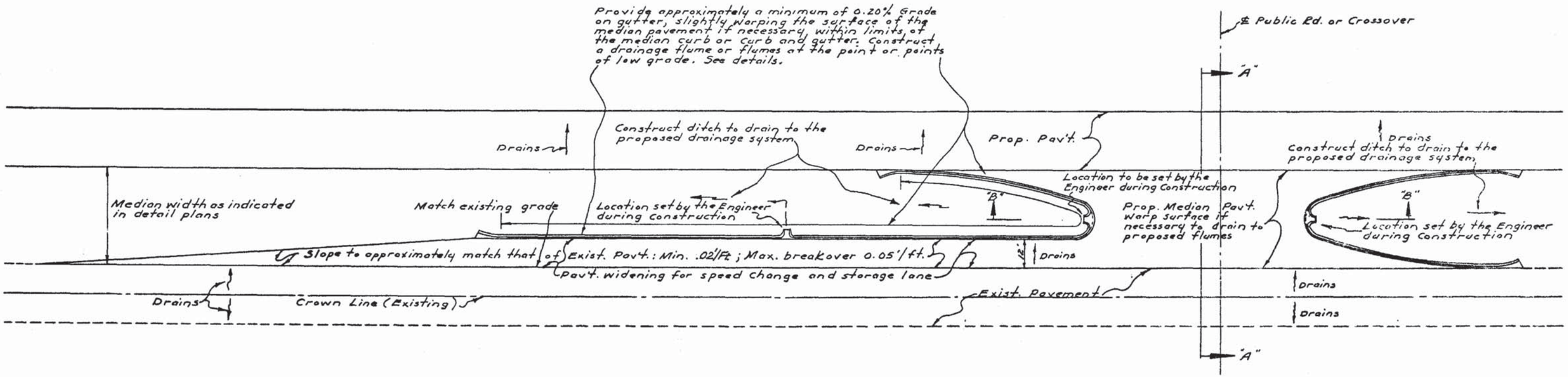


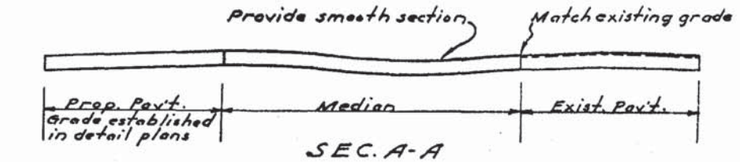


SEC. A-A

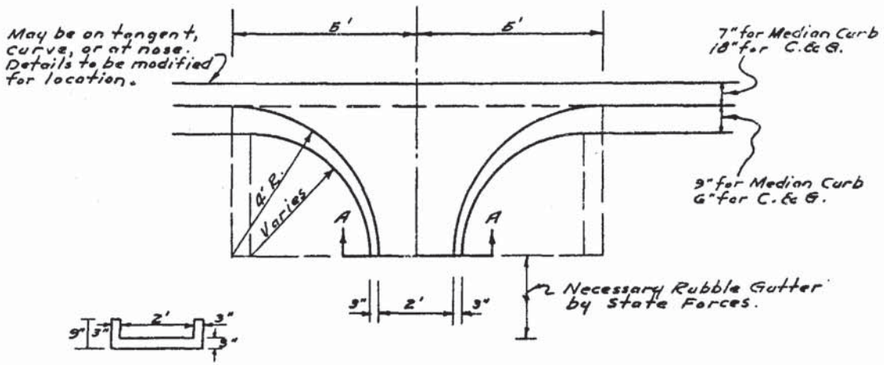


SEC. A-A

FLUME DETAIL




SEC. B-B

(May drain from any point as established by the Engineer)

GENERAL NOTES: These details are to apply to projects which provide for the conversion of 2-lane sections to 4-lane divided highway sections and for superelevated sections of new 4-lane divided highways. Location of low point or points in gutters is to be set by the Engineer during construction and will establish locations of flumes. The number of flumes is to be maintained at a minimum. Plan of median openings to conform to detail plans. Layout above is illustration only. Cost of flumes to be included in the contract price for Median Curb or Curb and Gutter.

FHWA APPROVED: 3-20-75

FLORIDA DEPARTMENT OF TRANSPORTATION
ROADWAY PLANS SECTION

# DRAINAGE DETAILS FOR MEDIAN OPENINGS

| REVISIONS | | ROAD NO. | COUNTY | | PROJECT NO. |
|---|---|---|---|---|---|
| Dates | Descriptions | | | | |
| 10-74 | Changed Index No. | | | | |
| | | | Names | Dates | |
| | | Detailed by | C.H.R. | 3-22-59 | APPROVED BY |
| | | Checked by | C.D.D. | 3-26-59 | E. H. Hunt |
| | | Quantities by | | | Deputy Design Engineer-Roadways |
| | | Checked by | | | Drawing No. 1 of 1 |
| | | Traced by | M.C.L. | 3-26-59 | Index No. DMO-0 |

| FED. ROAD DIV. NO. | STATE | PROJECT NO. | FISCAL YEAR | SHEET NO. |
|---|---|---|---|---|
| 3 | FLA. | | | |

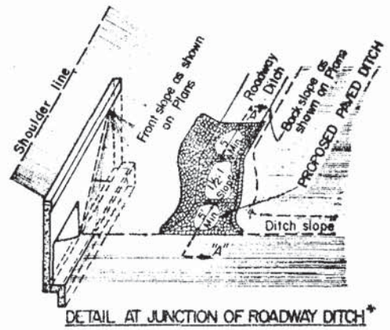


DETAIL AT JUNCTION OF ROADWAY DITCH* AND LATERAL DITCH

*Soil cement or SBRM will not be permitted for this type of construction.

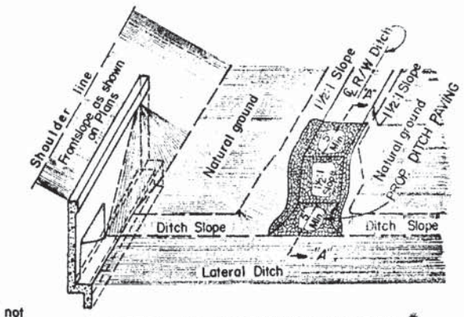


DETAIL AT JUNCTION OF R/W DITCH* AND LATERAL DITCH

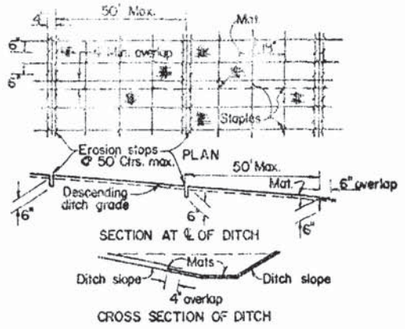


DETAILS OF INSTALLATION OF MATS FOR EROSION CONTROL

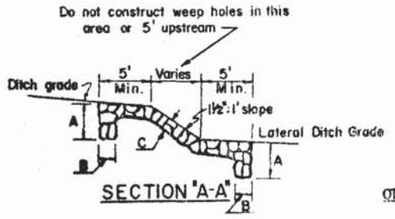


SECTION "A-A"

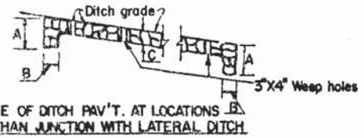


PROFILE OF DITCH PAV'T. AT LOCATIONS OTHER THAN JUNCTION WITH LATERAL DITCH

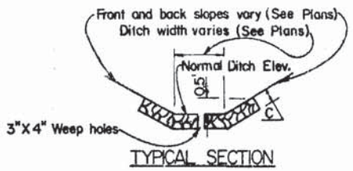


TYPICAL SECTION

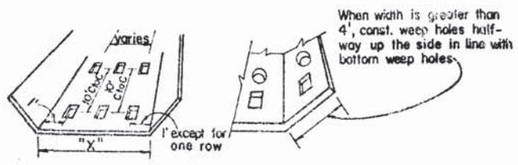


When "X" = 1' to 4' Const. 1 Row (centered)
"X" = 5' to 7' Const. 2 Rows
"X" = 8' to 12' Const. 3 Rows
"X" = 13' to 17' Const. 4 Rows
"X" = 18' to 22' Const. 5 Rows

Notes: All weep holes to be 3" X 4" rectangle or 4" or 5" Dia. circular hole. 1/2 Cu. ft. (12" x 12" x 6") of No. 6 aggregate to be placed under each hole. 1 Sq. ft. of galvanized wire mesh (1/4" openings) shall be placed between the aggregate and the concrete. Cost of holes, aggregate and wire mesh to be included in the cost of ditch pavement.

WEEP HOLE ARRANGEMENT

| SCHEDULE OF MIN. DIMENSIONS | | | |
|---|---|---|---|
| TYPE OF PAVEMENT | A | B | C |
| Concrete | 24" | 6" | 3" |
| Rubble | 24" | 12" | 9" |
| Sand-Cement | 24" | 12" | 4" |
| Soil- Cement | 24" | 12" | 4" |
| S.B.R.M. | 24" | 12" | 4" |
| Salvaged Concrete | 24" | 12" | 3½" |

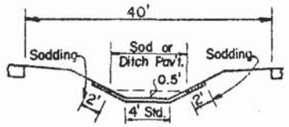


40' MEDIAN

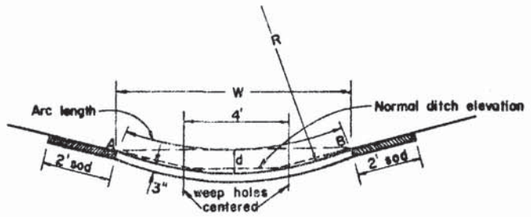


| TO REPLACE: | W | d | R | No. of rows of weep holes | Arc Length |
|---|---|---|---|---|---|
| 6' Median Swale | 6' | .24' | 19' | 0 | 6.0 |
| 6:1 Front Slopes; 4:1 Back Slope | | | | | |
| 5' B.W. Ditch | 10' | .67' | 19' | 2 | 10.1 |
| 4' B.W. Ditch | 9' | .54' | 19' | 2 | 9.1 |
| 4:1 Front slope & Back slope | | | | | |
| 5' B.W. Ditch | 9' | .74' | 14' | 2 | 9.2 |
| 4' B.W. Ditch | 8' | .58' | 14' | 1 in center | 8.1 |

ALTERNATE DITCH PAVEMENT

For use only where side slopes are 4:1 or flatter. Point "A" and "B" are to be the same elevation and should be used to locate the paved section.

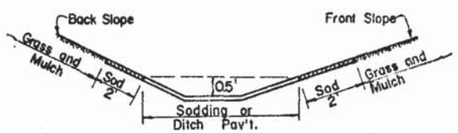


ROADWAY SIDE DITCH

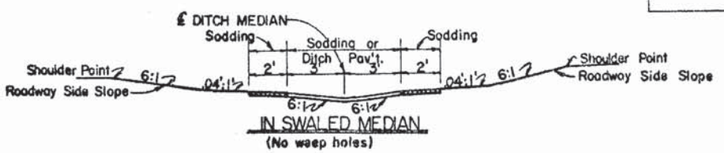


IN SWALED MEDIAN
(No weep holes)

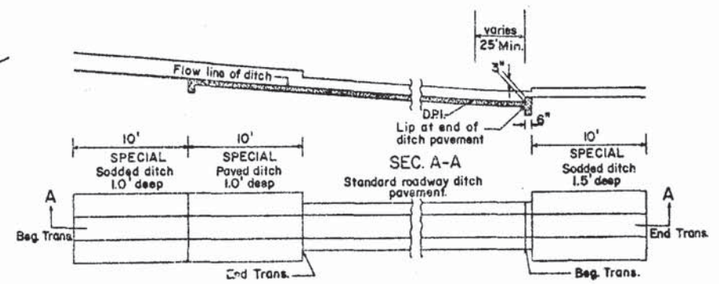


TYPICAL PAVED DITCH SECTION FOR TRANSITIONS FROM PAVED TO UNPAVED SECTIONS

## DITCH PAVEMENT & SODDING

### GENERAL NOTES

1. Type of ditch pavement shall be as shown on plans.
2. In concrete ditch pavement, contraction joints are to be spaced at 20' maximum intervals or as directed by the Engineer. Contraction joints may be either formed (construction joint) or tooled. No open joints will be permitted.

   ½" expansion joints (with preformed joint filler and seal) shall be constructed at all inlets, endwalls, and at intervals of not more than 200'.
3. Salvaged concrete ditch pavement shall consist of concrete pav't., sidewalk, curb and gutter with a 3 sq. ft. minimum surface area.
4. All joints shall be grouted when rubble, sand cement or salvaged concrete paving is used for ditch paving.
5. Toewalls are to be used with all ditch paving. A toewall is not required adjacent to drainage structures.
6. When directed by the Engineer, weep hole spacing may be reduced to 5' minimum.
7. For junction of R/W ditch spillway and lateral ditch, sides of paving to be 1' high minimum.
8. Lip at end of ditch pavement shall normally be located downstream of DPI or on flatter grades where there is a decrease in ditch velocity.

FHWA Approved: 5-1-75

| REVISIONS | |
|---|---|
| Date | Description |
| 10-74 | Redrawn - Engg. Index No. |

STATE OF FLORIDA DEPARTMENT OF TRANSPORTATION
ROADWAY PLANS SECTION

# DITCH PAVEMENT & SODDING

| ROAD NO. | COUNTY | PROJECT NO. |
|---|---|---|
| | | |

| | Name | Date |
|---|---|---|
| Designed by | | |
| Checked by | | |
| Quantities by | | |
| Checked by | | |
| Supervised by | | |

Recommended For Approval By: E. M. Hart — Deputy Design Engineer - Roadways
APPROVED BY: — State Design Engineer

Drawing No. 1 OF 1 | Index No. DPS-01

Form 281-10

# MEMORANDUM

State of Florida Department of Transportation

DATE February 18, 1976

TO District Design Engineers & Consultants

FROM E. H. Hart, Deputy Design Engineer (Roadways) E.H.Hart

COPIES TO

SUBJECT Standard Index Nos. DCI-01 and DCI-02

Index No. DCI-01

The following general note has been added:

8. For Inlet Bottoms see Index DSB-01.

Index No. DCI-02

Note 5 under general notes revised to read as shown below and note 7 added.

5. See Index DSD-01 for means of locking grate or cover to inlet and for other supplemental details.

7. For Inlet Bottoms see Index DSB-01

It will not be necessary to show each of the three Index numbers at each inlet on the Drainage Structure Sheets. Shown only the Index Number for the top portion of inlets. All three Index numbers must be shown on the key sheet.

No distribution of this revision to Index Nos. DCI-01 and DCI-02 will be made at this time.

EHH:jl

| FED. ROAD DIV. No. | STATE | PROJECT No. | FISCAL YEAR | SHEET No. |
|---|---|---|---|---|
| 20 | FLA. | | | |

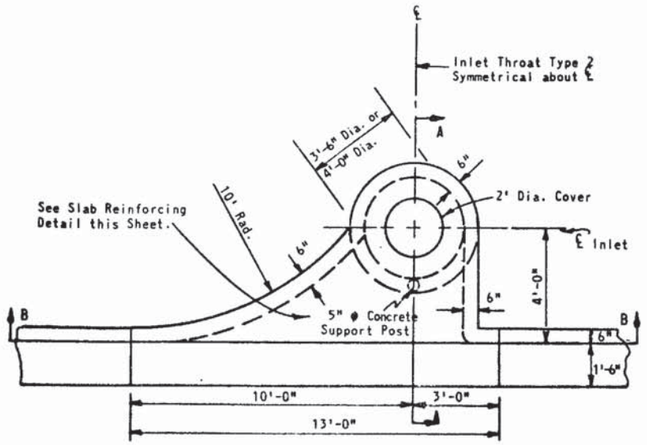


INLET THROAT TYPE 1

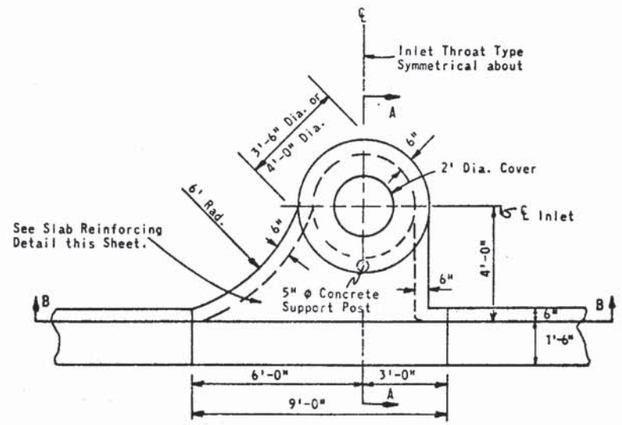


INLET THROAT TYPE 3

Inlet Throat Type 3
Symmetrical about ℄

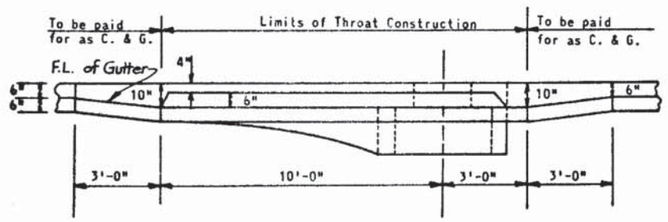


SECTION B-B

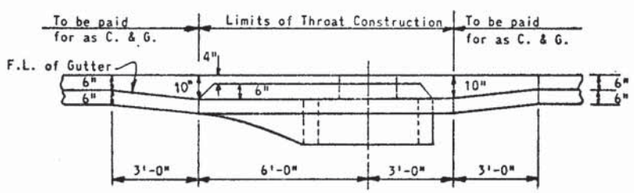


SECTION B-B

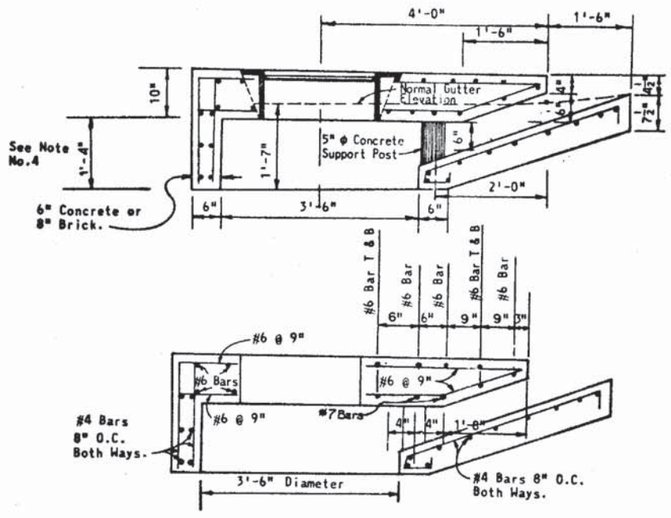


3'-6" DIAMETER

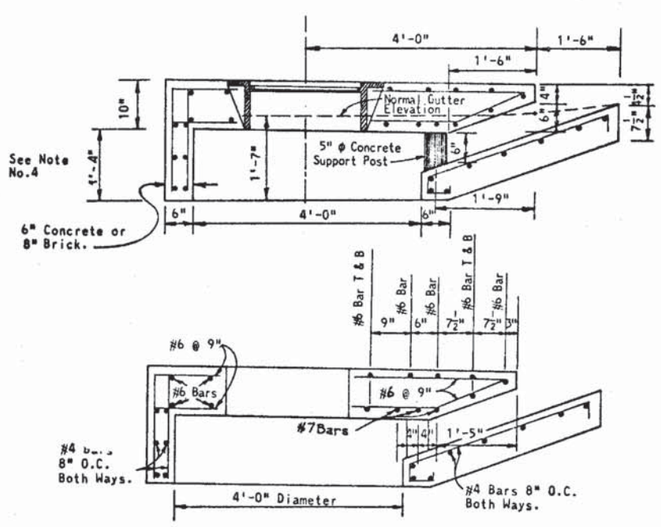


4'-0" DIAMETER

SECTION A-A FOR INLETS TYPE 1, 2, 3 & 4

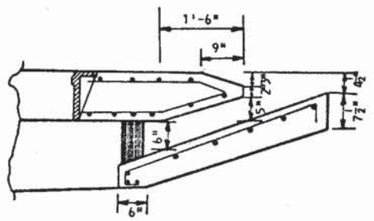


INLET TOP MODIFICATION
FOR TYPE "E" CURB

## GENERAL NOTES

1. The finished grade and slope of the inlet tops are to conform with the finished cross slope and grade of the proposed sidewalk and/or parkway.
2. When inlets are to be constructed on a curve, refer to the plans to determine the radius and, where necessary, modify the inlet details accordingly. Bend steel when necessary.
3. All steel in throats shall have 1½" minimum cover unless otherwise shown. Inlet throats shall be either cast-in-place or precast concrete.
4. The rear wall portion of throat Types 1, 2, 3 & 4 may be constructed with brick. Dowels to top slab required.
5. Only round concrete support post will be acceptable.
6. For supplemental details see index no. DSD-01.
7. These inlet throats were designed for use with std. curb & gutter and Type E curb. Locate outside of pedestrian cross traffic if possible.

8. For Inlet Throat Type 1, 2, 3 & 4 see Index DCI-01

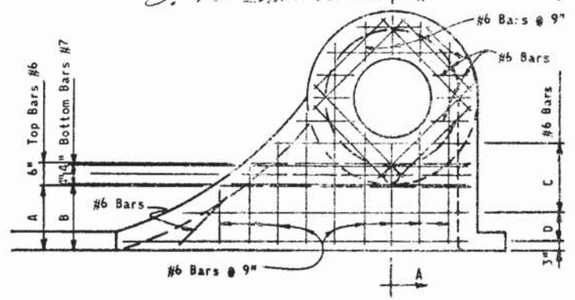


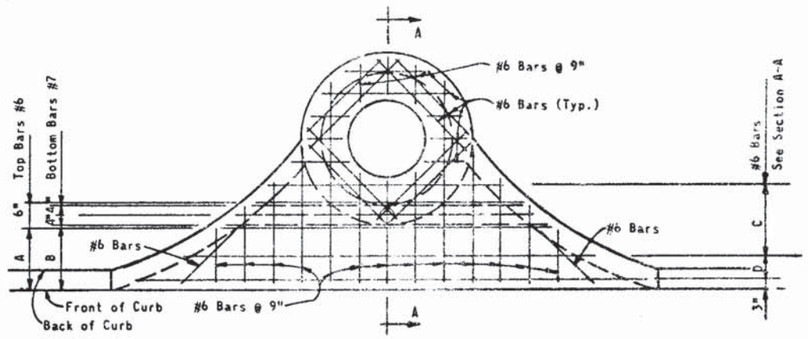


| TABLE OF VARIABLE DIMENSIONS | | |
|---|---|---|
| DIMENSION | 3'-6" | 4'-0" |
| A | 1'-9" | 1'-6" |
| B | 1'-8" | 1'-5" |
| C | 1'-9" | 1'-10½" |
| D | 9" | 7½" |

SLAB REINFORCING DETAILS
INLETS 1, 2, 3 & 4

FHWA Approved: 5-1-75

FLORIDA DEPARTMENT OF TRANSPORTATION
Road Design Section

CURB INLET-TYPES 1,2,3 & 4

| REVISIONS | | | INITIALS | DATES |
|---|---|---|---|---|
| Dates | Descriptions | Designed by | | |
| 5-74 | Redrawn-Chgd Index No | Checked by | | |
| | | Quantities by | | |
| | | Checked by | | |
| | | Supervised by | | |

Recommended for approval
by: E.H. Hart
Deputy Design Engineer-Roadways
Approved
by: [signature]
State Design Engineer

DRAWING NO. 1 of 1
INDEX NO. DCI-01

Form 281-10

# MEMORANDUM

State of Florida Department of Transportation

DATE January 3, 1976

TO ALL HOLDERS OF STANDARD INDEX BOOKS

FROM E. H. Hart, Deputy Design Engineer (Roadways)

COPIES TO

SUBJECT STANDARD INDEX DRAWINGS

The following index drawings have been revised:

DCI-02-2 supersedes DCI-02-1; Welding requirements on the solid steel cover were revised and a sentence was added to General Note No. 10.

DSE-02-1 supersedes DSE-02; Dimensions and Quantities for 84" pipe endwall were added.

Please destroy the copies of DCI-02-1 and DSE-02 in your files and add the new index drawings.

LMF

EHH:LMF:jl

Form 281-10

# MEMORANDUM

State of Florida Department of Transportation

**DATE** July 19, 1976

**TO** All Holders of Standard Index Books

**FROM** E. H. Hart, Deputy Design Engineer (Roadways)

**COPIES TO**

**SUBJECT** Standard Index No. DCI-02-1

This index has been revised to remove the reticuline bar grating and provide the use of the solid steel cover.

Please destroy the copy of Index No. DCI-02 in your files and replace with this new drawing.

LMF

EHH/LMF/jl

| STATE PROJ. NO. | SHEET NO. |
|---|---|
| | |

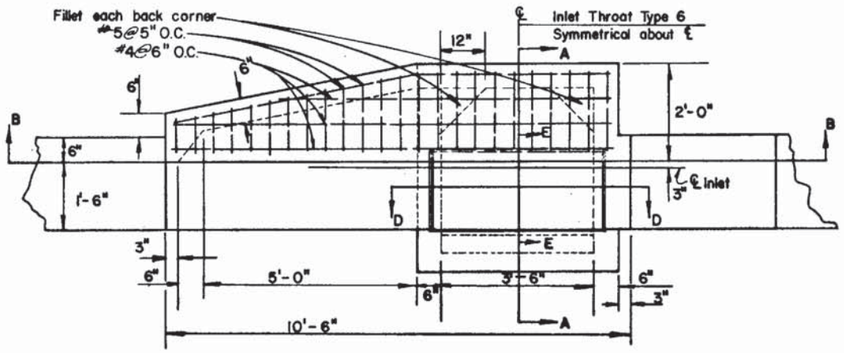


## INLET THROAT TYPE 5

Inlet Throat Type 6
Symmetrical about ℄

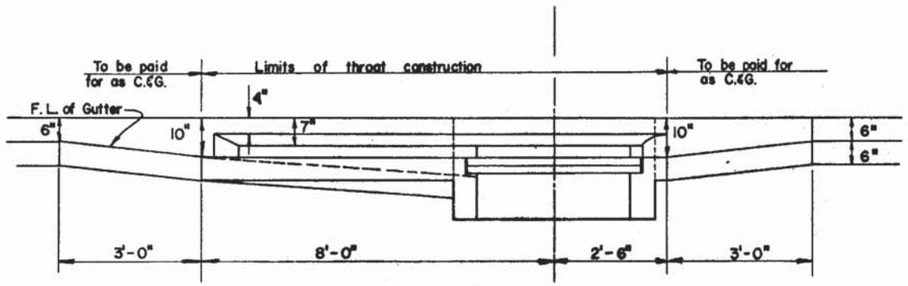


SECTION "B-B"

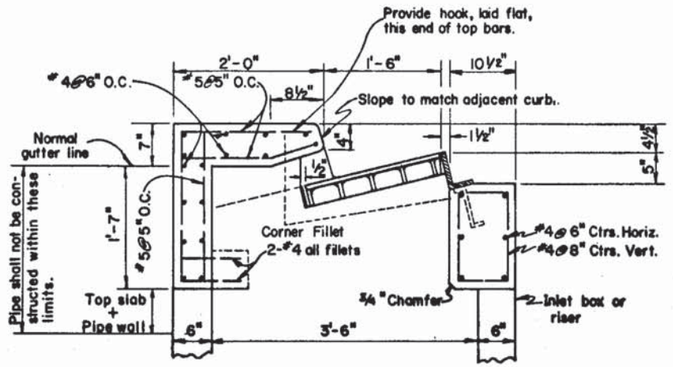


SECTION "A-A"

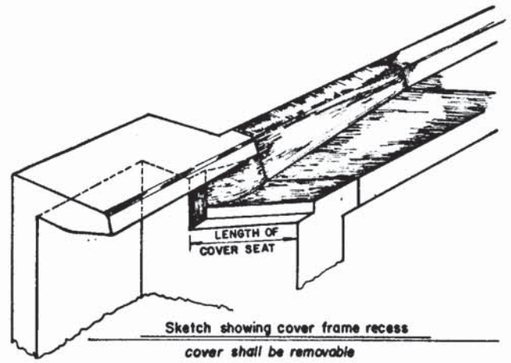


Sketch showing cover frame recess
*cover shall be removable*

### GENERAL NOTES:

1. The finished grade and slope of the inlet tops are to conform with the finished cross slope and grade of the proposed sidewalk and / or parkway.
2. When inlets are to be constructed on a curve, refer to the plans to determine the radius and, where necessary, modify the inlet details accordingly. Bend steel when necessary.
3. All steel in throats shall have 1¼" minimum cover unless otherwise shown. Inlet throats shall be either cast-in-place or precast concrete.
4. The corner fillets shown for rectangular throats ( Type 5&6 ) are necessary only when throats are to be used in conjunction with circular inlet boxes or when used on skew with rectangular inlet boxes.
5. See Index DSD-01 for supplemental details.
6. These inlet throats were designed for use with std. curb & gutter and Type E curb. Locate outside of pedestrian cross traffic if possible.
7. For inlet bottoms see index no. DSB-01.
8. Tack weld cover to frame in 4 places.
9. All steel used for frame and cover shall meet the requirements of ASTM A-36.
10. When Alternate "G" Cover is specified in plans, steel cover to be hot dip galvanized after fabrication. All exposed joints to be seal welded before galvanizing.

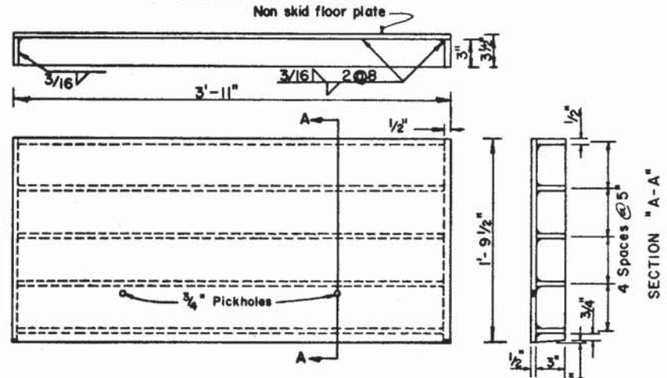


SOLID STEEL COVER DETAIL




INLET TOP MODIFICATION FOR TYPE "E" CURB

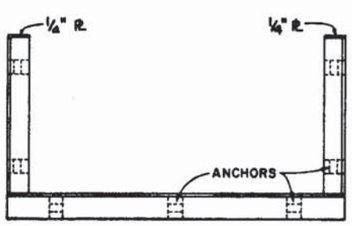


TOP VIEW OF FRAME

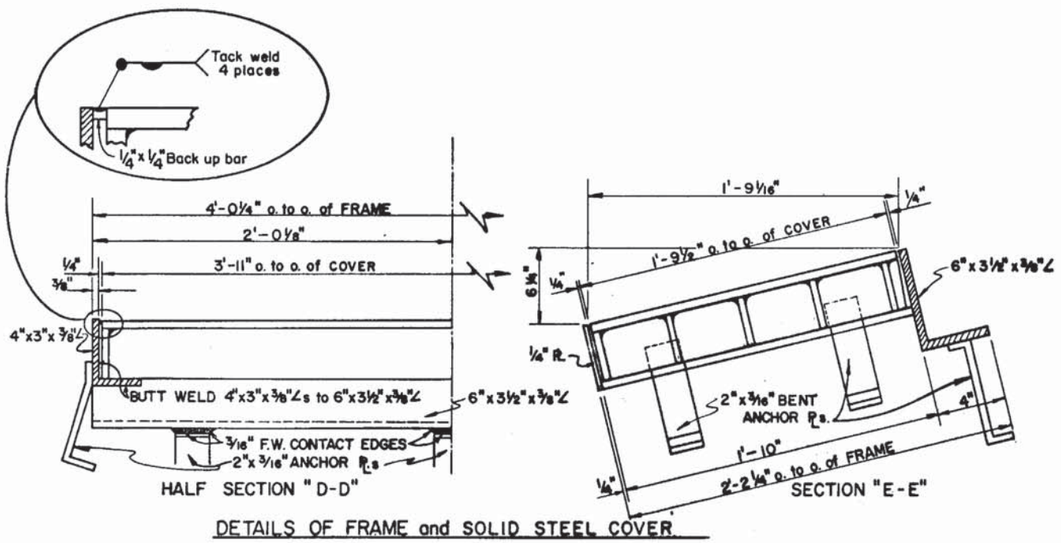


DETAILS OF FRAME and SOLID STEEL COVER

FHWA Approved: 12-14-76

FLORIDA DEPARTMENT OF TRANSPORTATION
Road Design Section

**CURB INLET - TYPES "5" & "G"**

| REVISIONS | | | INITIALS | DATES |
|---|---|---|---|---|
| Dates | Descriptions | Designed By | | |
| 5-74 | Redrawn - Chgd Index No. | Checked By | | |
| 6-76 | Removed Irving Type Grate | Quantities By | | |
| 12-76 | Revised welding on Steel Cover; Added to Note 10 | Checked By | | |
| | | Supervised | | |

Recommended For Approval By: _____ Deputy Design Engineer — Roadways

APPROVED BY: _____ STATE DESIGN ENGINEER

DRAWING NO. 1 of 1

INDEX NO. DCI-02-2

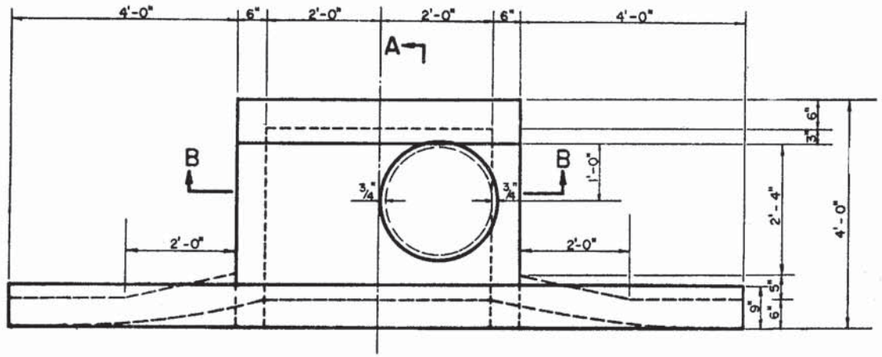


A
PLAN

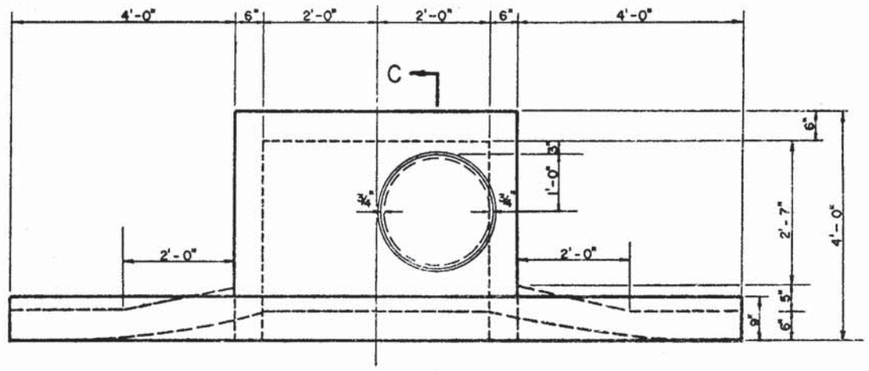


C
PLAN

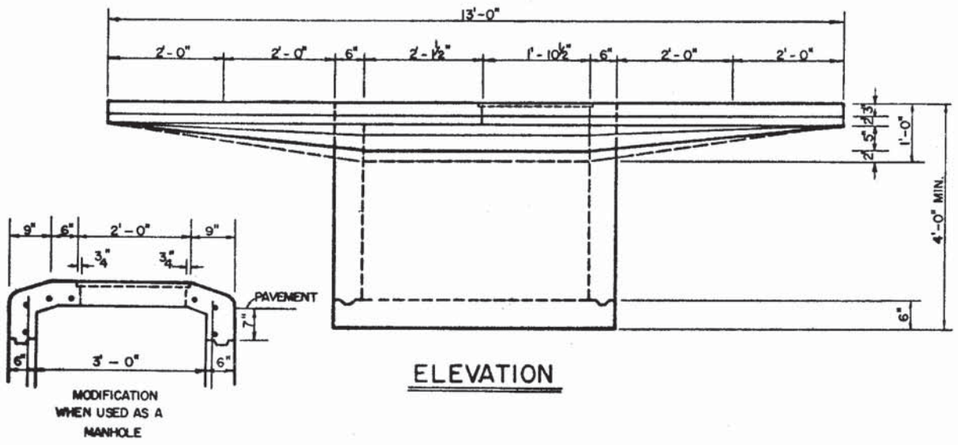


MODIFICATION
WHEN USED AS A
MANHOLE

ELEVATION

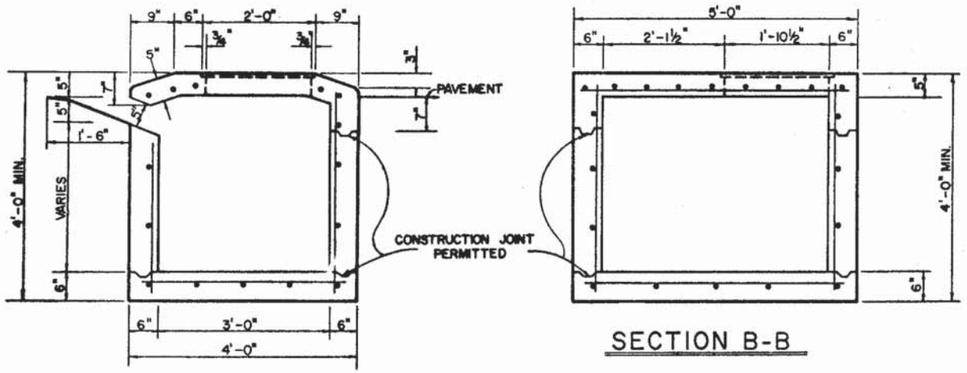


SECTION A-A

SECTION B-B

DETAILS OF TYPE "7" INLET FOR FOUR FEET WIDE MEDIAN

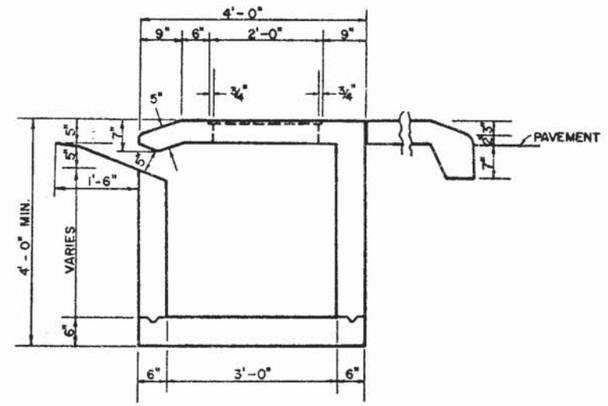


SECTION C-C

DETAILS OF TYPE "7" INLETS FOR MEDIAN WIDER THAN FOUR FEET

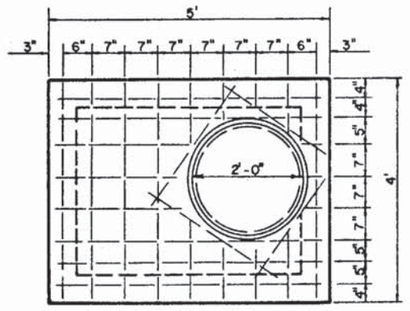


DETAIL
REINFORCING STEEL DIAGRAM
TOP SLAB OF INLET

## GENERAL NOTES

DESIGN SPECIFICATIONS: A.A.S.H.O.-1973

CHAMFER: All EXPOSED EDGES TO BE CHAMFERED 3/4" UNLESS OTHERWISE SHOWN.

CONCRETE CURB: FOR SHAPE OF CONCRETE CURB SEE INDEX NO. PCG-01.

STEEL: NO. 4 REINFORCING BARS 12" CENTERS UNLESS OTHERWISE NOTED, 1½" CLEARANCE TO INSIDE FACE.

FOR SUPPLEMENTARY DETAILS SEE INDEX DSD-01.

THIS INLET WAS DESIGNED FOR USE WITH TYPE A & B MEDIAN CURB OR TYPE I & II TRAFFIC SEPARATOR. LOCATE OUTSIDE OF PEDESTRIAN CROSS TRAFFIC.

FHWA APPROVED: 5-1-75

FLORIDA DEPARTMENT OF TRANSPORTATION
Road Design Section

**CURB INLET-TYPE "7"**

| REVISIONS | | | INITIALS | DATES |
|---|---|---|---|---|
| Dates | Descriptions | Designed by | | |
| 8-14-74 W.G.L. | REVISED | Checked by | | |
| | | Quantities by | | |
| | | Checked by | | |
| | | Supervised by | | |

Recommended for approval by Deputy Design Engineer-Roadways

Approved by State Design Engineer

DRAWING NO 1 OF 1

INDEX NO DCI-03

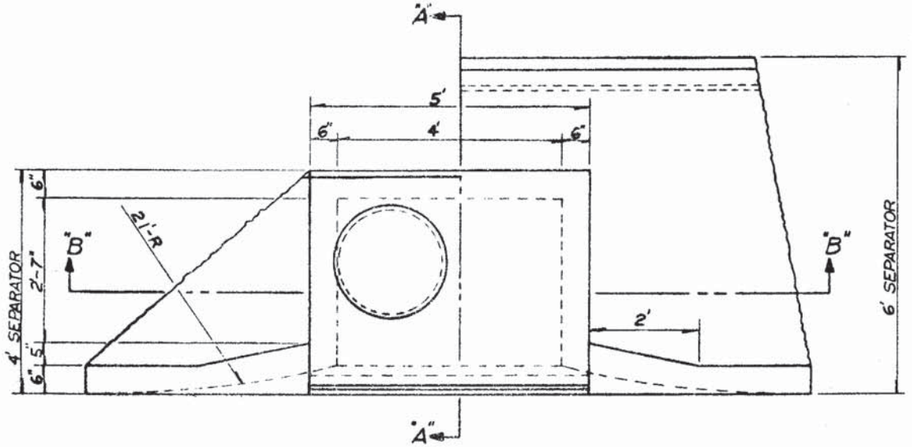


PLAN

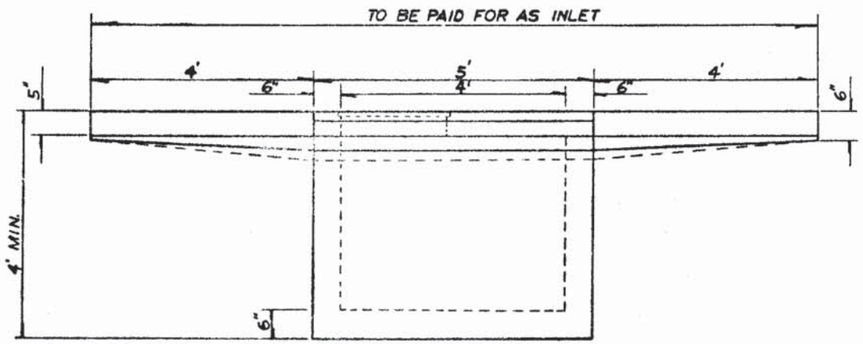


ELEVATION

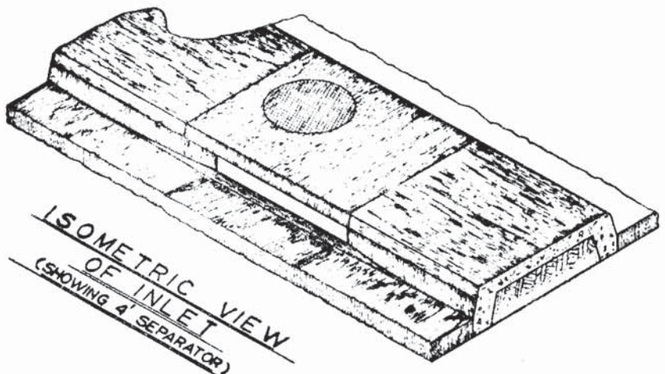


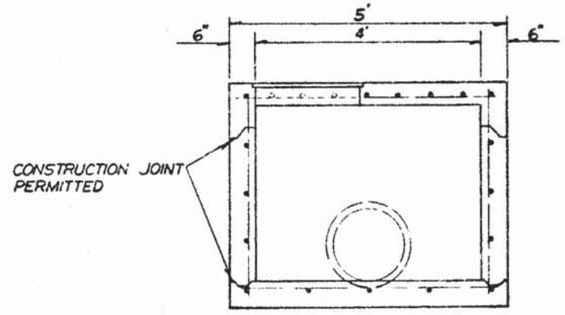


SECTION "B-B"

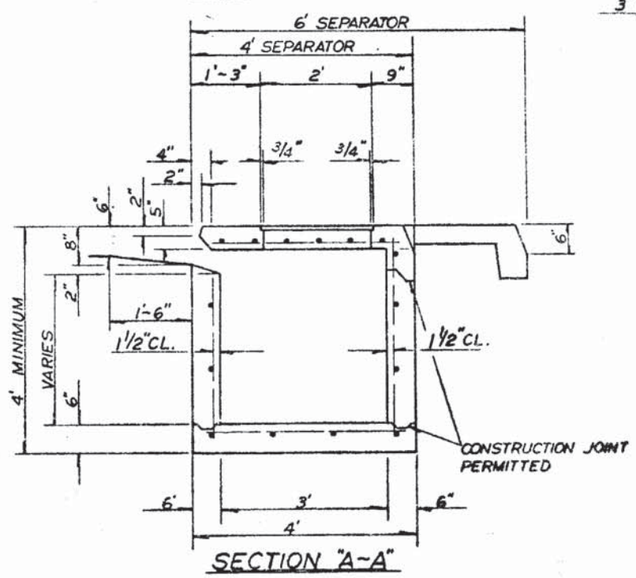


SECTION "A-A"

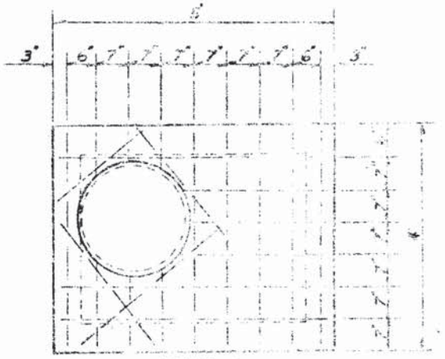


DETAIL
REINFORCING STEEL DIAGRAM
TOP SLAB OF INLET

NOTES:

1. N° 4 REINFORCING BARS 12" CENTERS UNLESS OTHERWISE NOTED.
2. CUT AND BEND BARS OUT OF WAY OF PIPE WHEN NECESSARY. BARS TO CLEAR PIPE BY 1½".
3. FOR SUPPLEMENTAL DETAILS SEE INDEX NO. DSD-01.
4. THIS INLET WAS DESIGNED FOR USE WITH TYPE D MEDIAN CURB OR TYPE IV & V TRAFFIC SEPARATOR. LOCATE OUTSIDE OF PEDESTRIAN CROSS TRAFFIC.

FHWA APPROVED 5-1-75

STATE ROAD DEPARTMENT OF FLORIDA
ROADWAY PLANS SECTION

# CURB INLET - TYPE "B"

| REVISIONS | | ROAD NO. | COUNTY | | PROJECT NO. |
|---|---|---|---|---|---|
| Dates | Descriptions | | | | |
| 3-73 | Added Class I Conc. | | | | |
| 10-74 | Revised notes, changed inlet type, Index No. | | Name | Date | Basic standard for Roadway and Traffic Design approved by: |
| | | Detailed by | H.W. | 11-68 | APPROVED BY: |
| | | Checked by | | | |
| | | Quantities by | | | |
| | | Checked by | | | |
| | | Traced by | H.W. | 11-68 | Drawing No. 1 OF 1 Index No. DCI-04 |

| FED. ROAD DIV. NO. | STATE | PROJECT NO. | FISCAL YEAR |
|---|---|---|---|
| 3 | FLA. | | |

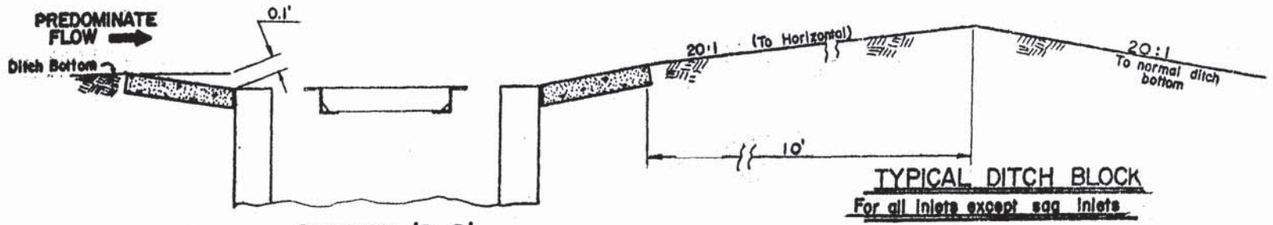


TYPICAL DITCH BLOCK
For all inlets except sag inlets

SECTION 'D-D'

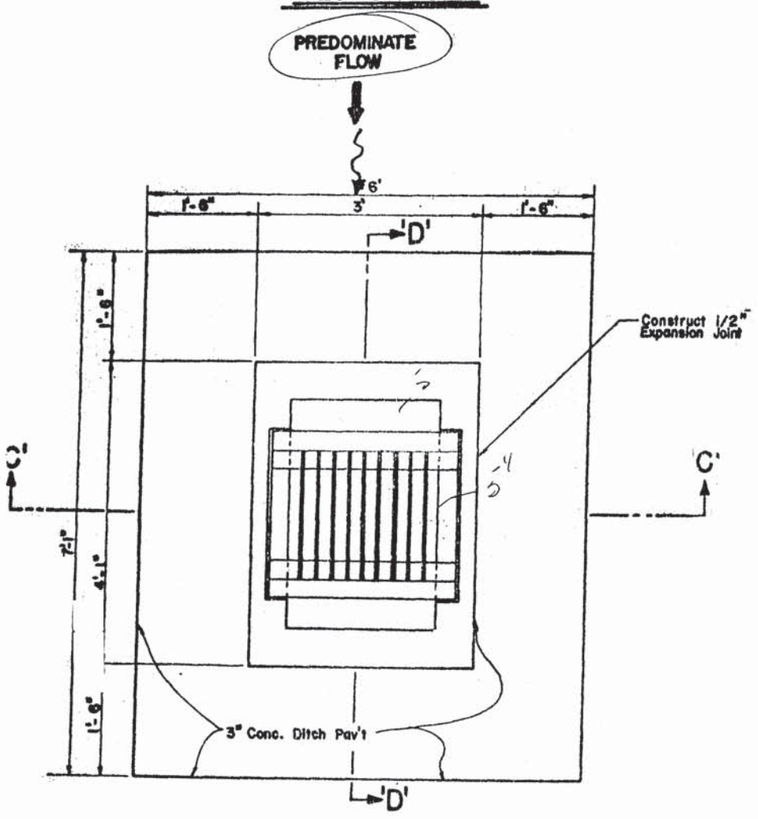


PAVEMENT DETAIL FOR ALL "A" INLETS

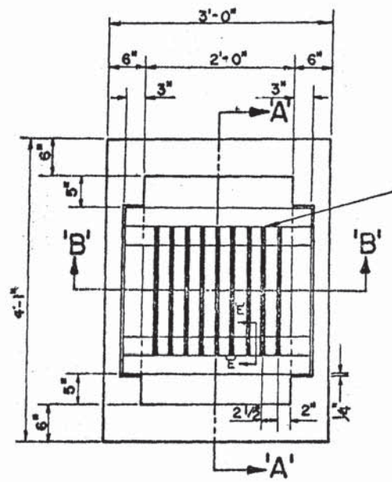


PLAN

Recommended Maximum Pipe Sizes*
2'-0" Side – 18" Pipe
3'-1" Side – 24" Pipe

*See note #9

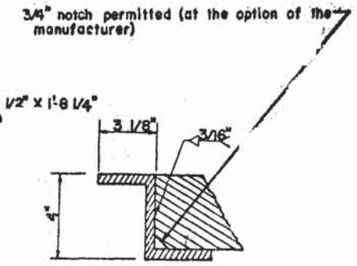


DETAIL 4" ZEE

SECTION 'E-E'

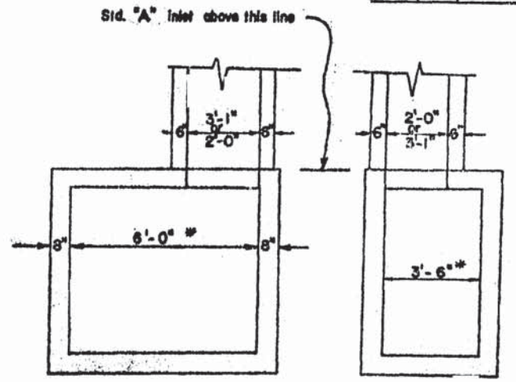


* unless otherwise shown in plans

"J-A" DETAIL

NOTES:
For details of "J" bottom, see Index DSB-01 (Alt. "B" only).
"A" top to be oriented as required by Note #5.

GENERAL NOTES

1. Cost of Ditch Paving to be included in cost of inlet.
2. Reinforcing – Nº 4 bars at each 12" center both ways 2" clearance to inside face.
3. Inlet to be used only where flow thru Grate is less than 7 c.f.s.
4. Where material unsatisfactory for foundation is encountered at F.L. EL. omit floor and carry walls down to satisfactory foundation. Backfill to F.L. with clear sand.
5. Direction of 1/2" X 3 1/2" bars to be in same direction as predominant flow.
6. Chamfer exposed edges. (3/4" Chamfer.)
7. Cut and bend Bars out of way of Pipe when necessary; Bars to clear Pipe by 1 1/2"
8. For supplemental detail, see Index DSD-01.
9. Recomended maximum pipe sizes, are for concrete pipe. Check larger sizes for fit. For larger pipe, Type "B" inlet or "J-A" inlet (see detail above) should be considered.
10. This inlet was designed for ditches, medians, or other areas subject to heavy wheel loads where debris may be a problem. It is not for use in areas subject to pedestrian and/or bicycle traffic.

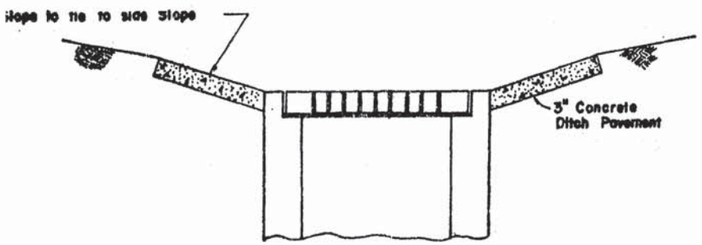


SECTION 'C-C'

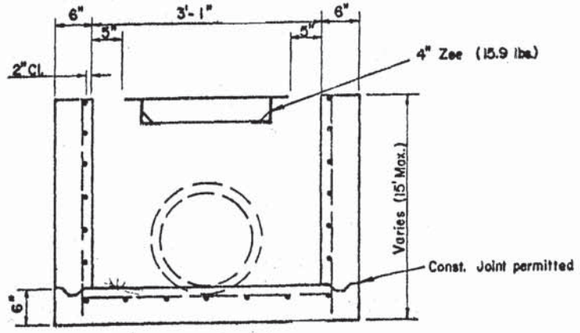


SECTION 'A-A'

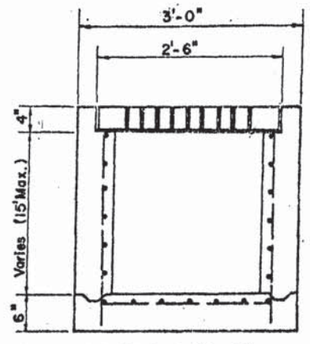


SECTION 'B-B'

FHWA Approved: 7-18-75

STATE OF FLORIDA DEPARTMENT OF TRANSPORTATION
ROADWAY PLANS SECTION

DITCH BOTTOM INLET - TYPE "A"

| REVISIONS | |
|---|---|
| Dates | Descriptions |
| 10-74 | Revised notes, changed inlet type & Index Nº |

| ROAD NO. | COUNTY | PROJECT NO. |
|---|---|---|
| | | |

| | Names | Dates |
|---|---|---|
| Designed by | | |
| Checked by | | |
| Quantities by | | |
| Checked by | | |
| Supervised by | | |

Recommended For Approval by: E. A. Hart, Deputy Design Engineer - Roadways

APPROVED BY: [signature], State Design Engineer

Drawing No. 1 of 1 | Index No. DDI-01

| PLAN SHEET NO. | STATE | PROJECT NO. | TOTAL SHEETS | SHEET NO. |
|---|---|---|---|---|
| 3 | FLA. | | | |

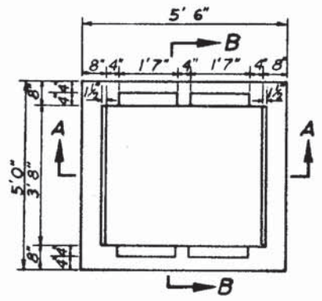


PLAN

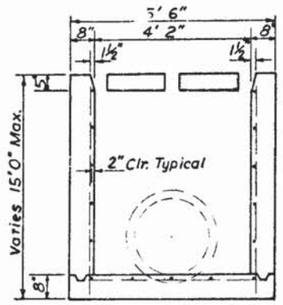


SECTION A-A

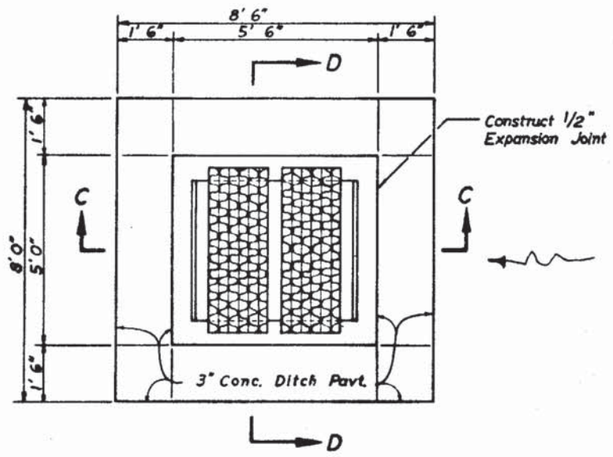


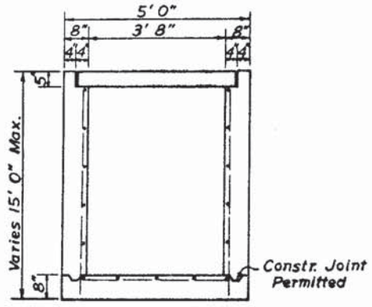


SECTION B-B

PAVING DETAIL FOR ALL INLETS

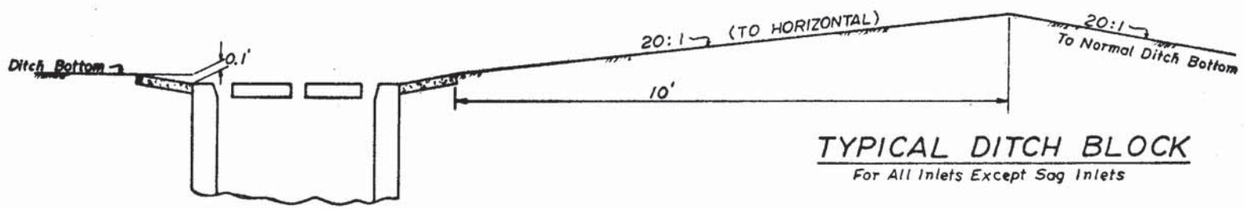


TYPICAL DITCH BLOCK

For All Inlets Except Sag Inlets

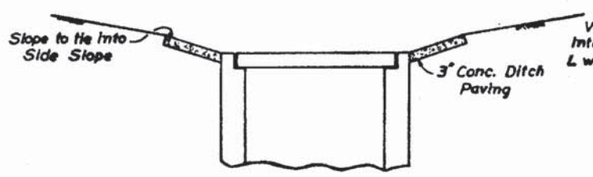


SECTION C-C

SECTION D-D

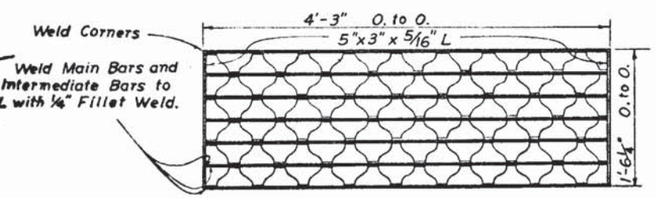


STEEL GRATING DETAIL

TWO REQUIRED PER INLET.

5" Borden, Florida Steel, Irving, Reliance, Greulich, (or equal). Main Bars 5"x ⅛" Intermediate Bars 1½"x ¼" Reticuline Bars 1¼" x 3/16" (or equal).

~GENERAL NOTES:~

1. COST OF DITCH PAVING TO BE INCLUDED IN COST OF INLET.
2. REINFORCING-No 4 BARS AT 12" CENTERS BOTH WAYS 2" CLEARANCE TO INSIDE FACE.
3. FOR SUPPLEMENTARY DETAILS SEE INDEX NO. DSD-01
4. CUT AND BEND BARS OUT OF WAY OF PIPE WHEN NECESSARY; BARS TO CLEAR PIPE BY 1½".
5. WHERE MATERIAL UNSATISFACTORY FOR FOUNDATION IS ENCOUNTERED AT FL. EL. OMIT FLOOR AND CARRY WALLS DOWN TO SATISFACTORY FOUNDATION. BACKFILL TO FL. WITH CLEAR SAND.
6. THIS INLET WAS DESIGNED FOR DITCHES, MEDIANS, OR OTHER AREAS SUBJECT TO HEAVY WHEEL LOADS WHERE DEBRIS MAY BE A PROBLEM (FOR MORE THAN 7 CFS THRU GRATE). IT IS NOT FOR USE IN AREAS SUBJECT TO PEDESTRIAN AND/OR BICYCLE TRAFFIC.
7. RECOMMEND 36" PIPE AS MAXIMUM SIZE FOR CONCRETE PIPE. FOR LARGER PIPE, "J-B" INLET SHOULD BE CONSIDERED.

FHWA Approved: 7-18-75

FLORIDA DEPARTMENT OF TRANSPORTATION

ROADWAY PLANS SECTION

# DITCH BOTTOM INLET - TYPE "B"

| REVISIONS | | ROAD NO. | COUNTY | | PROJECT NO. |
|---|---|---|---|---|---|
| Dates | Descriptions | | | | |
| 1-69 | Changed D & T to C.I.T. & C.I.; Revise notes and detail of GUTTER BARS, ADDED STRAIGHT & 45° BENT CHANGED C.I. TO C.I.T.'S NOTES | | Names | Dates | Recommended For Approval by: C. D. Dunbar, Engineer of Road Design |
| | | Detailed by | H.A.B. | APR. 67 | |
| | | Checked by | | | APPROVED: Assistant State Highway Engineer |
| h.w. | | Quantities by | | | |
| 10-74 | Revised notes, Changed inlet type & Index No. | Checked by | | | Drawing No. 1 of 1 |
| LMF | | Traced by | G.C.B. | APR. 67 | Index No. DDI-02 |

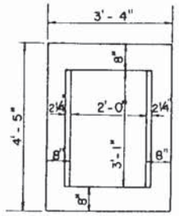


PLAN

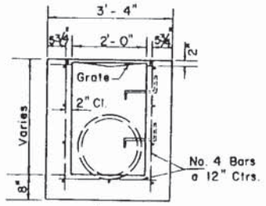


SECTION

## TYPE C

Recommended Maximum Pipe Size:

2'-0" Wall - 18" Pipe
3'-1" Wall - 24" Pipe

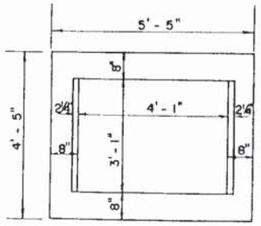


PLAN

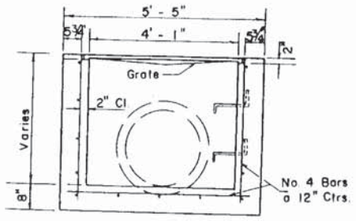


SECTION

## TYPE D

Recommended Maximum Pipe Size:

3'-1" Wall - 24" Pipe
4'-1" Wall - 36" Pipe

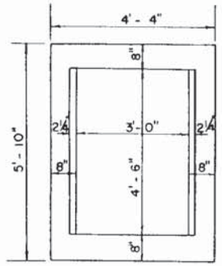


PLAN

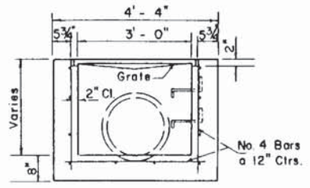


SECTION

## TYPE E

Recommended Maximum Pipe Size:

3'-0" Wall - 24" Pipe
4'-6" Wall - 42" Pipe

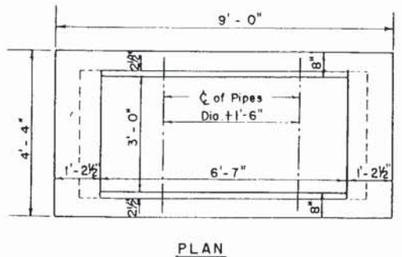


PLAN

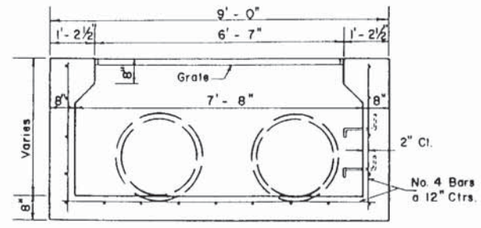


SECTION

## TYPE H

Recommended Maximum Pipe Size:

3'-0" Wall - 30" Pipe
7'-8" Wall - 1 - 66" Pipe
2 - 30" Pipe

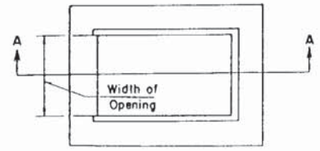


PLAN

NOTE:
Opening may be constructed at either end or at both ends as shown on plans.

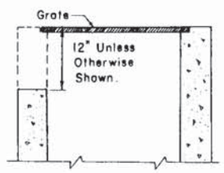


SECTION A-A

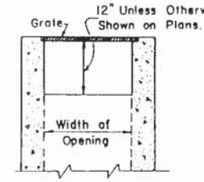


END VIEW

## DETAIL OF OPENINGS IN DITCH BOTTOM INLETS

## GENERAL NOTES:

1. BEVELED EDGES: All exposed corners and edges to be chamfered 3/4"
2. FOUNDATION MATERIAL: Where material unsatisfactory for foundation is encountered at FL. EL. omit floor and carry walls down to satisfactory foundation. Backfill to FL. with clear sand.
3. CAST IRON: In accordance with Florida Department of Transportation Specifications.
4. STEEL GRATING: Manufactured by Borden, Florida Steel, Irving, Reliance, Greulich (or equal).
5. STRUCTURES: These structures are not to be placed in areas subject to heavy wheel loads.
6. DETAILS: For supplementary details see Standard Index DSD-01
7. PIPE SIZES: Recommended maximum pipe sizes given are for concrete pipe. Larger than recommended sizes must be checked for fit.
8. USES: When used without slots — For ditches, medians & other areas subject to infrequent traffic loads where debris is minimum. Where debris is a problem slots should be used unless controlled by safety criteria.

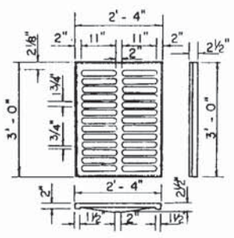


## TYPE C

Approx. Weight 235 Lbs.

Note:
Type D Inlet to be used only when openings are required in wide side of Inlet. Cast Iron Grate not permitted.

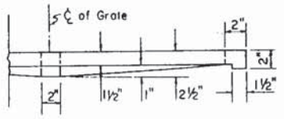


## HALF SECTION DETAIL OF CAST IRON GRATES

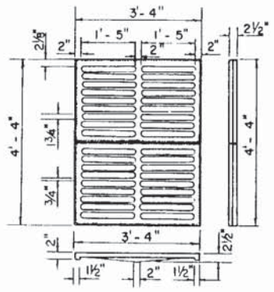


## TYPE E

Approx. Weight 465 Lbs.

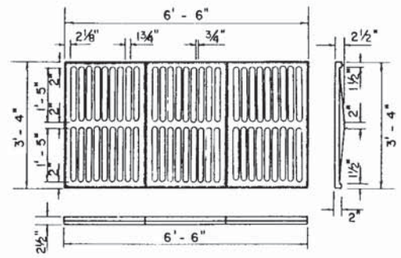


## TYPE H

Approx. Weight 725 Lbs.

## DETAILS OF CAST IRON GRATING

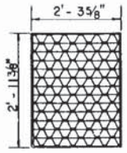


## TYPE C

Straight Bars 2" X 3/16"
Reticuline Bars 1¼" X 3/16"
Approx. Weight 100 Lbs.

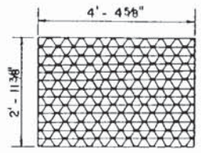


## TYPE D

Straight Bars 2" X 3/16"
Reticuline Bars 1¼" X 3/16"
Approx. Weight 180 Lbs.

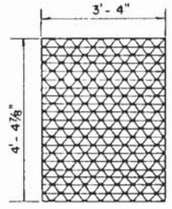


## TYPE E

Straight Bars 2" X 3/16"
Reticuline Bars 1¼" X 3/16"
Approx. Weight 215 Lbs.

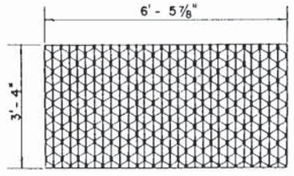


## TYPE H

Straight Bars 2" X 3/16"
Reticuline Bars 1¼" X 3/16"
Approx. Weight 315 Lbs.

## DETAILS OF STEEL GRATING

FHWA Approved: 5-1-75

FLORIDA DEPARTMENT OF TRANSPORTATION
Road Design Section

STANDARD DITCH BOTTOM INLET TYPES C, D, E, & H

| REVISIONS | | | INITIALS | DATES | |
|---|---|---|---|---|---|
| Dates | Descriptions | Designed by | | | Recommended for approval by _____ Deputy Design Engineer - Roadways |
| 3-74 | REVISED | Checked by | | | |
| 10-74 | Added note no. 8. Changed Index No. | Quantities by | | | Approved by _____ State Design Engineer |
| | | Checked by | | | |
| | | Supervised by | LMF | | DRAWING NO. 1 of 1 / INDEX NO. DD1-03 |

| FED. ROAD DIV. NO. | STATE | SECTION | JOB NO. | FISCAL YEAR | SHEET NO. | TOTAL SHEETS |
|---|---|---|---|---|---|---|
| 3 | FLA. | | | | | |

| ESTIMATED QUANTITIES | | |
|---|---|---|
| HEIGHT OF WALLS | CONCRETE CU. YD. | REINFORCING STEEL, LBS. |
| 2'-0" | 0.07 | 81 |
| 3'-0" | 1.15 | 102 |
| 4'-0" | 1.51 | 124 |
| 5'-0" | 1.87 | 145 |
| 6'-0" | 2.23 | 166 |
| | | |
| Floor only (Inside of Walls) | 0.20 | 25 |

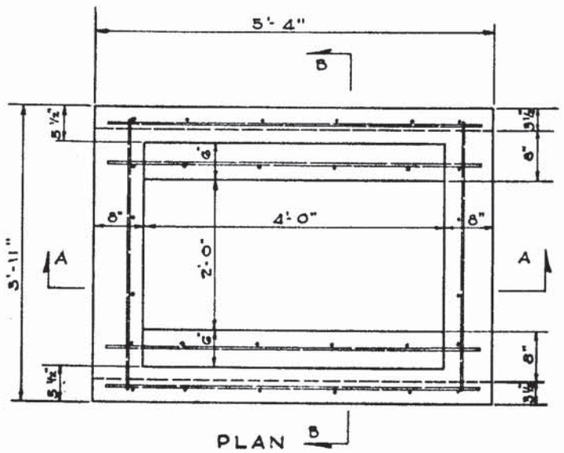


PLAN

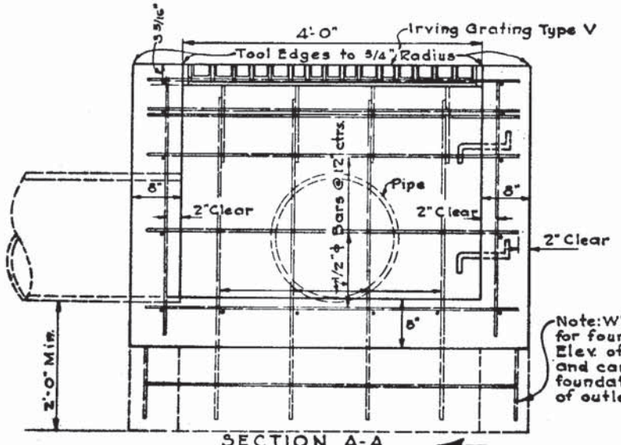


SECTION A-A

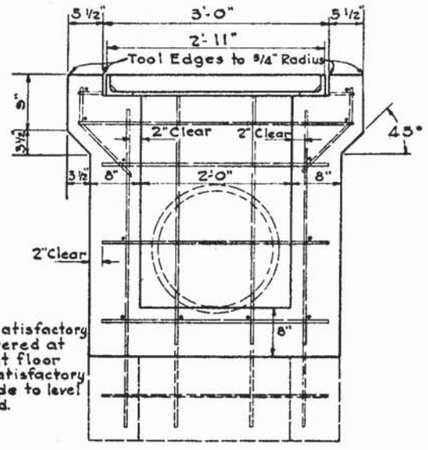


SECTION B-B

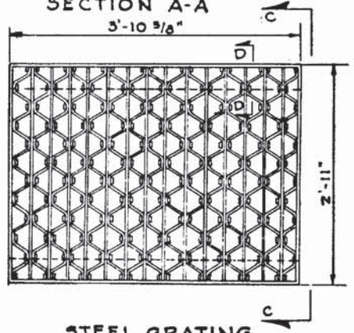


STEEL GRATING

STEEL GRATING, STRAIGHT BARS 3"x 1/4"
RETICULINE BARS 2"x 5/16".

STEEL DECKING: Manufactured by Borden, Florida Steel, Irving, Reliance, Greulich (or equal).

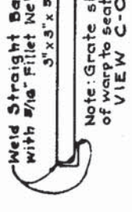


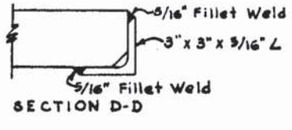


SECTION D-D

2' x 4' DROP INLET - TYPE "F"

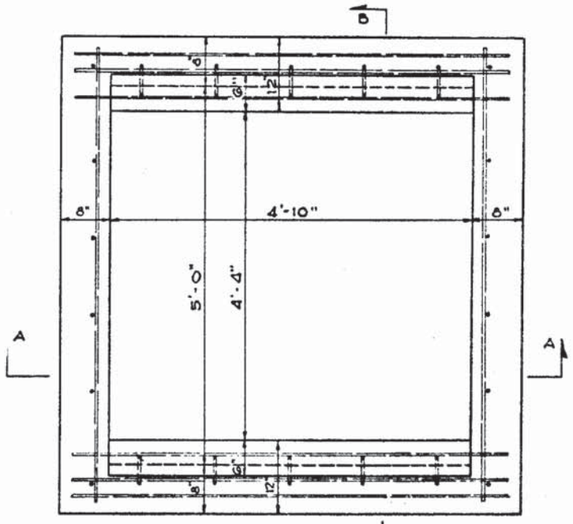


PLAN

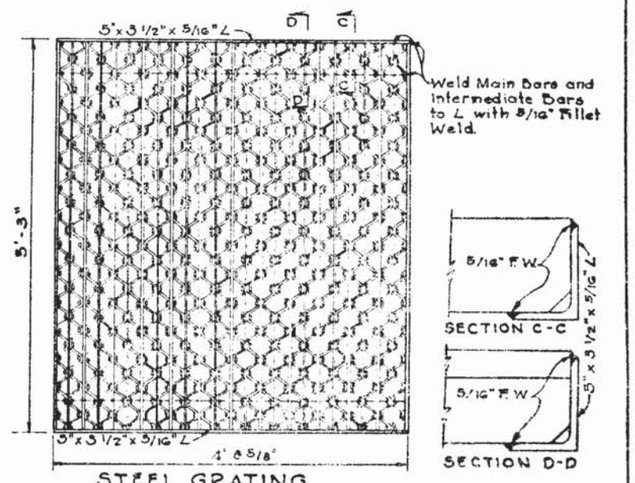


STEEL GRATING

5" STEEL DECKING, WEIGHT 630 LBS. MAIN BARS 5" x 1/8"
INTERMEDIATE BARS 1 1/2" x 1/4", RETICULINE BARS 1 1/4" x 3/16".
STEEL DECKING: Manufactured by Borden, Florida Steel, Irving, Reliance, Greulich (or equal).

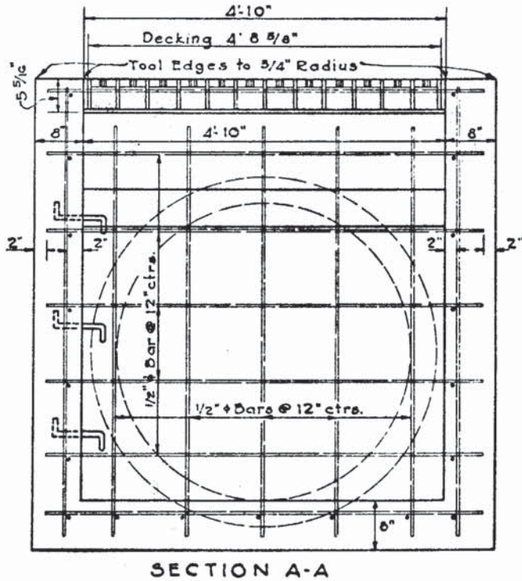


SECTION A-A

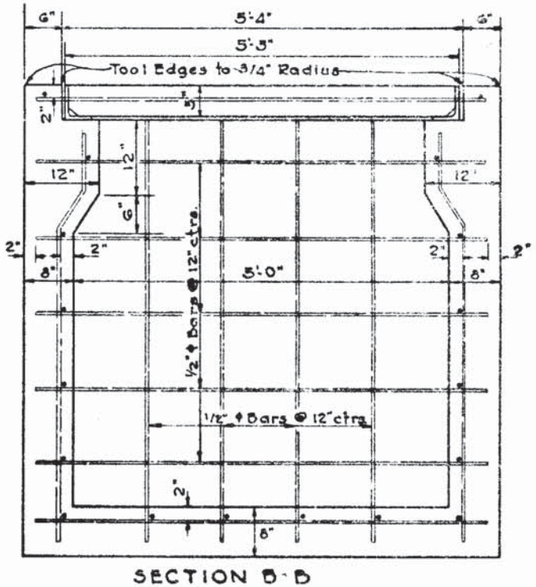


SECTION B-B

5' x 5' DITCH BOTTOM INLET - TYPE "G"

Note: For construction of bottom where unsatisfactory foundation is encountered (see Note Section A-A, Type "F")

*Note: These inlets were designed for use in ditches, medians, pavement areas, or other areas subject to heavy wheel loads where debris is minimum and it is subject to pedestrian and/or bicycle traffic.*

FHWA Approved: 5-1-75

FLORIDA DEPARTMENT OF TRANSPORTATION
ROADWAY PLANS SECTION

STANDARD DITCH BOTTOM INLETS (LOAD BEARING) TYPES "F" & "G"

| ROAD NO. | COUNTY | SECTION | JOB NO. |
|---|---|---|---|
| | | | |

| REVISIONS | | | | Names | Dates |
|---|---|---|---|---|---|
| Names | Dates | Descriptions | Designed by | T. W. J. | 1-50 |
| B.A.S. | 4-20-51 | Retraced | Checked by | | |
| H.W. | 8-56 | Added Ladder Bar | Drawn by | M. E. F. | 1-50 |
| L.H. | 3-62 | Rev Ladder Bars | Checked by | W. H. M. | 1-50 |
| L.F. | 7-70 | Added Alt. Install. for Ladder Bars | Quantities by | M. E. F. | 1-50 |
| G.F. | 7-70 | Added Detail for Bar Bars - Chairs | Checked by | W. H. M. | 1-50 |
| L.M.F. | 3-73 | Removed Detail for Ladder Bars | Traced by | M. E. F. | 1-50 |

10-74 Changed Index No. Added Note

Approved by

Recommended For Approval By: E. A. Hurst, Deputy Design Engineer - Roy

APPROVED BY: _____, State Design Engineer

| Drawing No. | Index No. |
|---|---|
| 1 of 1 | DDI-04 |

DDI-05 - This is a new index. The use this inlet was designed for is shown in General Note No. 9.

Please destroy the copies of FTA-01-a and FTB-01-1 in your files and add all the new index drawings.

9-10-74
[illegible]
TO FTA-01-2

EHH:LMF:jl

LMF

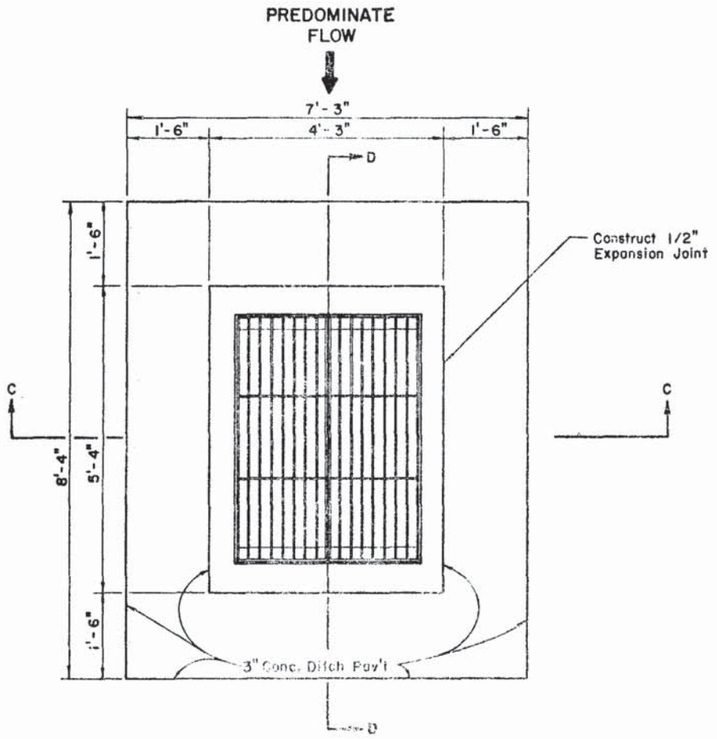


PAVEMENT DETAIL FOR ALL "J" INLETS

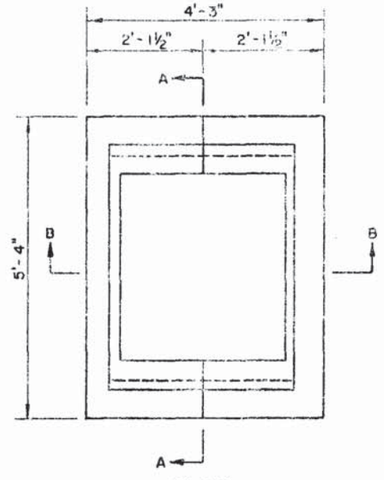


PLAN

Recommended Maximum Pipe Sizes (See Notes 4 & 8)
2'-11" Wall - 24"
4'-0" Wall - 36"

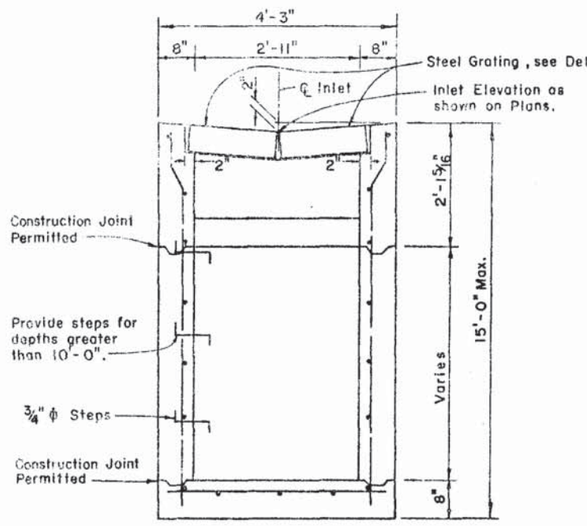


SECTION B-B

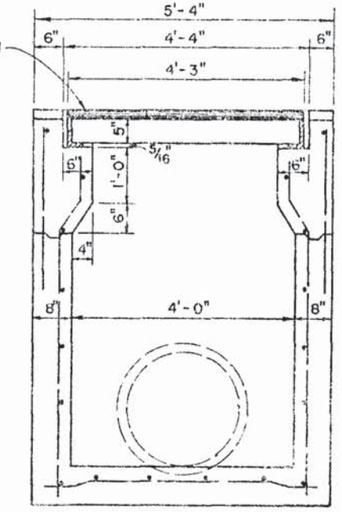


SECTION A-A

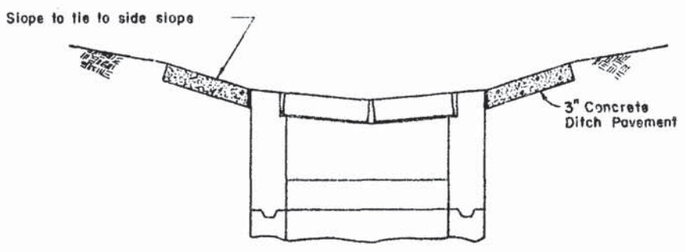


SECTION C-C

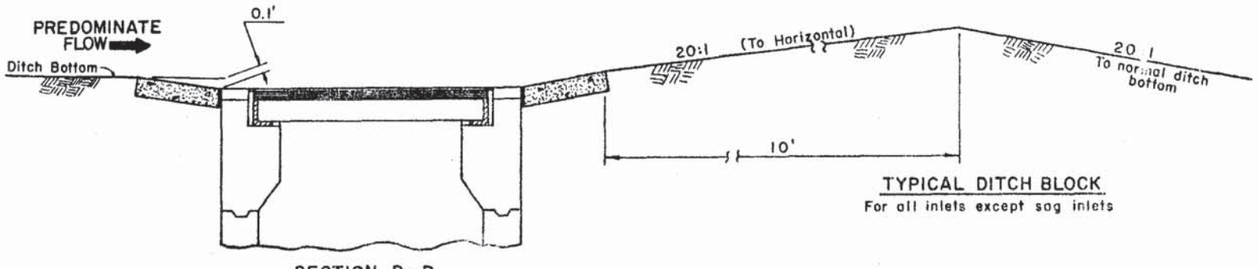


TYPICAL DITCH BLOCK
For all inlets except sag inlets

SECTION D-D

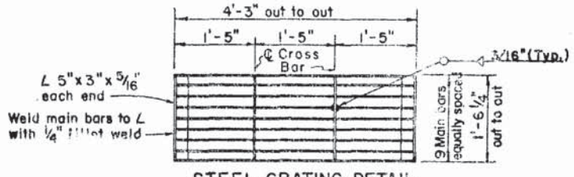


STEEL GRATING DETAIL
Note: Two required per inlet

Main Bars 5"x ¼" (Notched for cross bars).
Cross Bars 1¾" x ¼" (Continuously welded at main bar notches).
Main Bars and Cross Bars flush on top.

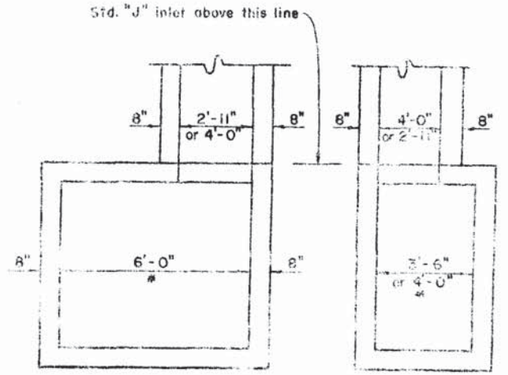


# Use as otherwise shown in plans.

"J-J" DETAIL

NOTES:
For details of "J" bottom, see Index 035-01 (Alt. "B" only).
"J" top to be oriented as required by Note 4.

GENERAL NOTES

1. Cost of Ditch Paving to be included in cost of inlet.
2. Reinforcing - Nº 4 bars at 12" centers both ways with 2" clearance to inside face.
3. Where material unsatisfactory for foundation is encountered at F.L. elevation omit floor and carry walls down to satisfactory foundation. Backfill to F.L. with clean sand.
4. Direction of ¼"x 5" Main bars to be in same direction as predominant flow.
5. Chamfer exposed edges. (¾" Chamfer)
6. Cut and bend bars out of way of pipe when necessary; Bars to clear pipe by 1½".
7. For supplemental details, see Index D[illegible]-01.
8. Recommended maximum pipe sizes are for concrete pipe. Check larger sizes for fit. For larger pipe a "J-J" inlet should be considered (see detail above).
9. This inlet was designed for ditches, medians or other areas subject to heavy wheel loads where debris may be a problem and pedestrian traffic is anticipated. It is not for use in areas subject to bicycle traffic.

F.H.W.A. Approved: 9-3-76

FLORIDA DEPARTMENT OF TRANSPORTATION
Road Design Section

DITCH BOTTOM INLET-TYPE "J"

| REVISIONS | | | INITIALS | DATES |
|---|---|---|---|---|
| Dates | Descriptions | Designed by | LMF | 8-76 |
| | | Checked by | SRL | 8-76 |
| | | Quantities by | | |
| | | Checked by | | |
| | | Supervised by | W.J.R. | |

Approved by:
[signature]
Deputy Design Engineer - Roadways

DRAWING NO. 1 OF 1
INDEX NO. DDI-05

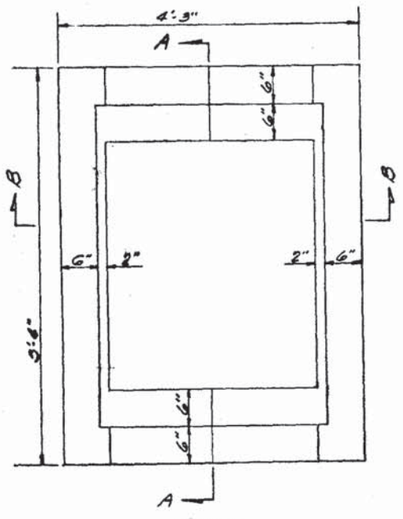


PLAN
(Without Grate)

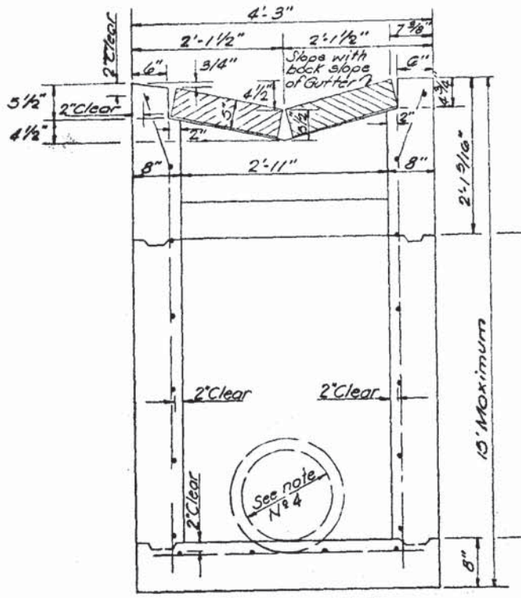


SECTION B-B

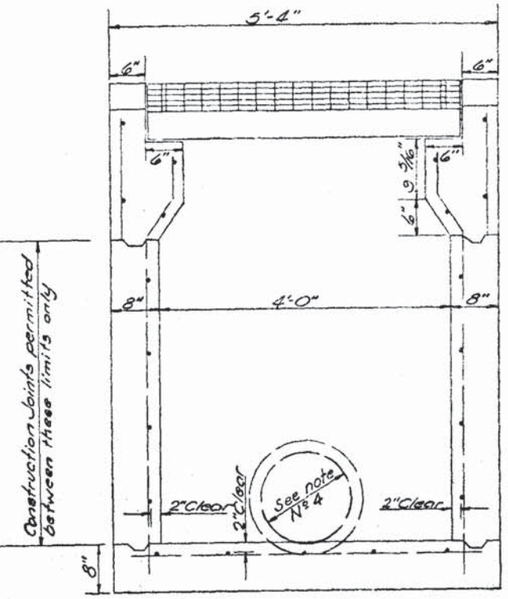


SECTION A-A

Note: Riser to be oriented by direction of grates

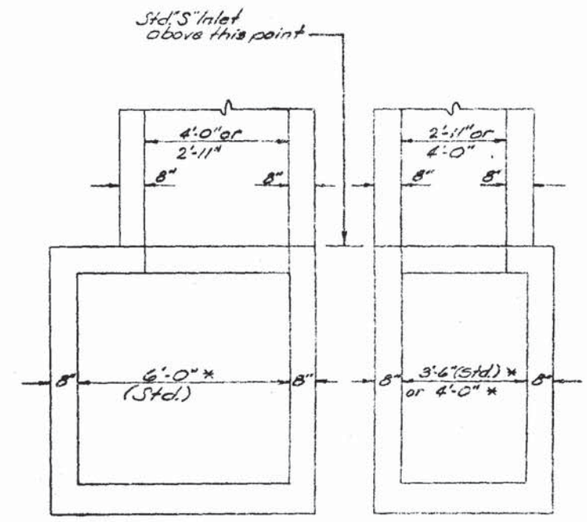


S INLET WITH "J" TYPE BOTTOM

Note: For Details of "J" Box, See Index No. DSB-01.
* Unless otherwise shown on plans.

## GENERAL NOTES

1. This inlet was designed for shoulder gutters subject to heavy wheel loads on sections where bicycle traffic is not anticipated (ex. limited access - rural sections). Also may be used in locations where the wide opening in the "A" and "B" inlets are unacceptable.
2. All reinforcing steel bars are 1/2" ϕ @ 12" Ctrs.
3. Cut and bend bars out of way of pipe when necessary. Bars to clear pipe by 1½".
4. All exposed edges and corners shall be tooled to ¾" radius.
5. Recommended maximum pipe sizes based on concrete pipe: Section A-A, 36" pipe; Section B-B, 24" pipe. Larger pipe sizes may be used but should be checked for fit. "J-S" detail is recommended for larger pipe sizes.
6. For supplementary details see Index No. 080-01 & DSB-01.
7. Grate and top of structure shall be true to grade shown on plans.




DETAIL OF SHOULDER GUTTER
SEC. "D-D"

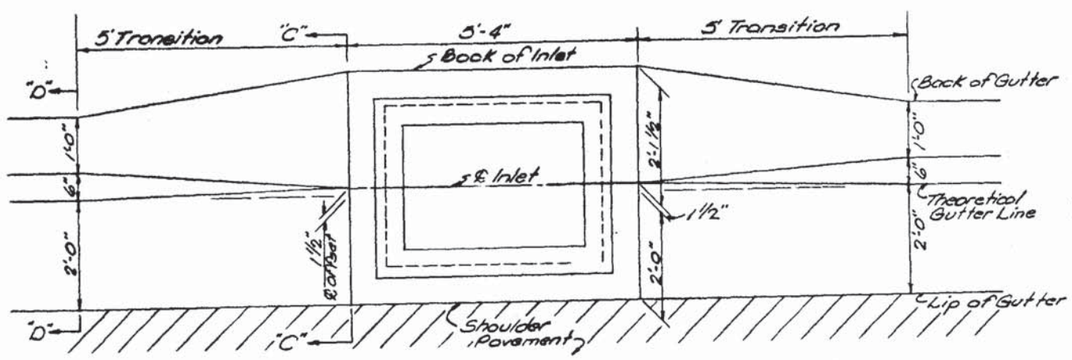


SHOULDER GUTTER TRANSITION AT INLET TYPE "S"

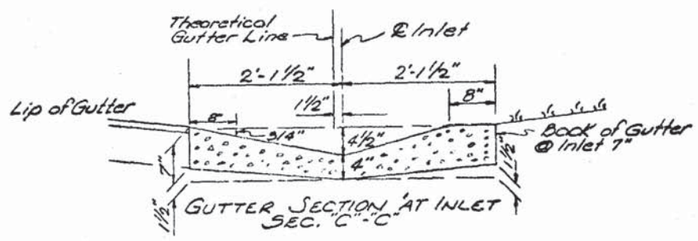


GUTTER SECTION AT INLET
SEC. "C"-"C"

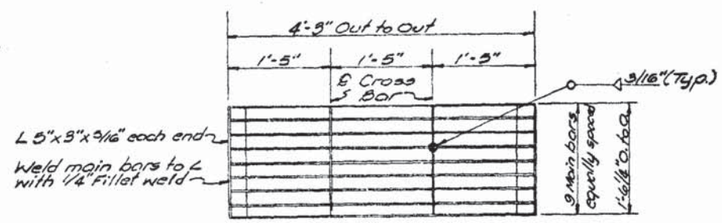


STEEL GRATING DETAIL

Note: Two required per inlet

Main Bars 3"x1/4" (Notched for cross bars)
Cross Bars 1¾"x1/4" (Continuously welded of main bar notches)
Main Bars and Cross Bars Flush on top.

FHWA APPROVED: 5-1-75

FLORIDA DEPARTMENT OF TRANSPORTATION
ROADWAY PLANS SECTION

# GUTTER INLET - TYPE "S"

| REVISIONS | | ROAD NO. | COUNTY | | PROJECT NO. |
|---|---|---|---|---|---|
| Date | Description | | | | |
| 6-71 | Redrawn-Added Shldr. Gutter Transition and "J" Detail | | | | |
| 10-74 | Revised notes, Changed Inlet type & Index No. | | Names | Dates | Recommended For Approval by: Drainage Design Engineer - Roadways |
| | | Detailed By | | | APPROVED BY: State Design Engineer |
| | | Checked By | | | |
| | | Quantities By | | | |
| | | Checked By | | | Drawing No. 1 of 1 |
| | | Traced by | C.O.R. | 6-71 | Index No. DGI-01 |

| FED. ROAD DIV. No. | STATE | PROJECT No. | FISCAL YEAR | SHEET No. |
|---|---|---|---|---|
| 3 | FLA. | | | |

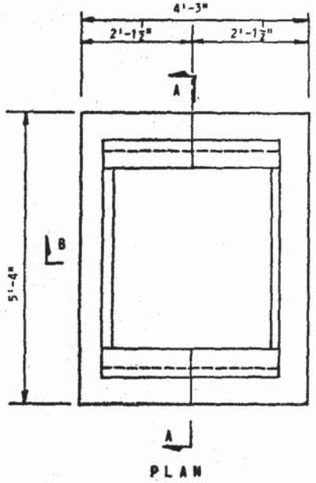


PLAN

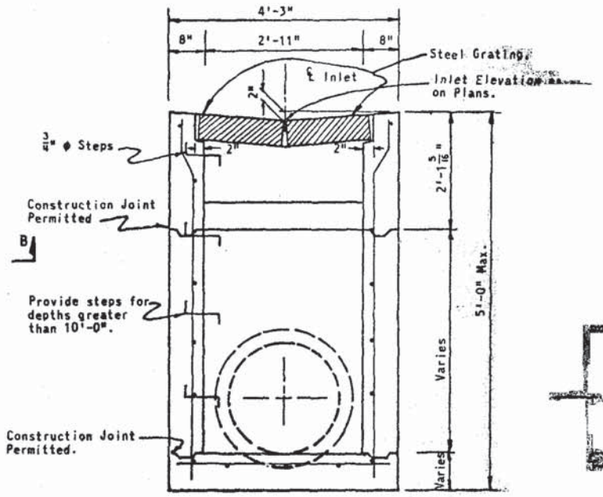


SECTION B-B

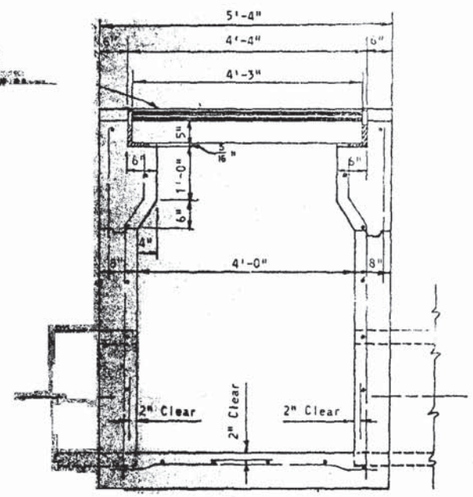


SECTION A-A

NOTE: Cut and bend Bars out of way of Pipe when necessary. Bars to clear Pipe 1½".

NOTE: All Reinforcing Steel Bars are

GUTTER INLET TYPE V

FOR PIPES 24" DIAM. AND UNDER

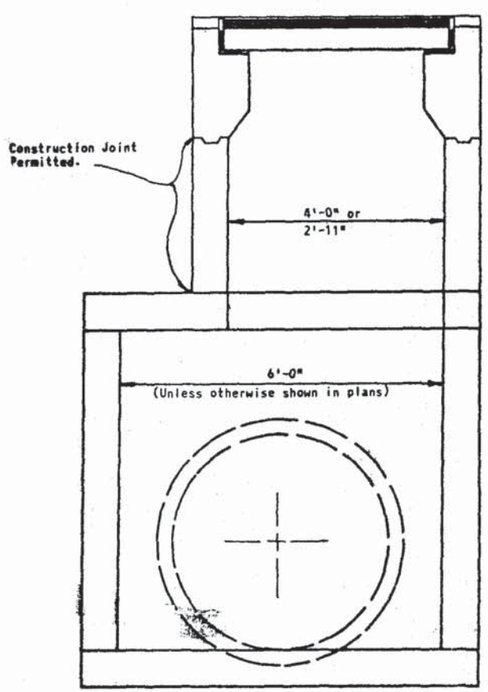


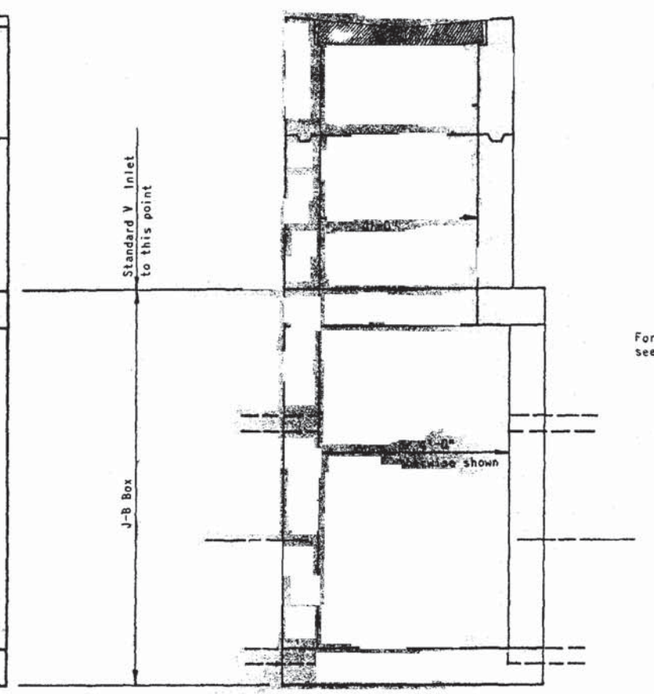


For details of J-B B see Index No. DSB-

FOR PIPES 30" DIAM. AND LARGER

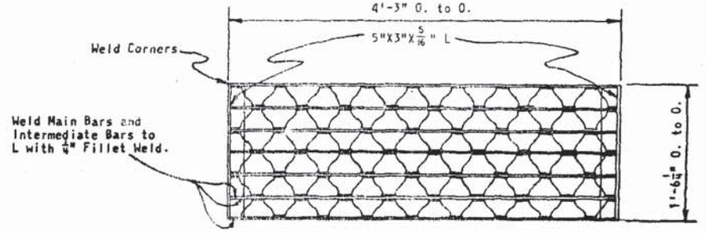


STEEL GRATING DETAIL

TWO REQUIRED PER INLET

5" Steel Decking Main Bars 5"X¼"

Intermediate Bars 1½"X¼" Reticuline Bars 1¼"X3/16"

STEEL DECKING: MANUFACTURED BY BORDEN, FLORIDA STEEL, IRVING, RELIANCE, GREULICH (OR EQUAL).

GENERAL NOTES:

1. All exposed edges and corners shall be tooled to ¼" radius.
2. For supplementary details see index no. DSD-01.
3. This inlet was designed for village swales, ditches, or other areas subject to heavy wheel loads where debris is minimum and it is subject to pedestrian and/or bicycle traffic.

FHWA Approved: 5-1-75

FLORIDA DEPARTMENT OF TRANSPORTATION
ROADWAY PLANS SECTION

GUTTER INLET-TYPE "V"

| REVISIONS | | REVISIONS | |
|---|---|---|---|
| Dates | Descriptions | Dates | Descriptions |
| L F 3-71 | Changed max. depth to 15' & step requirement to 10' | L.H. 3-62 | Rev Ladder Bars |
| L F 10-72 | Removed VB Inlet & Ladder Bar detail Added J-VA Inlet | K.S. 1-63 | Rev. Dimensions |
| L F 10-74 | Added note no. 3, Changed inlet type and Index No. | L F 12-69 | Added Alternate Installation on Ladder bars |

| ROAD NO. | COUNTY | | PROJECT NO. |
|---|---|---|---|
| | | | |

| | Name | Date |
|---|---|---|
| Detailed by | W.H.W. | 4-57 |
| Checked by | R.M.M. | 4-57 |
| Quantities by | | |
| Checked by | | |
| Traced by | W.H.W. | 4-57 |

Recommended For Approval By: E.H. Hart
Deputy Design Engr. - Rdwys.

APPROVED BY: [signature]
State Design Engineer

Drawing No. 1 of 1 Index No. DGI-02

| FED. ROAD DIV. No. | STATE | PROJECT NO. | FISCAL YEAR | SHEET No. |
|---|---|---|---|---|
| 8 | FLA. | | | |

| TOP AND FLOOR SLAB TABLE TYPE "J" | | | | | |
|---|---|---|---|---|---|
| ALT. "A" I.D. | ALT. "B" BOX WIDTH | SLAB THICKNESS | ALLOWABLE FILL OVER TOP SLAB MIN. | ALLOWABLE FILL OVER TOP SLAB MAX. | REINFORCING TOP & FLOOR SLABS |
| | 3'-6" | 8" | 2' | 29' | #6 @ 6" CTRS. B.W. |
| | 5'-0" | 8" | 2' | 25' | #6 @ 6" CTRS. B.W. |
| | 5'-0" | 10" | 2' | 27' | #7 @ 6" CTRS. B.W. |
| 6' | 6'-0" | 8" | 2' | 20' | #6 @ 6" CTRS. B.W. |
| 6' | 6'-0" | 10" | 2' | 25' | #7 @ 6" CTRS. B.W. |
| 7' or 8' | 8'-0" | 10" | 2' | 11' | #7 @ 6" CTRS. B.W. |

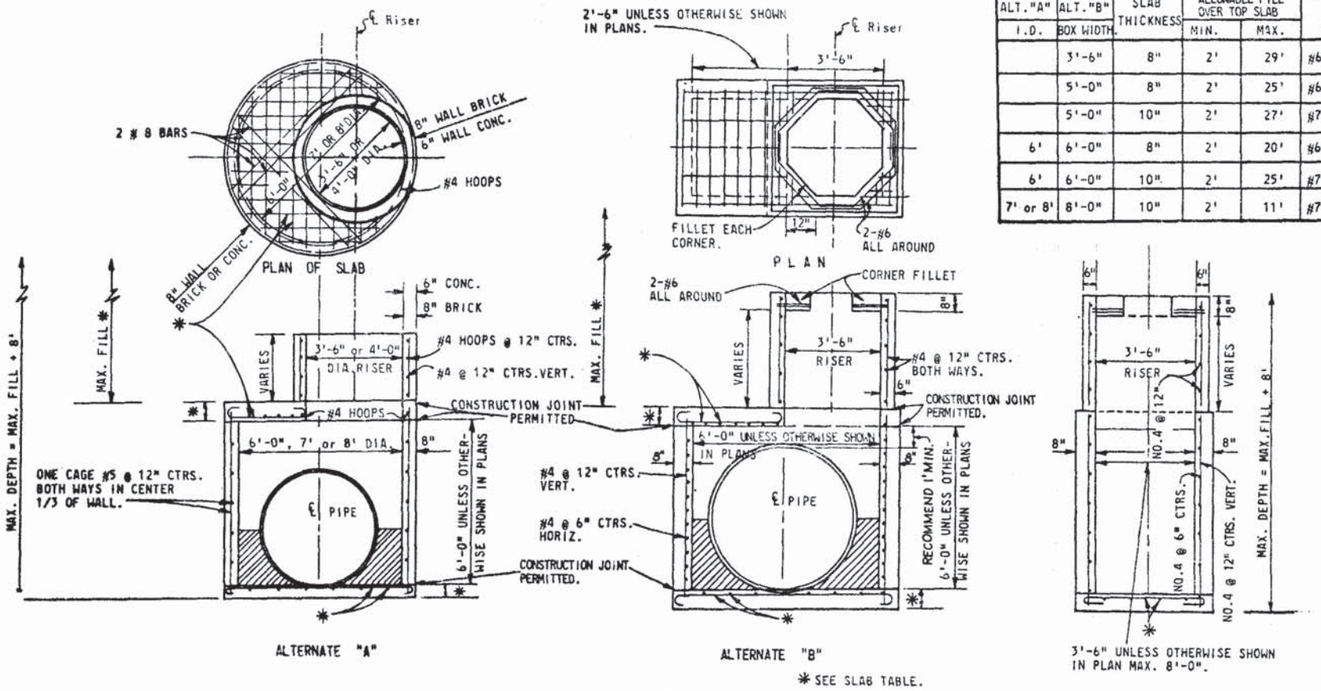


INLET, MANHOLE, JUNCTION BOX TYPE J

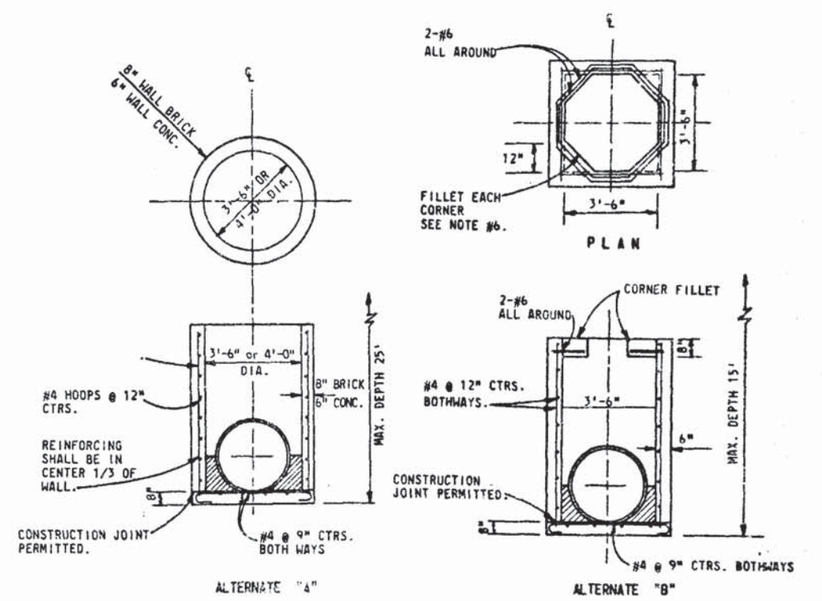


MANHOLE, JUNCTION BOX TYPE P

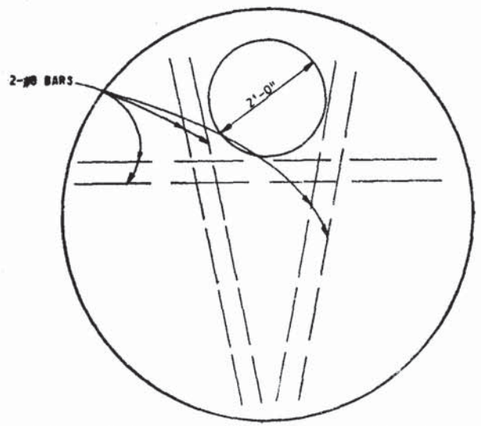


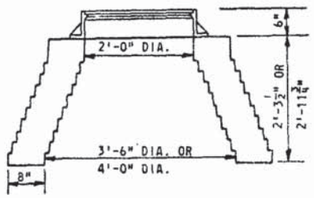


MANHOLE TOP TYPE 8

NOTE: DETAIL SHOWN IS FOR BRICK CONSTRUCTION.

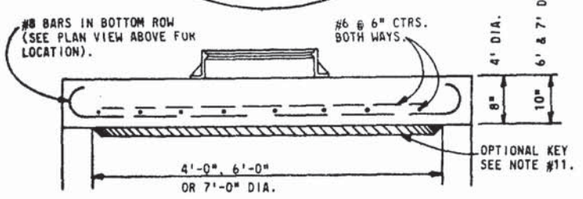


JUNCTION BOX OR MANHOLE TOP TYPE 7-T

FOR USE WHEN TOP SLAB IS SUBJECTED TO WHEEL LOADS (H-20) (TRAFFIC)

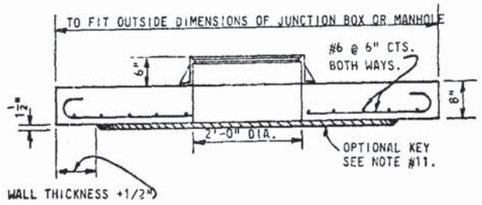


JUNCTION BOX OR MANHOLE TOP TYPE 7-NT

FOR USE WHEN TOP SLAB IS NOT SUBJECTED TO WHEEL LOADS (NON-TRAFFIC)

## GENERAL NOTES

1. WALLS OF CIRCULAR STRUCTURES (ALTERNATE "A") MAY BE CONSTRUCTED OF CONCRETE OR BRICK, BUT RECTANGULAR STRUCTURES (ALTERNATE "B") SHALL BE CONSTRUCTED OF CONCRETE ONLY. THE CONCRETE MAY BE CAST-IN-PLACE OR PRECAST.
2. WALL REINFORCEMENT AND THICKNESS ARE FOR EITHER CAST-IN-PLACE OR PRECAST CONCRETE UNITS EXCEPT THAT THE MANUFACTURER MAY FURNISH PRECAST CIRCULAR UNITS IN ACCORDANCE WITH A.S.T.M. SPECIFICATION C-478 UP TO 72" IN DIA. OR PRECAST CIRCULAR UNITS A.S.T.M. SPECIFICATION C-76, TABLE III FOR "B" WALL CONCRETE PIPE. TOP AND FLOOR SLAB THICKNESS AND REINFORCEMENT ARE FOR ALL TYPES OF CONSTRUCTION.
3. ELLIPTICAL STEEL, ASTM SPECIFICATION C-76, TABLE III, "B" WALL, IS MODIFIED TO USE A CIRCULAR CAGE OF STEEL AREA EQUAL TO THAT OF THE ELLIPTICAL CAGE AND PLACED IN THE CENTER ONE-THIRD OF THE WALL. THIS MODIFICATION IS FOR PRECAST CIRCULAR UNITS PRODUCED IN ACCORDANCE WITH ASTM C-76.
4. TOP AND FLOOR SLABS FOR TYPE J UNITS AND TYPE 7 MANHOLE TOPS SHALL BE OF CLASS II CONCRETE. CONCRETE AS SPECIFIED IN ASTM C-478 MAY BE USED FOR PRECAST UNITS.
5. ANY INLET, MANHOLE OR JUNCTION BOX MAY BE USED IN CONJUNCTION WITH ANY INLET THROAT OR MANHOLE TOP. FOR EXAMPLE, AN INLET WITH A TYPE J BOX AND A TYPE 2 THROAT WOULD BE CALLED AN INLET TYPE J-2 IN THE PLANS. THE CONTRACTOR MAY AT HIS OPTION USE EITHER ALTERNATE A OR B STRUCTURES, UNLESS OTHERWISE SHOWN IN THE PLANS.
6. RECTANGULAR STRUCTURES MAY BE ROTATED AS DIRECTED BY THE ENGINEER IN ORDER TO FACILITATE CONNECTIONS BETWEEN THE STRUCTURE WALLS AND STORM SEWER PIPES.
7. THE CORNER FILLETS SHOWN FOR RECTANGULAR STRUCTURES ARE NECESSARY ONLY WHEN STRUCTURES ARE USED IN CONJUNCTION WITH CIRCULAR INLET THROATS (TYPES 1, 2, 3 & 4) OR WHEN USED ON SKEW WITH RECTANGULAR INLET THROATS (TYPES 5 & 6).
8. INLET THROATS, RISERS OR MANHOLE TOPS SHALL BE SECURED TO STRUCTURES WITH A MINIMUM OF 6 - NO. 4 BARS 12" LONG OR AS SHOWN ON INDEX NO.DSD-01.
9. STRUCTURES WITH DEPTHS OVER 14' ARE TO BE CHECKED FOR FLOTATION BY DESIGNER OF PROJECT DRAINAGE.
10. ALL STEEL BARS SHALL HAVE 1½" MINIMUM COVER UNLESS OTHERWISE SHOWN AND SHALL BE HOOKED WHERE INDICATED. HORIZONTAL STEEL IN RECTANGULAR STRUCTURES SHALL BE LAPPED A MINIMUM OF 24 BAR DIAMETERS AT CORNERS. ON PRECAST UNITS, FLOOR SLABS MAY BE SECURED TO STRUCTURE WALLS BY NO. 4 DOWEL BARS (A MINIMUM OF 6 DOWELS) PUSHED INTO THE WET CONCRETE AFTER THE FLOOR SLAB IS PLACED.
11. TYPE 7 TOP SLABS MAY BE OF CAST-IN-PLACE OR PRECAST CONSTRUCTION. THE OPTIONAL KEY IS FOR PRECAST TOPS AND IS IN LIEU OF DOWELS. FRAME AND SLAB OPENINGS ARE TO BE OMITTED WHEN TOP IS USED OVER A JUNCTION BOX. FRAME CAN BE ADJUSTED WITH FROM ONE TO SIX COURSES OF BRICK.
12. MANHOLE TOP TYPE 8 MAY BE OF CAST-IN-PLACE OR PRECAST CONCRETE CONSTRUCTION OR BRICK CONSTRUCTION. FOR CONCRETE CONSTRUCTION, THE CONCRETE AND STEEL REINFORCEMENT SHALL BE THE SAME AS THE SUPPORTING WALL UNIT. AN ECCENTRIC CONE MAY BE USED.
13. LARGER THAN SPECIFIED STANDARD UNITS MAY BE SUBSTITUTED AT THE CONTRACTOR'S OPTION WHEN THESE UNITS WILL NOT CAUSE OR INCREASE THE SEVERITY OF UTILITY CONFLICTS. SUCH LARGER UNITS SHALL BE FURNISHED AT NO ADDITIONAL COST TO THE DEPARTMENT. LARGER ALTERNATE "A" UNITS CANNOT REPLACE ALTERNATE "B" UNITS WITHOUT APPROVAL OF THE ENGINEER. THIS NOTE APPLIES TO THIS INDEX ONLY.
14. FOR SUPPLEMENTARY DETAILS SEE INDEX NO.DSD-01.

FHWA Approved: 5-1-75

**FLORIDA DEPARTMENT OF TRANSPORTATION**
Road Design Section

INLET, MANHOLE, JUNCTION BOX TYPES J & P

| REVISIONS | | | INITIALS | DATES |
|---|---|---|---|---|
| Dates | Descriptions | Designed by | | |
| 10-74 | Changed Index No. | Checked by | | |
| | | Quantities by | | |
| | | Checked by | | |
| | | Supervised by | | |

Recommended for approval
by: S.H.Hart
Deputy Design Engineer-Roadways
Approved
by:
State Design Engineer

| DRAWING NO. | INDEX NO. |
|---|---|
| 1 of 1 | DSB-01 |

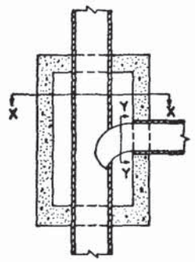


PLAN ON PIPE ℄




SECTION X-X

Channel to be formed with either half-pipe and mortar or brick and mortar.




SECTION Y-Y

## DETAIL OF BOTTOM CONSTRUCTION WHEN INLET SERVES AS MANHOLE

GENERAL NOTE:
Mortar used to seal the pipe into the walls of precast units will be of such a mix that shrinkage will not cause leakage into or out of the units. Maximum opening for pipe shall be the O.D. of the pipe required plus 6".

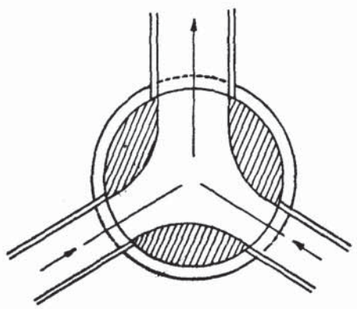

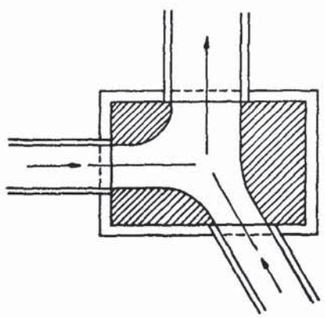

## DETAIL OF CHANNELIZATION

Note: Channelization required at all drainage structures with two or more pipes.

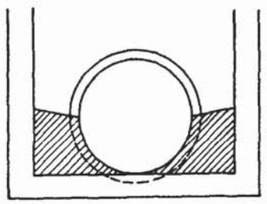

Smooth flow channels composed of concrete, or brick and mortar shall be constructed in the bottoms of all structures to a depth equal to half the diameter of the largest pipe.

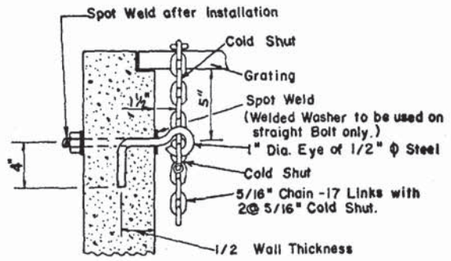


## DETAIL OF EYE BOLT AND CHAIN FOR LOCKING GRATES TO INLETS

Note: One required per inlet grate.

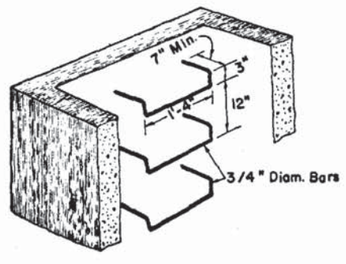


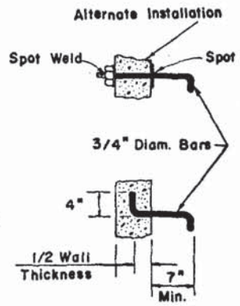


## DETAIL OF LADDER BARS

Use for box heights over 10'-0"

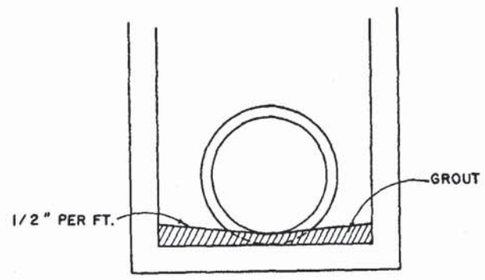


## ALTERNATE LOCATION OF PIPE IN STRUCTURE WHEN PREFABRICATED FLOOR SLAB IS USED

COMPLETE FLOW CHANNEL IS REQUIRED WHEN THERE IS FLOW THROUGH THE STRUCTURE

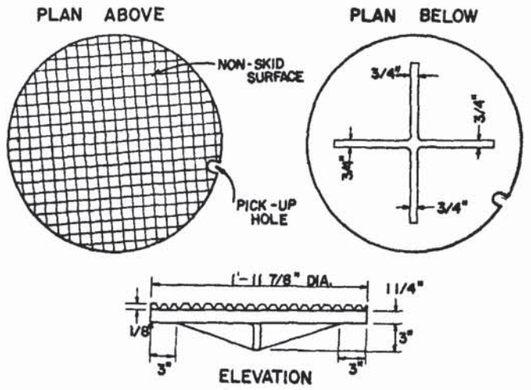


## COVER FOR ALL FRAMES
(WHEEL LOADS H-20)

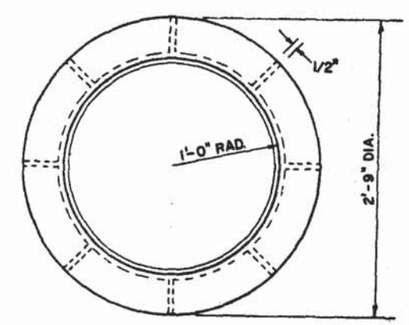


TYPE II FRAME
For Type 1, 2, 3 & 4 Inlets

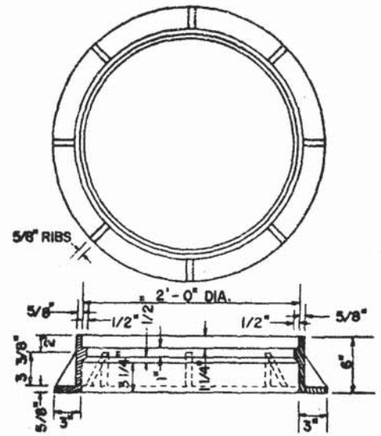


## TYPE I FRAME FOR MANHOLES
AS SHOWN ON INDEX DSB-01

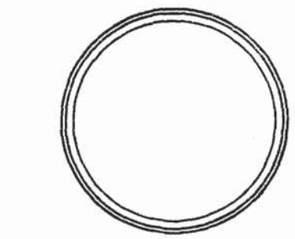


TYPE III FRAME
For Type 7 & 8 Inlets

CAST IRON

## FRAME AND COVER DETAILS

Note: Tack Weld all Covers to Frames ( 3 places) as directed by the Engineer.

| FED. ROAD DIV. NO. | STATE | PROJECT NO. | FISCAL YEAR | SHEET NO. |
|---|---|---|---|---|
| 3 | FLA. | | | |

FHWA Approved: 5-1-75

STATE OF FLORIDA DEPARTMENT OF TRANSPORTATION
ROADWAY PLANS SECTION

SUPPLEMENTARY DETAILS FOR MANHOLE & INLET STRUCTURES

| REVISIONS | | ROAD NO. | COUNTY | PROJECT NO. |
|---|---|---|---|---|
| Date | Description | | | |

| | Name | Date |
|---|---|---|
| Designed by | | |
| Checked by | | |
| Quantities by | | |
| Checked by | | |
| Submitted by | | |

Recommended For Approval By: E. H. Hart
APPROVED BY: Deputy Design Engr. - Rdwys
State Design Engineer

Drawing No. 1 of 2 | Index No. DSD-01

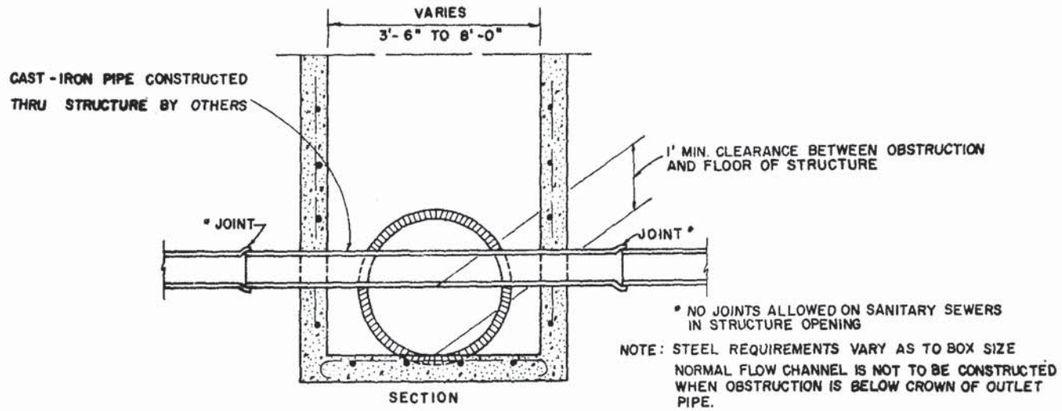


* NO JOINTS ALLOWED ON SANITARY SEWERS IN STRUCTURE OPENING

NOTE: STEEL REQUIREMENTS VARY AS TO BOX SIZE
NORMAL FLOW CHANNEL IS NOT TO BE CONSTRUCTED WHEN OBSTRUCTION IS BELOW CROWN OF OUTLET PIPE.

## DETAIL SHOWING PIPE CONSTRUCTED THRU STORM SEWER STRUCTURE

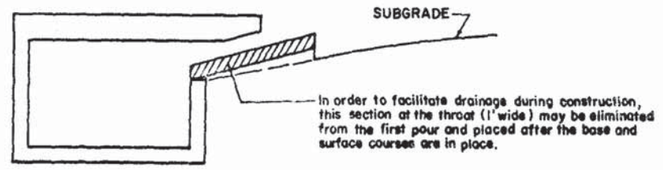


## ALTERNATE A

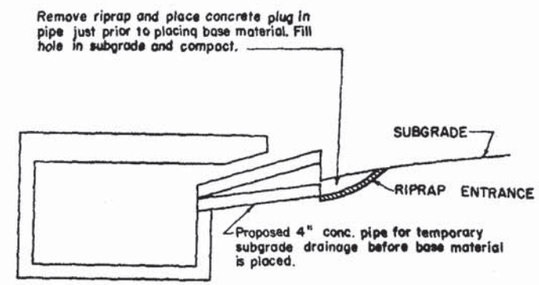


## ALTERNATE B

(Cost to be included in the unit price bid for inlets.)

## DETAIL OF TEMPORARY SUBGRADE DRAINS

(Optional with Contractor)

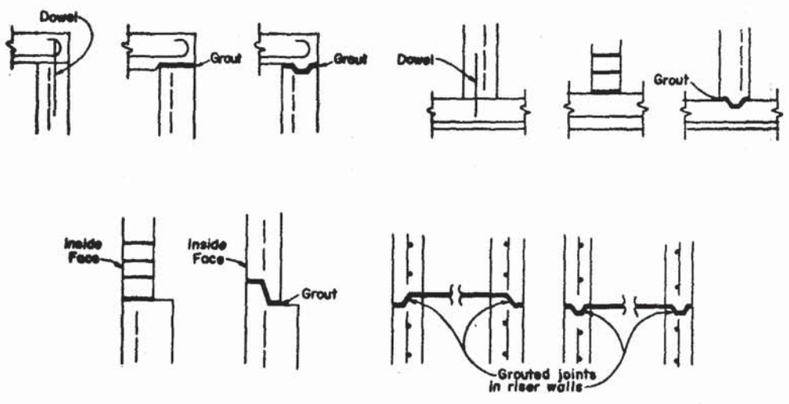


NOTES -

1. Any type joint may be used in conjunction with any other type joint.
2. All grouted joints are to have a maximum thickness of 1".
3. Keyways are to be a minimum of 1 1/2" deep.
4. Joint dowels are to be #4 bars, 12" long with a minimum of 6 bars per joint evenly spaced.
5. Minimum cover on reinforcing bars is 1 1/4".

## OPTIONAL CONSTRUCTION JOINTS

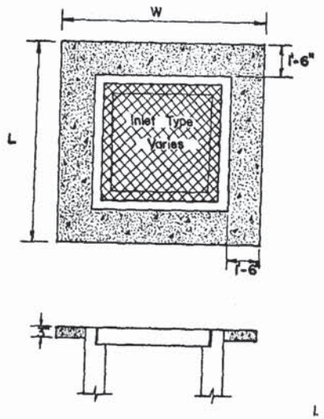


| Inlet | "L" | "W" | C.Y.* |
|---|---|---|---|
| C | 7'-5" | 6'-4" | 0.30 |
| D | 8'-5" | 7'-5" | 0.36 |
| E | 8'-10" | 7'-4" | 0.37 |
| F | 8'-4" | 6'-11" | 0.34 |
| G | 9'-4" | 9'-2" | 0.43 |
| H | 12'-0" | 7'-4" | 0.45 |
| | | | |
| | | | |

* for estimating purposes only

1. Cost of ditch pavement pad to be included in cost of inlet.
2. Ditch pavement pad to be used only where shown on the plans.

## DITCH PAVEMENT PAD FOR STANDARD DITCH BOTTOM INLETS

NOTE:
For all manhole, inlet and junction box structures the mortar used to seal the pipe into the walls of the precast units will be of such a mix that shrinkage will not cause leakage into or out of the units. Maximum opening for pipe shall be max. req'd O D+6".

FHWA Approved: 5-1-75

STATE OF FLORIDA DEPARTMENT OF TRANSPORTATION
ROADWAY PLANS SECTION

SUPPLEMENTARY DETAILS FOR MANHOLE & INLET STRUCTURES

| REVISIONS | |
|---|---|
| Dates | Descriptions |
| 2-75 | REDRAWN |

| ROAD NO. | COUNTY | PROJECT NO. |
|---|---|---|
| | | |

| | Names | Dates |
|---|---|---|
| Designed by | HLB | |
| Checked by | LMF | |
| Quantities by | | |
| Checked by | | |
| Supervised by | WJR | |

Recommended For Approval By: E H Hurt
APPROVED BY: Deputy Design Engr. - Rdwys.
State Design Engineer

Drawing No. 2 of 2 | Index No. DSD-01

| FED. ROAD DIV. NO. | STATE | PROJECT NO. | FISCAL YEAR | SHEET NO. |
|---|---|---|---|---|
| 3 | FLA. | | | |

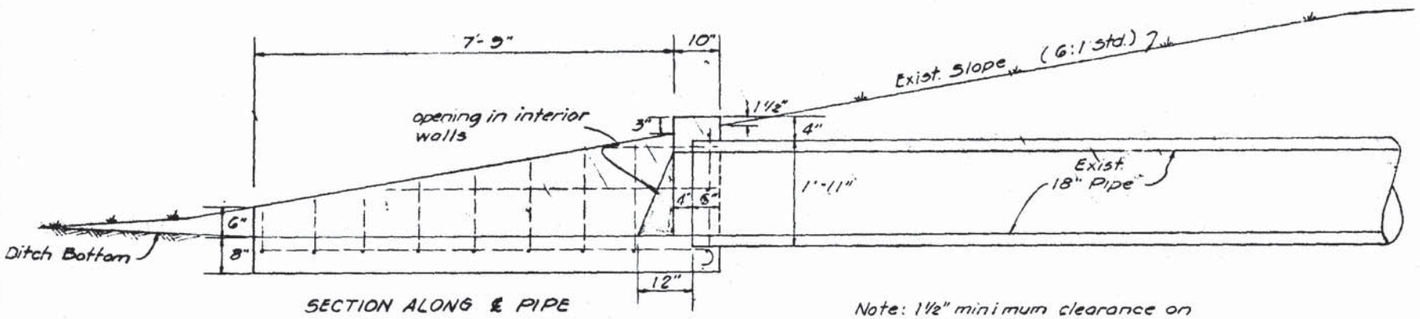


SECTION ALONG ℄ PIPE

Note: 1½" minimum clearance on all reinforcing bars. All reinforcing steel ½" ϕ bars and on 12" c. to c.

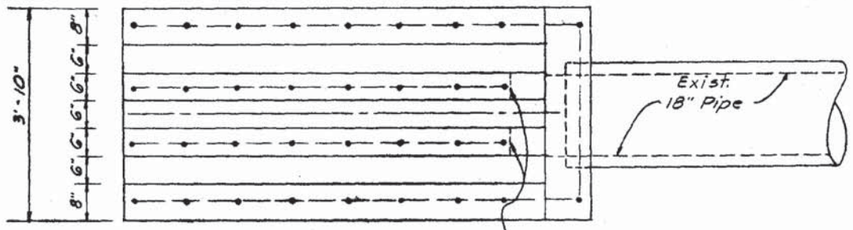


PLAN

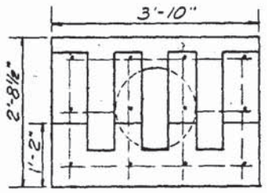


END VIEW

## DETAIL OF MEDIAN ENDWALL

(MODIFICATION OF DETAILS SHOWN ON INDEX DCE03.
Scale : 3/4" = 1'

Class I Concrete 1.72 Cu. Yds., Cost of Steel to be included in price for Concrete

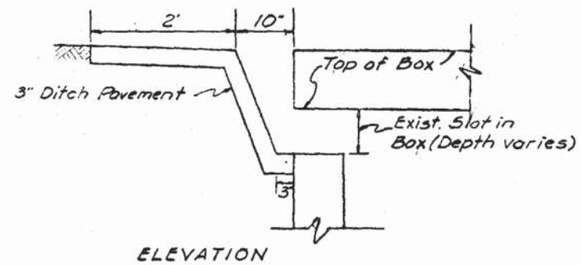


ELEVATION

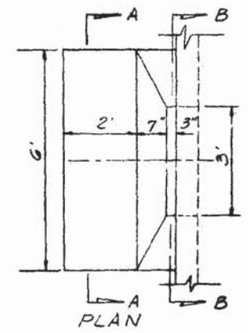


PLAN

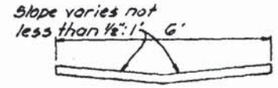


SECTION A-A

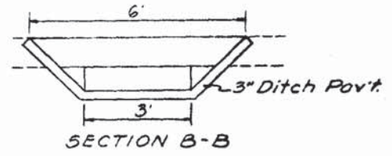


SECTION B-B

## SAFETY MODIFICATION FOR OPENING IN BOX CULVERTS

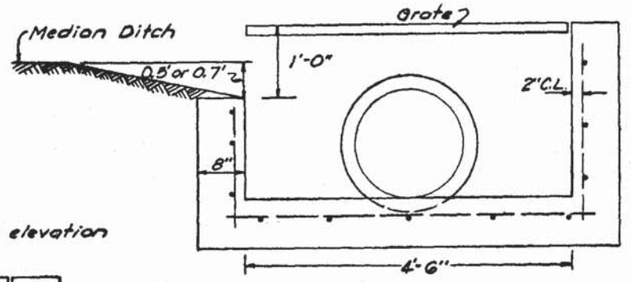


MEDIAN INLET DESIGN AS SHOWN ON THE PLANS

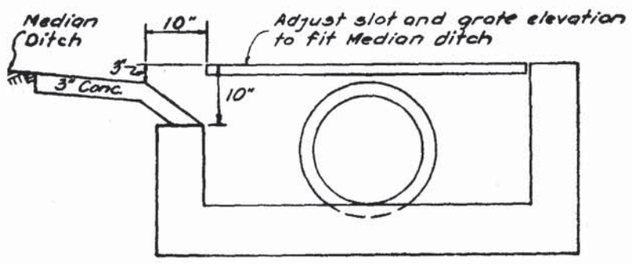


PROPOSED INLET MODIFICATION WHERE GRATE WAS SET 0.5' ABOVE THE DITCH

## SAFETY MODIFICATION FOR MEDIAN INLETS

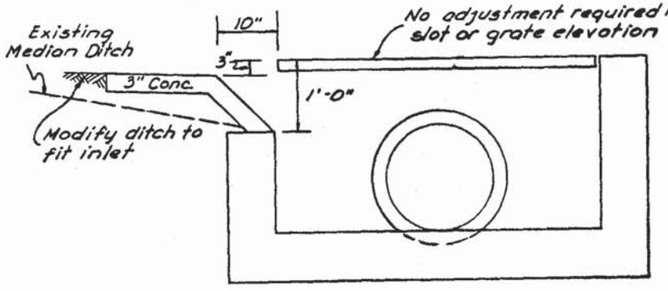


PROPOSED DITCH MODIFICATIONS WHERE GRATE WAS SET 0.3' ABOVE DITCH ELEV.

NOTE: These modifications will be made only on Projects now under construction. Do not use this Index for Projects being designed.

STATE ROAD DEPARTMENT OF FLORIDA
ROADWAY PLANS DEPARTMENT

# SAFETY MODIFICATION

FHWA Approved: 3-20-75

| REVISIONS | | ROAD NO. | COUNTY | PROJECT NO. |
|---|---|---|---|---|
| Dates | Descriptions | | | |
| 3-75 | Added Class I Conc | | | |
| 10-76 | Changed Index No | | | |

| | Names | Dates |
|---|---|---|
| Detailed by | H. A. B. | 7-67 |
| Checked by | D. W. S. | 7-67 |
| Quantities by | | |
| Checked by | | |
| Traced by | M. J. T. | 7-67 |

Recommended For Approval by _____ Engineer of Road Design

APPROVED BY _____ Asst. State Highway Engineer

Drawing No. 2 of 2

Index No. DSM-01

| FED. ROAD DIV. No. | STATE | PROJECT NO. | FISCAL YEAR | SHEET NO. |
|---|---|---|---|---|
| 3 | FLA. | | | |

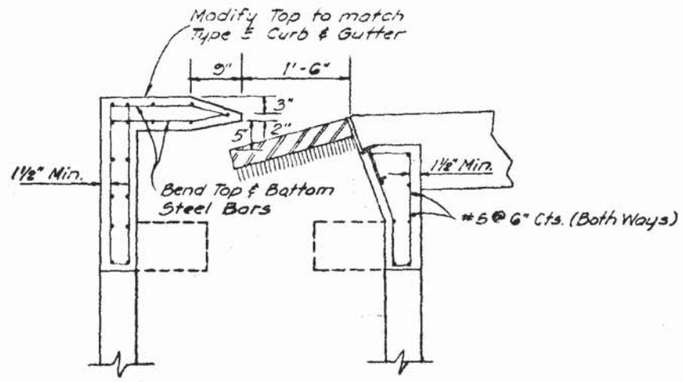


SECTION A-A

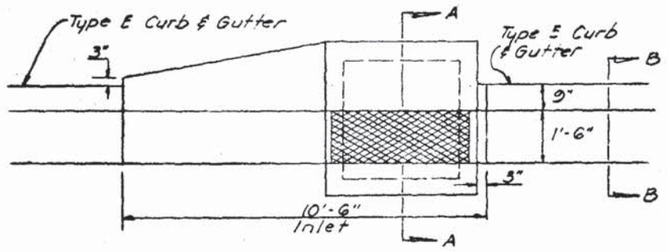


PLAN

Note: This modification will be required where Type E Curb & Gutter is constructed adjacent to the Inlet.

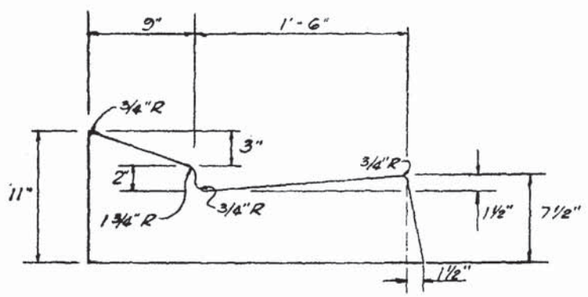


SECTION B-B
TYPE E CURB AND GUTTER

SAFETY MODIFICATION FOR TYPE P-5 INLET (FROM DETAILS ON INDEX DC1-02)

NOTE: These modifications will be made only on Projects now under construction.
Do not use this Index for Projects being designed.

FHWA Approved: 3-20-75

| REVISIONS | | ROAD NO. | COUNTY | PROJECT NO. |
|---|---|---|---|---|
| Dates | Descriptions | | | |
| 10-74 | Changed Index No. | | | |

STATE ROAD DEPARTMENT OF FLORIDA
ROADWAY PLANS DEPARTMENT

SAFETY MODIFICATION

| | Names | Dates |
|---|---|---|
| Detailed by | H. A. B. | 7-67 |
| Checked by | D. W. S. | 7-67 |
| Quantities by | | |
| Checked by | | |
| Traced by | M. J. T. | 7-67 |

Recommended For Approval by: Engineer of Road Design
APPROVED BY: Asst. State Highway Engineer

Drawing No. 2 of 2
Index No. DSM-01

Form 281-10

# MEMORANDUM

State of Florida Department of Transportation

DATE October 5, 1977

TO All Holders of Standard Index Books

FROM E. H. Hart, Deputy Design Engineer (Rdwys.)

COPIES TO

SUBJECT Standard Index Drawings

The following index drawings have been revised:

DCE-01-1 supersedes DCE-01. The chart showing data and quantities for metal pipe arch culverts was up-dated to 1974 AASHTO specifications.

DSE-01-1 supersedes DSE-01. The chart showing data and quantities for metal pipe arch culverts was up-dated to 1974 AASHTO specifications.

DCE-04-1 supersedes DCE-04. This index has been redrawn. The general notes were revised, design notes were added, a detail for a reinforced concrete jacket was added and sheet 2 which showed the grate details and requirements has been deleted.

PEJ-02-1 supersedes PEJ-02. This index was revised to show the joint extended across the shoulder pavement when the shoulder pavement is constructed with either concrete or econocrete. Details and notes were added or deleted as needed for this revision.

All projects whose scheduled letting will not be delayed should be reviewed for the utilization of these revised indices.

Please destroy all copies of these indices in your files and replace with the revised index drawings.

EHH:LMF:jl

| FED. ROAD DIST. NO. | STATE | PROJECT No. | FISCAL YEAR | SHT. NO. |
|---|---|---|---|---|
| 7 | FLA. | | | |

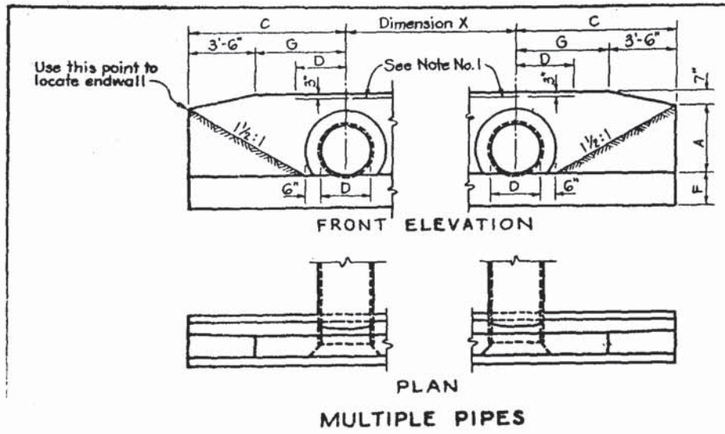


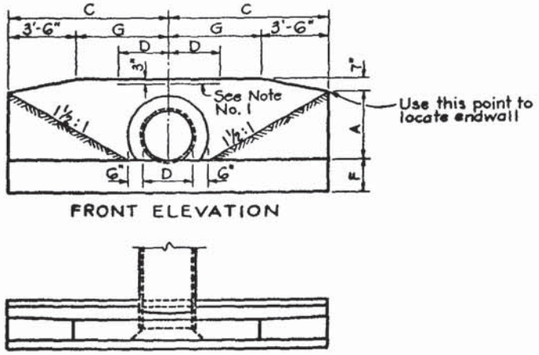


## CONCRETE ENDWALLS FOR ROUND PIPE CULVERTS

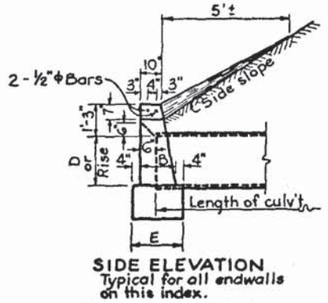


## TABLE OF CONSTRUCTION DATA AND ESTIMATED QUANTITIES FOR ROUND PIPE CULVERT ENDWALLS

| D | CONSTRUCTION DATA: AREA OF OPENING SQUARE FEET 1 PIPE | 2 PIPES | 3 PIPES | 4 PIPES | DIMENSIONS A | B | C | E | F | G | X | QUANTITIES IN ONE ENDWALL CU. YDS. OF CLASS I CONCRETE: ONE PIPE CULVERT CONC. | C.M. | C.I. | TWO PIPE CULVERT CONC. | C.M. | C.I. | THREE PIPE CULVERT CONC. | C.M. | C.I. | FOUR PIPE CULVERT CONC. | C.M. | C.I. | D |
|---|---|---|---|---|---|---|---|---|---|---|---|---|---|---|---|---|---|---|---|---|---|---|---|---|
| 15" | 1.23 | 2.46 | 3.69 | 4.92 | 1'-11" | 1'-2" | 4'-0" | 1'-10" | 1'-2" | 0'-6" | 2'-7" | 1.23 | 1.24 | 1.24 | 1.59 | 1.62 | 1.61 | 1.94 | 1.99 | 1.98 | 2.30 | 2.37 | 2.36 | 15" |
| 18" | 1.77 | 3.54 | 5.31 | 7.08 | 2'-2" | 1'-3" | 4'-6" | 1'-11" | 1'-3" | 1'-0" | 2'-10" | 1.56 | 1.59 | 1.58 | 1.99 | 2.04 | 2.03 | 2.43 | 2.51 | 2.49 | 2.86 | 2.96 | 2.94 | 18" |
| 21" | 2.41 | 4.82 | 7.23 | 9.64 | 2'-5" | 1'-4" | 5'-0" | 2'-0" | 1'-4" | 1'-6" | 3'-2" | 1.97 | | | | | | | | | | | | 21" |
| 24" | 3.14 | 6.28 | 9.42 | 12.56 | 2'-8" | 1'-4" | 5'-6" | 2'-0" | 1'-4" | 2'-0" | 3'-5" | 2.24 | 2.29 | 2.28 | 2.82 | 2.91 | 2.89 | 3.39 | 3.52 | 3.48 | 3.97 | 4.14 | 4.09 | 24" |
| 27" | 3.98 | 7.96 | 11.94 | 15.92 | 2'-11" | 1'-5" | 6'-0" | 2'-1" | 1'-5" | 2'-6" | 3'-10" | 2.73 | | | | | | | | | | | | 27" |
| 30" | 4.91 | 9.82 | 14.73 | 19.64 | 3'-2" | 1'-6" | 6'-6" | 2'-2" | 1'-6" | 3'-0" | 4'-3" | 3.26 | 3.34 | 3.32 | 4.13 | 4.28 | 4.24 | 4.98 | 5.20 | 5.14 | 5.84 | 6.13 | 6.05 | 30" |
| 36" | 7.07 | 14.14 | 21.21 | 28.28 | 3'-8" | 1'-8" | 7'-6" | 2'-4" | 1'-8" | 4'-0" | 5'-1" | 4.53 | 4.64 | 4.61 | 5.73 | 5.95 | 5.89 | 6.92 | 7.25 | 7.17 | 8.13 | 8.57 | 8.46 | 36" |
| 42" | 9.62 | 19.24 | 28.86 | 38.48 | 4'-2" | 1'-10" | 8'-6" | 2'-6" | 2'-0" | 5'-0" | 6'-0" | 6.33 | 6.49 | 6.45 | 8.11 | 8.43 | 8.35 | 9.90 | 10.38 | 10.26 | 11.68 | 12.32 | 12.16 | 42" |
| 48" | 12.57 | 25.14 | 37.71 | 50.28 | 4'-8" | 2'-1" | 9'-6" | 2'-9" | 2'-0" | 6'-0" | 6'-9" | 8.15 | 8.38 | 8.32 | 10.40 | 10.85 | 10.74 | 12.64 | 13.34 | 13.17 | 14.89 | 15.82 | 15.59 | 48" |
| 54" | 15.90 | 31.80 | 47.70 | 63.60 | 5'-2" | 2'-6" | 10'-6" | 3'-2" | 2'-3" | 7'-0" | 7'-8" | 11.71 | | | 15.23 | | | 18.77 | | | 22.29 | | | 54" |

## TABLE OF CONSTRUCTION DATA AND ESTIMATED QUANTITIES FOR METAL PIPE ARCH CULVERT ENDWALLS

| SPAN | RISE | CONSTRUCTION DATA: AREA OF OPENING SQUARE FEET 1 PIPE | 2 PIPES | 3 PIPES | 4 PIPES | DIMENSIONS A | B | C | E | F | G | X | QUANTITIES IN ONE ENDWALL CU.YDS. OF CLASS I CONCRETE 1 PIPE | 2 PIPES | 3 PIPES | 4 PIPES | SPAN | RISE | EQUIV. ROUND PIPE |
|---|---|---|---|---|---|---|---|---|---|---|---|---|---|---|---|---|---|---|---|
| 28" | 20" | 2.8 | 5.6 | 8.4 | 11.2 | 2'-4" | 1'-3" | 5'-2" | 1'-11" | 1'-3" | 1'-8" | 3'-5" | 1.78 | 2.31 | 2.83 | 3.36 | 28" | 20" | 24" |
| 35" | 24" | 4.3 | 8.6 | 12.9 | 17.2 | 2'-8" | 1'-4" | 5'-11½" | 2'-0" | 1'-4" | 2'-5½" | 4'-0" | 2.34 | 3.03 | 3.72 | 4.40 | 35" | 24" | 30" |
| 42" | 29" | 5.9 | 11.8 | 17.7 | 23.6 | 3'-1" | 1'-5" | 6'-10½" | 2'-1" | 1'-5" | 3'-4½" | 4'-9" | 3.13 | 4.06 | 4.99 | 5.93 | 42" | 29" | 36" |
| 49" | 33" | 8.4 | 16.8 | 25.2 | 33.6 | 3'-5" | 1'-6" | 7'-8" | 2'-2" | 1'-6" | 4'-2" | 5'-6" | 3.83 | 5.00 | 6.16 | 7.32 | 49" | 33" | 42" |
| 57" | 38" | 10.6 | 21.2 | 31.8 | 42.4 | 3'-10" | 1'-7" | 8'-7½" | 2'-3" | 1'-7" | 5'-1½" | 6'-4" | 4.87 | 6.31 | 7.74 | 9.18 | 57" | 38" | 48" |
| 64" | 43" | 13.2 | 26.4 | 39.6 | 52.8 | 4'-3" | 1'-8" | 9'-6½" | 2'-4" | 1'-8" | 6'-0½" | 7'-1" | 5.88 | 7.64 | 9.40 | 11.15 | 64" | 43" | 54" |
| 71" | 47" | 16.9 | 33.8 | 50.7 | 67.6 | 4'-7" | 1'-10" | 10'-4" | 2'-6" | 2'-0" | 6'-10" | 7'-10" | 7.80 | 10.15 | 12.49 | 14.85 | 71" | 47" | 60" |

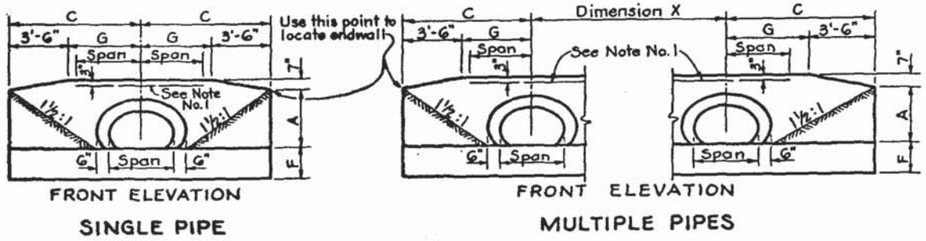


## CONCRETE ENDWALLS FOR METAL PIPE ARCH CULVERTS AND CONCRETE ELLIPTICAL PIPE CULVERTS

## TABLE OF CONSTRUCTION DATA AND ESTIMATED QUANTITIES FOR CONCRETE ELLIPTICAL PIPE CULVERT ENDWALLS

| SPAN | RISE | CONSTRUCTION DATA: AREA OF OPENING SQUARE FEET 1 PIPE | 2 PIPES | 3 PIPES | 4 PIPES | DIMENSIONS A | B | C | E | F | G | X | QUANTITIES IN ONE ENDWALL CU.YDS. OF CLASS I CONCRETE 1 PIPE | 2 PIPES | 3 PIPES | 4 PIPES | SPAN | RISE | EQUIV. ROUND PIPE |
|---|---|---|---|---|---|---|---|---|---|---|---|---|---|---|---|---|---|---|---|
| 30" | 19" | 3.10 | 6.20 | 9.30 | 12.40 | 2'-3" | 1'-4" | 5'-1½" | 2'-0" | 1'-4" | 1'-7½" | 4'-2" | 1.89 | 2.55 | 3.22 | 3.88 | 30" | 19" | 24" |
| 38" | 24" | 4.98 | 9.96 | 14.94 | 19.92 | 2'-8" | 1'-5" | 6'-3" | 2'-1" | 1'-5" | 2'-9" | 5'-2" | 2.64 | 3.55 | 4.48 | 5.39 | 38" | 24" | 30" |
| 45" | 29" | 7.13 | 14.26 | 21.39 | 28.52 | 3'-1" | 1'-6" | 7'-0" | 2'-2" | 1'-6" | 3'-6" | 6'-0" | 3.32 | 4.48 | 5.64 | 6.80 | 45" | 29" | 36" |
| 53" | 34" | 9.82 | 19.64 | 29.46 | 39.28 | 3'-6" | 1'-7" | 7'-11½" | 2'-3" | 1'-7" | 4'-5½" | 7'-1" | 4.24 | 5.76 | 7.29 | 8.81 | 53" | 34" | 42" |
| 60" | 38" | 12.45 | 24.90 | 37.35 | 49.80 | 3'-10" | 1'-8" | 8'-9" | 2'-4" | 1'-8" | 5'-3" | 7'-11" | 5.22 | 7.16 | 9.10 | 11.05 | 60" | 38" | 48" |
| 68" | 43" | 15.94 | 31.88 | 47.82 | 63.76 | 4'-3" | 1'-10" | 9'-8½" | 2'-6" | 1'-10" | 6'-3½" | 8'-10" | 6.63 | 9.01 | 11.39 | 13.77 | 68" | 43" | 54" |
| 76" | 48" | 19.89 | 39.78 | 59.67 | 79.56 | 4'-8" | 2'-1" | 10'-8" | 2'-9" | 2'-0" | 7'-2" | 9'-9" | 8.66 | 11.74 | 14.82 | 17.91 | 76" | 48" | 60" |
| 83" | 53" | 24.02 | 48.04 | 72.06 | 96.08 | 5'-1" | 2'-6" | 11'-7" | 3'-2" | 2'-6" | 8'-1" | 10'-7" | 12.50 | 16.98 | 21.47 | 25.97 | 83" | 53" | 66" |
| 91" | 58" | 28.76 | 57.52 | 86.28 | 115.04 | 5'-6" | 2'-10" | 12'-6½" | 3'-6" | 2'-10" | 9'-0½" | 11'-4" | 16.46 | 22.26 | 28.05 | 33.85 | 91" | 58" | 72" |

### GENERAL NOTES

1. Reinforcing Steel grade 40 or 60. Cost of bars shall be included in the contract unit price for concrete.
2. For sodding around endwall see detail on Index Nº GRC-01.
3. Provide 20' transition from endwall to ditch slopes where sideslopes on outfall ditches are flatter than 1½:1.

FHWA APPROVED: 8-30-77

FLORIDA DEPARTMENT OF TRANSPORTATION
Road Design Section

# CONCRETE ENDWALLS

| REVISIONS Dates | Descriptions | | INITIALS | DATES |
|---|---|---|---|---|
| 8-77 | Up-date CMP Arch to 1974 AASHTO | Designed by | HAB | 5/73 |
| | | Checked by | LMF | 5/73 |
| | | Quantities by | HAB | 5/73 |
| | | Checked by | LMF | 5/73 |
| | | Supervised by | | |

Recommended for approval by: Deputy Design Engineer - Roadways

Approved by: State Design Engineer

DRAWING NO. 1 OF 1 | INDEX NO. DCE-01-1

| FED. ROAD DIV. No. | STATE | PROJECT No. | FISCAL YEAR | SHEET No. |
|---|---|---|---|---|
| 7 | FLA. | | | |

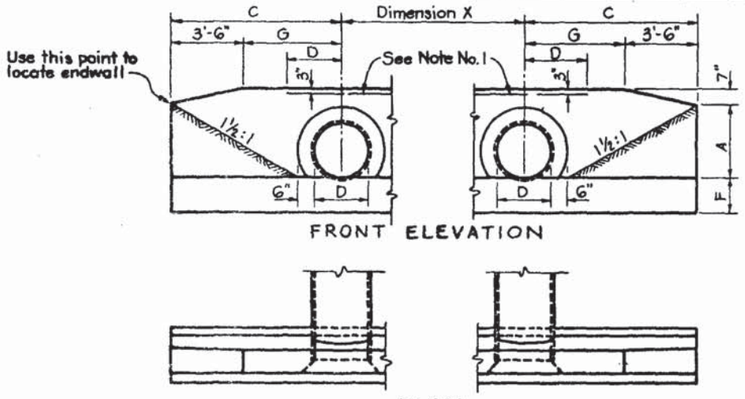


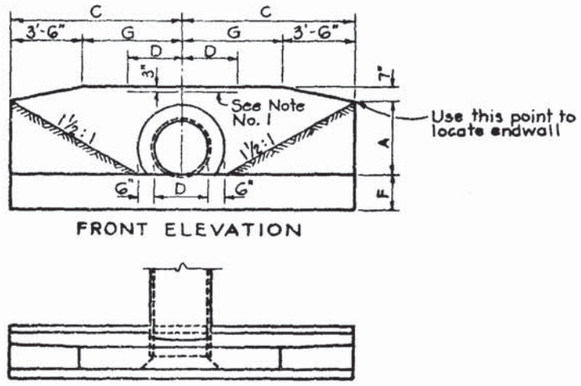


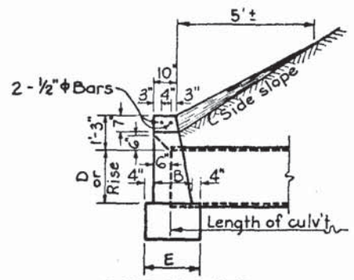


## CONCRETE ENDWALLS FOR ROUND PIPE CULVERTS

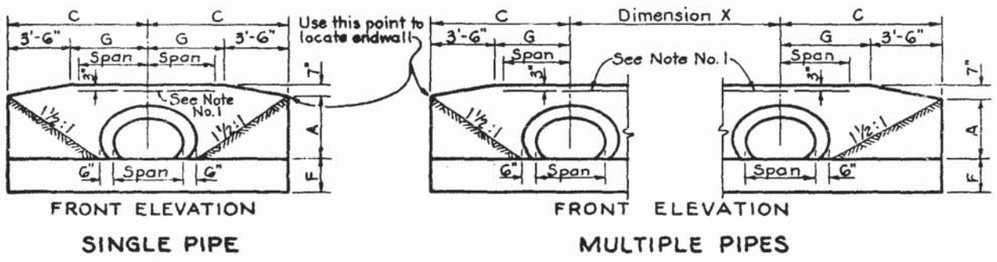


## CONCRETE ENDWALLS FOR METAL PIPE ARCH CULVERTS AND CONCRETE ELLIPTICAL PIPE CULVERTS

### TABLE OF CONSTRUCTION DATA AND ESTIMATED QUANTITIES FOR ROUND PIPE CULVERT ENDWALLS

| D | AREA OF OPENING SQUARE FEET | | | | DIMENSIONS | | | | | | | QUANTITIES IN ONE ENDWALL CU. YDS. OF CLASS I CONCRETE | | | | | | | | | | | | D |
|---|---|---|---|---|---|---|---|---|---|---|---|---|---|---|---|---|---|---|---|---|---|---|---|---|
| | | | | | | | | | | | | ONE PIPE CULVERT | | | TWO PIPE CULVERT | | | THREE PIPE CULVERT | | | FOUR PIPE CULVERT | | | |
| | 1 PIPE | 2 PIPES | 3 PIPES | 4 PIPES | A | B | C | E | F | G | X | CONC. | C.M. | C.I. | CONC. | C.M. | C.I. | CONC. | C.M. | C.I. | CONC. | C.M. | C.I. | |
| 15" | 1.23 | 2.46 | 3.69 | 4.92 | 1'-11" | 1'-2" | 4'-0" | 1'-10" | 1'-2" | 0'-6" | 2'-7" | 1.23 | 1.24 | 1.24 | 1.59 | 1.62 | 1.61 | 1.94 | 1.99 | 1.98 | 2.30 | 2.37 | 2.36 | 15" |
| 18" | 1.77 | 3.54 | 5.31 | 7.08 | 2'-2" | 1'-3" | 4'-6" | 1'-11" | 1'-3" | 1'-0" | 2'-10" | 1.56 | 1.59 | 1.58 | 1.99 | 2.04 | 2.03 | 2.43 | 2.51 | 2.49 | 2.86 | 2.96 | 2.94 | 18" |
| 21" | 2.41 | 4.82 | 7.23 | 9.64 | 2'-5" | 1'-4" | 5'-0" | 2'-0" | 1'-4" | 1'-6" | 3'-2" | 1.97 | | | | | | | | | | | | 21" |
| 24" | 3.14 | 6.28 | 9.42 | 12.56 | 2'-8" | 1'-4" | 5'-6" | 2'-0" | 1'-4" | 2'-0" | 3'-5" | 2.24 | 2.29 | 2.28 | 2.82 | 2.91 | 2.89 | 3.39 | 3.52 | 3.48 | 3.97 | 4.14 | 4.09 | 24" |
| 27" | 3.98 | 7.96 | 11.94 | 15.92 | 2'-11" | 1'-5" | 6'-0" | 2'-1" | 1'-5" | 2'-6" | 3'-10" | 2.73 | | | | | | | | | | | | 27" |
| 30" | 4.91 | 9.82 | 14.73 | 19.64 | 3'-2" | 1'-6" | 6'-6" | 2'-2" | 1'-6" | 3'-0" | 4'-3" | 3.26 | 3.34 | 3.32 | 4.13 | 4.28 | 4.24 | 4.98 | 5.20 | 5.14 | 5.84 | 6.13 | 6.05 | 30" |
| 36" | 7.07 | 14.14 | 21.21 | 28.28 | 3'-8" | 1'-8" | 7'-6" | 2'-4" | 1'-8" | 4'-0" | 5'-1" | 4.53 | 4.64 | 4.61 | 5.73 | 5.95 | 5.89 | 6.92 | 7.25 | 7.17 | 8.13 | 8.57 | 8.46 | 36" |
| 42" | 9.62 | 19.24 | 28.86 | 38.48 | 4'-2" | 1'-10" | 8'-6" | 2'-6" | 2'-0" | 5'-0" | 6'-0" | 6.33 | 6.49 | 6.45 | 8.11 | 8.43 | 8.35 | 9.90 | 10.38 | 10.26 | 11.68 | 12.32 | 12.16 | 42" |
| 48" | 12.57 | 25.14 | 37.71 | 50.28 | 4'-8" | 2'-1" | 9'-6" | 2'-9" | 2'-0" | 6'-0" | 6'-9" | 8.15 | 8.38 | 8.32 | 10.40 | 10.85 | 10.74 | 12.64 | 13.34 | 13.17 | 14.89 | 15.82 | 15.59 | 48" |
| 54" | 15.90 | 31.80 | 47.70 | 63.60 | 5'-2" | 2'-6" | 10'-6" | 3' 2" | 2'-3" | 7'-0" | 7'-8" | 11.71 | | | 15.23 | | | 18.77 | | | 22.29 | | | 54" |

### TABLE OF CONSTRUCTION DATA AND ESTIMATED QUANTITIES FOR METAL PIPE ARCH CULVERT ENDWALLS

| SPAN | RISE | AREA OF OPENING SQUARE FEET | | | | DIMENSIONS | | | | | | | QUANTITIES IN ONE ENDWALL CU. YDS. OF CLASS I CONCRETE | | | | SPAN | RISE | EQUIV. ROUND PIPE |
|---|---|---|---|---|---|---|---|---|---|---|---|---|---|---|---|---|---|---|---|
| | | 1 PIPE | 2 PIPES | 3 PIPES | 4 PIPES | A | B | C | E | F | G | X | 1 PIPE | 2 PIPES | 3 PIPES | 4 PIPES | | | |
| 28" | 20" | 2.8 | 5.6 | 8.4 | 11.2 | 2'-4" | 1'-3" | 5'-2" | 1'-11" | 1'-3" | 1'-8" | 3'-5" | 1.78 | 2.31 | 2.83 | 3.36 | 24" | 30" | 24" |
| 35" | 24" | 4.3 | 8.6 | 12.9 | 17.2 | 2'-8" | 1'-4" | 5'-11½" | 2'-0" | 1'-4" | 2'-5½" | 4'-0" | 2.34 | 3.03 | 3.72 | 4.40 | 35" | 24" | 30" |
| 42" | 29" | 5.9 | 11.8 | 17.7 | 23.6 | 3'-1" | 1'-5" | 6'-10½" | 2'-1" | 1'-5" | 3'-4½" | 4'-9" | 3.13 | 4.06 | 4.99 | 5.93 | 42" | 29" | 36" |
| 49" | 33" | 8.4 | 16.8 | 25.2 | 33.6 | 3'-5" | 1'-6" | 7'-8" | 2'-2" | 1'-6" | 4'-2" | 5'-6" | 3.83 | 5.03 | 6.16 | 7.32 | 49" | 33" | 42" |
| 57" | 38" | 10.6 | 21.2 | 31.8 | 42.4 | 3'-10" | 1'-7" | 8'-7½" | 2'-3" | 1'-7" | 5'-1½" | 6'-4" | 4.67 | 6.31 | 7.71 | 9.18 | 57" | 38" | 48" |
| 64" | 43" | 13.2 | 26.4 | 39.6 | 52.8 | 4'-3" | 1'-8" | 9'-6½" | 2'-4" | 1'-8" | 6'-0½" | 7'-1" | 5.68 | 7.64 | 9.43 | 11.[illegible] | 64" | 43" | 54" |
| 71" | 47" | 16.9 | 33.8 | 50.7 | 67.6 | 4'-7" | 1'-10" | 10'-4" | 2'-6" | 2'-0" | 6'-10" | 7'-8" | 7.80 | 10.[illegible] | 9.48 | 14.85 | 71" | 47" | 60" |

### TABLE OF CONSTRUCTION DATA AND ESTIMATED QUANTITIES FOR CONCRETE ELLIPTICAL PIPE CULVERT ENDWALLS

| SPAN | RISE | AREA OF OPENING SQUARE FEET | | | | DIMENSIONS | | | | | | | QUANTITIES IN ONE ENDWALL CU. YDS. OF CLASS I CONCRETE | | | | SPAN | RISE | EQUIV. ROUND PIPE |
|---|---|---|---|---|---|---|---|---|---|---|---|---|---|---|---|---|---|---|---|
| | | 1 PIPE | 2 PIPES | 3 PIPES | 4 PIPES | A | B | C | E | F | G | X | 1 PIPE | 2 PIPES | 3 PIPES | 4 PIPES | | | |
| 30" | 19" | 3.10 | 6.20 | 9.30 | 12.40 | 2'-3" | 1'-4" | 5'-1½" | 2'-0" | 1'-4" | 1'-7½" | 4'-2" | 1.89 | 2.55 | 3.22 | 3.86 | 30" | 19" | 24" |
| 38" | 24" | 4.98 | 9.96 | 14.94 | 19.92 | 2'-8" | 1'-5" | 6'-3" | 2'-1" | 1'-5" | 2'-9" | 5'-2" | 2.64 | 3.65 | 4.48 | 5.39 | 38" | 24" | 30" |
| 45" | 29" | 7.13 | 14.26 | 21.39 | 28.52 | 3'-1" | 1'-6" | 7'-0" | 2'-2" | 1'-6" | 3'-6" | 6'-0" | 3.32 | 4.48 | 5.64 | 6.80 | 45" | 29" | 36" |
| 53" | 34" | 9.82 | 19.64 | 29.46 | 39.28 | 3'-6" | 1'-7" | 7'-11½" | 2'-3" | 1'-7" | 4'-5½" | 7'-1" | 4.24 | 5.76 | 7.29 | 8.81 | 53" | 34" | 42" |
| 60" | 38" | 12.45 | 24.90 | 37.35 | 49.80 | 3'-10" | 1'-8" | 8'-9" | 2'-4" | 1'-8" | 5'-3" | 7'-11" | 5.22 | 7.16 | 9.10 | 11.05 | 60" | 38" | 48" |
| 68" | 43" | 15.94 | 31.88 | 47.82 | 63.76 | 4'-3" | 1'-10" | 9'-8½" | 2'-6" | 1'-10" | 6'-3½" | 8'-10" | 6.63 | 9.01 | 11.39 | 13.77 | 68" | 43" | 54" |
| 76" | 48" | 19.89 | 39.78 | 59.67 | 79.56 | 4'-8" | 2'-1" | 10'-8" | 2'-9" | 2'-0" | 7'-2" | 9'-9" | 8.66 | 11.74 | 14.82 | 17.91 | 76" | 48" | 60" |
| 83" | 53" | 24.02 | 48.04 | 72.06 | 96.08 | 5'-1" | 2'-6" | 11'-7" | 3' 2" | 2'-6" | 8'-1" | 10'-7" | 12.50 | 16.98 | 21.47 | 25.97 | 83" | 53" | 66" |
| 91" | 58" | 28.76 | 57.52 | 86.28 | 115.04 | 5'-6" | 2'-10" | 12'-6½" | 3'-6" | 2'-10" | 9'-0½" | 11'-4" | 16.46 | 22.26 | 28.05 | 33.85 | 91" | 58" | 72" |

### GENERAL NOTES

1. Reinforcing Steel grade 40 or 60. Cost of bars shall be included in the contract unit price for concrete.
2. For sodding around endwall see detail on Index Nº GRC-01.
3. Provide 20' transition from endwall to ditch slopes where sideslopes on outfall ditches are flatter than 1½:1.

FHWA APPROVED: 8-30-77

FLORIDA DEPARTMENT OF TRANSPORTATION
Road Design Section

# CONCRETE ENDWALLS

| REVISIONS | | | INITIALS | DATES |
|---|---|---|---|---|
| Dates | Descriptions | Designed by | HAB | 5/73 |
| 8-77 | Up-date CM Pipe to 1974 AASHTO | Checked by | LMF | 5/73 |
| | | Quantities by | HAB | 4/73 |
| | | Checked by | LMF | 5/73 |
| | | Supervised by | | |

Recommended for approval

Deputy Design Engineer - Roadways

Approved

State Design Engineer

| DRAWING NO. | INDEX NO. |
|---|---|
| 1 OF 1 | DCE-01-1 |

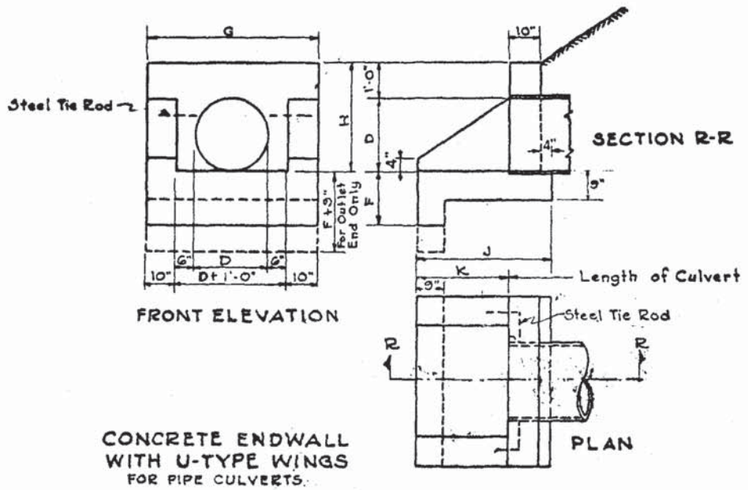


CONCRETE ENDWALL
WITH U-TYPE WINGS
FOR PIPE CULVERTS.

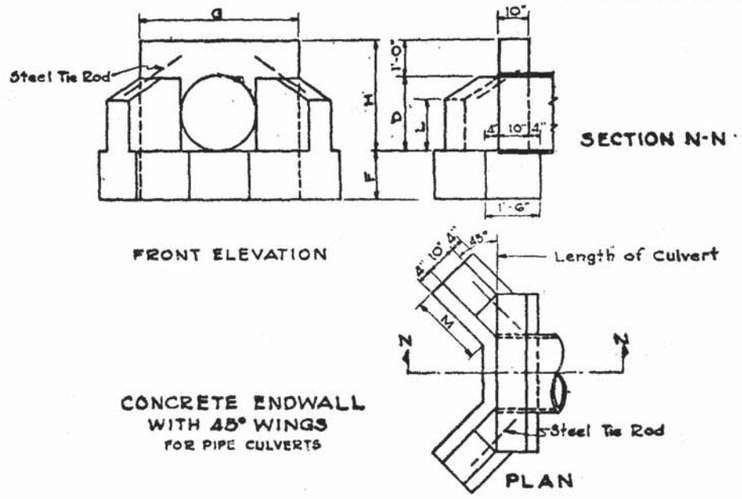


CONCRETE ENDWALL
WITH 45° WINGS
FOR PIPE CULVERTS

TABLE OF DIMENSIONS AND ESTIMATED QUANTITIES
PIPE CULVERT ENDWALLS WITH U-TYPE WINGS

| DIMENSIONS | | | | | | | QUANTITIES IN ONE ENDWALL | | | | | | |
|---|---|---|---|---|---|---|---|---|---|---|---|---|---|
| Opening | | Wall | | | Footing | | Total Cu. Yds. Concrete, Class I | | | | | | Steel Tie Rods |
| | | | | | | | Conc. Pipe | | C.M. Pipe | | C.I. Pipe | | |
| D | Area Sq. Ft. | G | H | K | F | J | Inlet | Outlet | Inlet | Outlet | Inlet | Outlet | |
| 12" | 0.8 | 3'-8" | 2'-0" | 1'-0" | 1'-3" | 2'-2" | 0.50 | 0.57 | 0.51 | 0.59 | 0.51 | 0.59 | none |
| 15" | 1.2 | 3'-11" | 2'-3" | 1'-5" | 1'-5" | 2'-7" | 0.61 | 0.69 | 0.64 | 0.72 | 0.65 | 0.72 | none |
| 18" | 1.8 | 4'-2" | 2'-6" | 1'-9" | 1'-8" | 2'-11" | 0.72 | 0.81 | 0.76 | 0.84 | 0.76 | 0.84 | none |
| 24" | 3.1 | 4'-8" | 3'-0" | 2'-6" | 1'-6" | 3'-8" | 1.03 | 1.15 | 1.08 | 1.18 | 1.08 | 1.18 | 2-3/4"ϕx2'-0" |
| 30" | 4.9 | 5'-2" | 3'-6" | 3'-3" | 1'-6" | 4'-5" | 1.35 | 1.46 | 1.43 | 1.53 | 1.42 | 1.53 | 2-3/4"ϕx2'-0" |
| 36" | 7.1 | 5'-8" | 4'-0" | 4'-0" | 1'-9" | 5'-2" | 1.75 | 1.87 | 1.86 | 1.98 | 1.84 | 1.96 | 2-3/4"ϕx2'-6" |
| 42" | 9.6 | 6'-2" | 4'-6" | 4'-9" | 2'-0" | 5'-11" | 2.21 | 2.34 | 2.34 | 2.47 | | | 2-3/4"ϕx2'-6" |
| 48" | 12.6 | 6'-8" | 5'-0" | 5'-6" | 2'-0" | 6'-8" | 2.66 | 2.80 | 2.85 | 2.97 | | | 2-3/4"ϕx3'-0" |

TABLE OF DIMENSIONS AND ESTIMATED QUANTITIES
PIPE CULVERT ENDWALLS WITH 45° WINGS

| DIMENSIONS | | | | | | | QUANTITIES IN ONE ENDWALL | | | |
|---|---|---|---|---|---|---|---|---|---|---|
| Opening | | Wall | | | | Footing | Concrete Class I | | | Steel Tie Rods |
| | | | | | | | Total Cu Yds | | | |
| D | Area Sq. Ft. | H | G | L | M | F | Conc Pipe | C.M. Pipe | C.I. Pipe | |
| 18" | 1.8 | 2'-6" | 3'-10" | 1'-2" | 1'-7" | 1'-3" | 0.76 | 0.79 | 0.79 | none |
| 24" | 3.1 | 3'-0" | 4'-4" | 1'-5" | 2'-1" | 1'-4" | 1.05 | 1.08 | 1.08 | 2-3/4"ϕx2'-0" |
| 30" | 4.9 | 3'-6" | 4'-10" | 1'-8" | 2'-5" | 1'-6" | 1.34 | 1.42 | 1.41 | 2-3/4"ϕx2'-0" |
| 36" | 7.1 | 4'-0" | 5'-4" | 2'-0" | 2'-11" | 1'-8" | 1.74 | 1.85 | 1.84 | 2-3/4"ϕx3'-0" |
| 42" | 9.6 | 4'-6" | 5'-10" | 2'-3" | 3'-6" | 2'-0" | 2.36 | 2.49 | | 2-3/4"ϕx3'-0" |
| 48" | 12.6 | 5'-0" | 6'-4" | 2'-6" | 4'-0" | 2'-0" | 2.76 | 2.92 | | 2-3/4"ϕx3'-0" |
| 15" | 1.2 | 2'-3" | 3'-7" | 1'-0" | 1'-5" | 1'-3" | 0.58 | 0.61 | 0.61 | none |

Note:
Chanfer all exposed edges 3/4".
Provide good foundation under pipes using concrete, if natural conditions are very bad
Where tie rods are required the cost of same shall be included in the unit price bid for Concrete. } Rev. 6-14-46

FHWA APPROVED: 3-20-75

FLORIDA DEPARTMENT OF TRANSPORTATION
ROADWAY PLANS SECTION

# STANDARD ENDWALLS FOR PIPE CULVTS.

| ROAD NO. | COUNTY | SECTION | JOB NO. |
|---|---|---|---|
| | | | |

| REVISIONS | | | REVISIONS | | | Designed by | Names | Dates | Approved by |
|---|---|---|---|---|---|---|---|---|---|
| Names | Dates | Descriptions | Names | Dates | Descriptions | | | | |
| LMF | 8-70 | Raised side slope to top of endwall | E.A.P. G.E.P. | 7-10-36 | | Checked by | | | |
| LMF | 3-73 | Added Class I Conc | H.L.P. | 7-20-43 | Retraced | Drawn by | | | |
| LMF | 4-74 | Removed straight endwall details | C.H.E. | 6-14-46 | Tie Rods | Checked by | | | |
| LMF | 10-74 | Changed Index No. | B.A.S. | 9-25-51 | Retraced | Quantities by | | | |
| | | | H.N. | 11-7-55 | 15, 45° added | Checked by (Original) | G.E.P. | 3-2-32 | E.H. Hoyt |
| | | | LMF | 8-12-70 | Added flewel to straight endwall | Traced by | T.J.K. | 12-11-51 | Deputy Design Engineer - Roadways |

Drawing No. 1 of 1 | Index No. DCE-02

| FED. ROAD DIV. No. | STATE | PROJECT No. | FISCAL YEAR | SHEET No. |
|---|---|---|---|---|
| 3 | FLA. | | | |

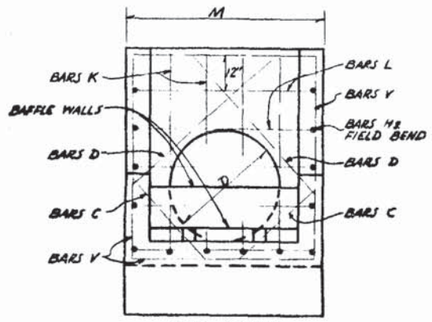


END VIEW

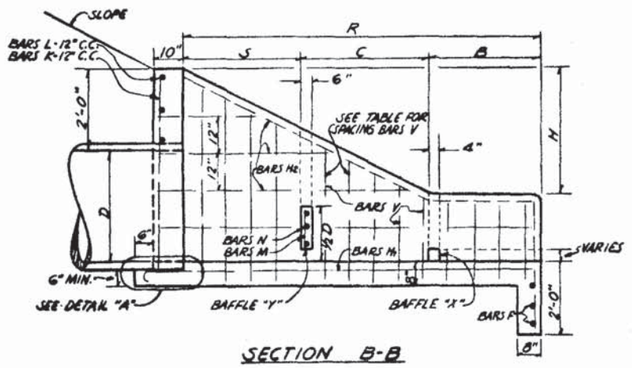


SECTION B-B

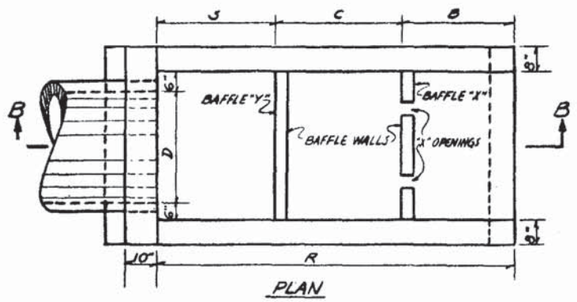


PLAN

DETAILS OF U-ENDWALL WITH BAFFLES FOR 2:1 SLOPE

NOTE: FOR SODDING AROUND ENDWALL SEE INDEX Nº GRC-01.

TABLE OF DIMENSIONS AND QUANTITIES FOR ONE U-ENDWALL (SECTION A-A)

| RATE OF SLOPE | PIPE SIZE "D" | AREA OF OPENING SQ. FT. | R | H | M | BAFFLE LOCATIONS (WHEN REQUIRED) S | B | C | CONCRETE CLASS I CU. YD. | REINFORCING STEEL LBS. |
|---|---|---|---|---|---|---|---|---|---|---|
| 2:1 | 15" | 1.23 | 3'-3" | 1'-7½" | 3'-7" | | | | 0.89 | 49 |
| | 18" | 1.77 | 3'-9" | 1'-10½" | 3'-10" | | | | 1.05 | 60 |
| | 24" | 3.14 | 4'-9" | 2'-4½" | 4'-4" | | | | 1.48 | 82 |
| | 30" | 4.91 | 5'-9" | 2'-10½" | 4'-10" | | | | 1.88 | 146 |
| 4:1 | 15" | 1.23 | 7'-4" | 1'-10" | 3'-7" | 2'-6" | 2'-6" | 2'-4" | 1.54 | 95 |
| | 18" | 1.77 | 8'-4" | 2'-1" | 3'-10" | 2'-10" | 2'-10" | 2'-8" | 1.84 | 109 |
| | 24" | 3.14 | 10'-4" | 2'-7" | 4'-4" | 3'-6" | 3'-6" | 3'-4" | 2.53 | 139 |
| | 30" | 4.91 | 12'-4" | 3'-1" | 4'-10" | 4'-2" | 4'-2" | 4'-0" | 3.34 | 236 |
| 6:1 | 15" | 1.23 | 11'-6" | 1'-11" | 3'-7" | 3'-10" | 3'-10" | 3'-10" | 2.19 | 138 |
| | 18" | 1.77 | 13'-0" | 2'-2" | 3'-10" | 4'-4" | 4'-4" | 4'-4" | 2.63 | 145 |
| | 24" | 3.14 | 16'-0" | 2'-8" | 4'-4" | 5'-4" | 5'-4" | 5'-4" | 3.59 | 227 |
| | 30" | 4.91 | 19'-0" | 3'-2" | 4'-10" | 6'-4" | 6'-4" | 6'-4" | 4.81 | 333 |

TABLE OF DIMENSIONS AND QUANTITIES FOR BAFFLES (SECTION A-A)

| PIPE SIZE "D" | X BAFFLE OPENINGS WIDTH | HEIGHT | LENGTH | Y BAFFLE OPENING VERTICAL CLEARANCE | Y BAFFLE - REINFORCING STEEL BARS M | BARS N | CONCRETE CLASS I CU. YD. | REINFORCING STEEL LBS. |
|---|---|---|---|---|---|---|---|---|
| 15" | 4" | 4" | 4" | 4" | 3 - #4 | 1 - #4 | 0.03 | 4 |
| 18" | 4" | 4" | 4" | 4" | 4 - #4 | 2 - #4 | 0.04 | 8 |
| 24" | 5" | 5" | 4" | 4" | 5 - #4 | 3 - #4 | 0.05 | 12 |
| 30" | 5" | 5" | 4" | 4" | 6 - #4 | 4 - #4 | 0.07 | 18 |

TABLE OF DIMENSIONS AND QUANTITIES FOR ONE U-ENDWALL WITH BAFFLES FOR 2:1 SLOPE (SECTION B-B)

| PIPE SIZE "D" | AREA OF OPENING SQ. FT. | R | H | M | S | B | C | X BAFFLE OPENINGS WIDTH | HEIGHT | LENGTH | Y BAFFLE OPENING VERTICAL CLEAR. | Y BAFFLE REINFORCING STEEL BARS M | BARS N | *CONCRETE CLASS I CU. YD. | *REINFORCING STEEL LBS. |
|---|---|---|---|---|---|---|---|---|---|---|---|---|---|---|---|
| 15" | 1.23 | 5'-9" | 2'-3½" | 3'-7" | 2'-3" | 1'-3" | 2'-3" | 4" | 4" | 4" | 4" | 3 - #4 | 1 - #4 | 1.61 | 99 |
| 18" | 1.77 | 6'-6" | 2'-5" | 3'-10" | 2'-6" | 1'-6" | 2'-6" | 4" | 4" | 4" | 4" | 4 - #4 | 2 - #4 | 1.89 | 142 |
| 24" | 3.14 | 8'-0" | 2'-8" | 4'-4" | 3'-0" | 2'-0" | 3'-0" | 5" | 5" | 4" | 4" | 5 - #4 | 3 - #4 | 2.52 | 193 |
| 30" | 4.91 | 9'-6" | 2'-11" | 4'-10" | 3'-6" | 2'-6" | 3'-6" | 5" | 5" | 4" | 4" | 6 - #4 | 4 - #4 | 3.34 | 241 |

*NOTE: CONCRETE AND REINFORCING STEEL QUANTITIES IN THIS TABLE INCLUDE BAFFLE QUANTITIES.

NOTE: ALL REINFORCING STEEL IS ½" Ø BARS. ALL BAR DIMENSIONS ARE GIVEN OUT TO OUT. BAR CLEARANCE 2" EXCEPT AS NOTED.

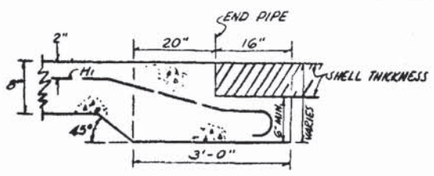


DETAIL A

| V & F BAR SPACING | |
|---|---|
| PIPE DIAMETER | C. C. |
| 15" | 12" |
| 18" | 12" |
| 24" | 10" |
| 30" | 10" |

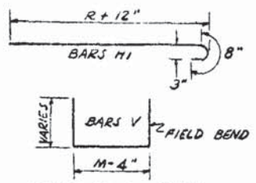


BENDING DIAGRAM

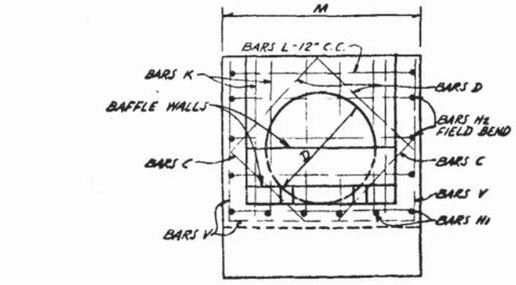


END VIEW

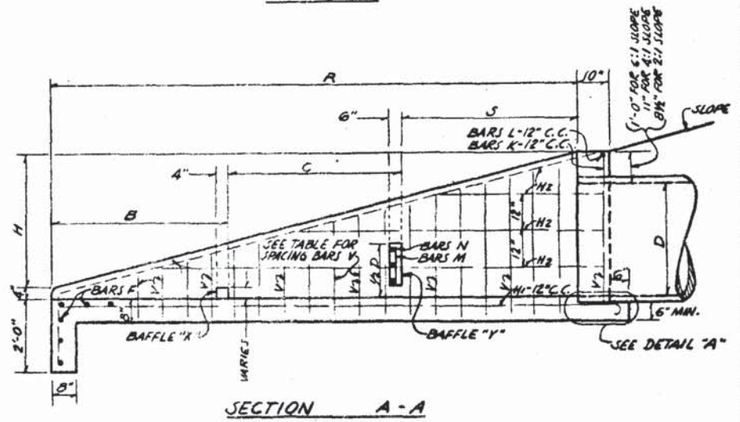


SECTION A-A

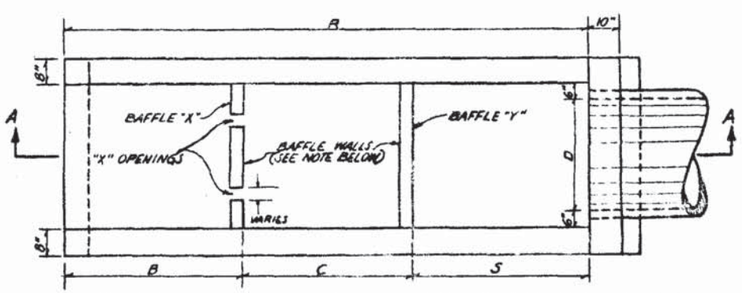


NOTE: BAFFLE WALLS TO BE CONSTRUCTED ONLY WHERE SPECIFIED IN THE PLANS.

-PLAN-

DETAILS OF U-ENDWALL WITH OR WITHOUT BAFFLES FOR 4:1 AND 6:1 SLOPES AND WITHOUT BAFFLES FOR 2:1 SLOPE

NOTE: WHEN STEEL GRATING IS REQUIRED ON ENDWALL SEE SHEET Nº 2 OF 3 FOR MOUNTING DETAILS.

F.H.W.A. APPROVED: 3-20-75

FLORIDA DEPARTMENT OF TRANSPORTATION
ROADWAY PLANS SECTION

# U-ENDWALLS FOR PIPE CULVERTS

| REVISIONS Dates | Descriptions |
|---|---|
| 10/16/69 M.W. | CHANGED DIMENSIONS IN BAFFLE "X" & ADDED SH. 2 |
| 8/70 LMF | Raised Side slope ½ to top of endwall |
| 7/71 C.D.R | REVISED TO ACCOMODATE STEEL GRATING |

| REVISIONS Dates | Descriptions |
|---|---|
| 3-72 L.M. | Rev Baffles & Redrawn |
| 6-74 L.M. | Rev Baffles "X" & "Y" |
| 2-78 G.B. | Quantities Extended To Include Thru 54" Pipe |

| ROAD NO. | COUNTY | PROJECT NO. |
|---|---|---|

| | Names | Dates |
|---|---|---|
| Detailed by | | |
| Checked by | | |
| Quantities by | | |
| Checked by | | |
| Traced by | | |

Recommended for approval by _____ ENGINEER OF ROADWAY DESIGN - DEPARTMENT

APPROVED BY _____ STATE ROAD ENGINEER

Drawing No. 1 of 3 | Index No. DCE-03

(See Sheet 2 for additional revisions)

| FED. ROAD DIV. NO. | STATE | PROJECT NO. | FISCAL YEAR | SHEET NO. |
|---|---|---|---|---|
| 3 | FLA. | | | |

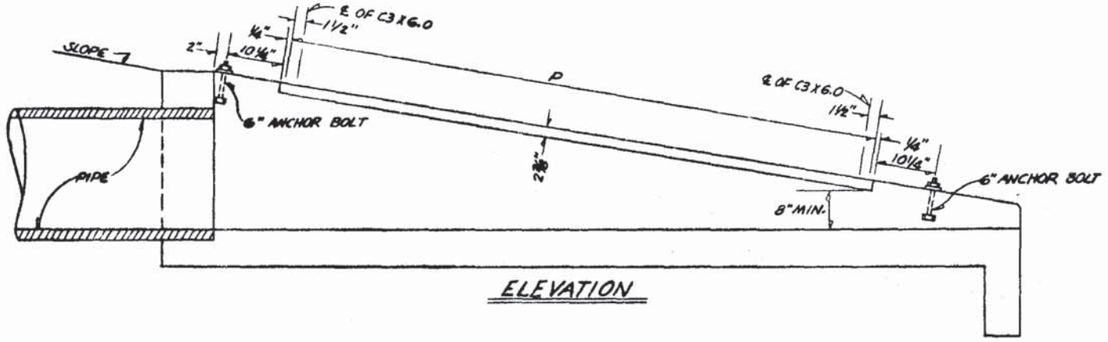


ELEVATION

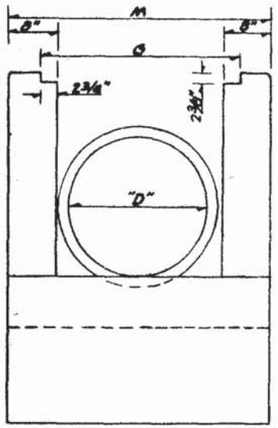


END SECTION

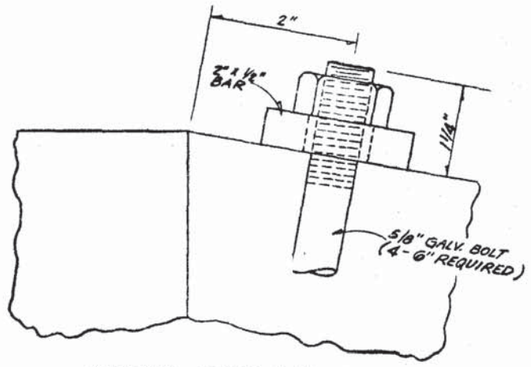


ANCHOR BOLT DETAIL

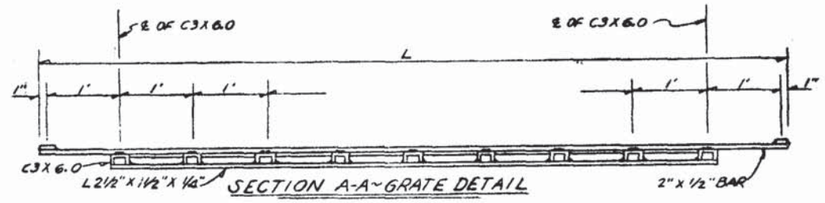


SECTION A-A~GRATE DETAIL

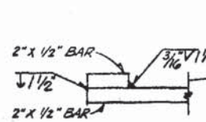


BAR TO BAR WELDING DETAIL

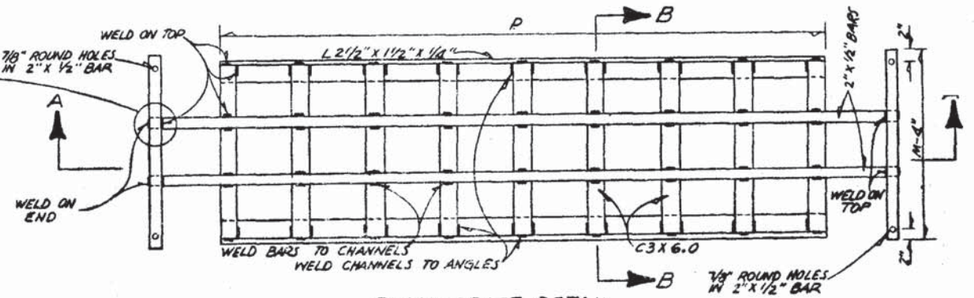


PLAN~GRATE DETAIL

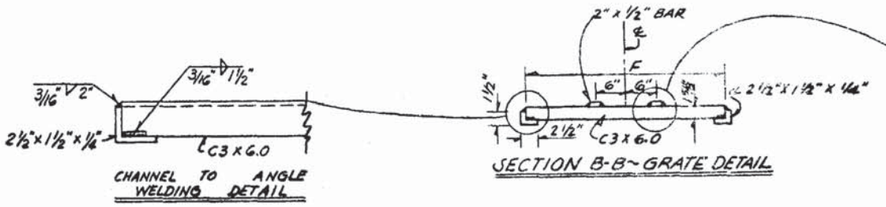


CHANNEL TO ANGLE WELDING DETAIL




SECTION B-B~GRATE DETAIL

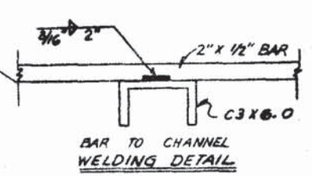


BAR TO CHANNEL WELDING DETAIL

# MOUNTING DETAILS FOR STEEL GRATING

## STEEL GRATING USE CRITERIA

1. GRATED HEADWALL AND/OR ENDWALL TO BE USED ON PIPE CULVERTS WHEN IN THE DESIGNATED CLEAR RECOVERY AREA AND WHEN ANY OF THE FOLLOWING CONDITIONS EXIST:
   - A. DRAINAGE AREA TO CULVERT CONSISTS OF MEDIAN OR INFIELD AREAS OR AREAS WHERE DEBRIS AND/OR DRIFT IS NEGLIGIBLE.
   - B. RUNOFF TO CULVERT IS BY SHEET FLOW OR IN SUCH ILL DEFINED CHANNELS THAT DEBRIS TRANSPORT IS NOT CONSIDERED A MAJOR PROBLEM.
   - C. RUNOFF TO CULVERT IS MINOR EXCEPT ON AN INFREQUENT BASIS (10 TO 15 YEAR FREQUENCY); FOR EXAMPLE A DRAINAGE BASIN IN FLAT SANDY TERRAIN WITH NORMALLY LOW GROUND WATER TABLE.
   - D. AREAS WHERE CULVERT BLOCKAGE WITH RESULTANT BACKWATER WOULD NOT SERIOUSLY AFFECT ROADWAY EMBANKMENT, TRAFFIC OPERATION OR UPLAND PROPERTY.
2. STEEL GRATING TO BE USED ONLY WHERE CALLED FOR IN PLANS AND ONLY ON HEADWALLS AND/OR ENDWALLS HAVING EITHER 4:1 OR 6:1 RATES OF SLOPE.

TABLE OF DIMENSIONS AND QUANTITIES FOR ONE GRATE

| RATE OF SLOPE | SIZE PIPE "D" | G | 2 EACH BARS@ 3.4 LBS/L.F. | | | (X) CHANNELS @ 6 LBS/L.F. | | | 2 ANGLES@3.2 LBS/L.F. | | TOTAL WEIGHT |
|---|---|---|---|---|---|---|---|---|---|---|---|
| | | | L | M-4" | LBS. | (X) | F | LBS. | P | LBS. | LBS. |
| 6:1 | 15" | 2'-8 1/2" | 9'-2" | 3'-3" | 85 | 8 | 2'-7 1/2" | 126 | 7'-3" | 47 | 258 |
| | 18" | 2'-11 1/2" | 10'-2" | 3'-6" | 93 | 9 | 2'-10 1/2" | 156 | 8'-3" | 53 | 302 |
| | 24" | 3'-5 1/2" | 13'-2" | 4'-0" | 117 | 12 | 3'-4 1/2" | 243 | 11'-3" | 72 | 432 |
| | 30" | 3'-11 1/2" | 16'-2" | 4'-6" | 141 | 15 | 3'-10 1/2" | 349 | 14'-3" | 92 | 582 |
| 4:1 | 15" | 2'-8 1/2" | 6'-2" | 3'-3" | 64 | 5 | 2'-7 1/2" | 79 | 4'-3" | 28 | 171 |
| | 18" | 2'-11 1/2" | 7'-2" | 3'-6" | 73 | 6 | 2'-10 1/2" | 104 | 5'-3" | 34 | 211 |
| | 24" | 3'-5 1/2" | 9'-2" | 4'-0" | 90 | 8 | 3'-4 1/2" | 162 | 7'-3" | 47 | 299 |
| | 30" | 3'-11 1/2" | 11'-2" | 4'-6" | 107 | 10 | 3'-10 1/2" | 233 | 9'-3" | 60 | 400 |

# DETAILS OF STEEL GRATING FOR U-ENDWALL

GENERAL NOTES:

1. COST OF GRATING TO BE PAID FOR AS ENDWALL GRATE PER POUND.
2. COST OF GALVANIZED BOLTS AND NUTS TO BE INCLUDED IN BID PRICE FOR ENDWALL GRATE.
3. ALL ANGLE, CHANNEL AND BAR STEEL TO BE A.S.T.M. A-588 WEATHERING STEEL EXCEPT AS NOTED IN GENERAL NOTE NO. 4.
4. WHEN GRATING WILL BE EXPOSED TO SALT WATER ALL ANGLE, CHANNEL AND BAR STEEL TO BE A.S.T.M. A-572 GRADE 50, GALVANIZED.
5. CHANNEL SECTION C4 X 5.4 MAY BE USED AS AN ALTERNATE FOR C3 X 6.0 CHANNEL.

FHWA APPROVED: 3-20-75

FLORIDA DEPARTMENT OF TRANSPORTATION
ROADWAY PLANS SECTION

U-ENDWALLS FOR PIPE CULVERTS

| REVISIONS | | ROAD NO. | COUNTY | | PROJECT NO. |
|---|---|---|---|---|---|
| Dates | Descriptions | | | | |
| 3-73 LMF | Revised Weld locations & Size | | | | |
| 10-74 | Changed Index No. | | | | |

| | Names | Dates |
|---|---|---|
| Detailed by | C.D.R. | 7-20-71 |
| Checked by | | |
| Quantities by | | |
| Checked by | | |
| Traced by | | |

Recommended for Approval by: Deputy Manager Engineer - Roadways
APPROVED BY: State Design Engineer

Drawing No. 2 of 3 | Index No. DCE-03

| FED. ROAD DIV. NO. | STATE | PROJECT NO. | SHEET NO. | TOTAL SHEETS |
|---|---|---|---|---|
| 3 | FLA. | | | |

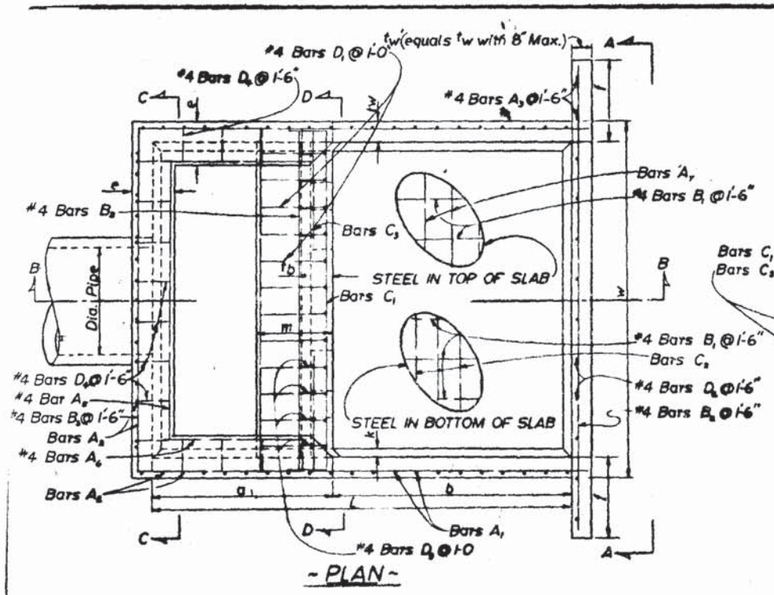


~ PLAN ~

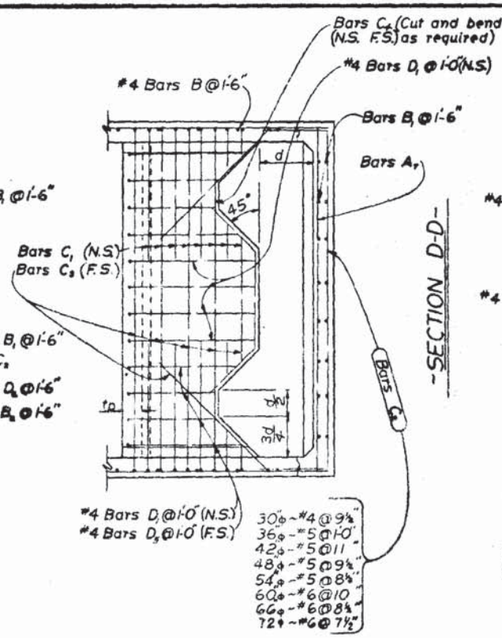


~ SECTION D-D ~

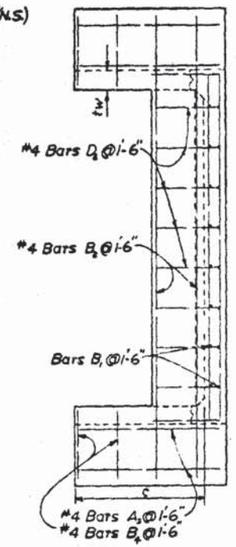


~ VIEW A-A ~

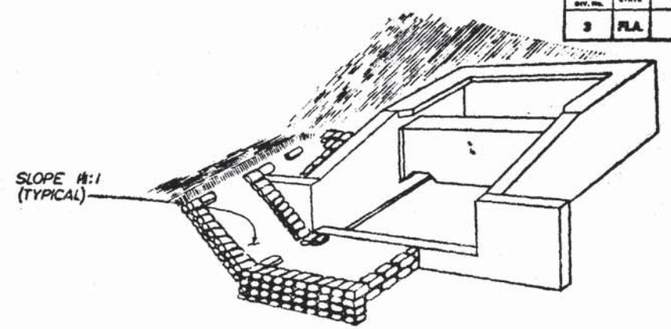


PERSPECTIVE
ENERGY DISSIPATOR

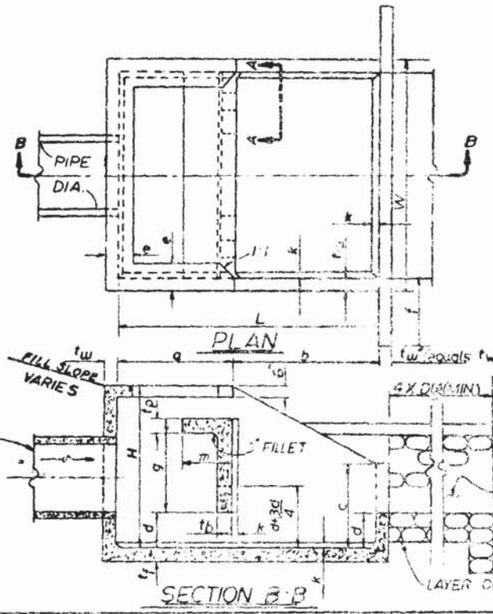


SECTION B-B

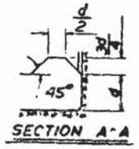


SECTION A-A

## BENDING DIAGRAMS

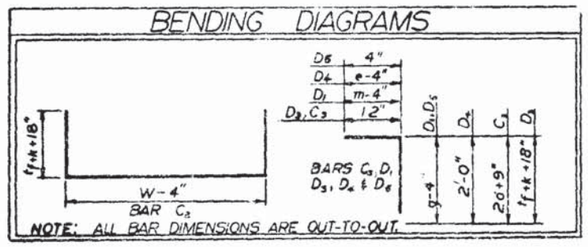


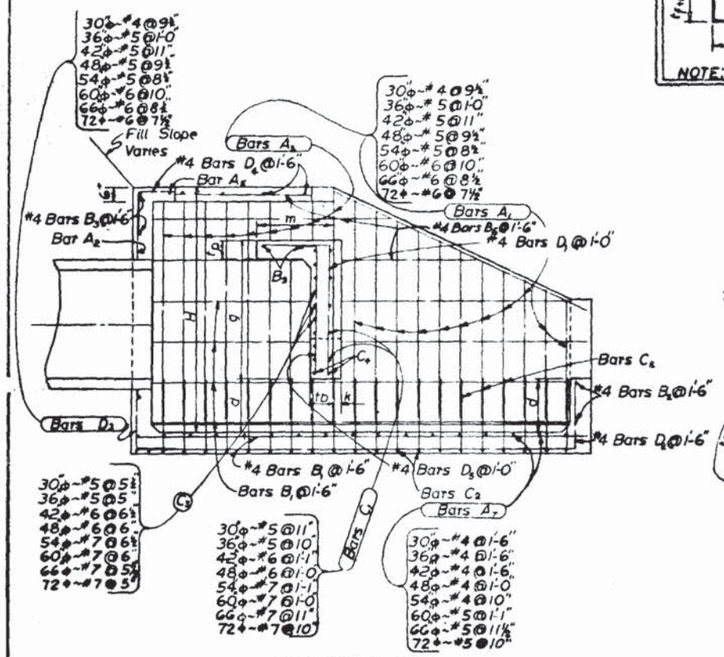


SECTION B-B

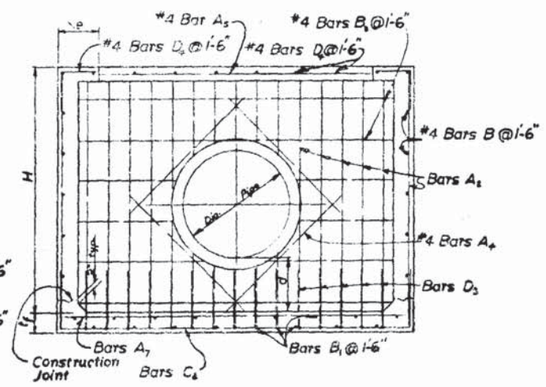


Note: Cut bars as required.

~ SECTION C-C ~

| SIZE DIA. INCHES | PIPE AREA SQ. FT. | MAX. DISCHARGE Q | FEET AND INCHES W | H | L | a | b | c | d | e | f | g | m | INCHES tw | tf | tb | ts | k | CONCRETE CLASS I CU. YD. | REINF STEEL LBS. |
|---|---|---|---|---|---|---|---|---|---|---|---|---|---|---|---|---|---|---|---|---|
| 30 | 4.91 | 59 | 9-0 | 6-3 | 10-8 | 4-7 | 6-1 | 3-4 | 1-4 | 1-2 | 2-6 | 3-0 | 1-11 | 6 | 6-1/2 | 7 | 7 | 3 | 6.72 | 736 |
| 36 | 7.07 | 85 | 10-5 | 7-3 | 12-4 | 5-3 | 7-1 | 3-10 | 1-7 | 1-3 | 3-0 | 3-6 | 2-3 | 7 | 7-1/2 | 8 | 8 | 3 | 10.34 | 1,072 |
| 42 | 9.62 | 115 | 11-10 | 8-0 | 14-0 | 6-0 | 8-0 | 4-5 | 1-9 | 1-6 | 3-0 | 3-11 | 2-6 | 8 | 8-1/2 | 9 | 8 | 4 | 14.82 | 1429 |
| 48 | 12.57 | 151 | 13-3 | 9-0 | 15-8 | 6-9 | 8-11 | 4-11 | 2-0 | 1-7 | 3-0 | 4-5 | 2-10 | 9 | 9-1/2 | 10 | 8 | 4 | 20.32 | 2000 |
| 54 | 15.90 | 191 | 14-8 | 9-9 | 17-4 | 7-4 | 10-0 | 5-5 | 2-2 | 1-10 | 3-0 | 4-11 | 3-0 | 10 | 10-1/2 | 10 | 8 | 4 | 27.19 | 2659 |
| 60 | 19.63 | 236 | 16-1 | 10-9 | 19-0 | 8-0 | 11-0 | 5-11 | 2-5 | 1-11 | 3-0 | 5-4 | 3-4 | 11 | 11-1/2 | 11 | 8 | 6 | 36.52 | 3552 |
| 66 | 23.76 | 285 | 17-3 | 11-6 | 20-6 | 8-8 | 11-10 | 6-5 | 2-7 | 2-1 | 3-0 | 5-9 | 3-7 | 12 | 12-1/2 | 12 | 8 | 6 | 42.82 | 4,472 |
| 72 | 28.27 | 339 | 18-6 | 12-3 | 22-0 | 9-3 | 12-9 | 6-11 | 2-9 | 2-3 | 3-0 | 6-2 | 3-9 | 12 | 12-1/2 | 12 | 8 | 6 | 50.68 | 5,426 |

IMPACT TYPE ENERGY DISSIPATOR

FHWA APPROVED: 3-20-75

FLORIDA DEPARTMENT OF TRANSPORTATION
ROADWAY PLANS SECTION

# U-ENDWALLS FOR PIPE CULVERTS

| REVISIONS Date | Descriptions |
|---|---|
| 7/71 | DRAWING NO. CHANGED / Added 2 of 3 to 3 of 3 |
| 3/73 | Added Class I Conc. Sheets 1 & 3 |
| 10-74 | Changed Index No. |

| | ROAD NO. | COUNTY | PROJECT NO. |
|---|---|---|---|
| | | | |

| | Name | Date |
|---|---|---|
| Detailed by | HJ.I / RC-HB | 6 D |
| Checked by | HAB / A.M. | 11-69 |
| Quantities by | J.W. / JAC | " " |
| Checked by | | DCE 11-69 |
| Traced by | G.F. | 10-69 |

Recommended for Approval by: [signature] Supply Design Engineer
APPROVED BY: [signature] State Design Engineer

Drawing No. 3 of 3
Index No. DCE-05

# MEMORANDUM

State of Florida Department of Transportation

DATE October 5, 1977

TO All Holders of Standard Index Books

FROM E. H. Hart, Deputy Design Engineer (Rdwys.)

COPIES TO

SUBJECT Standard Index Drawings

The following index drawings have been revised:

DCE-01-1 supersedes DCE-01. The chart showing data and quantities for metal pipe arch culverts was up-dated to 1974 AASHTO specifications.

DSE-01-1 supersedes DSE-01. The chart showing data and quantities for metal pipe arch culverts was up-dated to 1974 AASHTO specifications.

DCE-04-1 supersedes DCE-04. This index has been redrawn. The general notes were revised, design notes were added, a detail for a reinforced concrete jacket was added and sheet 2 which showed the grate details and requirements has been deleted.

PEJ-02-1 supersedes PEJ-02. This index was revised to show the joint extended across the shoulder pavement when the shoulder pavement is constructed with either concrete or econocrete. Details and notes were added or deleted as needed for this revision.

All projects whose scheduled letting will not be delayed should be reviewed for the utilization of these revised indices.

Please destroy all copies of these indices in your files and replace with the revised index drawings.

EHH:LMF:jl

| STATE PROJ. NO. | SHEET NO. |
|---|---|
| | |

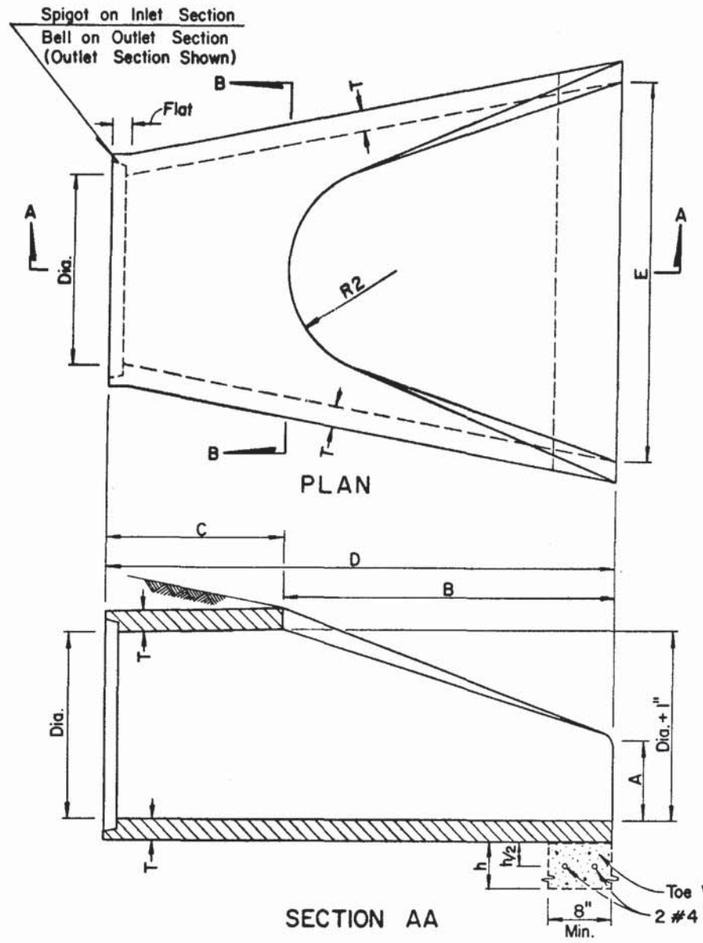


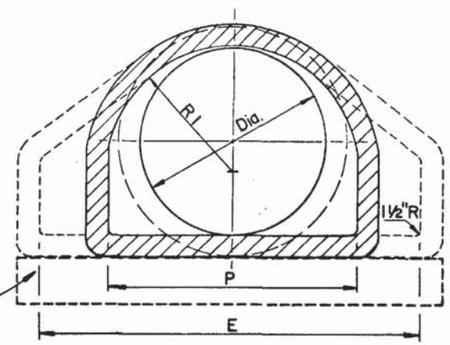


# FLARED END SECTION

| DIA. | T | REINF. Sq. In./Lin. Ft. | BELL or SPIGOT | A | B | C | D | E | P | R1 | R2 | FLAT | WEIGHT (LBS.) | TOE WALL h |
|---|---|---|---|---|---|---|---|---|---|---|---|---|---|---|
| 12" | 2" | 0.07 | 1 1/2" | 4" | 2'-0" | 4'-0 7/8" | 6'-0 7/8" | 2'-0" | 19 5/16" | 10 1/8" | 9" | 3 1/2" | 530 | 12" |
| 15" | 2 1/4" | 0.07 | 2" | 6" | 2'-3" | 3'-10" | 6'-1" | 2'-6" | 24 3/16" | 12 1/2" | 11" | 3 1/2" | 740 | 12" |
| 18" | 2 1/2" | 0.07 | 2 1/2" | 9" | 2'-3" | 3'-10" | 6'-1" | 3'-0" | 29" | 15 1/2" | 12" | 4" | 990 | 15" |
| 21" | 2 3/4" | 0.07 | 2 1/4" | 9" | 2'-11" | 3'-2" | 6'-1" | 3'-6" | 31 5/8" | 16 1/8" | 13" | 4" | 1280 | 15" |
| 24" | 3" | 0.07 | 2 1/2" | 9 1/2" | 3'-7 1/2" | 2'-6" | 6'-1 1/2" | 4'-0" | 33 3/16" | 16 13/16" | 14" | 4 1/2" | 1520 | 18" |
| 27" | 3 1/4" | 0.148 | 2 1/2" | 10 1/2" | 4'-0" | 2'-1 1/2" | 6'-1 1/2" | 4'-6" | 36" | 18 9/16" | 14 1/2" | 4 1/2" | 1930 | 18" |
| 30" | 3 1/2" | 0.148 | 3" | 1'-0" | 4'-6" | 1'-7 3/4" | 6'-1 3/4" | 5'-0" | 37" | 18 1/2" | 15" | 5" | 2190 | 21" |
| 36" | 4" | 0.148 | 3 1/2" | 1'-3" | 5'-3" | 2'-10 3/4" | 8'-1 3/4" | 6'-0" | 47 13/16" | 24 5/16" | 20" | 5 1/2" | 4100 | 21" |
| 42" | 4 1/2" | 0.148 | 3 3/4" | 1'-9" | 5'-3" | 2'-11" | 8'-2" | 6'-6" | 53 7/8" | 27 1/2" | 22" | 5 1/2" | 5380 | 24" |
| 48" | 5" | 0.148 | 4 1/8" | 2'-0" | 6'-0" | 2'-2" | 8'-2" | 7'-0" | 56 1/2" | 28 1/2" | 22" | 5 3/4" | 6550 | 24" |
| 54" | 5 1/2" | 0.174 | 4 3/4" | 2'-3" | 5'-5" | 2'-11" | 8'-4" | 7'-6" | 65 1/2" | 33 1/8" | 24" | 6 1/4" | 8040 | 24" |
| 60" | 6" | 0.174 | 5" | 2'-6" | 5'-0" | 3'-3" | 8'-3" | 8'-0" | 72 1/2" | 36 11/16" | 24" | 6 3/4" | 8750 | 24" |
| 66" | 6 1/2" | 0.174 | 5 1/2" | 2'-0" | 6'-6" | 1'-9" | 8'-3" | 8'-6" | 72" | 36 1/8" | 24" | 7 1/4" | 10630 | 24" |
| 72" | 7" | 0.174 | 6" | 2'-0" | 6'-6" | 1'-9" | 8'-3" | 9'-0" | 77 13/16" | 38 15/16" | 24" | 7 3/4" | 12520 | 24" |

## GENERAL NOTES

1. Flared end sections shall conform to the requirements of ASTM 76 with the exception that dimensions and reinforcement shall be as prescribed in the table above. Circumferential reinforcement may consist of either one cage or two cages of steel. Compressive strength of concrete shall be 4000 psi. Shop drawings for flared end sections having dimensions other than above must be submitted for approval to the Engineer of Drainage.

2. Connections between the flared end section and the pipe culvert may be any of the following types unless otherwise shown on the plans.

   a. Joints meeting the requirements of Section 941-1.5 of the Standard Specifications.

      The manufacturer of the flared end section shall identify the manufacturer of the pipe culvert and certify that the flared end section is suited to joining the pipe culvert.

   b. Joints sealed with preformed plastic gaskets.

      The gaskets shall meet the requirements of Section 942-2 of the Standard Specifications and the minimum sizes for gaskets shall be as that specified for equivalent sizes of elliptical pipe.

   c. Reinforced concrete jackets, as detailed on this drawing.

      Cost of the reinforced concrete jacket to be included in the contract unit price for the flared end section.

      When non-coated corrugated metal pipe is called for in the plans, the pipe shall be bituminous coated in the jacketed area as specified on Index DMD-01. Bituminous coating to be included in the contract unit price for the pipe culvert.

3. Toe walls shall be constructed when shown on the plans or at locations designated by the Engineer. Toe walls are to be cast in-place with Class I Concrete and paid for under the contract unit price for Class I Concrete (Miscellaneous). Reinforcing steel to be included in cost of toe wall.

4. Sodding shall be placed about the flared end section in accordance with Index GRC-01, and paid for under the contract unit price for Sodding.

5. On skewed pipe culverts the flared end sections shall be placed in line with the pipe culvert. Side slopes shall be warped as required to fit the flared end sections.

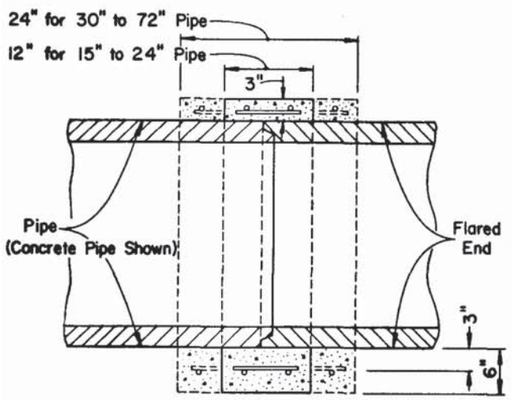


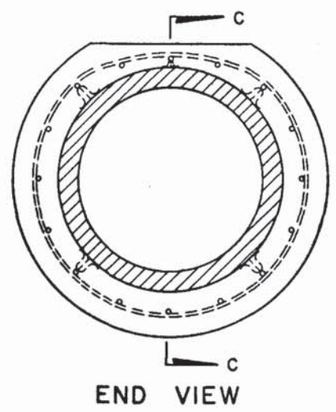


# REINFORCED CONCRETE JACKET DETAIL

## DESIGN NOTES

1. Flared end sections are intended for use outside the clear recovery area on median drain and cross drain installations.

   Flared end sections are not intended for side drain installations.

2. Reinforced concrete jackets shall be used at all locations where high velocities and/or highly erosive soils may cause disjointing. These locations will be shown on the plans.

3. Toe walls shall be used whenever the anticipated velocity of discharge and soil type are such that erosive action would occur. Toe walls are not required where ditch pavement is provided, except when disjointing would occur if the ditch pavement should fail.

FHWA APPROVED: 9-23-77

STATE OF FLORIDA DEPARTMENT OF TRANSPORTATION
ROAD DESIGN SECTION

# FLARED END SECTION FOR PIPE CULVERTS

| REVISIONS | | ROAD NO. | COUNTY | | PROJECT NO. |
|---|---|---|---|---|---|
| Dates | Descriptions | | | | |
| 9-77 | Redrawn & Sheet 2 Deleted | | | | |
| | | | Names | Dates | APPROVED BY |
| | | Designed by | E.G.R. | 9-77 | E H Hart |
| | | Checked by | J.V.G. | 9-77 | Deputy Design Engineer, Roadways |
| | | Drawn by | H.K.H. | 9-77 | Drawing No. 1 of 1 |
| | | Checked by | J.V.G. | 9-77 | Index No. DCE-04-1 |
| | | Supervised by | D.C.B. | | |

| FED. ROAD DIV. No. | STATE | PROJECT No. | FISCAL YEAR | SHEET No. |
|---|---|---|---|---|
| 3 | FLA. | | | |

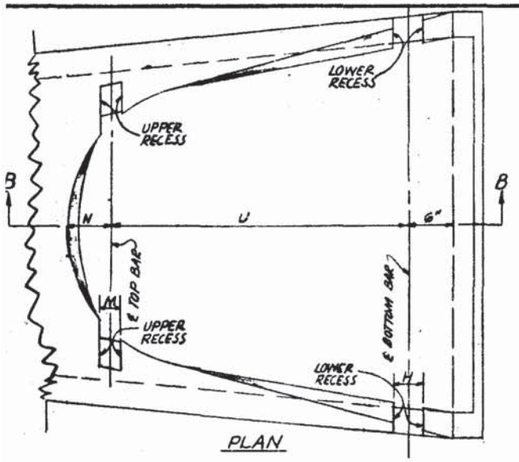


PLAN

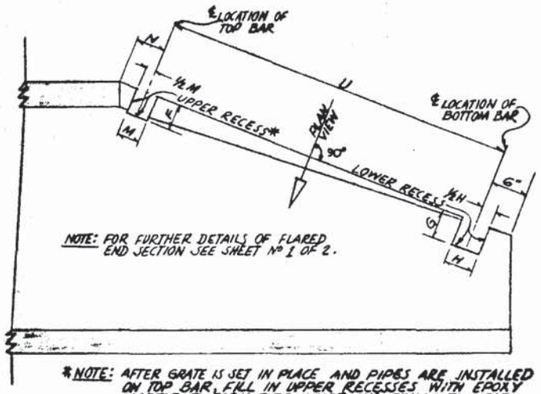


NOTE: FOR FURTHER DETAILS OF FLARED END SECTION SEE SHEET Nº 1 OF 2.

*NOTE: AFTER GRATE IS SET IN PLACE AND PIPES ARE INSTALLED ON TOP BAR, FILL IN UPPER RECESSES WITH EPOXY MORTAR TO FORM PIPE HINGE AND FINISH TO HEAT LINES OF FLARED END SECTION.

SECTION B-B

## MOUNTING DETAILS FOR STEEL HINGED GRATE

## TABLE OF DIMENSIONS AND QUANTITIES FOR ONE STEEL HINGED GRATE

| CULVERT DIAMETER | TOTAL POUNDS STEEL | END SECTION, MOUNTING DIMENSIONS | | | | | GRATE DIMENSIONS | | | | | | | PIPE (2 REQU'D) 1" DIA @ 1.68 LBS/L.F OR 1¼" DIA @ 2.27 LBS/L.F | | TOP BAR, CENTER BAR, SIDE BARS AND BARS X ¾" DIA. @ 1.50 LBS/L.F. OR 1" DIA. @ 2.67 LBS/L.F. LENGTH | | | | | BOTTOM BAR 1⅛" DIA @ 4.17 LBS/L.F OR 1¼" DIA @ 6.01 LBS/L.F. | | BARS Y ¾" DIA. @ 1.50 LBS/L.F. LENGTH | | | | |
|---|---|---|---|---|---|---|---|---|---|---|---|---|---|---|---|---|---|---|---|---|---|---|---|---|---|---|
| | | G | H | F | M | N | Q | R | S | T | U | V | W | DIA. | LENGTH | DIA. | TOP | CENTER | 2 EACH REQUIRED SIDE | X1 | X2 | DIA. | LENGTH | Y1 | Y2 | Y3 | Y4 | Y5 |
| 12" | 26.55 | 2⅜" | 2" | 2⅛" | 1½" | 3½" | 6" | 9⅜" | 4" | 1'-5" | 1'-4½" | 9½" | 10" | 1" | 8" | ¾" | 2' | 1'-6½" | 1'-7" | | | 1⅛" | 2'-10¼" | 8⅛" | 10¼" | | | |
| 15" | 31.12 | 2⅜" | 2" | 2⅛" | 1½" | 3¾" | 6" | 1'-3⅞" | 7⅛" | 1'-7⅛" | 1'-7⅜" | 9¾" | 10½" | 1" | 8½" | ¾" | 2'-0⅛" | 1'-9⅜" | 1'-9⅜" | | | 1⅛" | 3'-5⅛" | 9⅞" | 1'- ⅛" | | | |
| 18" | 35.71 | 2⅜" | 2" | 2⅛" | 1½" | 3¾" | 6" | 1'-7⅛" | 7⅛" | 1'-9" | 1'-8" | 10⅛" | 11" | 1" | 9" | ¾" | 2'-5⅛" | 1'-10" | 1'-11" | | | 1¼" | 3'-10⅛" | 1'-1" | 1'-5" | | | |
| 24" | 73.47 | 3" | 2" | 2¼" | 1½" | 4¼" | 6" | 2'-8" | 11¼" | 3'-2⅛" | 3'-0⅜" | 10¾" | 12" | 1" | 10" | ¾" | 2'-11½" | 3'-2⅜" | 3'-4⅛" | 3'-3" | | 1½" | 4'-11⅝" | 1'-3" | 1'-6⅛" | 1'-10" | 2'-1½" | 2'-3" |
| 30" | 116.66 | 3¼" | 2" | 2½" | 1½" | 4¾" | 1' | 3'-7⅝" | 1' | 4'-2⅜" | 3'-11⅜" | 11⅜" | 12½" | 1⅛" | 10½" | 1" | 3'-1" | 4'-1¾" | 4'-4½" | 4'-2⅜" | | 1½" | 6'-0⅞" | 1'-10" | 2'-6" | 3'-2" | | |
| 36" | 170.33 | 3½" | 2" | 2½" | 1½" | 6⅜" | 1' | 4'-7⅝" | 1'-3" | 4'-9⅞" | 4'-7¼" | 1' | 1'-1" | 1⅛" | 11" | 1" | 3'-11" | 4'-9⅜" | 5' | 4'-10" | 5'-0⅜" | 1½" | 7'-1¼" | 2'-6½" | 3'-2" | 3'-9½" | 4'-5" | |

## STEEL HINGED GRATE ~ USE CRITERIA

1. GRATED FLARED END SECTION TO BE USED ON PIPE CULVERTS WHEN OUTSIDE OF THE CLEAR RECOVERY AREA AND WHEN ANY OF THE FOLLOWING CONDITIONS EXIST.
   - A. DRAINAGE AREA TO CULVERT CONSISTS OF MEDIAN OR INFIELD AREAS OR AREAS WHERE DEBRIS AND/OR DRIFT IS NEGLIGIBLE.
   - B. RUNOFF TO CULVERT IS BY SHEET FLOW OR IN SUCH ILL DEFINED CHANNELS THAT DEBRIS TRANSPORT IS NOT CONSIDERED A MAJOR PROBLEM.
   - C. RUNOFF TO CULVERT IS MINOR EXCEPT ON AN INFREQUENT BASIS (10 TO 15 YEAR FREQUENCY); FOR EXAMPLE A DRAINAGE BASIN IN FLAT SANDY TERRAIN WITH NORMALLY LOW GROUND WATER TABLE.
   - D. AREAS WHERE CULVERT BLOCKAGE WITH RESULTANT BACKWATER WOULD NOT SERIOUSLY AFFECT ROADWAY EMBANKMENT, TRAFFIC OPERATION OR UPLAND PROPERTY.
2. STEEL HINGED GRATE TO BE USED ONLY WHERE CALLED FOR IN PLANS AND ONLY WHERE THE CULVERT DIAMETER IS EITHER 12", 15", 18", 24", 30" OR 36".

## GENERAL NOTES

1. ALL STEEL FOR HINGED GRATE SHALL BE ROUND SMOOTH BARS OF A.S.T.M.-A-36 AND ROUND PIPE OF A.S.T.M.-A-501, HOT DIP GALVANIZED.
2. AFTER FABRICATION GRATE SHALL BE STRAIGHTENED AS REQUIRED, THEN GALVANIZED PER A.S.T.M.-A-123.
3. THE UPPER AND LOWER RECESSES SHOWN IN MOUNTING DETAILS MAY BE EITHER CAST INTO THE FLARED END SECTION DURING MANUFACTURE OR CUT IN FIELD TO THE NEAT LINES SHOWN.
4. COST OF HINGED GRATE TO BE PAID FOR AS ENDWALL GRATE PER POUND.
5. ALL WELDS SHOULD BE IN ACCORDANCE WITH ARTICLE 460-6 OF THE STANDARD SPECIFICATIONS.

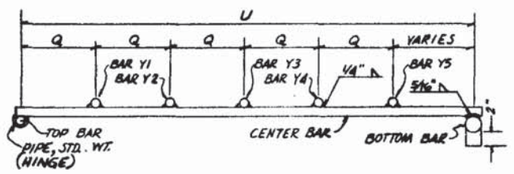


SECTION A-A

NOTE: ALL STEEL HINGED GRATES REQUIRE EXACTLY 2 PIPE HINGES, 1 TOP BAR, 1 CENTER BAR, 1 BOTTOM BAR, AND 2 SIDE BARS. THE NUMBER OF BARS X AND BARS Y REQUIRED VARIES AS SHOWN IN THE TABLE ABOVE. DETAILS SHOWN ARE SCHEMATIC AND SHOW THE MAXIMUM NO. OF BARS X AND BARS Y

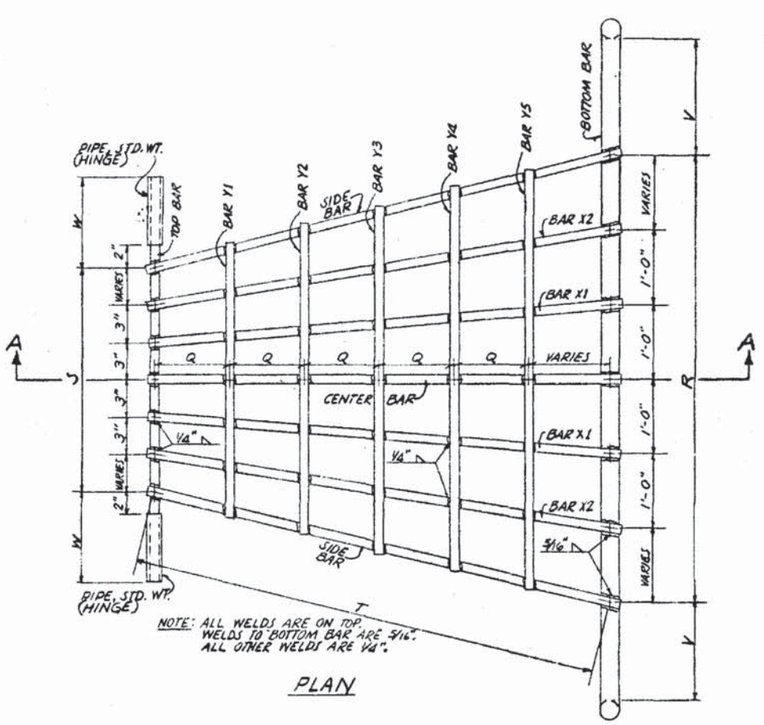


NOTE: ALL WELDS ARE ON TOP. WELDS TO BOTTOM BAR ARE 5/16". ALL OTHER WELDS ARE ¼".

PLAN

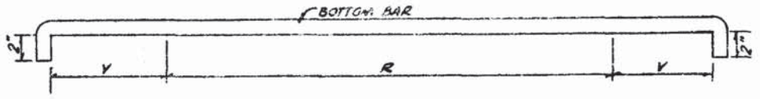


## BENDING DETAIL ~ FOR BOTTOM BAR

## DETAILS OF STEEL HINGED GRATE FOR FLARED END SECTION

FHWA APPROVED: 3-20-75

FLORIDA DEPARTMENT OF TRANSPORTATION
ROADWAY PLANS SECTION

FLARED END SECTION FOR PIPE CULVERTS

| REVISIONS | | ROAD NO. | COUNTY | | PROJECT NO. |
|---|---|---|---|---|---|
| Dates | Descriptions | | | | |
| 3/79 LMF | Added Cl. I Conc. to Sh. 1 | | | | |
| 10-74 | Changed Index Nº | | Names | Dates | Recommended for Approval by: E. W. Hart, State Design Engineer |
| | | Designed by | C.D.P. | 9-71 | |
| | | Checked by | L.M.F. | 9-71 | APPROVED BY: [illegible], State Design Engineer |
| | | Quantities by | C.D.R. | 9-71 | |
| | | Checked by | L.M.F. | 9-71 | Drawing No. 2 of 2 |
| | | Supervised by | L.M.F. | | Index No. DCE-04 |

| FED. ROAD DIV. No. | STATE | PROJECT NO. | FISCAL YEAR | SHEET NO. |
|---|---|---|---|---|
| 3 | FLA. | | | |

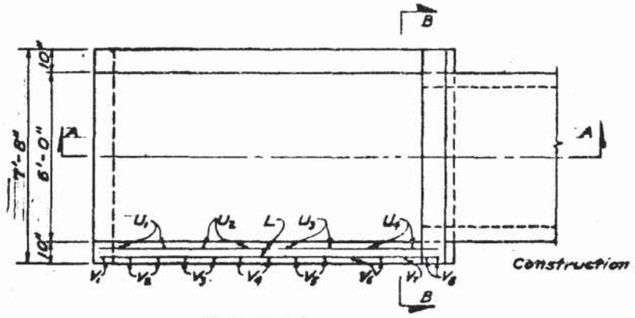


PLAN

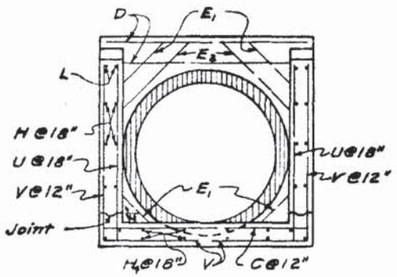


SECTION B-B

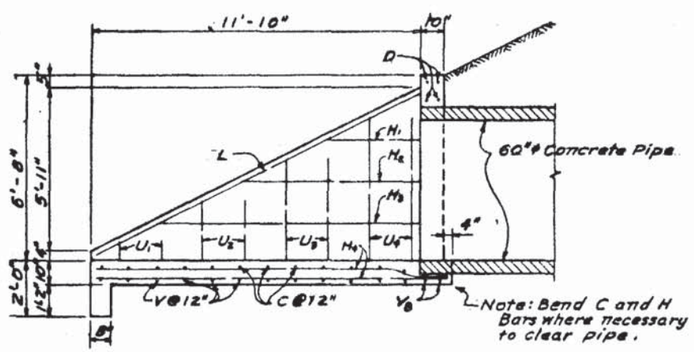


SECTION A-A

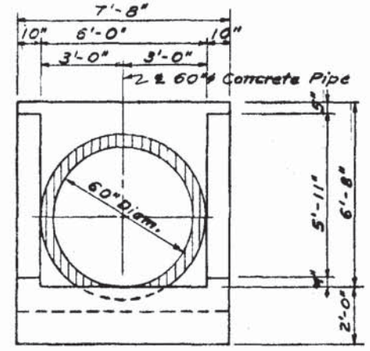


END ELEVATION

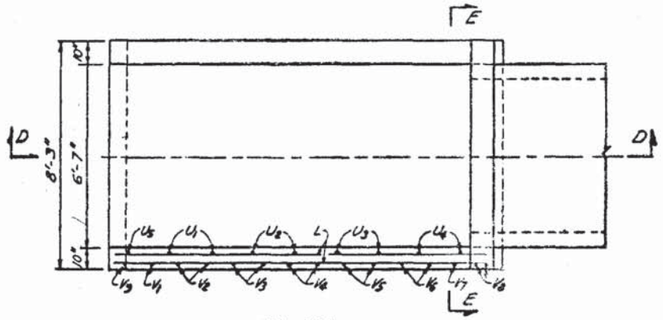


PLAN

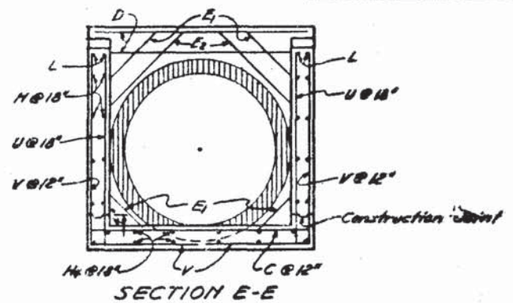


SECTION E-E

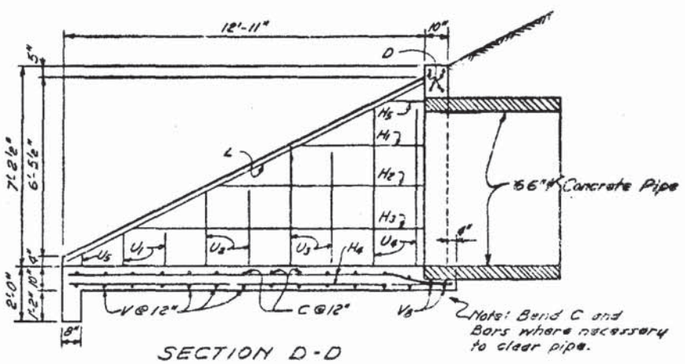


SECTION D-D

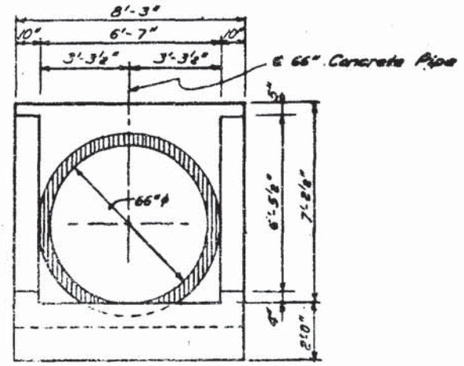


END ELEVATION

## BILL OF REINFORCING STEEL

| MARK | SIZE | NO. REQ'D | LENGTH | LOCATION | BENDING |
|---|---|---|---|---|---|
| C | 4 | 14 | 7'-4" | Slab | Straight |
| D | 4 | 4 | 7'-4" | Headwall | " |
| $E_1$ | 4 | 8 | 3'-3" | " | " |
| $E_2$ | 4 | 4 | 4'-4" | " | " |
| $H_1$ | 4 | 4 | 4'-1" | Wings | " |
| $H_2$ | 4 | 4 | 7'-1" | " | " |
| $H_3$ | 4 | 4 | 10'-1" | " | " |
| $H_4$ | 4 | 12 | 12'-8" | Slab | " |
| L | 4 | 4 | 13'-9" | Wings | " |
| $U_1$ | 4 | 4 | 1'-3" | " | " |
| $U_2$ | 4 | 4 | 2'-9" | " | " |
| $U_3$ | 4 | 4 | 4'-3" | " | " |
| $U_4$ | 4 | 4 | 5'-9" | " | " |
| $V_1$ | 4 | 2 | 4'-4" | Wings & Slab | See Diagram |
| $V_2$ | 4 | 4 | 4'-10" | " " | " " |
| $V_3$ | 4 | 4 | 5'-10" | " " | " " |
| $V_4$ | 4 | 4 | 6'-10" | " " | " " |
| $V_5$ | 4 | 4 | 7'-10" | " " | " " |
| $V_6$ | 4 | 4 | 8'-10" | " " | " " |
| $V_7$ | 4 | 2 | 9'-10" | " " | " " |
| $V_8$ | 4 | 4 | 10'-7" | " " | " " |

## ESTIMATED QUANTITIES

| ITEM | UNIT | QUANTITY |
|---|---|---|
| Concrete, Class II | Cu. Yd. | 6.39 |
| Reinforcing Steel | Lb. | 488 |

## BENDING DIAGRAMS

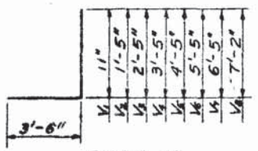


BARS V

Note: Bar dimensions are given out to out.

CONCRETE ENDWALL WITH U-TYPE WINGS FOR 60"ϕ CONCRETE PIPE

## BILL OF REINFORCING STEEL

| MARK | SIZE | NO. REQD | LENGTH | LOCATION | BENDING |
|---|---|---|---|---|---|
| C | 4 | 15 | 7'-11" | Slab | Straight |
| D | 4 | 4 | 7'-11" | Headwall | " |
| $E_1$ | 4 | 8 | 3'-6" | " | " |
| $E_2$ | 4 | 4 | 4'-8" | " | " |
| $H_1$ | 4 | 4 | 5'-2" | Wings | " |
| $H_2$ | 4 | 4 | 8'-2" | " | " |
| $H_3$ | 4 | 4 | 11'-2" | " | " |
| $H_4$ | 4 | 12 | 13'-9" | Slab | " |
| $H_5$ | 4 | 4 | 2'-3" | Wings | " |
| L | 4 | 4 | 15'-1" | " | " |
| $U_1$ | 4 | 4 | 1'-10" | " | " |
| $U_2$ | 4 | 4 | 3'-4" | " | " |
| $U_3$ | 4 | 4 | 4'-10" | " | " |
| $U_4$ | 4 | 4 | 6'-4" | " | " |
| $U_5$ | 4 | 2 | 1'-1" | " | " |
| $V_1$ | 4 | 2 | 5'-4" | Wing & Slab | See Diagram |
| $V_2$ | 4 | 4 | 5'-10" | " " | " " |
| $V_3$ | 4 | 4 | 6'-10" | " " | " " |
| $V_4$ | 4 | 4 | 7'-10" | " " | " " |
| $V_5$ | 4 | 4 | 8'-10" | " " | " " |
| $V_6$ | 4 | 4 | 9'-10" | " " | " " |
| $V_7$ | 4 | 2 | 10'-10" | " " | " " |
| $V_8$ | 4 | 4 | 11'-6" | " " | " " |
| $V_9$ | 4 | 2 | 4'-10" | " " | " " |

## ESTIMATED QUANTITIES

| ITEM | UNIT | QUANTITY |
|---|---|---|
| Concrete, Class II | Cu. Yd | 7.43 |
| Reinforcing Steel | Lb. | 535 |

## BENDING DIAGRAMS

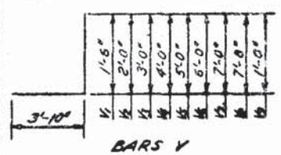


BARS V

Note: All bar dimensions are out-to-out.

Note: For sodding around endwall see detail on Index No. GAC-01.

CONCRETE ENDWALL WITH U-TYPE WINGS FOR 66"ϕ CONCRETE PIPE

FHWA APPROVED: 3-20-75

FLORIDA DEPARTMENT OF TRANSPORTATION
ROADWAY PLANS SECTION

# U-ENDWALL FOR 60" and 66" PIPE CULVERT

| REVISIONS | | ROAD NO. | COUNTY | PROJECT NO. |
|---|---|---|---|---|
| Date | Description | | | |
| 11-60 | Endwall for 66"ϕ Pipe added. | | | |
| 8-70 | Raised side slope to top of endwall | Designed by | M.A.A. | 5-70 |
| | | Detailed by | A.L.T. | 7-70 |
| | | Checked by | M.G.L. | 7-70 |
| | | Quantities by | A.L.T. | 11-60 |
| | | Checked by | M.C.L. | 7-70 |
| | | Traced by | A.L.T. | 11-60 |
| L.M.F. | To top of endwall | Designed by | M.A.A. | 5-70 |
| | | Detailed by | A.L.T. | 7-70 |
| | | Checked by | M.G.L. | 7-70 |
| | | Quantities by | A.L.T. | 11-60 |
| | | Checked by | M.C.L. | 7-70 |
| | | Traced by | A.L.T. | 11-60 |
| 3-75 | Added Class II Conc. | Designed by | M.A.A. | 5-70 |
| | | Detailed by | A.L.T. | 7-70 |
| | | Checked by | M.G.L. | 7-70 |
| | | Quantities by | A.L.T. | 11-60 |
| | | Checked by | M.C.L. | 7-70 |
| | | Traced by | A.L.T. | 11-60 |
| 10-74 | Changed Index No. | Designed by | M.A.A. | 5-70 |
| | | Detailed by | A.L.T. | 7-70 |
| | | Checked by | M.G.L. | 7-70 |
| | | Quantities by | A.L.T. | 11-60 |
| | | Checked by | M.C.L. | 7-70 |
| | | Traced by | A.L.T. | 11-60 |

Approved by:

Deputy Design Engineer-Roadways

Drawing No. 1 of 1

Index No. DCE-05

| FED. ROAD DIV. No. | STATE | PROJECT NO. | FISCAL YEAR | SHEET NO. |
|---|---|---|---|---|
| 3 | FLA | | | |

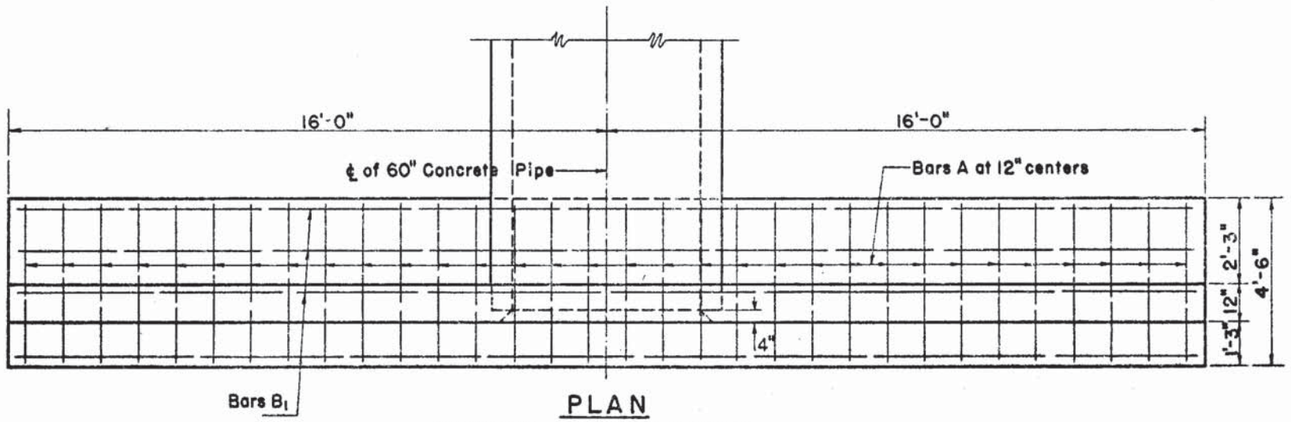


PLAN
SHOWING BARS IN FOOTING

| BILL OF REINFORCING STEEL | | | | | |
|---|---|---|---|---|---|
| MARK | SIZE | Nº REQ'D. | LENGTH | LOCATION | BENDING |
| A | Nº 4 | 32 | 5'-3" | Footing | Bend |
| $B_1$ | Nº 4 | 14 | 31'-6" | Footing and Wall | Straight |
| $B_2$ | Nº 4 | 4 | 12'-4" | Wall | Straight |
| $B_3$ | Nº 4 | 4 | 13'-9" | Wall | Straight |
| C | Nº 4 | 26 | 10'-3" | Wall | Bend |
| D | Nº 4 | 18 | 7'-10" | Wall | Straight |
| E | Nº 4 | 8 | 1'-8" | Footing and Wall | Straight |

BENDING DIAGRAMS




NOTE: All bar dimensions are out to out

| ESTIMATED QUANTITIES | | |
|---|---|---|
| ITEM | UNIT | QUANTITY |
| Concrete Class II | Cu. Yd. | 13.56 |
| Reinforcing Steel | Pound | 758 |

*Note: For sodding around endwall see detail on Index no. GRC-01.*

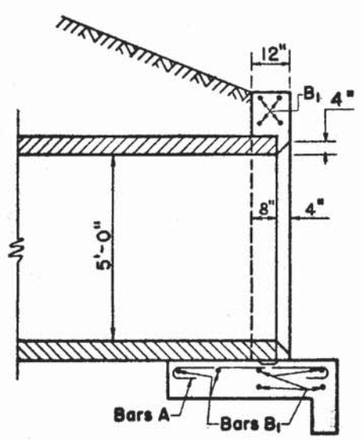


SECTION A-A

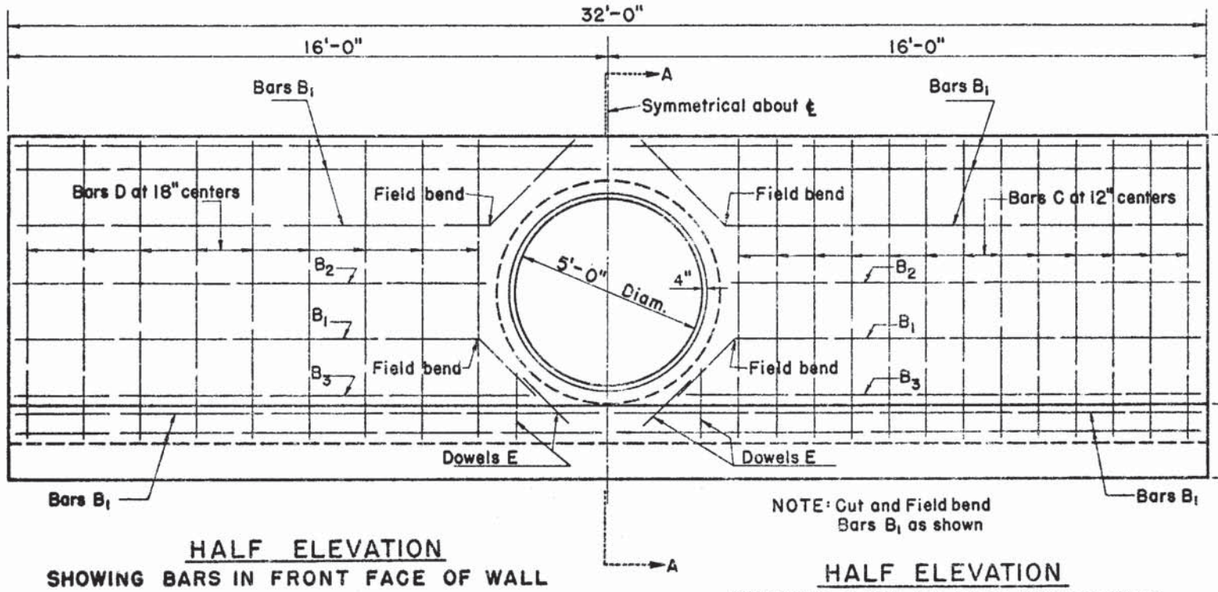


HALF ELEVATION
SHOWING BARS IN FRONT FACE OF WALL

NOTE: Cut and Field bend Bars $B_1$ as shown

HALF ELEVATION
SHOWING BARS IN BACK FACE OF WALL

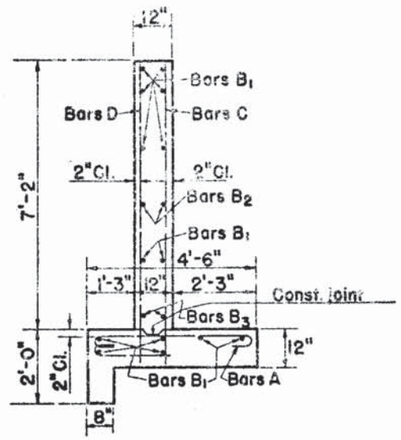


TYPICAL SECTION
THRU ENDWALL

-GENERAL NOTES-

DESIGN SPECIFICATIONS: A.A.S.H.O., 1973

CHAMFER: All exposed edges and corners to be chamfered $\frac{3}{4}$" unless otherwise shown

REINFORCING STEEL: Grade 40 or 60

FHWA APPROVED: 3-20-75

FLORIDA DEPARTMENT OF TRANSPORTATION
ROADWAY PLANS SECTION

# STANDARD ENDWALL FOR 60" CONCRETE PIPE

| REVISIONS | | ROAD NO. | COUNTY | PROJECT NO. |
|---|---|---|---|---|
| 8-65 | Redrawn and Traced-H.W. | | | |
| 7-72 | Raised side slope L.M.A's top of headwall | | | |
| 3-73 | Added Cl. II Conc. | | | |
| 10-74 | Changed Index No. | | | |

| | Names | Dates |
|---|---|---|
| Detailed by | T.W.J. | 11-49 |
| Checked by | W.H.M. | 11-49 |
| Quantities by | R.G.L. | 11-49 |
| Checked by | | |
| Traced by | | |

Approved by:

Deputy Design Engineer-Roadways

INDEX NO. DCE-06

| FED. ROAD DIV. NO. | STATE | PROJECT NO. | FISCAL YEAR | SHEET NO. |
|---|---|---|---|---|
| 3 | FLA. | | | |

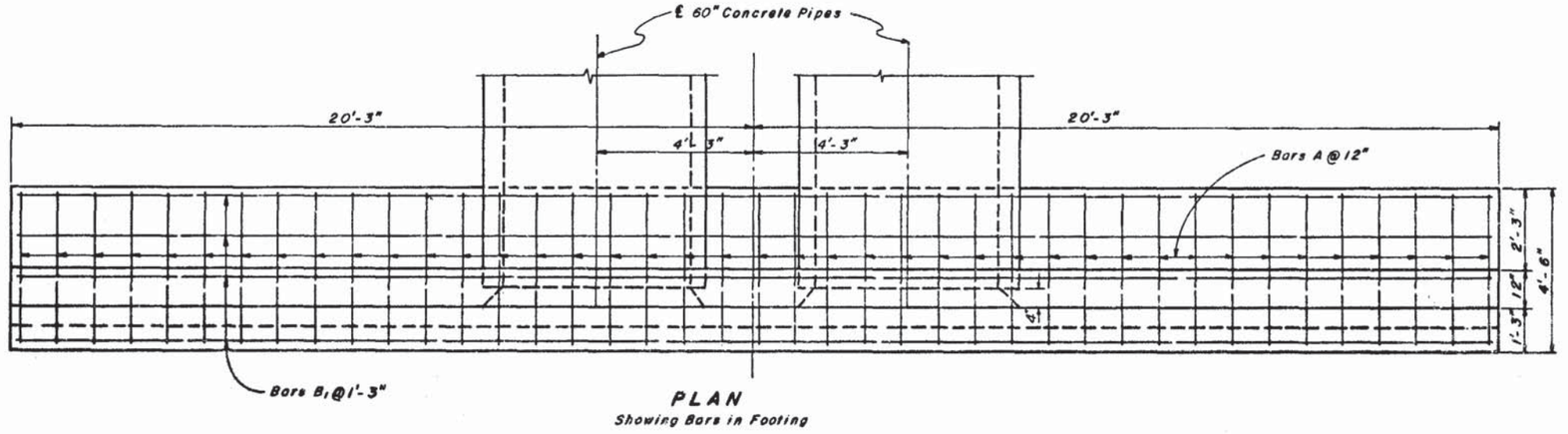


PLAN
Showing Bars in Footing

## BILL OF REINFORCING STEEL

| MARK | SIZE | No. REQ'D. | LENGTH | LOCATION | BENDING |
|---|---|---|---|---|---|
| A | 4 | 41 | 5'-3" | Footing | Bend |
| $B_1$ | 4 | 10 | 40'-2" | Footing & Wall | Straight |
| $B_2$ | 4 | 4 | 12'-6" | Wall | Straight |
| $B_3$ | 4 | 4 | 13'-9" | Wall | Straight |
| $B_4$ | 4 | 4 | 6'-0" | Wall | Field Bend |
| $B_5$ | 4 | 2 | 2'-2" | Wall | Straight |
| $B_6$ | 4 | 8 | 15'-0" | Wall | Field Bend |
| C | 4 | 29 | 10'-3" | Footing & Wall | Bend |
| D | 4 | 20 | 7'-10" | Footing & Wall | Straight |
| E | 4 | 16 | 1'-8" | Footing & Wall | Straight |

## BENDING DIAGRAMS

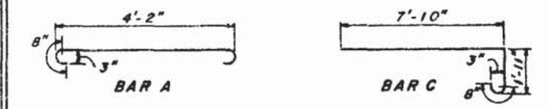


NOTE: All Bar dimensions are out to out.

## ESTIMATED QUANTITIES

| ITEM | UNIT | QUANTITY |
|---|---|---|
| Class II Concrete | Cu. Yd. | 16.39 |
| Reinforcing Steel | Lb. | 901 |
| | | |

Note: For sodding around endwall, see detail on Index No. GRC-01.

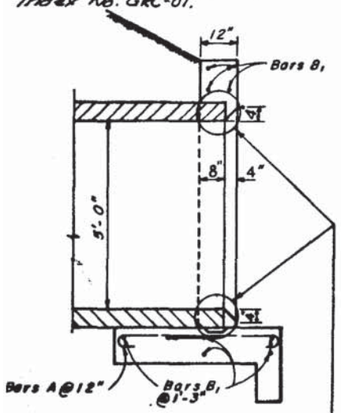


SECTION A-A



ALTERNATE ENTRANCE

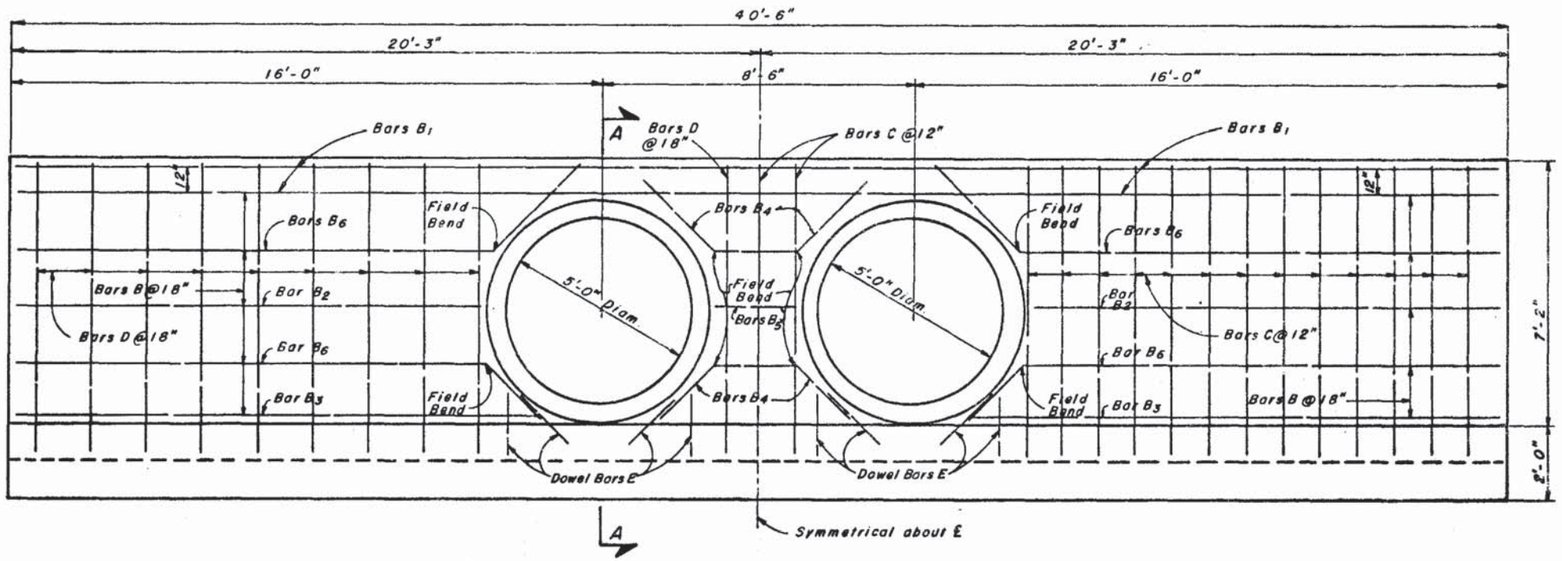


HALF ELEVATION
Showing Bars in Front Face of Wall

HALF ELEVATION
Showing Bars in Back Face of Wall

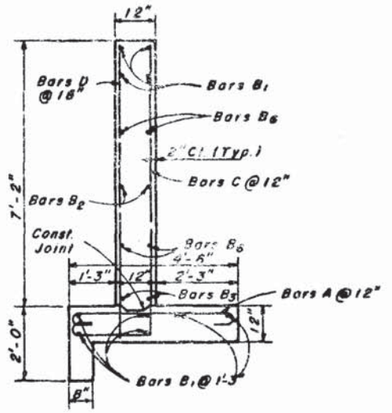


TYPICAL SECTION
THRU ENDWALL

## GENERAL NOTES

DESIGN SPECIFICATIONS: A.A.S.H.O. 1973
CHAMFER: All Exposed Edges and Corners to be Chamfered 3/4" unless otherwise shown.
MAXIMUM WORKING STRESSES:
Class II Concrete 1360PSI
Reinforcing Steel 20,000PSI
REINFORCING STEEL: Grade 40 or 60

FHWA APPROVED: 3-20-75

| REVISIONS | |
|---|---|
| Date | Description |
| 3/75 | Added Class II Conc. |
| 10-74 | Changed Index No. |

STATE OF FLORIDA DEPARTMENT OF TRANSPORTATION
STRUCTURES

# STANDARD ENDWALL FOR DOUBLE 60" CONCRETE PIPE

| ROAD NO. | COUNTY | PROJECT NO. |
|---|---|---|
| | | |

| | Names | Dates |
|---|---|---|
| Designed by | J.B.L. | 1-72 |
| Checked by | M.C.C. | 2-72 |
| Quantities by | J.B.L. | 1-72 |
| Checked by | M.C.C. | 2-72 |
| Supervised by | P.W.B. | |

APPROVED BY
Deputy Design Engineer, Structures

Drawing No. 1 of 1
Index No. DCE-07

| FED. ROAD DIV. No. | STATE | PROJECT NO. | FISCAL YEAR | SHEET NO. |
|---|---|---|---|---|
| 3 | FLA. | | | |

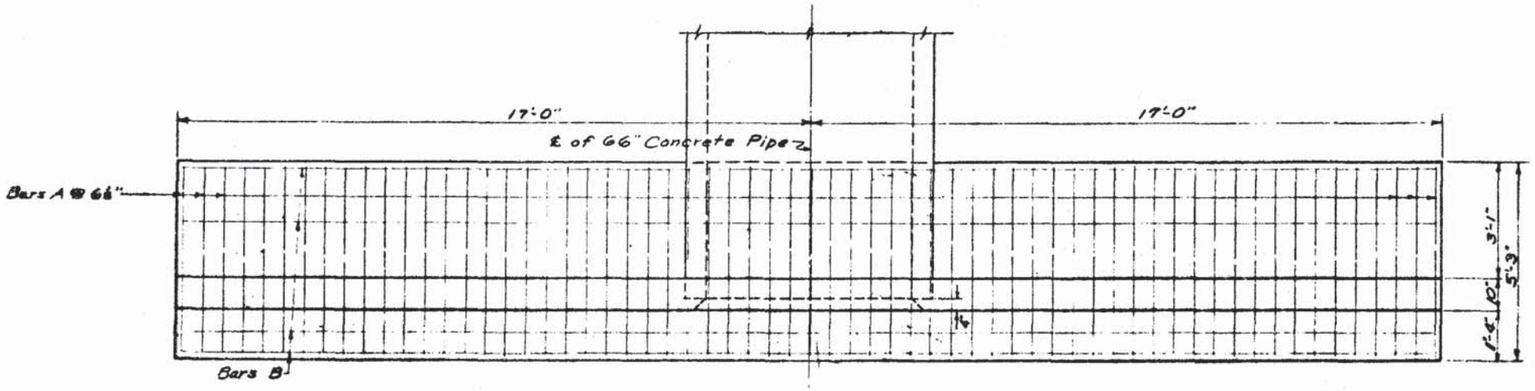


PLAN
(SHOWING BARS IN FOOTING)

## BILL OF REINFORCING STEEL

| MARK | SIZE | No. REQ'D | LENGTH | LOCATION | BENDING |
|---|---|---|---|---|---|
| A | 5 | 63 | 4'-11" | Footing | Straight |
| B | 4 | 17 | 33'-8" | Footing & Wall | " |
| C | 5 | 34 | 9'-10" | Wall | Bend |
| D | 4 | 20 | 8'-1" | " | Straight |
| E | 4 | 4 | 1'-8" | " | " |

## BENDING DIAGRAMS

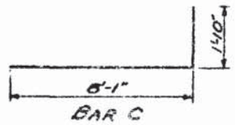


BAR C

Note: All bar dimensions are out to out

## ESTIMATED QUANTITIES

| ITEM | UNIT | QUANTITY |
|---|---|---|
| Concrete, Class II | Cu. Yd. | 12.60 |
| Reinforcing Steel | Lb. | 1167 |

Note: For sodding around endwall see Index No. GRC-01

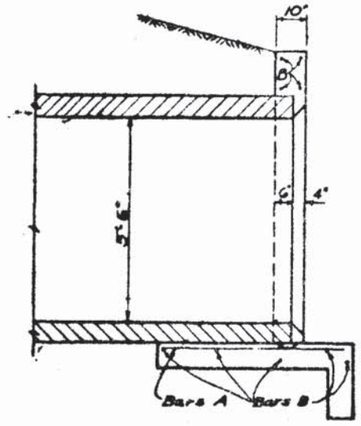


SECTION A-A

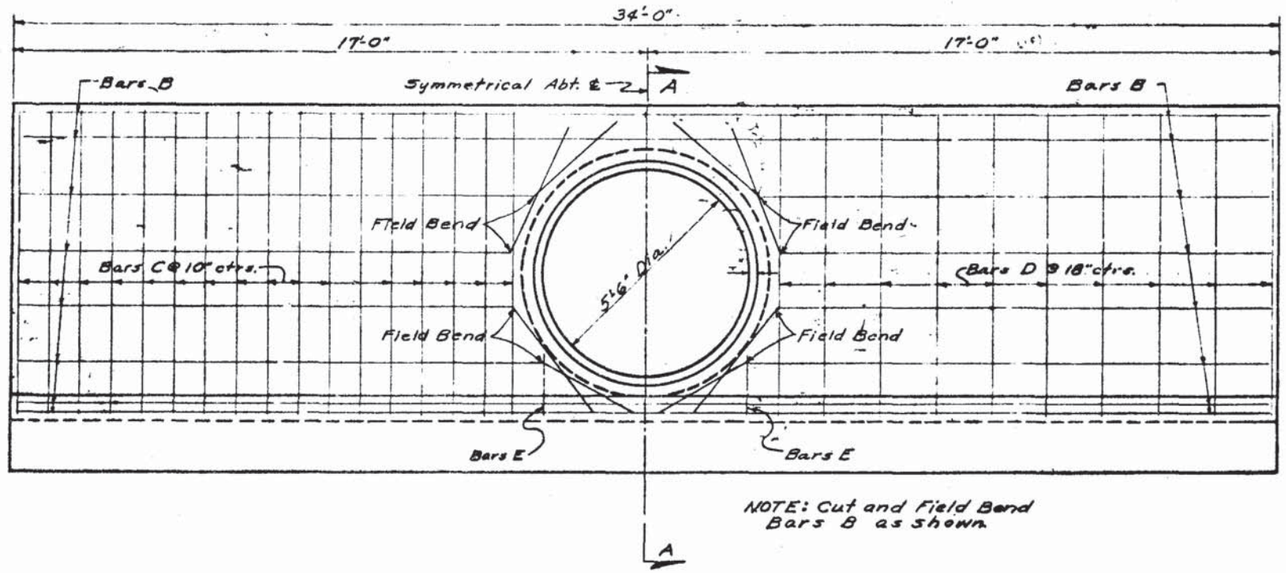


NOTE: Cut and Field Bend Bars B as shown.

HALF ELEVATION
(SHOWING BARS IN BACK FACE OF WALL)

HALF ELEVATION
(SHOWING BARS IN FRONT FACE OF WALL)

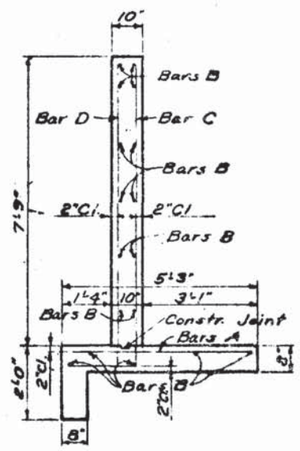


TYPICAL SECTION
THRU ENDWALL

## - GENERAL NOTES -

DESIGN SPECIFICATIONS: AASHO., 1973
CHAMFER: All exposed edges and corners to be chamfered ¾" unless otherwise noted
REINFORCING STEEL: Grade 40 or 60

FHWA APPROVED: 3-20-75

FLORIDA DEPARTMENT OF TRANSPORTATION
ROADWAY PLANS SECTION

# STANDARD ENDWALL FOR 66" CONCRETE PIPE

| REVISIONS | | ROAD NO. | COUNTY | | PROJECT NO. |
|---|---|---|---|---|---|
| Date | Descriptions | | | | |
| 8-70 | Raised side slope | | Names | Dates | Approved by: |
| LMF | to top of endwall | Detailed by | J.L.W | 3-54 | |
| 3-79 | Added Class II Conc. | Checked by | R.C.B. | 3-54 | |
| 10-74 | Changed Index No. | Quantities by | J.L.W | 3-54 | |
| | | Checked by | R.C.B. | 3-54 | Deputy Design Engineer - Roadways |
| | | Traced by | J.L.W | 3-54 | Drawing No. 1 of 1 — Index No. DCE-08 |

| FED. ROAD DIV. No. | STATE | PROJECT NO. | FISCAL YEAR | SHEET NO. |
|---|---|---|---|---|
| 3 | FLA. | | | |

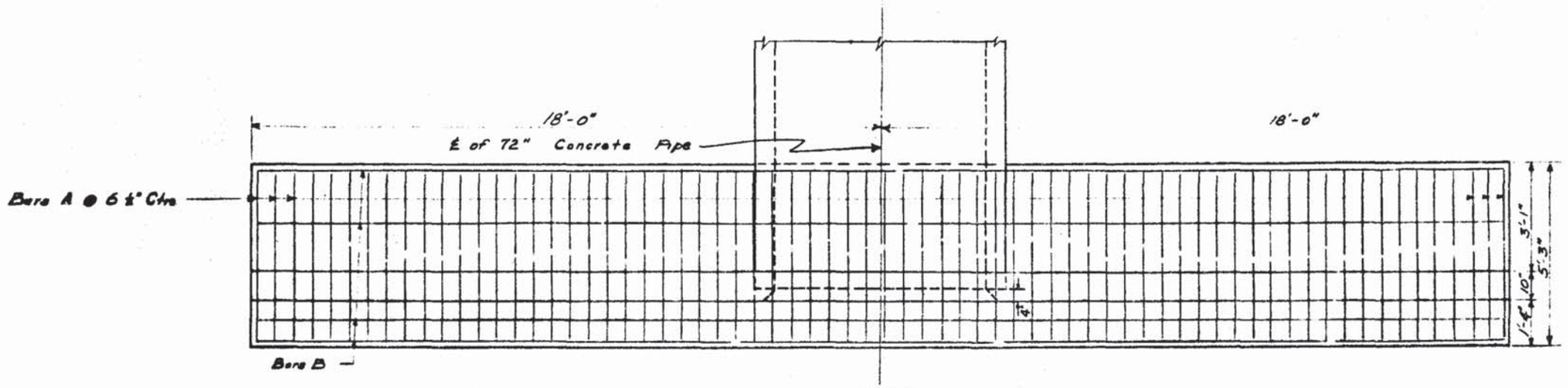


PLAN
SHOWING BARS IN FOOTING

## BILL OF REINFORCING STEEL

| Mark | Size | No. Req'd | Length | Location | Bending |
|---|---|---|---|---|---|
| A | 5 | 68 | 4'-11" | Footing | Straight |
| B | 4 | 17 | 35'-8" | Footing & Wall | " |
| C | 5 | 34 | 10'-5" | Wall | Bend |
| D | 4 | 20 | 8'-7" | Wall | Straight |
| E | 4 | 4 | 2'-6" | Wall | " |
| F | 4 | 4 | 1'-6" | Wall | " |

BENDING DIAGRAMS




BAR C

Note: All bar dimensions are out to out.

## ESTIMATED QUANTITIES

| Item | Unit | Quantity |
|---|---|---|
| Concrete Class II | Cu. Yd. | 13.76 |
| Reinforcing Steel | Lb. | 1249 |

Note: For sodding around endwall see Index No. GRC-01.

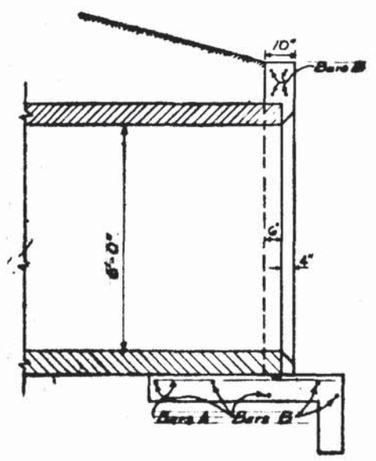


SECTION A-A

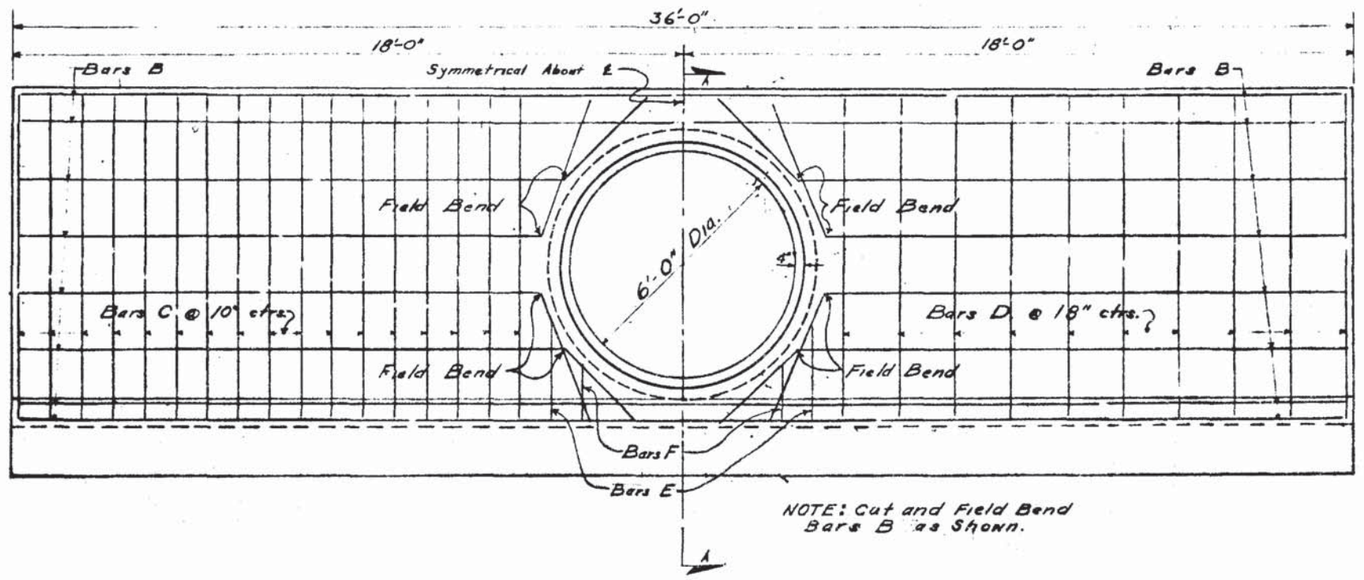


NOTE: Cut and Field Bend Bars B as Shown.

HALF ELEVATION
SHOWING BARS IN BACK FACE OF WALL

HALF ELEVATION
SHOWING BARS IN FRONT FACE OF WALL

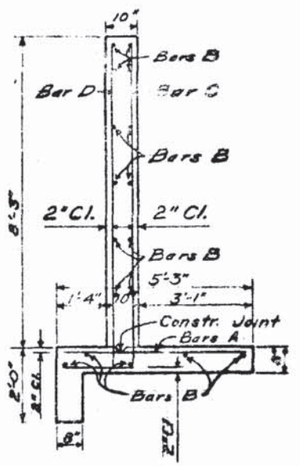


TYPICAL SECTION
THRU ENDWALL

## GENERAL NOTES

DESIGN SPECIFICATIONS: A.A.S.H.O., 1973
CHAMFER: All exposed edges and corners to be chamfered ¾" unless otherwise noted.
REINFORCING STEEL: Grade 40 or 60

FHWA APPROVED: 3-20-75

FLORIDA DEPARTMENT OF TRANSPORTATION
ROADWAY PLANS SECTION

STANDARD ENDWALL FOR 72" CONCRETE PIPE

| REVISIONS | | ROAD NO. | COUNTY | PROJECT NO. |
|---|---|---|---|---|
| Date | Descriptions | | | |
| 8-70 LMF | Raised side slope to top of endwall | | | |
| 3-73 | Added Class II Conc. | | Name | Date |
| 10-74 | Changed Index No. | Detailed by | EVC | 10-55 |
| | | Checked by | WHW | 10-55 |
| | | Quantities by | EVC | 10-55 |
| | | Checked by | WHW | 10-55 |
| | | Traced by | EVC | 10-55 |

APPROVED BY
J. W. Jernigan
Engineer of Bridge Design

Assistant State Highway Engineer

Drawing No. 1 of 1 | Index No. DCE-09

| FED. ROAD DIV. NO. | STATE | PROJECT NO. | FISCAL YEAR | SHEET NO. |
|---|---|---|---|---|
| 3 | FLA. | | | |

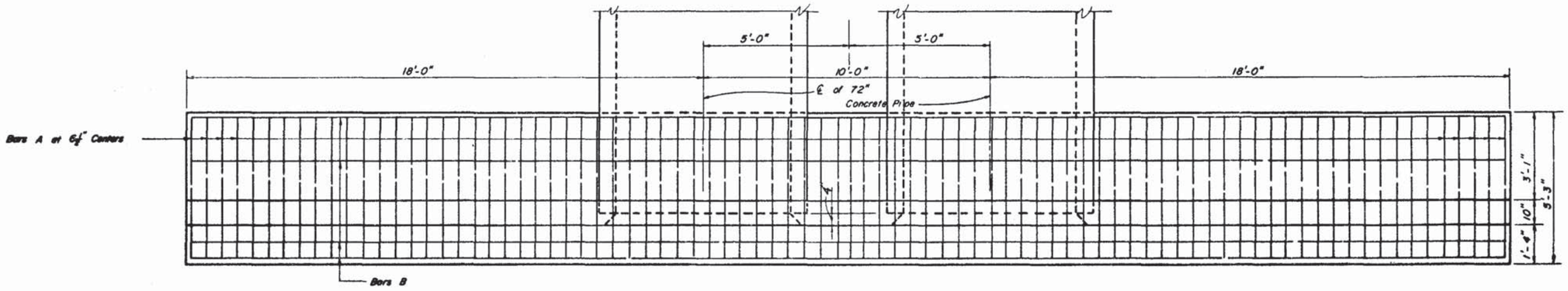


PLAN
(SHOWING BARS IN FOOTING)

NOTE: For sodding around endwall see Index No. GRC-01.

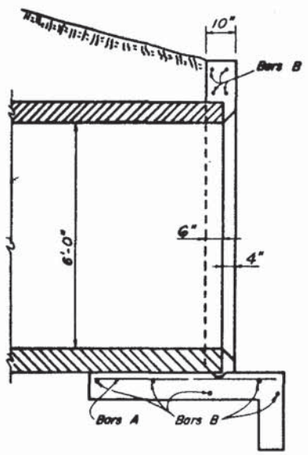


SECTION A-A

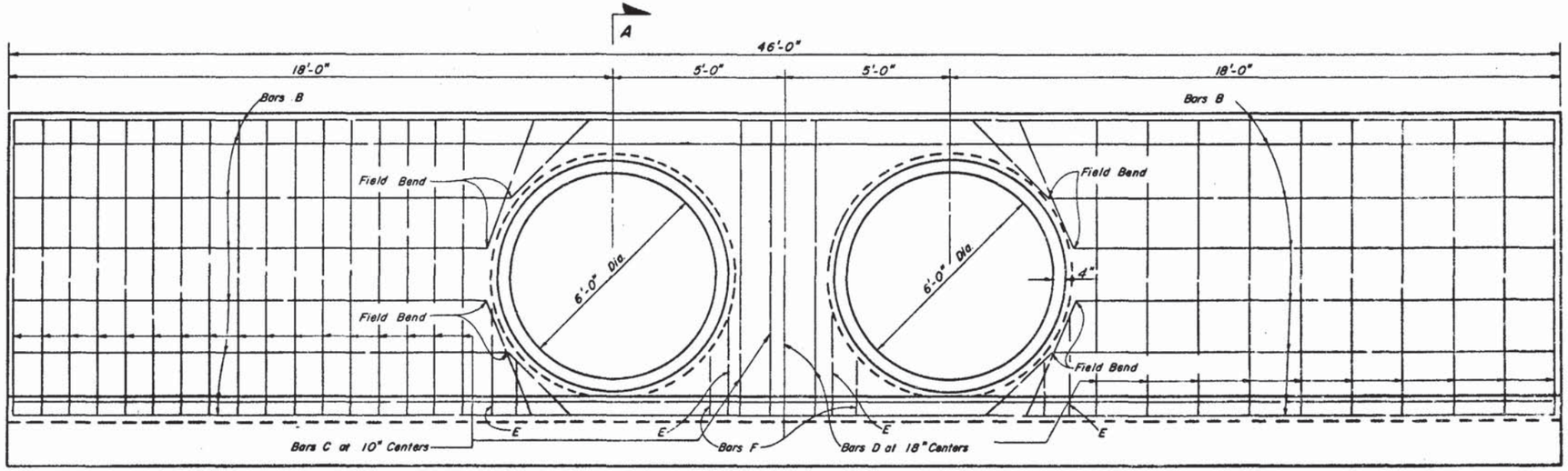


NOTE: Cut and Field Bend Bars B as shown.

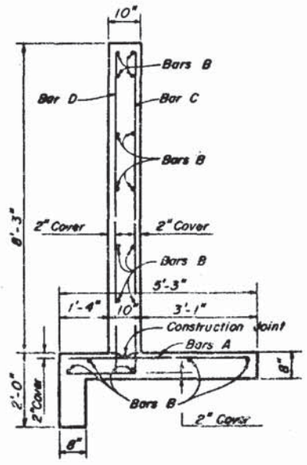


TYPICAL SECTION THRU ENDWALL

HALF ELEVATION
(SHOWING BARS IN BACK FACE OF WALL)

HALF ELEVATION
(SHOWING BARS IN FRONT FACE OF WALL)

BILL OF REINFORCING STEEL

| Mark | Size | No. Req'd. | Length | Location | Bending |
|---|---|---|---|---|---|
| A | 5 | 85 | 4'-11" | Footing | Straight |
| B | 4 | 17 | 45'-8" | Footing & Wall | " |
| C | 5 | 38 | 10'-5" | Wall | Bend |
| D | 4 | 23 | 8'-7" | Wall | Straight |
| E | 4 | 8 | 2'-6" | Wall | " |
| F | 4 | 8 | 1'-6" | Wall | " |

BENDING DIAGRAM

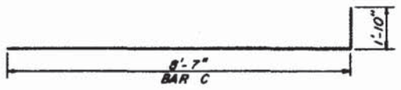


NOTE: All Bar dimensions are out-to-out.

ESTIMATED QUANTITIES

| Item | Unit | Quantity |
|---|---|---|
| Class II Concrete | Cu. Yd. | 16.74 |
| Reinforcing Steel | Lb. | 1519 |
| | | |

GENERAL NOTES

DESIGN SPECIFICATIONS: A.A.S.H.O. 1973
CHAMFER: All exposed edges and corners to be chamfered ¾" unless otherwise noted.
REINFORCING STEEL: Grade 40 or 60

FHWA APPROVED: 7-7-75

STATE OF FLORIDA DEPARTMENT OF TRANSPORTATION
ROADWAY PLANS SECTION

# ENDWALL FOR DOUBLE 72" PIPE

| REVISIONS | | ROAD NO. | COUNTY | PROJECT NO. |
|---|---|---|---|---|
| Dates | Descriptions | | | |
| | | | | |

| | Names | Dates |
|---|---|---|
| Designed by | G.F.G. | 1-75 |
| Checked by | W.H.W. | 1-75 |
| Quantities by | G.F.G. | 1-75 |
| Checked by | W.H.W. | 1-75 |
| Supervised by | S.P.J. | |

Approved by:
Deputy Design Engineer - Roadways

Drawing No. 1 of 1
Index No. DCE-10

| FED. ROAD DIV. No. | STATE | PROJECT No. | FISCAL YEAR | SHEET No. |
|---|---|---|---|---|
| 2 | FLA. | | | |

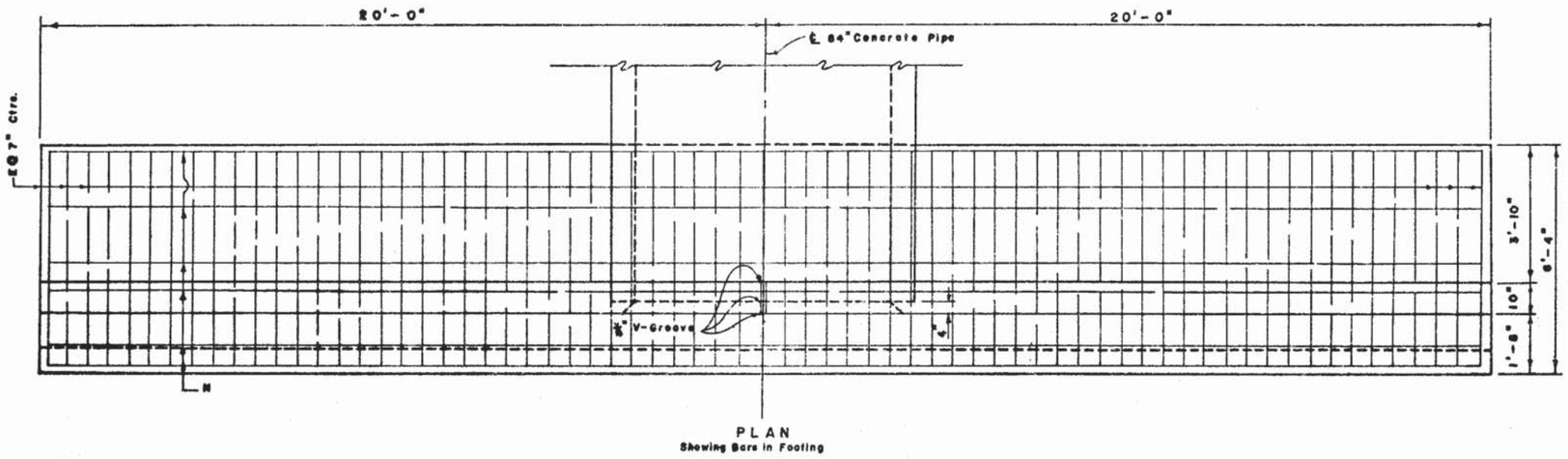


PLAN
Showing Bars in Footing

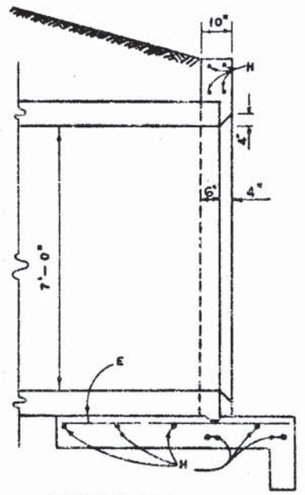


SECTION A-A
NOTE: For sodding around endwall see Index No. 280[illegible]

| BILL OF REINFORCING STEEL | | | |
|---|---|---|---|
| MARK | SIZE | NO. REQ'D. | LENGTH |
| E | 6 | 69 | 6'-0" |
| H | 4 | 20 | 39'-8" |
| $V_1$ | 6 | 26 | 12'-2" |
| $V_2$ | 6 | 26 | 7'-10" |
| $V_3$ | 4 | 22 | 10'-0" |
| $V_4$ | 4 | 4 | 2'-0" |
| | | | |
| | | | |

SENDING DIAGRAM

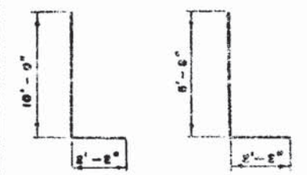


BAR $V_1$ BAR $V_2$

NOTE: All Bar Dimensions are out-to-out.

| ESTIMATED QUANTITIES | | |
|---|---|---|
| ITEM | UNIT | QUANTITY |
| Concrete, Class H | Cu. Yd. | 19.3 |
| Reinforcing Steel | Lb. | 2,095 |
| | | |

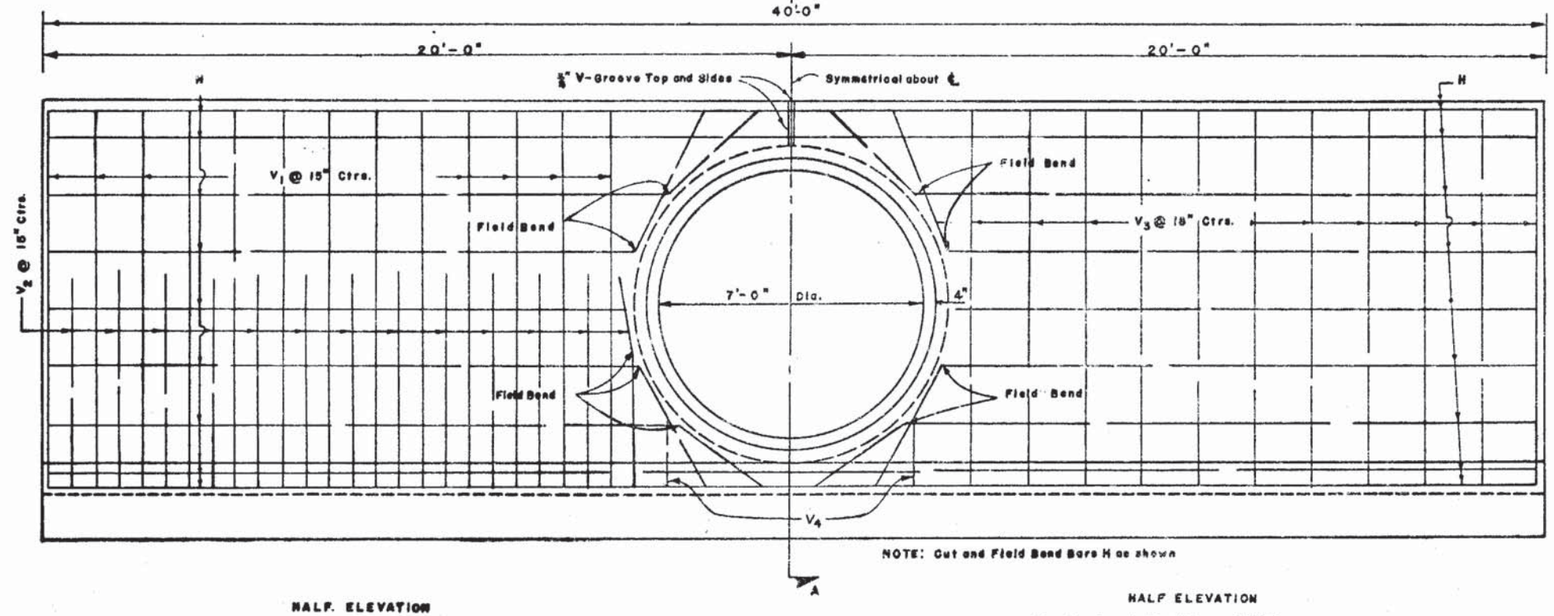


NOTE: Cut and Field Bend Bars H as shown

HALF ELEVATION
Showing Bars in Back Face of Wall

HALF ELEVATION
Showing Bars in Front Face of Wall

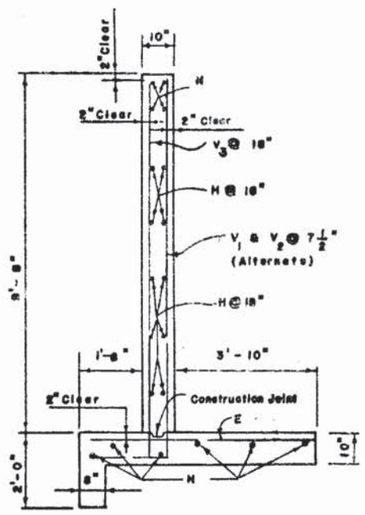


TYPICAL SECTION THRU ENDWALL

GENERAL NOTES

DESIGN SPECIFICATIONS: A.A.S.H.O. 1973
CHAMFER: All exposed edges and corners to be chamfered ¾" unless otherwise noted.
REINFORCEMENT STEEL: Grade 40 to 60.

F.H.W.A. APPROVED: 3-20-75

FLORIDA DEPARTMENT OF TRANSPORTATION
ROADWAY PLANS SECTION

STANDARD ENDWALL FOR
84" CONCRETE PIPE

| REVISIONS | | ROAD No. | COUNTY | PROJECT No. |
|---|---|---|---|---|
| Date | Descriptions | | | |
| 3-75 | Traced from | | | |
| V.A.C. | Sepia | | | |
| 10-74 | Changed Index No. | | | |

| | Names | Dates |
|---|---|---|
| Detailed by | W.H.W. | 7-58 |
| Checked by | H.C.G. | 7-58 |
| Quantities by | W.H.W. | 7-58 |
| Checked by | H.C.G. | 7-58 |
| Traced by | W.H.W. | 7-58 |

APPROVED BY

Deputy Design Engineer - Roadways

Drawing No. 10 of 1 | Index No. DCE-11

| FED. ROAD DIV. No. | STATE | PROJECT NO. | FISCAL YEAR | SHEET NO. |
|---|---|---|---|---|
| 3 | FLA. | | | |

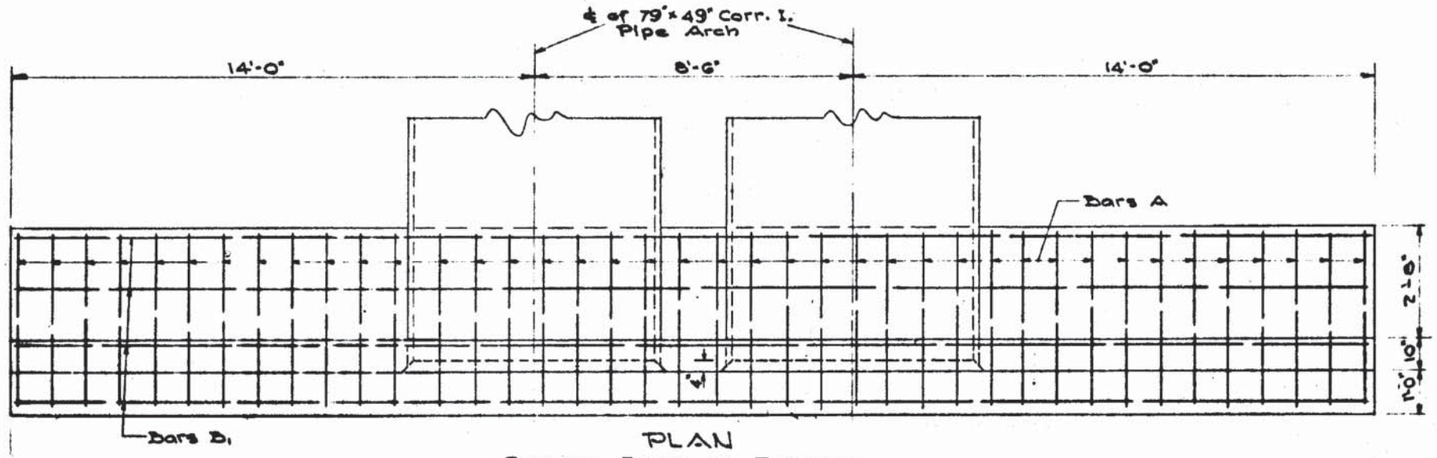


PLAN
SHOWING BARS IN FOOTINGS

## BILL OF REINFORCING STEEL

| MARK | SIZE | No. REQ'D. | LENGTH | LOCATION | BENDING |
|---|---|---|---|---|---|
| A | 4 | 40 | 4'-2" | Footing | Straight |
| $B_1$ | " | 9 | 36'-2" | Ftg & Wall | Straight |
| $B_2$ | " | 12 | 10'-5" | Wall | " |
| C | " | 24 | 7'-5" | Ftg & Wall | See Diag. |
| D | " | 18 | 6'-0" | " " | Straight |
| $E_1$ | " | 4 | 4'-9" | Wall | See Diag. |
| $E_2$ | " | 4 | 5'-3" | " | " " |
| F | " | 8 | 7'-5" | " | Straight |
| G | " | 4 | 4'-0" | Ftg & Wall | " |

## BENDING DIAGRAMS

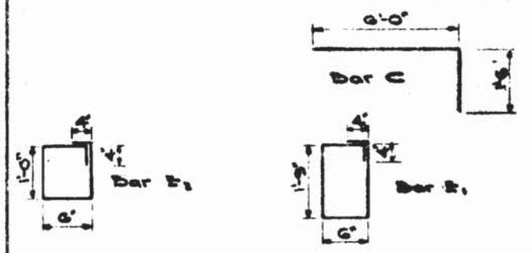


NOTE:- All bar dimensions are out to out.

## ESTIMATED QUANTITIES

| ITEM | UNIT | QUANTITY |
|---|---|---|
| Concrete, Class II | Cu. Yd. | 11.19 |
| Reinforcing Steel | Lb. | 674 |

Note: For sodding around endwall see detail on Index No. GRC-01.

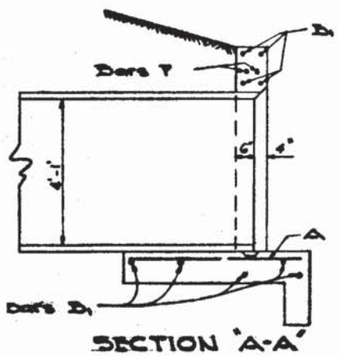


SECTION 'A-A'

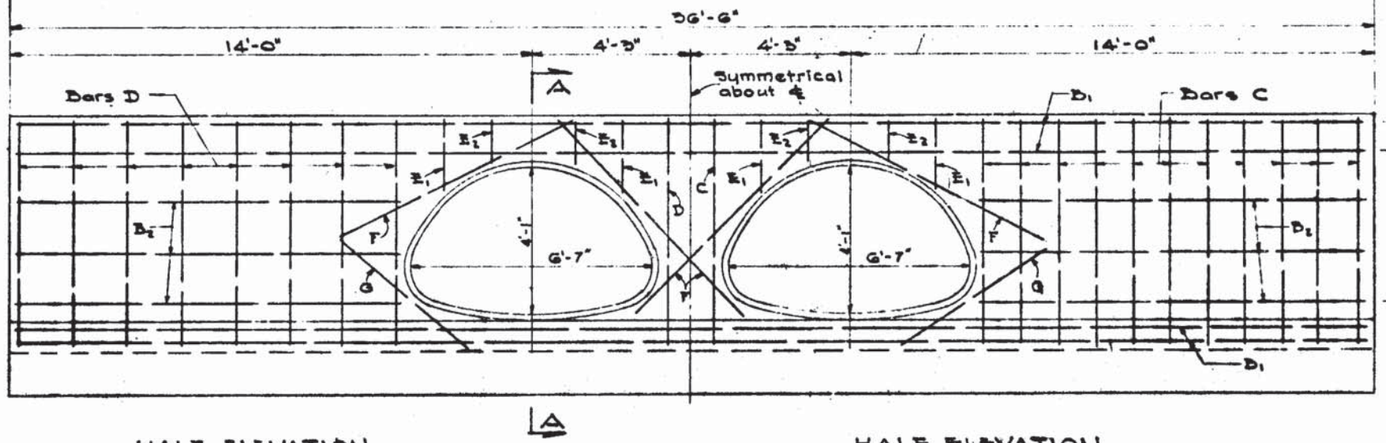


HALF ELEVATION
SHOWING BARS IN FRONT FACE OF WALL

HALF ELEVATION
SHOWING BARS IN BACK FACE OF WALL

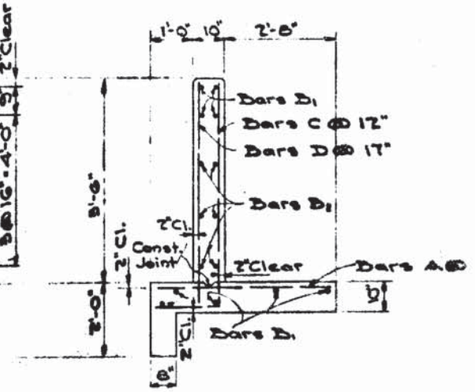


TYPICAL SECTION
THRU ENDWALL

GENERAL NOTES

DESIGN SPECIFICATIONS : A. A. S. H. O. 1973.
CHAMFER : All exposed edges and corners to be chamfered ¾" unless otherwise shown.
REINFORCING STEEL : Grade 40 or 60

FHWA APPROVED: 3-20-75

FLORIDA DEPARTMENT OF TRANSPORTATION
ROADWAY PLANS SECTION

# STANDARD ENDWALL FOR 79" x 49" CMP ARCH

| REVISIONS | | ROAD NO. | COUNTY | | PROJECT NO. |
|---|---|---|---|---|---|
| Dates | Descriptions | | | | |
| 8-70 | Raised side slope to top of endwall | | Names | Dates | Approved by: |
| LMF | | Detailed by | J.J.B. | 5-'73 | |
| 3-73 | Added Class II Conc. | Checked by | J.J.W. | 6-'73 | |
| 10-74 | Changed Index No. | Quantities by | J.J.B. | 5-'74 | E.H. Hunt |
| | | Checked by | J.J.W. | 5-'74 | Deputy Design Engineer - Roadways |
| | | Traced by | J.J.B. | 5-'74 | Drawing No. 1 OF 1 — Index No. DCE-12 |

| FED. ROAD DIV. NO. | STATE | PROJECT NO. | FISCAL YEAR | SHEET NO. |
|---|---|---|---|---|
| 3 | FLA. | | | |

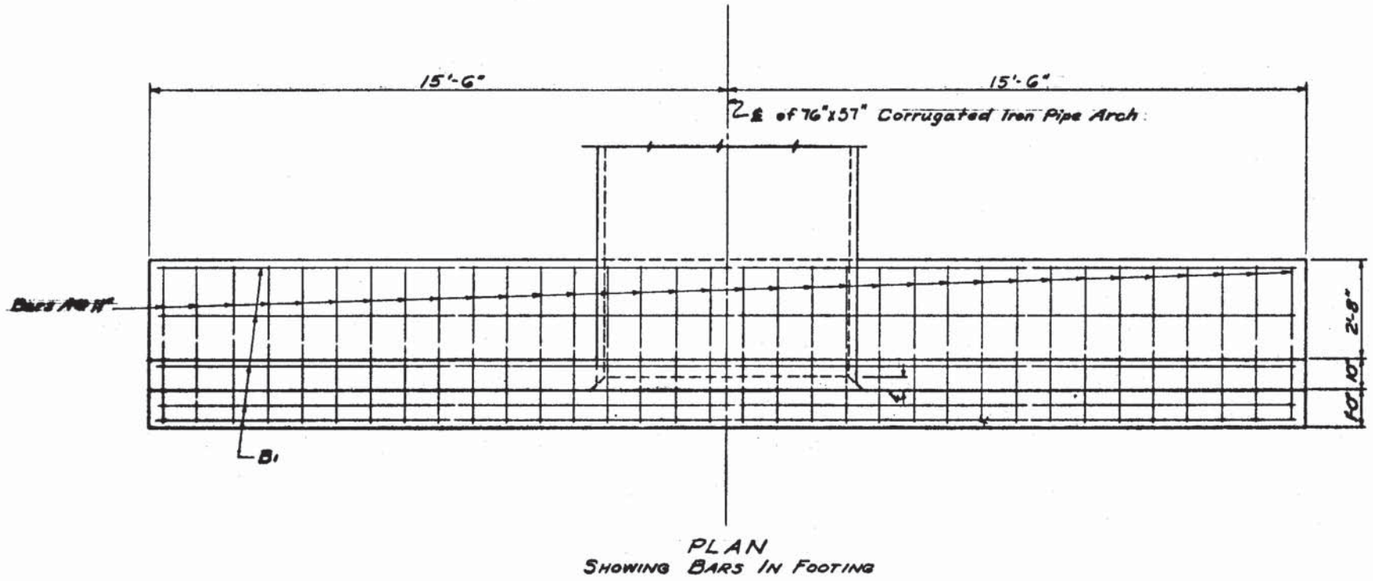


PLAN
SHOWING BARS IN FOOTING

## BILL OF REINFORCING STEEL

| MARK | SIZE | Nº REQ. | LENGTH | BENDING |
|---|---|---|---|---|
| A | 4 | 34 | 4'-2" | Straight |
| $B_1$ | " | 9 | 30'-6" | " |
| $B_2$ | " | 12 | 11'-8" | " |
| C | " | 26 | 8'-2" | See Diagram |
| D | " | 18 | 6'-9" | Straight |
| $E_1$ | " | 3 | 3'-1" | See Diagram |
| $E_2$ | " | 2 | 4'-3" | " " |
| $E_3$ | " | 2 | 6'-7" | " " |
| F | " | 4 | 8'-0" | Straight |
| G | " | 4 | 6'-6" | " |

## BENDING DIAGRAMS

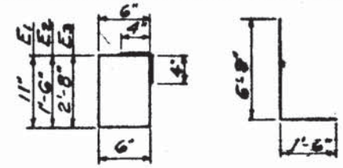


BARS E BAR C

Note: All bar dimensions are out to out.

## ESTIMATED QUANTITIES

| ITEM | UNIT | QUANTITY |
|---|---|---|
| Concrete, Class II | Cu. Yd. | 10.51 |
| Reinforcing Steel | Lb. | 654 |

Note: For sodding around endwall see detail on Index No. 040-01.

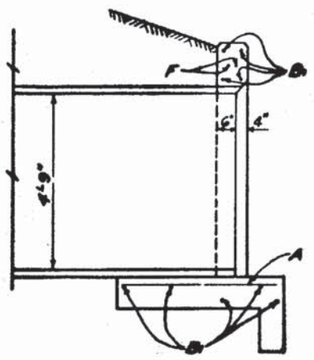


SECTION A-A

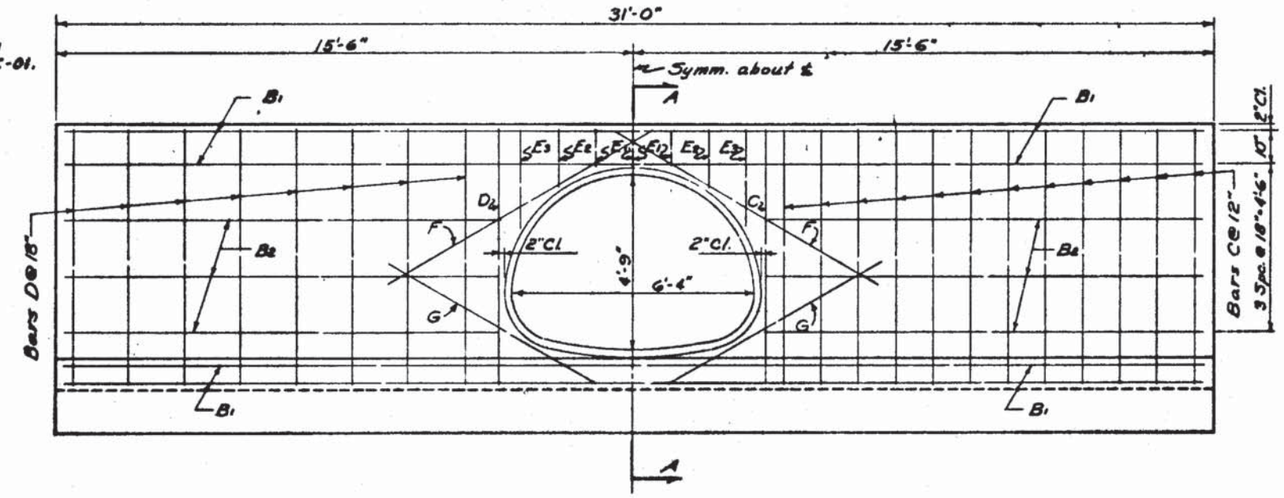


HALF ELEVATION
SHOWING BARS IN FRONT
FACE OF WALL

HALF ELEVATION
SHOWING BARS IN BACK
FACE OF WALL

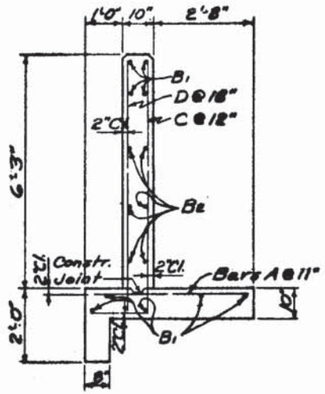


TYPICAL SECTION
THRU ENDWALL

## GENERAL NOTES

DESIGN SPECIFICATIONS: AASHO - 1973
REINFORCING STEEL: GRADE 40 or 60
STRESSES: $f_s$ - 20,000 $f'_c$ - 1,000
CHAMFER: All edges and corners to be chamfered ¾" unless otherwise noted.

FHWA APPROVED: 3-20-75

FLORIDA DEPARTMENT OF TRANSPORTATION
ROADWAY PLANS SECTION

# STANDARD ENDWALL FOR 76" x 57" CMP ARCH

| REVISIONS | | ROAD NO. | COUNTY | | PROJECT NO. |
|---|---|---|---|---|---|
| Dates | Descriptions | | | | |
| 8-70 | Raised side slope | | Names | Dates | Recommended For Approval by: T. Ted J. [illegible] Date |
| LMF | to top of endwall | Detailed by | J.L.W. | 12-52 | |
| 3-78 | Added Class II Conc. | Checked by | H.L.F. | 12-52 | APPROVED BY |
| 10-74 | Changed Index Nº | Quantities by | J.L.W. | 12-52 | |
| | | Checked by | H.L.F. | 12-52 | Engineer of Design |
| | | Traced by | J.L.W. | 12-52 | Index No. DCE-13 |

Drawing No. 1 of 1

| FED. ROAD DIV. NO. | STATE | PROJECT NO. | FISCAL YEAR | SHEET NO. |
|---|---|---|---|---|
| 3 | FLA. | | | |

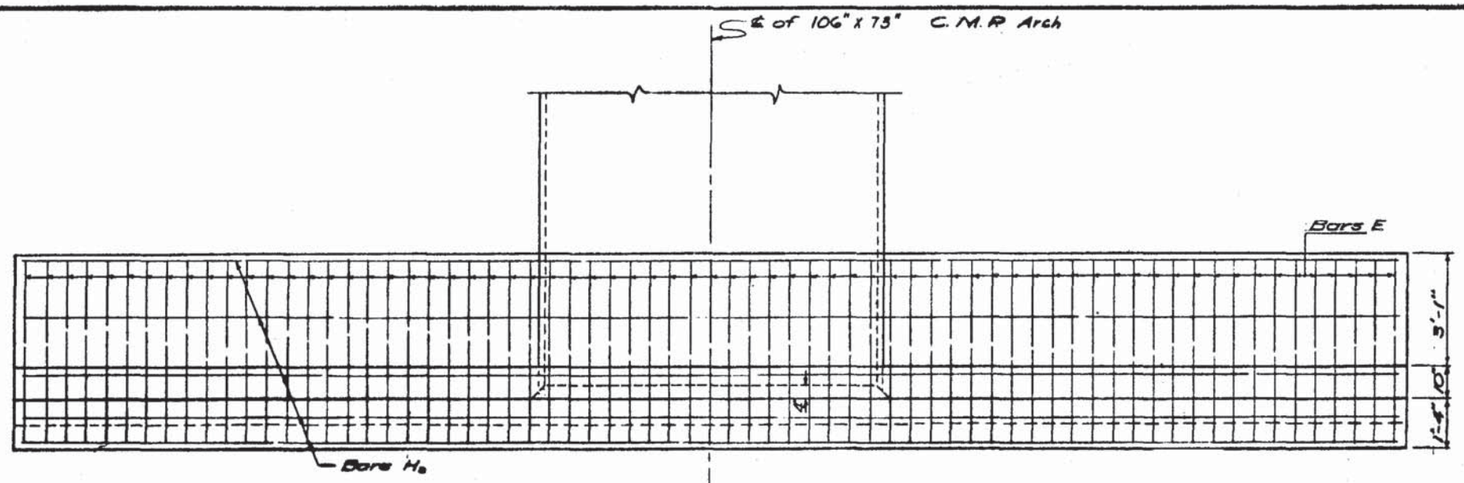


PLAN
SHOWING BARS IN FOOTING

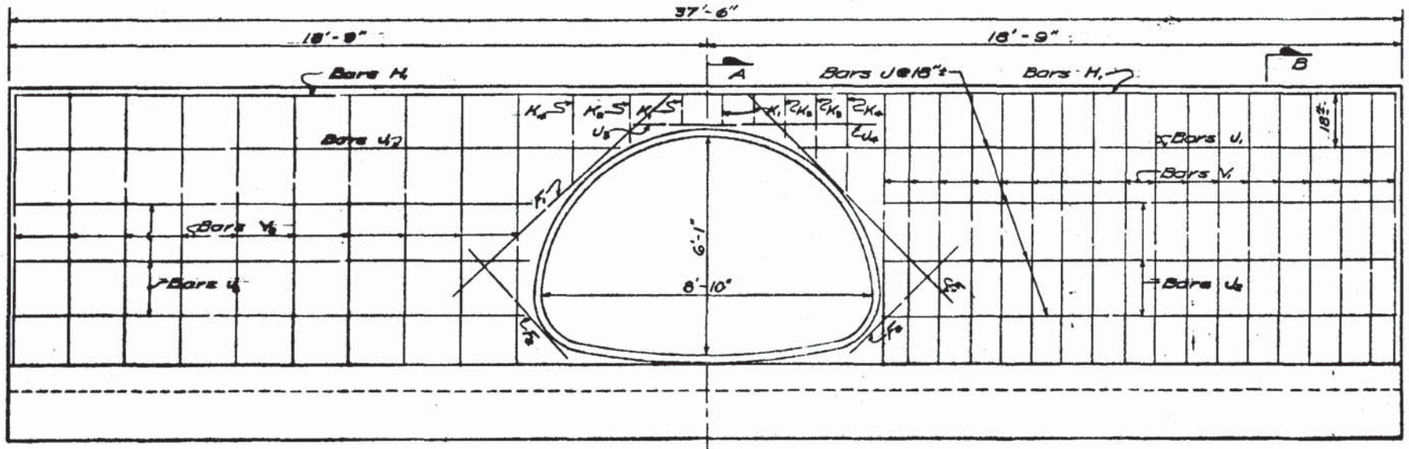


HALF ELEVATION
SHOWING BARS IN FRONT FACE OF WALL

HALF ELEVATION
SHOWING BARS IN BACK FACE OF WALL

Note: For sodding around endwall see detail on Index Nº GRC-01.

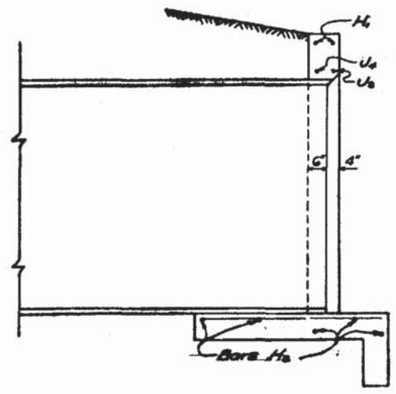


SECTION A-A

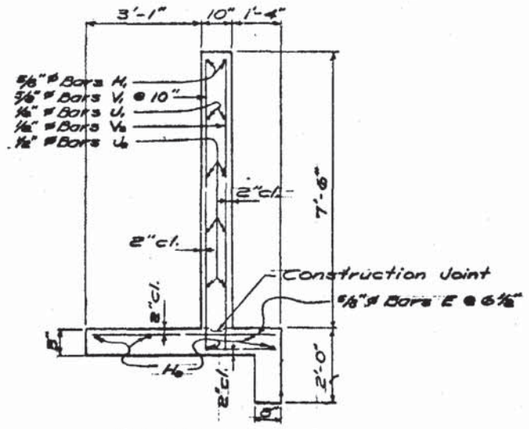


SECTION B-B

## BILL OF REINFORCING STEEL

| MARK | SIZE | NO. REQ'D | LENGTH | BENDING |
|---|---|---|---|---|
| E | 5 | 69 | 4'-11" | Straight |
| F₁ | 5 | 4 | 8'-0" | " |
| F₂ | 4 | 4 | 4'-0" | " |
| H₁ | 5 | 2 | 37'-2" | " |
| H₂ | 4 | 5 | 37'-2" | " |
| J₁ | 4 | 4 | 16'-4" | " |
| J₂ | 4 | 12 | 13'-10" | " |
| J₃ | 4 | 1 | 4'-0" | " |
| J₄ | 4 | 1 | 9'-0" | " |
| K₁ | 4 | 6 | 0'-10" | " |
| K₂ | 4 | 4 | 1'-4" | " |
| K₃ | 4 | 2 | 1'-10" | " |
| K₄ | 4 | 4 | 2'-8" | " |
| V₁ | 5 | 36 | 9'-7" | See Diagram |
| V₂ | 4 | 20 | 7'-10" | Straight |

## BENDING DIAGRAMS

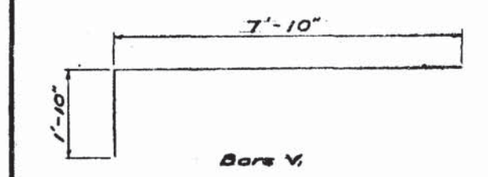


Note: All bar dimensions are out-to-out.

## ESTIMATED QUANTITIES

| ITEM | UNIT | QUANTITY |
|---|---|---|
| Concrete, Class II | Cu. Yd. | 13.46 |
| Reinforcing Steel | Lb. | 1244 |

Note: Quantities are for one endwall only.

## — GENERAL NOTES —

DESIGN SPECIFICATIONS: A.A.S.H.O. 1973
CHAMFER: All edges and corners to be chamfered 3/4" unless otherwise shown.
REINFORCING STEEL: Grade 40 or 60

FHWA APPROVED: 3-20-75

FLORIDA DEPARTMENT OF TRANSPORTATION
ROADWAY PLANS SECTION

ENDWALL FOR SINGLE 106" x 73" CMP ARCH

| REVISIONS | | ROAD NO. | COUNTY | PROJECT NO. |
|---|---|---|---|---|
| Dates | Descriptions | | | |
| 8-70 LMF | Raised side slope to top of endwall | | | |
| 3-73 | Added Class II Conc. | | | |
| 10-74 | Changed Index Nº | | | |

| | Names | Date |
|---|---|---|
| Detailed by | E.C.D. | 2/53 |
| Checked by | J.L.W. | 2-53 |
| Quantities by | E.C.D. | 2/53 |
| Checked by | J.L.W. | 2-53 |
| Traced by | E.C.D. | 2/53 |

Recommended by: [signature] Assistant Engineer
Approved by: [signature] Engineer of Bridges
Drawing No. 1 of 1
Index No. DCE-14

| FED. ROAD DIV. No. | STATE | PROJECT No. | FISCAL YEAR |
|---|---|---|---|
| 3 | FLA. | | |

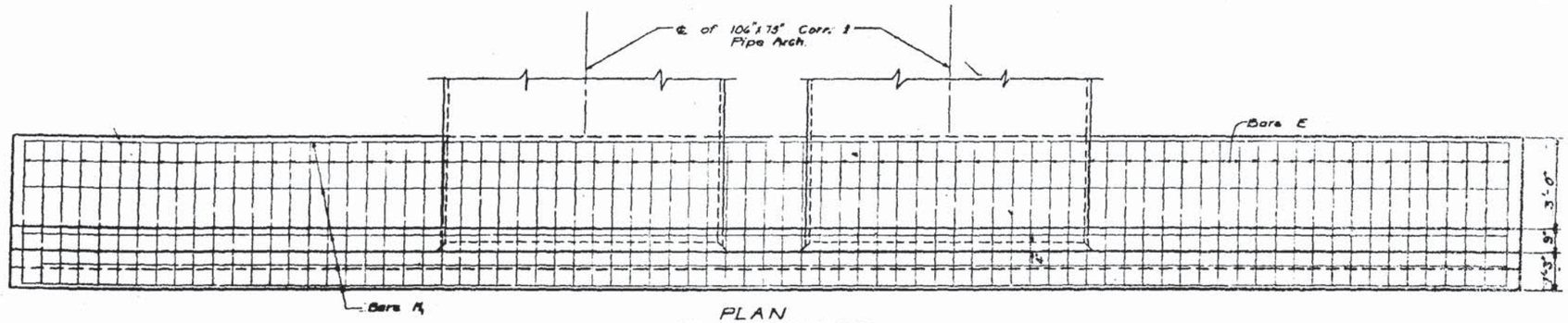


PLAN
SHOWING BARS IN FOOTING

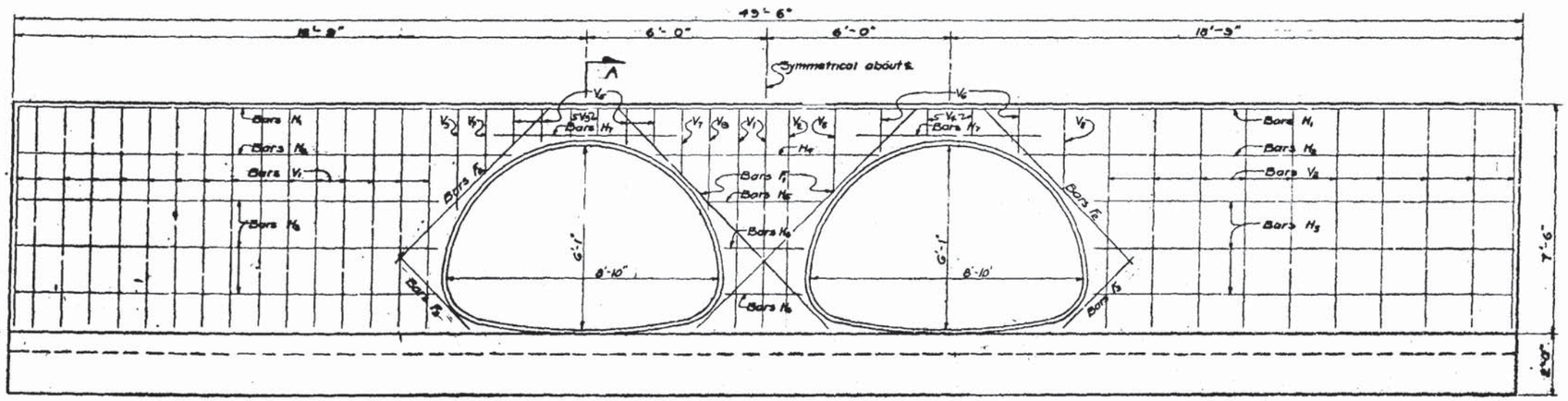


HALF ELEVATION
SHOWING BARS IN BACK FACE OF WALL

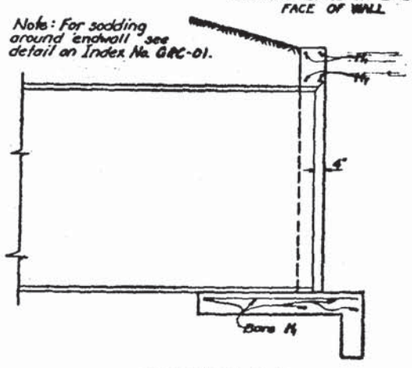


SECTION A-A

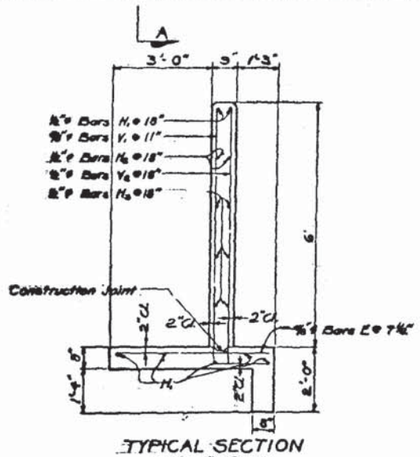


TYPICAL SECTION
THRU ENDWALL

HALF ELEVATION
SHOWING BARS IN FRONT FACE OF WALL

## BILL OF REINFORCING STEEL

| MARK | SIZE | NO. REQD. | LENGTH | BENDING |
|---|---|---|---|---|
| E | 5 | 73 | 4'-8" | Straight |
| F1 | 4 | 4 | 10'-0" | " |
| F2 | 4 | 4 | 7'-0" | " |
| F3 | 4 | 4 | 3'-0" | " |
| H1 | 4 | 7 | 49'-2" | " |
| H2 | 4 | 4 | 16'-2" | " |
| H3 | 4 | 12 | 13'-3" | " |
| H4 | 4 | 2 | 7'-3" | " |
| H5 | 4 | 2 | 3'-3" | " |
| H6 | 4 | 4 | 2'-6" | " |
| H7 | 4 | 4 | 6'-0" | " |
| V1 | 5 | 35 | 9'-5" | See Diag. |
| V2 | 4 | 22 | 7'-10" | Straigh |
| V3 | 5 | 4 | 1'-0" | " |
| V4 | 4 | 4 | 1'-0" | " |
| V5 | 5 | 8 | 1'-1" | " |
| V6 | 4 | 4 | 1'-5" | " |
| V7 | 5 | 4 | 2'-1" | " |
| V8 | 4 | 4 | 2'-8" | " |
| V9 | 6 | 4 | 3'-3" | " |

## BENDING DIAGRAMS

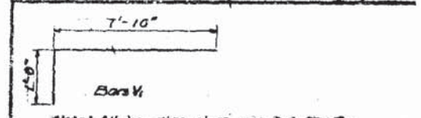


Note: All bar dimensions are out-to-out.

## ESTIMATED QUANTITIES

| ITEM | UNIT | QUANTITY |
|---|---|---|
| Concrete, Class II | Cu. Yd. | 15.68 |
| Reinforcing Steel | Lb. | 1370.00 |

## —GENERAL NOTES—

DESIGN SPECIFICATIONS: A.A.S.H.O. 1973
CHAMFER: All edges and corners to be chamfered ¾" unless otherwise shown.
REINFORCING STEEL: Grade 40 or 60

FHWA APPROVED: 3-20-75

FLORIDA DEPARTMENT OF TRANSPORTATION
ROADWAY PLANS SECTION

STANDARD ENDWALL FOR DBL. 106" x 73" CMP ARCH

| REVISIONS | | ROAD NO. | COUNTY | PROJECT NO. |
|---|---|---|---|---|
| Dates | Descriptions | | | |
| 8-70 LMF | Raised side slope to top of endwall | | | |
| 3-75 | Added Class II Conc. | | | |
| 10-74 | Changed Index No. | | | |

| | Name | Date |
|---|---|---|
| Detailed by | R.C.B. | 6-58 |
| Checked by | | |
| Quantities by | R.C.B. | 6-58 |
| Checked by | | |
| Traced by | R.C.B. | 6-58 |

Approved by:
E H Hart
Deputy Design Engineer - Roadway

Sheet No. 1 of 1 DCE-15

| FED. ROAD DIV. No. | STATE | PROJECT NO. | FISCAL YEAR | SHEET NO. |
|---|---|---|---|---|
| 3 | FLA. | | | |

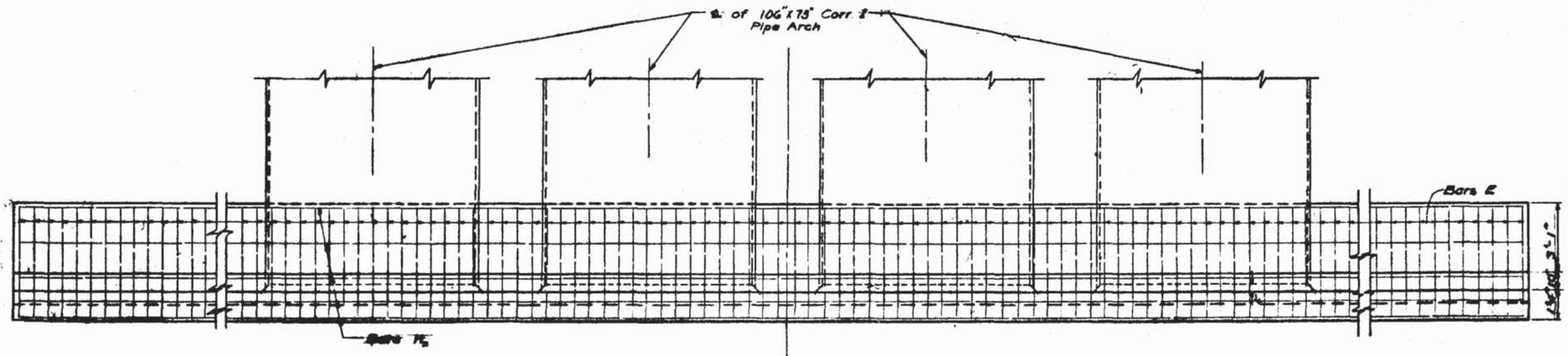


PLAN
SHOWING BARS IN FOOTING

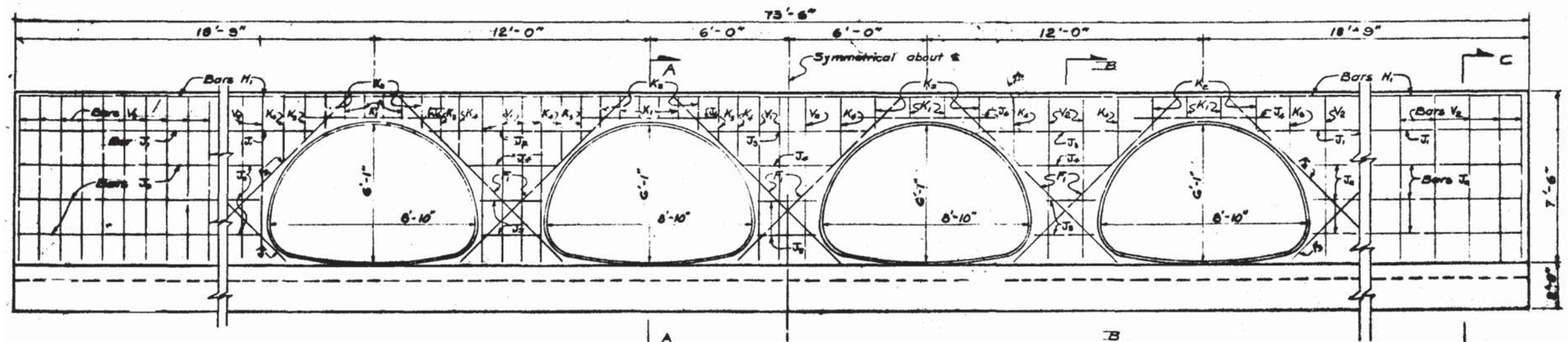


Note: For sodding around endwall see detail on Index No. GRC-01.

HALF ELEVATION
SHOWING BARS IN BACK FACE OF WALL

HALF ELEVATION
SHOWING BARS IN FRONT FACE OF WALL

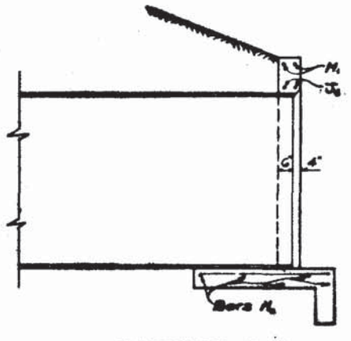


SECTION A-A

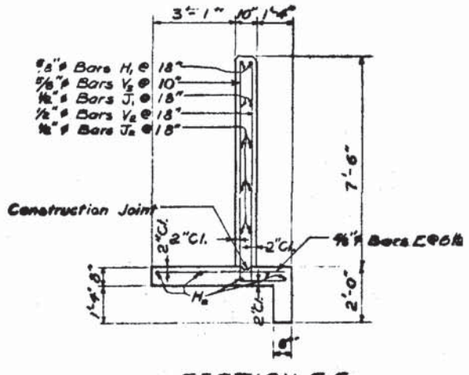


SECTION C-C

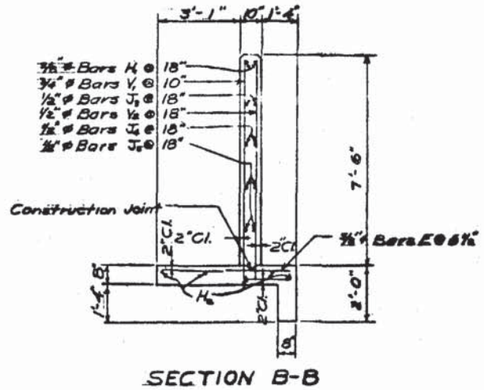


SECTION B-B

## BILL OF REINFORCING STEEL

| MARK | SIZE | NO. REQ'D | LENGTH | BENDING |
|---|---|---|---|---|
| E | 5 | 136 | 4'-11" | Straight |
| $F_1$ | 5 | 12 | 10'-0" | " |
| $F_2$ | 5 | 4 | 8'-0" | " |
| $F_3$ | 4 | 4 | 4'-0" | " |
| $H_1$ | 5 | 2 | 74'-6" | See Diagram |
| $H_2$ | 4 | 5 | 74'-2" | " |
| $J_1$ | 4 | 4 | 16'-2" | Straight |
| $J_2$ | 4 | 12 | 73'-11" | " |
| $J_3$ | 4 | 8 | 7'-3" | " |
| $J_4$ | 4 | 6 | 4'-0" | " |
| $J_5$ | 4 | 12 | 2'-6" | " |
| $J_6$ | 4 | 8 | 9'-0" | " |
| $K_1$ | 4 | 24 | 1'-0" | " |
| $K_2$ | 4 | 16 | 1'-6" | " |
| $K_3$ | 4 | 8 | 2'-0" | " |
| $K_4$ | 4 | 16 | 2'-9" | " |
| $V_1$ | 6 | 12 | 9'-7" | See Diagram |
| $V_2$ | 4 | 26 | 7'-10" | Straight |
| $V_3$ | 5 | 37 | 9'-7" | See Diagram |

## BENDING DIAGRAMS

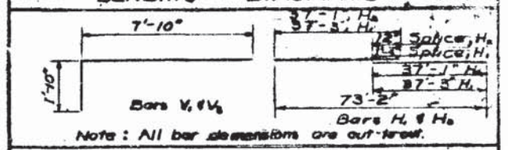


Note: All bar dimensions are out-to-out.

## ESTIMATED QUANTITIES

| ITEM | UNIT | QUANTITY |
|---|---|---|
| Concrete Class II | Cu. Yd. | 23.69 |
| Reinforcing Steel | Lb. | 2278 |

## — GENERAL NOTES —

DESIGN SPECIFICATIONS: A.A.S.H.O. 1973
CHAMFER: All edges and corners to be chamfered ¾" unless otherwise shown.
REINFORCING STEEL: Grade 40 or 60

FHWA APPROVED: 3-20-75

FLORIDA DEPARTMENT OF TRANSPORTATION
ROADWAY PLANS SECTION

ENDWALL FOR QUADRUPLE
106" x 73" CMP ARCH

| REVISIONS | | ROAD NO. | COUNTY | PROJECT NO. |
|---|---|---|---|---|
| Dates | Descriptions | | | |
| 8-70 LMF | Raised side slope to top of endwall | | | |
| 3-73 | Added Class II Conc. | | | |
| 10-74 | Changed Index No. | | | |

| | Names | Dates |
|---|---|---|
| Detailed by | R.C.B. | 6-52 |
| Checked by | J.L.W. | 7-52 |
| Quantities by | J.L.W. | 7-52 |
| Checked by | E.C.D. | 7-52 |
| Traced by | R.C.B. | 6-52 |

Recommended For Approval by T. W. [illegible]
Chief Engineer
APPROVED BY M. E. Dean
Engineer of Bridges

Drawing No. 1 of 1
Index No. DCE-16

| FED. ROAD DIV. No. | STATE | PROJECT NO. | FISCAL YEAR | SH. |
|---|---|---|---|---|
| 3 | FLA. | | | |

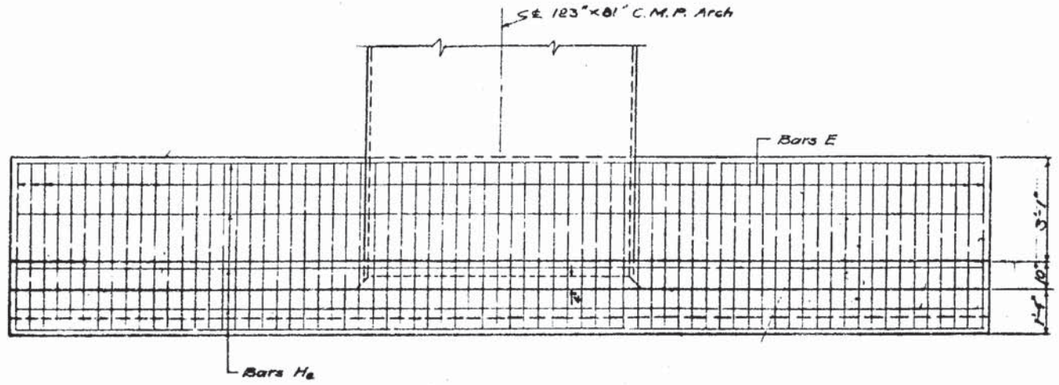


PLAN
SHOWING BARS IN FOUNDATION

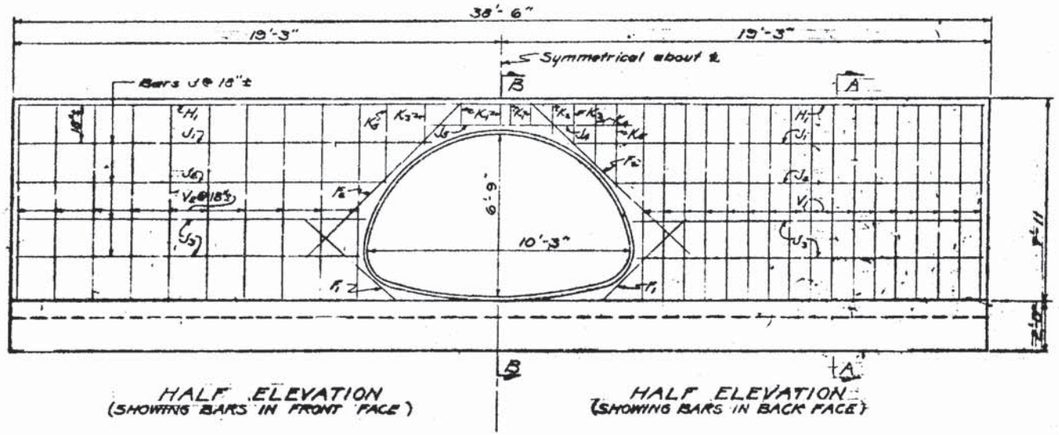


HALF ELEVATION
(SHOWING BARS IN FRONT FACE)

HALF ELEVATION
(SHOWING BARS IN BACK FACE)

Note: For sodding around endwall see Index No. 620-01.

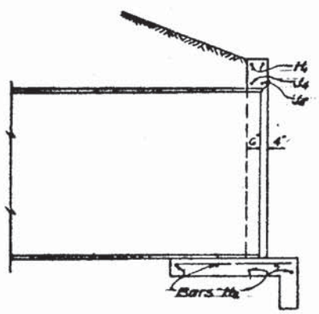


SECTION 'B-B'

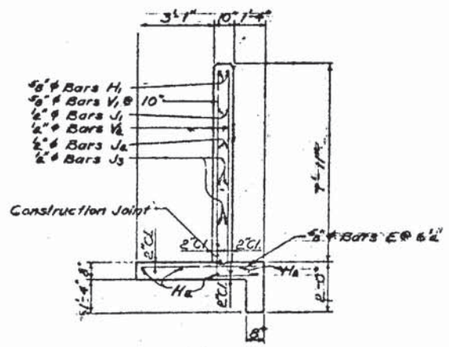


SECTION 'A-A'

## BILL OF REINFORCING STEEL

| MARK | SIZE | NO. REQD. | LENGTH | BENDING |
|---|---|---|---|---|
| E | 5 | 71 | 4'-11" | Straight |
| $F_1$ | 5 | 4 | 4'-9" | " |
| $F_2$ | 5 | 4 | 8'-3" | " |
| $H_1$ | 5 | 8 | 38'-6" | " |
| $H_2$ | 4 | 5 | 38'-6" | " |
| $J_1$ | 4 | 4 | 16'-6" | " |
| $J_2$ | 4 | 4 | 14'-8" | " |
| $J_3$ | 4 | 8 | 13'-8" | " |
| $J_4$ | 4 | 4 | 10'-0" | " |
| $J_5$ | 4 | 1 | 5'-8" | " |
| $K_1$ | 4 | 7 | 0'-10" | " |
| $K_{2,3}$ | 4 | 8 | 1'-3" | " |
| $K_3$ | 4 | 4 | 1'-9" | " |
| $K_4$ | 4 | 8 | 2'-5" | " |
| $K_5$ | 4 | 4 | 3'-4" | " |
| $V_1$ | 5 | 34 | 10'-0" | See Diagram |
| $V_2$ | 4 | 80 | 8'-3" | Straight |

BENDING DIAGRAMS

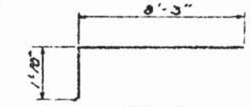


BAR $V_1$

Note: All bar dimensions are out-to-out.

## ESTIMATED QUANTITIES

| ITEM | UNIT | QUANTITY |
|---|---|---|
| Concrete Class II | Cu. Yd. | 14.0 |
| Reinforcing Steel | Lb. | 1279 |

Note: Quantities and Bill of Reinforcing Steel are for one endwall.

## GENERAL NOTES

DESIGN SPECIFICATIONS : A.A.S.H.O. 1973
CHAMFER : All edges and corners to be chamfered ¾" unless otherwise shown.
REINFORCING STEEL : Grade 40 or 60

FHWA APPROVED: 3-20-75

FLORIDA DEPARTMENT OF TRANSPORTATION
ROADWAY PLANS SECTION

# ENDWALL FOR SINGLE 123" x 81" CMP ARCH

| REVISIONS | | ROAD NO. | COUNTY | PROJECT NO. |
|---|---|---|---|---|
| Date | Description | | | |
| 8-70 | Raised side slope | | Nassau | 4-603-3 |
| L.M.F | to top of endwall | Drawn by | M. C. Mc | 4-603-3 |
| 3-73 | Added Class II Conc | Checked by | M. R. P. | 4-603-3 |
| 10-74 | Changed Length $H_2$ | Quantities by | D.C.S. | 4-603-3 |
| | | Detailed by | M.E.S. | |
| | | Traced by | R.E.D. | |

Sheet 1 of 1 — DOE-17

| FED. ROAD DIV. No. | STATE | PROJECT NO. | FINAL PLAN |
|---|---|---|---|
| 3 | FLA. | | |

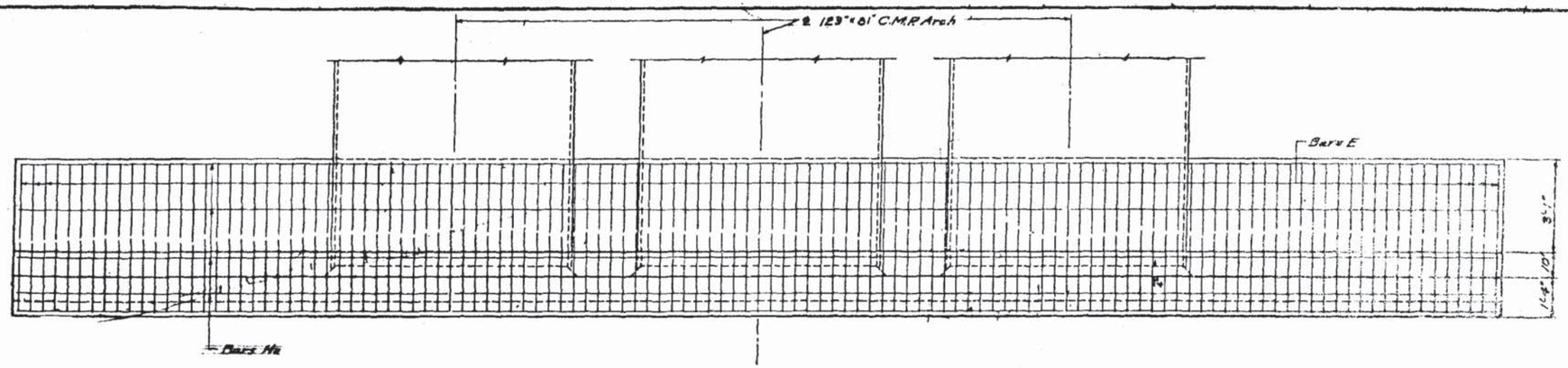


PLAN
SHOWING BARS IN FOOTING

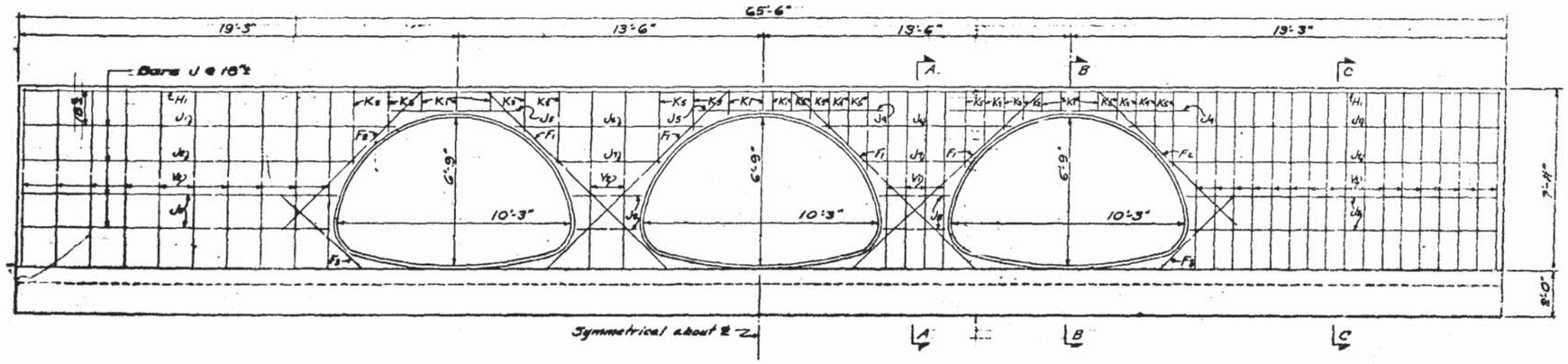


HALF ELEVATION
SHOWING BARS IN FRONT FACE

HALF ELEVATION
SHOWING BARS IN BACK FACE

Note: For sodding ground endwall see detail on Index No. GRC-01.

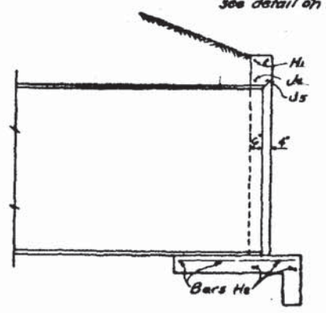


SECTION B-B

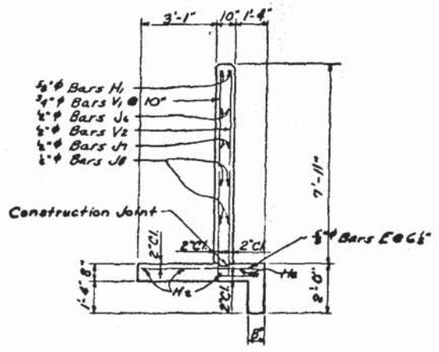


SECTION A-A

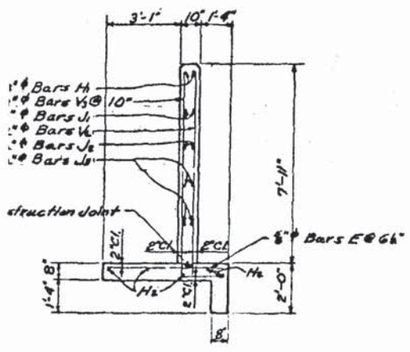


SECTION C-C

## BILL OF REINFORCING STEEL

| MARK | SIZE | NO. REQ. | LENGTH | BENDING |
|---|---|---|---|---|
| E | 5 | 121 | 4'-11" | Straight |
| F1 | 5 | 8 | 9'-0" | " |
| F2 | 5 | 4 | 8'-9" | " |
| F3 | 4 | 4 | 4'-9" | " |
| H1 | 5 | 2 | 66'-6" | See Diagram |
| H2 | 5 | 5 | 66'-6" | " |
| J1 | 4 | 6 | 16'-6" | Straight |
| J2 | 4 | 4 | 14'-6" | " |
| J3 | 4 | 8 | 13'-6" | " |
| J4 | 4 | 3 | 10'-0" | " |
| J5 | 4 | 3 | 5'-8" | " |
| J6 | 4 | 4 | 8'-5" | " |
| J7 | 4 | 4 | 4'-8" | " |
| J8 | 4 | 8 | 2'-7" | " |
| K1 | 4 | 21 | 0'-10" | " |
| K2 | 4 | 6 | 1'-3" | " |
| K3 | 4 | 72 | 1'-9" | " |
| K4 | 4 | 6 | 2'-5" | " |
| K5 | 4 | 72 | 3'-4" | " |
| V1 | 6 | 8 | 10'-0" | See Diagram |
| V2 | 4 | 24 | 8'-3" | Straight |
| V3 | 5 | 34 | 10'-0" | See Diagram |

## BENDING DIAGRAMS

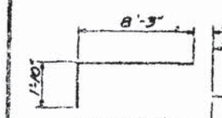


BARS V1 & V3

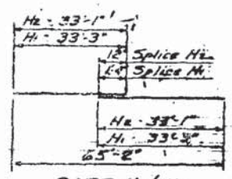


BARS H1 & H2

Note: All bar dimensions are out to out.

## ESTIMATED QUANTITIES

| ITEM | UNIT | QUANTITY |
|---|---|---|
| Concrete, Class II | Cu. Yd. | 21.6 |
| Reinforcing Steel | Lb. | 2013 |
| | | |

Note: Quantities are for one endwall only.

## GENERAL NOTES

DESIGN SPECIFICATIONS: A.A.S.H.O. - 1973
CHAMFER: All edges and corners to be chamfered ¾" unless otherwise shown.
REINFORCING STEEL: Grade 40 or 60

FHWA APPROVED: 3-20-75

FLORIDA DEPARTMENT OF TRANSPORTATION
ROADWAY PLANS SECTION

# ENDWALL FOR TRIPLE 123" x 81" CMP ARCH

| REVISIONS | | ROAD NO. | COUNTY | | PROJECT NO. |
|---|---|---|---|---|---|
| Date | Description | | | | |
| 8-70 | Raised side slope | | Name | Date | Recommended For Approval by: T. W. Hayes, State Engr. |
| 1-71 | Fr. top of endwall | Detailed by | J.L.W. | 2-53 | |
| 5-73 | Added Class II Conc. | Checked by | E.C.D. | 2-53 | APPROVED: M. E. Dean, Engineer of Roads |
| 10-74 | Changed Index No. | Quantities by | J.L.W. | 2-53 | |
| | | Obgected by | E.C.D. | 2-53 | Drawing No. 1 of 1 / Index No. DCE-18 |
| | | Traced by | J.L.W. | 2-53 | |

| FED. ROAD DIST. No. | STATE | PROJECT NO. | FISCAL YEAR |
|---|---|---|---|
| 3 | FLA. | | |

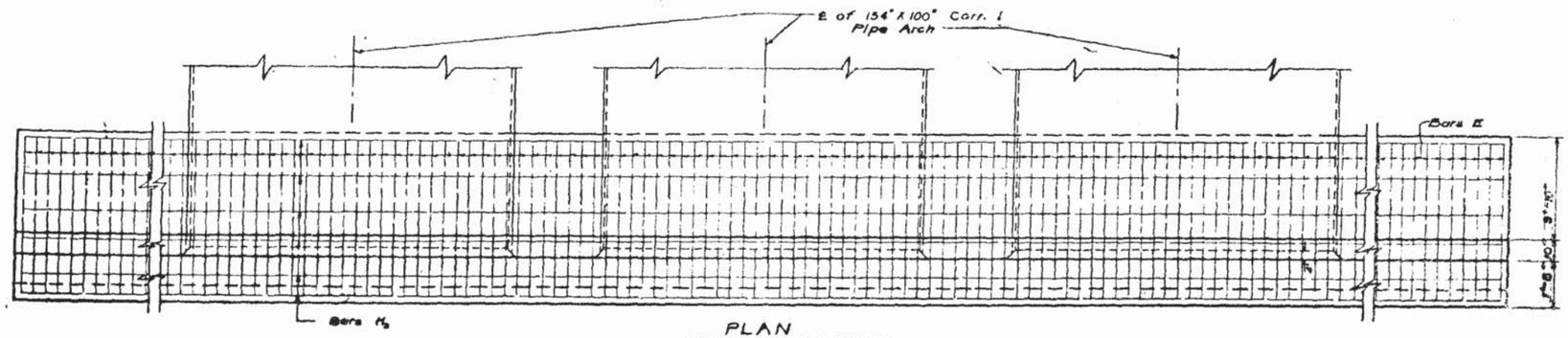


PLAN
SHOWING BARS IN FOOTING

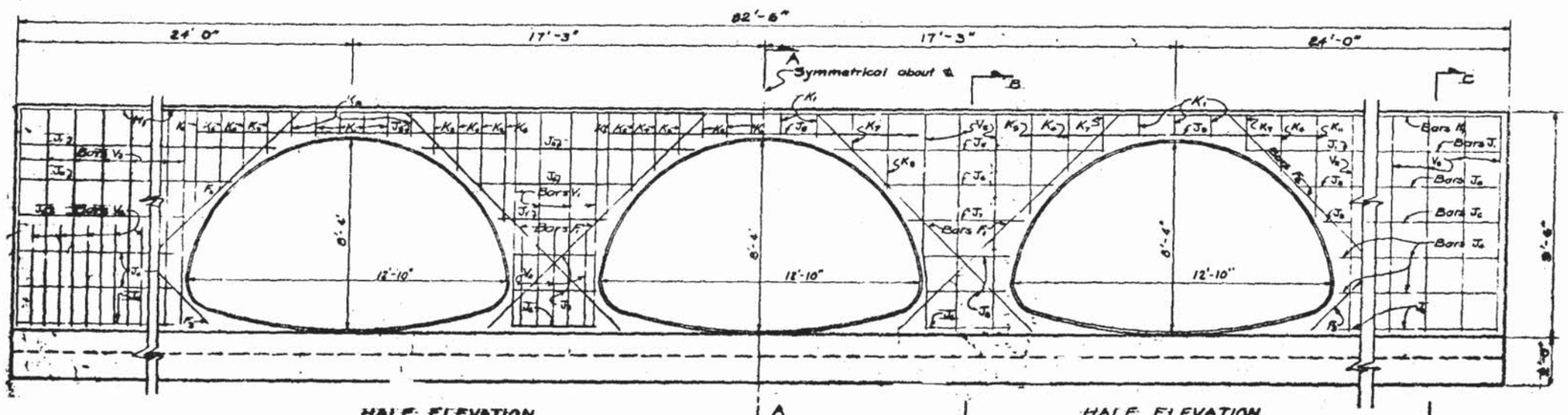


HALF ELEVATION
SHOWING BARS IN BACK FACE OF WALL

HALF ELEVATION
SHOWING BARS IN FRONT FACE OF WALL

Note: For sodding around endwall see detail on Index No. 6RC-01.

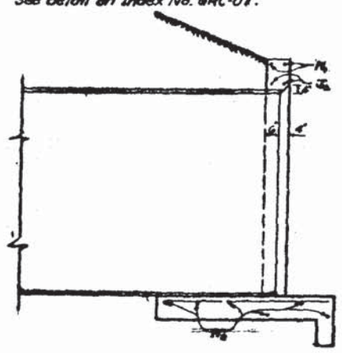

SECTION A-A

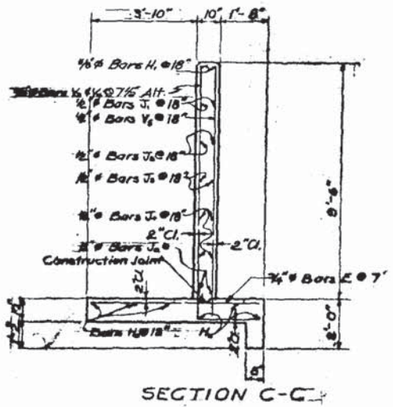


SECTION C-C

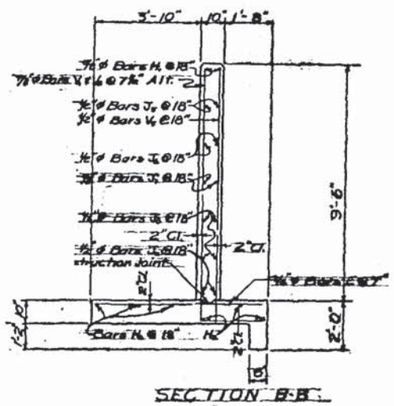


SECTION B-B

## BILL OF REINFORCING STEEL

| MARK | SIZE | NO. REQD | LENGTH | BENDING |
|---|---|---|---|---|
| E | 6 | 142 | 6'-0" | Straight |
| $F_1$ | 5 | 8 | 12'-11" | " |
| $F_2$ | 5 | 4 | 10'-0" | " |
| $F_3$ | 4 | 4 | 3'-0" | " |
| $H_1$ | 5 | 2 | 83'-2" | See Diagr. |
| $H_2$ | 4 | 6 | 83'-6" | " |
| $J_1$ | 4 | 4 | 20'-10" | Straight |
| $J_{1a}$ | 4 | 8 | 18'-9" | " |
| $J_2$ | 4 | 4 | 17'-7" | " |
| $J_{2a}$ | 4 | 8 | 16'-10" | " |
| $J_3$ | 4 | 4 | 11'-3" | " |
| $J_4$ | 4 | 10 | 7'-0" | " |
| $J_5$ | 4 | 4 | 4'-10" | " |
| $J_6$ | 4 | 8 | 3'-4" | " |
| $J_7$ | 4 | 6 | 18'-0" | " |
| $K_1$ | 4 | 22 | 1'-0" | " |
| $K_2$ | 4 | 6 | 1'-4" | " |
| $K_3$ | 4 | 6 | 1'-10" | " |
| $K_4$ | 4 | 10 | 2'-7" | " |
| $K_5$ | 4 | 6 | 3'-6" | " |
| $K_6$ | 4 | 8 | 6'-0" | " |
| $K_7$ | 4 | 6 | 1'-6" | " |
| $K_8$ | 4 | 2 | 3'-2" | " |
| $K_9$ | 4 | 4 | 4'-2" | " |
| $V_1$ | 7 | 8 | 12'-1" | See Diagr. |
| $V_2$ | 7 | 6 | 7'-3" | " |
| $V_3$ | 6 | 30 | 12'-1" | See Diagr. |
| $V_4$ | 6 | 28 | 7'-3" | " |
| $V_5$ | 4 | 30 | 10'-0" | Straight |

## BENDING DIAGRAMS

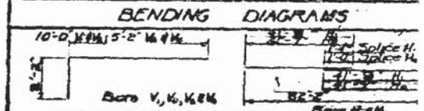


## ESTIMATED QUANTITIES

| ITEM | UNIT | QUANTITY |
|---|---|---|
| Concrete Class II | Cu. Yd. | 34.84 |
| Reinforcing Steel | Lb. | 3830 |

## GENERAL NOTES

DESIGN SPECIFICATIONS: A.A.S.H.O. 1973
CHAMFER: All edges and corners shall be chamfered ¾" unless otherwise shown.
REINFORCING STEEL: Grade 40 or 60

FHWA APPROVED: 3-20-75

FLORIDA DEPARTMENT OF TRANSPORTATION
ROADWAY PLANS SECTION

ENDWALL FOR TRIPLE 154" x 100" CMP ARCH

| REVISIONS | | ROAD NO. | COUNTY | PROJECT NO. |
|---|---|---|---|---|
| Dates | Descriptions | | | |
| 8-20 LMF | Revised side slope to top of wingwall | | | |
| 5-79 | Added Class II Conc. | | | |
| 10-79 | Changed Index No. | | | |

| | Name | Date |
|---|---|---|
| Designed by | R.C.B. | 6-52 |
| Detailed by | J.L.W. | 7-52 |
| Quantities by | R.C.B. | 7-52 |
| Checked by | E.C.D. | 7-52 |
| Traced by | R.C.B. | 6-52 |

Recommended for Approval by T. H. Anderson, Engineer of Bridges
Approved by T. H. Anderson, State Highway Engineer

DCE-19

Form 281-10

# MEMORANDUM

State of Florida Department of Transportation

DATE October 5, 1977

TO All Holders of Standard Index Books

FROM E. H. Hart, Deputy Design Engineer (Rdwys.)

COPIES TO

SUBJECT Standard Index No. DCE-20

This is a new index developed as a substitute for Index No. DCE-03 (with grate, no baffles) as the standard endwall treatment for most median drains and infield cross drains. DCE-20 is intended for use within the clear recovery area and has been set up to call for the grate unless it is specifically deleted in the plans by note. The cost of this unit is anticipated to exceed the cost of additional pipe and a flared end section or other acceptable end treatment outside the clear recovery area, therefore should be used only when it can be economically justified or when other restrictions indicate that it would offer a better treatment than a pipe extension. The use of DCE-03 with grate and baffles should be continued when erosive velocities are anticipated and the extra interior width of DCE-03 and baffles would be required to provide energy dissipation.

The DCE-20 endwall is suitable for use on intersecting road cross drains where a treatment such as a mitered end section would be required. This endwall could be used with the grate (30" pipe) or without grate (15", 18" or 24" pipes) provided that a concrete slab similar to the one shown on Index DME-01 is called for on the plans.

All projects whose scheduled letting will not be delayed should be reviewed for utilization of this index.

Please add this index to your file.

EHH:LMF:jl

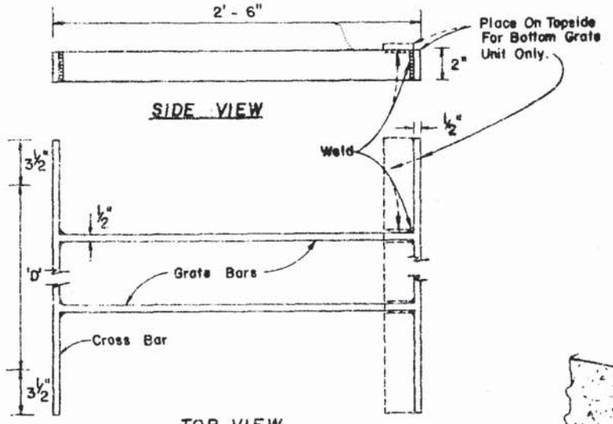


## GRATE TYPE NO. 1

| Pipe Size | Grate Bars Reqd. | Grate Wt. |
|---|---|---|
| 15" | 2 | 28.93 |
| | | |
| | | |
| | | |

Bars to be evenly spaced across dimension 'D'.
All bars ½" x 2".

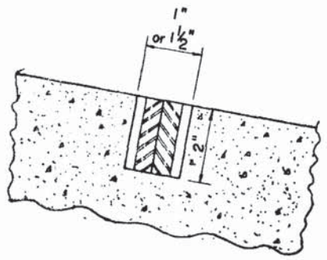


SECTION AA

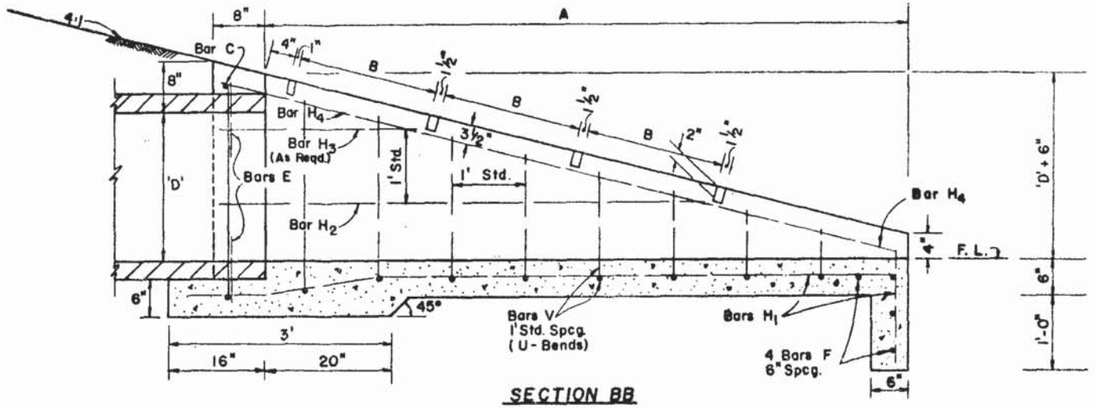


SECTION BB

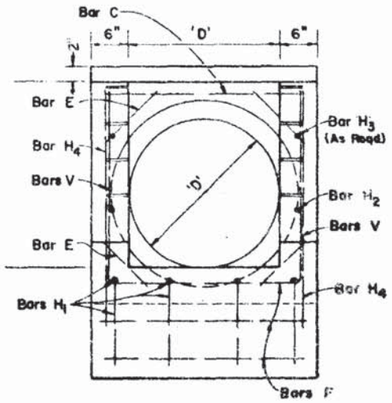


END VIEW

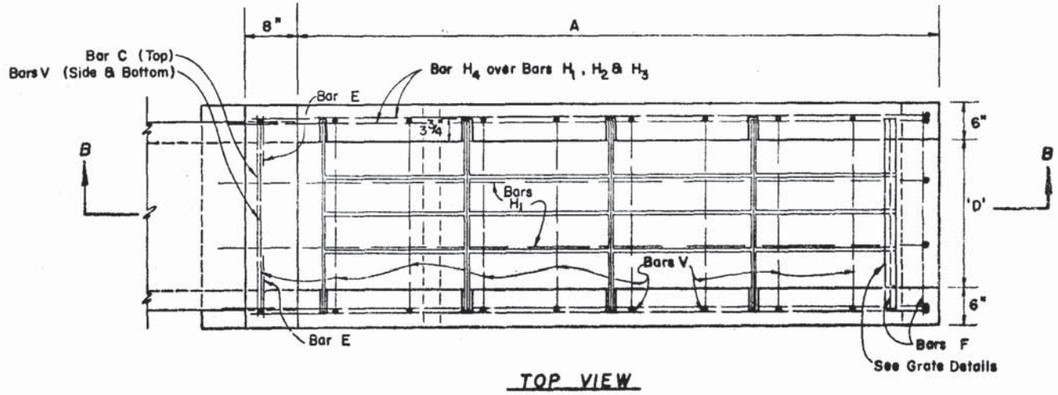


TOP VIEW

| RATE OF SLOPE | PIPE SIZE 'D' | A | B | | CONC. CLASS I (Cu.Yds) | REINF. STEEL (lbs.) | NUMBER OF GRATES REQ'D. GRATE TYPE NO. 1 | NUMBER OF GRATES REQ'D. GRATE TYPE NO. 2 | TOTAL GRATE WT(lbs.) | SODDING (Sq. Yds.) |
|---|---|---|---|---|---|---|---|---|---|---|
| 4:1 | 15" | 5.67' | 2.38' | | 0.85 | 56 | 2 | 0 | 57.86 | 14.5 |
| | 18" | 6.67' | 1.875' | | 1.01 | 73 | 0 | 3 | 101.08 | 15.3 |
| | 24" | 8.67' | 1.875' | | 1.65 | 97 | 0 | 4 | 174.52 | 18.4 |
| | 30" | 10.67' | 1.875' | | 2.33 | 129 | 0 | 5 | 267.75 | 21.0 |

TABLE OF DIMENSIONS AND QUANTITIES

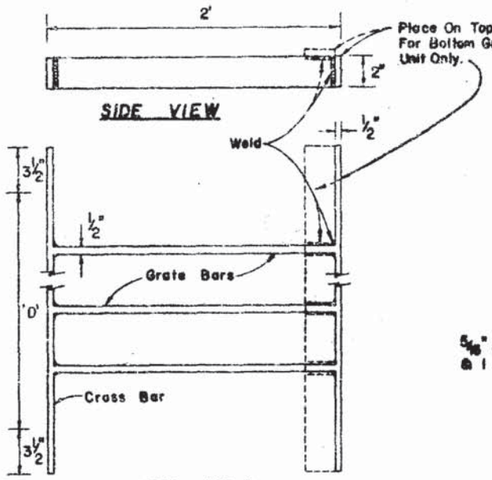


## GRATE TYPE NO. 2

| Pipe Size | Grate Bars Reqd. | Grate Wt. |
|---|---|---|
| 18" | 3 | 33.69 |
| 24" | 4 | 43.63 |
| 30" | 5 | 53.55 |
| | | |

Bars to be evenly spaced across dimension 'D'.
All bars ½" x 2".

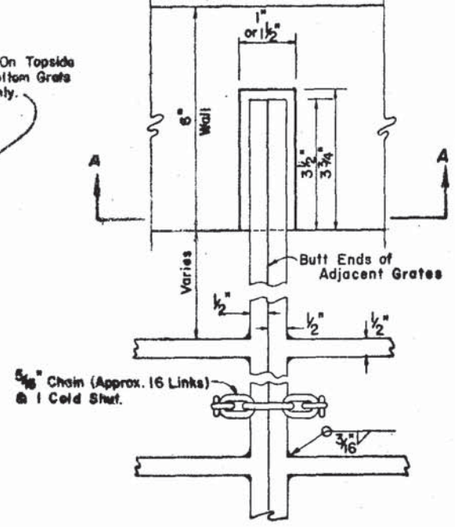


TOP VIEW

## GRATE, SEAT, WELD & CHAIN DETAIL

## GENERAL NOTES

1. This endwall is to be used only in the clear recovery area for the drainage of medians and other areas having low design velocities and negligible debris.
2. Reinforcing Steel: All bars are size # 4. Spacings shown are center to center. Laps to be 12" minimum. Clearance is 2" except as noted.
   Square welded wire fabric (two cages max.) having an equivalent cross sectional area (0.20 sq. in.) may be substituted for bar reinforcement.
3. Grates to be ASTM A 588 weathering steel. If exposed to salt water, grate to be fabricated from ASTM A 572, Grade 50, then galvanized.
4. Endwall to be paid for per each. Payment shall include cost of concrete, reinforcing steel, grate, and accessories. Quantities shown are for estimating purposes only.
5. Sod slopes 5' each side and above endwall. Sodding to be paid for under contract unit price for Sodding.
6. Precasting of this endwall will be permitted. Precast units shall conform to the dimensions shown or in accordance with approved shop drawings. Request for shop drawing approval shall be directed to the D.O.T. Engineer of Drainage.
7. Concrete meeting the requirements of A.S.T.M. C 478 (4,000 P.S.I.) may be used in lieu of Class I concrete for precast units.

FHWA Approved: 7-15-77

STATE OF FLORIDA DEPARTMENT OF TRANSPORTATION

# U - ENDWALL FOR PIPE CULVERTS

| REVISIONS | | ROAD NO. | COUNTY | FED. ROAD NO. |
|---|---|---|---|---|
| Date | Description | | | |

| | Name | Date |
|---|---|---|
| Designed by | E. G. R. | 6-77 |
| Checked by | J. V. G. | 6-77 |
| Quantities by | A. F. | 6-77 |
| Checked by | J. V. G. | 6-77 |
| Supervised by | E. G. R. | |

APPROVED BY: E. H. Hart

Drawing No. 1 OF 1 | Index No. DCE-20

# MEMORANDUM

State of Florida Department of Transportation

DATE October 5, 1977

TO All Holders of Standard Index Books

FROM E. H. Hart, Deputy Design Engineer (Rdwys.)

COPIES TO

SUBJECT Standard Index Drawings

The following index drawings have been revised:

DCE-01-1 supersedes DCE-01. The chart showing data and quantities for metal pipe arch culverts was up-dated to 1974 AASHTO specifications.

DSE-01-1 supersedes DSE-01. The chart showing data and quantities for metal pipe arch culverts was up-dated to 1974 AASHTO specifications.

DCE-04-1 supersedes DCE-04. This index has been redrawn. The general notes were revised, design notes were added, a detail for a reinforced concrete jacket was added and sheet 2 which showed tne grate details and requirements has been deleted.

PEJ-02-1 supersedes PEJ-02. This index was revised to show the joint extended across the shoulder pavement when the shoulder pavement is constructed with either concrete or econocrete. Details and notes were added or deleted as needed for this revision.

All projects whose scheduled letting will not be delayed should be reviewed for the utilization of these revised indices.

Please destroy all copies of these indices in your files and replace with the revised index drawings.

EHH:LMF:jl

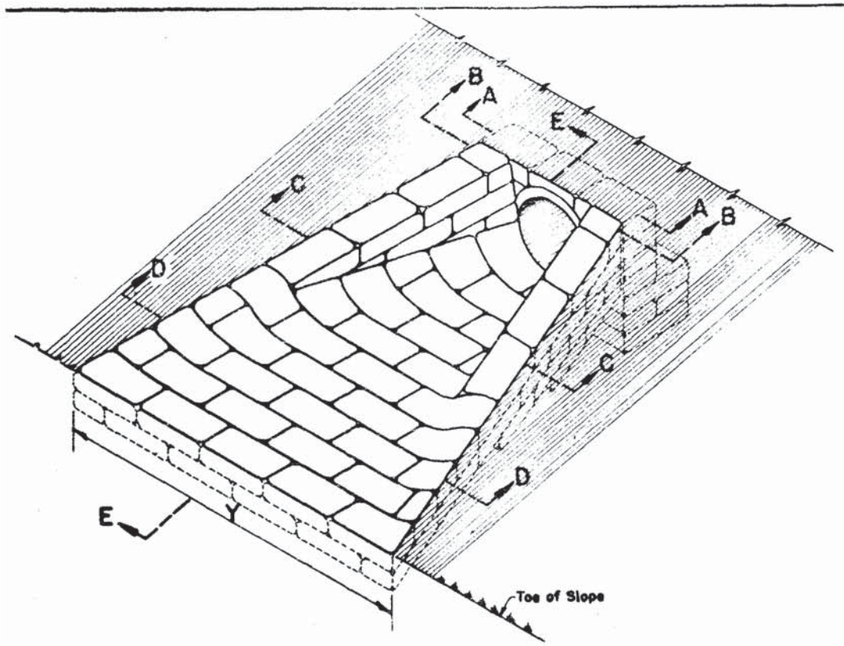


ISOMETRIC

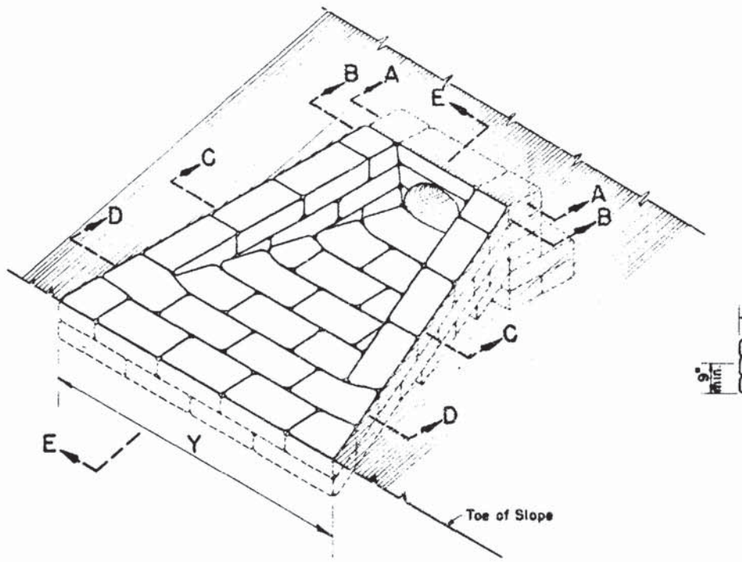


ISOMETRIC

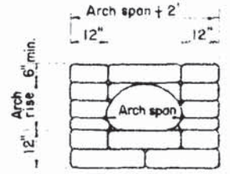


SECTION A-A

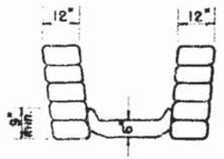


SECTION B-B

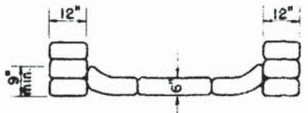


SECTION C-C

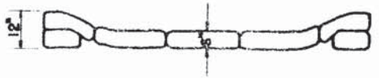


SECTION D-D

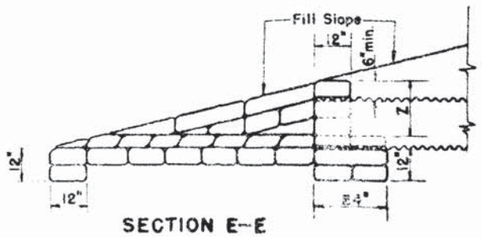


SECTION E-E

## DETAILS FOR SINGLE METAL PIPE ARCH CULVERTS

NOTE: For Multiple Metal Pipe Arch Culvert spacing between Arch centers = X

| DIMENSIONS and QUANTITIES for METAL PIPE ARCH CULVERTS | | | | | | | | | | | | | | | | | | | | | | | |
|---|---|---|---|---|---|---|---|---|---|---|---|---|---|---|---|---|---|---|---|---|---|---|---|
| Span | Rise | Dimensions | | | | | | | Quantity of Sand-Cement Riprap in Cu. Yds. for One Endwall | | | | | | | | | | | | | | |
| | | X | Y | | | | Z | | For 2:1 Slopes | | | | For 4:1 Slopes | | | | For 6:1 Slopes | | | | | | |
| | | | 1-Arch | 2-Arch | 3-Arch | 4-Arch | | | 1-Arch | 2-Arch | 3-Arch | 4-Arch | 1-Arch | 2-Arch | 3-Arch | 4-Arch | 1-Arch | 2-Arch | 3-Arch | 4-Arch | 1-Arch | 2-Arch | 3-Arch | 4-Arch |
| 17" | 13" | 2'-6" | 6'-6" | 9'-0" | 11'-6" | 14'-0" | 1'-7" | | 1.0 | 1.5 | 2.0 | 2.5 | 1.5 | 2.2 | 2.9 | 3.6 | | | | | | | |
| 21" | 15" | 2'-10" | 7'-6" | 10'-4" | 13'-2" | 16'-0" | 1'-9" | | 1.2 | 1.8 | 2.4 | 3.0 | 1.9 | 2.7 | 3.5 | 4.3 | | | | | | | |
| 28" | 20" | 3'-5" | 9'-3" | 12'-8" | 16'-1" | 19'-6" | 2'-0" | | 1.7 | 2.5 | 3.3 | 4.1 | 2.6 | 3.7 | 4.8 | 5.9 | | | | | | | |
| 35" | 24" | 4'-0" | 11'-0" | 15'-0" | 19'-0" | 23'-0" | 2'-0" | | 2.2 | 3.1 | 4.0 | 4.9 | 3.4 | 4.7 | 6.0 | 7.3 | | | | | | | |
| 42" | 29" | 4'-9" | 12'-9" | 17'-6" | 22'-3" | 27'-0" | 2'-0" | | 2.9 | 4.1 | 5.3 | 6.5 | 4.5 | 6.1 | 7.7 | 9.3 | | | | | | | |
| 49" | 33" | 5'-6" | 14'-6" | 20'-0" | 25'-6" | 31'-0" | 2'-0" | | 3.5 | 4.9 | 6.3 | 7.7 | 5.5 | 7.4 | 9.3 | 11.2 | | | | | | | |
| 57" | 38" | 6'-4" | 16'-6" | 22'-10" | 29'-2" | 35'-6" | 2'-0" | | 4.4 | 6.1 | 7.8 | 9.5 | 6.9 | 9.2 | 11.5 | 13.8 | | | | | | | |
| 64" | 43" | 7'-1" | 18'-3" | 25'-4" | 32'-5" | 39'-6" | 2'-0" | | 5.1 | 7.0 | 8.9 | 10.8 | 8.1 | 10.7 | 13.3 | 15.9 | | | | | | | |
| 71" | 47" | 7'-10" | 20'-0" | 27'-10" | 35'-8" | 43'-6" | 2'-0" | | 5.9 | 8.1 | 10.3 | 12.5 | 9.5 | 12.4 | 15.3 | 18.2 | | | | | | | |

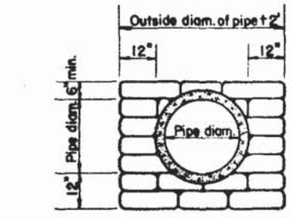


SECTION A-A

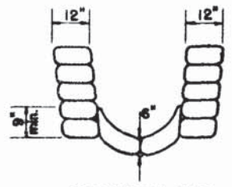


SECTION B-B

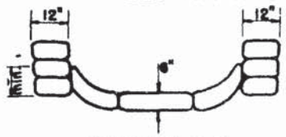


SECTION C-C

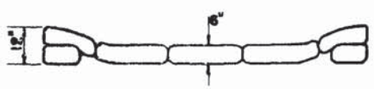


SECTION D-D

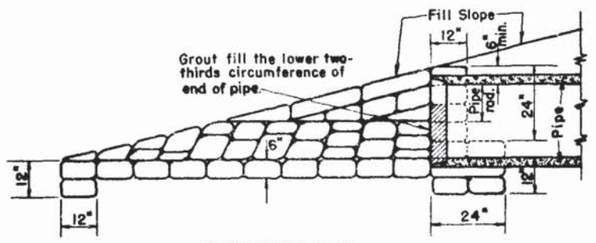


SECTION E-E

## DETAIL FOR SINGLE PIPE CULVERT

NOTE: For Multiple Pipe Culvert spacing between pipe centers = X

| DIMENSIONS and QUANTITIES for ROUND PIPE CULVERTS | | | | | | | | | | | | | | | | | | | | | |
|---|---|---|---|---|---|---|---|---|---|---|---|---|---|---|---|---|---|---|---|---|---|
| Pipe Diam | Dimensions | | | | | Quantity of Sand-Cement Riprap in Cu.Yds. for One Endwall | | | | | | | | | | | | | | | |
| | X | Y | | | | For 2:1 Slopes | | | | For 4:1 Slopes | | | | For 6:1 Slopes | | | | | | | |
| | | 1-Pipe | 2-Pipes | 3-Pipes | 4-Pipes | 1-Pipe | 2-Pipes | 3-Pipes | 4-Pipes | 1-Pipe | 2-Pipes | 3-Pipes | 4-Pipes | 1-Pipe | 2-Pipes | 3-Pipes | 4-Pipes | | | | |
| 15" | 2'-7" | 7'-0" | 9'-7" | 12'-2" | 14'-9" | 1.2 | 1.6 | 2.1 | 2.6 | 1.7 | 2.4 | 3.0 | 3.6 | | | | | | | | |
| 18" | 2'-10" | 8'-0" | 10'-10" | 13'-8" | 16'-6" | 1.4 | 2.0 | 2.6 | 3.1 | 2.1 | 2.9 | 3.7 | 4.4 | | | | | | | | |
| 24" | 3'-5" | 10'-0" | 13'-5" | 16'-10" | 20'-3" | 1.9 | 2.7 | 3.5 | 4.3 | 2.9 | 4.0 | 5.1 | 6.3 | | | | | | | | |
| 30" | 4'-3" | 12'-0" | 16'-3" | 20'-6" | 24'-9" | 2.5 | 3.6 | 4.8 | 5.9 | 3.8 | 5.4 | 7.0 | 8.6 | | | | | | | | |
| 36" | 5'-1" | 14'-0" | 19'-1" | 24'-2" | 29'-3" | 3.1 | 4.6 | 6.2 | 7.7 | 4.8 | 7.0 | 9.2 | 11.4 | | | | | | | | |
| 42" | 6'-0" | 16'-0" | 22'-0" | 28'-0" | 34'-0" | 3.8 | 5.8 | 7.7 | 9.7 | 6.0 | 8.8 | 11.7 | 14.5 | | | | | | | | |
| 48" | 6'-9" | 18'-0" | 24'-9" | 31'-6" | 38'-3" | 4.5 | 7.0 | 9.4 | 11.8 | 7.2 | 10.8 | 14.3 | 17.9 | | | | | | | | |
| 54" | 7'-8" | 20'-0" | 27'-8" | 35'-4" | 43'-0" | 5.3 | 8.3 | 11.3 | 14.2 | 8.5 | 12.9 | 17.3 | 21.7 | | | | | | | | |
| 60" | 8'-6" | 22'-0" | 30'-6" | 39'-0" | 47'-6" | 6.2 | 9.7 | 13.3 | 16.9 | 10.0 | 15.3 | 20.6 | 25.9 | | | | | | | | |

FHWA APPROVED: 6-30-77

FLORIDA DEPARTMENT OF TRANSPORTATION

ROADWAY PLANS SECTION

# SAND-CEMENT ENDWALLS FOR PIPE CULVERTS

| REVISIONS | | STATE NO. | COUNTY | PROJECT NO. |
|---|---|---|---|---|
| Date | Description | | | |
| 10-74 | Changed Index No. | | | |
| 8-77 | Update CMP Arch to 1974 AASHTO | | | |

| | Name | Date |
|---|---|---|
| Detailed by | J.E.P. Jr | 12-3-48 |
| Checked by | C.D.D | 12-6-48 |
| Quantities by | | |
| Checked by | | |
| Traced by | H.W. | 3-9-54 |

Approved by:

Deputy Design Engineer - Roadways

Drawing No. DSE-01-1

| FED. ROAD DIV. No. | STATE | PROJECT NO. | FISCAL YEAR | SHEET NO. |
|---|---|---|---|---|
| 3 | FLA. | | | |

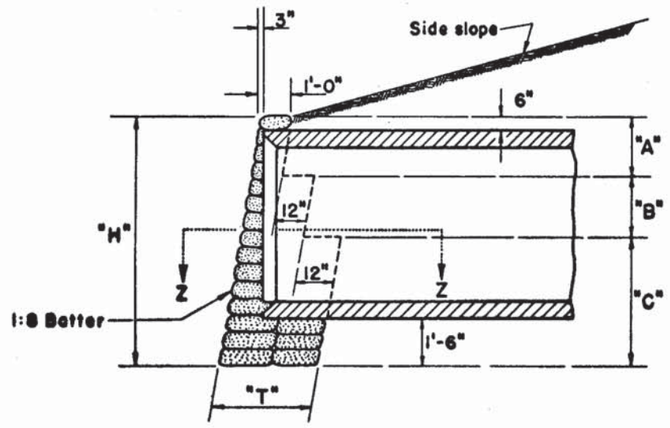


SECTION Y-Y

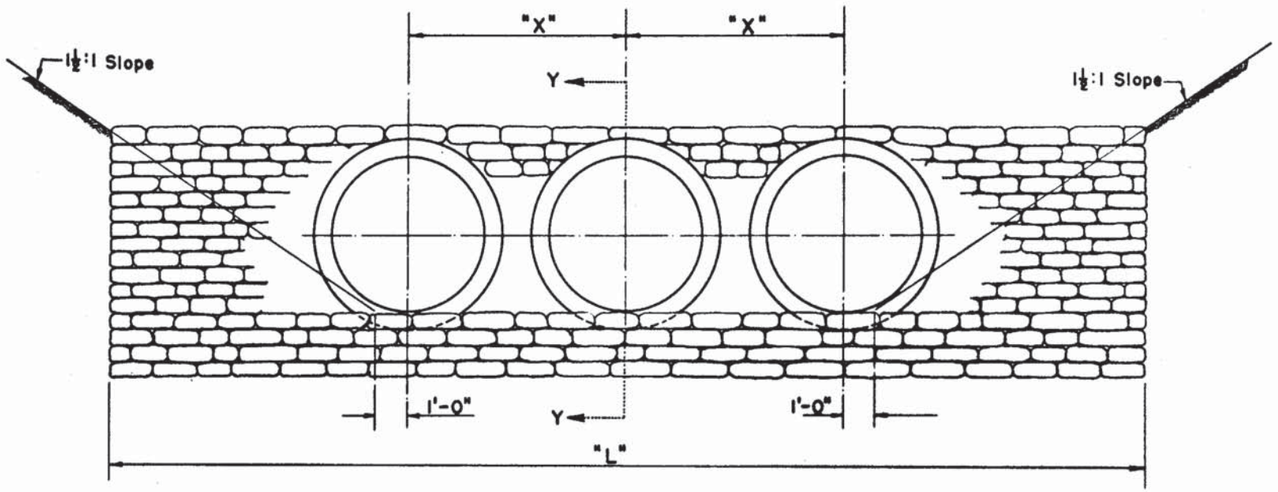


FRONT ELEVATION

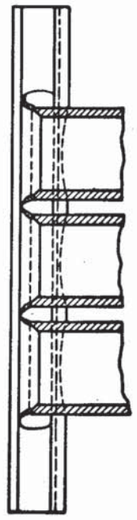

SECTION Z-Z

| TABLE OF DIMENSIONS | | | | | | | QUANTITIES FOR ONE ENDWALL | | | | | | | |
|---|---|---|---|---|---|---|---|---|---|---|---|---|---|---|
| SIZE OF PIPE | H | T | A | B | C | X | ONE PIPE CULVERTS | | TWO PIPE CULVERTS | | THREE PIPE CULVERTS | | FOUR PIPE CULVERTS | |
| | | | | | | | L | RIPRAP CU. YDS. | L | RIPRAP CU. YDS. | L | RIPRAP CU. YDS. | L | RIPRAP CU. YDS. |
| 18" | 3'-10" | 1'-0" | 3'-10" | 0'-0" | 0'-0" | 2'-10" | 8'-0" | 1.04 | 10'-10" | 1.34 | 13'-8" | 1.65 | 16'-6" | 1.95 |
| 24" | 4'-5" | 2'-0" | 2'-0" | 2'-5" | 0'-0" | 3'-5" | 9'-8" | 2.22 | 13'-1" | 2.85 | 16'-6" | 3.49 | 19'-11" | 4.13 |
| 30" | 5'-0" | 2'-0" | 2'-0" | 3'-0" | 0'-0" | 4'-3" | 11'-3" | 2.94 | 15'-6" | 3.81 | 19'-9" | 4.67 | 24'-0" | 5.54 |
| 36" | 5'-7" | 2'-0" | 2'-0" | 3'-7" | 0'-0" | 5'-1" | 12'-11" | 3.79 | 18'-0" | 4.91 | 23'-1" | 6.04 | 28'-2" | 7.17 |
| 42" | 6'-3" | 3'-0" | 2'-0" | 2'-0" | 2'-3" | 6'-0" | 14'-7" | 5.94 | 20'-7" | 7.83 | 26'-7" | 9.71 | 32'-7" | 11.60 |
| 48" | 6'-10" | 3'-0" | 2'-0" | 2'-0" | 2'-10" | 6'-9" | 16'-3" | 7.45 | 23'-0" | 9.81 | 29'-9" | 12.16 | 36'-6" | 14.51 |
| 54" | 7'-6" | 3'-0" | 2'-0" | 2'-0" | 3'-6" | 7'-8" | 18'-0" | 9.22 | 25'-8" | 12.12 | 33'-4" | 15.02 | 41'-0" | 17.92 |
| 60" | 8'-2" | 3'-0" | 2'-0" | 2'-0" | 4'-2" | 8'-6" | 19'-9" | 11.23 | 28'-3" | 14.75 | 36'-9" | 18.27 | 45'-3" | 21.79 |
| 66" | 8'-7" | 3'-0" | 2'-0" | 2'-0" | 4'-7" | 9'-2" | 21'-7½" | 12.92 | 30'-9½" | 15.18 | | | | |
| 72" | 9'-2" | 3'-0" | 2'-0" | 2'-0" | 5'-2" | | 23'-3" | 15.07 | | | | | | |
| 84" | 10'-4" | 3'-0" | 2'-0" | 2'-0" | 6'-4" | | 26'-6" | 18.72 | | | | | | |

FHWA APPROVED: 12-6-76

FLORIDA DEPARTMENT OF TRANSPORTATION
ROADWAY PLANS SECTION

# SAND-CEMENT ENDWALLS FOR PIPE CULVERTS

| REVISIONS | | ROAD NO. | COUNTY | PROJECT NO. |
|---|---|---|---|---|
| Dates | Descriptions | | | |
| 2-61 | Added 72" Pipe | | | |
| 10-74 | Changed Index No. | | | |
| 11-76 DAM | Added 84" Pipe | | | |

| | Names | Dates |
|---|---|---|
| Detailed by | | |
| Checked by | | |
| Quantities by | J.E.P.Jr. | 5-48 |
| Checked by | H.B. | 5-48 |
| Traced by | E.H. | 5-48 |

Approved by:

E. H. Hurt
Deputy Design Engineer - Roadways

Drawing No.

Index No. DSE-02-1

| FED. ROAD DIV. NO. | STATE | PROJECT NO. | SHEET NO. |
|---|---|---|---|
| 2 | FLA. | | |

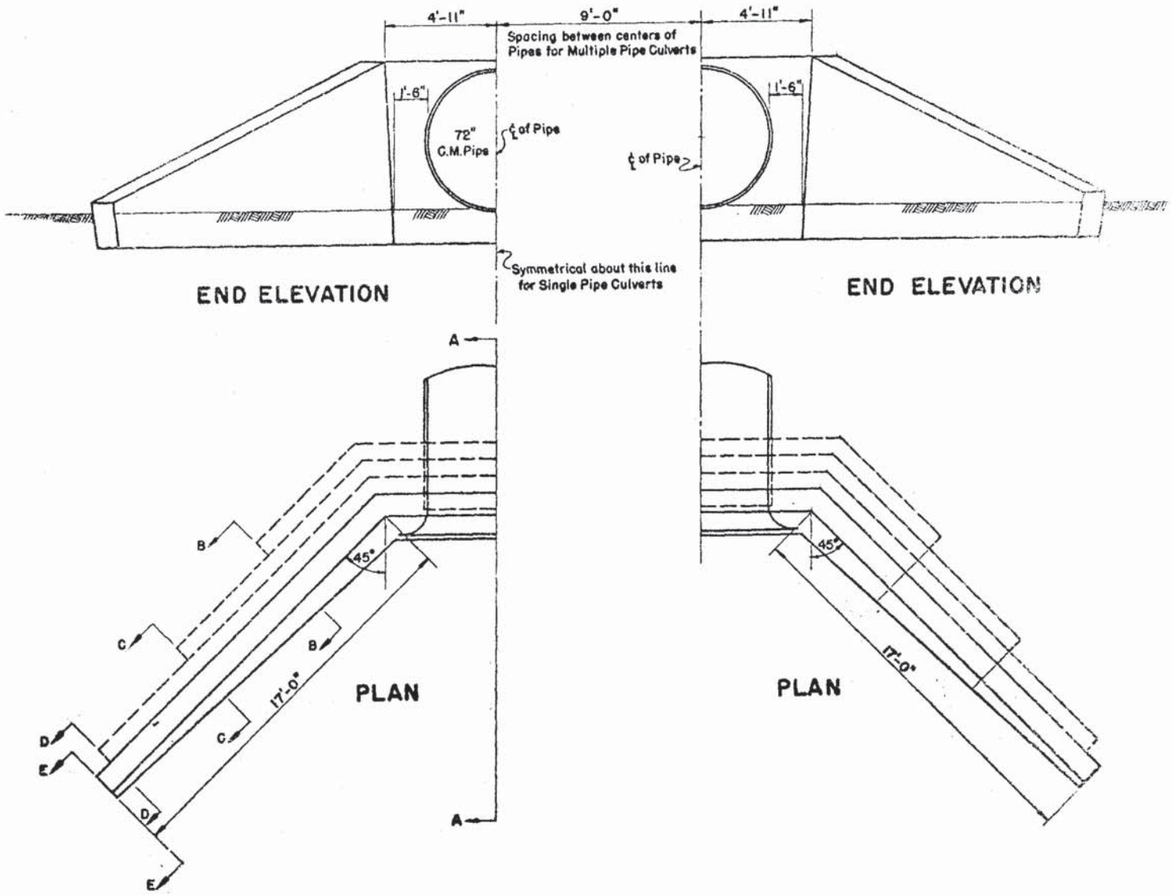


| QUANTITY IN ONE ENDWALL, CU.YDS. OF SAND-CEMENT RIPRAP | | | |
|---|---|---|---|
| 1 PIPE | 2 PIPES | 3 PIPES | 4 PIPES |
| 19.3 | 23.6 | 27.9 | 32.2 |

NOTE: Wingwalls based on 2:1 slope

SCALE : 1"= 3'-0"

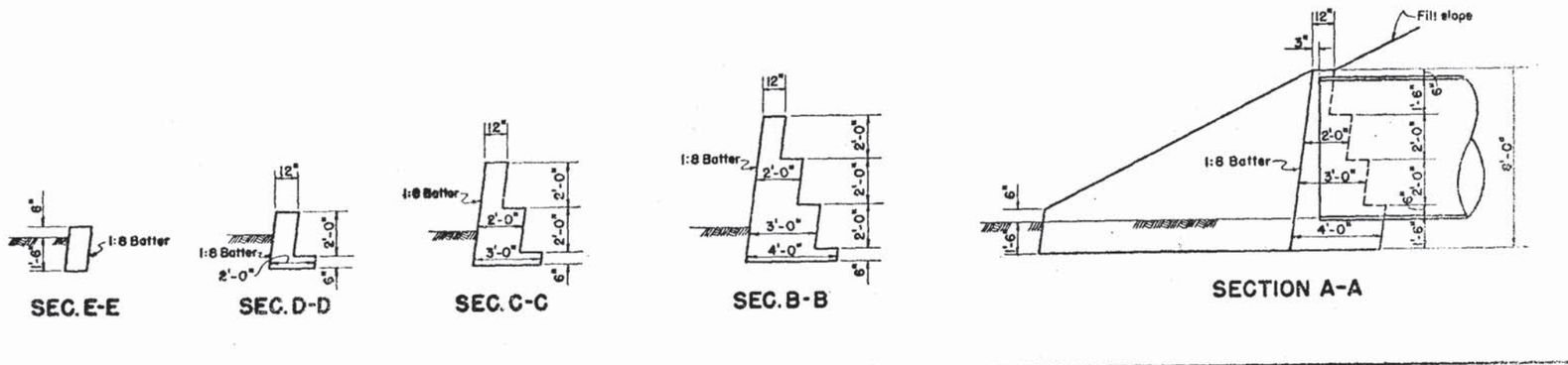


FHWA APPROVED: 3-20-75

FLORIDA DEPARTMENT OF TRANSPORTATION

ROADWAY PLANS SECTION

# SAND-CEMENT ENDWALLS FOR 72" C.M. PIPE

| REVISIONS | | ROAD NO. | COUNTY | | PROJECT NO. |
|---|---|---|---|---|---|
| Date | Description | | | | |
| 10-74 | Flanged Index No. | | | | |
| | | | Names | Dates | Approved by: |
| | | Detailed by | W.C.L. | 5-54 | |
| | | Checked by | S.G.B. | 5-54 | E.R. Hurst |
| | | Quantities by | W.C.L. | 5-54 | Deputy Design Engineer - Roadways |
| | | Checked by | S.G.B. | 5-54 | Drawing No. 1 of 1 |
| | | Traced by | H.W. | 5-54 | Index No. DSE-03 |

| FED. ROAD DIV. No. | STATE | PROJECT NO. | FISCAL YEAR | SHEET NO. |
|---|---|---|---|---|
| 9 | FLA. | | | |

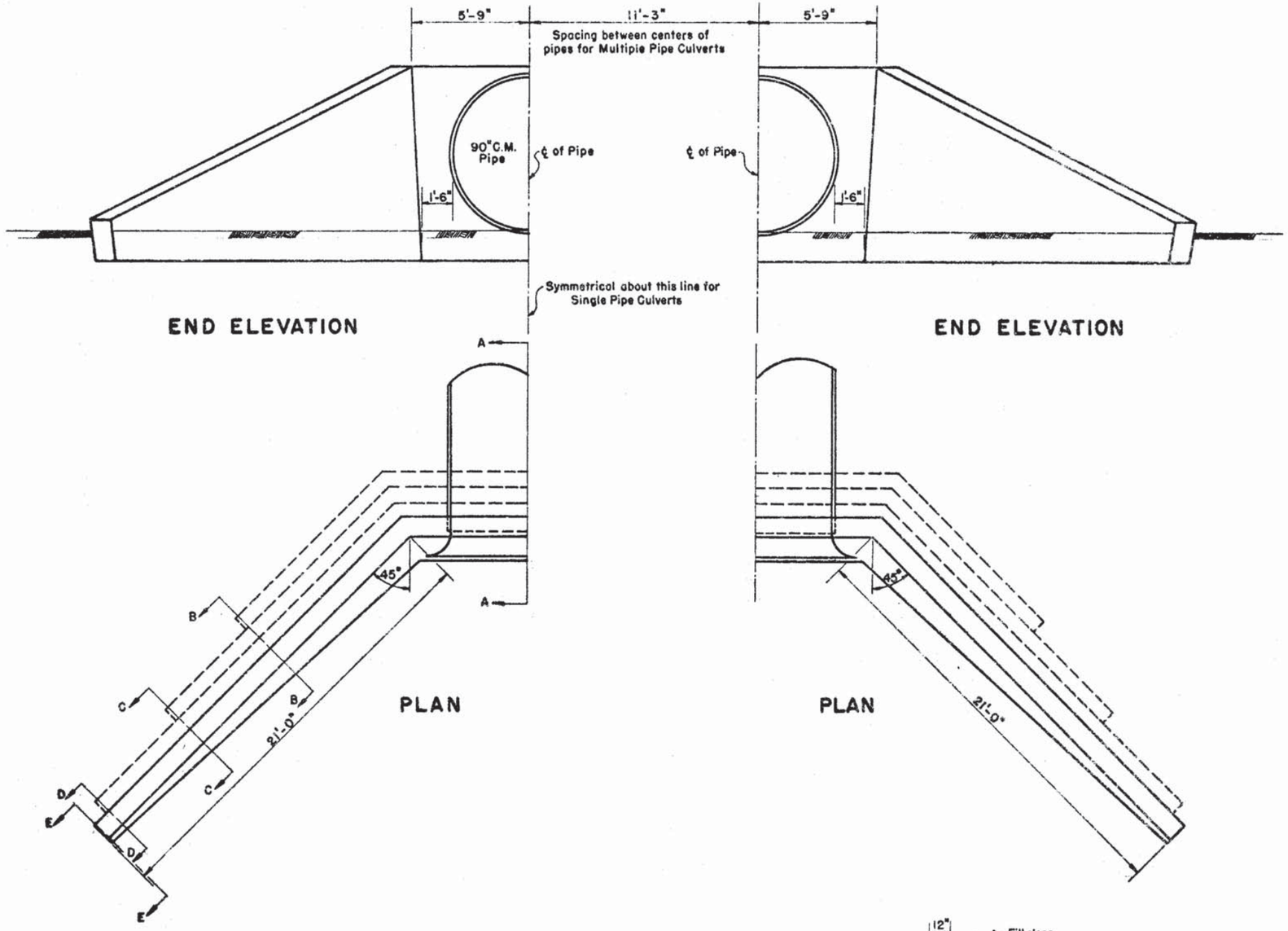


| QUANTITY IN ONE ENDWALL, CU. YDS. OF SAND-CEMENT RIPRAP | | | |
|---|---|---|---|
| 1 PIPE | 2 PIPES | 3 PIPES | 4 PIPES |
| 28.8 | 35.4 | 42.0 | 48.6 |

NOTE: Wingwalls based on 2:1 slope

SCALE: 1" = 3'-0"

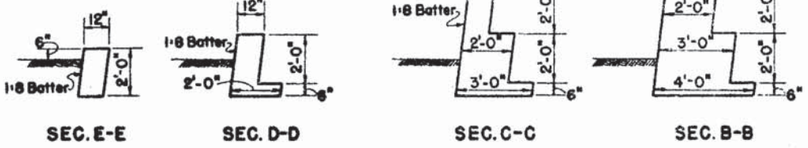


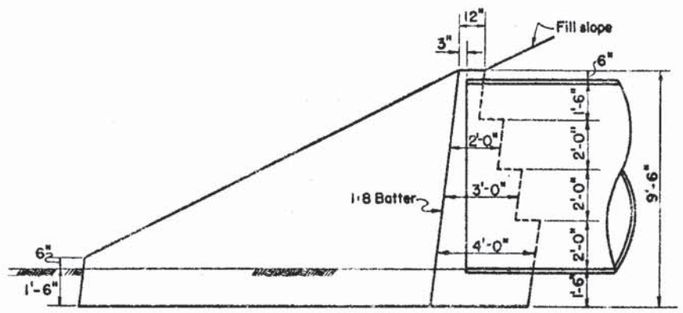


FHWA APPROVED: 3-20-75

FLORIDA DEPARTMENT OF TRANSPORTATION

ROADWAY PLANS SECTION

# SAND-CEMENT ENDWALLS FOR 90" C.M. PIPE

| REVISIONS | | ROAD NO. | COUNTY | | PROJECT NO. |
|---|---|---|---|---|---|
| Date | Descriptions | | | | |
| 10-74 | Changed Index No. | | | | |
| | | | Names | Date | Approved by: |
| | | Detailed by | E.H.H. | 5-12-54 | |
| | | Checked by | W.C.L. | 5-13-54 | |
| | | Quantities by | E.H.H. | 5-12-54 | S. Hiart |
| | | Checked by | W.C.L. | 5-13-54 | Deputy Design Engineer - Roadways |
| | | Traced by | H.W. | 5-13-54 | Drawing No. 1 of 1 — Index No. DSE-C |

| FED. ROAD DIV. No. | STATE | PROJECT NO. | FISCAL YEAR | SHEET NO. |
|---|---|---|---|---|
| 3 | FLA. | | | |

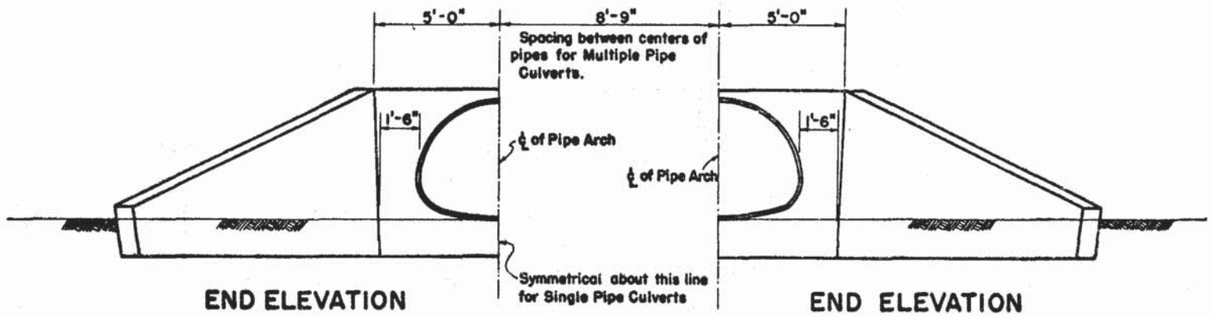


END ELEVATION

END ELEVATION

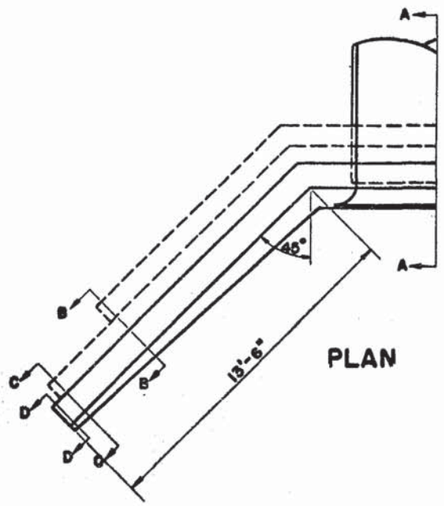


PLAN

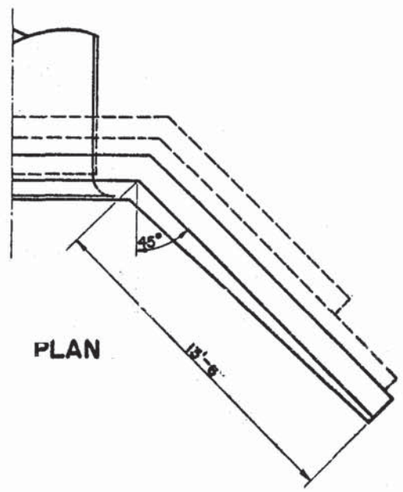


PLAN

| QUANTITY IN ONE ENDWALL, CU. YDS. OF SAND-CEMENT RIPRAP | | | |
|---|---|---|---|
| 1 PIPE | 2 PIPES | 3 PIPES | 4 PIPES |
| 11.8 | 14.6 | 17.3 | 20.1 |

NOTE: Wingwalls based on 2:1 slope

SCALE = 1" = 3'-0"




SEC. D—D

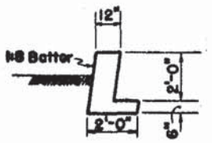


SEC. C—C

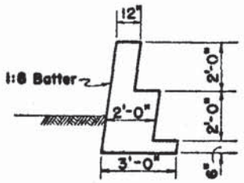


SEC. B—B

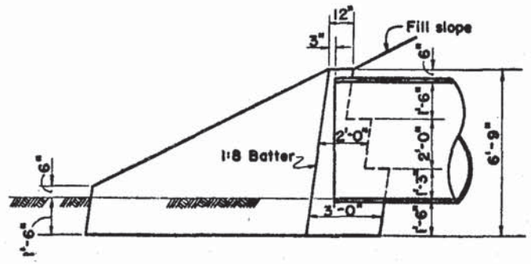


SECTION A—A

FHWA APPROVED: 3-20-75

FLORIDA DEPARTMENT OF TRANSPORTATION

ROADWAY PLANS SECTION

# SAND-CEMENT ENDWALLS FOR 76" x 57" C.M. PIPE ARCH

| REVISIONS | | ROAD NO. | COUNTY | PROJECT NO. |
|---|---|---|---|---|
| Date | Descriptions | | | |
| 10-74 | Changed Index N° | | | |

| | Name | Date |
|---|---|---|
| Detailed by | S.G.B. | 10-15-53 |
| Checked by | E.H.A. | 10-16-53 |
| Quantities by | S.G.B. | 10-15-53 |
| Checked by | G.A.C. | 10-19-53 |
| Traced by | H.W. | 10-22-53 |

Approved by:

E H Hart

Deputy Design Engineer - Roadways

Drawing No. 1 of 1

Index No. DSE-05

| FED. ROAD DIV. NO. | STATE | PROJECT NO. | FISCAL YEAR | SHEET NO. |
|---|---|---|---|---|
| 3 | FLA. | | | |

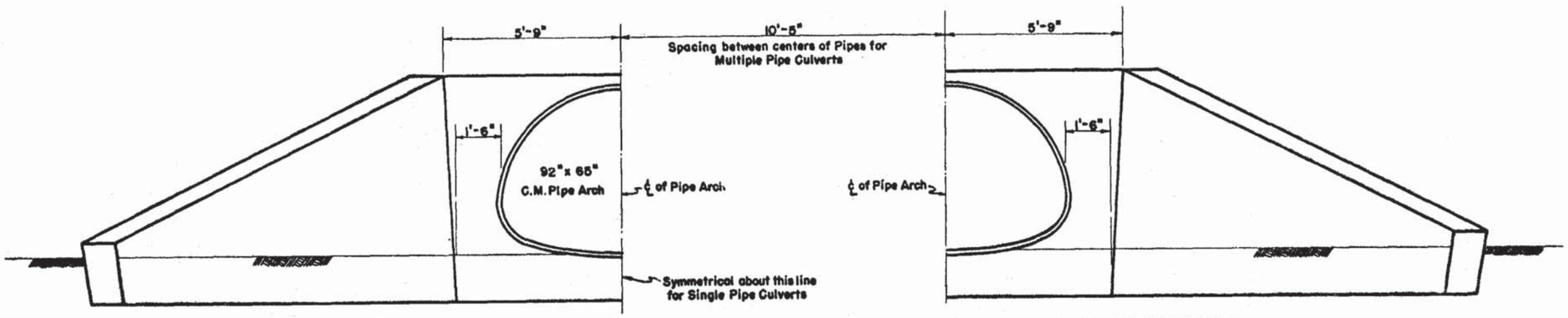


END ELEVATION

END ELEVATION

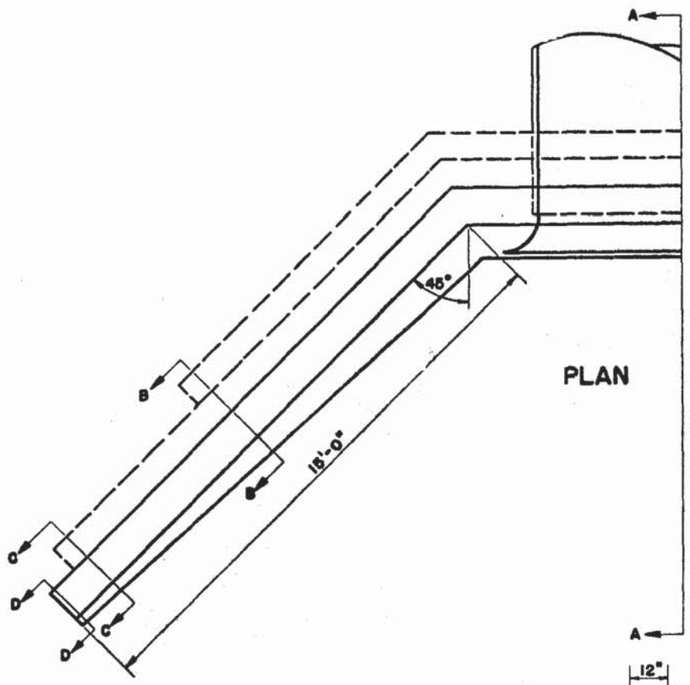


PLAN

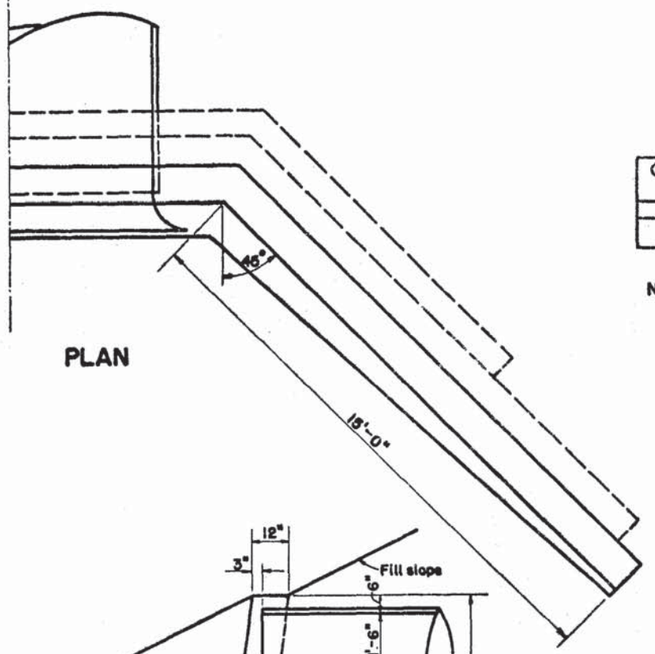


PLAN

| QUANTITY IN ONE ENDWALL, CU. YDS. OF SAND-CEMENT RIPRAP | | | |
|---|---|---|---|
| 1 PIPE | 2 PIPES | 3 PIPES | 4 PIPES |
| 14.9 | 18.4 | 21.9 | 25.4 |

NOTE: Wingwalls based on 2:1 slope

SCALE: 1"=2'-0"

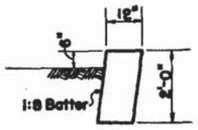


SEC. D-D

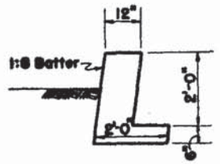


SEC. C-C

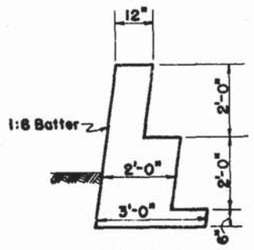


SEC. B-B

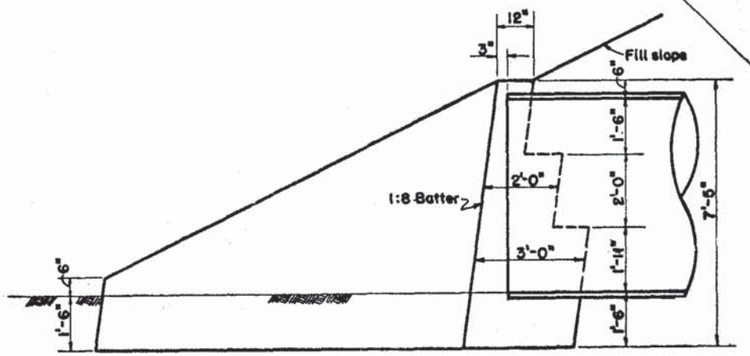


SECTION A-A

FHWA APPROVED: 3-20-75

FLORIDA DEPARTMENT OF TRANSPORTATION

ROADWAY PLANS SECTION

# SAND-CEMENT ENDWALLS FOR 92" x 65" C.M. PIPE ARCH

| REVISIONS | | ROAD NO. | COUNTY | PROJECT NO. |
|---|---|---|---|---|
| Date | Description | | | |
| 10-74 | Changed Index N° | | | |

| | Name | Date |
|---|---|---|
| Detailed by | E.H.A. | 10-53 |
| Checked by | E.H.H. | 10-53 |
| Quantities by | E.H.A. | 10-53 |
| Checked by | E.H.H. | 10-53 |
| Traced by | H.W. | 11-53 |

Approved by:

E.H. Hoad

Deputy Design Engineer - Roadways

Drawing No. 1 of 1

Index No. DSE-06

| FED. ROAD DIV. No | STATE | PROJECT NO. | FISCAL YEAR | SHEET NO. |
|---|---|---|---|---|
| 3 | FLA. | | | |

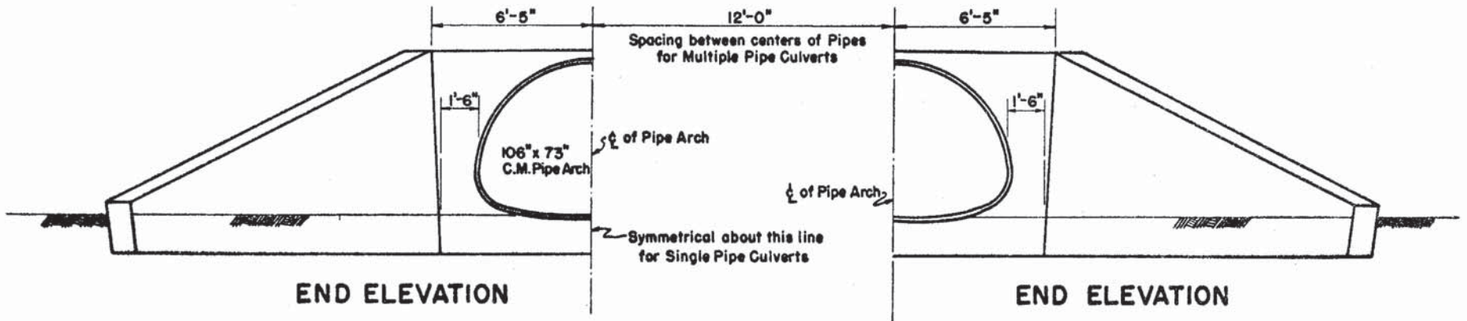


END ELEVATION

END ELEVATION

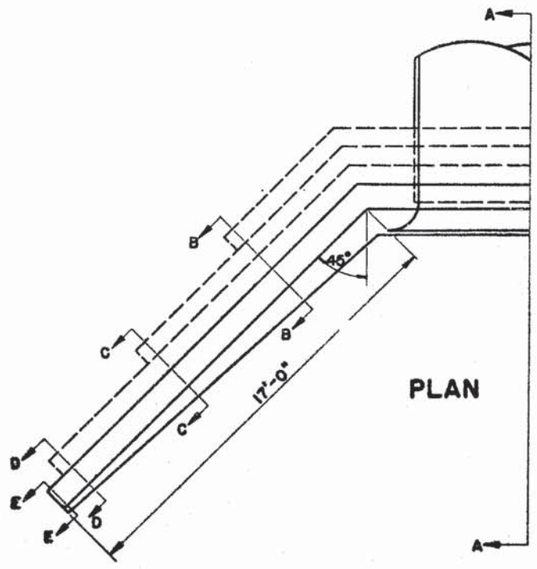


PLAN

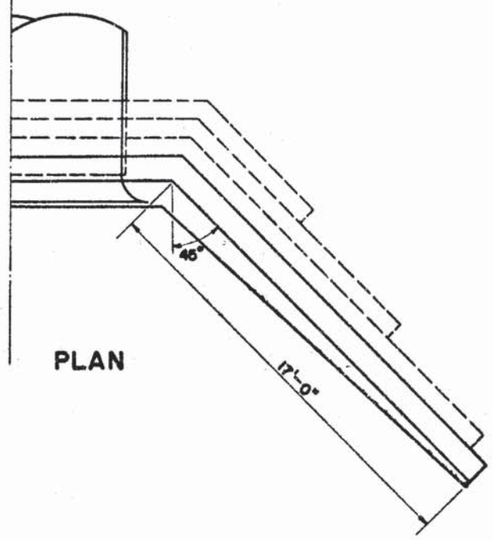


PLAN

| QUANTITY IN ONE ENDWALL, CU.YDS. OF SAND-CEMENT RIPRAP | | | |
|---|---|---|---|
| 1 PIPE | 2 PIPES | 3 PIPES | 4 PIPES |
| 20.4 | 25.5 | 30.6 | 35.7 |

NOTE: Wingwalls based on 2:1 slope

SCALE : 1" = 3'-0"

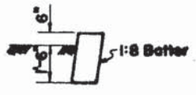


SEC. E-E

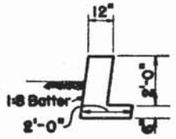


SEC. D-D

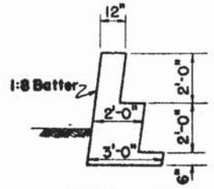


SEC. C-C

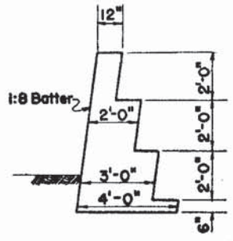


SEC. B-B

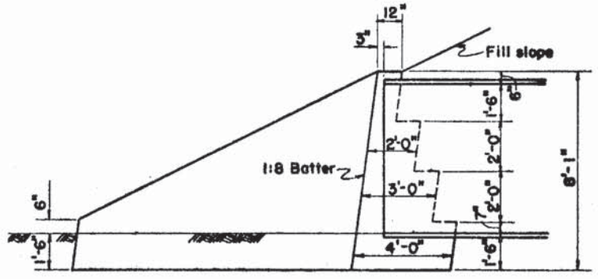


SECTION A-A

FHWA APPROVED : 3-20-75

FLORIDA DEPARTMENT OF TRANSPORTATION

ROADWAY PLANS SECTION

# SAND-CEMENT ENDWALLS FOR 106" x 73" C.M. PIPE ARCH

| REVISIONS | | ROAD NO. | COUNTY | PROJECT NO. |
|---|---|---|---|---|
| Dates | Descriptions | | | |
| 10-76 | Changed Index No | | | |

| | Names | Dates |
|---|---|---|
| Detailed by | E.H.A. | 10-53 |
| Checked by | E.H.H. | 10-53 |
| Quantities by | E.H.A. | 10-53 |
| Checked by | E.H.H. | 10-53 |
| Traced by | H.W. | 11-53 |

Approved by:

E.H. Hart

Deputy Design Engineer-Roadways

| Drawing No. | Index No. |
|---|---|
| 1 of 1 | DSE-07 |

| FED. ROAD DIV. No. | STATE | PROJECT NO. | FINAL YEAR |
|---|---|---|---|
| 3 | FLA. | | |

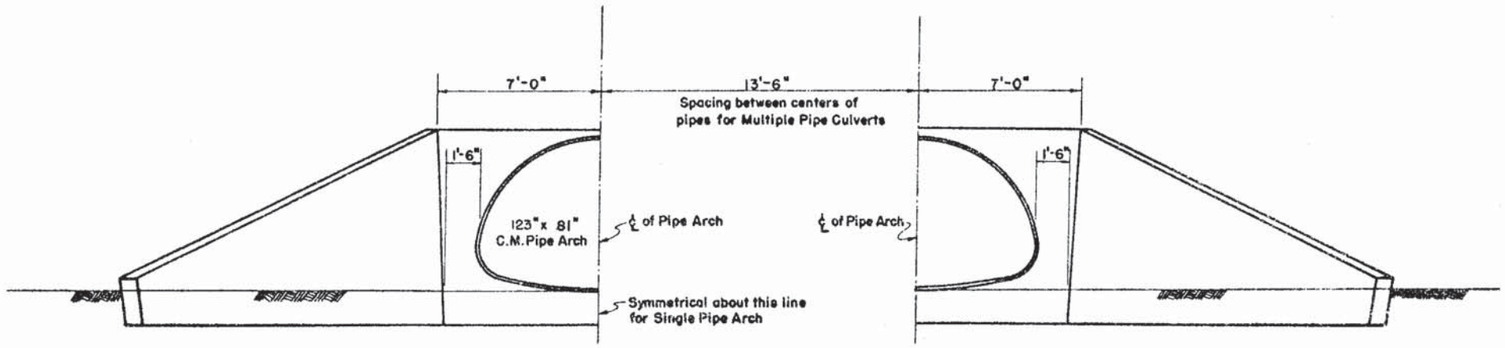


END ELEVATION

END ELEVATION

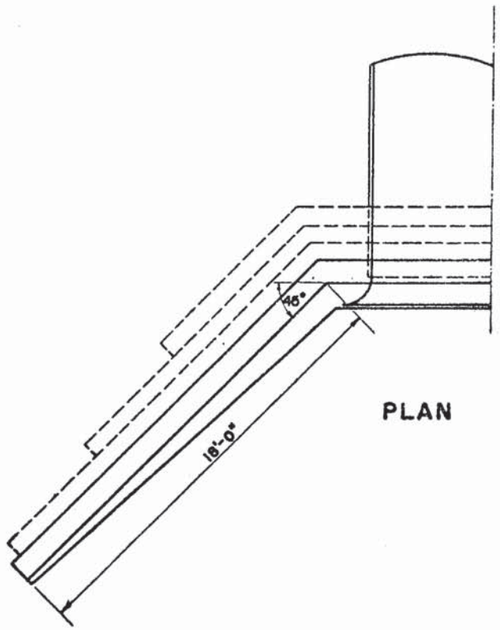


PLAN

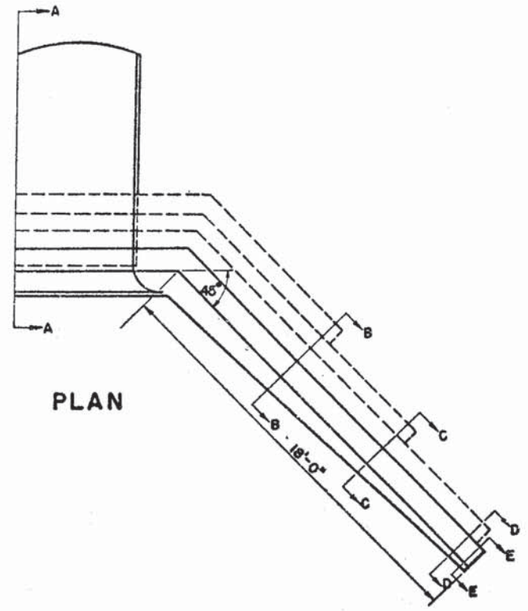


PLAN

| QUANTITY IN ONE ENDWALL, CU. YDS. OF SAND-CEMENT RIPRAP | | | |
|---|---|---|---|
| 1 PIPE | 2 PIPES | 3 PIPES | 4 PIPES |
| 22.6 | 28.3 | 34.0 | 39.7 |

NOTE: Wingwalls based on 2:1 slope

SCALE = 1" = 3'-0"

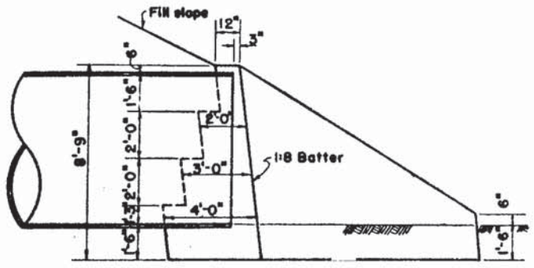


SECTION A–A

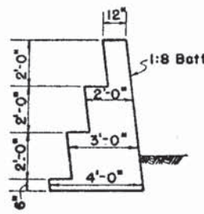


SEC. B–B

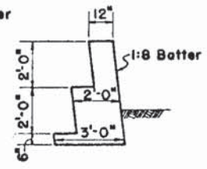


SEC. C–C

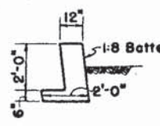


SEC. D–D

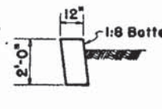


SEC. E–E

FHWA APPROVED: 3-20-75

FLORIDA DEPARTMENT OF TRANSPORTATION

ROADWAY PLANS SECTION

# SAND-CEMENT ENDWALLS FOR 123" x 81" C.M. PIPE ARCH

| REVISIONS | |
|---|---|
| Dates | Descriptions |
| 10-74 | Changed Index No |

ROAD NO. | COUNTY | PROJECT NO.

| | Names | Dates |
|---|---|---|
| Detailed by | G.A.C. | 10-2-53 |
| Checked by | E.H.A. | 10-19-53 |
| Quantities by | G.A.C. | 10-2-53 |
| Checked by | E.H.A. | 10-19-53 |
| Traced by | H.W. | 10-21-53 |

Approved by:

E H Hart

Deputy Design Engineer - Roadway

Drawing No. 1 of 1

Index No. DSE-08

| FED. ROAD Div. No. | STATE | PROJECT NO. | FISCAL YEAR |
|---|---|---|---|
| 3 | FLA. | | |

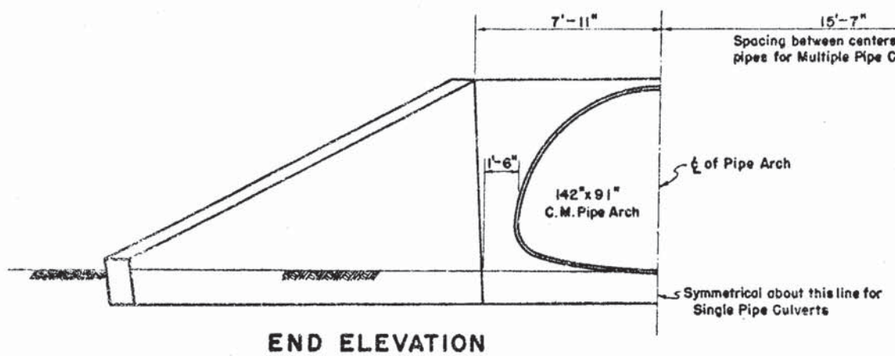


END ELEVATION

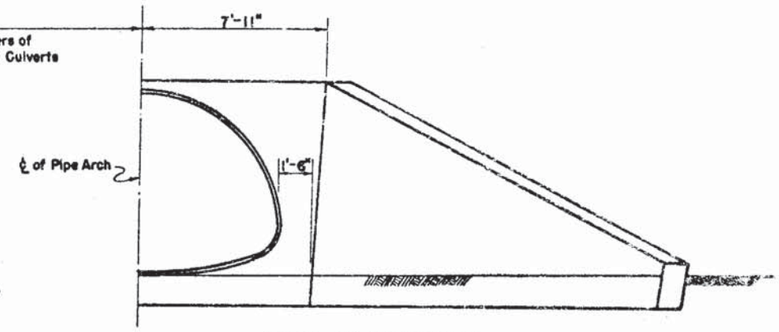


END ELEVATION

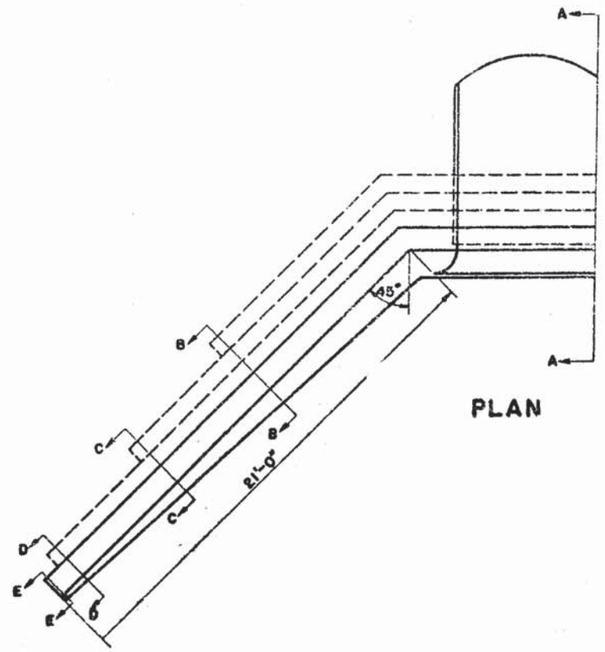


PLAN

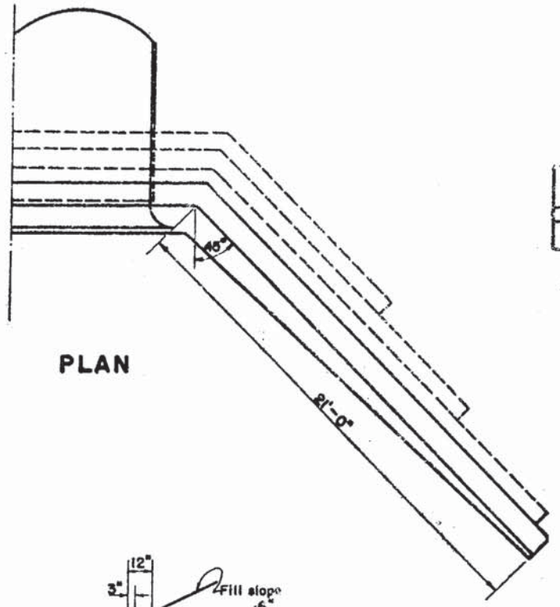


PLAN

| QUANTITY IN ONE ENDWALL, CU.YDS OF SAND-CEMENT RIPRAP | | | |
|---|---|---|---|
| 1 PIPE | 2 PIPES | 3 PIPES | 4 PIPES |
| 30.8 | 38.4 | 46.2 | 54.0 |

NOTE: Wingwalls based on 2:1 slope

SCALE = 1" = 3'-0"

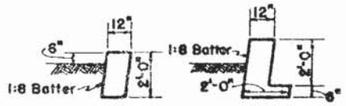


SEC. E-E




SEC. D-D

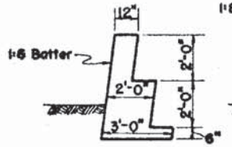


SEC. C-C

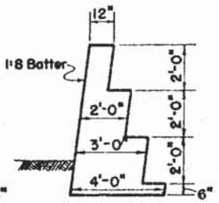


SEC. B-B

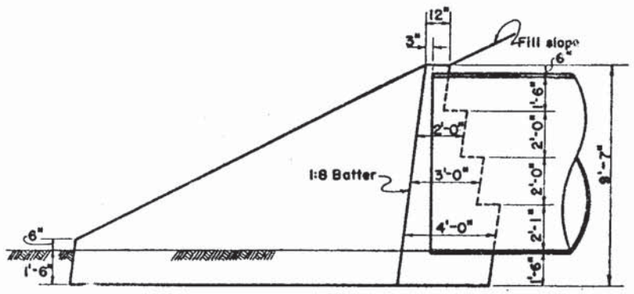


SECTION A-A

FHWA APPROVED: 3-20-75

FLORIDA DEPARTMENT OF TRANSPORTATION

ROADWAY PLANS SECTION

# SAND-CEMENT ENDWALLS FOR 142"x91" C.M. PIPE ARCH

| REVISIONS | | ROAD NO. | COUNTY | PROJECT NO. |
|---|---|---|---|---|
| Date | Description | | | |
| 10-26 | Changed Index N° | | | |

| | Name | Date |
|---|---|---|
| Detailed by | E.H.A. | 10-12-53 |
| Checked by | E.H.H. | 10-14-53 |
| Quantities by | E.H.A. | 10-12-53 |
| Checked by | G.A.C. | 10-14-53 |
| Traced by | H.W. | 10-20-53 |

Approved by:

Deputy Design Engineer - Roadways

Drawing No. 1 of 1

Index No. DSE-09

| FED. ROAD DIV. No. | STATE | PROJECT NO. | FISCAL YEAR |
|---|---|---|---|
| 8 | F.A. | | |

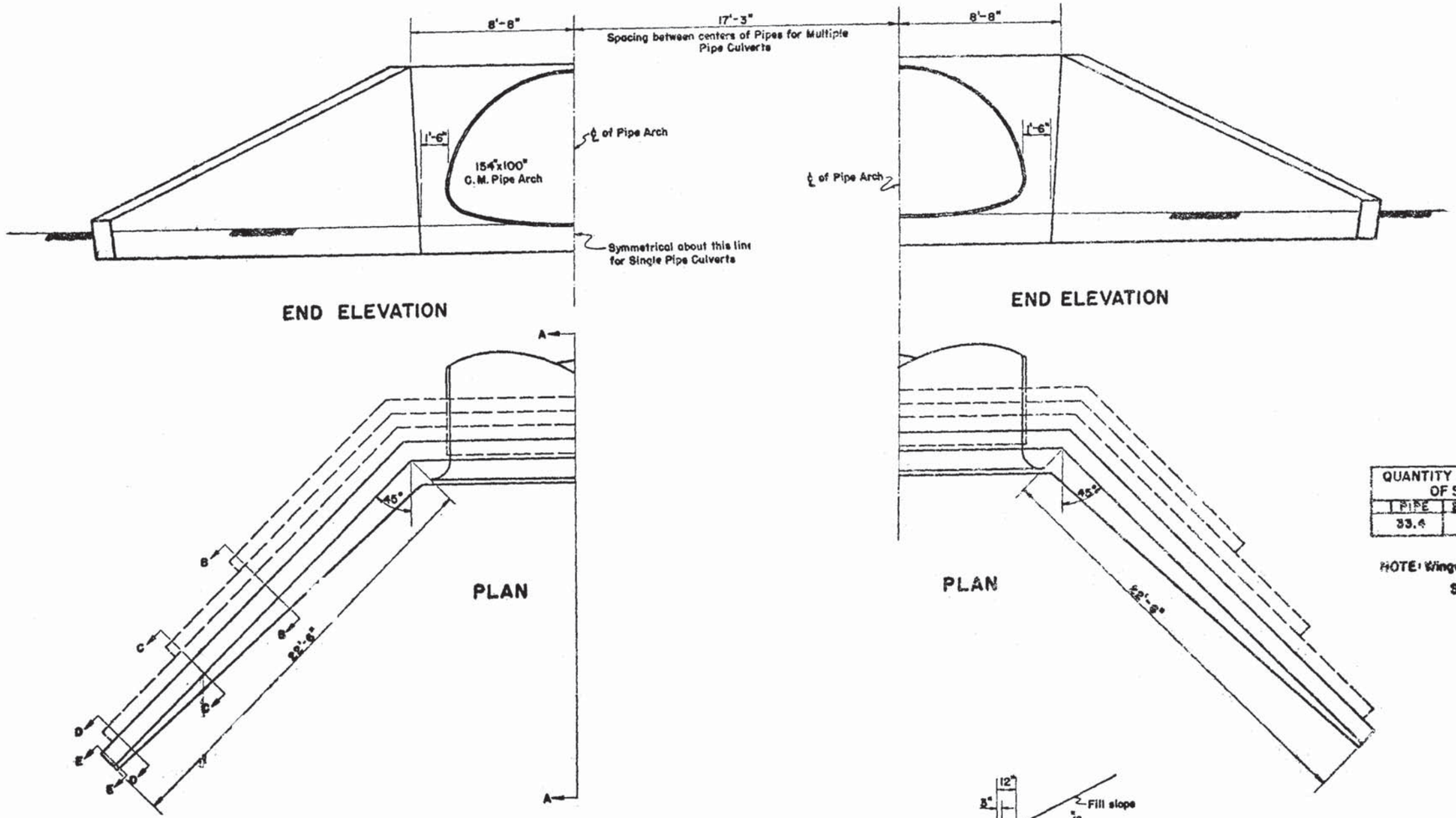


| QUANTITY IN ONE ENDWALL, CU.YDS. OF SAND-CEMENT RIPRAP | | | |
|---|---|---|---|
| 1 PIPE | 2 PIPES | 3 PIPES | 4 PIPES |
| 33.4 | 42.1 | 50.9 | 59.6 |

NOTE: Wingwalls based on 2:1 slope

SCALE: 1" = 3'-0"

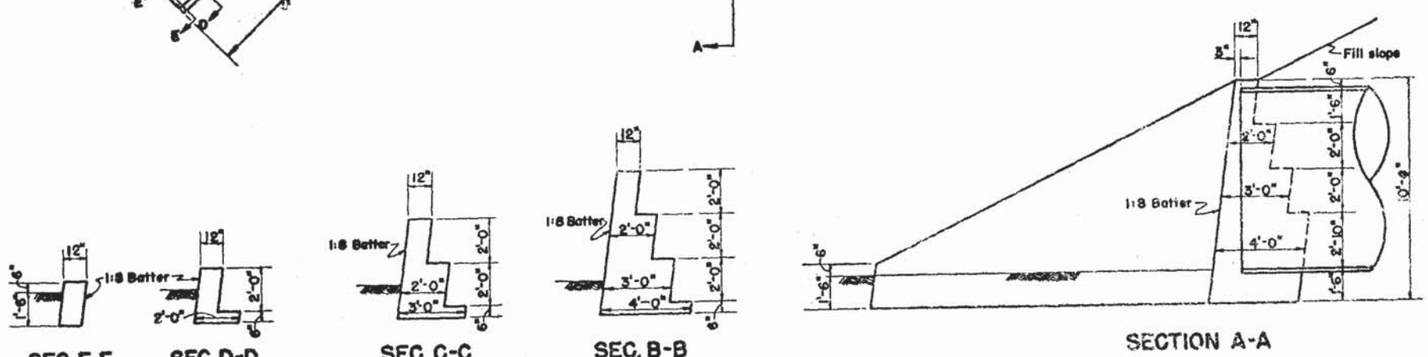


SEC. E-E

SEC. D-D

SEC. C-C

SEC. B-B

SECTION A-A

FHWA APPROVED: 3-20-75

FLORIDA DEPARTMENT OF TRANSPORTATION

ROADWAY PLANS SECTION

SAND-CEMENT ENDWALLS FOR 154"x100" C.M. PIPE ARCH

| REVISIONS | | ROAD NO. | COUNTY | PROJECT NO. |
|---|---|---|---|---|
| Date | Descriptions | | | |
| 10-74 | Changed Index No. | | | |

| | Names | Dates |
|---|---|---|
| Detailed by | E.H.A. | 10-53 |
| Checked by | E.H.H. | 10-53 |
| Quantified by | E.H.A. | 10-53 |
| Checked by | E.H.H. | 10-53 |
| Traced by | H.W. | 11-53 |

Approved by:

E H Hart

Deputy Design Engineer - Roadway

Drawing No. 1 of 1

Index No. DSE-10

Form 281-10

# MEMORANDUM

State of Florida Department of Transportation

DATE October 25, 1977

TO All Holders of Standard Index Books

FROM E. H. Hart, Deputy Design Engineer (Rdwys.)

COPIES TO

SUBJECT Standard Index No. DME-01-1

This index has been revised and expanded to five sheets to include multiple pipe installations, pipe arch installations and fastener details. The dimensions, quantities and general notes were also expanded and revised.

All projects whose scheduled letting will not be delayed should be reviewed for utilization of this index.

Please destroy all copies of this index in your file and replace with the revised index drawings.

EHH:LMF:jl

| FED. ROAD DIV. NO. | STATE | PROJECT NO. | PROJ. YEAR |
|---|---|---|---|
| 3 | FLA. | | |

## DIMENSIONS & QUANTITIES

| D | X | A | B | C | E | F | G | M Single Pipe | M Double Pipe | M Triple Pipe | M Quad. Pipe | N | GRATE SIZES Standard Weight Pipe | GRATE SIZES Extra Strong Pipe | CONCRETE (Cu. Yds.) Single Pipe | CONCRETE (Cu. Yds.) Double Pipe | CONCRETE (Cu. Yds.) Triple Pipe | CONCRETE (Cu. Yds.) Quad. Pipe | SODDING (Sq. Yds.) Single Pipe | SODDING (Sq. Yds.) Double Pipe | SODDING (Sq. Yds.) Triple Pipe | SODDING (Sq. Yds.) Quad. Pipe |
|---|---|---|---|---|---|---|---|---|---|---|---|---|---|---|---|---|---|---|---|---|---|---|
| 15" | 2'-7" | 2.27' | 4.09' | 6.36' | 4.03' | 8' | 1.22' | 4.63' | 7.21' | 9.79' | 12.37' | 1.19' | | | 0.40 | 0.61 | 0.80 | 1.00 | 8.69 | 10.41 | 12.13 | 13.86 |
| 18" | 2'-10" | 2.36' | 5.12' | 7.48' | 5.03' | 9' | 1.41' | 4.92' | 7.75' | 10.58' | 13.42' | 1.21' | | | 0.47 | 0.69 | 0.91 | 1.14 | 9.39 | 11.25 | 13.14 | 15.02 |
| 24" | 3'-5" | 2.53' | 7.18' | 9.71' | 7.03' | 11' | 1.73' | 5.50' | 8.92' | 12.33' | 15.75' | 1.25' | | | 0.60 | 0.90 | 1.21 | 1.52 | 10.76 | 13.03 | 15.31 | 17.59 |
| 30" | 4'-3" | 2.70' | 9.25' | 11.95' | 9.03' | 13' | 2.00' | 6.08' | 10.33' | 14.58' | 18.83' | 1.29' | 2½" | 3" | 0.76 | 1.19 | 1.63 | 2.07 | 12.14 | 14.97 | 17.81 | 20.64 |
| 36" | 5'-1" | 2.87' | 11.31' | 14.18' | 11.03' | 15' | 2.24' | 6.67' | 11.75' | 16.83' | 21.92' | 1.33' | 2½" | 3" | 0.89 | 1.48 | 2.05 | 2.63 | 13.52 | 16.92 | 20.30 | 23.69 |
| 42" | 6'-0" | 3.05' | 13.37' | 16.42' | 13.03' | 17' | 2.45' | 7.25' | 13.25' | 19.25' | 25.25' | 1.38' | 2½" | 3½" | 1.05 | 1.82 | 2.57 | 3.34 | 14.90 | 18.90 | 22.90 | 26.90 |
| 48" | 6'-9" | 3.22' | 15.43' | 18.65' | 15.03' | 19' | 2.65' | 7.83' | 14.58' | 21.33' | 28.08' | 1.42' | 2½" | 3½" | 1.21 | 2.15 | 3.07 | 4.00 | 16.28 | 20.78 | 26.50 | 29.78 |
| 54" | 7'-8" | 3.39' | 17.49' | 20.88' | 17.03' | 21' | 2.83' | 8.42' | 16.08' | 23.75' | 31.42' | 1.46' | 3" | 4" | 1.39 | 2.55 | 3.72 | 4.88 | 17.67 | 22.78 | 27.89 | 33.00 |
| 60" | 8'-6" | 3.56' | 19.55' | 23.11' | 19.03' | 23' | 3.00' | 9.00' | 17.50' | 26.00' | 34.50' | 1.50' | 3" | 4" | 1.59 | 3.02 | 4.44 | 5.86 | 19.04 | 24.71 | 30.38 | 36.04 |

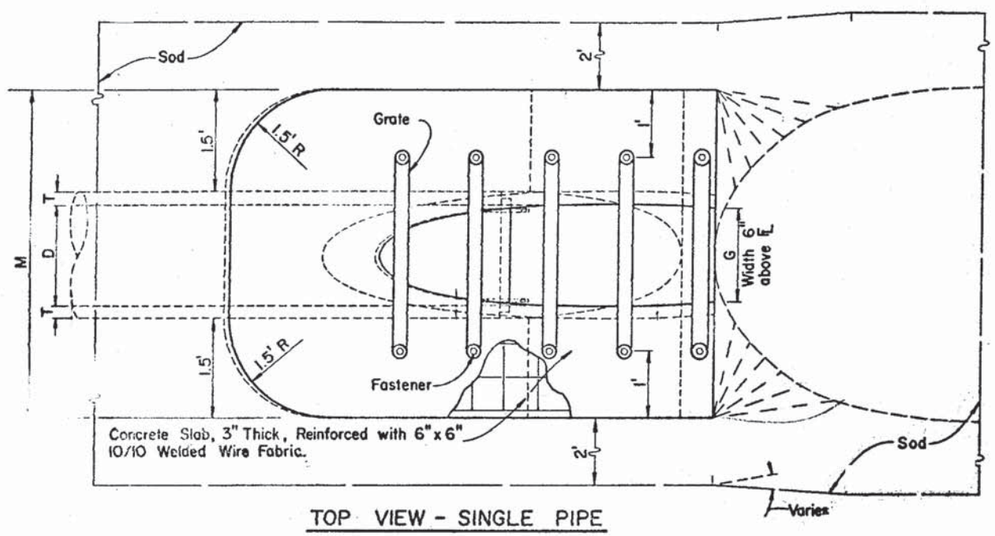


TOP VIEW - SINGLE PIPE

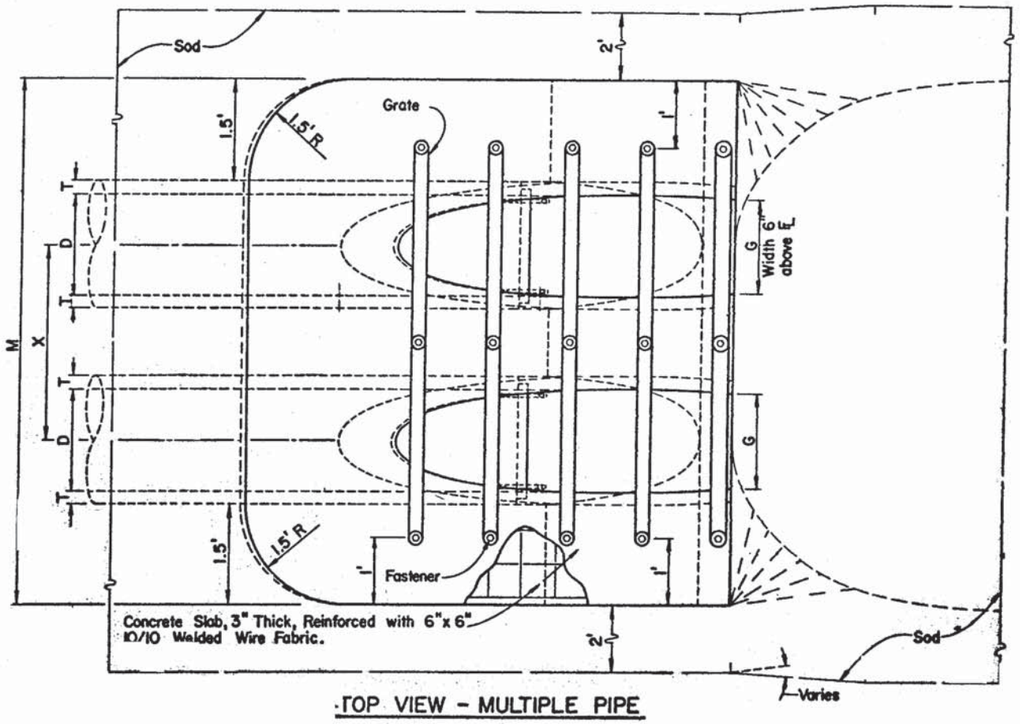


TOP VIEW - MULTIPLE PIPE

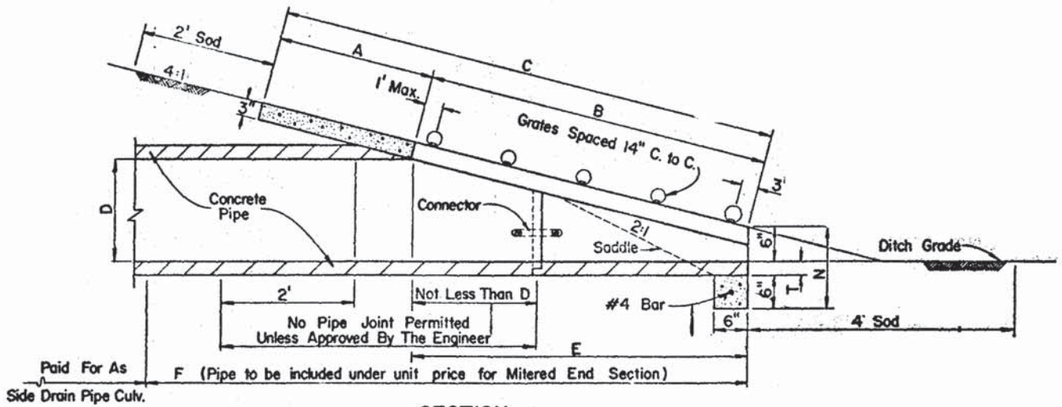


SECTION

Note:
See Sheet 4 for Details and Sheet 5 for Notes

F.H.W.A. APPROVED: 10-21-77

STATE OF FLORIDA DEPARTMENT OF TRANSPORTATION

# SIDE DRAIN MITERED END SECTION

## SINGLE AND MULTIPLE ROUND CONCRETE PIP

| REVISIONS | | ROAD NO. | COUNTY | PROJECT NO. |
|---|---|---|---|---|
| Date | Descriptions | | | |
| 8-77 | Expanded to include multiple pipe, pipe-arch and fastener details. Revised dimensions, quantities and general notes. 3 sheets added. | | | |

| | Names | Dates |
|---|---|---|
| Designed by | E.G.R. | 8-77 |
| Checked by | J.V.G. | 8-77 |
| Quantities by | A.F. | 8-77 |
| Checked by | J.V.G. | 8-77 |
| Supervised by | D.C.B. | |

APPROVED BY: E. H. Hart, Chief Design Engineer, Florida

Drawing No. 1 of 5 | Index No. DME-01

| FED. ROAD DIV. NO. | STATE | PROJECT NO. | FISCAL YEAR | SHEET NO. |
|---|---|---|---|---|
| 3 | FLA. | | | |

# DIMENSIONS & QUANTITIES

| D | X | A | B | C | E | F | G | M Single Pipe | M Double Pipe | M Triple Pipe | M Quad. Pipe | N | Grate Sizes: Standard Weight Pipe | Grate Sizes: Extra Strong Pipe | Concrete (Cu. Yds.): Single Pipe | Concrete (Cu. Yds.): Double Pipe | Concrete (Cu. Yds.): Triple Pipe | Concrete (Cu. Yds.): Quad. Pipe | Sodding (Sq. Yds.): Single Pipe | Sodding (Sq. Yds.): Double Pipe | Sodding (Sq. Yds.): Triple Pipe | Sodding (Sq. Yds.): Quad. Pipe |
|---|---|---|---|---|---|---|---|---|---|---|---|---|---|---|---|---|---|---|---|---|---|---|---|
| 15" | 2'-7" | 2.27' | 4.09' | 6.36' | 4.03' | 8' | 1.22' | 4.63' | 7.21' | 9.79' | 12.37' | 1.19' | | | 0.40 | 0.61 | 0.80 | 1.00 | 8.69 | 10.41 | 12.13 | 13.86 |
| 18" | 2'-10" | 2.56' | 5.12' | 7.48' | 5.03' | 9' | 1.41' | 4.92' | 7.75' | 10.58' | 13.42' | 1.21' | | | 0.47 | 0.69 | 0.91 | 1.14 | 9.39 | 11.25 | 13.14 | 15.02 |
| 24" | 3'-5" | 2.93' | 7.18' | 9.71' | 7.03' | 11' | 1.73' | 5.50' | 8.92' | 12.33' | 15.75' | 1.25' | | | 0.60 | 0.90 | 1.21 | 1.52 | 10.76 | 13.03 | 15.31 | 17.59 |
| 30" | 4'-4" | 3.70' | 9.25' | 11.95' | 9.03' | 13' | 2.00' | 6.08' | 10.33' | 14.58' | 18.83' | 1.29' | 2½" | 3" | 0.76 | 1.19 | 1.63 | 2.07 | 12.14 | 14.97 | 17.81 | 20.64 |
| 36" | 5'-1" | 4.37' | 11.31' | 14.18' | 11.03' | 15' | 2.24' | 6.67' | 11.75' | 16.83' | 21.92' | 1.33' | 2½" | 3" | 0.89 | 1.48 | 2.05 | 2.63 | 13.52 | 16.92 | 20.30 | 23.69 |
| 42" | 5'-10" | 5.05' | 13.37' | 16.42' | 13.03' | 17' | 2.45' | 7.25' | 13.25' | 19.25' | 25.25' | 1.38' | 2½" | 3½" | 1.05 | 1.82 | 2.57 | 3.34 | 14.90 | 18.90 | 22.90 | 26.90 |
| 48" | 6'-7" | 5.73' | 15.05' | 18.85' | 15.03' | 19' | 2.65' | 7.83' | 14.58' | 21.33' | 28.08' | 1.42' | 2½" | 3½" | 1.21 | 2.15 | 3.07 | 4.00 | 16.28 | 20.78 | 26.50 | 29.78 |
| 54" | 7'-4" | 6.41' | 17.03' | 20.85' | 17.03' | 21' | 2.84' | 8.42' | 16.08' | 23.75' | 31.42' | 1.46' | 3" | 4" | 1.39 | 2.55 | 3.72 | 4.88 | 17.67 | 22.78 | 27.89 | 33.00 |
| 60" | 8'-1" | 7.09' | 19.03' | 23.11' | 19.03' | 23' | 3.00' | 9.00' | 17.90' | 26.00' | 34.50' | 1.50' | 3" | 4" | 1.59 | 3.02 | 4.44 | 5.86 | 19.04 | 24.71 | 30.38 | 36.04 |

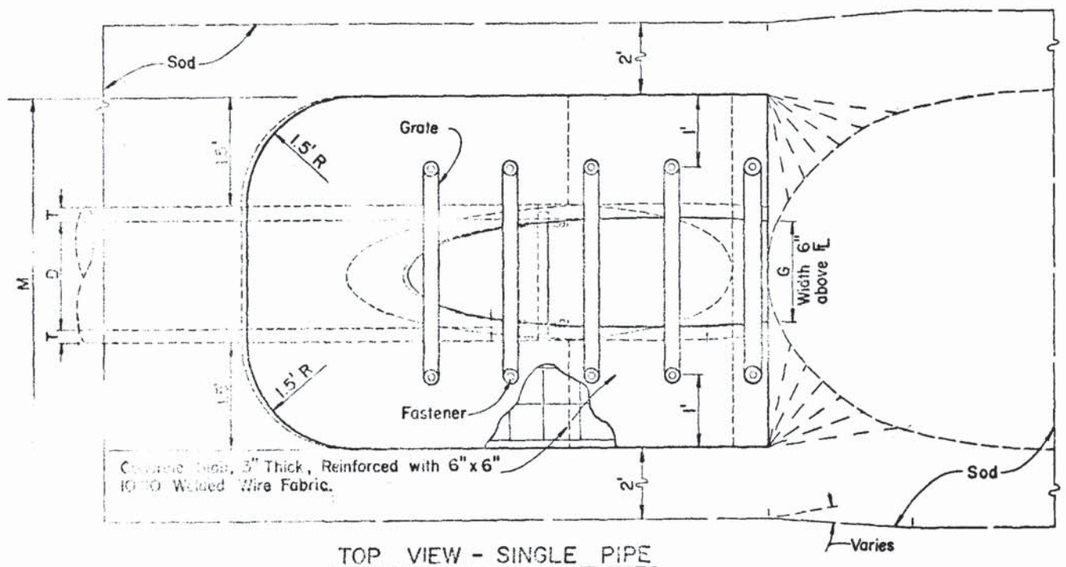


TOP VIEW - SINGLE PIPE

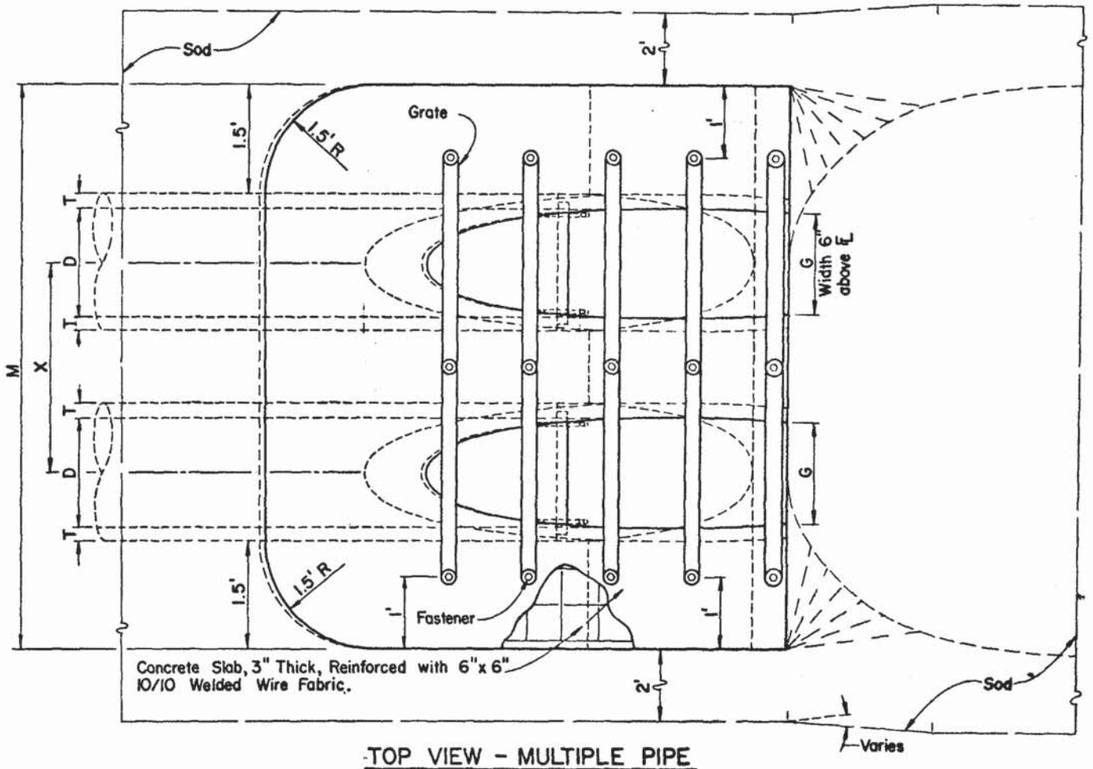


TOP VIEW - MULTIPLE PIPE

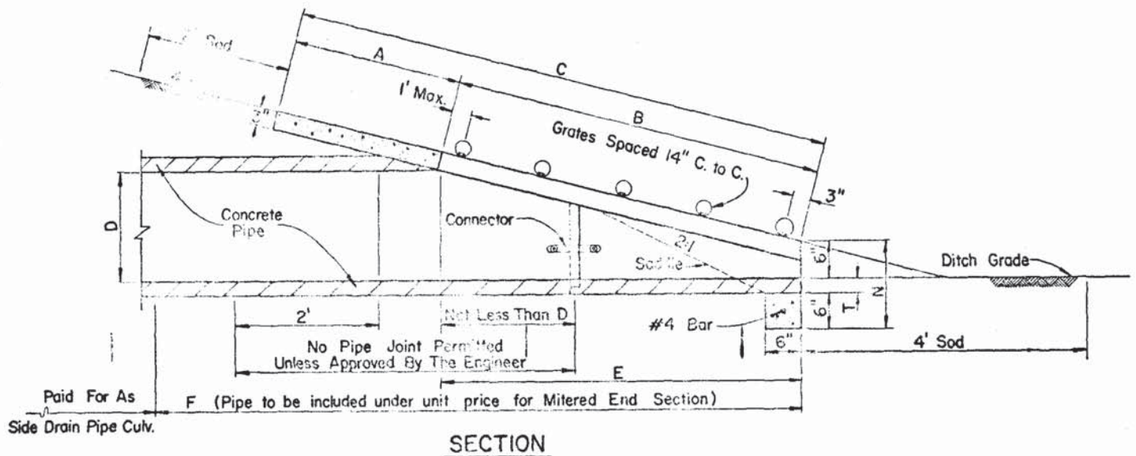


SECTION

Note:

See Sheet 4 for Details and Sheet 5 for Notes.

F.H.W.A. APPROVED: 10-21-77

STATE OF FLORIDA DEPARTMENT OF TRANSPORTATION

# SIDE DRAIN MITERED END SECTION

## SINGLE AND MULTIPLE ROUND CONCRETE PIPE

| REVISIONS | |
|---|---|
| Date | Descriptions |
| 8-77 | Expanded to include multiple pipe, pipe-arch and fastener details. Revised dimensions, quantities and general notes. 3 sheets added. |

| ROAD NO. | COUNTY | PROJECT NO. |
|---|---|---|
| | | |

| | Names | Dates |
|---|---|---|
| Designed by | E.G.R. | 8-77 |
| Checked by | J.V.G. | 8-77 |
| Quantities by | A.F. | 8-77 |
| Checked by | J.V.G. | 8-77 |
| Supervised by | D.C.B. | |

APPROVED BY: E. H. Hart, Deputy Chief Engineer, Roadways

Drawing No. 1 of 5 | Index No. DME-01-1

| FED. ROAD DIV. NO. | STATE | PROJECT NO. | FISCAL YEAR | SHEET NO. |
|---|---|---|---|---|
| 3 | FLA. | | | |

# DIMENSIONS & QUANTITIES

| D | X | A | B | C | E | F | G | M Single Pipe | M Double Pipe | M Triple Pipe | M Quad. Pipe | N | GRATE SIZES Standard Weight Pipe | GRATE SIZES Extra Strong Pipe | CONCRETE (Cu. Yds.) Single Pipe | CONCRETE (Cu. Yds.) Double Pipe | CONCRETE (Cu. Yds.) Triple Pipe | CONCRETE (Cu. Yds.) Quad. Pipe | SODDING (Sq. Yds.) Single Pipe | SODDING (Sq. Yds.) Double Pipe | SODDING (Sq. Yds.) Triple Pipe | SODDING (Sq. Yds.) Quad. Pipe |
|---|---|---|---|---|---|---|---|---|---|---|---|---|---|---|---|---|---|---|---|---|---|---|---|
| 15" | 2'-7" | 2.5' | 3.09' | 5.59' | 3.0' | 7.0' | 1.23' | 4.33' | 6.92' | 9.50' | 12.08' | 1.04' | | | 0.31 | 0.47 | 0.63 | 0.79 | 8.15 | 9.88 | 11.59 | 13.31 |
| 18" | 2'-10" | 2.5' | 4.12' | 6.62' | 4.0' | 8.0' | 1.41' | 4.58' | 7.42' | 10.25' | 13.08' | 1.04' | | | 0.34 | 0.53 | 0.71 | 0.90 | 8.77 | 10.67 | 12.55 | 14.44 |
| 24" | 3'-5" | 2.5' | 6.18' | 8.68' | 6.0' | 10.0' | 1.73' | 5.08' | 8.50' | 11.92' | 15.33' | 1.04' | | | 0.44 | 0.69 | 0.92 | 1.18 | 10.02 | 12.30 | 14.59 | 16.86 |
| 30" | 4'-3" | 2.5' | 8.25' | 10.75' | 8.0' | 12.0' | 2.00' | 5.58' | 9.83' | 14.08' | 18.33' | 1.04' | 2½" | 3" | 0.53 | 0.88 | 1.25 | 1.60 | 11.28 | 14.12 | 16.95 | 19.77 |
| 36" | 5'-1" | 2.5' | 10.31' | 12.81' | 10.0' | 14.0' | 2.24' | 6.08' | 11.17' | 16.25' | 21.33' | 1.04' | 2½" | 3" | 0.62 | 1.07 | 1.53 | 2.00 | 12.52 | 15.92 | 19.30 | 22.69 |
| 42" | 6'-0" | 2.5' | 12.37' | 14.87' | 12.0' | 16.0' | 2.45' | 6.58' | 12.58' | 18.58' | 24.58' | 1.04' | 2½" | 3½" | 0.70 | 1.30 | 1.92 | 2.52 | 13.77 | 17.78 | 21.77 | 25.77 |
| 48" | 6'-9" | 2.5' | 14.43' | 16.93' | 14.0' | 18.0' | 2.65' | 7.08' | 13.83' | 20.58' | 27.33' | 1.04' | 2½" | 3½" | 0.80 | 1.54 | 2.29 | 3.02 | 15.02 | 19.53 | 24.02 | 28.52 |
| 54" | 7'-8" | 2.5' | 16.49' | 18.99' | 16.0' | 20.0' | 2.83' | 7.58' | 15.25' | 22.92' | 30.58' | 1.04' | 3" | 4" | 0.90 | 1.83 | 2.74 | 3.67 | 16.27 | 21.39 | 26.49 | 31.61 |
| 60" | 8'-6" | 2.5' | 18.55' | 21.05' | 18.0' | 22.0' | 3.00' | 8.08' | 16.58' | 25.08' | 33.58' | 1.04' | 3" | 4" | 1.02 | 2.15 | 3.27 | 4.39 | 17.52 | 23.19 | 28.85 | 34.52 |

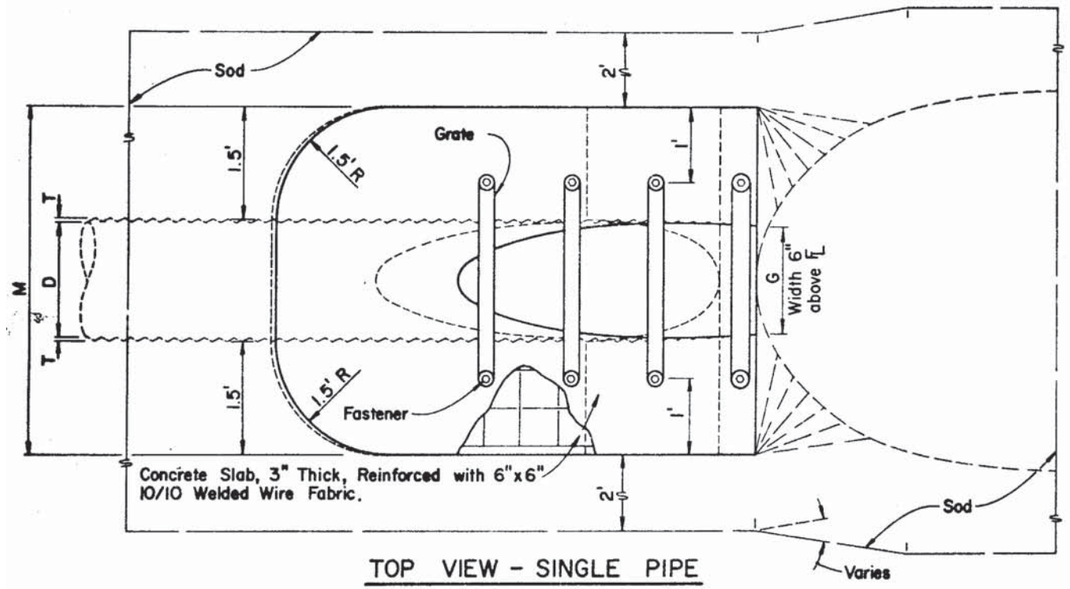


TOP VIEW - SINGLE PIPE

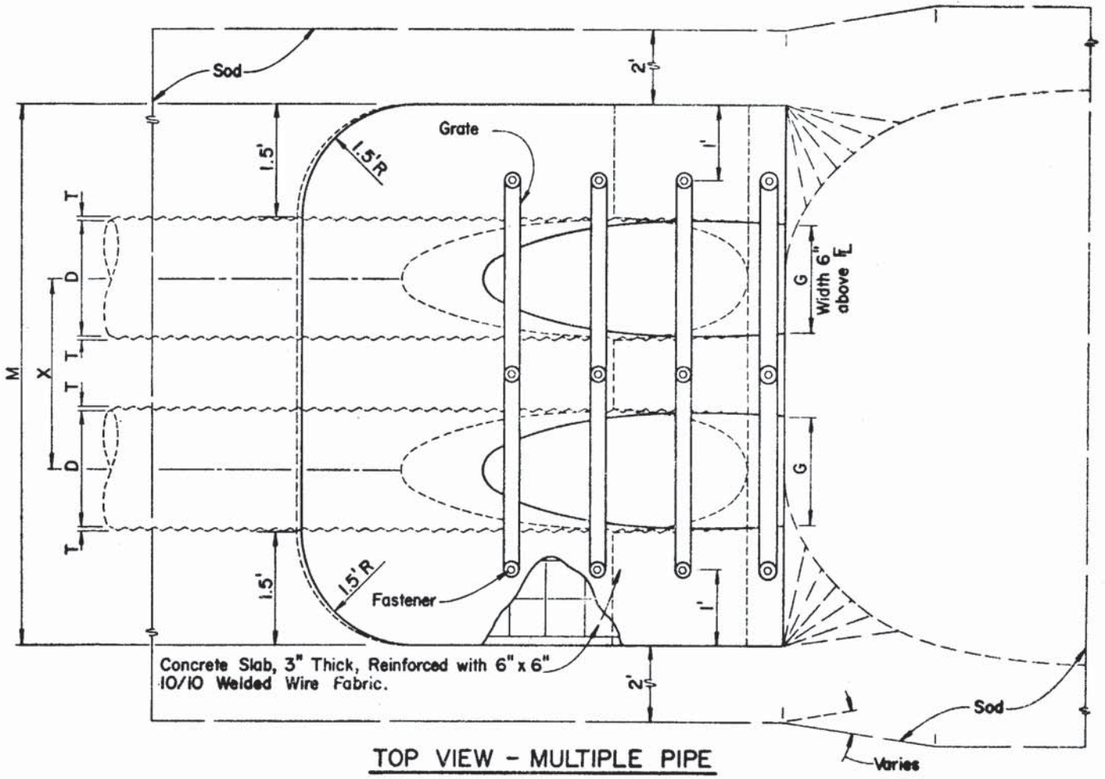


TOP VIEW - MULTIPLE PIPE

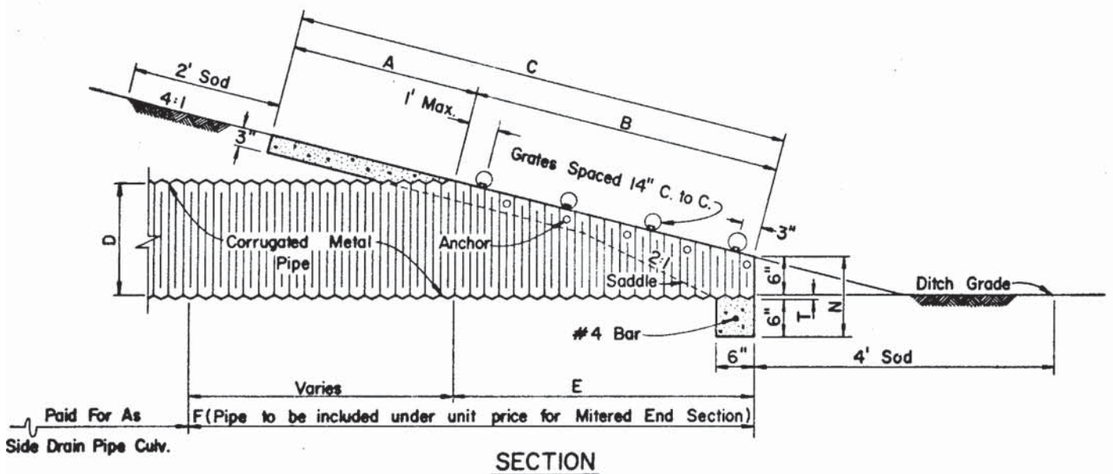


SECTION

Note:

See Sheet 4 for Details and Sheet 5 for Notes.

F.H.W.A. APPROVED 10-21-77

STATE OF FLORIDA DEPARTMENT OF TRANSPORTATION

# SIDE DRAIN MITERED END SECTION

SINGLE AND MULTIPLE ROUND CORRUGATED METAL PIPE

| REVISIONS Dates | REVISIONS Descriptions |
|---|---|
| | |
| | |

| ROAD NO. | COUNTY | PROJECT NO. |
|---|---|---|
| | | |

| | Names | Dates |
|---|---|---|
| Designed by | E.G.R. | 8-77 |
| Checked by | J.V.G. | 8-77 |
| Quantities by | A.F. | 8-77 |
| Checked by | J.V.G. | 8-77 |
| Supervised by | D.C.B. | |

APPROVED BY: E W Hart, Deputy Design Engineer, Roadways

Drawing No. 2 of 5

Index No. DME-01-1

H.K.H.

| FED. ROAD DIV. NO. | STATE | PROJECT NO. | SHEET NO. |
|---|---|---|---|
| 3 | FLA. | | |

# DIMENSIONS & QUANTITIES

| 1974 AASHTO | | | | | | | | | M | | | | | GRATE SIZES | | CONCRETE (Cu. Yds.) | | | | SODDING (Sq. Yds.) | | | |
|---|---|---|---|---|---|---|---|---|---|---|---|---|---|---|---|---|---|---|---|---|---|---|---|
| Span | Rise | X | A | B | C | E | F | G | Single Pipe | Double Pipe | Triple Pipe | Quad. Pipe | N | Standard Weight Pipe | Extra Strong Pipe | Single Pipe | Double Pipe | Triple Pipe | Quad. Pipe | Single Pipe | Double Pipe | Triple Pipe | Quad. Pipe |
| 17" | 13" | 2'-6" | 2.5' | 2.41' | 4.91' | 2.33' | 7' | 1.39' | 4.50' | 7.00' | 9.50' | 12.00' | 1.04' | | | .28 | .42 | .56 | .70 | 7.96 | 9.62 | 11.29 | 12.96 |
| 21" | 15" | 2'-10" | 2.5' | 3.09' | 5.59' | 3.00' | 8' | 1.76' | 4.83' | 7.67' | 10.50' | 13.33' | 1.04' | | | .32 | .49 | .66 | .78 | 8.48 | 10.37 | 12.26 | 14.15 |
| 28" | 20" | 3'-5" | 2.5' | 4.81' | 7.31' | 4.67' | 9' | 2.22' | 5.42' | 8.83' | 12.25' | 15.67' | 1.04' | | | .40 | .60 | .82 | 1.03 | 9.64 | 11.91 | 14.19 | 16.47 |
| 35" | 24" | 4'-0" | 2.5' | 6.18' | 8.68' | 6.00' | 11' | 2.55' | 6.00' | 10.00' | 14.00' | 18.00' | 1.04' | 2 ½" | 3" | .49 | .77 | 1.05 | 1.33 | 10.63 | 13.30 | 15.97 | 18.63 |
| 42" | 29" | 4'-9" | 2.5' | 7.90' | 10.40' | 7.67' | 12' | 2.97' | 6.58' | 11.33' | 16.08' | 20.83' | 1.04' | 2 ½" | 3 ½" | .57 | .92 | 1.27 | 1.62 | 11.78 | 14.95 | 18.12 | 21.28 |
| 49" | 33" | 5'-6" | 2.5' | 9.28' | 11.78' | 9.00' | 14' | 3.34' | 7.17' | 12.67' | 18.17' | 23.67' | 1.04' | 2 ½" | 3 ½" | .65 | 1.08 | 1.50 | 1.93 | 12.79 | 16.45 | 20.12 | 23.79 |
| 57" | 38" | 6'-4" | 2.5' | 11.00' | 13.50' | 10.67' | 16' | 3.65' | 7.83' | 14.17' | 20.50' | 26.83' | 1.04' | 3" | 4" | .76 | 1.30 | 1.83 | 2.37 | 13.99 | 18.22 | 22.44 | 26.66 |
| 64" | 43" | 7'-1" | 2.5' | 12.71' | 15.21' | 12.33' | 17' | 3.89' | 8.42' | 15.50' | 22.58' | 29.67' | 1.04' | 3" | 4" | .87 | 1.55 | 2.18 | 2.83 | 15.15 | 19.86 | 24.59 | 29.31 |
| 71" | 47" | 7'-10" | 2.5' | 14.09' | 16.59' | 13.67' | 19' | 4.14' | 9.00' | 16.83' | 24.67' | 32.50' | 1.04' | 3" | 4" | .95 | 1.68 | 2.43 | 3.17 | 16.15 | 21.37 | 26.59 | 31.82 |

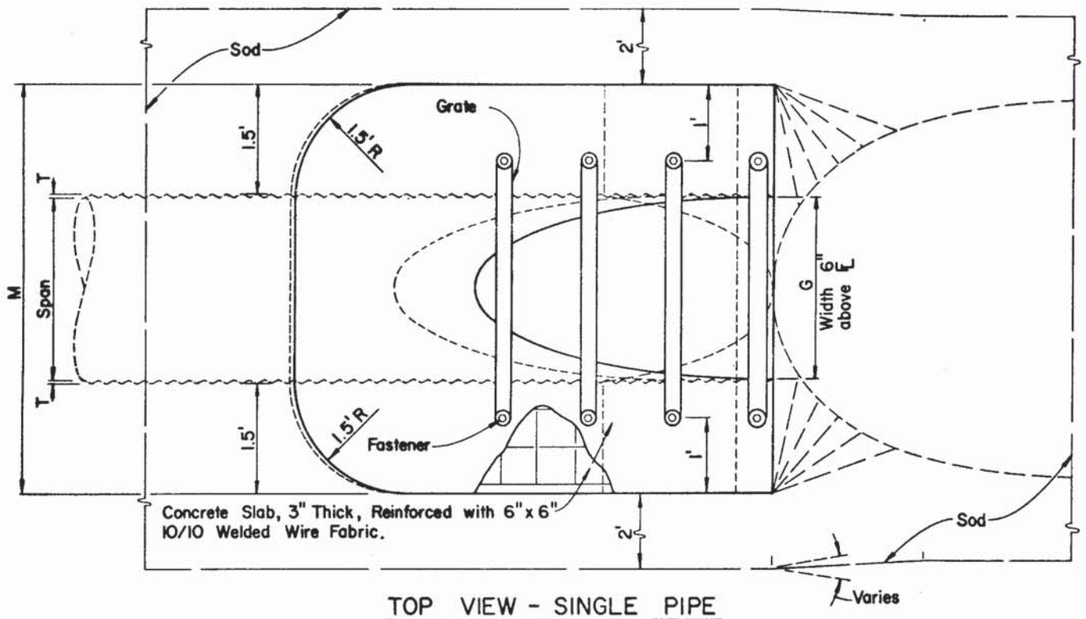


TOP VIEW - SINGLE PIPE

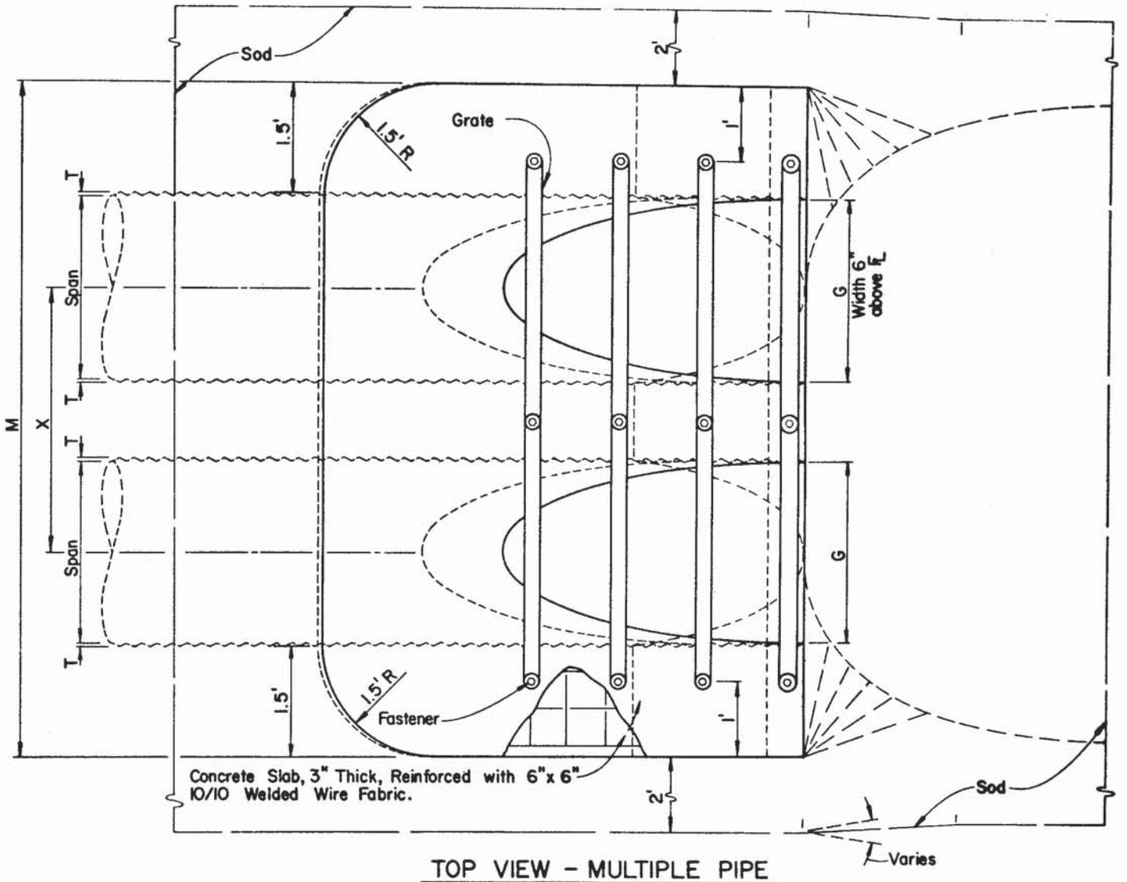


TOP VIEW - MULTIPLE PIPE

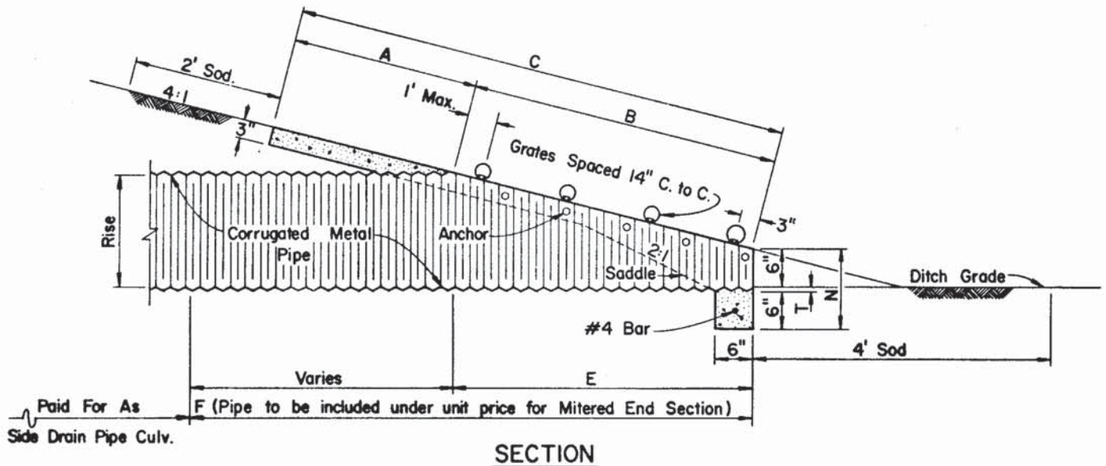


SECTION

Note:

See Sheet 4 for Details and Sheet 5 for Notes.

F.H.W.A. APPROVED: 10-21-77

STATE OF FLORIDA DEPARTMENT OF TRANSPORTATION

# SIDE DRAIN MITERED END SECTION

## SINGLE AND MULTIPLE CORRUGATED METAL PIPE-ARCH

| REVISIONS | |
|---|---|
| Dates | Descriptions |
| | |
| | |
| | |

H.K.H.

| ROAD NO. | COUNTY | PROJECT NO. |
|---|---|---|
| | | |

| | Names | Dates |
|---|---|---|
| Designed by | E.G.R. | 8-77 |
| Checked by | J.V.G. | 8-77 |
| Quantities by | A.F. | 8-77 |
| Checked by | J.V.G. | 8-77 |
| Supervised by | D.C.B. | |

APPROVED BY

E H Hart

Deputy Design Engineer, Roadways

| Drawing No. | Index No. |
|---|---|
| 3 of 5 | DME-01-1 |

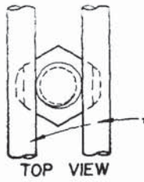


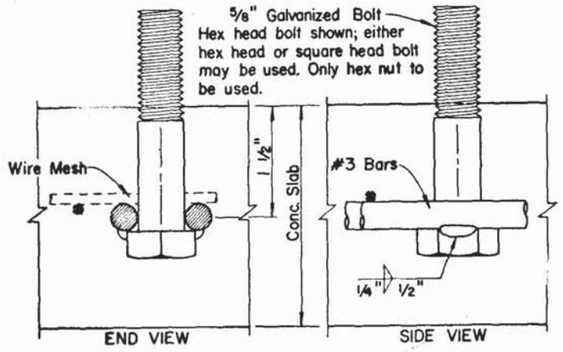


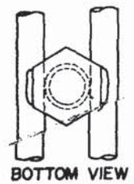


The specified weld shall be made when the fabricated unit is subject to hazardous hauls and repeated handling. Tack welds are permitted for local or job site fabrication. Galvanizing over welded surface not required.

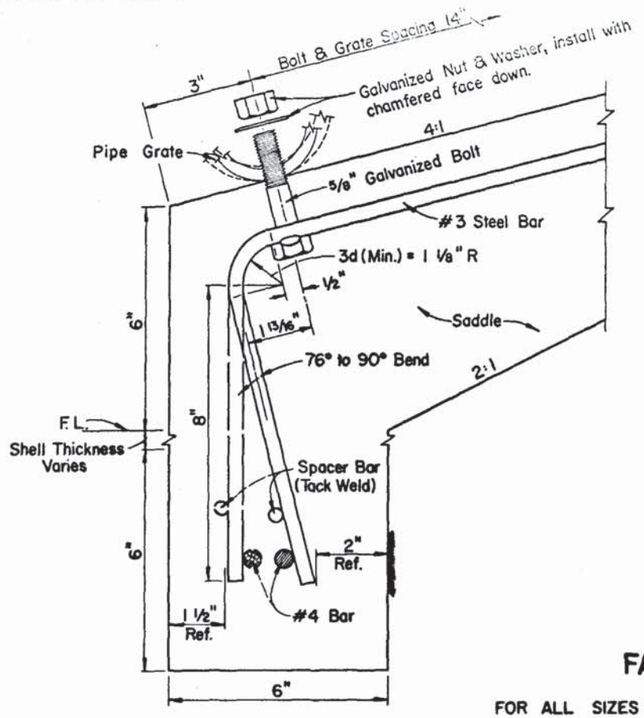


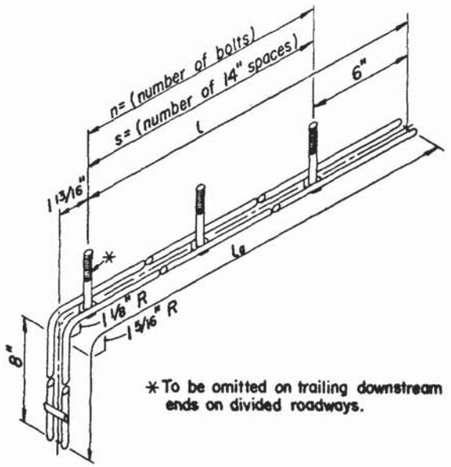


*To be omitted on trailing downstream ends on divided roadways.

# FASTENER UNIT

FOR ALL SIZES OF SINGLE AND MULTIPLE DRAIN PIPE

| Drain Size | s | n | L | La |
|---|---|---|---|---|
| CONCRETE PIPE (ROUND) | | | | |
| 15" | 3 | 4 | 4'-0" | 4'-11" |
| 18" | 4 | 5 | 5'-2" | 6'-1" |
| 24" | 6 | 7 | 7'-6" | 8'-5" |
| 30" | 7 | 8 | 8'-8" | 9'-7" |
| 36" | 9 | 10 | 11'-0" | 11'-11" |
| 42" | 11 | 12 | 13'-4" | 14'-3" |
| 48" | 13 | 14 | 15'-8" | 16'-7" |
| 54" | 14 | 15 | 16'-10" | 17'-9" |
| 60" | 16 | 17 | 19'-2" | 20'-1" |
| CORRUGATED METAL PIPE (ROUND) | | | | |
| 15" | 2 | 3 | 2'-10" | 3'-9" |
| 18" | 3 | 4 | 4'-0" | 4'-11" |
| 24" | 5 | 6 | 6'-4" | 7'-3" |
| 30" | 7 | 8 | 8'-8" | 9'-7" |
| 36" | 8 | 9 | 9'-10" | 10'-9" |
| 42" | 10 | 11 | 12'-2" | 13'-1" |
| 48" | 12 | 13 | 14'-6" | 15'-5" |
| 54" | 14 | 15 | 16'-10" | 17'-9" |
| 60" | 15 | 16 | 18'-0" | 18'-11" |
| CORRUGATED METAL PIPE (ARCH)*** | | | | |
| 17"x13" | 1 | 2 | 1'-8" | 2'-7" |
| 21"x15" | 2 | 3 | 2'-10" | 3'-9" |
| 28"x20" | 4 | 5 | 5'-2" | 6'-1" |
| 35"x24" | 5 | 6 | 6'-4" | 7'-3" |
| 42"x29" | 6 | 7 | 7'-6" | 8'-5" |
| 49"x33" | 7 | 8 | 8'-8" | 9'-7" |
| 57"x38" | 9 | 10 | 11'-0" | 11'-11" |
| 64"x43" | 10 | 11 | 12'-2" | 13'-1" |
| 71"x47" | 12 | 13 | 14'-6" | 15'-5" |

** To be used only when grates are called for in the plans.
***1974 AASHTO Pipe Arch Sizes.

Note:
5/8" x 3" bolts are standard for all grate fasteners, except when the contractor elects to use the slotted upper holes for the intermediate fasteners on multiple drain pipe, which will require the following bolt lengths:

| Grate Size (Std. & X-Stg.) | Bolt Length |
|---|---|
| 2 1/2" | 5 1/2" |
| 3" | 6" |
| 3 1/2" | 6 1/2" |
| 4" | 7" |

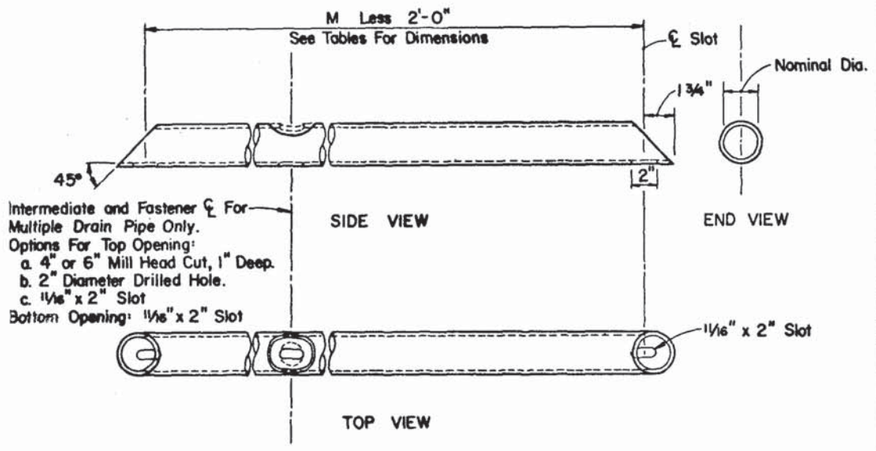


See General Notes, Sheet 5.

# GRATE DETAIL

FOR SINGLE & MULTIPLE DRAIN PIPE

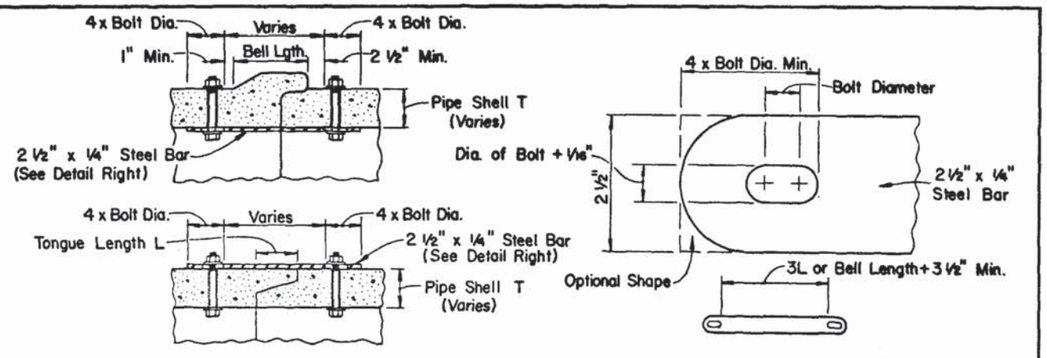


All bars, bolts, nuts and washers are to be galvanized steel.
Bolt diameters shall be 3/8" for 15" to 36" pipe and 5/8" for 42" to 60" pipe.
Two connectors required per joint, located 60° right and left of bottom center of pipe.
Bolt holes in pipe shell are to be drilled.

# CONCRETE PIPE CONNECTOR DETAIL

H.K.H.

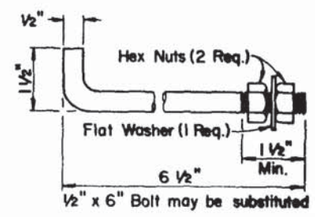


Anchors required for CMP only.
Anchor, washer and nuts to be galvanized steel.
Bend anchor where required to center in concrete slab. Damaged surfaces to be repaired after bending.
Anchors are to be spaced a distance equal to four (4) corrugations. Place the anchors in the outside crest of corrugation.
Flat washer to be placed on inside wall of pipe.

# ANCHOR DETAIL

F.H.W.A. APPROVED: 10-21-77

STATE OF FLORIDA DEPARTMENT OF TRANSPORTATION

# SIDE DRAIN MITERED END SECTION

## DETAILS FOR CONCRETE & CORRUGATED METAL PIPE

| REVISIONS | | ROAD NO. | COUNTY | PROJECT NO. |
|---|---|---|---|---|
| Dates | Descriptions | | | |
| | | | | |
| | | | | |

| | Names | Dates |
|---|---|---|
| Designed by | E.G.R. | 8-77 |
| Checked by | J.V.G. | 8-77 |
| Quantities by | A.F. | 8-77 |
| Checked by | J.V.G. | 8-77 |
| Supervised by | D.C.B. | |

APPROVED BY: E.N. Hart, County Design Engineer, Roadways

Drawing No. 4 of 5 | Index No. DME-01-1

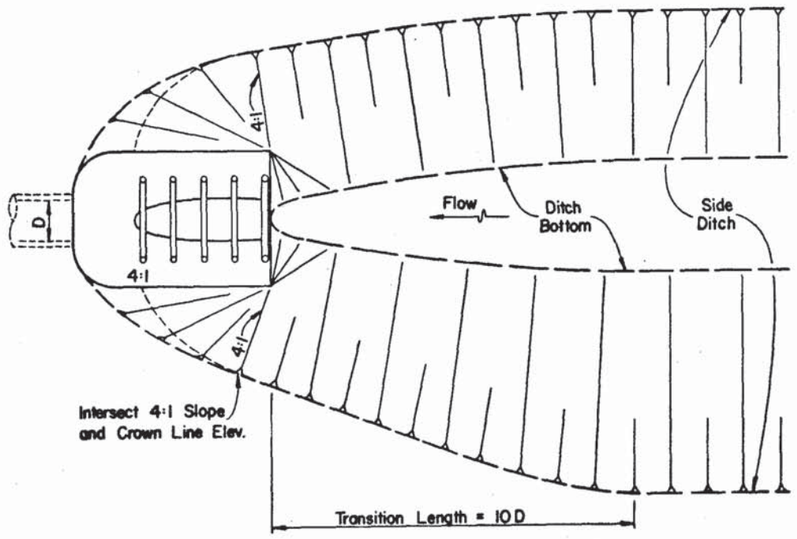


PLAN

## DITCH TRANSITION

| FED. ROAD DIV. NO. | STATE | PROJECT NO. | | |
|---|---|---|---|---|
| 3 | FLA. | | | |

## GENERAL NOTES

1. The cost of all pipe(s), grates, fasteners, reinforcing, connectors, anchors and concrete shall be included in the contract unit price for mitered end section, each. Sodding not included.
2. The reinforced concrete slab shall be constructed for all sizes of side drain pipe and cast in place with Class I concrete.
3. Round pipe size 30" or greater and pipe-arch size 35" x 24" or greater shall be grated unless excepted in the plans. Smaller sizes of pipe shall be grated only when called for in the plans.

   The lower grate on trailing downstream ends on divided highways shall be omitted.
4. Grates are to be fabricated from galvanized steel. The lower grate on all traffic approach ends shall be Schedule 80 ASTM A 120 extra strong pipe. All remaining grates shall be either ASTM A 501 structural tubing or A 53, grade B, pipe.

   Base metal exposed during fabrication shall be repaired as specified in Section 562, Standard Specifications. Grates subject to salt water or highly corrosive environment shall be hot dipped galvanized after fabrication in accordance with ASTM A 123.
5. Concrete pipe used in the assembly of mitered end sections shall be of selective lengths to avoid excessive connections.
6. Corrugated metal pipe galvanizing that is damaged during beveling and perforating for mitered end section shall be repaired.
7. That portion of corrugated metal pipe in direct contact with the concrete slab shall be bituminous coated prior to placing of the concrete.
8. Unless otherwise designated in the plans, concrete pipe mitered end sections may be used with any type of side drain pipe; corrugated steel pipe mitered end sections may be used with any type of side drain pipe except aluminum pipe; and, corrugated aluminum mitered end sections may be used with any type of side drain pipe except steel pipe. When bituminous coated metal pipe is specified for side drain pipe, mitered end sections shall be constructed with like pipe or concrete pipe.
   When the mitered end section pipe is dissimilar to the side drain pipe, a concrete jacket shall be constructed in accordance with Standard Index DMD-01.
9. When existing multiple side drain pipes are spaced other than the dimensions shown in this detail, or have non-parallel axes, or have non-uniform sections, the mitered end sections will be constructed either separately as single pipe mitered end sections or collectively as multiple pipe end sections as directed by the Engineer; however, mitered end sections will be paid for each, based on each independent pipe end.
10. Ditch transitions shall be used on all grades in excess of 3% as directed by the Engineer.

## DESIGN NOTES

1. In critical hydraulic locations, grates shall not be used until potentual debris transport has been evaluated by the drainage engineer and appropriate adjustments made. Ditch grades in excess of 3% or pipe with less than 1.5' of cover and grades in excess of 1% will require such an evaluation (General Note 3).
2. The design engineer shall determine highly corrosive locations and specify in the plans when the grates shall be hot-dipped galvanized after fabrication (General Note 4).

F.H.W.A. APPROVED 10-21-77

STATE OF FLORIDA DEPARTMENT OF TRANSPORTATION

# SIDE DRAIN MITERED END SECTION

NOTES & INFORMATION

| REVISIONS | | ROAD NO. | COUNTY | PROJECT NO. |
|---|---|---|---|---|
| Date | Description | | | |
| | | | | |
| | | | | |

| | Names | Dates | APPROVED BY |
|---|---|---|---|
| Designed by | E.G.R. | 5-77 | E.N. Hart |
| Checked by | J.V.G. | 5-77 | Deputy Design Engineer, Roadways |
| Quantities by | A.F. | 8-77 | |
| Checked by | J.V.G. | 9-77 | |
| Supervised by | D.C.B. | | |

H.K.M.

| Drawing No. | Index No. |
|---|---|
| 5 of 5 | DME-01-1 |

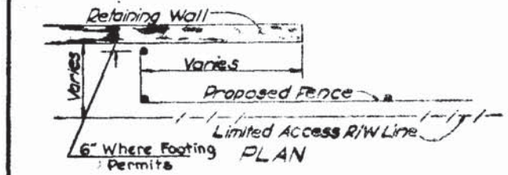


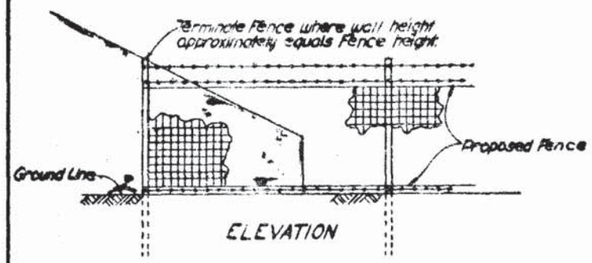


FENCING TERMINALS AT RETAINING WALLS

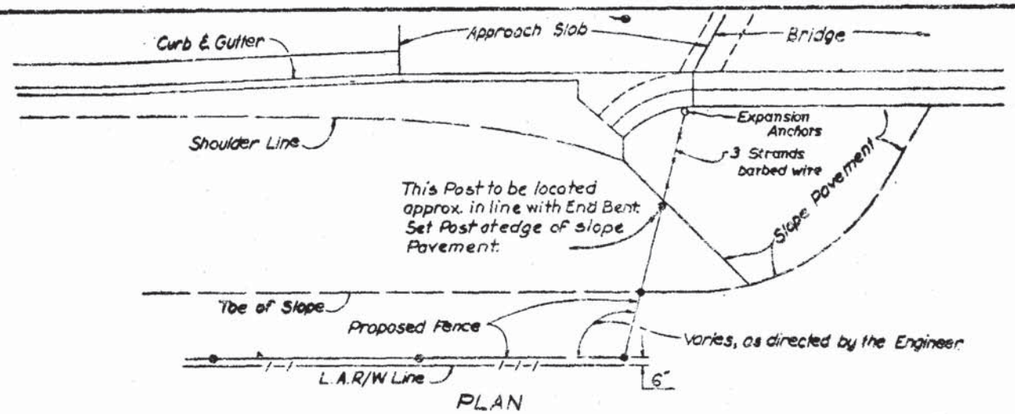


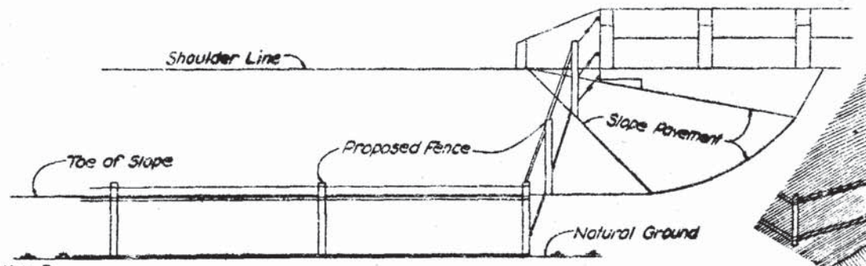


FENCING TERMINALS AT BRIDGE ENDS
(ROADWAY)

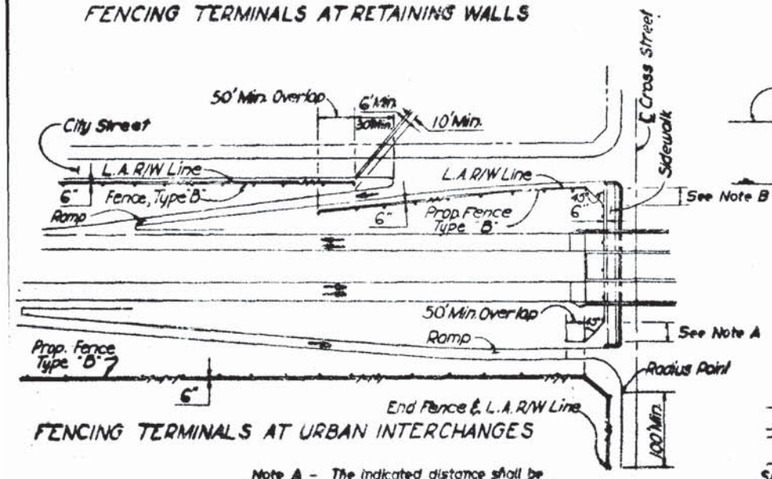


FENCING TERMINALS AT URBAN INTERCHANGES

Note A - The indicated distance shall be sufficient to provide satisfactory sight distance for the traffic from the ramp.

Note B - The indicated distance shall be identical to the above noted dimension, if practical.

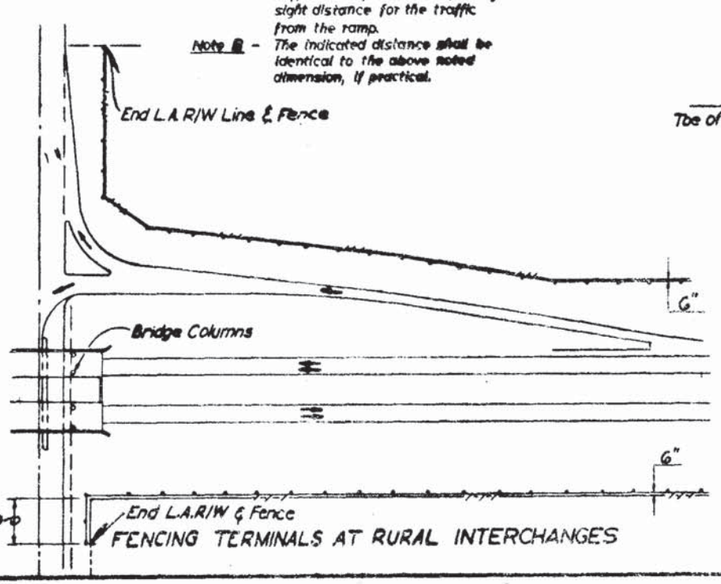


FENCING TERMINALS AT RURAL INTERCHANGES

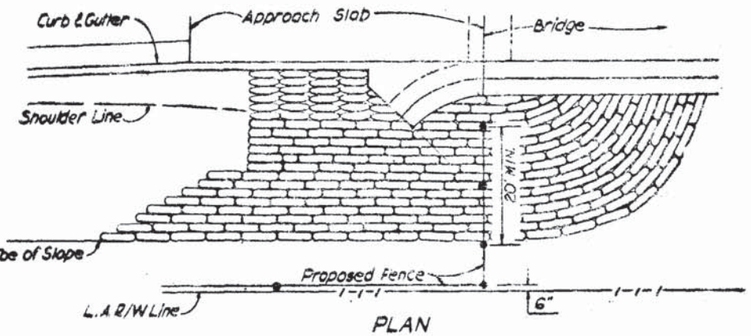


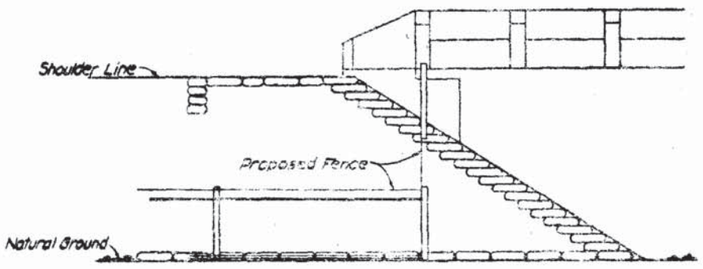


FENCING TERMINALS AT BRIDGE ENDS
(STREAM CROSSING)

Note:
1. Angle of fence to be measured from a line parallel to the ℄ of Structure.
2. This Fence location to be used at Cross Drains with excavated outfall Ditches or as shown in plans.

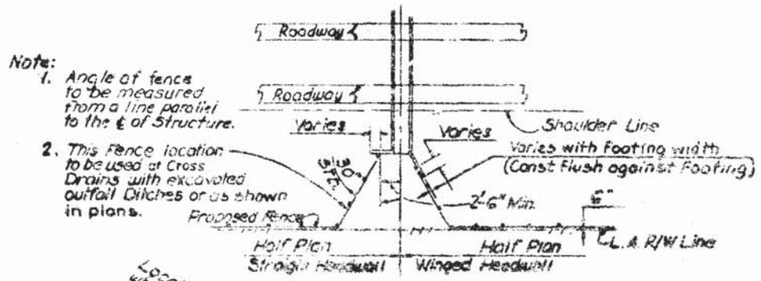


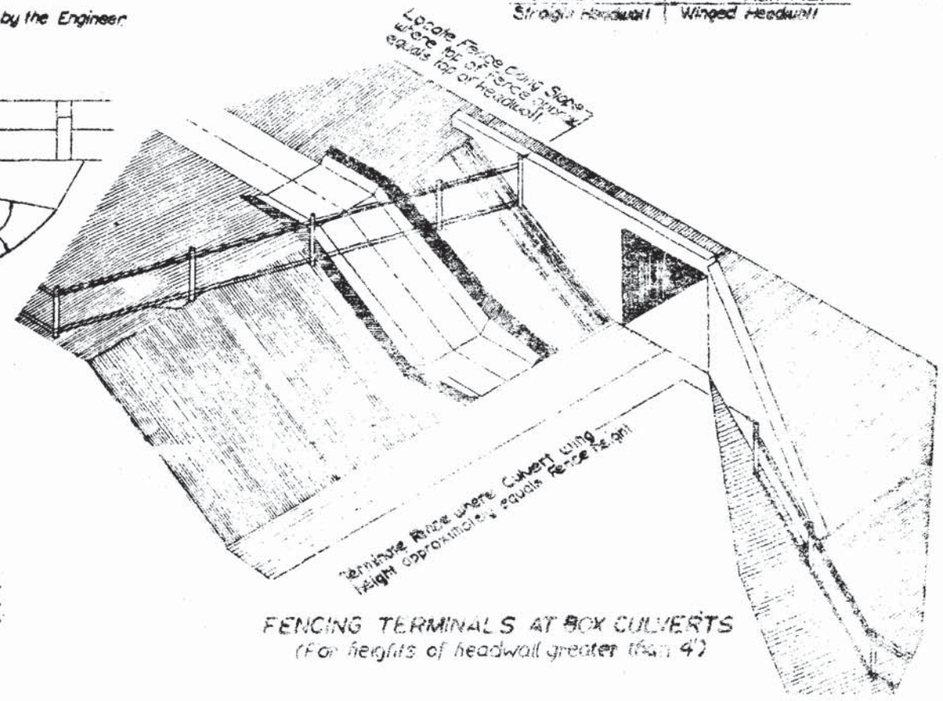


FENCING TERMINALS AT BOX CULVERTS
(For heights of headwall greater than 4')

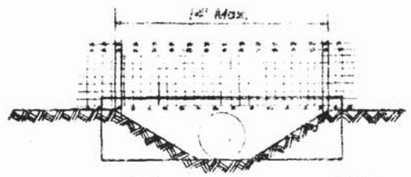


FENCING DETAIL AT CULVERT
(For heights of headwalls 4' or less.)

Note: When height of headwall is 4' or less (pipe culverts 36" or less) the fence shall not be tied to the headwall, but shall span the lateral ditch.

| REVISIONS | | REVISIONS | |
|---|---|---|---|
| Date | Description | Date | Description |
| 10/68 | ADDED NOTES TYP. S. STRUCTURES AND REVISED LOCATION OF SIGNS AT TYP. C STRUCTURE | 8-66 | REVISED WHEN REQUIRED ADDED NOTES TO SHT. DETAILS SHT. 2 |
| | | 4-67 | Revised B Fence to C, revised A Fence note to read "Two A's 9 Gage Wires" |
| | | REVISED | |

FLORIDA DEPARTMENT OF TRANSPORTATION
ROADWAY PLANS SECTION

# DETAILS OF FENCING

| ROAD NO. | COUNTY | | PROJECT NO. |
|---|---|---|---|
| | Names | Dates | Recommended For Approval by: Engineer of Road Design |
| Drawn by | h.f.w | 2-19-65 | |
| Checked by | | | APPROVED BY: State Highway Engineer |
| Quantities by | | | |
| Checked by | | | |
| Traced by | h.f.w | 2-19-65 | Drawing No. 1 OF 1 / Sheet No. FLD-01 |

RRWA APPROVED: 6-18-74

Form 281-10

# MEMORANDUM

State of Florida Department of Transportation

**DATE** September 10, 1976

**TO** All Holders of Standard Index Books

**FROM** E. H. Hart, Deputy Design Engineer (Rdwys.)

**COPIES TO**

**SUBJECT** Standard Index Drawings

The following index drawings have been revised or added.

FTA-01-2 supersedes FTA-01-1; Concrete posts and braces were added to this drawing as an alternate on Type "A" Fence.

FTB-01-2 supersedes FTB-01-1; Steel "C" post was added to this drawing as an alternate for line posts on Type "B" Fence.

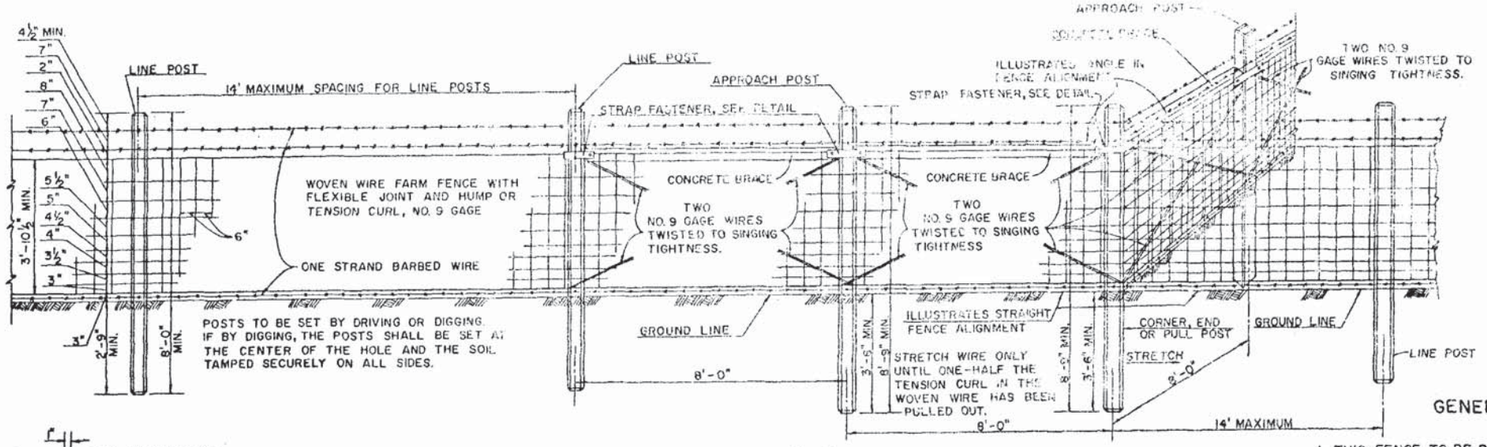


# DETAILS OF TYPE "A" FENCE

(ILLUSTRATED FOR CONC. POSTS AND BRACES)

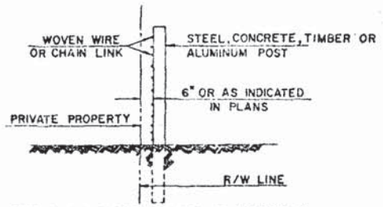


SKETCH INDICATING FENCE LOCATION AT SECTIONS OF NO FRONTAGE ROADS. REFER TO DETAIL PLANS FOR LOCATIONS OF FENCING ON PROJECTS WITH FRONTAGE ROADS.

## GENERAL NOTES (TYPE "A" FENCE)

1. THIS FENCE TO BE PROVIDED GENERALLY IN RURAL AREAS.
2. POSTS AND BRACES MAY BE EITHER STEEL, ALUMINUM, TIMBER OR CONCRETE.
3. STEEL POSTS AND BRACES SHALL BE STANDARD STEEL POSTS, GALVANIZED AT THE RATE OF 2 OZ. PER SQ. FT., TOGETHER WITH NECESSARY HARDWARE AND WIRE CLAMPS AND MEETING THE FOLLOWING REQUIREMENTS:
   (A) LINE POSTS: 8' LONG; 1.33 LBS. PER LIN. FT.; STUDDED, ANCHOR PLATE ATTACHED; WITH NECESSARY CLAMPS, ETC.
   (B) APPROACH POSTS: 2½" x 2½" x ¼" ANGLES, 8' LONG; FABRICATED FOR ATTACHING BRACE; WITH NECESSARY HARDWARE, CLAMPS, ETC.
   (C) PULL, END AND CORNER POSTS: 2½" x 2½" x ¼" ANGLES, 8' LONG, FABRICATED FOR ATTACHING BRACE; WITH NECESSARY HARDWARE, CLAMPS, ETC.
   (D) BRACES: 2" x 2" x ¼" ANGLES WITH NECESSARY HARDWARE AND FABRICATED FOR ATTACHING TO POST.
   (E) THE PULL, CORNER, APPROACH AND END POSTS ARE TO BE SET IN CONCRETE AS PER DETAIL. (ALSO SEE NOTE NO. 6)
4. ALL TIMBER POSTS, EXCEPT CORNER AND PULL POSTS ARE TO BE MINIMUM 4" DIAMETER. TIMBER CORNER AND PULL POSTS ARE TO BE MINIMUM 5" DIAMETER. BRACES ARE TO BE 4" MINIMUM DIAMETER. LENGTHS OF TIMBER POSTS TO BE AS INDICATED ABOVE FOR CONCRETE POSTS.
   (A) STAPLES FOR LINE POSTS TO BE 1½" MINIMUM LENGTH, FOR APPROACH, CORNER AND PULL POSTS 1½" MINIMUM LENGTH. AT APPROACH, CORNER AND PULL POSTS, STAPLE EVERY LINE WIRE. AT LINE POSTS, STAPLE EVERY LINE WIRE IN TOP HALF AND ALTERNATE LINE WIRES IN BOTTOM HALF.
   (B) ADEQUATE CONNECTIONS BETWEEN TIMBER POSTS AND BRACES ARE TO BE PROVIDED.
   (C) WIRE TO BE WRAPPED AROUND END OR SPLICE POSTS ONLY.
5. LONGER POSTS THAN THOSE INDICATED ABOVE MAY BE REQUIRED BY THE PLANS OR FOR DEEPER INSTALLATIONS.
6. MATERIAL FOR CLASS I CONCRETE FOR FENCE FOOTINGS MAY BE MEASURED BY VOLUMETRIC AND/OR BY WEIGHT. SECTIONS 345-5.1, 345-10 AND 345-11 OF D.O.T. STANDARD SPECIFICATIONS WILL BE DELETED.
7. THE CONTRACTOR, AT HIS OPTION, MAY USE ANY SUITABLE PRECAST OR PRESTRESSED CONCRETE POST; HOWEVER, APPROVAL BY THE ENGINEER, OF POSTS NOT SHOWN ON THIS DRAWING, WILL BE REQUIRED PRIOR TO CONSTRUCTION OF THE FENCE

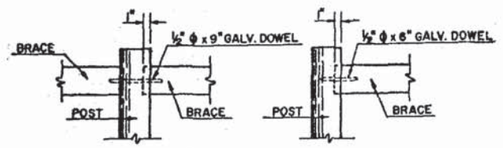


ALTERNATE TIMBER BRACING DETAILS

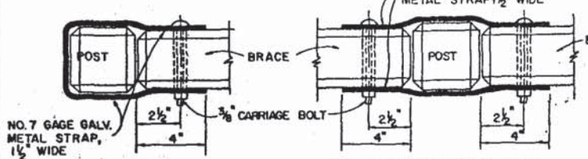


DETAIL OF FASTENER FOR BRACE AND POST

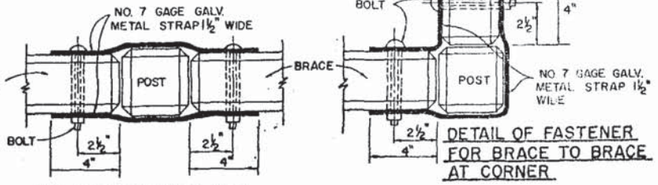


DETAIL OF FASTENER FOR BRACE TO BRACE ON LINE




DETAIL OF FASTENER FOR BRACE TO BRACE AT CORNER

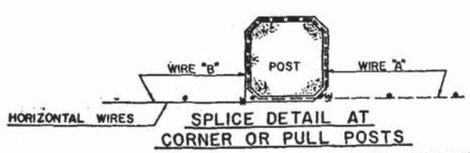


SPLICE DETAIL AT CORNER OR PULL POSTS

EACH HORIZONTAL WIRE TO BE WRAPPED COMPLETELY AROUND PULL POST AND TIED TO SAME WIRE. CONC. POST ILLUSTRATED. THIS METHOD ALSO APPLIES TO STEEL POST INSTALLATIONS AND TIMBER POST INSTALLATIONS.

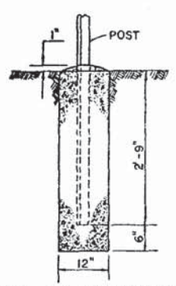


DETAIL OF CONCRETE SETTING FOR ANGULAR STEEL POSTS

(PULL, CORNER, END AND APPROACH POSTS)

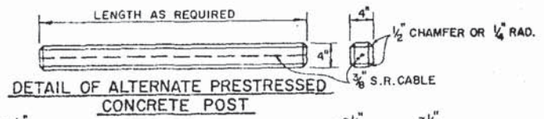


DETAIL OF ALTERNATE PRESTRESSED CONCRETE POST

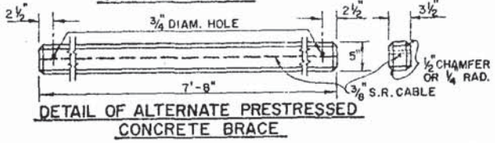


DETAIL OF ALTERNATE PRESTRESSED CONCRETE BRACE

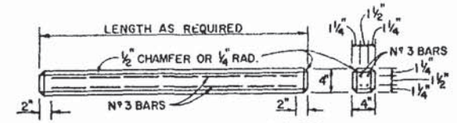


DETAIL OF ALTERNATE PRECAST CONCRETE POST

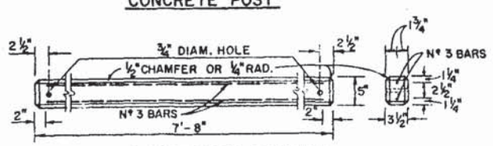


DETAIL OF ALTERNATE PRECAST CONCRETE BRACE

## GENERAL NOTES FOR ALL FENCE

THE TYPE OF FENCE TO BE INSTALLED SHALL BE SHOWN ON PLANS. PULL POSTS SHALL BE USED AT BREAKS IN VERTICAL GRADES OF 15° OR MORE, OR AT APPROXIMATELY 330' CENTERS EXCEPT THAT THIS MAXIMUM INTERVAL MAY BE REDUCED BY THE ENGINEER ON CURVES WHERE THE DEGREE OF CURVATURE IS GREATER THAN 3 DEGREES. PULL POSTS SHALL ALSO BE PLACED AT THE END OF EACH ROLL OR PIECE OF WOVEN WIRE.

CORNER POSTS ARE TO BE INSTALLED AT ALL HORIZONTAL BREAKS IN FENCE OF 15° OR MORE.

A MAXIMUM LENGTH OF 1320' OF WIRE MAY BE INSTALLED AS A UNIT.

FLORIDA DEPARTMENT OF TRANSPORTATION
Road Design Section

# DETAILS OF FENCING

| REVISIONS | | | INITIALS | DATES |
|---|---|---|---|---|
| Dates | Descriptions | Designed by | | |
| 6-10-74 WGL | REVISED | Checked by | | |
| 11-76 LMF | REVISED NOTE 5 ADDED NOTES 5 & 6 | Quantities by | | |
| 7-76 LMF | ADDED CONC. POSTS AND BRACES | Checked by | | |
| | | Supervised by | | |

Recommended for approval by _____ Deputy Design Engineer - Roadways

Approved by _____ State Design Engineer

DRAWING NO. 1 OF 1

INDEX NO. FTA-01-2

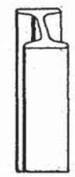

ALTERNATE H-BEAM LINE POST FOR TYPE "B" FENCE

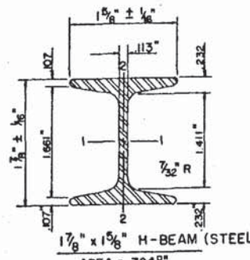


1⅞" x 1⅝" H-BEAM (STEEL)

AREA = .724"
GALV. WT. PER. FT. = 2.72 # ± 5%

| | —AXES— 1-1 | 2-2 |
|---|---|---|
| MOMENT OF INERTIA | .428 | .101 |
| SECTION MODULUS | .456 | .124 |
| RAD. OF GYRATION | .779 | .373 |
| SURFACE AREA = .776" PER FT. | | |
| TENSILE STRENGTH P.S.I. (MIN.) 60,000 | | |
| YIELDING POINT P.S.I. (MIN.) 40,000 | | |

(ALUM)

0.91 # ±5%

| | —AXES— 1-1 | 2-2 |
|---|---|---|
| | .428 | .101 |
| | .456 | .124 |
| | .779 | .373 |
| .776" | PER FT. | |
| | 30,000 | |
| | 25,000 | |

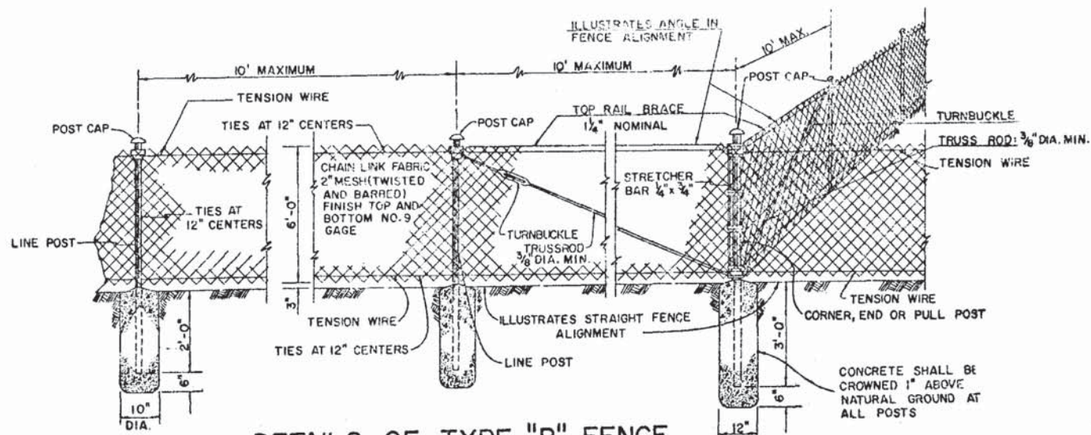


## DETAILS OF TYPE "B" FENCE

(ILLUSTRATED FOR STEEL TUBULAR POSTS)

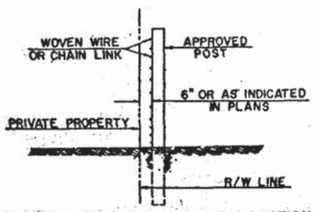


SKETCH INDICATING FENCE LOCATION AT SECTIONS OF NO FRONTAGE ROADS. REFER TO DETAIL PLANS FOR LOCATIONS OF FENCING FOR PROJECTS WITH FRONTAGE ROADS

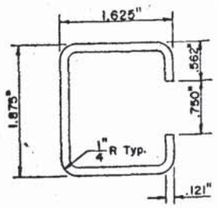


ALTERNATE "C" LINE POST FOR TYPE "B" FENCE

GALV. WT. PER. FT. = 2.34 # ±5%
YIELDING POINT P.S.I. (MIN.) 45,000

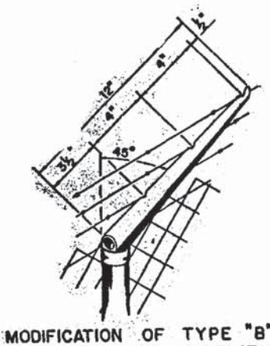


MODIFICATION OF TYPE "B" FENCING SHOWING BARB WIRE AT ATTACHMENT.

## GENERAL NOTES (TYPE "B" FENCE)

1. THIS FENCE TO BE PROVIDED GENERALLY IN URBAN AREAS.
2. LINE POSTS MAY BE ANY OF THE FOLLOWING:
   (A) GALVANIZED STEEL PIPE – 1½" NOMINAL; (B) ALUMINUM COATED STEEL PIPE – 1½" NOMINAL; (C) ALUMINUM ALLOY PIPE – 2" NOMINAL; (D) GALVANIZED STEEL H-BEAM – 1⅞" x 1⅝"; (E) ALUMINUM ALLOY H-BEAM – 1⅞" x 1⅝"; (F) GALV. STEEL "C" – 1⅞" x 1⅝".
3. CORNER, END OR PULL POSTS MAY BE ANY OF THE FOLLOWING:
   (A) GALVANIZED STEEL PIPE – 2" NOMINAL; (B) ALUMINUM COATED STEEL PIPE – 2" NOMINAL; (C) ALUMINUM ALLOY PIPE – 2½" NOMINAL
   NOTE: OTHER STEEL OR ALUMINUM SHAPES FOR CORNER, END OR PULL POST ASSEMBLIES MAY BE USED IF APPROVED BY THE ENGINEER.
4. CHAIN LINK FABRIC, POSTS, RAILS, GATE FRAMES, EXPANSION SLEEVES, WIRE TIRES, TENSION WIRES, AND ALL MISCELLANEOUS FITTINGS AND HARDWARE SHALL MEET THE REQUIREMENTS OF AASHTO M-181-74 AND M-111 UNLESS OTHERWISE NOTED:
   (A) UNLESS OTHERWISE CALLED FOR IN THE PLANS OR SPECIAL PROVISIONS;
      (1) THE CHAIN LINK FABRIC WIRE SHALL BE NO. 9 GAGE AND GALVANIZED AT RATE OF 2 OZ. PER SQ. FT..
      (2) THE TENSION WIRE SHALL BE EITHER NO. 7 GAGE STEEL WIRE GALVANIZED AT THE RATE OF 2 OZ. PER SQ. FT. MIN. OR ALUMINUM WIRE OF ALLOY ALCLAD 5056-H38 OR EQUAL WITH A WIRE DIAMETER OF 0.1875 INCH OR LARGER, OR NO. 7 GAGE ALUMINUM COATED STEEL WIRE COATED AT THE RATE OF 0.4 OZ. PER SQ. FT. MIN..
      (3) TIE WIRE AND HOG RINGS SHALL BE NO. 9 GAGE (0.148 INCH) GALVANIZED OR ALUMINUM ALLOY.
   (B) THE CONTRACTOR MAY ELECT TO USE A COMBINATION OF ZINC-COATED STEEL FENCE MEMBERS, ALUMINUM COATED STEEL FENCE MEMBERS, AND ALUMINUM ALLOY FENCE MEMBERS; BUT IN GENERAL ONLY ONE COMBINATION OF MATERIALS WILL BE ALLOWED IN FENCE CONSTRUCTION.
5. SEE SECTION 966 OF D.O.T. STANDARD SPECIFICATIONS FOR OPTIONAL MATERIALS
6. MATERIAL FOR CLASS I CONCRETE FOR FENCE FOOTINGS MAY BE MEASURED BY VOLUMETRIC AND/OR BY WEIGHT. SECTIONS 345-5.1, 345-10 AND 345-11 OF D.O.T. STANDARD SPECIFICATIONS WILL BE DELETED.

## GENERAL NOTES FOR ALL FENCE

THE TYPE OF FENCE TO BE INSTALLED SHALL BE SHOWN ON PLANS. PULL POSTS SHALL BE USED AT BREAKS IN VERTICAL GRADES OF 15° OR MORE, OR AT APPROXIMATELY 330' CENTERS EXCEPT THAT THIS MAXIMUM INTERVAL MAY BE REDUCED BY THE ENGINEER ON CURVES WHERE THE DEGREE OF CURVATURE IS GREATER THAN 3 DEGREES. PULL POSTS SHALL ALSO BE PLACED AT THE END OF EACH ROLL OR PIECE OF WOVEN WIRE.

CORNER POSTS ARE TO BE INSTALLED AT ALL HORIZONTAL BREAKS IN FENCE OF 15° OR MORE.

A MAXIMUM LENGTH OF 1320' OF WIRE MAY BE INSTALLED AS A UNIT.

FHWA APPROVED: 9-8-76

FLORIDA DEPARTMENT OF TRANSPORTATION
Road Design Section

# DETAILS OF FENCING

| REVISIONS | | | INITIALS | DATES |
|---|---|---|---|---|
| Dates | Descriptions | Designed by | | |
| 5-7-74 G.L. | REVISED | Checked by | | |
| 11-76 L.M.F. | REVISED NOTE 4 and OTHER NOTES | Quantities by | | |
| 7-76 | ADDED "C" POST | Checked by | | |
| | | Supervised by | | |

Recommended for approval by _____ Deputy Design Engineer - Roadways

Approved by _____ State Design Engineer

DRAWING NO. 1 OF 1

INDEX NO. FTB-01-2

| FED. ROAD DIV. NO. | STATE | SECTION | JOB NO. | FISCAL YEAR | SHEET NO. | TOTAL SHEETS |
|---|---|---|---|---|---|---|
| 3 | FLA. | | | | | |

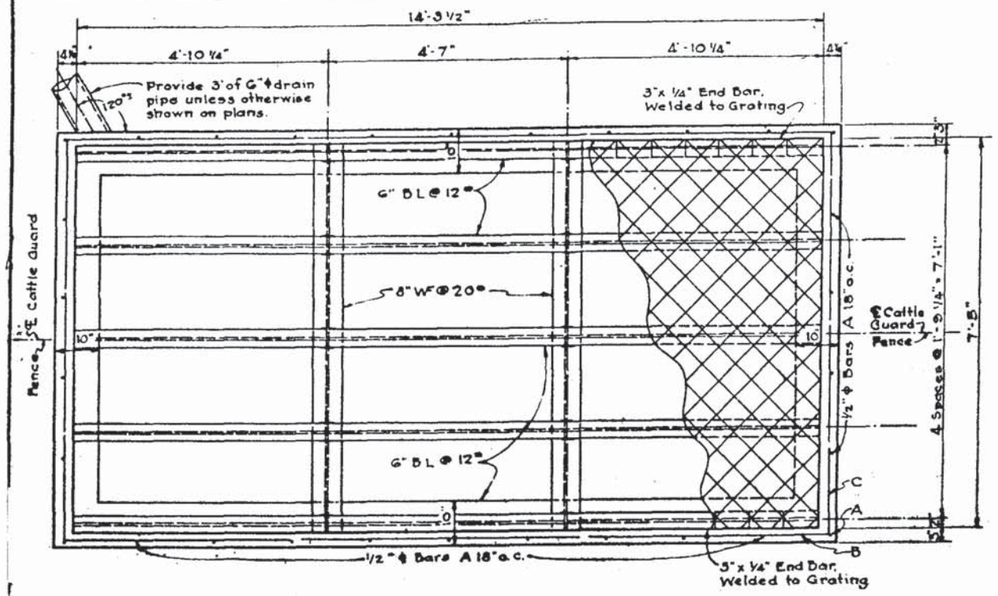


PLAN

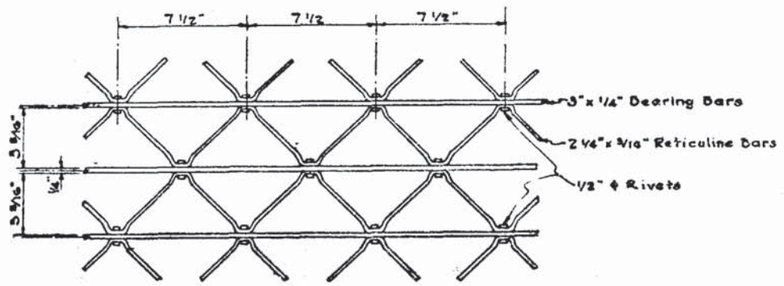


GRATING DETAILS

## BILL OF REINFORCING STEEL

| MARK | SIZE | NO. REQD. | LENGTH | LOCATION | BENDI |
|---|---|---|---|---|---|
| A | 1/2" ϕ | 30 | 2'-6" | Wall | Straigt |
| B | 1/2" ϕ | 4 | 14'-8" | Wall | Straigt |
| C | 1/2" ϕ | 4 | 7'-7" | Wall | Straigt |

## ESTIMATED QUANTITIES

| ITEM | UNIT | QUANTIT |
|---|---|---|
| Concrete, Class II | Cu. Yd | 3.3 |
| Reinforcing Steel | Lb. | 100 |
| Structural Steel | Lb. | 1162 |
| Steel Bridge Floor | Sq. Ft. | 106.0 |
| | | |
| | | |

## NOTES

Decking to be welded to sills (6" DL 12").
Sills (6" DL 12") to be welded to 8" WF 20".
Stringers (8" WF 20") to be anchored to concrete with 5/8" ϕ Anchor Bolts (4 Bolts per Stringer).
Steel Bridge Floor to be "A.F." Type Air Field Grid, as manufactured by Irving Subway Grating Co., Inc. Long Island City, L. I., New York (or equal).
Steel Flooring shall be given one shop coat of red lead according to manufacturer's specifications and one field coat of graphite paint.
Structural Steel Beams shall be given one shop coat of red lead and two field coats of cut back asphalt, grade R.C.-70.
Cut back asphalt may be applied by mopping.

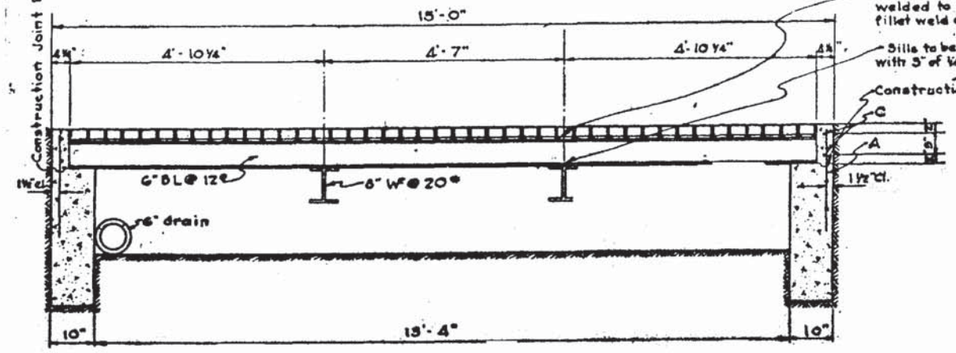


LONGITUDINAL SECTION

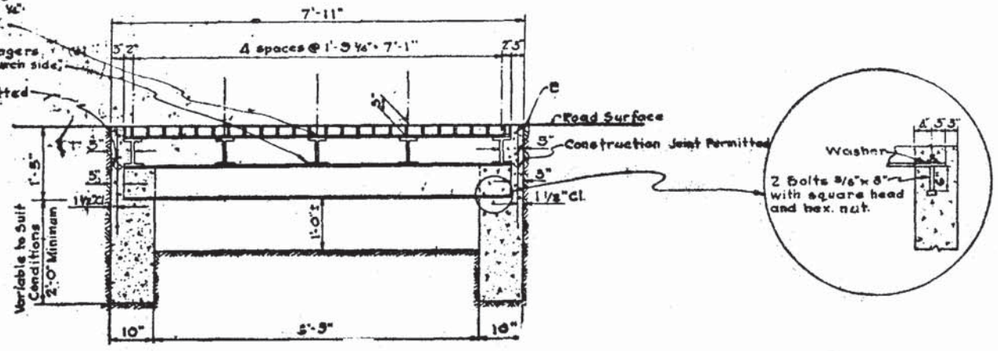


TRANSVERSE SECTION

FHWA APPROVED: 3-20-75

STATE OF FLORIDA
STATE ROAD DEPARTMENT

# CATTLE GUARD

| ROAD NO. | COUNTY | SECTION | JOB NO. |
|---|---|---|---|
| | | | |

| No. | Date | Description |
|---|---|---|
| R.A.C. | 10-951 | Retraced |
| L.M.F. | 5-73 | Added Class II Conc. |
| L.M.F. | 10-74 | Changed Index No. |

| | Name | Date |
|---|---|---|
| Designed by | | |
| Checked by | | |
| Drawn by | J. L.W. | 4-80 |
| Quantities by | J. L. W. | 4-80 |
| Checked by | W. B. S. | 4-80 |
| Traced by | J. L.W. | 4-80 |

Approved by:
C. R. Hart
Deputy Design Engineer - Roadways

Index No. 1 of 1 GCG-01

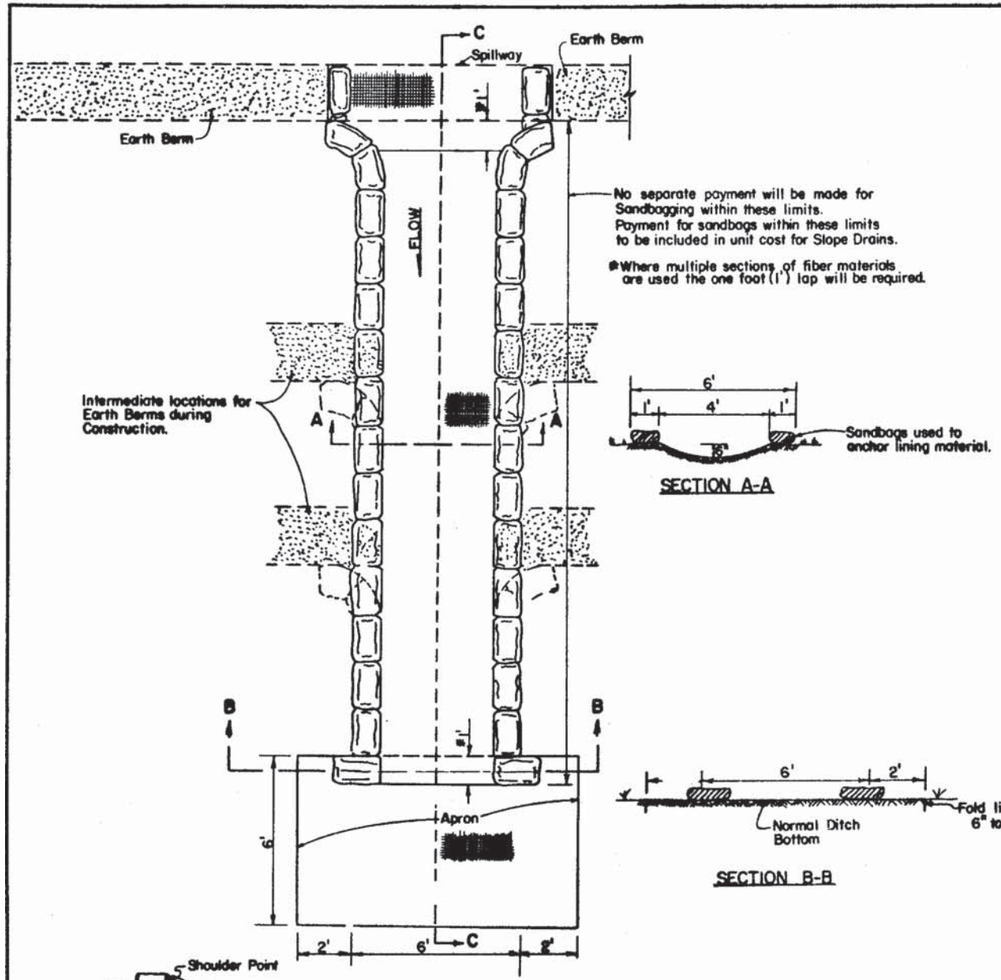


GENERAL NOTES

Glass Fiber, Bituminized Fiber, Plastic Sheets or any other Material approved by the Engineer may be used to line the Earth Slope Drain.

Pipe Slope Drains may be used as an alternate.

Where there is no existing Concrete Ditch a similar method may be used to anchor the Toe of the Drain into the Earthen or Grassed Ditch.

## TEMPORARY SLOPE DRAINS FOR FILL SECTIONS

NOTE: THIS IS A SUGGESTED METHOD ONLY. ANY ALTERNATE SOLUTION MAY BE USED AS APPROVED BY THE PROJECT ENGINEER.

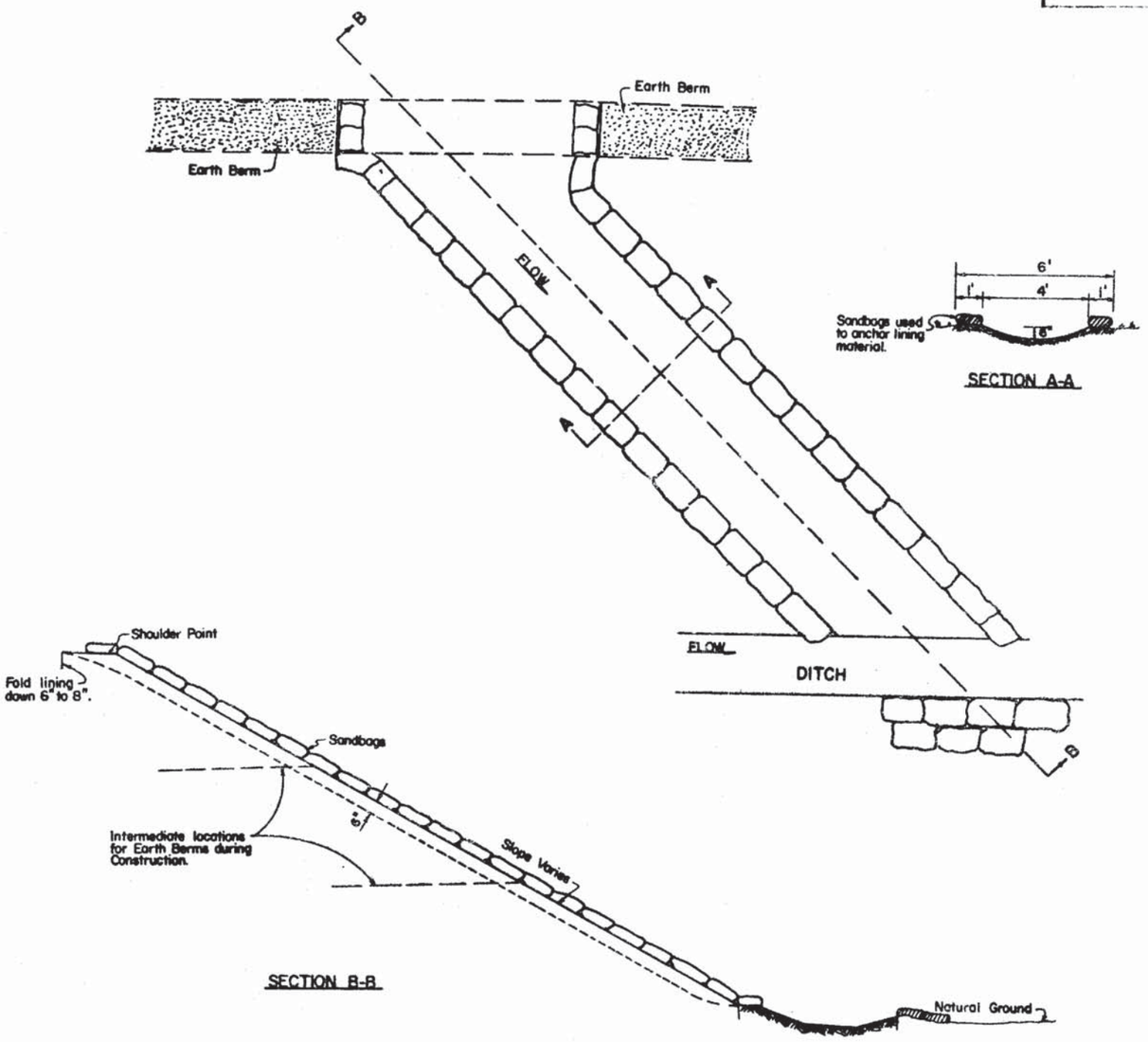


## TEMPORARY SLOPE DRAIN FOR FILL HEIGHTS GREATER THAN 10' OR ROADWAY GRADES STEEPER THAN 1.5%

| STATE PROJ. NO. | SHEET NO. |
|---|---|
| | |

FHWA APPROVED: 3-13-75

FLORIDA DEPARTMENT OF TRANSPORTATION
Road Design Section

EROSION CONTROL DEVICES
TEMPORARY SLOPE DRAINS

| REVISIONS | | | INITIALS | DATES |
|---|---|---|---|---|
| Dates | Descriptions | Designed by | WJR | 5/74 |
| | | Checked by | HLB | 6/74 |
| | | Quantities by | | |
| | | Checked by | | |
| | | Supervised by | DCB | |

Recommended for approval
by _____
Deputy Design Engineer-Roadways

Approved
by _____
State Design Engineer

| DRAWING NO. | INDEX NO. |
|---|---|
| 1 OF 1 | GEC-01 |

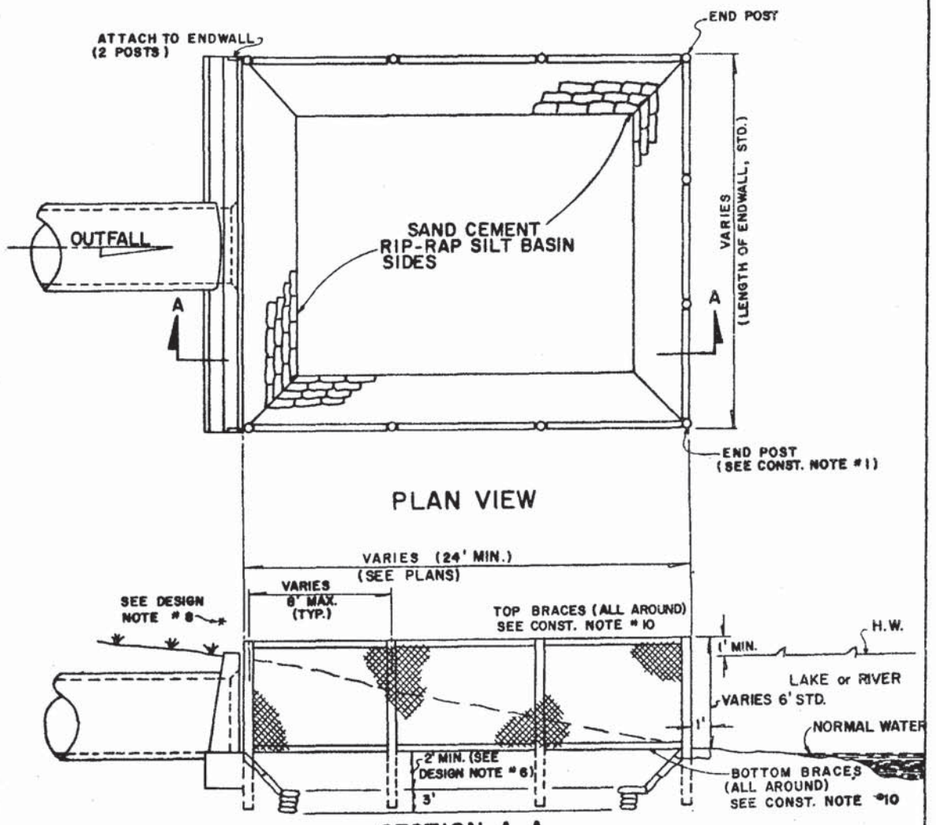


PLAN VIEW




SECTION A-A

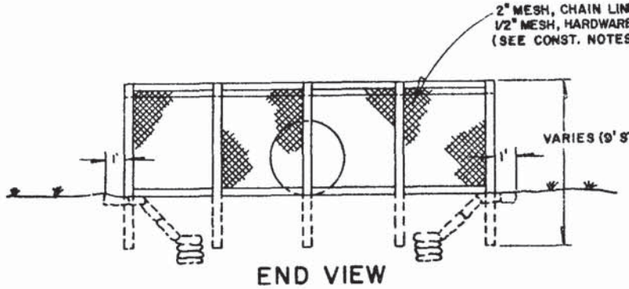


END VIEW

TYPE 'A' TRASH RETAINER & SILT BASIN
INTENDED FOR USE ON STORM SEWER OUTFALL PIPES WHICH TERMINATE ADJACENT TO SHORE LINES OF NATURAL WATER BODIES.

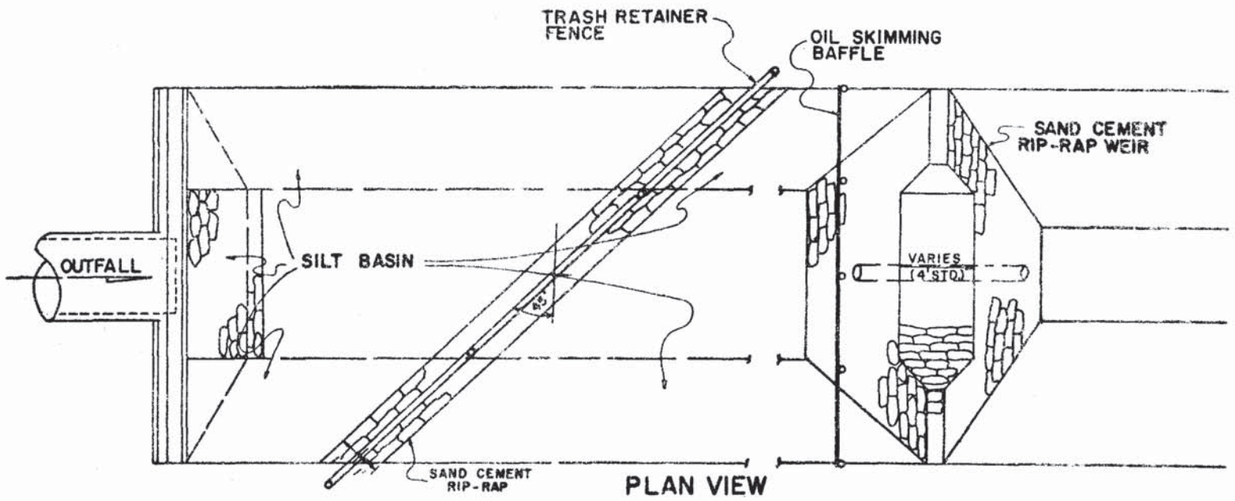


PLAN VIEW

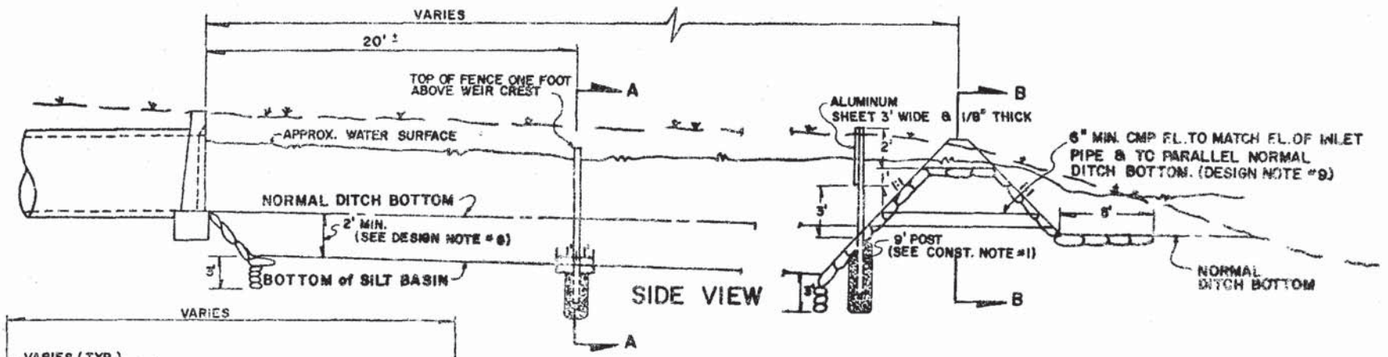


SIDE VIEW

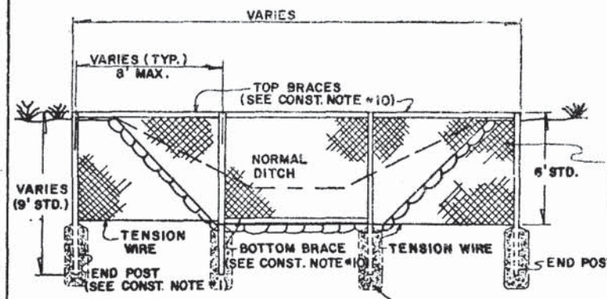


SECTION A-A
TRASH RETAINER

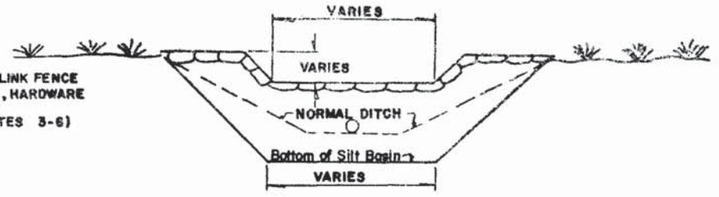


SECTION B-B
SAND CEMENT RIP-RAP WEIR

TYPE 'B' TRASH RETAINER & SILT BASIN
INTENDED FOR USE ON STORM SEWER OUTFALL PIPES WHICH TERMINATE IN AN OPEN OUTFALL DITCH BEFORE SPILLING INTO A NATURAL WATER BODY.

## GENERAL DESIGN NOTES

1. THE TYPE 'B' RETAINER & BASIN IS PREFERED OVER THE TYPE 'A' BECAUSE OF THE OIL BAFFLE & A LARGER SILT BASIN. THE TYPE 'A' RETAINER SHOULD BE USED ONLY IN CASES WHERE IT IS NOT PRACTICAL TO CONST. AN OPEN DITCH BETWEEN THE ENDWALL & THE WATER.
2. THE CHAIN LINK FENCE & HARDWARE CLOTH IS INTENDED TO SCREEN OUT & RETAIN DEBRIS WASHED INTO STORM SEWER SYSTEM FOR LATER REMOVAL BY MAINTENANCE FORCES.
3. THE SILT BASIN IS INTENDED TO ALLOW SILT & SAND WASHED INTO STORM SEWER SYSTEM TO SETTLE OUT BEFORE SPILLING INTO NATURAL WATER BODY.
4. THE OIL SKIMMING BAFFLE IN TYPE 'B' RETAINER IS INTENDED TO PREVENT ANY OILS WASHED INTO STORM SEWER SYSTEM FROM SPILLING OVER WEIR.
5. THE WEIR IN TYPE 'B' RETAINER SHOULD BE LOCATED AS FAR FROM THE ENDWALL AS PRACTICAL. ON STEEP DITCH GRADES TWO OR MORE WEIRS MAY BE REQUIRED.
6. THE DEPTH OF THE SILT BASIN SHOULD BE AS DEEP AS PRACTICAL WITH A MINIMUM OF 2.0 FT.
7. THE SILT BASIN IN TYPE 'A' RETAINER CAN BE EXTENDED BEYOND THE LIMITS OF THE FENCE IF REQUIRED. IN THESE INSTANCES, FENCE WILL EXTEND DOWN TO BOTTOM OF BASIN.
8. WHERE TOP OF ENDWALL IS BELOW HIGH WATER (H.W.), FENCE WILL BE REQUIRED ALONG ENDWALL TO ENCLOSE BASIN.
9. 6" CMP IS MINIMUM DRAINAGE UNLESS SHOWN OTHERWISE IN PLANS.

## GENERAL CONSTRUCTION NOTES

1. FENCE POSTS TO BE ALUMINUM OR CONCRETE ONLY.
2. ALL METAL HARDWARE TO BE ALUMINUM.
3. FENCE TO BE INSTALLED TO INSIDE OF POSTS.
4. FENCE TO BE ALUMINUM CHAIN LINK FABRIC, 2" MESH.
5. FENCE TO BE TIED TO ALL POSTS & BRACES AT 6' CENTERS.
6. ALUMINUM HARDWARE CLOTH, 1/2" MESH TO BE ATTACHED TO INSIDE OF FENCE.
7. ALL POSTS TO BE SET IN CONCRETE.
8. ALUMINUM POSTS TO BE 3" DIA. MINIMUM.
9. FOR ADDITIONAL DETAILS ON FENCING, SEE INDEX Nos. FTA-01 AND FTB-01.
10. BRACES TO BE ALUMINUM OR CONCRETE ONLY.
11. ALL SLOPES TO BE 1:1.
12. THE WORDS SILT & SEDIMENT ARE INTERCHANGABLE.
13. SEDIMENT BASINS TO BE CONSTRUCTED PRIOR TO CONSTRUCTION OF PIPE OUTFALL. MAINTENANCE AND CLEAN OUT TO BE BY THE CONTRACTOR UNTIL ACCEPTANCE BY THE ENGINEER.

STATE PROJ. NO. | SHEET NO.

FHWA APPROVED: 3-13-75

FLORIDA DEPARTMENT OF TRANSPORTATION
Road Design Section

EROSION CONTROL DEVICES
SEDIMENT BASINS

| REVISIONS | | | INITIALS | DATES |
|---|---|---|---|---|
| Dates | Descriptions | Designed by | WJR | 5/74 |
| | | Checked by | HLB | 6/74 |
| | | Quantities by | | |
| | | Checked by | | |
| | | Supervised by | DCB | |

Recommended for approval
by E.A. Hart
Deputy Design Engineer - Roadways
Approved
by
State Design Engineer

DRAWING NO. 1 OF 1 | INDEX NO. GEC-02

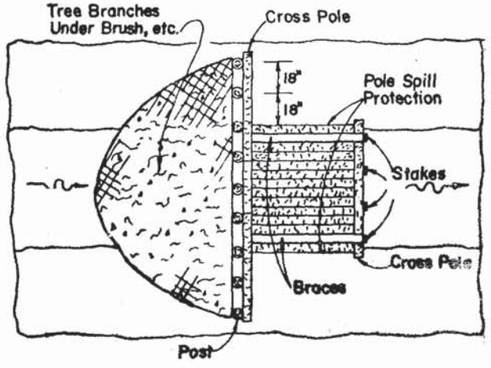


TOP VIEW

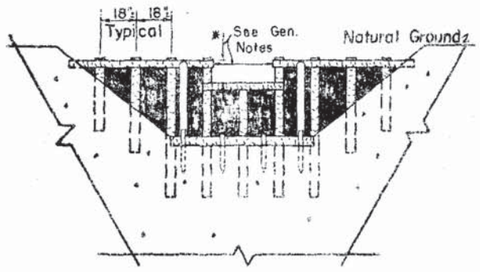


FRONT VIEW

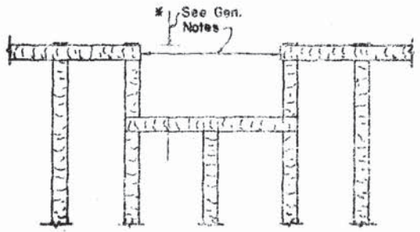


WEIR DETAIL

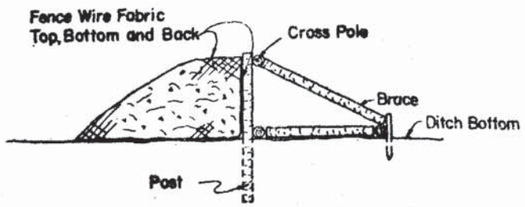


SIDE VIEW

## SUGGESTED SEDIMENT CHECK

General Notes:

1. Width and depth of weir may be varied to fit conditions at site. However, as a general guide it shall have a depth between 6" to 12" deep with a width between 3' to 6' wide.
2. Top elevation of ditch check should be set to provide an effective check for silt without causing an objectionable backwater. Depending upon site conditions and the particular season of the year this top elevation will have a wide range. As a general guide a suggested trial height of approximately 1/4 the distance between natural ground and ditch bottom be used unless other criteria controls.
3. Additional spill protection may be provided for slope protection if desired.
4. For use in lateral ditches or side ditches.

FHWA APPROVED: 5-13-75

FLORIDA DEPARTMENT OF TRANSPORTATION
Road Design Section

EROSION CONTROL DEVICES
SEDIMENT CHECK

| REVISIONS | | | INITIALS | DATES |
|---|---|---|---|---|
| Dates | Descriptions | Designed by | WJR | 6/74 |
| | | Checked by | HLB | 6/74 |
| | | Quantities by | | |
| | | Checked by | | |
| | | Supervised by | DCB | |

Recommended for approval
by E H Hart
Deputy Design Engineer - Roadways
Approved
by
State Design Engineer

DRAWING NO. 1 OF 1 | INDEX NO. GEC-03

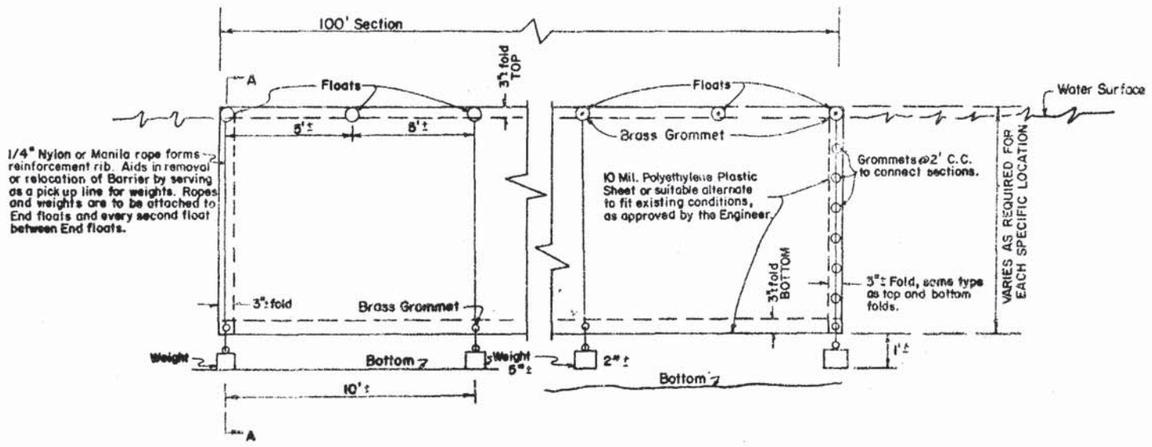


FRONT VIEW

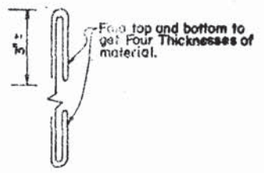


SIDE VIEW

FOLDING DETAIL

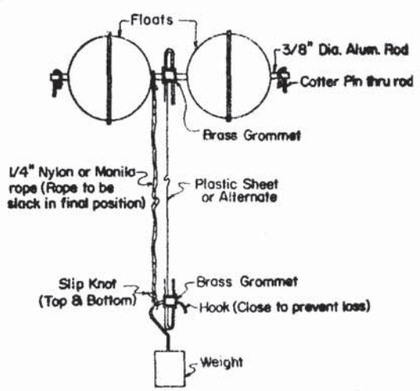


SECTION A-A

NOTE: At shallow water locations the plastic sheet or suitable alternate may be fastened to stakes driven into the bottom in lieu of floats and weights.

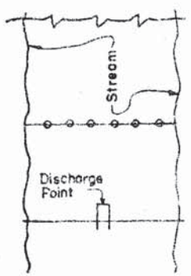


TYPICAL APPLICATION

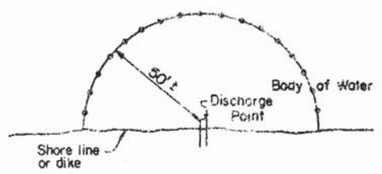


TYPICAL APPLICATION

## GENERAL NOTES

Silt Barrier to Prevent drifting of Silt caused by discharge of Storm Sewers during Construction, dredging or filling Operations.

Exact placement of silt barrier shall be so as to effectively control silt dispersion under the conditions present on a particular project.

The details shown on this sheet are suggested methods only. Alternate solutions and usage of materials may be used as approved by the Engineer.

DETAIL OF FLOATING SILT BARRIER

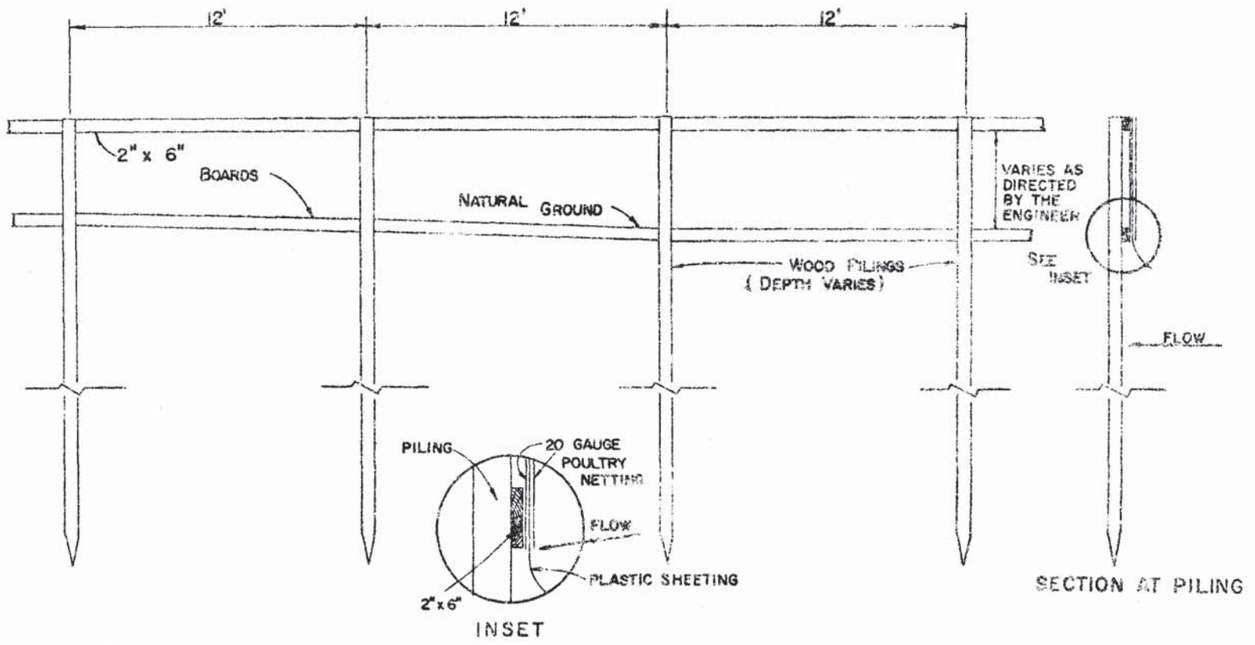


DETAIL OF STAKED SILT BARRIER

NOTES

THE FRAME WILL BE CONSTRUCTED WITH 2" x 6" BOARDS. PILINGS WILL BE A MINIMUM OF 6" IN DIAMETER AT THE BUTT END. THE DEPTH OF PILINGS WILL BE AT THE DISCRETION OF THE PROJECT ENGINEER. ATTACHED TO THE FRAME WILL BE 20 GAUGE POULTRY NETTING WITH 1" NET. THE SILT RETAINER WILL BE PLASTIC SHEETING , EXTENDING FROM THE TOP 2" X 6" BOARD TO 4" BEYOND THE BOTTOM 2" X 6" BOARD. IN THE DITCH BOTTOM, THE SHEETING AND POULTRY NETTING SHOULD EXTEND TO THE DITCH BOTTOM AND BE ANCHORED IN PLACE BY MEANS AVAILABLE TO THE CONTRACTOR TO EFFECTIVELY PREVENT SILT FROM ESCAPING FROM UNDER THE BOTTOM OF THE BARRIER. (SEE DETAIL BELOW)

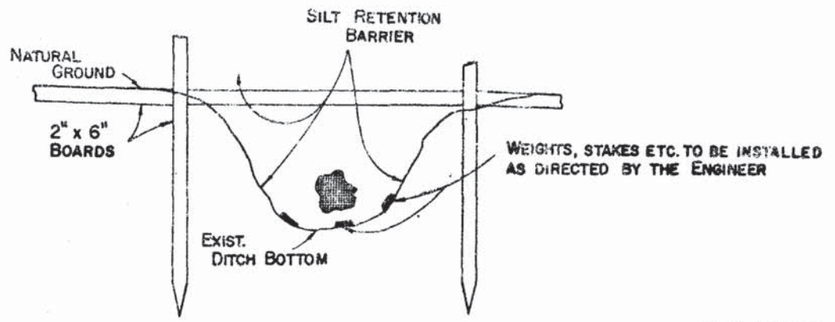


DETAIL SHOWING PLACEMENT OF STAKED SILT BARRIER AT EXISTING DITCH LOCATIONS

FHWA APPROVED: 3-13-75

FLORIDA DEPARTMENT OF TRANSPORTATION
Road Design Section

ERROSION CONTROL DEVICES
SILT BARRIERS

| REVISIONS | | | INITIALS | DATES |
|---|---|---|---|---|
| Dates | Descriptions | Designed by | WJR | 5/74 |
| | | Checked by | HLB | 6/74 |
| | | Quantities by | | |
| | | Checked by | | |
| | | Supervised by | DCB | |

Recommended for approval
by _____
Deputy Design Engineer - Roadways

Approved
by _____
State Design Engineer

DRAWING NO. 1 OF 1

INDEX NO. GEC-0

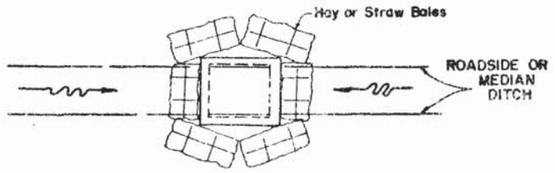


DITCH BOTTOM INLET

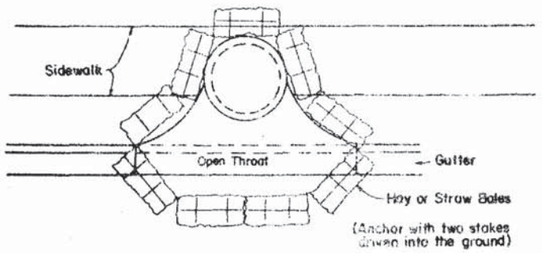


CURB AND GUTTER INLETS

## TEMPORARY PROTECTION AROUND INLETS OR SIMILAR STRUCTURES

Note: For use on completed or partially completed structures.

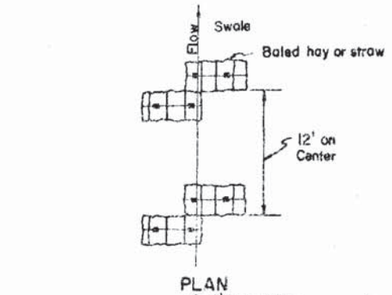


ELEVATION

Note: To be used where the natural ground slopes toward the toe of slope.

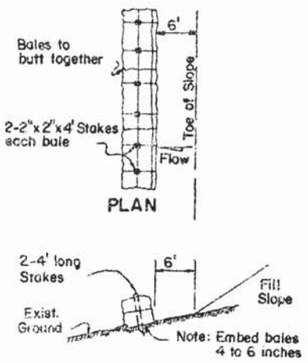


ELEVATION

Note: To be used where the natural ground slopes away from the toe of slope.

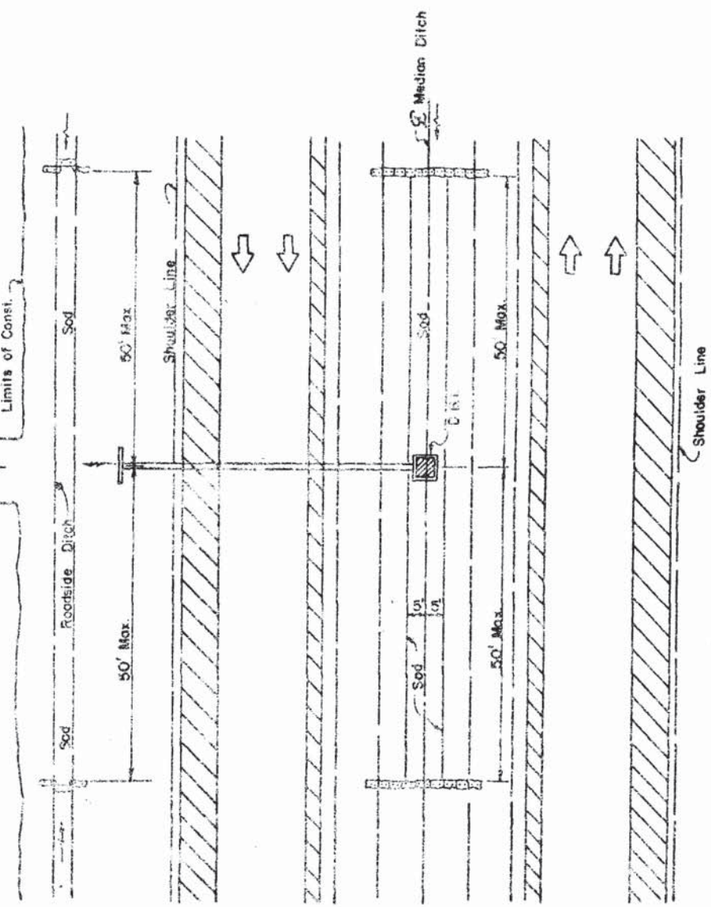


PLAN

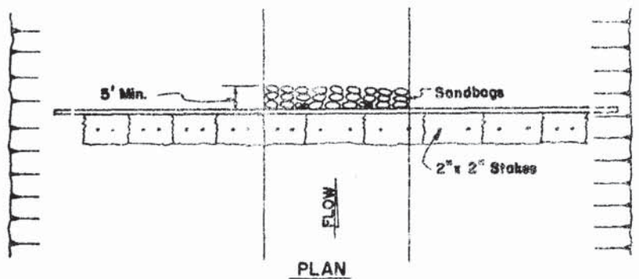


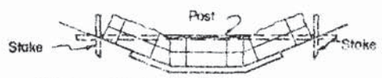


DETAIL OF HAY OR STRAW BALE DAM ON PAVED DITCH

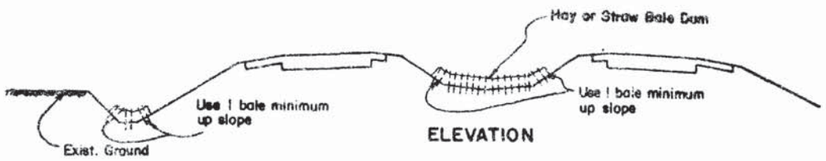


ELEVATION

Note: Secure each bale with 2-4' long stakes

HAY OR STRAW BALE DAMS ON TYPICAL 4 LANE DIVIDED HIGHWAY

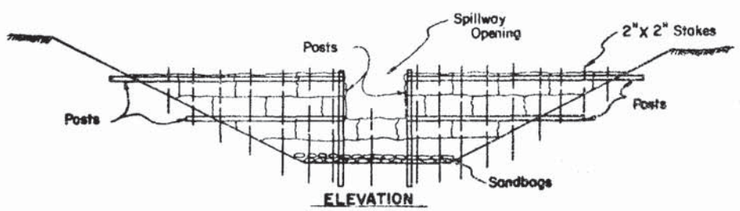


ELEVATION

STAKED HAY OR STRAW BALES

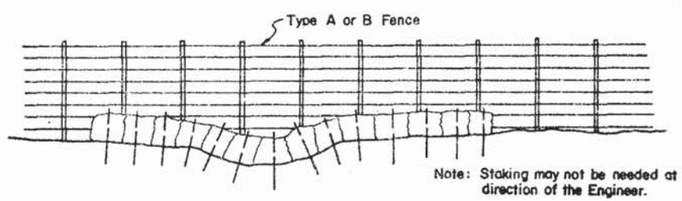


Note: Staking may not be needed at the direction of the Engineer.

HAY OR STRAW BALES BACKED BY FENCE

Note: Dam should extend for enough up ditch side slopes to effectively pond the runoff and prevent erosion and washout.

## TYPES OF TEMPORARY DAMS

Note: Payment to be made under Item 104 ~ Baled Hay or Straw ~Ton

STATE PROJ. NO. | SHEET NO.

FHWA APPROVED: 3-13-75

FLORIDA DEPARTMENT OF TRANSPORTATION
Road Design Section

EROSION CONTROL DEVICES
BALED HAY OR STRAW

| REVISIONS | | | INITIALS | DATES |
|---|---|---|---|---|
| Dates | Descriptions | Designed by | WJR | 5/74 |
| | | Checked by | HLB | 5/74 |
| | | Quantities by | | |
| | | Checked by | | |
| | | Supervised by | DCB | |

Recommended for approval by _____ Deputy Design Engineer-Roadways

Approved by _____ State Design Engineer

DRAWING NO. 1 OF 1 | INDEX NO. GEC-05

| STATE PROJ. NO. | SH |
|---|---|
| | |

## TO BE USED AT SAG VERTICAL CURVES

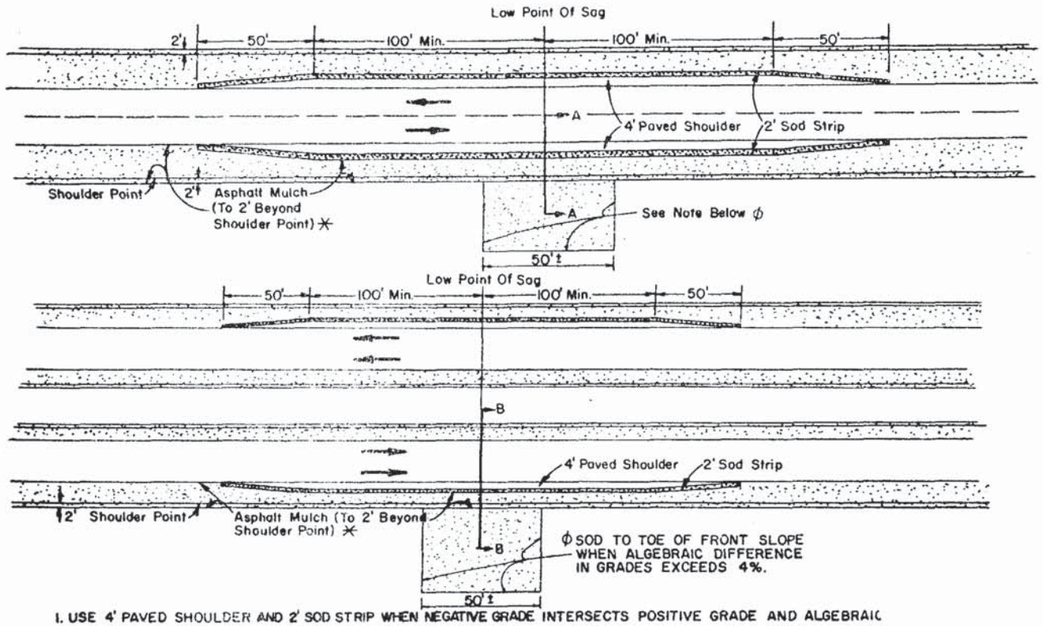


1. USE 4' PAVED SHOULDER AND 2' SOD STRIP WHEN NEGATIVE GRADE INTERSECTS POSITIVE GRADE AND ALGEBRAIC DIFFERENCE IN GRADES IS 2% OR GREATER.
2. USE ONLY 2' SOD STRIP WHEN NEGATIVE GRADE INTERSECTS POSITIVE GRADE AND ALGEBRAIC DIFFERENCE BETWEEN GRADES IS BETWEEN 1% AND 2%.

when does sod go

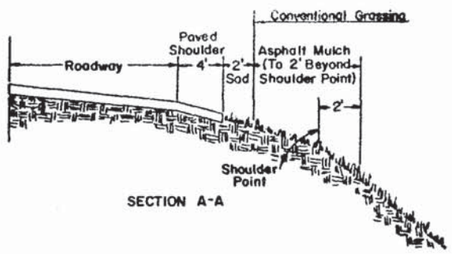


SECTION A-A

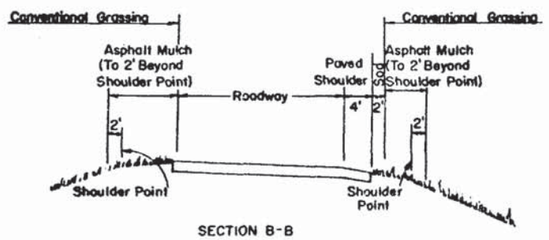


SECTION B-B

NOTES:

* 1. ASPHALT MULCH WILL EXTEND THROUGH THE ENTIRE LIMITS OF PROJECT. ASPHALT MULCH WILL NORMALLY NOT BE NECCESSARY WHEN TOPSOIL OR MUCK BLANKET IS USED.
2. FOR SODDING ADJACENT TO DITCHES SEE INDEX DPS-01.
3. FOR SODDING AT HEADWALLS SEE SHEET 2 OF2 ON INDEX GRC-01.
4. ALL FRONT SLOPES STEEPER THAN 4:1 ARE TO BE SODDED.

Feb 11 1975
May 6, 1977

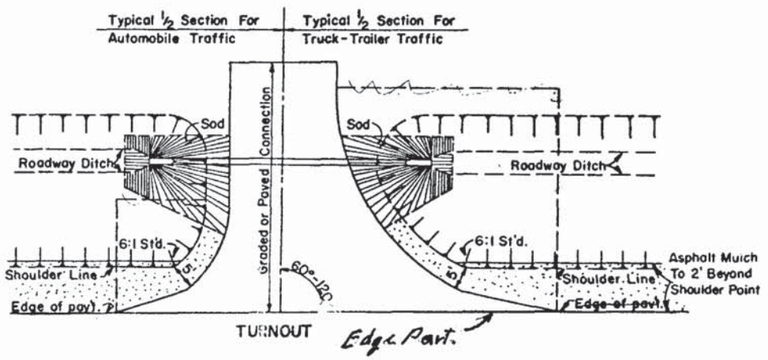


TURNOUT

Edge Part.

## TO BE USED AT SUPER ELEVATED HORIZONTAL CURVES
AS INDICATED IN TABLE BELOW

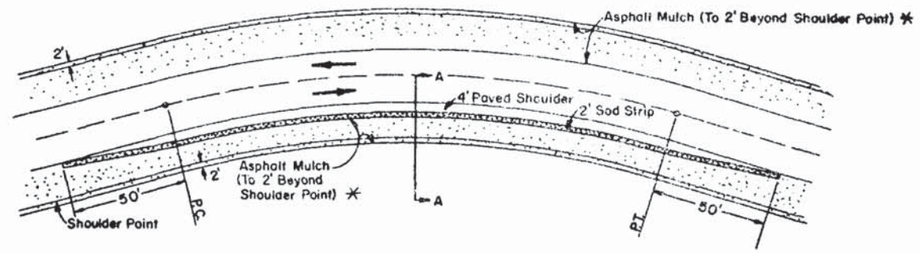


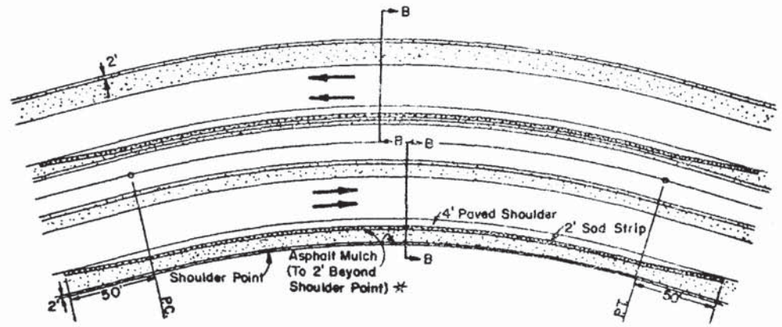


### PAVED SHOULDER CRITERIA AT SUPER ELEVATED HORIZONTAL CURVES

| DESIGN SPEED | DEGREE OF CURVE |
|---|---|
| 30 | 7° or greater |
| 40 | 5° or greater |
| 50 | 4° or greater |
| 60 | 3° or greater |
| 65 | 3° or greater |
| 70 | 2° or greater |

FHWA. APPROVED: 8-20-75

FLORIDA DEPARTMENT OF TRANSPORTATION
Road Design Section

EROSION CONTROL DETAILS FOR PERMANENT CONSTRUCTION

| REVISIONS | | | INITIALS | DATES |
|---|---|---|---|---|
| Dates | Descriptions | Designed by | H.L.G. | 4-75 |
| | | Checked by | | |
| | | Quantities by | | |
| | | Checked by | | |
| | | Supervised by | D.C.B. | |

Approved by:

Deputy Design Engineer - Roadways

DRAWING NO. 1 OF 1

INDEX NO. GEC-06

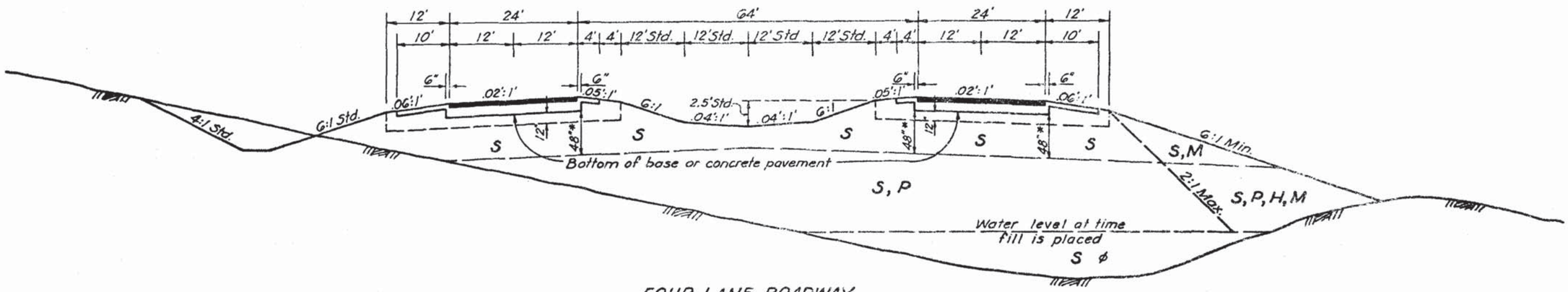


FOUR LANE ROADWAY

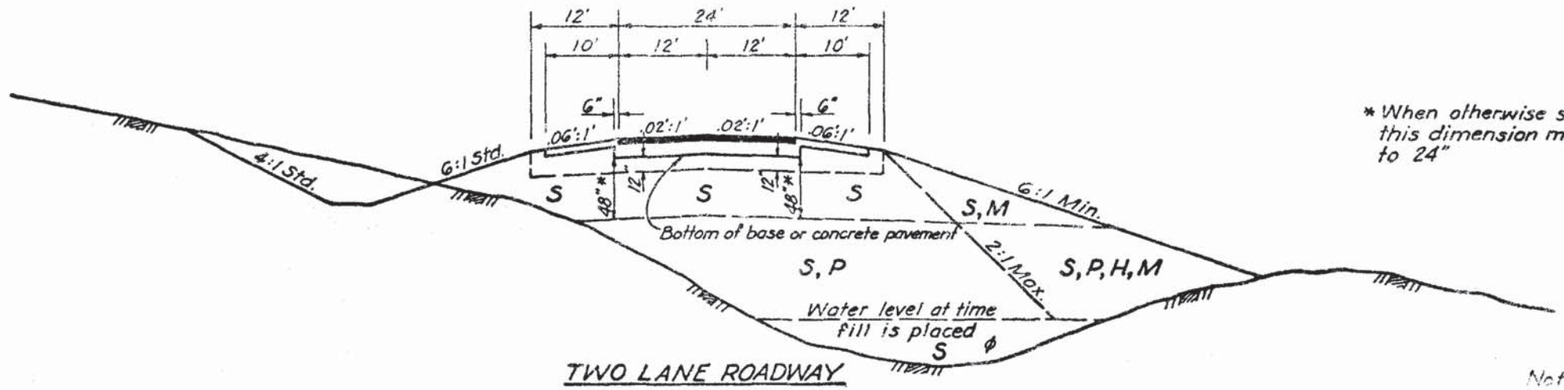


TWO LANE ROADWAY

* When otherwise shown on plans this dimension may be reduced to 24"

Note: All dimensions shown are standard.

The details shown on this Index drawing do not supersede the details shown on Index GRC-01.

| SYMBOL | SOIL | CLASSIFICATION* |
|---|---|---|
| S | Select | A-1, A-3, A-2-4 |
| P | Plastic | A-2-5, A-2-6, A-2-7, A-4, A-5, A-6, A-7 (All with LL < 50) |
| H | High Plastic | A-5 or A-7 (both with LL > 50) |
| M | Muck | A-8 |

Symbols listed L to R in order of preference.

* AASHO Soil Classification System (AASHO-M-145)

ϕ Certain types of A-2-4 material are likely to retain excess moisture and may be difficult to dry and therefor should be used in the embankment above water level existing at time of construction.

FHWA APPROVED: 4-23-74

STATE OF FLORIDA DEPARTMENT OF TRANSPORTATION
ROADWAY PLANS SECTION

EMBANKMENT UTILIZATION DETAILS

| REVISIONS | |
|---|---|
| Dates | Descriptions |

| ROAD NO. | COUNTY | PROJECT NO. |
|---|---|---|
| | | |

| | Names | Dates |
|---|---|---|
| Designed by | L.M.F | 10-72 |
| Checked by | | |
| Quantities by | — | |
| Checked by | — | |
| Supervised by | | |

Recommended For Approval By ____ Deputy Design Engineer - Roadway
APPROVED BY ____ State Design Engineer

Drawing No. 1 of 1 | Index No. GEU-01

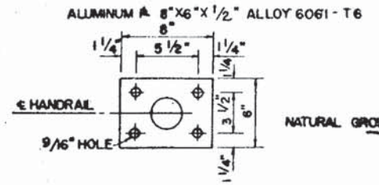


BASE PLATE

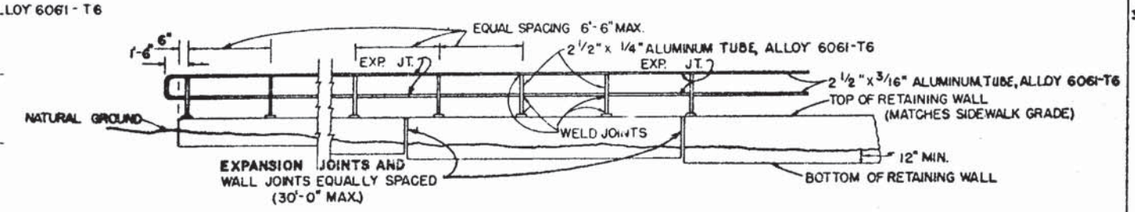


HANDRAIL ELEVATION

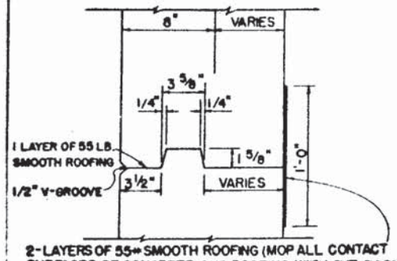


2-LAYERS OF 55# SMOOTH ROOFING (MOP ALL CONTACT SURFACES OF CONCRETE AND ROOFING WITH CUT-BACK ASPHALT. STOP ROOFING PAPER 6" BELOW TOP OF WALL)

KEYWAY DETAIL

ALL WALL JOINTS TO BE EQUALLY SPACED WITH 30'-0" MAX. CENTERS. KEYWAY TO STOP 6" BELOW TOP OF WALL.

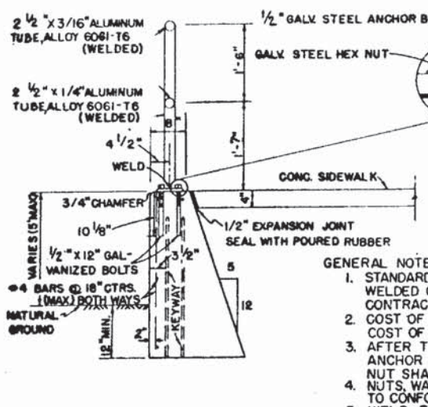


GENERAL NOTES:
1. STANDARD PIPE RAIL FITTINGS MAY BE USED WHERE WELDED CONNECTIONS ARE SHOWN, AT THE CONTRACTORS OPTION.
2. COST OF REINFORCING STEEL TO BE INCLUDED IN THE COST OF CLASS I CONCRETE.
3. AFTER THE NUTS HAVE BEEN TIGHTENED, THE ANCHOR BOLT THREADS SHALL BE NICKED OR THE NUT SHALL BE WELDED TO THE BOLT.
4. NUTS, WASHERS, AND BOLTS TO BE HOT DIP GALVANIZED TO CONFORM TO REQUIREMENTS OF ASTM SPEC. A-153.
5. WELD FILLER ALLOY 5556.

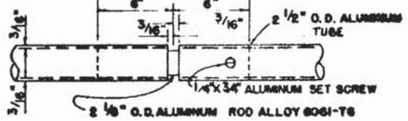


DETAIL OF EXPANSION JOINT FOR PIPE HANDRAIL

TYPICAL SECTION OF RETAINING WALL WITH PIPE HANDRAIL

DETAIL OF ALUMINUM PIPE HANDRAIL ON GRAVITY WALL

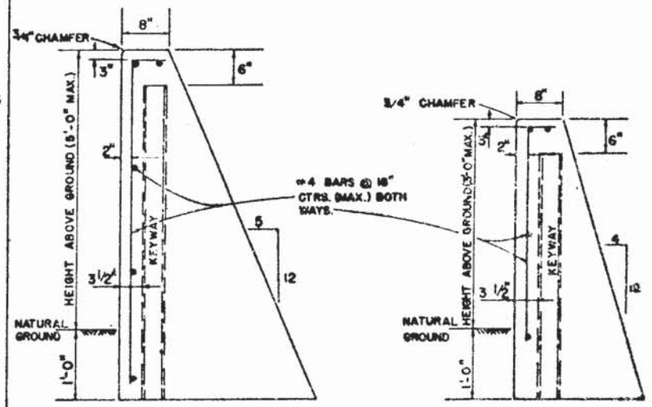


DETAIL OF GRAVITY WALL

| ESTIMATED QUANTITIES FOR WALL | | |
|---|---|---|
| HEIGHT ABOVE GROUND | CUBIC YARDS CONCRETE | POUNDS STEEL |
| 2' | .13 | 4 |
| 3' | .20 | 5 |
| 4' | .32 | 6 |
| 5' | .43 | 7 |

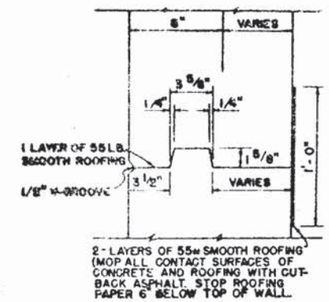


2-LAYERS OF 55# SMOOTH ROOFING (MOP ALL CONTACT SURFACES OF CONCRETE AND ROOFING WITH CUT-BACK ASPHALT. STOP ROOFING PAPER 6" BELOW TOP OF WALL.

KEYWAY DETAIL

ALL WALL JOINTS TO BE EQUALLY SPACED WITH 30'-0" MAX. CENTERS. KEYWAY TO STOP 6" BELOW TOP OF WALL..

GENERAL NOTES:
1. COST OF REINFORCING STEEL TO BE INCLUDED IN THE COST OF CLASS I CONCRETE.
2. QUANTITIES SHOWN ARE FOR ONE LINEAR FOOT OF WALL.

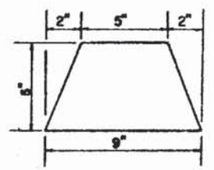


DETAIL OF ASPHALTIC CONCRETE CURB

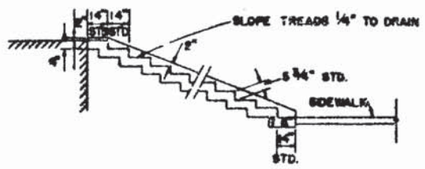


SECTION

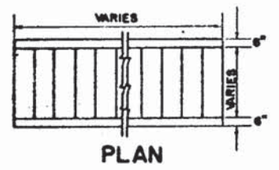


PLAN

NOTE: WIDTH OF TREADS AND RISERS SHOWN IS STANDARD AND MAY BE VARIED TO FIT EXISTING CONDITIONS AS DIRECTED BY THE ENGINEER.

DETAIL OF CONCRETE STEPS

| FED. ROAD DIST. NO. | STATE | PROJECT NO. | FISCAL YEAR | SHEET NO. |
|---|---|---|---|---|
| 1 | FLA. | | | |

FINAL APPROVED: 3-20-75

| REVISIONS | |
|---|---|
| DATES | DESCRIPTIONS |
| 3/68 R.H.C. | Transfered details To SGTE-8 & added all details as shown |
| 3/75 | Added Cl. I Conc. |
| 10-74 | Changed Books to M° |

FLORIDA DEPARTMENT OF TRANSPORTATION
ROADWAY PLANS SECTION

# DETAILS FOR MUNICIPAL CONST.

| ROAD NO. | COUNTY | PROJECT NO. |
|---|---|---|
| | | |

| | NAMES | DATES |
|---|---|---|
| DETAILED BY | COK | 2-68 |
| CHECKED BY | R.H.C | 2-68 |
| QUANTITIES BY | | |
| CHECKED BY | | |
| TRACED BY | C.O.K. | 2-2-68 |

RECOMMENDED FOR APPROVAL BY: ENGINEER OF ROAD DESIGN
APPROVED BY: ASST. STATE HIGHWAY ENGINEER

DRAWING NO. 1 of 1 | INDEX NO. GMC-01

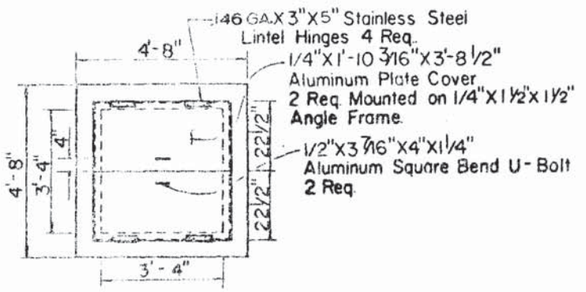


TOP VIEW

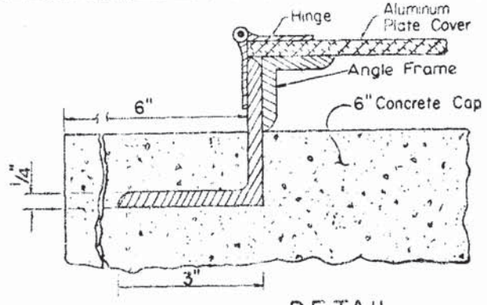


DETAIL
1/4" X 3" X 3" ANGLE

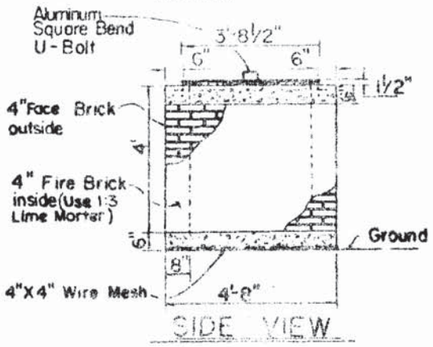


SIDE VIEW

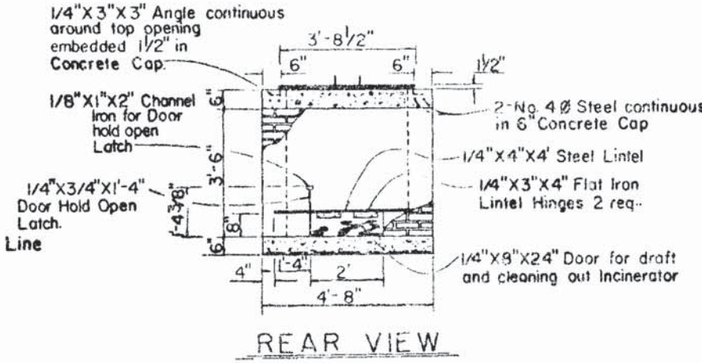


REAR VIEW

DETAIL ~ INCINERATOR

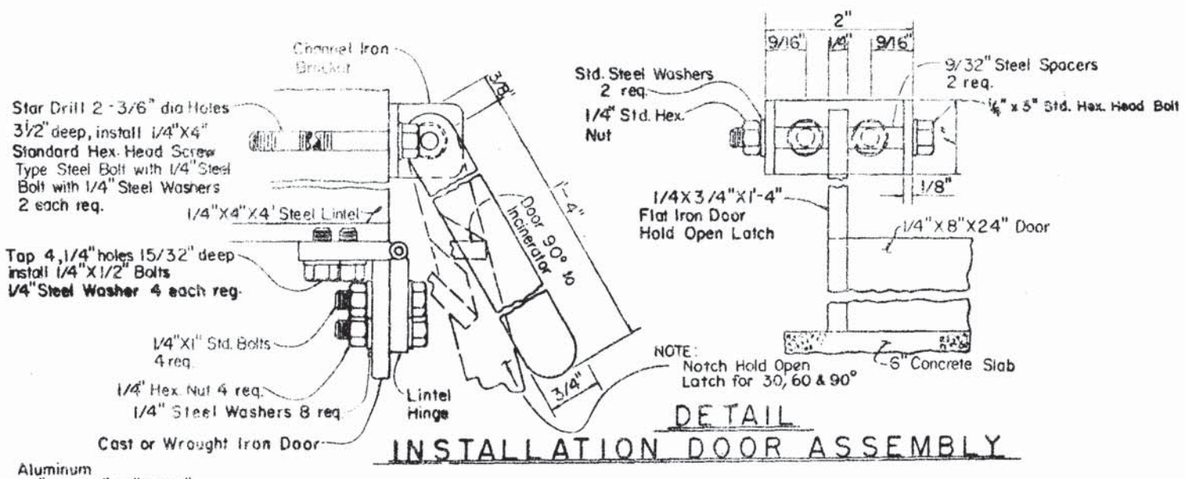


DETAIL
INSTALLATION DOOR ASSEMBLY

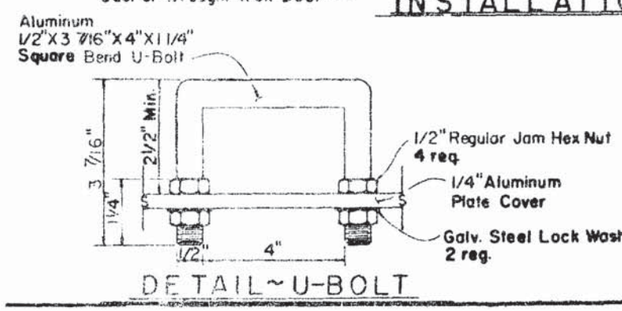


DETAIL ~ U-BOLT

## ~INCINERATOR~

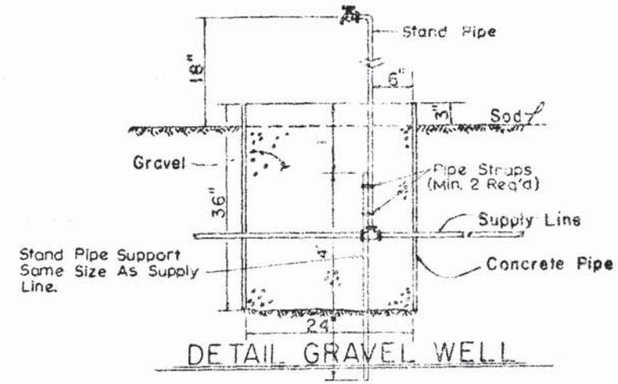


DETAIL GRAVEL WELL

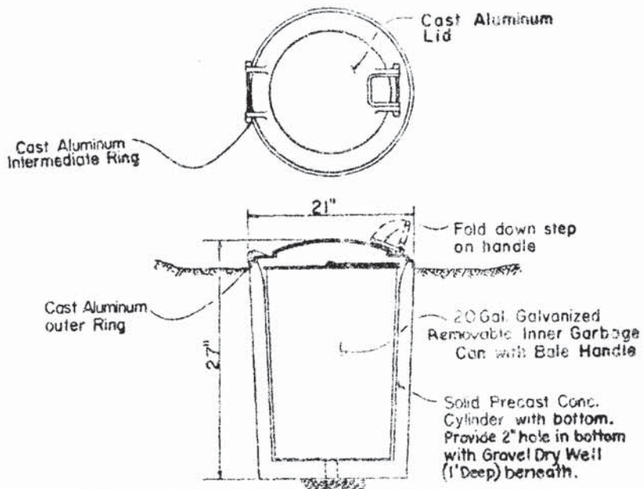


DETAIL OF BURIED GARBAGE CANS

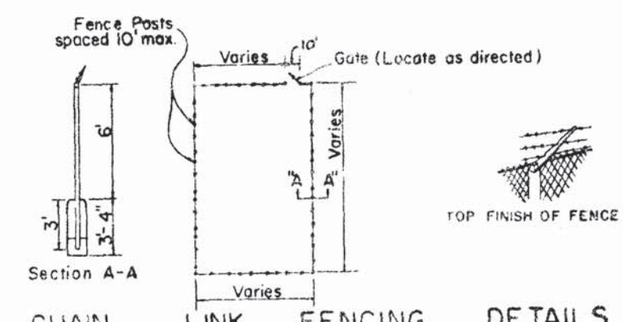


CHAIN LINK FENCING DETAILS

For additional details see index No. FTB-01

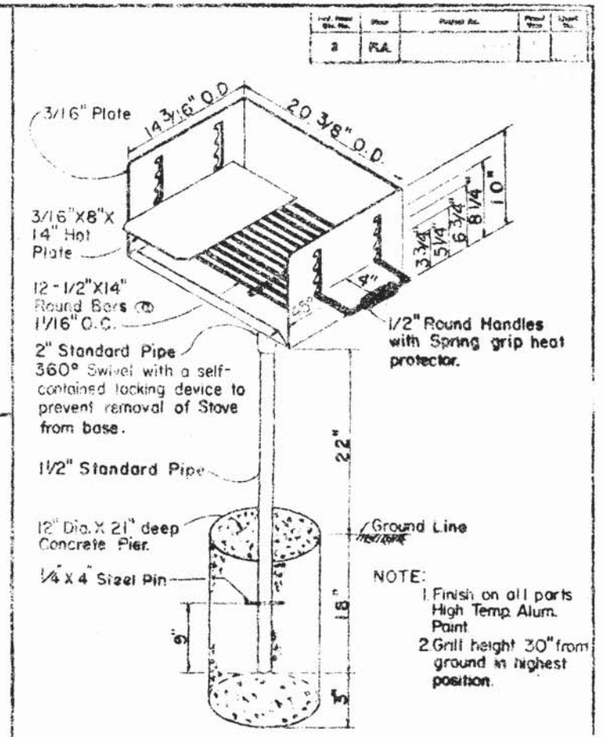


ADJUSTABLE CAMPSTOVE AND GRILL

FHWA APPROVED: 3-20-75

FLORIDA DEPARTMENT OF TRANSPORTATION
ROADWAY PLANS SECTION

MISC. REST AREA DETAILS

| REVISIONS | | ROAD NO. | COUNTY | PROJECT NO. |
|---|---|---|---|---|
| Dates | Descriptions | | | |
| 2/69 | Changed Red brick for increments | | | |
| 6/70 | to Face brick | | | |
| 6/70 | Added Stand Pipe, Support & Detail of Gravel Well | | | |
| 10-74 | Changed Index No. | | | |

| | Names | Dates |
|---|---|---|
| Detailed by | J.W. | 3-1968 |
| Checked by | R.H.C. | 8-1968 |
| Quantities by | | |
| Checked by | | |
| Traced by | J.W. | 6-1968 |

Recommended For Approval by: [signature] Engineer of Road Design
APPROVED BY: [signature] State Highway Engineer

Drawing No. 1 of 1
Index No. GRA-01

Form 281-10

# MEMORANDUM

State of Florida Department of Transportation

DATE September 13, 1976

TO All Holders of Standard Index Books

FROM E. H. Hart, Deputy Design Engineer (Rdwys.)

COPIES TO

SUBJECT Standard Index No. GRC-01-1

The subject standard index drawing has been revised as follows:

Sheet No. 1 - Added "Detail for Removal of Excess Base Material".

Sheet No. 2 - Was not changed.

Please destroy the copy of Index No. GRC-01 in your files and replace with this new drawing.

LMF

EHH:LMF:jl

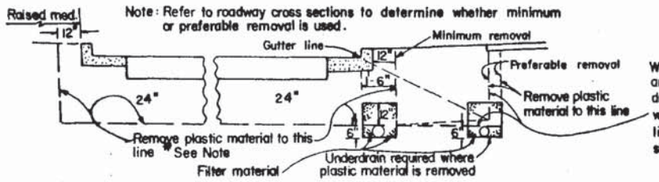


Where preferable method of removal governs and it is impossible to place the underdrain at the outer cut limit due to conflict with storm sewer mains, remove to these limits and place underdrain at location shown for minimum removal.

* NOTE: Where frequency of median breaks indicates that it is impractical to leave plastic material in the median, the designer may elect to indicate total removal of this material. If during construction it becomes apparent, due to normal required construction procedures, that it is impractical to leave the plastic material in the median, the project engineer may authorize total removal of this material after clearing this change thru the Asst. Dist. Engr.-Const.

HALF SECTION SHOWING REMOVAL OF PLASTIC MATERIAL AND LOCATION OF UNDERDRAIN IN MUNICIPAL CONST

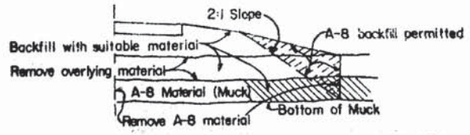


HALF SECTION SHOWING REMOVAL AND DISPOSAL OF A-8 MATERIAL IN RURAL CONSTRUCTION

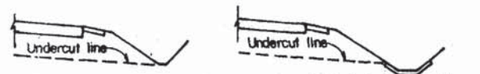


At locations where plastic material is being removed, the side ditches must be at least as deep as the undercut plane.

Where paved side ditches are used in areas of removal of plastic material, the top of the ditch pavement must be no higher than the undercut plane.

MISCELLANEOUS DETAILS

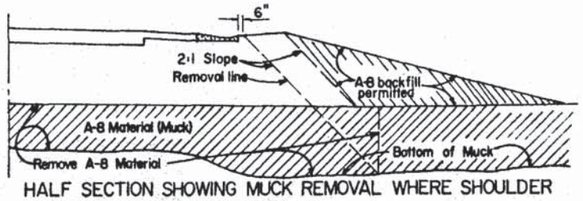


HALF SECTION SHOWING MUCK REMOVAL WHERE SHOULDER GUTTER IS CONSTRUCTED

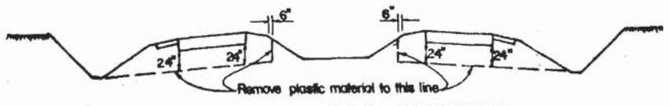


TYPICAL CUT SECTION ON TANGENT

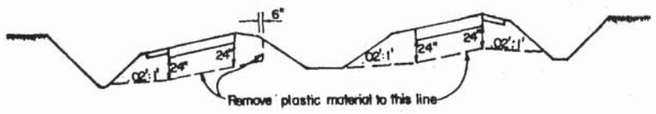


TYPICAL CUT SECTION ON SUPERELEVATION

TYPICAL SECTIONS FOR REMOVAL OF PLASTIC MATERIAL ON INTERSTATE AND PRIMARY SYSTEM HAVING DEPRESSED MEDIAN

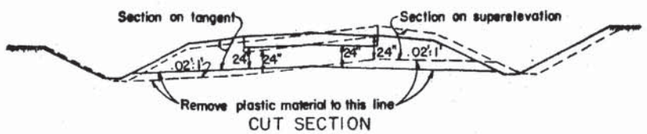


CUT SECTION

TYPICAL SECTION FOR REMOVAL OF PLASTIC MATERIAL ON MAJOR PRIMARY SYSTEM ROADS

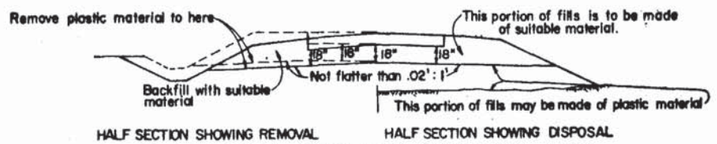


HALF SECTION SHOWING REMOVAL HALF SECTION SHOWING DISPOSAL

REMOVAL AND DISPOSAL OF PLASTIC MATERIAL FOR SECONDARY AND MINOR PRIMARY SYSTEM ROADS

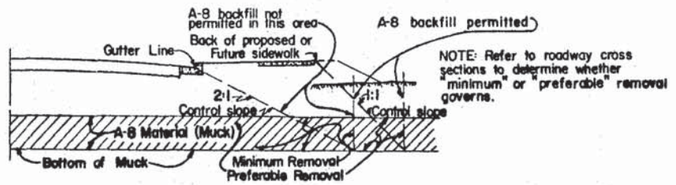


HALF SECTION SHOWING REMOVAL AND DISPOSAL OF A-8 MATERIAL IN MUNICIPAL CONSTRUCTION

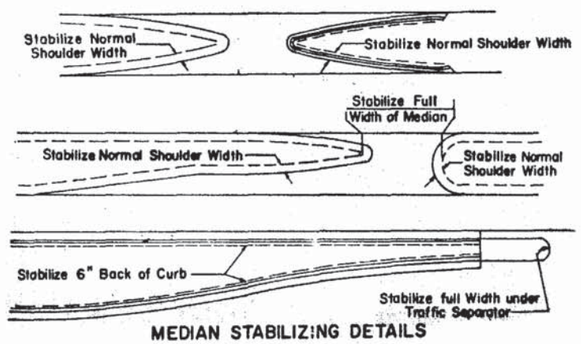


MEDIAN STABILIZING DETAILS

GENERAL STABILIZING NOTES:

(1) When typical section has curb or curb and gutter in median stabilize 6" back of curb.
(2) When typical section has shoulder with no curb or curb and gutter in median stabilize to normal shoulder width.
(3) Stabilize entire area under all paved traffic islands.
(4) Stabilize full width under all traffic separators.

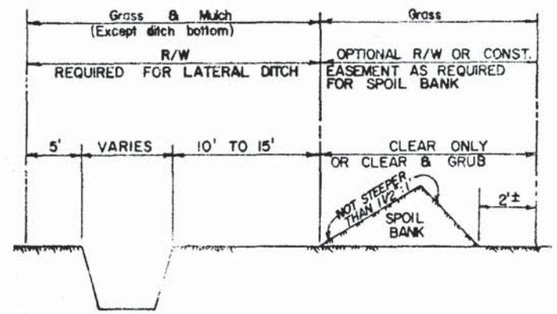


NOTE.

1. Where no spoil is anticipated or when a large ditch or Canal is involved and spoil is anticipated on both sides, R/W should be adjusted accordingly.
2. Clearing and Grubbing is to extend 200' beyond the end of the ditch if necessary.
3. The bottom width of Lateral Ditches is to be 2' wider than the span of the Structure they drain or as shown on Plans.
4. No Spoil Bank will be permitted within 300' of the ℄ of the Project, measured at right angles thereto. Waste materials in this section shall be either hauled and deposited in areas approved by the Engineer, or spread on adjacent areas to the depth designated by the Engineer.
5. All excavation from Lateral Ditches shall be wasted unless otherwise shown on Lateral Ditch Sheets.

TYPICAL SECTION

LATERAL DITCH SHOWING SPOIL BANK

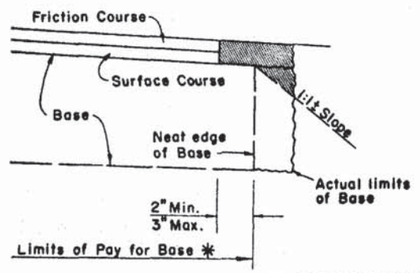


DETAIL FOR REMOVAL OF EXCESS BASE MATERIAL

NOTES:
1. All surplus material in shaded area to be removed.
2. Payment for removal is included in the Base item.
3. * Area of base for payment will be calculated using the nominal width (3" Overhang).

GENERAL NOTES

1. Minimum grade on underdrain pipe shall be 0.2%.
2. Gradation of the filter material shall conform to standard specifications.
3. In rural projects, where underdrain is to be constructed beneath the proposed pavement, the grade of the underdrain is to be such that the underdrain filter material will not extend above the bottom of the stabilized section of the subgrade.
4. All details shown on this sheet for the removal and disposal of unsuitable materials apply unless otherwise shown on the plans.
5. Where plastic material is undercut, backfill shall be made of suitable material.
6. The term "plastic material" used in this drawing in conjunction with removal of plastic material is defined as any material of the soils classifications of A-2-6, A-2-7, A-4, A-5, A-6 and A-7.
7. The normal depth of side ditches for Interstate and major Primary System roads shall be 3.5' below the shoulder point except in special cases.
8. On Primary and Interstate highways where plastic material is permitted for use in roadway fill, the material may be placed above the existing water level (at the time of Construction) to within 4' of the proposed base. It should be placed uniformly in the lower portion of the embankment for some distance along the Project rather than full depth for short distances.

FHWA Approved: 7-7-75

STATE OF FLORIDA DEPARTMENT OF TRANSPORTATION
ROADWAY PLANS SECTION

# MISC. ROADWAY CONSTRUCTION DETAILS

| FED. ROAD DIV. NO. | STATE | PROJECT NO. | TOTAL SHEETS | SHEET NO. |
|---|---|---|---|---|
| 3 | FLA. | | | |

| REVISIONS | |
|---|---|
| Date | Description |
| 10-74 | Redrawn / Index No. Changed |
| 8-76 | Added Detail for Removal of Excess Base Material |

| ROAD NO. | COUNTY | PROJECT NO. |
|---|---|---|
| | | |

| | Name | Date |
|---|---|---|
| Designed by | | |
| Checked by | | |
| Quantities by | | |
| Checked by | | |
| Supervised by | | |

Approved by
Deputy Design Engineer - Roadways

Drawing No. 1 of 2

Index No. GRC-01-1

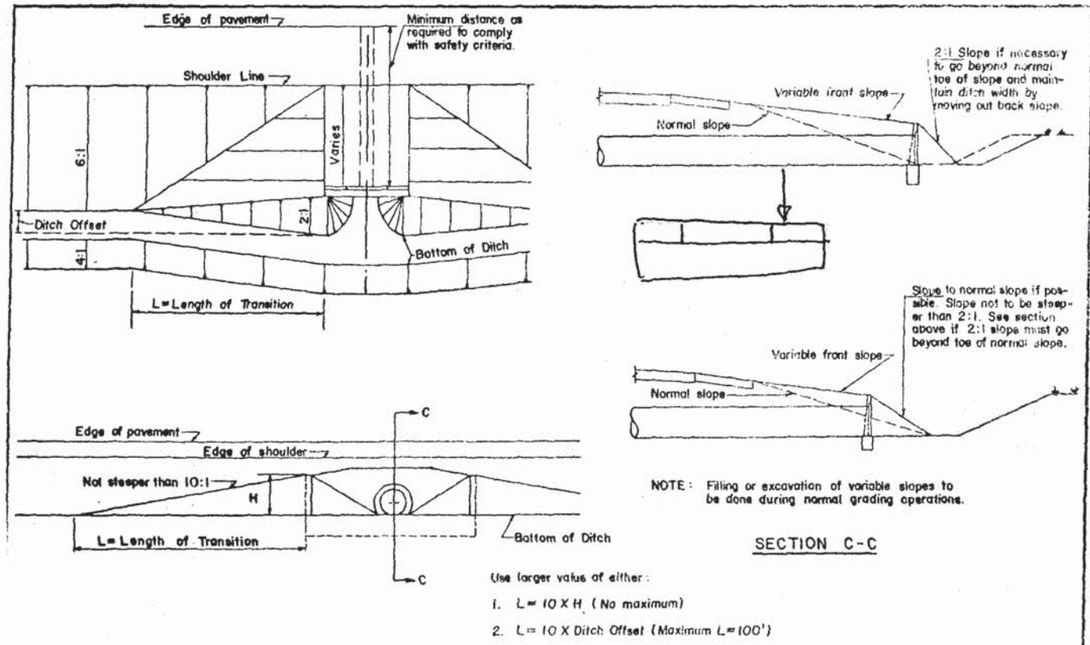


NOTE: Filling or excavation of variable slopes to be done during normal grading operations.

SECTION C-C

Use larger value of either:

1. L = 10 X H (No maximum)
2. L = 10 X Ditch Offset (Maximum L = 100')

## DETAIL FOR SETTING LIMITS OF VARIABLE FRONT SLOPES AT DRAINAGE STRUCTURES WHERE FRONT SLOPES ARE FLATTER THAN NORMAL SLOPES.

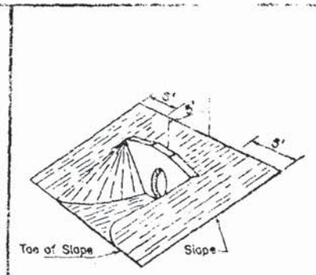


ENDWALL - INDEX DCE-01

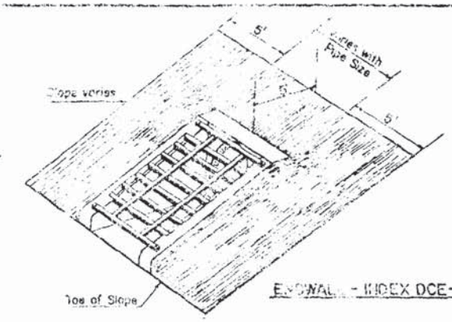


ENDWALL - INDEX DCE-03

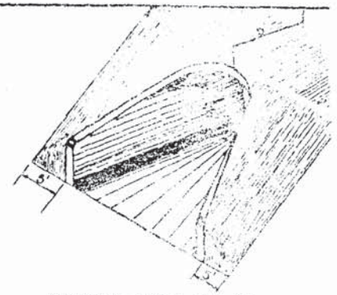

ENDWALL - INDEX DCE-04

## SODDING QUANTITIES Sq. Yds.

| PIPE SIZE | INDEX DCE-01 2:1 SLOPE 1-PIPE | 2-PIPE | 3-PIPE | INDEX DCE-01 4:1 SLOPE 1-PIPE | 2-PIPE | 3-PIPE | INDEX DCE-01 6:1 SLOPE 1-PIPE | 2-PIPE | 3-PIPE | INDEX DCE-02 2:1 SLOPE | 4:1 SLOPE | 6:1 SLOPE |
|---|---|---|---|---|---|---|---|---|---|---|---|---|
| 12" | | | | | | | | | | 14.73 S.Y. | 20.61 S.Y. | 26.71 S.Y. |
| 15" | | | | | | | | | | 16.72 S.Y. | 23.80 S.Y. | 31.12 S.Y. |
| 18" | 25 S.Y. | 28 S.Y. | 31 S.Y. | 35 S.Y. | 40 S.Y. | 45 S.Y. | 45 S.Y. | 51 S.Y. | 57 S.Y. | 18.83 S.Y. | 27.22 S.Y. | 35.93 S.Y. |
| 21" | | | | | | | | | | | | |
| 24" | 30 | 34 | 39 | 43 | 50 | 57 | 57 | 65 | 74 | 23.42 S.Y. | 34.74 S.Y. | 46.50 S.Y. |
| 27" | | | | | | | | | | | | |
| 30" | 35 | 42 | 48 | 53 | 62 | 72 | 70 | 86 | 95 | 28.51 S.Y. | 43.18 S.Y. | 58.42 S.Y. |
| 36" | 42 | 50 | 58 | 63 | 76 | 88 | 85 | 102 | 118 | 30.08 S.Y. | 52.53 S.Y. | 71.7 S.Y. |
| 42" | 49 | 59 | 70 | 75 | 91 | 107 | 101 | 123 | 144 | 40.16 S.Y. | 63.80 S.Y. | 86.32 S.Y. |
| 48" | 56 | 69 | 86 | 87 | 107 | 126 | 119 | 145 | 172 | 46.74 S.Y. | 74.01 S.Y. | 102.30 S.Y. |
| 54" | 64 | 79 | 94 | 100 | 124 | 148 | 137 | 170 | 203 | | | |
| 60" | S.Y. | S.Y. | S.Y. | S.Y. | S.Y. | S.Y. | 157 S.Y. | S.Y. | S.Y. | | | |

Note: These quantities are for one pipe

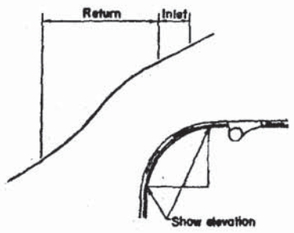


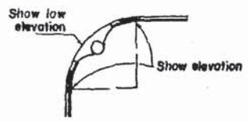


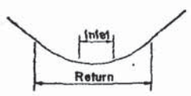


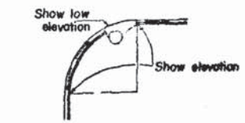


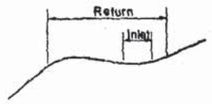


## TYPICAL RETURN PROFILES

INCLUDING DETAIL SHOWING LOCATION OF INLETS ON RETURN

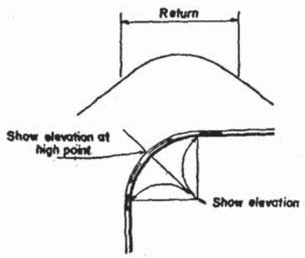


NOTE:
1. On normal intersections, profiles need not be included in the plans as the above typicals adequately present the desired configuration.
2. For major intersections, where extreme grades are involved or where it is deemed necessary to include profiles in order to present adequate design data; return profiles may be included in the plans.
3. Inlet locations and low points should be located, as much as possible, to be compatible with pedestrian traffic and drop curb location.
4. A minimum 0.2% grade should be maintained on all sag grades outside inlet limits.

## SODDING QUANTITIES Sq. Yds.

| PIPE SIZE | INDEX DCE-03 2:1 SLOPE | 4:1 SLOPE | 6:1 SLOPE | INDEX DCE-04 2:1 SLOPE | 4:1 SLOPE | 6:1 SLOPE |
|---|---|---|---|---|---|---|
| 12" | | | | 15.14 S.Y. | 14.44 S.Y. | 14.30 S.Y. |
| 15" | 14.77 S.Y. | 17.18 S.Y. | 22.55 S.Y. | 15.57 | 14.84 | 14.70 |
| 18" | 15.46 | 18.76 | 24.35 | 16.06 | 15.31 | 15.17 |
| 21" | | | | 16.33 | 15.56 | 15.41 |
| 24" | 16.44 | 20.93 | 27.96 | 16.60 | 15.80 | 15.64 |
| 27" | | | | 16.91 | 16.08 | 15.92 |
| 30" | 18.24 S.Y. | 23.43 S.Y. | 31.57 S.Y. | 17.17 | 16.32 | 16.15 |
| 36" | | | | 17.53 | 16.63 | 16.45 |
| 42" | | | | 22.07 | 20.82 | 20.58 |
| 48" | | | | 22.40 | 21.10 | 20.85 |
| 54" | | | | 23.86 | 22.49 | 22.22 |
| 60" | | | | 24.79 | 23.39 | 23.12 |
| 66" | | | | 24.49 | 23.04 | 22.76 |
| 72" | | | | 25.26 S.Y. | 23.77 S.Y. | 23.48 S.Y. |

Note: Quantity for 2:1 is for endwall with baffles.

## SOD QUANTITIES FOR PIPE CULVERT ENDWALLS

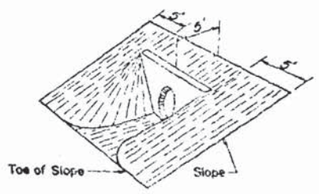


STRAIGHT ENDWALLS

NOTE: All straight endwalls except index DCE-01 will require sodding as shown in this drawing. Quantities for each particular case to be determined by the designer.

FHWA APPROVED: 7-7-75

FLORIDA DEPARTMENT OF TRANSPORTATION
Road Design Section

MISC. ROADWAY CONSTRUCTION DETAILS

| REVISIONS | | | INITIALS | DATES |
|---|---|---|---|---|
| Dates | Descriptions | Designed by | | |
| 9-74 | Redrawn & Index No. Changed | Checked by | | |
| | | Quantities by | | |
| | | Checked by | | |
| | | Supervised by | | |

Approved by:

Deputy Design Engineer-Roadways

DRAWING NO. 2 OF 2

INDEX NO. GRC-01-1

Form 221-10

# MEMORANDUM

State of Florida Department of Transportation

DATE June 20, 1977

TO All Holders of Standard Index Books

FROM E. H. Hart, Deputy Design Engineer (Roadways)

COPIES TO

SUBJECT Standard Index Drawings

The following index drawings have been revised:

BMB-01-1 (Sheet 1 of 3); General Note No. 1 was changed to include reflective barrier marker in the cost of the concrete barrier wall. Sheets 2 and 3 were not changed.

DMD-01-1 Supersedes DMD-01; Sheet 2 has been revised to show bituminous coating required at the junction of dissimilar types of pipe. This is shown on "Detail of Concrete Jacket" at the bottom center of the sheet. Sheets 1 and 3 were not changed.

GRR-01 (Sheet 6 of 6); This is a new index showing a new type of approved railroad crossing. We have included sheets 1 through 5 of 6 which show the change in those drawing numbers.

GSE-02-1 Supersedes GSE-02: On sheet 1 we added a note under the superelevation chart. On sheet 2 we added the superelevation chart for e Max. 0.05.

Please destroy all copies of these indices in your files and replace with the revised index drawings.

EHH/LMF/db

LMF

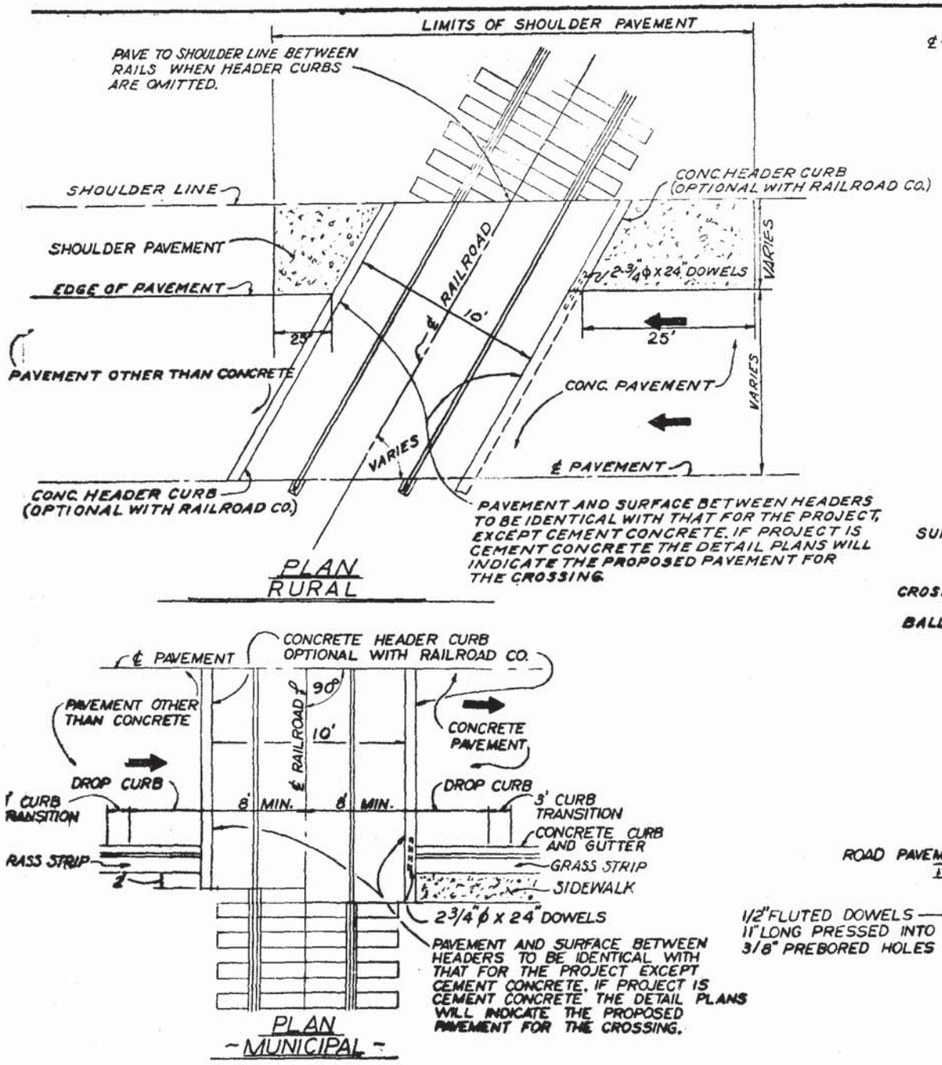


PLAN
RURAL




PLAN
- MUNICIPAL -

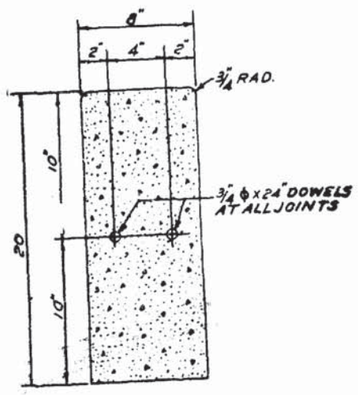


DETAIL OF HEADER CURB
(OPTIONAL WITH RAILROAD CO.)

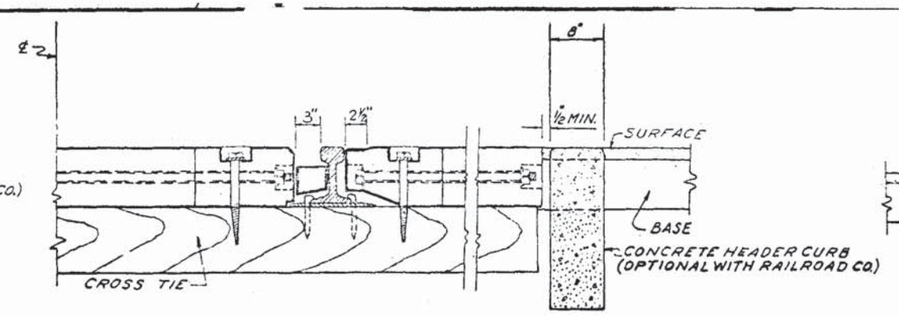


HALF SECTION TYPE "D"

NOTE: THIS TYPE OF CROSSING TO BE CONSTRUCTED ENTIRELY BY THE RAILROAD CO.

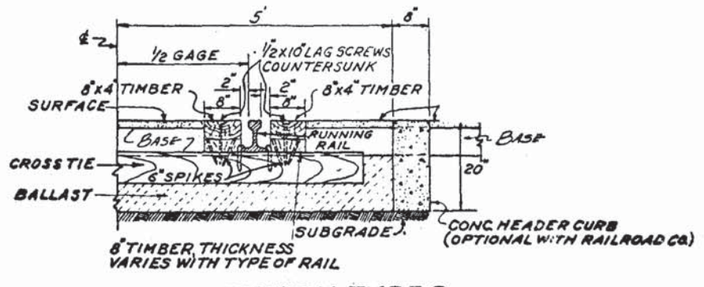


HALF SECTION TYPE G

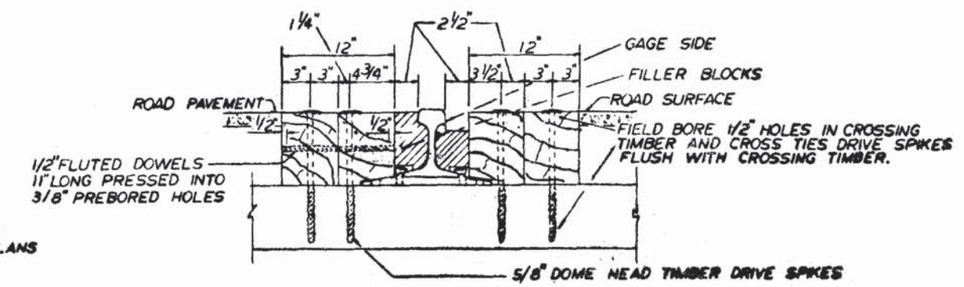


HALF SECTION TYPE "L"

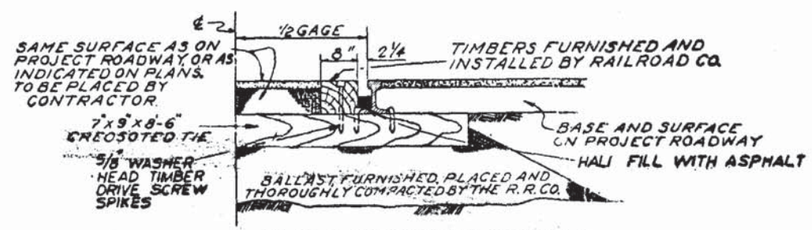


HALF SECTION TYPE "S"

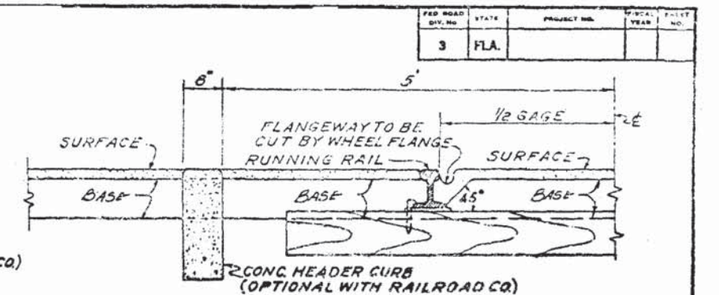


HALF SECTION TYPE E

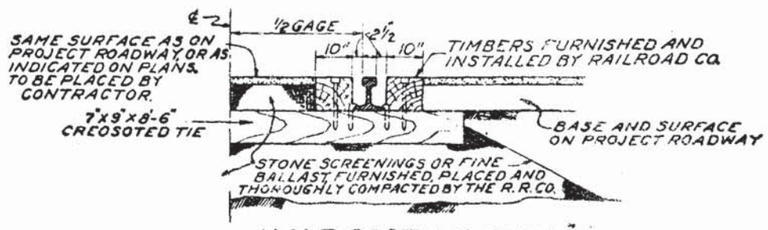


HALF SECTION TYPE "H"

| FED ROAD DIV. No. | STATE | PROJECT NO. | FISCAL YEAR | SHEET NO. |
|---|---|---|---|---|
| 3 | FLA. | | | |

~ NOTES ~

1. THE CONTRACTOR WILL CONSTRUCT HEADER CURBS AT LOCATIONS REQUESTED BY THE RAILROAD COMPANY. AND CONSTRUCT PAVEMENT AS SHOWN FOR ALL CROSSINGS EXCEPT J AND K.
2. THE RAILROAD COMPANY WILL FURNISH AND INSTALL ALL MATERIAL WITHIN 5' OF ℄ OF TRACKS. EXCEPT PAVEMENT. FOR ALL CROSSINGS EXCEPT J AND K.
3. ALL RAILS WITHIN CROSSING SHALL BE LINED AND LEVELED TO ELEVATIONS SHOWN ON PLANS.
4. UNLESS OTHERWISE REQUESTED BY THE RAILROAD COMPANY; THE VARIOUS TYPES OF CROSSING WILL BE USED AS FOLLOWS:

| | |
|---|---|
| APALACHICOLA NORTHERN R.R. CO. | TYPE "E" |
| ATLANTA AND ST. ANDREWS BAY RAILWAY CO. | E |
| FLORIDA EAST COAST RAILWAY CO. | G |
| ST. LOUIS ~ SAN FRANCISCO RAILWAY CO. | H |
| SEABOARD COAST LINE R.R. CO. | L |
| LOUISVILLE AND NASHVILLE R.R. CO. | L |
| SOUTHERN RAILWAY SYSTEM | |
| (a) GEORGIA SOUTHERN AND FLORIDA RAILWAY CO. | G |
| (b) LIVE OAK, PERRY AND SOUTH GEORGIA RAILWAY CO. | G |
| (c) ST. JOHNS RIVER TERMINAL CO. | G |
| (d) GEORGIA AND FLORIDA RAILWAY CO. | TYPE "S" |

FHWA APPROVED: 3-20-75

FLORIDA DEPARTMENT OF TRANSPORTATION
ROADWAY PLANS SECTION

# - DETAILS OF RAILROAD - CROSSINGS -

| REVISIONS | | REVISIONS | | ROAD NO. | COUNTY | | PROJECT NO. | |
|---|---|---|---|---|---|---|---|---|
| Dates | Descriptions | Dates | Descriptions | | | | | |
| 10-74 | Changed Index No | 11-69 L.F. | Added grass strip on "PLAN MUNICIPAL" | | Names | Dates | Recommended for Approval by | |
| | | 2-79 L.F. | Changed crossing type from 3 to 9 on Southern System | Detailed by | | | APPROVED BY | |
| | | 9-79 LF | Added Class I Conc Sheets 2&3 | Designed by | | | | Asst. State Highway Engineer |
| | | | | Checked by | | | Drawing No. 1 of 6 | Index No. GRR-01 |
| | | | | Traced by | | | | |

| FED. ROAD DIV. NO. | STATE | PROJECT NO. | FISCAL YEAR | SHT. NO. |
|---|---|---|---|---|
| 3 | FLA. | | | |

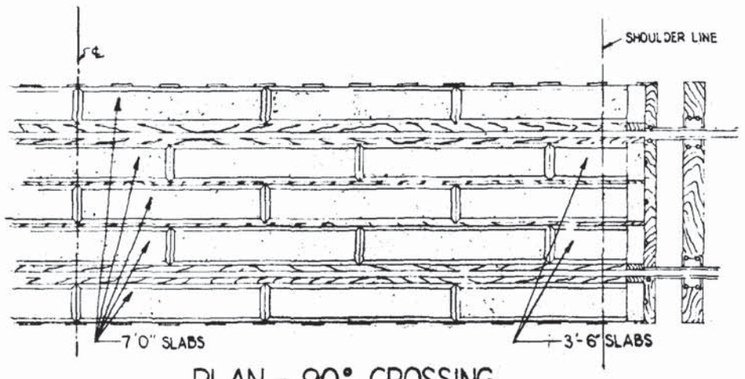


PLAN - 90° CROSSING

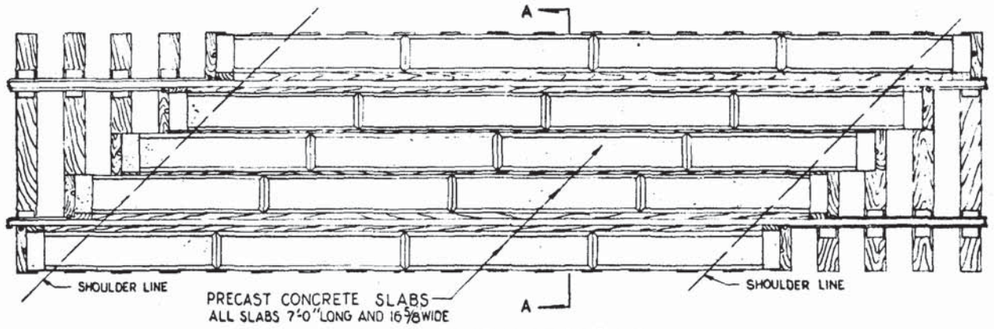


PLAN - SKEW CROSSING

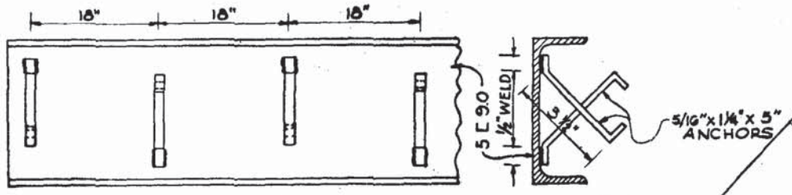


ELEVATION

SECTION

DETAIL OF 5/16"x1¼"x5" ANCHORS
ANCHORS STAGGERED 18" C. TO C.
TWO ANCHORS EACH END CHANNEL
NOTE: ½"x5" STUDS MAY BE USED IN LIEU OF ANCHORS.

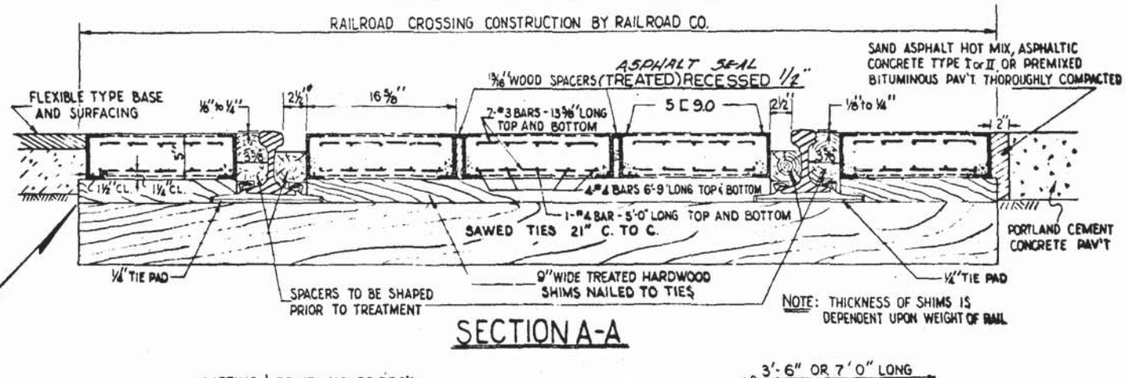


SECTION A-A

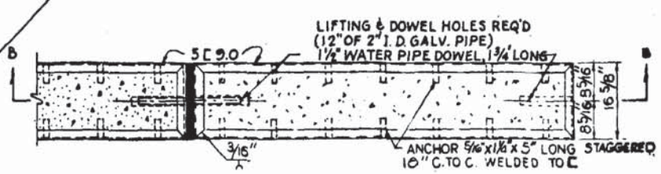


PLAN TYPICAL SLAB

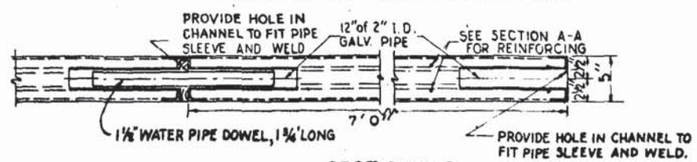


SECTION B-B

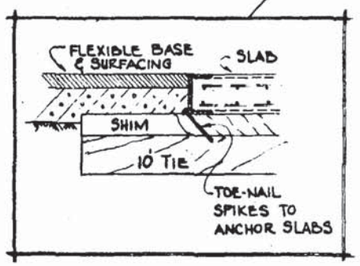


OPTIONAL DETAIL
WHEN 10' TIES ARE USED

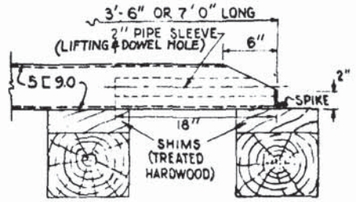


BEVELED END SECTION

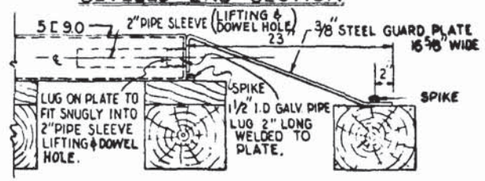


ALTERNATE END SECTION

~ NOTES ~

1. SPACERS ADJACENT TO RAIL TO BE DENSE STRUCTURAL 65 GRADE.
2. SPACERS BETWEEN SLABS TO BE №1 COMMON GRADE.
3. ALL TIMBER TO BE SHAPED PRIOR TO TREATMENT.
4. CLASS I CONCRETE TO BE USED IN THE CONSTRUCTION OF THE PRECAST CONCRETE SLABS.
5. ALL TIMBER SHIMS AND SPACERS AND PRECAST CONCRETE SLABS WILL BE FURNISHED AND INSTALLED BY THE RAILROAD CO. THE TRACK SHALL BE CONDITIONED TRUE TO LINE AND GRADE BY THE RAILROAD CO. PRIOR TO INSTALLATION OF THE CROSSING ELEMENTS.
6. CONSTRUCTION OF THIS CROSSING REQUIRES A STABLE SUBGRADE FOR A MINIMUM OF 2' BELOW THE BOTTOM OF THE BALLAST. THE SUBGRADE SHALL BE CONSTRUCTED TO THE SAME REQUIREMENTS AS SPECIFIED FOR THE ADJOINING ROADWAY.

~ DETAILS OF RAILROAD CROSSING TYPE "J" ~

FHWA APPROVED: 3-20-75

FLORIDA DEPARTMENT OF TRANSPORTATION
ROADWAY PLANS SECTION

RAILROAD CROSSING TYPE - J

| REVISIONS | | ROAD NO. | COUNTY | | PROJECT NO. |
|---|---|---|---|---|---|
| Dates | Descriptions | | | | |
| 8/70 LMF | Changed ℄ to C & added dowel & plate No 6 | | | | |
| 10-74 | Changed Index № | | Names | Dates | Recommended For Approval by R.E. Amell, Engineer of Road Design |
| | | Detailed by | W. Wilfong | 9-'69 | APPROVED BY C.P. Schenck, Asst. State Highway Engineer |
| | | Checked by | J.K.C. | 6-69 | |
| | | Quantities by | | | Drawing No. 2 of 6 |
| | | Checked by | | | Index No. GRR-01 |
| | | Traced by | | | |

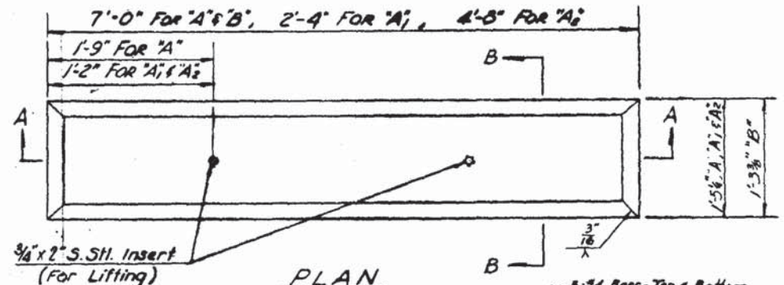


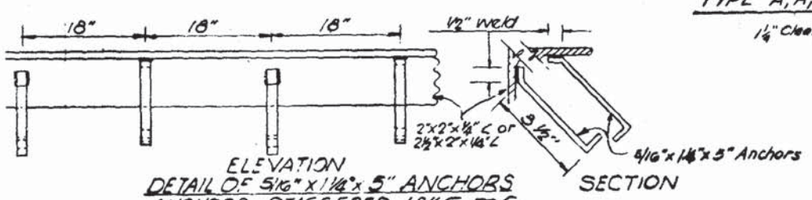


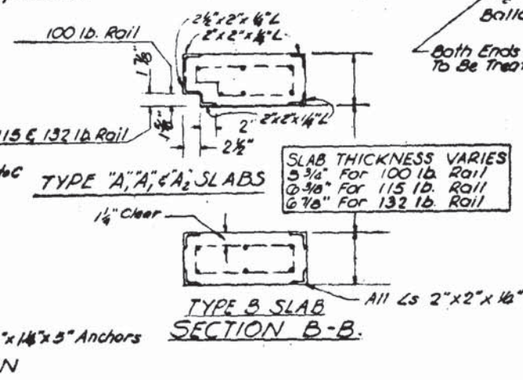


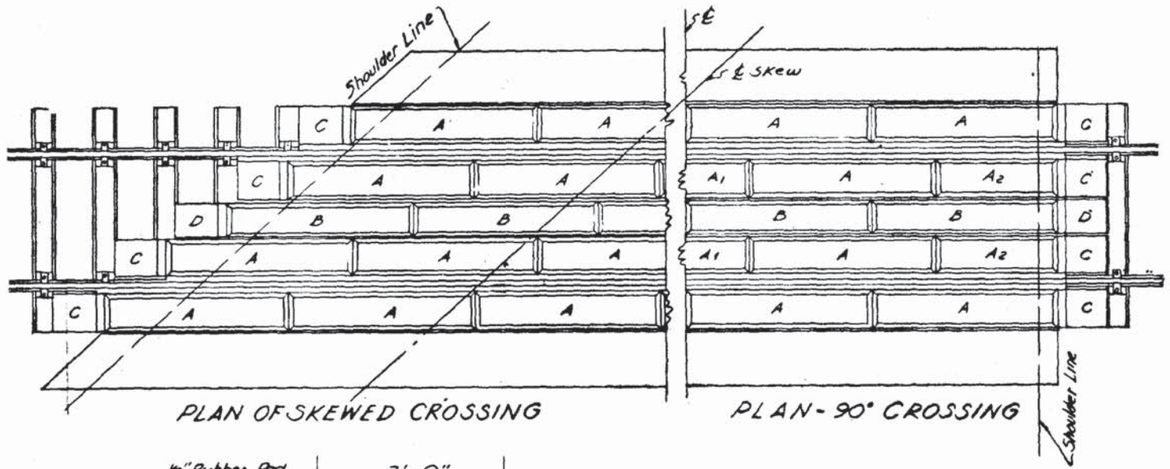


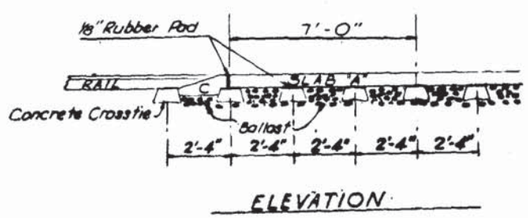


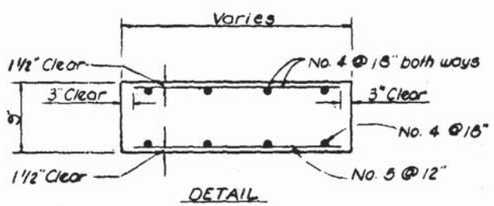


Reinforcing for Concrete Paving between Parallel Track Crossings
(Cost of Reinforcing to be included in cost of Class I Concrete, see note No. 6)

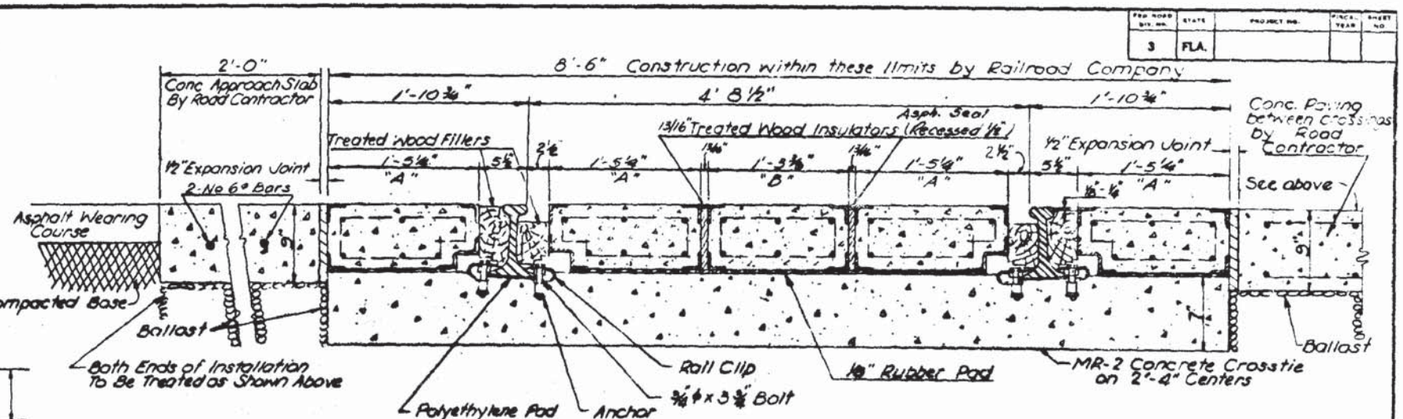


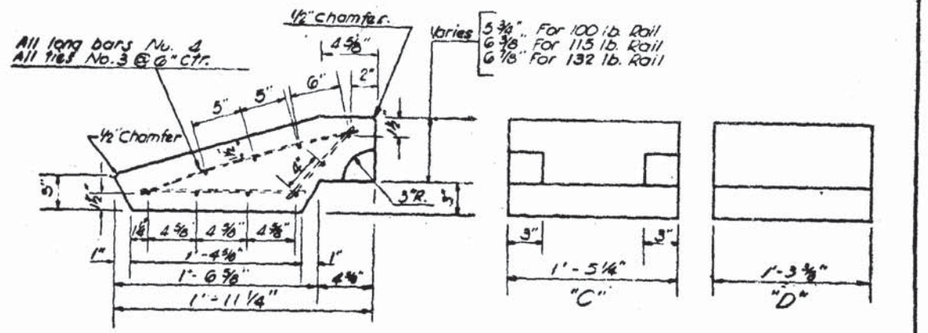


TYPES "C" & "D" SLAB DETAILS

## GENERAL NOTES

1. The furnishing and installing of concrete crossties together with any necessary reballasting, grade adjustment and track alignment shall be done by the Railroad Company without cost to the Contractor or to the Department.
2. All concrete slabs, rubber pads for tops of ties and wood filler blocks shall be furnished and installed by the Railroad Company.
3. Concrete Crossties shall be spaced on 28" centers by the Railroad Company.
4. Rubber pads shall be installed on concrete ties in field using contact cement.
5. Filler blocks shall be pressure treated pine or clear heart redwood and shall be shaped prior to treatment.
6. Class I Concrete 9" thick to be used in construction by road contractor of Concrete Approach Slabs and for paving between crossings. (Cost of steel to be included in cost of Class I Concrete.)

FHWA APPROVED: 3-20-75

FLORIDA DEPARTMENT OF TRANSPORTATION
ROADWAY PLANS SECTION

# RAILROAD CROSSING TYPE "K"

| REVISIONS | | ROAD NO. | COUNTY | | PROJECT NO. |
|---|---|---|---|---|---|
| Date | Descriptions | | | | |
| 10-74 | Changed Index No. | | | | |
| | | | Name | Date | |
| | | Detailed by | J. Wolfgang | 8/69 | |
| | | Checked by | W.E.S. | 8-69 | |
| | | Quantities by | | | |
| | | Checked by | | | |
| | | Traced by | | | |

Recommended For Approval by _____ Engineer of Road Design
APPROVED BY _____ State Road Highway Engineer

Sheet No. 3 of 6 | Index No. GRR-01

| FED. ROAD DIV. NO. | STATE | PROJECT NO. | FISCAL YEAR | SHT. NO. |
|---|---|---|---|---|
| 3 | FLA. | | | |

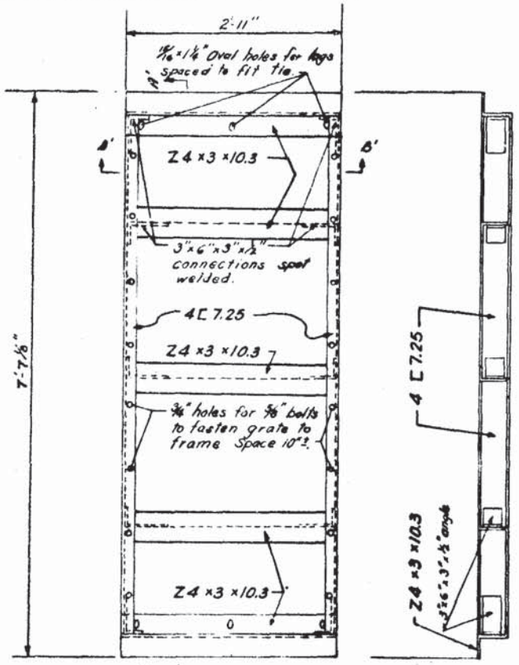


PLAN INTER-TRACK UNIT

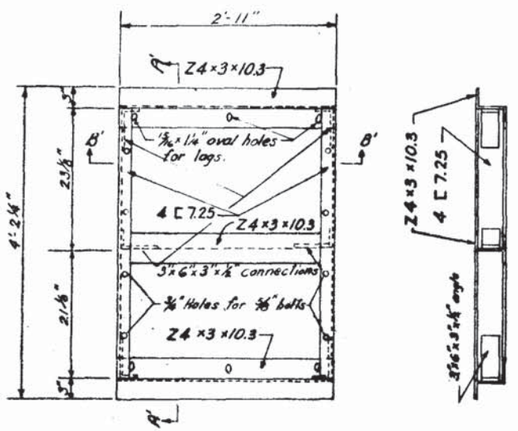


PLAN INTER-RAIL UNIT

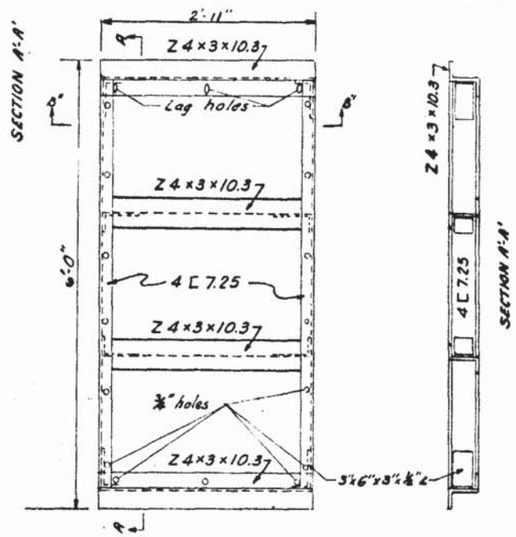


PLAN ALTERNATE OUTER-TRACK UNIT

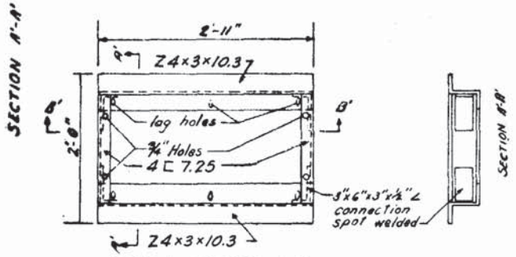


PLAN OUTER TRACK unit

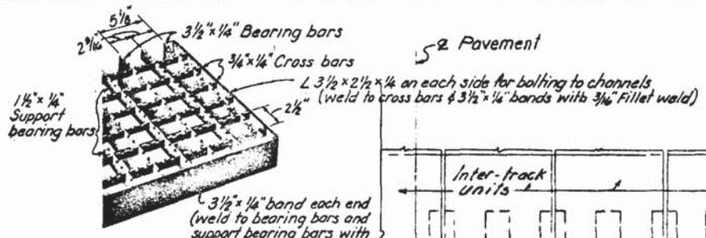


DECKING (14.81 Lbs/S.F.)

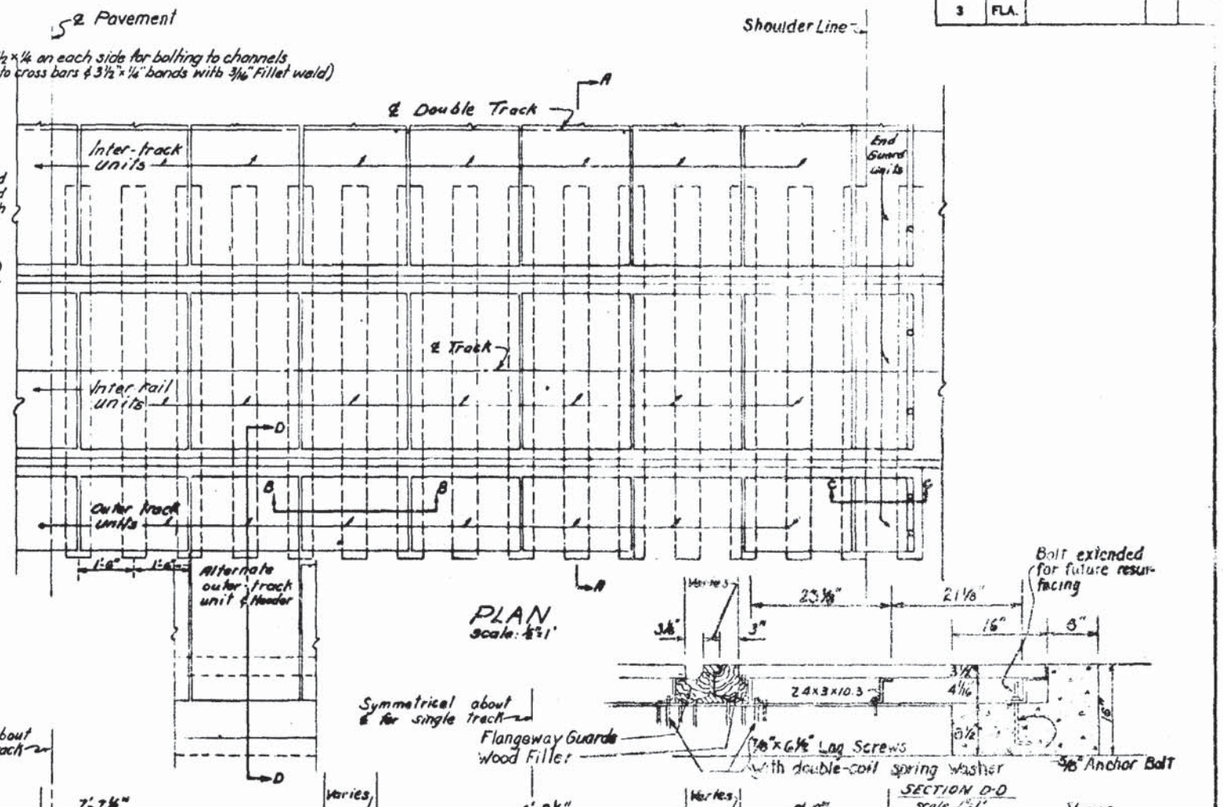


PLAN
scale: ½"=1'




Symmetrical about ℄ for single track

Symmetrical about ℄ for double Track

Flangeway Guards
Wood Filler




SECTION A-A
scale 1"=1'

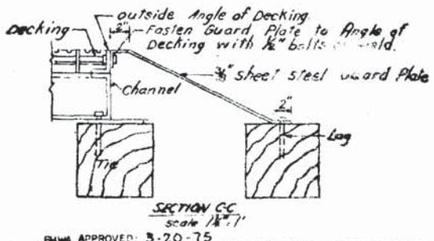


SECTION CC
scale 1½"=1'

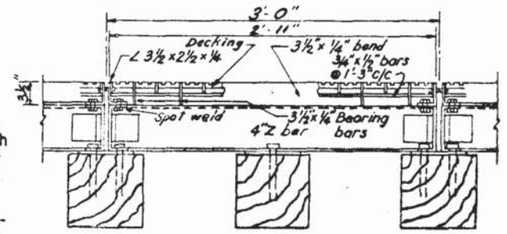


SECTION B-B
scale 1½"=1'




SECTION B'-B'

## FRAME DETAILS

Scale: 1"=1'

### GENERAL NOTES

1. This drawing is based on using 131# rail on a tangent section and Decking fabricated in sections to fit the corresponding sections of the supporting frame. The depth of the Z bars and channels may be varied to fit other rail sections.
2. The framework units are attached to ties by 7/8"x 6 1/2" lag screws, and to Headwall by 5/8" anchor bolts. Double-coil spring washers are used with lags to compensate for vertical motion.
3. The decking is attached to the framework with 5/8" bolts. The head of the bolt is to be spot welded to the underside of the channel flange.
4. Flangeway and outside filler timbers to be rabbetted to assure close fit prior to treatment.
5. Ties to be sawed and spaced 18" C to C.
6. Crossing of any angle can be equiped with units of either 45°, 67°30' or 90°.
7. Decking may be as shown or equal (Submit shop drawings for approval by the Engineer).

FHWA APPROVED: 3-20-75

**FLORIDA DEPARTMENT OF TRANSPORTATION**
ROADWAY PLANS SECTION

# RAILROAD CROSSING TYPE "M"

| REVISIONS | | ROAD NO. | COUNTY | | PROJECT NO. |
|---|---|---|---|---|---|
| Dates | Descriptions | | | | |
| 8/70 | Changed type & thickness of decking | | | | |
| LMF | | | Names | Dates | Recommended For Approval by: Engineer of Road Design |
| 10-74 | Changed Index No. | Detailed by | J. Wolfe & C.D. | | APPROVED BY: Asst. State Highway Engineer |
| | | Checked by | J.R.C. | 6-69 | |
| | | Quantities by | | | Drawing No. 4 of 6 |
| | | Checked by | | | Index No. GRR-01 |
| | | Traced by | | | |

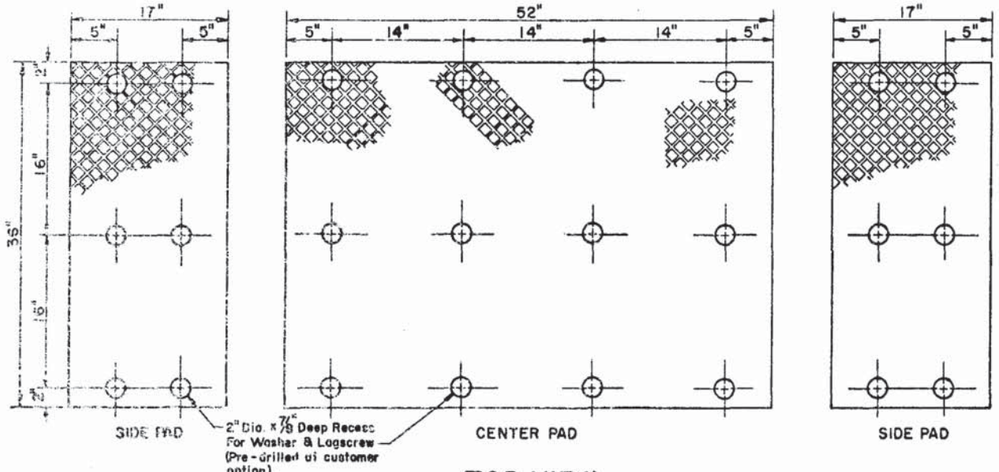


## TOP VIEW

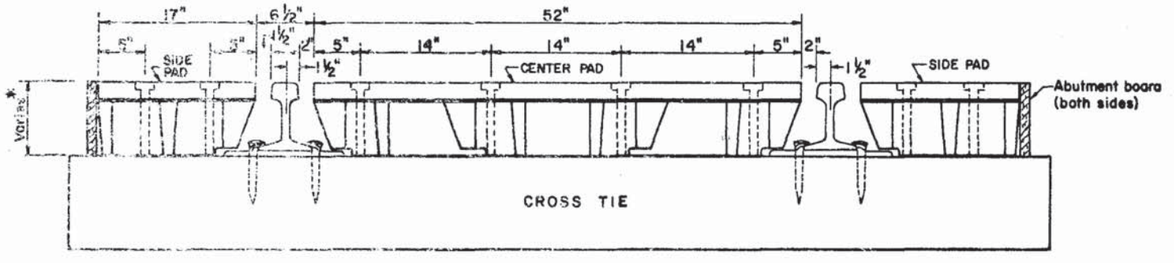


* C.A. Height 6½" – Pads typical for 90 – 100 lb rails.
C.A. Height 7⅜" – Pads typical for 110 – 130 lb rails.
C.A. Height 7⅞" – Pads typical for 131, 133 or 136 lb rails.

## SECTION

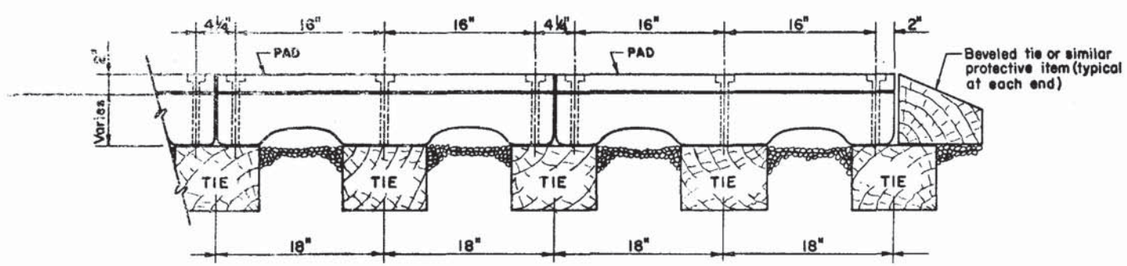


PARTIAL SECTION PARALLEL TO RAIL

## CROSSING TYPE "P"
(POLYETHYLENE)

| STOP ZONE | |
|---|---|
| Design Speed | Zone length-Distance from stop |
| 45 MPH or less | 250' |
| 50 - 55 | 350' |
| 60 - 65 | 500' |
| 70 | 600' |

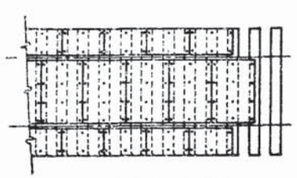

PARTIAL PLAN DEPICTING SUGGESTED PAD PLACEMENT

## GENERAL NOTES

1. The crossings shown on this sheet are NOT to be used under the following conditions: (a) at locations with more than double tracks, (b) at crossings with a skew angle in excess of 30 degrees or (c) within zones for an existing or scheduled future vehicular stop. Zone lengths are charted above.
2. For additional details, materials required and installation procedures refer to the manufacturers specifications.
3. Details shown are for straight track installations. Materials are also available for curved track installations.

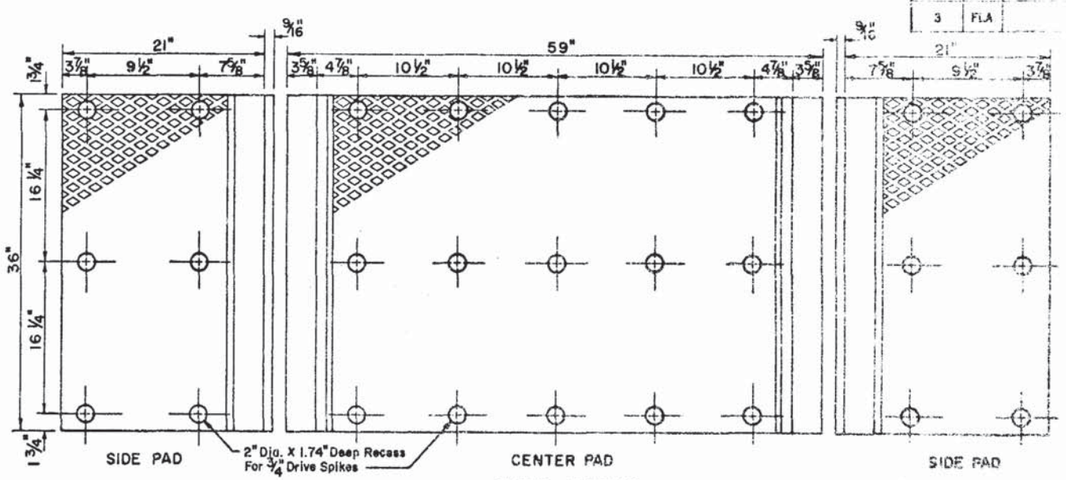


## TOP VIEW

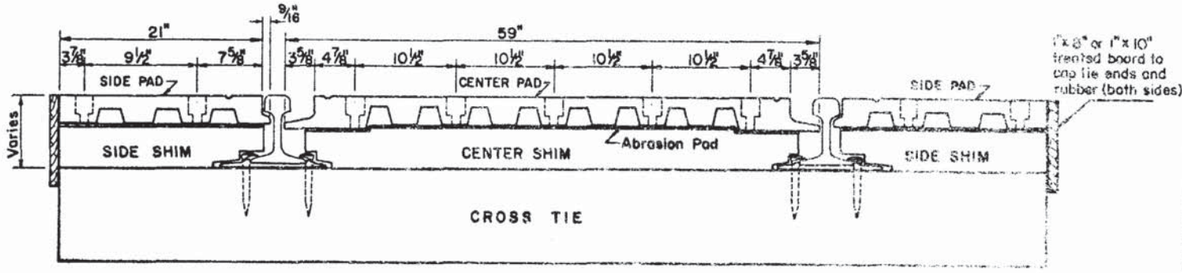


## SECTION

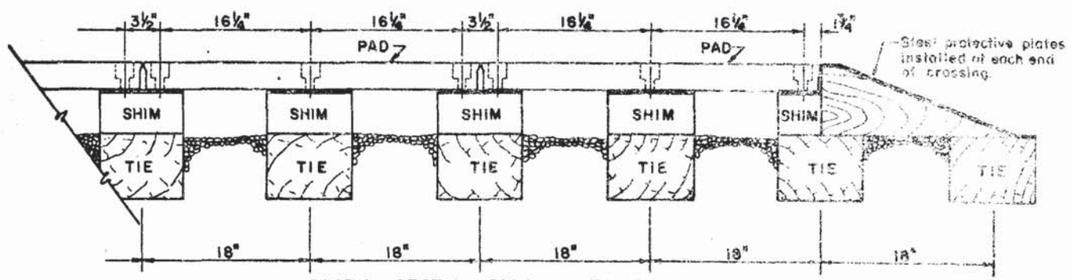


PARTIAL SECTION PARALLEL TO RAIL

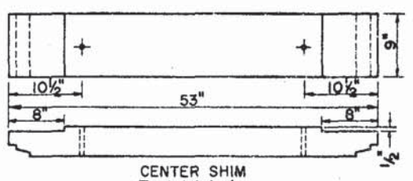


CENTER SHIM
(Treated timber)

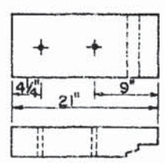


SIDE SHIM
(Treated timber)

Shim thickness varies with height of rail.

## CROSSING TYPE "R"
(RUBBER)

FHWA APPROVED: 2-19-76

STATE OF FLORIDA DEPARTMENT OF TRANSPORTATION
ROAD DESIGN SECTION

RAILROAD CROSSING TYPES "P" & "R"

| REVISIONS | |
|---|---|
| Date | Description |
| | |

| ROAD NO. | COUNTY | PROJECT NO. |
|---|---|---|
| | | |

| | Name | Date |
|---|---|---|
| Designed by | LMF | 11-75 |
| Checked by | GSB | 11-75 |
| Quantities by | | |
| Checked by | | |
| Supervised by | GSB | |

APPROVED BY: E H Hart, Deputy Design Engineer, Roadways

Drawing No. 5 of 6 | FHWA No. GRR-01

| STATE PROJ. NO. | SHEET NO. |
|---|---|
| | |

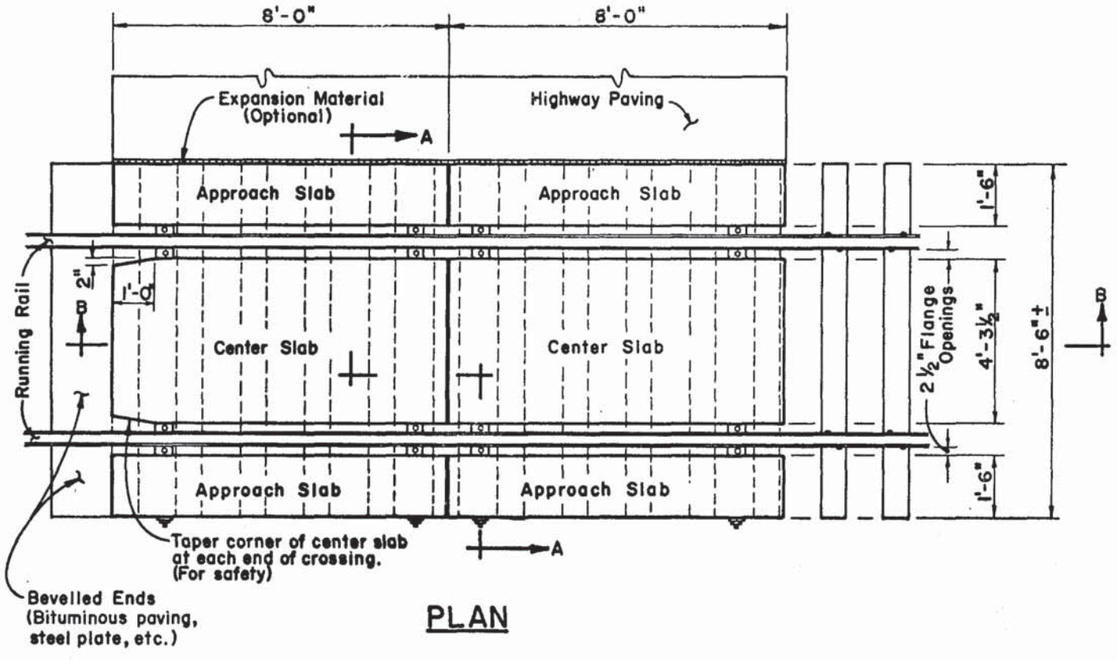


PLAN



SECTION B-B

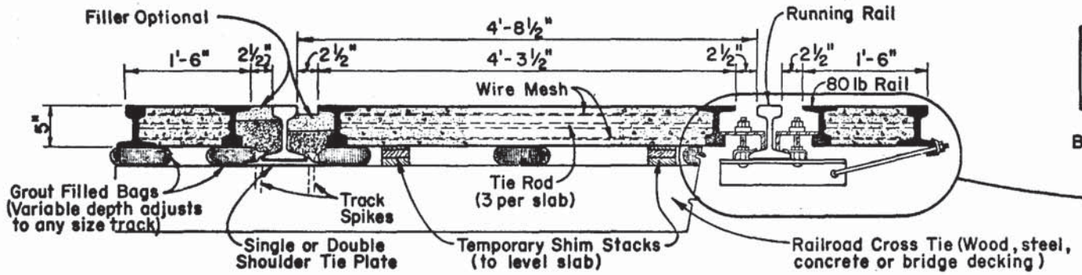


SECTION A-A

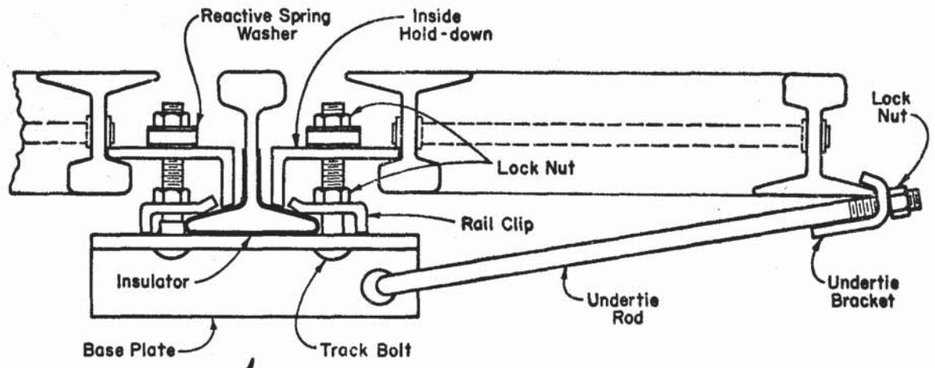


TYPICAL BOTH SIDES

## GENERAL NOTES

1. The reinforced concrete slabs are manufactured in 8'-0" sections, 5" in depth to fit all rail sections 5 1/4" in height or heavier. Slabs are interchangeable and relocateable.
2. Center slabs are one piece construction allowing for 2½" flange opening. 80 lb. rail is used to encase, armor and reinforce slabs and is held to gage with 3 tie rods per slab.
3. Slabs are installed by a "flotation" process, supported on non-shrinkable, non-metallic grout positioned on the ties. Slabs can be placed on wood ties, concrete ties, steel ties, bridge decks or any other type of track support. No re-spacing of ties is necessary.
4. Slabs are secured to "running rails" with specially designed hardware. Insulation is to be provided for crossings in signal territory.
5. Curved slabs are fabricated to fit curved track to 22 degrees (262.04' radius). Special slabs are available for Diamond Crossings, Turnouts, Multiple Tracks, Bridge Decks and Rapid Transit Systems.
6. For additional details, materials required and installation procedures refer to the manufacturers specifications.

FHWA Approved: 5-3-77

FLORIDA DEPARTMENT OF TRANSPORTATION
Road Design Section

# RAILROAD CROSSING TYPE "T"

| REVISIONS | | | INITIALS | DATES |
|---|---|---|---|---|
| Dates | Descriptions | Designed by | | |
| | | Checked by | | |
| | | Quantities by | | |
| | | Checked by | | |
| | | Supervised by | | |

Approved by:

Deputy Design Engineer – Roadways

DRAWING NO. 6 of 6 | INDEX GRR-

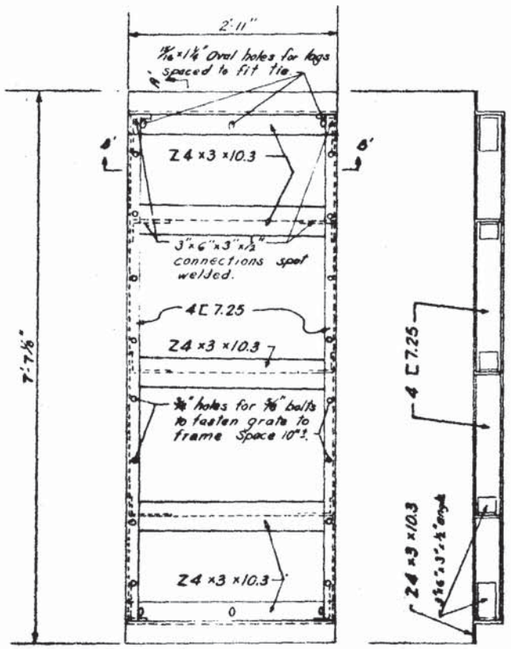


PLAN INTER-TRACK UNIT

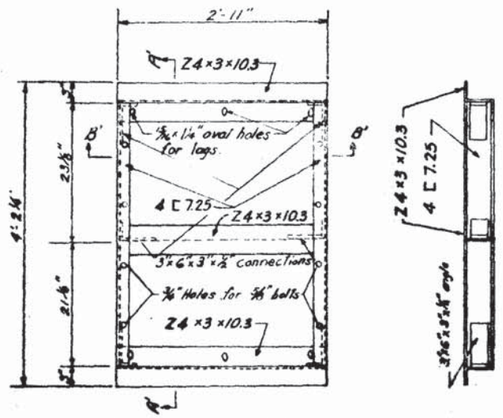


PLAN INTER-RAIL UNIT

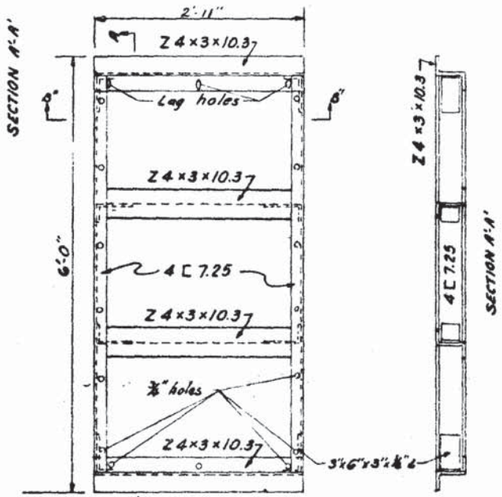


PLAN ALTERNATE OUTER-TRACK UNIT

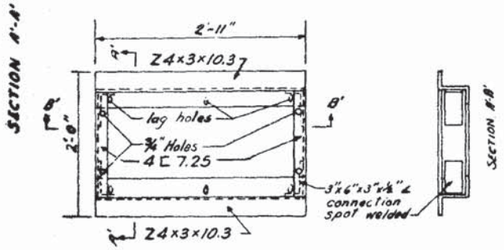


PLAN OUTER TRACK unit

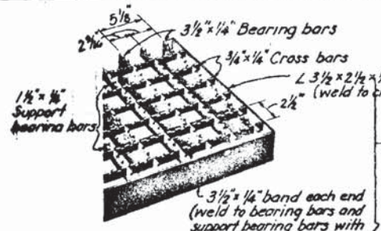


DECKING (14.81 Lbs/S.F.)

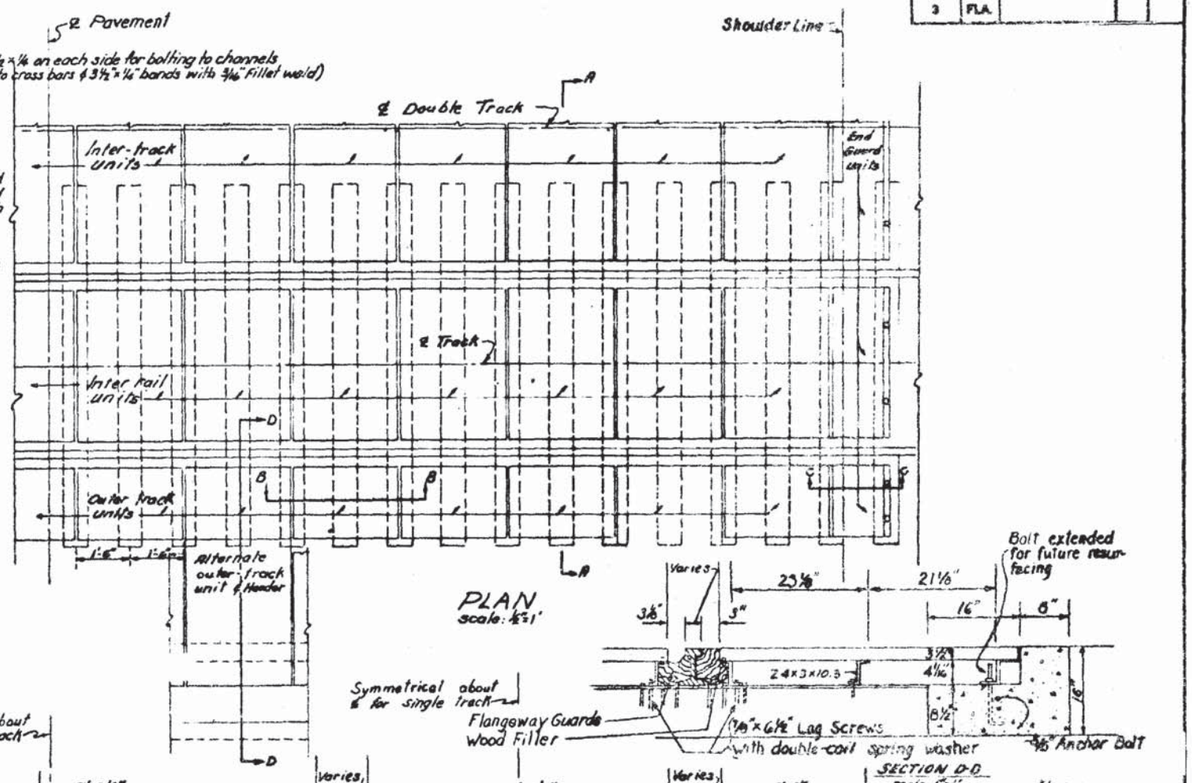


PLAN
scale: ½"=1'




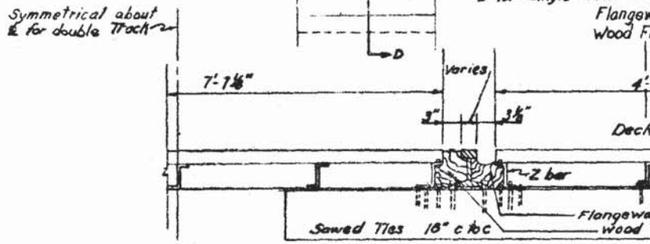


SECTION D-D
scale 1"=1'

SECTION A-A
scale 1"=1'

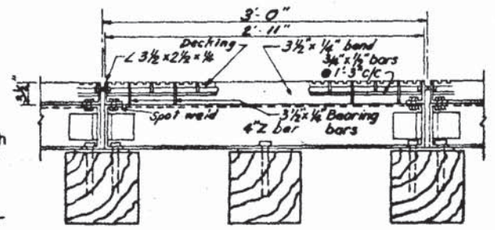


SECTION B-B
scale 1½"=1'

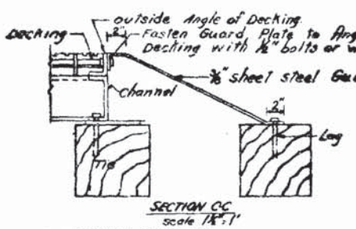


SECTION C-C
scale 1½"=1'




SECTION B'-B'

## FRAME DETAILS

Scale: 1½"=1'

GENERAL NOTES

1. This drawing is based on using 131# rail on a tangent section and Decking fabricated in sections to fit the corresponding sections of the supporting frame. The depth of the Z bars and channels may be varied to fit other rail sections.
2. The framework units are attached to ties by 7/8"x 6 1/2" lag screws, and to Headwall by 5/8" anchor bolts. Double-coil spring washers are used with lags to compensate for vertical motion.
3. The decking is attached to the framework with 5/8" bolts. The head of the bolt is to be spot welded to the under-side of the channel flange.
4. Flangeway and outside filler timbers to be rabbetted to assure close fit prior to treatment.
5. Ties to be sawed and spaced 18" C to C.
6. Crossing of any angle can be equiped with units of either 45°, 67°30' or 90°.
7. Decking may be as shown or equal (Submit shop drawings for approval by the Engineer).

| REVISIONS | |
|---|---|
| Dates | Descriptions |
| 8/70 LMF | Changed type & thickness of decking |
| 10-74 | Changed Index No |

| ROAD NO. | COUNTY | PROJECT NO. |
|---|---|---|
| | | |

| | Names | Dates |
|---|---|---|
| Detailed by | L.M.Wilford | 8/69 |
| Checked by | A.H.Lee | 8-69 |
| Quantities by | | |
| Checked by | | |
| Traced by | | |

Recommended For Approval by: A.H. Lee, Engineer of Road Design
APPROVED BY: [signature], State Highway Engineer
Division No. 1
Sheet No. 4 of 4
Index No. GRR-01

FHWA APPROVED: 3-20-75

FLORIDA DEPARTMENT OF TRANSPORTATION
ROADWAY PLANS SECTION

# RAILROAD CROSSING TYPE "M"

Form 281-10

# MEMORANDUM

State of Florida Department of Transportation

DATE March 11, 1976

TO ALL HOLDERS OF STANDARD INDEX BOOKS

FROM E. H. Hart, Deputy Design Engineer (Roadways)

COPIES TO

SUBJECT Standard Index No. GRR-01, Sheet 5 of 5

This is a new index which shows two new Railroad Crossings, Type "P" (High Density Polyethylene) and Type "R" (Rubber). The use of these materials on the State Highway System is restricted by the general notes on the index.

Please add this index to your file.

LMF

EHH:LMF:jl

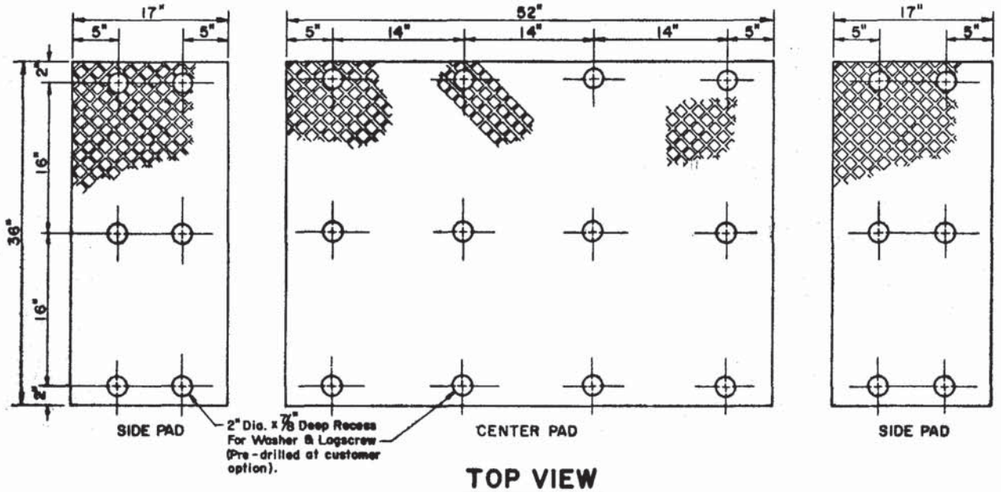


## TOP VIEW

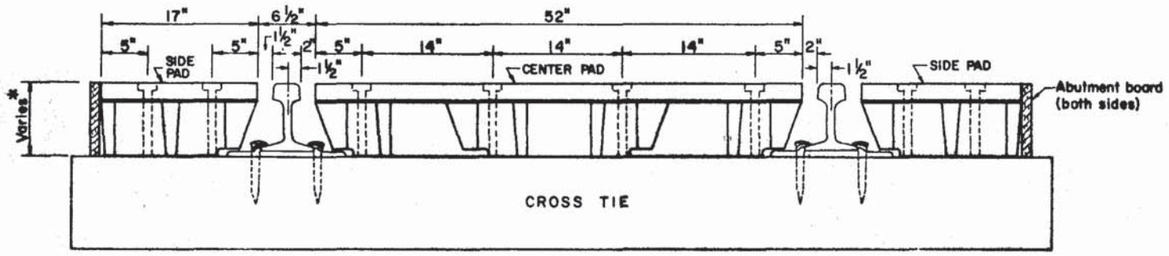


* O.A. Height 6 1/2" – Pads typical for 90 – 100 lb rails.
O.A. Height 7 3/8" – Pads typical for 110 – 130 lb rails.
O.A. Height 7 7/8" – Pads typical for 131, 133 or 136 lb rails.

## SECTION

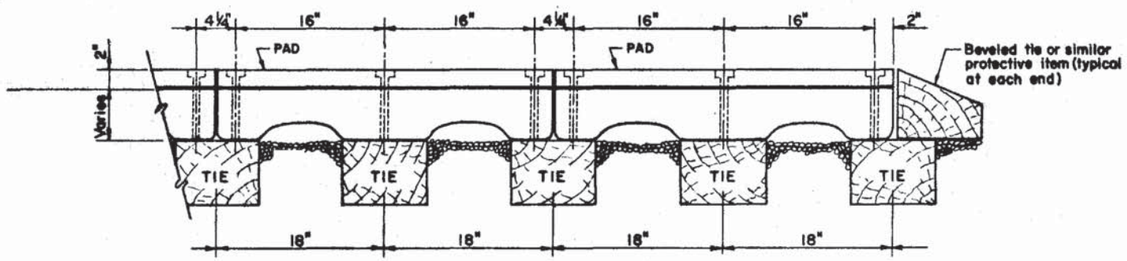


PARTIAL SECTION PARALLEL TO RAIL

## CROSSING TYPE "P"
(POLYETHYLENE)

| STOP ZONE | |
|---|---|
| Design Speed | Zone length-Distance from stop |
| 45 MPH or less | 250' |
| 50 - 55 | 350' |
| 60 - 65 | 500' |
| 70 | 600' |

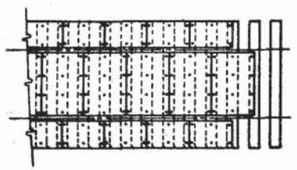

PARTIAL PLAN DEPICTING SUGGESTED PAD PLACEMENT

## GENERAL NOTES

1. The crossings shown on this sheet are NOT to be used under the following conditions: (a) at locations with more than double tracks, (b) at crossings with a skew angle in excess of 30 degrees or (c) within zones for an existing or scheduled future vehicular stop. Zone lengths are charted above.
2. For additional details, materials required and installation procedures refer to the manufacturers specifications.
3. Details shown are for straight track installations. Materials are also available for curved track installations.

| FED. ROAD DIV. NO. | STATE | PROJECT NO. | FISCAL YEAR | SHEET NO. |
|---|---|---|---|---|
| 3 | FLA. | | | |

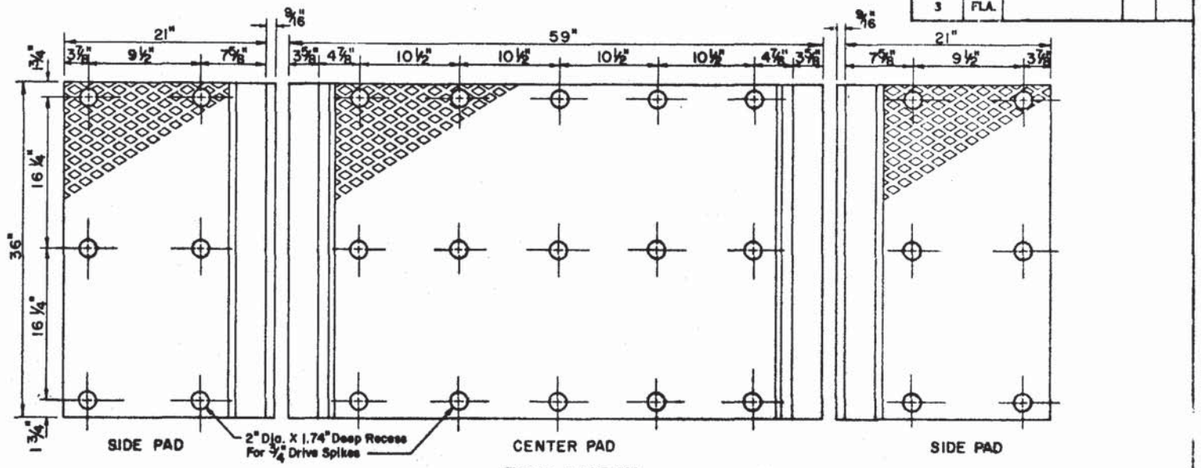


## TOP VIEW

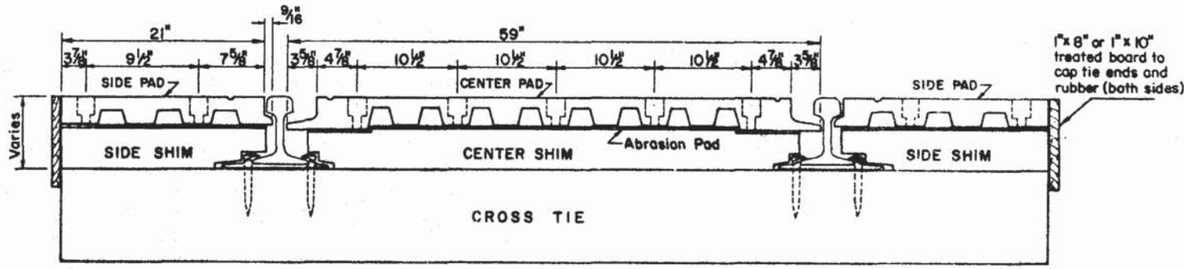


## SECTION

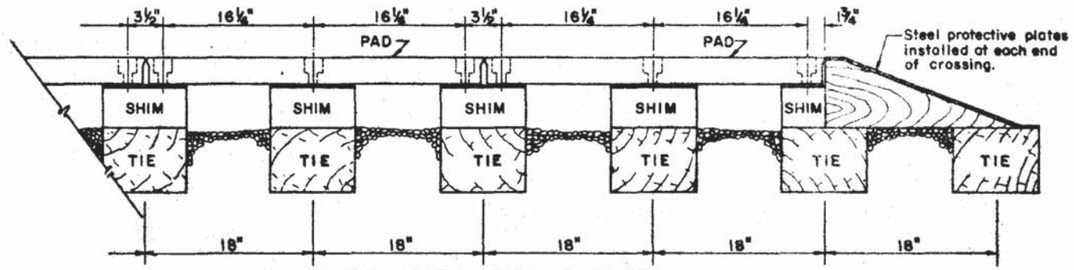


PARTIAL SECTION PARALLEL TO RAIL

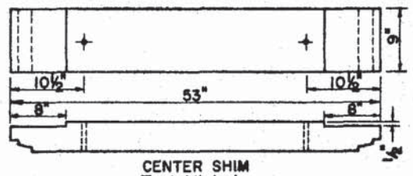


CENTER SHIM
(Treated timber)

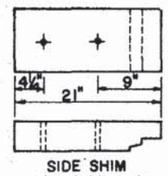


SIDE SHIM
(Treated timber)

Shim thickness varies with height of rail.

## CROSSING TYPE "R"
(RUBBER)

FHWA APPROVED: 2-10-76

STATE OF FLORIDA DEPARTMENT OF TRANSPORTATION
ROAD DESIGN SECTION

# RAILROAD CROSSING TYPES "P" & "R"

| REVISIONS | |
|---|---|
| Date | Description |
| | |

| ROAD NO. | COUNTY | PROJECT NO. |
|---|---|---|
| | | |

| | Name | Date |
|---|---|---|
| Designed by | LMF | 11-75 |
| Checked by | GSB | 11-75 |
| Quantities by | | |
| Checked by | | |
| Supervised by | GSB | |

APPROVED BY: E H Hart, Deputy Design Engineer, Roadways

| Drawing No. | Index No. |
|---|---|
| 5 of 5 | GRR-01 |

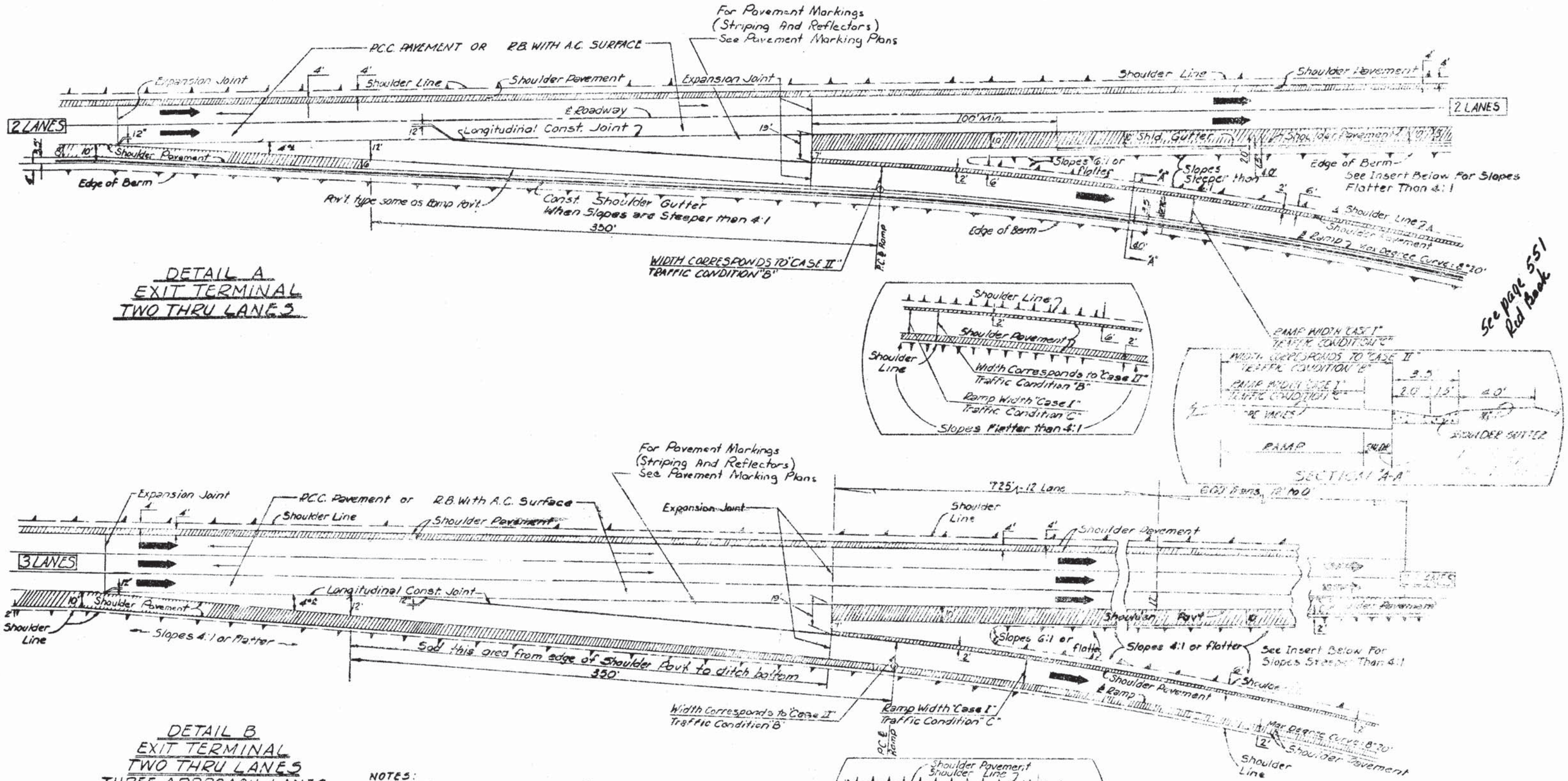


NOTES:
1. For General Notes see Sheet No 2.

FHWA APPROVED: 7-18-75

FLORIDA DEPARTMENT OF TRANSPORTATION
ROADWAY PLANS SECTION

STANDARD DETAILS FOR RAMP TERMINALS

| REVISIONS | | ROAD NO. | COUNTY | | PROJECT NO. |
|---|---|---|---|---|---|
| Date | Descriptions | | | | |
| 10-61 L.H. | Added Sheet No. 3 | | Name | Date | Recommended For Approval by C. D. Dunlap, Engineer of Road Design |
| 11-65 M.J.T. | Revised Terminal Details Sheets 1,2,3 | Detailed by | H.F.N. | 1-65 | APPROVED BY |
| | | Checked by | E.H. | 3-65 | |
| | | Quantities by | | | Asst. State Highway Engineer |
| 12-65 M.J.T. | Added Detail of Conc. S.W. Const. | Checked by | | | Drawing No. 1 of 4 |
| | | Traced by | M.J.T. | 6-65 | Index No. GRT-01 |

(FOR CONTINUATION OF REVISIONS SEE SHEET No 2)

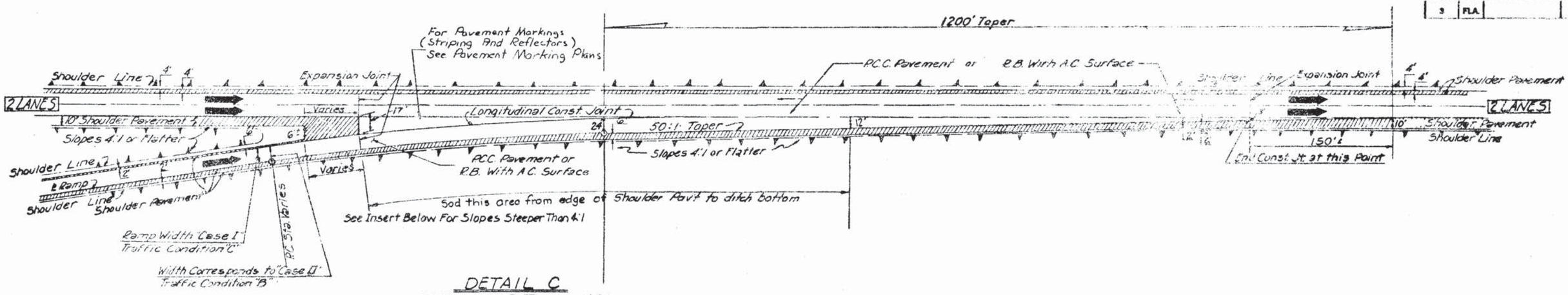


DETAIL C
ENTRANCE TERMINAL
TWO THRU LANES

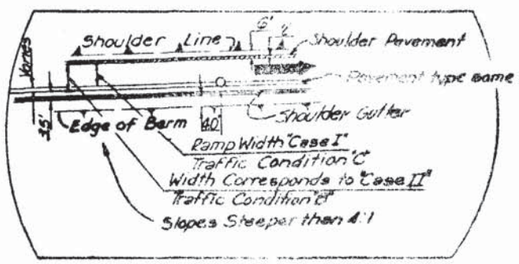


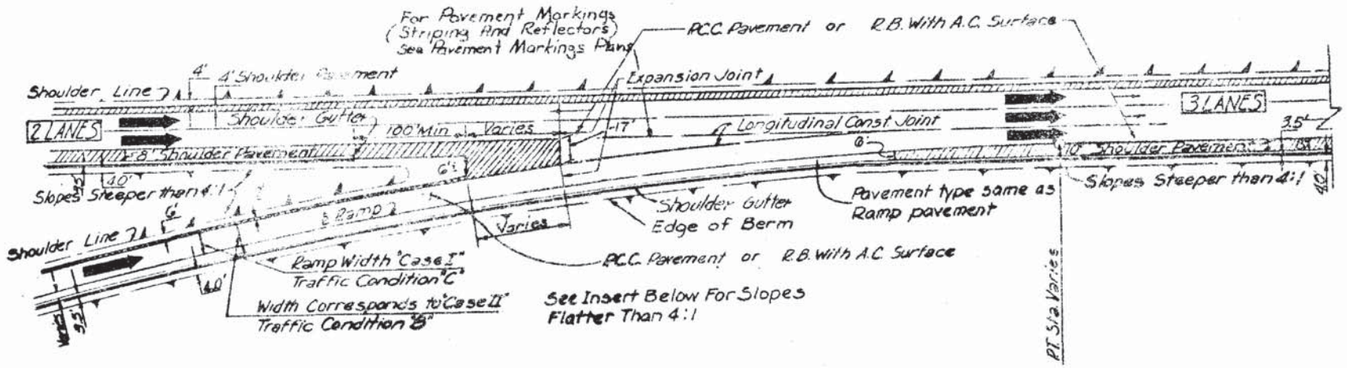


DETAIL D
ENTRANCE TERMINAL
WITH ADDED LANE

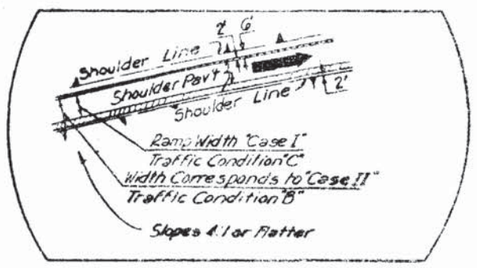


— GENERAL NOTES —

1. The notes applying to P.C.C. Pavement are not applicable to R.B.A.C. Pavement.

2 (a) P.C.C. Pavement Projects:
Where shoulder pavement adjacent to Shoulder Gutter is less than 6' wide it shall be identical to the adjacent roadway pavement beginning with the transverse joint nearest the point of 6' width.
(b) Flexible Base Projects:
Where shoulder pavement used in conjunction with shoulder gutter is less than 6' uniform width, it shall be identical to the adjacent roadway pavement.

3. Exit and Entrance terminals as detailed shall not be used on ramps for which a speed of 50 MPH or greater cannot be maintained. For such ramps parallel deceleration and acceleration lanes shall be used in place of tapers with lengths set according to Table 3A&J-10 (1973 A.A.S.H.O. Red Book)

FHWA APPROVED 7-18-75

FLORIDA DEPARTMENT OF TRANSPORTATION
ROADWAY PLANS SECTION

STANDARD DETAILS FOR RAMP TERMINALS

| REVISIONS | | | ROAD NO. | COUNTY | | PROJECT NO. |
|---|---|---|---|---|---|---|
| 1-70 | Removed Curb from Ramp Sta. | Date | | | | |
| 8-71 | Visibility Triangle | 5-67 | REVISED EXIT TERMINALS & BERM (SH. 1) | | | |
| 5-72 | Revised shoulder pavement to gore area | 6-67 | ADDED TYPE E CURB & GUTTER (SH. 1 & 3) | Name | Date | Recommended For Approval by: C. D. Dunlap, Engineer of Road Design |
| 1-75 | Increased from length & changed Index No. | 2-69 | Revised Details To Show Shoulder Gutter (SHEETS 1, 2, 3) | Detailed by: W.L.B. | 1-65 | APPROVED BY: Asst. State Highway Engineer |
| | | | | Checked by: E.H. | 3-65 | |
| | | | | Quantities by: | | |
| | | | | Checked by: | | Index No. |
| | | | | Traced by: M.J.T. | 6-65 | Drawing No. 2 of 4 — GRT-01 |

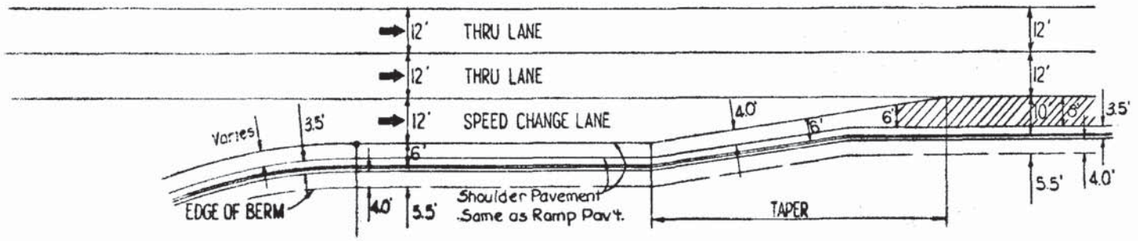


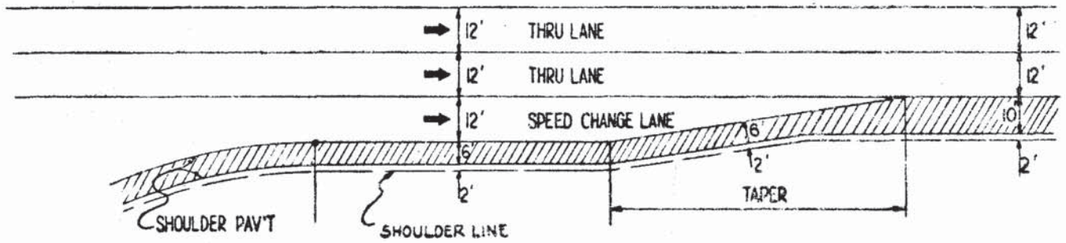


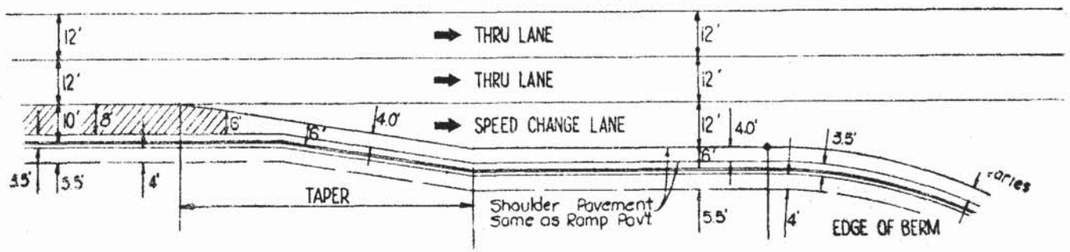


SKETCHES INDICATING SHOULDER TREATMENT AT SPEED CHANGE LANES WITH SHOULDER GUTTER

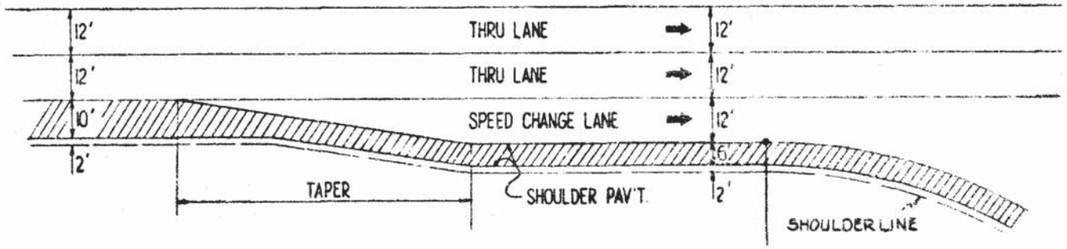


SKETCHES INDICATING SHOULDER TREATMENT AT SPEED CHANGE LANES WITHOUT SHOULDER GUTTER

FHWA APPROVED: 7-18-75

FLORIDA DEPARTMENT OF TRANSPORTATION
ROADWAY PLANS SECTION

# STANDARD DETAILS FOR RAMP TERMINALS

| REVISIONS | | ROAD NO. | COUNTY | PROJECT NO. |
|---|---|---|---|---|
| Dates | Descriptions | | | |
| R.H.C. 2-68 | Revised Exit & Ent. Terminals | | | |
| R.H.C. 9-68 | Changed Case II and S. Line to edge of Pav't. where Shoulder Gutter is involved | | | |
| 10-71 | Changed Index No. | | | |

| | Name | Date |
|---|---|---|
| Detailed by | | |
| Checked by | | |
| Quantities by | | |
| Checked by | | |
| Traced by | | |

Recommended For Approval by: C. D. Richards
Engineer of Road Design

APPROVED BY: C. A. Leguin
Asst. Chief Engineer, Highways

Sheet No. 3 of 4

Index No. GRT-01

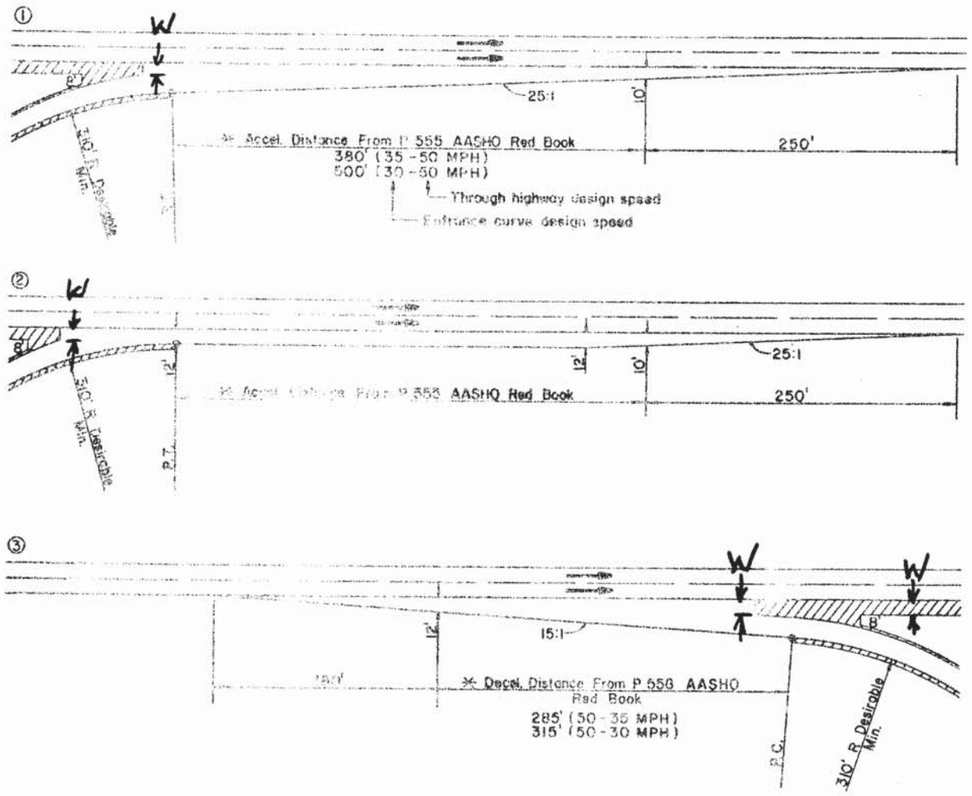


## ENTRANCE AND EXIT RAMP TERMINAL DETAILS

To be used along the cross road at all rural type, unsignalized ramp terminals (Interstate and Expressway Interchanges).

**W NORMAL SHOULDER PAVT WIDTH**

* Adjust for grades if greater than 2% (See P 556 AASHO Red Book).

① Standard cross road entrance terminals. To be used when roadway alignment is tangent and no bridges are located within the merging lane.

② Parallel cross road entrance terminals. Recommended when a bridge is located within the merging lane, turning roadway speed is less than 60% of thru roadway speed or for the combinations of horizontal alignment shown elsewhere on this sheet.

③ Standard cross road exit terminal. To be used when roadway alignment is tangent.

④ Parallel cross road exit terminals. Recommended when exit is partially hidden over the crest of vertical curve or when turning roadway speed is less than 60% of the thru roadway speed, or for the combinations of horizontal alignment shown elsewhere on this sheet.

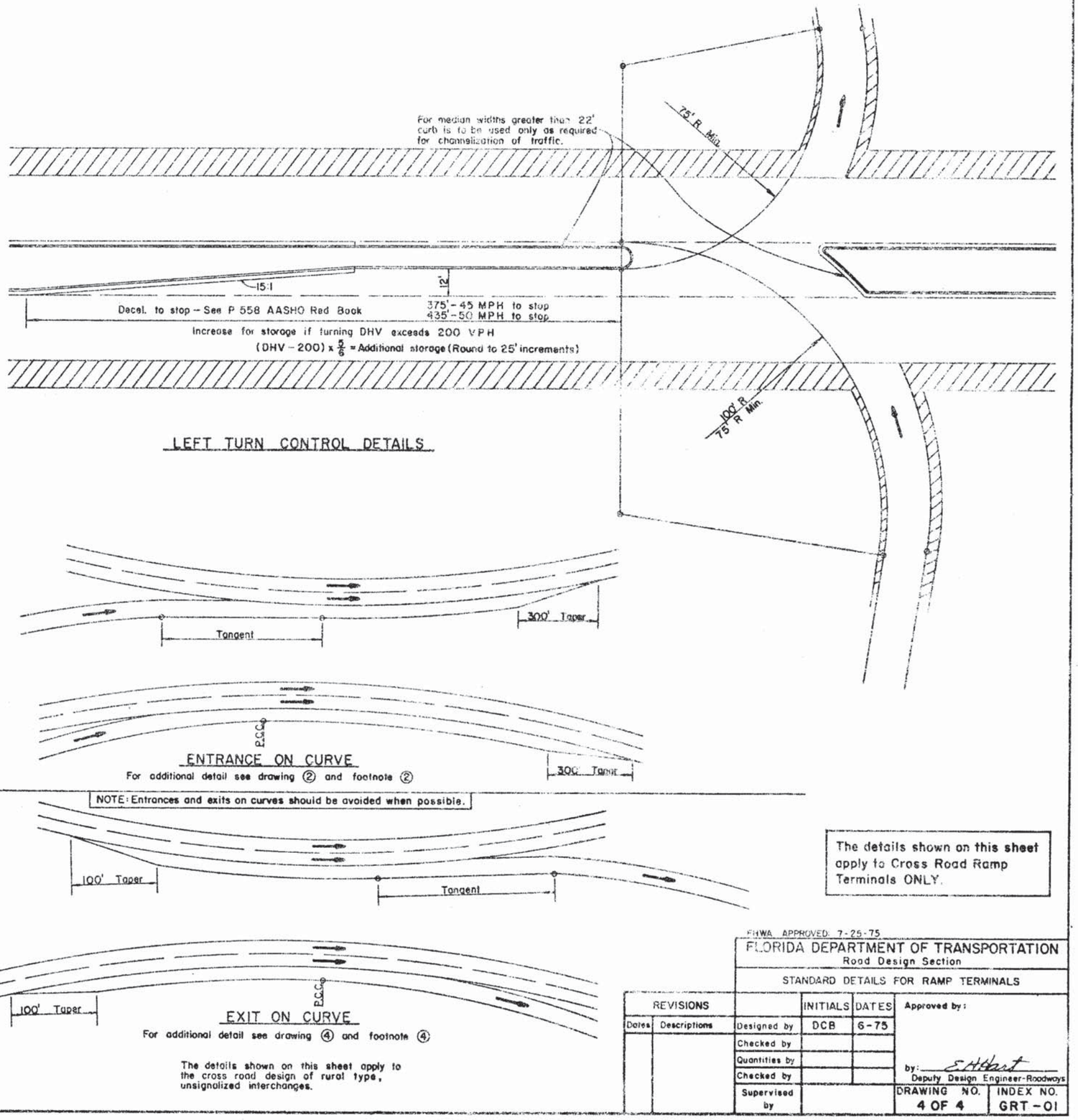


## LEFT TURN CONTROL DETAILS







## ENTRANCE ON CURVE

For additional detail see drawing ② and footnote ②

NOTE: Entrances and exits on curves should be avoided when possible.







## EXIT ON CURVE

For additional detail see drawing ④ and footnote ④

The details shown on this sheet apply to the cross road design of rural type, unsignalized interchanges.

The details shown on this sheet apply to Cross Road Ramp Terminals ONLY.

FHWA APPROVED: 7-25-75

FLORIDA DEPARTMENT OF TRANSPORTATION
Road Design Section

STANDARD DETAILS FOR RAMP TERMINALS

| REVISIONS | | | INITIALS | DATES |
|---|---|---|---|---|
| Dates | Descriptions | Designed by | DCB | 6-75 |
| | | Checked by | | |
| | | Quantities by | | |
| | | Checked by | | |
| | | Supervised by | | |

Approved by:

by: E. Hart
Deputy Design Engineer-Roadways

DRAWING NO. 4 OF 4

INDEX NO. GRT-01

| | |
|---|---|
| A | AREA |
| AASHO | AMERICAN ASSOCIATION OF STATE HIGHWAY OFFICIALS |
| AASHTO | AMERICAN ASSOCIATION OF STATE HIGHWAY AND TRANSPORTATION OFFICIALS |
| ABC | ASPHALT BASE COURSE |
| ABD | ABANDONED |
| AC | ACRE |
| ACT | ACTUATED |
| ADJ | ADJUST |
| ADT | ANNUAL AVERAGE DAILY TRAFFIC |
| AGG | AGGREGATE |
| AH | AHEAD |
| ALT | ALTERNATE |
| ALUM | ALUMINUM |
| APPRH | APPROACH |
| APPROX | APPROXIMATE |
| ARTF | ARTIFICIAL |
| ASPH | ASPHALT |
| ASPH CONC | ASPHALTIC CONCRETE |
| OR AC | ASPHALTIC CONCRETE |
| ASSEM | ASSEMBLY |
| ASTM | AMERICAN SOCIETY FOR TESTING MATERIALS |
| ATTNUATR | ATTENUATOR |
| AVE | AVENUE |

| | |
|---|---|
| B TO B | BACK TO BACK |
| BASC | BASCULE |
| BBL | BARREL |
| BC | BOTTLE CAP |
| BCCMP | BITUMINOUS COATED CORRUGATED METAL PIPE CULVERT |
| BCPA | BITUMINOUS COATED PIPE ARCH CULVERT |
| BCPCMP | BITUMINOUS COATED AND PAVED CORRUGATED METAL PIPE CULVERT |
| BCPPA | BITUMINOUS COATED AND PAVED PIPE ARCH CULVERT |
| BEG | BEGIN |
| BIT | BITUMINOUS |
| BK | BACK |
| BL | BASE LINE |
| BLDG | BUILDING |
| BLKHD | BULKHEAD |
| BLVD | BOULEVARD |
| BM | BENCH MARK |
| BOT | BOTTOM |
| BP | BORROW PIT |
| BRG | BEARING |
| BRWAY | BREAKAWAY |
| BTFLY | BUTTERFLY |
| BW | BARBED WIRE |

| | |
|---|---|
| C | CANTILEVER LENGTH |
| C & G | CURB AND GUTTER |
| CAP | CORRUGATED ALUMINUM PIPE |
| CB | CATCH BASIN |
| CBC | CONCRETE BOX CULVERT |
| CBS | CONCRETE BOX STRUCTURE |
| CC | CENTER TO CENTER |
| CD | CROSS DRAIN |
| CEM | CEMENT |
| CEM'D | CEMENTED |
| CH | CHANNEL |
| CH CH | CHANNEL CHANGE |
| CHGABLE | CHANGABLE |
| CI | CAST IRON |
| CIP | CAST IRON PIPE |
| CIPL | CAST IN PLACE |
| CL | CLEARANCE OR CENTER LINE |
| CM | CONCRETE MONUMENT |
| CMP | CORRUGATED METAL PIPE |
| CO | COUNTY |
| COM | COMMERCIAL |
| COMP | COMPOSITE |
| CONC | CONCRETE |
| CONST | CONSTRUCT |
| CONTR | CONTROLLER |
| CONT | CONTINUATION |
| CONTR | CONTRACTOR |
| COORD | COORDINATE |
| COR | CORNER |
| CORR | CORRUGATED |
| CP | CONCRETE PIPE |
| CRS | COURSE |
| CS | CURVE TO SPIRAL |
| CSE | COURSE |
| CTLVR | CANTILEVER |
| CTR | CENTER |
| CULV | CULVERT |
| CY | CUBIC YARD |
| CYL | CYLINDRICAL |

| | |
|---|---|
| D | DEGREE OF CURVATURE |
| DA | DRAINAGE AREA |
| DBL | DOUBLE |
| D-CSE | DOUBLE COURSE |
| D-POST | DOUBLE POST |
| DCS | DEGREE OF CURVATURE (SPIRAL) |
| DELIN | DELINEATORS |
| DEMOB | DEMOBILIZATION |
| DEPT | DEPARTMENT |
| DET | DETOUR |
| DHV | DESIGN HOURLY VOLUME |
| DT | DITCH |
| DI | DROP INLET |
| DIA | DIAMETER |
| DIM | DIMENSION |
| DISP | DISPOSAL |
| DOT | DEPARTMENT OF TRANSPORTATION |
| DPI | DITCH POINT INTERSECTION |
| DR | DRAIN |
| DRIV | DRIVEN |
| DRWY | DRIVEWAY |
| DS | DESIGN SPEED |
| DWG | DRAWING |

| | |
|---|---|
| E | EAST |
| E | RATE OF SUPERELEVATION |
| E TO E | END TO END |
| E= | EXTERNAL DISTANCE |
| EA | EACH |
| EB | EASTBOUND |
| EL OR ELEV | ELEVATION |
| ELAST | ELASTOMERIC |
| ELEC | ELECTRIC |
| ELLIP | ELLIPTICAL |
| EMBK | EMBANKMENT |
| EMUL | EMULSIFIED |
| ENCL | ENCLOSURE |
| ENGR | ENGINEER |
| EOS | END OF SURVEY |
| EQ | EQUATION OR EQUAL |
| EQUIP | EQUIPMENT |
| ESMT | EASEMENT |
| EST | ESTIMATE |
| ESTBLMNT | ESTABLISHMENT |
| EW | ENDWALL |
| EXCAV | EXCAVATION |
| OR EXC | EXCAVATION |
| EXIST | EXISTING |
| EXP | EXPANSION |
| EXT | EXTENSION |

| | |
|---|---|
| F | FILL |
| F & I | FURNISH & INSTALL |
| F TO F | FACE TO FACE |
| FA | FEDERAL AID |
| FAP | FEDERAL AID PROJECT |
| FE | FLOOR ELEVATION |
| FED | FEDERAL |
| FERT | FERTILIZER |
| FETS | FLARED END TERMINAL SECTION |
| FH | FIRE HYDRANT |
| FHWA | FEDERAL HIGHWAY ADMINISTRATION |
| FIN | FINISH |
| FL | FLOW LINE |
| FLEX | FLEXIBLE |
| FOUND | FOUNDATION |
| FR | FRAME |
| FRANG | FRANGIBLE |
| FT | FEET |
| FURN | FURNISH |
| FUT | FUTURE |

| | |
|---|---|
| GA | GAUGE, GAGE |
| GAL | GALLON |
| GALV | GALVANIZED |
| GAR | GARAGE |
| GD | GUTTER DRAIN |
| GIP | GALVANIZED IRON PIPE |
| GR | GRADE OR GUARDRAIL |
| GRD | GROUND |
| GTTR | GUTTER |

| | |
|---|---|
| HDWL | HEADWALL |
| HNDRL | HANDRAIL |
| HORIZ | HORIZONTAL |
| HR | HOUR |
| HSE | HOUSE |
| HW | HIGH WATER |
| HWY | HIGHWAY |
| HYD | HYDRANT |

| | |
|---|---|
| I | EXTERNAL ANGLE(DELTA) |
| ID | INSIDE DIAMETER |
| IN | INCH |
| INC | INCORPORATED |
| INCL | INCLUDED |
| IP | IRON PIPE |
| INSTL | INSTALL |
| INTCH | INTERCHANGE |

| | |
|---|---|
| JB | JUNCTION BOX |
| JCT | JUNCTION |

| | |
|---|---|
| L | LENGTH OF CURVE |
| LA | LIMITED ACCESS |
| LB | POUND |
| LBR | LIMEROCK BEARING RATIO |
| LC | LONG CHORD |
| LF | LINEAR FEET |
| LGTH | LENGTH |
| LIN | LINEAR |
| LMRK | LIMEROCK |
| LS | LENGTH OF SPIRAL |
| LT | LEFT |
| LT'D | LIGHTED |
| L/W | LIGHTWEIGHT |

| | |
|---|---|
| M | MIDDLE ORDINATE DISTANCE |
| MAINT | MAINTENANCE |
| MATL | MATERIAL |
| MAX | MAXIMUM |
| MED | MEDIAN |
| MESS | MESSAGE |
| MH | MANHOLE |
| MHW | MEAN HIGH WATER |
| MI | MILE |
| MIN | MINIMUM |
| MISC | MISCELLANEOUS |
| MLW | MEAN LOW WATER |
| MOBL | MOBILIZATION |
| MOD | MODIFY |
| MON | MONUMENT |
| MP | MILE POST |
| MPH | MILES PER HOUR |
| MSL | MEAN SEA LEVEL |
| MT'D | MOUNTED |

| | |
|---|---|
| N | NORTH |
| N & C | NAIL & (BOTTLE) CAP |
| NB | NORTHBOUND |
| NE | NORTHEAST |
| NIC | NOT IN CONTRACT |
| NO | NUMBER |
| NW | NORTHWEST |

| | |
|---|---|
| O PASS | OVERPASS |
| O TO O | OUTSIDE TO OUTSIDE |
| OD | OUTSIDE DIAMETER |
| OPT | OPTICALLY |
| OVHD | OVERHEAD |

| | |
|---|---|
| PAVT | PAVEMENT |
| PC | POINT OF CURVATURE |
| PCC | POINT OF COMPOUND CURVATURE OR PLAIN CEMENT CONCRETE |
| PEDES | PEDESTRIAN |
| PEN | PENETRATION |
| PG | PROFILE GRADE |
| PH | PHASE |
| PI | POINT OF INTERSECITON |
| PK | PER CAP |
| PL | PROPERTY LINE |
| POC | POINT ON CURVE |
| POST | POINT ON SEMI TANGENT |
| POT | POINT ON TANGENT |
| PP | POWER POLE |
| PRC | POINT OF REVERSE CURVATURE |
| PRCST | PRECAST |
| PREST | PRESTRESSED |
| PROG | PROGRAMMED |
| PROJ | PROJECT |
| PRM | PERMANENT REFERENCE MONUMENT |
| PROV | PROVISIONS |
| PRSE | PRESSURE |
| PS&E | PLANS, SPECIFICATIONS AND ESTIMATES |
| PT | POINT OF TANGENCY |
| P-TIME | PRE-TIMED |
| Q | PEAK DISCHARGE |

| | |
|---|---|
| R | RADIUS |
| R- | RANGE |
| RBAC | ROCK BASE ASPHALTIC CONCRETE |
| RBST | ROCK BASE SURFACE TREATMENT |
| RCP | REINFORCED CONCRETE PIPE |
| RCPA | REINFORCED CONCRETE PIPE ARCH |
| RD | ROAD |
| RD-SD | ROADSIDE |
| RDWY | ROADWAY |
| REF | REFERENCE |
| REFL | REFLECTIVE |
| REINF | REINFORCED |
| REJUV | REJUVENATION |
| RELOC | RELOCATED |
| REM | REMOVAL |
| REPL | REPLACE |
| RES | RESIDENCE |
| RM | REFERENCE MONUMENT |
| RP | REFERENCE POINT |
| RR | RAILROAD |
| RSF | RESURFACE |
| RT | RIGHT |
| R/W | RIGHT OF WAY |

| | |
|---|---|
| S | SOUTH |
| SAMH | SAND-ASPHALT HOT MIX |
| SAN | SANITARY |
| SB | SOUTHBOUND" |
| SBAC | SHELL BASE ASPHALTIC CONCRETE |
| SBAM | SAND BITUMINOUS ROAD MIX |
| SBST | SHELL BASE SURFACE TREATMENT |
| SC | SEAL COAT |
| SCST | SAND-CLAY SURFACE TREATMENT |
| SD | SIDE DRAIN |
| SE | SOUTHEAST |
| SECT | SECTION |
| SED | SEDIMENT |
| SEP | SEPARATOR |
| SEQ | SEQUENTIAL |
| SF | SHRINKAGE FACTOR |
| SG | SUBGRADE |
| SHLDR | SHOULDER |
| SPEC | SPECIFICATION |
| SQ FT | SQUARE FOOT |
| SQ IN | SQUARE INCH |
| SQ YD OR SY | SQUARE YARD |
| SR | STATE ROAD |
| SS | STORM SEWER |
| SSMD | SOLID STATE MODULAR DESIGN |
| ST | SURFACE TREATMENT OR STREET |
| STA | STATION |
| STAB | STABILITY |
| STD | STANDARD |
| STL | STEEL |
| STR | STRUCTURE |
| SUBGR | SUBGRADE |
| SUPPTS | SUPPORTS |
| SURF | SURFACE |
| SW | SOUTHWEST OR SIDEWALK |
| SYST | SYSTEM |
| S-POST | SINGLE POST |

| | |
|---|---|
| T | TANGENT LENGTH OF CURVE |
| TBM | TEMPORARY BENCH MARK |
| TC | TANGENT TO CURVE |
| TCP | TERRA COTTA PIPE |
| TEL | TELEPHONE |
| TEMP | TEMPERATURE |
| THRMPLSTC | THERMOPLASTIC |
| TM | TOM |
| TRAF | TRAFFIC |
| TREAT | TREATMENT |
| TS | TANGENT TO SPIRAL |
| TSC | LENGTH OF TANGENT (SPIRAL CURVE) |
| TWP | TOWNSHIP |
| TYP | TYPICAL |
| T-CSE | TRIPLE COURSE |

| | |
|---|---|
| U PASS | UNDERPASS |
| UNDGRD | UNDERGROUND |
| UNDR | UNDERDRAINS |
| UNDRWAY | UNDERROADWAY |
| UNL | UNLOADED |
| UNTR | UNTREATED |
| USC&GS | US COAST AND GEODETIC SURVEY (NOW NATIONAL GEODETIC SURVEY) |
| USGS | US GEOLOGICAL SURVEY |

| | |
|---|---|
| VAR | VARIABLE |
| VC | VERICAL CURVE |
| VF | VERTICAL FOOT |
| VCP | VITRIFIED CLAY PIPE |
| VEH | VEHICLE |
| VERT | VERTICAL |
| VOL | VOLUME |
| VW | VARIABLE WIDTH |

| | |
|---|---|
| W | WEST |
| WB | WESTBOUND |
| WM | WATER MAIN |
| WT | WATER TABLE OR WEIGHT |

| | |
|---|---|
| X | COORDINATE DISTANCE (EAST-WEST) |
| X RD | CROSS ROAD |
| XING | CROSSING |
| X-SEC | CROSS SECTION |
| Y | COORDINATE DISTANCE(NORTH-SOUTH) |
| ZL | TWO LANE |

## UNITS OF MEASURE

| | |
|---|---|
| AC | ACRE |
| AS | ASSEMBLY |
| BA | BARREL |
| CF | CUBIC FT. |
| CO | PER CLEANOUT |
| CY | CUBIC YARD |
| CW | CWT |
| DA | DAYS |
| EA | EACH |
| FB | RFBM |
| FT | FOOT |
| GA | GALLON |
| GM | GROSS MILE |
| LB | POUND |
| LF | LIN. FT. |
| LS | LUMP SUM |
| LU | PER LUMINAIRE |
| MG | THOUSAND GALLONS |
| MM | NET MILE |
| PB | PER BUILDING |
| PC | PER CLUSTER |
| PE | PILE |
| PI | PER INTERSECTION |
| PJ | PER JOINT |
| PL | PLANT |
| PO | POST |
| PP | PER POLE |
| PW | PER WELL |
| RM | ROAD MILE |
| SF | SQUARE FOOT |
| SP | SPAN |
| SY | SQUARE YARD |
| TN | TON |
| VF | VERTICAL FOOT |

FHWA APPROVED 12-13-74

FLORIDA DEPARTMENT OF TRANSPORTATION
Road Design Section

# STANDARD ABBREVIATIONS

| REVISIONS | | | INITIALS | DATES |
|---|---|---|---|---|
| Dates | Descriptions | Designed by | | |
| 11-74 O.R. | Reworked & Changed Index No. | Checked by | | |
| | | Quantities by | | |
| | | Checked by | | |
| | | Supervised by | | |

Recommended for approval
by E.H.Hart
Deputy Design Engineer - Roadways

Approved
by R.R.Bowman
State Design Engineer

DRAWING NO. 1 of 1

INDEX NO. 650A-01

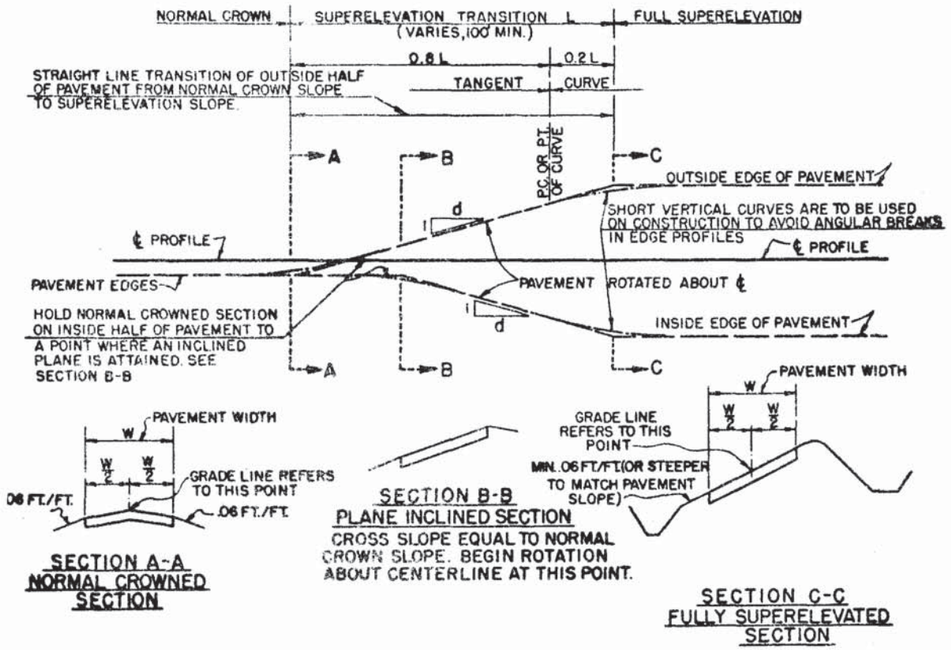


## 2-LANE OR 4-LANE PAVEMENT, NO MEDIAN

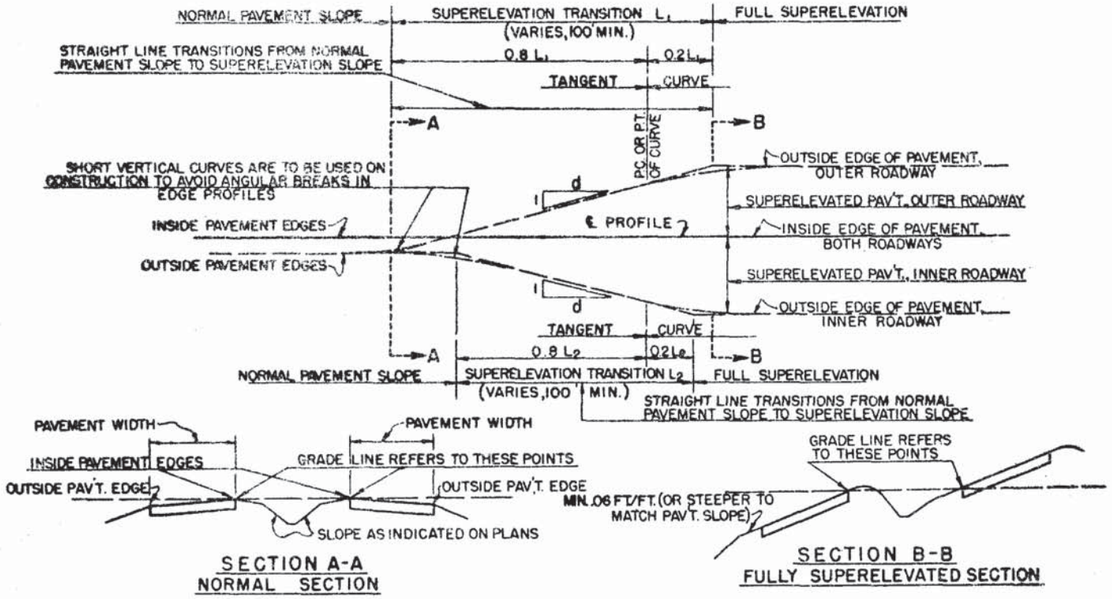


## 4-LANE PAVEMENT WITH MEDIAN

# DETAIL OF TRANSITION FROM NORMAL CROWNED SECTION TO SUPERELEVATED SECTION

THESE TRANSITION DETAILS ARE TO APPLY IN ALL CASES, EXCEPT AT CURVES OF INSUFFICIENT LENGTH, INSUFFICIENT TANGENT LENGTH BETWEEN CURVES, P.C.C.'S OR P.R.C.'S, IN WHICH CASE THE DETAILS OF THE TRANSITIONS ARE TO BE INCLUDED IN THE DETAIL PLANS.

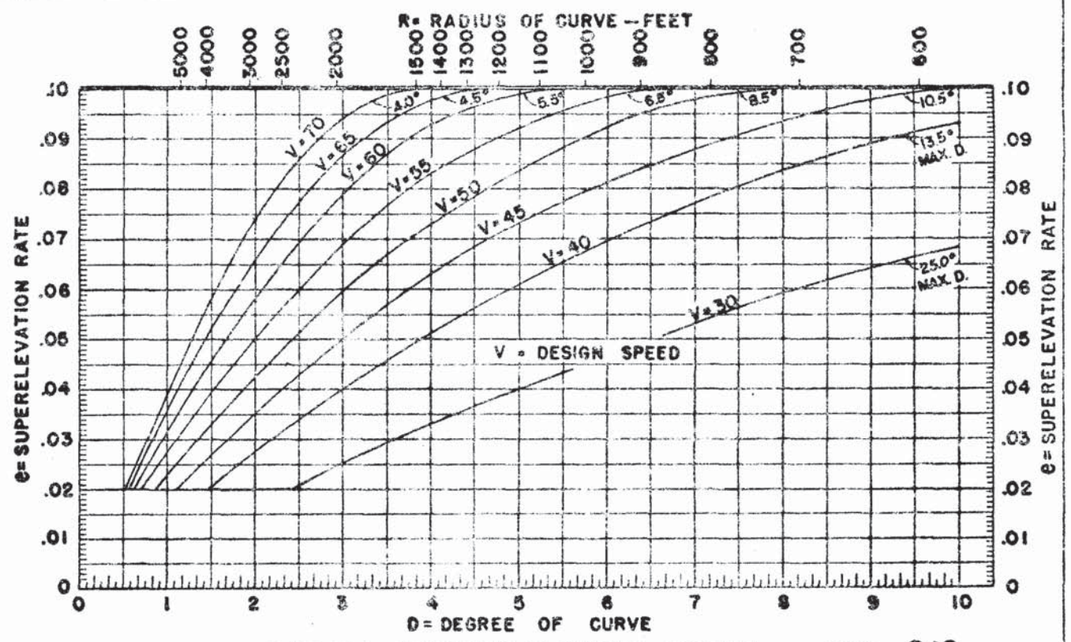


## DESIGN SUPERELEVATION RATES $e_{MAX.} = 0.10$

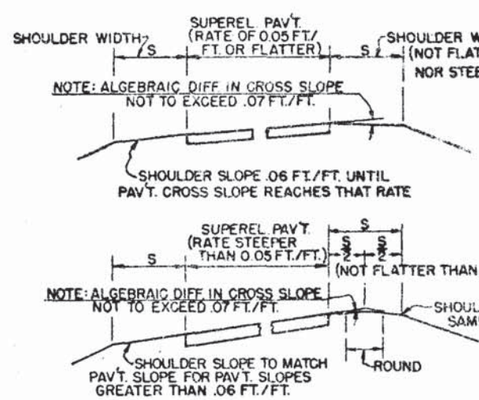


## DETAILS OF SHOULDER CONSTRUCTION WITH SUPERELEVATION

### NOTES

**SHOULDER ON HIGH SIDE** A SHOULDER SLOPE OF .06 FT./FT. DOWNWARD FROM THE EDGE OF PAVEMENT WILL BE MAINTAINED UNTIL A 0.07 FT./FT. BREAK IN SLOPE AT THE PAVEMENT EDGE IS REACHED DUE TO SUPERELEVATION OF THE PAVEMENT. AS THE PAVEMENT SUPERELEVATION INCREASES, THE 0.07 FT./FT. BREAK IN SLOPE WILL BE MAINTAINED AND THE SHOULDER FLATTENED UNTIL THE SHOULDER SLOPE REACHES THE MINIMUM OF .02 FT./FT. DOWNWARD FROM THE EDGE OF PAVEMENT. ANY FURTHER INCREASE IN PAVEMENT SUPERELEVATION WILL NECESSITATE SLOPING THE INSIDE HALF OF THE SHOULDER TOWARD THE PAVEMENT AND THE OUTER HALF OUTWARD, BOTH AT .02 FT./FT.
THESE SLOPES WILL BE HELD WITH FURTHER INCREASE IN PAVEMENT SUPERELEVATION UNTIL THE MAXIMUM BREAK OF 0.07 FT./FT. AT THE PAVEMENT EDGE IS AGAIN REACHED. THIS MAXIMUM BREAK WILL THEN BE HELD AND SHOULDER SLOPES STEEPENED WITH ADDITIONAL SUPERELEVATION.

**SHOULDER ON LOW SIDE** MAINTAIN .06 FT./FT. DROP ACROSS INSIDE SHOULDER UNTIL PAVEMENT CROSS SLOPE REACHES .06 FT./FT. FOR PAVEMENT CROSS SLOPES GREATER THAN .06 FT./FT., SHOULDER TO HAVE SAME SLOPE AS PAVEMENT.

THESE DETAILS APPLY TO BOTH PAVED AND GRASSED SHOULDERS.

### GENERAL NOTES FOR SUPERELEVATION

1. USE NORMAL SECTION WITH NO SUPERELEVATION FOR CURVES UP TO 0°-20' (0°-14' FOR DESIGN SPEEDS OF 70 MPH).
2. WHEN THE DEGREE OF CURVE IS 0°-21' OR GREATER (0° IS FOR DESIGN SPEEDS OF 70 MPH) AND IS IN THE RANGE OF THE HORIZONTAL PORTION OF THE CURVE, SUPERELEVATE AT THE NORMAL CROSS SLOPE RATE OF .02 FT./FT. OR AS INDICATED BY THE CURVE FOR THE APPROVED DESIGN SPEED.
3. THE LENGTH OF SUPERELEVATION TRANSITION IS TO BE DETERMINED BY USING A RELATIVE SLOPE OF PAVEMENT EDGE TO PROFILE GRADE GIVEN IN THE TABLE BELOW, EXCEPT THAT THE MINIMUM LENGTH OF TRANSITION SHALL BE 100 FT.
4. FOR CURVES IN MUNICIPAL AREAS, SEE INDEX NO 498-02.

### SLOPE RATIOS FOR SUPERELEVATION TRANSITIONS

| DESIGN SPEED, M.P.H. | 45-50 | 55-60 | 65-70 | |
|---|---|---|---|---|
| 1:d | 1:200 | 1:225 | 1:250 | 2 Lane & 4 Lane |
| | 1:160 | 1:180 | 1:200 | 6 Lane |
| | 1:150 | 1:170 | 1:190 | 8 Lane |

FHWA APPROVED: 7-7-75

FLORIDA DEPARTMENT OF TRANSPORTATION
ROADWAY PLANS SECTION

# SUPERELEVATION DETAILS

| REVISIONS | | | | | |
|---|---|---|---|---|---|
| | | 7-73 | Changed all fractions to decimals. | 5-58 | RETRACED |
| | | 10-07 | ADDED NOTE #5 | 9-81 | SUPER. TRANS. RATE REV. TO CONFORM TO AASHO |
| 5-28 | Removed Gen. Note #3 Revised Superelevation Tables | 1-67 | REVISED S.E. CHART | 5-65 | Rev. for 1/4 Cross Slope |
| 10-74 | Revised S.E. Chart & Changed Index No. | | | | |

| ROAD NO. | COUNTY | | PROJECT NO. |
|---|---|---|---|
| | Name | Date | Recommended for Approval by: [signature] Engineer of Plans |
| Detailed by | | | APPROVED BY [signature] State Chief Engineer |
| Checked by | | | |
| Quantities by | | | |
| Checked by | | | |
| Traced by | | | Drawing No. 1 of 1 — Index No. GSE-01 |

Form 281-10

# MEMORANDUM

State of Florida Department of Transportation

DATE June 20, 1977

TO All Holders of Standard Index Books

FROM E. H. Hart, Deputy Design Engineer (Roadways)

COPIES TO

SUBJECT Standard Index Drawings

The following index drawings have been revised:

BMB-01-1 (Sheet 1 of 3); General Note No. 1 was changed to include reflective barrier marker in the cost of the concrete barrier wall. Sheets 2 and 3 were not changed.

DMD-01-1 Supersedes DMD-01; Sheet 2 has been revised to show bituminous coating required at the junction of dissimilar types of pipe. This is shown on "Detail of Concrete Jacket" at the bottom center of the sheet. Sheets 1 and 3 were not changed.

GRR-01 (Sheet 6 of 6); This is a new index showing a new type of approved railroad crossing. We have included sheets 1 through 5 of 6 which show the change in those drawing numbers.

GSE-02-1 Supersedes GSE-02: On sheet 1 we added a note under the superelevation chart. On sheet 2 we added the superelevation chart for e Max. 0.05.

Please destroy all copies of these indices in your files and replace with the revised index drawings.

EHH/LMF/db

LMF

| FED. ROAD DIST. No. | STATE | PROJECT No. | FISCAL YEAR | SHT. No. |
|---|---|---|---|---|
| 3 | FLA. | | | |

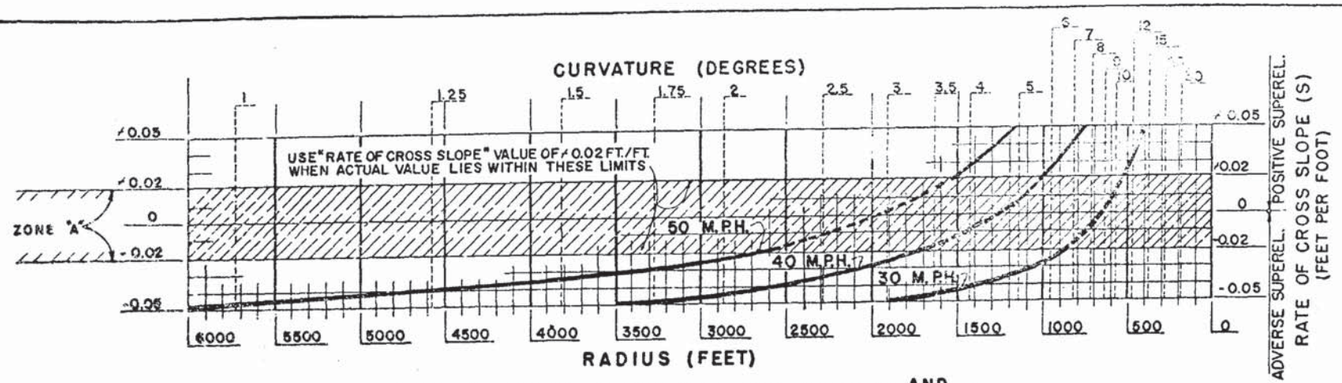


# CHART SHOWING REMOVAL OF CROWN AND OR SUPERELEVATON NECESSARY FOR CURVATURE AT VARIOUS DESIGN SPEEDS

NOTE: WHEN THE ACTUAL SUPERELEVATION VALUE LIES WITHIN ZONE "A", USE A POSITIVE RATE OF 0.02 FT./FT. THE SUPERELEVATION RATES SHOWN ABOVE ARE TO BE USED FOR URBAN (CURB & GUTTER) CONSTRUCTION IN BUILT UP AREAS.

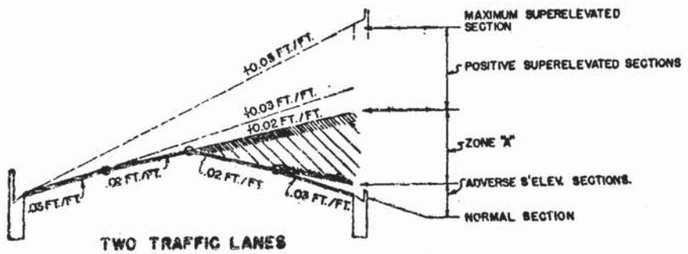


TWO TRAFFIC LANES EACH DIRECTION

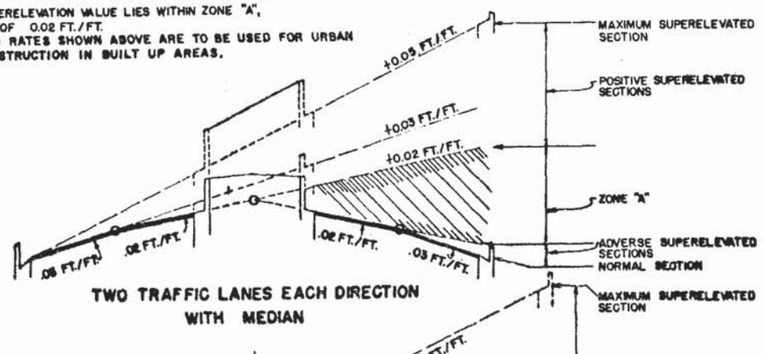


TWO TRAFFIC LANES EACH DIRECTION WITH MEDIAN

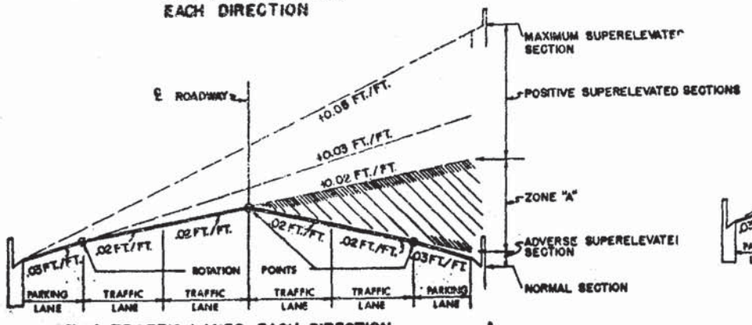


TWO TRAFFIC LANES EACH DIRECTION WITH PARKING

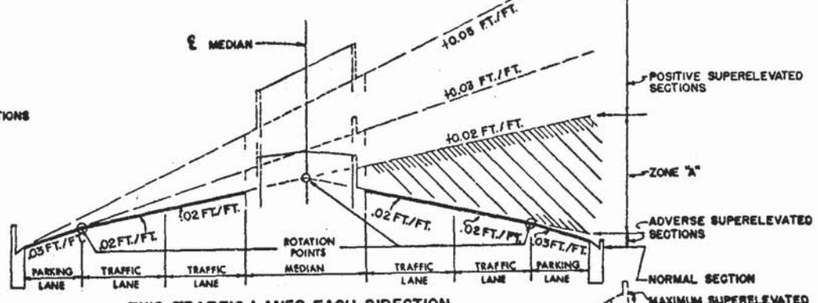


TWO TRAFFIC LANES EACH DIRECTION WITH MEDIAN AND PARKING

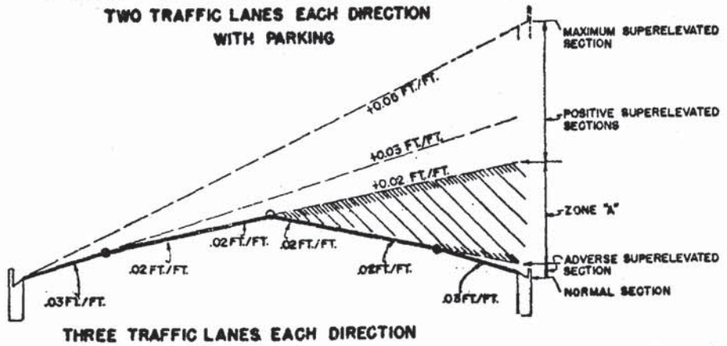


THREE TRAFFIC LANES EACH DIRECTION

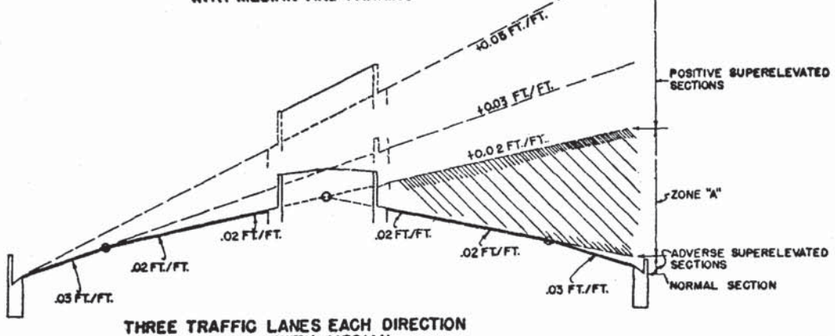


THREE TRAFFIC LANES EACH DIRECTION WITH MEDIAN

## GENERAL NOTES FOR SUPERELEVATION

1. MAXIMUM RATE OF SUPERELEVATION (IN MUNICIPAL CONSTRUCTION) SHALL BE 0.05 FT./FT.
2. SUPERELEVATION SHALL BE OBTAINED BY ROTATING THE PLANE SUCCESSIVELY ABOUT THE BREAK POINTS OF THE SECTION UNTIL THE PLANE HAS ATTAINED A SLOPE EQUAL TO THAT REQUIRED BY THE CHART. SHOULD THE ROTATION TRAVERSE THE ENTIRE SECTION AND FURTHER SUPERELEVATION BE REQUIRED, THE REMAINING ROTATION OF THE PLANE SHALL BE ABOUT THE LOW EDGE OF THE INSIDE TRAVEL LANE.
   ADVERSE SUPERELEVATION OF SECTIONS WITH PARKING LANES. NO SUPERELEVATION WILL BE REQUIRED WHEN THE MAXIMUM ADVERSE SUPERELEVATION RATE IS GREATER THAN THE NORMAL SLOPE OF THE TRAFFIC LANE ADJACENT TO THE PARKING LANE.
3. WHEN POSITIVE SUPERELEVATION IS REQUIRED, THE SLOPE OF THE GUTTER ON THE HIGH SIDE SHALL BE A CONTINUATION OF THE SLOPE OF THE SUPERELEVATED PAVEMENT.
4. IN CONSTRUCTION, SHORT VERTICAL CURVES SHALL BE PLACED AT ALL ANGULAR PROFILE BREAKS WITHIN THE LIMITS OF THE SUPERELEVATION TRANSITION.
5. MINIMUM GUTTER GRADES WITHIN THE LIMITS OF THE SUPERELEVATION TRANSITION SHALL BE 0.2%.
6. THE VARIABLE SUPERELEVATION TRANSITION LENGTH "L" SHALL HAVE A MINIMUM VALUE OF 50 FEET FOR DESIGN SPEEDS UNDER 40 M.P.H. AND 75 FEET FOR DESIGN SPEEDS OF 40 M.P.H. OR GREATER.
7. MUNICIPAL SECTIONS HAVING LANE ARRANGEMENTS DIFFERENT FROM THOSE SHOWN, BUT COMPOSED OF A SERIES OF PLANES, SHALL BE SUPERELEVATED IN A SIMILAR MANNER.
8. FOR CURVES IN RURAL AREAS, SEE INDEX NO. 536-01.

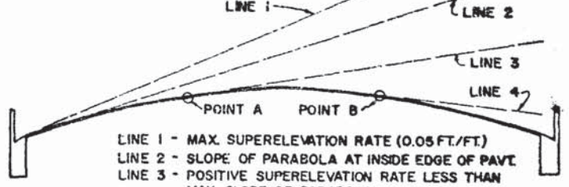


LINE 1 - MAX. SUPERELEVATION RATE (0.05 FT./FT.)
LINE 2 - SLOPE OF PARABOLA AT INSIDE EDGE OF PAVT.
LINE 3 - POSITIVE SUPERELEVATION RATE LESS THAN MAX. SLOPE OF PARABOLA.
LINE 4 - ADVERSE SUPERELEVATION.

VALUES OBTAINED FROM THE CHART ARE ALSO APPLICABLE TO A PARABOLIC CROWN SECTION. WHEN THIS TYPE SECTION IS USED, SUPERELEVATION IS ESTABLISHED BY ROTATING A TANGENT ABOUT THE ARC OF THE PARABOLIC CROWN UNTIL THE DESIRED SLOPE IS ATTAINED (POINTS A & B ON SKETCH). THE NORMAL PARABOLIC CROWN WILL BE MAINTAINED OUTSIDE THE LIMITS OF THE PLANE THUS FORMED.

SUPERELEVATION OF PARABOLIC SECTION

FHWA APPROVED: 5-20-77

FLORIDA DEPARTMENT OF TRANSPORTATION
ROADWAY PLANS SECTION

# SUPERELEVATION DETAILS FOR MUNICIPAL CONSTRUCTION

| REVISIONS | | REVISIONS | | ROAD NO. | COUNTY | | PROJECT NO. |
|---|---|---|---|---|---|---|---|
| Dates | Descriptions | Dates | Descriptions | | | | |
| 5-77 LMF | Added note under S.E. Chart | 5-67 N.L.T. | REVISED FOR PLANE SECTION. | | Names | Dates | Recommended For Approval by: Engineer of Road Design |
| | | 1-73 BNS | Changed all fractions to decimals. | Detailed by | W. L. B | 2-66 | APPROVED BY: Chief Engineer |
| | | 10-74 LMF | Changed Index No. Updated pav't slope to current policy | Quantities by | | | |
| | | | | Checked by | R. L. O. | 12-66 | |
| | | | | Traced by | C. D. R. | 1-67 | Drawing No. 1 OF 2 / Index No. GSE-02-1 |

| FED. ROAD DIV. No. | STATE | PROJECT No. | FISCAL YEAR | SHEET No. |
|---|---|---|---|---|
| 3 | FLA. | | | |

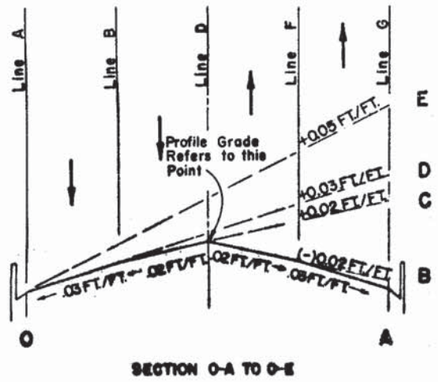


SECTION O-A TO O-E

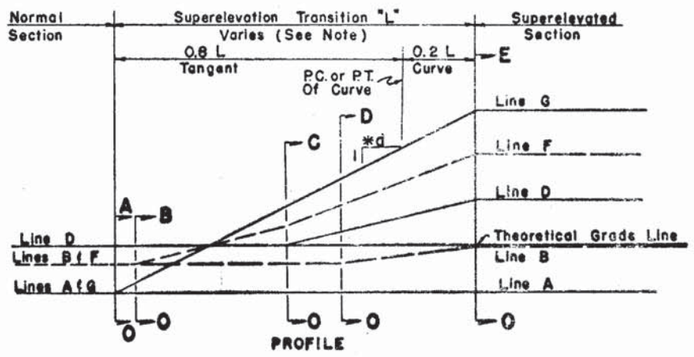


| LINE | DESCRIPTION |
|---|---|
| A | INSIDE TRAFFIC LANE |
| B | INSIDE LANE LINE |
| C | INSIDE MEDIAN EDGE PAVEMENT |
| D | ℄ CONSTRUCTION |
| E | OUTSIDE MEDIAN EDGE PAVEMENT |
| F | OUTSIDE LANE LINE |
| G | OUTSIDE TRAFFIC LANE |

## DETAIL OF SUPERELEVATION TRANSITION FOR TWO TRAFFIC LANES EACH DIRECTION

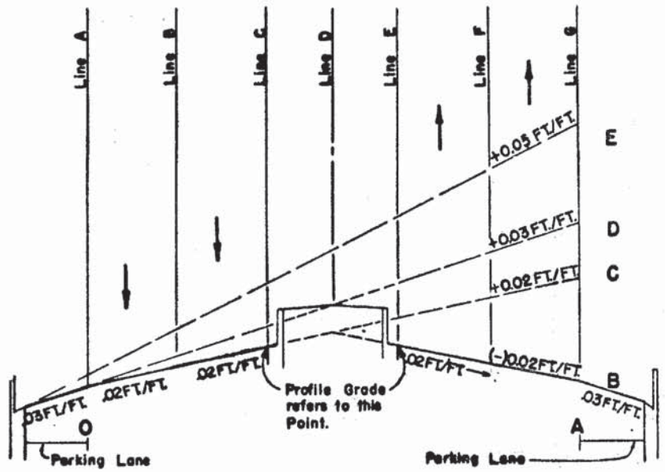


SECTION O-A TO O-E

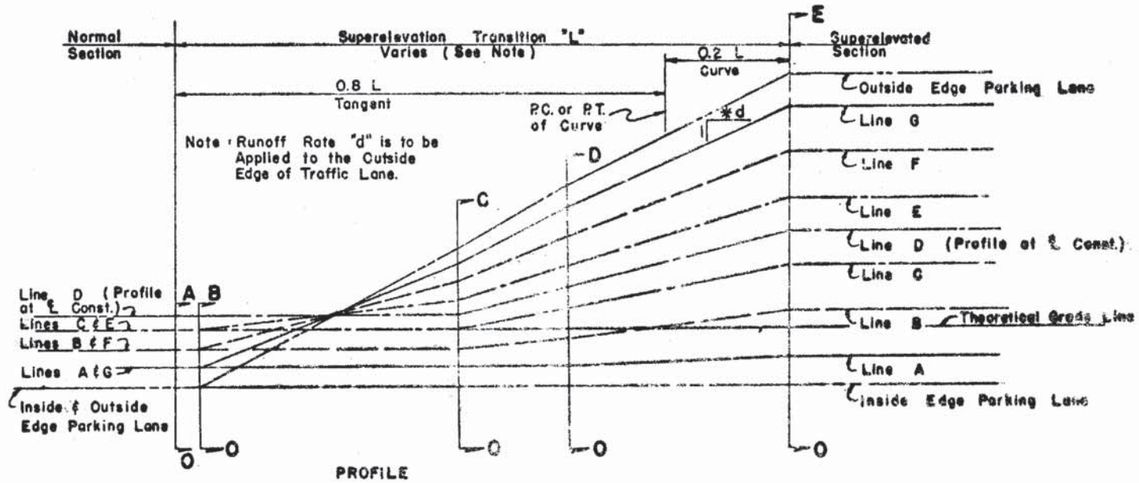


| *d (SLOPE RATIO) | |
|---|---|
| 30 MPH | 1 : 100 |
| 40 MPH | 1 : 125 |
| 50 MPH | 1 : 150 |

## DETAIL OF SUPERELEVATION TRANSITION FOR TWO TRAFFIC LANES EACH DIRECTION WITH MEDIAN AND PARKING

| D | R | V=30mph e | V=40mph e | V=50mph e |
|---|---|---|---|---|
| 0° 15' | 22918' | NC | NC | NC |
| 0° 30' | 11459' | NC | NC | NC |
| 0° 45' | 7639' | NC | NC | RC |
| 1° 00' | 5730' | NC | RC | RC |
| 1° 30' | 3820' | RC | RC | .024 |
| 2° 00' | 2865' | RC | .022 | .028 |
| 2° 30' | 2292' | RC | .026 | .031 |
| 3° 00' | 1910' | .020 | .029 | .033 |
| 3° 30' | 1637' | .023 | .032 | .036 |
| 4° 00' | 1432' | .025 | .033 | .038 |
| 5° 00' | 1146' | .028 | .036 | .043 |
| 6° 00' | 955' | .031 | .039 | .047 |
| 7° 00' | 819' | .032 | .041 | |
| 8° 00' | 716' | .034 | .044 | |
| 9° 00' | 637' | .035 | .046 | |
| 10° 00' | 573' | .037 | .048 | |
| 11° 00' | 521' | .038 | | |
| 12° 00' | 477' | .039 | | |
| 13° 00' | 441' | .040 | | |
| 14° 00' | 409' | .043 | | |
| 16° 00' | 358' | .045 | | |
| 18° 00' | 318' | .047 | | |
| 20° 00' | 286' | .050 | | |

e Max.=0.05

The superelevation rates shown above are to be used for urban (curb & gutter) arterials in suburban areas where sufficient R/W may be acquired to make suitable connections.

NOTE: THE SECTIONS AND PROFILES SHOWN ON THIS SHEET ARE EXAMPLES OF THE SUPERELEVATION TRANSITIONS. SIMILAR SCHEMES SHOULD BE USED FOR ROADWAYS HAVING DIFFERENT SECTION DESIGNS.

FHWA APPROVED: 5-20-77

FLORIDA DEPARTMENT OF TRANSPORTATION

ROADWAY PLANS SECTION

# SUPERELEVATION DETAILS FOR MUNICIPAL CONSTRUCTION

| REVISIONS | | ROAD NO. | COUNTY | PROJECT NO. |
|---|---|---|---|---|
| Dates | Descriptions | | | |
| 1-75 | Changed all fractions to decimals. | | | |
| 10-74 LMF | Changed Index No. Updated pavt. slope to current policy | Detailed by | W.L.B. | 2-66 |
| 5-77 LMF | Added S.E. chart for e Max 0.05 | Checked by | R.L.O. | 12-66 |
| | | Quantities by | | |
| | | Checked by | | |
| | | Traced by | C.D.P. | 1-67 |

APPROVED BY: [signature] State Highway Engineer

Drawing No. 2 OF 2

Index No. GSE-02-1

# STANDARD SYMBOLS FOR KEY MAPS

- HIGHWAY WITH FULL CONTROL OF ACCESS
- CONTROLLED ACCESS HIGHWAY WITH FRONTAGE ROADS
- INTERCHANGE
- PROPOSED CONTROLLED ACCESS HIGHWAY
- DIVIDED HIGHWAY
- PAVED ROAD—HIGH TYPE
- BITUMINOUS ROAD—MEDIUM AND LOW TYPE
- GRAVEL OR STONE ROAD
- SOIL SURFACED ROAD
- GRADED AND DRAINED ROAD
- UNIMPROVED ROAD
- PRIMITIVE ROAD
- IMPASSABLE ROAD
- P — PRIVATE ROAD
- 3.9 — DISTANCE BETWEEN POINTS
- STREETS IN INSET AREAS OR DELIMITED URBAN COMPACT AREAS
- EXTENSION OF LOCAL ROADS WITHIN CITY LIMITS
- FAI — FEDERAL AID INTERSTATE HIGHWAY
- FAP — FEDERAL AID PRIMARY HIGHWAY
- FAS — FEDERAL AID SECONDARY HIGHWAY
- NF — NATIONAL FOREST ROAD
- INTERSTATE HIGHWAY
- U. S. NUMBERED HIGHWAY
- STATE HIGHWAY
- RAILROAD
- ABANDONED RAILROAD OR LOGGING TRAM
- RAILROAD STATION OR PREPAY STATION
- GRADE CROSSING
- RAILROAD ABOVE
- RAILROAD BELOW
- AIRPORT, COMPLETE FACILITIES
- AIRFIELD, LIMITED FACILITIES
- LANDING AREA OR STRIP
- RUNWAYS
- CANAL OR DRAINAGE DITCH
- NARROW STREAM

- WIDE STREAM
- WIDE STREAM WITH DAM
- DAM WITH ROAD
- LAKE, RESERVOIR OR POND
- LAKE, RESERVOIR OR POND WITH DAM
- INTERMITTENT POND
- MARSH
- SWAMP
- HIGHWAY BRIDGE
- HIGHWAY GRADE SEPARATION
- PEDESTRIAN UNDERPASS OR OVERPASS
- Ped.U.P. — STATE BOUNDARY LINE
- COUNTY BOUNDARY LINE
- CIVIL TOWNSHIP BOUNDARY
- FORBES PURCHASE LINE
- LAND SECTION LINE
- SURVEY BY OTHERS
- NATIONAL OR STATE PARK BOUNDARY
- NATIONAL OR STATE FOREST BOUNDARY
- SCHOOL
- COMMUNITY HALL
- POST OFFICE
- POLICE SCHOOL
- D — GARBAGE DUMP
- A — AUTO JUNKYARD
- F — SANITARY FILL
- S — SEWAGE DISPOSAL PLANT
- POWER PLANT
- POWER SUBSTATION
- RADIO OR TV CONTROL TOWER
- RADAR STATION
- AS — ANIMAL SHELTER
- LOCKED GATE OR FENCE
- DIRECTIONAL ARROW
- PHIPPS — TRIANGULATION STATION WITH NAME
- LOCATION OF SYMBOL

- LOCATION OF INSET BOUNDARY WITHIN MAP
- STATE CAPITAL
- OTHER CITY OR VILLAGE
- CORPORATE LIMITS
- DELIMITED URBAN COMPACT AREA BOUNDARY
- PICNIC GROUND
- BATHING BEACH SWIMMING POOL
- CAMP SITE, TRAILER PARK
- TOURIST COURT OR MOTEL
- CAMP OR LODGE
- SP — SMALL STATE PARK
- NFP — NATIONAL FOREST PARK
- CP — COUNTY PARK
- WP — WAYSIDE PARK
- BOAT RAMP
- FIRE CONTROL HEADQUARTERS
- LOOKOUT TOWER
- F — FISH HATCHERY (POND)
- GAME CHECKING STATION
- PR — PISTOL RANGE
- GC — GOLF COURSE
- CC — COUNTRY CLUB
- FS — FIRE STATION
- RACE COURSE, SPEEDWAY
- DOG TRACK, RODEO ARENA
- RECREATION AREA, HISTORIC SITE
- DWELLING
- 3 — GROUP OF DWELLINGS
- SEASONAL DWELLING
- 3 — SEASONAL DWELLINGS CLOSELY SPACED
- CHURCH
- CEMETERY
- CHURCH AND CEMETERY
- BUSINESS
- GAUGING OR SMALL PUMPING STATION
- DAIRY

FHWA APPROVED: 7-7-75

FLORIDA DEPARTMENT OF TRANSPORTATION
Road Design Section

STANDARD SYMBOLS
FOR KEY MAPS AND PLAN SHEETS

| REVISIONS | | | INITIALS | DATE |
|---|---|---|---|---|
| Dates | Descriptions | Designed by | C.O.R. | 8-72 |
| 4-75 | Chg'd Index No | Checked by | C.O.R. | 8-72 |
| | | Quantities by | | |
| | | Checked by | | |
| | | Supervised by | D.G.B. | |

Recommended for approval by: Deputy Design Engineer - Roadways

Approved by: State Design Engineer

DRAWING NO. 1 of 3 — INDEX NO. GSS-01

# STANDARD SYMBOLS FOR PLAN SHEETS

## SYMBOLS

- STATE LINE
- COUNTY LINE
- TOWNSHIP LINE
- SECTION LINE
- CITY LINE
- BASE OR SURVEY LINE
- RIGHT-OF-WAY LINE
- LIMITED ACCESS LINE
- FENCE LINE
- NATIONAL OR STATE PARK OR FOREST
- GRANT LINE
- RAILROAD (DRAINAGE MAPS)
- RAILROAD (DETAIL PLANS)
- FENCE (LIMITED ACCESS)
- BOX CULVERT
- BRIDGE
- SIDE DRAIN PIPE
- 18" STORM SEWER
- INLET
- MANHOLE
- TIED LONGITUDINAL JOINT
- KEYED LONGITUDINAL JOINT
- DOWELED TRANSVERSE EXPANSION JOINT
- DOWELED TRANSVERSE CONTRACTION JOINT
- TRANSVERSE CONTRACTION JOINT WITHOUT DOWELS
- ALACHUA TRIANGULATION STATION
- B.M. NO. 112 BENCH MARK
- POINT OF INTERSECTION
- NORTH POINT
- TYPE TYPE PAVT WALK EDGES OF EXISTING PAVEMENT AND SIDEWALK
- BASE LINE
- CENTERLINE
- PROPERTY LINE
- DELTA ANGLE
- APPROXIMATE
- ROUND
- CURB
- CURB AND GUTTER
- WATER WELL, SPRING
- LEVEE
- MP 327 RAILROAD MILE POST
- GATE
- PUMP ISLAND
- STORAGE TANK (SURFACE)
- STORAGE TANK (UNDERGROUND)

## SYMBOLS

- MINE OR QUARRY
- B P BORROW PIT
- CHURCH
- S STORE
- RES RESIDENCE
- B BARN
- SCHOOL
- STREAM
- SHORE LINE
- MARSH
- HEDGE
- TREES
- EDGE OF WOODED AREA
- SHRUBBERY
- GROVE OR ORCHARD
- LT. SKEW RT. ℄ RT. SKEW LT. DEFINITION OF SKEW
- CONCRETE
- WOOD
- e RATE OF SUPERELEVATION

## UTILITY ADJUSTMENT SYMBOLS

| | EXISTING | PROPOSED |
|---|---|---|
| POWER POLE | | |
| OVERHEAD POWER CABLE | OE(7.5KV) | OE(7.5KV) |
| TELEPHONE POLE | | |
| OVERHEAD TELEPHONE CABLE | OT(100PR) | OT(100PR) |
| COMBINATION POLE | | |
| GUY WIRE AND ANCHOR PIN | | |
| BURIED POWER CABLE | BE(7.5KV) | BE(7.5KV) |
| ELECTRIC DUCT | BE4MTD(7.5KV) | BE4MTD(7.5KV) |
| BURIED TELEPHONE CABLE | BT(200PR) | BT(200PR) |
| TELEPHONE DUCT | BT6MTD | BT6MTD |
| TOWER | | |
| LIGHT POLE | | |
| GAS MAIN | 6" GM | 6" GM |
| WATER MAIN | 6" WM | 6" WM |
| SANITARY SEWER | 6" SAN | 8" SAN |
| MANHOLE | | |
| WATER METER | | |
| VALVE | | |
| FIRE HYDRANT | | |
| UNDERGROUND CABLE TELEVISION | UG(CATV) | UG(CATV) |
| OVERHEAD CABLE TELEVISION | OH(CATV) | OH(CATV) |

FHWA APPROVED: 7-7-75

STATE OF FLORIDA DEPARTMENT OF TRANSPORTATION
ROAD DESIGN SECTION

STANDARD SYMBOLS FOR KEY MAPS AND PLAN SHEETS

| REVISIONS | |
|---|---|
| Date | Description |
| 4-75 | Up dated & New Index No. |

| | INITIALS | DATE |
|---|---|---|
| Designed by | C.D.P. | 8-72 |
| Checked by | C.O.R. | 8-72 |
| Quantities by | | |
| Checked by | | |
| Supervised by | D.C.B. | |

Recommended for approval by: E H Hart
Deputy Design Engineer - Roadways

Approved by: [signature]
State Design Engineer

Drawing No. 2 of 3 | Index No. GSS-01

# STANDARD SYMBOLS FOR PLAN SHEETS

## TRAFFIC SIGNALS SYMBOLS

| | EXISTING | PROPOSED |
|---|---|---|
| TRAFFIC SIGNAL HEAD (SPAN WIRE MOUNTED) | | |
| TRAFFIC SIGNAL HEAD (PEDESTAL MOUNTED) | | |
| TRAFFIC SIGNAL HEAD (MAST ARM MOUNTED) | | |
| TRAFFIC SIGNAL POLE (CONCRETE, WOOD, METAL) | | |
| VEHICLE DETECTOR (LOOP) | | |
| SIGNAL CABLE (ON MESSENGER WIRE) | | |
| CONDUIT | | |
| VEHICLE DETECTOR (OTHERS) | | |
| PEDESTRIAN DETECTOR (PUSHBUTTON) | | |
| PEDESTRIAN SIGNAL HEAD (POLE OR PEDESTAL MOUNTED) | | |
| CONTROLLER CABINET (BASE MOUNTED) | | |
| CONTROLLER CABINET (POLE MOUNTED) | | |
| WALK - DON'T WALK | W-DW | |
| FLASH | FL. | |
| SIGNAL FACE NUMBER | 5 | |
| ITEM NUMBER | 630-63 | |
| SIGNAL LENS | | |
| PROGRAMED SIGNAL HEAD | P | |
| MESSENGER WIRE | | |
| POLE TABULATION CROSS REFERENCE | 3 | |
| POLE TABULATION CROSS REFERENCE (JOINT USE POLE) | 3 | |
| SIGNAL PHASE | ∅ | |

## LIGHTING SYMBOLS

- NEW POLE & LUMINAIRE
- EXISTING POLE & LUMINAIRE
- EXISTING POLE & LUMINAIRE TO BE REMOVED
- FINAL POSITION OF RELOCATED OR ADJUSTED POLE & LUMINAIRE
- NEW HIGH MAST LIGHTING TOWER
- CITY OR UTILITY OWNED LUMINAIRE & POLE
- PVC (POLYVINYL CHLORIDE) LIGHTING CONDUIT AND CONDUCTORS
- RIGID GALVANIZED LIGHTING CONDUIT AND CONDUCTORS
- CONCRETE LIGHTING PULL-BOX
- WATERPROOF LIGHTING PULL-BOX
- LIGHTING DISTRIBUTION POINT
- NEW JOINT USE POLE
- EXISTING USE POLE
- UNDER DECK LIGHTING FIXTURE

## SIGNING AND PAVEMENT MARKING SYMBOLS

| | PROPOSED |
|---|---|
| PAVEMENT ARROW | |
| SINGLE SOLID LINE | |
| DOUBLE SOLID LINE | |
| SKIP LINE | |
| STOP BAR | |
| TRAFFIC SIGN (POST MOUNTED) | |
| TRAFFIC SIGN (OVERHEAD) | |
| SIGN NUMBER | 15 |
| SIGN ITEM NUMBER | T00-63 |
| TRAFFIC FLOW ARROW | |

FHWA APPROVED: 7-7-75

STATE OF FLORIDA DEPARTMENT OF TRANSPORTATION
ROAD DESIGN SECTION

STANDARD SYMBOLS FOR KEY MAPS AND PLAN SHEETS

| REVISIONS | | | INITIALS | DATE |
|---|---|---|---|---|
| DATE | DESCRIPTION | Designed by | C.D.P. | 8-72 |
| 6-75 | Up-dated & New Index No. | Checked by | C.O.R | 8-72 |
| | | Quantities by | | |
| | | Checked by | | |
| | | Supervised by | D.C.S. | |

Recommended for approval by:
E. Hart
Deputy Design Engineer - Roadways

Approved by:
State Design Engineer

Drawing No. 3 of 3
Index No. GSS-01

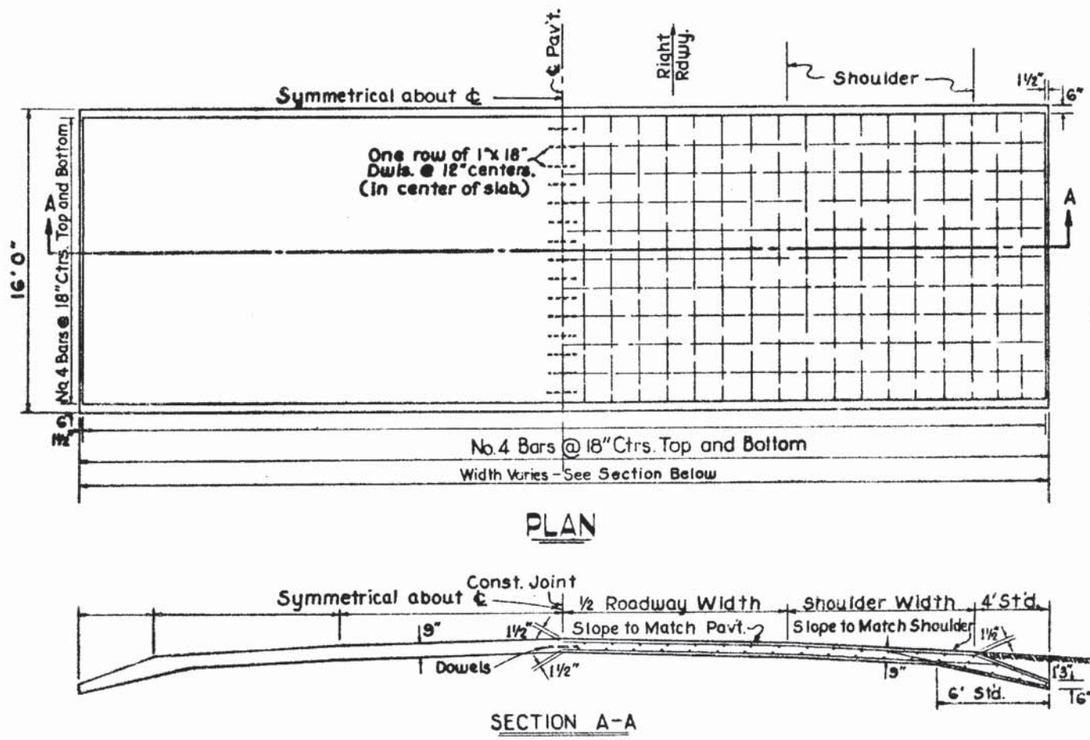


PLAN



SECTION A-A

**NOTE**
CLASS I CONCRETE IS TO BE USED UNLESS OTHERWISE NOTED IN PLANS OR SPECIAL PROVISIONS

## DETAIL OF TRACTOR CROSSING, TYPE "A"

REINFORCED CONCRETE

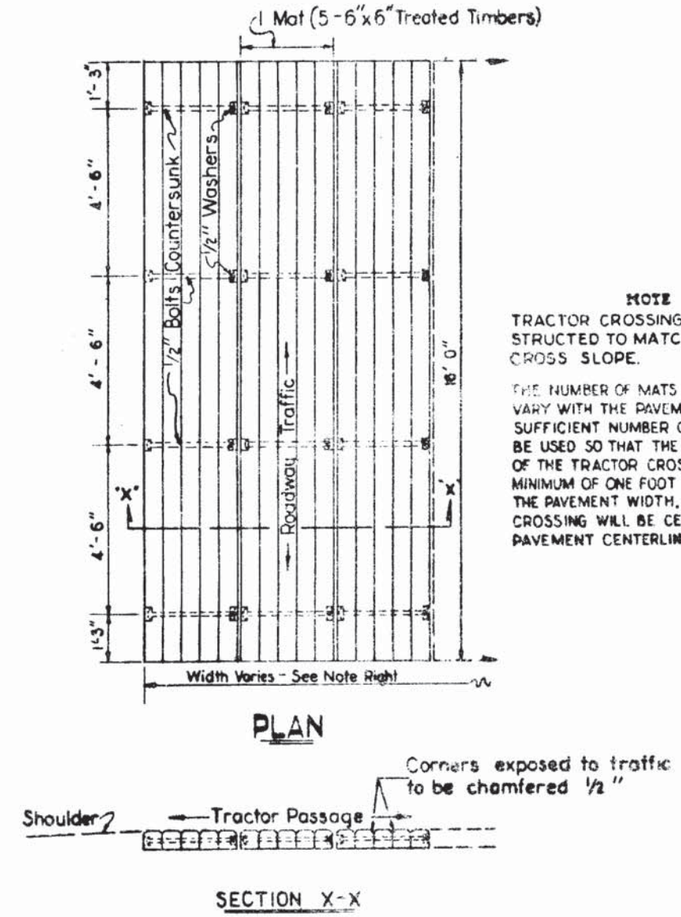


PLAN



SECTION X-X

**NOTE**
TRACTOR CROSSING TO BE CONSTRUCTED TO MATCH PAVEMENT CROSS SLOPE.

THE NUMBER OF MATS REQUIRED WILL VARY WITH THE PAVEMENT WIDTH. A SUFFICIENT NUMBER OF MATS WILL BE USED SO THAT THE OVERALL WIDTH OF THE TRACTOR CROSSING WILL BE A MINIMUM OF ONE FOOT GREATER THAN THE PAVEMENT WIDTH. THE TRACTOR CROSSING WILL BE CENTERED ON THE PAVEMENT CENTERLINE.

## DETAIL OF TRACTOR CROSSING, TYPE "B"

TREATED TIMBER

FHWA APPROVED: 3-20-75

FLORIDA DEPARTMENT OF TRANSPORTATION
ROADWAY PLANS SECTION

TRACTOR CROSSINGS

| REVISIONS | | ROAD NO. | COUNTY | | PROJECT NO. |
|---|---|---|---|---|---|
| Dates | Descriptions | | | | |
| 9/2/66 | Crossing Type "A" completely revised. GLR | | Names | Dates | Recommended For Approval by: C.H. Register, Engineer of Road Design |
| 3-73 | Added Class I Conc | Detailed by | L.H | Jan '61 | APPROVED BY |
| 10-74 | Changed Index No. | Checked by | C.D.D | Jan '61 | Asst. State Highway Engineer |
| | | Quantities by | | | |
| | | Checked by | | | Drawing No. 1 of 1 |
| | | Traced by | | | Index No. GTC-01 |

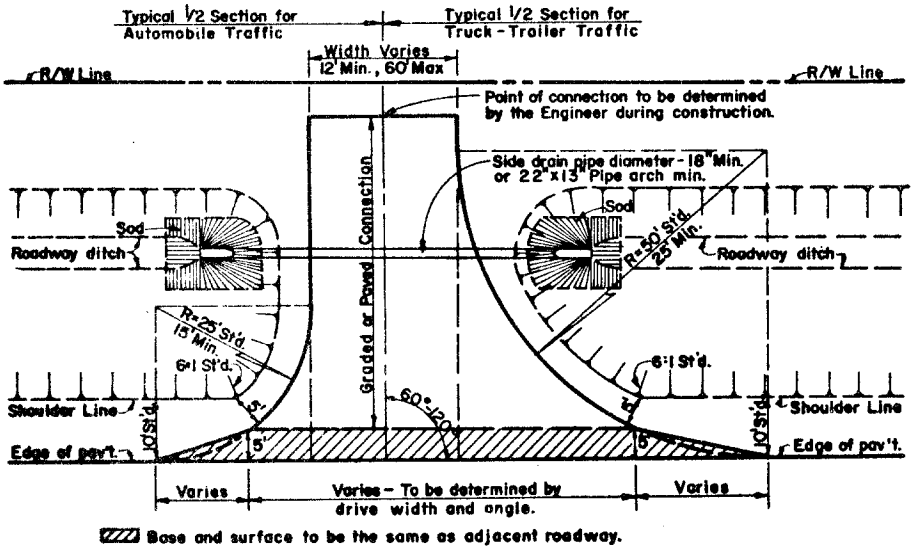


PLAN

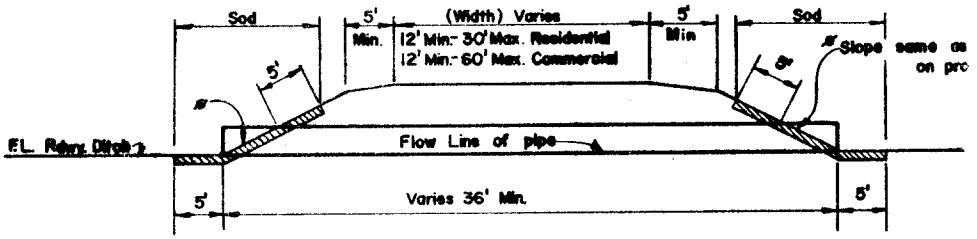


STANDARD SIDE DRAIN

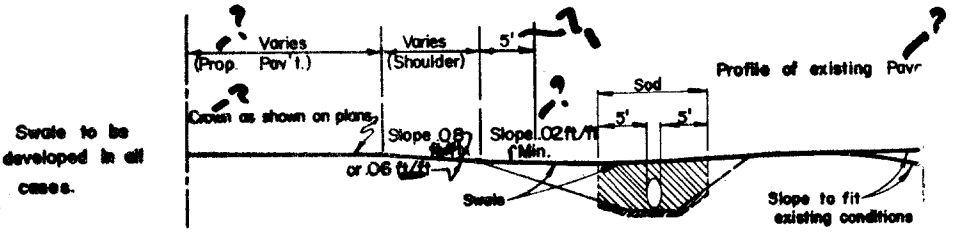


STANDARD PROFILE FOR TURNOUT

## DETAILS OF TURNOUT CONSTRUCTION TO PRIVATE PROPERTY AND GRADED ROADS

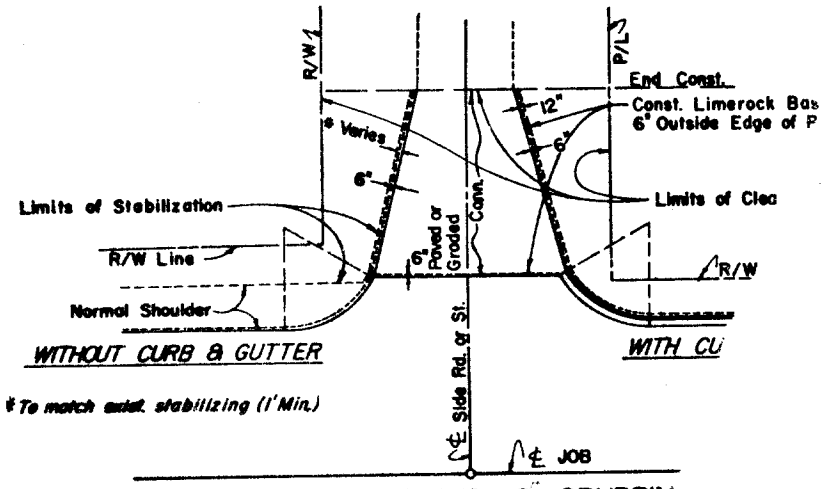


LIMITS OF CLEARING & GRUBBIN STABILIZING AT INTERSECT

Florida Department of Transportation

REUBIN O'D. ASKEW
GOVERNOR

Haydon Burns Building, 605 Suwannee Street, Tallahassee, Florida 32304, Telephone (904) 488-8772
TOM WEBB, JR.
SECRETARY

M E M O R A N D U M

December 29, 1976

To: All Holders of Standard Index Books

From: E. H. Hart, Deputy Design Engineer (Roadways) EH Hart

Copies To: Mr. P. E. Carpenter, FHWA

Subject: Standard Index GTO-01-1 and DME-01 (2 sheets)
Mitered End Sections for Side Drain Installation

---

Index GTO-01-1 has been revised and Index DME-01 has been added to provide for mitered end sections on side drain pipe up to 60" in diameter. Mitered end sections are to be used on all new construction and safety projects beginning with the March letting. Pipe grates are to be constructed when side drain pipe is 30" and larger.

Because of funding limitations, it will not be possible to upgrade side drain installations to provide mitered end sections in conjunction with normal resurfacing projects. Mitered end sections will be added on widening projects only when the widening necessitates the relocation or replacement of side drain pipe.

Referring to the Standard Index DME-01, Sheet 2 of 2, the intent of the note #6 is not to eliminate grates at these locations, but to insure that under potential problem situations, the site is evaluated. If the evaluation indicates, safe modifications such as using a larger size pipe would be an "appropriate adjustment". Deleting the grate bars would not be appropriate. Note 11 will allow the use of alternates with prior approval. An anticipated alternate might be some form of "U" endwall requested to replace mitered concrete pipe, due to potential production problems.

Index GTO-01-1

1. Details of turnout construction to private property and graded roads revised to provide for mitered end sections.
2. Limits of clearing and grubbing and stabilizing at intersections revised to show limits of base 3" outside edge of pavement and limits of stabilizing 9" outside.

....more....

3. General notes 2 and 3 revised.

Pay items for mitered end sections (side drain) have been established and entered in C.E.S.

Please destroy the copies of Index GTO-01 in your files and replace with the revised drawing.

EHH:rb

| FED. ROAD DIV. NO. | STATE | PROJECT NO. | FISCAL YEAR | SHEET NO. |
|---|---|---|---|---|
| 3 | FLA. | | | |

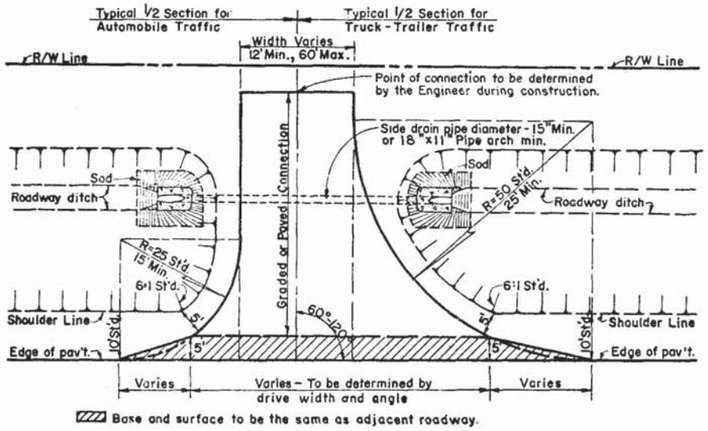


PLAN

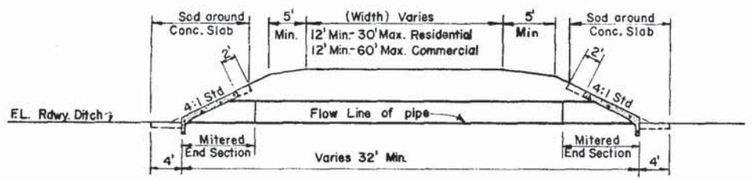


STANDARD SIDE DRAIN

NOTE: For details of Mitered End Section see Index No. DME-01.

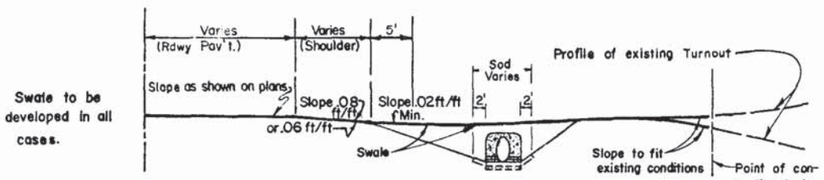


STANDARD PROFILE FOR TURNOUT

## DETAILS OF TURNOUT CONSTRUCTION TO PRIVATE PROPERTY AND GRADED ROADS

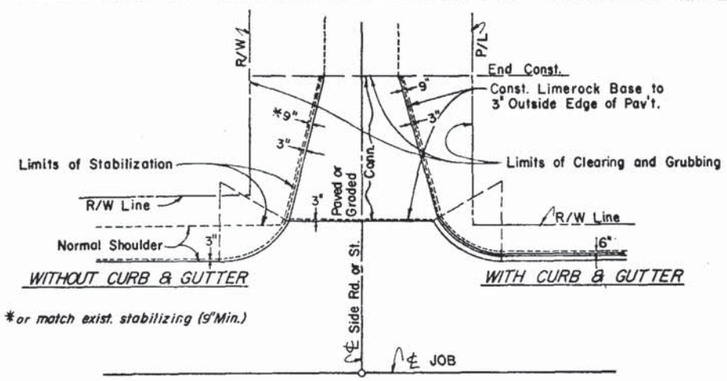


LIMITS OF CLEARING & GRUBBING AND STABILIZING AT INTERSECTIONS

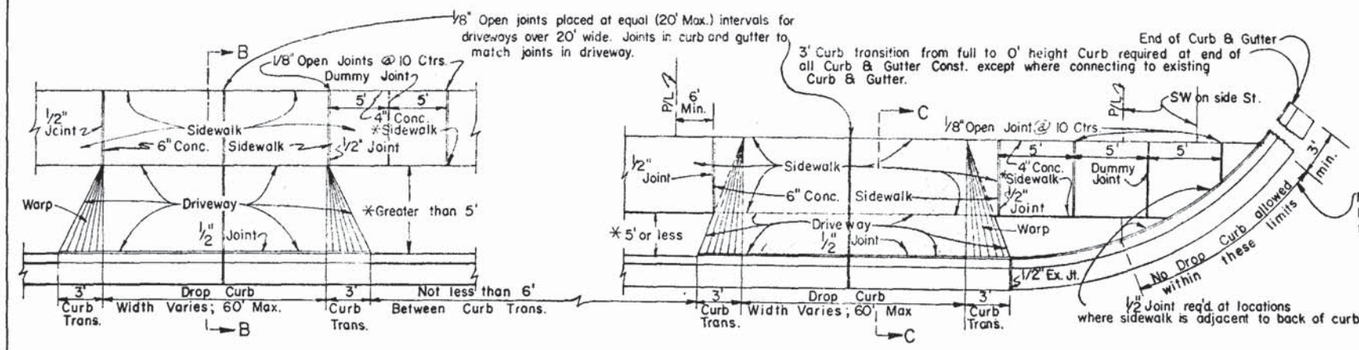


WHEN DISTANCE BETWEEN CURB & SIDEWALK IS GREATER THAN 5'

WHEN DISTANCE BETWEEN CURB & SIDEWALK IS 5' OR LESS

PLAN

NOTE: For detail of Drop Curb, See Index No. PCG-01.

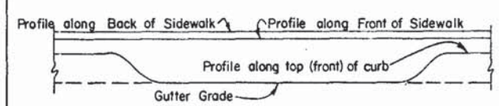


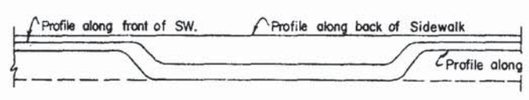


PROFILE

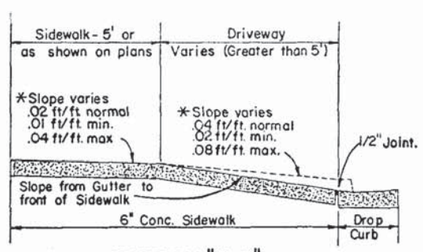


SECTION "B-B"

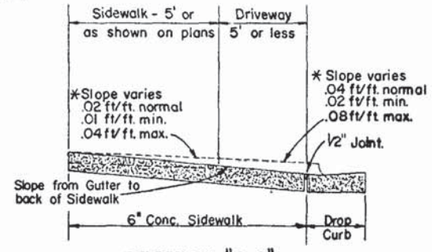


SECTION "C-C"

## DETAIL OF SIDEWALK AND PAVED DRIVEWAY CONSTRUCTION

* Slopes can be adjusted within the ranges shown to improve ties to adjacent property and are to be transitioned to avoid distortion in sidewalk continuity.

## GENERAL NOTES

1. No driveways, turnouts, or side drains are to be constructed without compensation for materials from the owner except for replacement of driveways, turnouts, and/or side drains existing at the time of beginning of const. of the project and if desired by the owner. All new or reconstructed driveways, turnouts, and side drains must conform to the size limits indicated above.
2. In a rural section where the abutting property owner desires installation of turnouts, the Department will construct or will allow the construction of a maximum of two 60' turnouts, to any business establishment or parcel of property, with a minimum of 25' of space between them.
3. In urban areas, at the request of the abutting property owner or his assignee, and to the extent that there is sufficient property, the Department will construct or will allow the construction of up to two entrances (drop curbs) of sixty feet each, maximum, separated by a minimum of six feet of curbing, but curbing shall be required around all corners.
4. In both urban and rural areas, wherever dual driveways are allowed, that portion of the Right-of-Way between the drives and outside the pavement limits of the highway shall be maintained as a "No-Parking-Area" and shall be suitably outlined by such fences, hedges, curbs, or other obstructions as are safe and effective.

## GENERAL STABILIZING NOTES

1. **No Stabilizing will be required for Paved Turnouts to Private Property.**
2. **Stable Material may be required for Unpaved Turnouts to Private Property as directed by the Engineer in accordance with Section 102-6 of the Standard Specifications.**

FHWA APPROVED: 12-6-76

STATE OF FLORIDA DEPARTMENT OF TRANSPORTATION
ROAD DESIGN SECTION

# TURNOUT DETAILS

| REVISIONS | | ROAD NO. | COUNTY | PROJECT NO. |
|---|---|---|---|---|
| Date | Description | | | |
| 9/73 | REDRAWN & NEW Nº | | | |
| 11/76 | Changed end protection for Side Drain Pipe. Changed limits of C&G and Stab. Rev. Gen. Notes 2 & 3. | | | |

| | Names | Date |
|---|---|---|
| Designed by | | |
| Checked by | | |
| Quantities by | | |
| Checked by | | |
| Supervised by | | |

APPROVED BY

Deputy Design Engineer - Roadways

Drawing No. 1 of 1

Index No. GTO-01-1

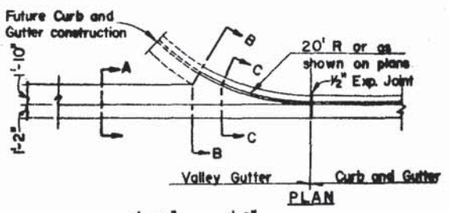


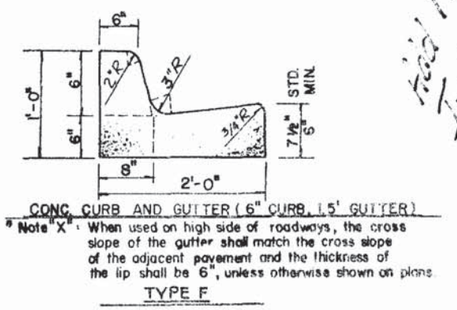


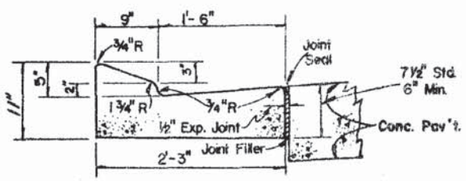


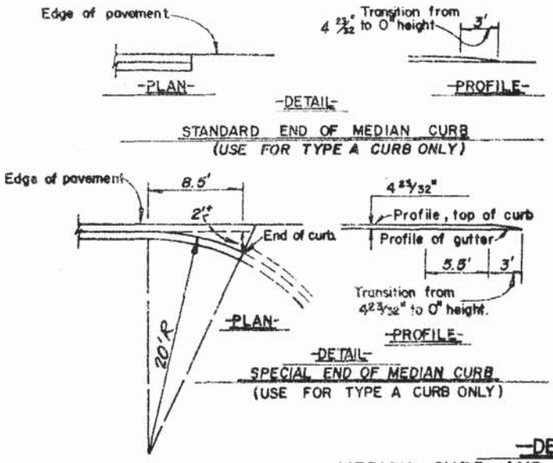


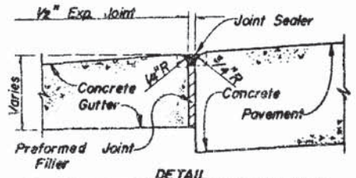


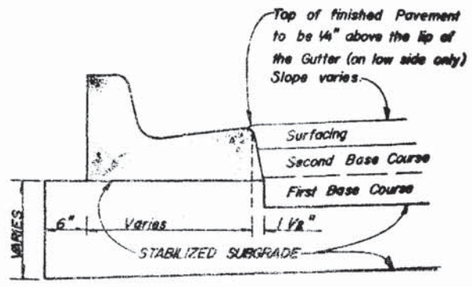


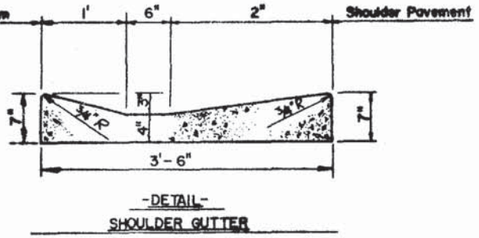


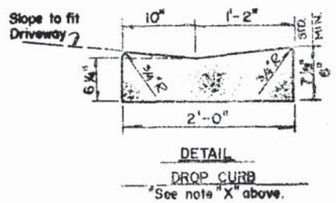


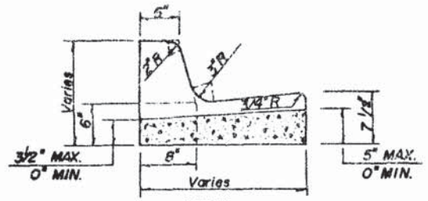


## -CONCRETE CURB AND GUTTER DETAILS-

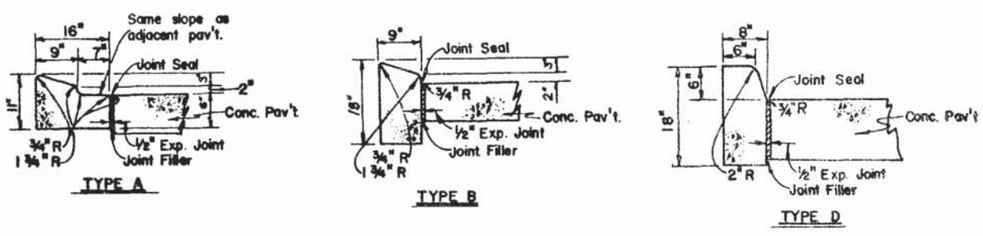


DETAILS OF CONCRETE CURB

Note: When Curb or Curb and Gutter is constructed adjacent to Flexable Pavement, the ½" Expansion Joint shown above will not be used.

### -GENERAL NOTES-

1. For Curb and Gutter and Traffic Separator provide ⅛"-¼" contraction joints at 10' centers.
2. All Curb and Gutter Details are shown for construction adjacent to Concrete Pavement, unless otherwise noted.

FHWA APPROVED: 7-7-75

FLORIDA DEPARTMENT OF TRANSPORTATION
ROADWAY PLANS SECTION
CURB, CURB AND GUTTER

| REVISIONS | | | INITIALS | DATES |
|---|---|---|---|---|
| Dates | Descriptions | Designed By | | |
| 6-79 | Redrawn | Checked By | | |
| 10-96 | Changed Index No. | Quantities By | | |
| | | Checked By | | |
| | | Supervised by | | |

Approved by:
E.B. Hart
Deputy Design Engineer - Roadways

DRAWING NO. 1 of 1
INDEX NO. PCG-01

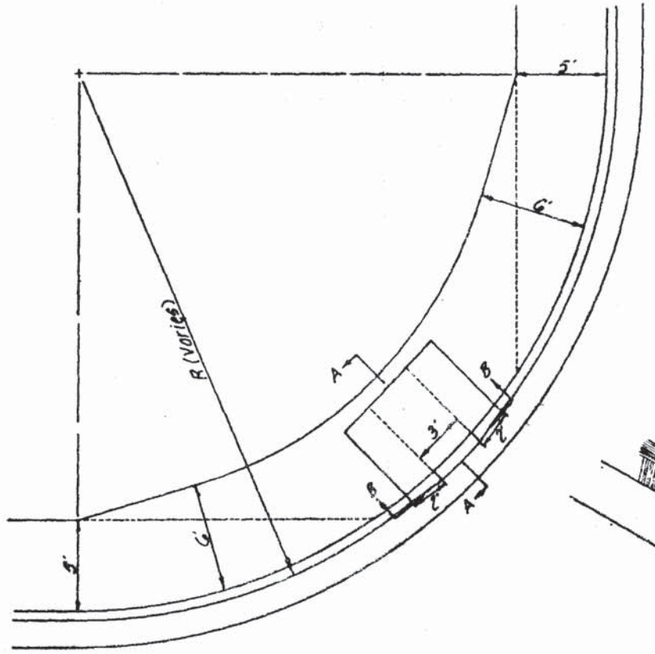


PLAN
SHOWING LOCATION TO MATCH CROSS WALK

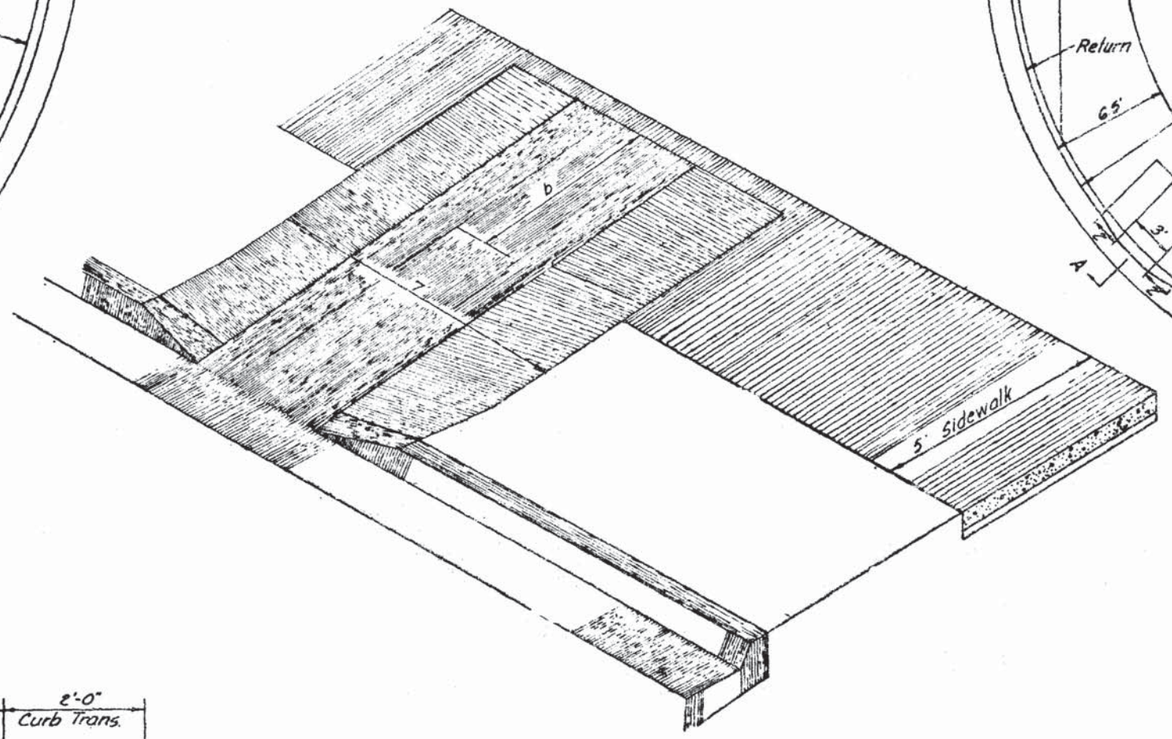


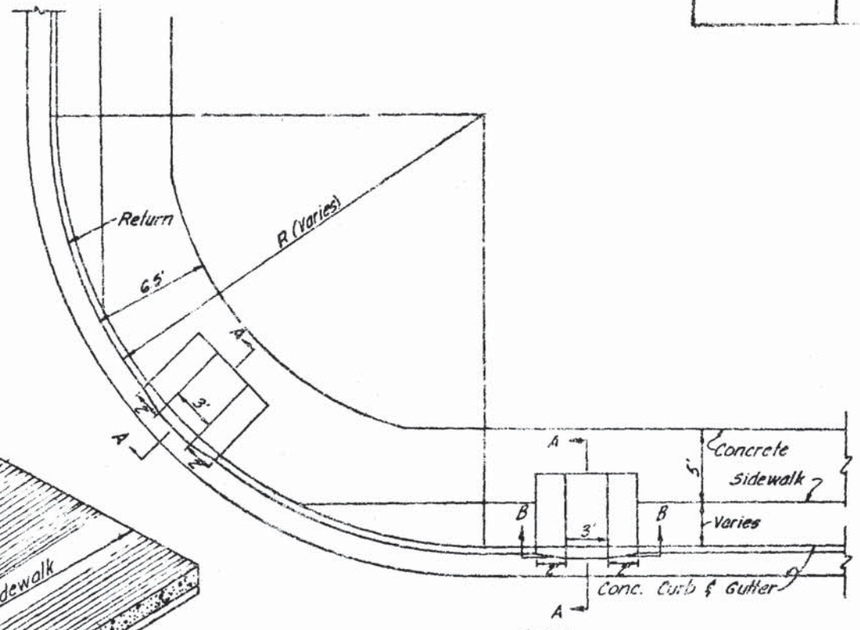


PLAN
SHOWING VARIOUS LOCATIONS TO MATCH CROSS WALKS

| S.W. | a | S.W.+0.10" | x | b |
|---|---|---|---|---|
| 5' | 0 | 5.8 | 6.8 | 6.0 |
| 6' | 0 | 6.8 | 6.8 | 6.0 |
| 7' | 0 | 7.8 | 7.3 | 6.5 |
| 8' | 0 | 8.8 | 7.3 | 6.5 |
| 5' | 2.0 | 7.8 | 7.8 | 5.0 |
| 5' | 2.5 | 8.3 | 8.1 | 4.8 |
| 5' | 3.0 | 8.8 | 8.3 | 4.4 |
| 5' | 3.5 | 9.3 | 8.4 | 4.1 |
| 5' | 4.0 | 9.8 | 8.6 | 3.8 |
| 5' | 4.5 | 10.3 | 8.7 | 3.4 |
| 5' | 5.0 | 10.8 | 8.9 | 3.1 |

b = distance from front edge of sidewalk to back point of 12:1 slope.

b = x - (a + 10")

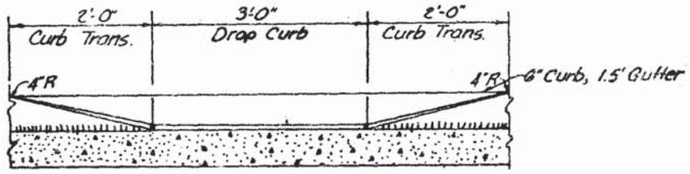


Section B-B

NOTES:

1. Ramp surface shall be constructed to conform to Section 522-7.2 of Florida Department of Transportation Standard Specifications. Ramp shall not exceed a maximum slope of 12:1.
2. Curb cut ramps are to be located as shown on the plans.
3. Basis of payment: contract unit price per Sq. Yd. of Concrete sidewalk.
4. Complete curb cut ramps are to be constructed at all locations shown on plans even when sidewalk is not constructed concurrently.

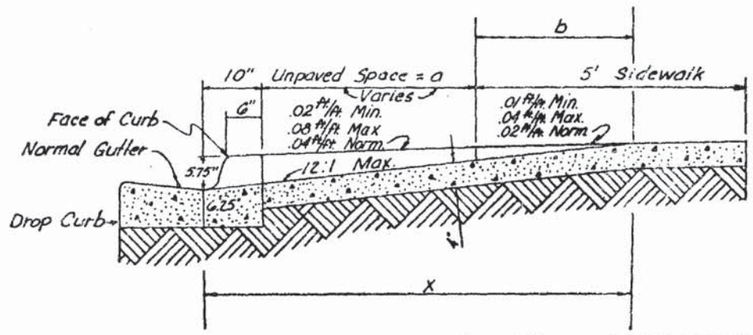


Section A-A

CURB CUT RAMP
FACILITY FOR PHYSICALLY HANDICAPPED

FHWA APPROVED: 8-20-75

**FLORIDA DEPARTMENT OF TRANSPORTATION**
Road Design Section
CURB CUT RAMP
FOR PHYSICALLY HANDICAPPED

| | INITIALS | DATES |
|---|---|---|
| Designed by | HLG | 2-74 |
| Checked by | OCB | 2-74 |
| Quantities by | | |
| Checked by | | |
| Supervised by | E.H.H. | |

Recommended for approval
by: _____
Deputy Design Engineer - Roadways
Approved
by: _____
State Design Engineer

| REVISIONS | |
|---|---|
| Dates | Descriptions |
| 10-74 | Changed Index No. |

DRAWING NO. 1 OF 1
INDEX NO. PCR-01

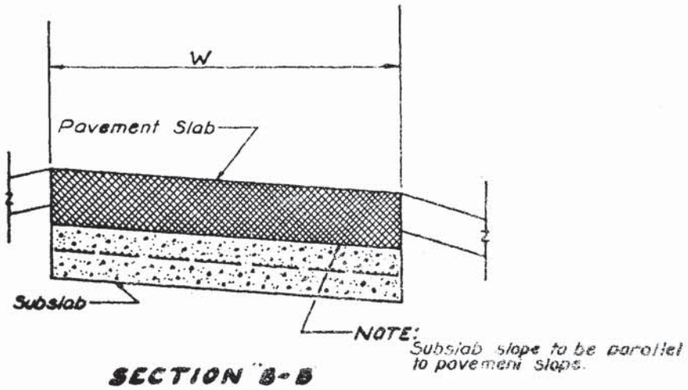


SECTION B-B

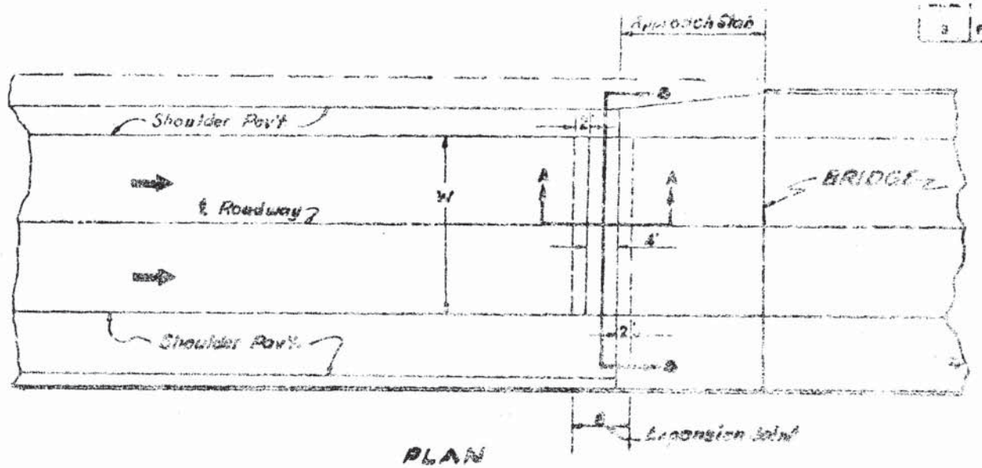


PLAN

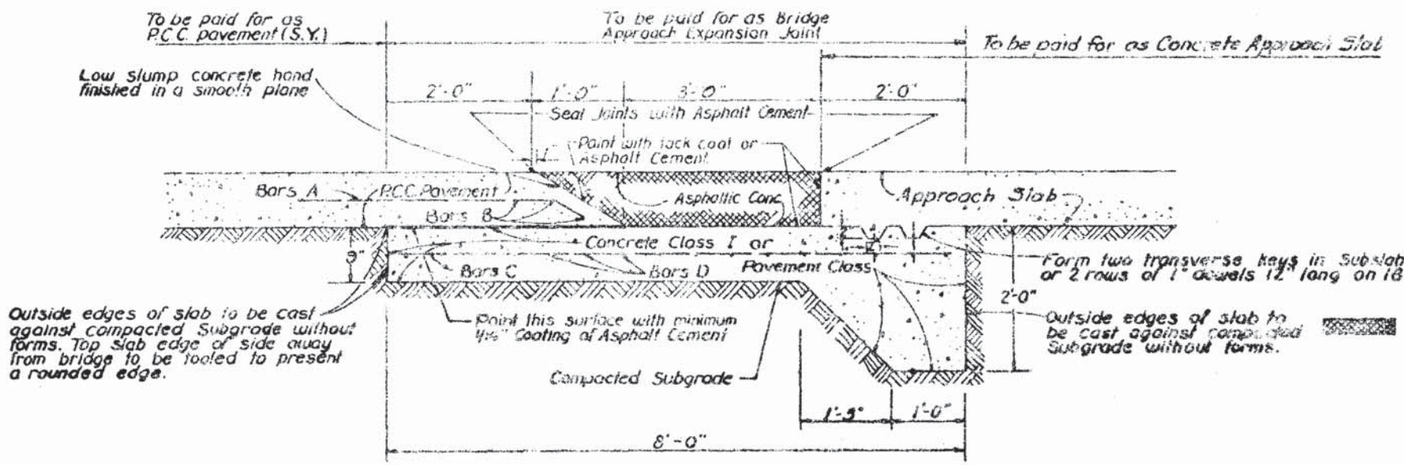


SECTION A-A

Asphaltic Concrete placed and compacted in layers not to exceed 2 inches compacted thickness.

NOTES:

(1) Basis of payment to be linear feet of transverse measure (W) of the complete joint including Subslab, Asphaltic Concrete, portion of pavement slab over the Subslab between the pay lines shown in Section A-A, and all additional excavation.

(2) Concrete in Subslab to be Class I or Concrete Pavement Class.

(3) Portions of Bars A which are outside of the indicated pay lines are to be included in the price bid for complete joint.

(4) For additional details see Index No. PJ-01.

(5) The ℄ of roadway and the ℄ of bridge do not necessarily coincide. Prior to the placement of the expansion joint, the ℄ of the roadway pavement shall be determined.

FHWA APPROVED: 3-20-75

| SCHEDULE OF REINFORCING STEEL | | | | | |
|---|---|---|---|---|---|
| MARK | SIZE | SPACING C-C | LENGTH | No. REQ'D | WEIGHT/FT. TRANSVERSE MEASURE LBS. |
| A | 5 | 12" | 4'-0" | (W) | 4.172 |
| B | 5 | 6" | W-4" | 3 | 3.129 |
| C | 4 | 6" | 7'-8" | (W)(2) | 10.240 |
| D | 4 | 6" | W-4" | 16 | 10.688 |

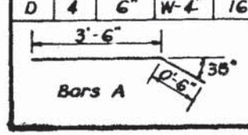


| APPROXIMATE QUANTITIES PER FOOT OF TRANSVERSE MEASURE | | |
|---|---|---|
| | MAIN LINE PAVEMENT DEPTH | |
| | 8" | 9" |
| Cu. Yds. Class I Conc. | 0.30 | 0.30 |
| Lbs. Reinforcing Steel | 28.23 | 28.23 |
| Tons Asphaltic Conc. | 0.156 | 0.175 |
| *Sq. Yds. P.C.C. Pavement | 0.28 | 0.28 |

*Note: Beveled portion of pavement slab has been converted to equivalent design depth of main line pavement.

FLORIDA DEPARTMENT OF TRANSPORTATION
ROADWAY PLANS SECTION

BRIDGE APPROACH EXPANSION JOINT FOR CONCRETE PAVEMENT

| REVISIONS | | ROAD NO. | COUNTY | PROJECT NO. |
|---|---|---|---|---|
| Date | Description | | | |
| 6/67 R.H.C. | Moved Joint to Approach Slab | | | |
| 4/71 L.M.F. | Added note No. 5 | | | |
| 3-73 | Added Cl. I Conc. | | | |
| 10-74 | Changed Index No. | | | |

| | Name | Date |
|---|---|---|
| Detailed by | W.L.B. | 4-65 |
| Checked by | E.H.H. | 4-65 |
| Quantities by | W.L.B. | 4-65 |
| Checked by | E.H.H. | 4-65 |
| Traced by | H.F.W. | 4-65 |

Recommended for Approval by C. D. Dunlap, Engineer of Road Design

APPROVED BY [signature], Asst. State Highway Engineer

Drawing No. 1 of 1 | Index No. PEJ-01

5084-C

Form 281-10

# MEMORANDUM

State of Florida Department of Transportation

DATE October 5, 1977

TO All Holders of Standard Index Books

FROM E. H. Hart, Deputy Design Engineer (Rdwys.)

COPIES TO

SUBJECT Standard Index Drawings

The following index drawings have been revised:

DCE-01-1 supersedes DCE-01. The chart showing data and quantities for metal pipe arch culverts was up-dated to 1974 AASHTO specifications.

DSE-01-1 supersedes DSE-01. The chart showing data and quantities for metal pipe arch culverts was up-dated to 1974 AASHTO specifications.

DCE-04-1 supersedes DCE-04. This index has been redrawn. The general notes were revised, design notes were added, a detail for a reinforced concrete jacket was added and sheet 2 which showed the grate details and requirements has been deleted.

PEJ-02-1 supersedes PEJ-02. This index was revised to show the joint extended across the shoulder pavement when the shoulder pavement is constructed with either concrete or econocrete. Details and notes were added or deleted as needed for this revision.

All projects whose scheduled letting will not be delayed should be reviewed for the utilization of these revised indices.

Please destroy all copies of these indices in your files and replace with the revised index drawings.

EHH:LMF:jl

| FED. ROAD DIV. No. | STATE | PROJECT No. | FISCAL YEAR | SHEET No. |
|---|---|---|---|---|
| 3 | FLA. | | | |

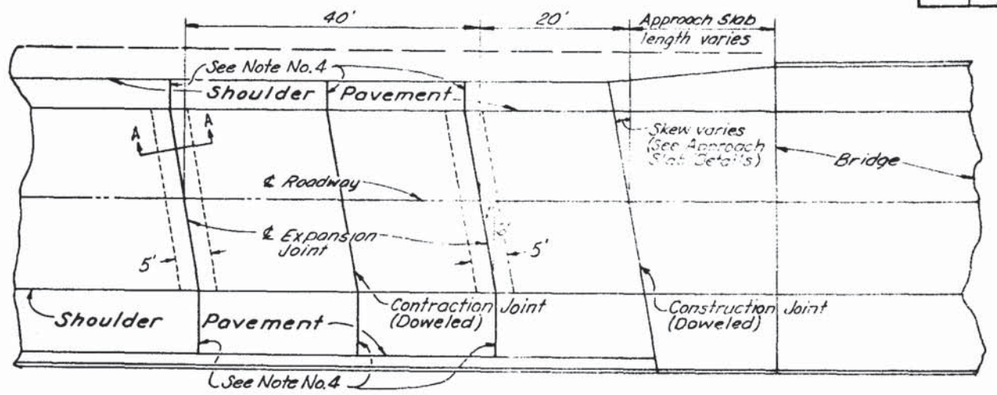


PLAN

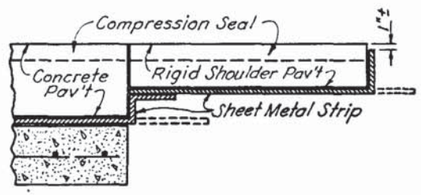


DETAIL SHOWING RIGID SHOULDER PAVEMENT

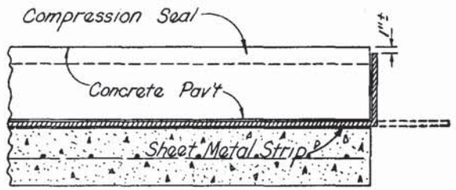


DETAIL SHOWING SHEET METAL STRIP

Note: Immediately prior to placing the seal, the joint shall be thoroughly cleaned of all foreign material. Immediately after the seal is placed, sheet metal strip shall be bent up against the pavement edge.

The sheet metal strip shall be a minimum 16 gage steel, 12" wide and shall be galvanized in accordance with ASTM A-526, Coating Designation G90.

## GENERAL NOTES

1. Quantity of Expansion Joint to be determined by measurement along the entire length of the joint.
2. For additional details see Index No. PJ-01.
3. The ℄ of roadway and the ℄ of bridge do not necessarily coincide. Prior to the placement of the expansion joint, the ℄ of the roadway pavement shall be determined.
4. When the shoulder pavement is constructed with either concrete or econocrete the expansion joints and contraction joints shall be continued across the shoulder pavement. See detail for construction in rigid shoulder pavement.

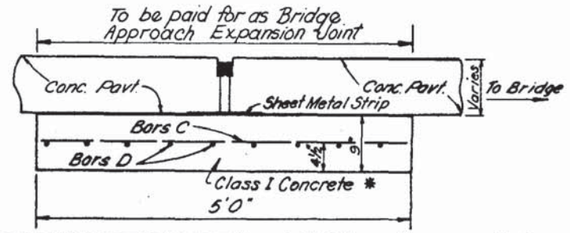


| REINFORCING STEEL | | | | |
|---|---|---|---|---|
| MK | SIZE | SPAC. | NO. REQ. | LGTH |
| C | 5 | 6" | Varies | 4'6" |
| D | 5 | 6" | 9 | W-4" |

* Finish surface smooth. Cure with heavy coating of wax base white pigmented curing compound. Apply second application immediately prior to placing pavement.

SECTION A-A
THROUGH EXPANSION JOINT

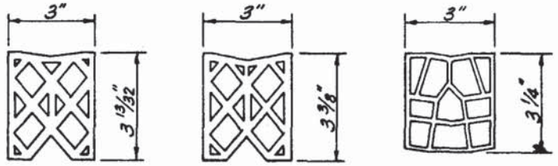


SECTION THRU SEALS
Either of the three Seals shown may be used.

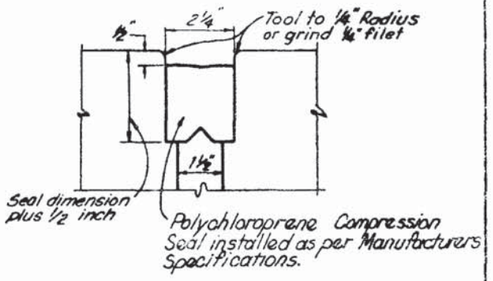


COMPRESSION SEAL DETAIL

Note: All contacting surfaces between the Compression Seal and Concrete shall be thoroughly coated with a lubricating adhesive.

FHWA APPROVED: 8-16-77

FLORIDA DEPARTMENT OF TRANSPORTATION
Road Design Section

BRIDGE APPROACH EXPANSION JOINT FOR CONCRETE PAVEMENT

| REVISIONS | | | INITIALS | DATES |
|---|---|---|---|---|
| Dates | Descriptions | Designed by | LMF | 6-75 |
| July 1977 | Extended Joint across shoulder | Checked by | SFA | 6-75 |
| | | Quantities by | | |
| | | Checked by | | |
| | | Supervised by | EHH | |

Approved by:

Deputy Design Engineer - Roadway

DRAWING NO. 1 of 1

INDEX NO. PEJ-02-1

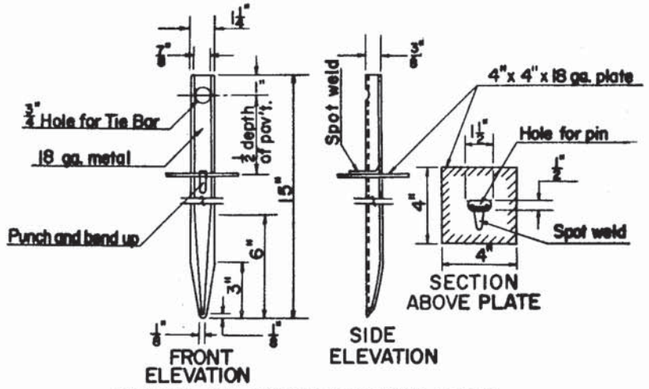


## DETAIL OF CHAIR FOR TIE BARS

OTHER CHAIR OR SUPPORT MAY BE APPROVED BY THE ENGINEER

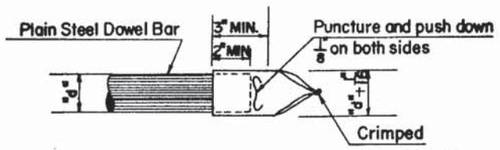


## DETAIL OF METAL CAPS FOR DOWEL BARS

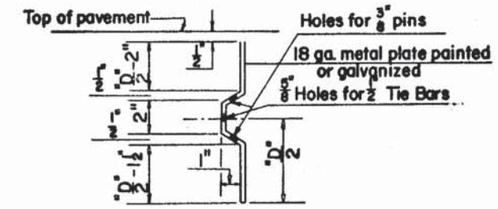


## DETAIL OF DEFORMED METAL PLATE

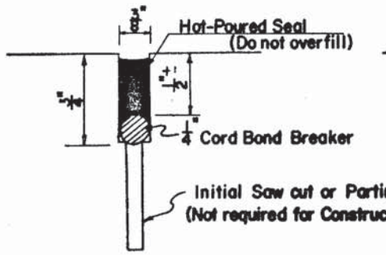


## HOT-POURED SEAL CORD TYPE BOND BREAKER

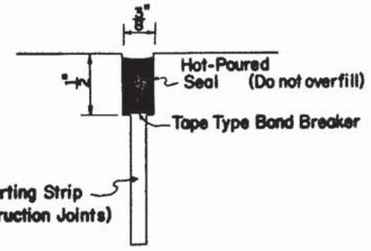


## HOT-POURED SEAL TAPE TYPE BOND BREAKER

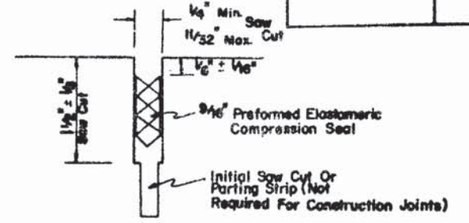


## PREFORMED ELASTOMERIC COMPRESSION SEAL

## JOINT SEALANT DETAILS

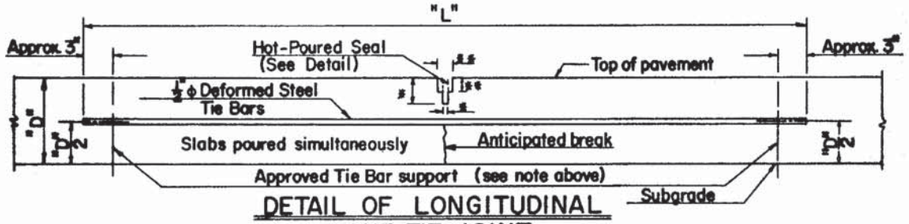


## DETAIL OF LONGITUDINAL LANE-TIE JOINT

Note: Tie bars may be inserted in the plastic concrete by means approved by the Engineer.

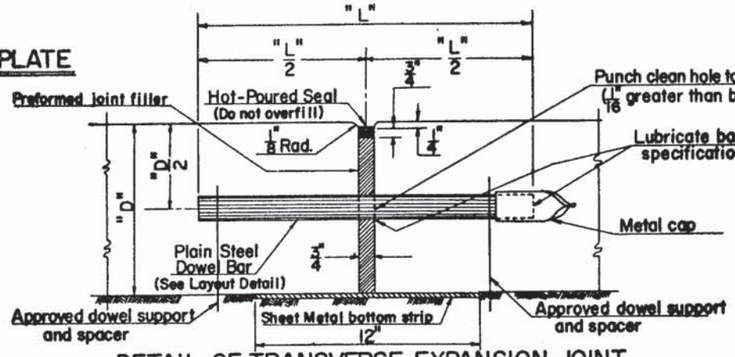


## DETAIL OF TRANSVERSE EXPANSION JOINT

EXPANSION JOINTS TO BE PLACED AT JUNCTIONS WITH APPROACH SLAB, AT STREET INTERSECTIONS AND OTHER LOCATIONS INDICATED IN DETAIL PLANS.

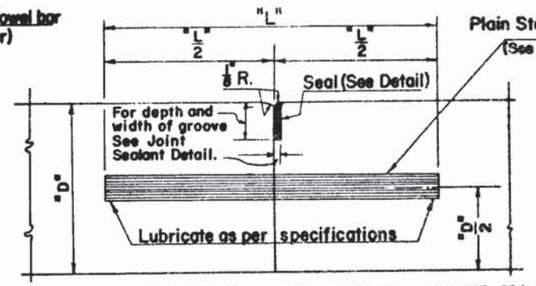


## DETAIL OF BUTT CONSTRUCTION JOINT TO BE USED AT DISCONTINUANCES OF WORK

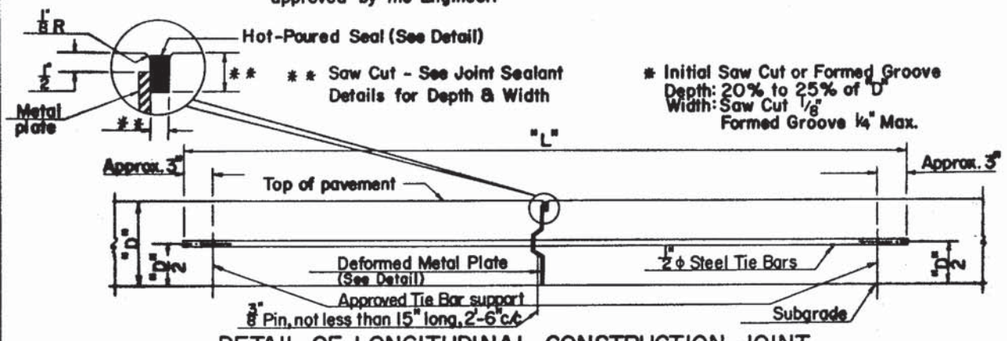


## DETAIL OF LONGITUDINAL CONSTRUCTION JOINT

Note: Metal plate optional. Keyway may be formed by bolting shaped timber to the side form or by extrusion from slip-form paver. Alternate keyway shape and tie bar details may be approved by the Engineer.

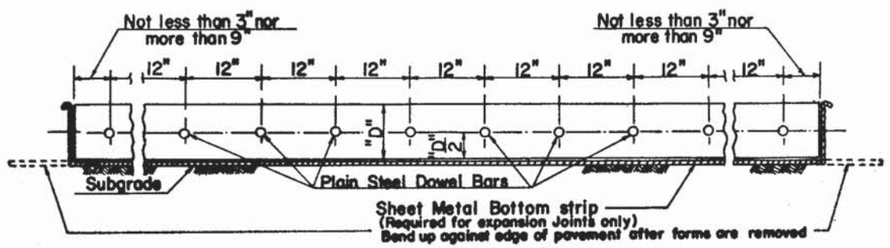


## DOWEL BAR LAYOUT

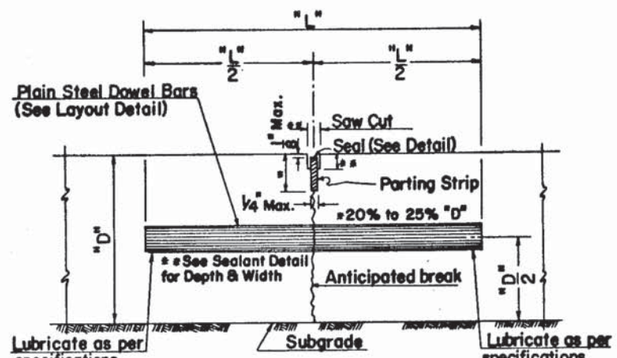


## DETAIL OF TRANSVERSE CONTRACTION JOINT, VIBRO CAST METHOD

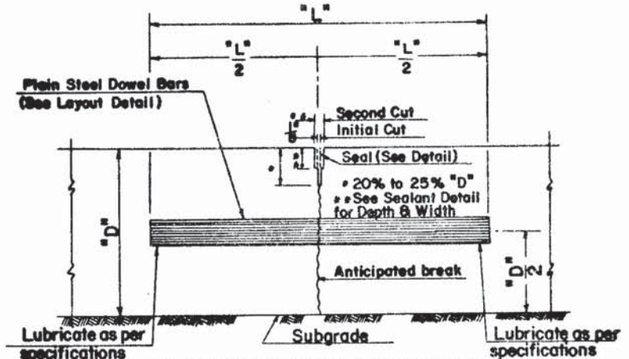


## DETAIL OF TRANSVERSE CONTRACTION JOINT, SAWED METHOD

CONTRACTION JOINTS TO BE SPACED AT 20' INTERVALS. DOWELS REQUIRED ONLY AT FIRST FIVE JOINTS ADJACENT TO EXPANSION JOINTS OR END OF PAVEMENT EXCEPT AS OTHERWISE INDICATED IN DETAIL PLANS.

| MAX. SPACING FOR 1/2" φ TIE BARS | | |
|---|---|---|
| PAVEMENT THICKNESS ("D") | LENGTH OF BARS (inches) | SPACING OF BARS (inches) |
| 6" | 24" | 47" |
| 7" | 24" | 40" |
| 8" | 24" | 35" |
| 9" | 24" | 31" |

| DOWEL REQUIREMENTS | | |
|---|---|---|
| PAVEMENT THICKNESS ("D") | DOWEL dia. (inches) | DOWEL LENGTH "L" (inches) |
| 6" | 1" | 18" |
| 7" | 1" | 18" |
| 8" | 1" | 18" |
| * 9" | 1" | 18" |

* Provide 1 1/8" Diam. dowels at Expansion Joints and Butt Construction joints.

FHWA APPROVED: 3-20-75

FLORIDA DEPARTMENT OF TRANSPORTATION
Road Design Section

# CONCRETE PAVEMENT JOINTS

| REVISIONS | | | INITIALS | DATES |
|---|---|---|---|---|
| Dates | Descriptions | Designed by | | |
| 9-73 8.5 | Changed Joint Details(Redrawn) | Checked by | | |
| 10-74 | Changed Index No. on all Sheets | Quantities by | | |
| | | Checked by | | |
| | | Supervised by | LMF | |

Recommended for approval by _____ Deputy Design Engineer - Roadways

Approved by _____ State Design Engineer

DRAWING NO. 1 OF 3

INDEX NO. PJ-01

STATE PROJ. NO.

SHEET NO.

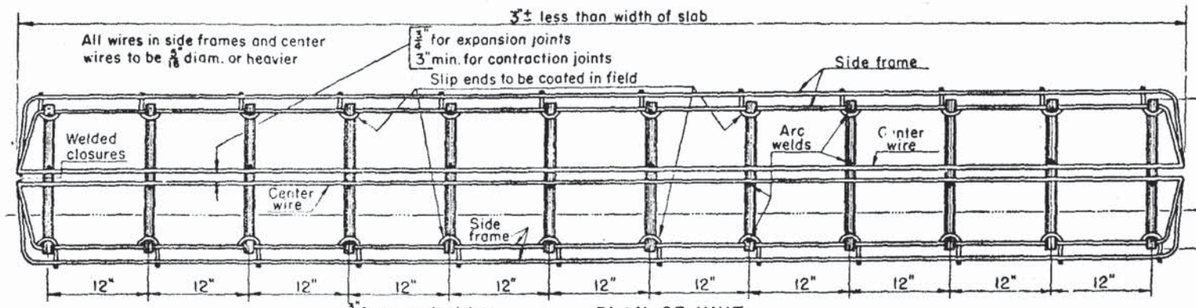


PLAN OF UNIT

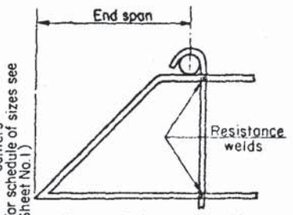


DETAIL OF SIDE FRAME

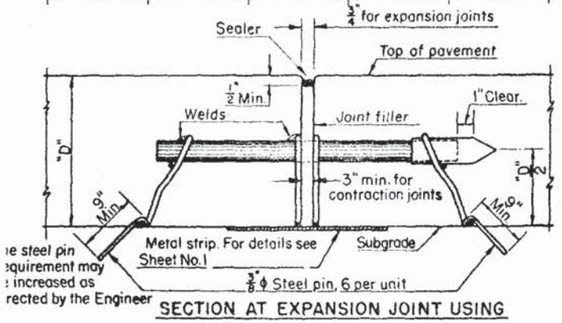


SECTION AT EXPANSION JOINT USING TYPE I CENTER WIRE

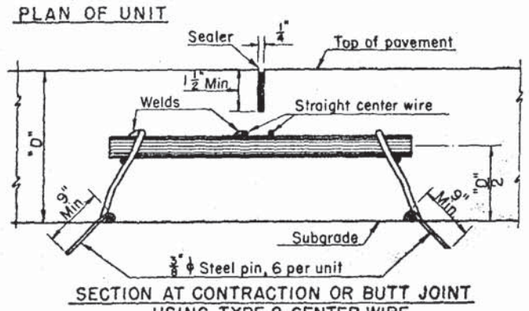


SECTION AT CONTRACTION OR BUTT JOINT USING TYPE 2 CENTER WIRE



SECTION "A"-"A" SHOWING TYPE I CENTER WIRE

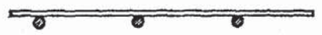

SECTION "A"-"A" SHOWING TYPE 2 CENTER WIRE

## DETAILS OF BETHLEHEM DOWEL UNIT ALTERNATE

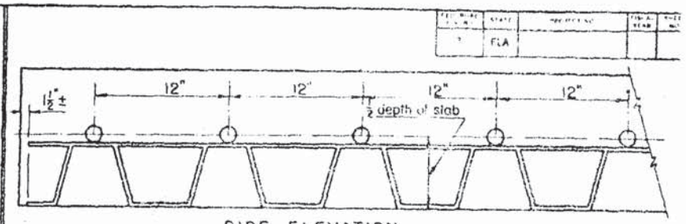


SIDE ELEVATION

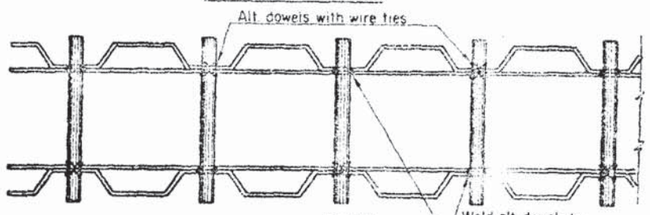


PLAN

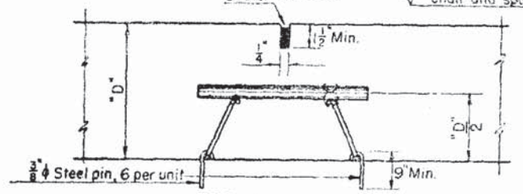


END ELEVATION

DETAIL OF CONTRACTION ASSEMBLY

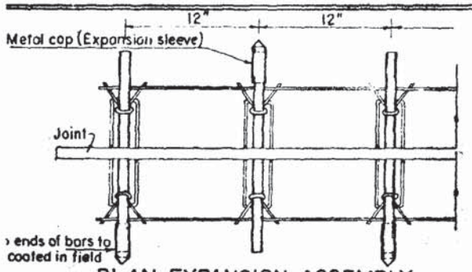


PLAN EXPANSION ASSEMBLY

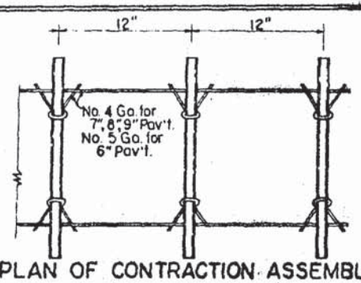


PLAN OF CONTRACTION ASSEMBLY

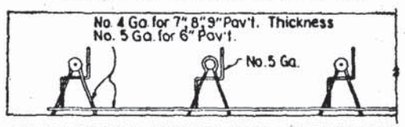


ELEVATION EXPANSION ASSEMBLY

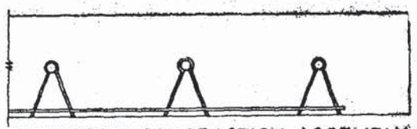

ELEVATION CONTRACTION ASSEMBLY

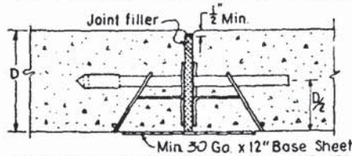


SECTION THRU EXPANSION JOINT ASSEMBLY

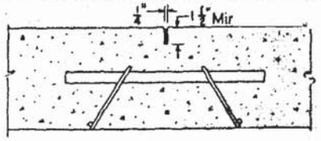


SECTION THRU CONTRACTION JOINT ASSEMBLY

## EXPANSION AND CONTRACTION JOINT DOWEL ASSEMBLY ALTERNATE
## FLORIDA STEEL CORPORATION

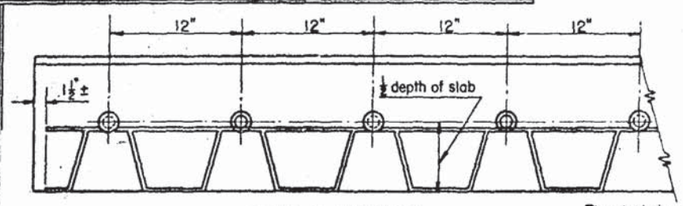


SIDE ELEVATION

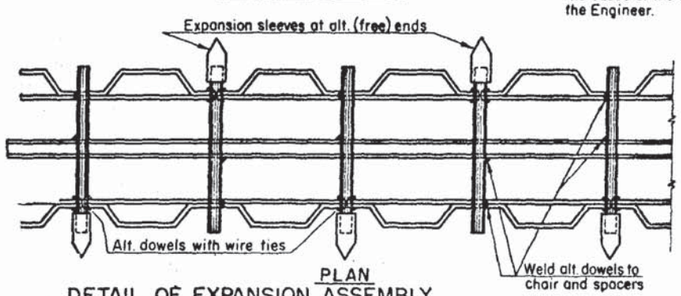


PLAN

DETAIL OF EXPANSION ASSEMBLY

## EXPANSION AND CONTRACTION JOINT DOWEL ASSEMBLY ALTERNATE
## VIRGINIA STEEL CO., INC.

ALL ASSEMBLY BARS $\frac{5}{16}$" ϕ PLAIN

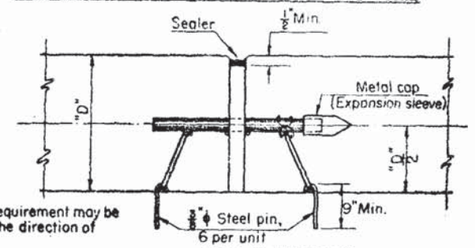


The steel pin requirement may be increased at the direction of the Engineer.

END ELEVATION

### GENERAL NOTES

Any other dowel bar support or assembly (except a cantilever design) which meets the approval of the Engineer, may be used at the option of the Contractor.

For details not shown on this sheet refer to Sheet Nos. 1 & 3.

FHWA APPROVED: 5-20-75

FLORIDA DEPARTMENT OF TRANSPORTATION
ROADWAY PLANS SECTION

# CONCRETE PAVEMENT JOINTS

| REVISIONS | | ROAD NO. | COUNTY | | PROJECT NO. |
|---|---|---|---|---|---|
| Dates | Descriptions | | | | |
| 03/69 | Added Note re Keyway on 1C bar | | Name | Date | Recommended For Approval by: Engrg. Res. Engr. + Roadways |
| RHC 10/69 | Approved by Engineer Changed Word or to And in Keyway Note. | Detailed by | | | |
| GF | | Checked by | | | APPROVED BY |
| 6/71 | Rev. Trans. Contr. (Y. dir.) | Quantities by | | | |
| LF | Added "B" Steel Details Added Sheet 3 | Checked by | | | State Design Engineer |
| | | Traced by | h.w. | 8-57 | Index No. 2 of 3 PJ-01 |

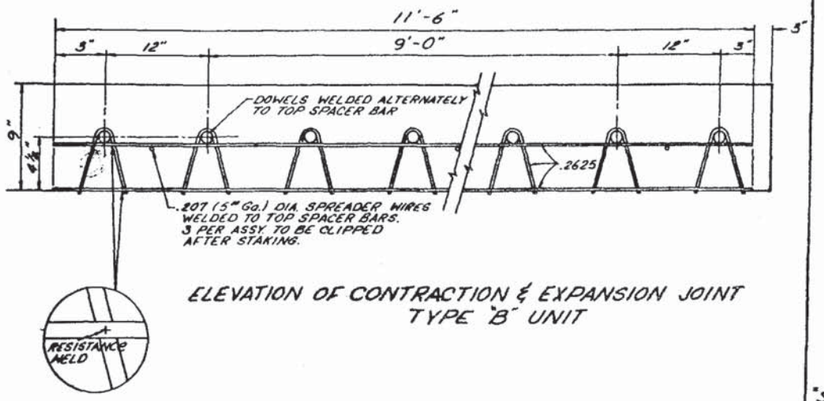


ELEVATION OF CONTRACTION & EXPANSION JOINT
TYPE 'B' UNIT

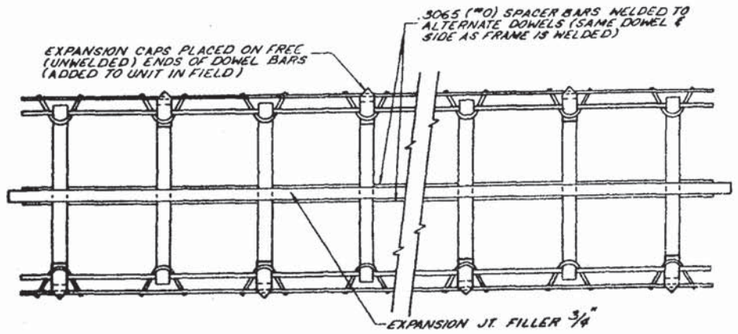


PLAN
TYPE "B" UNIT

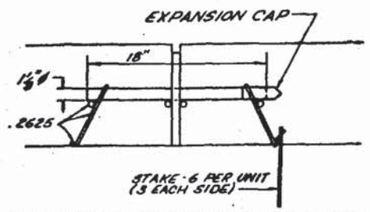


SECTION THROUGH EXPANSION JOINT UNIT

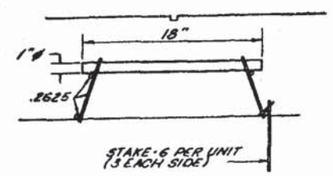


SECTION THROUGH CONTRACTION JOINT UNIT

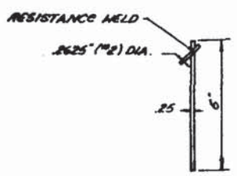


STAKE DETAIL

EXPANSION AND CONTRACTION JOINT DOWEL ASSEMBLY
ALTERNATE

L & L. STEEL COMPANY, INC.
Birmingham, Ala.

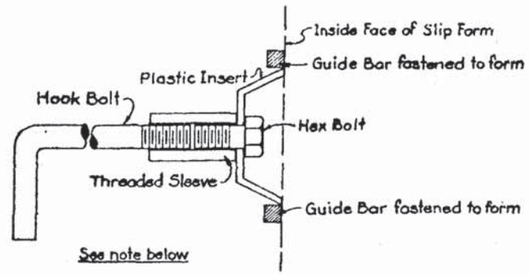


ALTERNATE KEYWAY AND TIE BAR

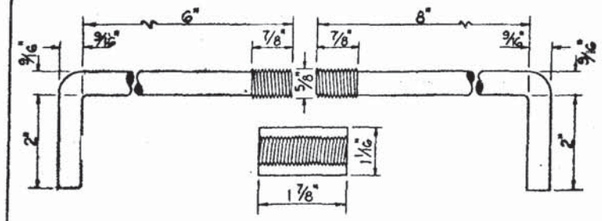


DETAIL FOR STEEL HOOK BOLT ASSEMBLY

NOTE: After the concrete has set to the extent that the Keyway will retain its shape, the hex bolt and plastic insert shall be removed. The remaining portion of the hook bolt assembly shall be installed immediately prior to placing of concrete in the adjacent lane.

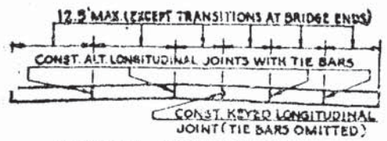


TYPICAL SECTION FOR
MULTI-LANE CONSTRUCTION

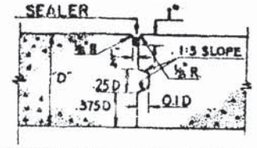


DETAIL OF KEYED JOINT

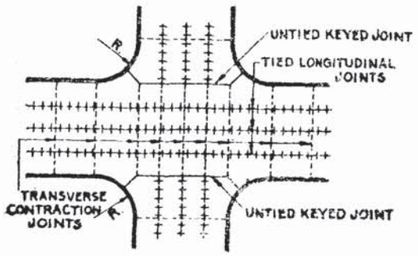


JOINT LAYOUT AT THRU
INTERSECTION

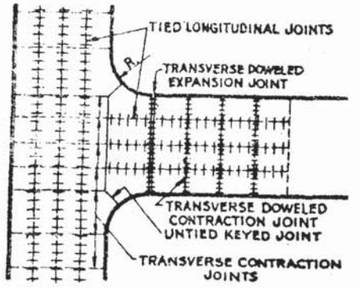


JOINT LAYOUT AT "T" OR
OFFSET INTERSECTION

## GENERAL NOTES

1 LONGITUDINAL JOINTS WILL NOT BE REQUIRED FOR SINGLE LANE PAVEMENT 16' OR LESS IN WIDTH.
2. WHEN PAVEMENT WIDTH NECESSITATES FIVE OR MORE LONGITUDINAL JOINTS PROVIDE ONE OR MORE UNTIED BUT KEYED JOINTS, (NO JOINT SHALL BE TIED THAT IS MORE THAN TWO LANES FROM A FREE EDGE OR FREE JOINT.)
3 ARRANGEMENT OF LONGITUDINAL JOINTS NOT SHOWN ON TYPICAL SECTION TO BE AS DIRECTED BY THE ENGINEER.
4 ALL MANHOLES, METER BOXES AND OTHER PROJECTIONS INTO THE PAVEMENT SHALL BE BOXED-IN WITH ½" PREFORMED EXPANSION JOINT MATERIAL.

DETAIL OF JOINT ARRANGEMENT

| Fed. Road Dist. No. | State | Project No. | Fiscal Year | Sheet No. |
|---|---|---|---|---|
| 3 | FLA. | | | |

FHWA APPROVED: 3-20-75

FLORIDA DEPARTMENT OF TRANSPORTATION
ROADWAY PLANS SECTION

# CONCRETE PAVEMENT JOINTS

| REVISIONS Date | Description | ROAD NO. | COUNTY | | PROJECT NO. |
|---|---|---|---|---|---|
| | | | | | |
| | | | Names | Dates | Recommended For Approval by: E.H. Hart, Roadway Design Engineer |
| | | Detailed by | LMF | 6-71 | APPROVED BY: Roadway Design Engineer |
| | | Checked by | | | |
| | | Quantities by | | | |
| 5-75 | Added Joint Dowel Assembly Alternate | Checked by | | | Drawing No. 3 of 3 |
| | | Traced by | | | Index No. PJ-01 |

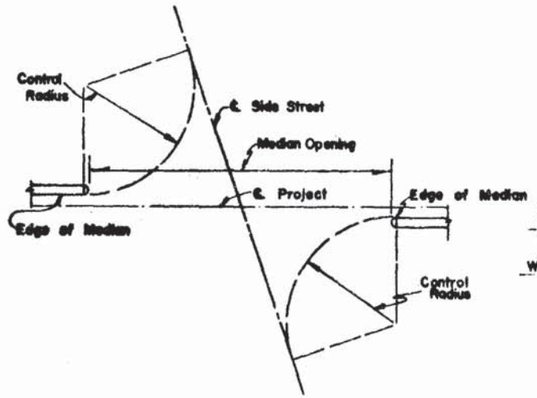


| DESIGN VEHICLE | MEDIAN OPENING 90° | CONTROL RADIUS EDGE OF LANE |
|---|---|---|
| P | 76 | 40' |
| SU | 96 | 50' |
| WB-40&WB-50 | 146 | 75' |

METHOD OF DETERMINING MEDIAN OPENINGS AT SKEWED SIDE STREETS

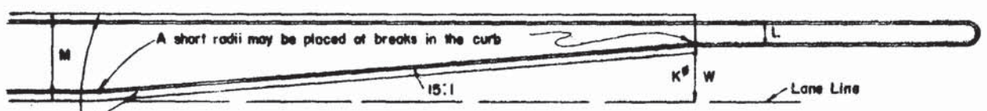


MEDIAN STORAGE LANE-ALT. I

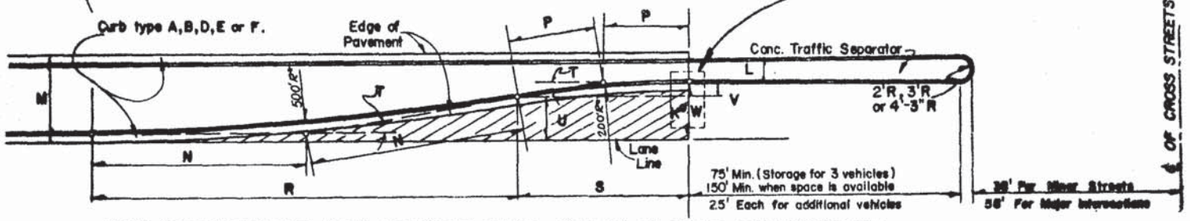


* Radii are measured from face of curb, regardless of curb type. These radii are minimums recommended for urban construction. For rural primary construction, the radii are to be in conformity with the design speed of the highway where practicable.

* Dimensions K and W are identical except when median curb is type D or curb and gutter type F. Dimension K is from lane line to the face of curb. Dimension W is from lane line to traffic separator.

-DETAILS OF MEDIAN STORAGE LANE- ALT II

*NOTE: HACHURED PORTION INDICATES AREA GIVEN IN TABLE BELOW*

TABLE OF DIMENSIONS AND QUANTITIES FOR MEDIAN STORAGE LANES

| L | M | CURB TYPE | N | P | R | S | T | U | V | K* | W | AREA SQ.FT. |
|---|---|---|---|---|---|---|---|---|---|---|---|---|
| 4' | 15'-6" | A | 43.12' | 17.25' | 85.60' | 34.24' | 09° 51' 25.3" | 7.96' | 2.95' | 10'-11" | 10'-11" | 529.8 |
| | | B | 45.50' | 18.20' | 90.26' | 36.10' | 10° 24' 00.1" | 8.21' | 3.29' | 11'-6" | 11'-6" | 622.1 |
| | | D | 45.50' | 18.20' | 90.26' | 36.10' | 10° 24' 00.1" | 8.38' | 3.12' | 11'-8" | 11'-6" | 622.0 |
| | | E | 39.09' | 15.63' | 77.68' | 31.07' | 08° 56' 16.7" | 7.57' | 2.43' | 10'-0" | 10'-0" | 395.2 |
| | | F | 39.84' | 15.94' | 79.18' | 31.67' | 09° 06' 42.8" | 7.81' | 2.36' | 10'-4" | 10'-2" | 418.6 |
| 4' | 17'-6" | A | 47.14' | 18.86' | 93.44' | 37.38' | 10° 46' 16.8" | 9.39' | 3.52' | 12'-11" | 12'-11" | 690.2 |
| | | B | 49.34' | 19.73' | 97.72' | 39.09' | 11° 16' 15.0" | 9.64' | 3.86' | 13'-6" | 13'-6" | 790.5 |
| | | D | 49.34' | 19.73' | 97.72' | 39.09' | 11° 16' 15.0" | 9.81' | 3.69' | 13'-8" | 13'-6" | 790.4 |
| | | E | 43.46' | 17.39' | 86.28' | 34.51' | 09° 56' 10.9" | 9.00' | 3.00' | 12'-0" | 12'-0" | 542.1 |
| | | F | 44.15' | 17.66' | 87.63' | 35.05' | 10° 05' 35.7" | 9.24' | 2.93' | 12'-4" | 12'-2" | 568.0 |
| 6' | 17'-6" | A | 43.12' | 17.25' | 85.60' | 34.24' | 09° 51' 25.3" | 7.96' | 2.95' | 10'-11" | 10'-11" | 529.8 |
| | | B | 45.50' | 18.20' | 90.26' | 36.10' | 10° 24' 00.1" | 8.21' | 3.29' | 11'-6" | 11'-6" | 622.1 |
| | | D | 45.50' | 18.20' | 90.26' | 36.10' | 10° 24' 00.1" | 8.38' | 3.12' | 11'-8" | 11'-6" | 622.0 |
| | | E | 39.09' | 15.63' | 77.68' | 31.07' | 08° 56' 16.7" | 7.57' | 2.43' | 10'-0" | 10'-0" | 395.2 |
| | | F | 39.84' | 15.94' | 79.18' | 31.67' | 09° 06' 42.8" | 7.81' | 2.36' | 10'-4" | 10'-2" | 418.6 |
| 6' | 19'-6" | A | 47.14' | 18.86' | 93.44' | 37.38' | 10° 46' 16.8" | 9.39' | 3.52' | 12'-11" | 12'-11 | 690.2 |
| | | B | 49.34' | 19.73' | 97.72' | 39.09' | 11° 16' 15.0" | 9.64' | 3.86' | 13'-6" | 13'-6" | 790.5 |
| | | D | 49.34' | 19.73' | 97.72' | 39.09' | 11° 16' 15.0" | 9.81' | 3.69' | 13'-8" | 13'-6" | 790.4 |
| | | E | 43.46' | 17.39' | 86.28' | 34.51' | 09° 56' 10.9" | 9.00' | 3.00' | 12'-0" | 12'-0" | 542.1 |
| | | F | 44.15' | 17.66' | 87.63' | 35.05' | 10° 05' 35.7" | 9.24' | 2.93' | 12'-4" | 12'-2" | 568.0 |
| 8'-6" | 22'-0" | A | 47.14' | 18.86' | 93.44' | 37.38' | 10° 46' 16.8" | 9.39' | 3.52' | 12'-11" | 12'-11" | 690.2 |
| | | B | 49.34' | 19.73' | 97.72' | 39.09' | 10° 16' 15.0" | 9.64' | 3.86' | 13'-6" | 13'-6" | 790.5 |
| | | D | 49.34' | 19.73' | 97.72' | 39.09' | 10° 16' 15.0" | 9.81' | 3.69' | 13'-8" | 13'-6" | 790.4 |
| | | E | 43.46' | 17.39' | 86.28' | 34.51' | 09° 56' 10.9" | 9.00' | 3.00' | 12'-0" | 12'-0" | 542.1 |
| | | F | 44.15' | 17.66' | 87.63' | 35.05' | 10° 05' 35.7" | 9.24' | 2.93' | 12'-4" | 12'-2" | 568.0 |

Note: The table above is applicable only where median storage lanes occur on tangent construction.

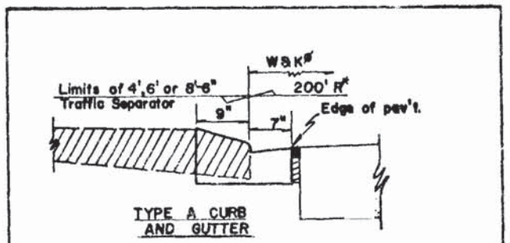


TYPE A CURB AND GUTTER

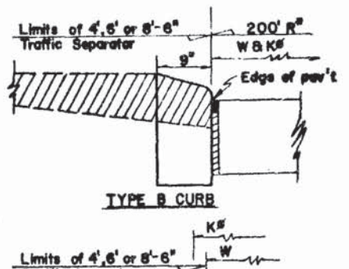


TYPE B CURB

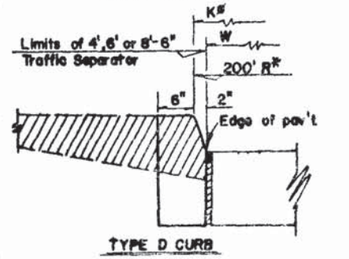


TYPE D CURB

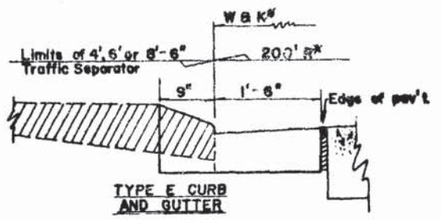


TYPE E CURB AND GUTTER

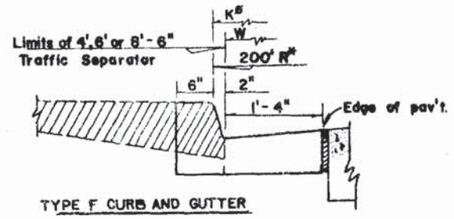


TYPE F CURB AND GUTTER

JUNCTURE DETAILS- MEDIAN CURBS AND TRAFFIC SEPARATORS

FHWA APPROVED: 7-7-75

FLORIDA DEPARTMENT OF TRANSPORTATION
Road Design Section

MEDIAN STORAGE LANES

| REVISIONS | | | INITIALS | DATES |
|---|---|---|---|---|
| Dates | Descriptions | Designed by | | |
| 6-75 | Rearrown SHS | Checked by | | |
| 10-76 | Changed Index No. | Quantities by | | |
| | | Checked by | | |
| | | Supervised by | | |

Approved by:

E H Hart

Deputy Design Engineer-Roadways

DRAWING NO. 1 of 1

INDEX NO. PMS-01

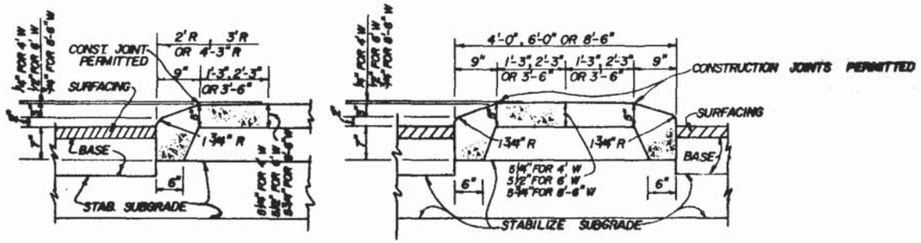


LONGITUDINAL SECTION

TRANSVERSE SECTION

## DETAILS OF TYPE I CONCRETE TRAFFIC SEPARATOR

NOTE: STABILIZE FULL WIDTH OF TRAFFIC SEPARATOR.

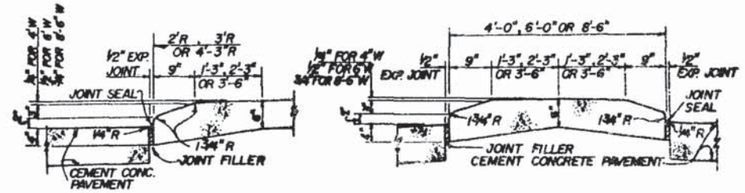


LONGITUDINAL SECTION

TRANSVERSE SECTION

## DETAILS OF TYPE II CONCRETE TRAFFIC SEPARATOR

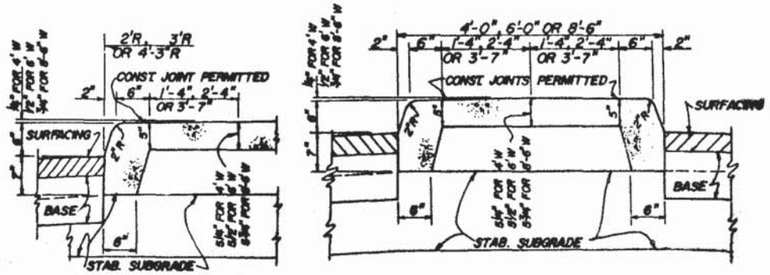


LONGITUDINAL SECTION

TRANSVERSE SECTION

## DETAILS OF TYPE IV CONCRETE TRAFFIC SEPARATOR

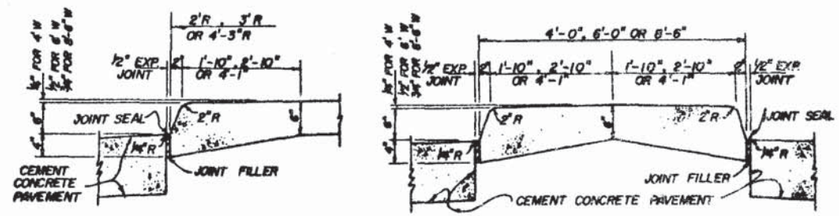


LONGITUDINAL SECTION

TRANSVERSE SECTION

## DETAILS OF TYPE V CONCRETE TRAFFIC SEPARATOR

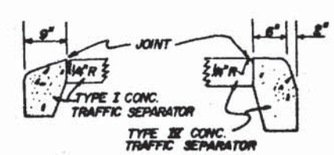


CONSTRUCTION JOINT DETAILS

NOTE: CONCRETE TRAFFIC SEPARATORS TYPE I AND TYPE IV ARE TO BE USED WHEN ADJACENT PAVEMENT IS FLEXIBLE.
CONCRETE TRAFFIC SEPARATORS TYPE II AND TYPE V ARE TO BE USED WHEN ADJACENT PAVEMENT IS CEMENT CONCRETE.

FHWA APPROVED: 7-7-75

FLORIDA DEPARTMENT OF TRANSPORTATION
ROADWAY PLANS SECTION

TRAFFIC SEPARATORS

| REVISIONS | | ROAD NO. | COUNTY | | PROJECT NO. |
|---|---|---|---|---|---|
| DATES | DESCRIPTIONS | | NAMES | DATES | Approved by: |
| 6-73 | Redrawn S.R.G. | Detailed by | h.f.w. | 1-69 | E. H. Hart |
| 10-74 | Changed Index No. | Checked by | | | Deputy Design Engineer - Roadways |
| | | Quantities by | | | |
| | | Checked by | | | Drawing No. 1 of 1 / Index No. PTS-01 |
| | | Traced by | N.F.W. | 3-69 | |

Form 281-10

# MEMORANDUM

State of Florida Department of Transportation

DATE September 7, 1976

TO DISTRICT DESIGN ENGINEERS

FROM E. H. Hart, Deputy Design Engineer (Roadways) E. H. Hart

COPIES TO Messrs. J. W. Brown, P. W. Ekey, C. J. Schenck, R. E. Magahey, Ernest Salley, and Ed Bailey.

SUBJECT Railroad Grade Crossing Traffic Control Devices

We have decided that the details on the old Index No. GPD-01 should be considered Traffic Control Devices rather than Railroad Crossing Protective Devices, and have therefore transferred this standard to the Traffic Operations Section. You should therefore delete Index GPD-01 from your Roadway Standards and substitute Standard Index 17882.

The Traffic Operations Section does not normally handle the standards in the same fashion as Roadway Design, however, they have agreed that this one standard will be handled in the same manner as the Roadway Design Standards.

By copy of this memo I am transmitting a mylar print to Mr. Ed Bailey, Reproduction Supervisor, and request that he destroy all copies of GPD-01 and substitute Index No. 17882 in its place.

There will be no change in your handling with the exception of the number change. Any future revisions made to this standard will be sent to you by this office.

EHH:jl

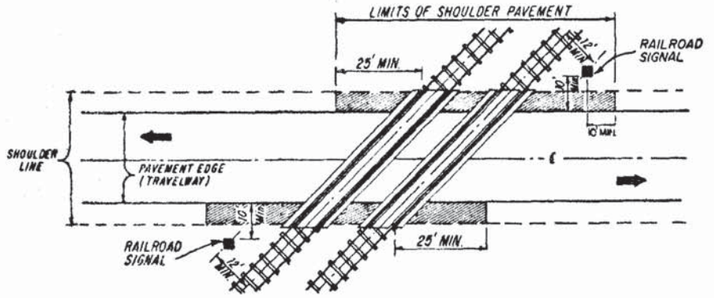


TRACK CLEARANCE FOR ACUTE OR RIGHT ANGLE CROSSINGS

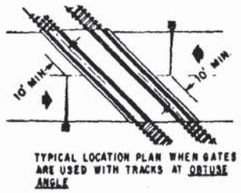


TYPICAL LOCATION PLAN WHEN GATES ARE USED WITH TRACKS AT OBTUSE ANGLE

NOTE:
IT IS INTENDED THAT THE FULL SHOULDER WIDTH OF THE EXISTING ROADWAY BE PAVED. WHERE AN EXISTING SHOULDER IS SUBSTANTIALLY SUBSTANDARD FOR THE FACILITY INVOLVED, THE SHOULDER WIDTH SHOULD BE UPGRADED TO MEET CURRENT STANDARDS.

## SIGNAL PLACEMENT AT RAILROAD CROSSING (2-LANE DESIGN)

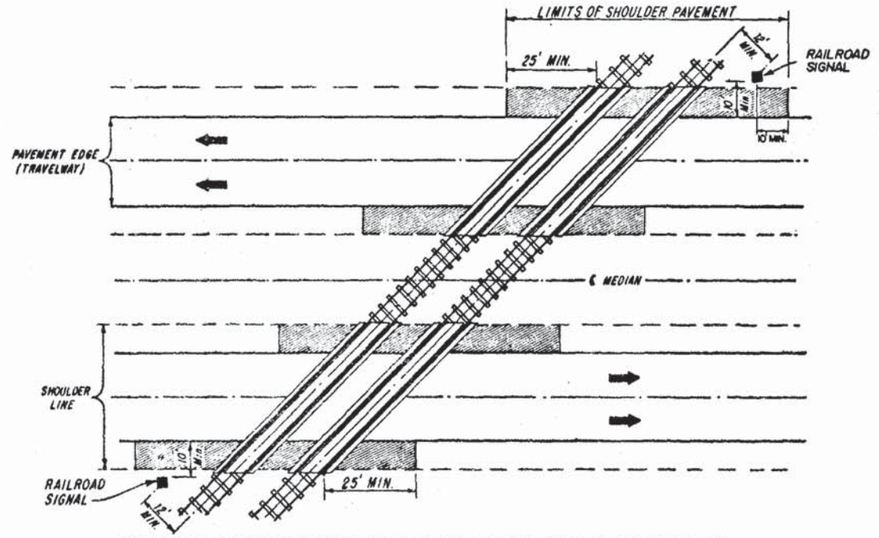


TRACK CLEARANCE FOR ACUTE OR RIGHT ANGLE CROSSINGS

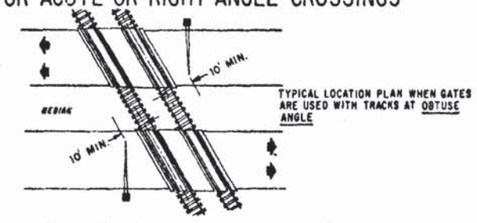


TYPICAL LOCATION PLAN WHEN GATES ARE USED WITH TRACKS AT OBTUSE ANGLE

## SIGNAL PLACEMENT AT RAILROAD CROSSING (4-LANE DESIGN)

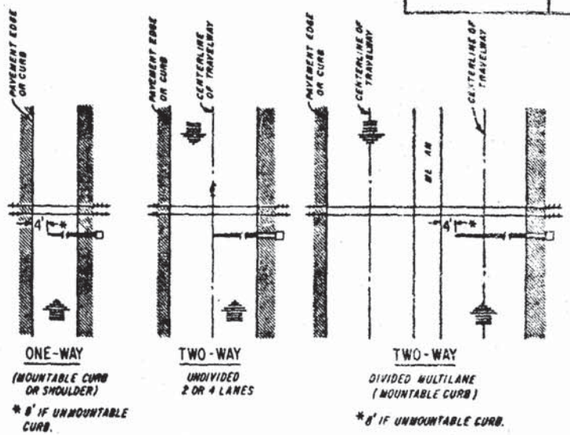


NOTE:
ARROWS DENOTE DIRECTION OF TRAVEL, NOT LANE INDICATION

## FIGURE 1

GATE LENGTH REQUIREMENTS

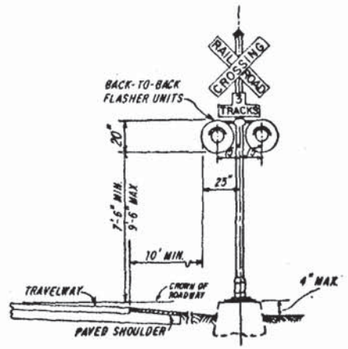


TYPE I

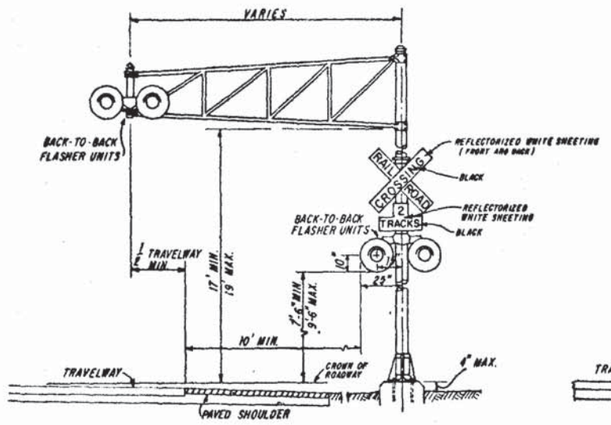


TYPE II

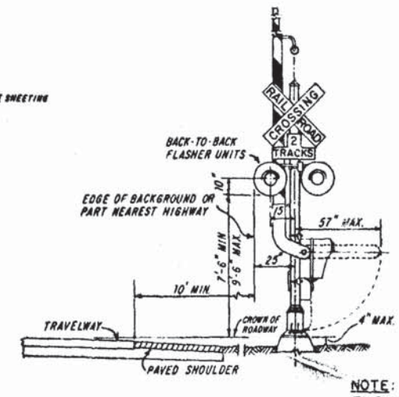


TYPE III

NOTE:
TWO SEPERATE FOUNDATIONS MAY BE REQUIRED (ONE FOR SIGNALS, ONE FOR GATE), DEPENDING ON TYPE OF EQUIPMENT USED.

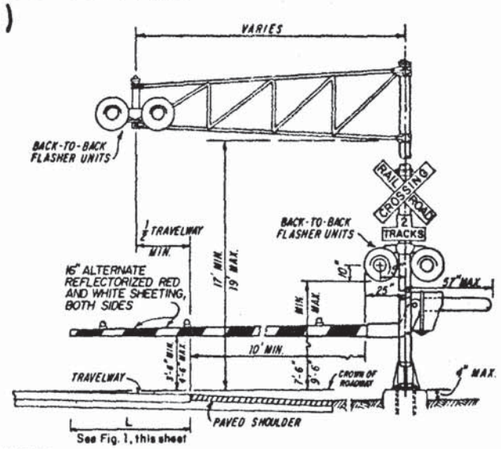


TYPE IV

## GENERAL NOTES

1. NO GUARDRAIL IS PROPOSED FOR SIGNALS; HOWEVER, SOME FORM OF IMPACT ATTENUATION DEVICE MAY BE SPECIFIED FOR CERTAIN LOCATIONS.
2. ADVANCE FLASHER TO BE INSTALLED WHEN AND IF CALLED FOR IN PLANS OR SPECIFICATIONS.
3. TOP OF FOUNDATION TO BE AT THE SAME ELEVATION AS THE SURFACE OF THE TRAVELWAY AND/OR NO MORE THAN 4" ABOVE THE SURFACE OF THE GROUND.
4. TYPE OF TRAFFIC CONTROL DEVICES
   - I FLASHING SIGNALS
   - II FLASHING SIGNALS WITH CANTILEVER
   - III FLASHING SIGNALS WITH GATE
   - IV FLASHING SIGNALS WITH CANTILEVER & GATE
   - V GATE
5. CLASS OF TRAFFIC CONTROL DEVICES
   - I FLASHING SIGNALS-ONE TRACK
   - II FLASHING SIGNALS-MULTIPLE TRACKS
   - III FLASHING SIGNALS AND GATES-ONE TRACK
   - IV FLASHING SIGNALS AND GATES-MULTIPLE TRACKS
6. SIX LANE GRADE CROSSINGS ARE SPECIAL CONDITIONS. PLACEMENT OF RAILROAD TRAFFIC CONTROL DEVICES ARE NOT COVERED UNDER THIS INDEX.

APPROVED BY FHWA JULY 29, 1976

FLORIDA DEPARTMENT OF TRANSPORTATION
TRAFFIC OPERATIONS

RAILROAD GRADE CROSSING TRAFFIC CONTROL DEVICES

| REVISIONS | | | | INITIALS | DATES |
|---|---|---|---|---|---|
| DATE | INITIALS | DESCRIPTION | Designed by | CG | 4-8-76 |
| | | | Checked by | RM | 4-8-76 |
| | | | Quantities by | | |
| | | | Checked by | | |
| | | | Supervised by | REM | |

Recommended for approval by R. E. Mogadley 6/15/76 Deputy Traffic Operations Engr.
Approved by E. L. Bowen 6/15/76 State Traffic Operations Engr.

DRAWING NO. 1 OF 2 | INDEX NO. 17882

STATE PROJ. NO. | SHEET NO.

| STATE PROJ. NO. | SHEET NO. |
|---|---|
| | |

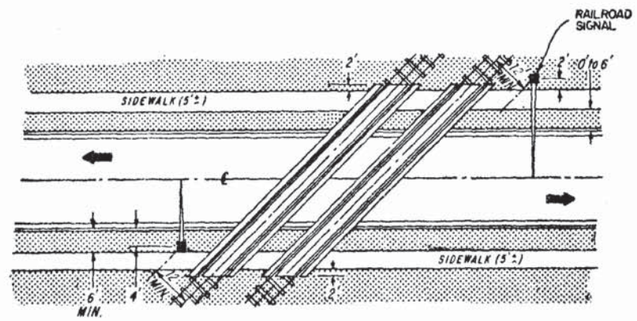


ACUTE ANGLE (AND RIGHT ANGLE)

## SIGNAL PLACEMENT AT RAILROAD CROSSING (2 LANES, CURB & GUTTER)

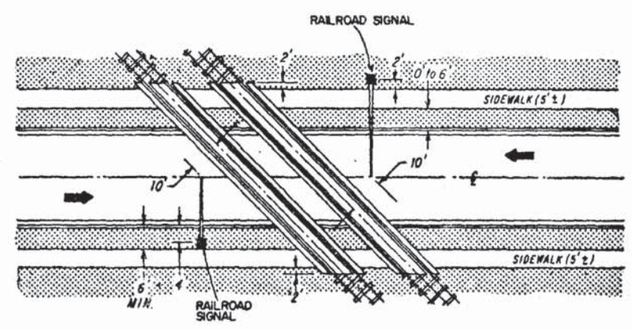


OBTUSE ANGLE

## SIGNAL PLACEMENT AT RAILROAD CROSSING (2 LANES, CURB & GUTTER)

### GENERAL NOTES

7. WHERE PLANS CALL FOR RAILROAD TRAFFIC CONTROL DEVICES TO BE INSTALLED IN CURBED MEDIANS, THE MINIMUM OFFSET FROM FACE OF CURB TO CENTER OF SUPPORT SHALL BE 4'-7", AS SHOWN FOR RIGHT SIDE INSTALLATIONS.
8. LOCATION OF RAILROAD TRAFFIC CONTROL DEVICE IS BASED ON THE DISTANCE AVAILABLE BETWEEN FACE OF CURB & SIDEWALK.
   - 0' TO 6' - LOCATE DEVICE OUTSIDE SIDEWALK.
   - OVER 6' - LOCATE DEVICE BETWEEN FACE OF CURB AND SIDEWALK.
9. STOP LINE TO BE PARALLEL TO TRACKS, APPROX. 15' FROM NEAREST RAIL; OR 8' FROM AND PARALLEL TO GATE IF PRESENT. (SEE INDEX 17346)

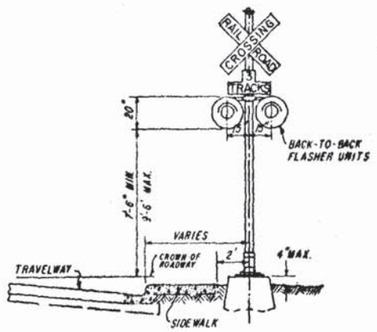


TYPE I

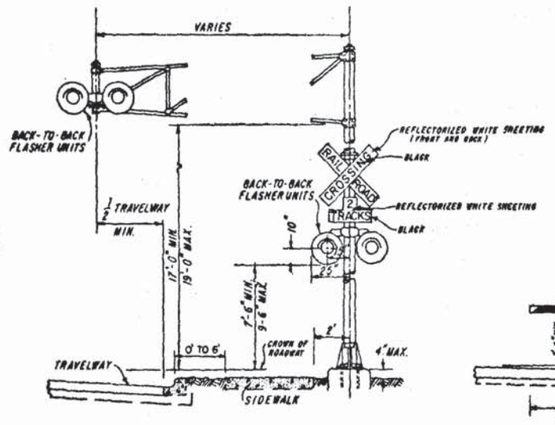


TYPE II

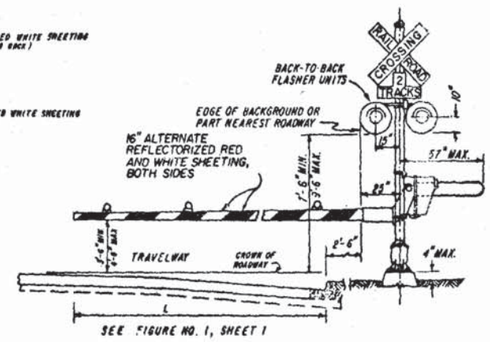


TYPE III

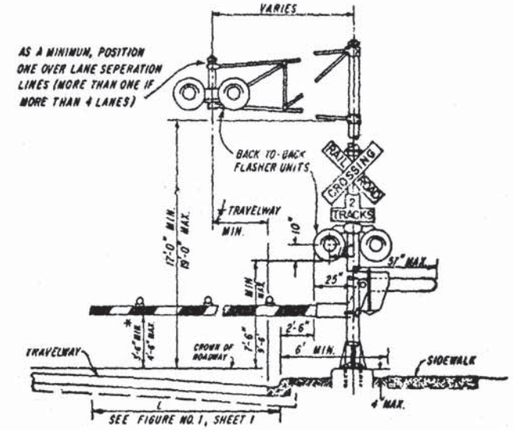


TYPE IV

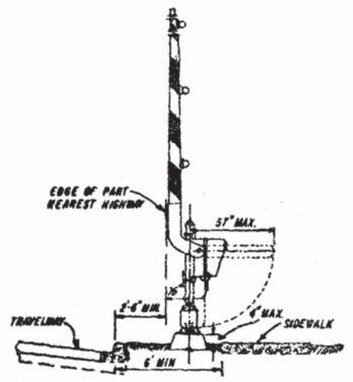


TYPE V

APPROVED BY FHWA JULY 29, 1976

FLORIDA DEPARTMENT OF TRANSPORTATION
TRAFFIC OPERATIONS

RAILROAD GRADE CROSSING TRAFFIC CONTROL DEVICES

| REVISIONS | | |
|---|---|---|
| DATE | INITIALS | DESCRIPTION |
| | | |
| | | |
| | | |
| | | |

| | INITIALS | DATES |
|---|---|---|
| Designed by | CG | 4-8-76 |
| Checked by | RM | 4-8-76 |
| Quantities by | | |
| Checked by | | |
| Supervised by | REM | |

Recommended for approval by R.E. Magaley 6/25/ Deputy Traffic Operations Engr.

Approved by E. L. Owens 6/25/ State Traffic Operations Engr.

DRAWING NO. 2 OF 2 | INDEX NO. 17882