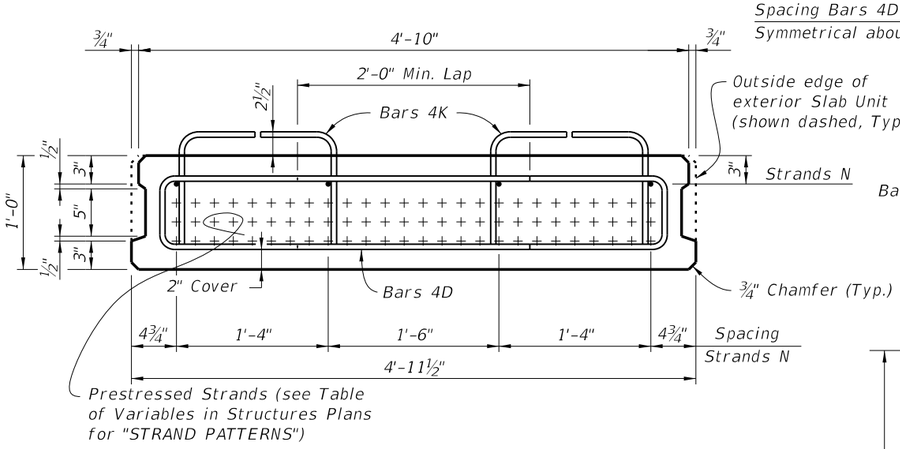

TYPICAL SECTION

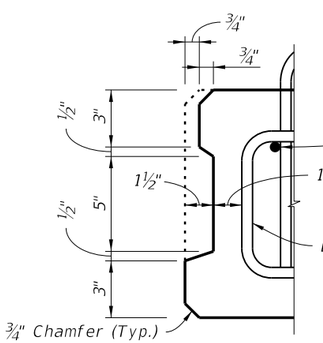

KEYWAY DETAIL

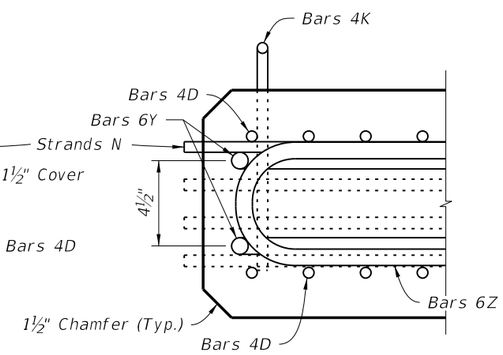

SECTION A-A

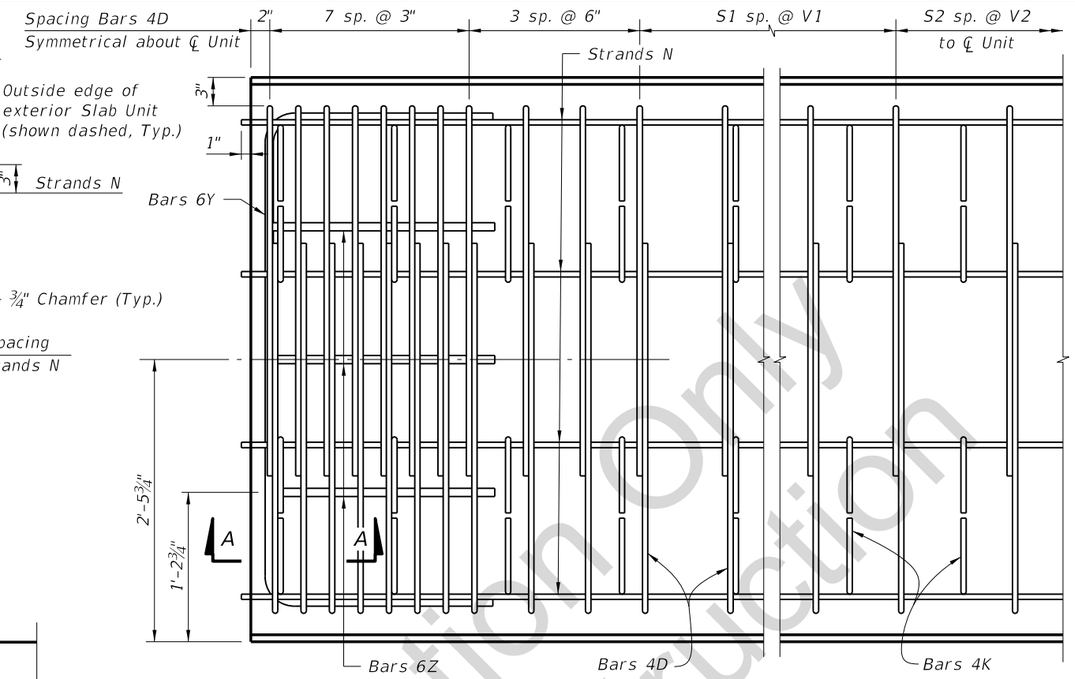

PLAN AT END OF PRESTRESSED SLAB UNIT

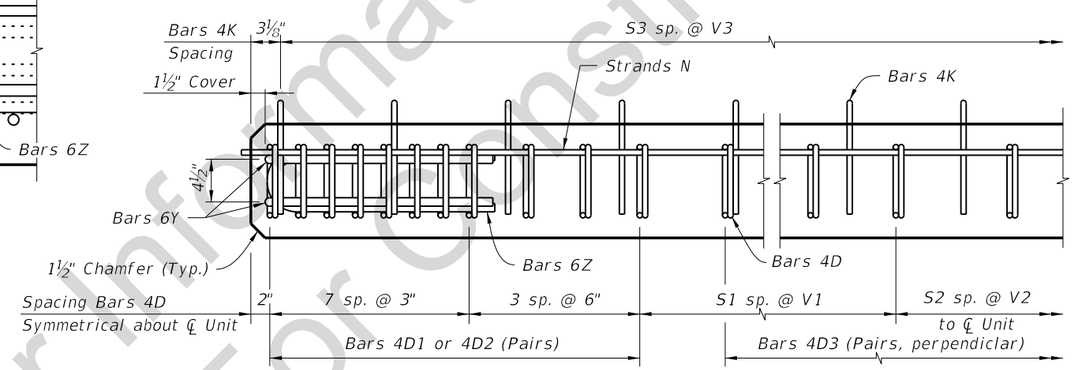

ELEVATION AT END OF PRESTRESSED SLAB UNIT

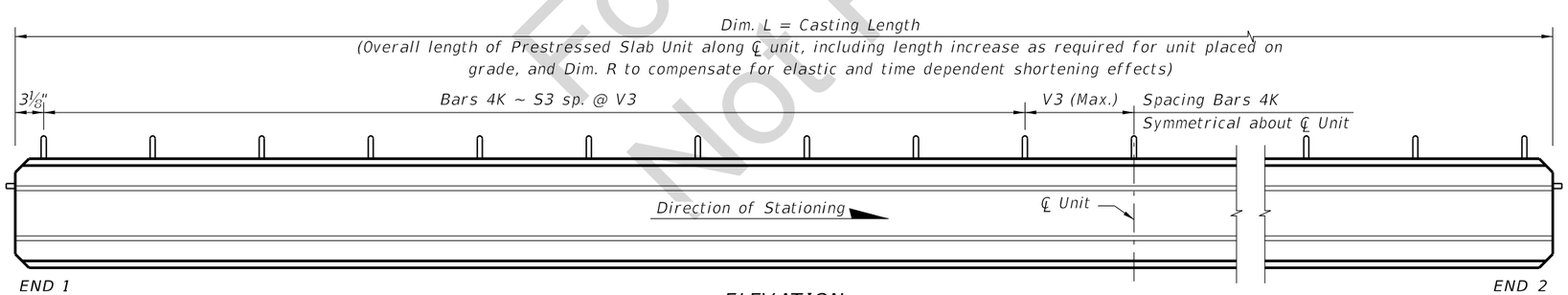

ELEVATION

BILL OF REINFORCING STEEL FOR ONE UNIT ONLY

MARK	SIZE	NOTE NUMBERS	NUMBER REQUIRED	LENGTH (NOTE 1)
D1	4	4, 5, 10	20 (End 1)*	Varies
D2	4	4, 5, 10	20 (End 2)*	Varies
D3	4	5	See Table	7'-2"
K	4	4, 5	See Table	1'-8"
N	⅜" Ø Strands	2, 9	4	Dim. L + 2"
Y1	6	4, 10	2 (End 1)	Varies
Y2	6	4, 10	2 (End 2)	Varies
Z	6	-	6	4'-7"

BENDING DIAGRAMS (See Note 1)

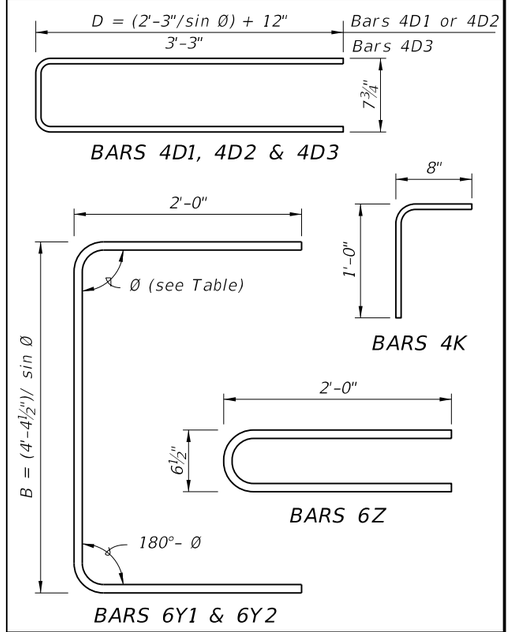

NOTES:

Work this Index with Index No. D20350 and Prestressed Standard Slab Units - Table of Variables in Structures Plans.

For Dimensions B, D, L, R, V1 thru V3 and number of spaces S1 thru S3, see Prestressed Standard Slab Units - Table of Variables in Structures Plans.

For referenced notes, see Index No. D20350, Sheet 1.

* See Note 4 for additional Bars 4D1 or 4D2 for skewed units.

For Information Only
Not For Construction

C:\d\projects\standards\structures\current\dev_design_stds\D20300_psu\D20355-1of1.dgn RD960DM 2:37:38 PM 4/28/2014

LAST REVISION	REVISION	DESCRIPTION:			INDEX NO.	SHEET NO.
04/28/14			FDOT DEVELOPMENTAL DESIGN STANDARDS	12"X60" PRESTRESSED SLAB UNIT - STANDARD DETAILS	D20355	1 of 1