NOTES:

1. Work with Index 17727 for grounding and span wire details. See the Plans for clamp spacing, cable sizes and forces, signals and sign mounting locations and details.

2. Shop Drawings:

   This Index is considered fully detailed, only submit shop drawings for minor modifications not detailed in the Plans.

3. Materials:

   A. Strain Pole and Backing Rings:
      a. Less than 3/16": ASTM A1011 Grade 50, 55, 60 or 65
      b. Greater than or equal to 3/16": ASTM A572 Grade 50, 55, 60 or 65
      c. ASTM A595 Grade A (55 ksi yield) or Grade B (60 ksi yield)
   B. Steel Plates: ASTM A36
   C. Weld Metal: E70XX
   D. Bolts, Nuts and Washers:
      a. High Strength Bolts: ASTM F3125, Grade A325, Type 1
      b. Nuts: ASTM A563 Grade DH Heavy-Hex
      c. Washers: ASTM F436 Type 1, one under turned element
   E. Anchor Bolts, Nuts and Washers:
      a. Anchor Bolts: ASTM F1554 Grade 55
      b. Nuts: ASTM A563 Grade A Heavy-Hex (5 per anchor bolt)
      c. Plate Washers: ASTM A36 (2 per bolt). Split-lock washers and self-locking nuts are not permitted
   F. Handhole Frame: ASTM A709 or ASTM A36, Grade 36
   G. Handhole Cover: ASTM A1011 Grade 50, 55, 60 or 65
   H. Aluminum Pole Caps and Nut Covers: ASTM B26 (319-F)
   I. Stainless Steel Screws: AISI Type 316
   J. Threaded Bars/Studs: ASTM A36 or ASTM A307
   K. Concrete: Class IV (Drilled Shaft) for all environmental classifications.
   L. Reinforcing Steel: Specification Section 415

4. Fabrication:

   A. Pole Taper: Change diameter at a rate of 0.14 inches per foot, round or 12-sided (Min.)
   B. Upright splices are not permitted. Transverse welds are only permitted at the base.
   C. Provide bolt hole diameters as follows:
      a. Bolts (except Anchor Bolts): Bolt diameter plus 1/16", prior to galvanizing.
      b. Anchor Bolts: Bolt diameter plus 1/2", maximum.
   D. Locate handhole 180° from 2" wire entrance pipe.
   E. Identification Tag: (Submit details for approval.)
      a. 2"x 4" (Max.) aluminum identification tag.
      b. Locate on the inside of the pole and visible from the handhole.
      c. Secure to pole with 1/8" diameter stainless steel rivets or screws.
      d. Include the following information on the ID Tag:
         1. Financial Project ID
         2. Pole Type
         3. Pole height
         4. Manufacturers' Name
         5. Fy of Steel
         6. Base Wall Thickness
   F. Provide a 'J' or 'C' hook at the top of the pole for signal wiring support (See Sheet 3).
   G. Perform all welding in accordance with Specification Section 460-6.4.
   H. Hot Dip Galvanize after fabrication.

5. Coatings:

   A. All Nuts, Bolts, Washers and Threaded Bars/Studs: ASTM F2329
   B. All other steel items ASTM A123

6. Construction:

   A. Foundation: Specification Section 455, except that payment is included in the cost of the strain pole.
   B. After installation, place wire screen between top of foundation and bottom of baseplate in accordance with Specification Section 649-6.

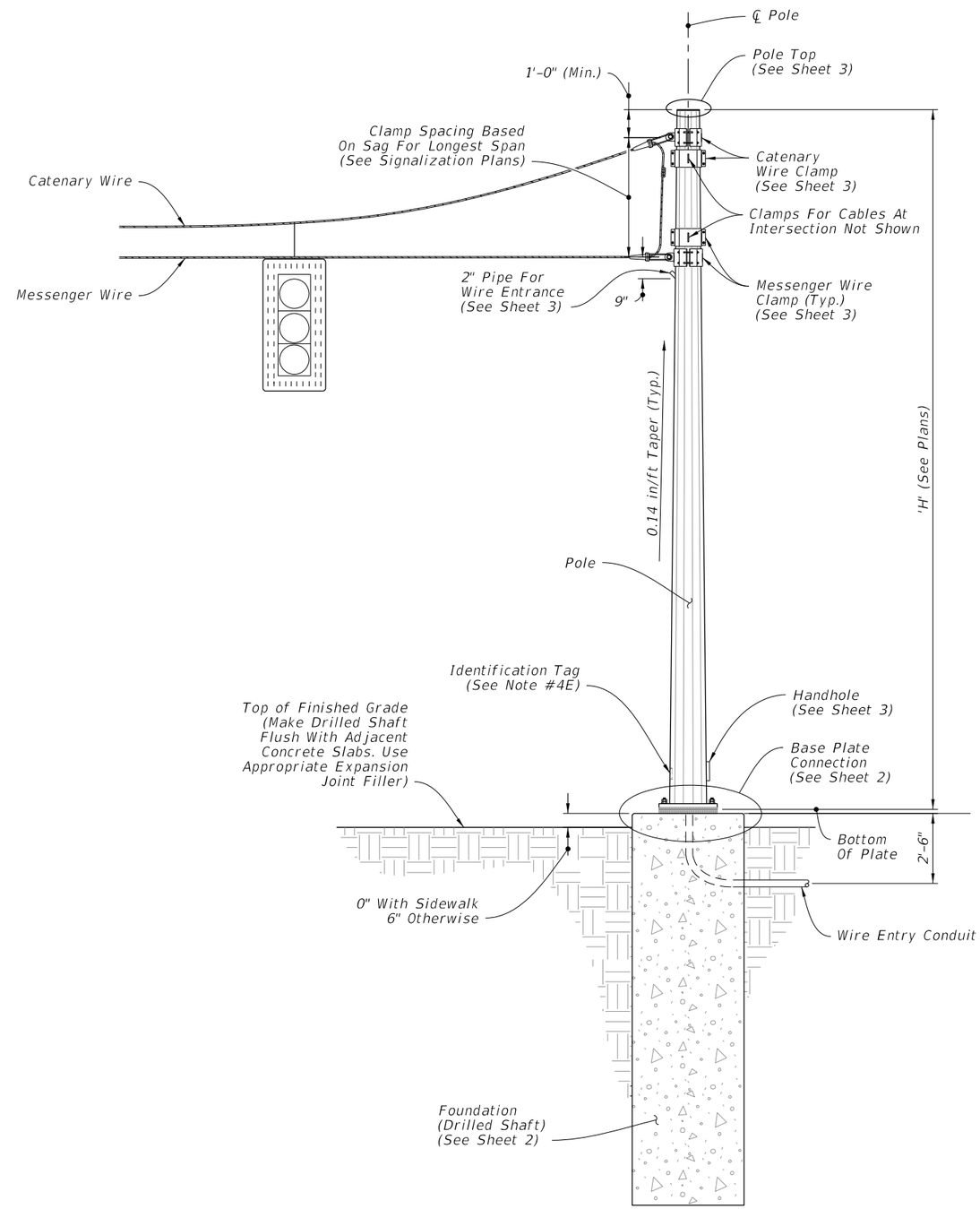

STRAIN POLE ASSEMBLY

ELEVATION AND NOTES

10/14/2016 11:47:16 AM

LAST REVISION	REVISION	DESCRIPTION:			INDEX NO.	SHEET NO.
11/01/16			FY 2017-18 DESIGN STANDARDS	STEEL STRAIN POLE	17723	1 of 3

TABLE OF FACTORED FLEXURAL RESISTANCE M_γ											
POLE TYPE	MAXIMUM ALLOWABLE MOMENT (kip-ft)	POLE		BASE CONNECTION					SHAFT		
		J (in)	K (in)	No. of Bolts	BA (in)	BB (in)	BC (in)	BF (in)	DA (FT)	DB (FT)	No. of #11 Bars
PS-IV	172	0.250	14	8	25	2.50	1 3/8	60	14	4	14
PS-V	285	0.313	16	10	28	2.50	1 1/2	60	15	4	14
PS-VI	354	0.313	18	12	30	2.50	1 1/2	60	16	4	14
PS-VII	473	0.313	21	14	33	2.50	1 1/2	60	16	4.5	16
PS-VIII	561	0.313	23	16	35	2.50	1 1/2	60	17	4.5	16
PS-IX	657	0.313	25	12	39	3.00	1 3/4	60	17	5	18
PS-X	760	0.313	27	14	41	3.00	1 3/4	60	18	5	18

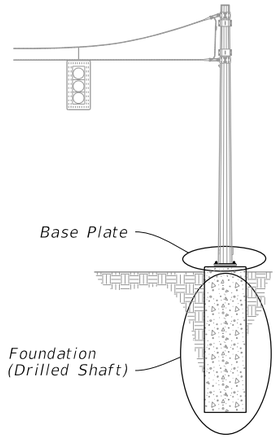

POLE ASSEMBLY

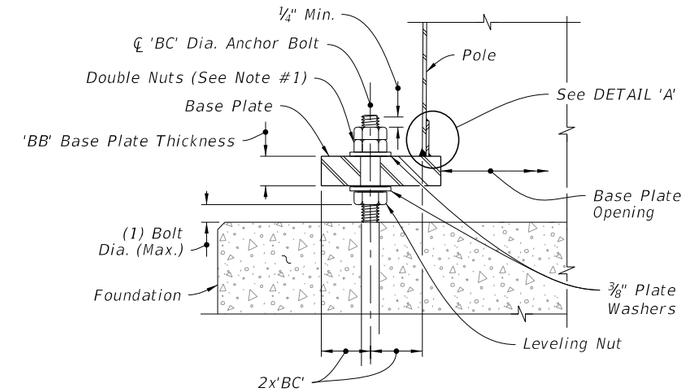

SECTION A-A

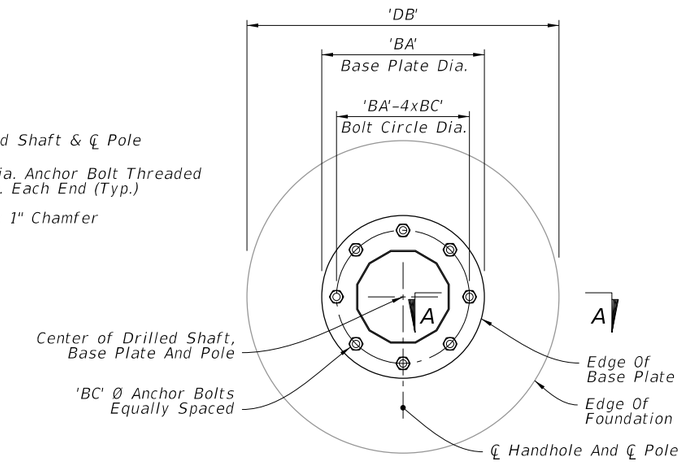

PLAN

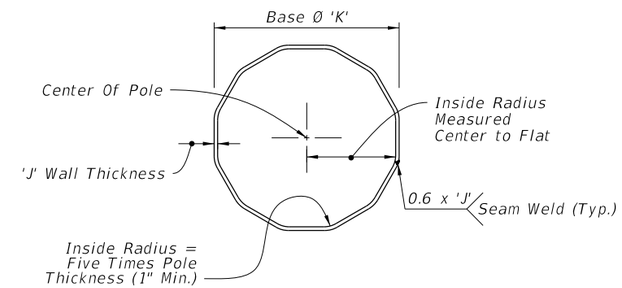

SECTION B-B

NOTE:

1. Double nuts: Bottom nut may be half height 'Jam' Nut. Provide individual nut covers (Not Shown) for each bolt.

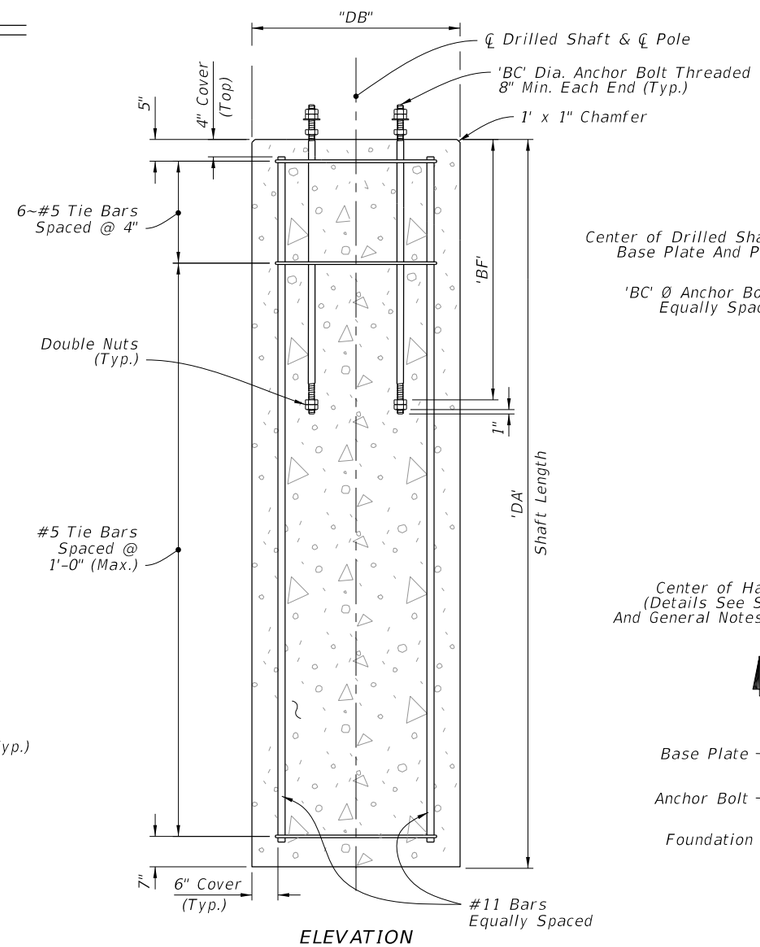

ELEVATION

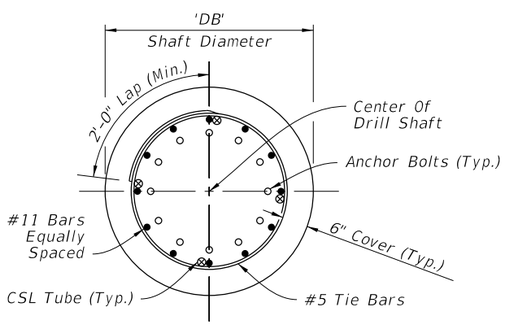

PLAN

FOUNDATION

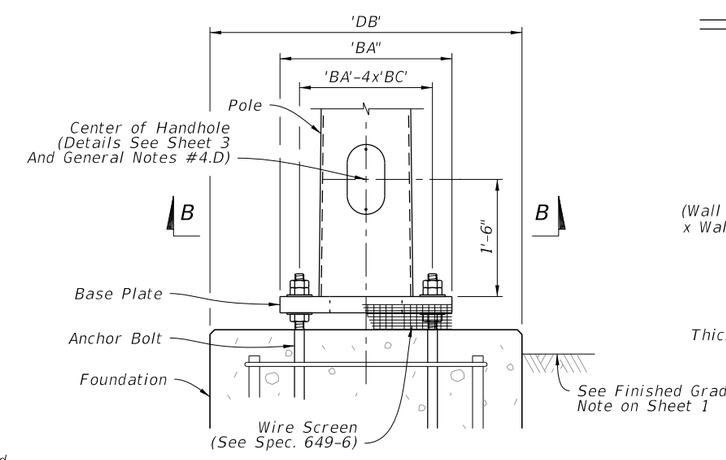

ELEVATION

BASE PLATE

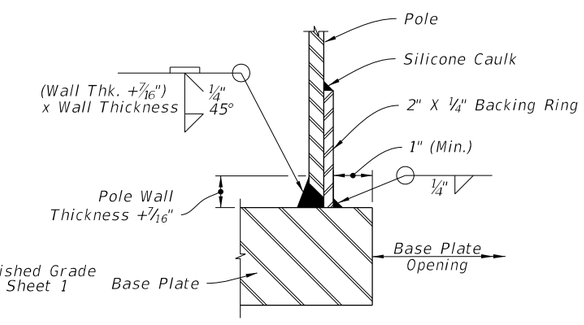

JOINT WELD DETAIL

DETAIL 'A'

FOUNDATON AND BASE DETAILS

10/14/2016 11:47:22 AM

LAST REVISION	REVISION	DESCRIPTION:			INDEX NO.	SHEET NO.
11/01/16			FY 2017-18 DESIGN STANDARDS	STEEL STRAIN POLE	17723	2 of 3

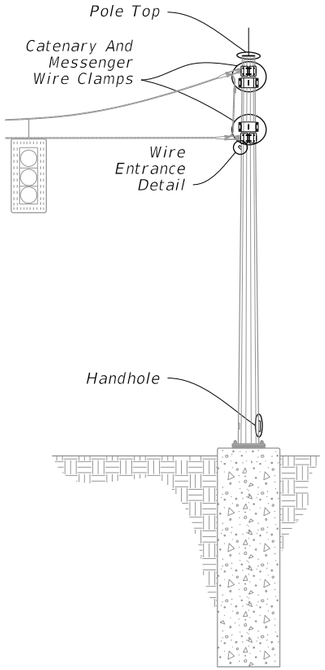

POLE ASSEMBLY

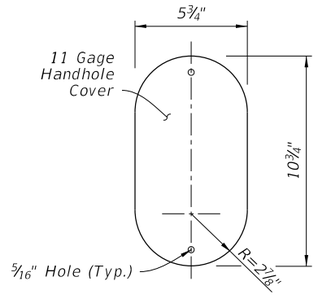

COVER

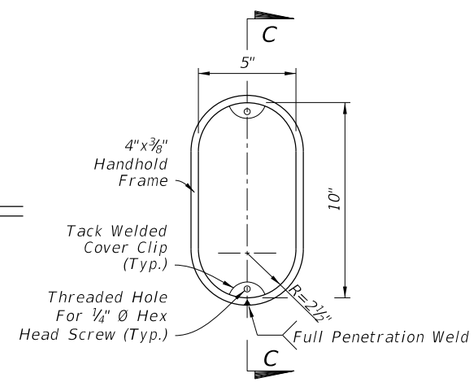

FRAME

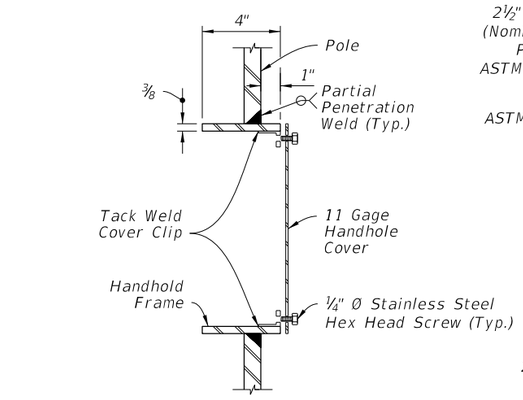

SECTION C-C

HANDHOLE

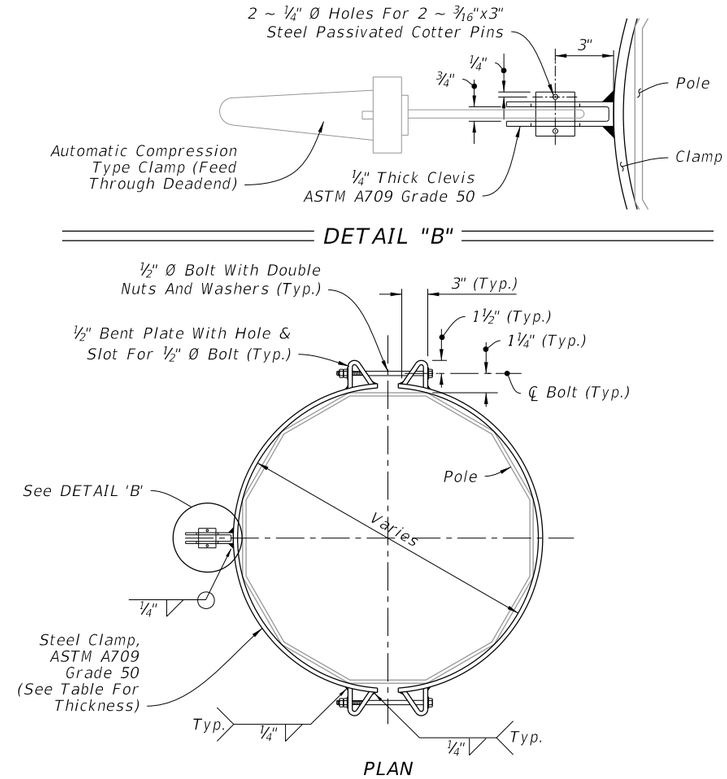

DETAIL "B"

PLAN

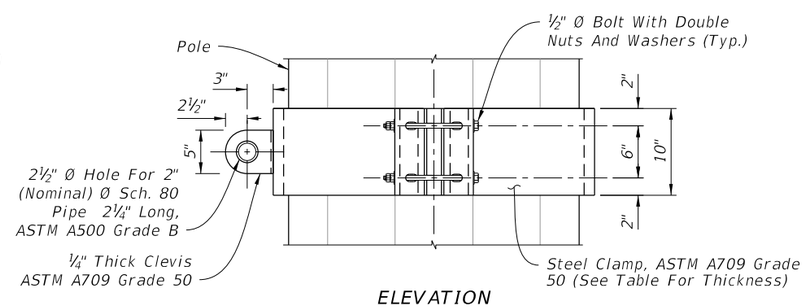

ELEVATION

CATENARY AND MESSENGER WIRE CLAMPS

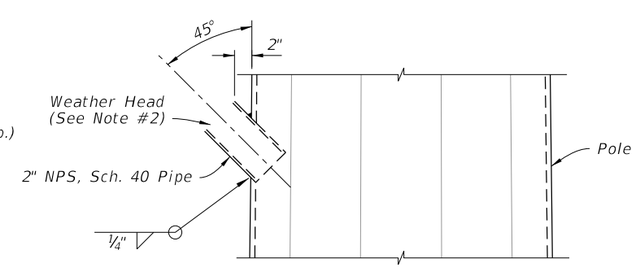

WIRE ENTRANCE DETAIL

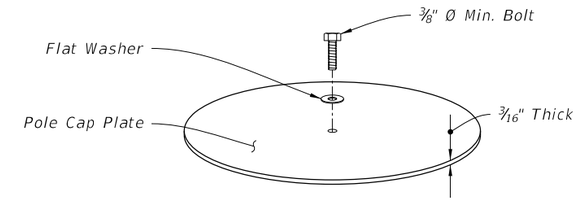

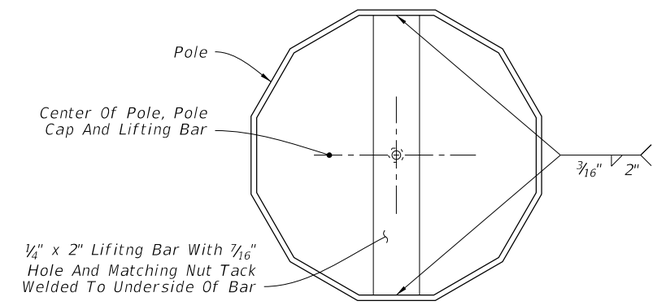

TOP VIEW

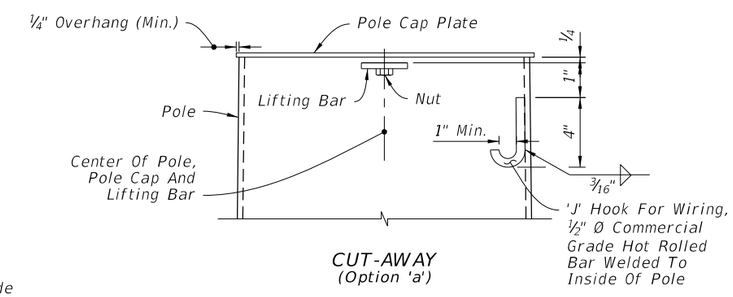

CUT-AWAY
(Option 'a')

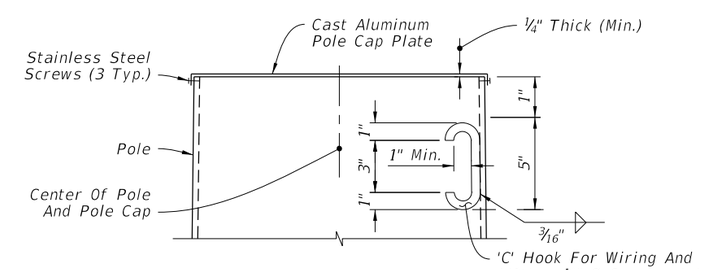

CUT-AWAY
(Option 'b')
(See Note #3)

POLE TOP

NOTES:

1. Clamps have been sized for Design Cable Loads shown in the Clamp Thickness Table, and a Maximum Pole Diameter at the Clamp location of 2'-1". Use one clamp per cable.
2. Install a properly sized Weather Head, fastened securely to the standard pipe for each pole location. At locations other than the wire entrance, the Weather Head face is to be left closed to outside atmosphere. Wire entrance installed per Index 17727.
3. Any combination of Option 'a' or 'b' may be used provided both lifting and wiring is accommodated.

CLAMP THICKNESS TABLE

Cable Diameter (in.)	Minimum Breaking Strength (kip)	Plate Thickness (in.)
1/2	25	1
7/16	18	7/8
3/8	11.5	3/4
1/4	3.15	3/8

ATTACHMENT DETAILS

10/14/2016 11:47:24 AM

LAST REVISION	REVISION	DESCRIPTION:	FY 2017-18 DESIGN STANDARDS	STEEL STRAIN POLE	INDEX NO.	SHEET NO.
11/01/16					17723	3 of 3