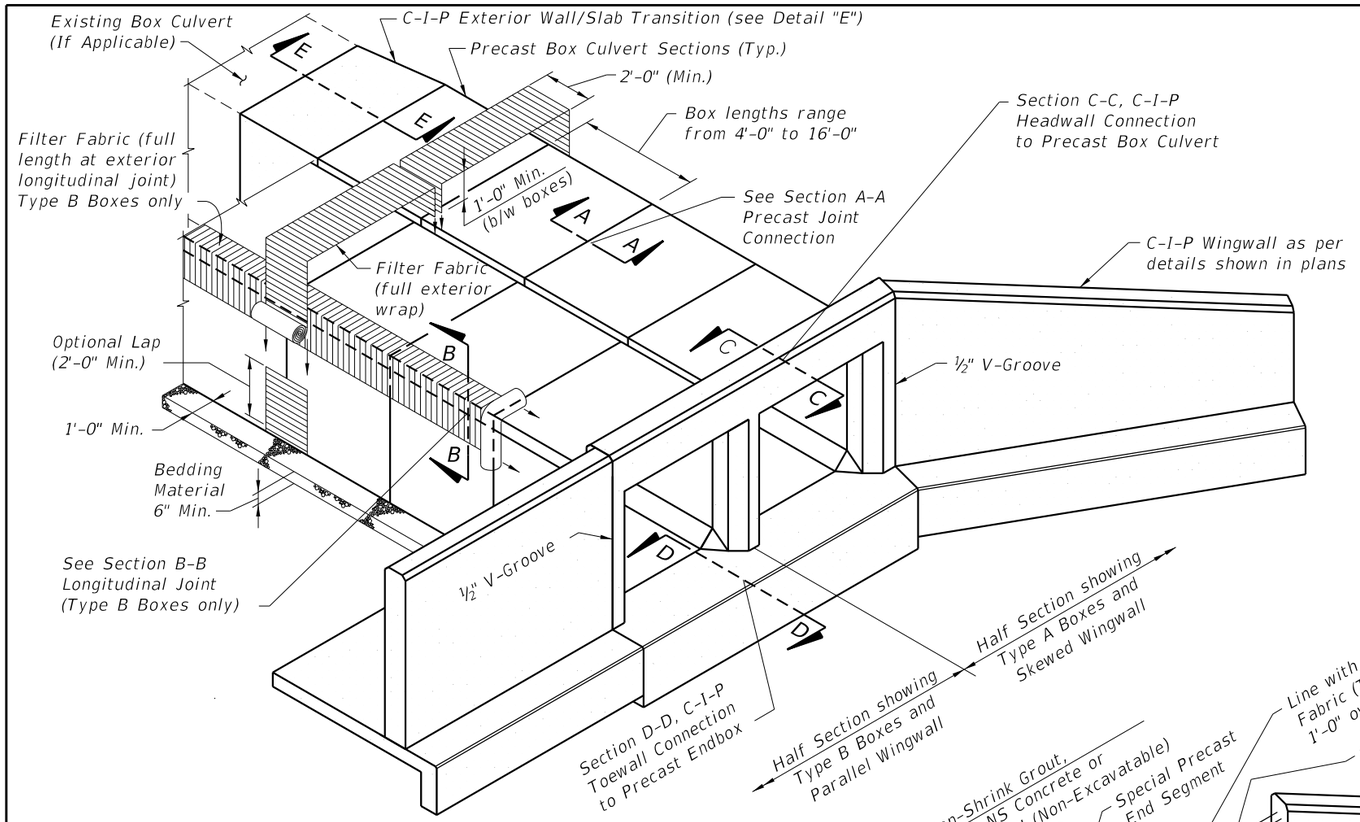

ISOMETRIC VIEW OF PRECAST CONCRETE BOX CULVERT
(Double Barrel Culvert shown, Single or Multiple Barrel Culvert similar)

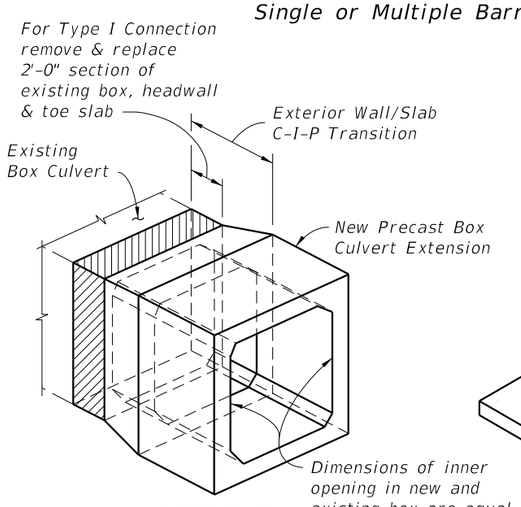

DETAIL E
PICTORIAL VIEW OF EXTERIOR WALL/SLAB TRANSITION

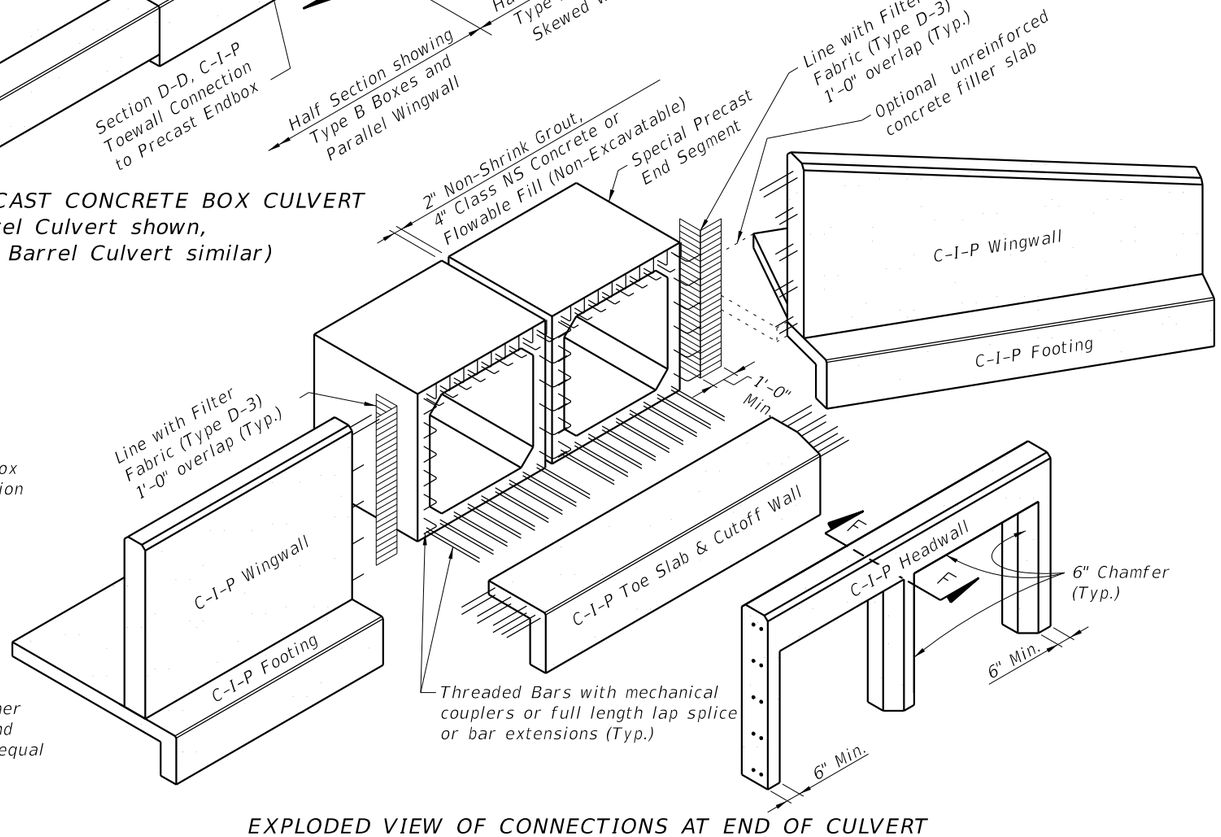

EXPLODED VIEW OF CONNECTIONS AT END OF CULVERT
(Double Barrel Culvert shown, Single or Multiple Barrel Culvert similar)

PERMITTED PRECAST ALTERNATE BOX SECTIONS

TYPE	DESCRIPTION	SINGLE BARREL	MULTIPLE BARRELS	DESIGN NOTES
A	Single Cell Monolithic (Four Sided)		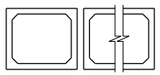	Index No. 292 or Contractor Design
B	Single Cell Two–Piece (Four Sided)	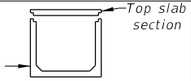	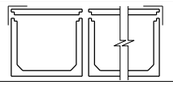	Contractor Design
C	Multicell Monolithic	Not Applicable	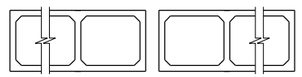	Contractor Design

GENERAL NOTES:

1. Specifications:
   - General:
     FDOT Standard Specifications for Road and Bridge Construction, Section 410 (current edition, and supplements thereto).
   - Concrete (Precast):
     Class III or Class II Modified (5,000 psi) for slightly aggressive environments.
     Class IV (5,500 psi) for moderately to extremely aggressive environments.
   - Concrete (Cast–In–Place):
     Class II (3,400 psi) for slightly aggressive environments.
     Class IV (5,500 psi) for moderately to extremely aggressive environments.
   - Reinforcing Steel:
     Maintain minimum clearance of 2" for slightly and moderately aggressive environments or 3" for extremely aggressive environments, unless otherwise shown. Equal area substitution of welded wire (WWR) reinforcement is permitted.

2. Work this Index with the Cast–In–Place Concrete Box Culvert Details and Data Tables shown in the plans, Index No. 289 and the Precast Concrete Box Culverts shown in the shop drawings.

3. All joints between precast sections must be tongue & groove with joint sealant. Joints between cast–in–place & precast sections shall have longitudinal reinforcing extending from top, bottom & both side slabs of the precast box tied to the cast–in–place reinforcement. Single barrel culverts may have precast headwalls cast integrally with the end segment when approved by the Engineer.

4. Extension of existing multiple barrel box culverts with multiple single cell precast box culverts is not permitted unless approved by the District Structures Engineer. Full transition details must be shown in the shop drawings when approved.

5. Culverts larger than the specified size may be substituted with no additional payment to the Contractor. Substitution must be approved by the Engineer, minimum earth cover and invert elevations shown in the Contract Documents must be maintained.

12/17/2015 11:12:55 AM

LAST REVISION	REVISION	DESCRIPTION:	FDOT FY 2016-17 DESIGN STANDARDS	SUPPLEMENTAL DETAILS FOR PRECAST CONCRETE BOX CULVERTS	INDEX NO.	SHEET NO.
01/01/11					291	1 of 5

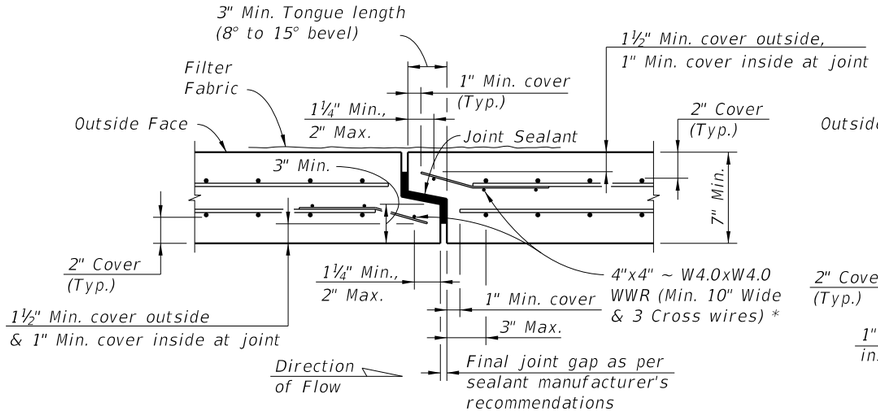

SECTION A-A
(2" Cover - Thin Wall Detail)

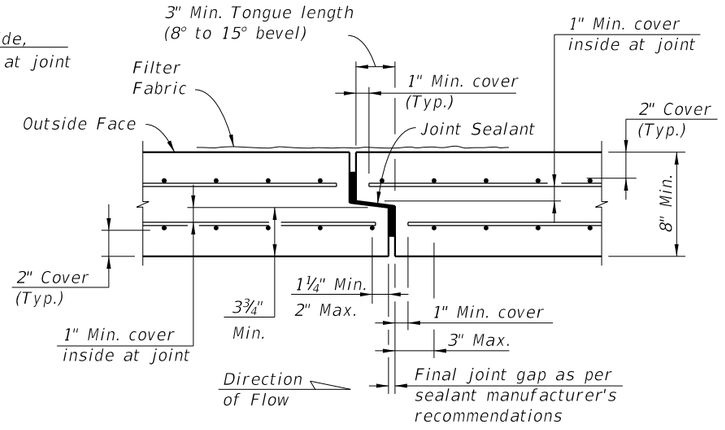

SECTION A-A
(2" Cover - Thick Wall Detail)

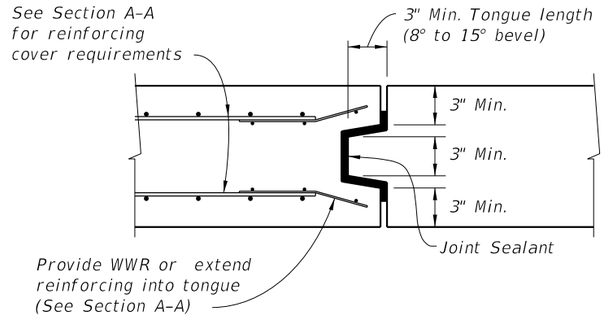

ALTERNATE BOTTOM SLAB TRANSVERSE JOINT
TYPICAL SECTION
(DOUBLE-SIDED TONGUE & GROOVE JOINT)
(All reinforcing not shown for clarity)

NOTE:
Bottom Slab Joints in Type B Boxes may be single tongue & groove joints as shown in Section A-A when the Top Slab Joints are oriented as shown in Schematic "A".

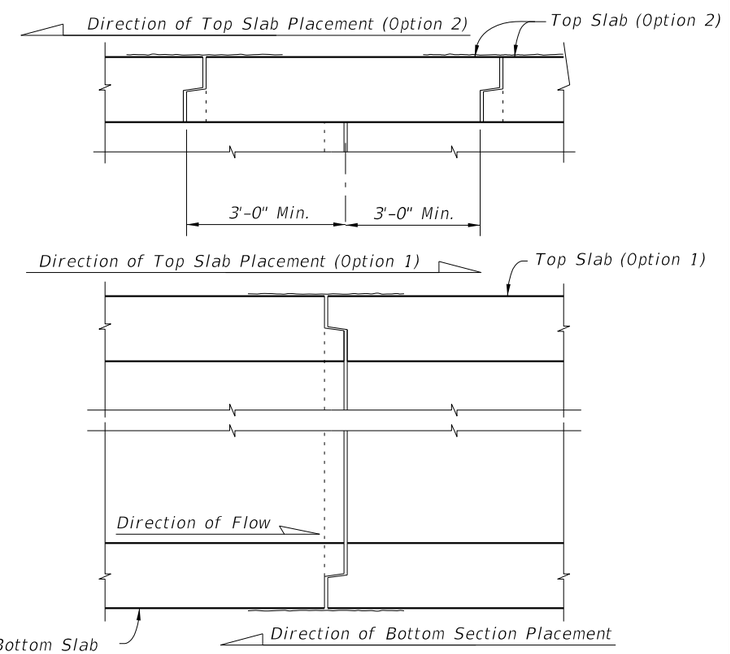

SCHEMATIC "A"
TYPE B BOX SECTION PLACEMENT
FOR SINGLE TONGUE & GROOVE JOINTS

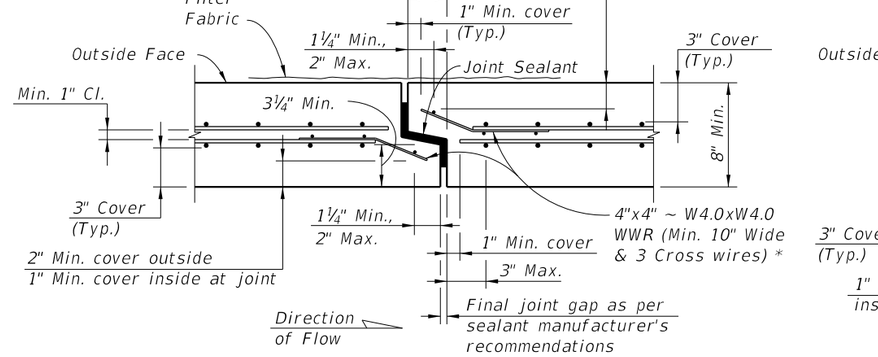

SECTION A-A
(3" Cover - Thin Wall Detail)

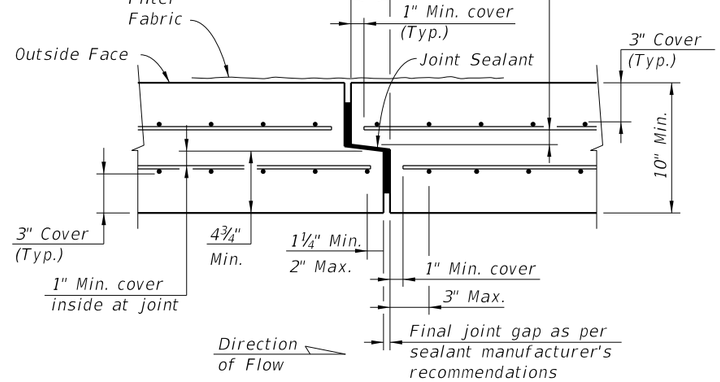

SECTION A-A
(3" Cover - Thick Wall Detail)

* *At the Contractor's option when the box culvert reinforcing utilizes WWR, extend wall and slab reinforcing into the joint and bend to maintain cover in lieu of 4"x4" ~ W4.0xW4.0 WWR at joint. Transverse wire in tongue may be cut at corners of box to allow bending of the WWR.*

PRECAST SEGMENT TO SEGMENT TONGUE & GROOVE TRANSVERSE JOINTS

TWO-PIECE PRECAST SEGMENT ADDITIONAL JOINT DETAILS (TYPE B BOX)

12/17/2015 11:12:56 AM

LAST REVISION	REVISION	DESCRIPTION:			INDEX NO.	SHEET NO.
07/01/15			FY 2016-17 DESIGN STANDARDS	SUPPLEMENTAL DETAILS FOR PRECAST CONCRETE BOX CULVERTS	291	2 of 5

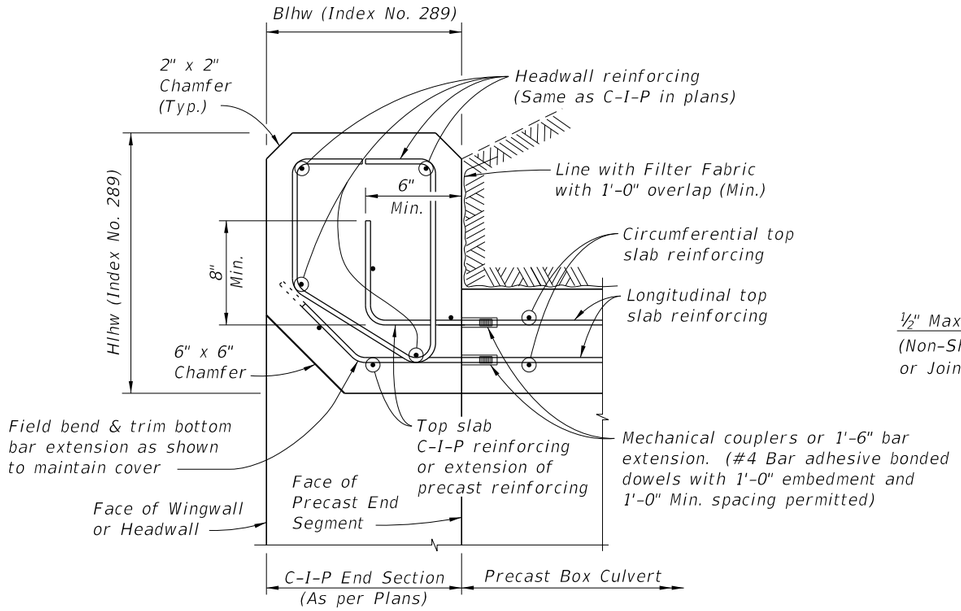

SECTION C-C
C-I-P HEADWALL DETAILS AND CONNECTION TO PRECAST BOX

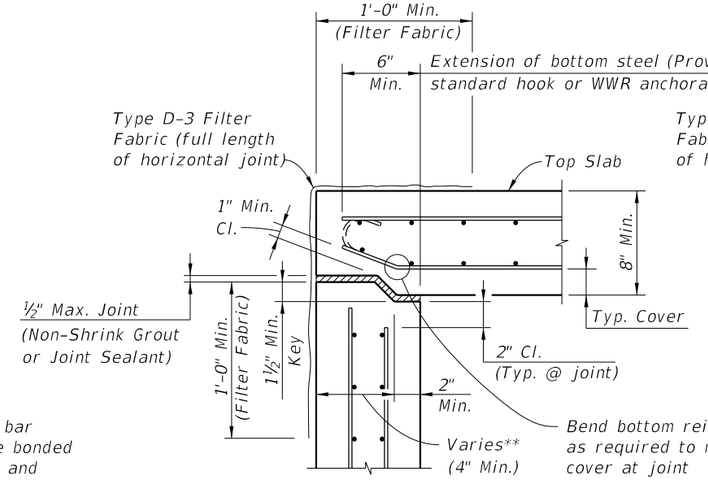

SECTION B-B
TOP SLAB TO WALL JOINT
(KEYED JOINT)

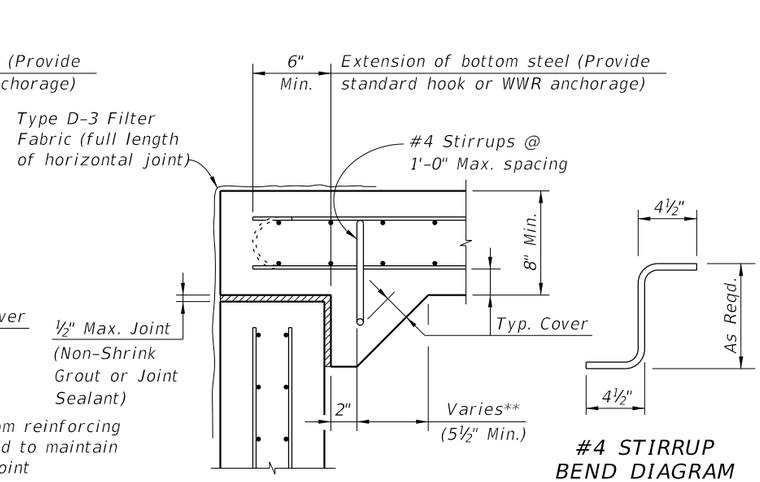

SECTION B-B
TOP SLAB TO WALL JOINT
(HAUNCHED JOINT)

#4 STIRRUP
BEND DIAGRAM

** Provide adequate width to satisfy shear strength requirements at joint

TYPE B BOX LONGITUDINAL JOINTS

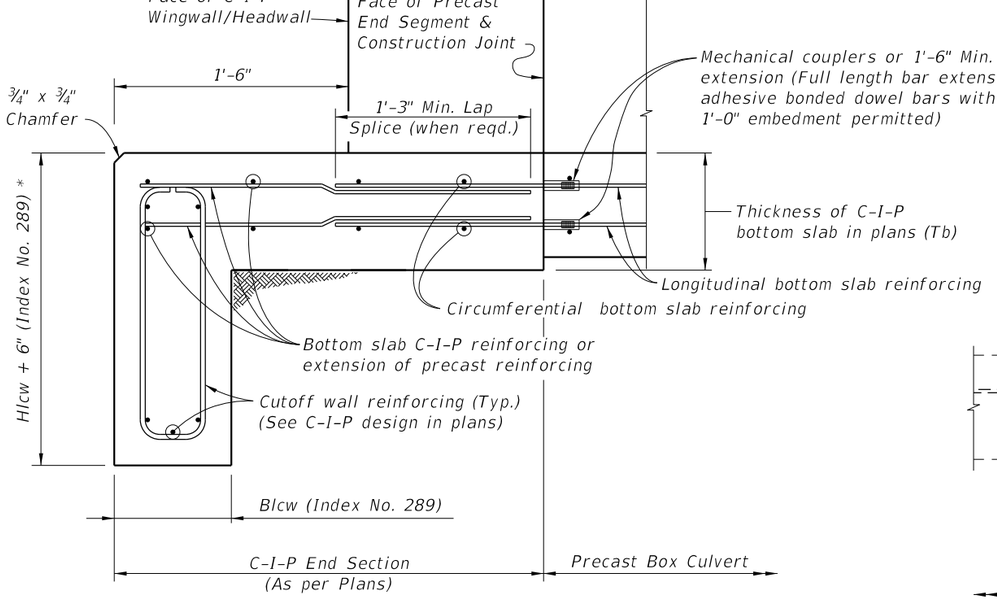

SECTION D-D
C-I-P TOE SLAB & CUTOFF WALL DETAILS
AND CONNECTION TO PRECAST BOX

* Provide additional 6" depth of cutoff wall at no additional cost.

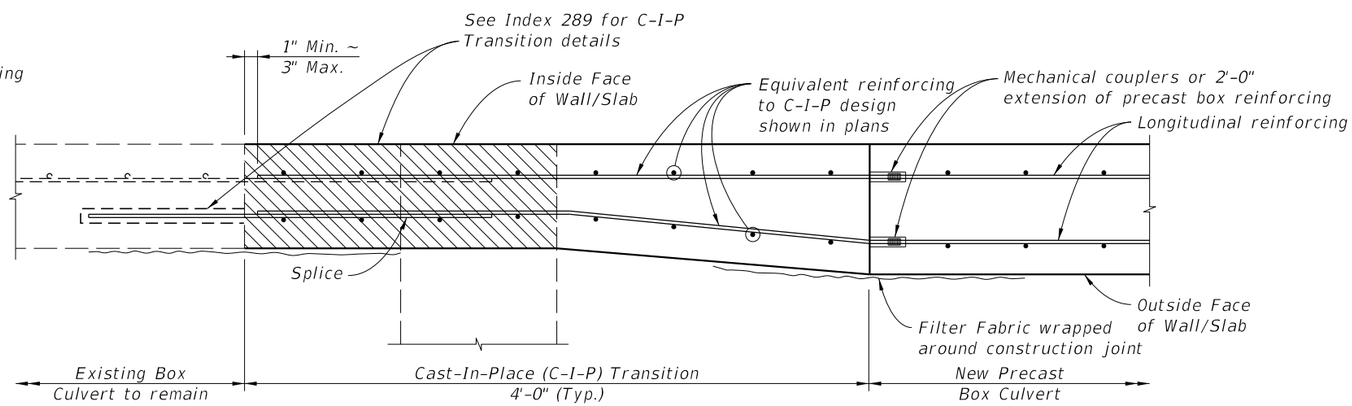

SECTION E-E
EXTERIOR WALL/SLAB TRANSITION DETAIL FOR PRECAST EXTENSION
(Type I Connection shown, Type II Connection similar)

12/17/2015 11:12:56 AM

LAST REVISION	REVISION	DESCRIPTION:	FDOT FY 2016-17 DESIGN STANDARDS	SUPPLEMENTAL DETAILS FOR PRECAST CONCRETE BOX CULVERTS	INDEX NO.	SHEET NO.
01/01/12					291	3 of 5

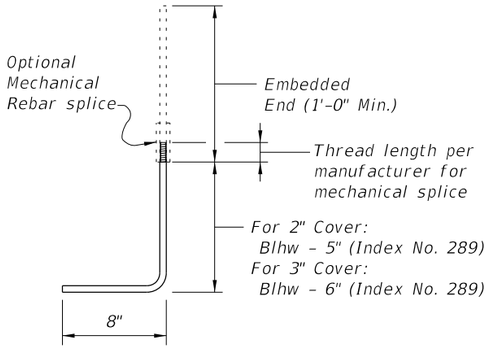

#4 BAR END CAP ANCHOR
BAR BEND DIAGRAM

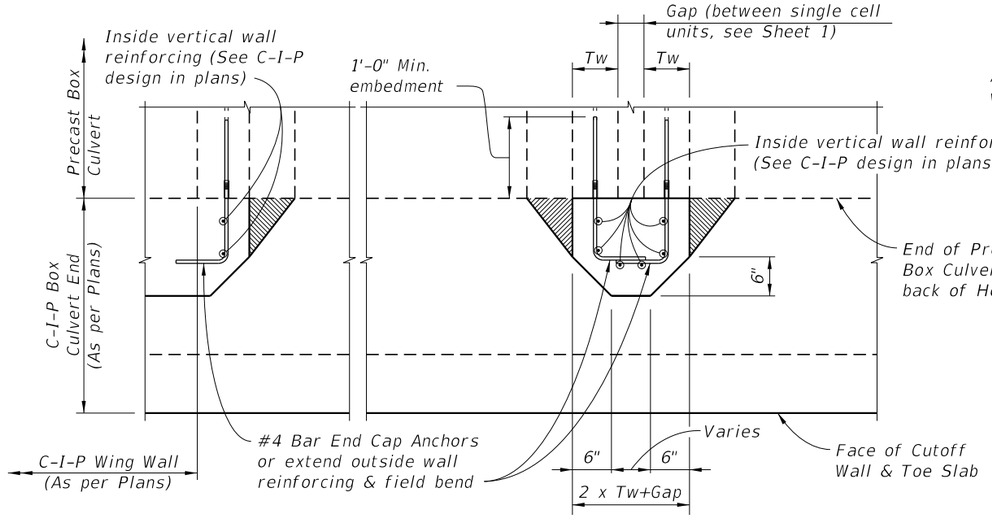

SECTION H-H

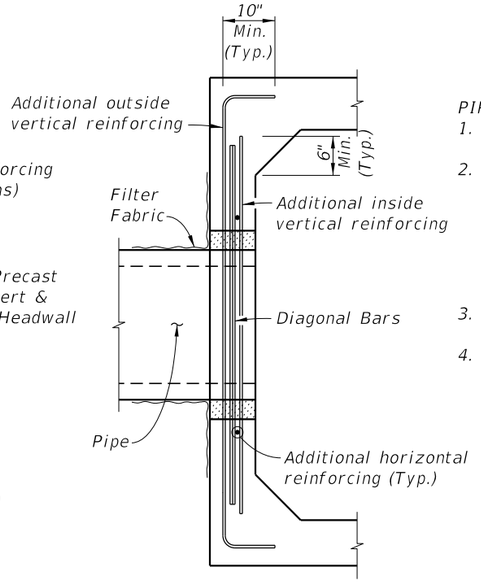

SECTION I-I
(Showing additional blockout reinforcing only)

PIPE BLOCKOUT NOTES:

1. Cut box culvert reinforcement as required to maintain 2" cover.
2. For Precast Sections construct opening a minimum of 1'-6" away from any box to box joint, except opening may be a minimum of 1'-0" away from joint when at least 2'-0" of clearance to the box to box joint is provided on the opposite side of the pipe opening.
3. Pipe blockout diameter to be 6" greater than pipe outside diameter.
4. See Drainage Plans for size, placement, and invert elevation.

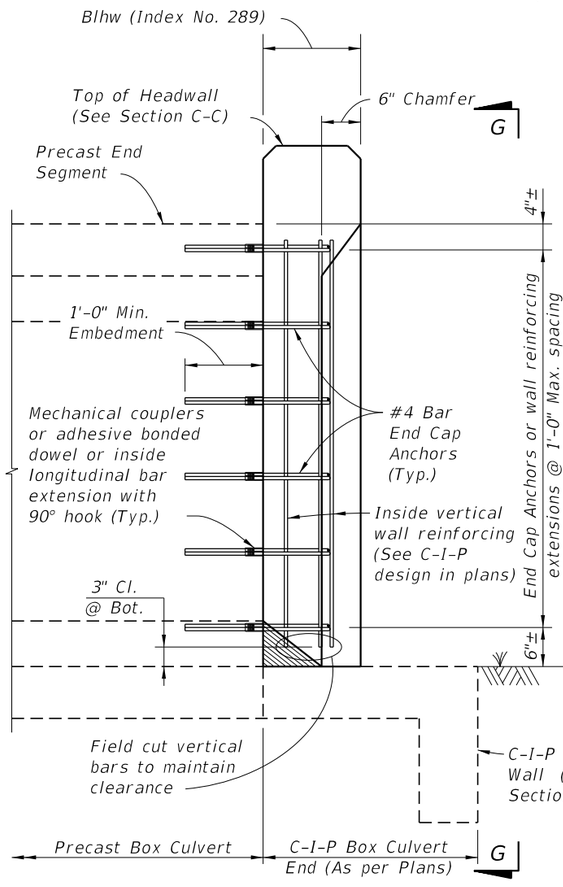

SECTION F-F

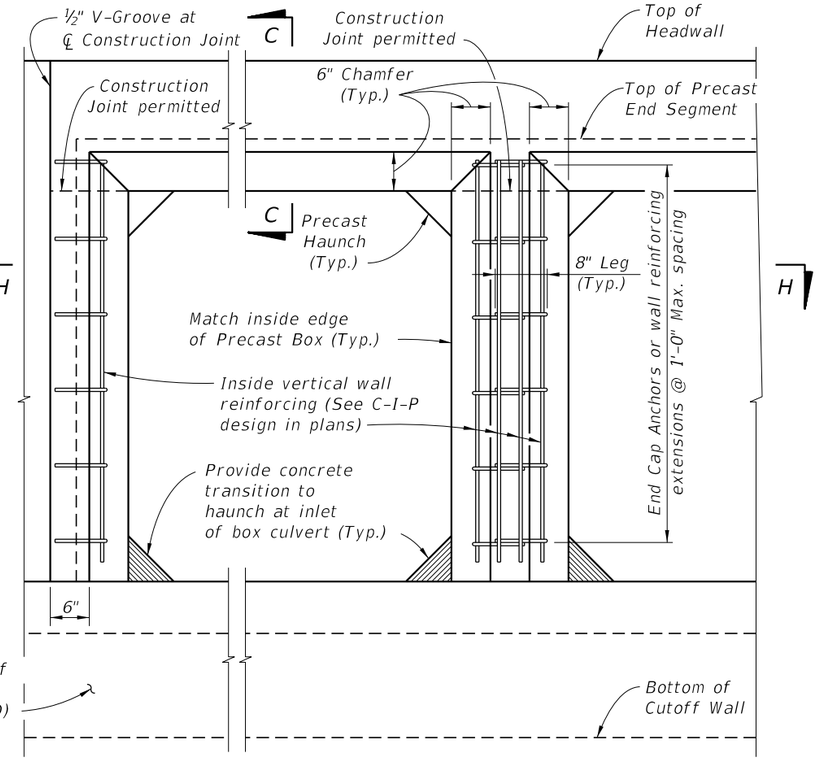

VIEW G-G
(Headwall, Toe Slab and Cutoff Wall Reinforcing not shown for clarity)

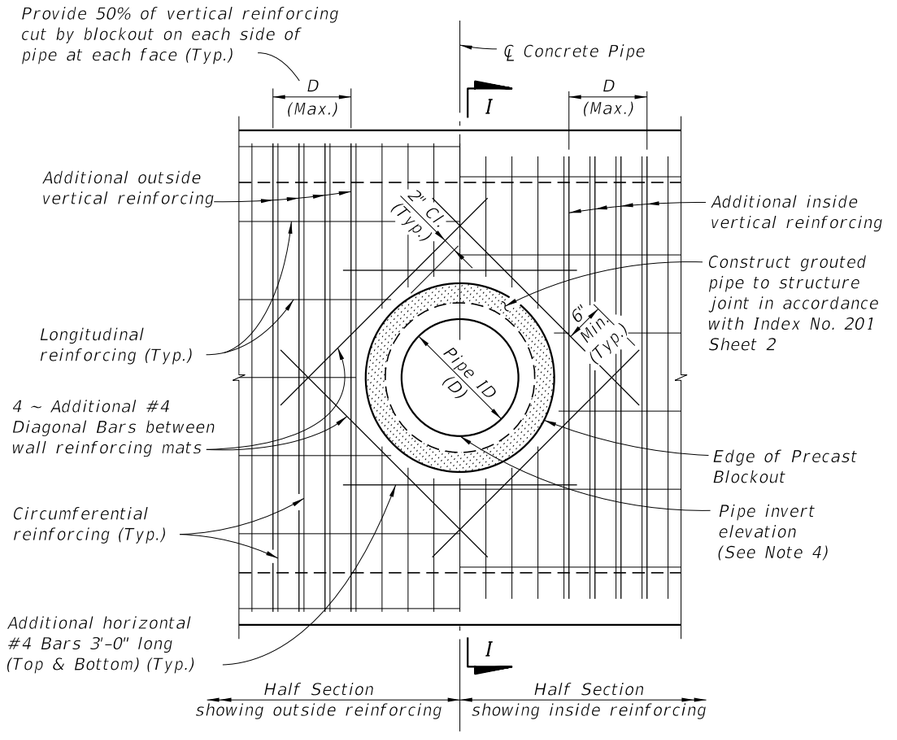

ELEVATION VIEW

C-I-P END CAP DETAILS AND CONNECTION TO PRECAST BOX

PIPE BLOCKOUT DETAILS

12/17/2015 11:12:57 AM

LAST REVISION	REVISION	DESCRIPTION:				
07/01/07			FDOT FY 2016-17 DESIGN STANDARDS	SUPPLEMENTAL DETAILS FOR PRECAST CONCRETE BOX CULVERTS	INDEX NO. 291	SHEET NO. 4 of 5

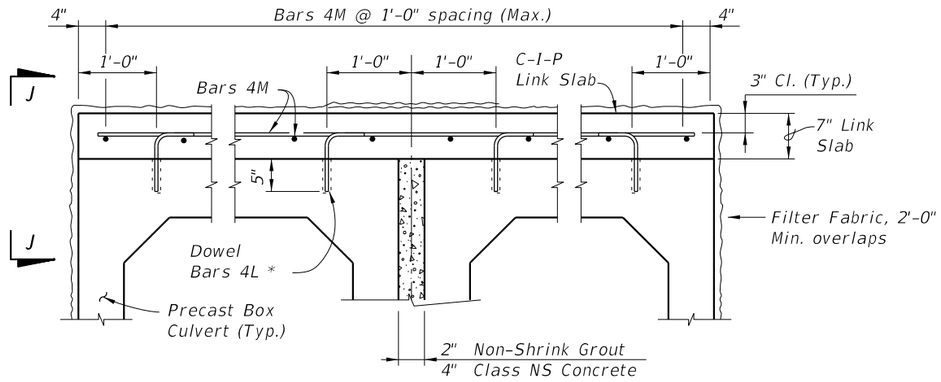

LINK SLAB TYPICAL SECTION
(Multiple Barrel Culvert shown, Single Barrel Culvert similar)

* Install dowels with an Adhesive Bonding Material System in accordance with Specification Section 416. The Contractor may substitute mechanical couplers in lieu of adhesive bonded dowels. Shift dowels to clear box culvert reinforcing.

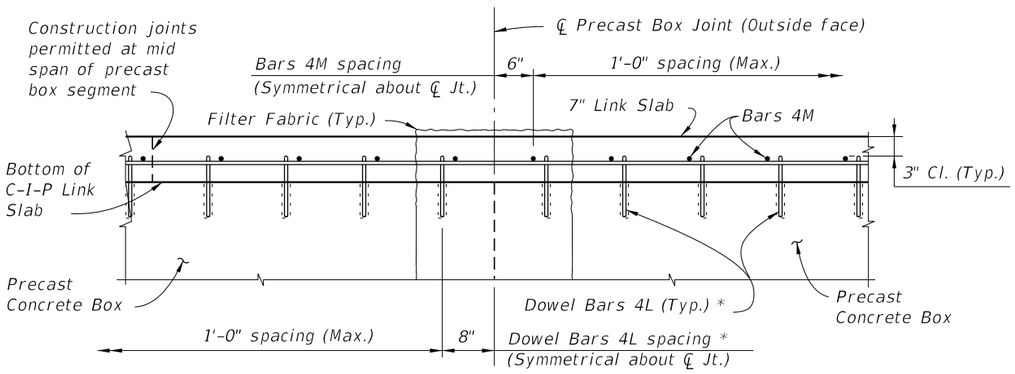

VIEW J-J

LINK SLAB NOTES:

1. Provide a Cast-In-Place Link Slab to ensure uniform joint opening of precast box culverts when the differential settlement shown in the plans exceeds the following limits, except that a Link Slab is not required for differential settlements less than ½".

$$\Delta Y \leq \frac{(L)^2}{760 \times R \times W}$$

Where:
ΔY = Maximum Long-Term Differential Settlement (ft.)
R = Exterior height of Box Culvert (ft.)
W = Length of Box Culvert Segments (ft.)
L = Effective length for single curvature deflection (ft.)

2. Extend Link Slab to back face of headwalls and to limits of existing box culverts for extensions.

ESTIMATED LINK SLAB QUANTITIES		
ITEM	UNIT	QUANTITY
Class II or IV Concrete (Culvert)	CY/SF	0.0216
Reinforcing Steel (Roadway)	Lb./SF	1.52

NOTE: Estimated quantities are based the plan area of precast box slabs, and are provided for information only. No additional payment will be made for Link Slabs where these are required for the precast box culverts.

BILL OF REINFORCING STEEL			
MARK	SIZE	NO. REQ'D	LENGTH
L	4	2 per Barrel/Ft.	1'-3"
M	4	As Reqd.	As Reqd.

REINFORCING STEEL BENDING DIAGRAMS

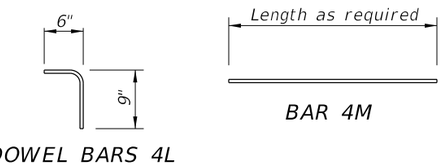

NOTES:
1. All bar dimensions are out to out.
2. Lap splice length for Bars 4M is 1'-4" minimum.

DESIGN NOTE:

1. Link Slab required when joint openings from differential settlement exceed ⅛" as determined in Link Slab Note 1.

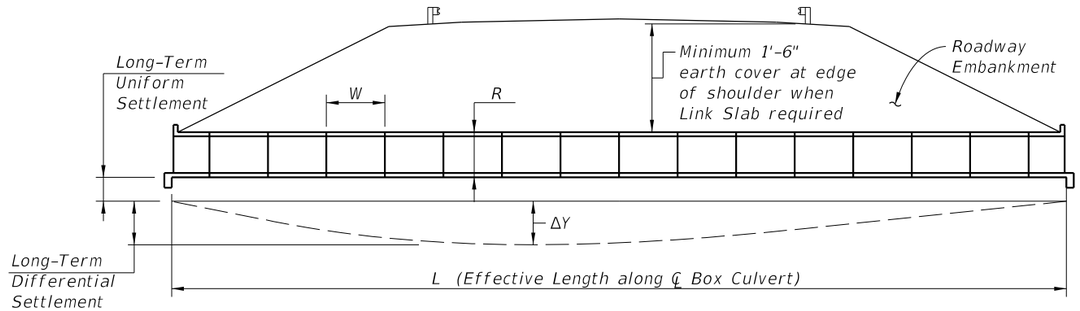

SCHEMATIC LONGITUDINAL SECTION (NEW CONSTRUCTION)

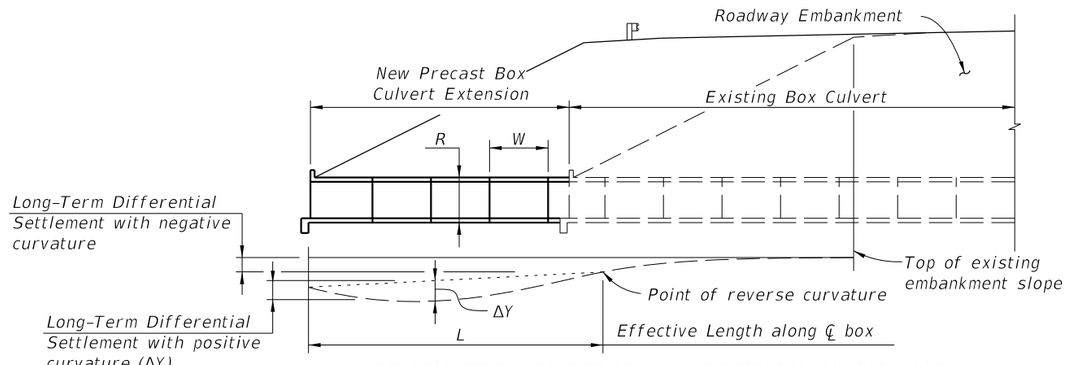

SCHEMATIC LONGITUDINAL SECTION (WIDENING)

DIFFERENTIAL SETTLEMENT COUNTERMEASURES FOR PRECAST BOX CULVERTS

12/17/2015 11:12:58 AM

LAST REVISION	REVISION	DESCRIPTION:	FDOT FY 2016-17 DESIGN STANDARDS	SUPPLEMENTAL DETAILS FOR PRECAST CONCRETE BOX CULVERTS	INDEX NO.	SHEET NO.
01/01/09					291	5 of 5