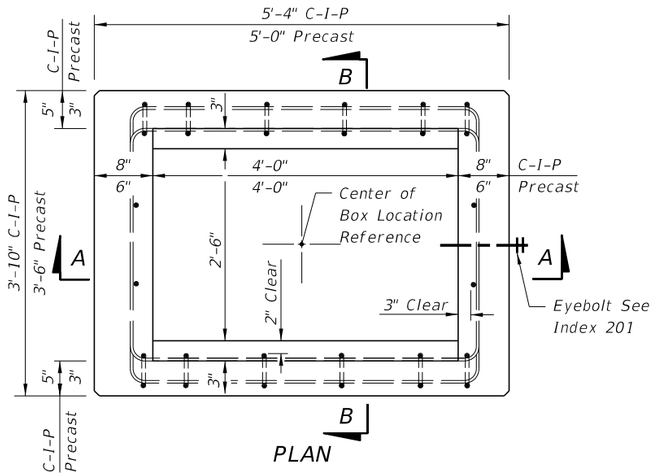

PLAN

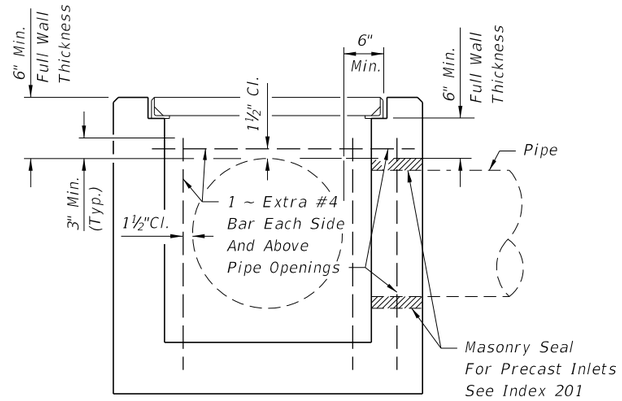

(TYPE F SHOWN, TYPE G SIMILAR)

PIPE OPENING SCHEMATIC

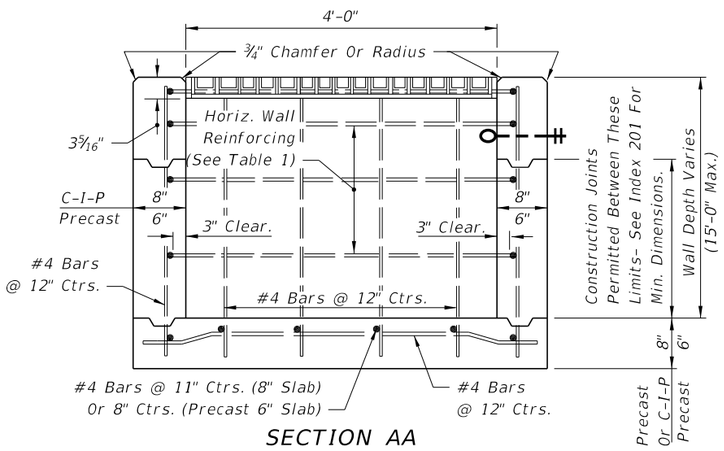

SECTION AA

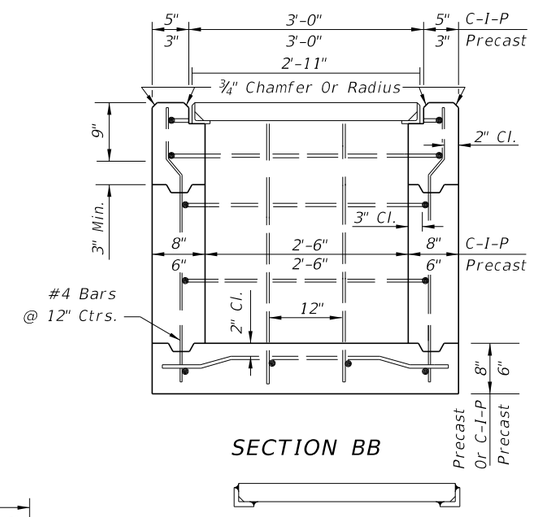

SECTION BB

SECTION CC

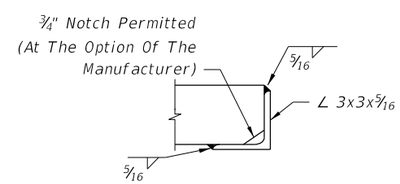

SECTION DD

GENERAL NOTES

1. These inlets are designed for use in ditches, medians, pavement areas, or other areas subject to heavy wheel loads, minimal debris, and bicycle traffic. This inlet may be placed in areas subject to occasional pedestrian traffic such as landscaped areas and pavement areas where pedestrians can walk around the inlet. When inlet is placed in areas subject to bicycle traffic, install filler bar when clearance or gap is greater than 1" as shown in Index 218 Inset B.
2. When Alternate G grate is specified in plans, the grate is to be hot dip galvanized after fabrication.
3. These inlets may be used with Alternate B structure bottoms, Index 200. The inlet and bottom combinations are to be paid for under the contract unit price for inlets (DT Bot) (Type F (or G)) (J Bot, Depth), Ea.
4. All exposed edges and corners shall be ¾" chamfer or tooled to ¼" radius.
5. For supplemental details, see Index 201.
6. All reinforcing is Grade 60 bars with 2" min. cover unless otherwise noted. Bars to be cut or bent for 1½" clearance around pipe opening. Provide one additional #4 bar above and at each side of pipe opening, as shown.
7. All dimensions are for both precast and cast-in-place inlets unless otherwise noted.

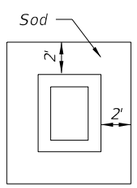

Inlet	Sod SY
G	7
F	6

SOD ONLY

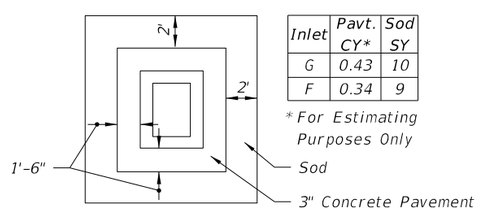

Inlet	Pavt. CY*	Sod SY
G	0.43	10
F	0.34	9

* For Estimating Purposes Only

PAVT. AND SOD

Notes:
1. Pavement and/or sod to be used only where called for in the plans.
2. Cost of paving to be included in cost of inlet.

PAVEMENT AND SODDING

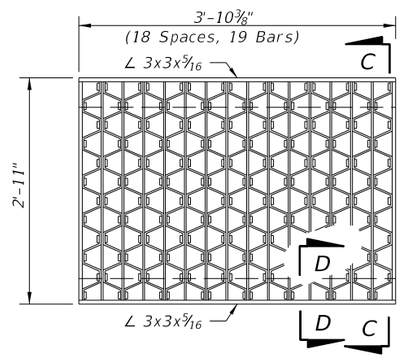

STEEL GRATE

Steel Grating, Straight Bars 3"x¼"
Reticuline Bars 2"x3/16"

TYPE F

HORIZONTAL WALL REINF. SCHEDULES
TYPE F INLET (TABLE 1)

WALL DEPTH	SCHEDULE	AREA (in^2/ft)	MAX. SPACING	
			BARS	WWF
0' - 4'	A12	0.20	12"	8"
4' - 7'	A6	0.20	6"	5"
7' - 12'	B5.5	0.24	5½"	5"
12' - 15'	Special 1	0.267	5"	4"

RECOMMENDED MAXIMUM PIPE SIZES

INLET INSIDE WIDTH	PIPE SIZE
2'-6" (Type F)	18"
4'-0" (Type F)	30"
4'-10" / 5'-0" (Type G)	42"

Note: Recommended sizes are for concrete pipe. Sizes for other types of pipe must be verified for fit in accordance with Index No. 201. For larger pipe sizes see Note 3.

12/3/2015 10:34:13 AM

LAST REVISION	REVISION	DESCRIPTION:			INDEX NO.	SHEET NO.
01/01/10			FY 2016-17 DESIGN STANDARDS	DITCH BOTTOM INLET TYPES F AND G	233	1 of 2

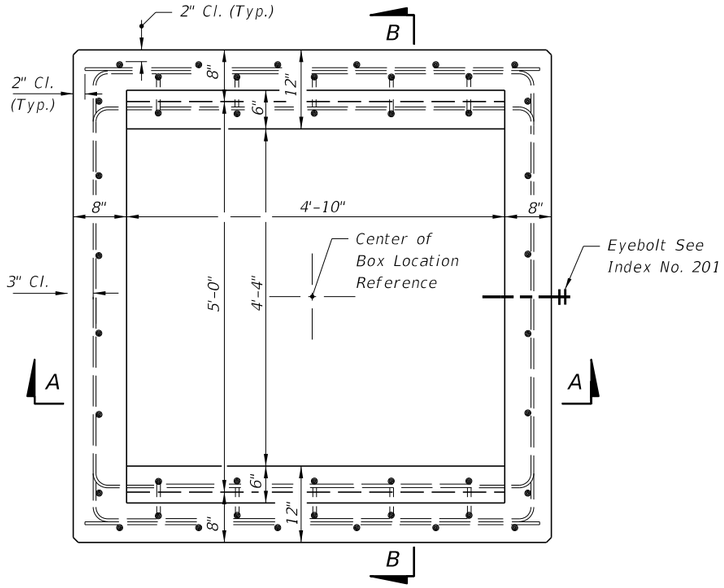

PLAN

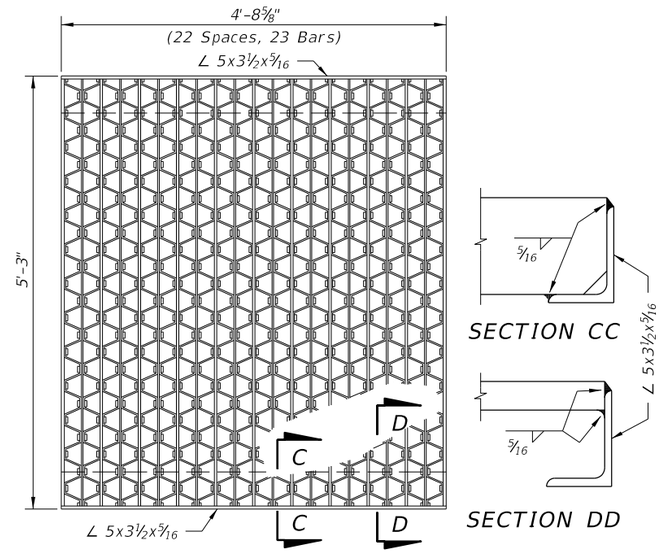

STEEL GRATE

5" Steel Decking, Weight 630 Lbs. Main Bars 5" x ¼"
Intermediate Bars 1½" x¼", Reticuline Bars 1¼" x 3/16"

TYPE G INLET (TABLE 2)

WALL DEPTH	SCHEDULE	AREA (in^2/ft)	MAX. SPACING	
			BARS	WWF
0' - 3'	A12	0.20	12"	8"
3' - 7'	A6	0.20	6"	5"
7' - 10'	B5.5	0.24	5½"	5"
10' - 15'	C6.5	0.37	6½"	6"

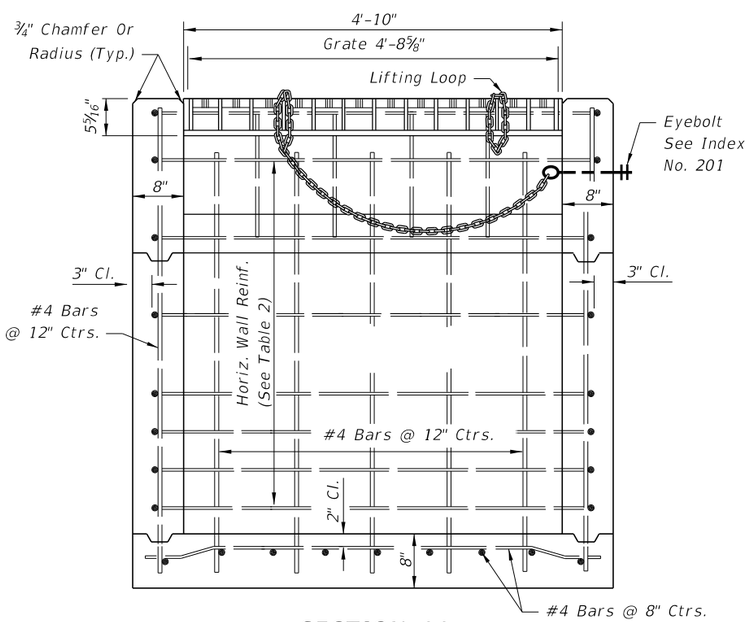

SECTION AA

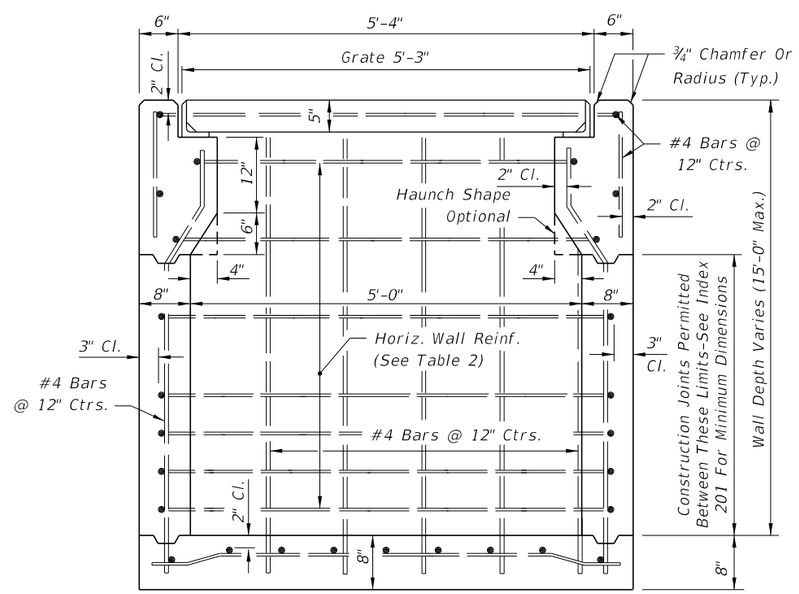

SECTION BB

TYPE G

LAST REVISION	REVISION	DESCRIPTION:			INDEX NO.	SHEET NO.
01/01/10			FDOT FY 2016-17 DESIGN STANDARDS	DITCH BOTTOM INLET TYPES F AND G	233	2 of 2

12/3/2015 10:34:15 AM