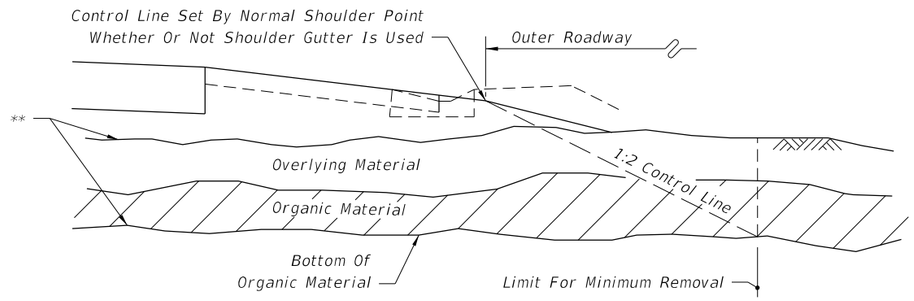

WITH OVERBURDEN - HALF SECTION

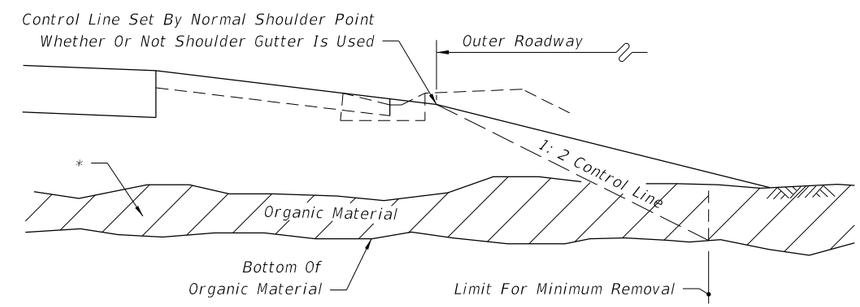

WITHOUT OVERBURDEN - HALF SECTION

IN RURAL CONSTRUCTION

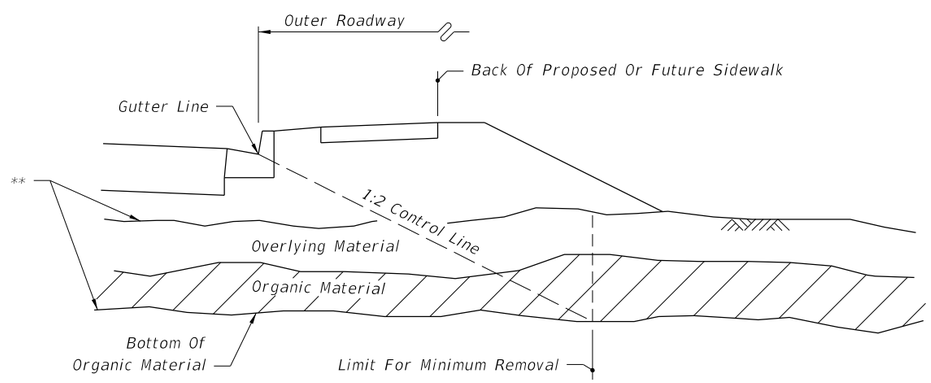

WITH OVERBURDEN - HALF SECTION

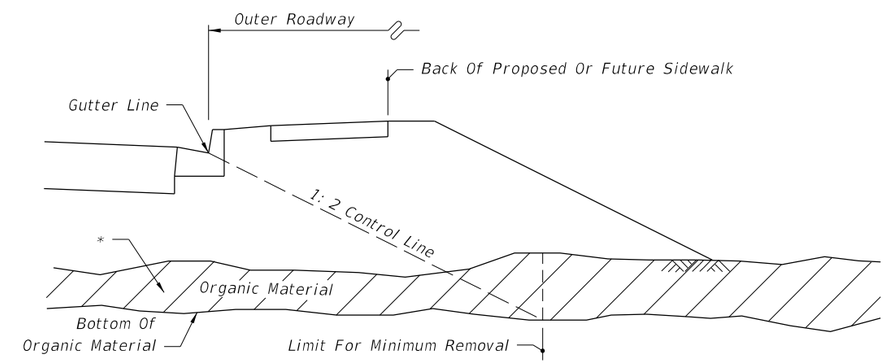

WITHOUT OVERBURDEN - HALF SECTION

** Remove overlying material and organic material within the limits shown and backfill in accordance with Index no. 505, unless approved otherwise by the District Geotechnical Engineer; The limits include full median width when applied to divided facilities with median widths up to 64'; When median width is greater than 64' and for bifurcated roadways the organic material removal limits will be set by a 1:2 control line complimentary to the outer roadway that will accommodate one future median lane on each roadway unless specified otherwise by the plans.

IN URBAN CONSTRUCTION

* Remove organic material within the limits shown and backfill in accordance with Index no. 505, unless approved otherwise by the District Geotechnical Engineer; The limits include full median width when applied to divided facilities with median widths up to 64'; When median width is greater than 64' and for bifurcated roadways the organic material removal limits will be set by a 1:2 control line complimentary to the outer roadway that will accommodate one future median lane on each roadway unless specified otherwise by the plans.

REMOVAL OF ORGANIC MATERIAL

GENERAL NOTES

1. All details shown on this index for removal of organic and plastic materials apply unless otherwise shown on the plans.

2. Utilization of excavated materials shall be in accordance with Index No. 505.

3. Where organic or plastic material is undercut, backfill shall be made of suitable material in accordance with Index No. 505, unless otherwise shown on the plans.

4. The term "Plastic Material" used in this index in conjunction with removal of plastic soil is as defined under soil classifications for Plastic (P) and High Plastic (H) on Index No. 505.

5. The term "Organic Material" as used on this index is defined as any soil which has an average organic content greater than five (5.0) percent, or an individual organic content test result which exceeds seven (7.0) percent. Organic material shall be removed as shown on this index and the plans unless directed otherwise by the District Geotechnical Engineer. Average organic content shall be determined from the test results from a minimum of three randomly selected samples from each stratum. Tests shall be performed in accordance with AASHTO T 267 on the portion of a sample passing the No. 4 sieve.

6. The normal depth of side ditches shall be 3.5' below the shoulder point except in special cases.

7. In municipal areas, where underdrain is to be constructed beneath the proposed pavement, the grade of the underdrain filter material will not extend above the bottom of the stabilized section of the subgrade. Gradation of the filter material shall conform to FDOT specifications. Minimum grade on underdrain pipe shall be 0.2%.

8. See Index No. 506 for miscellaneous earthwork details.

DESIGN NOTES

1. At locations where organic material or other soft soil deposits persists to such depth that removal is impractical, the construction of a geosynthetic foundation over those soils should be considered. The Engineer of Record should request guidance from the District Geotechnical Engineer and make a geosynthetic foundation design in accordance with Index No. 501 when pursuing geosynthetic alternates.

2. The designer shall take into consideration the expectancy of roadway widening to the outside, and where widening is anticipated specify in the plans the limits of removal of organic and plastic materials necessary to accommodate anticipated widening.

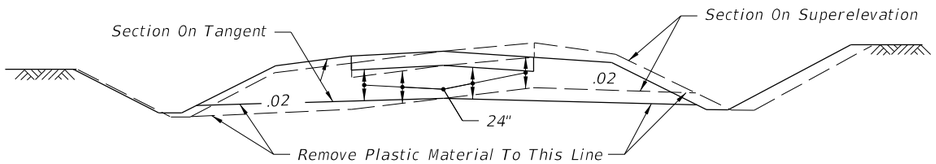

TYPICAL CUT SECTION

Note: When this detail is applied to minor collectors and local facilities, the undercut may be reduced to 18".

REMOVAL OF PLASTIC MATERIAL ON DIVIDED FREEWAYS, ARTERIALS AND MAJOR COLLECTORS HAVING FLUSH MEDIANS, AND ON UNDIVIDED ARTERIALS AND MAJOR COLLECTORS

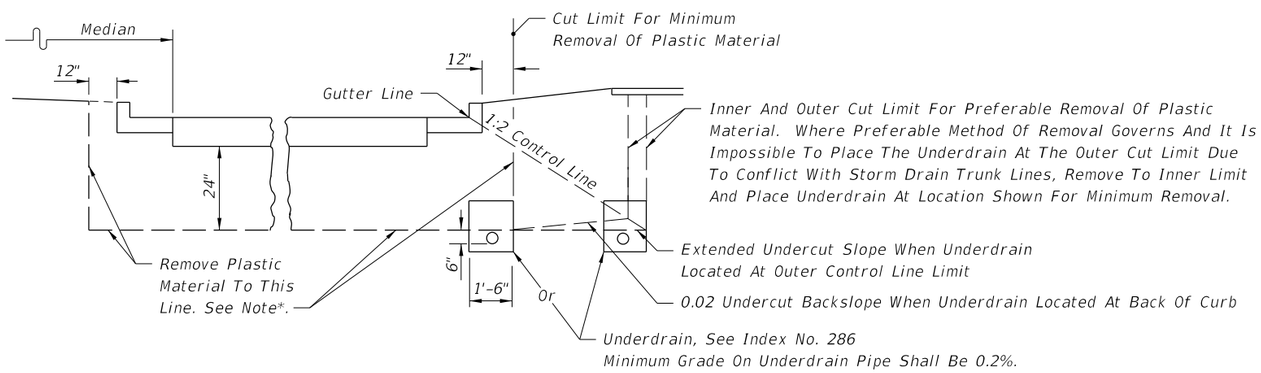

HALF SECTION

NOTES:

Refer to roadway cross sections to determine whether minimum or preferable removal is used.

* Where frequency of median breaks indicates that it is impractical to leave plastic material in the median, the designer may elect to indicate total removal of this material. If during construction it becomes apparent, due to normal required construction procedures, that it is impractical to leave the plastic material in the median, total removal of this material shall be approved by the Engineer.

REMOVAL OF PLASTIC MATERIAL AND LOCATION OF UNDERDRAIN IN URBAN CONSTRUCTION

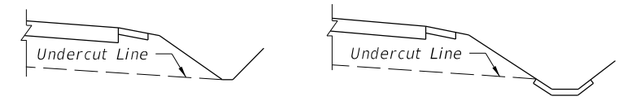

At locations where plastic material is being removed, the side ditches must be at least as deep as the undercut plane.

Where paved side ditches are used in areas of removal of plastic material, the top of the ditch pavement must be no higher than the undercut plane.

MISCELLANEOUS DETAILS

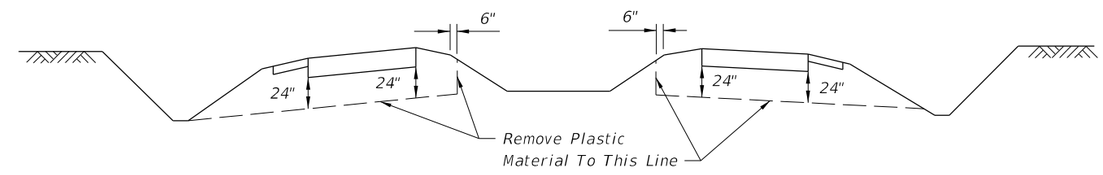

TYPICAL CUT SECTION ON TANGENT

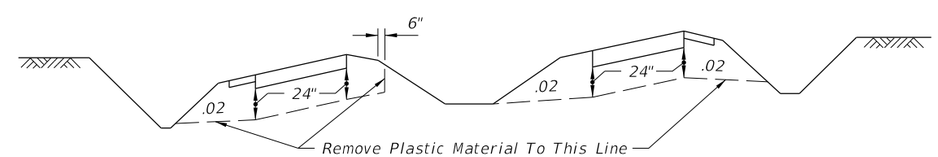

TYPICAL CUT SECTION ON SUPERELEVATION

REMOVAL OF PLASTIC MATERIAL ON INTERSTATE FACILITIES, FREEWAYS, DIVIDED ARTERIALS AND MAJOR COLLECTORS HAVING DEPRESSED MEDIANS

REMOVAL OF PLASTIC MATERIAL

Note: For GENERAL NOTES see Sheet 1.

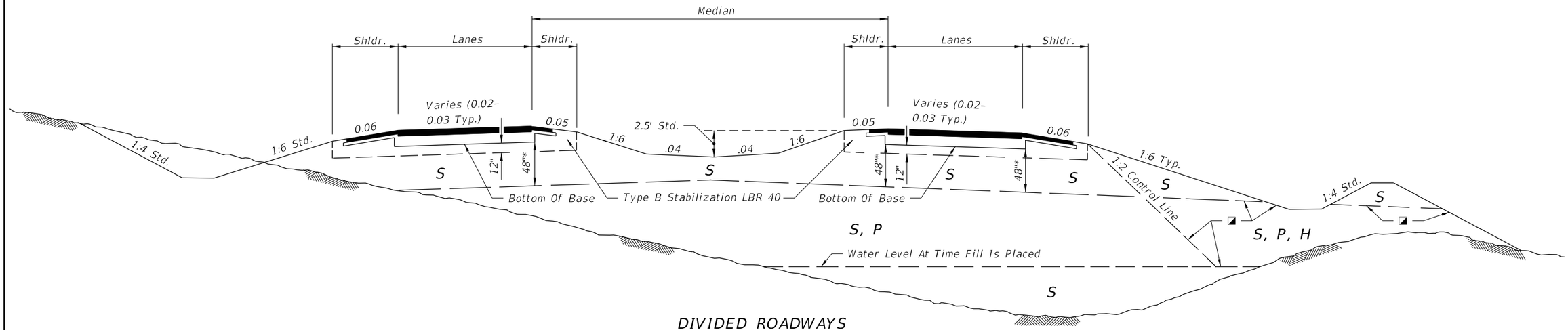

DIVIDED ROADWAYS

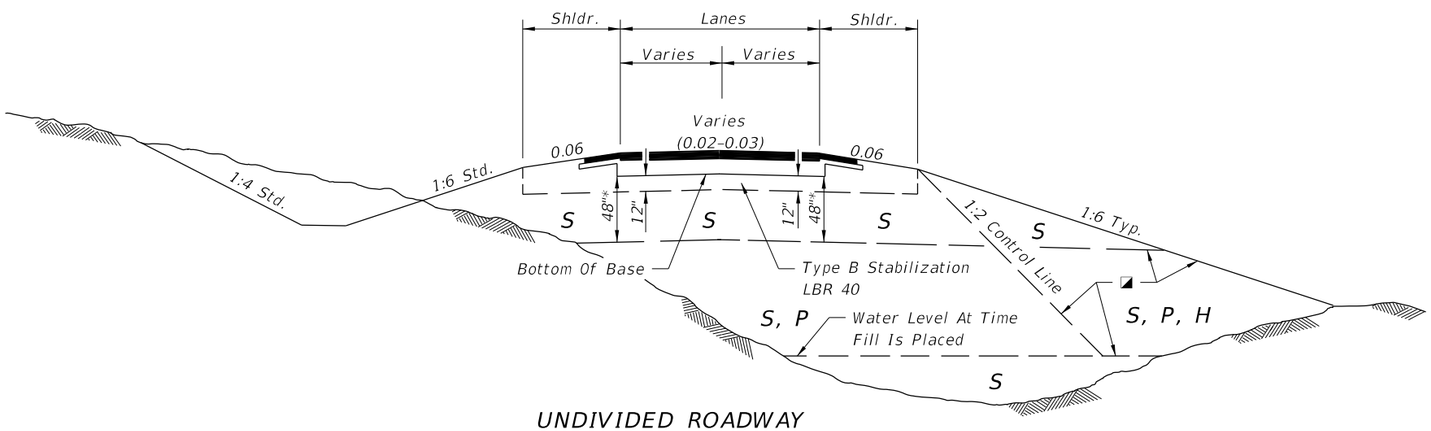

UNDIVIDED ROADWAY

SYMBOL	SOIL	CLASSIFICATION (AASHTO M 145)
S	Select	A-1, A-3, A-2-4 **
P	Plastic	A-2-5, A-2-6, A-2-7, A-4, A-5, A-6, A-7 (ALL WITH LL < 50)
H	High Plastic	A-2-5, A-2-7, A-5 Or A-7 (ALL WITH LL > 50)
M	Muck	A-8

Classification listed left to right in order of preference.

◪ See General Notes Nos. 4 & 5 for utilization of soils classified as organic material or muck.

** Certain types of A-2-4 material are likely to retain excess moisture and may be difficult to dry and compact. They should be used in the embankment above the water level existing at time of construction. They may be used in the subgrade portion of the roadbed when approved by the District Materials Engineer. A-2-4 material placed below the existing water level must be nonplastic and contain less than 15% passing the No. 200 U.S. Standard sieve.

* For cut sections this dimension may be reduced to 24"; see Index No. 500. For minor collectors and local facilities this dimension may be reduced to 18".

FLEXIBLE PAVEMENT

GENERAL NOTES

1. Roadway dimensions are representative. Subgrade dimensions and control lines are standard. The details shown on this Index do not supersede the details shown in the plans or on Index Nos. 500 or 506.

2. Plastic (P) soils may be placed above the existing water level (at the time of construction) to within 4 feet of the proposed base. It should be placed uniformly in the lower portion of the embankment for some distance along the project rather than full depth for short distances.

3. High Plastic (H) soils excavated within the project limits may be used in embankment construction as indicated on this index. High Plastic soils are not to be used for embankment construction when obtained from outside the project limits.

4. Select (S) soils having an average organic content of more than two and one-half (2.5) percent, or having an individual test value which exceeds four (4) percent, shall not be used in the subgrade portion of the roadbed. Select (S), Plastic (P), or High Plastic (H) soils having an average organic content of more than five (5) percent, or an organic content individual test result which exceeds seven (7) percent, shall not be used in the portion of embankment inside the control line, unless written authorization is provided by the District Geotechnical Engineer; these soils may be used for embankment construction outside the control line, unless restricted by the plans or otherwise specified in the plans, provided they can be compacted sufficiently to sustain a drivable surface for operational vehicles as approved by the Engineer. Average organic content shall be determined from the test results from a minimum of three randomly selected samples from each stratum or stockpile of a particular material. Tests shall be performed in accordance with AASHTO T 267 on the portion of a sample passing the No. 4 sieve.

5. Highly organic soils, composed primarily of partially decayed organic matter, often dark brown or black in color with an odor of decay, and sometimes fibrous, shall be designated as muck. Further, any stratum or stockpile of soil which contains pockets of highly organic material may be designated as Muck (M). Highly organic soils shall not be used within the subgrade or embankment portion of the roadbed, with the exception of muck used as a supplement to construct a finish soil layer as described in Section 162 of the FDOT Standard Specifications.

DESIGN NOTES

1. The designer shall take into consideration the expectancy of roadway widening to the outside, and where widening is anticipated, specify in the plans the location of the future widening control line for utilization of High Plastic (H) soils and/or soils classified as organic material in the embankment.

2. The designer shall take into consideration the position of the drainage swales in the portion of the embankment where Plastic (P) soils, High Plastic (H) soils, or soils classified as organic material would be allowed. The designer shall limit the use of Plastic (P) soils, High Plastic (H) soils, and/or soils classified as organic material to locations that will not inhibit the infiltration of stormwater from the swales.

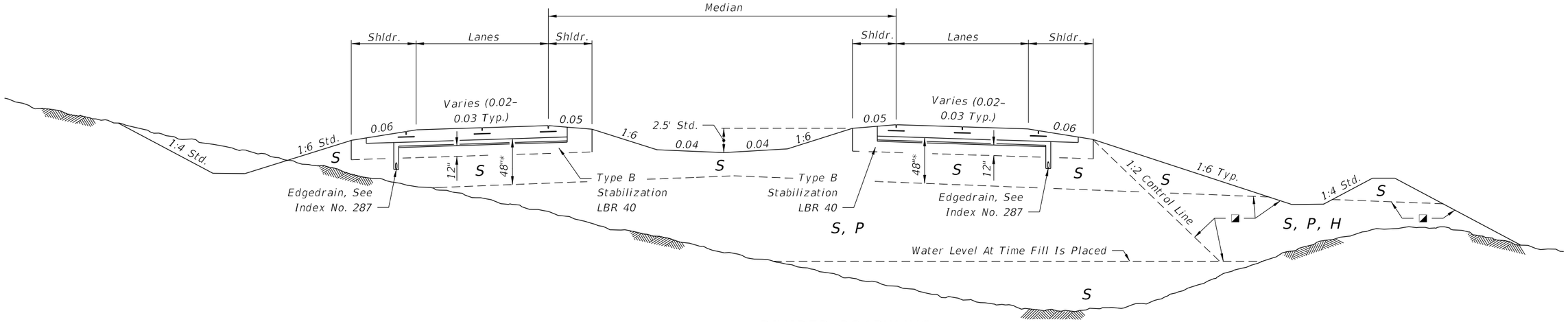

DIVIDED ROADWAYS

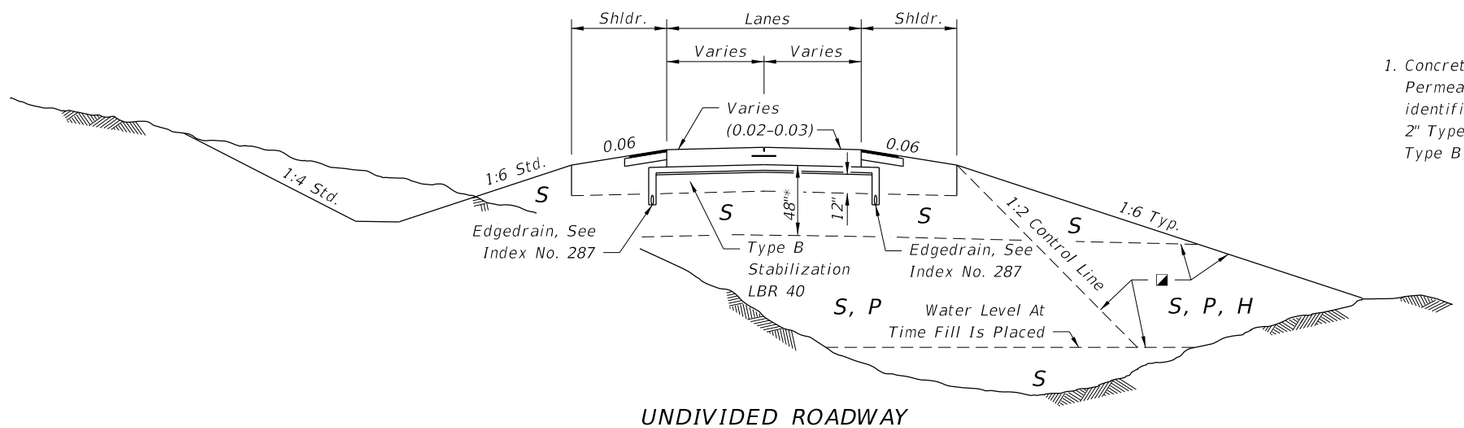

UNDIVIDED ROADWAY

DESIGN NOTE

1. Concrete pavement is to be placed over 4" of Asphalt Treated Permeable Base (ATPB) or Cement Treated Permeable Base (CTPB) as identified in the plans. This will be placed on a separator layer using 2" Type SP. This will be placed on a working platform using 12" of Type B Stabilization.

SYMBOL	SOIL	CLASSIFICATION (AASHTO M 145)
S	Select	A-1, A-3, A-2-4 **
P	Plastic	A-2-5, A-2-6, A-2-7, A-4, A-5, A-6, A-7 (ALL WITH LL < 50)
H	High Plastic	A-2-5, A-2-7, A-5 Or A-7 (ALL WITH LL > 50)
M	Muck	A-8

Classification listed left to right in order of preference.

◪ See General Notes Nos. 4 & 5 for utilization of soils classified as organic material or muck.

** Certain types of A-2-4 material are likely to retain excess moisture and may be difficult to dry and compact. They should be used in the embankment above the water level existing at time of construction. They may be used in the subgrade portion of the roadbed when approved by the District Materials Engineer. A-2-4 material placed below the existing water level must be nonplastic and contain less than 15% passing the No. 200 U.S. Standard sieve.

* For cut sections this dimension may be reduced to 24"; see Index No. 500. For minor collectors and local facilities this dimension may be reduced to 18".

RIGID PAVEMENT - TREATED PERMEABLE BASE OPTION

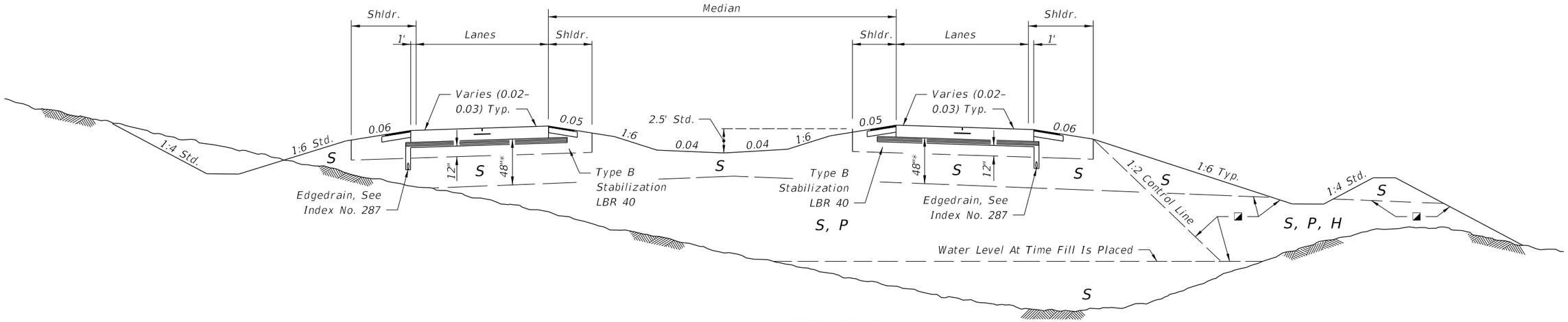

DIVIDED ROADWAYS

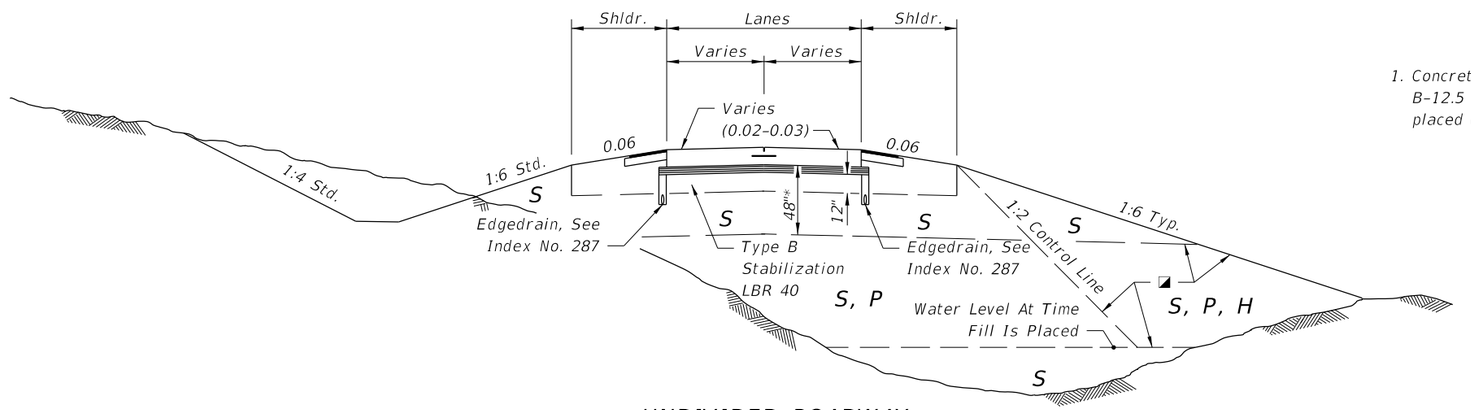

UNDIVIDED ROADWAY

DESIGN NOTE

1. Concrete pavement is to be placed over Optional Base Group 1 Type B-12.5 only Asphalt Base as identified in the plans. This will be placed on a working platform using 12" of Type B Stabilization.

SYMBOL	SOIL	CLASSIFICATION (AASHTO M 145)
S	Select	A-1, A-3, A-2-4 **
P	Plastic	A-2-5, A-2-6, A-2-7, A-4, A-5, A-6, A-7 (ALL WITH LL < 50)
H	High Plastic	A-2-5, A-2-7, A-5 Or A-7 (ALL WITH LL > 50)
M	Muck	A-8

Classification listed left to right in order of preference.

◪ See General Notes Nos. 4 & 5 for utilization of soils classified as organic material or muck.

** Certain types of A-2-4 material are likely to retain excess moisture and may be difficult to dry and compact. They should be used in the embankment above the water level existing at time of construction. They may be used in the subgrade portion of the roadbed when approved by the District Materials Engineer. A-2-4 material placed below the existing water level must be nonplastic and contain less than 15% passing the No. 200 U.S. Standard sieve.

* For cut sections this dimension may be reduced to 24"; see Index No. 500. For minor collectors and local facilities this dimension may be reduced to 18".

RIGID PAVEMENT - ASPHALT BASE OPTION

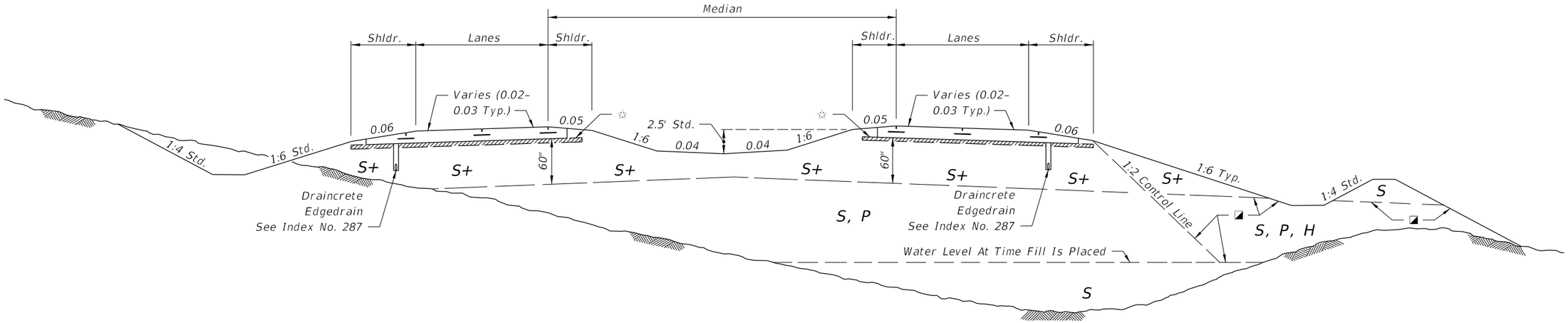

DIVIDED ROADWAYS

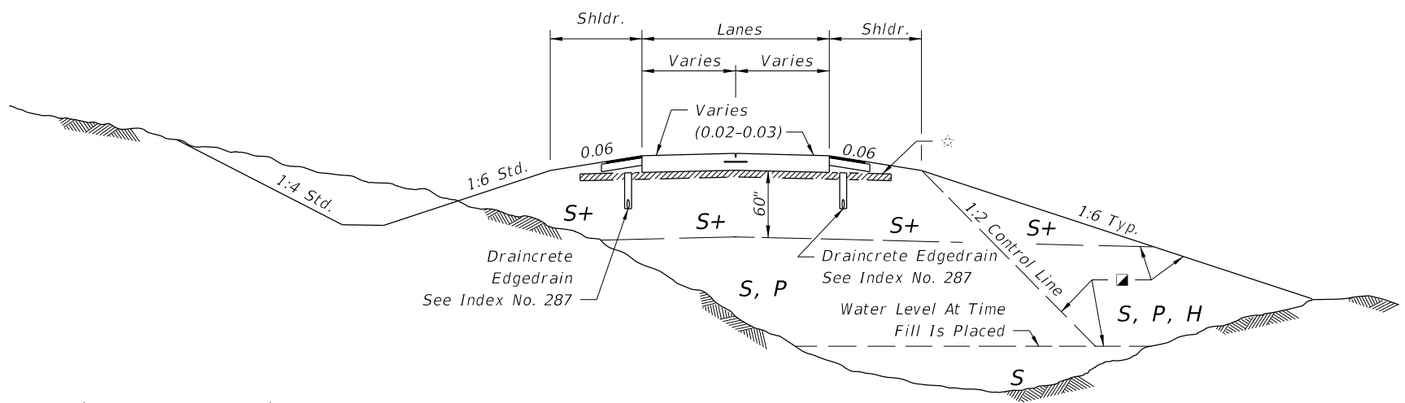

UNDIVIDED ROADWAY

SYMBOL	SOIL	CLASSIFICATION (AASHTO M 145)
S	Select	A-1, A-3, A-2-4 **
S+	Special Select	A-3 *** With Minimum Average Lab Permeability of $5x10^{-5}$ cm/sec. (0.14 ft./day) as per FM 1-T215
P	Plastic	A-2-5, A-2-6, A-2-7, A-4, A-5, A-6, A-7 (ALL WITH LL<50)
H	High Plastic	A-2-5, A-2-7, A-5 Or A-7 (ALL WITH LL>50)
M	Muck	A-8

Classification listed left to right in order of preference.

◪ See General Notes Nos. 4 & 5 for utilization of soils classified as organic material or muck.

*** When allowed by the plans, some types of A-2-4 material may be approved in writing by the District Materials Engineer. This material must meet the minimum lab permeability requirement, be nonplastic, and not exceed 12% passing the No. 200 U.S. Standard sieve.

** Certain types of A-2-4 material are likely to retain excess moisture and may be difficult to dry and compact. They should be used in the embankment above the water level existing at time of construction. A-2-4 material placed below the existing water level must be nonplastic and contain less than 15% passing the No. 200 U.S. Standard sieve.

☆ 3" of #57 or #89 Coarse Aggregate Mixed Into Top 6".

Note: SPECIAL SELECT SOIL OPTION may be used only when approved in writing by the District Materials Engineer and shown in the plans.

RIGID PAVEMENT - SPECIAL SELECT SOIL OPTION

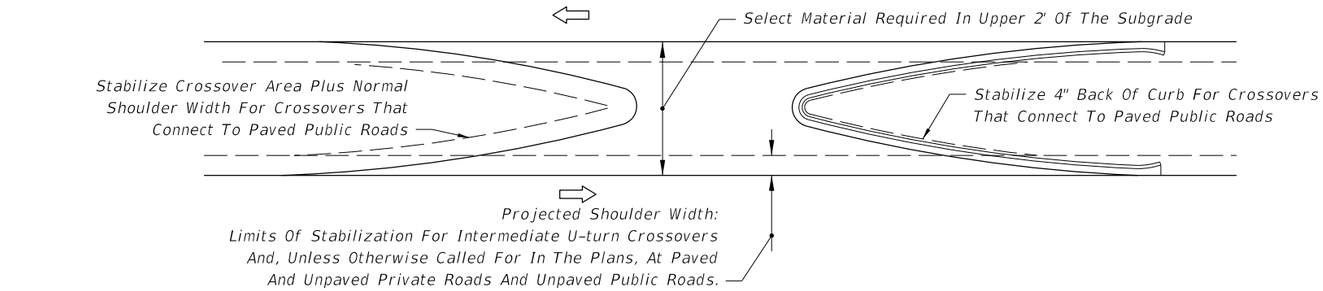

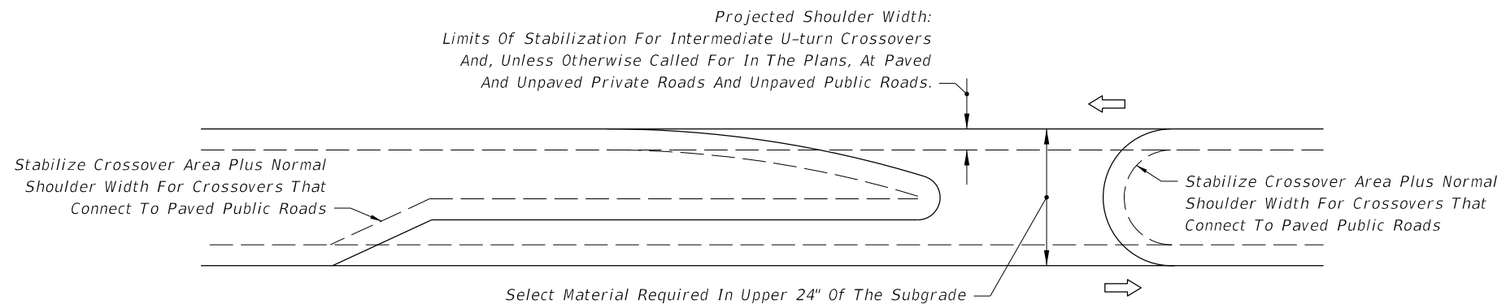

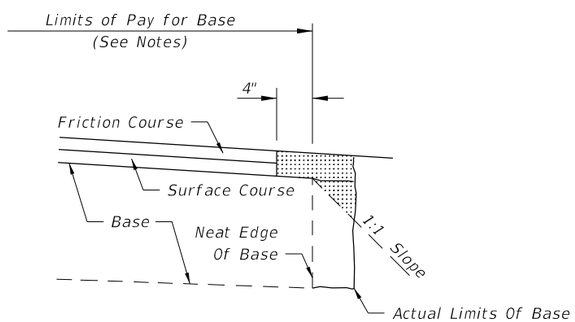

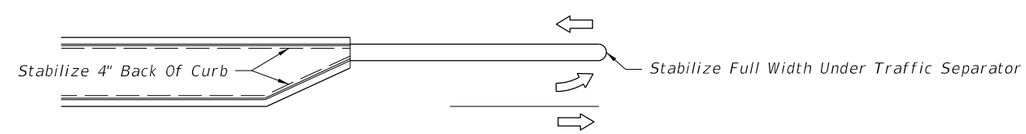

NOTES

1. All material in the shaded area is excess base to be removed.
2. The cost for removal of excess base material shall be included in the contract unit price for base.
3. Payment for base shall be calculated using normal width.

REMOVAL OF EXCESS BASE MATERIAL

NOTES

1. When the median has curb or curb and gutter, stabilize 4" back of curb.
2. When the median has shoulder with no curb or curb and gutter, stabilize to normal shoulder width.
3. See the details above for stabilizing requirements at crossroads.
4. Stabilize entire area under all paved traffic islands.
5. Stabilize full width under all traffic separators.
6. Select material as defined on Index No. 505. For minor collectors and local facilities the depth of select material thickness may be reduced from 24" to 18".

MEDIAN STABILIZING DETAILS

6/8/2015 2:08:37 PM

LAST REVISION	REVISION	DESCRIPTION:			INDEX NO.	SHEET NO.
07/01/00			FDOT 2016 DESIGN STANDARDS	MISCELLANEOUS EARTHWORK DETAILS	506	1 of 1

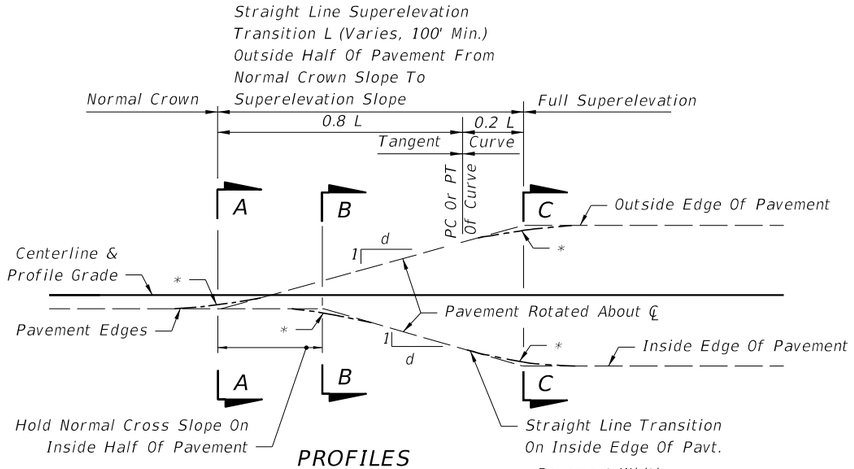

PROFILES

SLOPE RATIOS FOR SUPERELEVATION TRANSITIONS			
SECTION	DESIGN SPEED, MPH		
	45-50	55-60	65-70
	1 : d		
2 Lane & 4 Lane	1:200	1:225	1:250
6 Lane	1:160	1:180	1:200
8 Lane	1:150	1:170	1:190

The length of superelevation transition is to be determined by the relative slope between the travel way edge of pavement and the profile grade, except that the minimum length of transition shall be 100 ft.

* Short Vertical Curves Are To Be Used On Construction To Avoid Angular Breaks In Edge Profiles

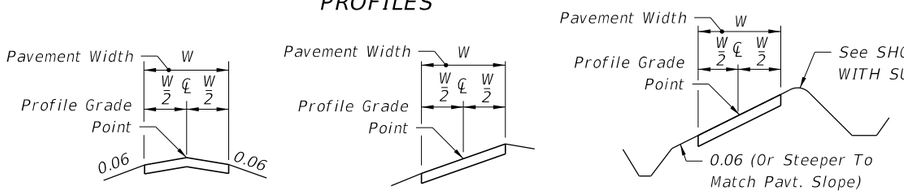

NORMAL CROWN SECTION AA

REVERSE CROWN SECTION BB

FULLY SUPERELEVATED SECTION CC

2-LANE, 4-LANE OR 6-LANE PAVEMENT, NO MEDIAN

THESE TRANSITION DETAILS ARE TO APPLY IN ALL CASES, EXCEPT UNDER THE FOLLOWING CONDITIONS:

1. Curves of insufficient length.
2. Insufficient tangent length between curves.
3. Deficient transition distance between a curve and other control point(s).
4. At PCC's or PRC's (Runoff rates are applicable).

Transitions for these exceptions are to be as detailed in the plans.

SUPERELEVATION TRANSITIONS

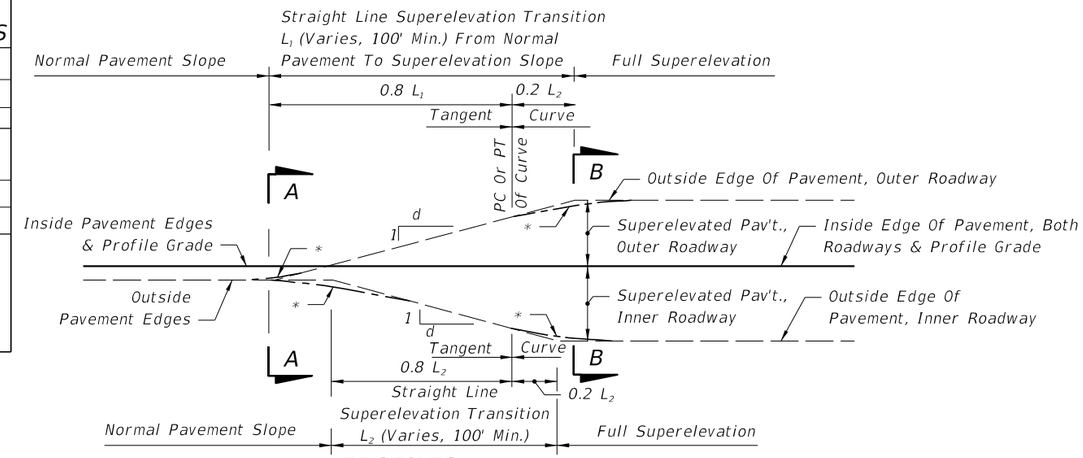

PROFILES

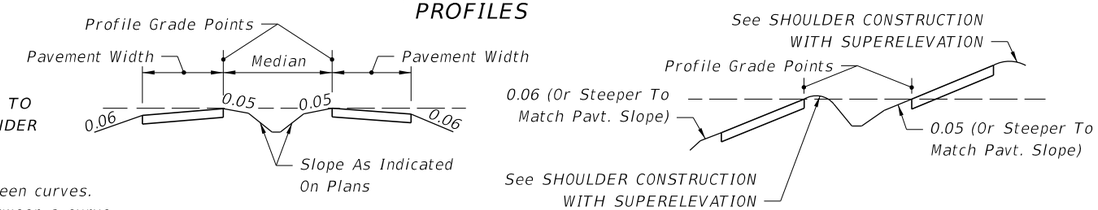

NORMAL SECTION SECTION AA

FULLY SUPERELEVATED SECTION BB

4-LANE OR 6-LANE PAVEMENT WITH MEDIAN

SHOULDER ON HIGH SIDE: A shoulder slope of 0.06 downward from the edge of travel way will be maintained until a 0.07 break in slope at the pavement edge is reached due to superelevation of the pavement. As the pavement superelevation increases, the 0.07 break in slope will be maintained and the shoulder flattened until the shoulder slope reaches the minimum of 0.02 downward from the edge of travel way. Any further increase in pavement superelevation will necessitate sloping the inside half of the shoulder toward the travel way and the outer half outward, both at 0.02 for superelevations 0.06–0.09 and both at 0.03 for superelevation 0.10. For shoulders with paved widths 5 feet o less see Special Shoulder Break Over Details on Sheet 2 of 2.

SHOULDER ON LOW SIDE: Maintain 0.06 drop across inside shoulder until pavement cross slope reaches 0.06. For pavement cross slopes greater than 0.06, shoulder to have same slope as pavement.

These slopes are the same as those shown pictorially on Sheet 2 of 2.

NOTE:
These details apply to both paved and grassed shoulders. For median shoulders use 0.05 in lieu of 0.06.

DEGREE OF CURVE (D)	DESIGN SPEED, V MPH						
	30	40	45/50	55	60	65	70
0°15'	NC	NC	NC	NC	NC	NC	NC
0°30'	NC	NC	NC	NC	RC	RC	RC
0°45'	NC	NC	RC	RC	0.023	0.025	0.028
1°00'	NC	NC	0.021	0.025	See Table To Right		
1°30'	NC	0.021					
2°00'	RC						

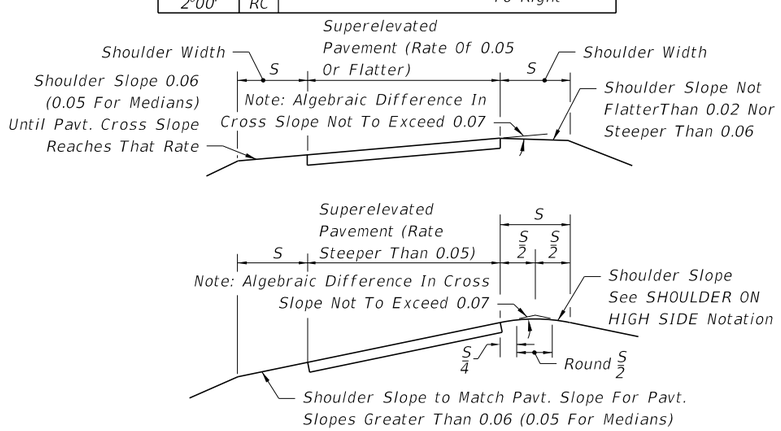

SHOULDER CONSTRUCTION WITH SUPERELEVATION

RADIUS OF CURVE - FEET

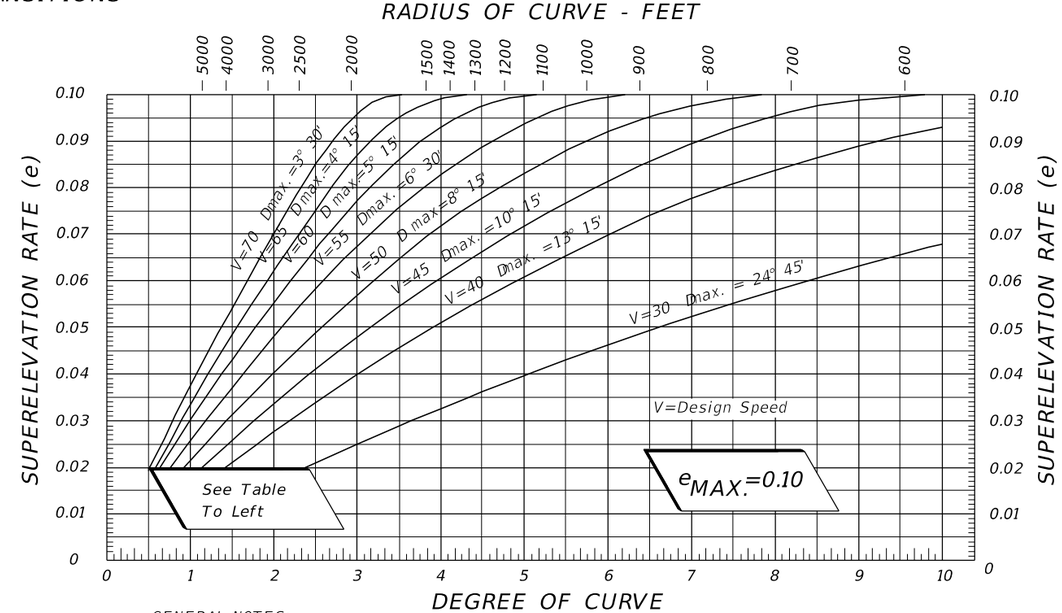

GENERAL NOTES:
1. For curves in Urban Highways and high speed Urban Streets, see Index No. 511.

DESIGN SUPERELEVATION RATES FOR RURAL HIGHWAYS, URBAN FREEWAYS AND HIGH SPEED URBAN HIGHWAYS

2:09:34 PM
6/8/2015

LAST REVISION	REVISION	DESCRIPTION:			INDEX NO.	SHEET NO.
07/01/14			FDOT 2016 DESIGN STANDARDS	SUPERELEVATION RURAL HIGHWAYS, URBAN FREEWAYS AND HIGH SPEED URBAN HIGHWAYS	510	1 of 2

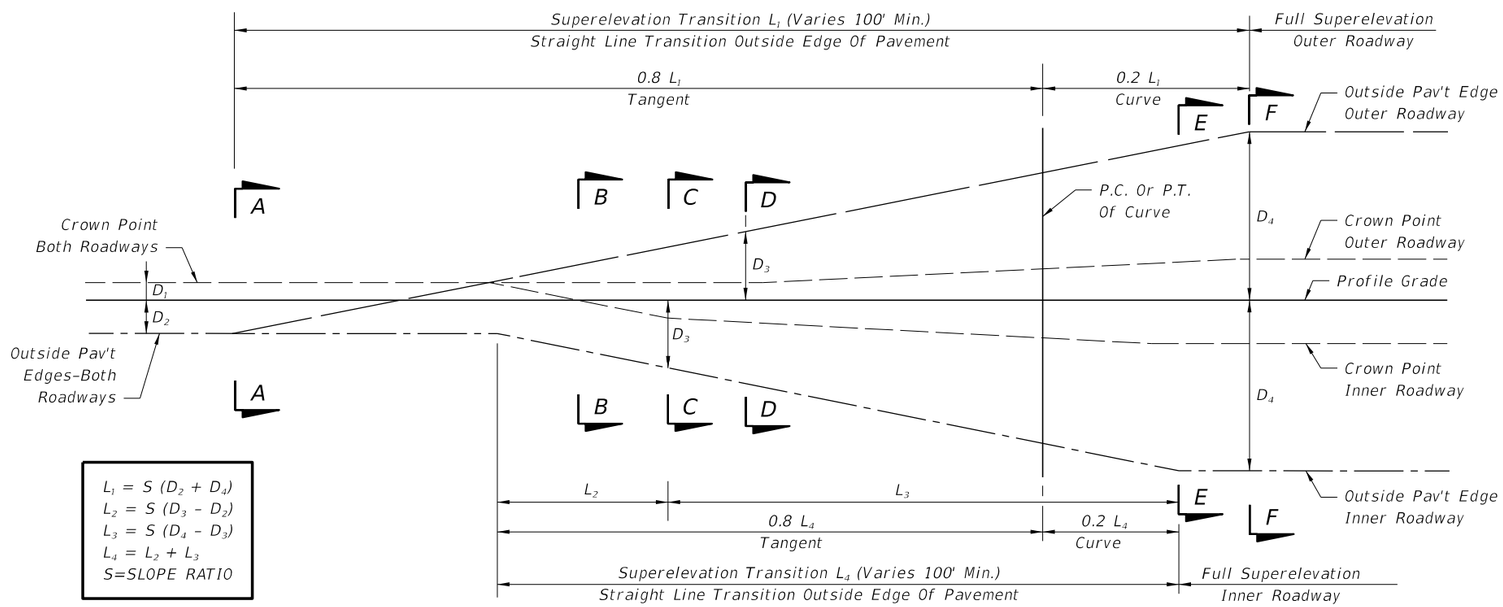

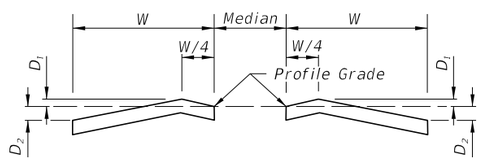

SECTION A-A
NORMAL CROWNED SECTION

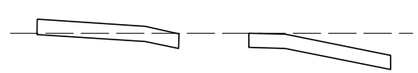

SECTION B-B
SUPERELEVATION SECTION LT. & RT.

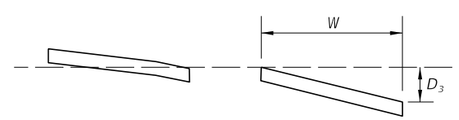

SECTION C-C
SUPERELEVATION SECTION LT.
PLANE INCLINED SECTION RT.

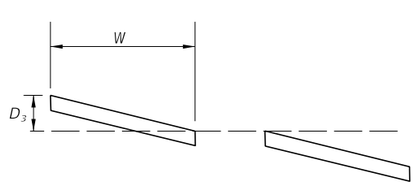

SECTION D-D
PLANE INCLINED SECTION LT.
SUPERELEVATION TRANSITION RT.

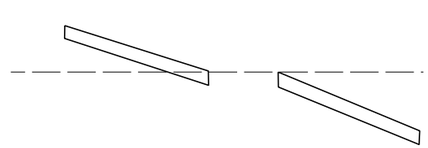

SECTION E-E
SUPERELEVATION TRANSITION LT.
FULL SUPERLEVATION RT.

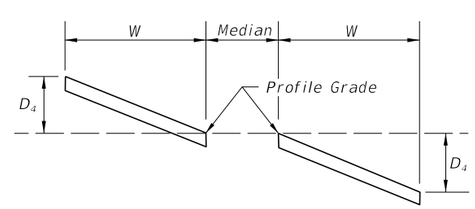

SECTION F-F
FULL SUPERELEVATION LT. & RT.

8-LANE PAVEMENT WITH ONE LANE SLOPED TO MEDIAN

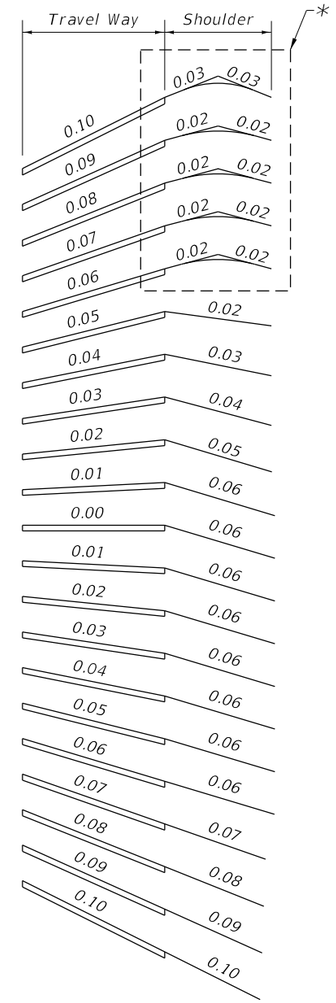

SLOPES OF TRAVELED WAY
AND ABUTTING SHOULDERS

SHOULDER SLOPES ON SUPERELEVATION SECTIONS

* FOR SHOULDERS WITH PAVED WIDTHS
5 FEET OR LESS SEE SPECIAL
SHOULDER BREAK OVER DETAILS

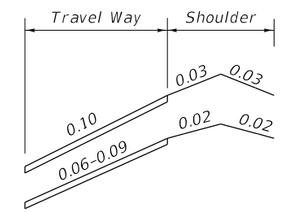

a) 12' AND 10' FULL WIDTH SHOULDERS WITH 5' OR LESS PAVED WIDTHS,

b) 8' FULL WIDTH SHOULDERS WITH 4' OR LESS PAVED WIDTHS,

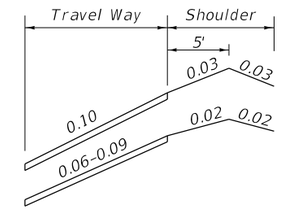

8' FULL WIDTH SHOULDER
WITH 5' PAVED WIDTH

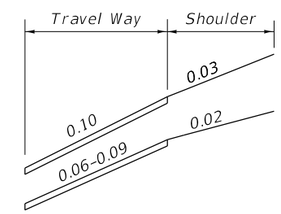

6' FULL WIDTH SHOULDER
WITH 5' OR LESS PAVED WIDTH

SPECIAL SHOULDER BREAK OVER DETAILS

6/8/2015 2:09:35 PM

LAST REVISION	REVISION	DESCRIPTION:			INDEX NO.	SHEET NO.
07/01/14			FDOT 2016 DESIGN STANDARDS	SUPERELEVATION RURAL HIGHWAYS, URBAN FREEWAYS AND HIGH SPEED URBAN HIGHWAYS	510	2 of 2

SUPERELEVATION RATES (e) FOR URBAN HIGHWAYS AND HIGH SPEED URBAN STREETS

$e_{max.} = 0.05$

TABULATED VALUES

Degree Of Curve (D)	Radius (R) (Ft.)	Design Speed (mph) 30	35	40	45	50
2° 00'	2,865	NC	NC	NC	NC	NC
2° 15'	2,546					RC
2° 45'	2,083				NC	
3° 00'	1,910				RC	
3° 45'	1,528			NC		
4° 00'	1,432			RC		
4° 45'	1,206					RC
5° 00'	1,146		NC			0.023
5° 15'	1,091		RC			0.027
5° 30'	1,042					0.030
5° 45'	996					0.035
6° 00'	955				RC	0.040
6° 15'	917				0.022	0.045
6° 30'	881				0.024	0.050
6° 45'	849				0.027	Dmax.= 6° 30'
7° 00'	819	NC			0.030	
7° 15'	790	RC			0.033	
7° 30'	764				0.037	
7° 45'	739				0.041	
8° 00'	716			RC	0.045	
8° 15'	694			0.022	0.050	
8° 30'	674			0.025	Dmax.= 8° 15'	
8° 45'	655			0.027		
9° 00'	637			0.030		
9° 30'	603			0.034		
10° 00'	573			0.040		
10° 30'	546		RC	0.047		
11° 00'	521		0.023	Dmax.= 10° 45'		
11° 30'	498		0.026			
12° 00'	477		0.030			
13° 00'	441		0.036			
14° 00'	409	RC	0.045			
15° 00'	382	0.023	Dmax.= 14° 15'			
16° 00'	358	0.027				
17° 00'	337	0.032				
18° 00'	318	0.038				
19° 00'	302	0.043				
20° 00'	286	0.050				
		Dmax.= 20° 00'				

NC = Normal Crown

RC = Reverse Crown (+0.02 Superelevation)

CHARTED VALUES

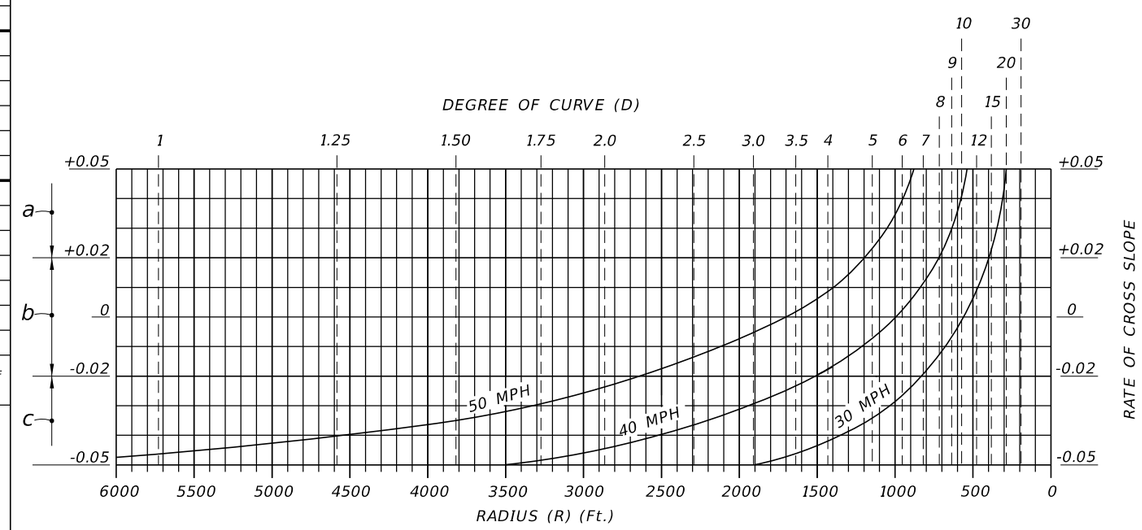

a: When the speed curves and the degree of curve or radius lines intersect above this line, the pavement is to be superelevated (positive slope) at the rates indicated at the lines intersecting points.

b: When the speed curves and the degree of curve or radius lines intersect between these limits, the pavement is to be superelevated at the rate of 0.02 (positive slope).

c: When the speed curves and the degree of curve or radius lines intersect below this line. The pavement is to have normal crown (typically 0.02 and 0.03 downward slopes).

GENERAL NOTES

1. Maximum rate of superelevation for urban highways and high speed urban streets shall be 0.05.
2. Superelevation shall be obtained by rotating the plane successively about the break points of the section until the plane has attained a slope equal to that required by the chart. Should the rotation traverse the entire section and further superelevation be required, the remaining rotation of the plane shall be about the low edge of the inside travel lane. Crown is to be removed in the auxiliary lane to the outside of the curve only when the adjoining travel lanes require positive superelevation.
3. When positive superelevation is required, the slope of the gutter on the high side shall be a continuation of the slope of the superelevated pavement.
4. In construction, short vertical curves shall be placed at all angular profile breaks within the limits of the superelevation transition.
5. The variable superelevation transition length "L" shall have a minimum value of 50 feet for design speeds under 40 MPH and 75 feet for design speeds of 40 MPH or greater.
6. Roadway sections having lane arrangements different from those shown, but composed of a series of planes, shall be superelevated in a similar manner.
7. For superelevation of lower speed urban streets, see the FDOT 'Manual Of Uniform Minimum Standards For Design, Construction And Maintenance For Streets And Highways'. For superelevation of curves on rural highways, urban freeways and high speed urban highways, see Index No. 510.

$e_{max.} = 0.05$ SUPERELEVATION URBAN HIGHWAYS AND STREETS

SUPERELEVATION FOR URBAN HIGHWAYS AND HIGH SPEED URBAN STREETS

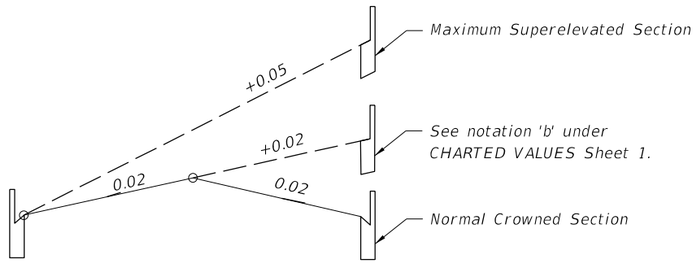

TWO TRAVEL LANES EACH DIRECTION

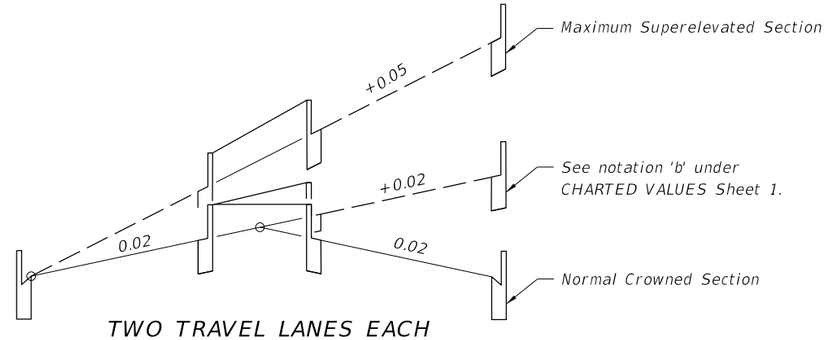

TWO TRAVEL LANES EACH DIRECTION WITH MEDIAN

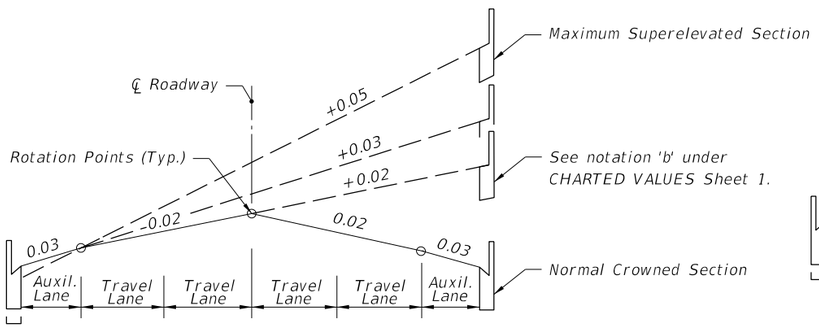

TWO TRAVEL LANES EACH DIRECTION WITH AUXILIARY LANES

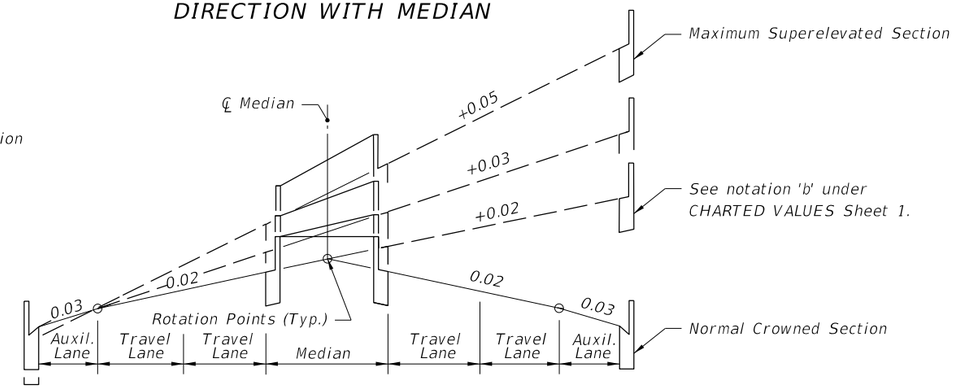

TWO TRAVEL LANES EACH DIRECTION WITH MEDIAN AND AUXILIARY LANES

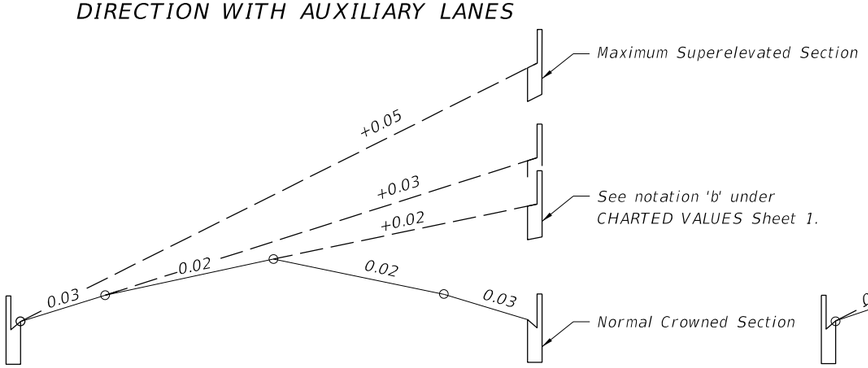

UNDIVIDED FACILITIES

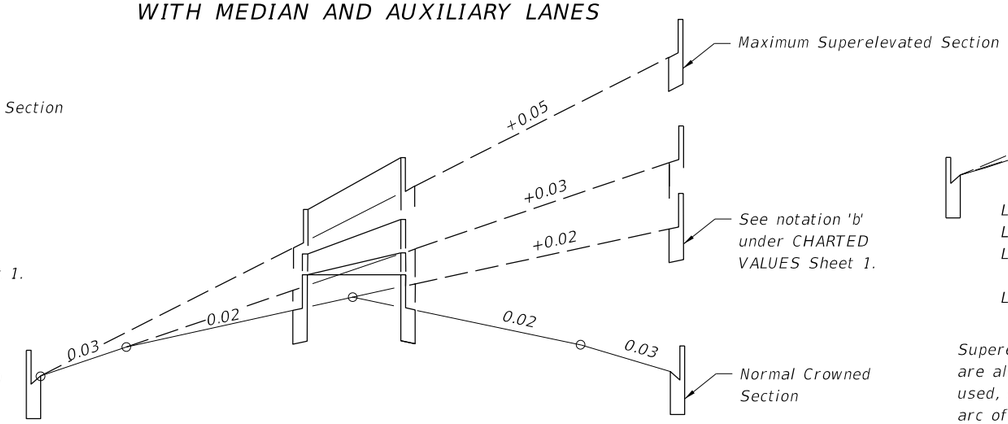

THREE TRAVEL LANES EACH DIRECTION WITH MEDIAN

DIVIDED FACILITIES

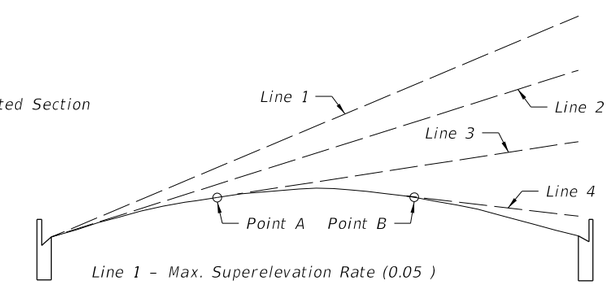

Line 1 – Max. Superelevation Rate (0.05)
Line 2 – Slope Of Parabola At Inside Edge Of Pavt.
Line 3 – Positive Superelevation Rate Less Than Max. Slope Of Parabola.
Line 4 – Adverse Superelevation.

Superelevation rates obtained from the chart or table on Sheet 1 are also applicable to a parabolic crown section. When this section is used, superelevation is established by rotating a tangent about the arc of the parabolic crown until the desired slope is attained (points A & B on sketch). The normal parabolic crown will be maintained outside the limits of the plane thus formed.

PARABOLIC SECTION

SUPERELEVATION TRANSITION SECTIONS FOR URBAN HIGHWAYS AND HIGH SPEED URBAN STREETS

6/8/2015 2:24:39 PM

LAST REVISION	REVISION	DESCRIPTION:			INDEX NO.	SHEET NO.
07/01/00			FDOT 2016 DESIGN STANDARDS	SUPERELEVATION URBAN HIGHWAYS AND STREETS	511	2 of 3

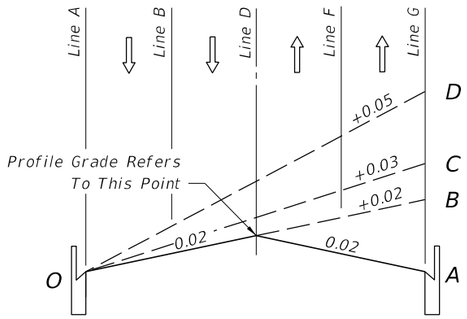

SECTION 0-A to 0-D

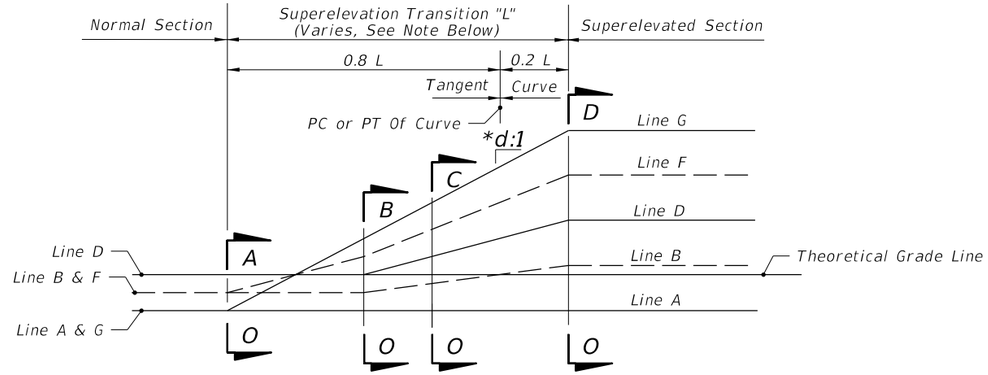

PROFILE

TWO LANES EACH DIRECTION

LINE	DESCRIPTION
A	Inside Travel Lane
B	Inside Lane Line
C	Inside Median Edge Pavement
D	℄ Construction
E	Outside Median Edge Pavement
F	Outside Lane Line
G	Outside Travel Lane

Inside And Outside Are Relative To Curve Center

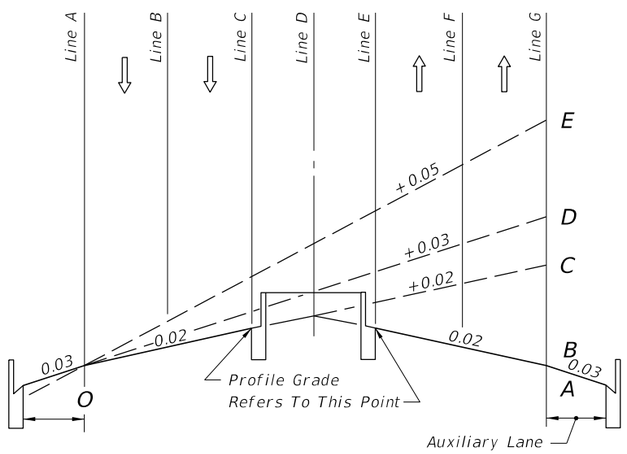

SECTION 0-A to 0-E

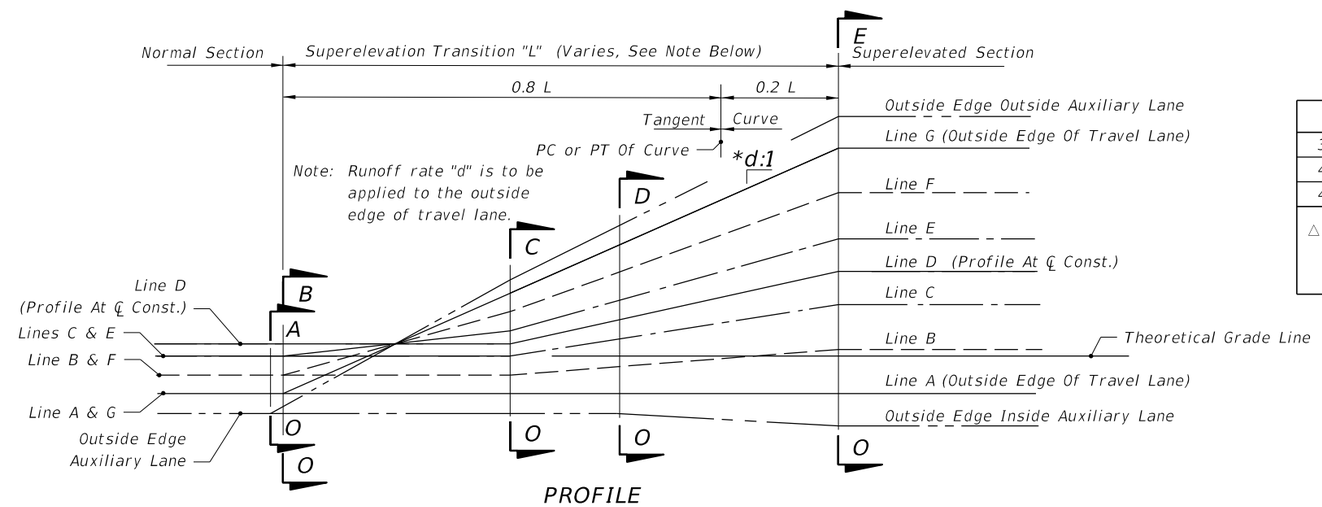

PROFILE

*d (Slope Ratio)	
30 MPH	1: 100
40 MPH	1: 125
45-50 MPH △	1: 150

△ 1: 125 May Be Used For 45 MPH Under Restricted Conditions.

TWO LANES EACH DIRECTION WITH MEDIAN AND AUXILIARY LANE

Note:
The sections and profiles shown are examples of superelevation transitions.
Similar schemes should be used for roadways having other sections.

EXAMPLE SUPERELEVATION SECTIONS AND PROFILES FOR URBAN HIGHWAYS AND HIGH SPEED URBAN STREETS

6/8/2015 2:24:40 PM

LAST REVISION	REVISION	DESCRIPTION:			INDEX NO.	SHEET NO.
07/01/00			FDOT 2016 DESIGN STANDARDS	SUPERELEVATION URBAN HIGHWAYS AND STREETS	511	3 of 3

BASE THICKNESS AND OPTION CODES

Base Group	Structural Range	Base Group Pay Item Number	Base Options								
			Limerock, LBR 100	Cemented Coquina, LBR 100	Shell Rock, LBR 100	Bank Run Shell, LBR 100	Recycled Concrete Aggregate, LBR 150 **	Graded Aggregate Base, LBR 100	Type B-12.5	B-12.5 And 4" Granular Subbase, LBR 100 *	RAP Base
			Structural Number (Per. in.)								
			(0.18)	(0.18)	(0.18)	(0.18)	(0.18)	(0.15)	(0.30)	(0.30 & 0.15)	(NA)
1	0.65-0.75	701	4"	4"	4"	4"	4"	4½"	△ 4"		□ 5"
2	0.80-0.90	702	5"	5"	5"	5"	5"	5½"	△ 4"		
3	0.95-1.05	703	5½"	5½"	5½"	5½"	5½"	6½"	△ 4"		
4	1.05-1.15	704	6"	6"	6"	6"	6"	7½"	△ 4"		
5	1.25-1.35	705	7"	7"	7"	7"	7"	8½"	4½"		
6	1.35-1.50	706	8"	8"	8"	8"	8"	9"	5"		
7	1.50-1.65	707	8½"	8½"	8½"	8½"	8½"	10"	5½"		
8	1.65-1.75	708	9½"	9½"	9½"	9½"	9½"	11"	5½"		
9	1.75-1.85	709	10"	10"	10"	10"	10"	12"	6"	4"	
10	1.90-2.00	710	11"	11"	11"	11"	11"	Ø 13"	6½"	4½"	
11	2.05-2.15	711	12"	12"	12"	12"	12"	Ø 14"	7"	5"	
12	2.20-2.30	712	12½"	12½"	12½"	12½"	12½"		7½"	5½"	
13	2.35-2.45	713	Ø 13½"	Ø 13½"	Ø 13½"	Ø 13½"	Ø 13½"		8"	6"	
14	2.45-2.55	714	Ø 14"	Ø 14"	Ø 14"	Ø 14"	Ø 14"		8½"	6½"	
15	2.60-2.70	715							9"	7"	

GENERAL NOTES

1. Where base options are specified in the plans, only those options may be bid and used.
2. In situations where the designer requires the use of a single base option, as shown in the plans, bid and use as optional base.

* For granular subbase, the construction of both the subbase and Type B-12.5 will be bid and used as Optional Base. Granular subbases include Limerock, Cemented Coquina, Shell Rock, Bank Run Shell, Recycled Concrete Aggregate and Graded Aggregate Base. The base thickness shown is Type B-12.5. All subbase thicknesses are 4" minimum.

** For restrictions on the use of Recycled Concrete Aggregate - see Specifications Section 911.

Ø To be used for widening, three feet or less.

△ Based on minimum practical thicknesses.

□ For restrictions on the use of RAP Base - see Standard Specifications.

GENERAL USE OPTIONAL BASE GROUPS AND STRUCTURAL NUMBERS

BASE THICKNESS AND OPTION CODES

Base Group	Structural Range	Base Group Pay Item Number	Base Options						
			Limerock Stabilized LBR 70	Shell LBR 70	Shell Stabilized LBR 70	Sand-Clay LBR 75	Soil Cement (300 psi) (Plant Mixed)	Soil Cement (300 psi) (Road Mixed)	Soil Cement (500 psi) (Plant Mixed)
			Structural Number (Per. in.)						
			(0.12)	(0.12)	(0.10)	(0.12)	(0.15)	(0.15)	(0.20)
1	0.60-0.75	701	5"	5"	7"	5"	5"	5"	4"△
2	0.75-0.90	702	6½"	6½"	8½"	6½"	5½"	5½"	4"
3	0.95-1.05	703	8"	8"	9½"	8"	6½"	6½"	5"
4	1.05-1.15	704	9"	9"	10½"	9"	7½"	7½"	5½"
5	1.20-1.35	705	10"	10"	12"	10"	8½"	8½"	6"
6	1.30-1.45	706	11"	11"		11"	9"		7"
7	1.45-1.60	707	12½"	12½"		12½"	10"		7½"
8	1.65-1.75	708					11"		8½"

Not Recommended For 20 Year Design Accumulated 18 kip Equivalent Single Axle Loads (ESAL) Greater Than 1,000,000

Note:
These base materials may be used on FDOT projects when approved in writing by the District Materials Engineer and shown in the plans.

△ Based on minimum practical thicknesses.

LIMITED USE OPTIONAL BASE GROUPS AND STRUCTURAL NUMBERS

6/9/2015 4:22:01 PM

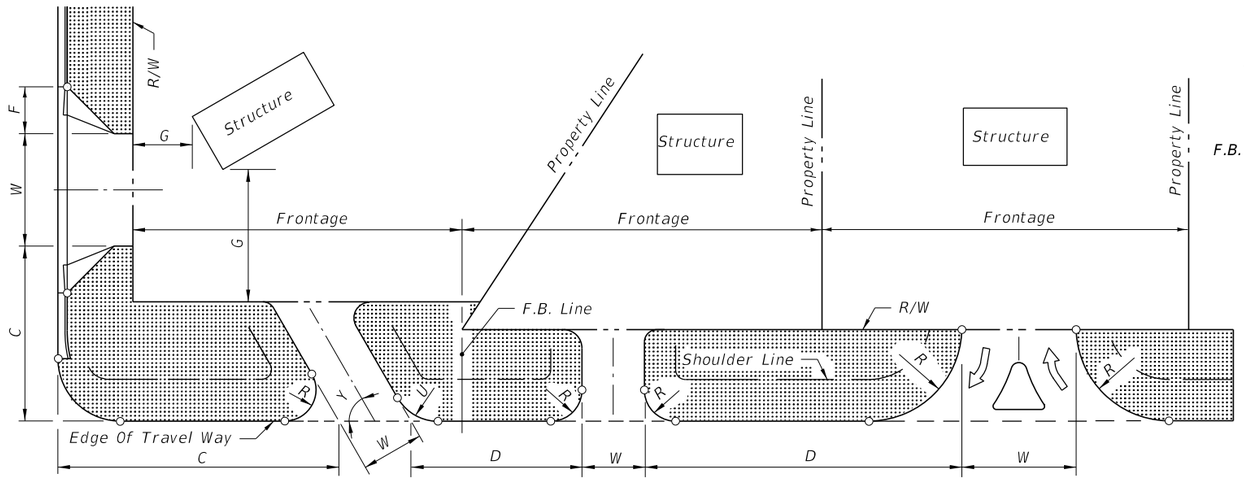

LEGEND

-O-	Return Radius Point Or Flare Point
▦	Buffer Areas
F.B. Line	Frontage Boundary Line
W	Driveway Width
Y	Driveway Angle
C	Corner Clearance
G	Setback
R	Outside Radius
U	Inside Radius
D	Distance Between Connections
F	Flare

For Corner Clearnace (C) Requirements see General Note 3.

For Additional Information Refer To FDOT Rules Chapters 14-96 And 14-97.

SKETCH ILLUSTRATING DEFINITIONS

ELEMENT DESCRIPTION	URBAN (CURB & GUTTER)			RURAL		
	1-20 Trips/Day or 1-5 Trips/Hour	21-600 Trips/Day or 6-60 Trips/Hour	601-4000 Trips/Day ◪ or 61-400 Trips/Hour	1-20 Trips/Day or 1-5 Trips/Hour	21-600 Trips/Day or 6-60 Trips/Hour	601-4000 Trips/Day ◪ or 61-400 Trips/Hour
		2-Way □	2-Way □		2-Way □	2-Way □
CONNECTION WIDTH W	12' Min. 24' Max.	24' Min. 36' Max. ☆	24' Min. 36' Max. ☆	12' Min. 24' Max.	24' Min. 36' Max. ☆	24' Min. 36' Max. ☆
FLARE (Drop Curb) F	10' Min.	10' Min.	N/A	N/A	N/A	N/A
RETURNS (Radius) R & U	N/A	△	25' Min. 50' Std. 75' Max.	15' Min. 25' Std. 50' Max.	25' Min. 50' Std. 75' Max.	25' Min. 50' Std. (Or 3-Centered Curves)
ANGLE OF DRIVE Y		60°-90°	60°-90°		60°-90°	60°-90°
DIVISIONAL ISLAND (Throat Median)		4'-22' Wide	4'-22' Wide		4'-22' Wide	4'-22' Wide
SETBACK G	12' Min., All categories. See General Note No. 5.					

◪ Side road intersection design, with possible auxiliary lanes and channelization, may be necessary. Intersection design, with possible auxiliary lanes and channelization, should be considered for connections with more than 4000 trips/days.

□ "2-Way" refers to one "in" movement and one "out" movement i.e., not exclusive left or right turn lanes on the connection.

☆ When more than 2 lanes in the turnout connection are required, the 36' max. width may be increased to relieve interference between entering and exiting traffic which adversely affects traffic flow. These cases require documented site specific study and design.

△ Small radii may be used in lieu of flares as approved by the Department.

DESIGN NOTE: 1-Way connections will be designed to effectively eliminate unpermitted movements.

NOT INTENDED FOR FULL INTERSECTION DESIGN

SUMMARY OF GEOMETRIC REQUIREMENTS FOR TURNOUTS

GENERAL NOTES

1. For definitions and descriptions of access connection "Categories" and access "Classifications" of highway segments, and for other detailed information on access to the State Highway System, refer to FDOT Rule Chapter 14-96, "State Highway Connection Permits Administrative Process" and Rule Chapter 14-97, "State Highway System Access Management Classification System And Standards."

2. For this index the term 'turnout' applies to that portion of driveways or side roads adjoining the outer roadway. For this index the term 'connection' encompasses a driveway or side road and their appurtenant islands, separators, transition tapers, auxiliary lanes, travelway flares, drainage pipes and structures, crossovers, sidewalks, curb cut ramps, signing, pavement marking, required signalization, maintenance of traffic or other means of access to or from controlled access facilities. The turnout requirements set forth in this index do not provide complete intersection design, construction or maintenance requirements.

3. The location, positioning, orientation, spacing and number of connections and median openings shall be in conformance with FDOT Rule Chapter 14-97.

4. On Department construction projects all driveways not shown on the plans shall be reconstructed at their existing location in conformance to these standards, or, in conformance to permits issued during the construction project.

5. Driveways shall have sufficient length and size for all vehicular queueing, stacking, maneuvering, standing and parking to be carried out completely beyond the right of way line. Except for vehicles stopping to enter the highway, the turnout areas and drives within the right of way shall be used only for moving vehicles entering or leaving the highway.

6. Connections with expected daily traffic over 4000 vpd shall be constructed as intersecting side roads. The design requirement of this index and that of the local government will be used to select appropriate connection widths, radii and intersection design, subject to the approval of the Department. For connections with expected daily traffic less than 4000 vpd, the Department will determine if a drop curb or radius returns are required in accordance with existing or planned connections. Where radius returns apply, the design requirements of this index and that of the local government will be used to select appropriate connection widths, radii and intersection design, subject to the approval of the Department.

   For connections that are intended to daily accommodate either multi-unit vehicles or single unit vehicles exceeding 30' in length, returns with 50' radii shall be used, unless otherwise called for in the plans or otherwise stipulated by permit. Where large numbers of multi-unit vehicles will use the connection, the connection width and radii shall be increased and auxiliary lanes, tapers, lane flares, separators and/or islands constructed, as determined by the Department to be necessary for safe turning movements.

7. Any connection requiring or having a specified median opening with left turn storage and served directly by that opening shall have radial returns.

8. Where a connection is intended to align with a connection across the highway, the through lanes shall align directly with the corresponding through lanes.

9. For new connections and for connections on all new construction and reconstruction projects, pavement materials and thicknesses shall meet the requirements applicable to either that detailed for "Urban Flared Turnouts", or, that described in "Table 515-1" for connections with radial returns and/or auxiliary lanes.

10. The responsibility for the cost of construction or alteration to an access connection shall be in accordance with FDOT Rule Chapter 14-96.

DESIGN NOTES

1. Prior to the adoption of FDOT Rules Chapters 14-96 and 14-97, connections to the State Highway System were defined and permitted by Classes. Connections have been redfined by Categories under Rule 14-96; and, the term "Class" has been applied to highway segments of the State Highway System as defined under Rule 14-97.

Footnotes:

All ½" joints shall be constructed with preformed joint filler.

* ⅛" Open joints placed at equal (20' max.) intervals for driveways over 20' wide. Joints in curb and gutter to match joints in driveways.

△ When connecting to side road curb and gutter sections, the no drop curb limits should extend back to the side road radius point. With or without curb and gutter, no driveway should encroach on the corner radius.

ϕ Driveways (6" concrete) shall be of a uniform width (W) to the right of way line.

(– – –) Alpha-numeric identification of a flared driveway type specifically called for in the plans, see sheets 3 and 4.

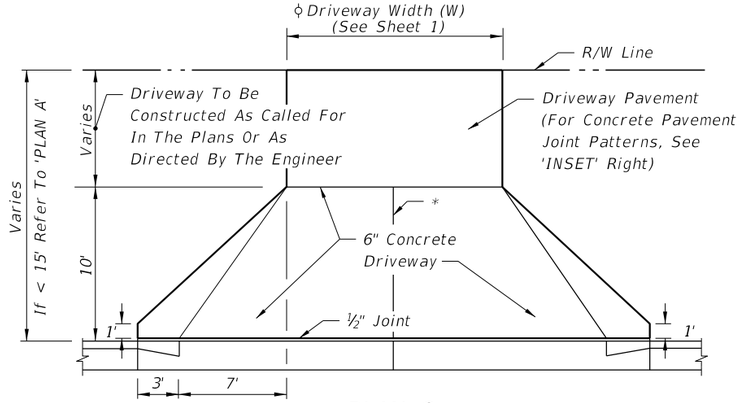

PLAN C

TURNOUT WITHOUT SIDEWALK

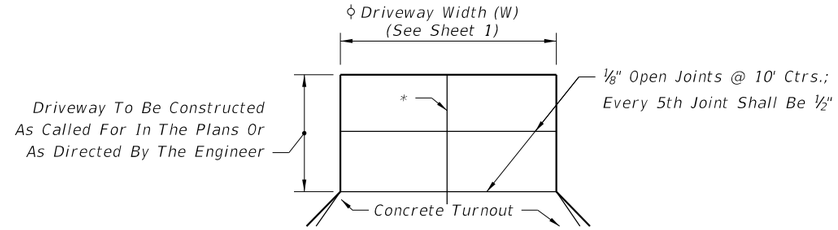

JOINT PATTERN WHEN CONCRETE DRIVE CONSTRUCTED INSET

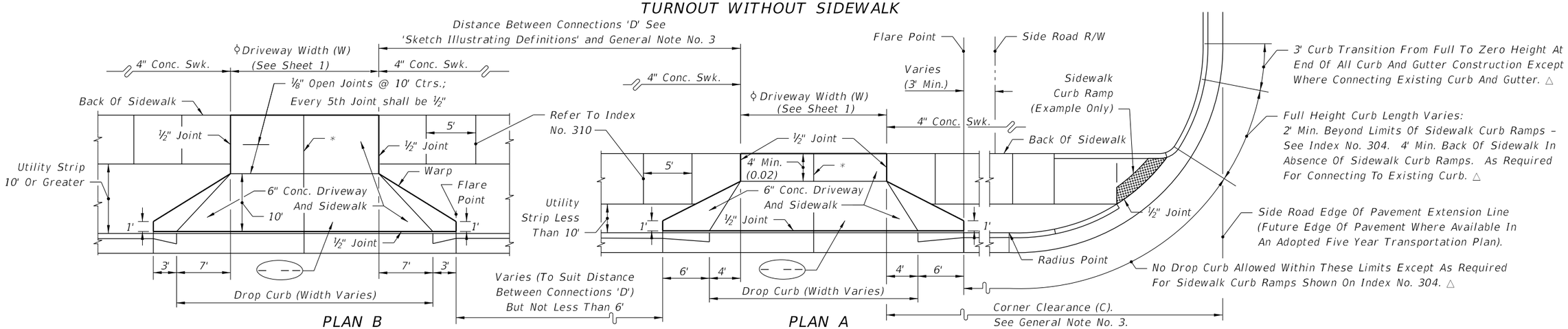

PLAN B

TURNOUT WITH SIDEWALK AND UTILITY STRIP (10' OR GREATER)

PLAN A

TURNOUT WITH SIDEWALK AND UTILITY STRIP (LESS THAN 10')

SPECIAL NOTES FOR URBAN FLARED TURNOUTS

1. Drop curb, concrete sidewalks (6" thick) and driveways (6" thick) shall meet Specification Sections 520 and 522. The driveway foundation shall meet the requirements of Subarticle 522-4.

2. For details of drop curb and sidewalk curb ramps refer to Indexes Nos. 300 and 304 respectively.

3. Where turnouts are constructed within existing curb and gutter, the existing curb and gutter shall be removed either to the nearest joint beyond the flare point or to the extent that no remaining section is less than 5' long; and, drop curb constructed in accordance with Notes Nos. 1 and 2.

4. For turnouts with radial returns see the requirements under the "Summary Of Geometric Requirements For Turnouts", the "General Notes", the details of "Rural Turnout Construction" and the detail of "Limits Of Clearing & Grubbing, Stabilization And Base At Intersections".

5. Maintenance of pavement shall extend out to the right of way or 2' beyond the back of sidewalk, whichever distance is less.

6. The maintenance and operation of highway lighting, traffic signals, associated equipment, and other necessary devices shall be the responsibility of a public agency.

7. All pavement markings on the State highways, including acceleration and deceleration lane markings, and signing installed for the operation of the State highway shall be maintained by the Department.

8. All signing and marking installed for the operation of the connection (such as stop bars and stop signs for the connection) shall be the responsibility of the permittee.

9. All sidewalk surfaces crossing driveways with a cross slope shown in this Index to be 0.02 shall be 0.02 Maximum.

DESIGN NOTES FOR URBAN FLARED TURNOUTS

1. Driveways indicated as 'Adverse Applications' are those with slopes that can cause overhang drag for representative standard passenger vehicles under fully loaded conditions; or, those with slopes that can cause drivers who are leaving the roadway to slow or pause to the extent that traffic demand volumes will be impeded.

   Driveways indicated as 'Marginal Applications' are those with slopes that can cause overhang drag for representative standard passenger vehicles under fully loaded conditions when the driveway is located on the low side of fully superelevated roadways.

   Driveways indicated as 'General Applications' are those with slopes that can readily accommodate representative standard passenger vehicles and those that can accommodate representative standard trucks, vans, buses and recreational vehicles operating under normal crown and superelevation conditions.

2. The standard flared driveways on this index may not accommodate vehicles with low beds, low undercarriage or low appendage features. Where such vehicles are design vehicles, driveways shall have site specific flare designs or Category III designs.

3. When specific flare type driveways shall be constructed, the type shall be designated in the plans using the assigned alpha-numeric designation.

URBAN FLARED TURNOUTS

* See 'DESIGN NOTES FOR URBAN FLARED TURNOUTS'.

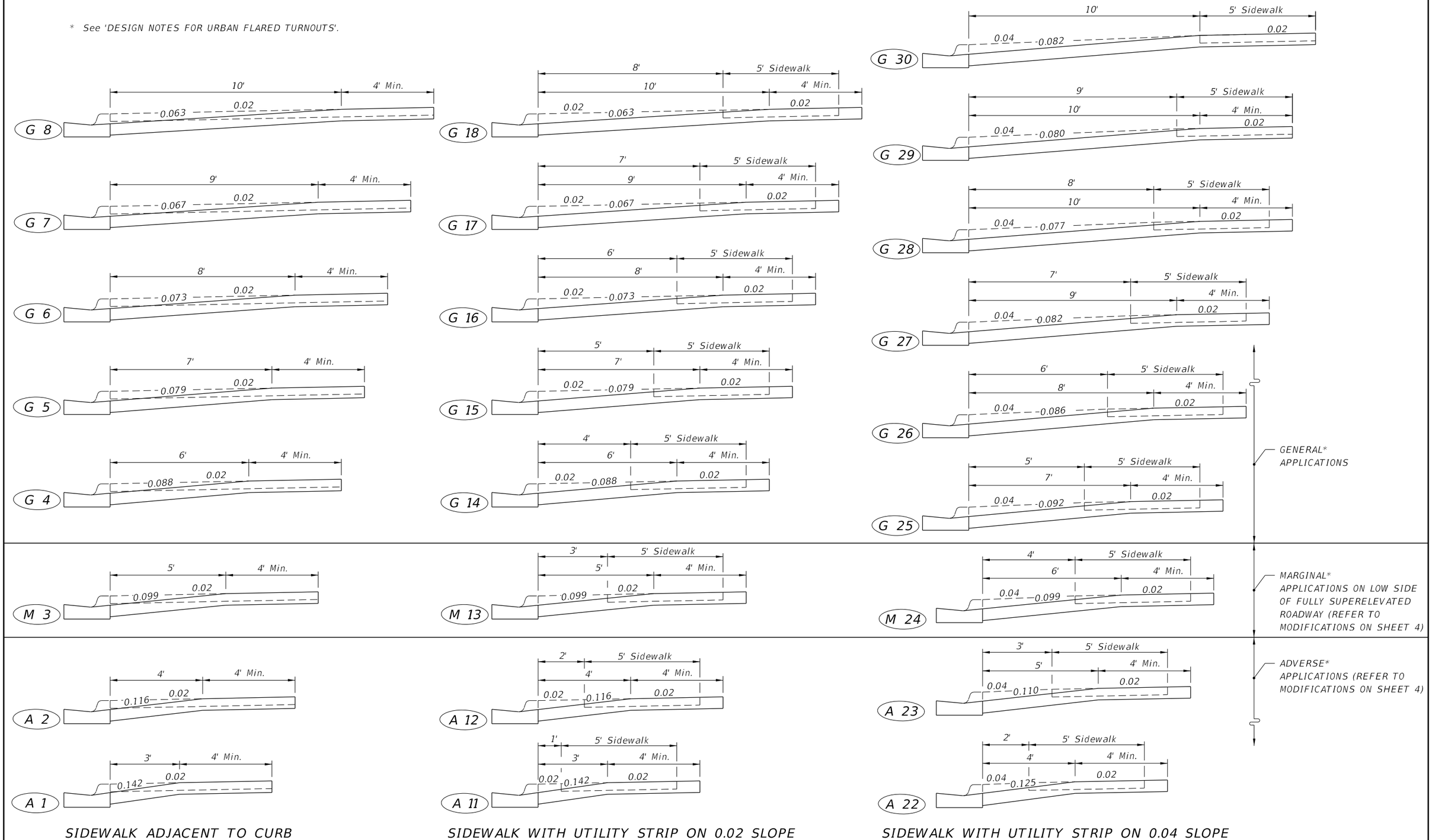

DRIVEWAY SECTIONS ON CURBED FACILITIES WITH SIDEWALKS

6/9/2015 4:22:42 PM

LAST REVISION	REVISION	DESCRIPTION:			INDEX NO.	SHEET NO.
07/01/13			FDOT 2016 DESIGN STANDARDS	TURNOUTS	515	3 of 7

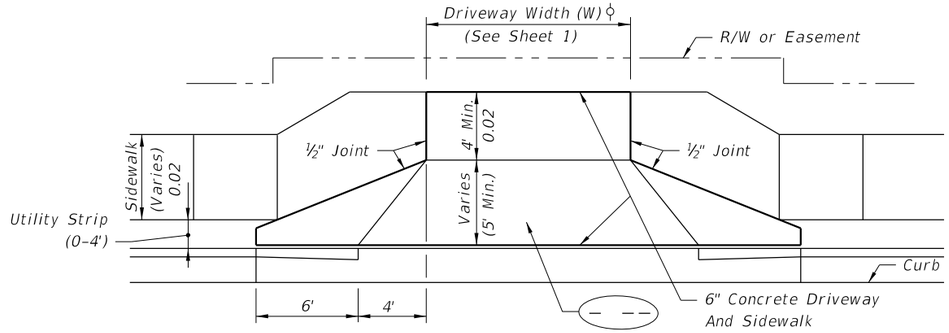

PLAN

MODIFICATIONS OF 'ADVERSE' AND 'MARGINAL' APPLICATIONS

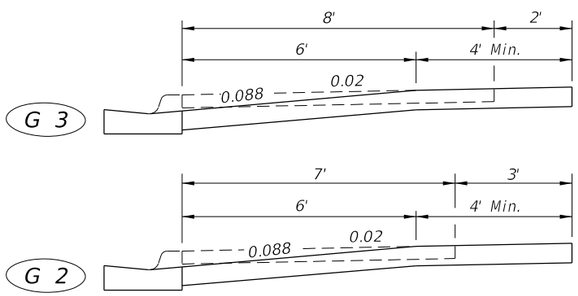

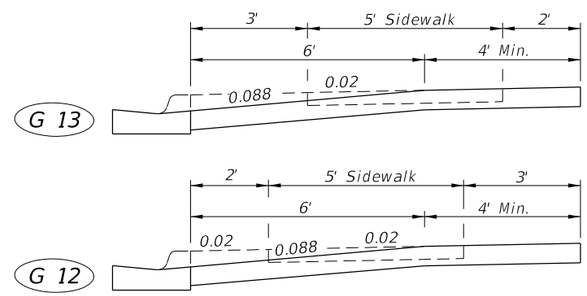

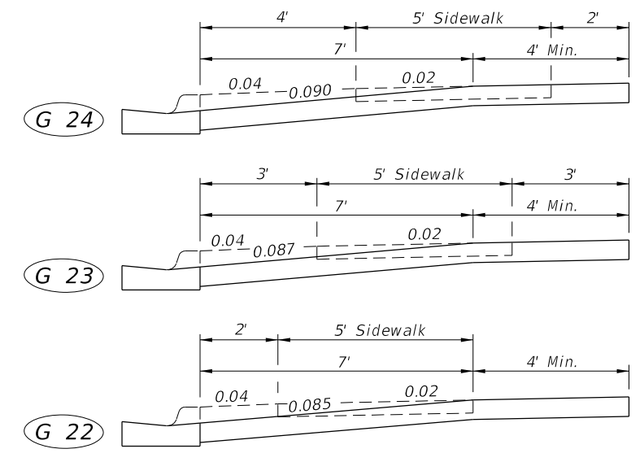

ADVERSE* AND MARGINAL* SECTIONS MODIFIED TO ACHIEVE GENERAL* APPLICATION

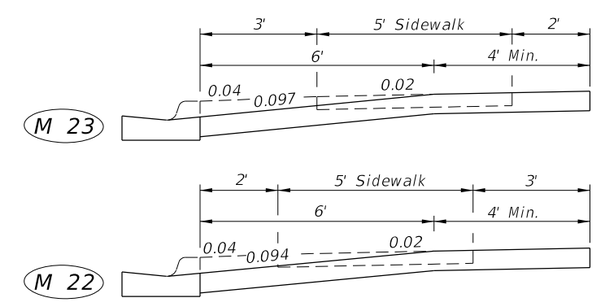

ADVERSE* SECTIONS MODIFIED TO ACHIEVE MARGINAL* APPLICATION

SIDEWALK WITH UTILITY STRIP ON 0.04 SLOPE

* See 'DESIGN NOTES FOR URBAN FLARED TURNOUTS'.

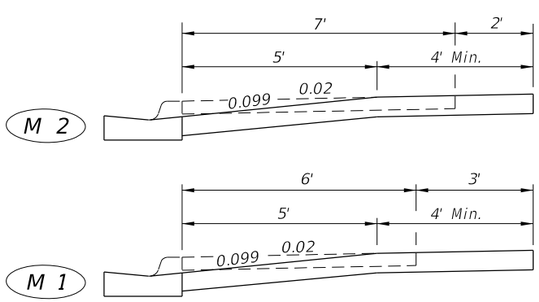

SIDEWALK ADJACENT TO CURB

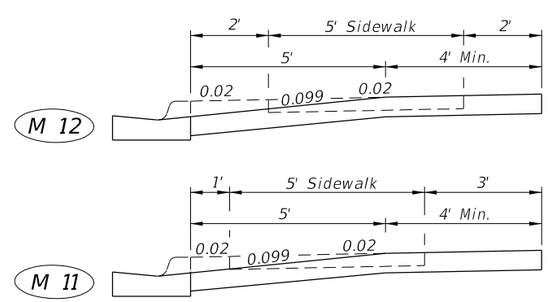

SIDEWALK WITH UTILITY STRIP ON 0.02 SLOPE

MODIFICATIONS TO ADVERSE AND MARGINAL SECTIONS

4:22:42 PM

6/9/2015

LAST REVISION	REVISION	DESCRIPTION:			INDEX NO.	SHEET NO.
07/01/13			FDOT 2016 DESIGN STANDARDS	TURNOUTS	515	4 of 7

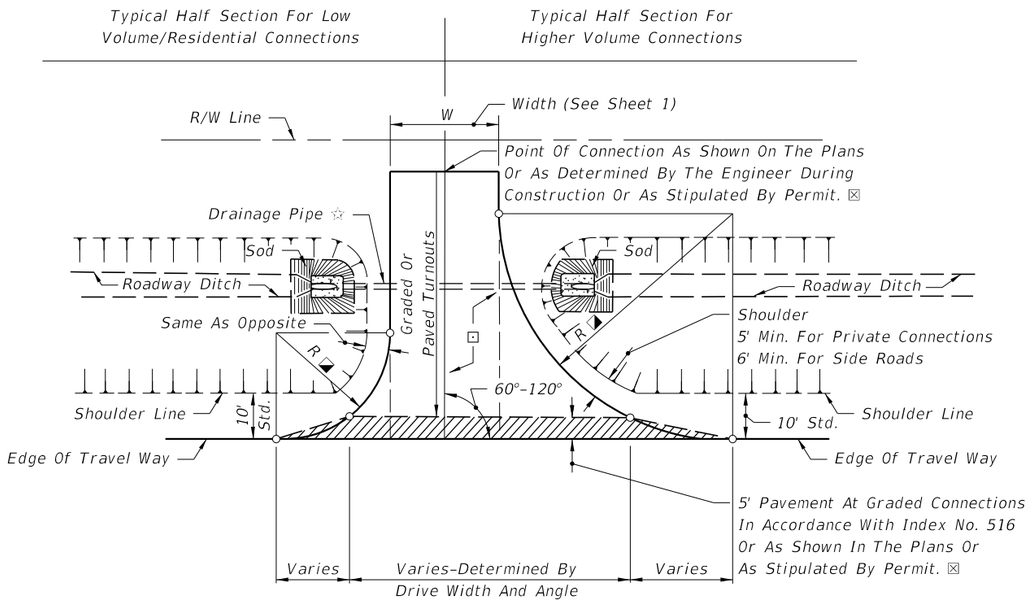

PLAN

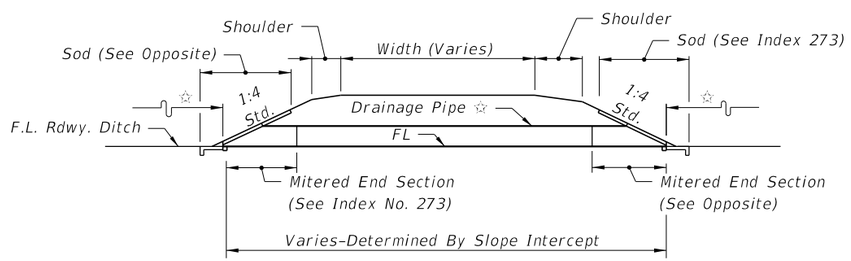

DRAINAGE SECTION

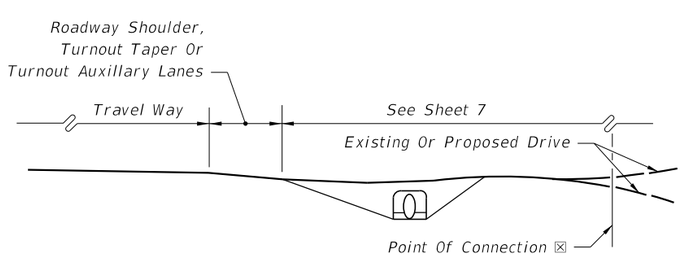

TURNOUT PROFILE AND END VIEW

RURAL TURNOUT CONSTRUCTION

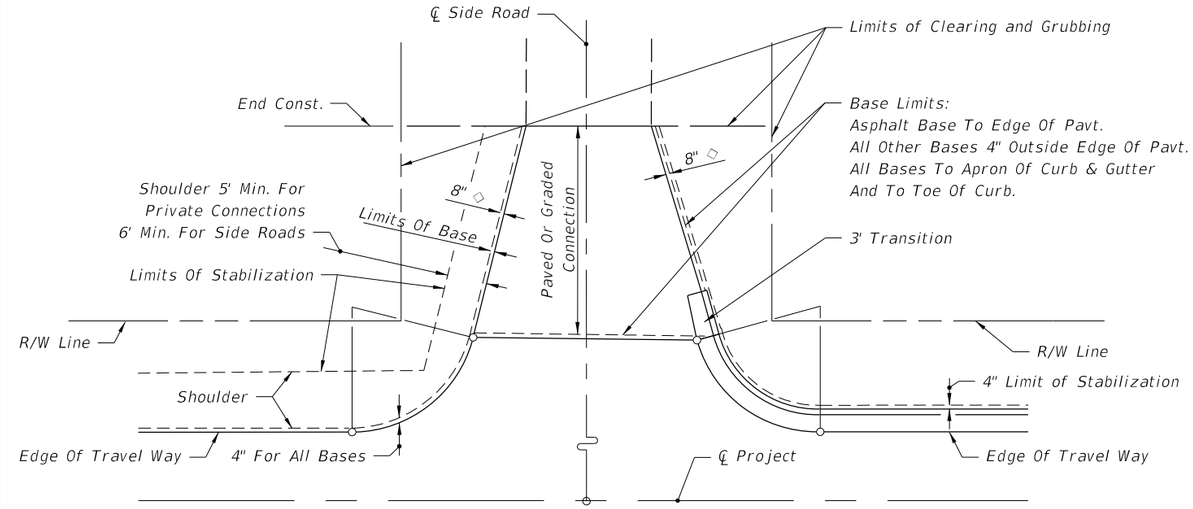

PLAN

LIMITS OF CLEARING & GRUBBING, STABILIZING AND BASE AT INTERSECTIONS

INTERSECTIONS NOTES:

○ Return Radius Point or Transition Point.

◇ 8" Or Match Exist. Stabilization Limits (8" Min.).

DRIVE ENTRANCES NOTES:

☆ Drainage pipe size and length shall be that shown on the plans, or as stipulated by permit, or, as determined by the Engineer during construction. The size shall be at least that established by the FDOT District, but not less than 15" diameter or equivalent. For minimum cover over drainage pipe see Index No. 205. Pipe arch or elliptical pipe may be required to obtain necessary cover. At minimal cover applications a modified pavement apron is permitted. See 'PERMISSIBLE PAVEMENT MODIFICATION' Index No. 273. For spacing between adjacent pipe end treatments see Index No. 273.

⊡ Stable material may be required for graded turnouts to private property as directed by the Engineer in accordance with Section 102-8 of the Standard Specifications.

☒ The 5' pavement at graded connections is not required where there is paved shoulder 4' or more in width. The 5' pavement requirement may be waived for connections serving one or two homes or field entrances with less than 20 trips per day, or 5 trips per hour as approved by permit or by the Engineer, or when not itemized in the plans.

Paved turnouts shall be constructed for all paved connecting facilities. The connecting point will be determined by the Engineer.

Paved turnouts shall be constructed for all business, commercial, industrial or high volume residential graded connecting facilities. The connecting point shall be 30' from edge of travel way or at R/W line, whichever is less.

Paved turnouts shall be constructed for all connecting facilities over 4000 vehicles per day. The connecting point shall be at the R/W line.

◪ See "Summary Of Geometric Requirements For Turnouts" chart for return radii lengths and supplemental information.

○ Return Radius Point or Flare Point.

6/9/2015 4:22:43 PM

MATERIAL TYPES AND THICKNESSES IN DRIVING AREAS FOR RURAL AND URBAN CONNECTIONS

Course	Materials ②	Thickness (in.) ①	
		Connections ③	Roadway ④
Structural	Asphaltic Concrete	1"	1½"
Bases	Optional Base (See Index No. 514)	O.B.G. 1	O.B.G. 3

① Minimum thickness.
② All materials shall be approved by the Department prior to being placed.
③ Connection structure other than traffic lanes. See Notes 1 and 2 below.
④ Travel way flares (bypass lanes), auxiliary lanes serving more than a single connection, and all median crossovers including their auxiliary lanes and/or transition tapers. See Notes 1 and 2 below.

NOTES

1. The pavement should be structurally adequate to meet the expected traffic loads and should not be less than that shown above, except as approved by the Department for graded connections. Other Department-approved equivalent pavements may be used at the discretion of the Engineer. For additional information see Index No. 514.

2. Auxiliary lanes and their transition tapers shall be the same structure as the abutting travel way pavement thickness or any of the roadway structures tabulated above, whichever is thicker.

3. If an asphalt base course is used for a turnout, its thickness may be increased to match the edge of travel way pavement thickness in lieu of a separate structural course. 6" of Portland cement concrete will be acceptable in lieu of the asphalt base and structural courses. See Notes 4 and 5 below.

4. A structural course is required for flexible pavements when they are used for auxiliary lanes serving more than a single connection.

5. Connections paved with Portland cement concrete shall be Class NS concrete at least 6" thick. The Department may require greater thickness when called for in the plans or stipulated by permit. Materials and construction shall conform with FDOT Standard Specifications Sections 347, 350 and 522.

6. The Department may require other pavement criteria where local conditions warrant.

PAVEMENT STRUCTURE FOR TURNOUTS AND AUXILIARY LANES
TABLE 515-1

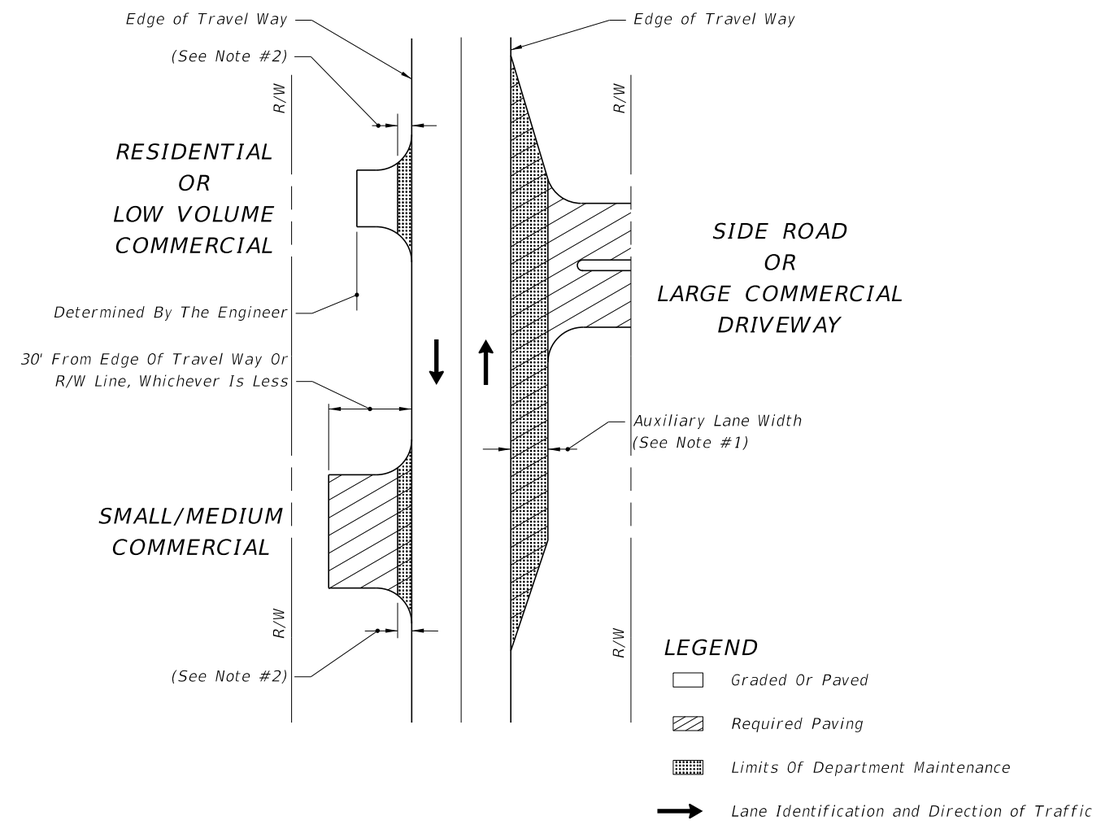

NOTES

1. Auxiliary lane pavements and crossover pavements shall be maintained by the Department.

2. Department maintenance of turnout pavement extends 5' from edge of the travel way or to the edge of paved shoulder, whichever is greater. The remainder of any turnout paved area on the right of way shall be maintained by the owner or his authorized agent. As a function of routinely reworking shoulders, the Department may grade and shape existing material on nonpaved areas beyond the maintained pavement.

3. Control and maintenance of drainage facilities within the right of way shall be solely the responsibility of the Department, unless specified differently by Department permit.

4. The maintenance and operation of highway lighting, traffic signals, associated equipment, and other necessary devices shall be the responsibility of a public agency.

5. All pavement markings on the State highways, including acceleration and deceleration lane markings, and signing installed for the operation of the State highway shall be maintained by the Department.

6. All signing and marking installed for the operation of the connection (such as stop bars and stop signs for the connection) shall be the responsibility of the permittee.

LIMITS OF CONSTRUCTION AND MAINTENANCE FOR RURAL CONNECTIONS

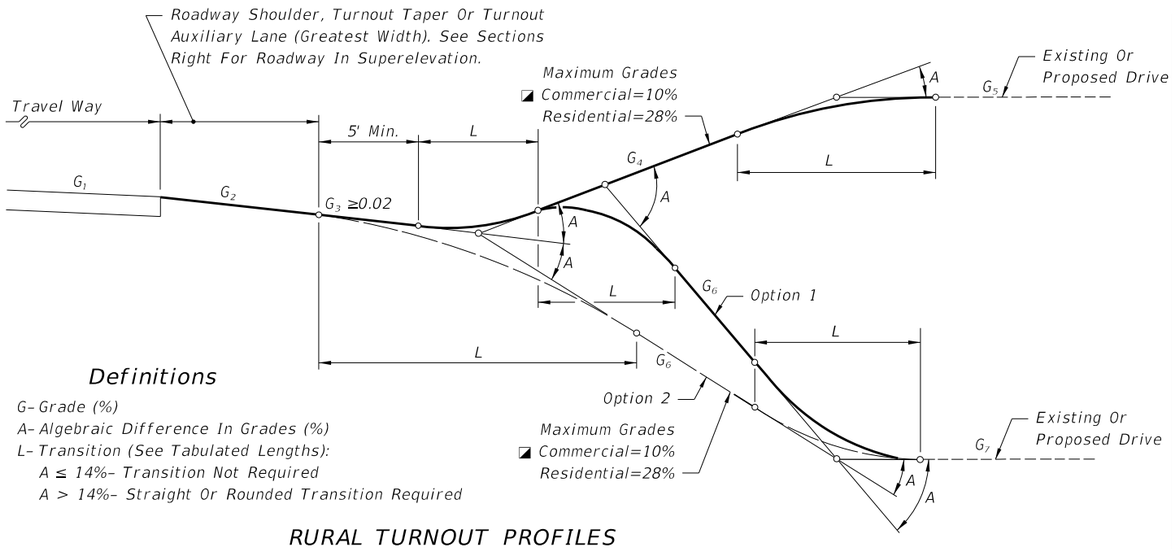

Definitions

G- Grade (%)
A- Algebraic Difference In Grades (%)
L- Transition (See Tabulated Lengths):
A ≤ 14%- Transition Not Required
A > 14%- Straight Or Rounded Transition Required

RURAL TURNOUT PROFILES

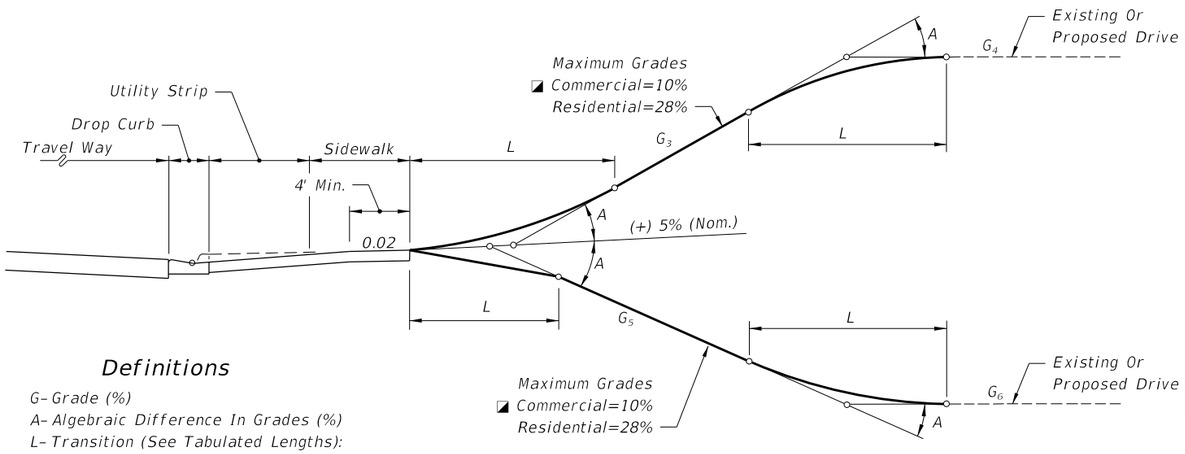

Definitions

G- Grade (%)
A- Algebraic Difference In Grades (%)
L- Transition (See Tabulated Lengths):
A ≤ 14%- Transition Not Required
A > 14%- Straight Or Rounded Transition Required

URBAN TURNOUT PROFILES

◪ When restoring or reconstructing existing commercial turnout connections on new construction and reconstruction projects, the maximum 10% commercial grade may be exceeded provided this does not create adverse roadway operational or safety impacts. This shall be approved by the District Design Engineer and supported by documented site specific findings.

LENGTHS (L) (FT.)								
A	CRESTS				SAGS			
	STRAIGHT		ROUNDED		STRAIGHT		ROUNDED	
	Desirable	Minimum	Desirable	Minimum	Desirable	Minimum	Desirable	Minimum
6-13%	3	0	5	0	3	0	5	0
14%	3	0	10	0	3	0	10	0
15%	3	2.5	10	3	5	3	10	5
16%	5	3	10	4	6	4	10	6
17%	6	3.5	10	5	8	5	10	7
18%	6	4	10	6	9	6	10	8
19%	7	4.5	10	7	11	7	12	9
20%	8	5	11	8	12	8	13	10
21%	9	5.5	12	9	13	8.5	14	11
22%	10	6	13	10	14	9	16	12
23%	10	6.5	14	10.5	14	9.5	16	12.5
24%	11	7	15	11	15	10	17	13
25%	12	7.5	15	11.5	16	10.5	18	13.5
26%	12	8	16	12	17	11	18	14
27%	13	8.5	17	12.5	17	11.5	19	14.5
28%	14	9	17	13	18	12	20	15
29%	NA	NA	22	14	NA	NA	21	17
30-31%	NA	NA	23	15	NA	NA	22	18
32-33%	NA	NA	24	16	NA	NA	23	20
34-36%	NA	NA	26	17	NA	NA	25	21
37-38%	NA	NA	27	18	NA	NA	26	22
39-41%	NA	NA	29	19	NA	NA	28	24
42-43%	NA	NA	30	20	NA	NA	29	25
44-46%	NA	NA	32	21	NA	NA	31	26
47-48%	NA	NA	33	22	NA	NA	32	27
49-51%	NA	NA	34	23	NA	NA	34	28
52-54%	NA	NA	36	24	NA	NA	35	30
55-56%	NA	NA	37	25	NA	NA	36	31

Rounded: Either circular, parabolic, or spline curvature. The plans or the Engineer may specify a particular type of curvature.

Desirable: Desirable minimum lengths
Minimum: Absolute minimum lengths

{Greater lengths than minimum and desirable are recommended where practical for flatter and smoother profile.}

RECOMMENDED TURNOUT PROFILE TRANSITION LENGTHS (L) (FT.)

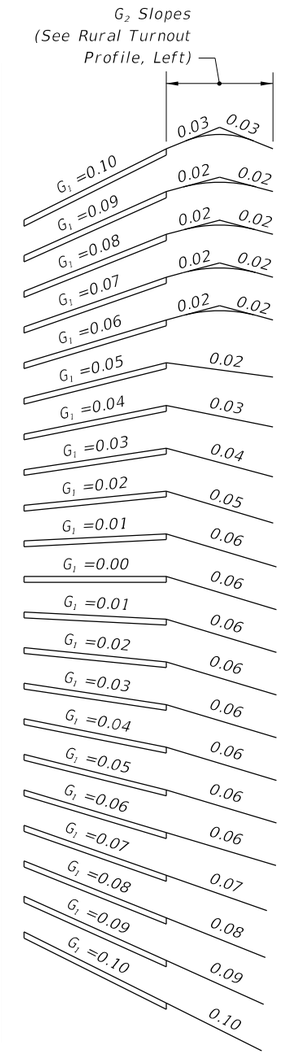

ROADWAY PAVEMENT SLOPES AND SLOPES OF ABUTTING RURAL TURNOUT SURFACES (G_2)

SUPERELEVATION SECTIONS

STORMWATER RUNOFF AND PROFILE OPTION NOTES

1. Turnouts shall neither cause water to flow on or across the roadway pavement, nor cause water ponding or erosion within the State right of way. On all rural turnouts the transition (L) nearest the roadway shall be sloped or crowned to direct stormwater runoff to the roadside ditch. Inlets, flumes or other appropriate runoff control devices shall be constructed when runoff volumes are sufficient to cause erosion of the shoulder. Similar runoff control devices shall be constructed as necessary to properly direct and control the stormwater runoff on urban turnouts.

2. The Option 1 profile is intended for locations where roadway, turnout taper and auxiliary lane stormwater runoff volumes are relatively large. The Option 2 profile is intended for locations where runoff volumes are relatively small and/or where there is no roadside ditch.

TURNOUT PROFILES

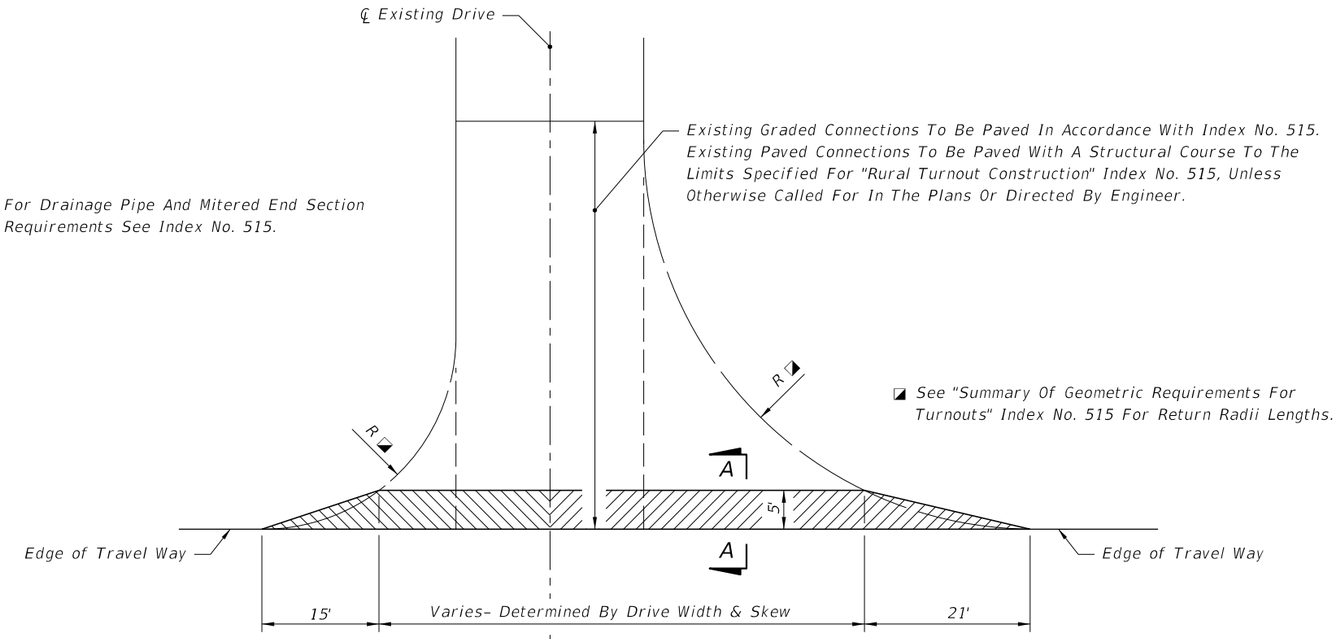

TYPE I TURNOUT
Typical Half-Section
For Automobile Traffic

TYPE II TURNOUT
Typical Half-Section
For Truck-Trailer Traffic

TURNOUT CONSTRUCTION

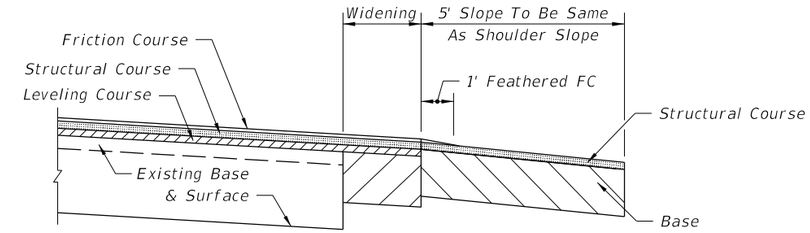

SECTION AA WITH WIDENING

TURNOUT CONSTRUCTION

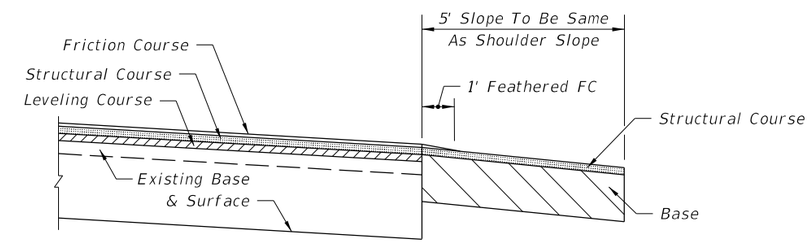

SECTION AA

RESURFACING EXISTING TURNOUT

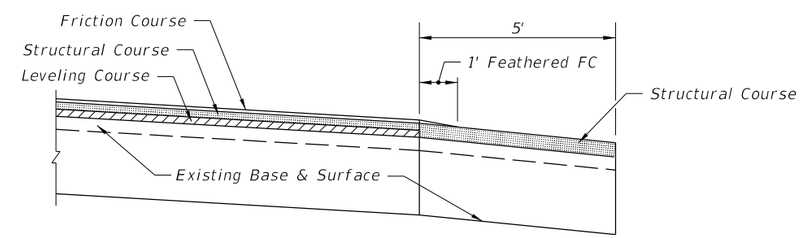

SECTION AA

AREAS FOR ONE 5' DEEP TURNOUT (SY)

Drive Width (Ft.)	Intersection			
	Normal		Skewed	
	Type I	Type II	Type I	Type II
12	26	51	31	60
14	27	52	33	61
16	28	53	34	63
18	29	54	35	64
20	31	55	37	65
22	32	56	38	67
24	33	57	39	68
26	34	58	40	69
28	35	59	42	70
30	36	61	43	72
32	37	62	44	73
34	38	63	46	74
36	39	64	47	76
38	41	65	48	77
40	42	66	49	78
42	43	67	51	79
44	44	68	52	81
46	45	69	53	82
48	46	71	55	83
50	47	72	56	85
52	48	73	57	86
54	49	74	58	87
56	51	75	60	88
58	52	76	61	90
60	53	77	62	91

PAVEMENT STRUCTURE FOR 5' DEEP TURNOUTS

Course	Material	Minimum Thickness
Structural	Asphaltic Concrete	1"
Base	Optional Base (See Index No. 514)	O.B.G. 1

Notes:

1. Turnout structural course to be the same material as roadway leveling or structure course. Structural course not required if asphalt base course and its thickness increased to match edge of roadway pavement.

2. Any Department-approved pavement structure equivalence may be used at the discretion of the Engineer.

3. Additional structural strength may be required if heavy truck loads are anticipated.

GENERAL NOTES

1. Turnouts are to be constructed or resurfaced for low volume (single family, duplex, farm, etc.) residential connections as directed by the Engineer.

2. Turnout construction is not required for low volume residential connections where roadway shoulders are paved.

3. Connections outside the 5' limit are to be constructed as directed by the Engineer.

4. The contract unit price for Turnout Construction includes the cost for excavation and base.

5. Payment for structural course is to be included in roadway resurfacing pay item.

6. Payment for feathering friction course is to be included in the unit price for Asphaltic Concrete Friction Course placed on the roadway. Feathered areas will not be included in measured quantities. Feathering is not required for FC-5 friction course.

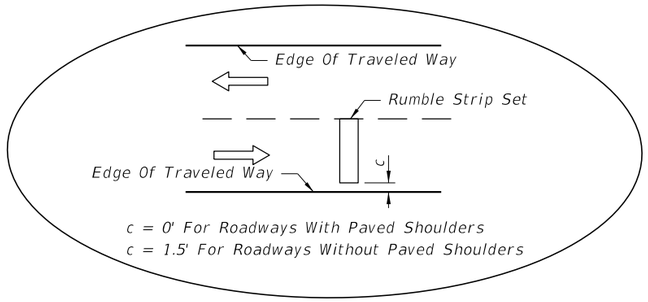

INSET A

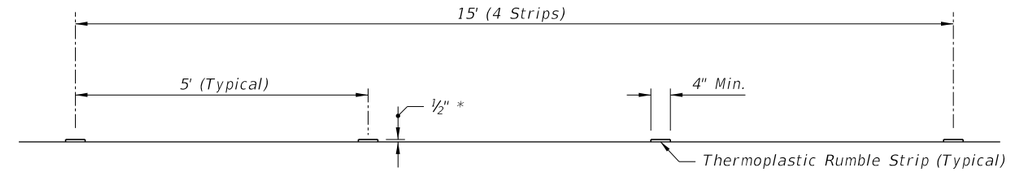

* Use multiple applications to achieve desired ½" thickness

Note: Intersection thermoplastic rumble strip sets shall be white.

THERMOPLASTIC SET

Note: Rumble strips may be required for one or more legs of the intersection (one leg shown for spacing information). Rumble strips shall be constructed only on the legs identified in the plans.

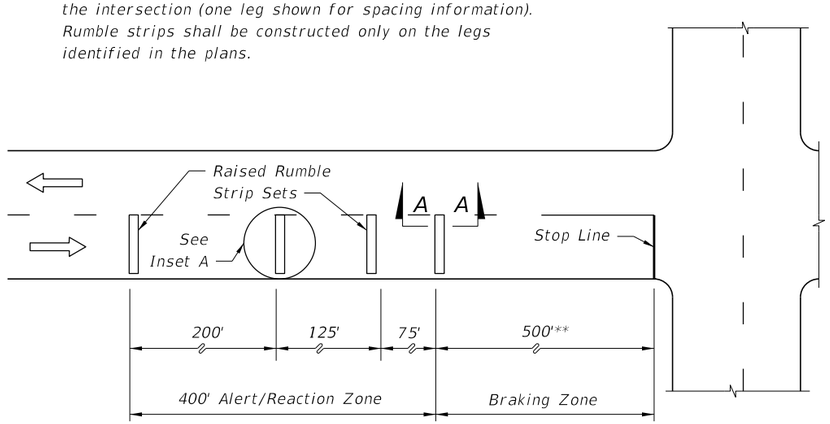

** May be decreased in urban areas with low operating speeds.

PLAN

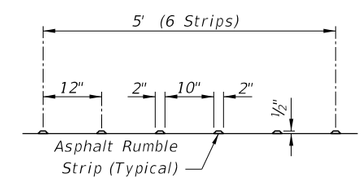

ASPHALT SET

SECTION AA FOR THERMOPLASTIC AND ASPHALT RUMBLE STRIP SETS

NOTE:

Raised rumble strips are to be constructed in accordance with Section 546 of the Specifications.

RAISED RUMBLE STRIPS AT INTERSECTIONS

LAST REVISION	REVISION	DESCRIPTION:			INDEX NO.	SHEET NO.
07/01/14			FDOT 2016 DESIGN STANDARDS	RAISED RUMBLE STRIPS	517	1 of 1

6/8/2015 3:54:05 PM

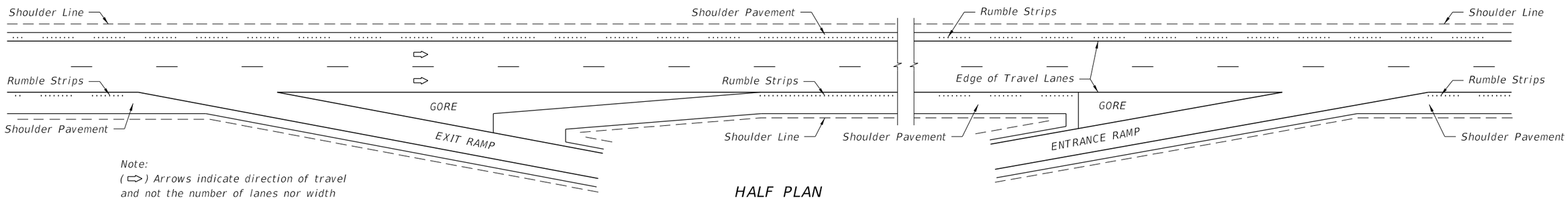

Note:
(⇨) Arrows indicate direction of travel and not the number of lanes nor width of median shoulder pavement.

HALF PLAN
LIMITED ACCESS FACILITIES

SHOULDER GROUND-IN RUMBLE STRIP PLACEMENT

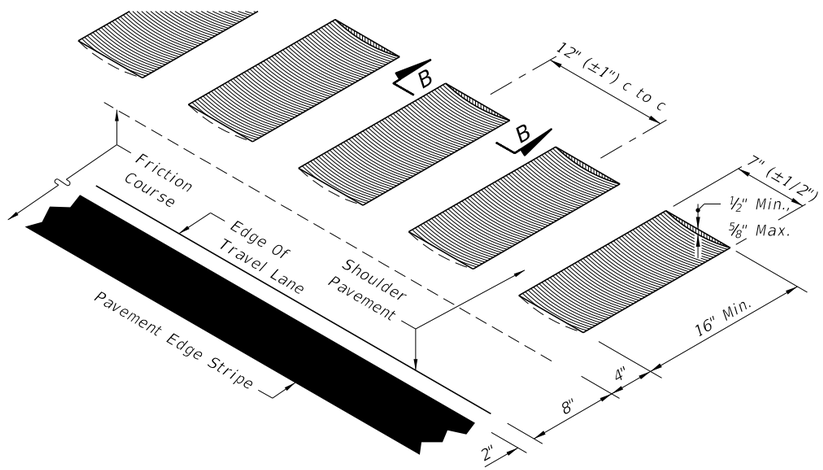

ISOMETRIC - LONGITUDINAL CUT

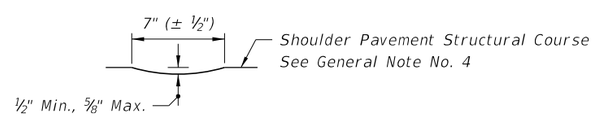

SECTION BB
LONGITUDINAL CUT

LOCATION ALONG SHOULDER (FLEXIBLE PAVEMENT)

SHOULDER GROUND-IN RUMBLE STRIPS

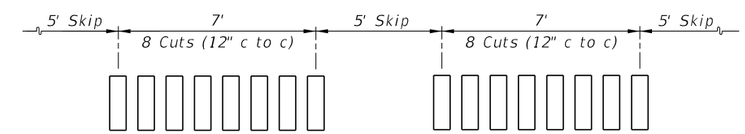

SKIP ARRAY

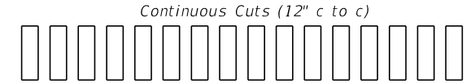

CONTINUOUS ARRAY

ARRAYS

GENERAL NOTES FOR SHOULDER GROUND-IN RUMBLE STRIPS

1. Shoulder ground-in rumble strips shall be constructed on limited access facilities.
2. The skip array is the standard array. The continuous array shall be constructed in advance of bridge ends for a distance of 1000', or back to the gore recovery area for mainline interchange bridges; and constructed at other specific locations as called for in the plans.
3. Ground-in rumble strips are to be constructed in accordance with Section 546 of the Specifications.
4. When friction course extends more than 8" beyond the edge of the travel lane, the extended friction course shall be bladed off back to the 8" line, prior to rumble strip grinding.

6/9/2015 4:24:00 PM

LAST REVISION	REVISION	DESCRIPTION:			INDEX NO.	SHEET NO.
07/01/14			FDOT 2016 DESIGN STANDARDS	SHOULDER RUMBLE STRIPS	518	1 of 2

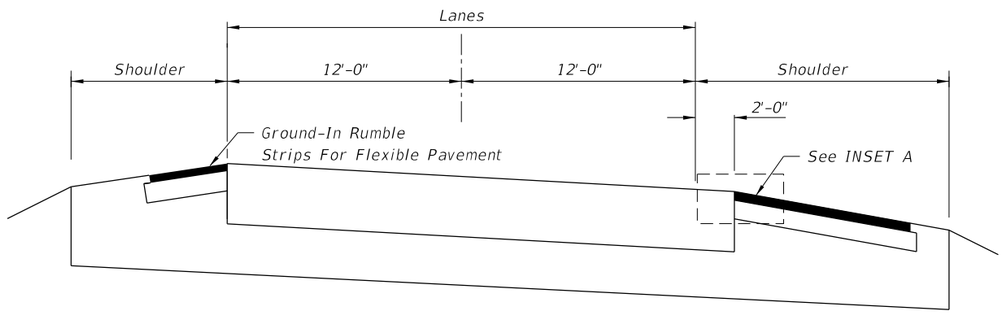

NTS

RIGID PAVEMENT WITH FLEXIBLE PAVEMENT SHOULDER

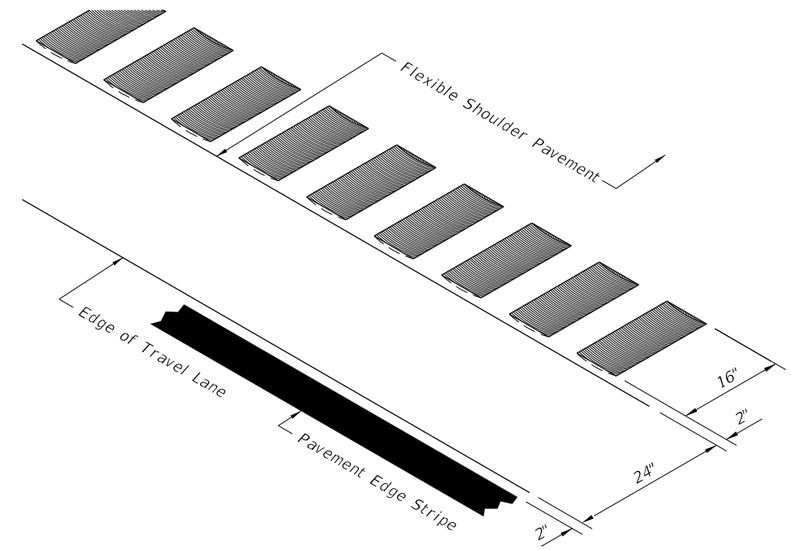

ISOMETRIC - LONGITUDINAL CUT
INSET A

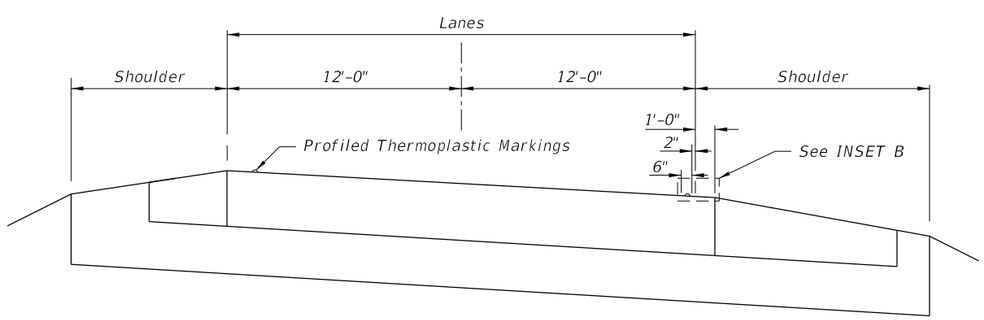

NTS

RIGID PAVEMENT WITH RIGID PAVEMENT SHOULDER

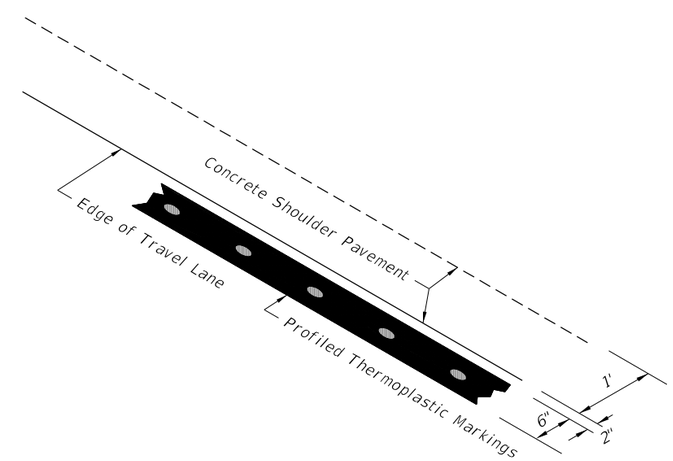

ISOMETRIC - LONGITUDINAL CUT (RIGID PAVEMENT)
INSET B

6/9/2015 4:24:00 PM

LAST REVISION	REVISION	DESCRIPTION:			INDEX NO.	SHEET NO.
07/01/15			FDOT 2016 DESIGN STANDARDS	SHOULDER RUMBLE STRIPS	518	2 of 2

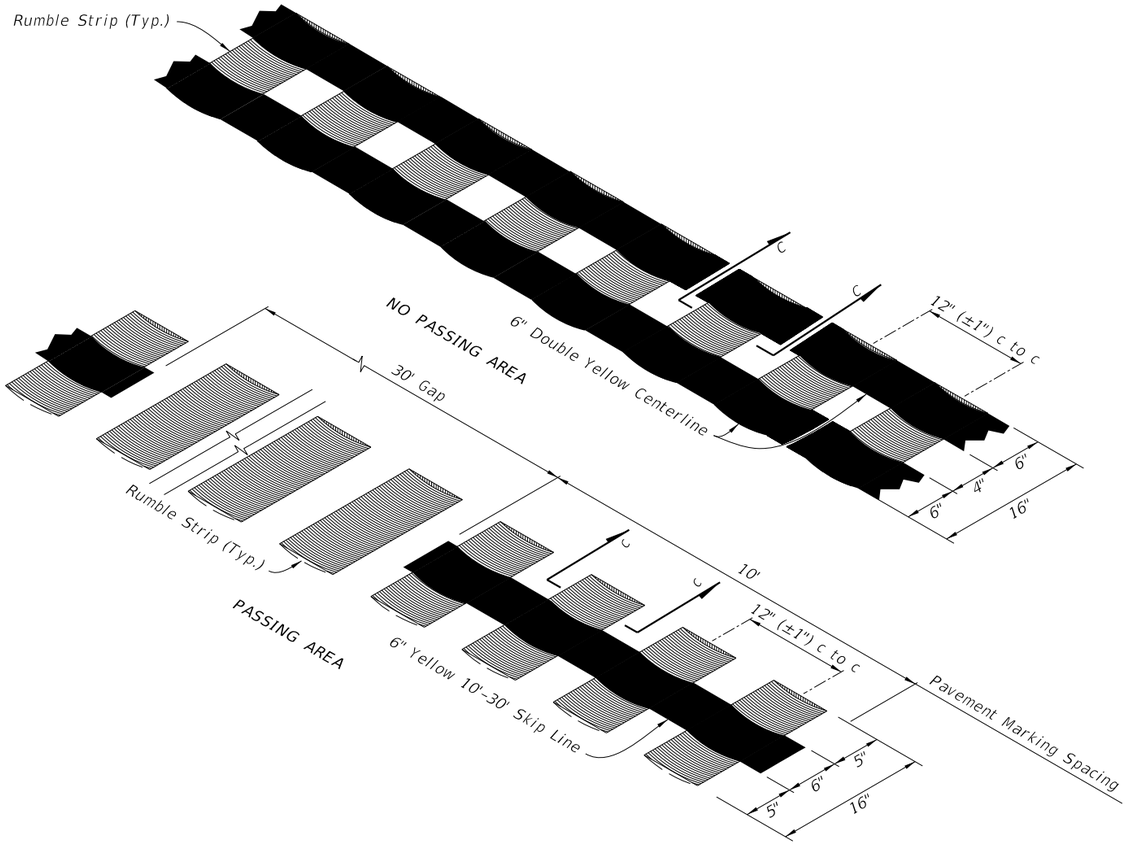

CENTER LINE RUMBLE STRIPING
ISOMETRIC - LONGITUDINAL CUT

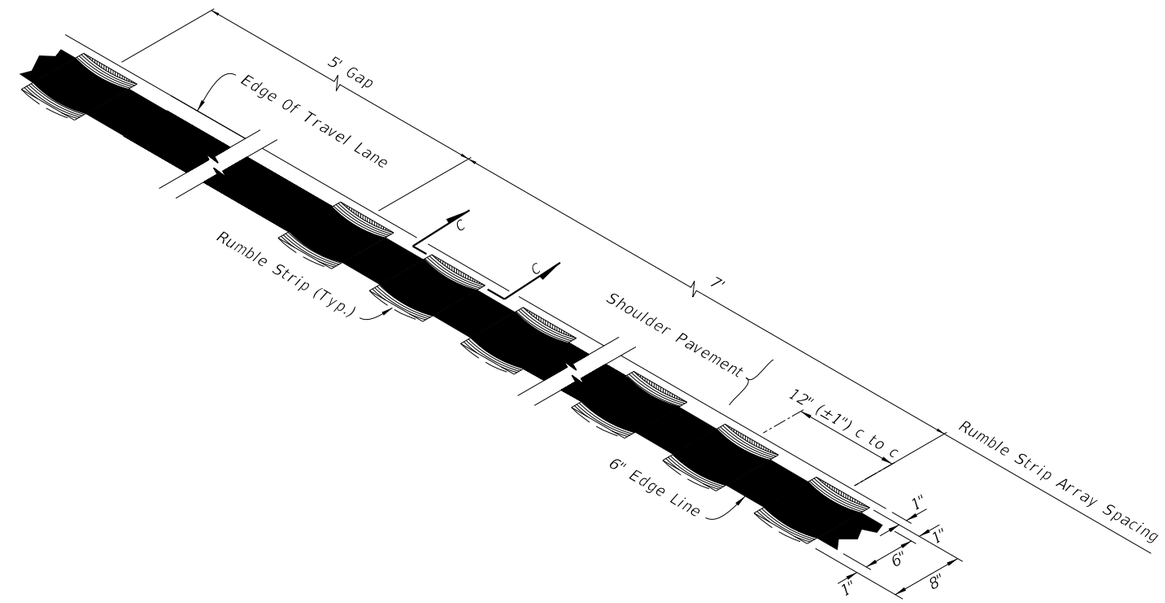

EDGE LINE RUMBLE STRIPING
ISOMETRIC - LONGITUDINAL CUT

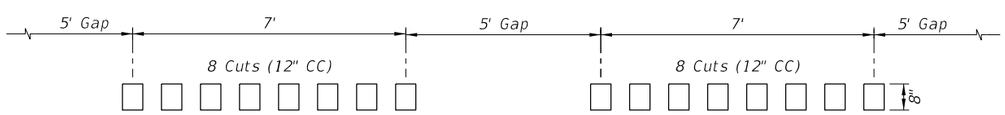

SKIP ARRAY RUMBLE STRIP
(For All Edge Lines)

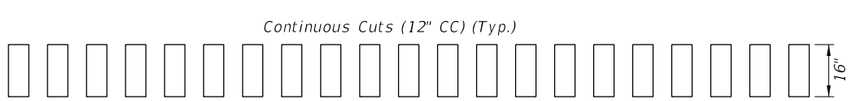

CONTINUOUS ARRAY RUMBLE STRIP
(For All Centerlines)

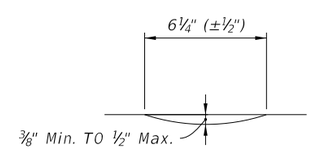

SECTION C-C
RUMBLE STRIP DEPTH

GENERAL NOTES:

1. Construct ground-in rumble strips centered on the proposed centerline or edge line markings in accordance with Specification Section 546.
2. The rumble strip depth detailed on this sheet is for use on dense-graded flexible pavement only.
3. Use the Skip Array Rumble Strip for edge line rumble striping and use the Continuous Array Rumble Strip for center line rumble striping.

6/9/2015 4:24:30 PM

LAST REVISION	REVISION	DESCRIPTION:	FDOT 2016 DESIGN STANDARDS	RUMBLE STRIPING	INDEX NO.	SHEET NO.
07/01/15					519	1 of 1

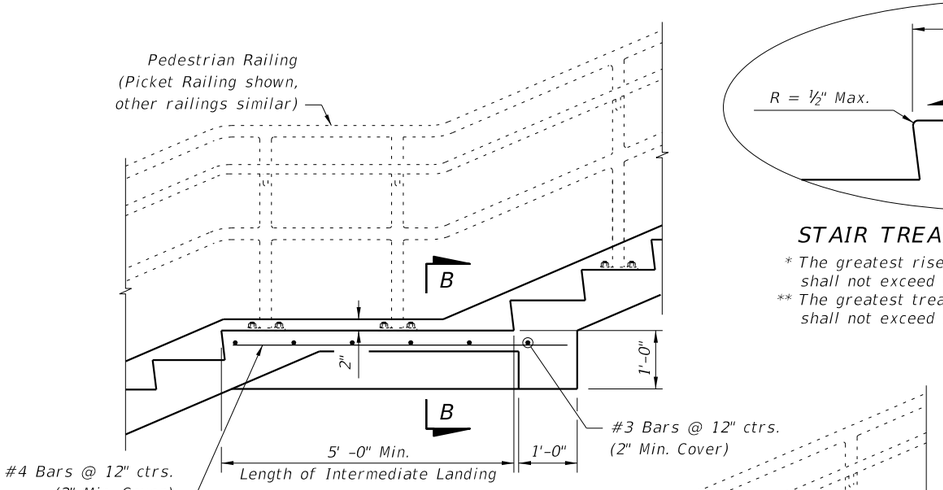

ELEVATION

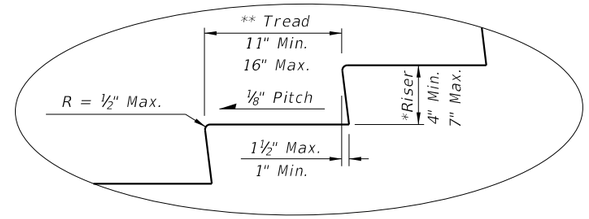

STAIR TREAD AND RISER DETAILS

* The greatest riser height within the flight of steps shall not exceed the smallest by more than ⅜".

** The greatest tread depth within the flight of steps shall not exceed the smallest by more than ⅜".

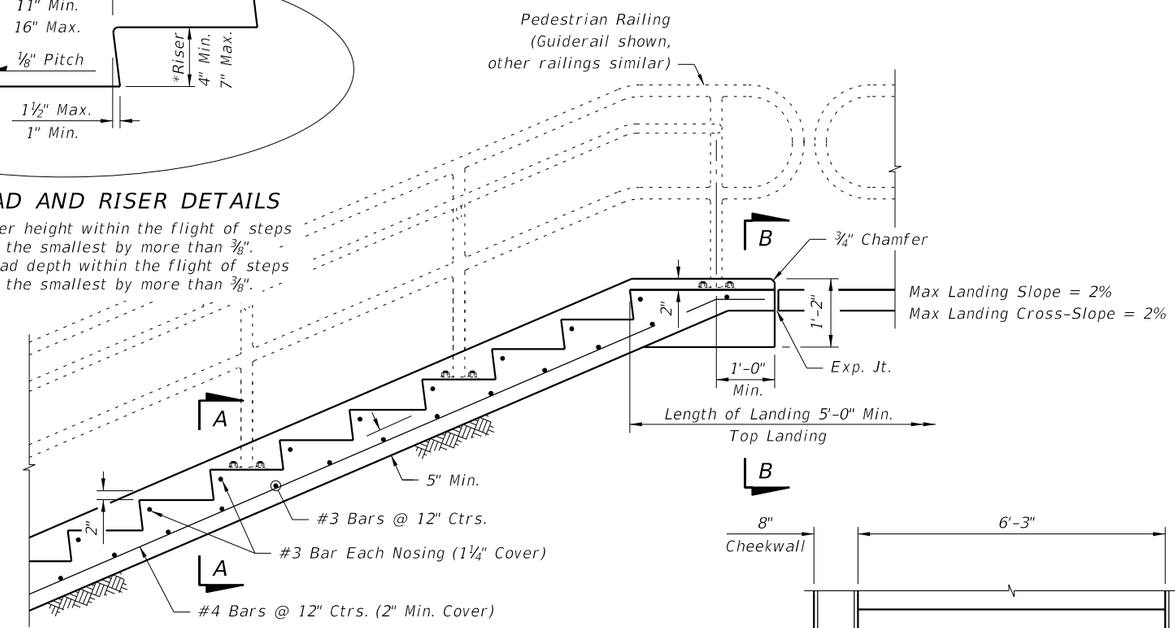

NOTE: Provide a maximum of 12 risers between landings.

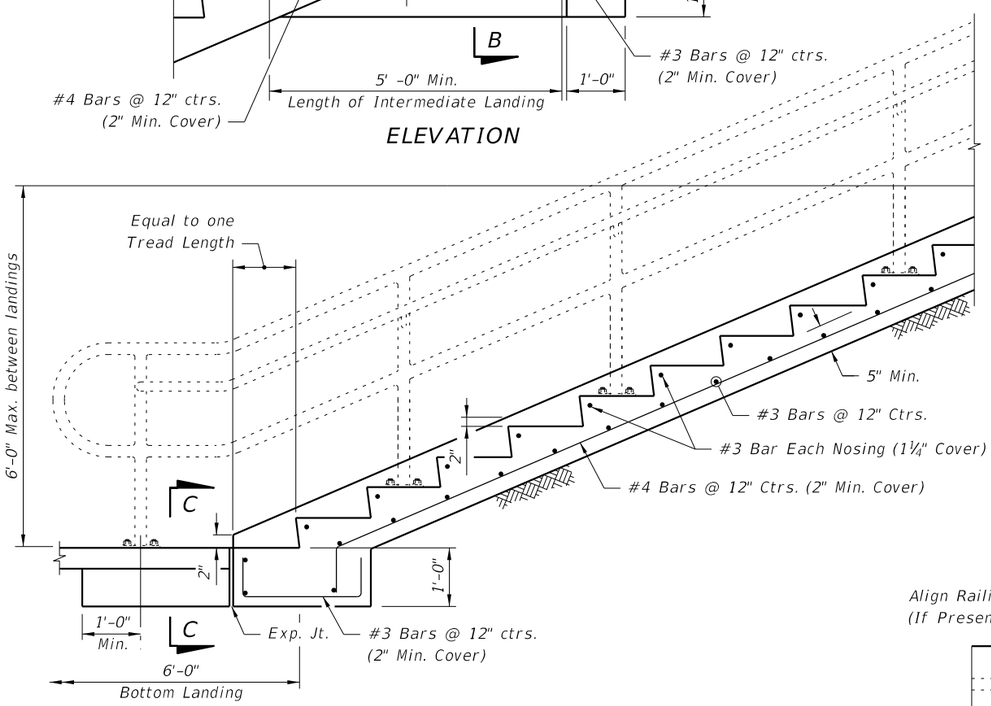

Max Landing Slope = 2%
Max Landing Cross-Slope = 2%

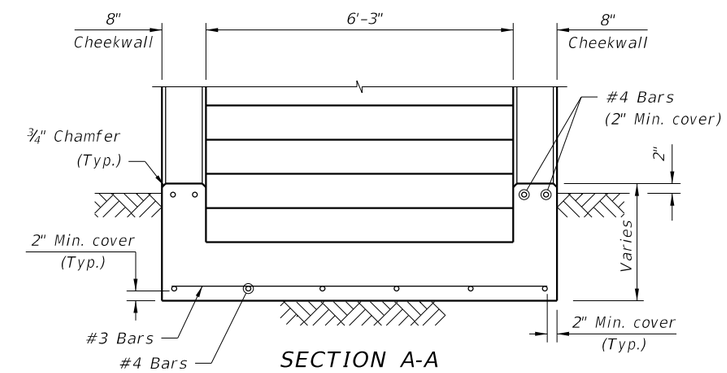

SECTION A-A

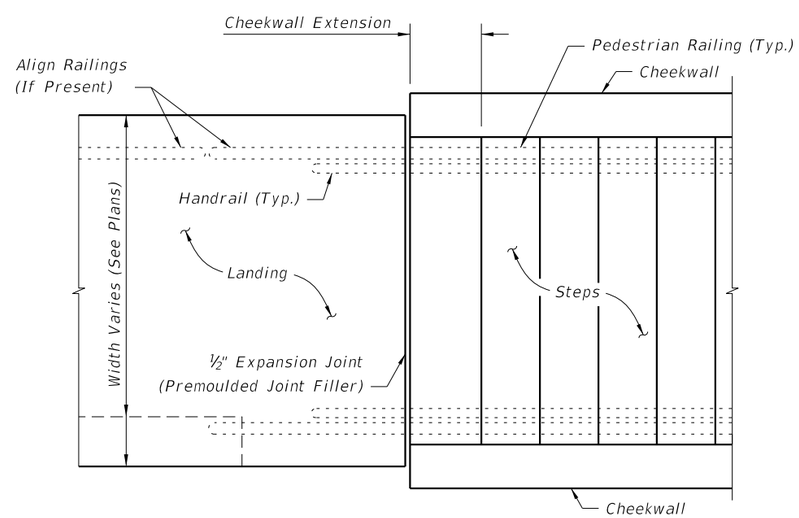

PLAN AT JUNCTION OF STEPS & LANDING
(Bottom Landing shown, Top Landing similar)

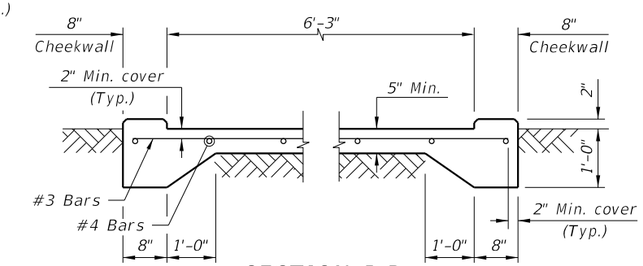

SECTION B-B

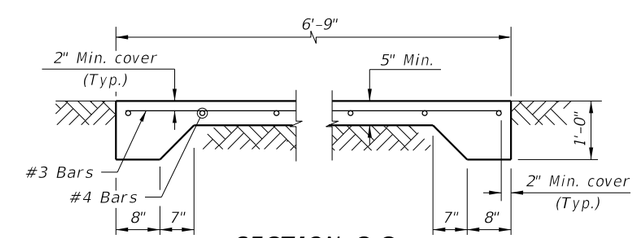

SECTION C-C

NOTES:

1. Do not use this Index for suspended (structural) steps or stairways.
2. Construct steps in accordance with Section 522 of the FDOT Standard Specifications.
3. Concrete: Class NS, Specification 347.
4. Tread Finish: Broom finish parallel to steps unless otherwise shown in Plans.
5. Pedestrian Railing: See Index Nos. 852, 862, 870, 880 or Project Specific Design.
6. Cost of concrete steps, landings and cheekwalls shall be paid for under the contract unit price for Class NS Concrete (Concrete Steps), CY. Cost of reinforcing steel shall be paid for under the contract unit price for Reinforcing Steel (Miscellaneous), LB.

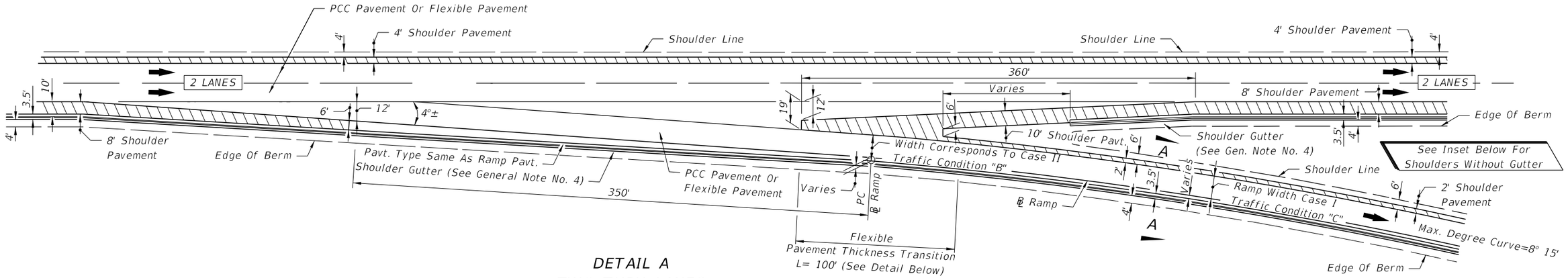

DETAIL A
TWO THRU LANES

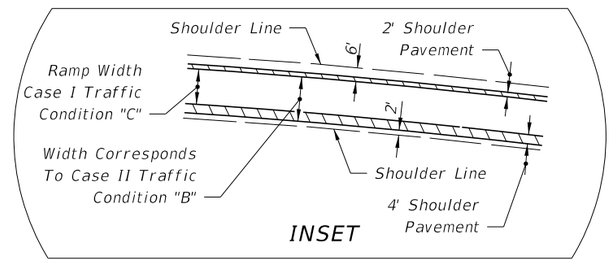

INSET

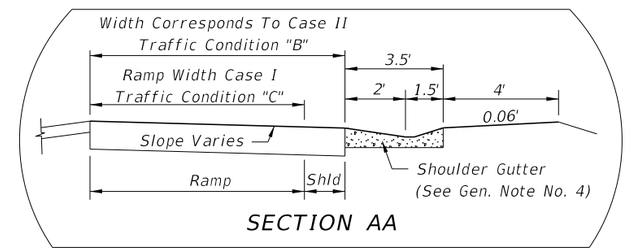

SECTION AA

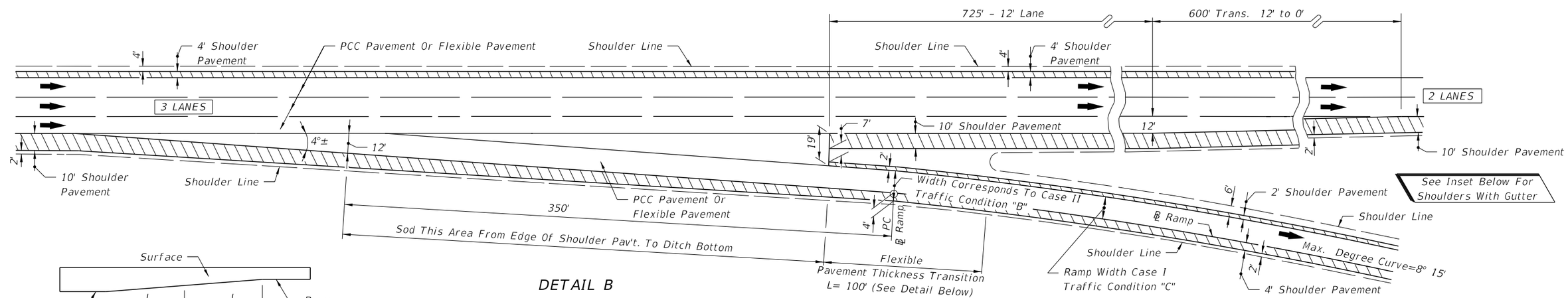

DETAIL B
THREE APPROACH LANES - TWO THRU LANES

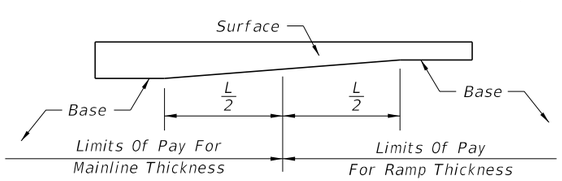

FLEXIBLE PAVEMENT THICKNESS TRANSITION

NOTE: For General Notes See Sheet No. 2

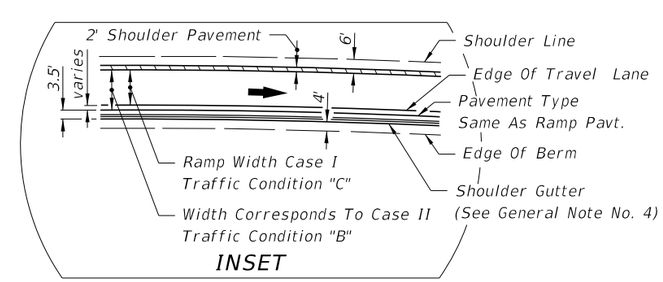

INSET

EXIT TERMINALS

SINGLE - LANE RAMPS

LAST REVISION	REVISION	DESCRIPTION:			INDEX NO.	SHEET NO.
07/01/04			FDOT 2016 DESIGN STANDARDS	RAMP TERMINALS	525	1 of 5

6/9/2015 8:29:04 AM

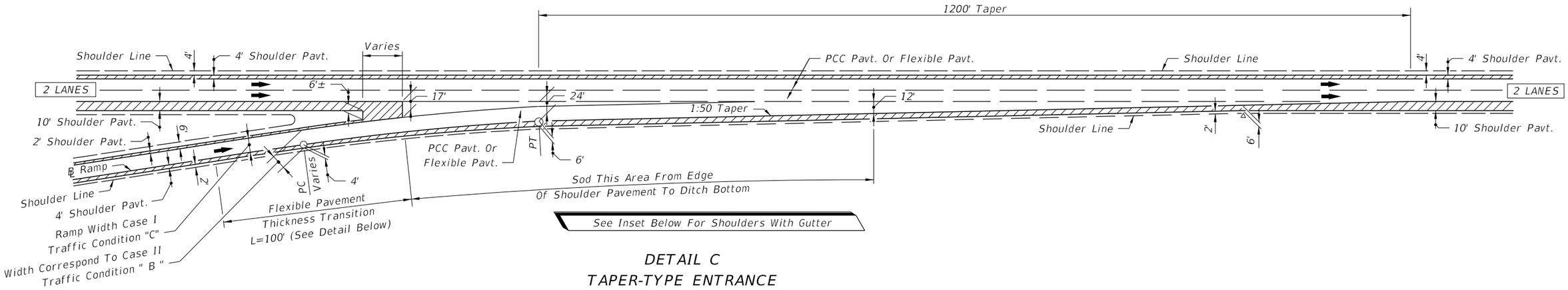

DETAIL C
TAPER-TYPE ENTRANCE

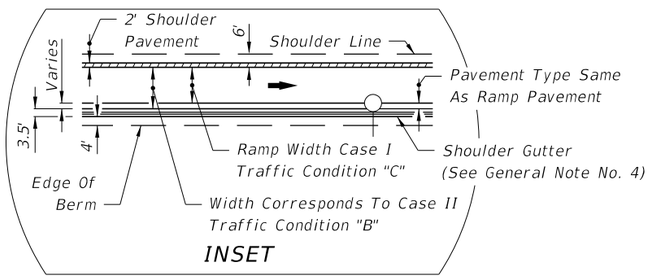

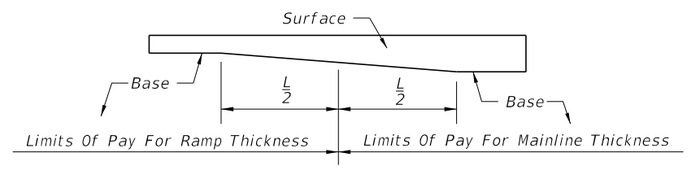

FLEXIBLE PAVT. THICKNESS TRANSITION

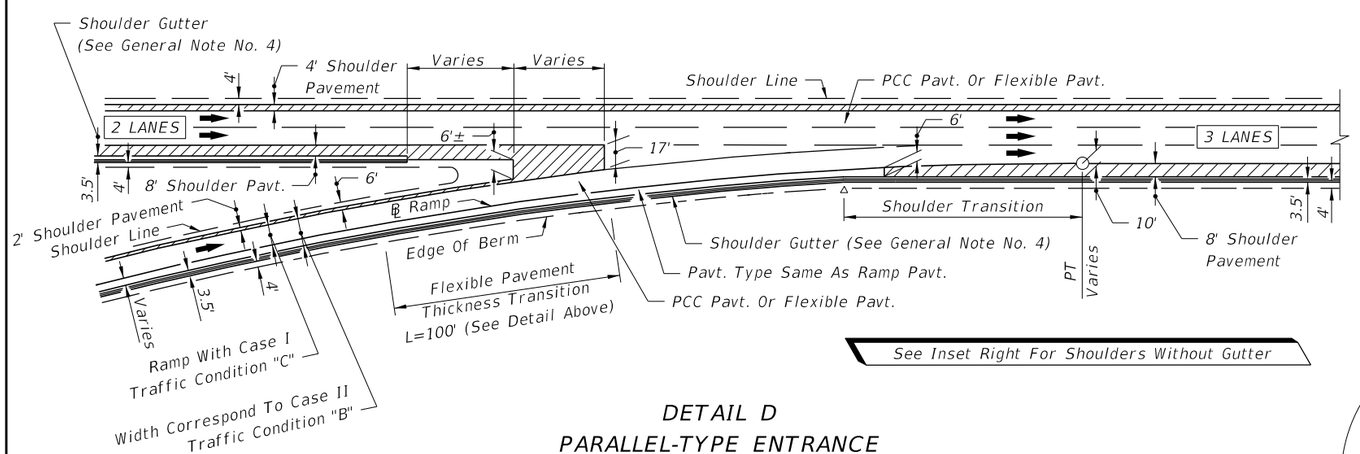

DETAIL D
PARALLEL-TYPE ENTRANCE

ENTRANCE TERMINALS
SINGLE-LANE RAMPS

GENERAL NOTES

1. Taper-Type exit and entrance terminals as detailed shall not be used on ramps for which a speed of 50 MPH or greater cannot be maintained. For such ramps, parallel deceleration and acceleration lanes shall be used in place of tapers with lengths set according to AASHTO.

2. a. PCC Pavement Projects:
   Where shoulder pavement adjacent to shoulder gutter is less than 6' wide, it shall be identical to the adjacent roadway pavement beginning with the transverse joint nearest the point of 6' width.
   b. Flexible Pavement Projects:
   Where shoulder pavement used in conjunction with shoulder gutter is less than 6' uniform width, it shall be identical to the adjacent roadway pavement.

3. For concrete pavement joint details and layouts at entrance and exit ramp terminals see Index No. 305.

4. Shoulder gutter applications will be determined by drainage design.

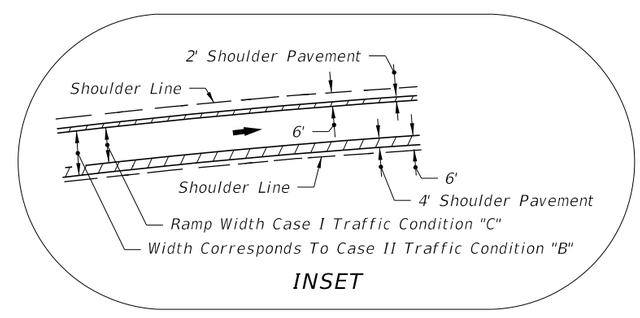

8:29:04 AM

6/9/2015

LAST REVISION	REVISION	DESCRIPTION:			INDEX NO.	SHEET NO.
07/01/04			FDOT 2016 DESIGN STANDARDS	RAMP TERMINALS	525	2 of 5

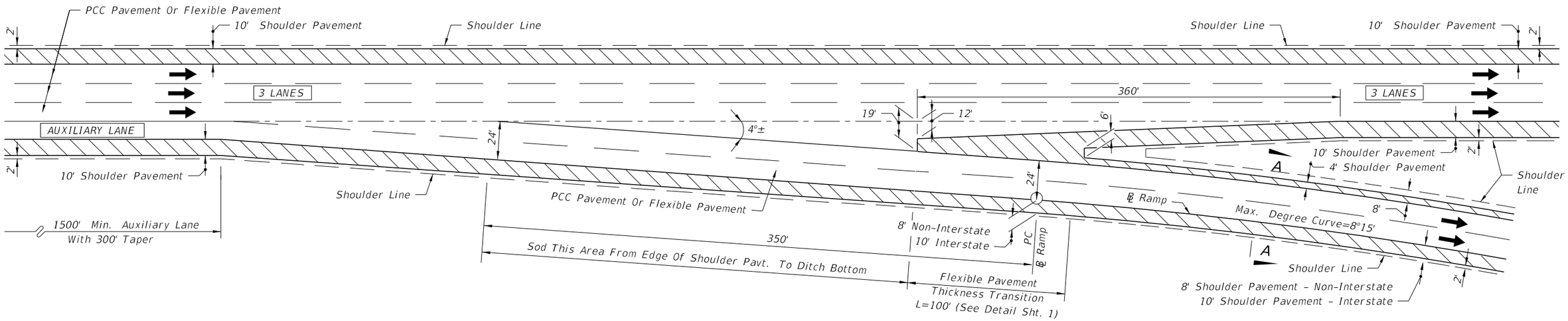

THREE THRU LANES - APPROACH AUXILIARY LANE

EXIT TERMINALS

TWO-LANE RAMPS

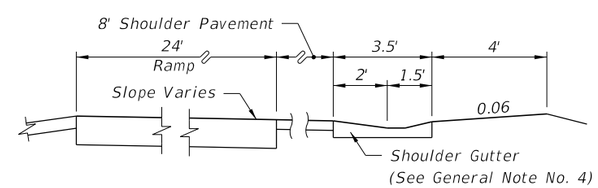

SECTION WHEN SHOULDER GUTTER USED
SECTION AA

6/9/2015 8:29:05 AM

LAST REVISION	REVISION	DESCRIPTION:			INDEX NO.	SHEET NO.
07/01/00			FDOT 2016 DESIGN STANDARDS	RAMP TERMINALS	525	3 of 5

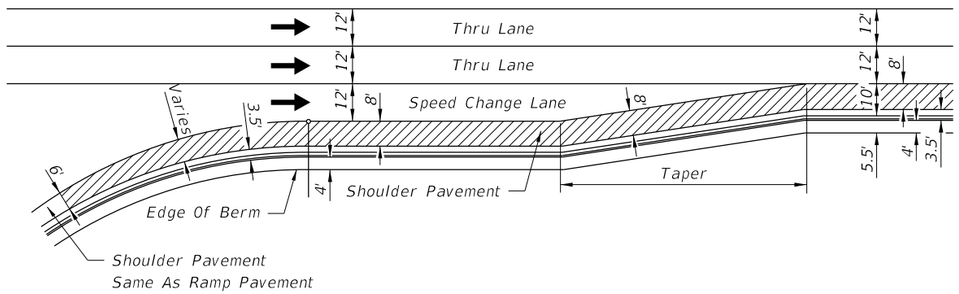

ACCELERATION LANE WITH SHOULDER GUTTER

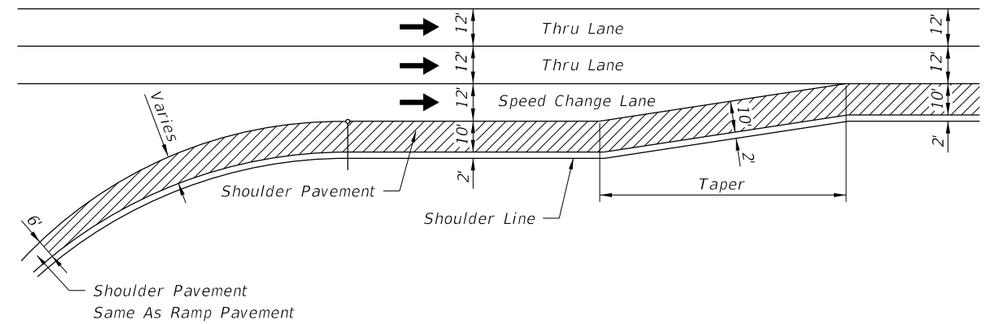

ACCELERATION LANE WITHOUT SHOULDER GUTTER

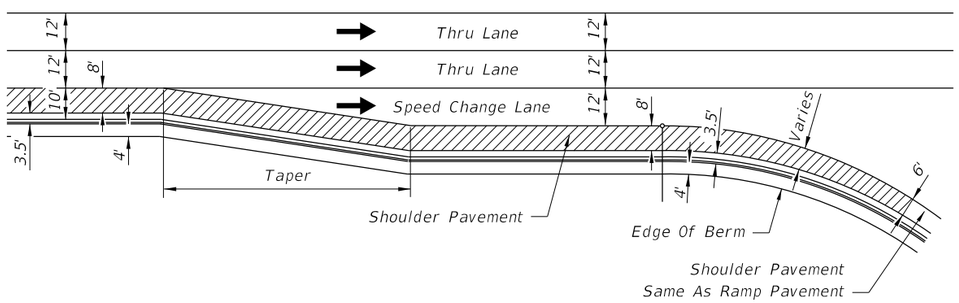

DECELERATION LANE WITH SHOULDER GUTTER

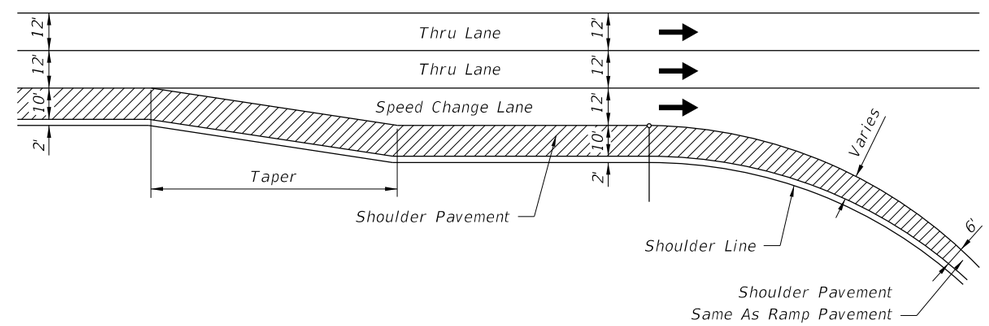

DECELERATION LANE WITHOUT SHOULDER GUTTER

SHOULDER TREATMENT
AT SPEED CHANGE LANES AT FREEWAY RAMP TERMINALS

FREEWAY RAMP TERMINALS

6/9/2015 8:29:05 AM

LAST REVISION	REVISION	DESCRIPTION:			INDEX NO.	SHEET NO.
07/01/05			FDOT 2016 DESIGN STANDARDS	RAMP TERMINALS	525	4 of 5

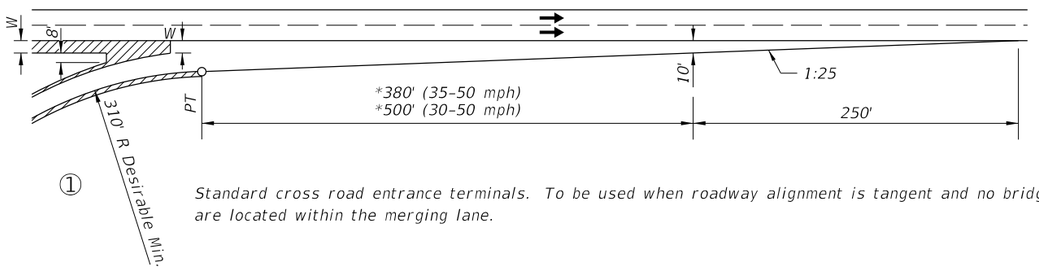

①

Standard cross road entrance terminals. To be used when roadway alignment is tangent and no bridges are located within the merging lane.

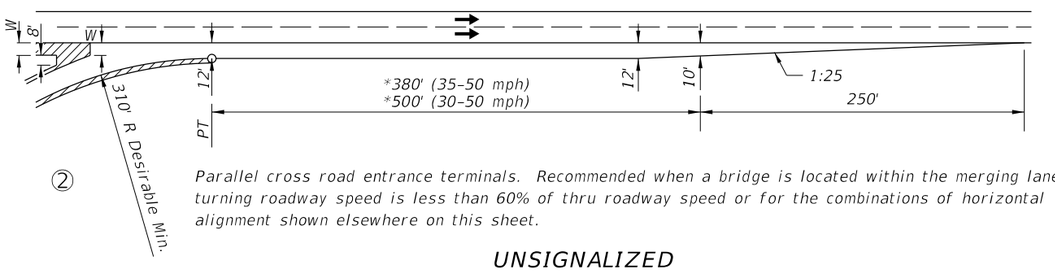

②

Parallel cross road entrance terminals. Recommended when a bridge is located within the merging lane, turning roadway speed is less than 60% of thru roadway speed or for the combinations of horizontal alignment shown elsewhere on this sheet.

UNSIGNALIZED ENTRANCES

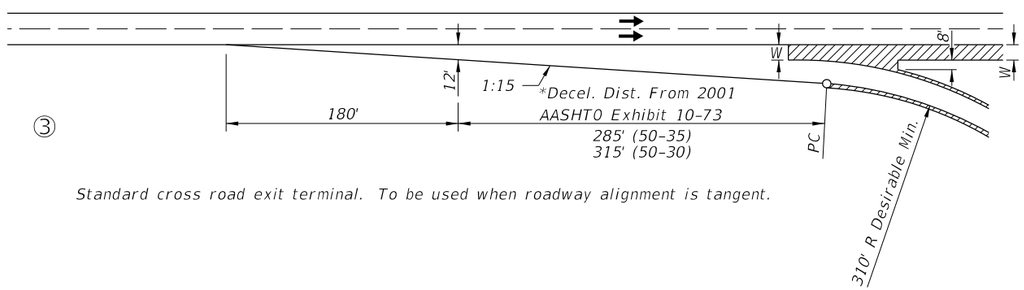

③

Standard cross road exit terminal. To be used when roadway alignment is tangent.

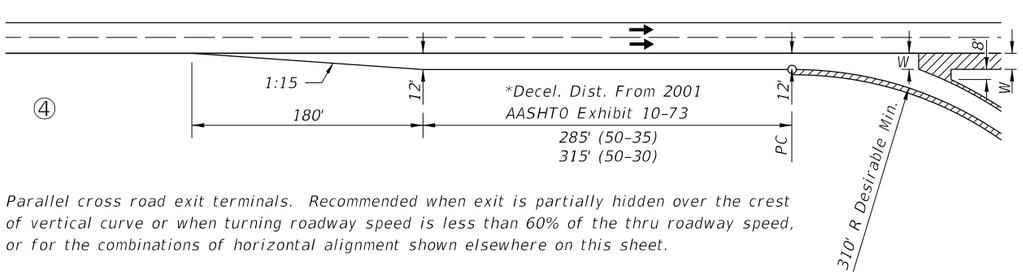

④

Parallel cross road exit terminals. Recommended when exit is partially hidden over the crest of vertical curve or when turning roadway speed is less than 60% of the thru roadway speed, or for the combinations of horizontal alignment shown elsewhere on this sheet.

UNSIGNALIZED EXITS

FOOTNOTES:

W Normal shoulder pavement width.

* Adjust for grades if greater than 2% (See Exhibit 10-71, AASHTO).

RAMP TERMINALS

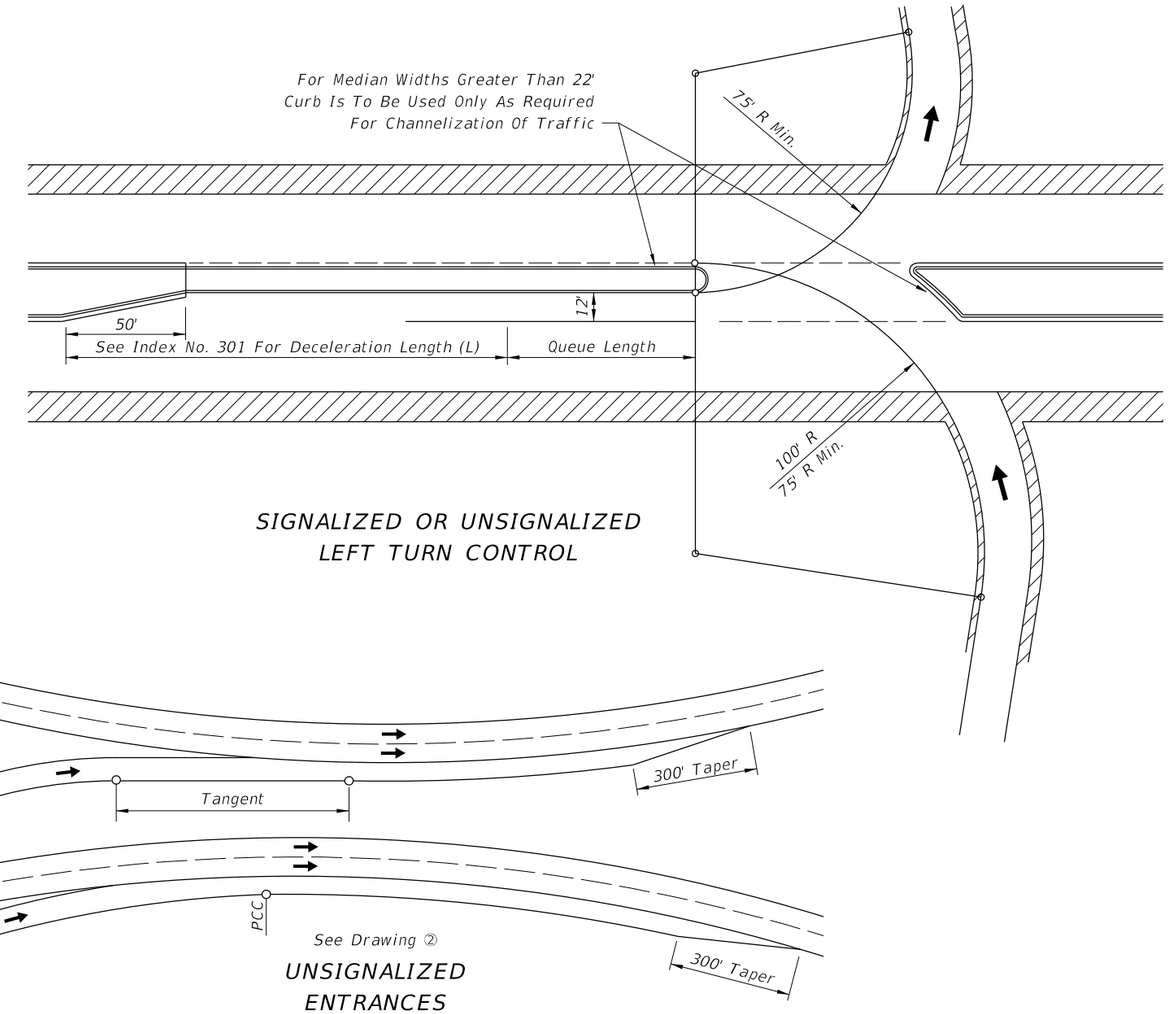

SIGNALIZED OR UNSIGNALIZED LEFT TURN CONTROL

UNSIGNALIZED ENTRANCES

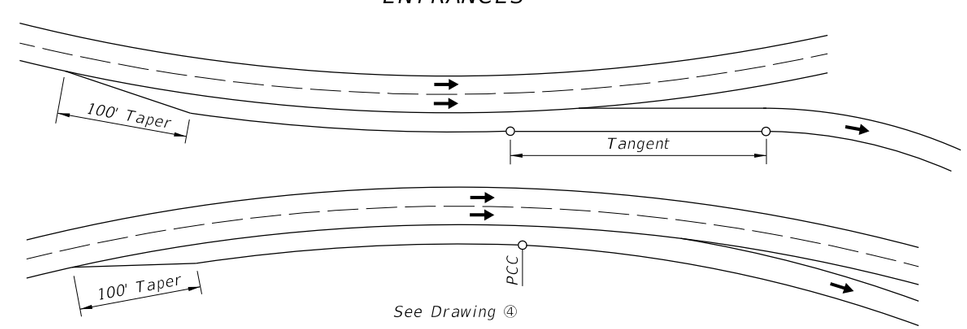

UNSIGNALIZED EXITS

NOTE: Ramp terminals on curves should be avoided when possible.

RAMP TERMINALS ON CURVES

CROSSROAD TERMINALS

LAST REVISION	REVISION	DESCRIPTION:			INDEX NO.	SHEET NO.
07/01/13			FDOT 2016 DESIGN STANDARDS	RAMP TERMINALS	525	5 of 5

6/9/2015 8:29:05 AM

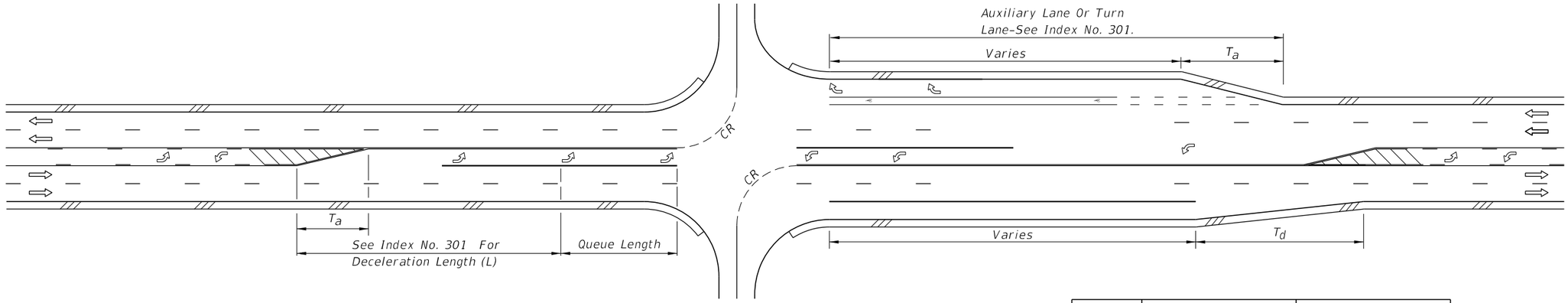

4-LANE WITH TWO-WAY LEFT-TURN LANES

DESIGN SPEED (mph)	T_a (FEET)	T_d
	ADD LANE	LANE DROP
<30	50' (± 1:4)	1:25
30-45		1:30
>45		1:40

Note: For locations with unrelocatable control points minimum taper rates for lane drop (T_d) will be 1:20.

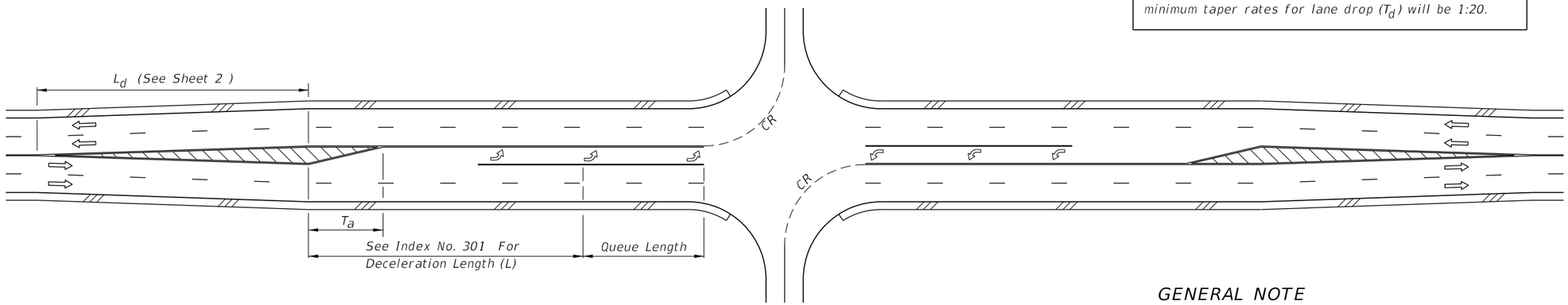

GENERAL NOTE

1. For pavement markings refer to Index No. 17346.

4-LANE UNDIVIDED FLARED - SYMMETRICAL

INTERSECTION TURNS AND STORAGE

6/10/2015 12:51:07 PM

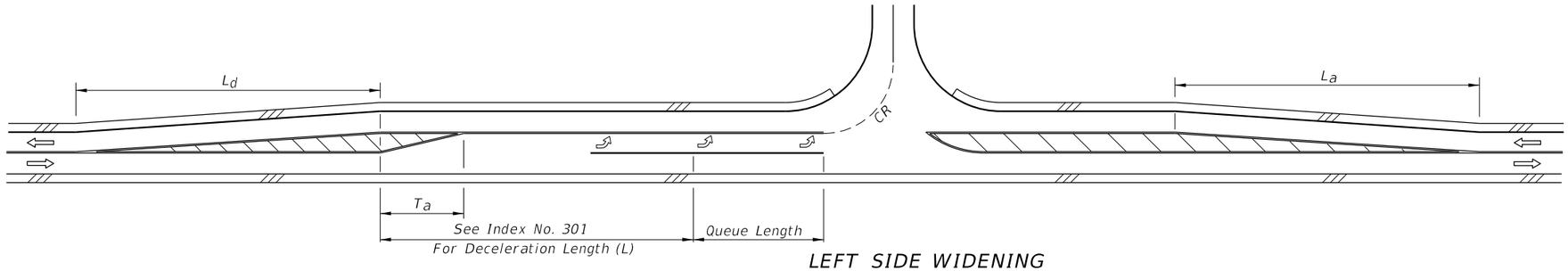

LEFT SIDE WIDENING

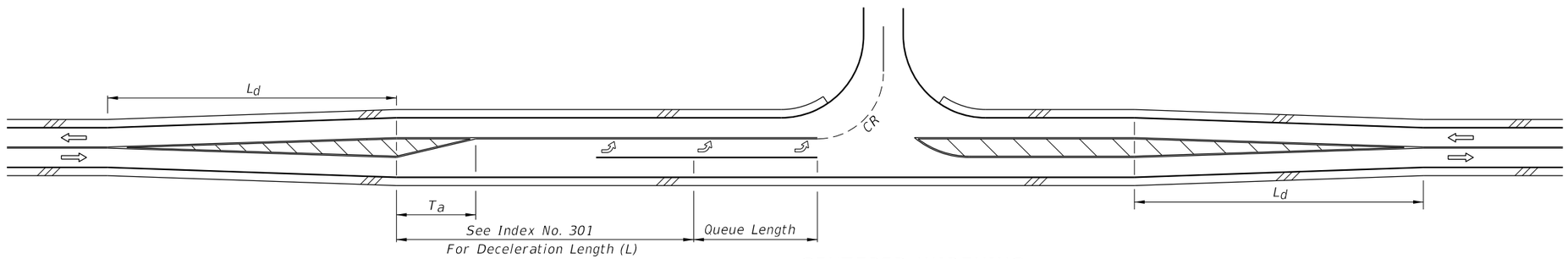

CENTERED WIDENING

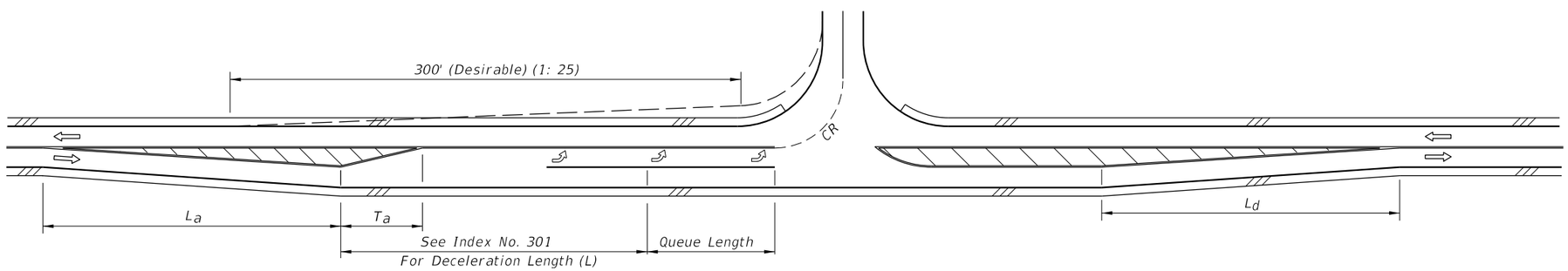

RIGHT SIDE WIDENING

DESIGN SPEED (mph)	L_a (Ft.)	
	STANDARD	MINIMUM UNDER CONSTRAINTS
30	180	120
40	320	150
50	500	180
60	720	240

(mph)	L_d (Ft.)	
30	180	120
40	240	150
50	360	180
60	480	240

FLARED & PAINTED LEFT TURNS FOR 2-LANE 2-WAY ROADWAYS

6/10/2015 12:51:07 PM

LAST REVISION	REVISION	DESCRIPTION:			INDEX NO.	SHEET NO.
07/01/15			FDOT 2016 DESIGN STANDARDS	ROADWAY TRANSITIONS	526	2 of 8

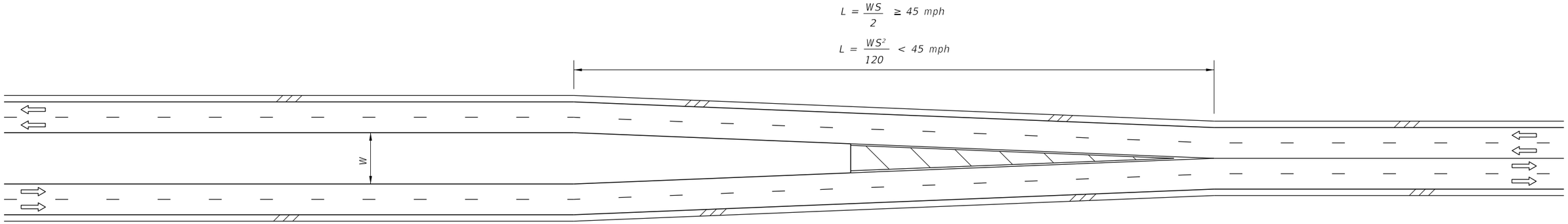

4-LANE DIVIDED TO 4-LANE UNDIVIDED

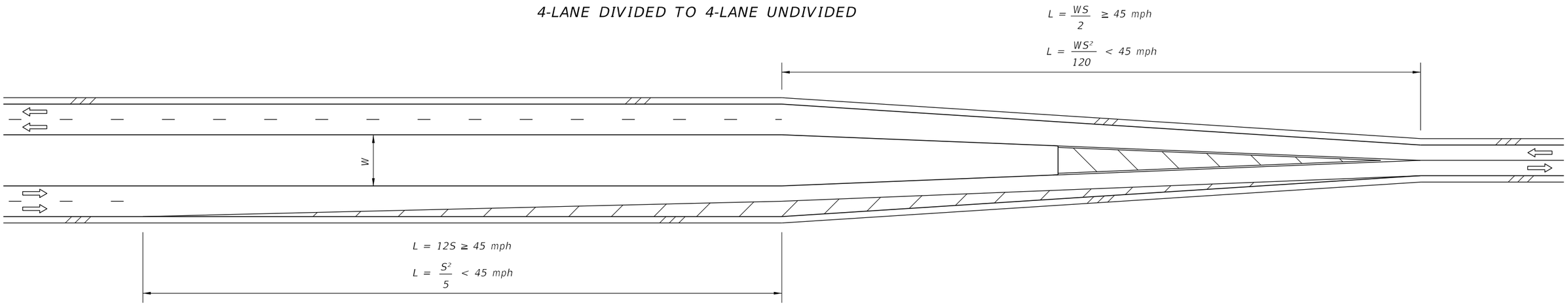

4-LANE DIVIDED TO 2-LANE UNDIVIDED

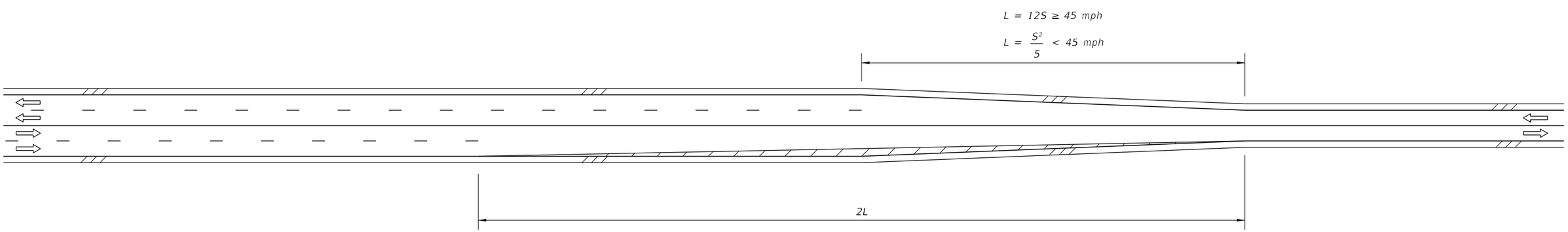

4-LANE UNDIVIDED TO 2-LANE UNDIVIDED

S=Design speed (mph)

LANE DIVERGENCE AND CONVERGENCE FOR CENTERED ROADWAYS

6/10/2015 12:51:07 PM

LAST REVISION	REVISION	DESCRIPTION:			INDEX NO.	SHEET NO.
07/01/00			FDOT 2016 DESIGN STANDARDS	ROADWAY TRANSITIONS	526	3 of 8

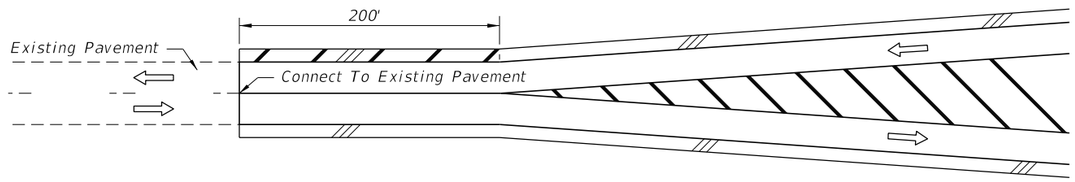

CONNECTING FLARE WITH PAVED SHOULDERS TO
EXISTING ROADWAY WITHOUT PAVED SHOULDERS

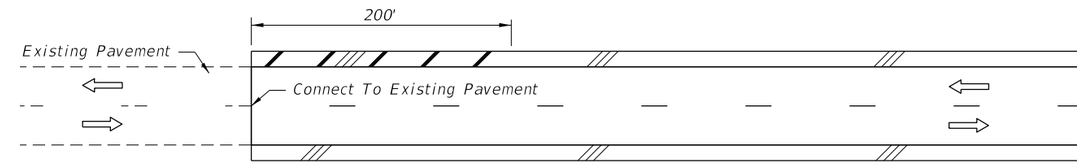

CONNECTING SIMILAR WIDTH PAVEMENTS

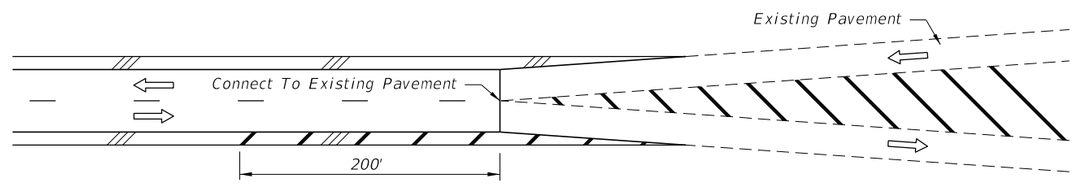

CONNECTING ROADWAY WITH PAVED SHOULDERS TO
EXISTING SYMMETRICAL FLARE WITHOUT PAVED SHOULDERS

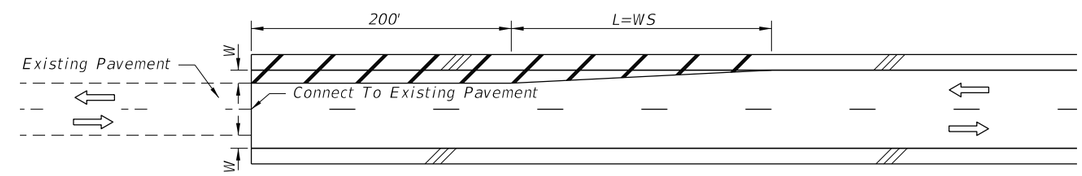

CONNECTING DIFFERENT WIDTH PAVEMENTS

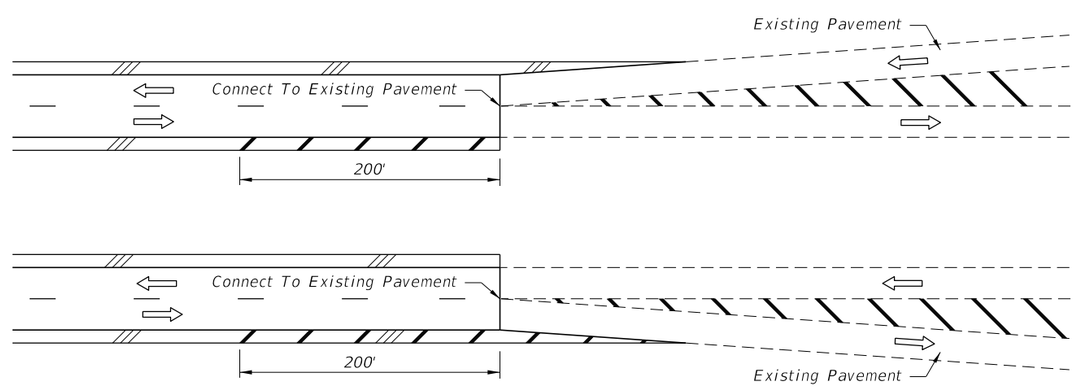

CONNECTING ROADWAY WITH PAVED SHOULDERS TO
EXISTING ASYMMETRICAL FLARE WITHOUT PAVED SHOULDERS

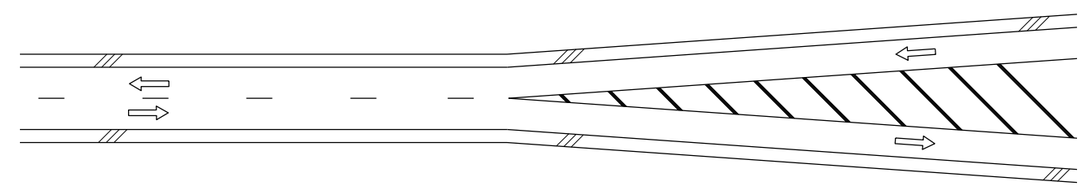

FLARED - PAVED SHOULDERS

S=Design speed (mph).

PAVED SHOULDER TREATMENT AT TRANSITIONS AND CONNECTIONS

6/10/2015 12:51:08 PM

LAST REVISION	REVISION	DESCRIPTION:			INDEX NO.	SHEET NO.
07/01/00			FDOT 2016 DESIGN STANDARDS	ROADWAY TRANSITIONS	526	4 of 8

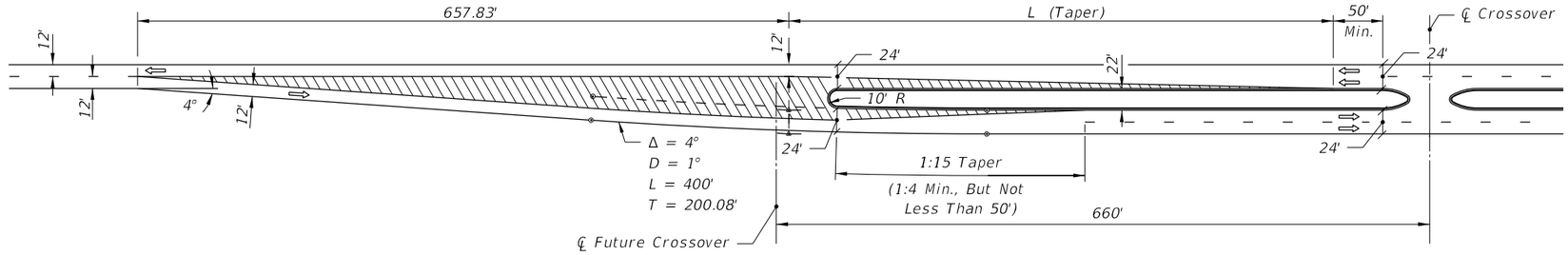

22' MEDIAN

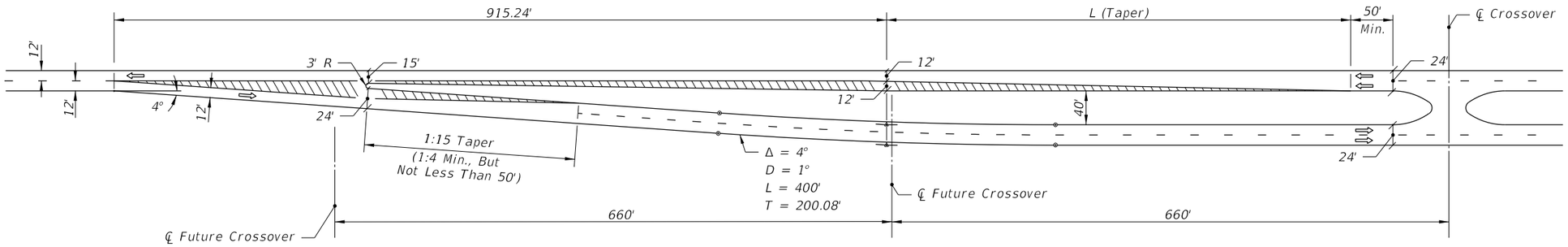

40' MEDIAN

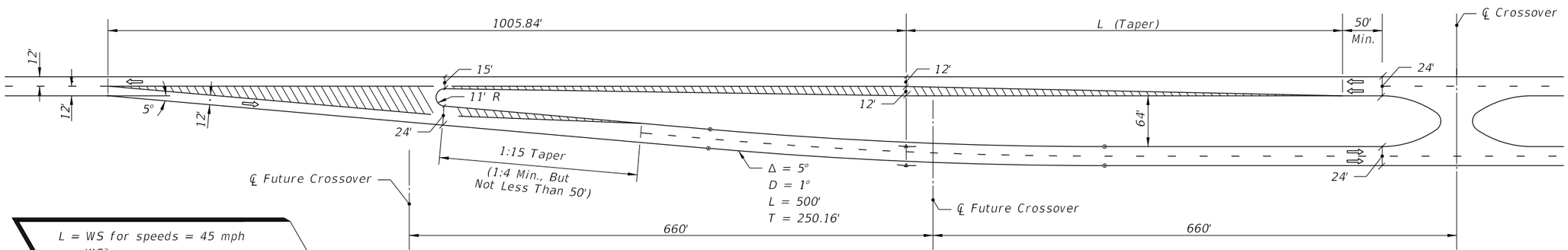

64' MEDIAN

$L = WS$ for speeds = 45 mph

$L = \frac{WS^2}{60}$ for speeds ≤ 40 mph

Where:

W=Width of lateral transition in feet.

S=Design speed.

NOTES FOR SHEETS 5 THRU 8

1. The transition details as represented on sheets 5 thru 8 are intended as guidelines only. The transition lengths, curve data, nose radii and offsets are valid only for tangent alignment, design speeds ≤ 45 mph, the median widths and lane widths shown.

2. Approach lane departures (Δ = 5°) are suitable for design speeds up to 60 mph. Interior curves (D = 1°) are suitable for normal crown for design speeds up to 50 mph. Merging curves (D ≥ 5°) will require superelevation.

3. The geometrics of these schemes are associated with the standard subsectional spacing for side roads, but in any case will require modification to accommodate side road location, multilane and/or divided side roads, oblique side roads, crossover widths, storage and speed change lane requirements, and, other related features.

LEFT ROADWAY CENTERED ON APPROACH ROADWAY

TWO LANE TO FOUR LANE TRANSITION

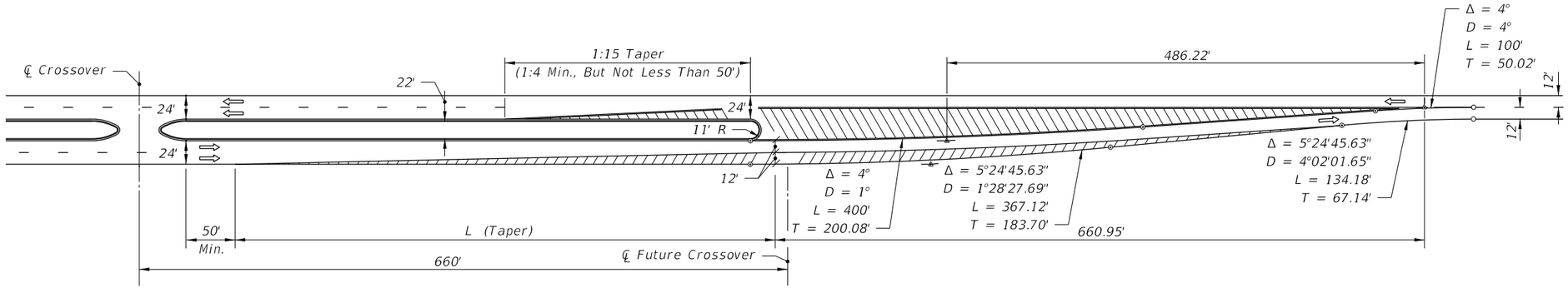

22' MEDIAN

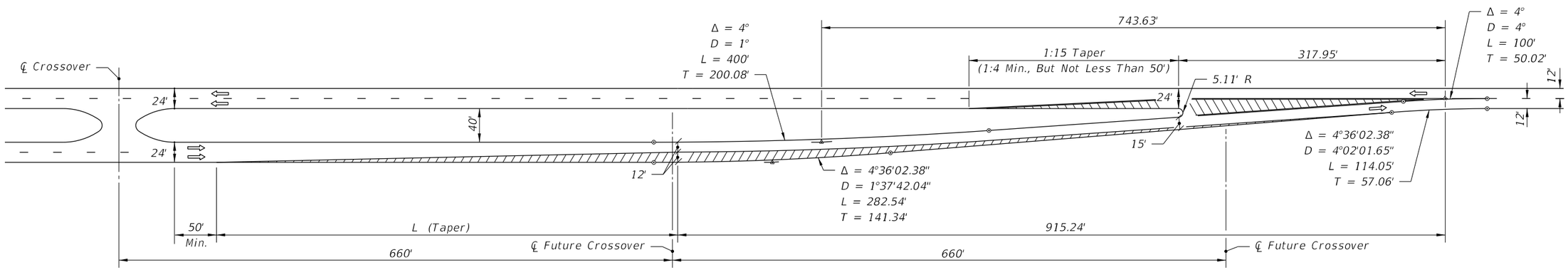

40' MEDIAN

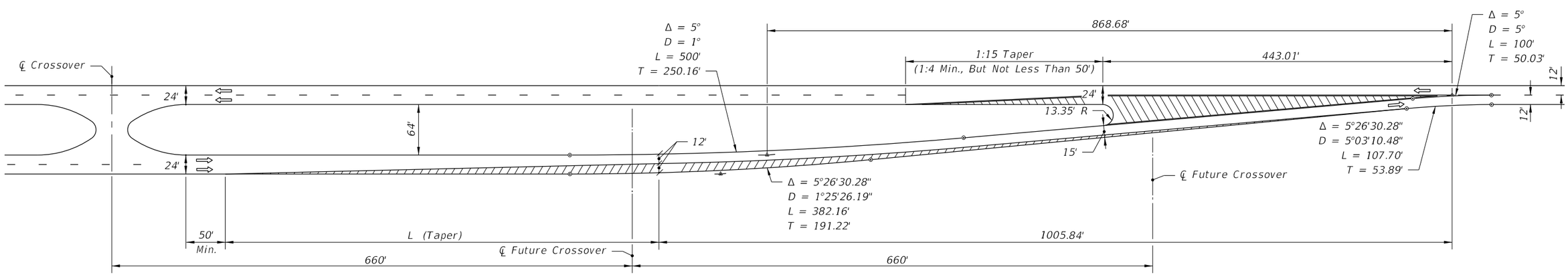

$L = WS$ for speeds = 45 mph

$L = \frac{WS^2}{60}$ for speeds ≤ 40 mph

Where:

W = Width of lateral transition in feet.

S = Design speed.

64' MEDIAN

LEFT ROADWAY CENTERED ON THRU ROADWAY

FOUR LANE TO TWO LANE TRANSITION

6/10/2015 12:51:09 PM

LAST REVISION	REVISION	DESCRIPTION:			INDEX NO.	SHEET NO.
07/01/00			FDOT 2016 DESIGN STANDARDS	ROADWAY TRANSITIONS	526	6 of 8

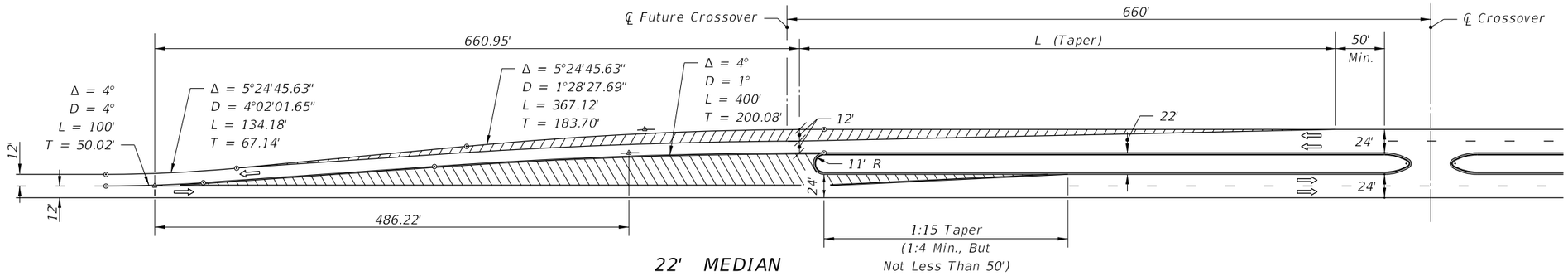

22' MEDIAN

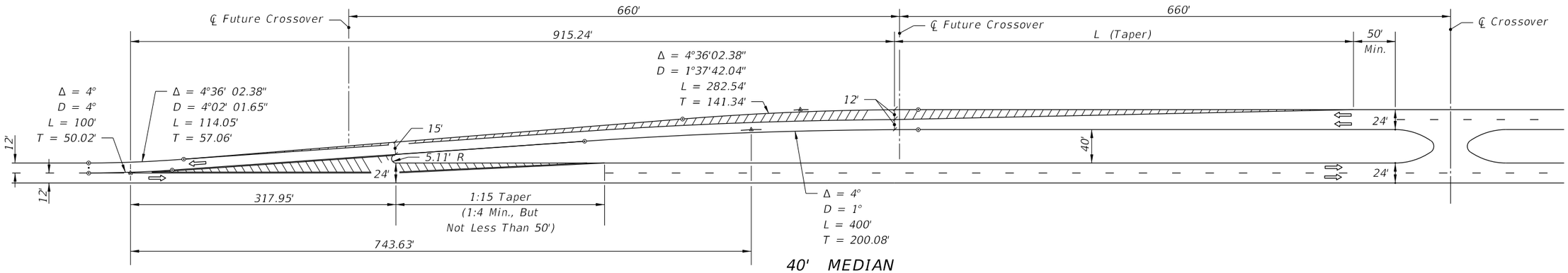

40' MEDIAN

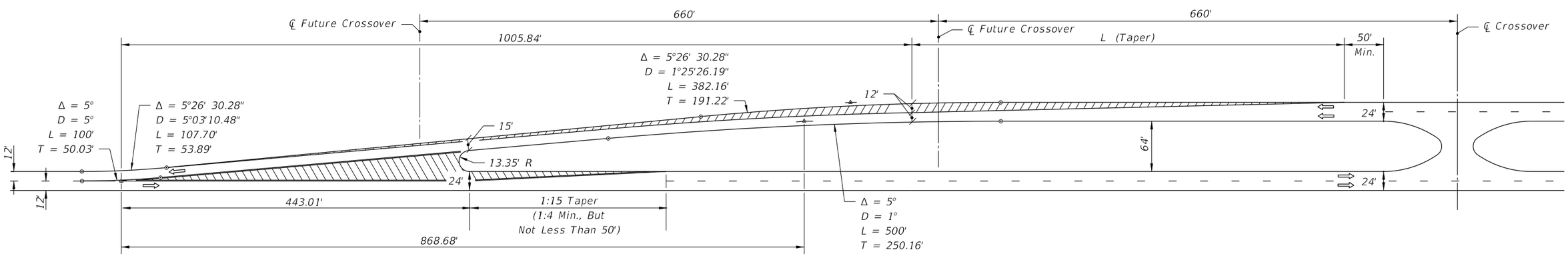

64' MEDIAN

$L = WS$ for speeds = 45 mph

$L = \frac{WS^2}{60}$ for speeds ≤ 40 mph

Where:
W = Width of lateral transition in feet.
S = Design speed.

RIGHT ROADWAY CENTERED ON APPROACH ROADWAY

TWO LANE TO FOUR LANE TRANSITION

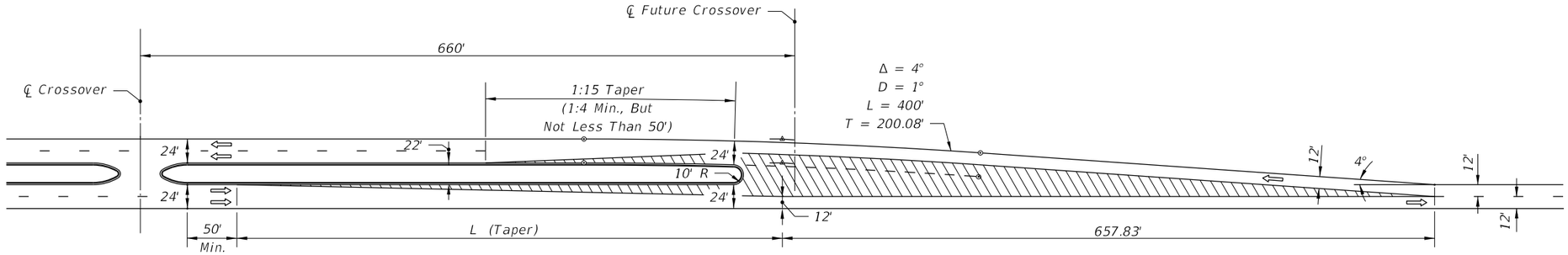

22' MEDIAN

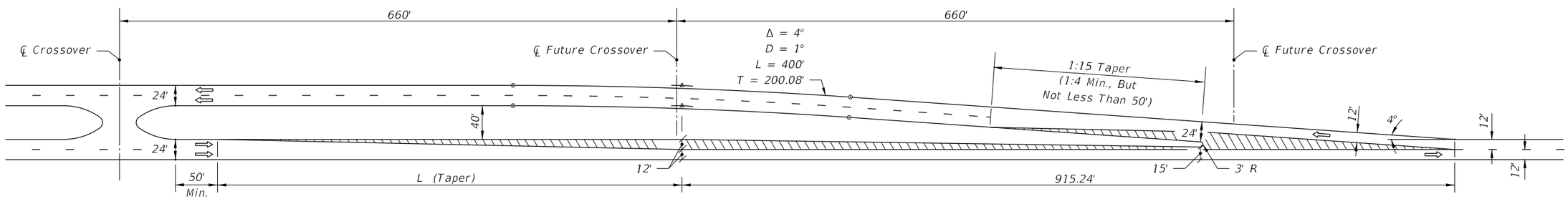

40' MEDIAN

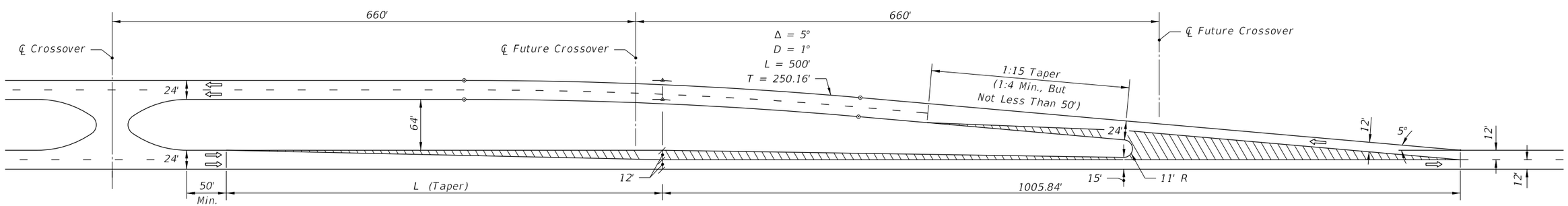

64' MEDIAN

$L = WS$ for speeds = 45 mph

$L = \frac{WS^2}{60}$ for speeds ≤ 40 mph

Where:

W = Width of lateral transition in feet.

S = Design speed.

RIGHT ROADWAY CENTERED ON THRU ROADWAY

FOUR LANE TO TWO LANE TRANSITION

6/10/2015 12:51:10 PM

LAST REVISION	REVISION	DESCRIPTION:			INDEX NO.	SHEET NO.
07/01/00			FDOT 2016 DESIGN STANDARDS	ROADWAY TRANSITIONS	526	8 of 8

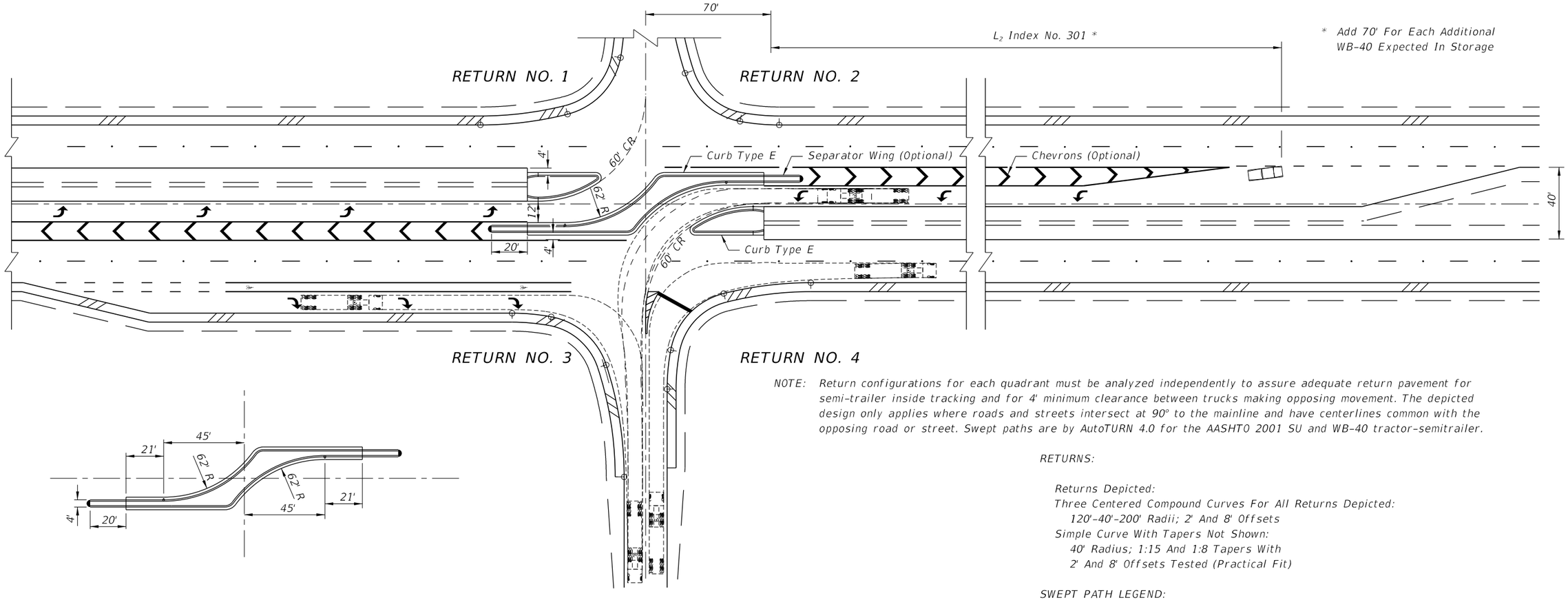

NOTE: Return configurations for each quadrant must be analyzed independently to assure adequate return pavement for semi-trailer inside tracking and for 4' minimum clearance between trucks making opposing movement. The depicted design only applies where roads and streets intersect at 90° to the mainline and have centerlines common with the opposing road or street. Swept paths are by AutoTURN 4.0 for the AASHTO 2001 SU and WB-40 tractor-semitrailer.

RETURNS:

Returns Depicted:
Three Centered Compound Curves For All Returns Depicted:
120'-40'-200' Radii; 2' And 8' Offsets
Simple Curve With Tapers Not Shown:
40' Radius; 1:15 And 1:8 Tapers With
2' And 8' Offsets Tested (Practical Fit)

SWEPT PATH LEGEND:

WB 40 ----------
SU - - - - - -

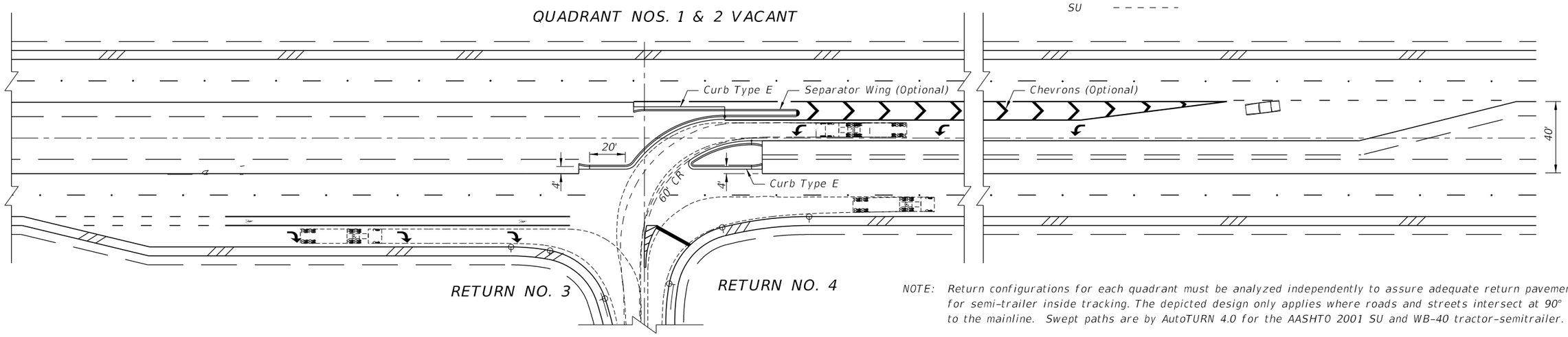

NOTE: Return configurations for each quadrant must be analyzed independently to assure adequate return pavement for semi-trailer inside tracking. The depicted design only applies where roads and streets intersect at 90° to the mainline. Swept paths are by AutoTURN 4.0 for the AASHTO 2001 SU and WB-40 tractor-semitrailer.

40' MEDIAN • 4-LANE DIVIDED • PARALLEL TURN BAY • 2001 AASHTO SU & WB-40

LAST REVISION	REVISION	DESCRIPTION:			INDEX NO.	SHEET NO.
07/01/04			FDOT 2016 DESIGN STANDARDS	DIRECTIONAL MEDIAN OPENINGS	527	1 of 3

6/9/2015 8:30:09 AM

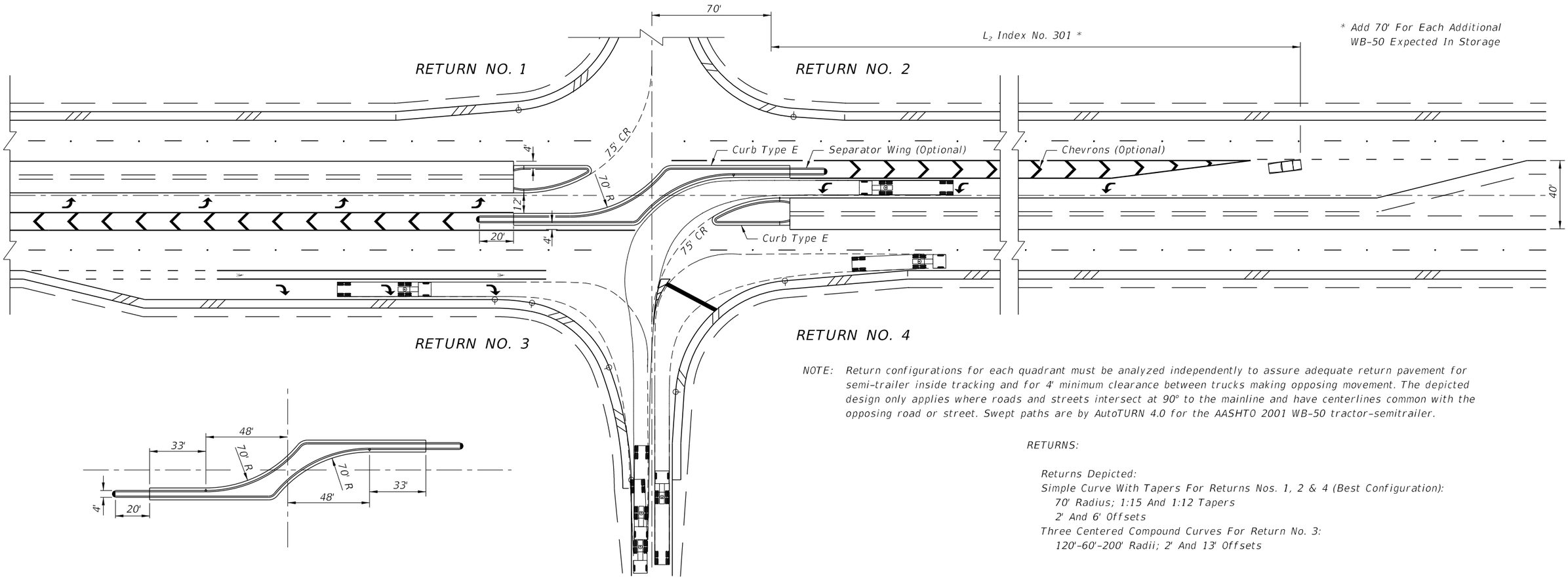

NOTE: Return configurations for each quadrant must be analyzed independently to assure adequate return pavement for semi-trailer inside tracking and for 4' minimum clearance between trucks making opposing movement. The depicted design only applies where roads and streets intersect at 90° to the mainline and have centerlines common with the opposing road or street. Swept paths are by AutoTURN 4.0 for the AASHTO 2001 WB-50 tractor-semitrailer.

RETURNS:

Returns Depicted:
Simple Curve With Tapers For Returns Nos. 1, 2 & 4 (Best Configuration):
70' Radius; 1:15 And 1:12 Tapers
2' And 6' Offsets
Three Centered Compound Curves For Return No. 3:
120'-60'-200' Radii; 2' And 13' Offsets

QUADRANT NOS. 1 & 2 VACANT

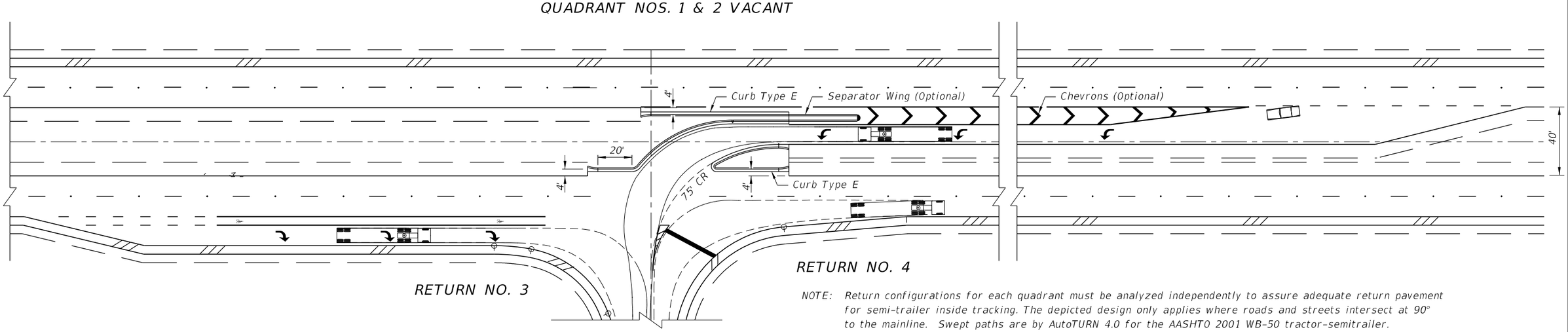

NOTE: Return configurations for each quadrant must be analyzed independently to assure adequate return pavement for semi-trailer inside tracking. The depicted design only applies where roads and streets intersect at 90° to the mainline. Swept paths are by AutoTURN 4.0 for the AASHTO 2001 WB-50 tractor-semitrailer.

40' MEDIAN 4-LANE DIVIDED • PARALLEL TURN BAY • 2001 AASHTO WB-50

LAST REVISION	REVISION	DESCRIPTION:			INDEX NO.	SHEET NO.
07/01/04			FDOT 2016 DESIGN STANDARDS	DIRECTIONAL MEDIAN OPENINGS	527	2 of 3

6/9/2015 8:30:10 AM

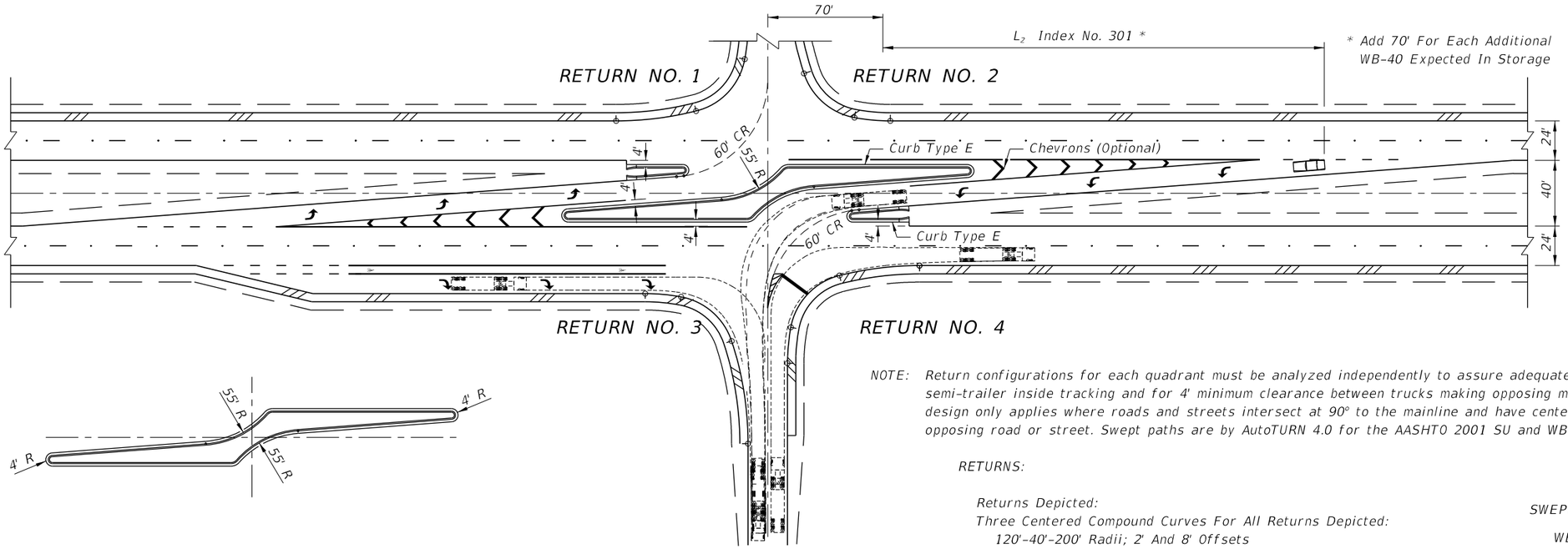

NOTE: Return configurations for each quadrant must be analyzed independently to assure adequate return pavement for semi-trailer inside tracking and for 4' minimum clearance between trucks making opposing movement. The depicted design only applies where roads and streets intersect at 90° to the mainline and have centerlines common with the opposing road or street. Swept paths are by AutoTURN 4.0 for the AASHTO 2001 SU and WB-40 tractor-semitrailer.

RETURNS:

Returns Depicted:
Three Centered Compound Curves For All Returns Depicted:
120'-40'-200' Radii; 2' And 8' Offsets
Simple Curve With Tapers Not Shown:
40' Radius; 1:15 And 1:8 Tapers With
2' And 8' Offsets Tested (Practical Fit)

SWEPT PATH LEGEND:

WB 40 ----------
SU – – – –

QUADRANT NOS. 1 & 2 VACANT

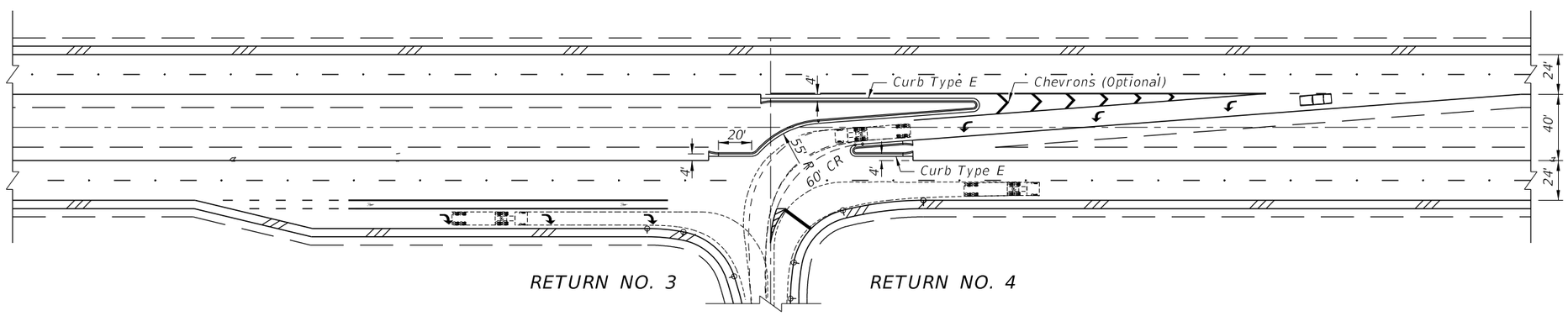

NOTE: Return configurations for each quadrant must be analyzed independently to assure adequate return pavement for semi-trailer inside tracking. The depicted design only applies where roads and streets intersect at 90° to the mainline. Swept paths are by AutoTURN 4.0 for the AASHTO 2001 SU and WB-40 tractor-semitrailer.

40' MEDIAN • 4-LANE DIVIDED • TAPERED TURN BAY • 2001 AASHTO SU & WB-40

6/9/2015 8:30:11 AM

LAST REVISION	REVISION	DESCRIPTION:			INDEX NO.	SHEET NO.
07/01/04			FDOT 2016 DESIGN STANDARDS	DIRECTIONAL MEDIAN OPENINGS	527	3 of 3

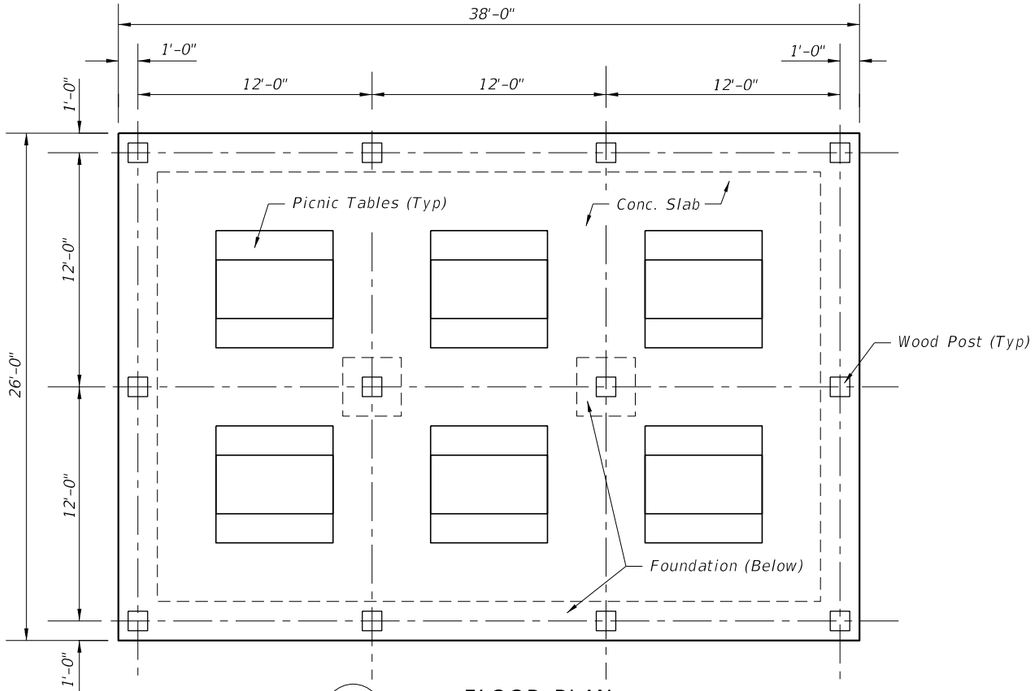

A/1 FLOOR PLAN

LARGE PAVILION

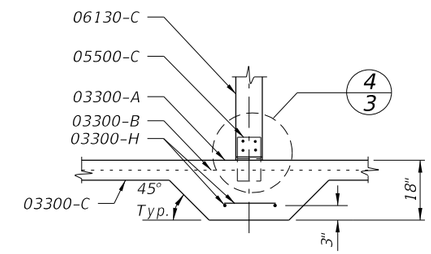

1/1 SECTION

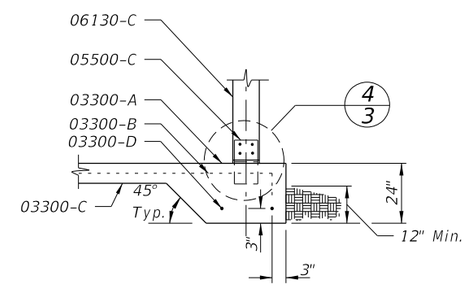

2/1 SECTION

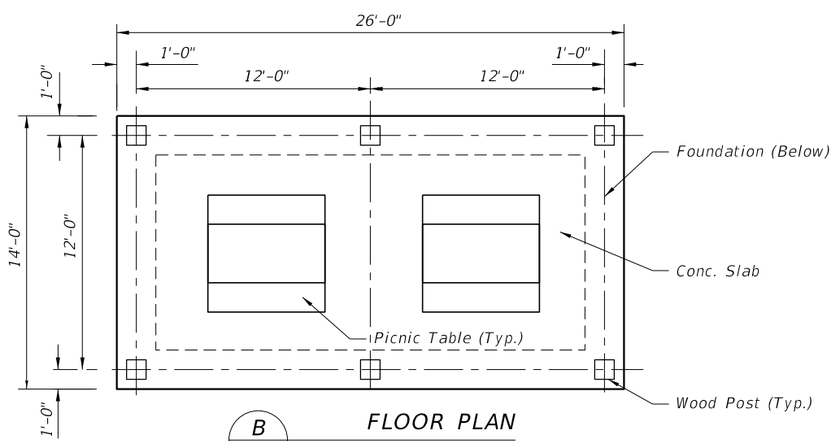

B/1 FLOOR PLAN

SMALL PAVILION

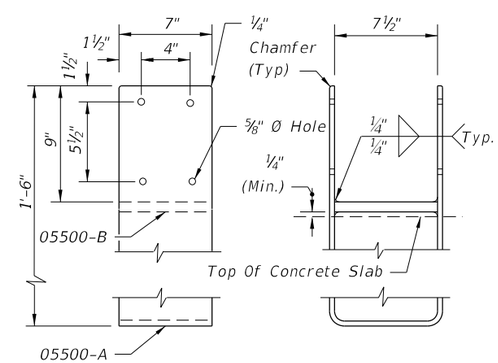

3/1 POST BASE DETAIL

NOTES

Keynotes on sheet 2.

FLOOR

6" reinf. concrete slab
w/ WWR 6x6-W1.4xW1.4

Drop footing at slab
perimeter & interior posts see keynotes.

Harden & broom finish slab surface.

STRUCTURE

Posts: 8 x 8 PT

Beams: 4 x 6 PT

Framing: 4x PT as described.

Misc members: 1x and 2x as described.

ROOF

3"x6" T&G wood decking.

30# asphalt impregnated fiberglass felt underlayment.

Standing seam metal roof (24 GA Steel or 0.032 Alum.) w/ Kynar 500 finish.

Structure, decking and roofing shall be designed to withstand 130 mph wind load.

BUILDING CODE

Picnic pavilions shall be constructed according to the requirements of the appropriate sections of the "Florida Building Code", current, adopted edition.

PICNIC TABLES

Picnic tables and benches shall be 6'x6' w/heavy galvanized pipe frames and recycled plastic wood seats and table tops. All tables shall be of walk thru design suitable for exterior locations. Pavilions shall meet the requirements of the Americans With Disabilities Act (ADA) accessibility guidelines. A minimum of 20% of picnic tables to meet ADA.

6/9/2015 8:30:37 AM

LAST REVISION	REVISION	DESCRIPTION:			INDEX NO.	SHEET NO.
01/01/12			FDOT 2016 DESIGN STANDARDS	REST AREA PAVILION	530	1 of 3

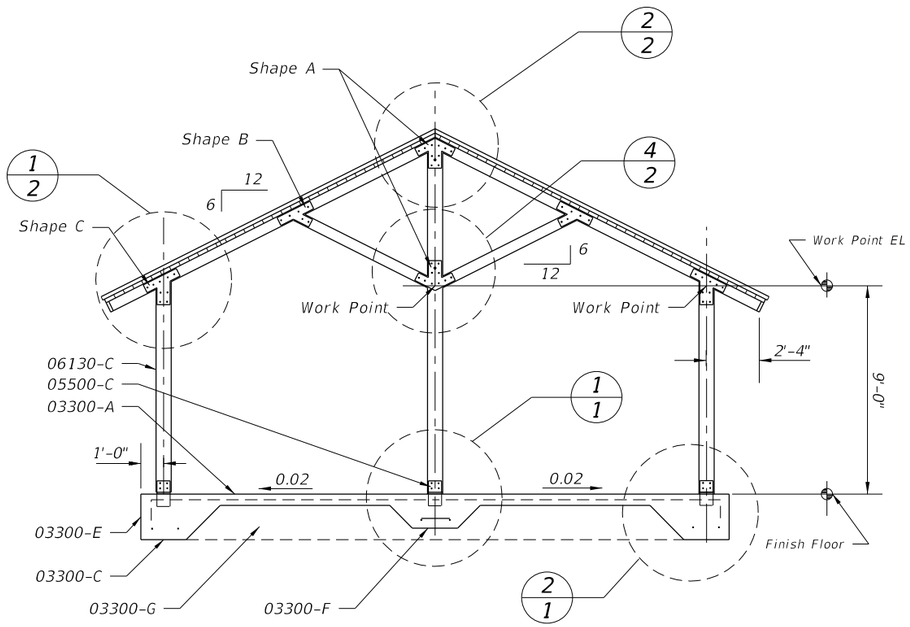

A/2 LARGE PAVILION SECTION

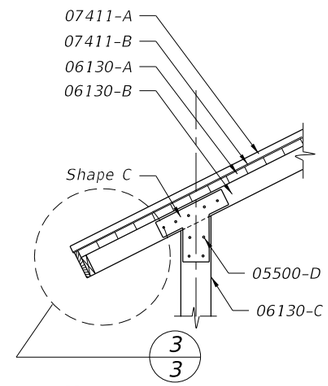

1/2 SECTION

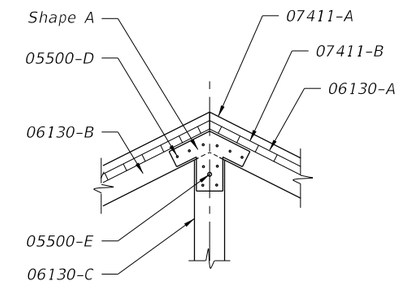

2/2 SECTION

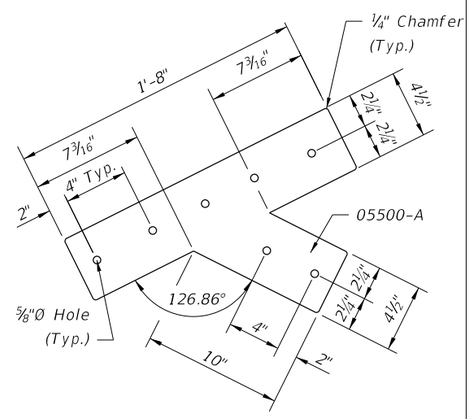

3/2 SHAPE B DETAIL

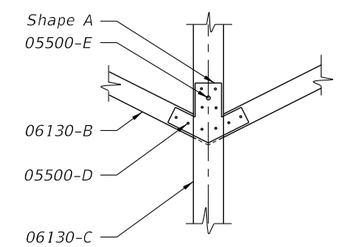

4/2 SECTION

KEYNOTES

03300-A	Class II 6" conc slab
03300-B	6"x6"-W1.4xW1.4 @ ℄ of slab
03300-C	6 mil vapor barrier
03300-D	#5 rebar cont. (2 required)
03300-E	24" cont. drop footing
03300-F	18"x18" drop footing
03300-G	6" min comp sand fill
03300-H	#5x18" rebar (4 required)
05500-A	⅜" galv. steel plate
05500-B	½" galv. steel plate
05500-C	post base.
05500-D	½" Ø bolt, washer & nut (typ.)
05500-E	¾" Ø eyebolt, washer & nut for cross brace bars
05500-F	½" Ø steel rod w/turnbuckle
06130-A	3"x6" T&G wood decking
06130-B	4"x6" PT wood frame
06130-C	8"x8" PT wood post
06130-D	2"x6" PT wood sub fascia
06130-E	1"x10" PT wood fascia
06130-F	¾" ± wood shim
07411-A	Standing seam metal roof
07411-B	Felt underlayment

Alternate Material Note: These structures are shown with timber frames and decking. Alternate materials (i.e., aluminum, steel, etc.) may be used when submittals are signed and sealed by a specialty engineer as per Section 5 of the Standard Specifications and when approved by the Engineer.

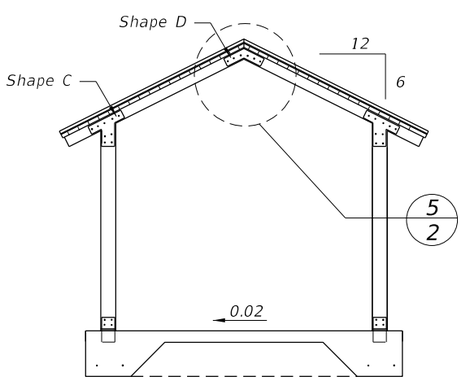

NOTE: DETAILS TO MATCH THOSE OF LARGE PICNIC PAVILION

B/2 SMALL PAVILION SECTION

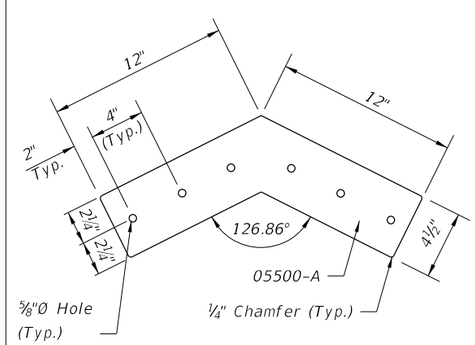

5/2 SHAPE D DETAIL

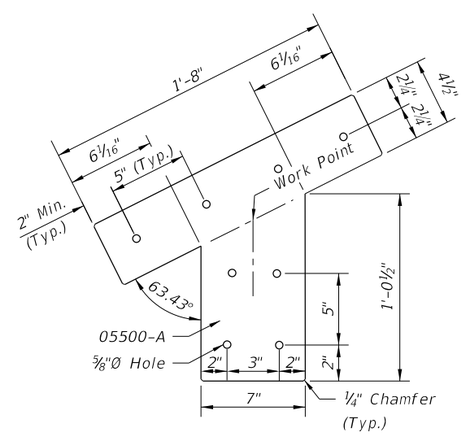

6/2 SHAPE C DETAIL

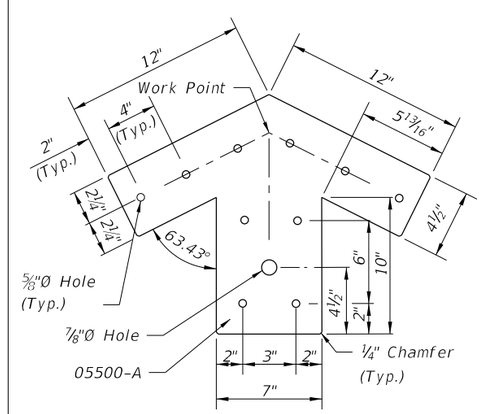

7/2 SHAPE A DETAIL

8:30:37 AM

6/9/2015

LAST REVISION	REVISION	DESCRIPTION:			INDEX NO.	SHEET NO.
01/01/12			FDOT 2016 DESIGN STANDARDS	REST AREA PAVILION	530	2 of 3

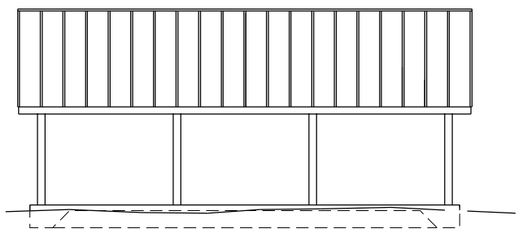

A/3 SIDE ELEVATION

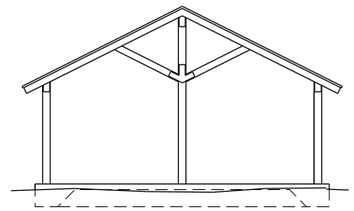

B/3 END ELEVATION

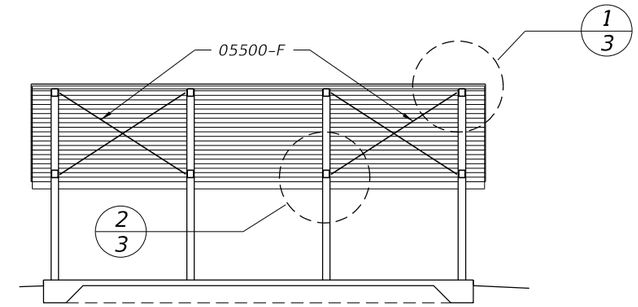

C/3 SECTION

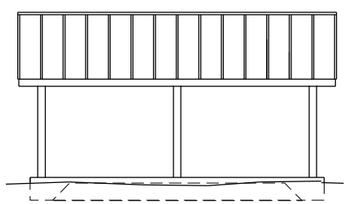

D/3 SIDE ELEVATION

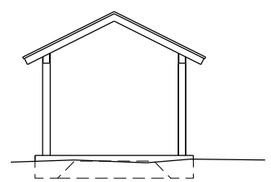

E/3 END ELEVATION

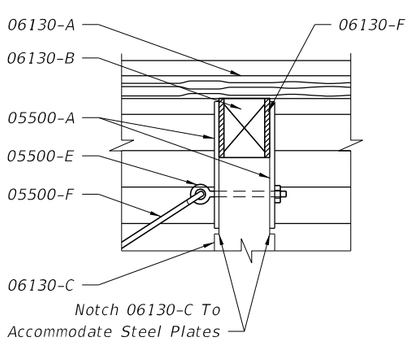

1/3 DETAIL

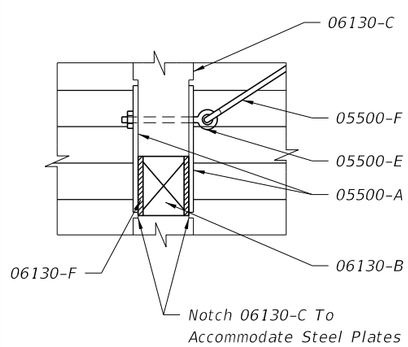

2/3 DETAIL

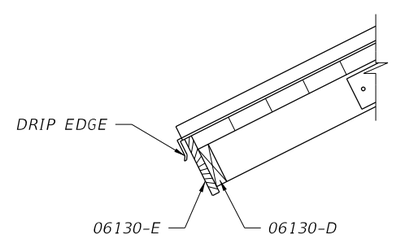

3/3 DETAIL

Similar At Roof Rake

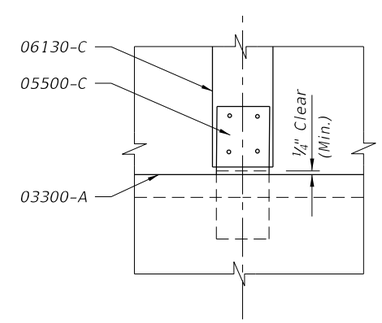

4/3 DETAIL

SPECIFICATIONS

Keynotes On Sheet 2.

CONCRETE

Concrete: FDOT Class II.

Reinforcing Bars: ASTM A615, Grade 60.

Welded Wire Fabric: ASTM A-185.

Vapor Barrier: Black 6-Mil Polyethylene.

STEEL

Galvanized Steel Plate: Steel Plate ASTM A36 or A709.

Provide galvanizing in accordance with the requirements of ASTM A123.

Galvanized Fasteners: High-Strength bolts and nuts, ASTM A325 in accordance with Specification Section 962.

Galvanize shapes after fabrication, make field repairs to galvanizing in accordance with Specification Section 562.

WOOD

Comply with American Institute For Timber Construction AITC 108, "Standard For Heavy Timber Construction."

For solid wood decking, comply with AITC 112, "Standard For Tongue And Groove Heavy Timber Standard."

Species: Douglas Fir, Hem-fir, or Southern Pine, at fabricator's option.

Preservative Treatment: Pressure treat fabricated members with waterborne solution for above ground use, complying with AWPA U1, category UC3B above ground exposed.

Wood Decking: Predrill decking at 30" centers for lateral spiking to adjacent units. Spikes to be 8" spikes galvanized common.

6/9/2015 8:30:38 AM

LAST REVISION	REVISION	DESCRIPTION:			INDEX NO.	SHEET NO.
01/01/12			FDOT 2016 DESIGN STANDARDS	REST AREA PAVILION	530	3 of 3

GENERAL NOTES

1. The location and construction of mailboxes shall conform to the rules and regulations of the United States Postal Service as modified by this design standard.

2. Mailboxes will not be permitted on Interstate highways, freeways, or other highways where prohibited by law or regulation.

3. The contractor shall give the Postmaster of the delivery route(s) written notice of project construction 7 days prior to the beginning of work, with Saturdays, Sundays and Holidays excluded.

   The Contractor shall furnish and install one mailbox in accordance with this design standard at each mail patron delivery location and maintain the box throughout the contract period. The Contractor shall apply box numbers to each patron box in accordance with identification specifications of the Domestics Mail Manual of the U. S. Postal Service; where local street names and house numbers are authorized by the Postmaster as a postal address, the Contractor shall inscribe the house number on the box; if the box is located on a different street from the patrons residence, the Contractor shall inscribe the street name and house number on the box.

   The Contractor shall coordinate removal of the patrons existing mailboxes. Immediately after installing the new mailboxes the Contractor must notify each "Mail Delivery Patron" by Certified Mail that removal of the existing mailboxes must be accomplished in 21 days after receipt of notices. Patrons shall have the option of removing their existing mailboxes or leaving the mailboxes in place for removal by the Contractor; removal by the Contractor shall be included in the contract unit price for Mailbox, Each. The Contractor shall dispose of mailboxes and supports in areas provided by him.

   Reuse of existing mailboxes by the Contractor will not be a requirement under any construction project; however where an existing mailbox meets the design requirements of this standard and is structurally and functionally sound, the Contractor at his option may elect to reuse the existing mailbox in lieu of constructing a new mailbox. Any use of existing mailboxes must be approved by the Engineer.

4. Mailboxes shall be light sheet metal or plastic construction, in traditional style only, and only in Size 1 as prescribed by the Domestic Mail Manual of the U. S. Postal Service (DMM).

   Mailbox production standards, lists of approved manufacturers and suppliers of mailboxes, design approval and guidance may be obtained by writing to the Rural Delivery Division, Delivery Service Department, Operations Group, USPS Headquarters, Washington, DC 20260.

5. Mailboxes shall be located on the right-hand side of the roadway in the direction of the delivery route, except on one-way roads and streets where they may be placed on the left-hand side.

   Mailboxes on rural highways shall be set with the roadside face of the box offset from the edge of the traveled way a minimum distance of the greater of the following:

   a. Shoulder width plus 8" to 12".

   b. 10' for ADT over 10,000 vpd.
      8' for ADT 100 to 10,000 vpd.
      6' for ADT under 100 vpd
      2'-6" for low speed and ADT under 100 vpd.

   When a mailbox is installed within the limits of guardrail it should be placed behind the guardrail whenever practical.

   Mailboxes on curbed highways, roads and streets shall be set with the face of the box between 6" and 12" back of the face of curb. If the sidewalk abuts the curb or if an unusual condition exists which makes it difficult or impractical to install or serve boxes at the curb, the Contractor with concurrence of the local postal authority may be permitted to install all mailboxes at the back edge of the sidewalk, where they can be served by the carrier from the sidewalk.

6. Mailboxes shall be set with the bottom of the box between 42" and 48" above the mail stop surface, unless the U.S. Postal Service establishes other height restrictions.

7. No more than two mailboxes may be mounted on a support structure unless the support structure and mailbox arrangements have been shown to be safe by crash testing in accordance with NCHRP Report 350.

   Neighborhood Delivery and Collection Box Units (NDCBU) are a specialized multiple mailbox installation that must be located outside the highway and street clear zones. The location of NDCBUs is the sole responsibility of the Postmaster for the delivery route under consideration.

8. Lightweight newspaper receptacles may be mounted below the mailbox on the side of the support post in conformance with the USPS Domestic Mail Manual. The mail patron shall be responsible for newspaper receptacle installation and maintenance.

9. Wood and steel support posts for both single and double mailbox mountings shall be embedded no more than 24" into the ground.

   Concrete, block, brick, stone or other rigid foundation structure or encasement, either above or below the shoulder groundline, will not be permitted for mailboxes on rural highways. On urban roads and streets where mailbox support posts are set within rigid pavement back of curb, the support posts shall be separated from the pavement by a minimum of 1" of expansion material.

   Support posts shall not be fitted nor installed with surface mount base plates.

10. At driveway entrances mailboxes shall be placed on the far side of the driveway in the direction of the delivery route.

    At intersecting roads mailboxes shall be located 100' or more from the centerline of the intersecting road on the far side in the direction of the delivery route, with the distance increased to 200' when the route volume exceeds 400 vehicles per day.

11. Wood support posts shall be in conformance with the material and dimensional requirements of Section 952 and the treatment requirements of Section 955 of the Standard Specifications.

    Steel support posts shall have an external finish equal to or better than two coats of weather resistant, air dried or baked, paint or enamel. Surface(s) shall be cleaned of all loose scale prior to finishing. The Postal Service prefers that posts be painted white, but other colors may be used when approved by the Engineer. When galvanized posts are used painting is not required.

    Mounting brackets, plates, platforms, shelfs and accessory hardware surface finishes are to be suited to support post finish.

12. Mailboxes shall be paid for under the contract unit price for Mailboxes, Each. Payment shall be full compensation for boxes, posts and accessory items essential for installation in accordance with this standard; erection; adjustments to suit construction needs; and, for identification letters and numbers.

    Payment shall be limited to one mailbox per patron address whether the mailbox is new, reused, salvaged, reset or relocated. Payment shall be per mailbox regardless of the number of mailboxes per support or grouping arrangement.

    The above compensation shall include any work and cost incurred by the contractor for removal and disposal of existing mailboxes.

    There shall be no payment participation for NDCBU furnishing, assembly, installation, resetting or relocation.

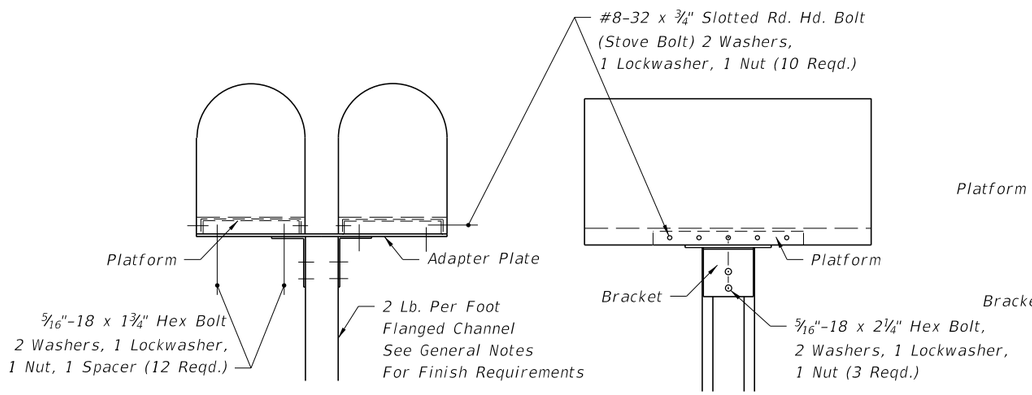

FRONT VIEW

SIDE VIEW

FLANGED CHANNEL

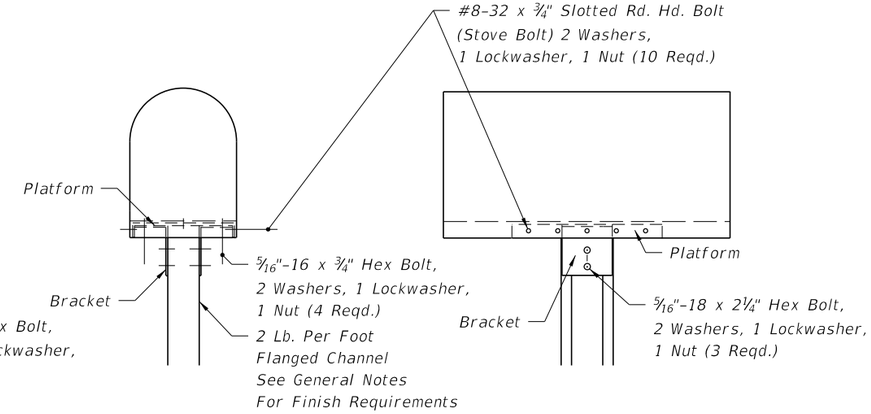

FRONT VIEW

SIDE VIEW

FLANGED CHANNEL

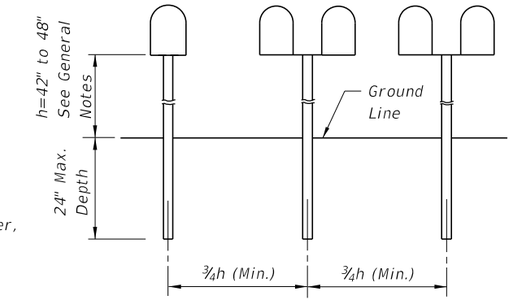

ELEVATION

SINGLE OR COMBINED WOOD, FLANGED CHANNEL
OR PIPE POST TYPES SHOWN ON THIS INDEX

POST SPACING

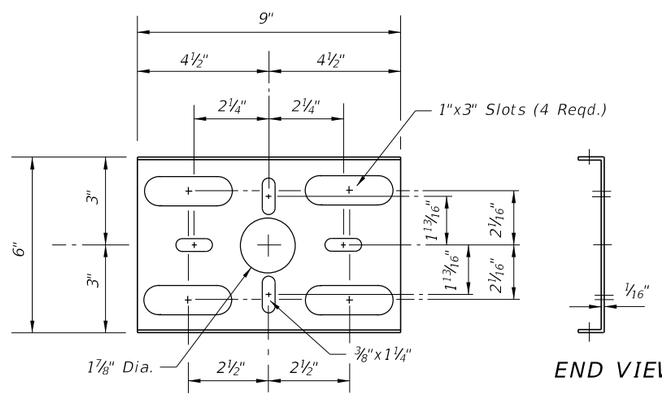

BOTTOM VIEW

END VIEW

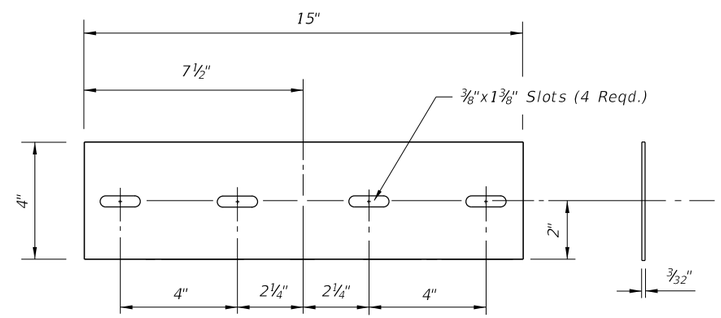

TOP VIEW

END VIEW

STEEL ADAPTER PLATE

Note: See General Notes for finish requirements.

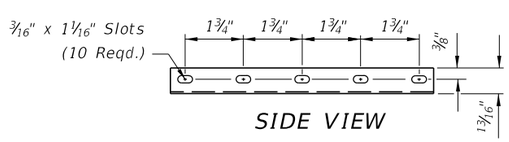

SIDE VIEW

STEEL PLATFORM

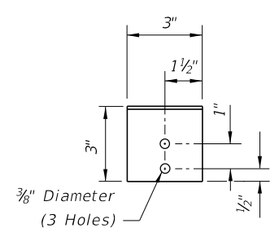

FRONT VIEW

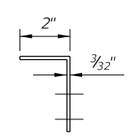

END VIEW

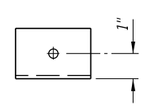

TOP VIEW

STEEL BRACKET

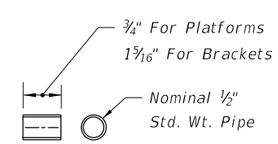

STEEL SPACER

STEEL FLANGED CHANNEL SUPPORT POSTS

6/9/2015 8:31:06 AM

LAST REVISION	REVISION	DESCRIPTION:			INDEX NO.	SHEET NO.
07/01/00			FDOT 2016 DESIGN STANDARDS	MAILBOXES	532	2 of 3

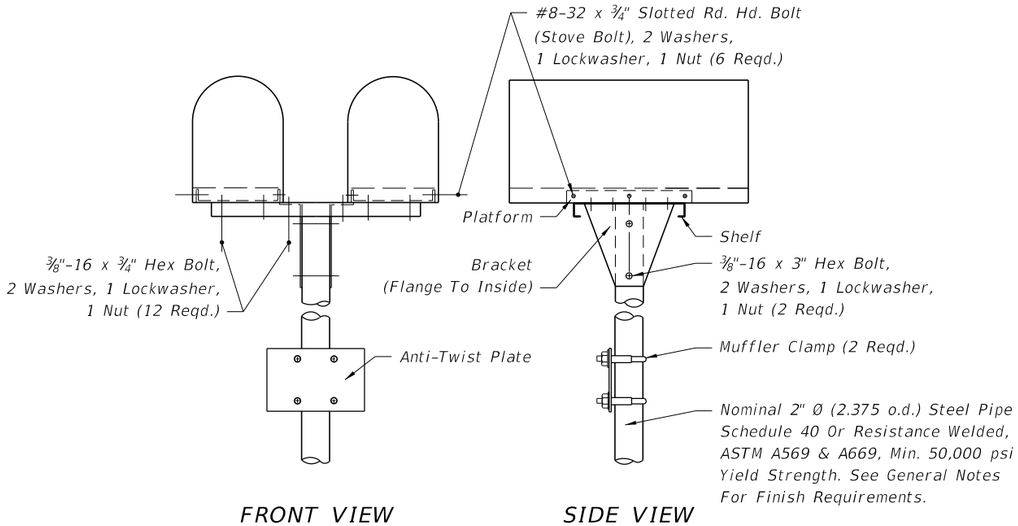

FRONT VIEW SIDE VIEW

2" Ø PIPE POST

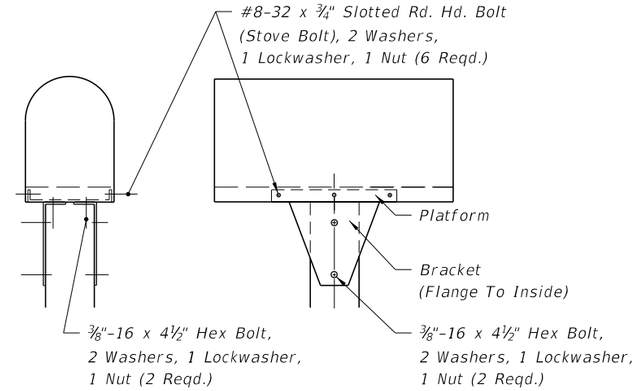

FRONT VIEW SIDE VIEW

4" X 4" WOOD POST

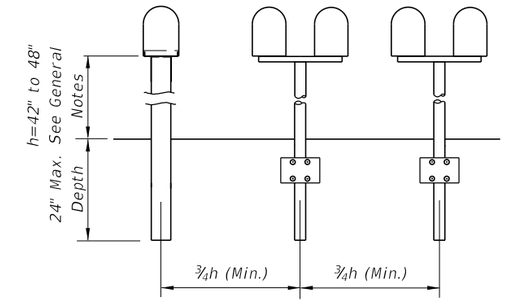

SINGLE OR COMBINED WOOD, FLANGED CHANNEL OR PIPE POST TYPES SHOWN ON THIS INDEX

ELEVATION

POST SPACING

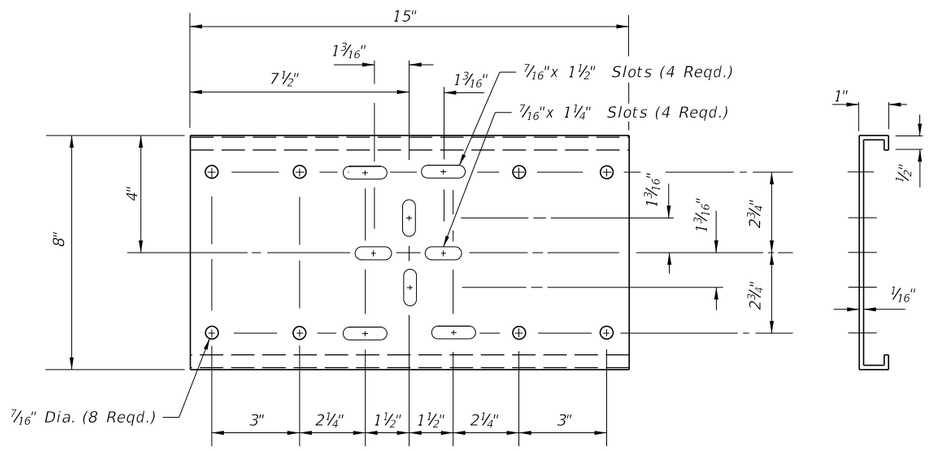

TOP VIEW END VIEW

STEEL SHELF

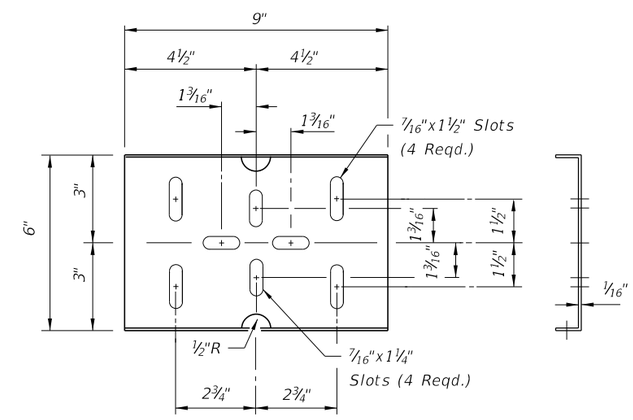

BOTTOM VIEW END VIEW

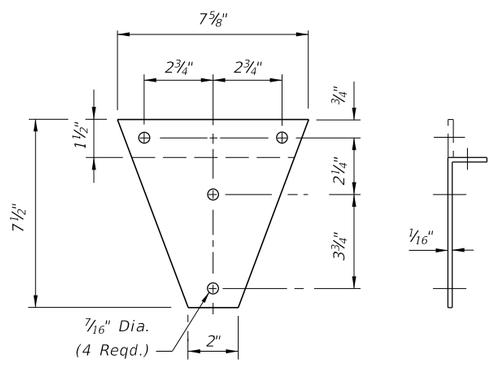

SIDE VIEW END VIEW

STEEL BRACKET

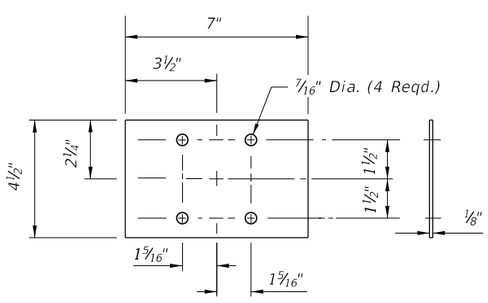

FRONT VIEW END VIEW

STEEL ANTI-TWIST PLATE

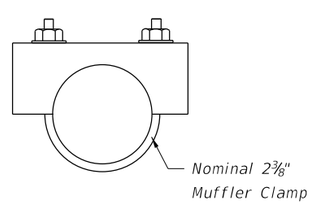

TOP VIEW

STEEL CLAMP

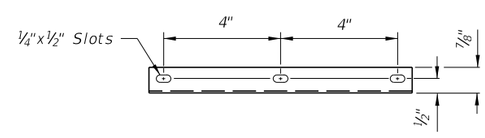

SIDE VIEW

STEEL PLATFORM

Note: See General Notes for finish requirements

STEEL PIPE AND WOOD SUPPORT POSTS

LAST REVISION	REVISION	DESCRIPTION:			INDEX NO.	SHEET NO.
07/01/00			FDOT 2016 DESIGN STANDARDS	MAILBOXES	532	3 of 3

6/9/2015 8:31:06 AM

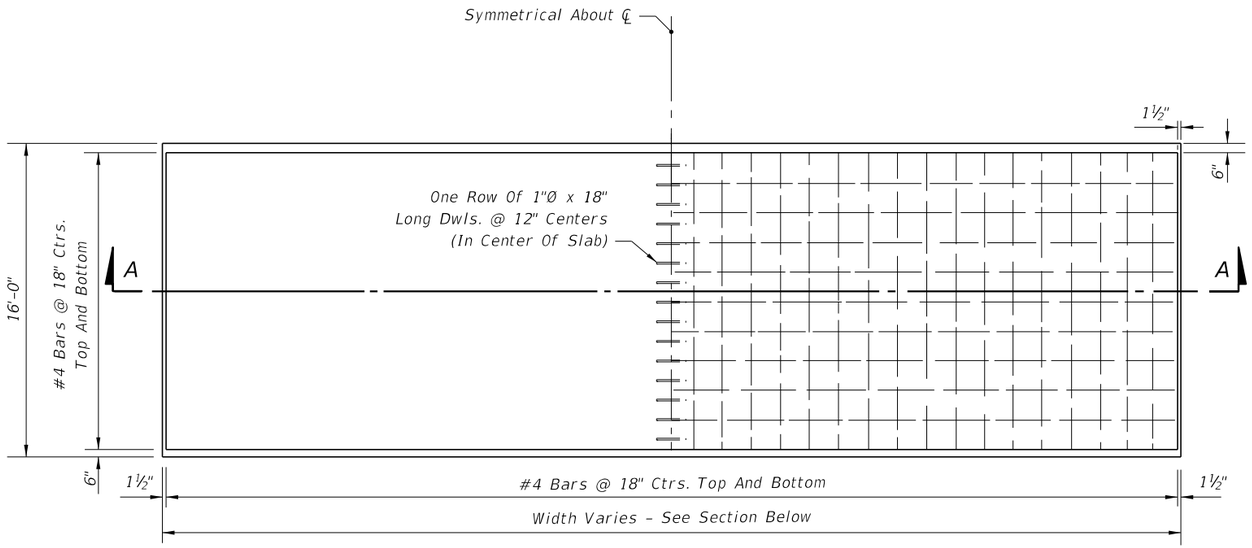

PLAN

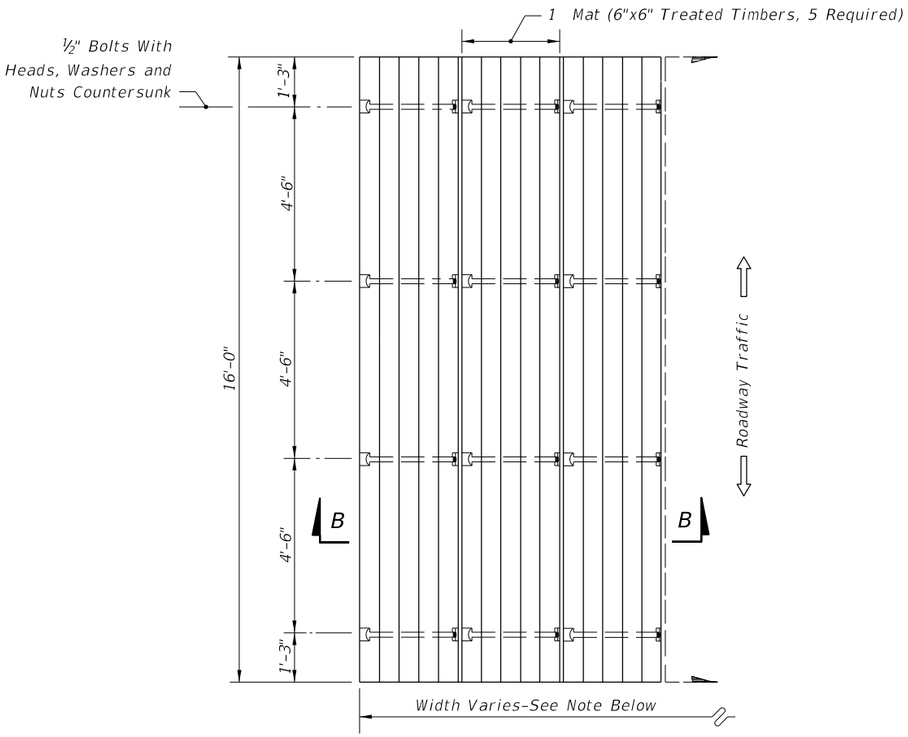

PLAN

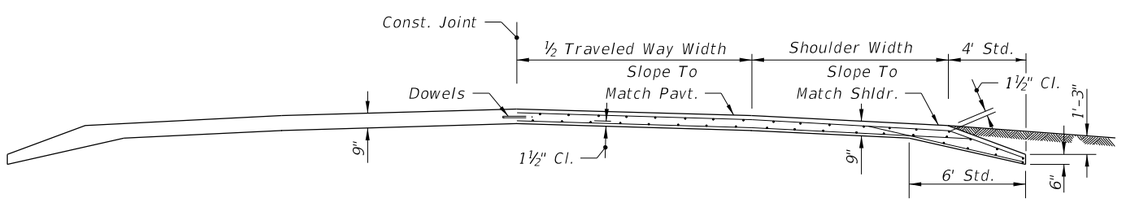

SECTION AA

Note: Class I concrete is to be used unless otherwise noted in plans or special provisions.

REINFORCED CONCRETE

TYPE A

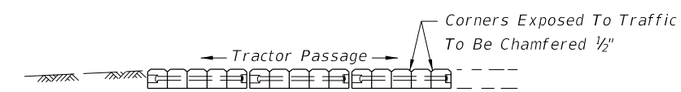

SECTION BB

Note: Tractor crossing to be constructed to match pavement cross slope.

The number of mats required will vary with the pavement width. A sufficient number of mats will be used so that the tractor crossing will extend a minimum of four feet (4') beyond roadway shoulders.

TREATED TIMBER

TYPE B

GENERAL NOTES

1. Tractor crossing shall be paid for under the contract unit price for Tractor Crossing, EA.

TRACTOR CROSSINGS

6/30/2015 10:38:56 AM

LAST REVISION	REVISION	DESCRIPTION:			INDEX NO.	SHEET NO.
07/01/00			FDOT 2016 DESIGN STANDARDS	TRACTOR CROSSINGS	535	1 of 1

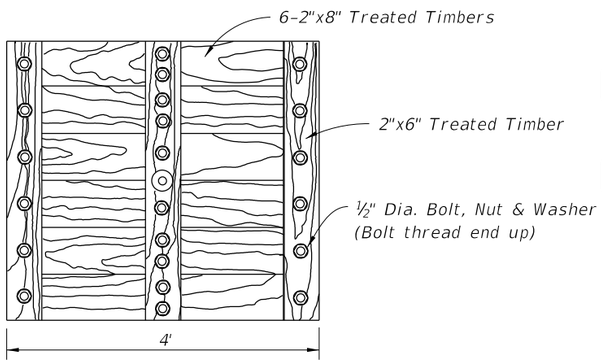

PLAN
TIMBER PLATE

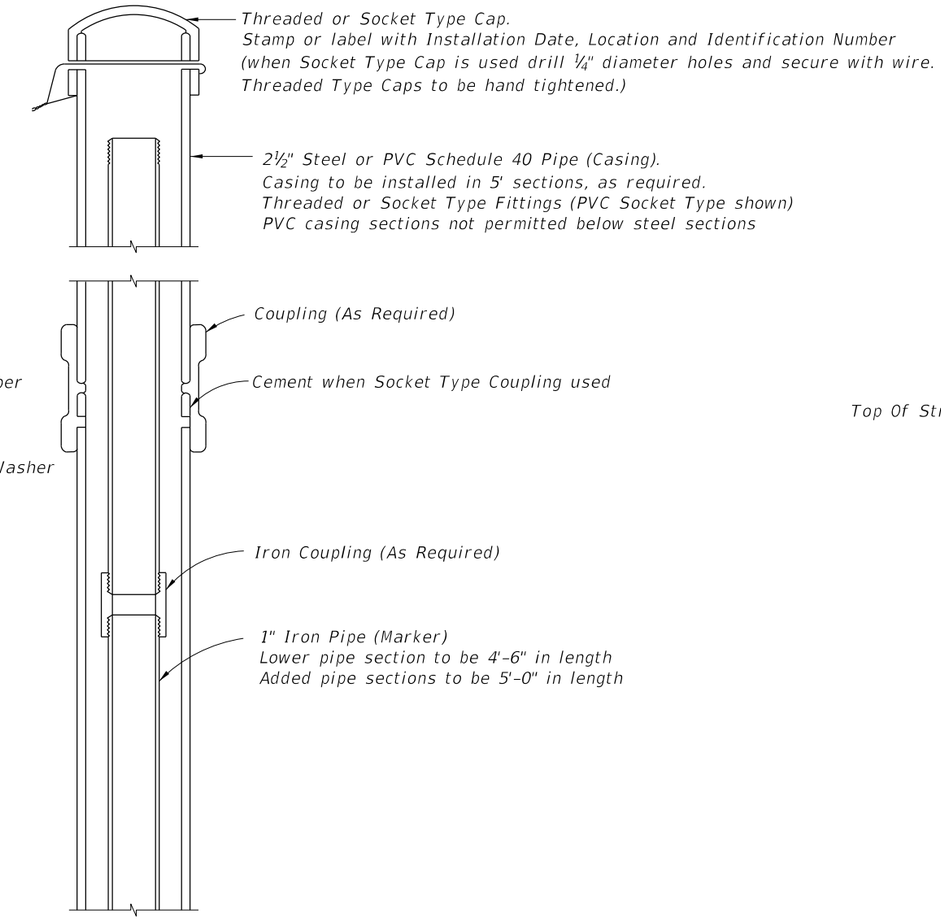

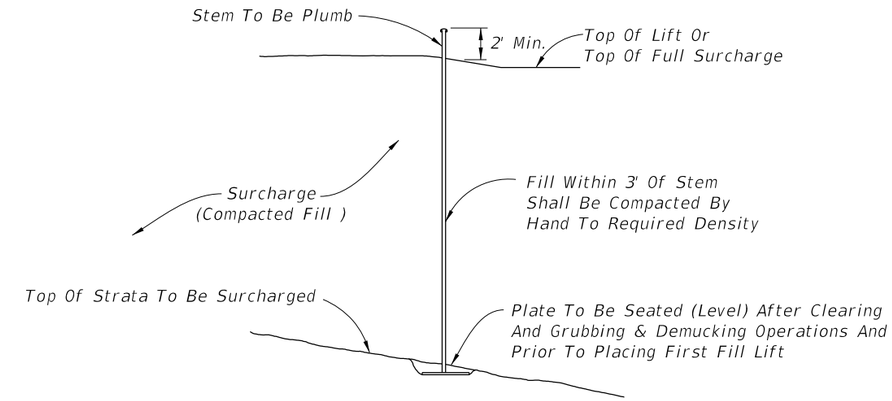

INSTALLATION

NOTES:

1. Elevation of the top of each length of marker pipe shall be determined as soon as it is installed and also immediately before the next length of marker pipe is added.
2. Settlement plate locations shall be flagged and protected from construction vehicles and equipment. If settlement plates are disturbed, they shall be replaced in kind.
3. Oakum used to construct seal should not have a mesh covering (plastic or other synthetic material).
4. The settlement plates shall be paid for under the contract unit price for Settlement Plate Assembly, AS.

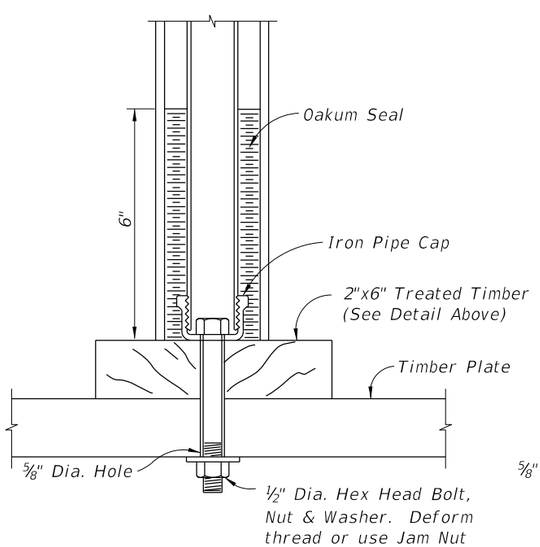

TIMBER PLATE

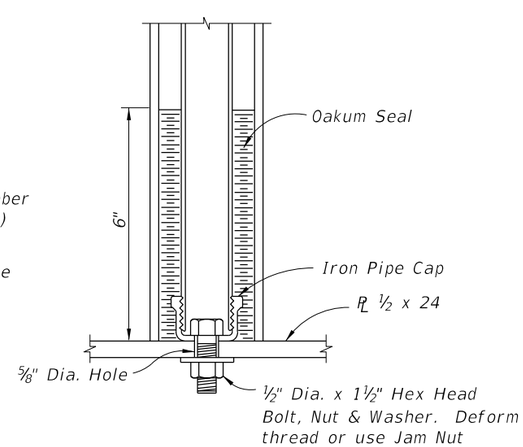

STEEL PLATE

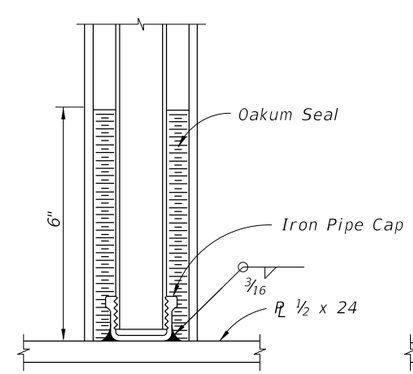

STEEL PLATE

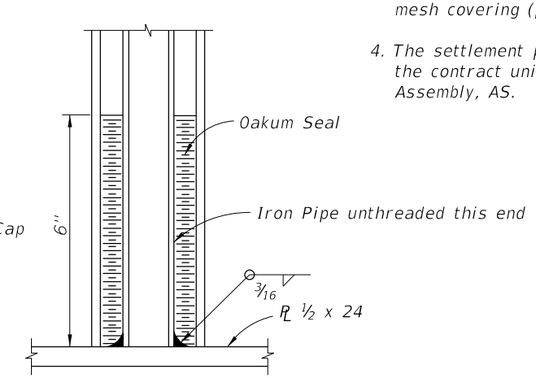

STEEL PLATE

STEM AND PLATE OPTIONS

6/23/2015 4:40:30 PM

LAST REVISION	REVISION	DESCRIPTION:			INDEX NO.	SHEET NO.
01/01/00			FDOT 2016 DESIGN STANDARDS	SETTLEMENT PLATE	540	1 of 1

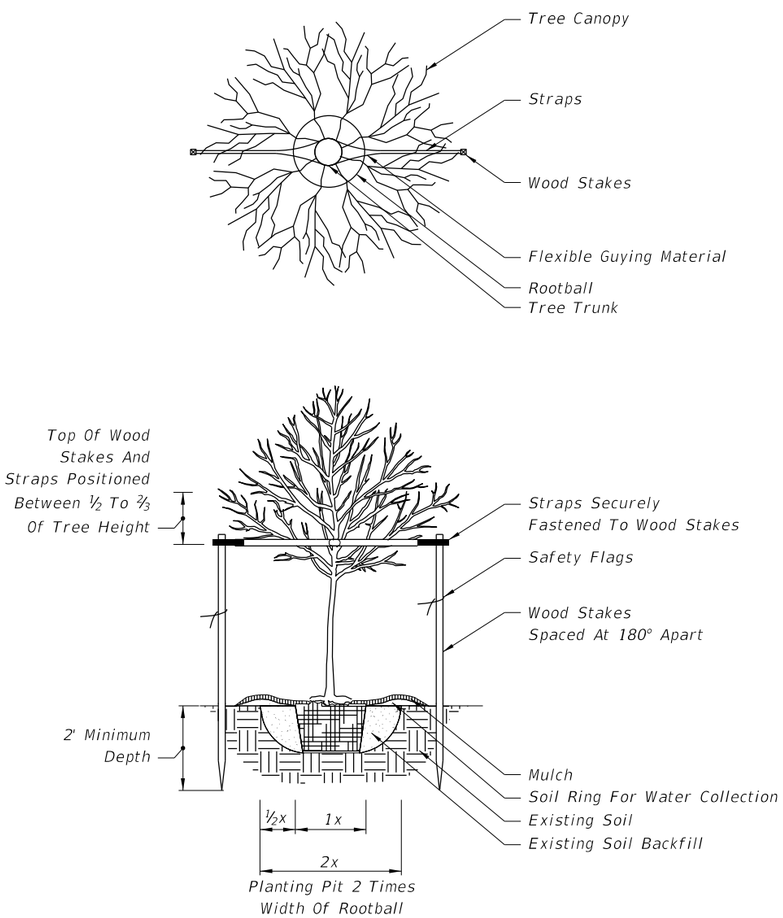

1" - 3 1/2 " CALIPER TREE PLANTING

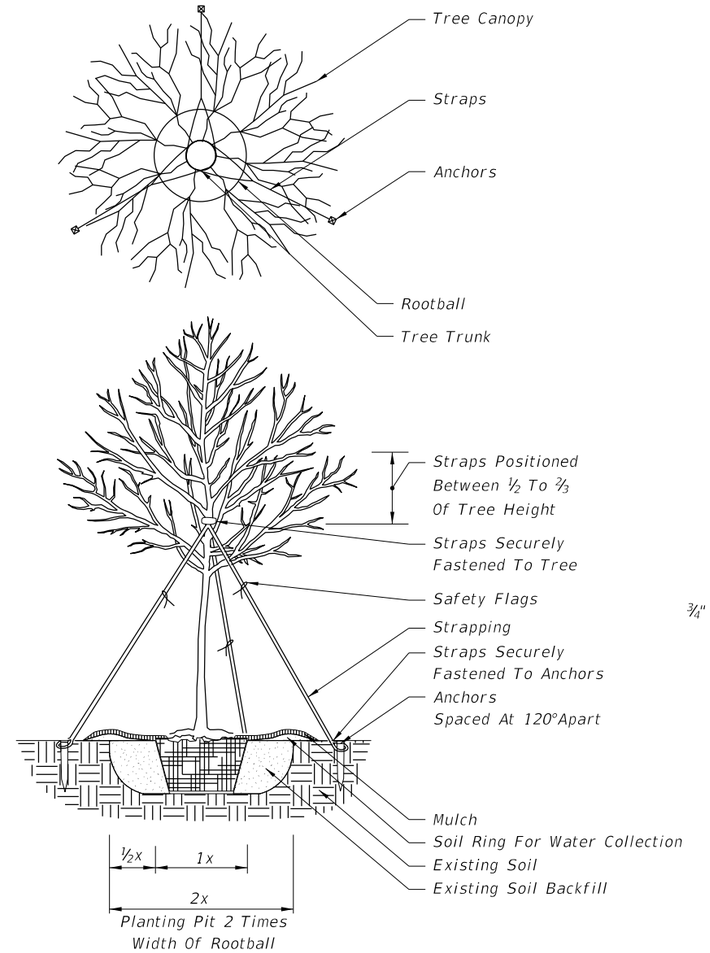

4" AND LARGER CALIPER TREE PLANTING

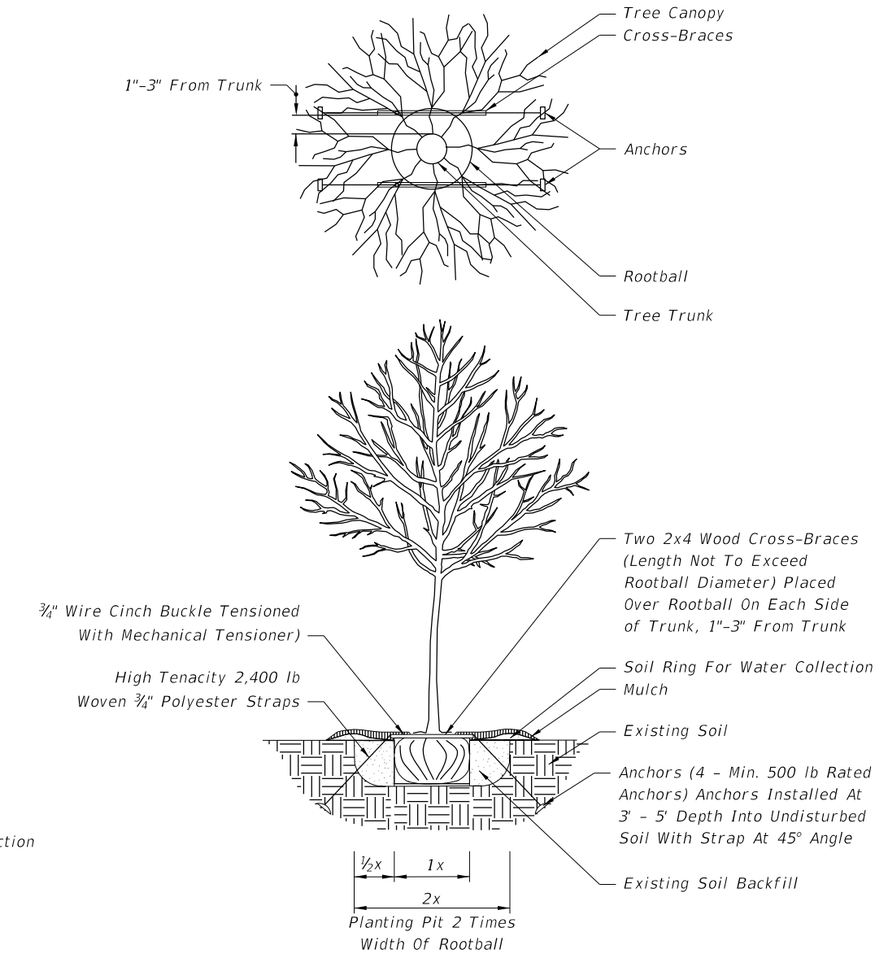

1" - 3½" CALIPER TREE PLANTING WITH UNDERGROUND BRACING

GENERAL NOTES:

1. All dimensions 6" and less are exaggerated for illustrative purposes only.
2. Plant containers shall be removed prior to planting. If plants are not container grown, remove a minimum of the top ⅓ of burlap, fabric, or wire mesh. Never lift or handle the tree by the trunk.
3. The uppermost root on all trees shall be covered by less than 1" of soil. Use hand tools to carefully remove all excess soil. The top of root ball shall be set 1"-2" above finish grade and set plumb to the horizon. If planting pit is too deep, remove the tree and firmly pack additional soil in the bottom of the planting pit to raise the rootball. After positioning the tree in the planting pit, slice through rootballs with 3 or 4 vertical slices (top to bottom) equally distributed around the tree.
4. Backfill shall be loosened existing soil. Remove rocks, sticks, or other deleterious material greater than 1" in any direction prior to backfilling. Water and tamp to remove air pockets. If existing soils contain excessive sand, clay, or other material not conducive to proper plant growth, contact Engineer prior to planting.
5. Soil rings shall be constructed of existing soil at the outer edge of the planting pit, with a height of 3" and gently sloping sides. Do not pile soil on top of rootball.
6. Mulch shall be a 3" deep layer placed to the edge of the trunk flare, around the base of shrub, or solidly around groundcover. Never pile mulch against the tree trunk.
7. Straps shall be minimum 1" wide nylon or polypropylene. All wood stakes or anchors shall be located beyond the edge of soil ring and located below finished grade, unless otherwise specified.
8. Sabal Palms may be hurricane cut. All other palms must have fronds tied with biodegradable twine. Palm trunks shall have no burn marks, scars, or sanding.
9. All dimensions provided for wood materials are nominal.
10. When a permanent, subsurface, or drip irrigation system is provided, a soil ring is not required. Mulch to edge of planting pit.
11. Alternate tree bracing and guying systems approved by the Engineer may be used in lieu of the tree bracing and guying methods detailed on the Index. Alternate tree protection systems approved by the Engineer may be used in lieu of the tree protection barricade detailed on the index.
12. Remove aboveground guying systems at the end of the establishment period.

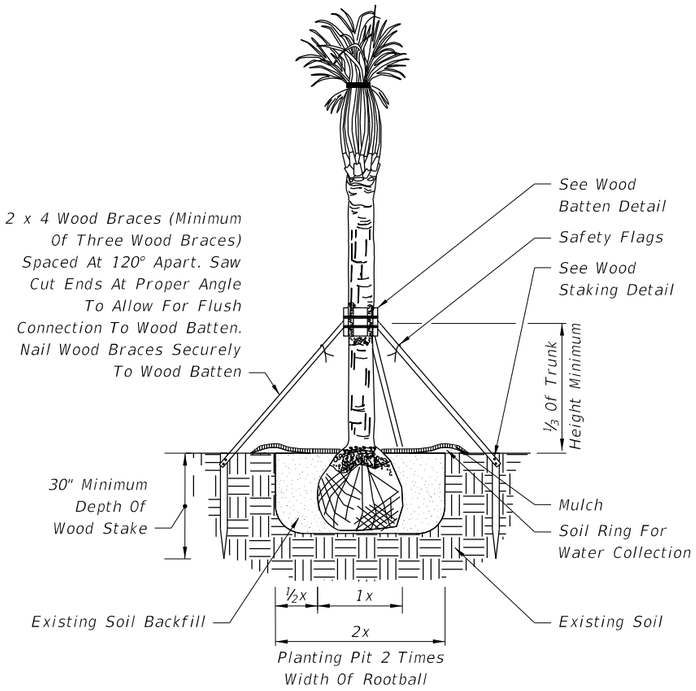

NOTE: For All Other Palms, Use Detail Provided By Landscape Architect In Contract Plans.

CABBAGE PALM PLANTING FOR UP TO 24' CLEAR TRUNK

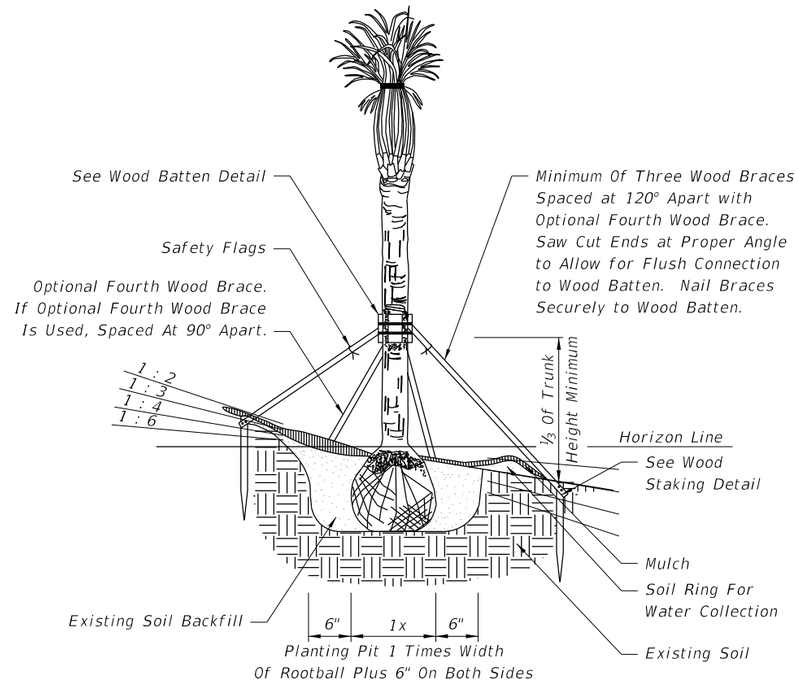

NOTES: Slope Provided As Rise:Run. For All Other Palms, Use Detail Provided By Landscape Architect In Contract Plans.

CABBAGE PALM PLANTING ON SLOPE FOR UP TO 24' CLEAR TRUNK

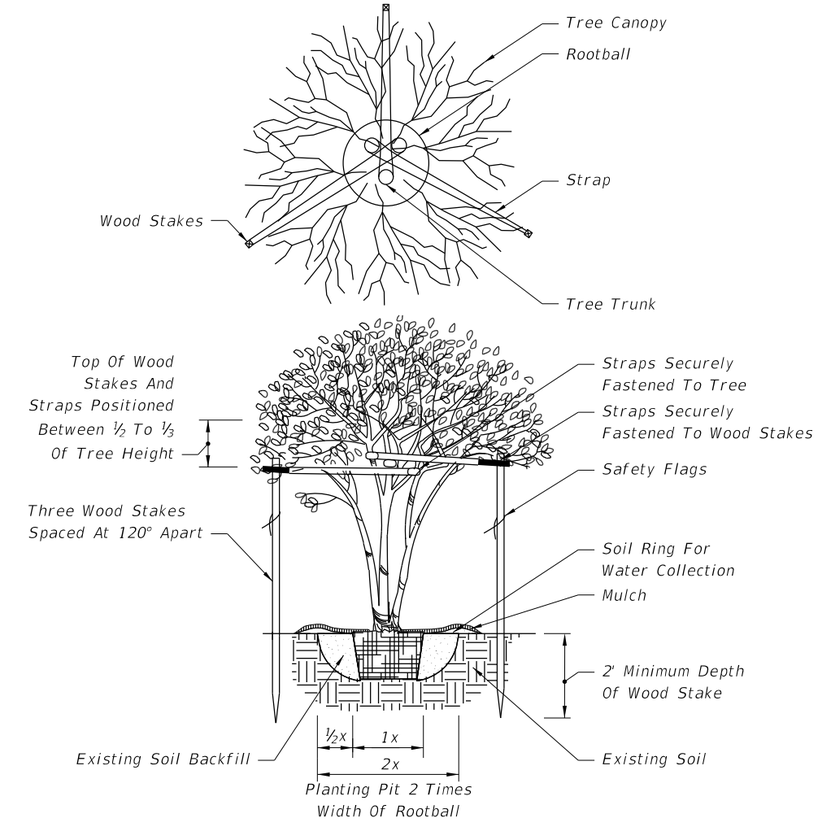

MULTI-TRUNK TREE PLANTING

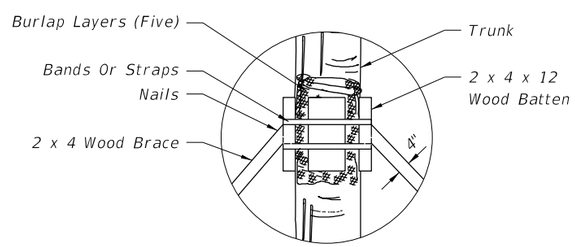

WOOD BATTEN DETAIL

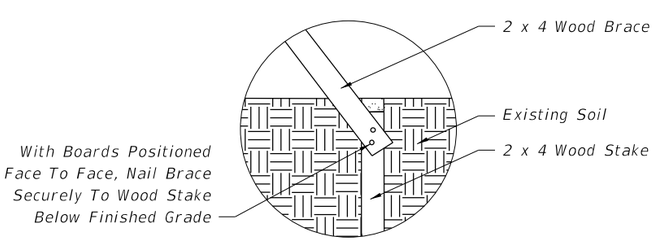

NOTE: Stake Into Firm, Existing Soil.

WOOD STAKING DETAIL

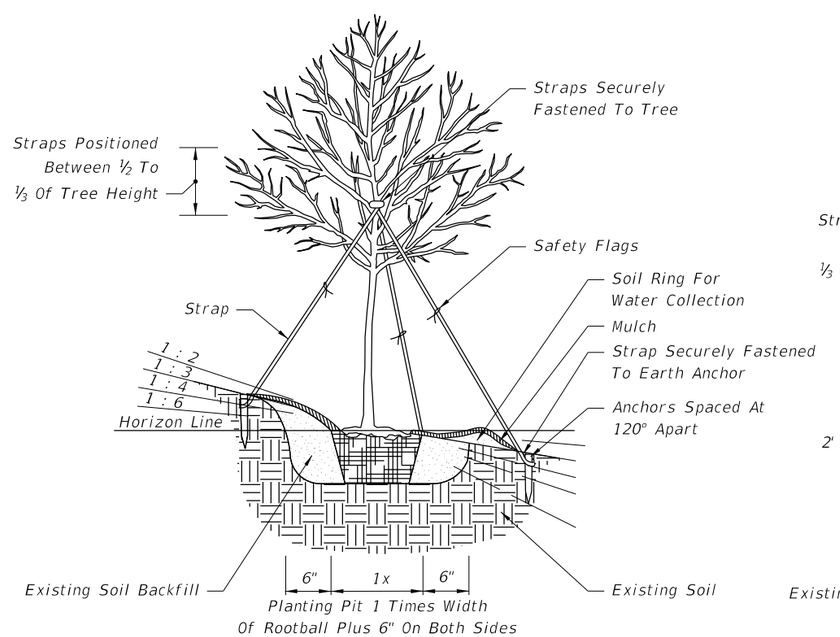

NOTE: Slope Provided As Rise:Run.

4" AND LARGER CALIPER TREE PLANTING ON SLOPE

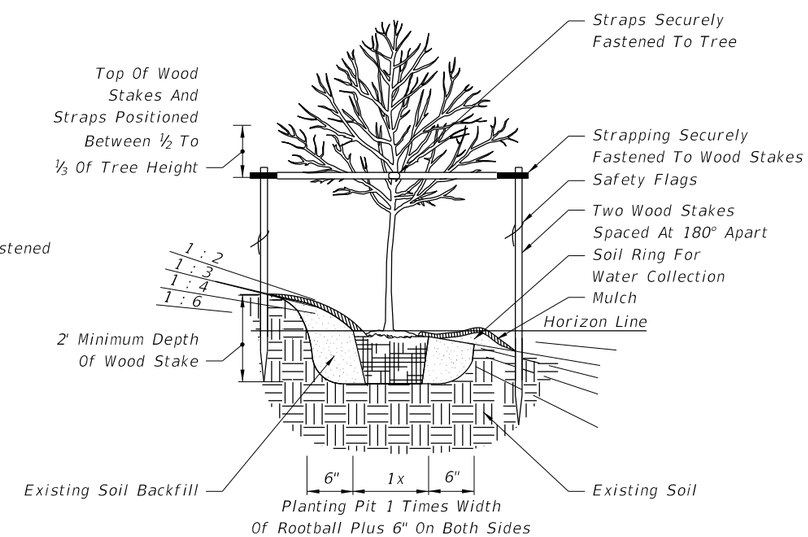

NOTE: Slope Provided As Rise:Run.

1" - 3 1/2 " CALIPER TREE PLANTING ON SLOPE

8:36:06 AM

6/9/2015

LAST REVISION	REVISION	DESCRIPTION:			INDEX NO.	SHEET NO.
07/01/07			FDOT 2016 DESIGN STANDARDS	LANDSCAPE INSTALLATION	544	2 of 3

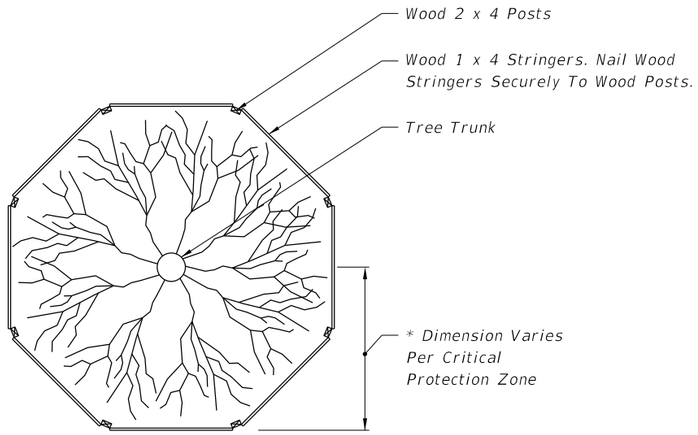

NOTE: For Groups Of Trees, Place Barricades Between Trees And Construction Activity.

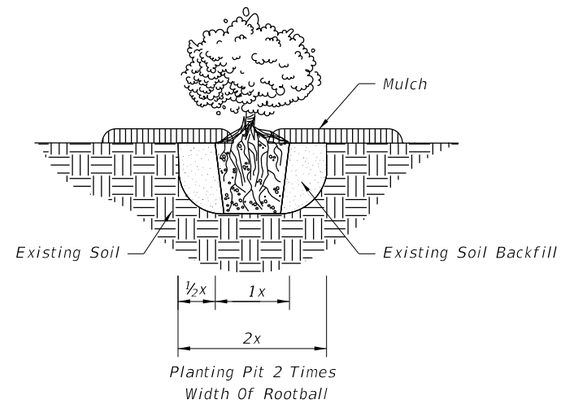

GROUND COVER/SHRUB PLANTING

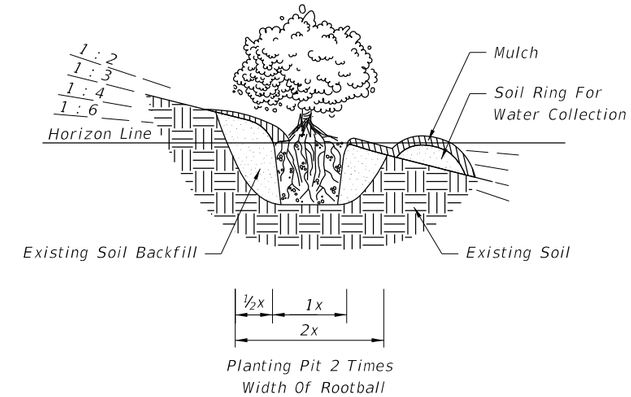

NOTE: Slope Provided As Rise:Run.

GROUND COVER/SHRUB PLANTING ON SLOPE

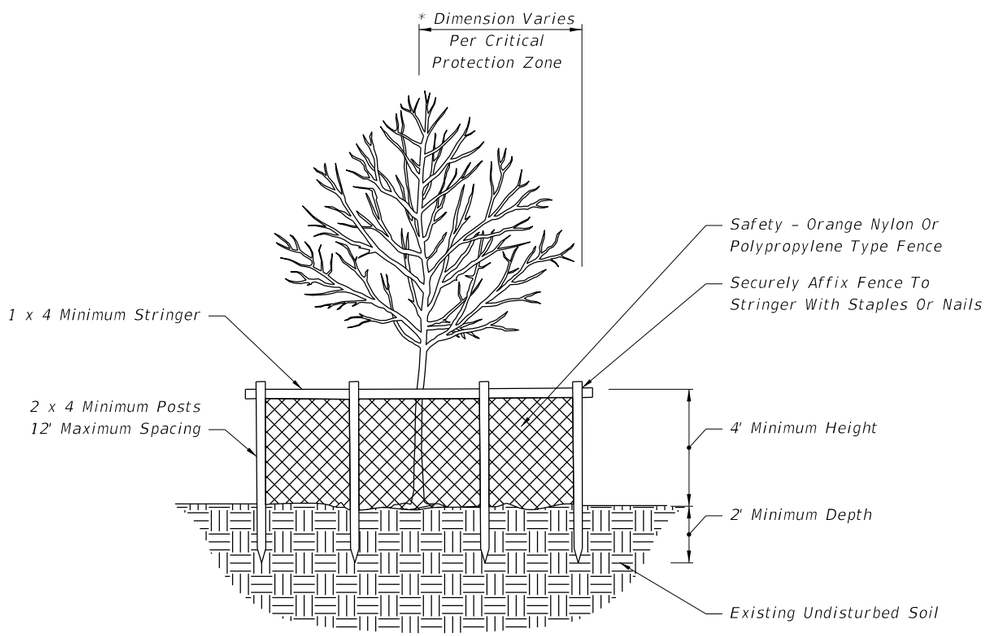

NOTES: Critical Protection Zone: The Area Surrounding A Tree Within A Circle Described By A Radius Of One Foot For Each Inch Of The Tree Trunk Diameter At 54" Above Finished Grade. For Groups Of Trees, Place Barricades Between Trees And Construction Activity.

* Tree Protection Barricades Shall Be Located To Protect A Minimum Of 75% Of The Critical Protection Zone.

TREE PROTECTION BARRICADE

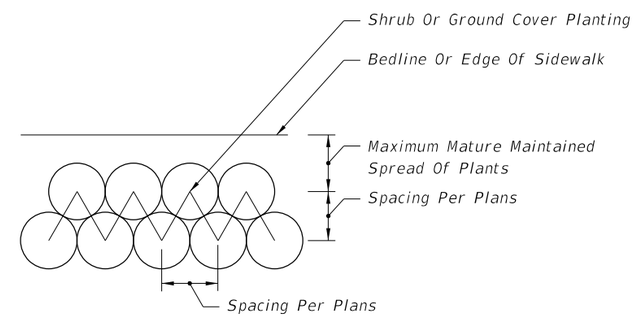

GROUND COVER/SHRUB LAYOUT DETAIL

6/9/2015 8:36:07 AM

LAST REVISION	REVISION	DESCRIPTION:			INDEX NO.	SHEET NO.
07/01/07			FDOT 2016 DESIGN STANDARDS	LANDSCAPE INSTALLATION	544	3 of 3

DESIGN NOTES

1. The information shown on this index is intended solely for the purpose of clear sight development and maintenance at intersecting highways, roads, streets and driveways, and is not intended to be used to establish roadway and roadside safety except as related to clear sight corridors. An analysis of sight distance shall be documented for all intersections.

2. For the purpose of this Index, Minor Road is defined as all intersecting highways, roads, streets and driveways.

3. Details are based on the AASHTO 'A Policy On Geometric Design Of Highways And Streets, 2001', CHAPTER 9, INTERSECTION SIGHT DISTANCE, CASES B and F, and Department practices for channelized median openings (left turns from major road).

4. The minimum driver eye setback of 14.5' from the edge of the traveled way may be adjusted on any intersection leg only when justified by a documented, site specific field study of vehicle stopping position and driver eye position.

5. For SIGNALIZED INTERSECTIONS sight distances should be developed based on AASHTO 'Case D–Intersections With Traffic Signal Control'. 'At signalized intersections, the first vehicle stopped on one approach should be visible to the driver of the first vehicle stopped on each of the other approaches. Left turning vehicles should have sufficient sight distance to select gaps in oncoming traffic and complete left turns. Apart from these sight conditions, there are generally no other approach or departure sight triangles needed for signalized intersections. However, if the traffic signal is to be placed on two–way flashing operation (i.e. flashing yellow on the major road approaches and flashing red on the minor road approaches) under off peak or nighttime conditions, then the appropriate departure sight triangles for Case B, both to the left and to the right, should be provided for the minor road approaches. In addition, if right turns on a red signal are to be permitted from any approach, then the appropriate departure sight triangle to the left for Case B2 should be provided to accommodate right turns from that approach.'

6. Where curvature, superelevation, adverse split profiles or other conditions preclude the use of standard tree sizes and spacing, proof of view and shadowing restraints must be documented and the size and location of trees in medians detailed in the plans.

7. Intersection sight distance values are provided for Passenger Vehicles, SU Vehicles and Combination Vehicles. Intersection sight distance based on the Passenger Vehicle is suitable for most intersections. Where substantial volumes of heavy vehicles enter the major road, such as from ramp terminals with stop control or roadways serving truck terminals, the use of tabulated values for SU Vehicles or Combination Vehicles should be considered.

GENERAL NOTES

1. Details apply to both rural and urban intersections under stop sign control or flashing beacon control. For full signal controlled intersections see Design Note No 4. At intersections listed in the Department's High Crash Intersection Report, designers shall give attention to keeping to a minimum, objects that distract or affect sight distance.

2. Sight distance 'd' applies to normal and skewed intersections (intersecting angles between 60° and 120°), and where vertical and/or horizontal curves are not present. Sight distance 'd' is measured along the major road from the center of the entrance lane of the minor road to the center of the near approach lane (right or left) of the major road. Distances 'd_L' and 'd_r' are measured from the centerline of the entrance lane of the minor road to a point on the edge of the near side outer traffic lane on the major road. Distance 'd_m' is measured from the centerline of the entrance lane of the minor road to a point on the median clear zone limit or horizontal clearance limit for the far side road of the major road.

3. A. The limits of clear sight define a corridor throughout which a clear sight window must be preserved. See WINDOW DETAIL, Sheet 2.

   B. Clear sight must be provided between vehicles at intersection stop locations, and vehicles on the major road within dimension 'd'.

   C. Since observations are made in both directions along the line of sight, the reference datum between roadways is 3'–6" above respective pavements.

4. Barrier systems within intersection sight corridors, where penetration into the sight window might occur, shall be located to provide the least adverse affect practical.

5. The corridor defined by the limits of clear sight is a restricted planting area. Drivers of vehicles on the intersecting road and vehicles on the major road must be able to see each other clearly throughout the limits of 'd' and 'd_a'. If in the Engineers judgement, landscaping interferes with the line of sight corridor prescribed by these standards the Engineer may rearrange, relocate or eliminate plantings. Plants within the restricted areas are limited to selections as follows:

5. (Cont.)
   Ground Cover & Trunked Plants (Separate or Combined):

   Ground Covers – Plant selection of low growing vegetation which at maturity does not attain a height greater than 18" below the sight line datum. For ground cover in combination with trees and palms; the following heights below the sight line datum will apply:

   24" for trees and palms ≤ 11" dia.; and, 18" for sabal palms >11" but ≤ 18" dia. (dia.–within Sight Window).

   Trunked Plants – Plant selection of a mature trunk diameter 4" or less measured at 6" above the ground. Canopy or high borne foliage shall never be lower than 5' above the sight line datum. These selections shall be spaced no closer than 20'.

   Trees – Trees can be installed with sod; pavers; gravel, mulch; ground covers or other Department–approved material. The clear sight window must be in conformance with the 'WINDOW DETAIL' modified to attain the height requirements listed in 'Ground Covers' above.

   A. Size and spacing shall conform to the Tree Spacing Table.

   B. Requirements for placement within medians at median openings and at unsignalized and signalized intersections:

      a. Horizontal clearance for the mature specimen shall be maintained as specified in Index 700. Specimens whose mature trunk diameter is greater than 18" shall not be permitted,

      b. Where left turns from the major road are permitted, no trees shall be located within the distance 'd_b', Sheet 2 of 6; and not less than the distances called for in (c) or (d), as applicable,

      c. For safety, these additional setbacks are required:

         1. Where no left turn lane is present, size and spacing shall conform to the Tree Spacing Table. No trees shall be permitted within 100' of the restricted median nose (measured from the edge of pavement),

         2. Where left turn lane(s) are present, the following requirements apply:

            - For low speed facilities (design speed less than 50 mph), size and spacing shall conform to the Tree Spacing Table. No trees shall be permitted within 100' of the restricted median nose (measured from the edge of pavement).

            - For high speed facilities (design speed 50 mph or greater), no trees shall be permitted within 200' of the restricted median nose. Beyond this limit, size and spacing shall conform to the Tree Spacing Table.

TREE SPACING TABLE **

Description	Design Speed (mph)													
	30		35		40		45		50		55		60	
Diameter	(Inches)													
(Within Limits Of Sight Window)	>4≤11	>11≤18	>4≤11	>11≤18	>4≤11	>11≤18	>4≤11	>11≤18	>4≤11	>11≤18	>4≤11	>11≤18	>4≤11	>11≤18
	(Feet)													
Minimum Spacing (c. to c. Of Trunk)	25	90	30	105	35	120	40	135	50	150	55	165	60	180

** Sizes and spacings are based on the following conditions:

a. A single line of trees in the median parallel to but not necessarily colinear with the centerline.

b. A straight approaching mainline, within skew limits as described in No. 2 above.

c. 1. Trees and palms ≤ 11" in diameter casting a vertical 6' wide shadow band on a vehicle entering at stop bar location when viewed by mainline driver beginning at distance 'd'; see SHADOW DIAGRAM, Sheet 2.

   2. Sabal palms with diameters > 11" ≤ 18" spaced at intervals providing a 2 second full view of entering vehicle at stop bar location when viewed by the mainline driver beginning at distance 'd'; see PERCEPTION DIAGRAM, Sheet 2.

d. Trees with diameters ≤ 11" intermixed with trees with diameters > 11" ≤ 18" are to be spaced based on trees with diameters > 11" ≤ 18".

For any other conditions the tree sizes, spacings and locations shall be detailed in the plans; see Design Note 5.

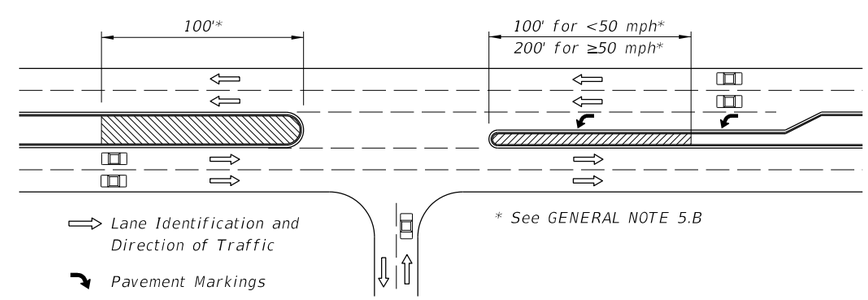

PLAN
Special Areas Limited to Ground Cover

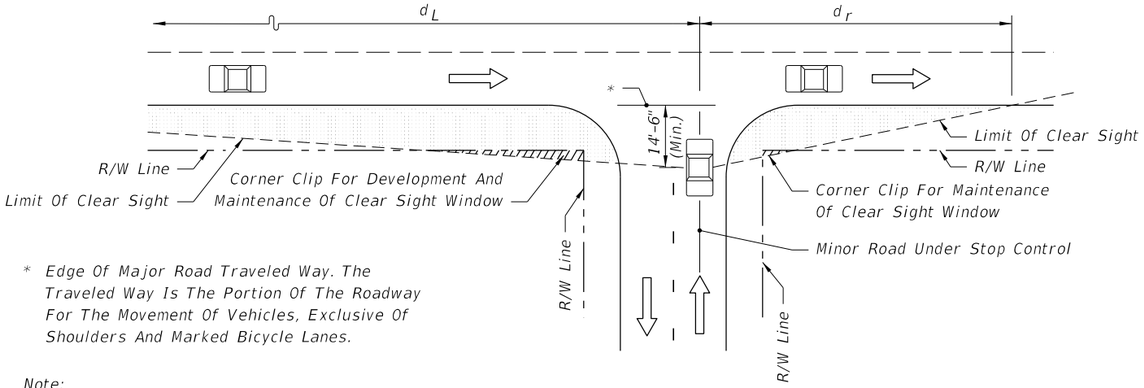

* Edge Of Major Road Traveled Way. The Traveled Way Is The Portion Of The Roadway For The Movement Of Vehicles, Exclusive Of Shoulders And Marked Bicycle Lanes.

Note:
Lines For 'Limit Of Clear Sight' Are Opposite Hand When Major Road Near Lane Traffic Moving Left (e.g., One-Way Left).

PICTORIAL
ORIGIN OF CLEAR SIGHT LINE ON MINOR ROAD

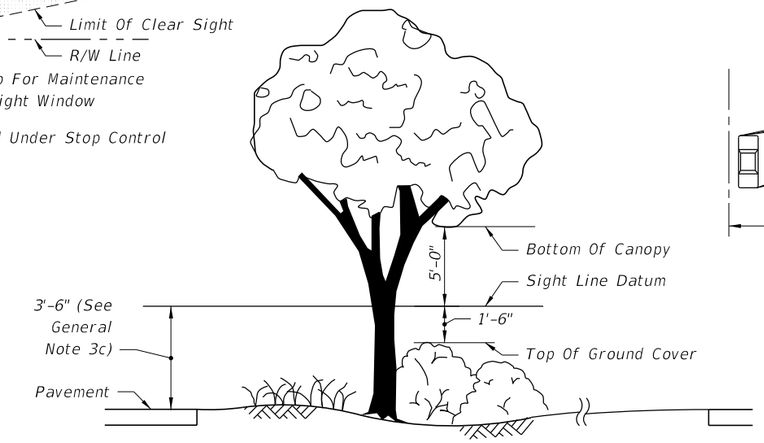

The Intent Of This Standard Is To Provide A Window With Vertical Limits Of Not Less Than 5' Above And 1'-6" Below The Sight Line Datum, And Horizontal Limits Defined By The Limits Of Clear Sight.

PICTORIAL
WINDOW DETAIL

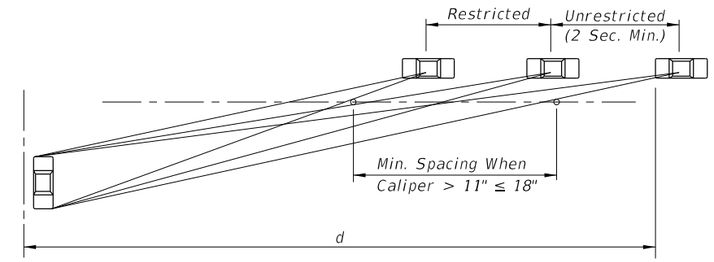

PERCEPTION DIAGRAM
SETTING SABAL PALM (STATE TREE) SPACING

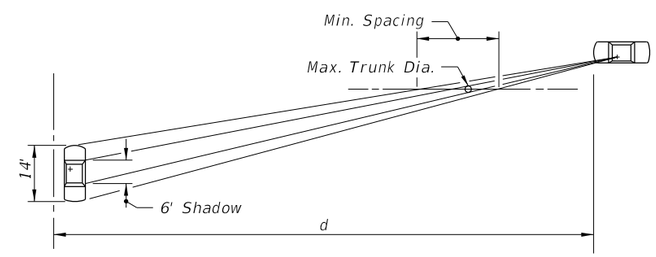

SHADOW DIAGRAM

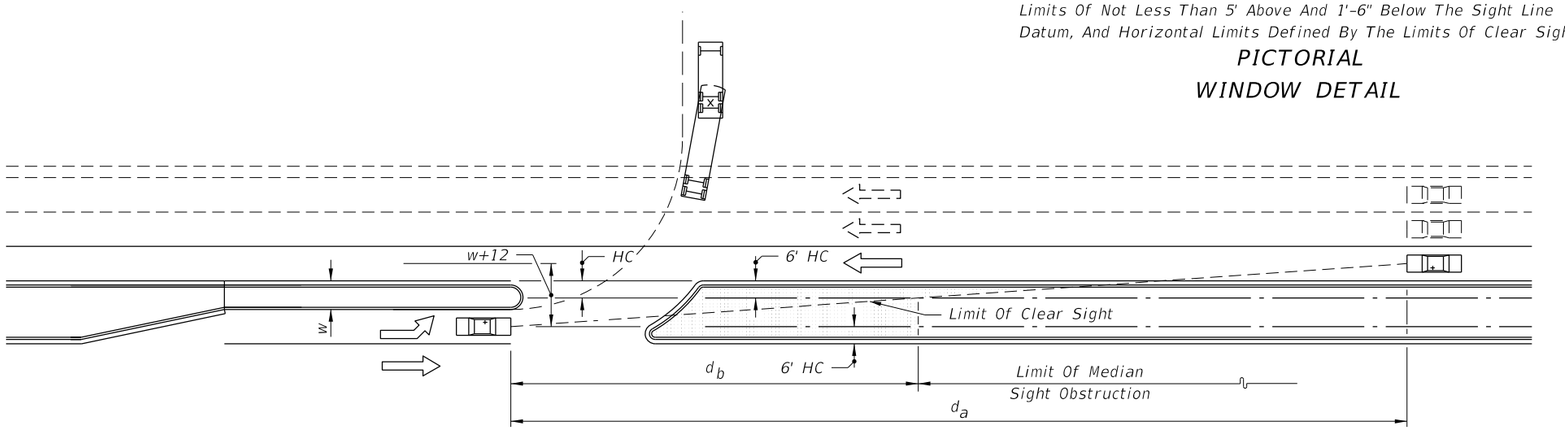

PICTORIAL

LEGEND

Areas Free Of Sight Obstructions

d_a (Feet)									
Design Speed MPH	1 Lane Crossed			2 Lanes Crossed			3 Lanes Crossed		
	P	SU	Comb.	P	SU	Comb.	P	SU	Comb.
30	245	290	330	265	320	365	290	350	395
35	285	335	385	310	370	425	335	410	460
40	325	385	440	355	425	485	385	465	525
45	365	430	495	400	475	545	430	525	590
☆ See Note									

☆ The d_a values in this table were established by the method referenced in Design Note 2, and are applicable to urban, predominantly curbed roadways with design speeds of 45 mph or less and meeting the restricted conditions defined in Index No. 700. For horizontal clearance (HC) of 6', the values for d_b may be determined by the equation $d_b = d_a\ (w/(w+12))$. For roadways with nonrestricted conditions, d_a and d_b should be based on the geometry for the left turn storage and on clear zone widths (See Index No. 700).

For wide medians where the turning vehicle can approach the through lanes at or near 90°, use d_v values from tables on sheets 5 or 6. (The clear sight line origin is assumed to be 14'-6" from the edge of the near lane.)

CHANNELIZED DIRECTIONAL MEDIAN OPENINGS

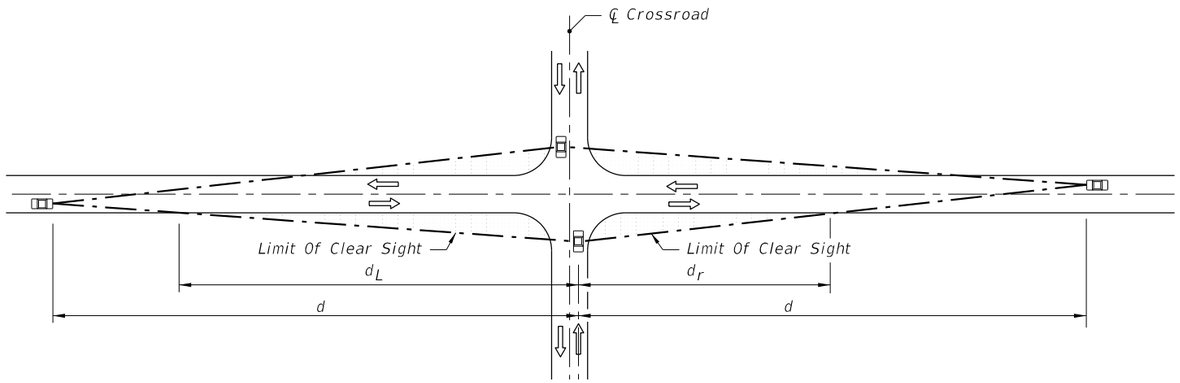

PICTORIAL

2 LANE UNDIVIDED

Design Speed	d	d_L	d_r
30	335	240	155
35	390	275	175
40	445	315	200
45	500	355	225
50	555	395	250
55	610	435	275
60	665	470	300
65	720	510	325

Passenger Vehicle

Design Speed	d	d_L	d_r
30	420	300	190
35	490	350	220
40	560	400	250
45	630	450	285
50	700	495	315
55	770	545	345
60	840	595	375
65	910	645	410

SU Vehicle

Design Speed	d	d_L	d_r
30	510	365	230
35	595	420	265
40	680	480	305
45	765	545	345
50	845	600	380
55	930	660	415
60	1015	720	455
65	1100	780	495

Combination Vehicle

SIGHT DISTANCE (d) AND RELATED DISTANCES (d_L, d_r) (FEET)

2 LANE UNDIVIDED

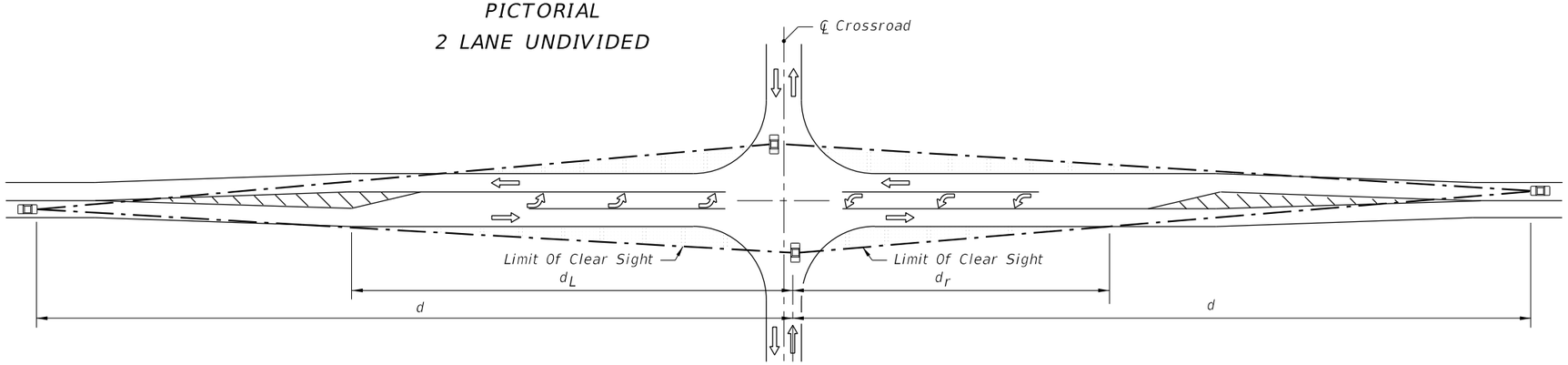

PICTORIAL

2 LANE 2 WAY • FLARED FOR OPPOSING LEFT TURN CENTERED ON ALIGNMENT

Design Speed	d	d_L	d_r
30	355	195	135
35	415	230	160
40	475	260	180
45	530	290	200
50	590	325	225
55	650	355	245
60	710	390	270
65	765	420	290

Passenger Vehicle

Design Speed	d	d_L	d_r
30	450	250	170
35	525	290	200
40	600	330	230
45	675	370	255
50	750	410	285
55	825	455	315
60	900	495	340
65	975	535	370

SU Vehicle

Design Speed	d	d_L	d_r
30	540	295	205
35	630	345	240
40	720	395	275
45	810	445	305
50	900	495	340
55	990	545	375
60	1080	590	410
65	1170	640	440

Combination Vehicle

SIGHT DISTANCE (d) AND RELATED DISTANCES (d_L, d_r) (FEET)

2 LANE 2 WAY • FLARED FOR LEFT TURNS

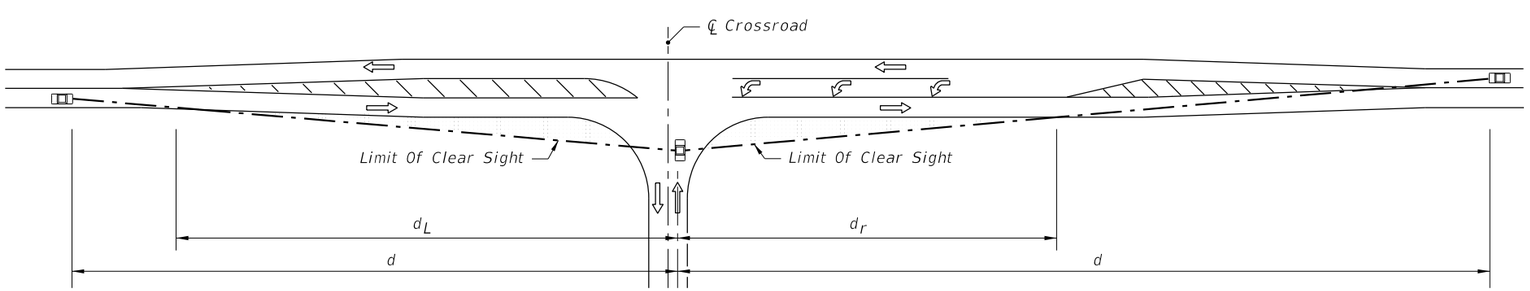

PICTORIAL

2 LANE 2 WAY • FLARED FOR SINGLE SIDE LEFT TURN CENTERED ON ALIGNMENT

LEGEND

Areas Free Of Sight Obstructions

NOTE: See Sheet 2 for intersecting roadway origin of clear sight and quadrant corner clips.

6/9/2015 4:25:13 PM

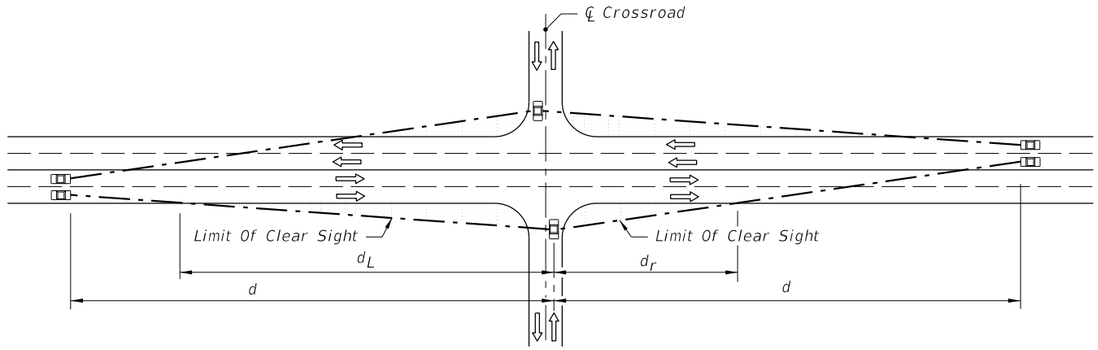

PICTORIAL
4 LANE UNDIVIDED

Design Speed	d	d_L	d_r
30	355	255	120
35	415	295	135
40	475	335	155
45	530	375	175
50	590	420	195
55	650	460	215
60	705	500	230
65	765	545	250

Passenger Vehicle

Design Speed	d	d_L	d_r
30	450	320	150
35	525	375	175
40	600	425	200
45	675	480	220
50	750	530	245
55	825	585	270
60	900	640	295
65	975	690	320

SU Vehicle

Design Speed	d	d_L	d_r
30	540	385	180
35	630	450	205
40	720	510	235
45	810	575	265
50	900	640	295
55	990	700	325
60	1080	765	355
65	1170	830	385

Combination Vehicle

SIGHT DISTANCE (d) AND RELATED DISTANCES (d_L, d_r) (FEET)
4 LANE UNDIVIDED

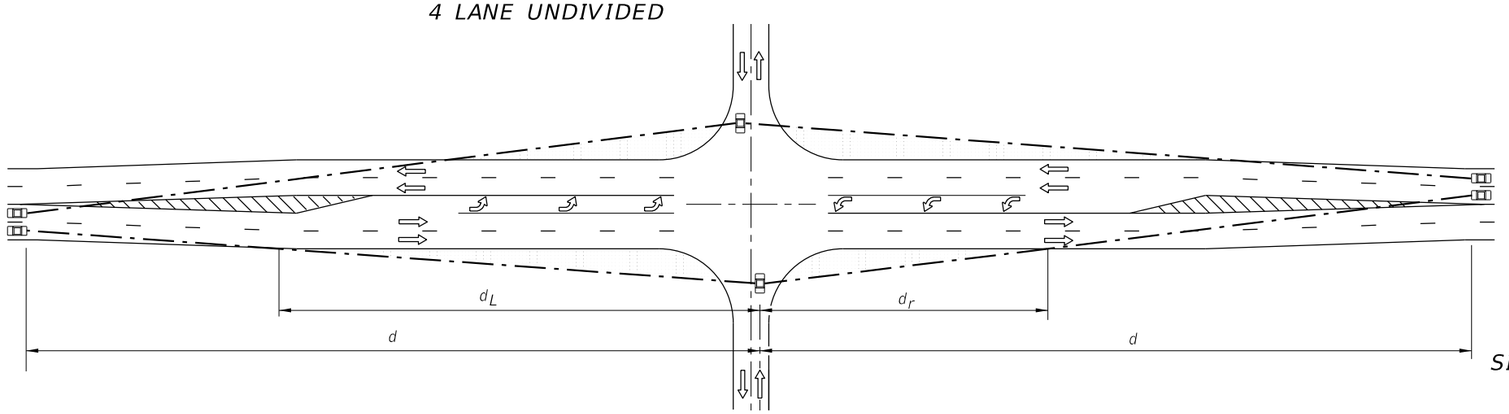

PICTORIAL
4 LANE UNDIVIDED FLARED - SYMMETRICAL

Design Speed	d	d_L	d_r
30	375	205	110
35	440	245	130
40	500	275	145
45	565	310	165
50	625	345	180
55	690	380	200
60	750	410	215
65	815	450	235

Passenger Vehicle

Design Speed	d	d_L	d_r
30	480	265	140
35	560	310	165
40	640	350	185
45	720	395	210
50	800	440	230
55	880	485	255
60	960	525	280
65	1040	570	300

SU Vehicle

Design Speed	d	d_L	d_r
30	570	315	165
35	665	365	195
40	760	420	220
45	855	470	245
50	950	520	275
55	1045	575	300
60	1140	625	330
65	1235	675	355

Combination Vehicle

SIGHT DISTANCE (d) AND RELATED DISTANCES (d_L, d_r) (FEET)
4 LANE UNDIVIDED FLARED - SYMMETRICAL

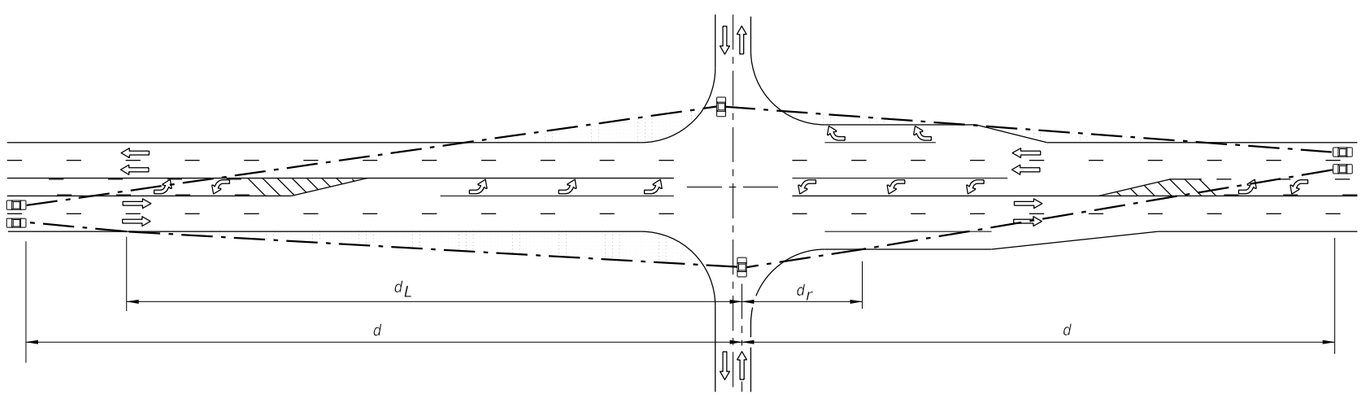

PICTORIAL
4 LANE UNDIVIDED WITH OPTIONAL LANE

Design Speed	d	d_L	d_r
30	375	265	80
35	440	315	95
40	500	355	110
45	565	400	120
50	625	445	135
55	690	490	150
60	750	530	160
65	815	580	175

Passenger Vehicle

Design Speed	d	d_L	d_r
30	480	340	105
35	560	400	120
40	640	455	135
45	720	510	155
50	800	570	170
55	880	625	190
60	960	680	205
65	1040	740	220

SU Vehicle

Design Speed	d	d_L	d_r
30	570	405	125
35	665	470	145
40	760	540	165
45	855	605	185
50	950	675	205
55	1045	740	225
60	1140	810	245
65	1235	875	265

Combination Vehicle

SIGHT DISTANCE (d) AND RELATED DISTANCES (d_L, d_r) (FEET)
4 LANE UNDIVIDED WITH OPTIONAL LANE

LEGEND

Areas Free Of Sight Obstructions

NOTE: See Sheet 2 for intersecting roadway origin of clear sight and quadrant corner clips.

6/9/2015 4:25:14 PM

MEDIAN 22' OR LESS				
Design Speed	d	d_L	d_r	d_m
30	395	280	90	325
35	460	325	100	380
40	525	375	115	430
45	590	420	130	485
50	655	465	145	540
55	720	510	160	590
60	785	555	175	645
65	850	605	185	700

25'-64' MEDIAN				
Design Speed	d	d_L	d_v	d_{vL}
30	355	255	330	240
35	415	295	390	280
40	470	335	445	320
45	530	375	500	360
50	590	420	550	400
55	650	460	610	440
60	705	500	665	480
65	765	545	720	520

PASSENGER VEHICLE (P)

MEDIAN 35' OR LESS				
Design Speed	d	d_L	d_r	d_m
30	540	385	110	460
35	630	450	125	535
40	720	510	145	615
45	810	575	160	685
50	900	640	180	760
55	990	700	195	840
60	1080	765	215	915
65	1170	830	230	990

40'-64' MEDIAN				
Design Speed	d	d_L	d_v	d_{vL}
30	450	320	420	330
35	525	375	490	385
40	600	425	560	440
45	675	480	630	490
50	750	530	700	545
55	825	585	770	600
60	900	640	840	655
65	975	690	910	710

SINGLE-UNIT TRUCK (SU)

MEDIAN 30' OR LESS				
Design Speed	d	d_L	d_r	d_m
30	615	435	120	520
35	720	510	140	605
40	820	580	160	690
45	925	655	180	780
50	1025	725	200	860
55	1130	800	220	950
60	1230	870	240	1035
65	1335	945	260	1120

35'-50' MEDIAN				
Design Speed	d	d_L	d_r	d_m
30	670	475	105	585
35	780	555	120	680
40	890	630	140	780
45	1000	710	155	875
50	1110	790	170	970
55	1225	870	190	1070
60	1335	945	205	1165
65	1445	1025	225	1265

64' MEDIAN				
Design Speed	d	d_L	d_v	d_{vL}
30	540	385	510	435
35	630	450	595	500
40	720	510	680	575
45	810	575	760	645
50	900	640	845	720
55	990	700	930	790
60	1080	765	1015	865
65	1165	825	1100	935

INTERMEDIATE SEMI-TRAILERS (WB-40 & WB-50)

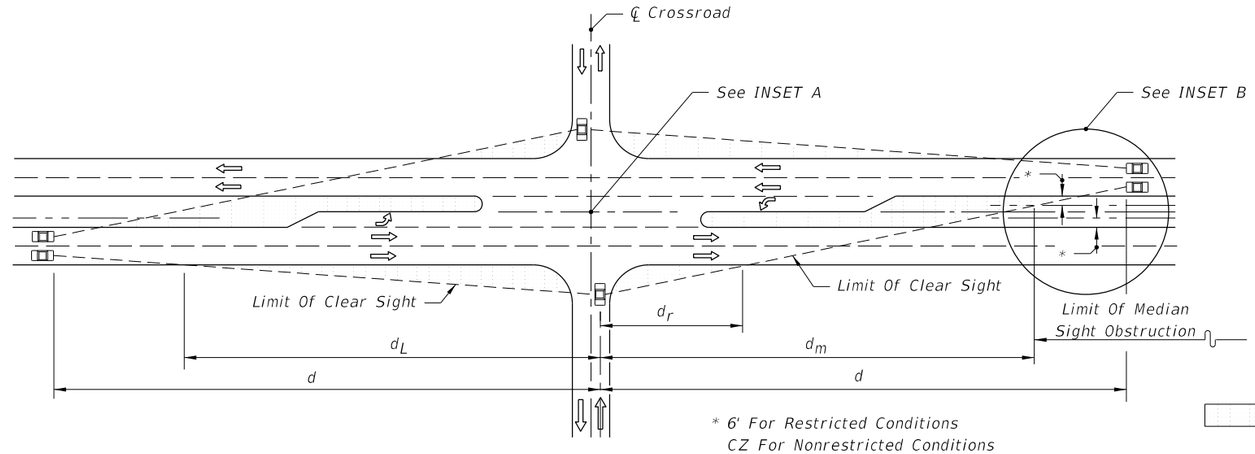

* 6' For Restricted Conditions
CZ For Nonrestricted Conditions
See Index No. 700

PLAN

PICTORIAL

LEGEND

Areas Free Of Sight Obstructions

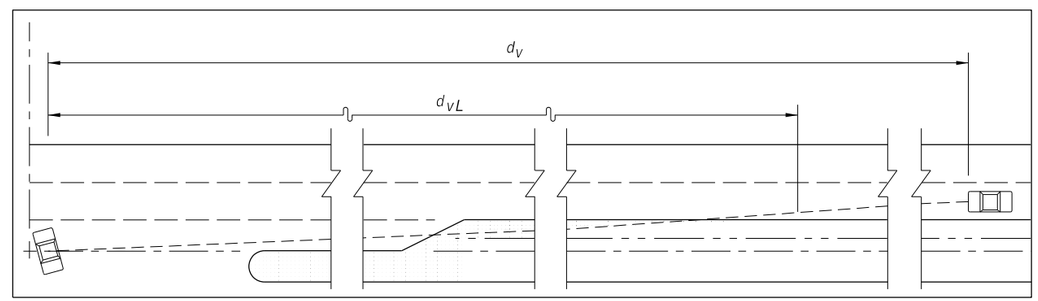

Where The Median Is Sufficiently Wide For The Design Vehicle To Pause In The Median Vehicle Length Plus 6' Min.) The Clear Line Of Sight To The Right (d_V) Is Measured From The Vehicle Pause Location, i.e., Not From The Cross Road Stop Position; Distances d_r & d_m Do Not Apply.

INSET A

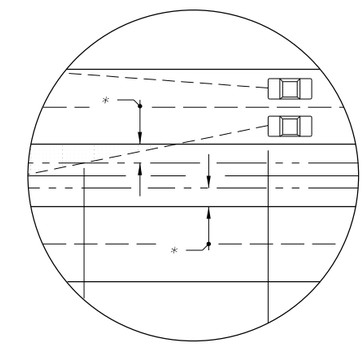

INSET B

Vehicle Type	Vehicle Length (Ft.)
Passenger (P)	19
Single Unit (SU)	30
Large School Bus	40
WB-40	45.5
WB-50	55

NOTES FOR 4-LANE DIVIDED ROADWAY

1. See Sheet 2 for origin of clear sight line on the minor road.
2. Values shown in the tables are the governing (controlling) sight distances calculated based on 'AASHTO Case B – Intersection with Stop Control on the Minor Road.'

SIGHT DISTANCES (d) & (d_v) AND RELATED DISTANCES (d_L, d_r, d_m & d_{VL}) (FEET)

4 LANE DIVIDED ROADWAY

6/9/2015 4:25:14 PM

LAST REVISION	REVISION	DESCRIPTION:			INDEX NO.	SHEET NO.
07/01/14			FDOT 2016 DESIGN STANDARDS	SIGHT DISTANCE AT INTERSECTIONS	546	5 of 6

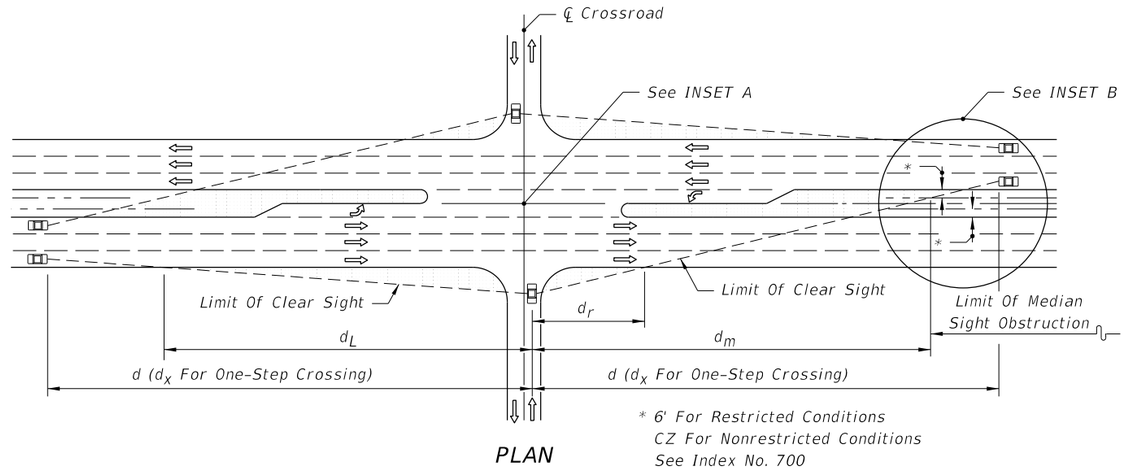

PLAN

PICTORIAL

LEGEND

Areas Free Of Sight Obstructions

MEDIAN 22' OR LESS				
Design Speed	d_x	d_L	d_r	d_m
30	415	295	80	355
35	485	345	90	415
40	555	395	105	470
45	625	445	115	530
50	690	490	130	585
55	760	540	140	645
60	830	590	155	705
65	900	640	170	765

25'-64' MEDIAN				
Design Speed	d	d_L	d_v	d_{vL}
30	375	265	330	240
35	440	315	385	280
40	500	355	445	320
45	565	400	500	360
50	625	445	555	400
55	690	490	610	440
60	750	530	665	480
65	815	580	720	520

PASSENGER VEHICLE (P)

MEDIAN 35' OR LESS				
Design Speed	d_x	d_L	d_r	d_m
30	570	405	90	495
35	665	470	105	580
40	760	540	120	660
45	855	605	135	745
50	955	675	155	830
55	1050	745	170	915
60	1145	810	185	995
65	1240	880	200	1080

40'-64' MEDIAN				
Design Speed	d	d_L	d_v	d_{vL}
30	480	340	420	330
35	560	400	490	385
40	640	455	560	440
45	720	510	630	490
50	805	570	700	545
55	885	625	770	600
60	965	685	840	665
65	1045	740	910	710

SINGLE-UNIT TRUCK (SU)

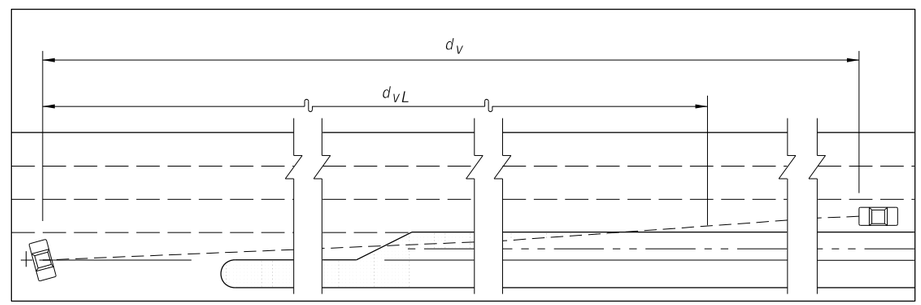

Where The Median Is Sufficiently Wide For The Design Vehicle To Pause In The Median (Vehicle Length Plus 6' Min.) The Clear Line Of Sight To The Right (d_V) Is Measured From The Vehicle Pause Location, i.e., Not From The Cross Road Stop Position; Distances d_r & d_m Do Not Apply.

INSET A

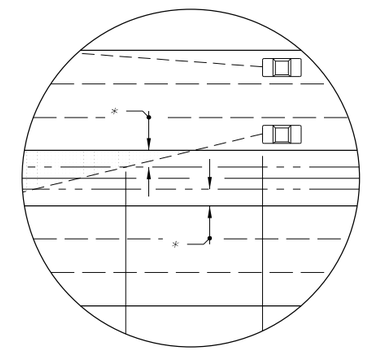

INSET B

MEDIAN 30' OR LESS				
Design Speed	d_x	d_L	d_r	d_m
30	650	460	110	560
35	755	535	130	655
40	865	615	145	745
45	970	690	165	835
50	1080	765	185	930
55	1185	840	200	1025
60	1290	915	220	1115
65	1400	990	235	1210

35'-50' MEDIAN				
Design Speed	d_x	d_L	d_r	d_m
30	700	495	95	625
35	815	580	115	725
40	930	660	130	825
45	1045	740	145	930
50	1165	825	160	1035
55	1280	905	175	1140
60	1395	990	190	1240
65	1510	1070	210	1340

64' MEDIAN				
Design Speed	d	d_L	d_v	d_{vL}
30	570	405	510	435
35	665	470	590	500
40	760	540	680	575
45	855	605	760	645
50	950	675	845	720
55	1045	740	930	790
60	1140	805	1015	865
65	1235	875	1100	935

INTERMEDIATE SEMI-TRAILERS (WB-40 & WB-50)

NOTES FOR 6-LANE DIVIDED ROADWAY

1. See Sheet 2 for origin of clear sight line on the minor road.
2. Values shown in the tables are the governing (controlling) sight distances calculated based on 'AASHTO Case B – Intersection with Stop Control on the Minor Road.'

SIGHT DISTANCES (d), (d_V) & (d_X) AND RELATED DISTANCES (d_L, d_r, d_m & d_{vL}) (FEET)

6 LANE DIVIDED

6/9/2015 4:25:15 PM

LAST REVISION	REVISION	DESCRIPTION:			INDEX NO.	SHEET NO.
07/01/14			FDOT 2016 DESIGN STANDARDS	SIGHT DISTANCE AT INTERSECTIONS	546	6 of 6

CROSSING SURFACES	
Type	Definition
C	Concrete
R	Rubber
RA	Rubber/Asphalt
TA	Timber/Asphalt

STOP ZONE FOR RUBBER CROSSING	
Design Speed (mph)	Zone Length (Distance From Stop)
45 Or Less	250'
50 - 55	350'
60 - 65	500'
70	600'

Notes:

1. Type R Crossings are NOT to be used for multiple track crossings within zones for an existing or scheduled future vehicular stop. Zone lengths are charted above.

2. Single track Type R Crossings within the zones on the chart may be used unless engineering or safety considerations dictate otherwise.

GENERAL NOTES

1. The Railroad Company will furnish and install all track bed (ballast), crossties, rails, crossing surface panels and accessory components. All pavement material, including that through the crossing, will be furnished and installed by the Department or its Contractor, unless negotiated otherwise.

2. When a railroad grade crossing is located within the limits of a highway construction project, a transition pavement will be maintained at the approaches of the crossing to reduce vehicular impacts to the crossing. The transition pavement will be maintained as appropriate to protect the crossing from low clearance vehicles and vehicular impacts until the construction project is completed and the final highway surface is constructed.

3. The Central Rail Office will maintain a list of currently used Railroad Crossing Products and will periodically distribute the current list to the District Offices as the list is updated.

4. The Railroad Company shall submit engineering drawings for the proposed crossing surface type to the Construction Project Engineer and/or the District Rail Office for concurrence along with the List of Railroad Crossing Products. The approved engineering drawings of the crossing surface type shall be made a part of the installation agreement.

5. Sidewalks shall be constructed through the crossing between approach sidewalks of the crossing. Sidewalks shall be constructed with appropriate material to allow unobstructed travel through the crossing in accordance with ADA requirements.

6. All asphalt shall be installed in accordance with Index No. 514 and Section 300 of the Standard Specifications.

7. The Department will participate in crossing work, that requires adjustments to rail outside of the crossing, no more than 50 feet from the edge of the travel way.

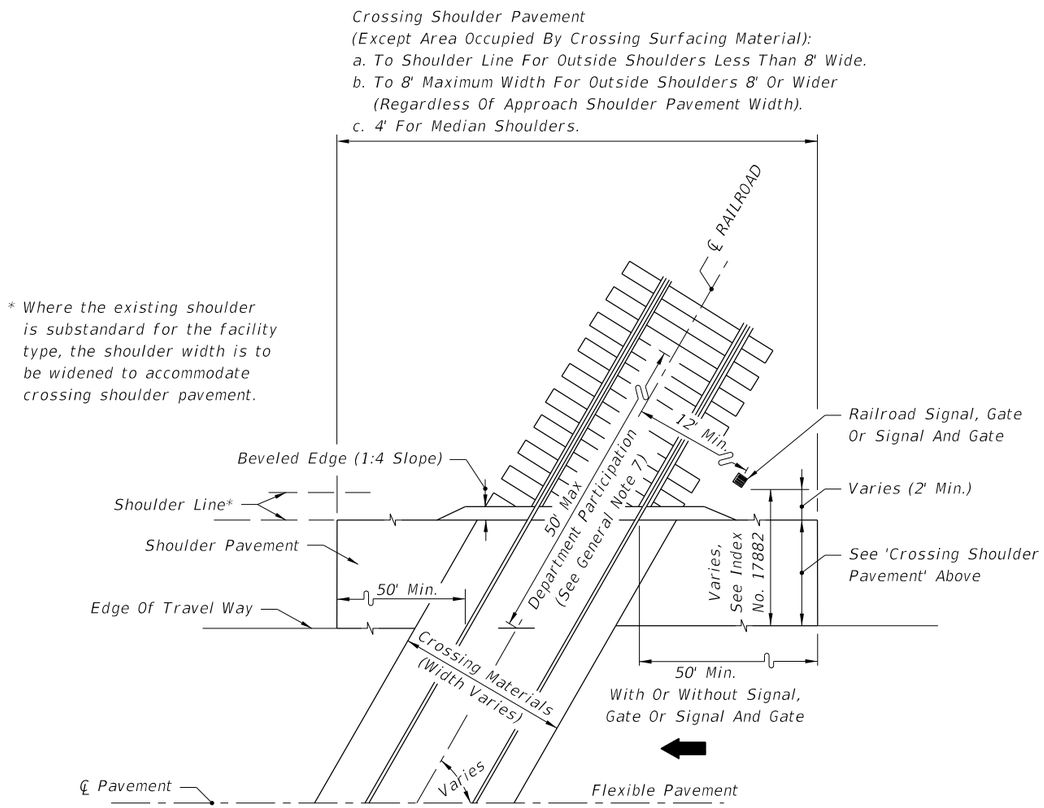

HALF PLAN
ROADWAYS WITH FLUSH SHOULDERS

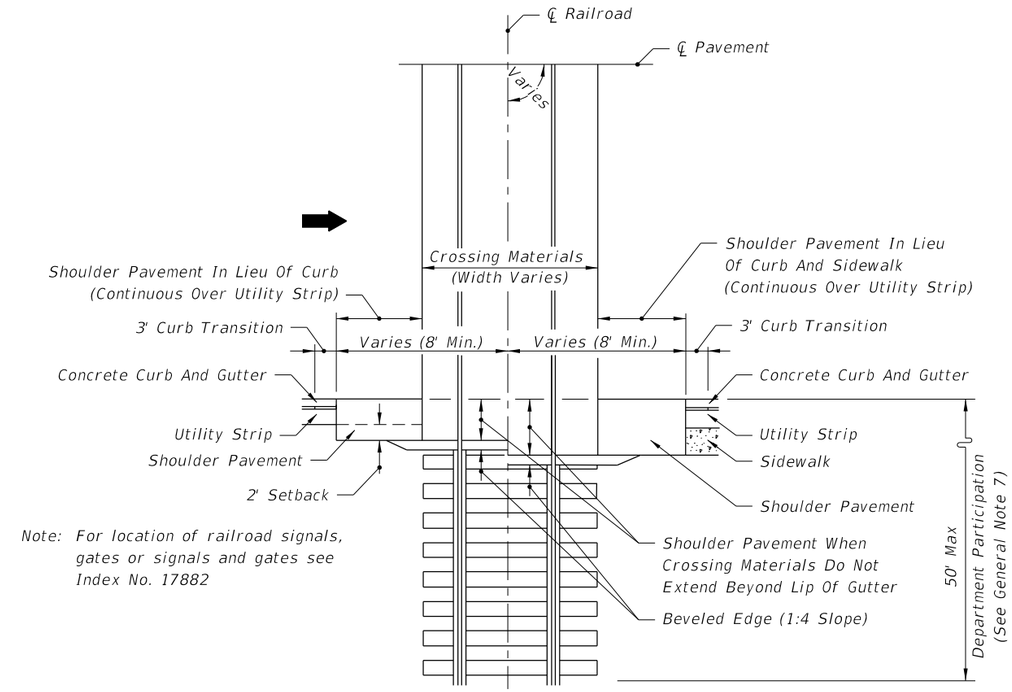

HALF PLAN
CURBED ROADWAYS

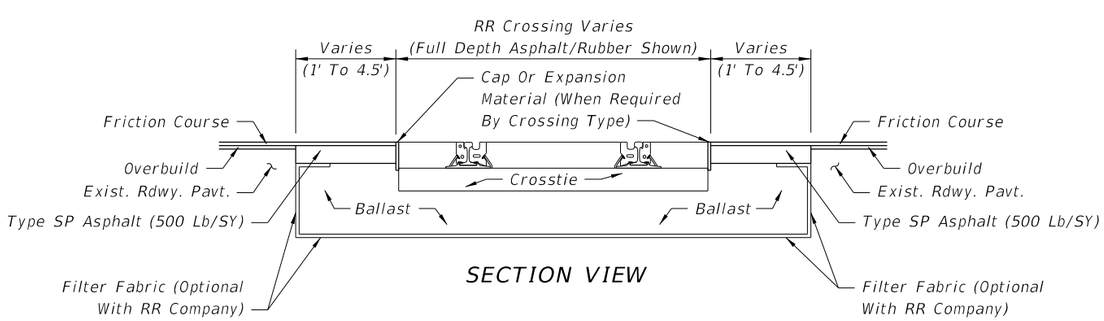

SECTION VIEW

TYPICAL CROSSING MATERIAL REPLACEMENT AT RR CROSSINGS

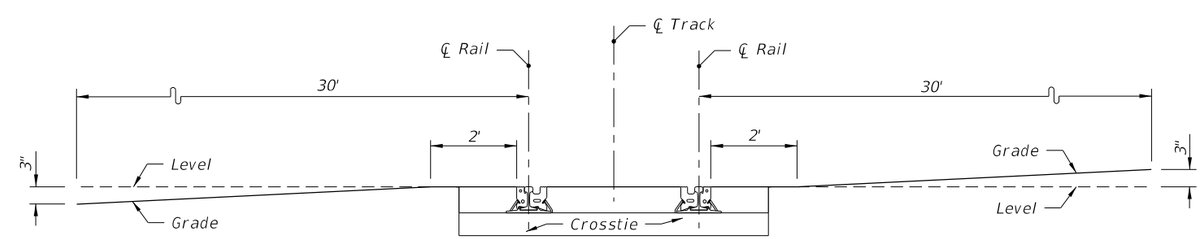

To prevent low-clearance vehicles from becoming caught on the tracks, the crossing surface should be at the same plane as the top of the rails for a distance of 2 feet outside the rails. The surface of the highway should also not be more than 3 inches higher or lower than the top of the nearest rail at a point 30 feet from the rail unless track superelevation makes a different level appropriate. Vertical curves should be used to traverse from the highway grade to a level plane at the elevation of the rails. Rails that are superelevated, or a roadway approach section that is not level, will necessitate a site specific analysis for rail clearances.

VERTICAL ROADWAY ALIGNMENT THROUGH A RAILROAD CROSSING

6/9/2015 8:36:33 AM

LAST REVISION	REVISION	DESCRIPTION:			INDEX NO.	SHEET NO.
01/01/10			FDOT 2016 DESIGN STANDARDS	RAILROAD CROSSING	560	2 of 2