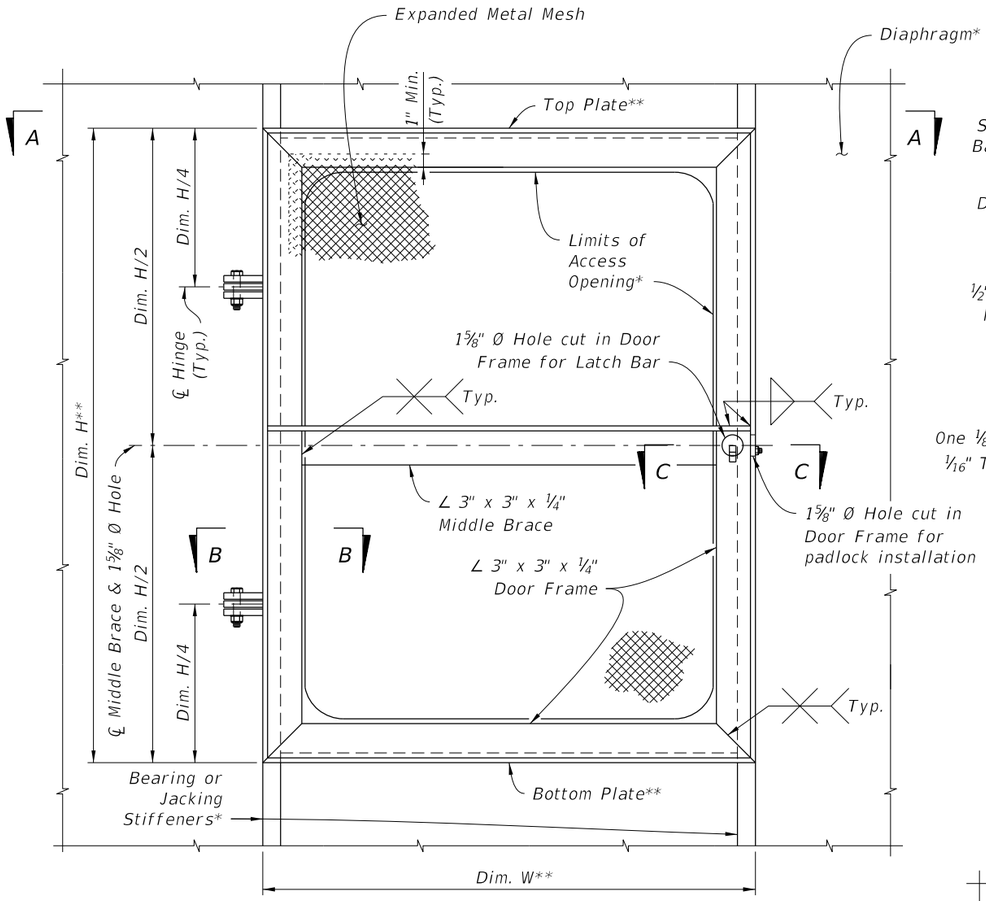

ELEVATION VIEW OF ACCESS DOOR ASSEMBLY
(At Access Opening in End Internal Diaphragm as seen from inside the Box Girder. Right Hand Door shown; Left Hand Door opposite hand)

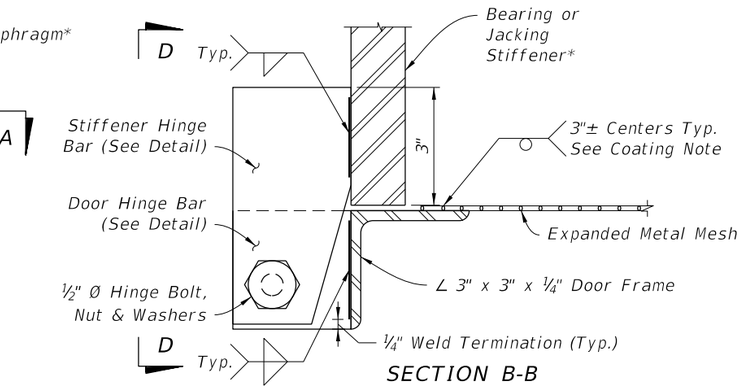

SECTION B-B

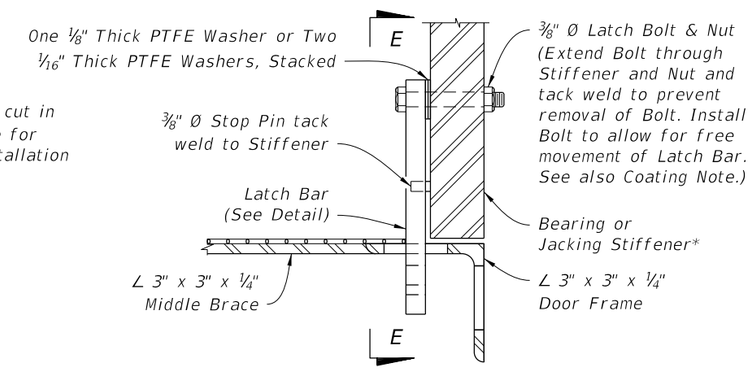

SECTION C-C

ACCESS DOOR NOTES:

STRUCTURAL STEEL:
Fabricate Door Assemblies using structural steel in accordance with Specification 962, any grade. Grind all exposed edges and burs smooth. Non-destructive testing of welds is not required. See Plans for details of Diaphragm, Stiffeners and Top and Bottom Plates.

EXPANDED METAL MESH:
Expanded metal mesh shall be ½" No. 16 expanded carbon steel metal mesh in accordance with ASTM F 1267, Type I or II, Class 2, Grade A.

BOLTS, NUTS AND STEEL WASHERS:
Bolts shall be stainless steel hex head bolts meeting the requirements of ASTM F 593, Type 316. Nuts shall be ASTM F 594, Type 316. Steel washers shall be stainless steel compatible with the bolts and nuts.

PTFE WASHERS:
PTFE washers shall be ¾" or 1" O.D. (nominal), 1/16" or 1/8" thick, sized for use with ⅜" or ½" diameter bolts as shown.

COATING:
Coat Access Door Assemblies after complete fabrication, including the expanded metal mesh, using an Interior Box Girder Coating System in accordance with Specification 975. Weld expanded metal mesh to the door frame after the door frame has been abrasive blast cleaned and prior to coating. Install Bolts and PTFE Washers after coating. Touch-up tack weld on Latch Bolt after welding.

DOOR HINGE LOCATION:
Place door hinges on the transverse downward side of the access opening.

PADLOCKS:
Provide a suitable keyed commercial grade, weather resistant padlock with a 2" shackle for each Access Door Assembly located at Bridge Abutments. Key all padlocks for Access Door Assemblies and Access Hatches (if present) on an individual bridge alike.

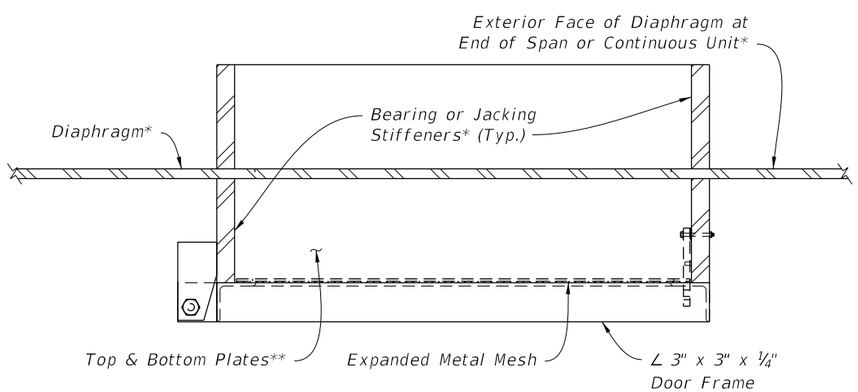

SECTION A-A

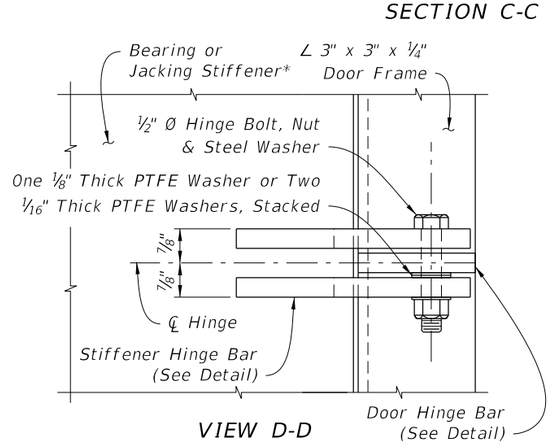

VIEW D-D

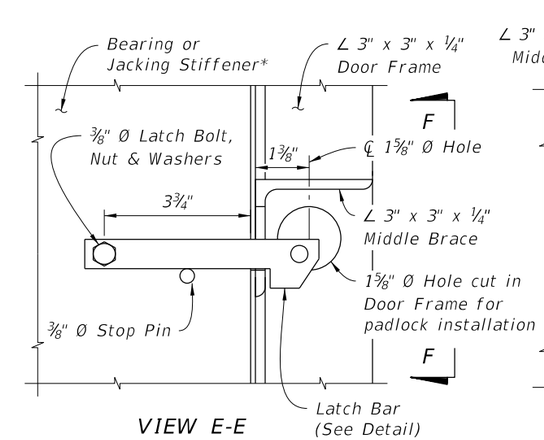

VIEW E-E

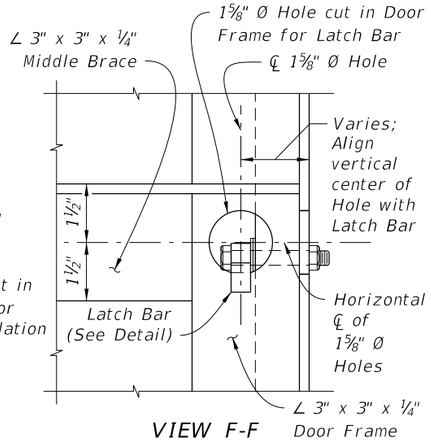

VIEW F-F

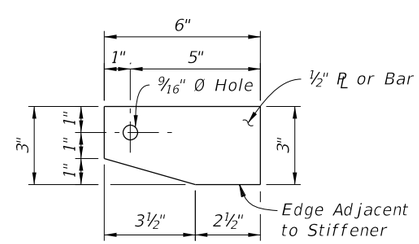

STIFFENER HINGE BAR DETAIL

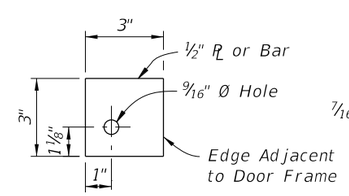

DOOR HINGE BAR DETAIL

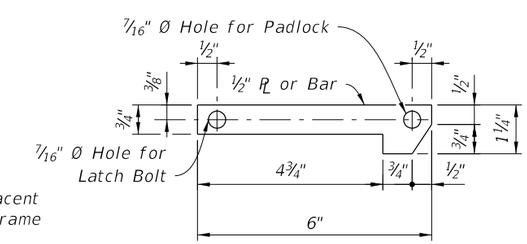

LATCH BAR DETAIL

* See Plans for dimensions and details.
** See Access Door Assembly for Steel Box Girders Data Table in the Plans for Dim. H & Dim. W.

6/24/2015 7:50:56 AM

LAST REVISION	REVISION	DESCRIPTION:			INDEX NO.	SHEET NO.
07/01/15			FDOT 2016 DESIGN STANDARDS	ACCESS DOOR ASSEMBLY FOR STEEL BOX SECTIONS	21252	1 of 1