FINANCIAL PROJECT ID	STATE PROJ. NO.	SHEET NO.

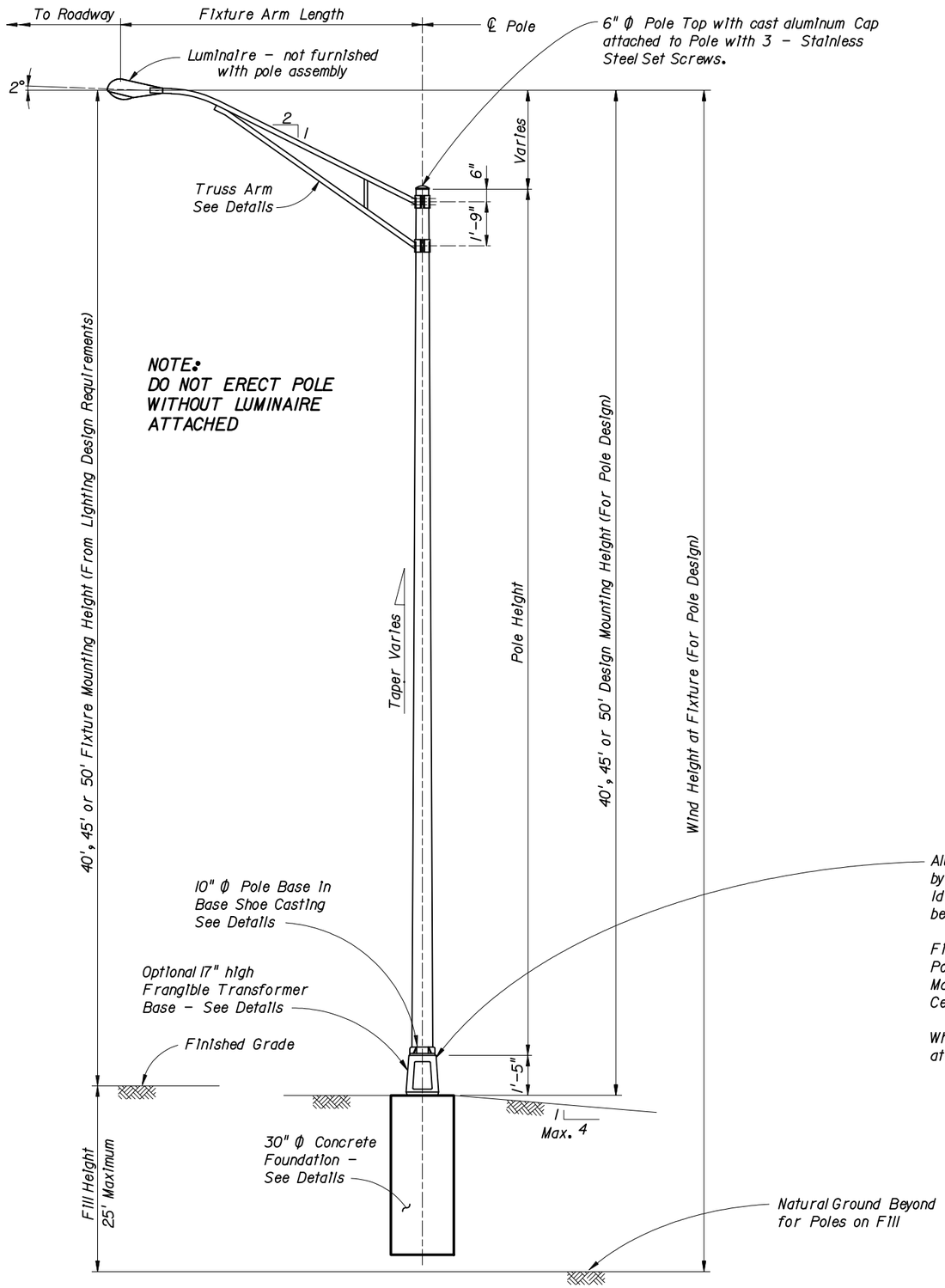

ELEVATION

ALUMINUM LIGHT POLE NOTES

1. Light Pole Materials shall be as follows:

Poles	->	ASTM B221 - ALLOY 6063-T6
Arm Pipes or Pipe Extrusions	->	ASTM B221 - ALLOY 6063-T6
Arm Connection Extrusions, Bars and Plates	->	ASTM B221 - ALLOY 6061-T6
Shoe Base Casting	->	ASTM B26 - ALLOY 356-T6
Aluminum Caps and Covers	->	ASTM B26 - ALLOY 356-T6
Frangible Transformer Base Casting	->	ASTM B26 - ALLOY 356-T6
Weld Metal	->	ER4043
Shoe Base Connection Bolts and Anchor Bolts	->	ASTM F1554 Grade 55
Nuts for Connection Bolts and Anchor Bolts	->	ASTM A563 Grade A Heavy Hex
Washers for Connection Bolts and Anchor Bolts	->	ASTM F436 Type 1
Stainless Steel Fasteners and Hardware	->	A.I.S.I. Grade 316

2. Aluminum alloys 6063, 6061 and 356 are to be furnished in T4 condition and heat treated to T6 condition after welding
3. Shoe Base Connection Bolts, Anchor Bolts, Nuts and Washers shall be galvanized in accordance with ASTM A153.
4. Foundation concrete shall be Class I (Special) with a minimum 28-day Compressive Strength (f'c) of 3,000 psi for all environmental classifications.
5. Reinforcing Steel shall be ASTM A615-96 Grade 60.
6. A design wind speed of 80, 100 or 110 mph with a 30% gust factor for wind loading on the pole is included in the design.
7. The pole shall be tapered as required to provide a top outside diameter (O.D.) of 6" with a base O.D. of 10". Portions of the shaft near the base shoe and at the arm connections may be held constant at 10" and 6" respectively to simplify fabrication .
8. All bolt hole diameters shall be equal to the bolt diameter plus $^1/_{16}$".
9. The pole shall be free of transverse welds except at the base.
10. Poles constructed out of two or more sections with overlapping splices are not permitted.
11. All welding shall conform to American Welding Society Structural Welding Code (Aluminum) ANSI/AWS D1.2 (current edition).
12. See Standard Index No. 17500 for grounding and wiring details.
13. The pole and arms shall be furnished with a 100 grit satin rubbed finish.
14. All designs to be in accordance with the AASHTO Standard Specifications for Structural Supports for Highway Signs , Luminaires and Traffic Signals.
15. The optional Transformer Base is to be a Certified FHWA approved breakaway device meeting the requirements of Section 7 of the 1994 issue of the referenced AASHTO Specifications.

Aluminum Identification Tag Not to Exceed 2" x 4". Secure to Transformer Base by 0.125" Stainless Steel rivets or screws. Fabricator to provide details for approval. Identification Tag Located on inside of base visible from door opening. Tag to be stamped with the following information :

Financial Project ID
Pole Design Designation (ie. Pole Pay Item Number)
Manufacturer's Name
Certification No.

Where the optional Transformer Base is omitted, the Identification Tag shall be attached to the Pole Base. Fabricator to provide details for approval.

INTERIM STANDARD IN ENGLISH UNITS APPLICABLE TO ROADWAY AND TRAFFIC DESIGN STANDARD BOOKLETS PUBLISHED IN EITHER ENGLISH OR METRIC UNITS.

THE SEALED RECORD OF THIS STANDARD IS ON FILE IN THE ROADWAY DESIGN OFFICE.

Date: 9-26-00

ELEVATION AND NOTES

STATE OF FLORIDA DEPARTMENT OF TRANSPORTATION

ALUMINUM LIGHT POLE

INTERIM STANDARD

WHEN INCLUDED IN THE PLANS SHEET NOS. 1-7 OF 7 ARE A SUPPLEMENT TO THE ROADWAY AND TRAFFIC DESIGN STANDARDS, ENGLISH AND METRIC BOOKLETS DATED JANUARY 2000.

APPROVED BY W. V. Blair
State Structures Design Engineer

REVISION NO.	SHEET NO.	INDEX NO.
	1 of 7	17515

FINANCIAL PROJECT ID	STATE PROJ. NO.	SHEET NO.

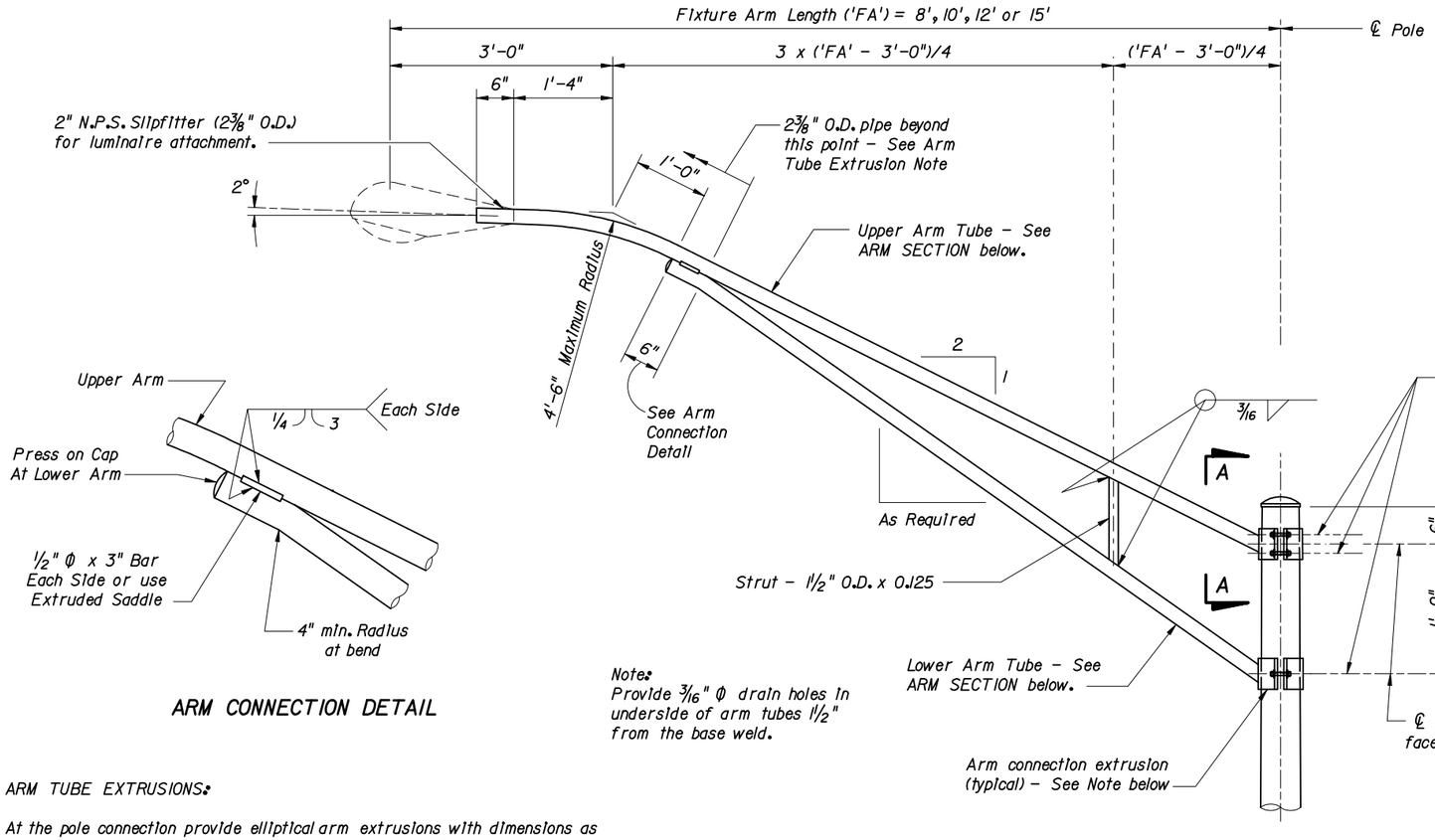

ARM CONNECTION DETAIL

Notes:
Provide 3/16" Φ drain holes in underside of arm tubes 1½" from the base weld.

ARM ELEVATION

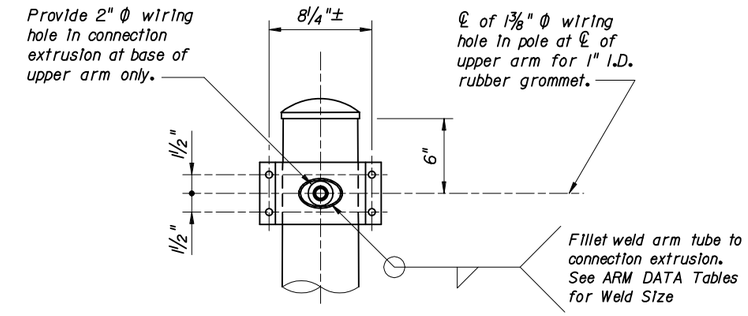

SECTION A-A
(Connection At Lower Arm Similar)

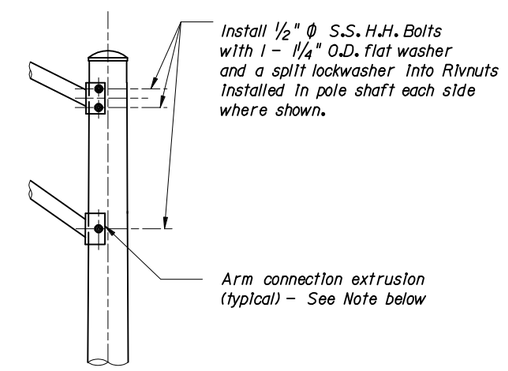

ALTERNATE ARM TO POLE CONNECTION

(See Section A-A for holes in pole and arm connection extrusion and vertical spacing of bolts at the upper arm)

ARM TUBE EXTRUSIONS:

At the pole connection provide elliptical arm extrusions with dimensions as shown in the ARM SECTION and as tabulated in the ARM DATA Tables. Uniformly transition elliptical extrusions to a cylindrical section at the arm connection.

The pole fabricator may substitute elliptical cross sections other than those tabulated, provided the section properties about the vertical axis and the area of the section equals or exceeds that of the required section, and provided the wall thickness is a minimum of ⅛".

The outside diameter about the minor axis should be held at 2⅜" at the upper arm and should not exceed 2⅜" at the lower arm.

ARM CONNECTION EXTRUSIONS:

Arm connection extrusions furnished by the pole fabricator are to be certified to be capable of transfering the arm connection forces shown in the ARM DATA Table for the required arm.

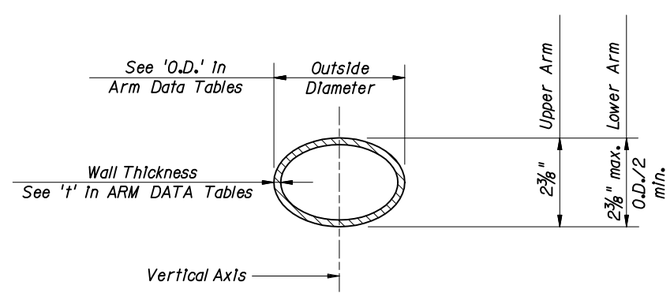

ARM SECTION

THE SEALED RECORD OF THIS STANDARD IS ON FILE IN THE ROADWAY DESIGN OFFICE.

INTERIM STANDARD IN ENGLISH UNITS APPLICABLE TO ROADWAY AND TRAFFIC DESIGN STANDARD BOOKLETS PUBLISHED IN EITHER ENGLISH OR METRIC UNITS.

Date: 9-26-00

ARM DETAILS

STATE OF FLORIDA DEPARTMENT OF TRANSPORTATION

ALUMINUM LIGHT POLE

INTERIM STANDARD

WHEN INCLUDED IN THE PLANS SHEET NOS. 1-7 OF 7 ARE A SUPPLEMENT TO THE ROADWAY AND TRAFFIC DESIGN STANDARDS. ENGLISH AND METRIC BOOKLETS DATED JANUARY 2000.

APPROVED BY W. H. Bates
State Structures Design Engineer

REVISION NO.	SHEET NO.	INDEX NO.
	2 of 7	17515

FINANCIAL PROJECT ID	STATE PROJ. NO.	SHEET NO.

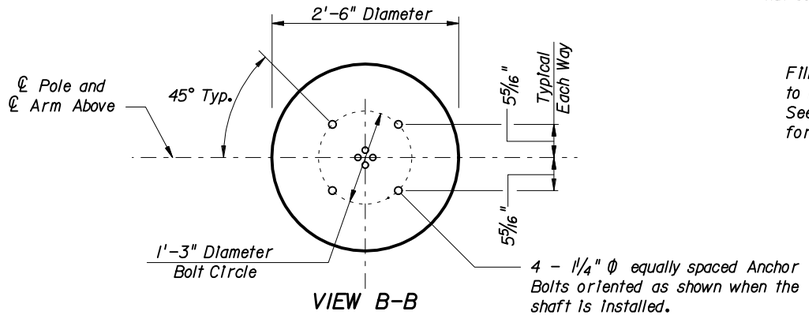

VIEW B-B

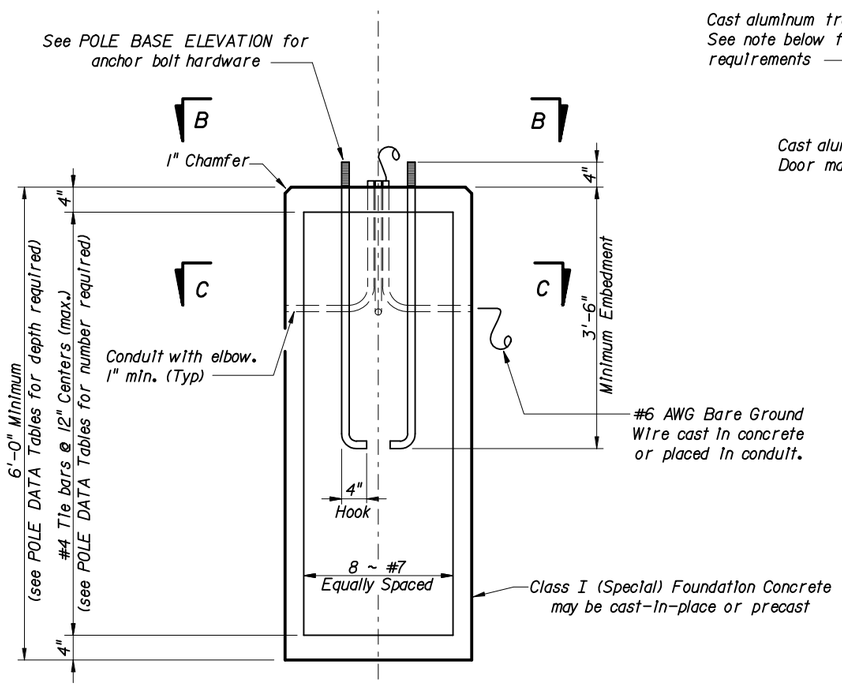

FOUNDATION

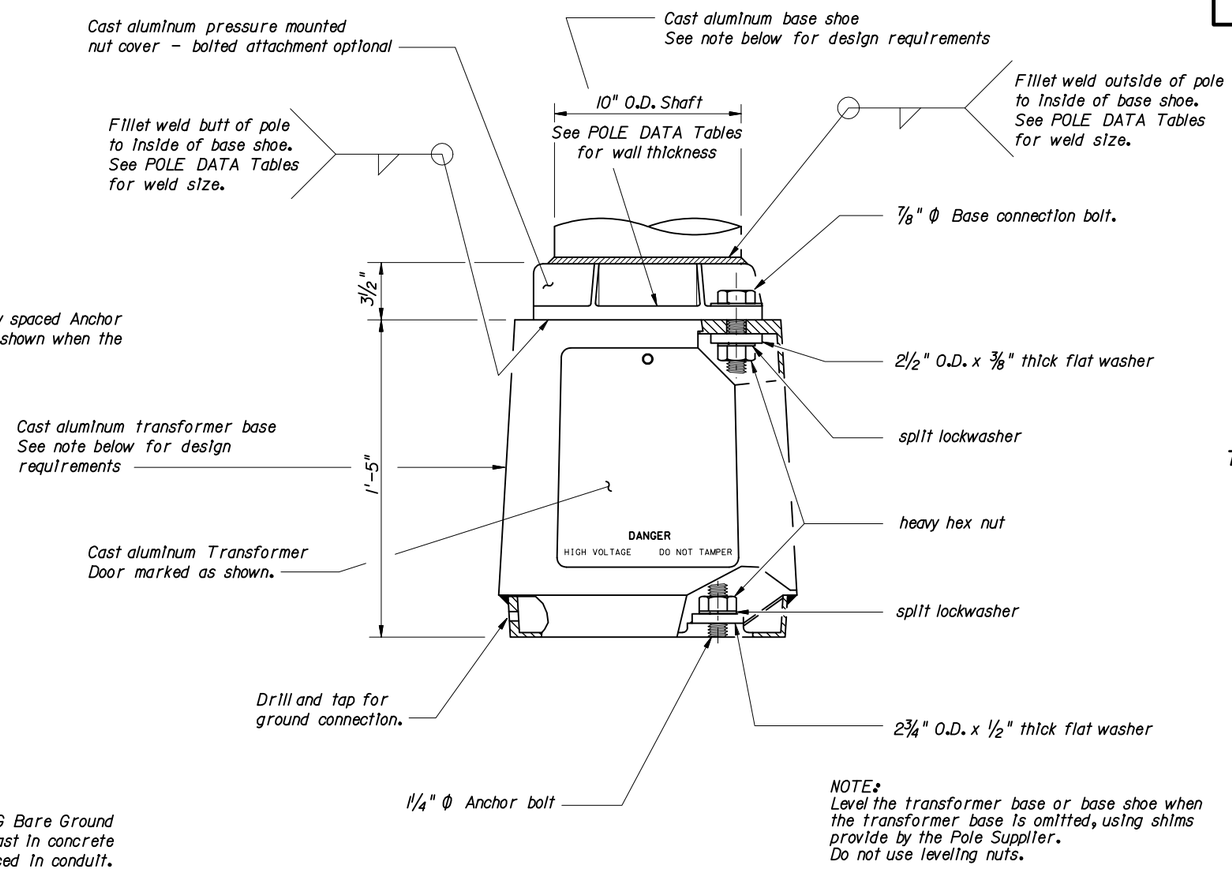

NOTE:
Level the transformer base or base shoe when the transformer base is omitted, using shims provide by the Pole Supplier.
Do not use leveling nuts.

POLE BASE ELEVATION

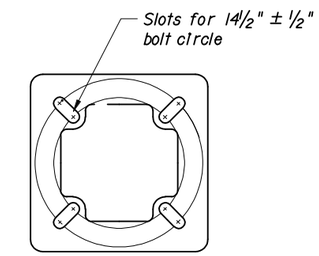

TOP VIEW
TRANSFORMER BASE

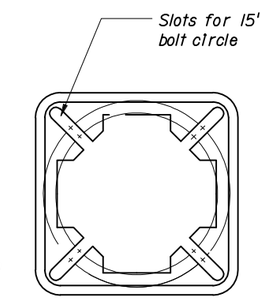

BOTTOM VIEW
TRANSFORMER BASE

BASE SHOE and TRANSFORMER BASE:
The fabricator shall provide a base shoe casting and transformer base casting capable of transmitting the design forces shown in the POLE DATA Tables.

The base shoe height shown is the minimum permitted.

Where the optional Transformer Base is omitted, the Base Shoe shall accommodate the 1'-3" bolt circle and 1 1/4" Φ anchor bolts.

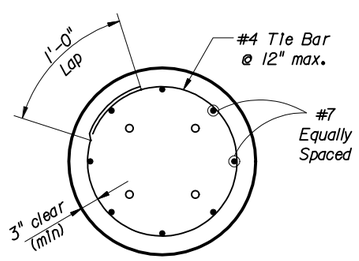

SECTION C-C

FOUNDATION NOTES:
The foundations for Aluminum Light Poles are pre-designed and are based upon the following conservative soil criteria which covers the great majority of soil types found in Florida:

Classification	=	Cohesionless (Fine Sand)
Friction Angle	=	30 Degrees (30°)
Unit Weight	=	50 lbs./cu. ft. (assumed saturated)
Unit Weight	=	112 lbs./cu. ft (assumed dry) for pole on fill.

Only in cases where the Designer considers the soil types at the specific site location to be of lesser strength properties should an analysis be required. Auger borings, SPT borings or CPT soundings may be utilized as needed to verify the assumed soil properties, and at relatively uniform sites, a single boring or sounding may cover several foundations. Furthermore, borings in the area that were performed for the other purposes may be used to confirm the assumed soil properties. In any event only the soil identification is required.

THE SEALED RECORD OF THIS STANDARD IS ON FILE IN THE ROADWAY DESIGN OFFICE.

INTERIM STANDARD IN ENGLISH UNITS APPLICABLE TO ROADWAY AND TRAFFIC DESIGN STANDARD BOOKLETS PUBLISHED IN EITHER ENGLISH OR METRIC UNITS.

BASE DETAILS

STATE OF FLORIDA DEPARTMENT OF TRANSPORTATION

ALUMINUM LIGHT POLE

INTERIM STANDARD

WHEN INCLUDED IN THE PLANS SHEET NOS. 1-7 OF 7 ARE A SUPPLEMENT TO THE ROADWAY AND TRAFFIC DESIGN STANDARDS. ENGLISH AND METRIC BOOKLETS DATED JANUARY 2000.

APPROVED BY
State Structures Design Engineer

REVISION NO.	SHEET NO.	INDEX NO.
	3 of 7	17515

Date: 9-26-00

FINANCIAL PROJECT ID	STATE PROJ. NO.	SHEET NO.

8 FT. ARM DATA

CASE NO.	WIND HEIGHT (FT.)	WIND SPEED (MPH)	UPPER ARM O.D. (IN.)	UPPER ARM t (IN.)	UPPER ARM WELD (IN.)	UPPER ARM MOMENT (FT. KIP)	UPPER ARM SHEAR (KIP)	UPPER ARM N * (KIP)	LOWER ARM O.D. (IN.)	LOWER ARM t (IN.)	LOWER ARM WELD (IN.)	LOWER ARM MOMENT (FT. KIP)	LOWER ARM SHEAR (KIP)	LOWER ARM N * (KIP)
1	40	80	2.375	0.125	0.250	0.429	0.107	0.253	2.375	0.125	0.250	0.160	0.040	0.253
2	40	100	2.375	0.125	0.375	0.671	0.158	0.253	2.375	0.125	0.250	0.250	0.059	0.253
3	45	80	2.375	0.125	0.250	0.437	0.109	0.253	2.375	0.125	0.250	0.163	0.041	0.253
4	45	100	2.375	0.125	0.375	0.682	0.160	0.253	2.375	0.125	0.250	0.255	0.060	0.253
5	50	80	2.375	0.125	0.250	0.443	0.110	0.253	2.375	0.125	0.250	0.166	0.041	0.253
6	50	100	2.375	0.125	0.375	0.693	0.163	0.253	2.375	0.125	0.250	0.259	0.061	0.253
7	55	110	3.125	0.125	0.375	0.940	0.212	0.255	2.375	0.125	0.250	0.182	0.041	0.255
8	60	110	3.125	0.125	0.375	0.952	0.214	0.255	2.375	0.125	0.250	0.185	0.042	0.255
9	65	110	3.125	0.125	0.375	0.963	0.217	0.255	2.375	0.125	0.250	0.187	0.042	0.255
10	70	110	3.125	0.125	0.375	0.973	0.219	0.255	2.375	0.125	0.250	0.189	0.042	0.255
11	75	110	3.125	0.125	0.375	0.983	0.221	0.255	2.375	0.125	0.250	0.191	0.043	0.255

10 FT. ARM DATA

CASE NO.	WIND HEIGHT (FT.)	WIND SPEED (MPH)	UPPER ARM O.D. (IN.)	UPPER ARM t (IN.)	UPPER ARM WELD (IN.)	UPPER ARM MOMENT (FT. KIP)	UPPER ARM SHEAR (KIP)	UPPER ARM N * (KIP)	LOWER ARM O.D. (IN.)	LOWER ARM t (IN.)	LOWER ARM WELD (IN.)	LOWER ARM MOMENT (FT. KIP)	LOWER ARM SHEAR (KIP)	LOWER ARM N * (KIP)
1	40	80	2.375	0.125	0.375	0.605	0.121	0.327	2.375	0.125	0.250	0.262	0.052	0.327
2	40	100	3.000	0.125	0.375	0.798	0.146	0.334	3.000	0.125	0.250	0.415	0.076	0.334
3	45	80	2.375	0.125	0.375	0.616	0.123	0.327	2.375	0.125	0.250	0.266	0.053	0.327
4	45	100	3.000	0.125	0.375	0.812	0.148	0.334	3.000	0.125	0.250	0.422	0.077	0.334
5	50	80	2.375	0.125	0.375	0.625	0.125	0.327	2.375	0.125	0.250	0.270	0.054	0.327
6	50	100	3.000	0.125	0.375	0.824	0.150	0.334	3.000	0.125	0.250	0.429	0.078	0.334
7	55	110	3.125	0.125	0.438	1.042	0.186	0.335	3.000	0.125	0.313	0.492	0.088	0.335
8	60	110	3.125	0.125	0.438	1.055	0.188	0.335	3.000	0.125	0.313	0.498	0.089	0.335
9	65	110	3.125	0.125	0.438	1.068	0.191	0.335	3.000	0.125	0.313	0.504	0.090	0.335
10	70	110	3.125	0.125	0.438	1.079	0.192	0.335	3.000	0.125	0.313	0.509	0.091	0.335
11	75	110	3.125	0.125	0.438	1.090	0.194	0.335	3.000	0.125	0.313	0.514	0.092	0.335

12 FT. ARM DATA

CASE NO.	WIND HEIGHT (FT.)	WIND SPEED (MPH)	UPPER ARM O.D. (IN.)	UPPER ARM t (IN.)	UPPER ARM WELD (IN.)	UPPER ARM MOMENT (FT. KIP)	UPPER ARM SHEAR (KIP)	UPPER ARM N * (KIP)	LOWER ARM O.D. (IN.)	LOWER ARM t (IN.)	LOWER ARM WELD (IN.)	LOWER ARM MOMENT (FT. KIP)	LOWER ARM SHEAR (KIP)	LOWER ARM N * (KIP)
1	40	80	3.000	0.125	0.375	0.673	0.110	0.416	3.000	0.125	0.250	0.379	0.062	0.416
2	40	100	3.125	0.125	0.438	1.033	0.159	0.419	3.125	0.125	0.313	0.600	0.092	0.419
3	45	80	3.000	0.125	0.313	0.685	0.112	0.416	3.000	0.125	0.250	0.386	0.063	0.416
4	45	100	3.125	0.125	0.438	1.051	0.161	0.419	3.125	0.125	0.313	0.611	0.094	0.419
5	50	80	3.000	0.125	0.313	0.695	0.113	0.416	3.000	0.125	0.250	0.392	0.064	0.416
6	50	100	3.125	0.125	0.438	1.068	0.164	0.419	3.125	0.125	0.313	0.620	0.095	0.419
7	55	110	3.500	0.125	0.438	1.250	0.188	0.425	3.500	0.125	0.313	0.789	0.119	0.425
8	60	110	3.500	0.125	0.438	1.266	0.190	0.425	3.500	0.125	0.313	0.799	0.120	0.425
9	65	110	3.500	0.125	0.438	1.280	0.192	0.425	3.500	0.125	0.375	0.808	0.121	0.425
10	70	110	3.500	0.125	0.438	1.294	0.194	0.425	3.500	0.125	0.375	0.817	0.123	0.425
11	75	110	3.500	0.125	0.438	1.307	0.196	0.425	3.500	0.125	0.375	0.825	0.124	0.425

15 FT. ARM DATA

CASE NO.	WIND HEIGHT (FT.)	WIND SPEED (MPH)	UPPER ARM O.D. (IN.)	UPPER ARM t (IN.)	UPPER ARM WELD (IN.)	UPPER ARM MOMENT (FT. KIP)	UPPER ARM SHEAR (KIP)	UPPER ARM N * (KIP)	LOWER ARM O.D. (IN.)	LOWER ARM t (IN.)	LOWER ARM WELD (IN.)	LOWER ARM MOMENT (FT. KIP)	LOWER ARM SHEAR (KIP)	LOWER ARM N * (KIP)
1	40	80	3.500	0.125	0.313	0.896	0.119	0.565	3.500	0.125	0.250	0.605	0.080	0.565
2	40	100	4.000	0.125	0.375	1.322	0.165	0.580	4.000	0.125	0.313	0.979	0.122	0.580
3	45	80	3.500	0.125	0.313	0.912	0.120	0.565	3.500	0.125	0.250	0.616	0.081	0.565
4	45	100	4.000	0.125	0.375	1.345	0.167	0.580	4.000	0.125	0.313	0.996	0.124	0.580
5	50	80	3.500	0.125	0.313	0.927	0.122	0.565	3.500	0.125	0.250	0.625	0.082	0.565
6	50	100	4.000	0.125	0.375	1.366	0.170	0.580	4.000	0.125	0.313	1.012	0.126	0.580
7	55	110	4.500	0.125	0.375	1.596	0.195	0.595	4.500	0.125	0.313	1.278	0.156	0.595
8	60	110	4.500	0.125	0.375	1.617	0.197	0.595	4.500	0.125	0.313	1.294	0.158	0.595
9	65	110	4.500	0.125	0.375	1.636	0.199	0.595	4.500	0.125	0.313	1.309	0.159	0.595
10	70	110	4.500	0.125	0.375	1.654	0.201	0.595	4.500	0.125	0.313	1.324	0.161	0.595
11	75	110	4.500	0.125	0.375	1.670	0.203	0.595	4.500	0.125	0.313	1.337	0.163	0.595

* 'N' equals force normal to face of connection due to axial force in the arm - tension upper arm - compression lower arm.

INTERIM STANDARD IN ENGLISH UNITS APPLICABLE TO ROADWAY AND TRAFFIC DESIGN STANDARD BOOKLETS PUBLISHED IN EITHER ENGLISH OR METRIC UNITS.

THE SEALED RECORD OF THIS STANDARD IS ON FILE IN THE ROADWAY DESIGN OFFICE.

Date: 9-26-00

ARM DATA

STATE OF FLORIDA DEPARTMENT OF TRANSPORTATION

ALUMINUM LIGHT POLE

INTERIM STANDARD

WHEN INCLUDED IN THE PLANS SHEET NOS. 1-7 OF 7 ARE A SUPPLEMENT TO THE ROADWAY AND TRAFFIC DESIGN STANDARDS. ENGLISH AND METRIC BOOKLETS DATED JANUARY 2000.

APPROVED BY W. N. Phillips
State Structures Design Engineer

REVISION NO.	SHEET NO.	INDEX NO.
	4 of 7	17515

FINANCIAL PROJECT ID	STATE PROJ. NO.	SHEET NO.

DATA FOR POLE WITH 8 FT. ARM

CASE No.	WIND HEIGHT (FT.)	WIND SPEED (MPH)	POLE WALL (IN.)	UPPER WELD (IN.)	LOWER WELD (IN.)	BASE FORCES MOMENT (FT.-KIP)	BASE FORCES SHEAR (KIP)	BASE FORCES TORSION (FT.-KIP)	BASE FORCES AXIAL (KIP)	FOUNDATION DEPTH (FT.)	FOUNDATION #4 BAR (No.)
1	40	80	0.125	0.250	0.250	13.259	0.508	0.590	0.199	6.000	7
2	40	100	0.156	0.250	0.250	17.946	0.689	0.921	0.231	6.333	7
3	45	80	0.125	0.250	0.250	13.573	0.529	0.600	0.199	6.000	7
4	45	100	0.156	0.250	0.250	18.401	0.719	0.937	0.231	6.333	7
5	50	80	0.125	0.250	0.250	13.845	0.544	0.609	0.199	6.000	7
6	50	100	0.156	0.250	0.250	18.762	0.740	0.951	0.231	6.000	7
7	55	110	0.188	0.250	0.250	21.571	0.873	1.122	0.265	6.000	7
8	60	110	0.188	0.250	0.250	21.901	0.890	1.136	0.265	6.000	7
9	65	110	0.188	0.250	0.250	22.209	0.906	1.149	0.265	6.000	7

DATA FOR POLE WITH 10 FT. ARM

CASE No.	WIND HEIGHT (FT.)	WIND SPEED (MPH)	POLE WALL (IN.)	UPPER WELD (IN.)	LOWER WELD (IN.)	BASE FORCES MOMENT (FT.-KIP)	BASE FORCES SHEAR (KIP)	BASE FORCES TORSION (FT.-KIP)	BASE FORCES AXIAL (KIP)	FOUNDATION DEPTH (FT.)	FOUNDATION #4 BAR (No.)
1	40	80	0.125	0.250	0.250	13.898	0.525	0.867	0.199	6.000	7
2	40	100	0.156	0.250	0.250	17.512	0.677	1.213	0.234	6.333	7
3	45	80	0.140	0.250	0.250	14.243	0.547	0.882	0.214	6.333	7
4	45	100	0.156	0.250	0.250	17.919	0.707	1.234	0.234	6.333	7
5	50	80	0.140	0.250	0.250	14.508	0.561	0.896	0.214	6.000	7
6	50	100	0.156	0.250	0.250	18.308	0.728	1.253	0.234	6.000	7
7	55	110	0.188	0.250	0.250	21.718	0.876	1.534	0.267	6.000	7
8	60	110	0.188	0.250	0.250	22.039	0.893	1.553	0.267	6.000	7
9	65	110	0.188	0.250	0.250	22.338	0.908	1.571	0.267	6.000	7

DATA FOR POLE WITH 12 FT. ARM

CASE No.	WIND HEIGHT (FT.)	WIND SPEED (MPH)	POLE WALL (IN.)	UPPER WELD (IN.)	LOWER WELD (IN.)	BASE FORCES MOMENT (FT.-KIP)	BASE FORCES SHEAR (KIP)	BASE FORCES TORSION (FT.-KIP)	BASE FORCES AXIAL (KIP)	FOUNDATION DEPTH (FT.)	FOUNDATION #4 BAR (No.)
1	40	80	0.125	0.250	0.250	13.268	0.508	1.052	0.203	6.000	7
2	40	100	0.156	0.250	0.250	18.120	0.693	1.633	0.234	6.333	7
3	45	80	0.125	0.250	0.250	13.566	0.529	1.071	0.203	6.000	7
4	45	100	0.156	0.250	0.250	18.592	0.724	1.662	0.234	6.333	7
5	50	80	0.125	0.250	0.250	13.861	0.545	1.087	0.203	6.000	7
6	50	100	0.156	0.250	0.250	18.935	0.744	1.688	0.234	6.000	7
7	55	110	0.188	0.250	0.250	22.294	0.890	2.038	0.269	6.000	7
8	60	110	0.188	0.250	0.250	22.644	0.908	2.064	0.269	6.000	7
9	65	110	0.188	0.250	0.250	22.973	0.924	2.088	0.269	6.000	7

DATA FOR POLE WITH 15 FT. ARM

CASE No.	WIND HEIGHT (FT.)	WIND SPEED (MPH)	POLE WALL (IN.)	UPPER WELD (IN.)	LOWER WELD (IN.)	BASE FORCES MOMENT (FT.-KIP)	BASE FORCES SHEAR (KIP)	BASE FORCES TORSION (FT.-KIP)	BASE FORCES AXIAL (KIP)	FOUNDATION DEPTH (FT.)	FOUNDATION #4 BAR (No.)
1	40	80	0.125	0.250	0.250	13.584	0.516	1.501	0.209	6.000	7
2	40	100	0.156	0.250	0.250	18.612	0.705	2.300	0.243	6.333	7
3	45	80	0.140	0.250	0.250	13.907	0.538	1.528	0.224	6.333	7
4	45	100	0.156	0.250	0.250	19.069	0.736	2.341	0.243	6.333	7
5	50	80	0.140	0.250	0.250	14.190	0.553	1.552	0.224	6.000	7
6	50	100	0.188	0.250	0.250	19.435	0.757	2.378	0.273	6.000	7
7	55	110	0.188	0.250	0.250	22.933	0.906	2.874	0.277	6.000	7
8	60	110	0.188	0.250	0.250	23.305	0.924	2.911	0.277	6.000	7
9	65	110	0.250	0.250	0.250	23.622	0.940	2.945	0.335	6.000	7

NOTE:
Pole wall thicknesses shown in the POLE DATA Tables are minimums. Thicker walls are permitted and tapered walls may be used provided the minimum thickness is not violated.

INTERIM STANDARD IN ENGLISH UNITS APPLICABLE TO ROADWAY AND TRAFFIC DESIGN STANDARD BOOKLETS PUBLISHED IN EITHER ENGLISH OR METRIC UNITS.

THE SEALED RECORD OF THIS STANDARD IS ON FILE IN THE ROADWAY DESIGN OFFICE.

Date: 9-26-00

POLE DATA - 40 FT. MOUNTING HEIGHT

STATE OF FLORIDA DEPARTMENT OF TRANSPORTATION

ALUMINUM LIGHT POLE

INTERIM STANDARD

WHEN INCLUDED IN THE PLANS SHEET NOS. 1-7 OF 7 ARE A SUPPLEMENT TO THE ROADWAY AND TRAFFIC DESIGN STANDARDS. ENGLISH AND METRIC BOOKLETS DATED JANUARY 2000.

APPROVED BY W. N. Phillips
State Structures Design Engineer

REVISION NO.	SHEET NO.	INDEX NO.
	5 of 7	17515

FINANCIAL PROJECT ID	STATE PROJ. NO.	SHEET NO.

DATA FOR POLE WITH 8 FT. ARM

CASE No.	WIND HEIGHT (FT.)	WIND SPEED (MPH)	POLE WALL (IN.)	UPPER WELD (IN.)	LOWER WELD (IN.)	BASE FORCES MOMENT (FT.-KIP)	SHEAR (KIP)	TORSION (FT.-KIP)	AXIAL (KIP)	FOUNDATION DEPTH (FT.)	#4 BAR (No.)
1	45	80	0.140	0.250	0.250	16.364	0.567	0.600	0.234	6.000	7
2	45	100	0.188	0.250	0.250	22.019	0.765	0.937	0.291	6.667	7
3	50	80	0.140	0.250	0.250	16.727	0.589	0.609	0.234	6.333	7
4	50	100	0.188	0.250	0.250	22.500	0.796	0.951	0.291	7.000	8
5	55	110	0.250	0.250	0.250	25.899	0.944	1.122	0.364	6.000	7
6	60	110	0.250	0.250	0.250	26.318	0.965	1.136	0.364	6.000	7
7	65	110	0.250	0.250	0.250	26.705	0.983	1.149	0.364	6.000	7
8	70	110	0.250	0.250	0.250	27.024	0.998	1.162	0.364	6.000	7

DATA FOR POLE WITH 10 FT. ARM

CASE No.	WIND HEIGHT (FT.)	WIND SPEED (MPH)	POLE WALL (IN.)	UPPER WELD (IN.)	LOWER WELD (IN.)	BASE FORCES MOMENT (FT.-KIP)	SHEAR (KIP)	TORSION (FT.-KIP)	AXIAL (KIP)	FOUNDATION DEPTH (FT.)	#4 BAR (No.)
1	45	80	0.140	0.250	0.250	17.118	0.584	0.882	0.234	6.333	7
2	45	100	0.188	0.250	0.250	21.476	0.753	1.234	0.293	6.667	7
3	50	80	0.156	0.250	0.250	17.473	0.606	0.896	0.253	6.333	7
4	50	100	0.188	0.250	0.250	21.988	0.784	1.253	0.293	6.667	7
5	55	110	0.250	0.250	0.250	26.065	0.947	1.534	0.364	6.000	7
6	60	110	0.250	0.250	0.250	26.474	0.967	1.553	0.364	6.000	7
7	65	110	0.250	0.250	0.250	26.852	0.985	1.571	0.364	6.000	7
8	70	110	0.250	0.250	0.250	27.206	1.002	1.588	0.364	6.000	7

DATA FOR POLE WITH 12 FT. ARM

CASE No.	WIND HEIGHT (FT.)	WIND SPEED (MPH)	POLE WALL (IN.)	UPPER WELD (IN.)	LOWER WELD (IN.)	BASE FORCES MOMENT (FT.-KIP)	SHEAR (KIP)	TORSION (FT.-KIP)	AXIAL (KIP)	FOUNDATION DEPTH (FT.)	#4 BAR (No.)
1	45	80	0.156	0.250	0.250	13.366	0.567	1.071	0.256	6.333	7
2	45	100	0.188	0.250	0.250	22.236	0.770	1.662	0.293	7.000	8
3	50	80	0.156	0.250	0.250	16.740	0.589	1.087	0.256	6.333	7
4	50	100	0.188	0.250	0.250	22.697	0.800	1.688	0.293	7.000	8
5	55	110	0.250	0.250	0.250	26.717	0.961	2.038	0.365	6.000	7
6	60	110	0.250	0.250	0.250	27.159	0.982	2.064	0.365	6.000	7
7	65	110	0.250	0.250	0.250	27.571	1.001	2.088	0.365	6.000	7
8	70	110	0.250	0.250	0.250	27.917	1.017	2.111	0.365	6.000	7

DATA FOR POLE WITH 15 FT. ARM

CASE No.	WIND HEIGHT (FT.)	WIND SPEED (MPH)	POLE WALL (IN.)	UPPER WELD (IN.)	LOWER WELD (IN.)	BASE FORCES MOMENT (FT.-KIP)	SHEAR (KIP)	TORSION (FT.-KIP)	AXIAL (KIP)	FOUNDATION DEPTH (FT.)	#4 BAR (No.)
1	45	80	0.140	0.250	0.250	16.731	0.575	1.528	0.243	6.333	7
2	45	100	0.250	0.250	0.250	22.775	0.782	2.341	0.366	7.000	8
3	50	80	0.156	0.250	0.250	17.106	0.597	1.552	0.261	6.333	7
4	50	100	0.250	0.250	0.250	23.262	0.813	2.378	0.366	7.000	8
5	55	110	0.250	0.250	0.250	27.441	0.977	2.874	0.370	6.000	7
6	60	110	0.250	0.250	0.250	27.909	0.999	2.911	0.370	6.000	7
7	65	110	0.250	0.250	0.250	28.307	1.017	2.945	0.370	6.000	7
8	70	110	0.250	0.313	0.313	28.682	1.034	2.977	0.370	6.000	7

NOTE:
Pole wall thicknesses shown in the POLE DATA Tables are minimums. Thicker walls are permitted and tapered walls may be used provided the minimum thickness is not violated.

INTERIM STANDARD IN ENGLISH UNITS APPLICABLE TO ROADWAY AND TRAFFIC DESIGN STANDARD BOOKLETS PUBLISHED IN EITHER ENGLISH OR METRIC UNITS.

THE SEALED RECORD OF THIS STANDARD IS ON FILE IN THE ROADWAY DESIGN OFFICE.

Date: 9-26-00

POLE DATA-45 FT. MOUNTING HEIGHT

STATE OF FLORIDA DEPARTMENT OF TRANSPORTATION

ALUMINUM LIGHT POLE

INTERIM STANDARD

WHEN INCLUDED IN THE PLANS SHEET NOS. 1-7 OF 7 ARE A SUPPLEMENT TO THE ROADWAY AND TRAFFIC DESIGN STANDARDS. ENGLISH AND METRIC BOOKLETS DATED JANUARY 2000.

APPROVED BY W. N. Bates
State Structures Design Engineer

REVISION NO.	SHEET NO.	INDEX NO.
	6 of 7	17515

FINANCIAL PROJECT ID	STATE PROJ. NO.	SHEET NO.

DATA FOR POLE WITH 8 FT. ARM

CASE No.	WIND HEIGHT (FT.)	WIND SPEED (MPH)	POLE WALL (IN.)	UPPER WELD (IN.)	LOWER WELD (IN.)	BASE FORCES MOMENT (FT.-KIP)	SHEAR (KIP)	TORSION (FT.-KIP)	AXIAL (KIP)	FOUNDATION DEPTH (FT.)	#4 BAR (No.)
1	50	80	0.188	0.250	0.250	19.823	0.627	0.609	0.318	6.333	7
2	50	100	0.250	0.250	0.250	26.487	0.842	0.951	0.399	7.333	8
3	55	110	0.250	0.313	0.313	30.543	1.008	1.122	0.399	7.667	8
4	60	110	0.313	0.313	0.313	31.073	1.035	1.136	0.480	6.000	7
5	65	110	0.313	0.313	0.313	31.556	1.057	1.149	0.480	6.000	7
6	70	110	0.313	0.313	0.313	31.954	1.076	1.162	0.480	6.000	7
7	75	110	0.313	0.313	0.313	32.373	1.093	1.173	0.480	6.000	7

DATA FOR POLE WITH 10 FT. ARM

CASE No.	WIND HEIGHT (FT.)	WIND SPEED (MPH)	POLE WALL (IN.)	UPPER WELD (IN.)	LOWER WELD (IN.)	BASE FORCES MOMENT (FT.-KIP)	SHEAR (KIP)	TORSION (FT.-KIP)	AXIAL (KIP)	FOUNDATION DEPTH (FT.)	#4 BAR (No.)
1	50	80	0.188	0.250	0.250	20.652	0.644	0.896	0.316	6.667	7
2	50	100	0.250	0.250	0.250	25.919	0.830	1.253	0.399	7.000	8
3	55	110	0.250	0.313	0.313	30.729	1.011	1.534	0.399	7.667	8
4	60	110	0.313	0.313	0.313	31.248	1.038	1.553	0.478	6.000	7
5	65	110	0.313	0.313	0.313	31.720	1.060	1.571	0.478	6.000	7
6	70	110	0.313	0.313	0.313	32.158	1.079	1.588	0.478	6.000	7
7	75	110	0.313	0.313	0.313	32.568	1.096	1.604	0.478	6.000	7

DATA FOR POLE WITH 12 FT. ARM

CASE No.	WIND HEIGHT (FT.)	WIND SPEED (MPH)	POLE WALL (IN.)	UPPER WELD (IN.)	LOWER WELD (IN.)	BASE FORCES MOMENT (FT.-KIP)	SHEAR (KIP)	TORSION (FT.-KIP)	AXIAL (KIP)	FOUNDATION DEPTH (FT.)	#4 BAR (No.)
1	50	80	0.188	0.250	0.250	19.834	0.627	1.087	0.318	6.667	7
2	50	100	0.250	0.250	0.250	26.709	0.846	1.688	0.397	7.333	8
3	55	110	0.313	0.313	0.313	31.457	1.026	2.038	0.477	7.667	8
4	60	110	0.313	0.313	0.313	32.013	1.053	2.064	0.477	6.000	7
5	65	110	0.313	0.313	0.313	32.523	1.075	2.088	0.477	6.000	7
6	70	110	0.313	0.313	0.313	32.951	1.094	2.111	0.477	6.000	7
7	75	110	0.313	0.313	0.313	33.353	1.111	2.132	0.477	6.000	7

DATA FOR POLE WITH 15 FT. ARM

CASE No.	WIND HEIGHT (FT.)	WIND SPEED (MPH)	POLE WALL (IN.)	UPPER WELD (IN.)	LOWER WELD (IN.)	BASE FORCES MOMENT (FT.-KIP)	SHEAR (KIP)	TORSION (FT.-KIP)	AXIAL (KIP)	FOUNDATION DEPTH (FT.)	#4 BAR (No.)
1	50	80	0.188	0.250	0.250	20.238	0.635	1.552	0.322	6.667	7
2	50	100	0.250	0.250	0.250	27.340	0.859	2.378	0.401	7.333	8
3	55	110	0.313	0.313	0.313	32.267	1.041	2.874	0.480	7.667	8
4	60	110	0.313	0.313	0.313	32.852	1.069	2.911	0.480	6.000	7
5	65	110	0.313	0.313	0.313	33.346	1.091	2.945	0.480	6.000	7
6	70	110	0.313	0.313	0.313	33.807	1.111	2.977	0.480	6.000	7
7	75	110	0.313	0.313	0.313	34.197	1.128	3.008	0.480	6.000	7

NOTE:
Pole wall thicknesses shown in the POLE DATA Tables are minimums. Thicker walls are permitted and tapered walls may be used provided the minimum thickness is not violated.

INTERIM STANDARD IN ENGLISH UNITS APPLICABLE TO ROADWAY AND TRAFFIC DESIGN STANDARD BOOKLETS PUBLISHED IN EITHER ENGLISH OR METRIC UNITS.

THE SEALED RECORD OF THIS STANDARD IS ON FILE IN THE ROADWAY DESIGN OFFICE.

Date: 9-26-00

POLE DATA - 50 FT. MOUNTING HEIGHT

STATE OF FLORIDA DEPARTMENT OF TRANSPORTATION

ALUMINUM LIGHT POLE

INTERIM STANDARD

WHEN INCLUDED IN THE PLANS SHEET NOS. 1-7 OF 7 ARE A SUPPLEMENT TO THE ROADWAY AND TRAFFIC DESIGN STANDARDS. ENGLISH AND METRIC BOOKLETS DATED JANUARY 2000.

APPROVED BY W. N. Blatt
State Structures Design Engineer

REVISION NO.	SHEET NO.	INDEX NO.
	7 of 7	17515