FINANCIAL PROJECT ID	STATE PROJ. NO.	SHEET NO.

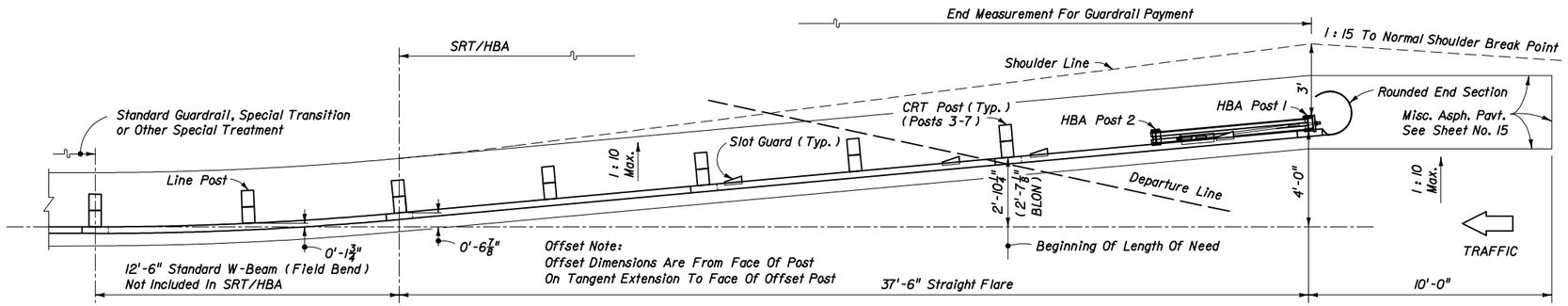

PLAN

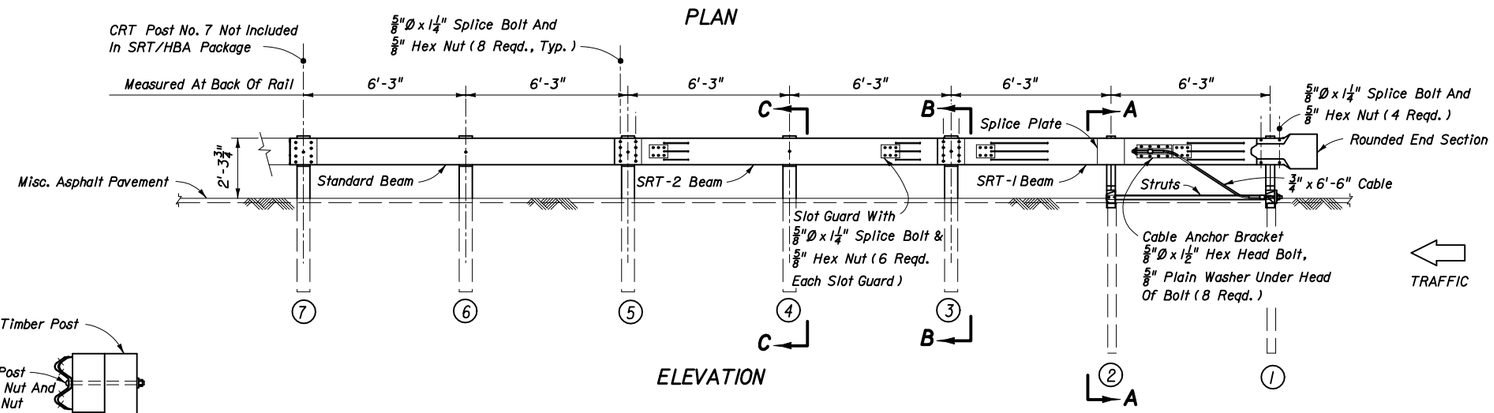

ELEVATION

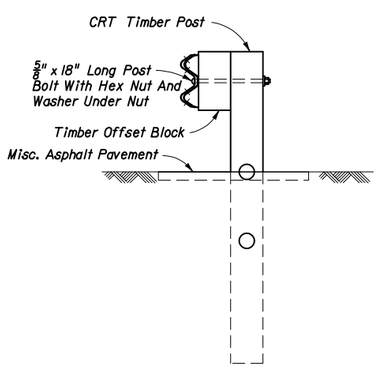

SECTION BB
POST Nos. 3 & 5

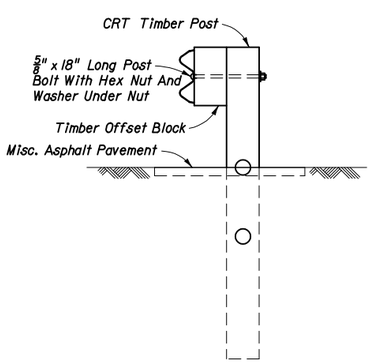

SECTION CC
POST Nos. 4 & 6

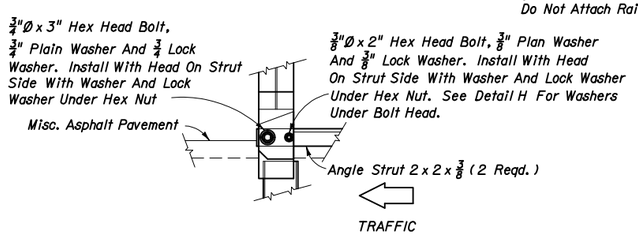

VIEW HH - POST No. 2

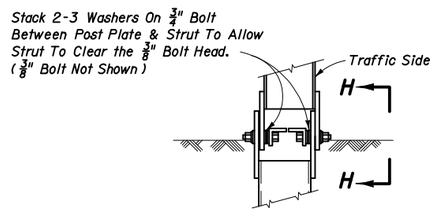

DETAIL H - POST No. 2

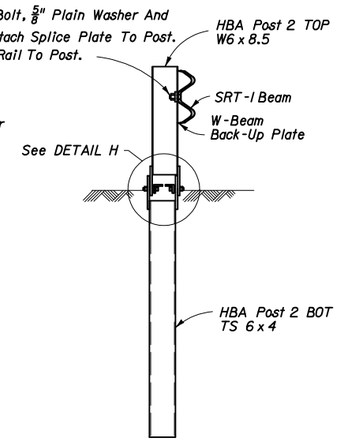

SECTION AA - POST No. 2

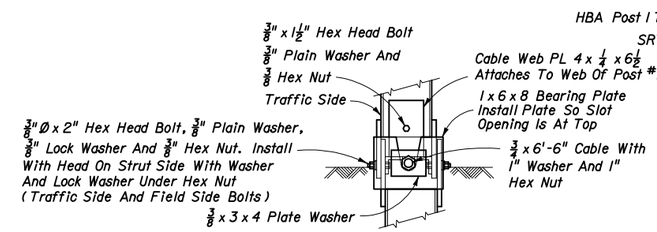

VIEW GG - POST No. 1

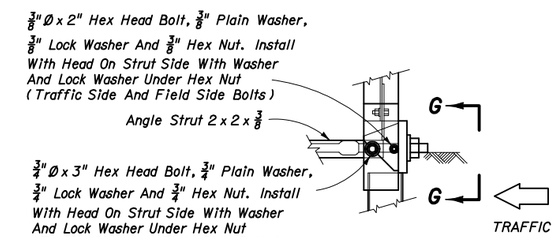

DETAIL G - POST No. 1

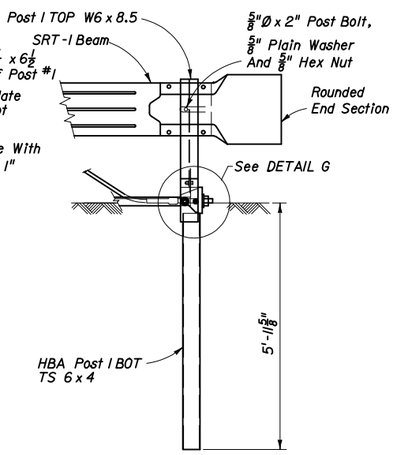

HBA POST 1

SRT/HBA 6 POST SYSTEM NOTES

1. The guardrail end anchorage system represented on this drawing is a proprietary six (6) post design by Trinity Industries, Inc. and marketed by Syro, Inc. under the trade name SRT/HBA 6 Post. Any infringement on the rights of the designer shall be the sole responsibility of the user.

2. This standard drawing is produced by the Florida Department Of Transportation solely for use by the Department and its assignees. This standard drawing provides the general graphics and information necessary to field identify component parts of the SRT/HBA 6 Post and their incorporation into a whole system.

3. This drawing is sufficient for plan details for the SRT/HBA 6 Post when installed in connection with shoulder guardrail and precludes the requirement for shop drawing submittals unless called for elsewhere in the plans. The SRT/HBA 6 Post shall be assembled in accordance with the manufacturer's detailed drawings, procedures and specifications.

4. The SRT/HBA 6 Post can not be used in medians where horizontal clearance requires the use of a backrail.

5. The SRT/HBA 6 Post is suitable for all design speeds. The SRT/HBA 6 Post is intended for use as an approach end anchorage for shoulder guardrail. Its alignment is a straight flare from the normal guardrail alignment with an effective length of 37.5' including two special slotted W-Beam panels and one standard W-Beam panel outside of any standard guardrail, guardrail transitions or other special treatments.

6. Posts 1 and 2 must be hinged breakaway steel posts. CRT breakaway posts shall be used at all other locations within the system.

7. See the General Notes for galvanizing requirements of metallic component.

8. If the plans call for the SRT/HBA 6 Post at a specific location, substitutions with other end anchorage assemblies will not be permitted unless approved by the Engineer. If the plans call for end anchorage assembly 'flared' at a specific location, the contractor has the option to construct any FDOT approved flared assembly. Where a flared end anchorage is called for in the plans, any approved substitution with a parallel end anchorage will not be eligible for VECP consideration.

9. The SRT/HBA 6 Post shall be paid for under the contract unit price for Guardrail End Anchorage Assembly (Flared), EA and shall be full compensation for furnishing and installing all components in accordance with the plans; the manufacturer's detail drawings, procedures and specifications and this index.

THE SEALED RECORD OF THIS STANDARD IS ON FILE IN THE ROADWAY DESIGN OFFICE.

INTERIM STANDARD IN ENGLISH UNITS APPLICABLE TO ROADWAY AND TRAFFIC DESIGN STANDARD BOOKLETS PUBLISHED IN EITHER ENGLISH OR METRIC UNITS.

SRT/HBA-6 POST SYSTEM

DATE: 03-26-01

STATE OF FLORIDA DEPARTMENT OF TRANSPORTATION

GUARDRAIL

INTERIM STANDARD

THIS INDEX IS A SUPPLEMENT TO INDEX 400 OF THE ROADWAY AND TRAFFIC DESIGN STANDARDS, BOOKLETS DATED JANUARY 2000.

APPROVED BY Roadway Design Engineer

REVISION NO.	SHEET NO.	INDEX NO.
01	1 of 1	0400