FINANCIAL PROJECT ID	STATE PROJ. NO.	SHEET NO.

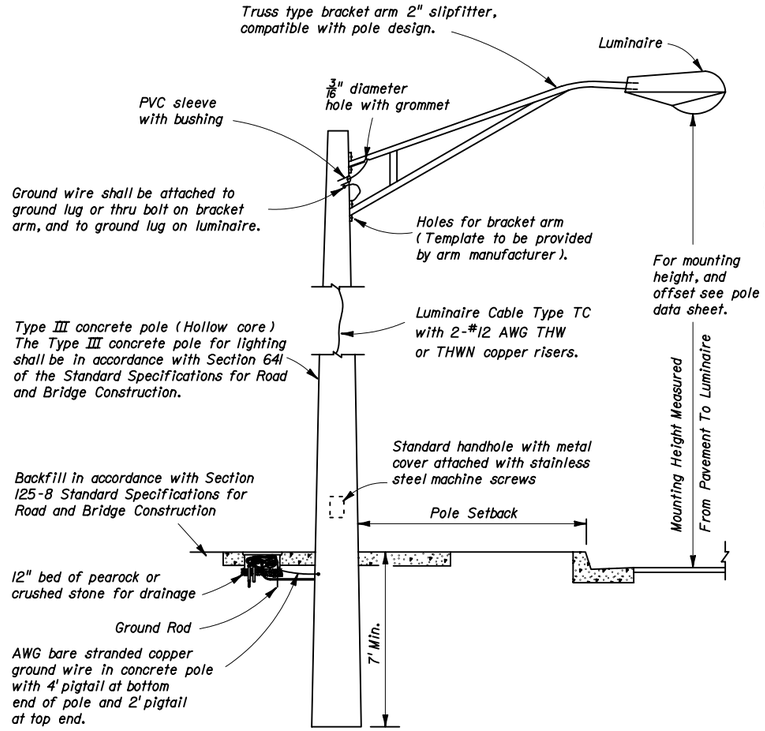

CONCRETE POLE DETAIL

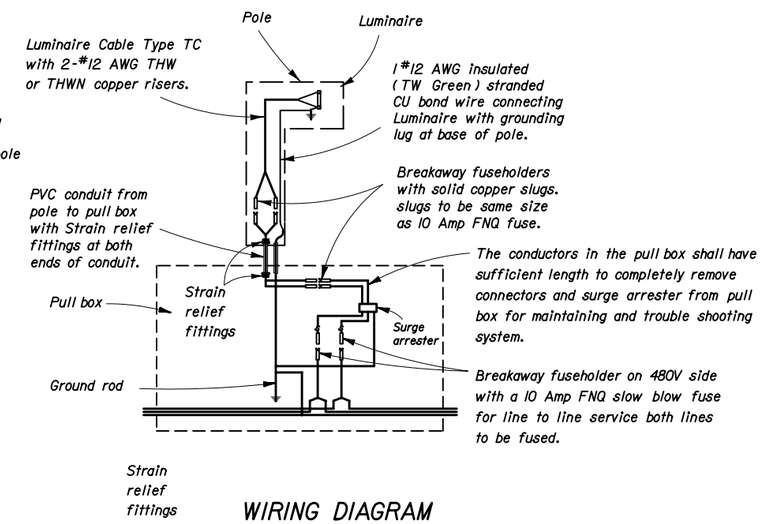

WIRING DIAGRAM

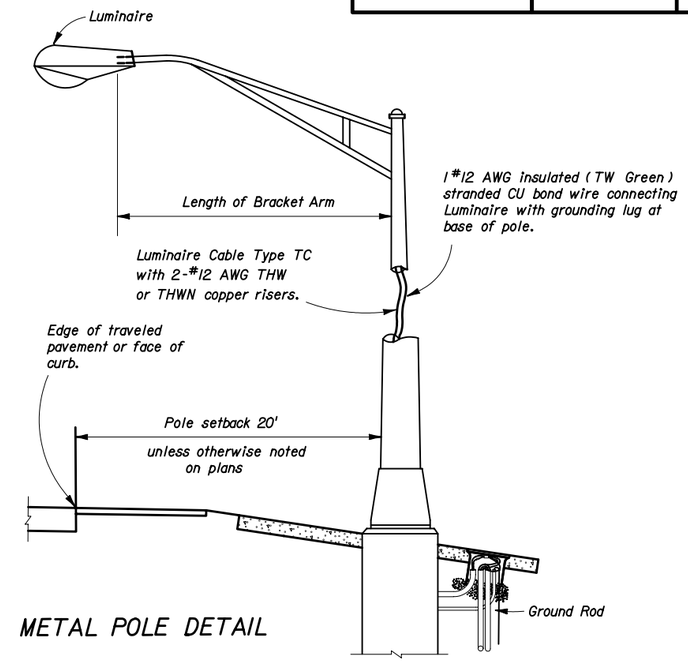

METAL POLE DETAIL

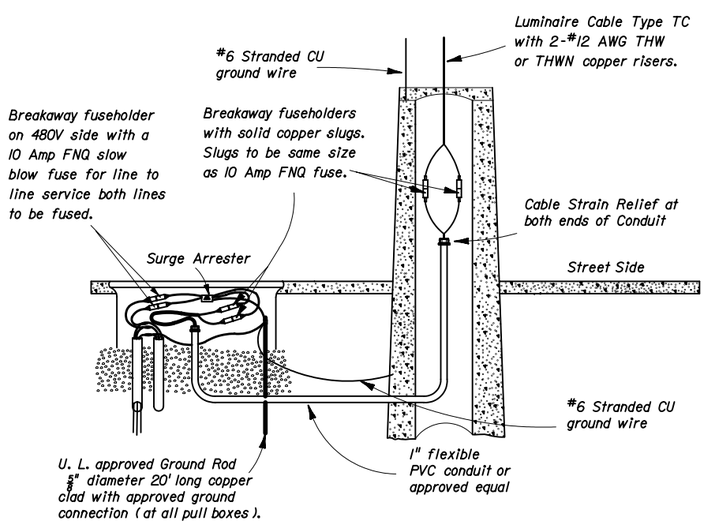

CONCRETE POLE WIRING DETAIL

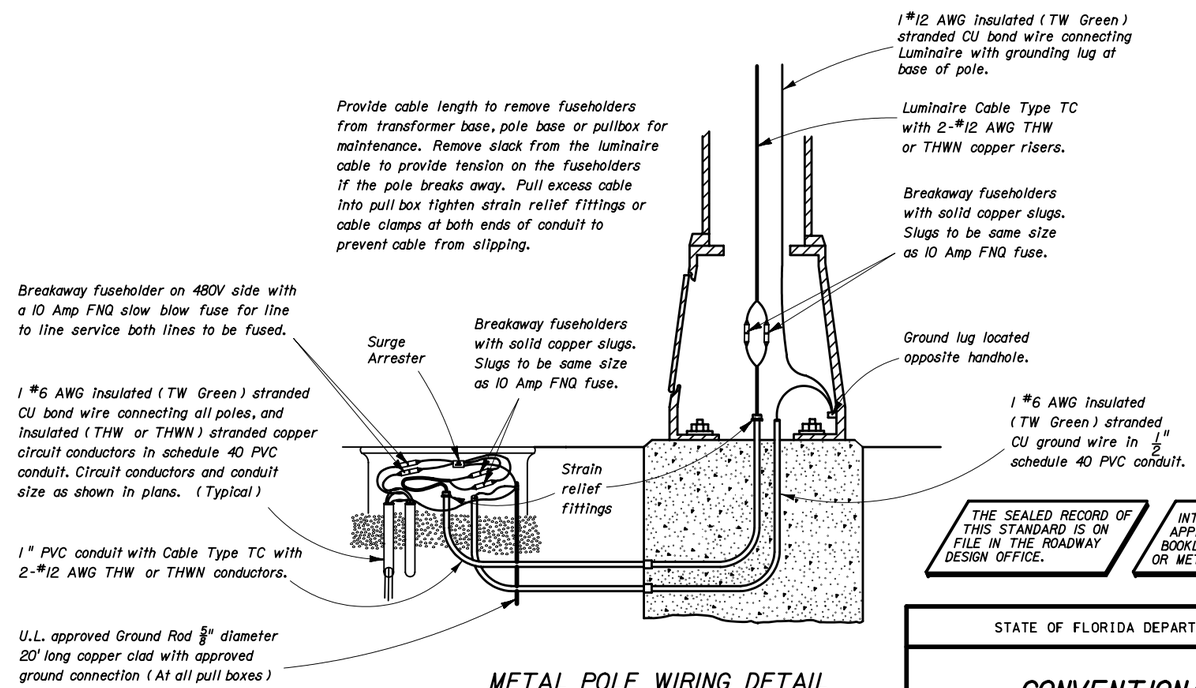

METAL POLE WIRING DETAIL

THE SEALED RECORD OF THIS STANDARD IS ON FILE IN THE ROADWAY DESIGN OFFICE.

INTERIM STANDARD IN ENGLISH UNITS APPLICABLE TO DESIGN STANDARDS BOOKLET PUBLISHED IN EITHER ENGLISH OR METRIC UNITS.

NOTES:

1. Barrier wall or bridge mounted poles: The wiring shall be in accordance with Section 992 of the Standard Specifications.

Revised: 01-01-05

STATE OF FLORIDA DEPARTMENT OF TRANSPORTATION

CONVENTIONAL LIGHTING

INTERIM STANDARD

THIS IS A REPLACEMENT SHEET FOR EXISTING SHEET 1 TO THE DESIGN STANDARDS, BOOKLET DATED JANUARY 2000.

APPROVED BY State Traffic Standards Engineer

REVISION NO.	SHEET NO.	INDEX NO.
04	1 of 3	017500