FINANCIAL PROJECT ID	STATE PROJ. NO.	SHEET NO.

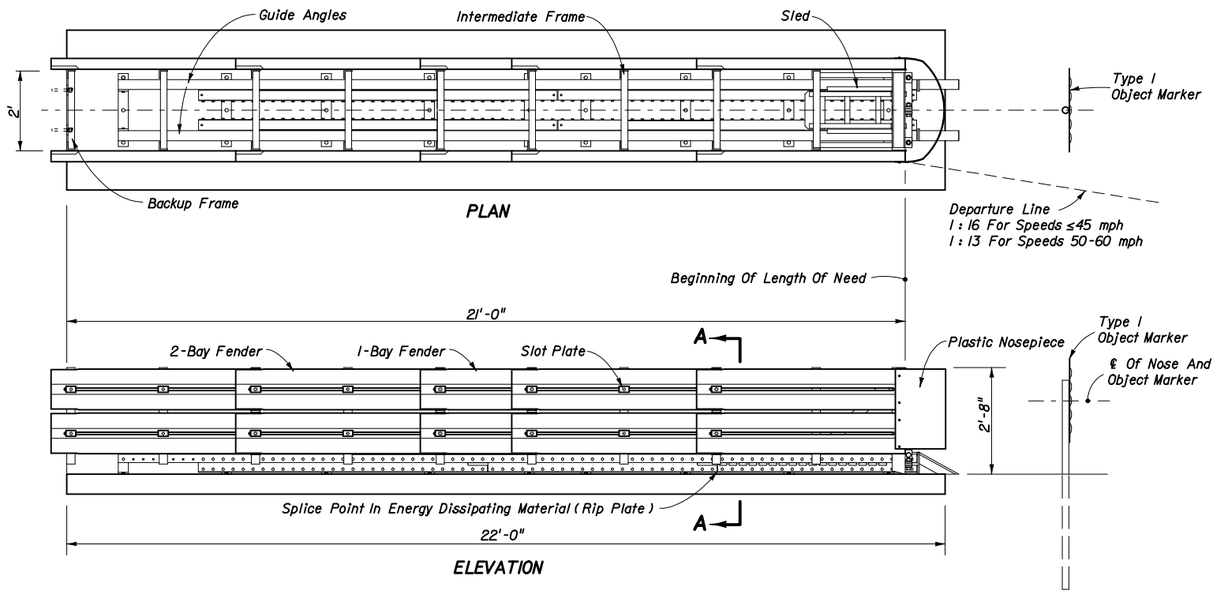

TRACC

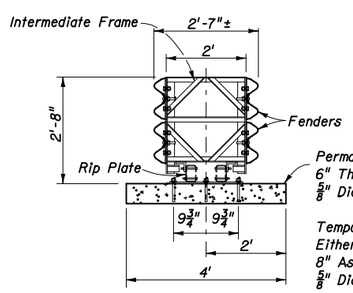

Permanent Pad:
6" Thick Reinforced Concrete Or 8" Nonreinforced Concrete With Twenty-Seven $\frac{5}{8}$" Dia. 7½" Long Chemical Anchor Studs With Flat And Lock Washers And Hex Nuts

Temporary Pad:
Either 8" Nonreinforced Concrete With The Above Anchor Hardware, Or, 8" Asphalt (Or 6" Ashpalt Over 6" Compacted Subbase) With Twenty-Seven $\frac{5}{8}$" Dia. 18" Long Chemical Anchor Studs With Flat And Lock Washers And Hex Nuts.

SECTION AA

TRACC MODULE GUIDELINES		
Speed (mph)	Manufacture's Naming Convention	Length (Feet)
≤45	SHORTRACC	14'-1"
>45 ≤60	TRACC	21'-0"
>60 ≤70	FASTRACC	26'-0"

GENERAL NOTES

1. The energy absorbing system represented on this standard drawing is a proprietary design by Trinity Industries, Inc. and marketed under the trade names SHORTRACC, TRACC, and FASTRACC. Any infringement on the rights of the designer shall be the sole responsibility of the user.

2. This standard drawing is produced by the Florida Department Of Transportation solely for use by the Department and its assignees. This standard drawing provides the general graphics and information necessary to field identify component parts of TRACC Systems and their incorporation into a whole system. This standard drawing is sufficient for plan details, and precludes the requirement for shop drawing submittals unless the plans call for such submittals.

3. TRACC Systems shall be installed in accordance with the manufacturer's detailed drawings, procedures and specifications, except that transition section posts will be set to connect to guardrail at standard W-beam center bolt height (1'-9").

4. TRACC Systems include pre-assembled energy absorbing modules that are available in three sizes. Larger modules can be substituted for smaller modules. See selection table below.

5. When TRACC Systems are installed at permanent locations they shall be anchored to either a reinforced 6" thick concrete pad or a nonreinforced 8" thick concrete pad with twenty-seven 7½" long $\frac{5}{8}$" dia. chemical anchor studs, flat and lock washers, and, hex nuts. When TRACC Systems are installed at temporary locations they shall be anchored to a nonreinforced 8" thick concrete pad with the above mentioned anchor hardware, or a 8" thick asphalt pad (or a 6" thick asphalt over 6" of compacted subbase) using twenty-seven 18" long $\frac{5}{8}$" dia. Grade 5 threaded chemical anchor studs, flat and lock washers, and, hex nuts.

6. TRACC Systems shall be located parallel to the approach travel lane(s), on 1 : 10 or flatter cross slopes.

7. In-place repairs on TRACC modules are limited to (a) end-on impacts which cause the sled to stroke 54" or less, and (b) side impacts where permanent distortion is limited to fender panels and where distortion of the intermediate frame(s) can be restored manually and (c) end on impacts that cause the sled to stroke more than 54", yet where repair can be accomplished in a period not to exceed 24 continuous hours. Unit replacement is required when damage exceeds these conditions. Temporary construction units and units under Maintenance responsibility may be shop repaired units utilizing new or salvaged parts which will produce condition new units. All permanent units shall be factory new at completion of construction.

8. A yellow Type I Object Marker shall be centered 3' in front of the nose of the TRACC System. Mounting hardware shall be in conformance with Index Nos. 11860 and 11865. The cost of the Object Marker shall be included in the cost of the TRACC System.

9. Permanent TRACC Systems will be paid for under the contract unit price for Vehicular Impact Attenuator (TRACC), EA. Temporary TRACC Systems will be paid for under the contract unit price for Vehicular Impact Attenuator (Temporary) (TRACC), LO. However, when a TRACC system is used as an option in accordance with Index No. 415, it will be paid for under the contract unit price for Vehicular Impact Attenuator (Temporary) (Redirective Option), LO.

DESIGN NOTES AND GUIDELINES

1. TRACC Systems are designed to cushion automobile end-on hits and to redirect automobiles from side hits within the length of need while shielding the ends of permanent or temporary concrete barrier walls or double faced guardrails.

2. The TRACC System is not field-restorable for all impacts. Repairs or replacement will be in accordance with GENERAL NOTE 7 above.

   Until additional replacement and repair experience is available, the TRACC System should not be permanently installed in gores of freeways and expressway mainline ramp terminals; gores of roadway forks; or other gore locations where the Engineer of Record has identified a specific history of high frequency vehicle departure from the roadway or the potential exists for such departures.

   The TRACC can be used in any temporary location identified in the plans for optional redirective crash cushion in accordance with Index No. 415, and will be used as a temporary crash cushion in any location identified in the plans for Vehicle Impact Attenuator (Temporary) (TRACC); likewise the TRACC is not to be substituted when the plans call for other crash cushion systems at specified locations.

3. Currently the Department does not recognize other proprietary items as being equally suitable alternatives to TRACC Systems, and until such alternatives are available, the TRACC Systems need not be bid against other proprietary items. However, where the TRACC Systems and other approved temporary redirective crash cushions meet or exceed the minimum requirements for a specific location, the approved crash cushions will be considered optional systems and paid for as described in General Note 9 above.

THE SEALED RECORD OF THIS STANDARD IS ON FILE IN THE ROADWAY DESIGN OFFICE.

INTERIM STANDARD IN ENGLISH UNITS APPLICABLE TO ROADWAY AND TRAFFIC DESIGN STANDARD BOOKLETS PUBLISHED IN EITHER ENGLISH OR METRIC UNITS.

GENERAL SYSTEM FEATURES AND GUIDELINES

Revised: 05-04-01

STATE OF FLORIDA DEPARTMENT OF TRANSPORTATION

TRACC SYSTEMS

INTERIM STANDARD

THIS INDEX IS A REPLACEMENT FOR INDEX NO. 440 OF THE ROADWAY AND TRAFFIC DESIGN STANDARDS, BOOKLETS DATED JANUARY 2000.

APPROVED BY
Roadway Design Engineer

REVISION NO.	SHEET NO.	INDEX NO.
01	1 of 5	0440

FINANCIAL PROJECT ID	STATE PROJ. NO.	SHEET NO.

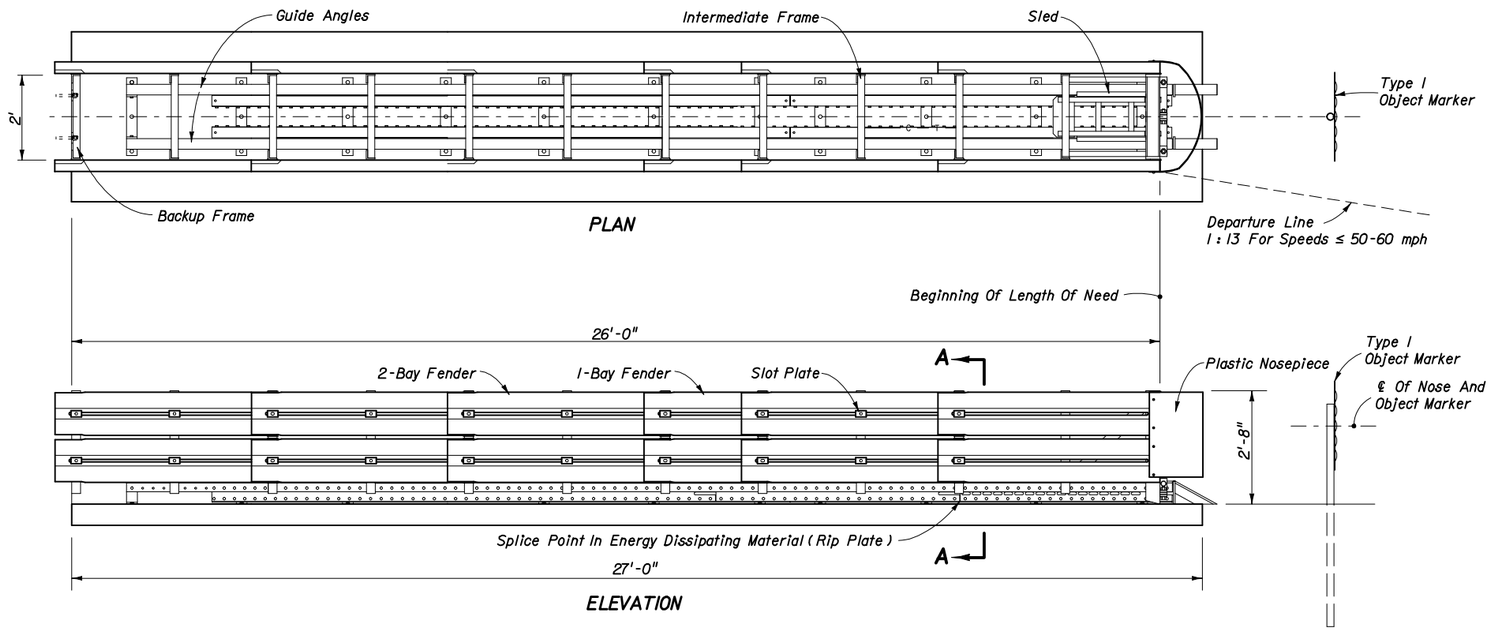

FASTRACC

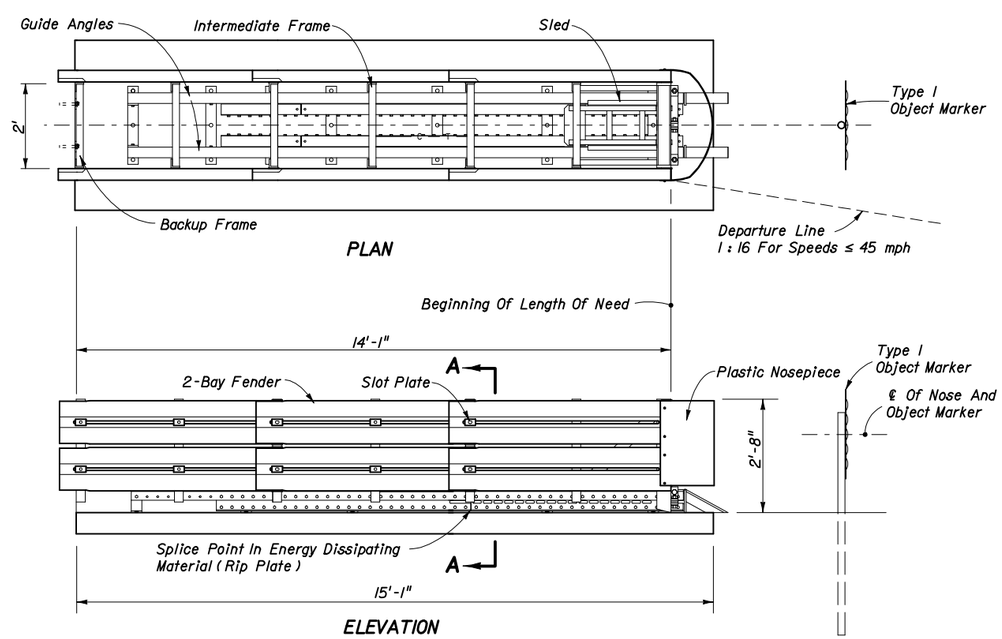

SHORTRACC

THE SEALED RECORD OF THIS STANDARD IS ON FILE IN THE ROADWAY DESIGN OFFICE.

INTERIM STANDARD IN ENGLISH UNITS APPLICABLE TO ROADWAY AND TRAFFIC DESIGN STANDARD BOOKLETS PUBLISHED IN EITHER ENGLISH OR METRIC UNITS.

REVISED: 04-10-01

STATE OF FLORIDA DEPARTMENT OF TRANSPORTATION

TRACC SYSTEMS

INTERIM STANDARD

THIS INDEX IS A REPLACEMENT FOR INDEX NO. 440 OF THE ROADWAY AND TRAFFIC DESIGN STANDARDS, BOOKLETS DATED JANUARY 2000.

APPROVED BY

Roadway Design Engineer

REVISION NO.	SHEET NO.	INDEX NO.
01	2 of 5	0440

FINANCIAL PROJECT ID	STATE PROJ. NO.	SHEET NO.

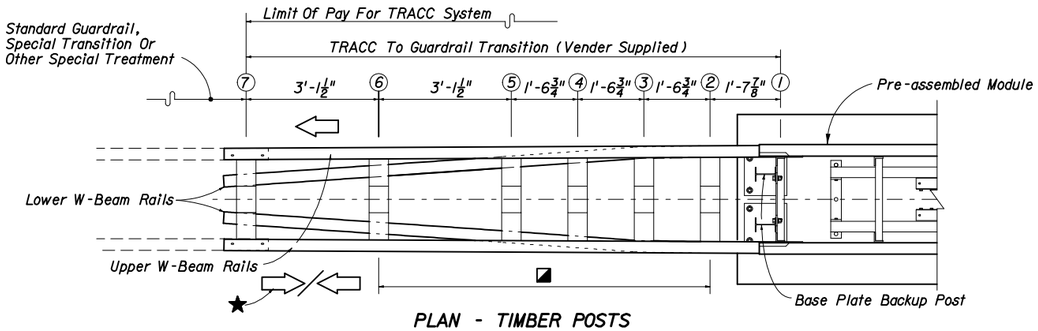

PLAN - TIMBER POSTS

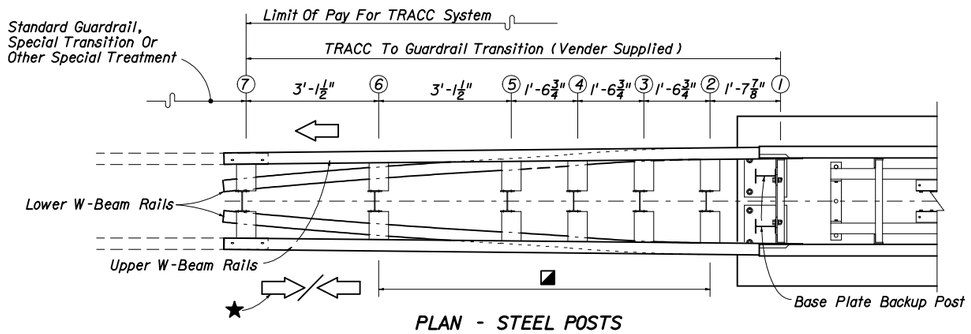

PLAN - STEEL POSTS

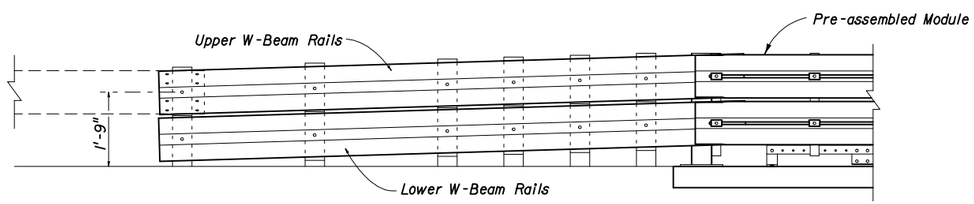

ELEVATION

★ Lap rail splice in direction of traffic for guardrail bidirectional applications.
See GENERAL NOTE 3 and DESIGN NOTE 1 for information on pending approval for bidirectional installations.

◪ Offset blocks that exceed standard block depth can be made up of blocks of special size or multiple standard blocks field trimed to approximately equal size to achieve full transition width. Offset blocks for lower W-beam that are less in depth than standard blocks may be field trimed standard blocks. All blocks are to be secured to plan position by 16d galvanized nails.

Transitions are required when connecting the TRACC to any guardrail system.

TRANSITION SECTION FOR CONNECTION TO DOUBLE FACED GUARDRAIL

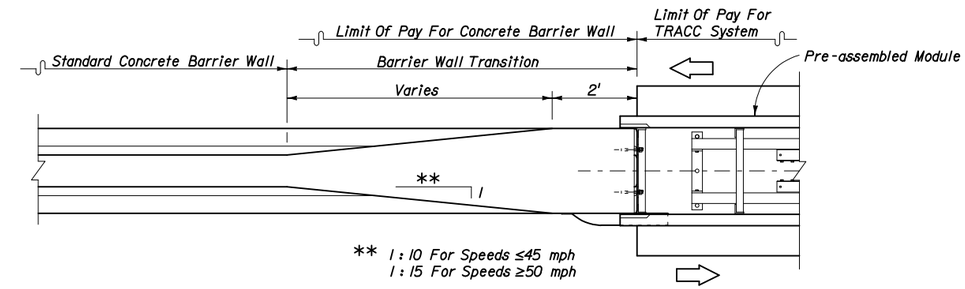

** 1 : 10 For Speeds ≤45 mph
1 : 15 For Speeds ≥50 mph

PLAN

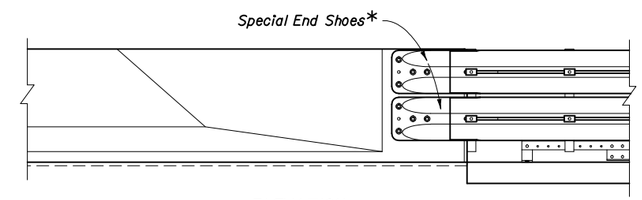

ELEVATION

* To Be Included In Cost Of TRACC System

CONNECTION TO CONRETE BARRIER WITH INTEGRAL WALL TRANSITION

INTERIM STANDARD IN ENGLISH UNITS APPLICABLE TO ROADWAY AND TRAFFIC DESIGN STANDARD BOOKLETS PUBLISHED IN EITHER ENGLISH OR METRIC UNITS.

THE SEALED RECORD OF THIS STANDARD IS ON FILE IN THE ROADWAY DESIGN OFFICE.

STATE OF FLORIDA DEPARTMENT OF TRANSPORTATION

TRACC SYSTEMS

INTERIM STANDARD

THIS INDEX IS A REPLACEMENT FOR INDEX NO. 440 OF THE ROADWAY AND TRAFFIC DESIGN STANDARDS, BOOKLETS DATED JANUARY 2000.

APPROVED BY
Roadway Design Engineer

REVISION NO.	SHEET NO.	INDEX NO.
00	3 of 5	0440

REVISED: 02-14-01

FINANCIAL PROJECT ID	STATE PROJ. NO.	SHEET NO.

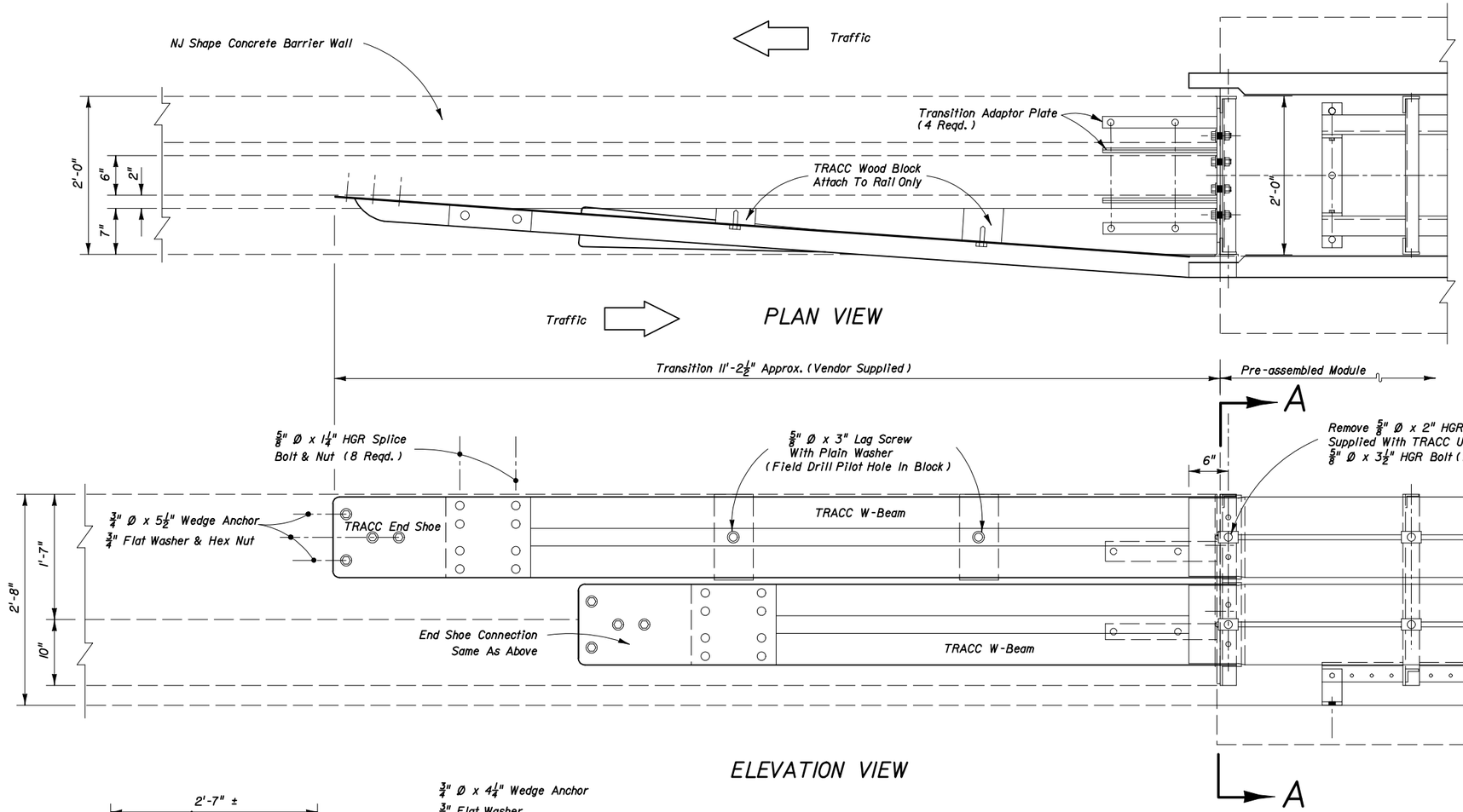

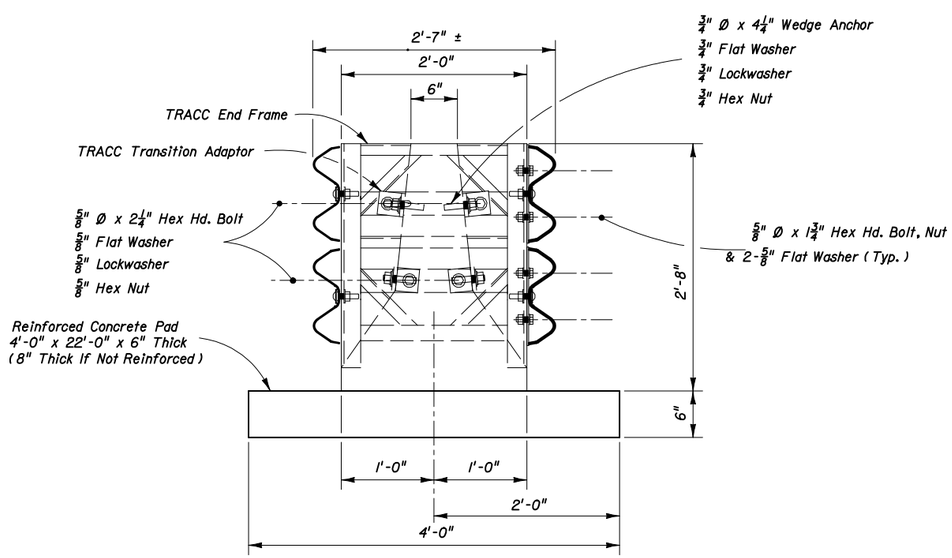

SECTION AA

BIDIRECTIONAL TRANSITION FOR CONNECTION TO NJ SHAPE CONCRETE BARRIER WALL

REVISED: 02-14-01

INTERIM STANDARD IN ENGLISH UNITS APPLICABLE TO ROADWAY AND TRAFFIC DESIGN STANDARD BOOKLETS PUBLISHED IN EITHER ENGLISH OR METRIC UNITS.

THE SEALED RECORD OF THIS STANDARD IS ON FILE IN THE ROADWAY DESIGN OFFICE.

STATE OF FLORIDA DEPARTMENT OF TRANSPORTATION

TRACC SYSTEMS

INTERIM STANDARD

THIS INDEX IS A REPLACEMENT FOR INDEX NO. 440 OF THE ROADWAY AND TRAFFIC DESIGN STANDARDS, BOOKLETS DATED JANUARY 2000.

APPROVED BY
Roadway Design Engineer

REVISION NO.	SHEET NO.	INDEX NO.
00	4 of 5	0440

FINANCIAL PROJECT ID	STATE PROJ. NO.	SHEET NO.

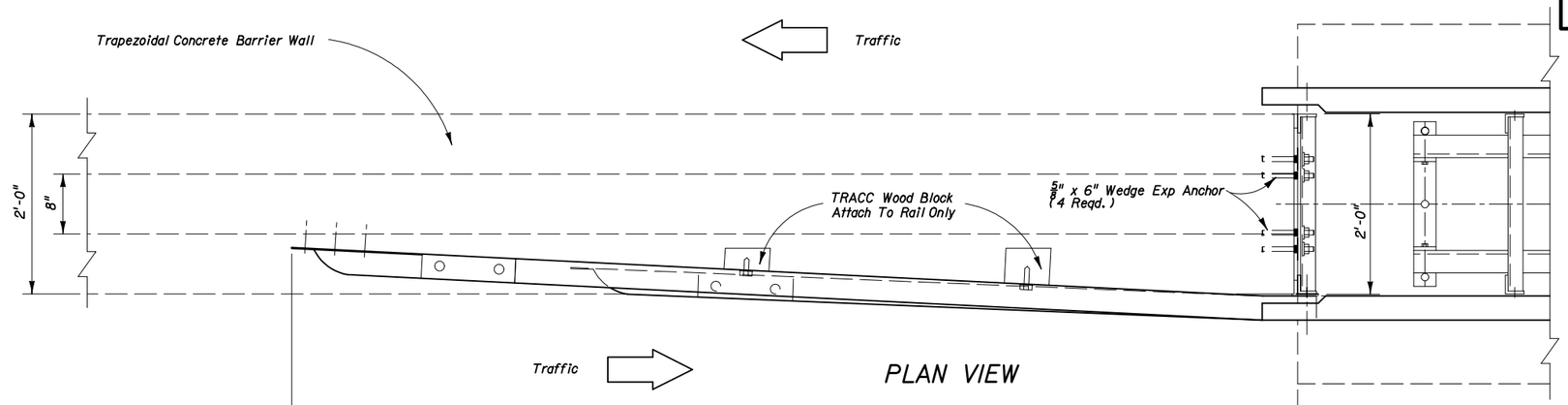

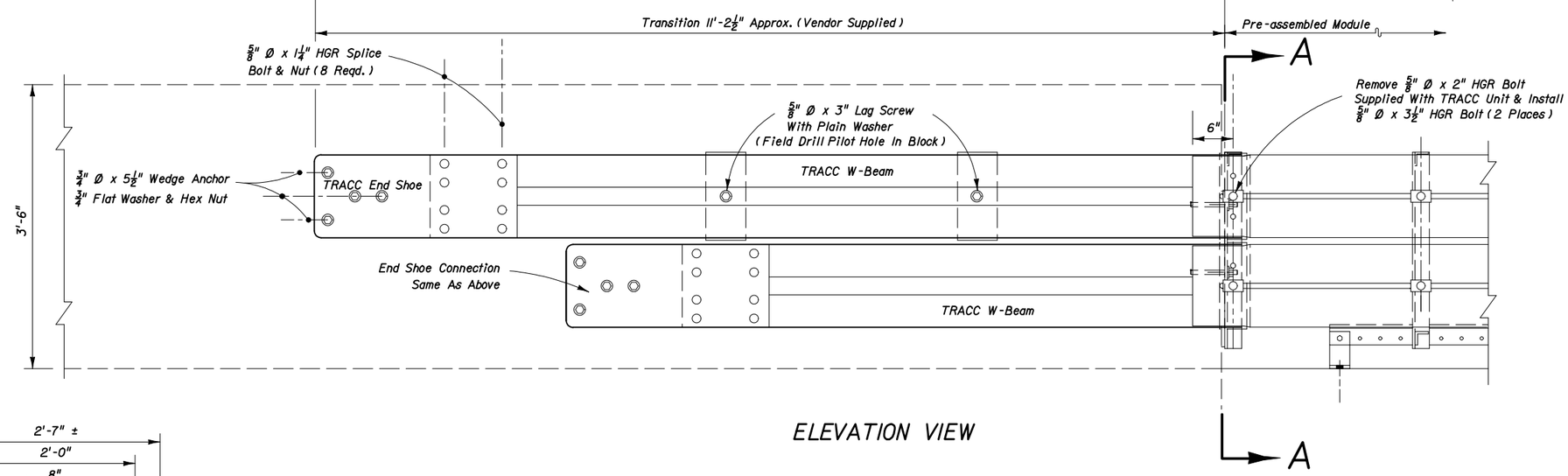

ELEVATION VIEW

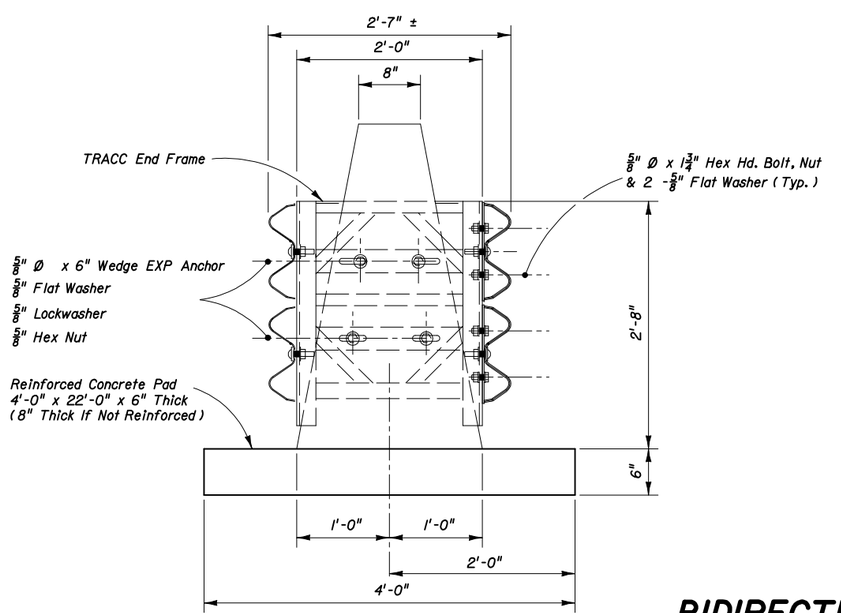

SECTION AA

BIDIRECTIONAL TRANSITION FOR CONNECTION TO TRAPEZOIDAL SHAPE CONCRETE BARRIER WALL

REVISED: 02-14-01

INTERIM STANDARD IN ENGLISH UNITS APPLICABLE TO ROADWAY AND TRAFFIC DESIGN STANDARD BOOKLETS PUBLISHED IN EITHER ENGLISH OR METRIC UNITS.

THE SEALED RECORD OF THIS STANDARD IS ON FILE IN THE ROADWAY DESIGN OFFICE.

STATE OF FLORIDA DEPARTMENT OF TRANSPORTATION

TRACC SYSTEMS

INTERIM STANDARD

THIS INDEX IS A REPLACEMENT FOR INDEX NO. 440 OF THE ROADWAY AND TRAFFIC DESIGN STANDARDS, BOOKLETS DATED JANUARY 2000.

APPROVED BY
Roadway Design Engineer

REVISION NO.	SHEET NO.	INDEX NO.
00	5 of 5	0440