FINANCIAL PROJECT ID	STATE PROJ. NO.	SHEET NO.

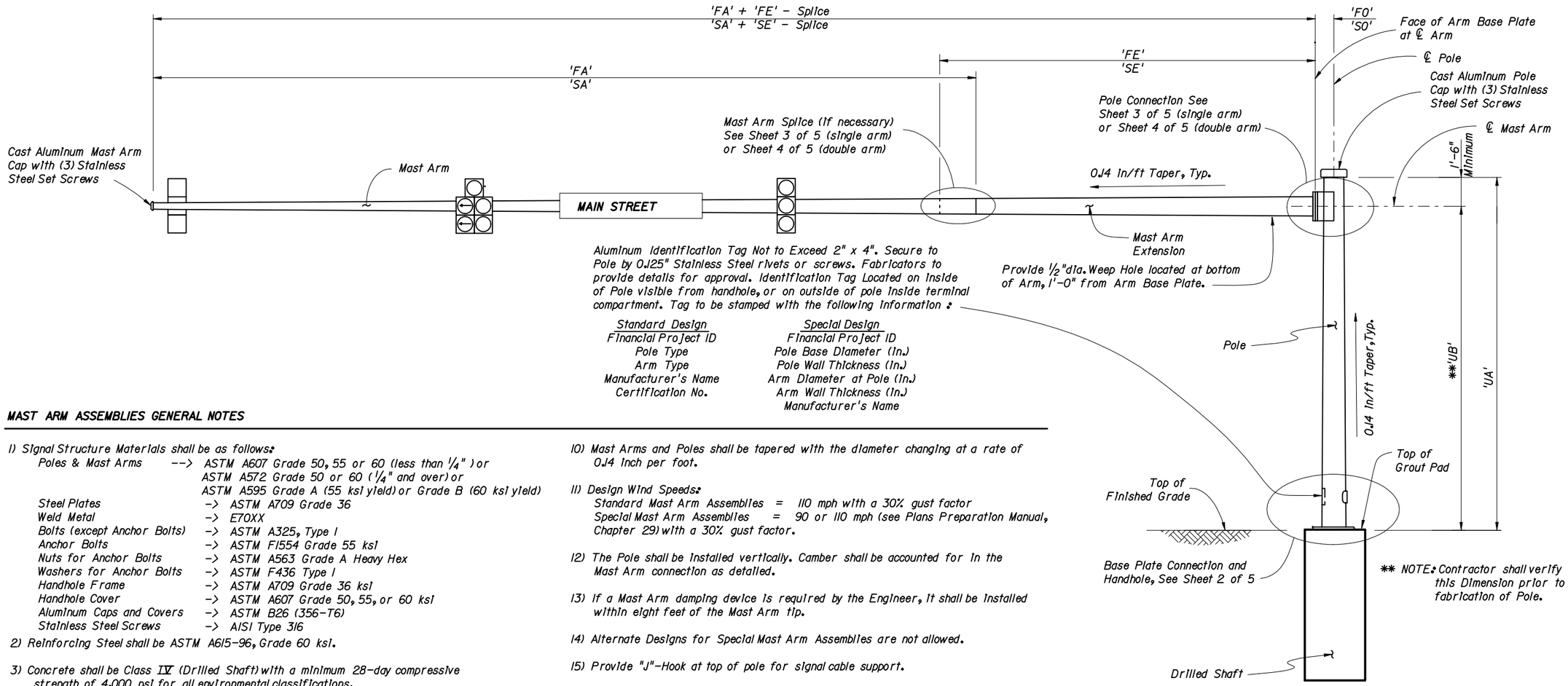

ELEVATION VIEW

(Single Arm Shown, Double Arm Similar)
(Luminaire Arm Not Shown)

Aluminum Identification Tag Not to Exceed 2" x 4". Secure to Pole by 0.125" Stainless Steel rivets or screws. Fabricators to provide details for approval. Identification Tag Located on Inside of Pole visible from handhole, or on outside of pole inside terminal compartment. Tag to be stamped with the following information :

Standard Design	Special Design
Financial Project ID	Financial Project ID
Pole Type	Pole Base Diameter (In.)
Arm Type	Pole Wall Thickness (In.)
Manufacturer's Name	Arm Diameter at Pole (In.)
Certification No.	Arm Wall Thickness (In.)
	Manufacturer's Name

MAST ARM ASSEMBLIES GENERAL NOTES

1) Signal Structure Materials shall be as follows:

Poles & Mast Arms	-->	ASTM A607 Grade 50, 55 or 60 (less than 1/4") or ASTM A572 Grade 50 or 60 (1/4" and over) or ASTM A595 Grade A (55 ksi yield) or Grade B (60 ksi yield)
Steel Plates	->	ASTM A709 Grade 36
Weld Metal	->	E70XX
Bolts (except Anchor Bolts)	->	ASTM A325, Type 1
Anchor Bolts	->	ASTM F1554 Grade 55 ksi
Nuts for Anchor Bolts	->	ASTM A563 Grade A Heavy Hex
Washers for Anchor Bolts	->	ASTM F436 Type 1
Handhole Frame	->	ASTM A709 Grade 36 ksi
Handhole Cover	->	ASTM A607 Grade 50, 55, or 60 ksi
Aluminum Caps and Covers	->	ASTM B26 (356-T6)
Stainless Steel Screws	->	AISI Type 316

2) Reinforcing Steel shall be ASTM A615-96, Grade 60 ksi.

3) Concrete shall be Class IV (Drilled Shaft) with a minimum 28-day compressive strength of 4,000 psi for all environmental classifications.

4) Grout shall have a minimum 28-day compressive strength of 5,000 psi and shall meet the requirements of Section 934.

5) All welding shall conform to American Welding Society Structural Welding Code (Steel) ANSI/AWS D1.1 (current edition).

6) All steel items shall be galvanized as follows:

All Nuts, Bolts and Washers	->	ASTM A153 Class C or D depending on size
All other steel items (Including Pole & Mast Arm)	->	ASTM A123

7) Locate handhole 180° from arm on single arm poles or 180° from first arm of double arm poles or see special instructions on Mast Arm Tabulation Sheet.

8) Except for Anchor Bolts, all bolt hole diameters shall be equal to the bolt diameter plus 1/16" , prior to galvanizing. Hole diameters for Anchor Bolts shall not exceed the bolt diameter plus 1/2".

9) Sign Panels and Signals attached to the Mast Arm shall be centered in elevation on the arm. Sign Panels shall be aluminum. Wire access holes shall not exceed 3/4" in diameter.

10) Mast Arms and Poles shall be tapered with the diameter changing at a rate of 0.14 inch per foot.

11) Design Wind Speeds:
Standard Mast Arm Assemblies = 110 mph with a 30% gust factor
Special Mast Arm Assemblies = 90 or 110 mph (see Plans Preparation Manual, Chapter 29) with a 30% gust factor.

12) The Pole shall be installed vertically. Camber shall be accounted for in the Mast Arm connection as detailed.

13) If a Mast Arm damping device is required by the Engineer, it shall be installed within eight feet of the Mast Arm tip.

14) Alternate Designs for Special Mast Arm Assemblies are not allowed.

15) Provide "J"-Hook at top of pole for signal cable support.

16) Do not erect pole until foundation concrete has cured for a minimum of seven days.

17) First and Second Arm Camber Angle = 2°.

18) Each standard Mast Arm pole has been designed for one free swinging internally illuminated street sign which is acceptable by Contractor Certification provided it meets the applicable requirements of Specification Section 699, weighs no more than 75 lbs. and is no more than 12 Sq. Ft. in area.

Note: Details for the Ground Rod, Signal and Sign Locations, Signal Head Attachment, Sign Attachment, Pedestrian Head Attachment, and Foundation Conduit are not shown for clarity.

NOTES FOR DOUBLE MAST ARMS

1. Work this Drawing with Sheets Nos. 2 and 4 of 5, Indices 17740 and 17742, and Structures Standard Drawings S-1700 and S-1710 as necessary.

NOTES FOR SINGLE MAST ARMS WITH LUMINAIRE

1. Work this Drawing with Sheets Nos. 2, 3 and 5 of 5, Indices 17740 and 17742, and Structures Standard Drawings S-1700 and S-1710 as necessary.

TYPICAL ELEVATION AND NOTES

Revised: 7-10-01

THE SEALED RECORD OF THIS STANDARD IS ON FILE IN THE ROADWAY DESIGN OFFICE.

INTERIM STANDARD IN ENGLISH UNITS APPLICABLE TO ROADWAY AND TRAFFIC DESIGN STANDARD BOOKLETS PUBLISHED IN EITHER ENGLISH OR METRIC UNITS.

STATE OF FLORIDA DEPARTMENT OF TRANSPORTATION

MAST ARM ASSEMBLIES

INTERIM STANDARD

THIS INDEX IS A SUPPLEMENT TO THE ROADWAY AND TRAFFIC DESIGN STANDARDS, BOOKLETS DATED JANUARY 2000.

APPROVED BY
State Structures Design Engineer

REVISION NO.	SHEET NO.	INDEX NO.
	1 of 5	017744

FINANCIAL PROJECT ID	STATE PROJ. NO.	SHEET NO.

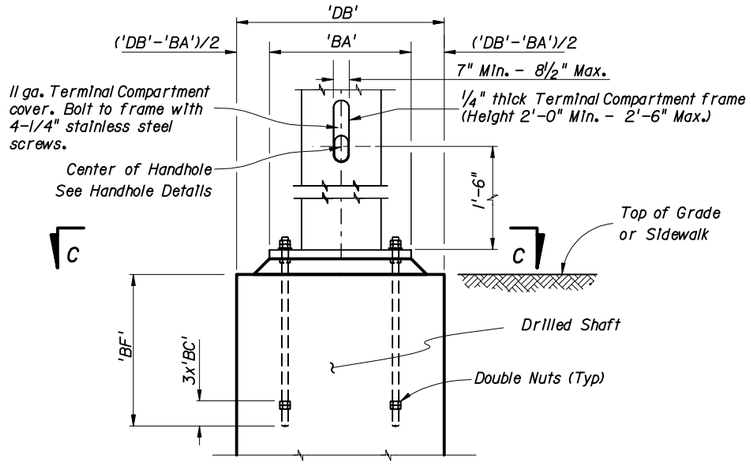

BASE PLATE AND ANCHORAGE ELEVATION
(Reinforcement Not Shown)

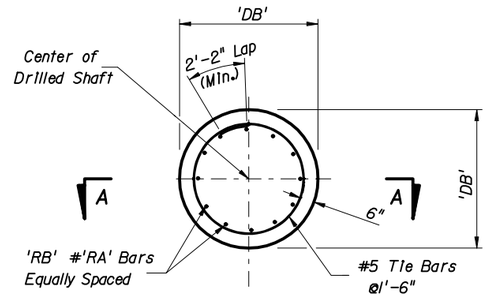

FOUNDATION PLAN
Note: 6" min. cover on Shaft Reinforcement

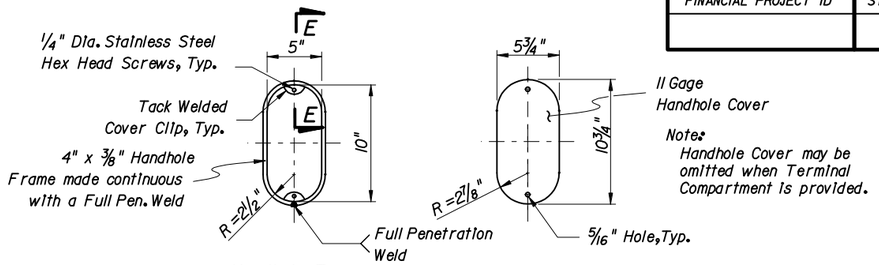

Handhole Frame
(w/Terminal Compartment Omitted)

Handhole Cover

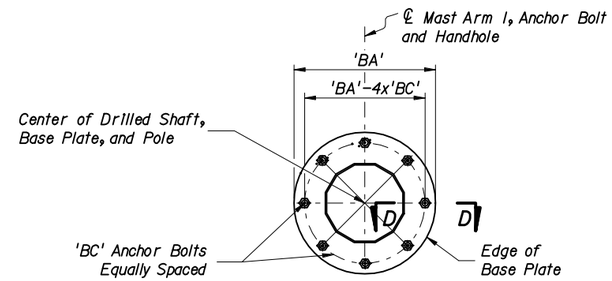

SECTION C-C
(8 Anchor Bolts shown, See Structures Standard Drawings S-1700 or S-1710 for actual quantity of bolts)

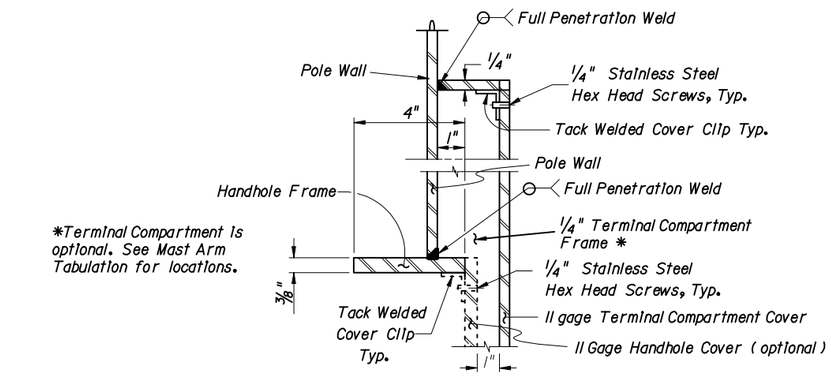

SECTION E-E
(thru Handhole & Terminal Compartment)

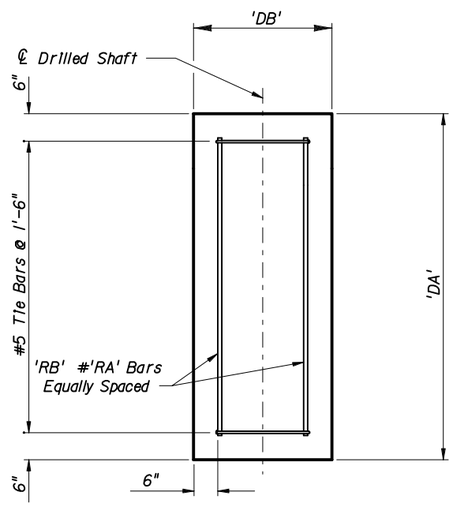

SECTION A-A

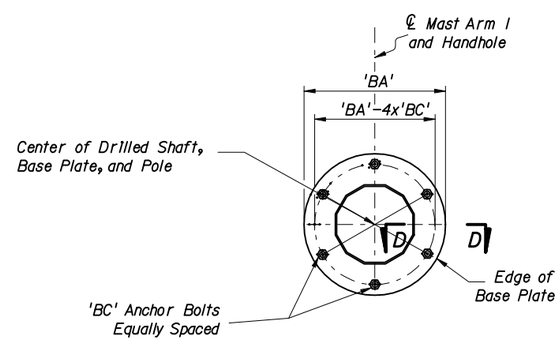

SECTION C-C
(6 Anchor Bolts)

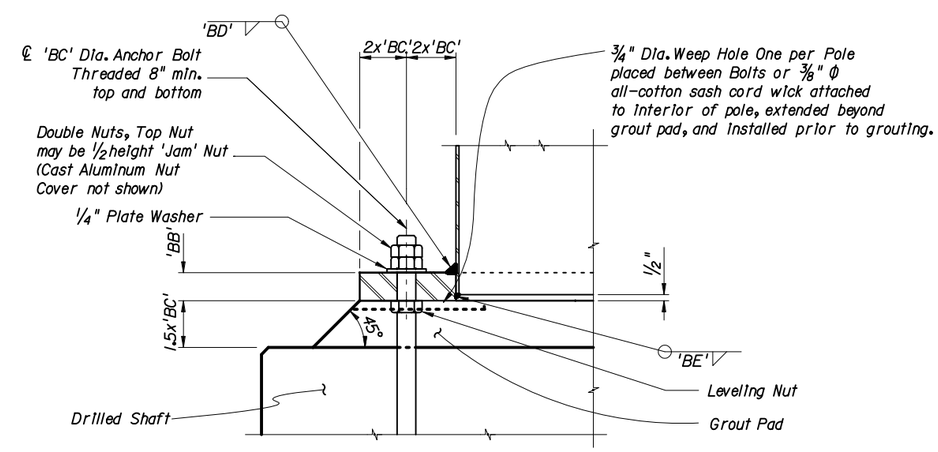

SECTION D-D

NOTES FOR DOUBLE MAST ARMS

1. Work this Drawing with Sheets Nos. 1 and 4 of 5, Indices 17740 and 17742, and Structures Standard Drawings S-1700 and S-1710 as necessary.

NOTES FOR SINGLE MAST ARMS WITH LUMINAIRE

1. Work this Drawing with Sheets Nos. 1, 3 and 5 of 5, Indices 17740 and 17742, and Structures Standard Drawings S-1700 and S-1710 as necessary.

THE SEALED RECORD OF THIS STANDARD IS ON FILE IN THE ROADWAY DESIGN OFFICE.

INTERIM STANDARD IN ENGLISH UNITS APPLICABLE TO ROADWAY AND TRAFFIC DESIGN STANDARD BOOKLETS PUBLISHED IN EITHER ENGLISH OR METRIC UNITS.

TYPICAL FOUNDATION AND BASE PLATE DETAILS

Revised: 7-10-01

STATE OF FLORIDA DEPARTMENT OF TRANSPORTATION

MAST ARM ASSEMBLIES

INTERIM STANDARD

THIS INDEX IS A SUPPLEMENT TO THE ROADWAY AND TRAFFIC DESIGN STANDARDS, BOOKLETS DATED JANUARY 2000.

APPROVED BY W. N. Blair
State Structures Design Engineer

REVISION NO.	SHEET NO.	INDEX NO.
	2 of 5	017744

FINANCIAL PROJECT ID	STATE PROJ. NO.	SHEET NO.

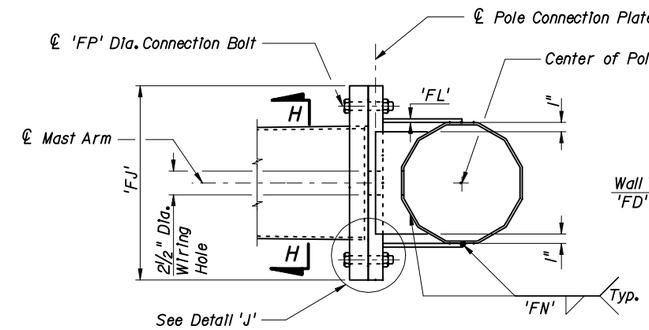

SECTION F-F

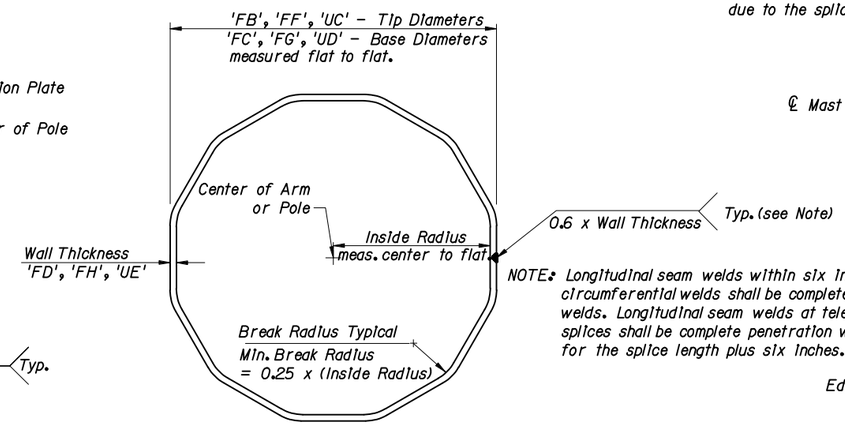

SECTION H-H

NOTE: Longitudinal seam welds within six inches of circumferential welds shall be complete penetration welds. Longitudinal seam welds at telescopic field splices shall be complete penetration welds for the splice length plus six inches.

The 'Slip Joint' splice shall be a tight fit with no change in the Mast Arm slope due to the splice.

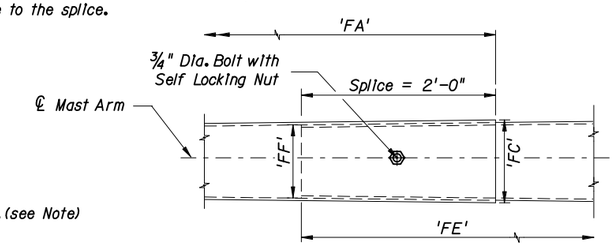

Arm Splice Detail

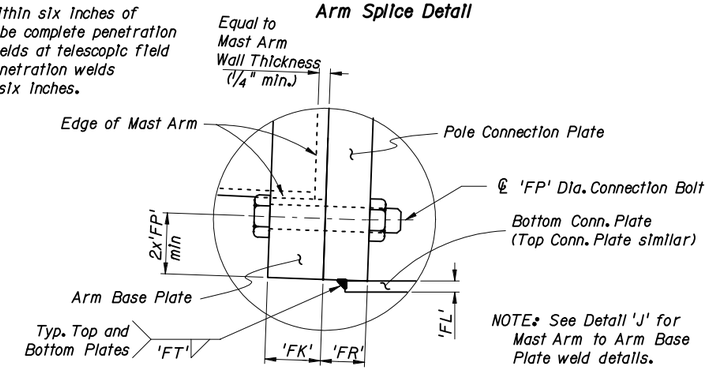

NOTE: See Detail 'J' for Mast Arm to Arm Base Plate weld details.

DETAIL 'I'

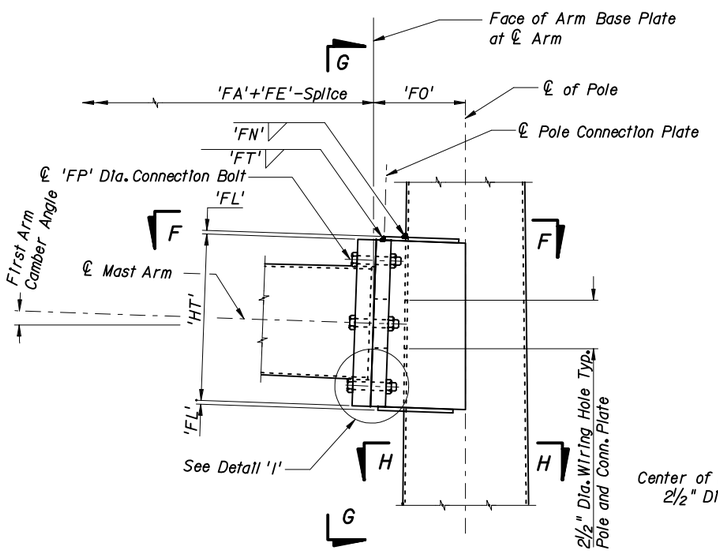

ELEVATION
(Single Arm Connection)

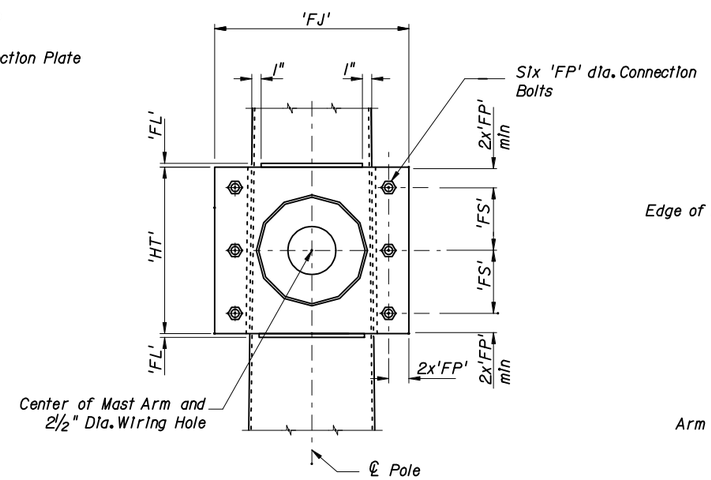

SECTION G-G

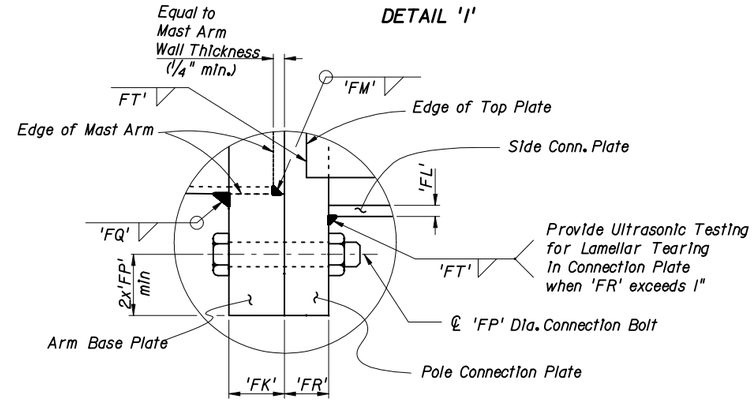

DETAIL 'J'

NOTE:
1. Details shown on this sheet are for 12 sided pole sections. However, sections with more than 12 sides and round sections are permitted provided outside diameter and wall thickness are not reduced.
2. Mast Arm and Connection Plates shall be match marked to ensure proper assembly.

NOTE FOR SINGLE MAST ARMS WITH LUMINAIRES:

Work this Drawing with Sheets Nos. 1, 2 and 5 of 5, Indices 17740 and 17742, and Structures Standard Drawings S-1700 and S-1710 as necessary.

THE SEALED RECORD OF THIS STANDARD IS ON FILE IN THE ROADWAY DESIGN OFFICE.

INTERIM STANDARD IN ENGLISH UNITS APPLICABLE TO ROADWAY AND TRAFFIC DESIGN STANDARD BOOKLETS PUBLISHED IN EITHER ENGLISH OR METRIC UNITS.

TYPICAL SINGLE ARM CONNECTION DETAILS

Revised: 7-10-01

STATE OF FLORIDA DEPARTMENT OF TRANSPORTATION

MAST ARM ASSEMBLIES

INTERIM STANDARD

THIS INDEX IS A SUPPLEMENT TO THE ROADWAY AND TRAFFIC DESIGN STANDARDS, BOOKLETS DATED JANUARY 2000.

APPROVED BY W. V. Bahr
State Structures Design Engineer

REVISION NO.	SHEET NO.	INDEX NO.
	3 of 5	017744

FINANCIAL PROJECT ID	STATE PROJ. NO.	SHEET NO.

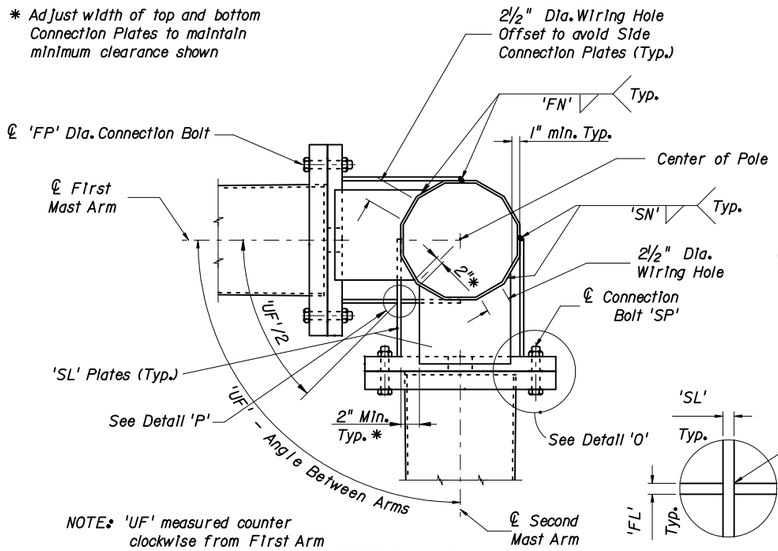

NOTE: 'UF' measured counter clockwise from First Arm

SECTION K-K

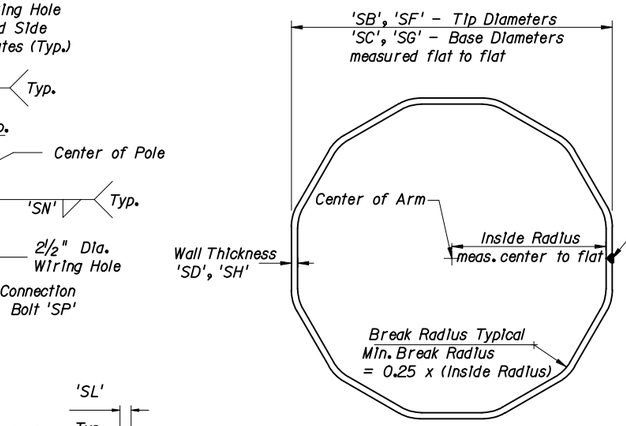

SECTION M-M

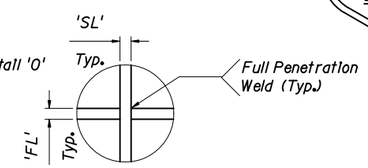

DETAIL 'P'

The 'Slip Joint' splice shall be a tight fit with no change in the Mast Arm slope due to the splice.

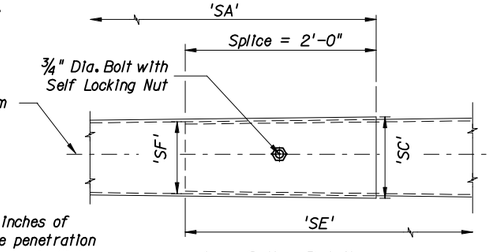

Arm Splice Detail

NOTE: Longitudinal seam welds within six inches of circumferential welds shall be complete penetration welds. Longitudinal seam welds at telescopic field splices shall be complete penetration welds for the splice length plus six inches.

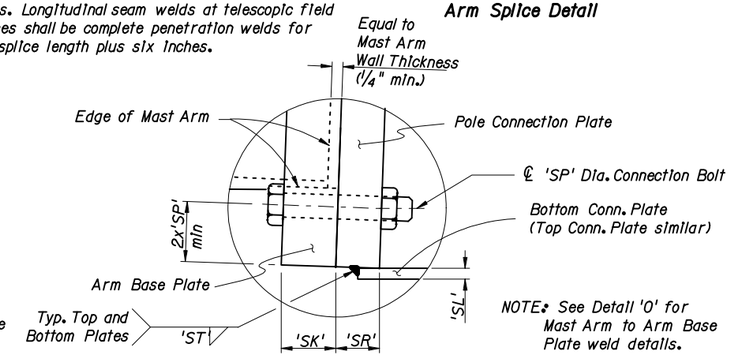

NOTE: See Detail 'O' for Mast Arm to Arm Base Plate weld details.

DETAIL 'N'

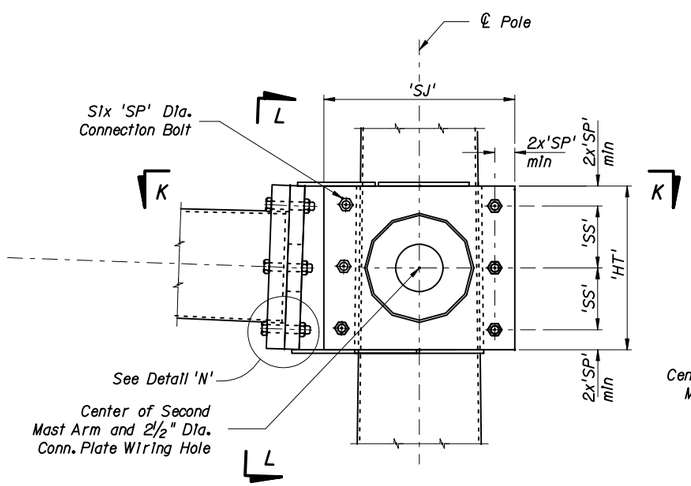

ELEVATION
(Double Arm Connection)

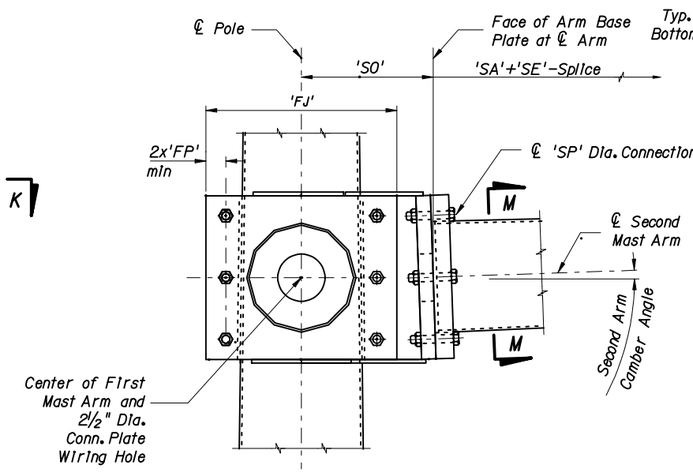

SECTION L-L

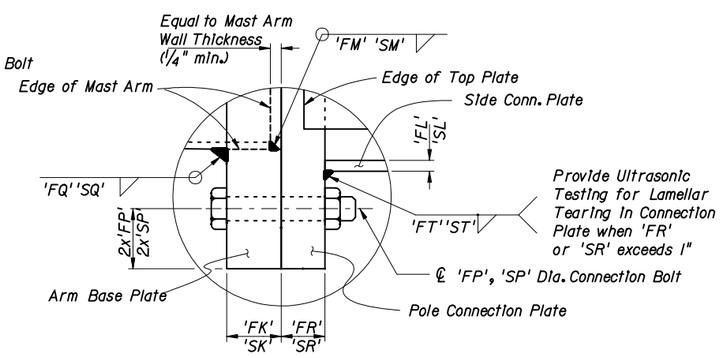

DETAIL 'O'

NOTE:
1. Details shown on this sheet are for 12 sided pole sections. However, sections with more than 12 sides and round sections are permitted provided outside diameter and wall thickness are not reduced.
2. Mast Arm and Connection Plates shall be match marked to ensure proper assembly.

NOTE FOR DOUBLE MAST ARMS:

Work this Drawing with Sheets Nos. 1, 2 and 3 of 5, Indices 17740 and 17742, and Structures Standard Drawings S-1700 and S-1710 as necessary.

THE SEALED RECORD OF THIS STANDARD IS ON FILE IN THE ROADWAY DESIGN OFFICE.

INTERIM STANDARD IN ENGLISH UNITS APPLICABLE TO ROADWAY AND TRAFFIC DESIGN STANDARD BOOKLETS PUBLISHED IN EITHER ENGLISH OR METRIC UNITS.

TYPICAL DOUBLE ARM CONNECTION DETAILS

Revised: 7-10-01

STATE OF FLORIDA DEPARTMENT OF TRANSPORTATION

MAST ARM ASSEMBLIES

INTERIM STANDARD

THIS INDEX IS A SUPPLEMENT TO THE ROADWAY AND TRAFFIC DESIGN STANDARDS, BOOKLETS DATED JANUARY 2000.

APPROVED BY W. N. Blair
State Structures Design Engineer

REVISION NO.	SHEET NO.	INDEX NO.
	4 of 5	017744

FINANCIAL PROJECT ID	STATE PROJ. NO.	SHEET NO.

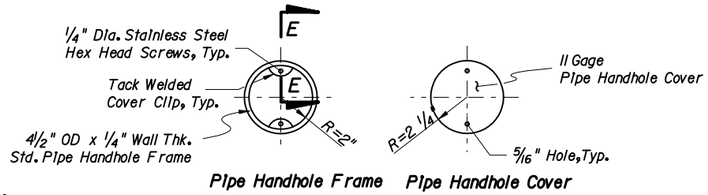

Pipe Handhole Frame Pipe Handhole Cover

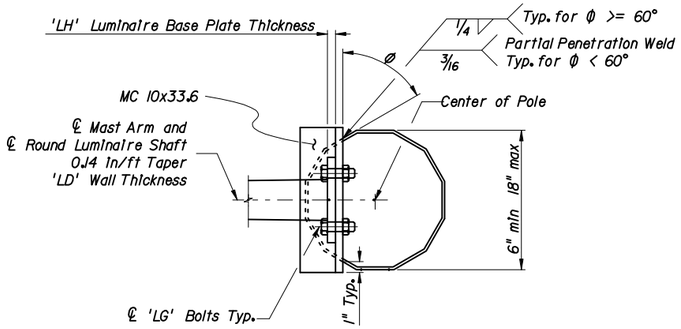

SECTION A-A

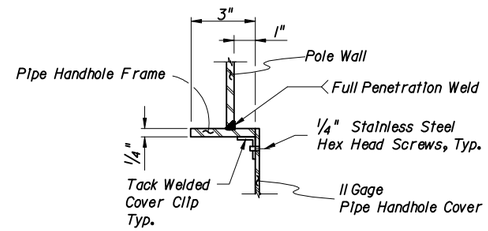

SECTION E-E
(thru Pipe Handhole)

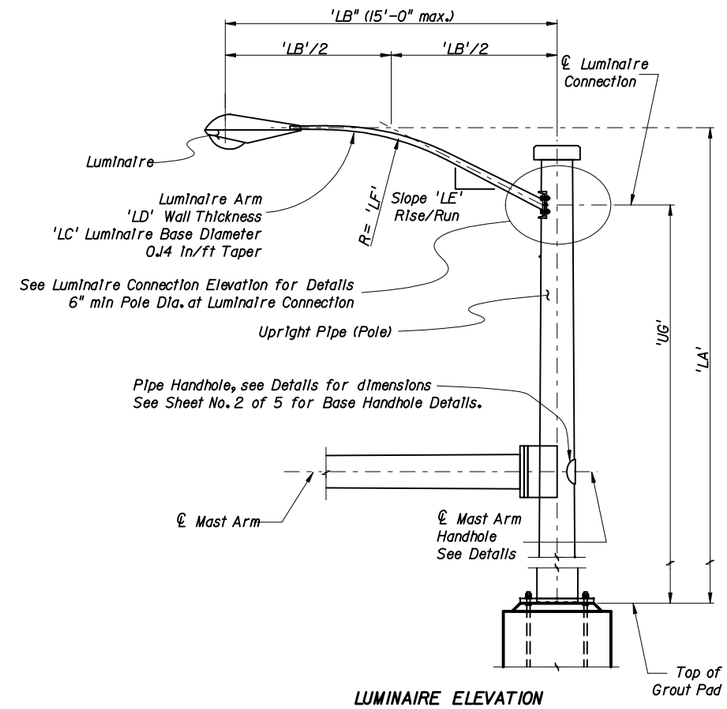

LUMINAIRE ELEVATION

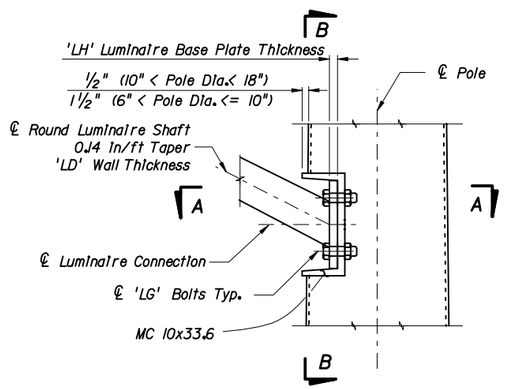

LUMINAIRE CONNECTION ELEVATION

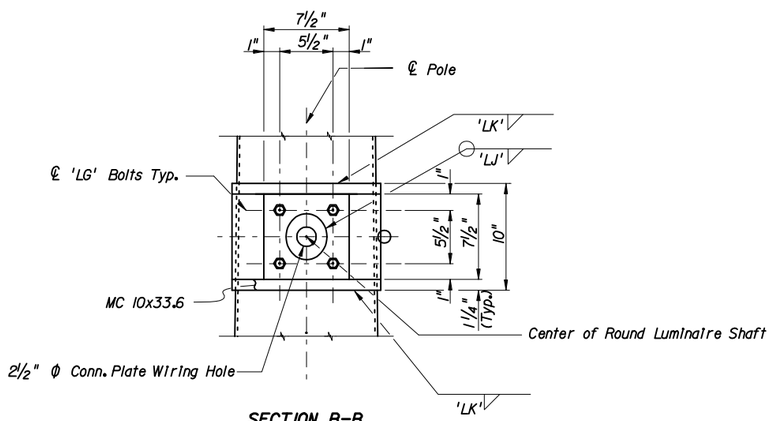

SECTION B-B

NOTE: The Pole shown on this sheet is a 12 sided section. However, sections with more than 12 sides and round sections are permitted provided outside diameter and wall thickness are not reduced

NOTE: The Fabricator may substitute a 1/2" thick bent plate with the same flange width, height, and length as the MC 10x33.6 Channel section.

NOTES:

1. Work this Drawing with Sheet Nos. 1,2 and 3 of 5, Indices 17740 and 17742, and Structures Standard Drawings S-1700 and S-1710 as necessary.
2. Luminaire type and Luminaire to Arm Connection Details can be found elsewhere.
3. Align Luminaire Arm with single Mast Arm or Primary Arm of Double Mast Arm Assembly.

THE SEALED RECORD OF THIS STANDARD IS ON FILE IN THE ROADWAY DESIGN OFFICE.

INTERIM STANDARD IN ENGLISH UNITS APPLICABLE TO ROADWAY AND TRAFFIC DESIGN STANDARD BOOKLETS PUBLISHED IN EITHER ENGLISH OR METRIC UNITS.

TYPICAL LUMINAIRE ARM AND CONNECTION DETAILS

Revised: 7-10-01

STATE OF FLORIDA DEPARTMENT OF TRANSPORTATION

MAST ARM ASSEMBLIES

INTERIM STANDARD

THIS INDEX IS A SUPPLEMENT TO THE ROADWAY AND TRAFFIC DESIGN STANDARDS, BOOKLETS DATED JANUARY 2000.

APPROVED BY W. Phillips
State Structures Design Engineer

REVISION NO.	SHEET NO.	INDEX NO.
	5 of 5	017744