FINANCIAL PROJECT ID	STATE PROJ. NO.	SHEET NO.

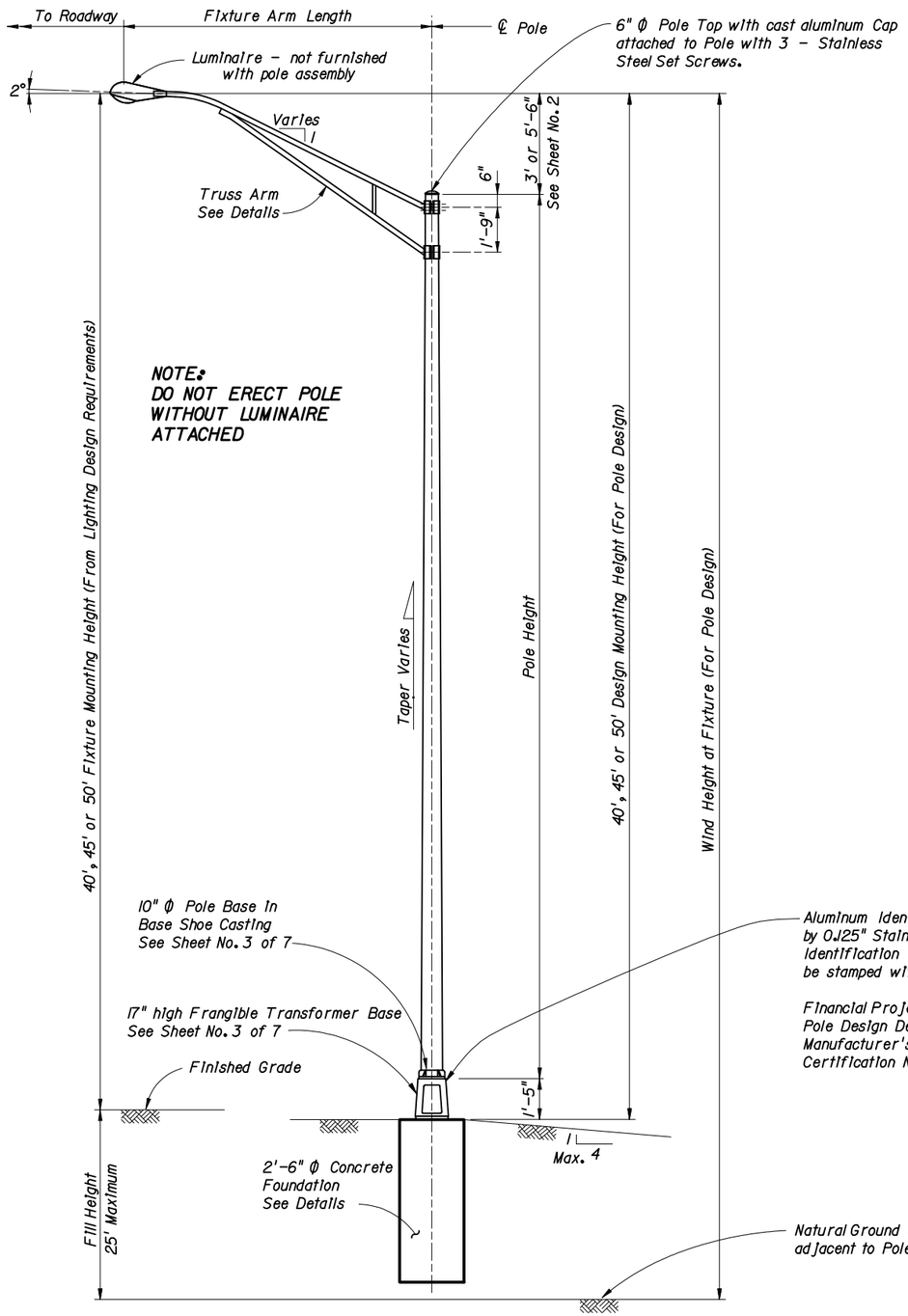

ELEVATION

Aluminum Identification Tag Not to Exceed 2" x 4". Secure to Transformer Base by 0.125" Stainless Steel rivets or screws. Fabricator to provide details for approval. Identification Tag Located on inside of base visible from door opening. Tag to be stamped with the following information :

Financial Project ID
Pole Design Designation (ie. Pole Pay Item Number)
Manufacturer's Name
Certification No.

ALUMINUM LIGHT POLE NOTES

1. Light Pole Materials shall be as follows:

Poles	->	ASTM B221 - ALLOY 6063-T6
Arm Pipes or Pipe Extrusions	->	ASTM B221 - ALLOY 6063-T6
Arm Connection Extrusions, Bars and Plates	->	ASTM B221 - ALLOY 6061-T6
Shoe Base Casting	->	ASTM B26 - ALLOY 356-T6 or ASTM B108 - ALLOY 356-T6
Aluminum Caps and Covers	->	ASTM B26
Frangible Transformer Base Casting	->	ASTM B26 - ALLOY 356-T6 or ASTM B108 - ALLOY 356-T6
Weld Metal	->	ER4043
Anchor Bolts	->	ASTM F1554 Grade 55
Shoe Base Connection Bolts	->	ASTM A325 Type 1
Nuts for Connection Bolts and Anchor Bolts	->	ASTM A563 Grade DH
Washers for Connection Bolts and Anchor Bolts	->	ASTM F436 Type 1
Stainless Steel Fasteners and Hardware	->	A.I.S.I. Grade 304

2. Aluminum alloy 6063 is to be furnished in T4 condition and heat treated in accordance with ASTM B597
3. Shoe Base Connection Bolts, Anchor Bolts, Nuts and Washers shall be galvanized in accordance with ASTM A153. Lock Washers shall galvanized in accordance with ASTM B695 Class 50
4. Foundation concrete shall be Class I (Special) with a minimum 28-day Compressive Strength (f'c) of 3,000 psi for all environmental classifications.
5. Reinforcing Steel shall be ASTM A615-96 Grade 60.
6. A design wind speed of 80 or 100 mph with a 30% gust factor for wind loading on the pole is included in the design.
7. The pole shall be tapered as required to provide a top outside diameter (O.D.) of 6" with a base O.D. of 10". Portions of the shaft near the base shoe and at the arm connections may be held constant at 10" and 6" respectively to simplify fabrication .
8. The pole shall be free of transverse welds except at the base.
9. Poles constructed out of two or more sections with overlapping splices are not permitted.
10. All welding shall conform to American Welding Society Structural Welding Code (Aluminum) ANSI/AWS D1.2 (current edition).
11. See Standard Index No. 17500 for grounding and wiring details.
12. The pole and arms shall be furnished with a 50 grit satin rubbed finish.
13. All designs to be in accordance with the 1994 AASHTO Standard Specifications for Structural Supports for Highway Signs , Luminaires and Traffic Signals.
14. All Light Poles within 5 miles of the coastline shall be equipped with a damping device. Information, details and performance data on the damping device shall be included with the Manufacturer's Qualified Products List (QPL) application.
15. The manufacturer's Qualified Product List (QPL) application shall include test reports certifying that the Arm and Base Connection components, including the breakaway transformer base, are capable of resisting the forces (axial, shear, torsion, and moment, as applicable) shown in the data tables for the arm and pole.

THE SEALED RECORD OF THIS STANDARD IS ON FILE IN THE ROADWAY DESIGN OFFICE.

INTERIM STANDARD IN ENGLISH UNITS APPLICABLE TO ROADWAY AND TRAFFIC DESIGN STANDARD BOOKLETS PUBLISHED IN EITHER ENGLISH OR METRIC UNITS.

ELEVATION AND NOTES

STATE OF FLORIDA DEPARTMENT OF TRANSPORTATION

ALUMINUM LIGHT POLE

INTERIM STANDARD

THIS INDEX IS A SUPPLEMENT TO THE ROADWAY AND TRAFFIC DESIGN STANDARDS, BOOKLETS DATED JANUARY 2000.

APPROVED BY W. V. Bats
State Structures Design Engineer

REVISION NO.	SHEET NO.	INDEX NO.
	1 of 7	017515

Revised: 7-10-01

FINANCIAL PROJECT ID	STATE PROJ. NO.	SHEET NO.

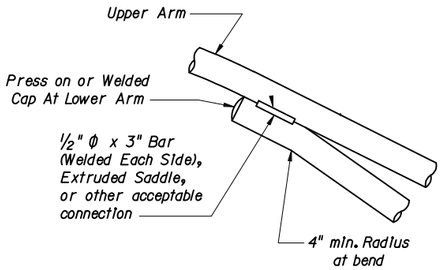

ARM CONNECTION DETAIL

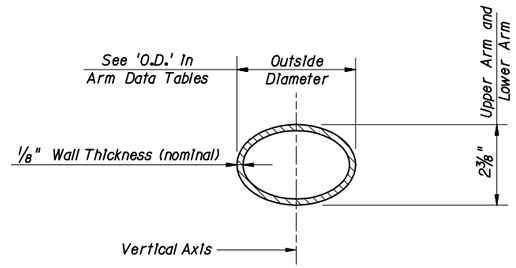

ARM SECTION

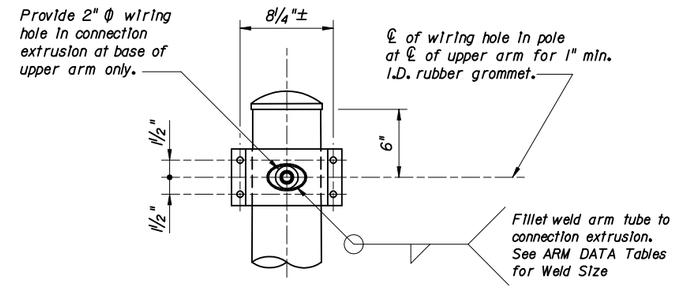

SECTION A-A

(Connection At Lower Arm Similar)

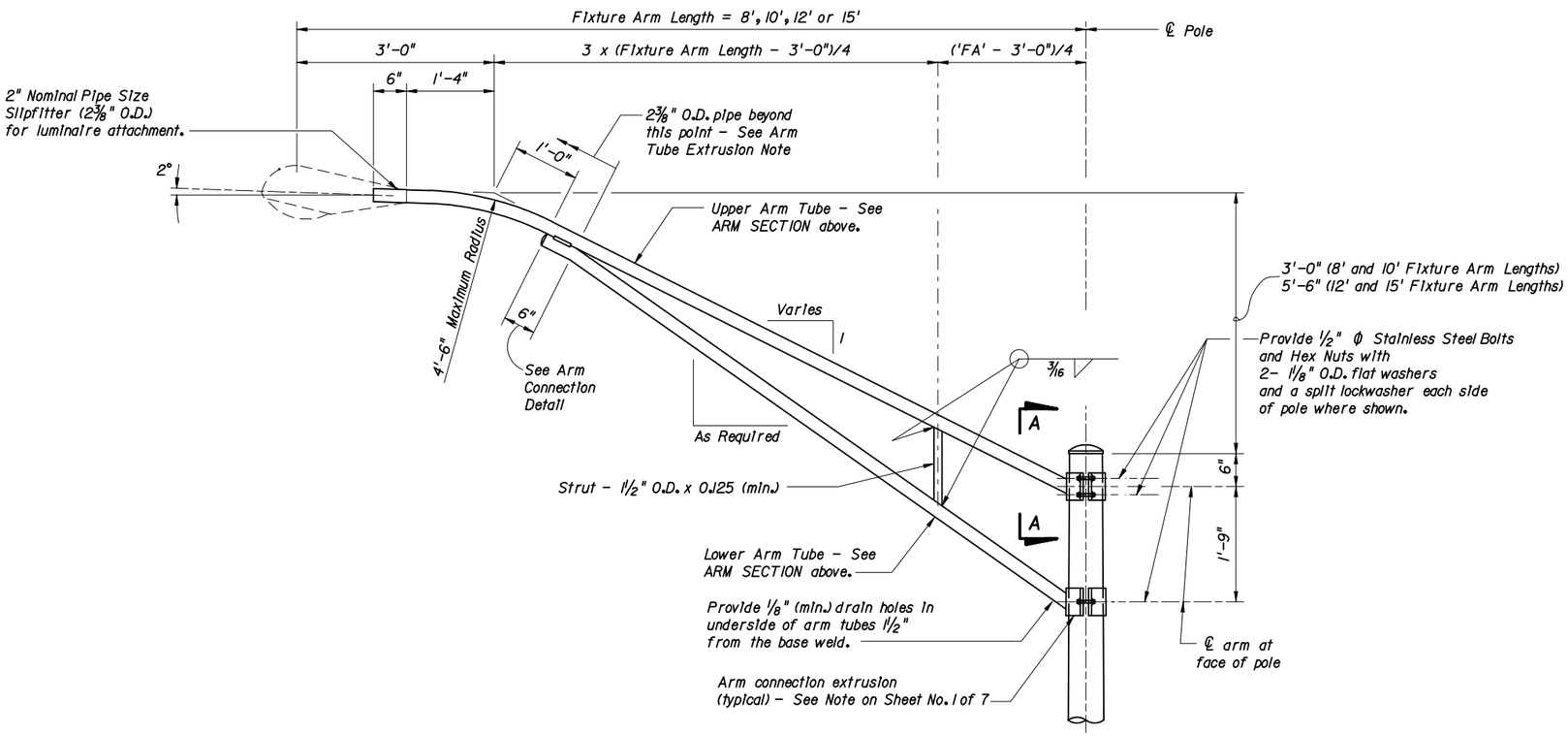

ARM ELEVATION

ARM TUBE EXTRUSIONS NOTES:

At the pole connection, provide arm extrusions with dimensions as shown in the ARM SECTION and as tabulated in the ARM DATA Tables. Uniformly transition elliptical extrusions to a cylindrical section at the arm connection.

The pole fabricator may substitute elliptical cross sections other than those tabulated, provided the section properties about the vertical axis and the area of the section equal or exceed that of the required section, and provided the wall thickness is a minimum of 1/8" nominal and within the Aluminum Association Tolerances.

The outside diameter about the minor axis should be held at 2 3/8" at the upper and lower arms.

THE SEALED RECORD OF THIS STANDARD IS ON FILE IN THE ROADWAY DESIGN OFFICE.

INTERIM STANDARD IN ENGLISH UNITS APPLICABLE TO ROADWAY AND TRAFFIC DESIGN STANDARD BOOKLETS PUBLISHED IN EITHER ENGLISH OR METRIC UNITS.

ARM DETAILS

STATE OF FLORIDA DEPARTMENT OF TRANSPORTATION

ALUMINUM LIGHT POLE

INTERIM STANDARD

THIS INDEX IS A SUPPLEMENT TO THE ROADWAY AND TRAFFIC DESIGN STANDARDS, BOOKLETS DATED JANUARY 2000.

APPROVED BY W. V. Bahr
State Structures Design Engineer

REVISION NO.	SHEET NO.	INDEX NO.
	2 of 7	017515

Revised: 7-10-01

FINANCIAL PROJECT ID	STATE PROJ. NO.	SHEET NO.

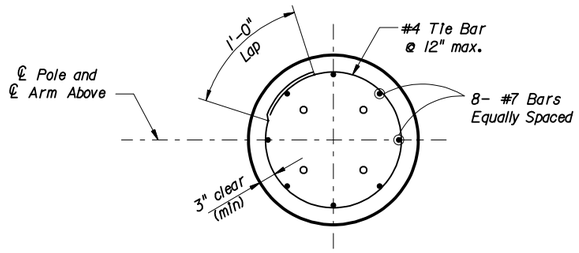

SECTION C-C

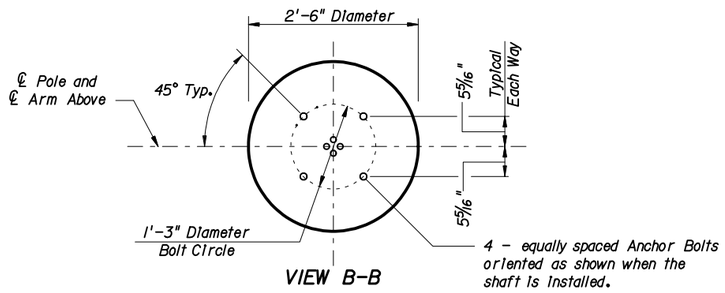

VIEW B-B

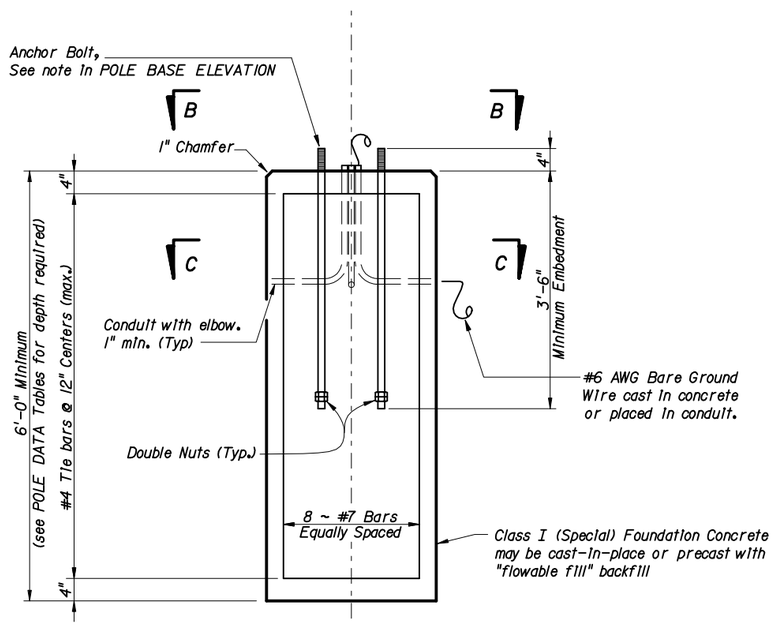

FOUNDATION

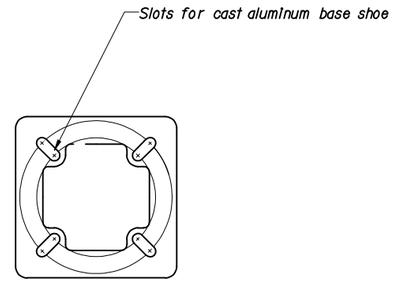

TOP VIEW
TRANSFORMER BASE

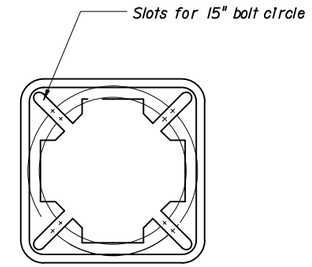

BOTTOM VIEW
TRANSFORMER BASE

FOUNDATION NOTES:
The foundations for Aluminum Light Poles are pre-designed and are based upon the following conservative soil criteria which covers the great majority of soil types found in Florida:

Classification	=	Cohesionless (Fine Sand)
Friction Angle	=	30 Degrees (30°)
Unit Weight	=	50 lbs./cu. ft. (assumed saturated) for poles on fill ≤ 6 feet.
Unit Weight	=	112 lbs./cu. ft (assumed dry) for poles on fill > 6 feet.

Only in cases where the Designer considers the soil types at the specific site location to be of lesser strength properties should an analysis be required. Auger borings, SPT borings or CPT soundings may be utilized as needed to verify the assumed soil properties, and at relatively uniform sites, a single boring or sounding may cover several foundations. Furthermore, borings in the area that were performed for the other purposes may be used to confirm the assumed soil properties. In any event only the soil identification is required.

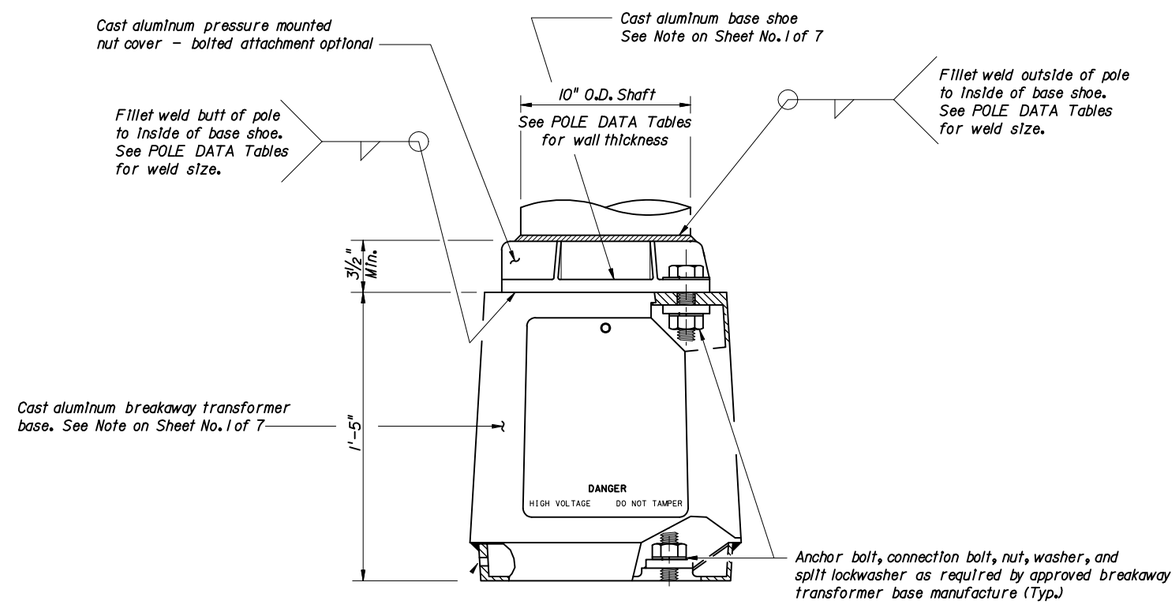

POLE BASE ELEVATION

THE SEALED RECORD OF THIS STANDARD IS ON FILE IN THE ROADWAY DESIGN OFFICE.

INTERIM STANDARD IN ENGLISH UNITS APPLICABLE TO ROADWAY AND TRAFFIC DESIGN STANDARD BOOKLETS PUBLISHED IN EITHER ENGLISH OR METRIC UNITS.

Revised: 7-10-01

BASE DETAILS

STATE OF FLORIDA DEPARTMENT OF TRANSPORTATION

ALUMINUM LIGHT POLE

INTERIM STANDARD

THIS INDEX IS A SUPPLEMENT TO THE ROADWAY AND TRAFFIC DESIGN STANDARDS, BOOKLETS DATED JANUARY 2000.

APPROVED BY W. N. Bates
State Structures Design Engineer

REVISION NO.	SHEET NO.	INDEX NO.
	3 of 7	017515

FINANCIAL PROJECT ID	STATE PROJ. NO.	SHEET NO.

8 FT. ARM DATA

CASE NO.	WIND HEIGHT (FT.)	WIND SPEED (MPH)	UPPER ARM O.D. (IN.)	UPPER ARM WELD (IN.)	UPPER ARM MOMENT (FT.KIP)	UPPER ARM SHEAR (KIP)	UPPER ARM N * (KIP)	LOWER ARM O.D. (IN.)	LOWER ARM WELD (IN.)	LOWER ARM MOMENT (FT.KIP)	LOWER ARM SHEAR (KIP)	LOWER ARM N * (KIP)
1	40	80	2.375	0.250	0.392	0.100	0.162	2.375	0.188	0.218	0.056	0.090
2	40	100	3.625	0.250	0.755	0.178	0.212	2.375	0.188	0.152	0.036	0.043
3	45	80	2.375	0.250	0.392	0.100	0.162	2.375	0.188	0.218	0.056	0.090
4	45	100	3.625	0.250	0.755	0.178	0.212	2.375	0.188	0.152	0.036	0.043
5	50	80	2.375	0.250	0.424	0.104	0.162	2.375	0.250	0.236	0.058	0.090
6	50	100	3.625	0.250	0.819	0.186	0.212	2.375	0.188	0.165	0.037	0.043
7	55	100	3.625	0.250	0.857	0.200	0.212	2.375	0.188	0.173	0.040	0.043
8	60	100	3.625	0.250	0.857	0.200	0.212	2.375	0.188	0.173	0.040	0.043
9	65	100	3.625	0.250	0.857	0.200	0.212	2.375	0.188	0.173	0.040	0.043
10	70	100	3.625	0.250	0.857	0.200	0.212	2.375	0.188	0.173	0.040	0.043
11	75	100	3.625	0.250	0.857	0.200	0.212	2.375	0.188	0.173	0.040	0.043

10 FT. ARM DATA

CASE NO.	WIND HEIGHT (FT.)	WIND SPEED (MPH)	UPPER ARM O.D. (IN.)	UPPER ARM WELD (IN.)	UPPER ARM MOMENT (FT.KIP)	UPPER ARM SHEAR (KIP)	UPPER ARM N * (KIP)	LOWER ARM O.D. (IN.)	LOWER ARM WELD (IN.)	LOWER ARM MOMENT (FT.KIP)	LOWER ARM SHEAR (KIP)	LOWER ARM N * (KIP)
1	40	80	3.625	0.188	0.669	0.134	0.269	2.375	0.188	0.150	0.030	0.060
2	40	100	3.625	0.188	0.651	0.118	0.182	3.625	0.188	0.556	0.101	0.155
3	45	80	3.625	0.188	0.669	0.134	0.269	2.375	0.188	0.150	0.030	0.060
4	45	100	3.625	0.188	0.651	0.118	0.182	3.625	0.188	0.556	0.101	0.155
5	50	80	3.625	0.250	0.720	0.138	0.269	2.375	0.188	0.161	0.031	0.060
6	50	100	3.625	0.250	0.703	0.123	0.182	3.625	0.250	0.601	0.105	0.155
7	55	100	3.625	0.250	0.739	0.133	0.182	3.625	0.250	0.632	0.114	0.155
8	60	100	3.625	0.250	0.739	0.133	0.182	3.625	0.250	0.632	0.114	0.155
9	65	100	3.625	0.250	0.739	0.133	0.182	3.625	0.250	0.632	0.114	0.155
10	70	100	3.625	0.250	0.739	0.133	0.182	3.625	0.250	0.632	0.114	0.155
11	75	100	3.625	0.250	0.739	0.133	0.182	3.625	0.250	0.632	0.114	0.155

12 FT. ARM DATA

CASE NO.	WIND HEIGHT (FT.)	WIND SPEED (MPH)	UPPER ARM O.D. (IN.)	UPPER ARM WELD (IN.)	UPPER ARM MOMENT (FT.KIP)	UPPER ARM SHEAR (KIP)	UPPER ARM N * (KIP)	LOWER ARM O.D. (IN.)	LOWER ARM WELD (IN.)	LOWER ARM MOMENT (FT.KIP)	LOWER ARM SHEAR (KIP)	LOWER ARM N * (KIP)
1	40	80	3.625	0.188	0.593	0.099	0.235	3.625	0.188	0.486	0.081	0.192
2	40	100	4.625	0.250	1.150	0.179	0.299	3.625	0.188	0.518	0.081	0.135
3	45	80	3.625	0.188	0.593	0.099	0.235	3.625	0.188	0.486	0.081	0.192
4	45	100	4.625	0.250	1.150	0.179	0.299	3.625	0.188	0.518	0.081	0.135
5	50	80	3.625	0.188	0.634	0.102	0.235	3.625	0.188	0.520	0.084	0.192
6	50	100	4.625	0.250	1.230	0.185	0.299	3.625	0.188	0.554	0.084	0.135
7	55	100	4.625	0.313	1.300	0.201	0.299	3.625	0.250	0.588	0.091	0.135
8	60	100	4.625	0.313	1.300	0.201	0.299	3.625	0.250	0.588	0.091	0.135
9	65	100	4.625	0.313	1.300	0.201	0.299	3.625	0.250	0.588	0.091	0.135
10	70	100	4.625	0.313	1.300	0.201	0.299	3.625	0.250	0.588	0.091	0.135
11	75	100	4.625	0.313	1.300	0.201	0.299	3.625	0.250	0.588	0.091	0.135

15 FT. ARM DATA

CASE NO.	WIND HEIGHT (FT.)	WIND SPEED (MPH)	UPPER ARM O.D. (IN.)	UPPER ARM WELD (IN.)	UPPER ARM MOMENT (FT.KIP)	UPPER ARM SHEAR (KIP)	UPPER ARM N * (KIP)	LOWER ARM O.D. (IN.)	LOWER ARM WELD (IN.)	LOWER ARM MOMENT (FT.KIP)	LOWER ARM SHEAR (KIP)	LOWER ARM N * (KIP)
1	40	80	4.625	0.250	1.02	0.137	0.388	3.625	0.188	0.484	0.065	0.184
2	40	100	4.625	0.250	1.15	0.145	0.293	4.625	0.250	1.170	0.146	0.296
3	45	80	4.625	0.250	1.02	0.137	0.388	3.625	0.188	0.484	0.065	0.184
4	45	100	4.625	0.250	1.15	0.145	0.293	4.625	0.250	1.170	0.146	0.296
5	50	80	4.625	0.250	1.09	0.140	0.388	3.625	0.188	0.514	0.066	0.184
6	50	100	4.625	0.250	1.23	0.149	0.293	4.625	0.313	1.240	0.151	0.296
7	55	100	4.625	0.313	1.31	0.162	0.293	4.625	0.313	1.330	0.164	0.296
8	60	100	4.625	0.313	1.31	0.162	0.293	4.625	0.313	1.330	0.164	0.296
9	65	100	4.625	0.313	1.31	0.162	0.293	4.625	0.313	1.330	0.164	0.296
10	70	100	4.625	0.313	1.31	0.162	0.293	4.625	0.313	1.330	0.164	0.296
11	75	100	4.625	0.313	1.31	0.162	0.293	4.625	0.313	1.330	0.164	0.296

Note:
All tables were developed assuming the following Luminaire properties:
Area = 1.5 ft^2 (Includes wind drag coefficient)
Weight = 51 pounds

* 'N' equals force normal to face of connection due to axial force in the arm - tension upper arm - compression lower arm.

THE SEALED RECORD OF THIS STANDARD IS ON FILE IN THE ROADWAY DESIGN OFFICE.

INTERIM STANDARD IN ENGLISH UNITS APPLICABLE TO ROADWAY AND TRAFFIC DESIGN STANDARD BOOKLETS PUBLISHED IN EITHER ENGLISH OR METRIC UNITS.

Revised: 7-10-01

ARM DATA

STATE OF FLORIDA DEPARTMENT OF TRANSPORTATION

ALUMINUM LIGHT POLE

INTERIM STANDARD

THIS INDEX IS A SUPPLEMENT TO THE ROADWAY AND TRAFFIC DESIGN STANDARDS, BOOKLETS DATED JANUARY 2000.

APPROVED BY
State Structures Design Engineer

REVISION NO.	SHEET NO.	INDEX NO.
	4 of 7	017515

FINANCIAL PROJECT ID	STATE PROJ. NO.	SHEET NO.

DATA FOR POLE WITH 8 FT. ARM

CASE NO.	WIND HEIGHT (FT.)	WIND SPEED (MPH)	POLE WALL (IN.)	UPPER WELD (IN.)	LOWER WELD (IN.)	BASE FORCES MOMENT (FT.KIP)	SHEAR (KIP)	TORSION (FT.KIP)	AXIAL (KIP)	FOUND. DEPTH (FT.)
1	40	80	0.156	0.188	0.156	13.5	0.522	0.611	0.227	6
2	40	100	0.156	0.188	0.156	17.6	0.690	0.907	0.229	7
3	45	80	0.156	0.188	0.156	13.8	0.539	0.611	0.227	6
4	45	100	0.156	0.188	0.156	18.0	0.713	0.907	0.229	7
5	50	80	0.156	0.188	0.156	14.3	0.563	0.660	0.227	6
6	50	100	0.156	0.188	0.156	18.6	0.747	0.985	0.229	6
7	55	100	0.156	0.188	0.156	19.7	0.790	1.030	0.229	6
8	60	100	0.188	0.188	0.188	20.1	0.805	1.030	0.261	6
9	65	100	0.188	0.188	0.188	20.4	0.825	1.030	0.261	6

DATA FOR POLE WITH 10 FT. ARM

CASE NO.	WIND HEIGHT (FT.)	WIND SPEED (MPH)	POLE WALL (IN.)	UPPER WELD (IN.)	LOWER WELD (IN.)	BASE FORCES MOMENT (FT.KIP)	SHEAR (KIP)	TORSION (FT.KIP)	AXIAL (KIP)	FOUND. DEPTH (FT.)
1	40	80	0.156	0.188	0.156	13.7	0.528	0.819	0.233	6
2	40	100	0.156	0.188	0.156	17.8	0.694	1.210	0.236	7
3	45	80	0.156	0.188	0.156	14.0	0.545	0.819	0.233	6
4	45	100	0.156	0.188	0.156	18.2	0.717	1.210	0.236	7
5	50	80	0.156	0.188	0.156	14.5	0.569	0.881	0.233	6
6	50	100	0.156	0.188	0.156	18.8	0.751	1.300	0.236	6
7	55	100	0.188	0.188	0.188	19.9	0.795	1.370	0.268	6
8	60	100	0.188	0.188	0.188	20.3	0.810	1.370	0.268	6
9	65	100	0.188	0.188	0.188	20.6	0.830	1.370	0.268	6

DATA FOR POLE WITH 12 FT. ARM

CASE NO.	WIND HEIGHT (FT.)	WIND SPEED (MPH)	POLE WALL (IN.)	UPPER WELD (IN.)	LOWER WELD (IN.)	BASE FORCES MOMENT (FT.KIP)	SHEAR (KIP)	TORSION (FT.KIP)	AXIAL (KIP)	FOUND. DEPTH (FT.)
1	40	80	0.156	0.188	0.156	13.1	0.514	1.08	0.232	6
2	40	100	0.156	0.188	0.156	17.9	0.699	1.66	0.235	7
3	45	80	0.156	0.188	0.156	13.4	0.530	1.08	0.232	6
4	45	100	0.156	0.188	0.156	18.2	0.721	1.66	0.235	7
5	50	80	0.156	0.188	0.156	13.8	0.553	1.15	0.232	6
6	50	100	0.156	0.188	0.156	18.9	0.753	1.78	0.235	6
7	55	100	0.188	0.188	0.188	19.9	0.796	1.89	0.265	6
8	60	100	0.188	0.188	0.188	20.4	0.814	1.89	0.265	6
9	65	100	0.188	0.188	0.188	20.7	0.832	1.89	0.265	6

DATA FOR POLE WITH 15 FT. ARM

CASE NO.	WIND HEIGHT (FT.)	WIND SPEED (MPH)	POLE WALL (IN.)	UPPER WELD (IN.)	LOWER WELD (IN.)	BASE FORCES MOMENT (FT.KIP)	SHEAR (KIP)	TORSION (FT.KIP)	AXIAL (KIP)	FOUND. DEPTH (FT.)
1	40	80	0.156	0.188	0.156	13.9	0.533	1.51	0.242	6
2	40	100	0.156	0.188	0.156	19.1	0.728	2.32	0.246	7
3	45	80	0.156	0.188	0.156	14.2	0.550	1.51	0.242	6
4	45	100	0.188	0.188	0.188	19.4	0.750	2.32	0.276	7
5	50	80	0.156	0.188	0.156	14.6	0.572	1.60	0.242	6
6	50	100	0.188	0.188	0.188	20.1	0.782	2.46	0.276	6
7	55	100	0.188	0.188	0.188	21.3	0.829	2.63	0.276	6
8	60	100	0.188	0.188	0.188	21.7	0.847	2.63	0.276	6
9	65	100	0.188	0.188	0.188	22.0	0.865	2.63	0.276	6

NOTE:
Pole wall thicknesses shown in the POLE DATA TABLES are nominals and shall be within the Aluminum Association Tolerances. Thicker walls are permitted and tapered walls may be used provided the minimum Aluminum Association thicknesses are not violated.

THE SEALED RECORD OF THIS STANDARD IS ON FILE IN THE ROADWAY DESIGN OFFICE.

INTERIM STANDARD IN ENGLISH UNITS APPLICABLE TO ROADWAY AND TRAFFIC DESIGN STANDARD BOOKLETS PUBLISHED IN EITHER ENGLISH OR METRIC UNITS.

Revised: 7-10-01

POLE DATA - 40 FT. MOUNTING HEIGHT

STATE OF FLORIDA DEPARTMENT OF TRANSPORTATION

ALUMINUM LIGHT POLE

INTERIM STANDARD

THIS INDEX IS A SUPPLEMENT TO THE ROADWAY AND TRAFFIC DESIGN STANDARDS, BOOKLETS DATED JANUARY 2000.

APPROVED BY W. N. Statz
State Structures Design Engineer

REVISION NO.	SHEET NO.	INDEX NO.
	5 of 7	017515

FINANCIAL PROJECT ID	STATE PROJ. NO.	SHEET NO.

DATA FOR POLE WITH 8 FT. ARM

CASE NO.	WIND HEIGHT (FT.)	WIND SPEED (MPH)	POLE WALL (IN.)	UPPER WELD (IN.)	LOWER WELD (IN.)	BASE FORCES MOMENT (FT.KIP)	SHEAR (KIP)	TORSION (FT.KIP)	AXIAL (KIP)	FOUND. DEPTH (FT.)
1	45	80	0.156	0.188	0.156	16.6	0.582	0.611	0.249	6
2	45	100	0.188	0.188	0.188	21.5	0.767	0.907	0.288	7
3	50	80	0.156	0.188	0.156	17.2	0.608	0.660	0.249	7
4	50	100	0.188	0.188	0.188	22.4	0.803	0.985	0.288	7
5	55	100	0.250	0.188	0.250	23.6	0.844	1.030	0.359	6
6	60	100	0.250	0.188	0.250	24.2	0.876	1.030	0.359	6
7	65	100	0.250	0.188	0.250	24.6	0.894	1.030	0.359	6
8	70	100	0.250	0.188	0.250	24.9	0.913	1.030	0.359	6

DATA FOR POLE WITH 10 FT. ARM

CASE NO.	WIND HEIGHT (FT.)	WIND SPEED (MPH)	POLE WALL (IN.)	UPPER WELD (IN.)	LOWER WELD (IN.)	BASE FORCES MOMENT (FT.KIP)	SHEAR (KIP)	TORSION (FT.KIP)	AXIAL (KIP)	FOUND. DEPTH (FT.)
1	45	80	0.156	0.188	0.156	16.9	0.588	0.819	0.255	7
2	45	100	0.188	0.188	0.188	21.8	0.771	1.210	0.294	7
3	50	80	0.156	0.188	0.156	17.5	0.614	0.881	0.255	7
4	50	100	0.250	0.188	0.250	22.6	0.807	1.300	0.366	7
5	55	100	0.250	0.188	0.250	23.9	0.849	1.370	0.366	6
6	60	100	0.250	0.188	0.250	24.4	0.881	1.370	0.366	6
7	65	100	0.250	0.188	0.250	24.8	0.899	1.370	0.366	6
8	70	100	0.250	0.188	0.250	25.2	0.917	1.370	0.366	6

DATA FOR POLE WITH 12 FT. ARM

CASE NO.	WIND HEIGHT (FT.)	WIND SPEED (MPH)	POLE WALL (IN.)	UPPER WELD (IN.)	LOWER WELD (IN.)	BASE FORCES MOMENT (FT.KIP)	SHEAR (KIP)	TORSION (FT.KIP)	AXIAL (KIP)	FOUND. DEPTH (FT.)
1	45	80	0.156	0.188	0.156	16.2	0.573	1.08	0.255	6
2	45	100	0.188	0.188	0.188	21.9	0.775	1.66	0.291	7
3	50	80	0.156	0.188	0.156	16.7	0.594	1.15	0.255	7
4	50	100	0.250	0.188	0.250	22.7	0.804	1.78	0.358	7
5	55	100	0.250	0.188	0.250	23.9	0.851	1.89	0.358	6
6	60	100	0.250	0.188	0.250	24.5	0.884	1.89	0.358	6
7	65	100	0.250	0.188	0.250	24.9	0.898	1.89	0.358	6
8	70	100	0.250	0.188	0.250	25.2	0.918	1.89	0.358	6

DATA FOR POLE WITH 15 FT. ARM

CASE NO.	WIND HEIGHT (FT.)	WIND SPEED (MPH)	POLE WALL (IN.)	UPPER WELD (IN.)	LOWER WELD (IN.)	BASE FORCES MOMENT (FT.KIP)	SHEAR (KIP)	TORSION (FT.KIP)	AXIAL (KIP)	FOUND. DEPTH (FT.)
1	45	80	0.156	0.188	0.156	17.1	0.592	1.51	0.264	7
2	45	100	0.250	0.188	0.250	23.2	0.804	2.32	0.370	7
3	50	80	0.156	0.188	0.156	17.6	0.613	1.60	0.264	7
4	50	100	0.250	0.188	0.250	24.0	0.833	2.46	0.370	7
5	55	100	0.250	0.188	0.250	25.4	0.885	2.63	0.370	6
6	60	100	0.250	0.250	0.250	26.0	0.918	2.63	0.370	6
7	65	100	0.250	0.250	0.250	26.4	0.931	2.63	0.370	6
8	70	100	0.250	0.250	0.250	26.7	0.952	2.63	0.370	6

NOTE:
Pole wall thicknesses shown in the POLE DATA TABLES are nominals and shall be within the Aluminum Association Tolerances. Thicker walls are permitted and tapered walls may be used provided the minimum Aluminum Association thicknesses are not violated.

THE SEALED RECORD OF THIS STANDARD IS ON FILE IN THE ROADWAY DESIGN OFFICE.

INTERIM STANDARD IN ENGLISH UNITS APPLICABLE TO ROADWAY AND TRAFFIC DESIGN STANDARD BOOKLETS PUBLISHED IN EITHER ENGLISH OR METRIC UNITS.

Revised: 7-10-01

POLE DATA - 45 FT. MOUNTING HEIGHT

STATE OF FLORIDA DEPARTMENT OF TRANSPORTATION

ALUMINUM LIGHT POLE

INTERIM STANDARD

THIS INDEX IS A SUPPLEMENT TO THE ROADWAY AND TRAFFIC DESIGN STANDARDS, BOOKLETS DATED JANUARY 2000.

APPROVED BY W. N. Bates
State Structures Design Engineer

REVISION NO.	SHEET NO.	INDEX NO.
	6 of 7	017515

FINANCIAL PROJECT ID	STATE PROJ. NO.	SHEET NO.

DATA FOR POLE WITH 8 FT. ARM

CASE NO.	WIND HEIGHT (FT.)	WIND SPEED (MPH)	POLE WALL (IN.)	UPPER WELD (IN.)	LOWER WELD (IN.)	BASE FORCES MOMENT (FT.KIP)	SHEAR (KIP)	TORSION (FT.KIP)	AXIAL (KIP)	FOUND. DEPTH (FT.)
1	50	80	0.188	0.188	0.188	20.4	0.650	0.660	0.312	7
2	50	100	0.250	0.250	0.250	26.4	0.856	0.985	0.394	8
3	55	100	0.250	0.250	0.250	27.9	0.899	1.030	0.394	8
4	60	100	0.250	0.250	0.250	28.5	0.930	1.030	0.394	6
5	65	100	0.250	0.250	0.250	29.1	0.965	1.030	0.394	6
6	70	100	0.250	0.250	0.250	29.5	0.981	1.030	0.394	6
7	75	100	0.250	0.250	0.250	29.8	0.998	1.030	0.394	6

DATA FOR POLE WITH 10 FT. ARM

CASE NO.	WIND HEIGHT (FT.)	WIND SPEED (MPH)	POLE WALL (IN.)	UPPER WELD (IN.)	LOWER WELD (IN.)	BASE FORCES MOMENT (FT.KIP)	SHEAR (KIP)	TORSION (FT.KIP)	AXIAL (KIP)	FOUND. DEPTH (FT.)
1	50	80	0.188	0.188	0.188	20.7	0.656	0.881	0.317	7
2	50	100	0.250	0.250	0.250	26.7	0.860	1.300	0.400	8
3	55	100	0.250	0.250	0.250	28.1	0.904	1.370	0.400	8
4	60	100	0.250	0.250	0.250	28.8	0.934	1.370	0.400	6
5	65	100	0.250	0.250	0.250	29.4	0.970	1.370	0.400	6
6	70	100	0.250	0.250	0.250	29.8	0.986	1.370	0.400	6
7	75	100	0.250	0.250	0.250	30.1	1.000	1.370	0.400	6

DATA FOR POLE WITH 12 FT. ARM

CASE NO.	WIND HEIGHT (FT.)	WIND SPEED (MPH)	POLE WALL (IN.)	UPPER WELD (IN.)	LOWER WELD (IN.)	BASE FORCES MOMENT (FT.KIP)	SHEAR (KIP)	TORSION (FT.KIP)	AXIAL (KIP)	FOUND. DEPTH (FT.)
1	50	80	0.188	0.188	0.188	19.9	0.640	1.15	0.315	7
2	50	100	0.250	0.250	0.250	26.8	0.863	1.78	0.393	8
3	55	100	0.250	0.250	0.250	28.2	0.906	1.89	0.393	8
4	60	100	0.250	0.250	0.250	28.8	0.935	1.89	0.393	6
5	65	100	0.250	0.250	0.250	29.5	0.972	1.89	0.393	6
6	70	100	0.250	0.250	0.250	29.9	0.987	1.89	0.393	6
7	75	100	0.250	0.250	0.250	30.1	1.000	1.89	0.393	6

DATA FOR POLE WITH 15 FT. ARM

CASE NO.	WIND HEIGHT (FT.)	WIND SPEED (MPH)	POLE WALL (IN.)	UPPER WELD (IN.)	LOWER WELD (IN.)	BASE FORCES MOMENT (FT.KIP)	SHEAR (KIP)	TORSION (FT.KIP)	AXIAL (KIP)	FOUND. DEPTH (FT.)
1	50	80	0.188	0.188	0.188	20.9	0.660	1.60	0.324	7
2	50	100	0.250	0.250	0.250	28.2	0.892	2.46	0.404	8
3	55	100	0.250	0.250	0.250	29.9	0.940	2.63	0.404	8
4	60	100	0.313	0.250	0.313	30.5	0.968	2.63	0.479	6
5	65	100	0.313	0.250	0.313	31.2	1.000	2.63	0.479	6
6	70	100	0.313	0.250	0.313	31.5	1.020	2.63	0.479	6
7	75	100	0.313	0.250	0.313	31.8	1.040	2.63	0.479	6

NOTE:
Pole wall thicknesses shown in the POLE DATA TABLES are nominals and shall be within the Aluminum Association Tolerances. Thicker walls are permitted and tapered walls may be used provided the minimum Aluminum Association thicknesses are not violated.

THE SEALED RECORD OF THIS STANDARD IS ON FILE IN THE ROADWAY DESIGN OFFICE.

INTERIM STANDARD IN ENGLISH UNITS APPLICABLE TO ROADWAY AND TRAFFIC DESIGN STANDARD BOOKLETS PUBLISHED IN EITHER ENGLISH OR METRIC UNITS.

Revised: 7-10-01

POLE DATA - 50 FT. MOUNTING HEIGHT

STATE OF FLORIDA DEPARTMENT OF TRANSPORTATION

ALUMINUM LIGHT POLE

INTERIM STANDARD

THIS INDEX IS A SUPPLEMENT TO THE ROADWAY AND TRAFFIC DESIGN STANDARDS, BOOKLETS DATED JANUARY 2000.

APPROVED BY W. N. Bates
State Structures Design Engineer

REVISION NO.	SHEET NO.	INDEX NO.
	7 of 7	017515