FINANCIAL PROJECT ID	SHEET NO.

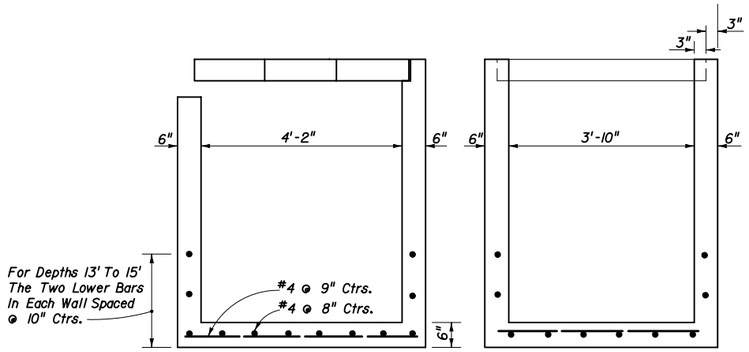

PARTIAL SECTION AA PARTIAL SECTION BB

DITCH BOTTOM INLET TYPE B

INDEX NO. 231

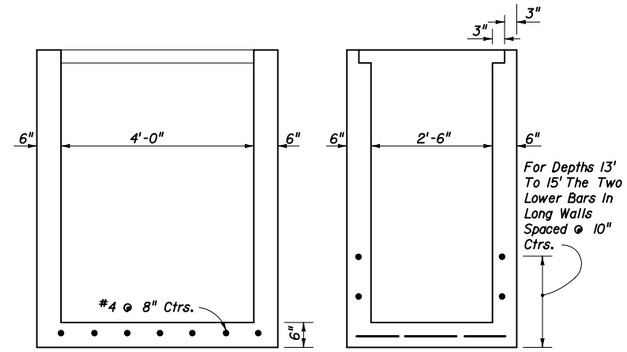

PARTIAL SECTION AA PARTIAL SECTION BB

DITCH BOTTOM INLET TYPE F

INDEX NO. 233

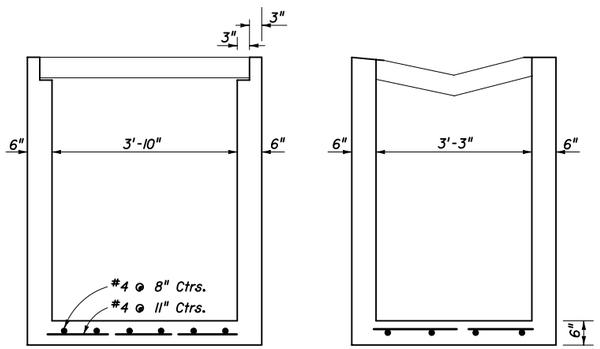

PARTIAL SECTION AA PARTIAL SECTION BB

GUTTER INLET TYPE S

INDEX NO. 220

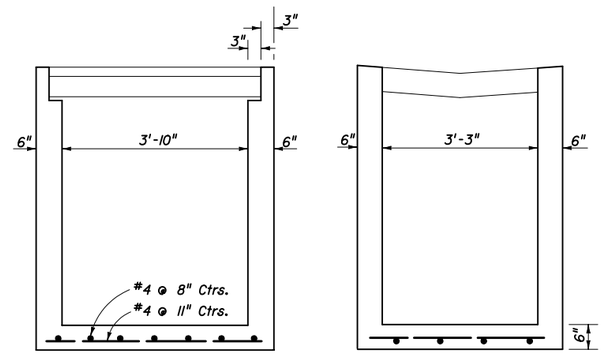

PARTIAL SECTION AA PARTIAL SECTION BB

GUTTER INLET TYPE V

AND DITCH BOTTOM INLET TYPE J

INDEX NO. 221 & 234

NOTES FOR THIN-WALL PRECAST OPTIONS

1. The details on Sheets 4, 5 & 6 are optional for precast inlet construction up to depths of 15'. These inlets can be used with Alt. "B" Bottoms, Index No. 200. Cast-in-place construction must adhere to the details contained on the referenced indexes.

2. Only the dimensions and reinforcement changes or other modifications are indicated. For all other dimensions and details, the referenced index drawings apply. When these precast units are used in conjunction with Alt "B" Structure Bottoms, Index No. 200, the interior dimensions of an Alt. "B" Bottom can be adjusted to reflect these inlet interior dimensions.

3. Concrete which meets the requirements of ASTM C478 shall be used for structures constructed to these details.

4. Reinforcement can be either deformed bar reinforcement or welded wire fabric. Bar reinforcement other than 40 ksi may be used, however only two grades are recognized; Grade 40 and Grade 60. Welded wire fabric, including deformed welded wire fabric, will be recognized as having a design strength of 65 ksi. The area of reinforcement required may be reduced in accordance with the Equivalent Steel Area Table provided. For bars and spacings not given, the steel area required can be determined by the following equations:

$$\text{Grade 60 Steel Area} = A_{s\,60} = \frac{40}{60} \times A_{s\,40}$$

$$\text{Welded Wire Fabric Steel Area} = A_{s\,65} = \frac{40}{65} \times A_{s\,40}$$

In no case will fabric with wires smaller than W3.1 or spacings greater than 8" be permitted. Bar reinforcement shall show the minimum yield designation grade mark of either the number 60 or one (1) grade mark line to be acceptable at the higher value. Maximum bar spacing shall not be greater than two (2) times the slab thickness with a maximum spacing of 12" or three (3) times the wall thickness, with a maximum spacing of 18".

EQUIVALENT STEEL AREA TABLE

GRADE 40 REINFORCING BAR		EQUIVALENT GRADE 60 REINFORCING BAR		EQUIVALENT 65 Ksi WELDED WIRE FABRIC	
Bar Size & Spacing	Steel Area	Bar Size & Spacing	Min. Steel Area	Style Designation	Min. Steel Area
#4 @ 12" CCEW (For Walls & Slabs ≤ 6" Thickness)	0.20	#3 @ 9½" CCEW	.1333	3" x 3"-W3.1 x W3.1 or 4" x 4"-W4.5 x W4.5 or 6" x 6"-W6.5 x W6.5	.1230
#4 @ 12" CCEW (For Walls & Slabs > 6" Thickness)	0.20	#3 @ 7½" CCEW	0.1730*	3" x 3"-W4.0 x W4.0 or 4" x 4"-W5.5 x W5.5 or 6" x 6"-W8.0 x W8.0	.1600*
#4 @ 9" CCEW	0.267	#4 @ 13½" CCEW or #3 @ 7" CCEW	.1778	3" x 3"-W4.5 x W4.5 or 4" x 4"-W5.5 x W5.5 or 6" x 6"-W8.5 x W8.5	.1641
#6 @ 6" CCEW	0.88	#5 @ 6" CCEW or #6 @ 9" CCEW	.5867	4" x 4"-W20 x W20 or 6" x 6"-W30 x W30	.5415
#7 @ 6" CCEW	1.20	#6 @ 6½" CCEW or #7 @ 9" CCEW	.80	4" x 4"-W26 x W26	.7385

* Modified minimum steel area to satisfy temperature and shrinkage reinforcing requirements.

INTERIM STANDARD IN ENGLISH UNITS APPLICABLE TO DESIGN STANDARDS BOOKLET PUBLISHED IN ENGLISH UNITS.

Date: 07-01-05

STATE OF FLORIDA DEPARTMENT OF TRANSPORTION

SUPPLEMENTARY DETAILS FOR MANHOLES AND INLETS

INTERIM STANDARD

THIS INDEX IS A SUPPLEMENT TO THE DESIGN STANDARDS, BOOKLET DATED JANUARY 2004.

APPROVED BY

STATE DRAINAGE ENGINEER

REVISION NO.	SHEET NO.	INDEX NO.
05	4 of 6	0201

$$$$$$$STIME$$$$$$ $$$$$$$$DGNSPECIFICATION$$$$$$$$

FINANCIAL PROJECT ID	SHEET NO.

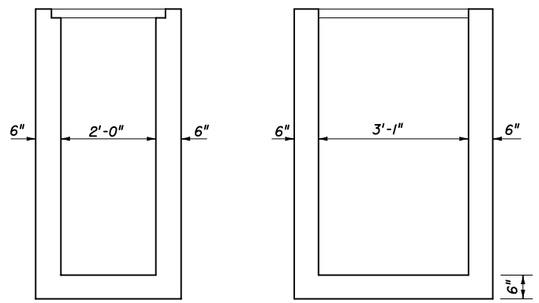

PARTIAL SECTION BB PARTIAL SECTION CC

DITCH BOTTOM INLET C

INDEX NO. 232

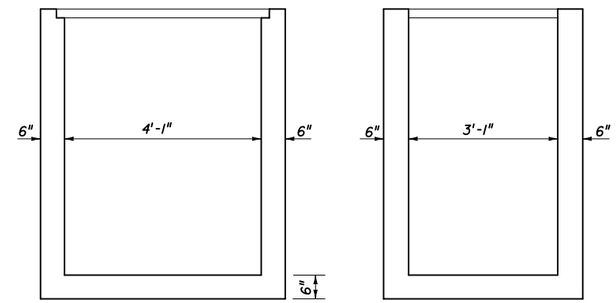

PARTIAL SECTION BB PARTIAL SECTION CC

DITCH BOTTOM INLET D

INDEX NO. 232

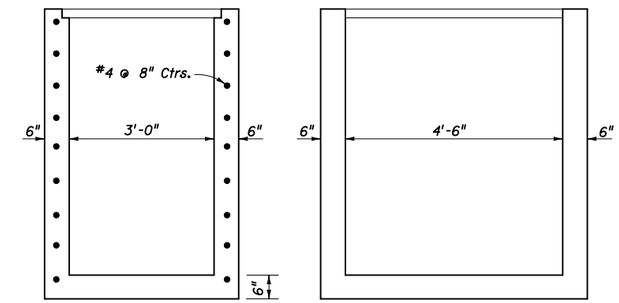

PARTIAL SECTION BB PARTIAL SECTION CC

DITCH BOTTOM INLET E

INDEX NO. 232

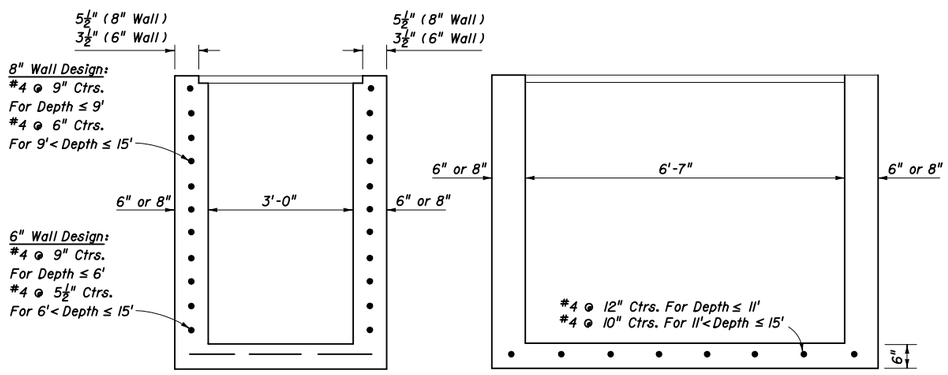

PARTIAL SECTION BB PARTIAL SECTION CC

DITCH BOTTOM INLET H (3-GRATE)

INDEX NO. 232

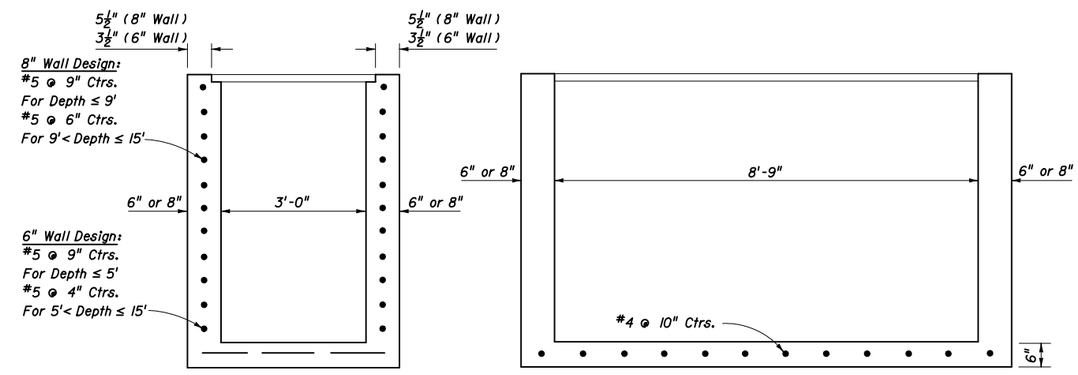

PARTIAL SECTION BB PARTIAL SECTION CC

DITCH BOTTOM INLET H (4-GRATE)

INDEX NO. 232

INTERIM STANDARD IN ENGLISH UNITS APPLICABLE TO DESIGN STANDARDS BOOKLET PUBLISHED IN ENGLISH UNITS.

Date: 07-01-05

STATE OF FLORIDA DEPARTMENT OF TRANSPORTATION
ROAD DESIGN

SUPPLEMENTARY DETAILS FOR MANHOLES AND INLETS

INTERIM STANDARD

THIS INDEX IS A SUPPLEMENT TO THE DESIGN STANDARDS, BOOKLET DATED JANUARY 2004

APPROVED BY
STATE DRAINAGE ENGINEER

REVISION NO.	SHEET NO.	INDEX NO.
05	5 of 6	0201

$$$$$$$TIME$$$$$$ $$$$$$$$DGNSPECIFICATION$$$$$$$$