FINANCIAL PROJECT ID	STATE PROJ. NO.	SHEET NO.

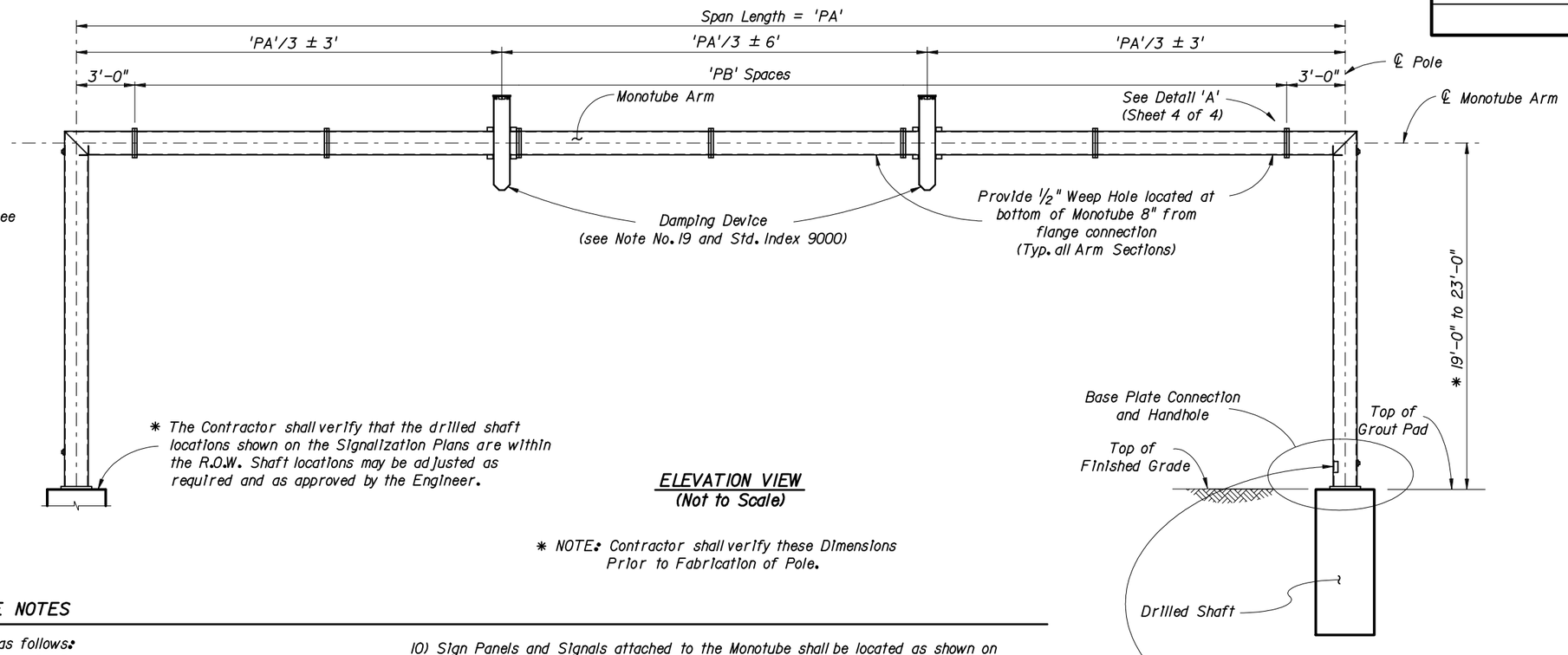

Note: For referenced dimensions see Index 17746 Sheet 4 of 4.

* The Contractor shall verify that the drilled shaft locations shown on the Signalization Plans are within the R.O.W. Shaft locations may be adjusted as required and as approved by the Engineer.

ELEVATION VIEW
(Not to Scale)

* NOTE: Contractor shall verify these Dimensions Prior to Fabrication of Pole.

Aluminum Identification Tag Not to Exceed 2" x 4". Secure to Shaft by 0.125" Stainless Steel rivets or screws. Fabricators to provide details for approval. Identification Tag Located on Inside of Pole visible from handhole, or on outside of pole inside terminal compartment. Tag to be stamped with the following information :

Standard Design	Special Design
Financial Project ID	Financial Project ID
Span Length	Pole Diameter (in.)
Manufacturer's Name	Pole Wall Thickness (in.)
Certification No.	Arm Diameter (in.)
	Arm Wall Thickness (in.)
	Manufacturer's Name

MONOTUBE SIGNAL STRUCTURE NOTES

1) Signal Structure Materials shall be as follows:

Poles & Monotube Arm	->	API-5L-X42 (42 ksi yield) or ASTM A618 Grade II
Handhole Frame	->	ASTM A709 Grade 36
Handhole Cover	->	ASTM A607, Grade 50, 55 or 60 ksi
Steel Plates	->	ASTM A709 Grade 50
Weld Metal	->	E70XX
Bolts (except Anchor Bolts)	->	ASTM A325 Type I
Anchor Bolts	->	ASTM F1554 Grade 55 ksi
Nuts for Anchor Bolts	->	ASTM A563 Grade A Heavy Hex
Washers for Anchor Bolts	->	ASTM F436 Type I
Stainless Steel Screws	->	AISI Type 316
Aluminum Nut Cover	->	ASTM B26 (356-T6)

2) Reinforcing Steel shall be ASTM A615-96, Grade 60 ksi.

3) Concrete shall be Class IV (Drilled Shaft) with a minimum 28-day compressive strength of 4,000 psi for all environmental classifications.

4) Grout shall have a minimum 28-day compressive strength of 5,000 psi and shall meet the requirements of Section 934 of the Specifications. Grout at the base of uprights shall be installed a minimum of 7 days prior to the installation of signals or sign panels.

5) All welding shall conform to American Welding Society Structural Welding Code (Steel) ANSI/AWS D1.1 (current edition).

6) All Steel Items shall be galvanized as follows:

All Nuts, Bolts and Washers	->	ASTM A153 Class C or D depending on size
All other steel items (including Pole & Monotube Arm)	->	ASTM A123

7) The Design Wind Speed is 110mph with a 30 percent gust factor.

8) Alternate Designs for this Structure are not allowed.

9) Except for Anchor Bolts, all bolt hole diameters shall be equal to the bolt diameter plus 1/16", prior to galvanizing. Hole diameters for Anchor Bolts shall not exceed the bolt diameter plus 1/2".

10) Sign Panels and Signals attached to the Monotube shall be located as shown on the Traffic Signal Plans. Wire access holes shall not exceed 3/4" in diameter.

11) The Pole shall be installed vertically. Arm Camber shall be accounted for in the Flange Connections.

12) Locate handhole 180° from monotube arm.

13) All signals shall be installed vertically.

14) Monotube Arm & Poles shall be fabricated from round pipe.

15) If damping devices are required by the Engineer, they shall be installed within 3'-0" ± of the third points of the Span Length.

16) Each Standard Monotube Signal Structure has been designed for two free swinging internally illuminated street signs, per pole, which are acceptable by Contractor certification provided they meet the applicable requirements of Specification Section 699, weigh no more than 75 lbs. (each) and are no more than 12 sq. ft. in area (each).

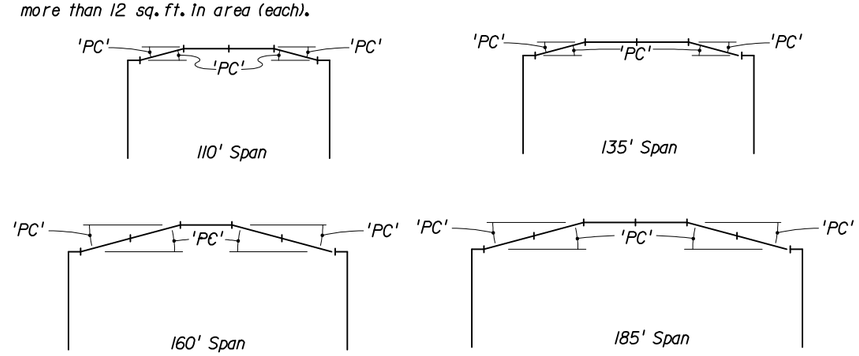

CAMBER DETAILS

Note: Fabricate with rolling camber up.

REVISED: 2-20-01

THE SEALED RECORD OF THIS STANDARD IS ON FILE IN THE ROADWAY DESIGN OFFICE.

INTERIM STANDARD IN ENGLISH UNITS APPLICABLE TO ROADWAY AND TRAFFIC DESIGN STANDARD BOOKLETS PUBLISHED IN EITHER ENGLISH OR METRIC UNITS.

STATE OF FLORIDA DEPARTMENT OF TRANSPORTATION

MONOTUBE SIGNAL STRUCTURE ELEVATION, NOTES AND CAMBER DETAILS

INTERIM STANDARD

WHEN INCLUDED IN THE PLANS SHEET NOS. 1-4 OF 4 ARE A SUPPLEMENT TO THE ROADWAY AND TRAFFIC DESIGN STANDARDS. ENGLISH AND METRIC BOOKLETS DATED JANUARY 2000.

APPROVED BY W. H. [illegible]
STATE STRUCTURES DESIGN ENGINEER

REVISION NO.	SHEET NO.	INDEX NO.
	1 of 4	17746

FINANCIAL PROJECT ID	STATE PROJ. NO.	SHEET NO.

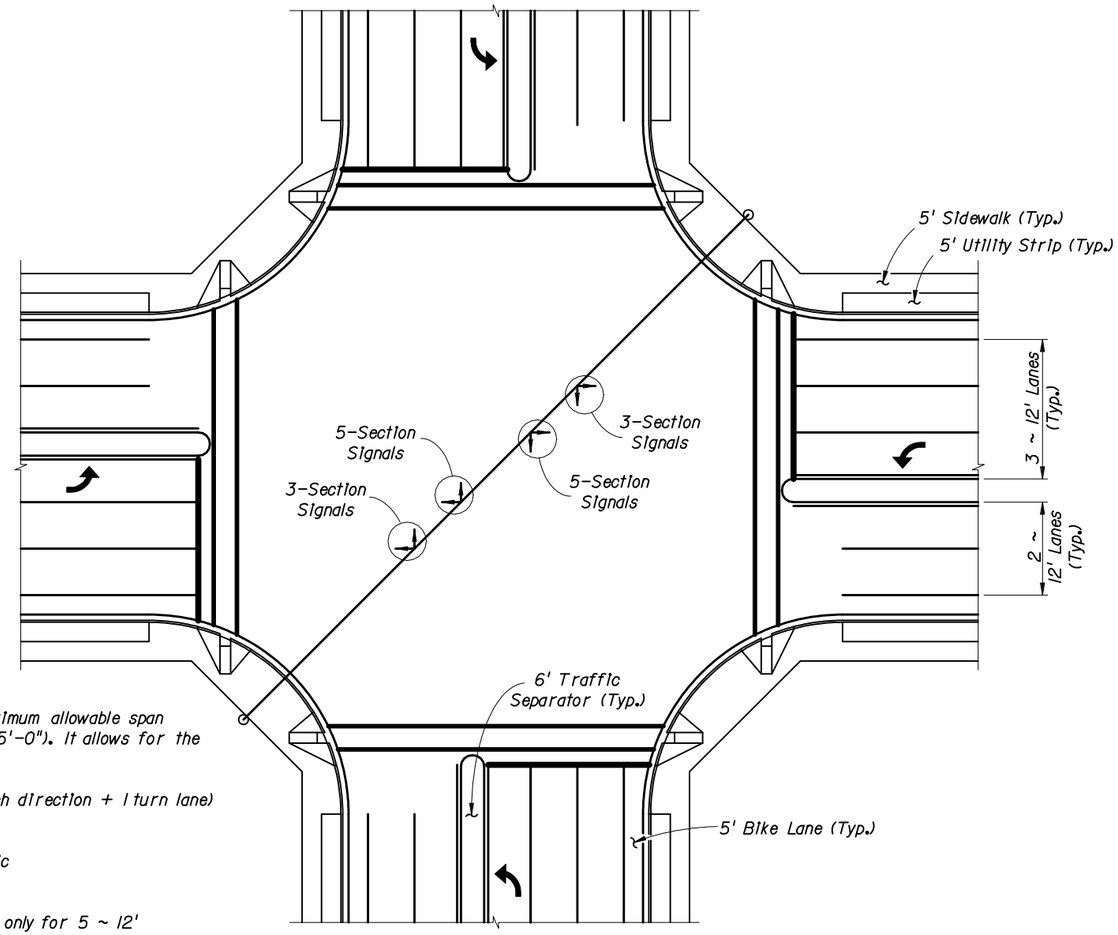

PLAN VIEW - MONOTUBE DESIGN INTERSECTION

Note:

The signal configuration shown represents the maximum allowable span for which this monotube standard is applicable (185'-0"). It allows for the following components:

a. 5 ~ 12' traffic lanes (2 thru lanes in each direction + 1 turn lane)
b. 1 ~ 6' traffic separator
c. 1 ~ 5' bike lane per direction of traffic
d. 1 ~ 5' utility strip per direction of traffic
e. 1 ~ 5' sidewalk per direction of traffic

The minimum monotube design span (110'-0") allows only for 5 ~ 12' traffic lanes (item "a" above). It is assumed that for this case there are no traffic separators, bike lanes, utility strips or sidewalks.

INSTRUCTIONAL NOTES:

1. This Index, 17746, is for use in preparing signalization plans when monotube assemblies are required. This standard establishes the requirements of monotube components listed on on the Qualified Products List (QPL). When using components on the QPL, the span length and heights of each pole will be the only information required in the Contract Plans, and Shop Drawings are not required.

2. If a monotube configuration does not meet the requirements stated below, a special design and shop drawing submittal is required.

3. Four standard monotube configurations are provided. The standard arm length and the signal locations used for design of the arm are shown on the monotube design loading tree on this sheet. If the same arrangement of signals is used with one or more signals closer to the nearest pole, the standard monotube may be used. If the same arrangement is used but one or more signals are further from the nearest pole, or if a different configuration of signals is used, a special design is required. If any signs are to be attached to the monotube arm, a special design is required.

4. Standard monotube span lengths of 110'-0", 135'-0", 160'-0" and 185'-0" are shown. For other required span lengths with the same configuration of signals in the same loations or closer to the poles, the standard monotube design with the next largest standard span length may be used. The difference in length shall be removed from the center horizontal segment(s) of the span. If a span longer than 185'-0" is to be used, a special design is required.

5. The standard monotube is valid for an arm heights between 19' and 23', inclusive. A special design is required for all heights greater than 23'. If an arm height of less than 19' is to be utilized with the same configuration of signals in the same locations or closer to the poles, the standard monotube may be used, provided that minimum required clearances to the roadway are maintained.

6. The foundations for the standard monotube are pre-designed and are based upon the following conservative soil criteria which covers the great majority of soil types found in Florida:

Classification = Cohesionless (Fine Sand)
Friction Angle = 30 Degrees (30°)
Unit Weight = 50 lbs./cu. ft. (assumed saturated)

Only in cases where the Designer considers the soil types of the specific site location to be of lesser strength properties should an analysis be required. Auger borings, SPT borings or CPT soundings may be utilitzed as needed to verify the assumed soil properties, and at relatively uniform sites, a single boring or sounding may cover several founations. Furthermore, borings in the area that were performed for other purposes may be used to confirm the assumed soil properties.

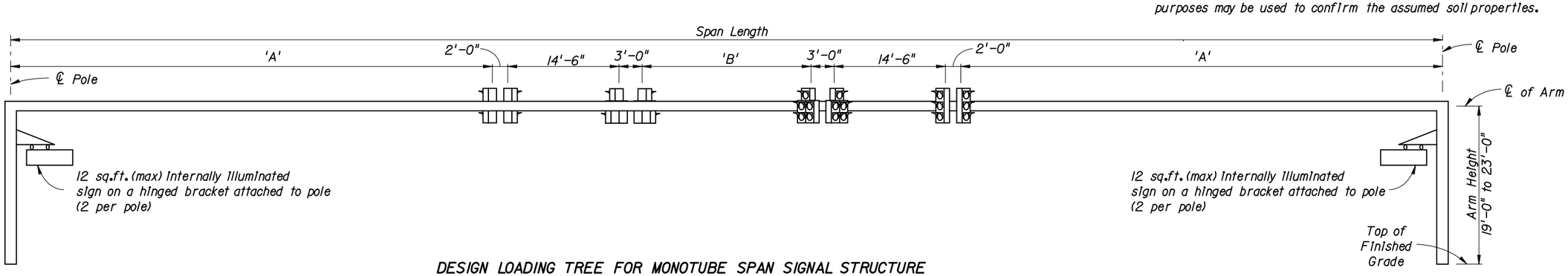

DESIGN LOADING TREE FOR MONOTUBE SPAN SIGNAL STRUCTURE

Note: Signal Backplates on 4 of the 8 signals are included in the design of Standard Arms.

Note: For referenced dimensions see Index 17746 Sheet 4 of 4.

THE SEALED RECORD OF THIS STANDARD IS ON FILE IN THE ROADWAY DESIGN OFFICE.

INTERIM STANDARD IN ENGLISH UNITS APPLICABLE TO ROADWAY AND TRAFFIC DESIGN STANDARD BOOKLETS PUBLISHED IN EITHER ENGLISH OR METRIC UNITS.

REVISED: 2-20-01

STATE OF FLORIDA DEPARTMENT OF TRANSPORTATION

MONOTUBE SIGNAL STRUCTURE DESIGN INTERSECTION AND DESIGN LOAD TREE

INTERIM STANDARD

WHEN INCLUDED IN THE PLANS SHEET NOS. 1-4 OF 4 ARE A SUPPLEMENT TO THE ROADWAY AND TRAFFIC DESIGN STANDARDS. ENGLISH AND METRIC BOOKLETS DATED JANUARY 2000.

APPROVED BY W. N. Blake
STATE STRUCTURES DESIGN ENGINEER

REVISION NO.	SHEET NO.	INDEX NO.
	2 of 4	17746

FINANCIAL PROJECT ID	STATE PROJ. NO.	SHEET NO.

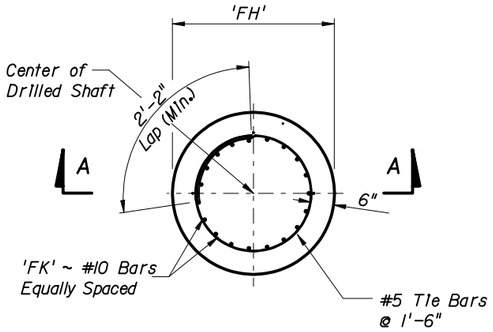

FOUNDATION PLAN

Note: 6" min. cover on Shaft Reinforcement

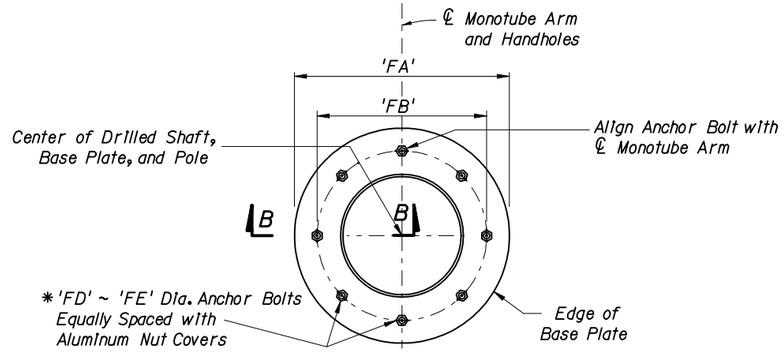

SECTION C-C

Note: Concrete and Reinforcement not shown.

* Anchor Bolt Group locations may be ± 1/2" in the direction of the span

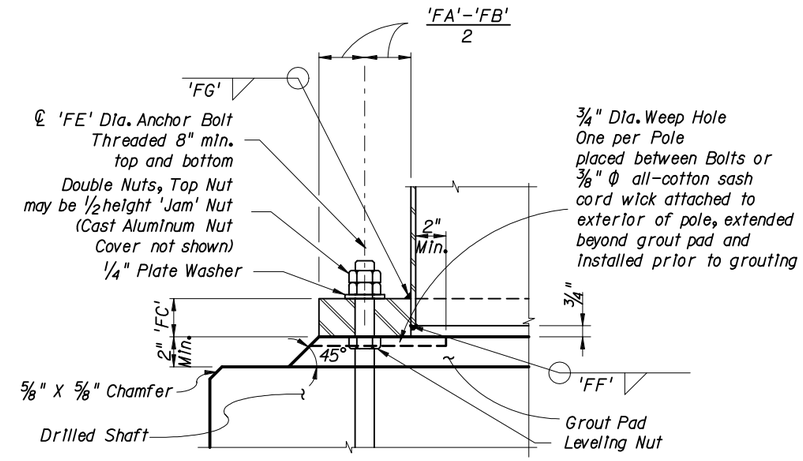

SECTION B-B

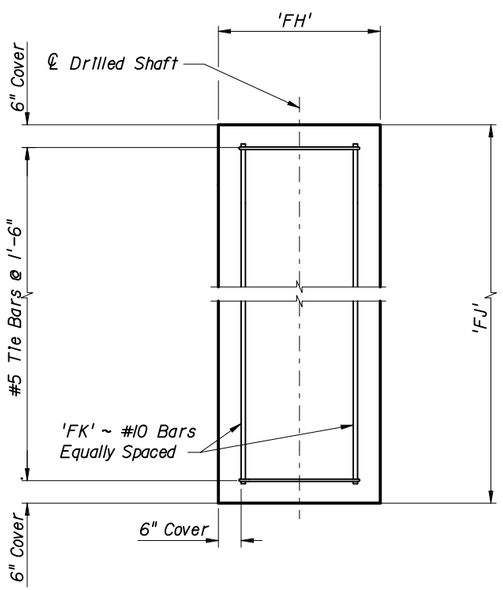

SECTION A-A

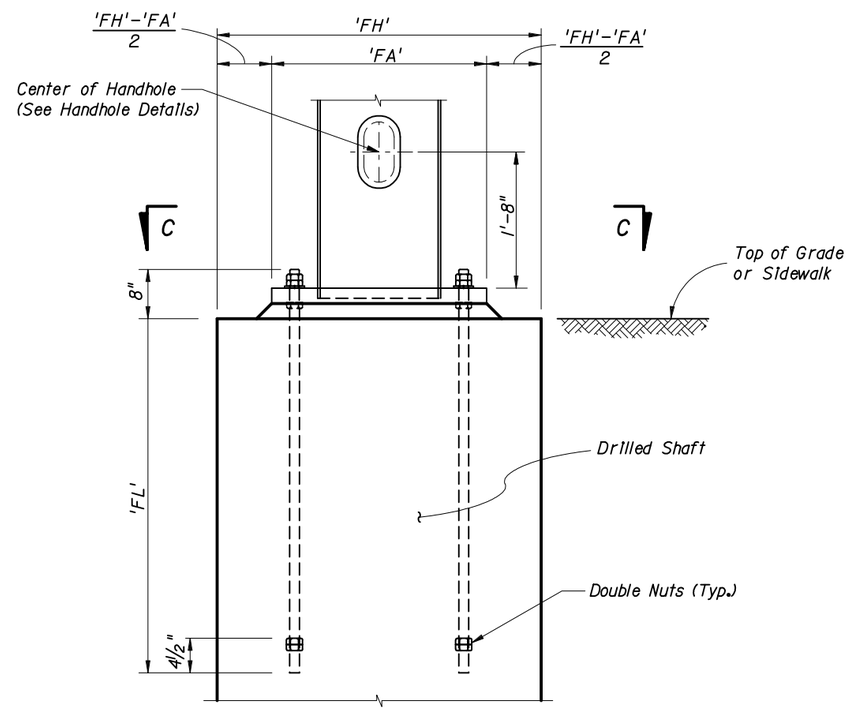

BASE PLATE AND ANCHORAGE ELEVATION

Note: For referenced dimensions see Index 17746 Sheet 4 of 4.

THE SEALED RECORD OF THIS STANDARD IS ON FILE IN THE ROADWAY DESIGN OFFICE.

INTERIM STANDARD IN ENGLISH UNITS APPLICABLE TO ROADWAY AND TRAFFIC DESIGN STANDARD BOOKLETS PUBLISHED IN EITHER ENGLISH OR METRIC UNITS.

STATE OF FLORIDA DEPARTMENT OF TRANSPORTATION

MONOTUBE SIGNAL STRUCTURE FOUNDATION AND BASE PLATE DETAILS

INTERIM STANDARD

WHEN INCLUDED IN THE PLANS SHEET NOS. 1-4 OF 4 ARE A SUPPLEMENT TO THE ROADWAY AND TRAFFIC DESIGN STANDARDS. ENGLISH AND METRIC BOOKLETS DATED JANUARY 2000.

APPROVED BY W. N. Phillips
STATE STRUCTURES DESIGN ENGINEER

REVISION NO.	SHEET NO.	INDEX NO.
	3 of 4	17746

Date: 9-26-00

FINANCIAL PROJECT ID	STATE PROJ. NO.	SHEET NO.

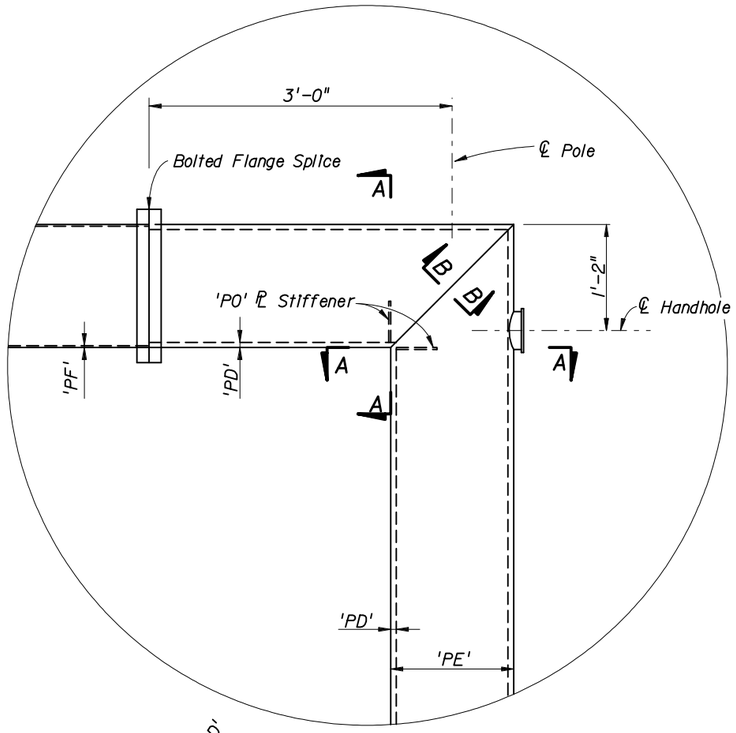

DETAIL 'A'

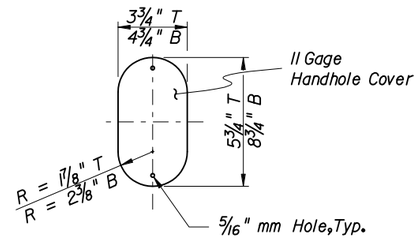

HANDHOLE COVER

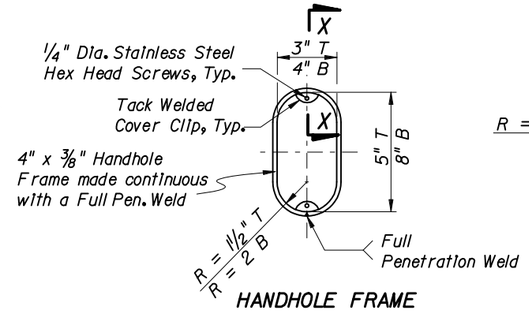

HANDHOLE FRAME

T - denotes top 3" x 5" handhole
B - denotes bottom 4" x 8" handhole

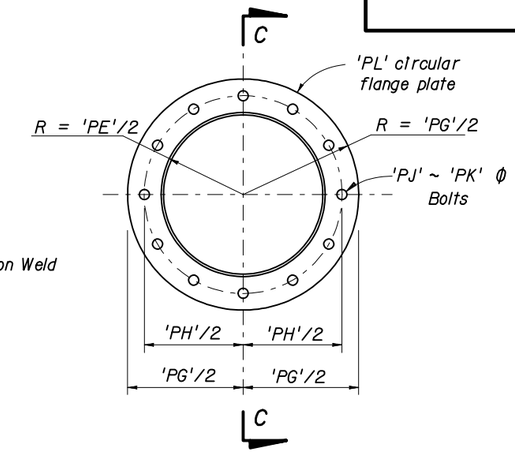

FLANGE SPLICE DETAILS

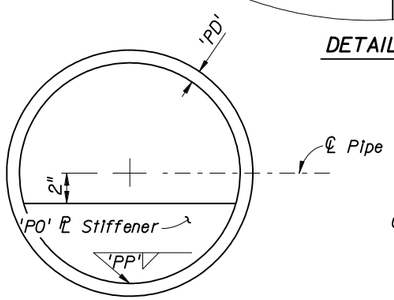

SECTION A-A

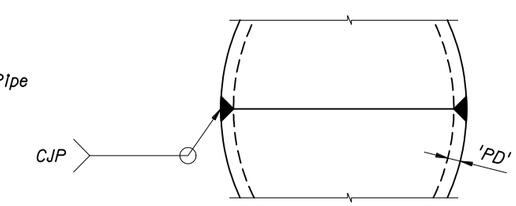

SECTION B-B

*Terminal Compartment is optional. See Mast Arm Tabulation for locations.

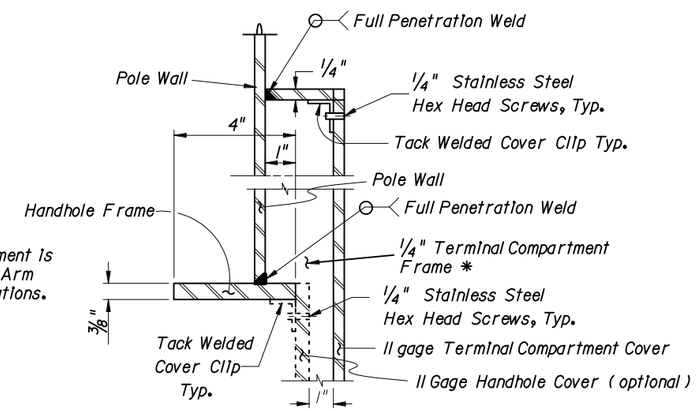

SECTION E-E
(thru Handhole & Terminal Compartment)

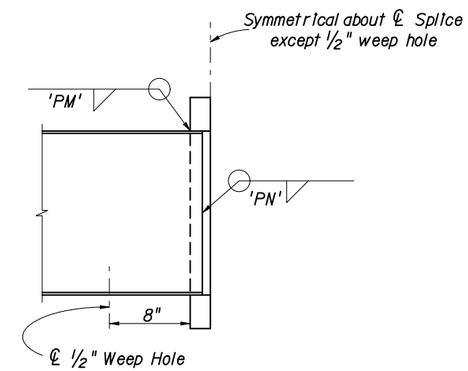

SECTION C-C

TABLE OF MONOTUBE VARIABLES

MONOTUBE ARM & POLES															FOUNDATION & BASE PLATE											SIGNAL LAYOUT	
'PA' (ft)	'PB'	'PC' (deg)	'PD' (In)	'PE' (In)	'PF' (In)	'PG' (In)	'PH' (In)	'PJ'	'PK' (In)	'PL' (In)	'PM' (In)	'PN' (In)	'PO' (In)	'PP' (In)	'FA' (In)	'FB' (In)	'FC' (In)	'FD'	'FE' (In)	'FF' (In)	'FG' (In)	'FH' (ft)	'FJ' (ft)	'FK'	'FL' (In)	Dim. 'A' (ft)	Dim. 'B' (ft)
110	4	1.5	1.093	14	⅜	21½	17¾	8	1¼	2¼	5/16"	5/16"	¼"	3/16"	21½	17¾	1⅞	8	1½"	5/16"	5/16"	3	12	10	45	29	13
135	4	1.5	1.031	16	⅜	23½	19¾	10	1¼	2¼	5/16"	5/16"	¼"	3/16"	23½	19¾	2	8	1½"	5/16"	5/16"	3.5	13	12	45	40	16
160	5	1.25	1.156	18	⅜	25½	21¾	12	1¼	2¼	5/16"	5/16"	¼"	3/16"	25½	21¾	2⅛	8	1½"	5/16"	5/16"	3.5	14	12	45	51	19
185	6	1.75	1.125	22	⅜	29½	25¾	14	1¼	2¼	5/16"	5/16"	¼"	3/16"	29½	25¾	2¼	10	1½"	5/16"	5/16"	4	16	16	45	62	22

Note: For additional variable definitions see Sheets 1 and 3 of 4.

THE SEALED RECORD OF THIS STANDARD IS ON FILE IN THE ROADWAY DESIGN OFFICE.

INTERIM STANDARD IN ENGLISH UNITS APPLICABLE TO ROADWAY AND TRAFFIC DESIGN STANDARD BOOKLETS PUBLISHED IN EITHER ENGLISH OR METRIC UNITS.

REVISED: 02-20-01

STATE OF FLORIDA DEPARTMENT OF TRANSPORTATION

MONOTUBE SIGNAL STRUCTURE ARM CONNECTION DETAILS & TABLE OF VARIABLES

INTERIM STANDARD

WHEN INCLUDED IN THE PLANS SHEET NOS. 1-4 OF 4 ARE A SUPPLEMENT TO THE ROADWAY AND TRAFFIC DESIGN STANDARDS. ENGLISH AND METRIC BOOKLETS DATED JANUARY 2000.

APPROVED BY W. N. Phillips
STATE STRUCTURES DESIGN ENGINEER

REVISION NO.	SHEET NO.	INDEX NO.
	4 of 4	17746