FINANCIAL PROJECT ID	STATE PROJ. NO.	SHEET NO.

SPEED/CLASSIFICATION LOOP ASSEMBLY WITH AXLE SENSORS PLACEMENT DETAIL

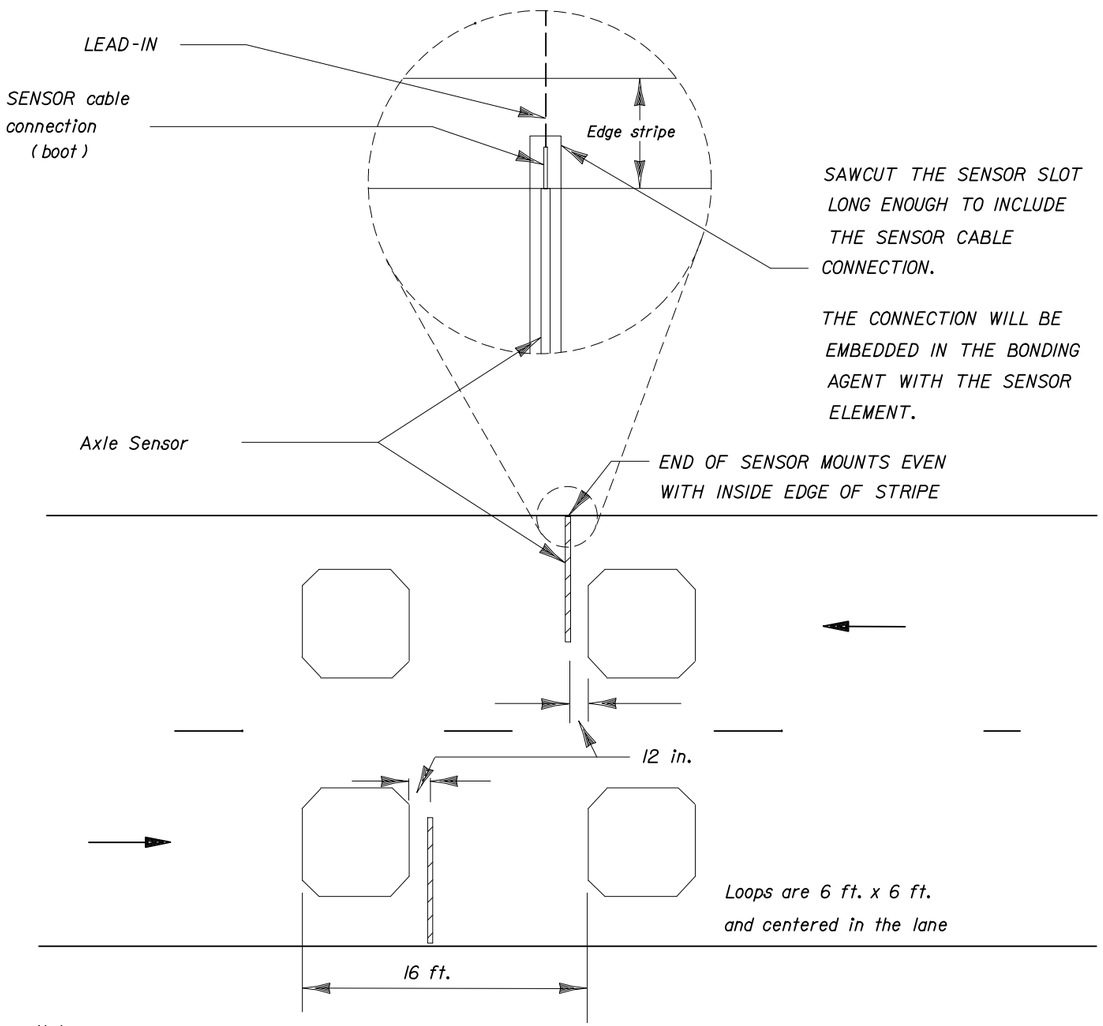

Note:

Loop slots shall be 0.25 inches wide (max.) by 1.5 inches to 2 inches deep. Four turns of #12 AWG, type XHHW stranded copper wire shall be placed in the slot. Backer rod shall be used to hold the loop wire in the bottom of the slot.

Loop leads shall be twisted at the rate of 10 to 12 twists per foot. The twisted pair shall extend to the pull box with three feet of spare length coiled in the pull box.

All leads (inductive loop & vehicle sensor) shall be identified according to the lane numbering convention shown on sheet 8 and 9.

TYPICAL UNENCAPSULATED CLASS II VEHICLE SENSOR

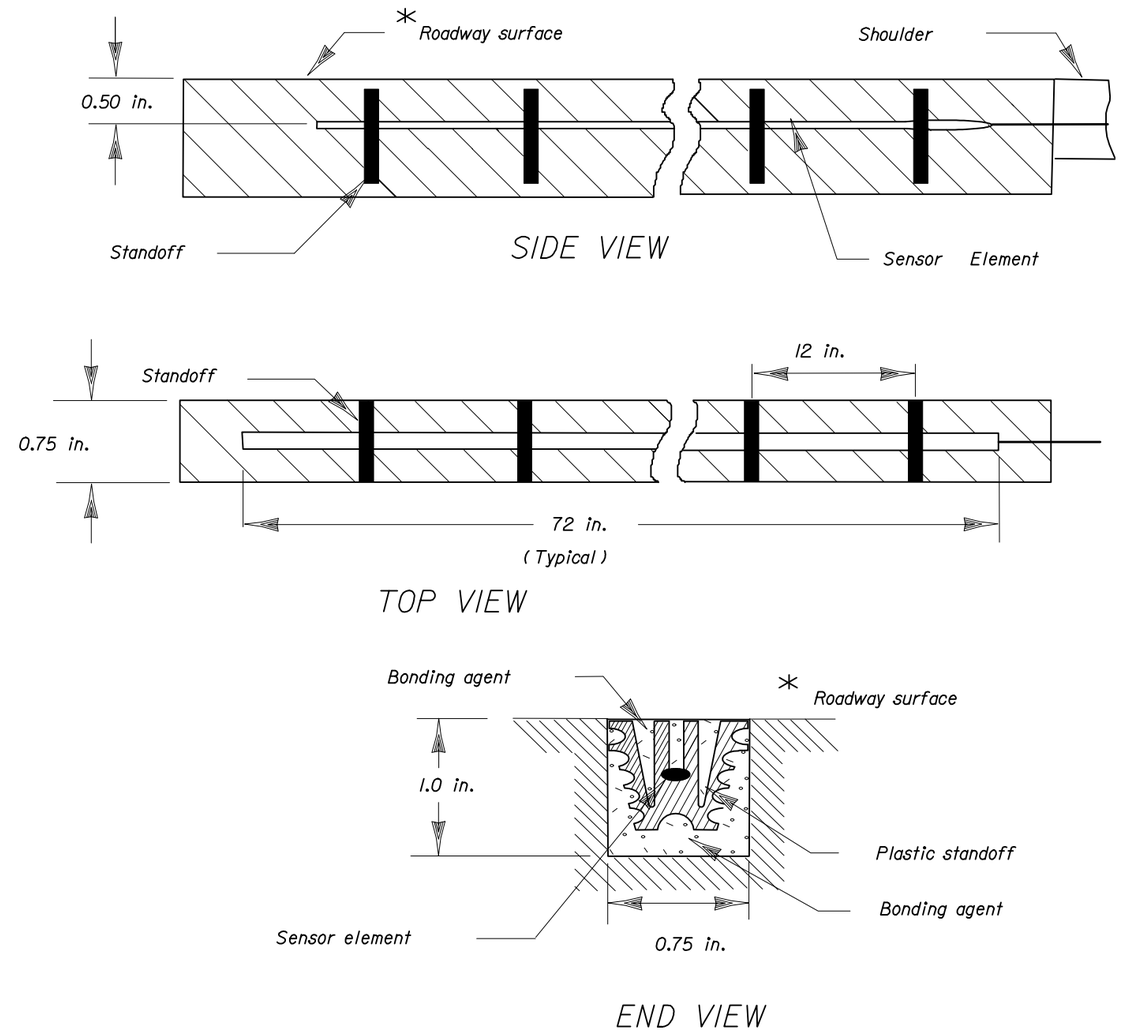

* Some installations may require axle sensors to be placed in the structural course, prior to placement of the friction course.

Note:

These are typical dimensions. actual dimensions, element cross-sections and standoffs may vary depending on manufacturer and model.

LOOP AND PIEZOELECTRIC VEHICLE SENSOR DETAIL

THE SEALED RECORD OF THIS STANDARD IS ON FILE IN THE ROADWAY DESIGN OFFICE.

INTERIM STANDARD IN ENGLISH UNITS APPLICABLE TO ROADWAY AND TRAFFIC DESIGN STANDARD BOOKLETS PUBLISHED IN EITHER ENGLISH OR METRIC UNITS.

Revised: 12-27-01

STATE OF FLORIDA DEPARTMENT OF TRANSPORTATION

TRAFFIC MONITORING SITE

INTERIM STANDARD

THIS SHEET IS A REPLACEMENT FOR INDEX NO. 17900 (SHEET 5 OF 9) OF THE ROADWAY AND TRAFFIC DESIGN STANDARDS, BOOKLETS DATED JANUARY 2000.

APPROVED BY Manager Of Transportation Statistics

REVISION NO.	SHEET NO.	INDEX NO.
	5 of 9	017900