FINANCIAL PROJECT ID	STATE PROJ. NO.	SHEET NO.

The Reinforced Earth Company

8614 Westwood Center Drive Suite 1100, Vienna, Virginia 22182 (703) 821-1175

DESIGN CRITERIA

1. DESIGN IS BASED ON THE ASSUMPTION THAT THE MATERIAL WITHIN THE REINFORCED EARTH VOLUME, METHODS OF CONSTRUCTION AND QUALITY OF PREFABRICATED MATERIALS SHALL CONFORM TO THE CONTRACTING AGENCY'S TECHNICAL SPECIFICATIONS (SECTION 548) FOR REINFORCED EARTH WALLS

2. SOIL PARAMETERS:

   SEE WALL CONTROL DRAWINGS FOR SOIL CHARACTERISTICS OF FOUNDATION MATERIAL TO BE USED IN THE DESIGN OF THE WALL SYSTEM. THE CONTRACTOR SHALL PROVIDE SOIL DESIGN PARAMETERS FOR BACKFILL MATERIAL BASED ON THE ACTUAL SOIL CHARACTERISTICS UTILIZED AT THE SITE. THE VALUES OF FRICTION ANGLE (ϕ), COHESION (c) AND TOTAL UNIT WEIGHT (γ) SHALL BE PROVIDED IN THE SHOP DRAWINGS.

3. THE MAXIMUM APPLIED BEARING PRESSURE AT THE FOUNDATION LEVEL IS AS SHOWN ON THE WALL ELEVATIONS FOR EACH DESIGN CASE. IT IS THE RESPONSIBILITY OF THE OWNER TO DETERMINE THAT THIS APPLIED BEARING PRESSURE IS ALLOWABLE FOR THAT LOCATION.

4. ANY UNSUITABLE FOUNDATION MATERIAL BELOW THE REINFORCED EARTH VOLUME, AS DETERMINED BY THE ENGINEER, SHALL BE EXCAVATED AND REPLACED WITH SUITABLE MATERIAL OR OTHERWISE STABILIZED AS DIRECTED BY THE ENGINEER.

5. REINFORCING STRIPS FOR REINFORCED EARTH WALLS SHALL BE 1 31/32" WIDE AND 5/32" THICK, AND SHALL CONFORM TO THE PHYSICAL AND MECHANICAL PROPERTIES OF ASTM A-572 GRADE 65. GALVANIZATION SHALL BE APPLIED IN ACCORDANCE WITH ASTM A-123.

6. HA LADDERS SHALL BE SUPPLIED BY THE REINFORCED EARTH COMPANY, AND SHOP FABRICATED OF COLD DRAWN STEEL WIRE CONFORMING TO THE PHYSICAL AND MECHANICAL PROPERTIES OF ASTM A-82. ALL WELDING SHALL BE IN ACCORDANCE WITH ASTM A-185. GALVANIZING FOR PERMANENT WALL SYSTEMS SHALL CONFORM TO THE MINIMUM REQUIREMENTS OF ASTM A-123 OR AASHTO M111 (2 OZ/SQ. FT.). HA LADDER REINFORCEMENTS MAY BE USED ONLY ON WALLS WITH HEIGHTS 20 FT OR LESS.

7. THE MINIMUM FACTORS OF SAFETY REQUIRED FOR DESIGN

   OVERTURNING = 2.0
   SLIDING = 1.5
   INTERNAL PULLOUT = 1.5 (ALLOWABLE DEFORMATION = 0.75 INCH)
   BEARING CAPACITY = 2.5
   OVERALL STABILITY = 1.5
   STEEL SOIL REINFORCEMENT = 0.55Fy AT END OF DESIGN LIFE AND 0.50 F_u AT NET SECTION OF BOLTED CONNECTION
   MAXIMUM PULLOUT FACTOR f* (FOR SAND) = 1.5
   (FOR LIMEROCK) = 2.0

WALL CONSTRUCTION

8. REINFORCED EARTH WALLS IN CURVES WILL FORM A SERIES OF SHORT CHORDS OF 4'-11" EACH TO MATCH DESIRED WALL ALIGNMENT.

9. FOR LOCATION AND ALIGNMENT OF REINFORCED EARTH WALLS, SEE RETAINING WALL CONTROL PLANS.

10. IF MANHOLES AND DROP INLETS ARE PRESENT, THEY SHALL BE LOCATED AS SHOWN ON WALL ELEVATIONS.

11. IF PILES ARE LOCATED WITHIN THE REINFORCED EARTH VOLUME, THEY SHALL BE DRIVEN PRIOR TO CONSTRUCTION OF THE REINFORCED EARTH WALL UNLESS A METHOD TO PROTECT THE STRUCTURE, WHICH IS ACCEPTABLE TO THE ENGINEER AND THE REINFORCED EARTH COMPANY, AND IS PROPOSED AND APPROVED IN WRITING.

12. BACKFILL MATERIAL SHALL BE COMPACTED IN ACCORDANCE WITH SEC 548 TO A LEVEL OF 2"* ABOVE THE TIE STRIPS EMBEDDED IN THE PANELS. INSTALLATION OF SOIL REINFORCEMENTS SHALL BE PERMITTED ONLY AFTER PLACEMENT AND COMPACTION OF THE BACKFILL MATERIAL HAS REACHED THE REQUIRED LEVEL.

13. IF STRUCTURES IN EXCESS OF 20' IN HEIGHT OCCUR, THE FINISHED GRADE IN FRONT OF THE WALL SHALL BE PLACED AND COMPACTED BEFORE WALL CONSTRUCTION EXCEEDS A HEIGHT OF 20'. FINISHED GRADE BACKFILL SHALL BE COMPACTED TO 95% OF AASHTO T-180 UNLESS OTHERWISE DIRECTED BY THE ENGINEER.

14. IT IS THE CONTRACTOR'S RESPONSIBILITY TO DETERMINE THE LOCATION OF ANY GUARDRAIL POSTS BEHIND THE REINFORCED EARTH PANELS PRIOR TO PLACEMENT OF THE TOP LAYER OF SOIL REINFORCEMENTS. INDIVIDUAL REINFORCEMENTS MAY BE SKEWED UP TO 15^ TO AVOID THE POST LOCATIONS IF AUTHORIZED BY THE ENGINEER. ANY DAMAGE DONE TO THE SOIL REINFORCEMENTS DUE TO THE INSTALLATION OF THE GUARDRAIL SHALL BE REPAIRED BY THE CONTRACTOR AT THE CONTRACTOR'S EXPENSE.

15. IF EXISTING OR FUTURE STRUCTURES, PIPES, FOUNDATIONS OR GUARDRAIL POSTS WHICH ARE WITHIN THE REINFORCED EARTH VOLUME INTERFERE WITH THE NORMAL PLACEMENT OF SOIL REINFORCEMENTS AND SPECIFIC DIRECTION HAS NOT BEEN PROVIDED ON THE PLANS, THE CONTRACTOR SHALL NOTIFY THE ENGINEER TO DETERMINE WHAT COURSE OF ACTION SHOULD BE TAKEN.

16. TOP PANELS BENEATH COPING SHALL HAVE #4 DOWELS PROTRUDING FROM THEIR TOP EDGE.

17. FOR OTHER INFORMATION PERTAINING TO WALL CONSTRUCTION PLEASE REFER TO THE REINFORCED EARTH CONSTRUCTION MANUAL.

18. THE CONTRACTOR IS RESPONSIBLE FOR GRADUALLY DEFLECTING UPPER SOIL REINFORCEMENTS DOWNWARD TO AVOID CONFLICTS WITH PAVING AND SUBGRADE PREPARATION. THE CONTRACTOR'S ATTENTION IS DIRECTED ESPECIALLY TO SITUATIONS WHERE ROADWAY SUPERELEVATION AND/OR SOIL MIXING ARE ANTICIPATED.

MATERIALS NOTES

19. NOMINAL SOIL REINFORCEMENT LENGTHS

    THE SOIL REINFORCEMENT LENGTHS SHOWN ON THE PLANS, MEASURED FROM BACK FACE OF PANEL, ARE THE NOMINAL LENGTHS REQUIRED BY CALCULATION. THE ACTUAL FABRICATED REINFORCEMENT LENGTHS ARE OFTEN LONGER (UP TO 6") DUE TO MANUFACTURING TOLERANCES. THE REQUIRED HORIZONTAL LIMIT OF GRANULAR BACKFILL IS EQUAL TO THE NOMINAL SOIL REINFORCEMENT LENGTH.

20. PANEL FINISH

    THE PRECAST PANELS FOR THIS PROJECT SHALL HAVE A PLAIN STEEL FINISH UNLESS OTHERWISE SPECIFIED ON THE RETAINING WALL CONTROL PLANS.

21. NOTE TO CONTRACTORS

    ONLY THE FOLLOWING MATERIALS ARE SUPPLIED BY THE REINFORCED EARTH COMPANY:

    - PRECAST CONCRETE FACING PANELS
    - SOIL REINFORCEMENTS
    - BOLT SETS (FOR ATTACHING PANELS TO THE SOIL REINFORCEMENTS)
    - BEARING BLOCKS
    - RUBBER SHIMS
    - FILTER CLOTH AND ADHESIVE (FOR PANEL JOINTS ONLY)

    ANY OTHER MATERIALS CALLED FOR IN THE CONTRACT PLANS OR SPECIFICATIONS ARE TO BE SUPPLIED BY THE CONTRACTOR. ANY JOINT MATERIALS SHOWN AT THE INTERFACE OF PRECAST PANELS AND CAST-IN-PLACE CONCRETE STRUCTURES ARE TO BE SUPPLIED BY THE ERECTION CONTRACTOR. ALL SANDBLASTING, PAINTING, SEALERS OR OTHER SPECIAL APPLIED COATINGS ARE ALSO SUPPLIED/INSTALLED BY THE CONTRACTOR IN THE FIELD FOLLOWING PANEL ERECTION.

22. THE REINFORCED EARTH COMPANY SUPPLIES PRECAST CONCRETE FACING PANELS AND ACCESSORIES TO BE USED IN CONJUNCTION WITH OTHER MATERIALS IN THE CONSTRUCTION OF THE REINFORCED EARTH® RETAINING WALLS DETAILED HEREIN. THE CONSTRUCTION AND QUALITY CONTROL PROCEDURES MANUAL FURNISHED BY THE REINFORCED EARTH COMPANY IS INTENDED TO PROVIDE A GENERAL EXPLANATION OF THE SYSTEM. IT IS THE CONTRACTOR'S OBLIGATION TO DEVISE AND EXECUTE A PROJECT SPECIFIC ERECTION SEQUENCE, PANEL UNLOADING, HANDLING AND BRACING SYSTEM, AND FALL PROTECTION SYSTEM. THE BRACING SYSTEM SHOWN IN THE CONSTRUCTION AND QUALITY CONTROL PROCEDURES MANUAL IS GENERAL IN NATURE AND DOES NOT ACCOUNT FOR PROJECT SPECIFIC CRITERIA. COMPLIANCE WITH THE GUIDELINES IN THIS MANUAL DOES NOT RELIEVE THE CONTRACTOR OF ITS RESPONSIBILITY TO ADHERE TO THE PROJECT PLANS, SPECIFICATIONS AND CONTRACT DOCUMENTS OR COMPLIANCE WITH ALL FALL PROTECTION, SAFETY, LAWS, STANDARDS AND PROCEDURES AT THE JOBSITE. CONTRACTORS SHOULD TAKE SPECIAL PRECAUTIONS TO PREVENT THE PANELS FROM SHIFTING OR FALLING DURING THE ERECTION PROCESS.

23. THE DESIGN CONTAINED ON THESE DRAWINGS IS BASED ON INFORMATION PROVIDED BY THE OWNER. ON THE BASIS OF THIS INFORMATION, THE REINFORCED EARTH COMPANY IS RESPONSIBLE FOR INTERNAL STABILITY OF THE STRUCTURE ONLY. EXTERNAL STABILITY DESIGN INCLUDING FOUNDATION AND SLOPE STABILITY IS THE RESPONSIBILITY OF OTHERS.

24. THESE DRAWINGS ARE CERTIFIED WITH RESPECT TO THE INTERNAL STABILITY OF REINFORCED EARTH STRUCTURES ONLY.

25. THIS DRAWING CONTAINS INFORMATION PROPRIETARY TO THE REINFORCED EARTH COMPANY, AND IS BEING FURNISHED FOR THE USE IN CONNECTION WITH FDOT PROJECTS ONLY, AND THE INFORMATION CONTAINED HEREIN IS NOT TO BE TRANSMITTED TO ANY OTHER ORGANIZATION UNLESS SPECIFICALLY AUTHORIZED IN WRITTING BY THE REINFORCED EARTH COMPANY. THE REINFORCED EARTH COMPANY IS EXCLUSIVE LICENSEE IN THE UNITED STATES UNDER PATENTS ISSUED TO HENRY VIDAL, AND THE FURNISHING OF THIS DRAWING DOES NOT CONSTITUTE AN EXPRESSED OR IMPLIED LICENSE UNDER THE VIDAL PATENTS.

THIS SYSTEM SHALL BE USED IN SLIGHTLY OR MODERATELY AGGRESSIVE ENVIRONMENTS ONLY.

CRUCIFORM AND SQUARE PANELS

DATE : 01-01-05

INTERIM STANDARD IN ENGLISH UNITS APPLICABLE TO DESIGN STANDARDS BOOKLET PUBLISHED IN EITHER ENGLISH OR METRIC UNITS.

STATE OF FLORIDA DEPARTMENT OF TRANSPORTATION

RETAINING WALL SYSTEMS
THE REINFORCED EARTH COMPANY
REINFORCED EARTH WALL

INTERIM STANDARD

SHEET NOS. 1 - 16 OF 16 ARE A REPLACEMENT OF INDEX NO. 5015 OF THE DESIGN STANDARDS BOOKLET DATED JANUARY 2000.

APPROVED BY
William N. Nickas, P.E.
State Structures Design Engineer

REVISION NO.	SHEET NO.	INDEX NO.
04	1 of 16	05015

FINANCIAL PROJECT ID	STATE PROJ. NO.	SHEET NO.

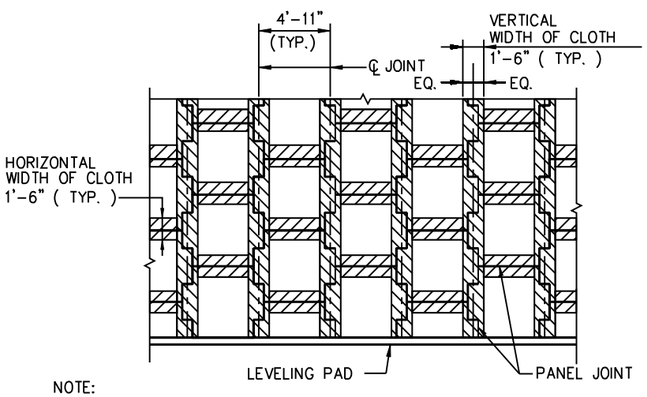

NOTE:
STRIPS OF FILTER CLOTH SHALL BE PLACED ON BACK FACE OF PANEL, OVER PANEL JOINTS. FILTER CLOTH SHALL BE ADHERED TO BACK FACE OF PANELS USING AN ADHESIVE COMPOUND SUPPLIED BY THE REINFORCED EARTH COMPANY. ADHESIVE SHALL BE APPLIED TO PANEL THEN FILTER CLOTH (CARTHAGE MILLS TYPE FX-45HS OR EQUAL) SHALL BE APPLIED TO PANELS.

FILTER CLOTH DETAIL
PARTIAL ELEVATION – BACK FACE

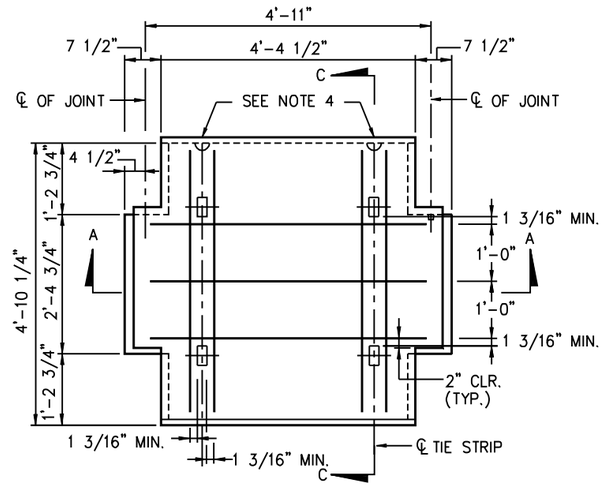

PANEL TYPE "A"
WITH R4 REINFORCEMENT
FRONT VIEW

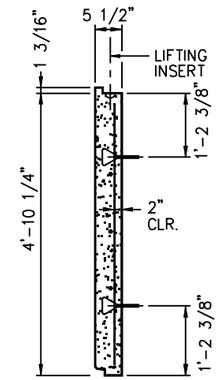

SECTION C–C

PANEL THICKNESS	REINFORCEMENT DESIGNATION	* PANEL REINFORCEMENT (IN2)	MAXIMUM ALLOWABLE HORIZONTAL STRESS AT FACING (kPa)
5 1/2"	R4	0.44 VERTICAL 0.58 HORIZONTAL	1.19
	R6	0.66 VERTICAL 0.78 HORIZONTAL	1.46
	R7	1.18 VERTICAL 1.78 HORIZONTAL	2.58

* TOTAL AREA OF STEEL REQUIRED PER "TYPE A" PANEL.

NOTES:

1. REINFORCING STEEL TO BE A615 GRADE 60.
2. 3/8" x 3/8" CHAMFER SHALL BE PROVIDED ON ALL EXPOSED EDGES (FRONT FACE ONLY).
3. ALL PANEL TYPES AND OTHER RELATED ELEMENTS WILL BE DETAILED ON SHOP DRAWINGS.
4. ALL PANELS SHALL HAVE TWO LIFTING INSERTS OF ONE TON CAPACITY EACH.
5. PANEL DESIGN THICKNESS IS 5 1/2". THICKNESS OF CONCRETE MUST INCREASE TO ACCOMMODATE ANY ARCHITECTURAL SURFACE FINISH THAT MAY BE SPECIFIED.
6. ACTUAL PANEL REINFORCEMENT FOR ALL PANEL TYPES ON THIS PROJECT IS DESIGNATED ABOVE. R4 ILLUSTRATED FOR INFORMATION ONLY.

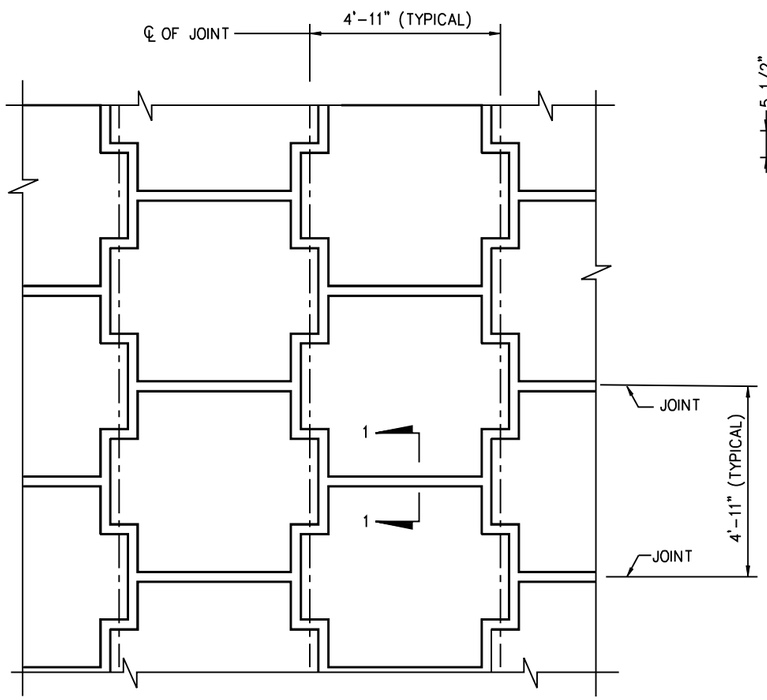

TYPICAL PANEL LAYOUT
PARTIAL ELEVATION – FRONT FACE

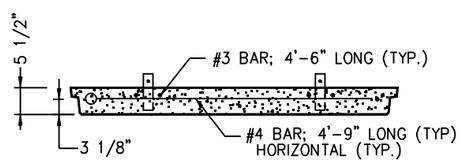

SECTION A–A

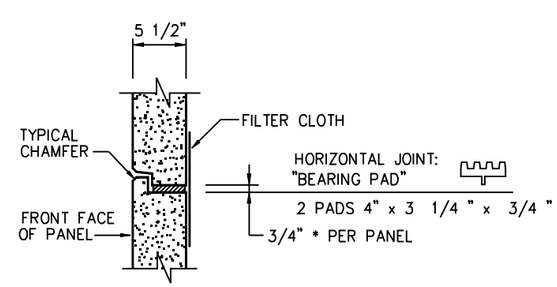

SECTION 1–1

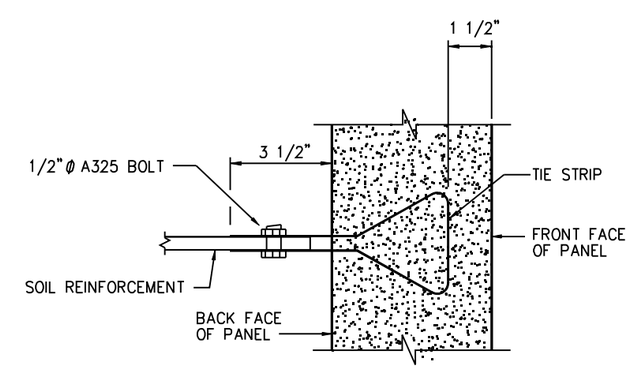

CONNECTION DETAIL

THIS SYSTEM SHALL BE USED IN SLIGHTLY OR MODERATELY AGGRESSIVE ENVIRONMENTS ONLY

CRUCIFORM AND SQUARE PANELS

DATE : 01-01-05

INTERIM STANDARD IN ENGLISH UNITS APPLICABLE TO DESIGN STANDARDS BOOKLET PUBLISHED IN EITHER ENGLISH OR METRIC UNITS.

STATE OF FLORIDA DEPARTMENT OF TRANSPORTATION

RETAINING WALL SYSTEMS
THE REINFORCED EARTH COMPANY
REINFORCED EARTH WALL

INTERIM STANDARD

SHEET NOS. 1 - 16 OF 16 ARE A REPLACEMENT OF INDEX NO. 5015 OF THE DESIGN STANDARDS BOOKLET DATED JANUARY 2000.

APPROVED BY
William N. Nickas, P.E.
State Structures Design Engineer

REVISION NO.	SHEET NO.	INDEX NO.
04	2 of 16	05015

FINANCIAL PROJECT ID	STATE PROJ. NO.	SHEET NO.

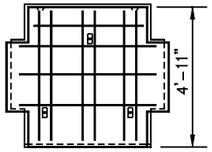

A-3-R5

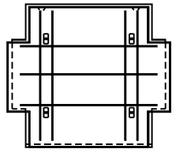

A-4-R4

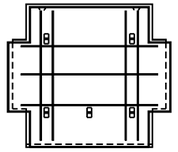

A-5-R4

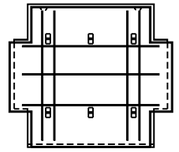

A-6-R4

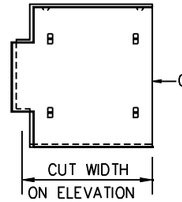

AL-4-R4

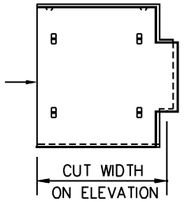

AR-4-R4

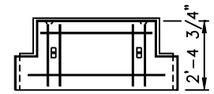

B-2-R4

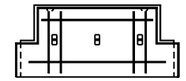

B-3-R4

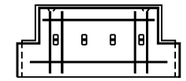

B-4-R4

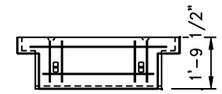

C-2-R4

C-3-R4

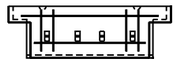

C-4-R4

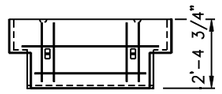

D-2-R4

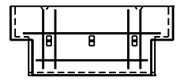

D-3-R4

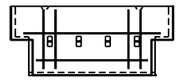

D-4-R4

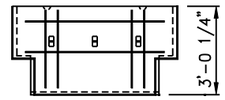

E-3-R4

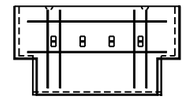

E-4-R4

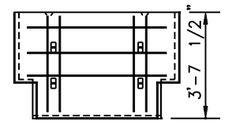

F-4-R4

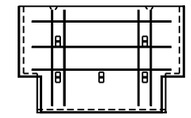

F-5-R4

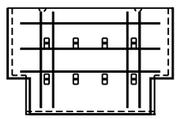

F-8-R4

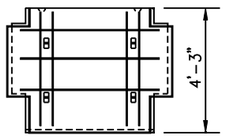

G-4-R4

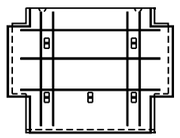

G-5-R4

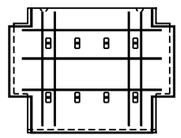

G-8-R4

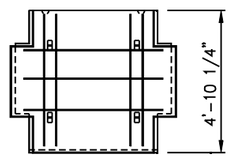

H-4-R4

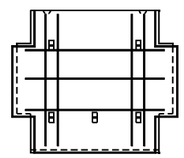

H-5-R4

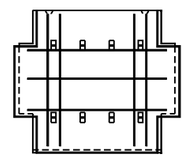

H-8-R4

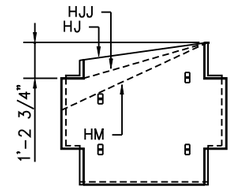

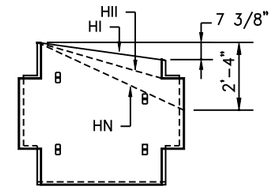

SLOPED TOP PANELS
"H" PANEL USED FOR ILLUSTRATION ONLY.

HJ-4-R4

HI-4-R4

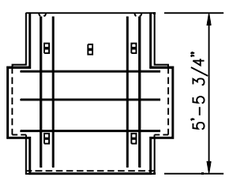

K-5-R4

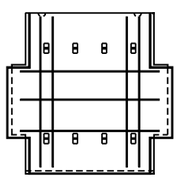

K-8-R4

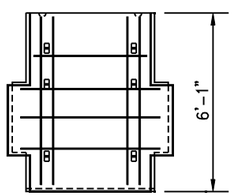

L-6-R4

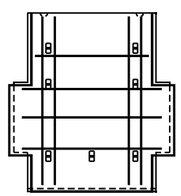

L-7-R4

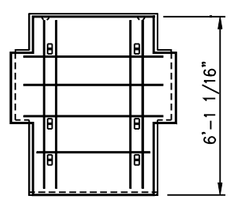

P-6-R4

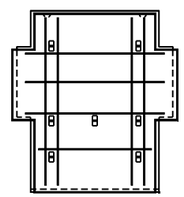

P-7-R4

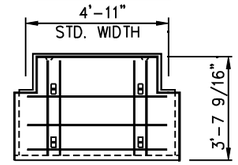

Q-4-R4

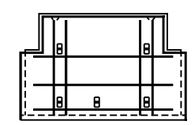

Q-5-R4

ALL PANELS ARE SHOWN BACK FACE VIEW

▯ TIE STRIP LOCATION

R4, R5 — VERTICAL BARS ARE #3 AS SHOWN
HORIZONTAL BARS ARE #4 AS SHOWN

R6 — VERTICAL BARS ARE 6-#3
HORIZONTAL BARS ARE 4-#4

R7 — VERTICAL BARS ARE 6-#4
HORIZONTAL BARS ARE 4-#6

SEE PANEL TYPE "A" WITH R4 REINFORCEMENT ON SHEET TITLED "PANEL DETAILS" FOR TYPICAL REINFORCEMENT SPACING

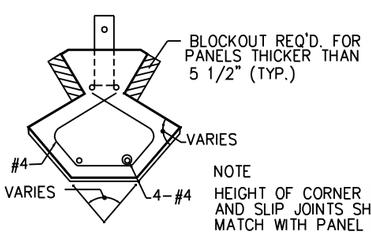

NOTE
HEIGHT OF CORNER ELEMENTS AND SLIP JOINTS SHOULD MATCH WITH PANEL HEIGHT.

CORNER ELEMENT
SIZE VARIES WITH ANGLES

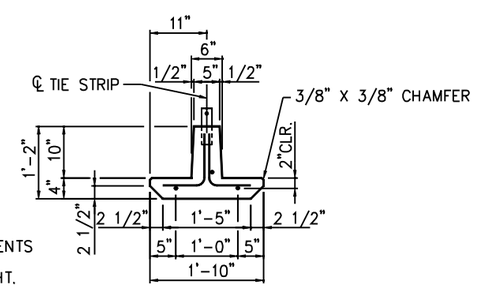

SLIP JOINT

THIS SYSTEM SHALL BE USED IN SLIGHTLY OR MODERATELY AGGRESSIVE ENVIRONMENTS ONLY

CRUCIFORM PANELS

DATE : 01-01-05

INTERIM STANDARD IN ENGLISH UNITS APPLICABLE TO DESIGN STANDARDS BOOKLET PUBLISHED IN EITHER ENGLISH OR METRIC UNITS.

STATE OF FLORIDA DEPARTMENT OF TRANSPORTATION

RETAINING WALL SYSTEMS
THE REINFORCED EARTH COMPANY
REINFORCED EARTH WALL

INTERIM STANDARD

SHEET NOS. 1 - 16 OF 16 ARE A REPLACEMENT OF INDEX NO. 5015 OF THE DESIGN STANDARDS BOOKLET DATED JANUARY 2000.

APPROVED BY
William N. Nickas, P.E.
State Structures Design Engineer

REVISION NO.	SHEET NO.	INDEX NO.
04	3 of 16	05015

FINANCIAL PROJECT ID	STATE PROJ. NO.	SHEET NO.

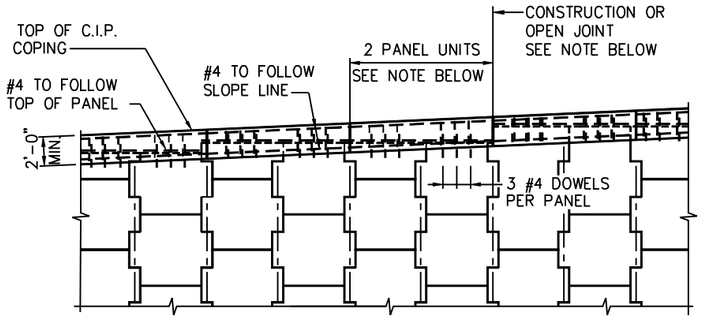

C.I.P. COPING – PARTIAL ELEVATION

NOTE;

1/2-INCH OPEN JOINTS IN COPING SHALL BE AT 6 PANEL INTERVALS AND COINCIDE APPROXIMATELY WITH ℄ OF PANEL JOINTS. REINFORCING STEEL SHALL BE STOPPED 2" SHORT OF EITHER SIDE OF THE JOINTS. CONSTRUCTION JOINTS IN BETWEEN THE OPEN JOINTS SHALL BE PROVIDED AT 2 PANELS INTERVALS.

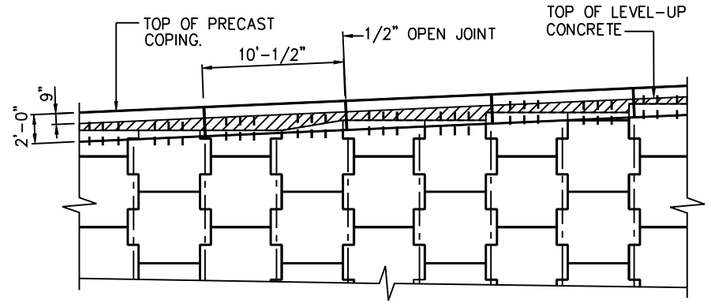

PRECAST COPING PARTIAL ELEVATION

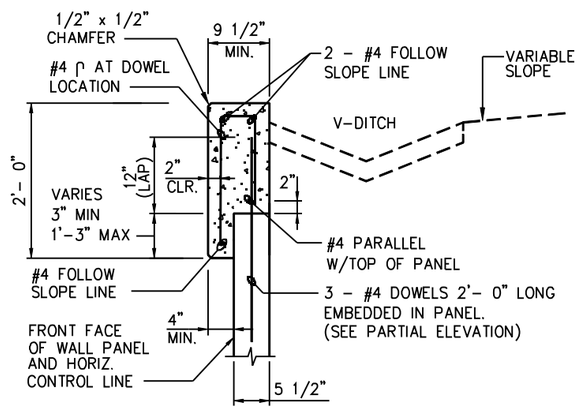

C.I.P. CONC. COPING W/DITCH

CLASS II CONC. (3400 PSI)

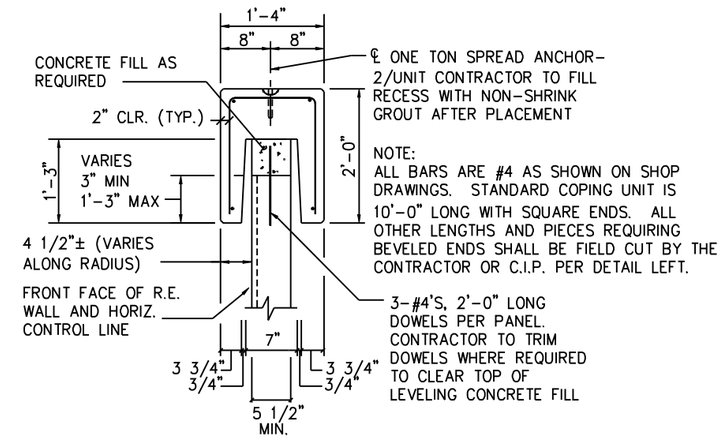

NOTE:
ALL BARS ARE #4 AS SHOWN ON SHOP DRAWINGS. STANDARD COPING UNIT IS 10'-0" LONG WITH SQUARE ENDS. ALL OTHER LENGTHS AND PIECES REQUIRING BEVELED ENDS SHALL BE FIELD CUT BY THE CONTRACTOR OR C.I.P. PER DETAIL LEFT.

PRECAST COPING SECTION

CLASS IV CONC. (5500 PSI)

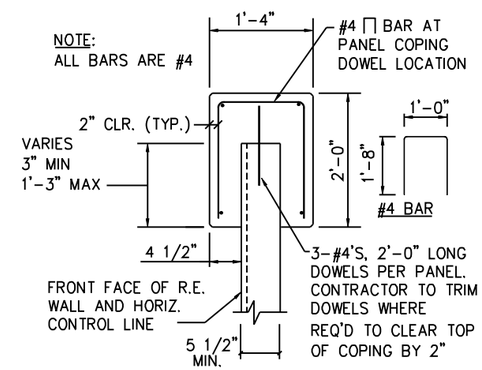

NOTE:
ALL BARS ARE #4

FOR ANY DESIRED SHORT PORTIONS OF C.I.P. CONC. COPING BETWEEN PRECAST CONC. COPING USE THIS SIMILAR C.I.P. CONC. SECTION. ALSO USE FOR VERTICAL COPING.

C.I.P. COPING SECTION

CLASS II CONC. (3400 PSI)

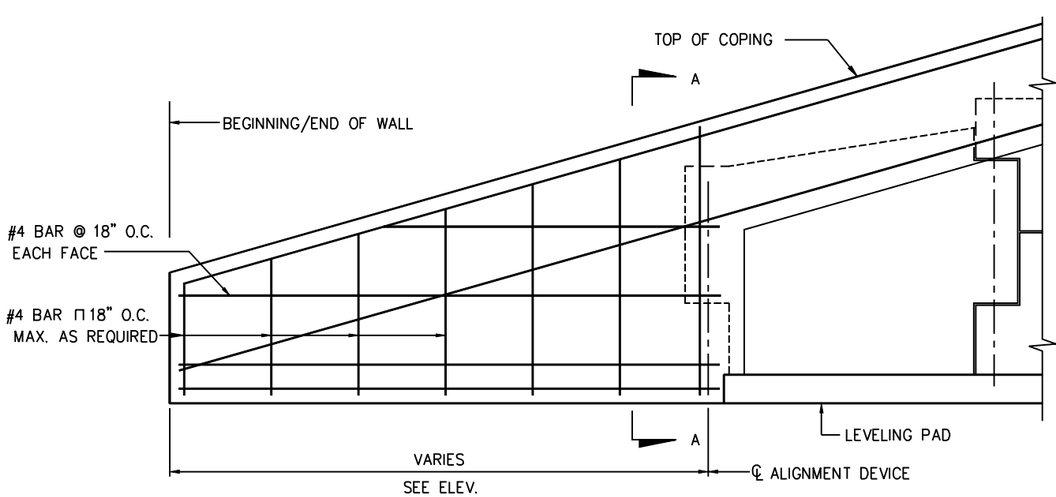

COPING ENCLOSURE DETAIL

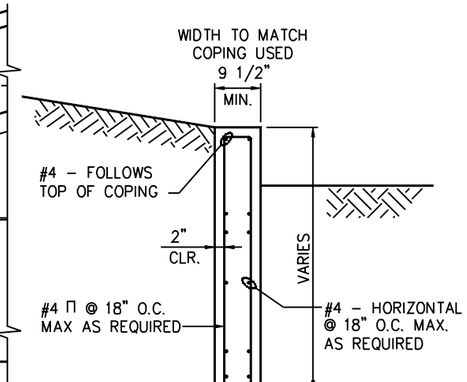

SECTION A–A

THIS SYSTEM SHALL BE USED IN SLIGHTLY OR MODERATELY AGGRESSIVE ENVIRONMENTS ONLY

CRUCIFORM PANELS

DATE : 01-01-05

INTERIM STANDARD IN ENGLISH UNITS APPLICABLE TO DESIGN STANDARDS BOOKLET PUBLISHED IN EITHER ENGLISH OR METRIC UNITS.

STATE OF FLORIDA DEPARTMENT OF TRANSPORTATION

RETAINING WALL SYSTEMS
THE REINFORCED EARTH COMPANY
REINFORCED EARTH WALL

INTERIM STANDARD

SHEET NOS. 1 - 16 OF 16 ARE A REPLACEMENT OF INDEX NO. 5015 OF THE DESIGN STANDARDS BOOKLET DATED JANUARY 2000.

APPROVED BY
William N. Nickas, P.E.
State Structures Design Engineer

REVISION NO.	SHEET NO.	INDEX NO.
04	4 of 16	05015

FINANCIAL PROJECT ID	STATE PROJ. NO.	SHEET NO.

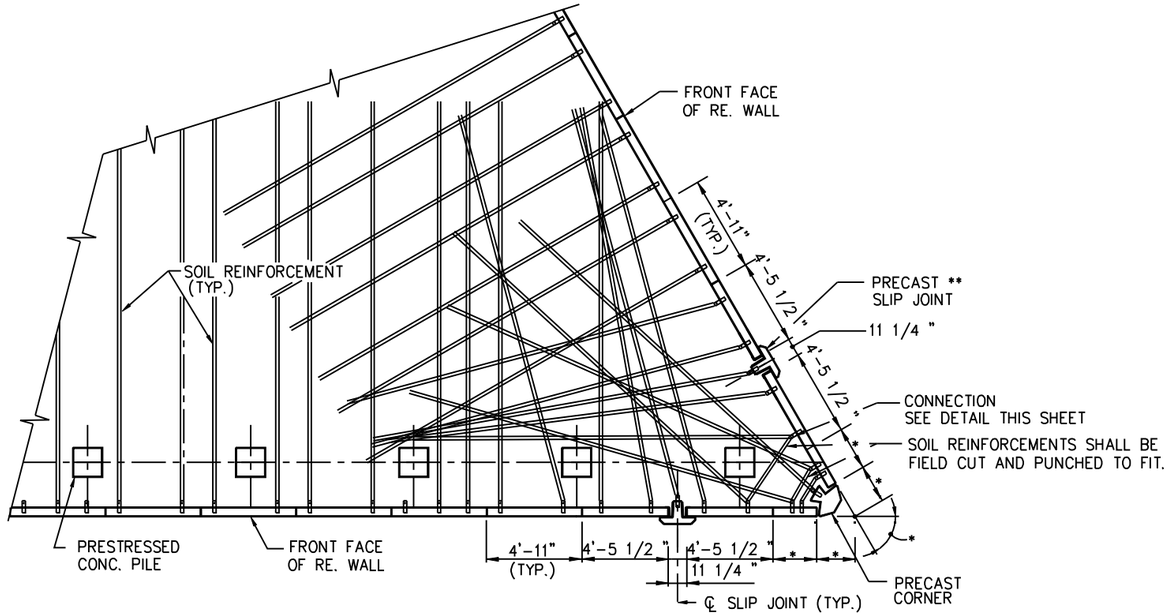

EXAMPLE ACUTE CORNER – SKEWED SOIL REINFORCEMENTS UNDER PILE CAP

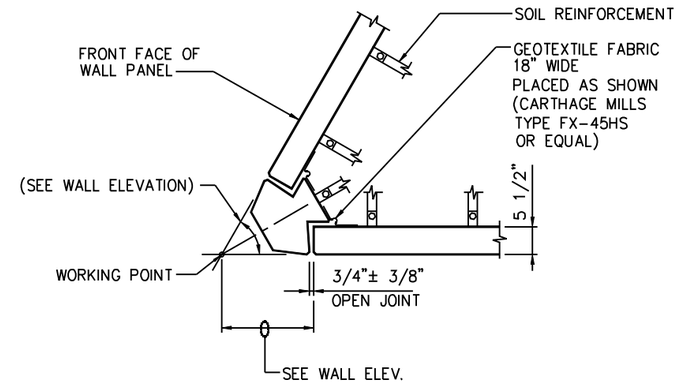

ACUTE CORNER ELEMENT DETAIL

NOTE:

* – DIMENSION OR ANGLE VARIES, SEE WALL ELEVATION

** – SLIP JOINTS ARE NOT REQUIRED FOR SQUARE PANELS

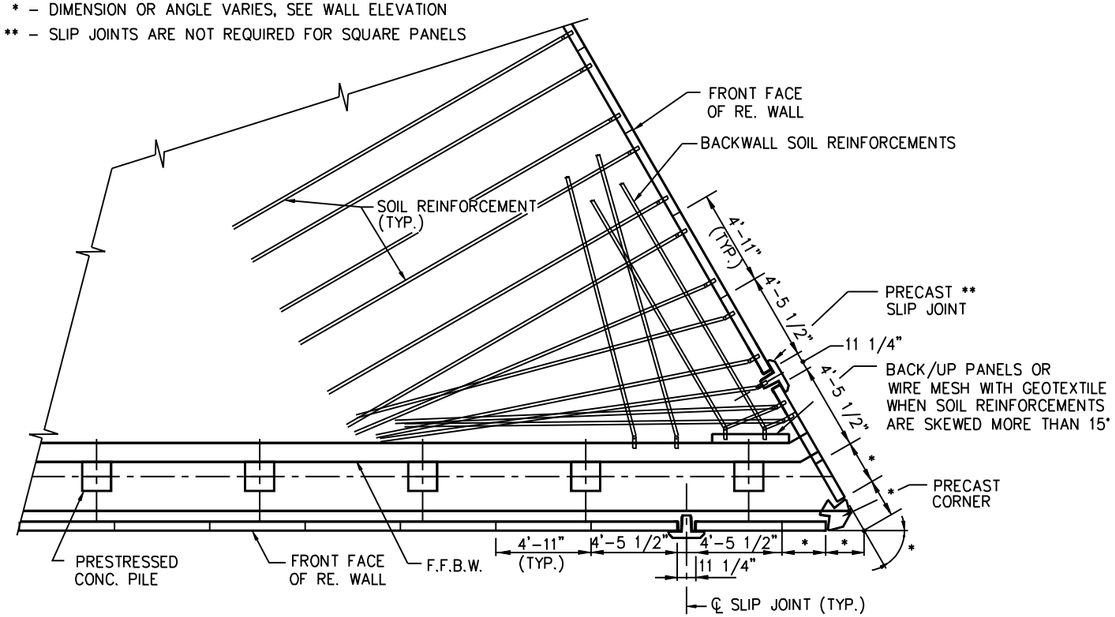

EXAMPLE ACUTE CORNER – SKEWED SOIL REINFORCEMENTS AT ABUTMENT LEVEL

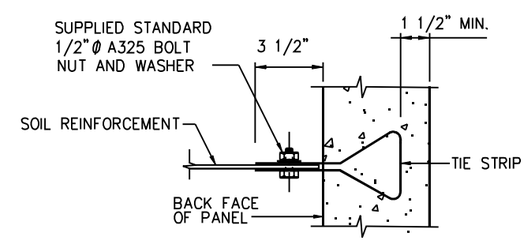

CONNECTION DETAIL

THIS SYSTEM SHALL BE USED IN SLIGHTLY OR MODERATELY AGGRESSIVE ENVIRONMENTS ONLY

CRUCIFORM AND SQUARE PANELS

DATE : 01-01-05

INTERIM STANDARD IN ENGLISH UNITS APPLICABLE TO DESIGN STANDARDS BOOKLET PUBLISHED IN EITHER ENGLISH OR METRIC UNITS.

STATE OF FLORIDA DEPARTMENT OF TRANSPORTATION

RETAINING WALL SYSTEMS
THE REINFORCED EARTH COMPANY
REINFORCED EARTH WALL

INTERIM STANDARD

SHEET NOS. 1 - 16 OF 16 ARE A REPLACEMENT OF INDEX NO. 5015 OF THE DESIGN STANDARDS BOOKLET DATED JANUARY 2000.

APPROVED BY
William N. Nickas, P.E.
State Structures Design Engineer

REVISION NO.	SHEET NO.	INDEX NO.
04	5 of 16	05015

FINANCIAL PROJECT ID	STATE PROJ. NO.	SHEET NO.

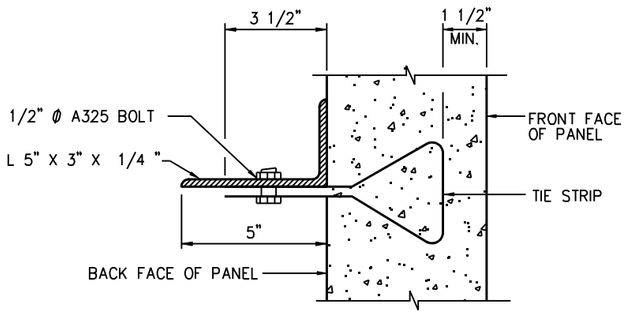

1 CONNECTION DETAIL ANGLE BOLTED TO TIE STRIP

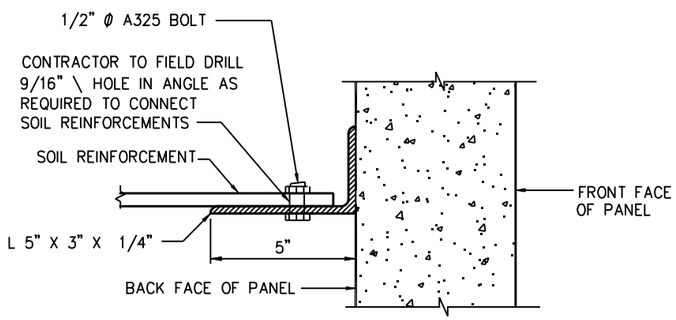

2 CONNECTION DETAIL SHIFTED SOIL REINFORCEMENT BOLTED TO ANGLE

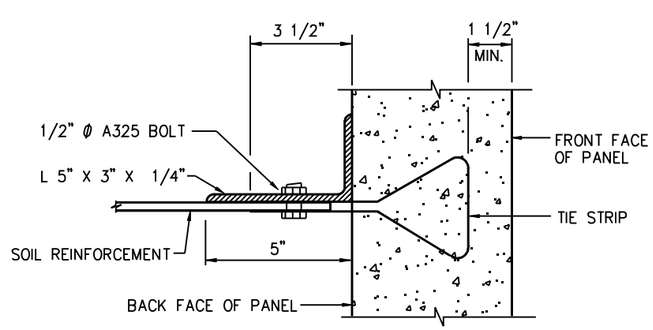

3 CONNECTION DETAIL ANGLE BOLTED TO TIE STRIP WITH SOIL REINFORCEMENT

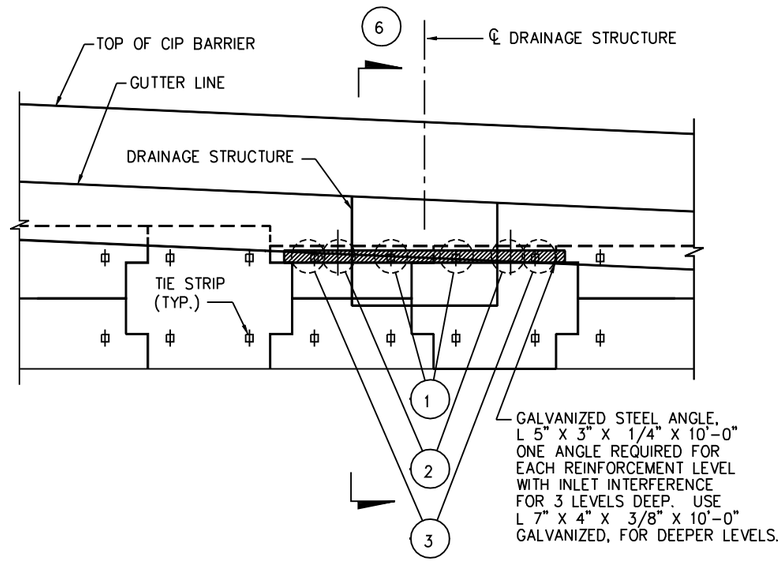

4 PARTIAL ELEVATION

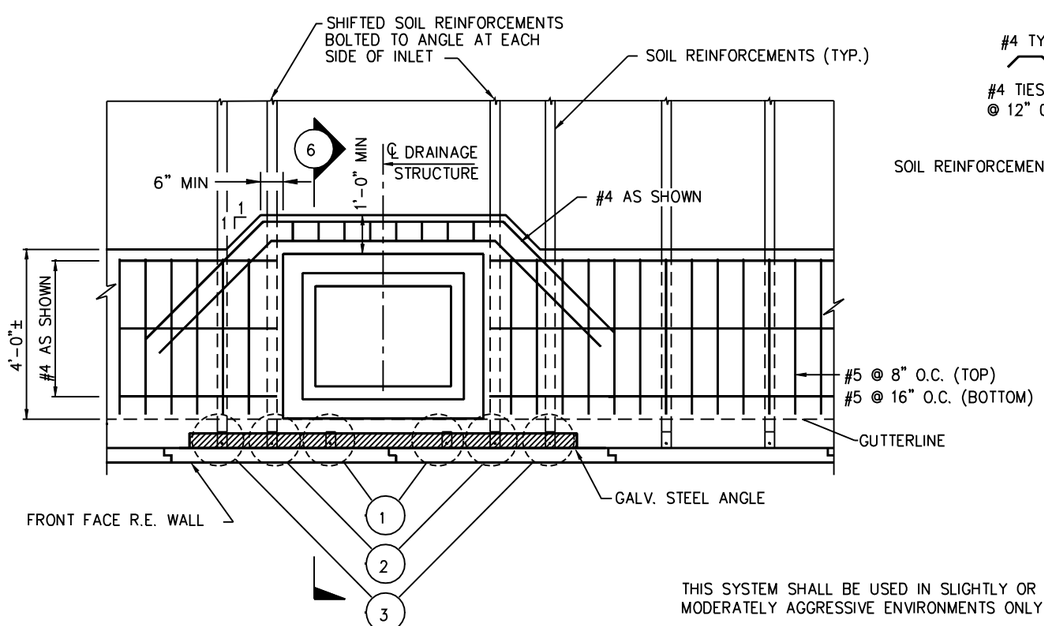

5 PARTIAL PLAN

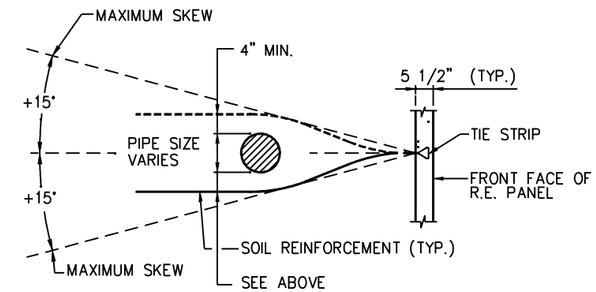

NOTE : BEND TO BE AS GRADUAL AS POSSIBLE.

7 TYP. SOIL REINFORCEMENT BENDING DETAIL AT ANY PROPOSED & EXISTING PIPES

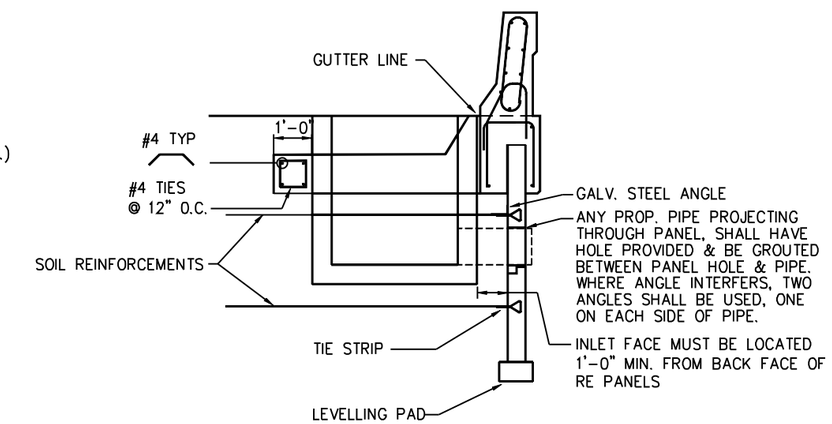

6 SECTION AT INLET

THIS SYSTEM SHALL BE USED IN SLIGHTLY OR MODERATELY AGGRESSIVE ENVIRONMENTS ONLY

CRUCIFORM AND SQUARE PANELS

DATE : 01-01-05

INTERIM STANDARD IN ENGLISH UNITS APPLICABLE TO DESIGN STANDARDS BOOKLET PUBLISHED IN EITHER ENGLISH OR METRIC UNITS.

STATE OF FLORIDA DEPARTMENT OF TRANSPORTATION

RETAINING WALL SYSTEMS THE REINFORCED EARTH COMPANY REINFORCED EARTH WALL

INTERIM STANDARD

SHEET NOS. 1 - 16 OF 16 ARE A REPLACEMENT OF INDEX NO. 5015 OF THE DESIGN STANDARDS BOOKLET DATED JANUARY 2000.

APPROVED BY
William N. Nickas, P.E.
State Structures Design Engineer

REVISION NO.	SHEET NO.	INDEX NO.
04	6 of 16	05015

FINANCIAL PROJECT ID	STATE PROJ. NO.	SHEET NO.

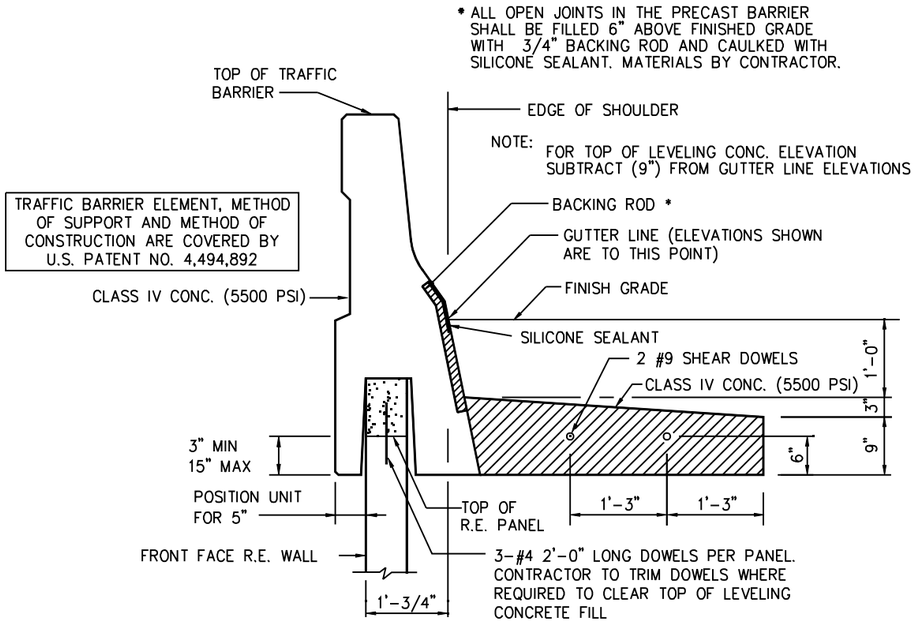

SECTION A–A

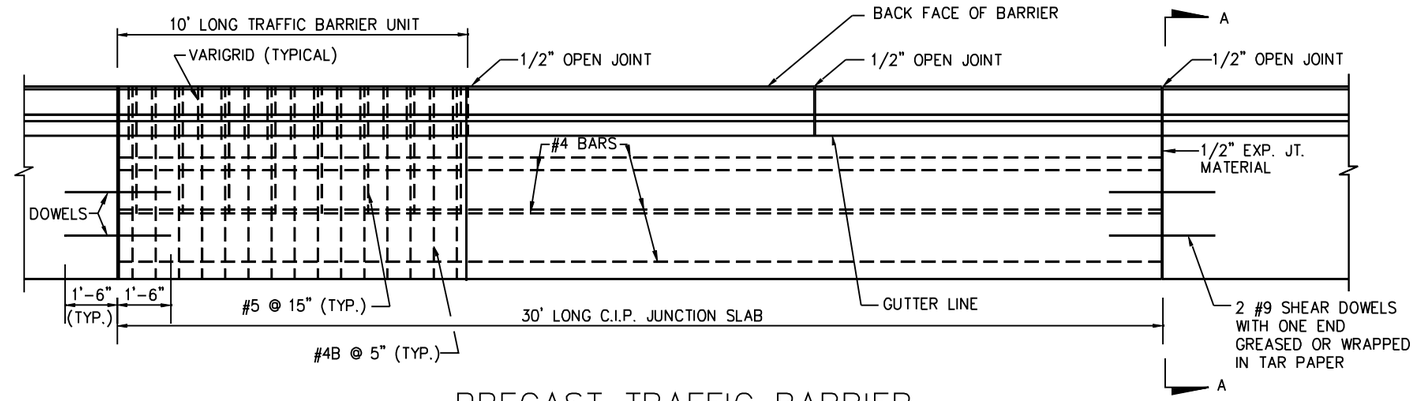

PRECAST TRAFFIC BARRIER
PLAN VIEW

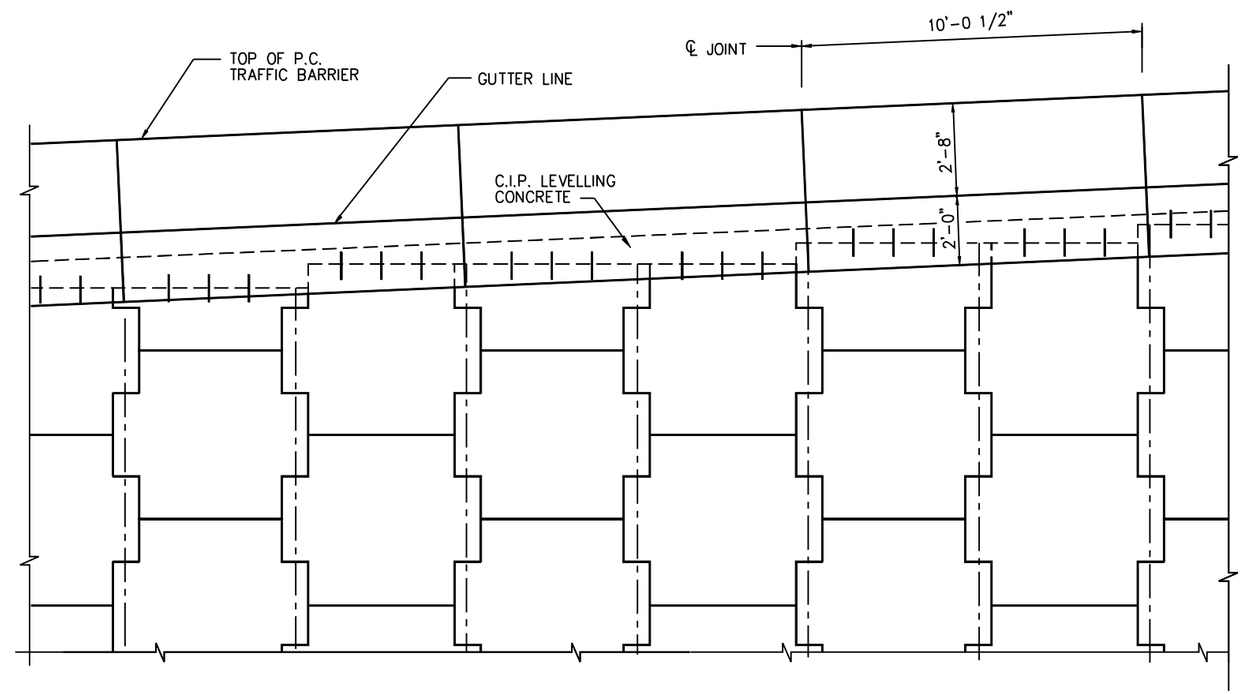

PRECAST TRAFFIC BARRIER
PARTIAL ELEVATION

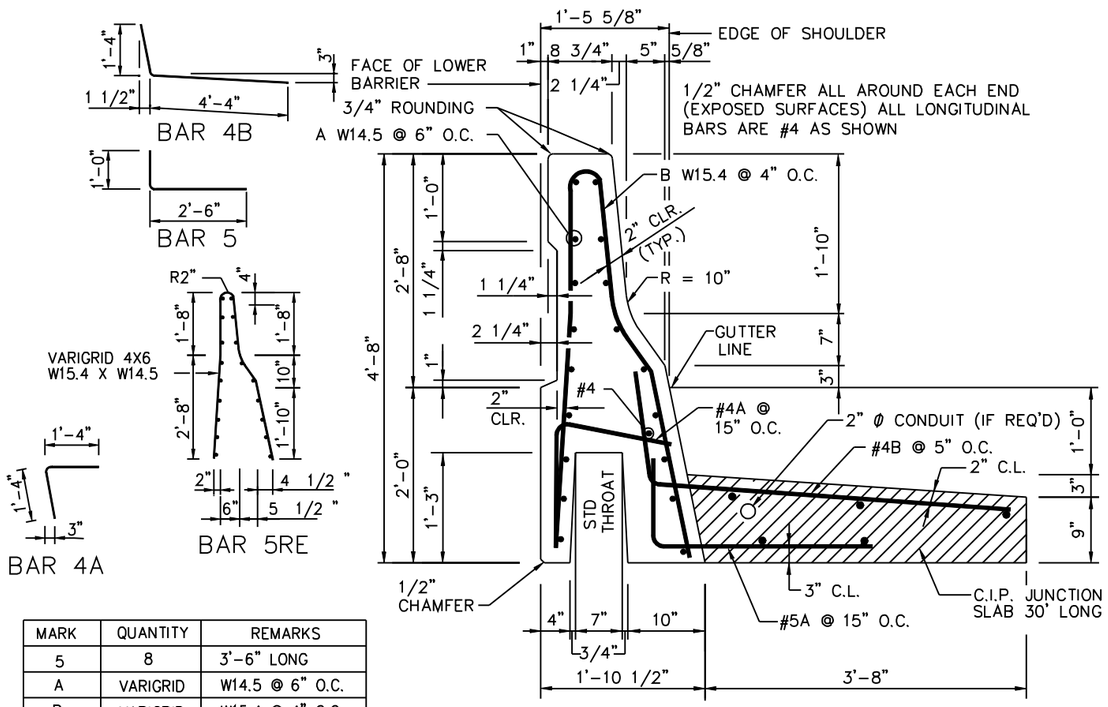

MARK	QUANTITY	REMARKS
5	8	3'-6" LONG
A	VARIGRID	W14.5 @ 6" O.C.
B	VARIGRID	W15.4 @ 4" O.C.
4A	8	2'-8" LONG
4B	24	5'-8" LONG

TRAFFIC BARRIER REINFORCEMENT
WITH STANDARD THROAT

THIS SYSTEM SHALL BE USED IN SLIGHTLY OR MODERATELY AGGRESSIVE ENVIRONMENTS ONLY.

CRUCIFORM AND SQUARE PANELS

DATE : 01-01-05

INTERIM STANDARD IN ENGLISH UNITS APPLICABLE TO DESIGN STANDARDS BOOKLET PUBLISHED IN EITHER ENGLISH OR METRIC UNITS.

STATE OF FLORIDA DEPARTMENT OF TRANSPORTATION

RETAINING WALL SYSTEMS
THE REINFORCED EARTH COMPANY
REINFORCED EARTH WALL

INTERIM STANDARD

SHEET NOS. 1 - 16 OF 16 ARE A REPLACEMENT OF INDEX NO. 5015 OF THE DESIGN STANDARDS BOOKLET DATED JANUARY 2000.

APPROVED BY
William N. Nickas, P.E.
State Structures Design Engineer

REVISION NO.	SHEET NO.	INDEX NO.
04	7 of 16	05015

FINANCIAL PROJECT ID	STATE PROJ. NO.	SHEET NO.

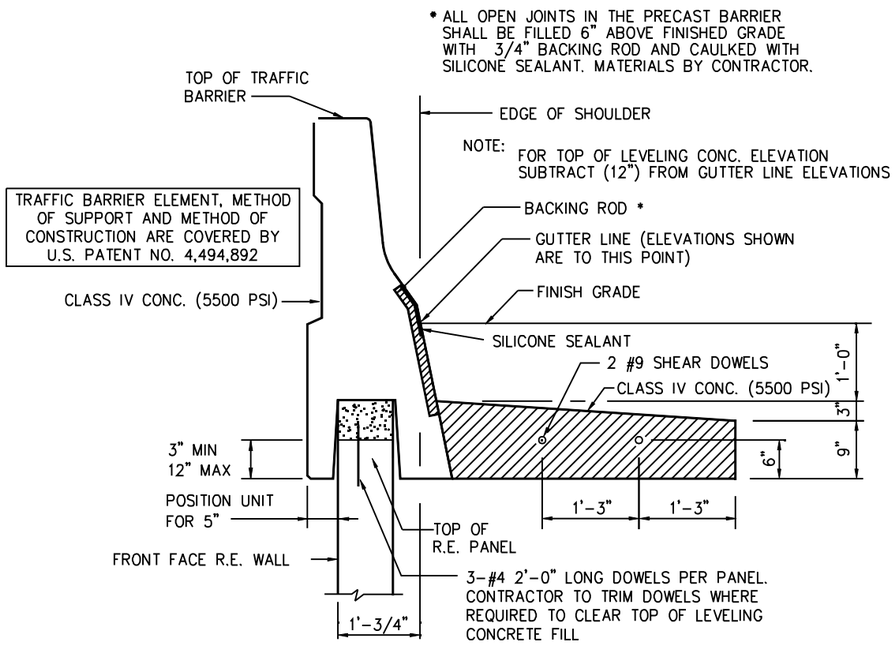

SECTION A–A

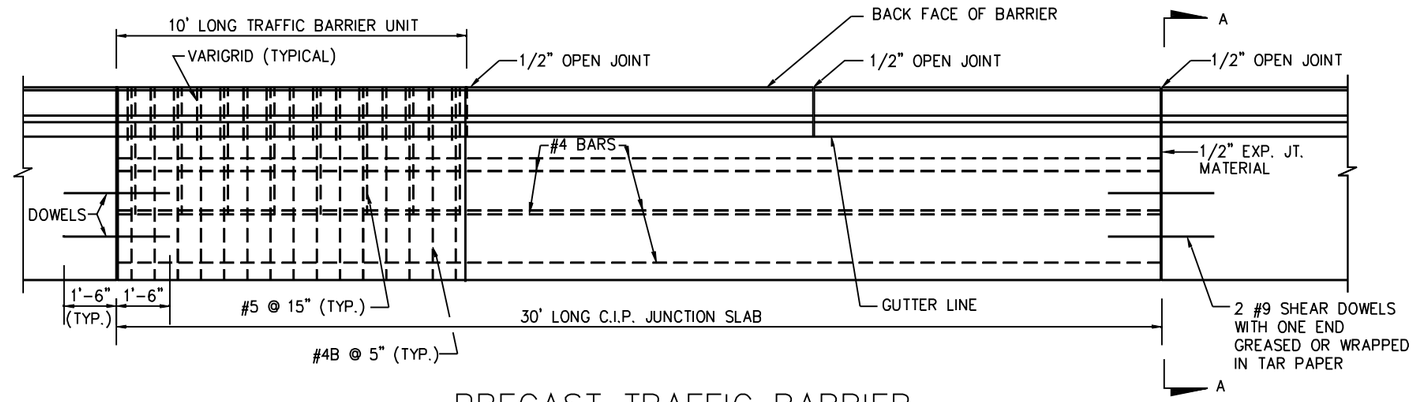

PRECAST TRAFFIC BARRIER
PLAN VIEW

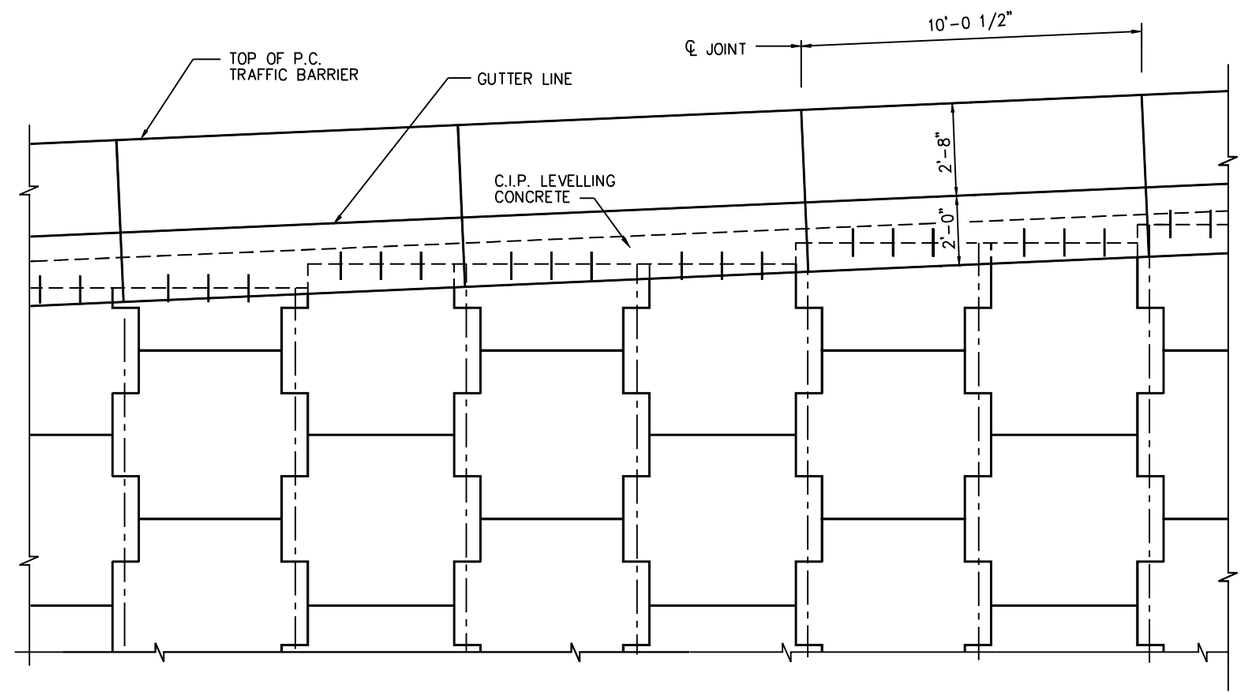

PRECAST TRAFFIC BARRIER
PARTIAL ELEVATION

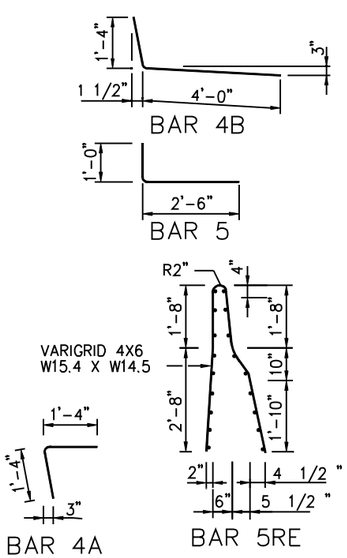

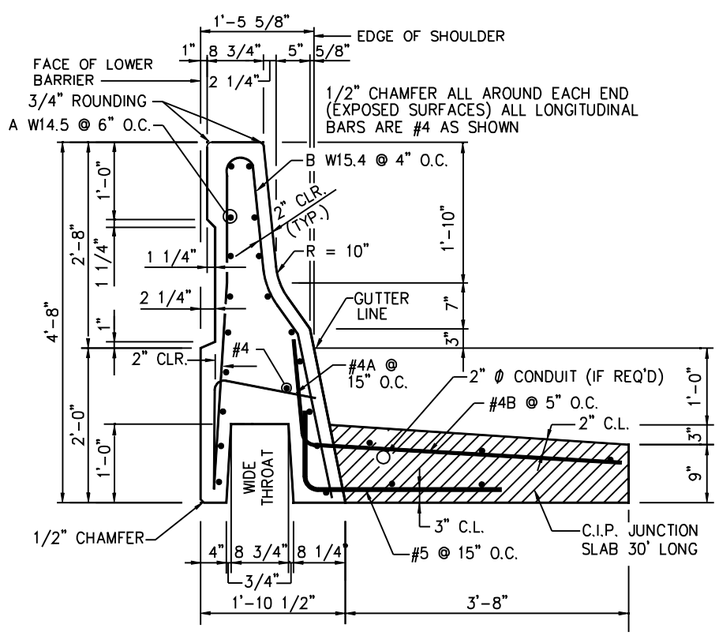

TRAFFIC BARRIER REINFORCEMENT
WITH WIDE THROAT

MARK	QUANTITY	REMARKS
5	8	3'-6" LONG
A	VARIGRID	W14.5 @ 6" O.C.
B	VARIGRID	W15.4 @ 4" O.C.
4A	8	2'-8" LONG
4B	24	5'-8" LONG

THIS SYSTEM SHALL BE USED IN SLIGHTLY OR MODERATELY AGGRESSIVE ENVIRONMENTS ONLY.

CRUCIFORM AND SQUARE PANELS

DATE : 01-01-05

INTERIM STANDARD IN ENGLISH UNITS APPLICABLE TO DESIGN STANDARDS BOOKLET PUBLISHED IN EITHER ENGLISH OR METRIC UNITS.

STATE OF FLORIDA DEPARTMENT OF TRANSPORTATION

RETAINING WALL SYSTEMS
THE REINFORCED EARTH COMPANY
REINFORCED EARTH WALL

INTERIM STANDARD

SHEET NOS. 1 - 16 OF 16 ARE A REPLACEMENT OF INDEX NO. 5015 OF THE DESIGN STANDARDS BOOKLET DATED JANUARY 2000.

APPROVED BY
William N. Nickas, P.E.
State Structures Design Engineer

REVISION NO.	SHEET NO.	INDEX NO.
04	8 of 16	05015

FINANCIAL PROJECT ID	STATE PROJ. NO.	SHEET NO.

NOTE:
IF SHORT C.I.P. BARRIER SECTIONS ARE TO BE CONSTRUCTED ADJACENT TO PRECAST BARRIER SECTIONS, THEN THIS SECTION'S DIMENSIONS SHALL BE ADJUSTED TO CONFORM TO THE PRECAST DIMENSIONS

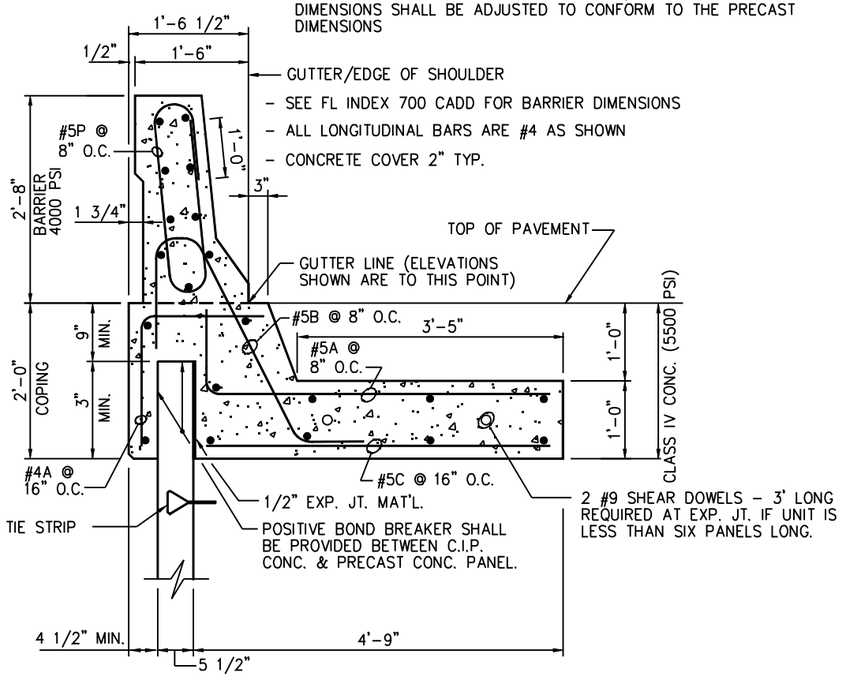

C.I.P. CONC. TRAFFIC BARRIER

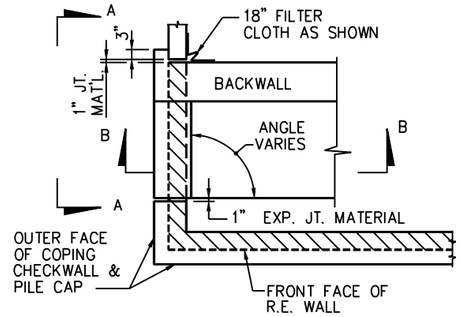

PLAN VIEW @ BEND (TYP.)

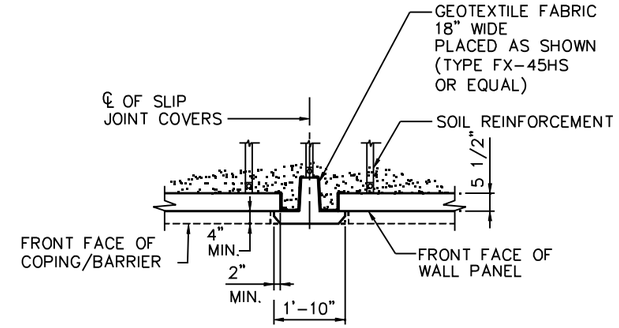

SLIP JOINT COVER DETAIL

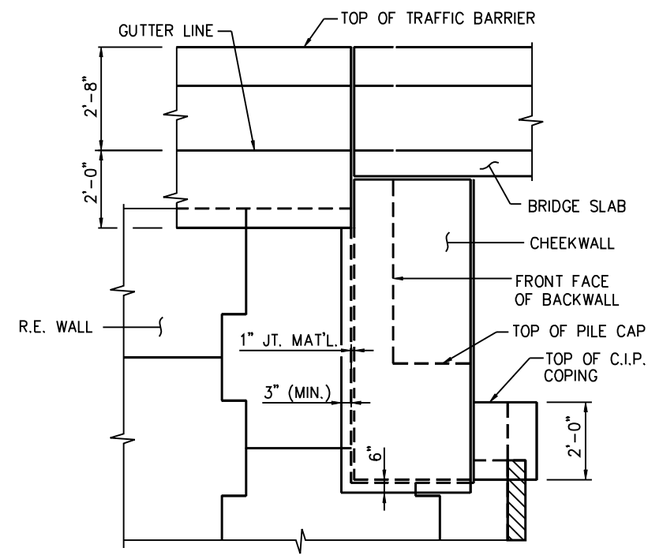

SECTION A-A

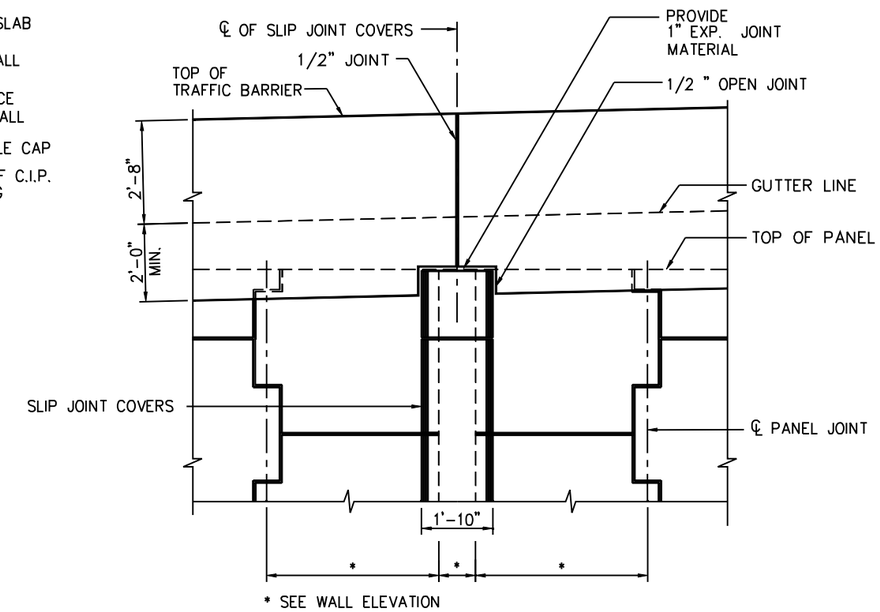

C.I.P. TRAFFIC BARRIER OVER SLIP JOINT COVER

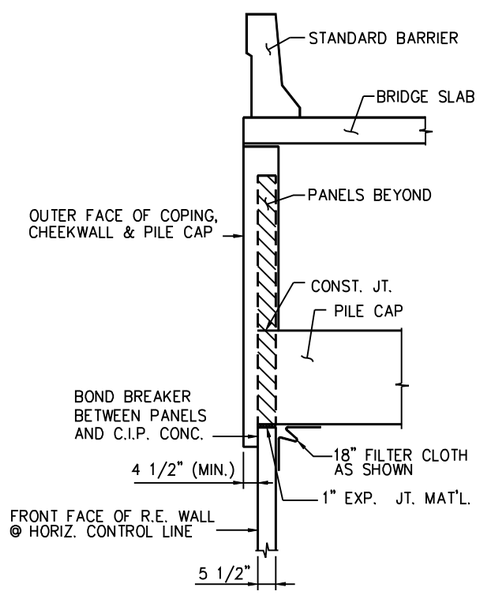

SECTION B-B

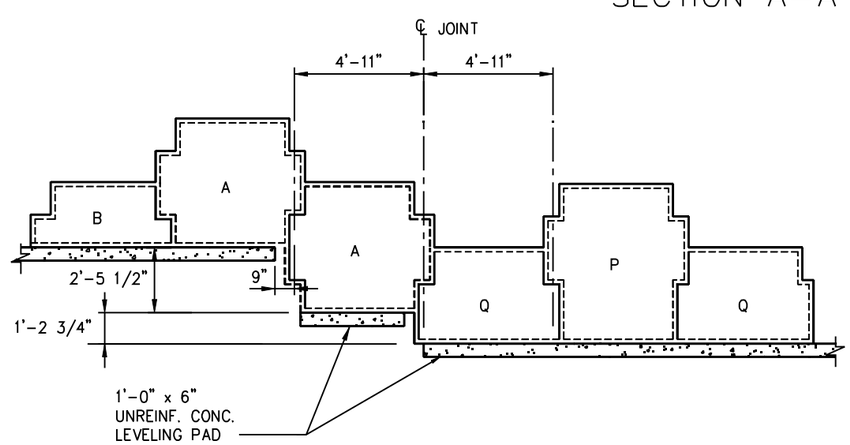

TYPICAL LEVELING PAD STEP DETAIL

(LEVELING PAD DIMENSIONS ARE THE SAME FOR BOTH CRUCIFORM AND SQUARE PANELS, SEE WALL ELEVATIONS FOR PANEL TYPES AT STEPS)

THIS SYSTEM SHALL BE USED IN SLIGHTLY OR MODERATELY AGGRESSIVE ENVIRONMENTS ONLY

CRUCIFORM AND SQUARE PANELS

DATE : 01-01-05

INTERIM STANDARD IN ENGLISH UNITS APPLICABLE TO DESIGN STANDARDS BOOKLET PUBLISHED IN EITHER ENGLISH OR METRIC UNITS.

STATE OF FLORIDA DEPARTMENT OF TRANSPORTATION

RETAINING WALL SYSTEMS
THE REINFORCED EARTH COMPANY
REINFORCED EARTH WALL

INTERIM STANDARD

SHEET NOS. 1 - 16 OF 16 ARE A REPLACEMENT OF INDEX NO. 5015 OF THE DESIGN STANDARDS BOOKLET DATED JANUARY 2000.

APPROVED BY
William N. Nickas, P.E.
State Structures Design Engineer

REVISION NO.	SHEET NO.	INDEX NO.
04	9 of 16	05015

FINANCIAL PROJECT ID	STATE PROJ. NO.	SHEET NO.

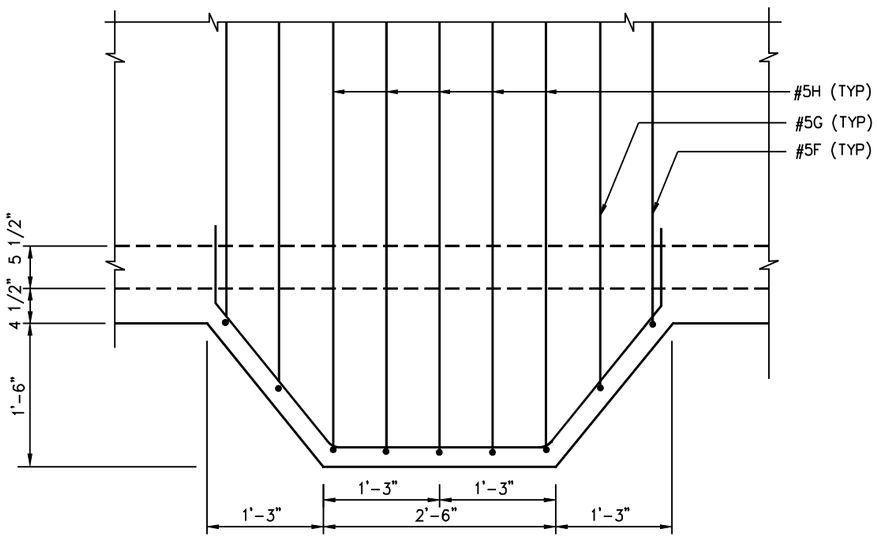

1 PLAN

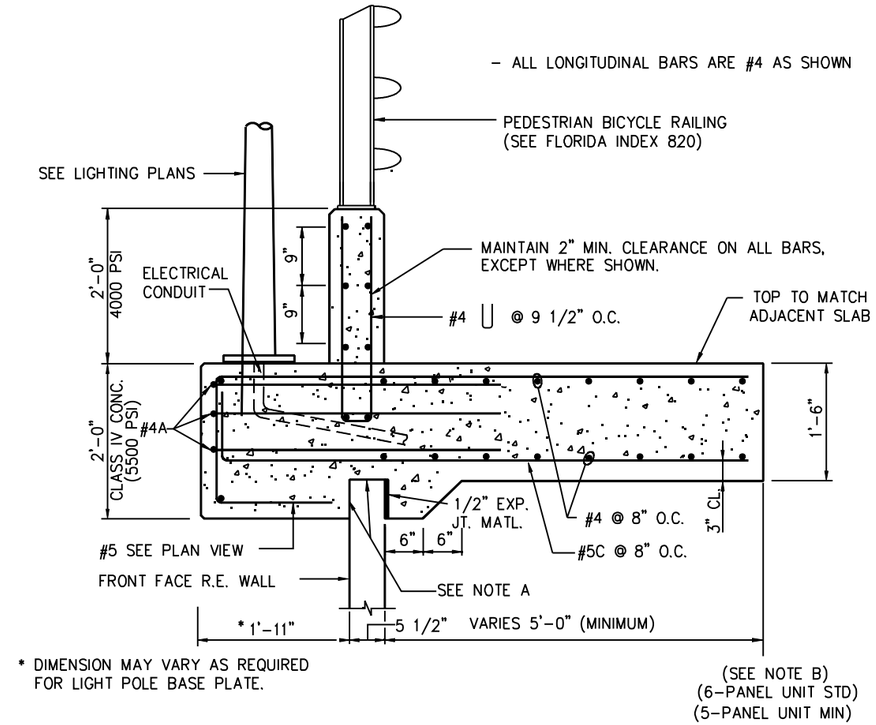

2 BARRIER DETAIL @ LIGHT POLE

NOTE A:
POSITIVE BOND BREAKER SHALL BE PROVIDED BETWEEN C.I.P. CONCRETE AND CONCRETE PANEL

NOTE B:
THE BARRIER JUNCTION SLAB SHALL HAVE THESE DIMENSIONS FOR ONE PRECAST UNIT EITHER SIDE OF LIGHT POLE BARRIER LONGITUDINAL BARS SHALL BE AS SHOWN ABOVE

NOTE C:
2 - #9 SHEAR DOWELS 3'-0" LONG
REFER TO PRECAST BARRIER SHEET

NOTE D:
LIGHT POLE MANUFACTURER IS RESPONSIBLE FOR PROVIDING ANCHOR BOLTS THAT EFFECTIVELY TRANSMIT LOADS TO THE PILASTER AND FIT THE REINFORCING CAGE.

NOTE E:
SEE STANDARD INDEX NO. 1200 FOR ADDITIONAL DETAILS.

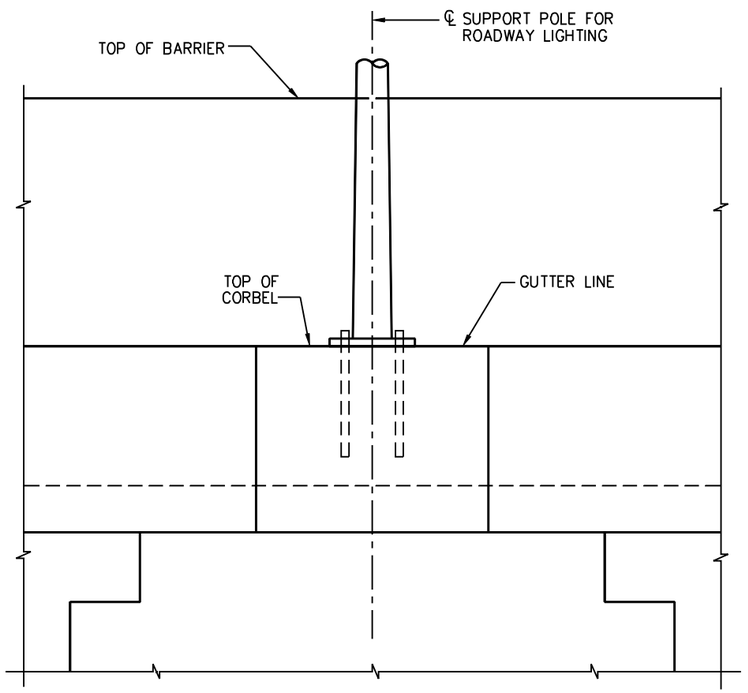

3 PARTIAL ELEVATION

REBAR SCHEDULE	
MARK	QTY.
4A	3
5C	8
5F	2
5G	2
5H	5
4U	6

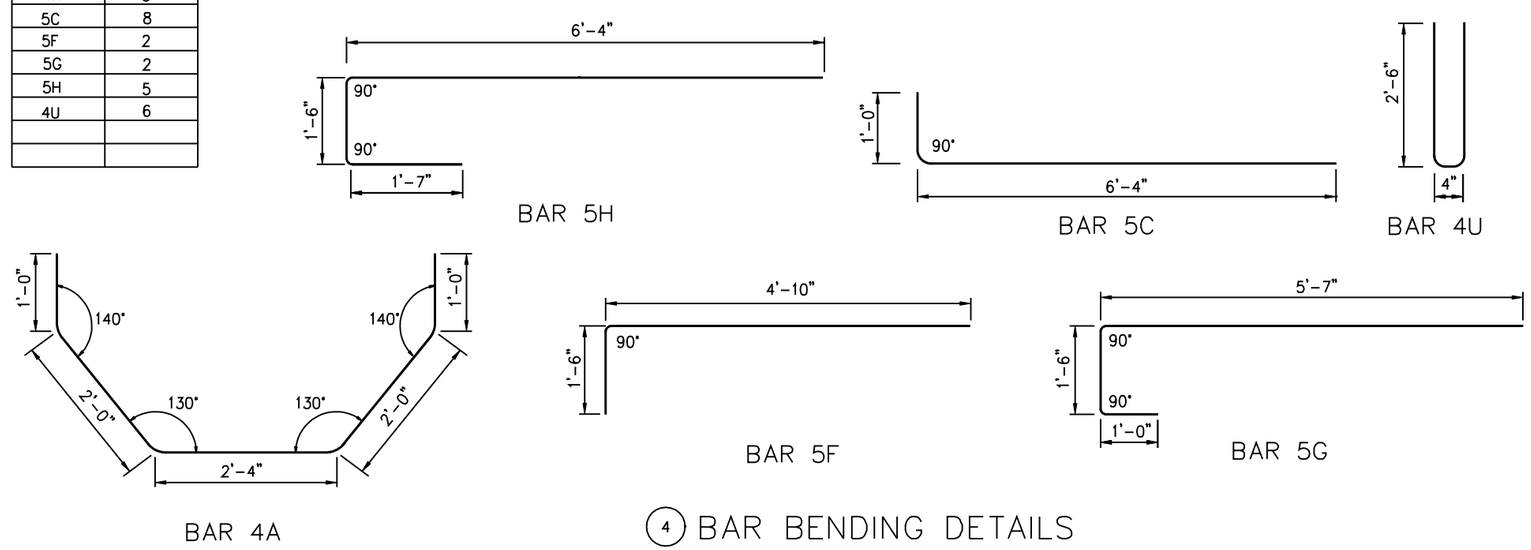

4 BAR BENDING DETAILS

THIS SYSTEM SHALL BE USED IN SLIGHTLY OR MODERATELY AGGRESSIVE ENVIRONMENTS ONLY.

CRUCIFORM AND SQUARE PANELS

DATE : 01-01-05

STATE OF FLORIDA DEPARTMENT OF TRANSPORTATION

RETAINING WALL SYSTEMS
THE REINFORCED EARTH COMPANY
REINFORCED EARTH WALL

INTERIM STANDARD

APPROVED BY
William N. Nickas, P.E.
State Structures Design Engineer

REVISION NO.	SHEET NO.	INDEX NO.
04	10 of 16	05015

FINANCIAL PROJECT ID	STATE PROJ. NO.	SHEET NO.

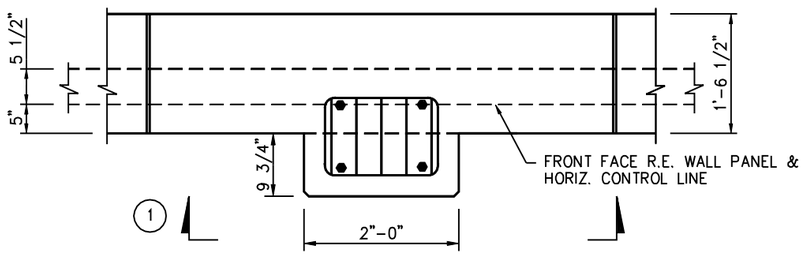

(2) PLAN

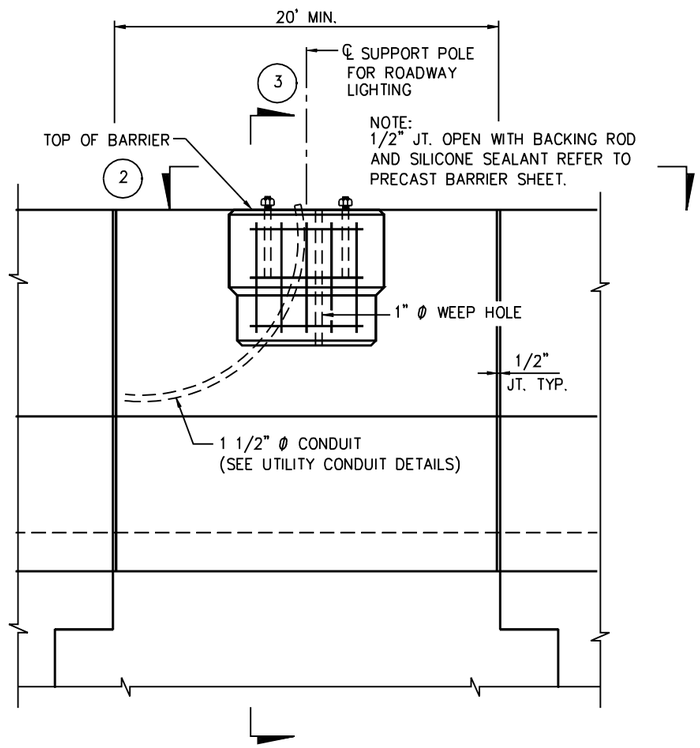

(1) PARTIAL ELEVATION

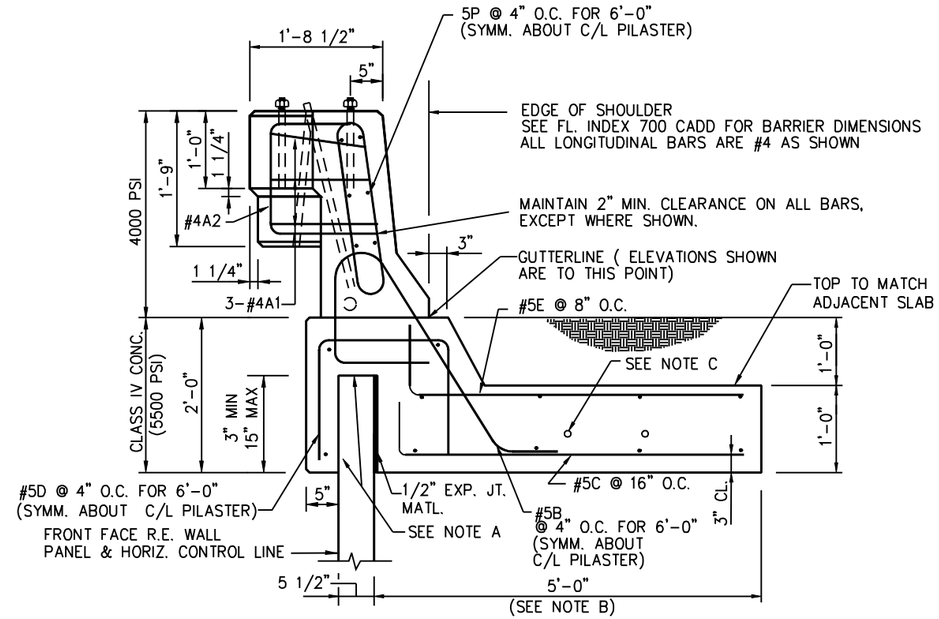

(3) BARRIER DETAIL @ LIGHT POLE

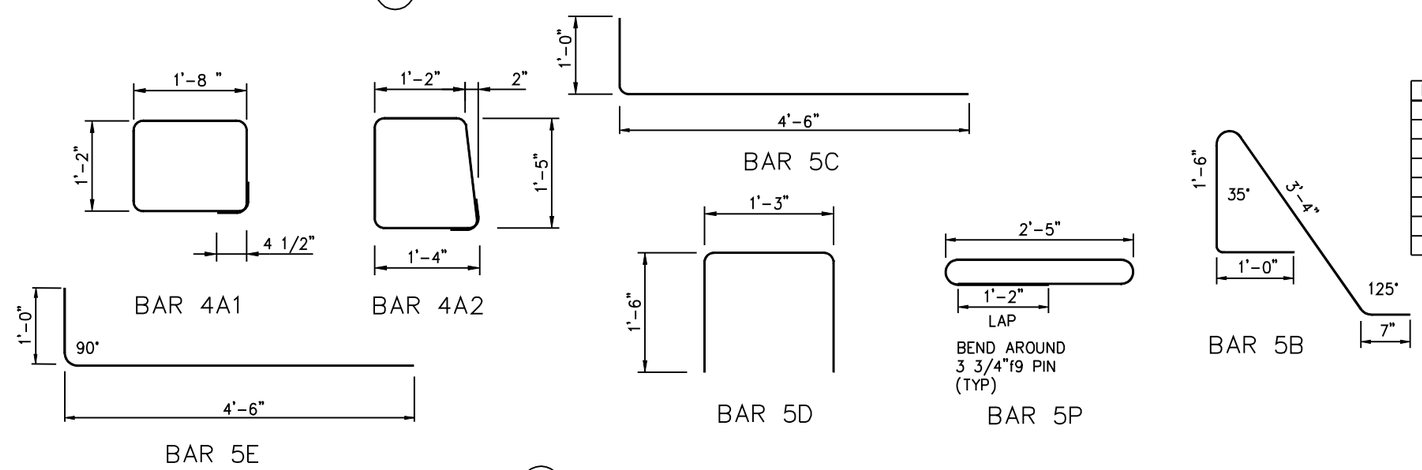

(4) BAR BENDING DETAILS

REBAR SCHEDULE	
MARK	QTY.
4A1	3
4A2	5
5B	18
5C	4
5D	18
5E	9
5P	18

NOTES:

A. POSITIVE BOND BREAKER SHALL BE PROVIDED BETWEEN CAST IN PLACE CONC. AND PRECAST CONC. PANEL.

B. THE BARRIER JUNCTION SLAB SHALL HAVE THESE DIMENSIONS FOR ONE PRECAST UNIT EITHER SIDE OF LIGHT POLE BARRIER LONGITUDINAL BARS SHALL BE AS SHOWN ABOVE.

C. 2 – #9 SHEAR DOWELS – 3'-0" LONG REFER TO PRECAST BARRIER SHEET

D. LIGHT POLE PILASTER AND ADJACENT TRAFFIC RAIL BARRIER AND MOMENT SLAB AREA SHOWN ON THIS SHEET ARE DESIGNED TO RESIST WORKING LOADS (IN ANY DIRECTION) FROM THE LIGHT POLE APPLIED AT THE TOP OF THE PILASTER AS FOLLOWS:
   LONGITUDINAL MOMENT = 30 KIP-FT
   TRANSVERSE MOMENT = 6 KIP-FT
   LONGITUDINAL SHEAR = 1 KIP
   TRANSVERSE SHEAR = 0.2 KIP
   TORSION = 3 KIP-FT
   AXIAL = 0.4 KIP
IF THE LIGHT POLE PROVIDED APPLIES LOADS THAT ARE IN EXCESS OF THOSE SHOWN ABOVE, THE CONTRACTOR SHALL REDESIGN THE PILASTER AND SUBMIT THE DESIGN TO THE DEPARTMENT FOR REVIEW. THE CONTRACTOR'S REDESIGN SHALL BE PREPARED, SIGNED AND SEALED BY A PROFESSIONAL ENGINEER REGISTERED IN THE STATE OF FLORIDA, AND QUALIFIED TO PERFORM THIS WORK.

E. LIGHT POLE SUPPLIER IS RESPONSIBLE FOR PROVIDING ANCHOR BOLTS THAT EFFECTIVELY TRANSMIT THE LIGHT POLE LOADS TO THE PILASTER AND FIT THE REINFORCING CAGE.

THIS SYSTEM SHALL BE USED IN SLIGHTLY OR MODERATELY AGGRESSIVE ENVIRONMENTS ONLY.

CRUCIFORM AND SQUARE PANELS

DATE : 01-01-05

STATE OF FLORIDA DEPARTMENT OF TRANSPORTATION

RETAINING WALL SYSTEMS
THE REINFORCED EARTH COMPANY
REINFORCED EARTH WALL

INTERIM STANDARD

APPROVED BY
William N. Nickas, P.E.
State Structures Design Engineer

REVISION NO.	SHEET NO.	INDEX NO.
04	11 of 16	05015

FINANCIAL PROJECT ID	STATE PROJ. NO.	SHEET NO.

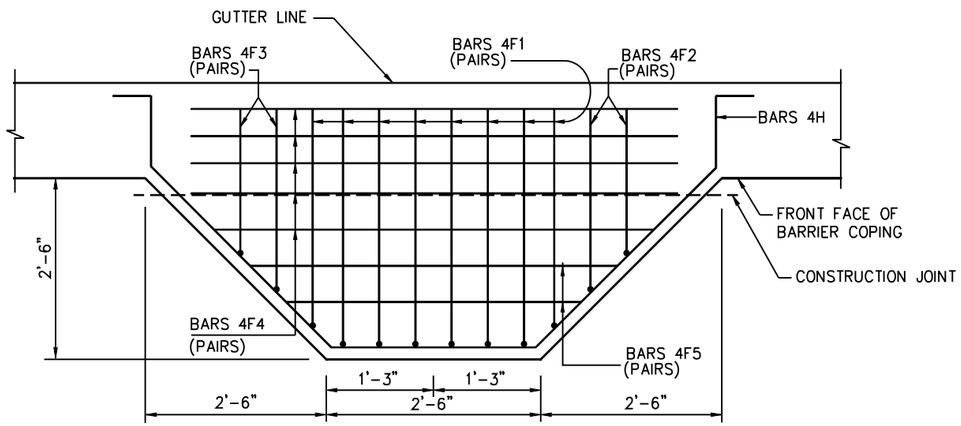

PARTIAL PLAN VIEW

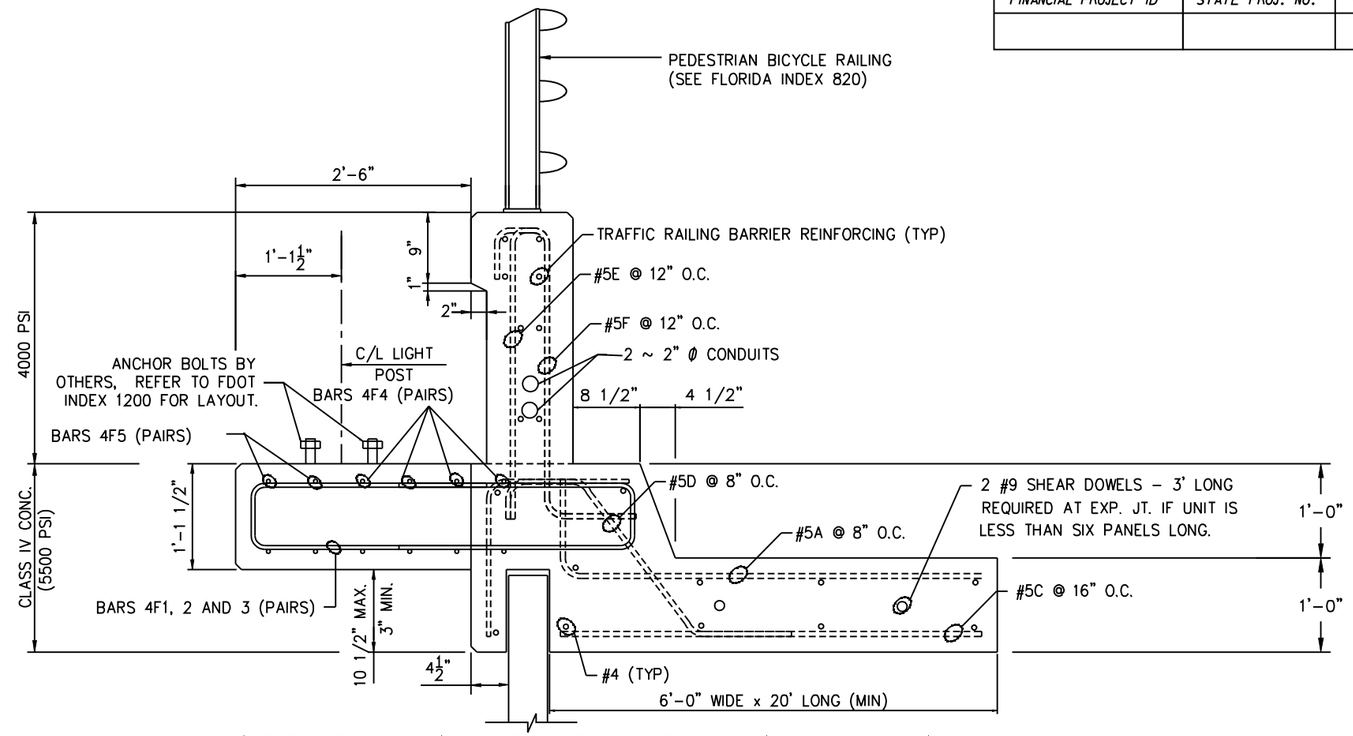

BARRIER DETAIL @ LIGHT POLE AND SIGNAL

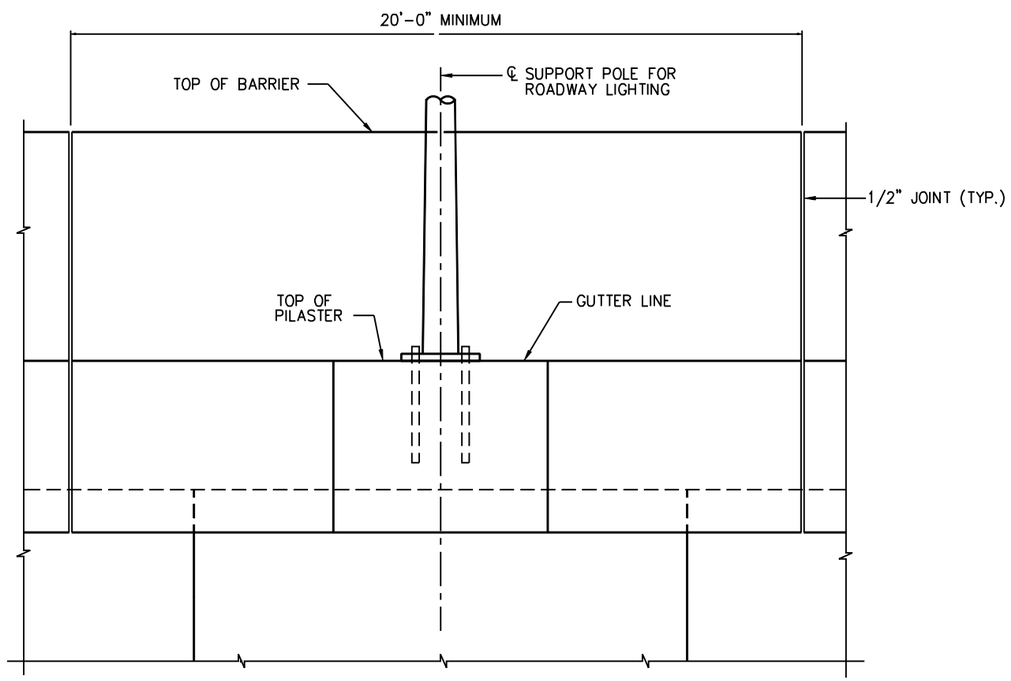

PARTIAL ELEVATION

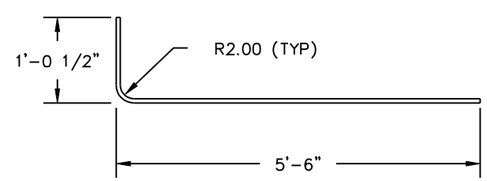

BAR #5A

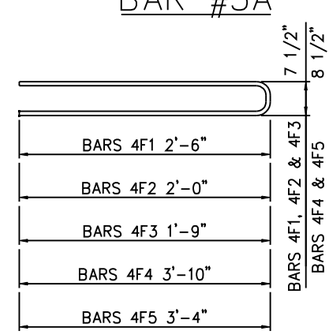

BARS 4F1,2,3,4 AND 5

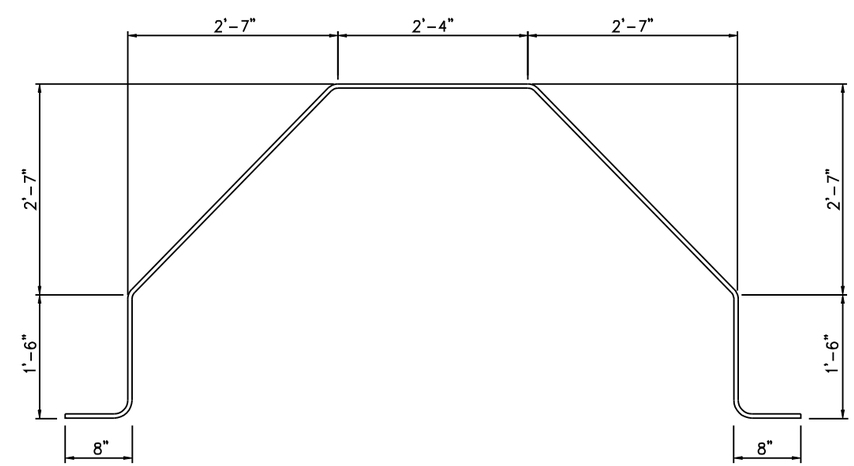

BAR #4H

CONTRACTOR TO ADJUST LIGHT POLE LOCATION FROM THAT SHOWN ON PLANS TO THE CENTER OF THE 20'-0" LONG C.I.P. BARRIER.

DATE : 01-01-05

STATE OF FLORIDA DEPARTMENT OF TRANSPORTATION

RETAINING WALL SYSTEMS
THE REINFORCED EARTH COMPANY
REINFORCED EARTH WALL

INTERIM STANDARD

APPROVED BY
William N. Nickas, P.E.
State Structures Design Engineer

REVISION NO.	SHEET NO.	INDEX NO.
04	12 of 16	05015

FINANCIAL PROJECT ID	STATE PROJ. NO.	SHEET NO.

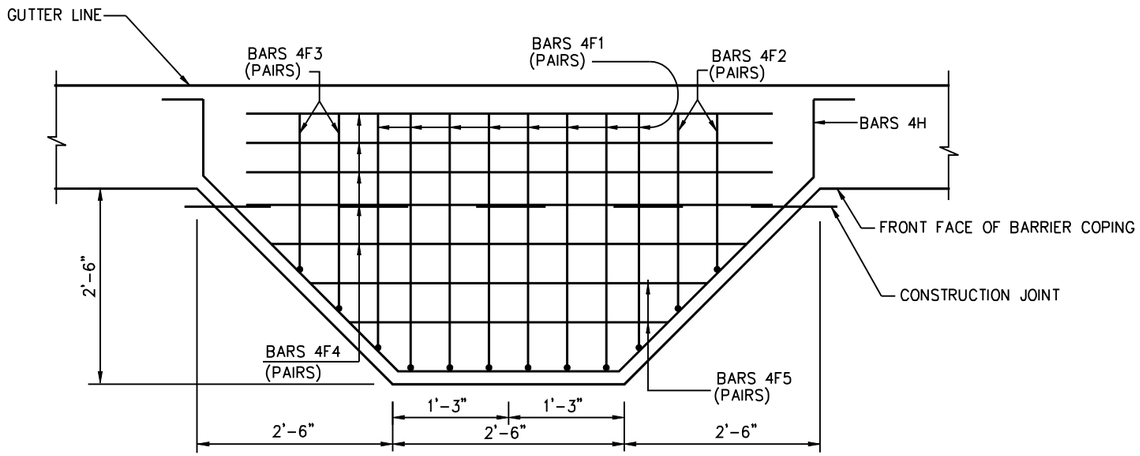

PARTIAL PLAN VIEW

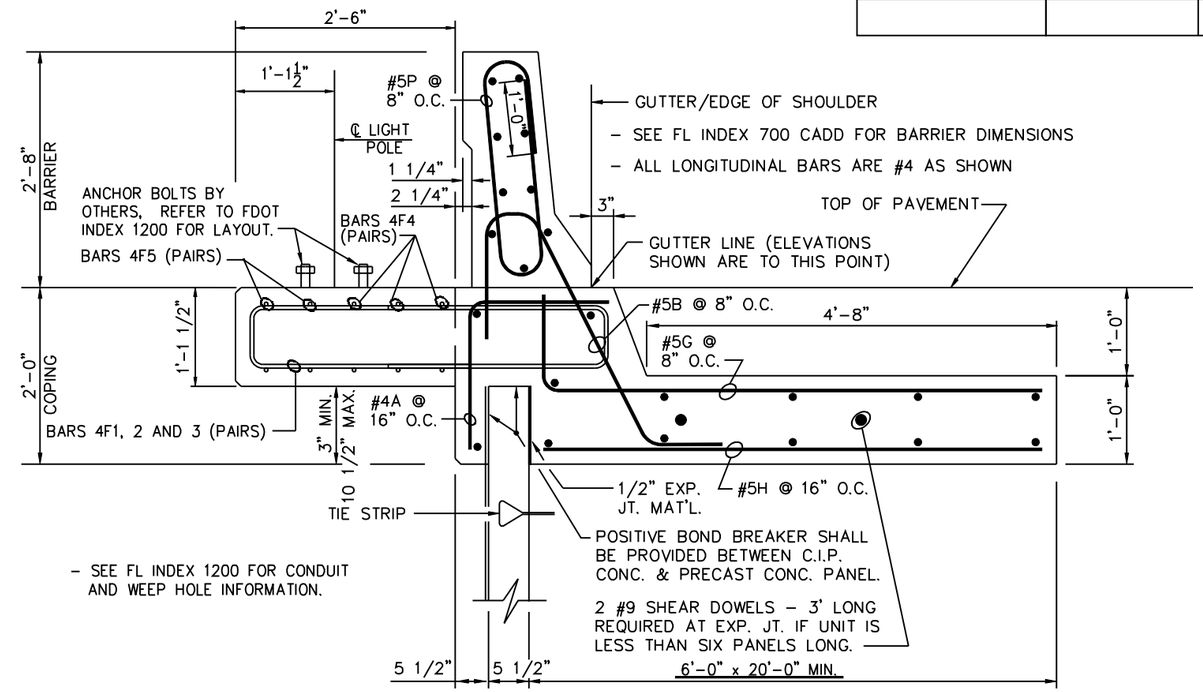

BARRIER DETAIL @ LIGHT POLE AND SIGNAL

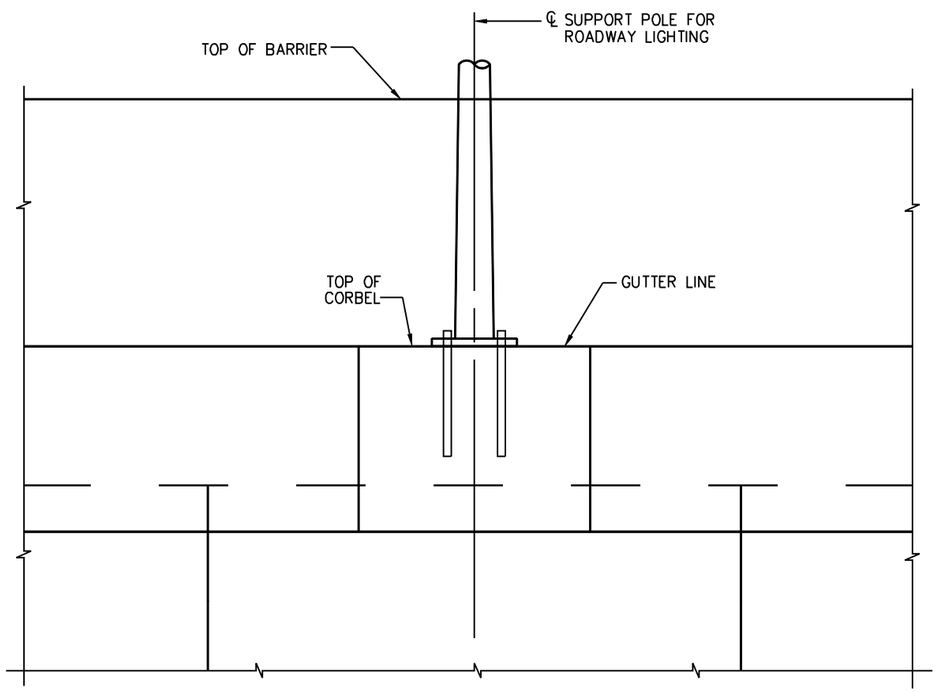

PARTIAL ELEVATION

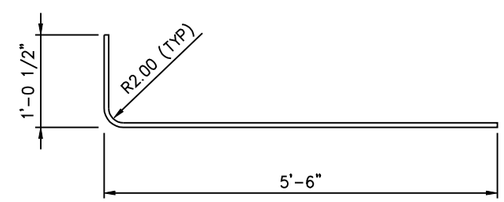

BAR #5G

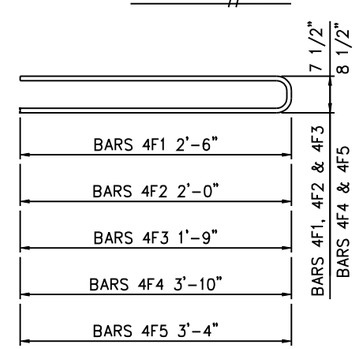

BARS 4F1,2,3,4 AND 5

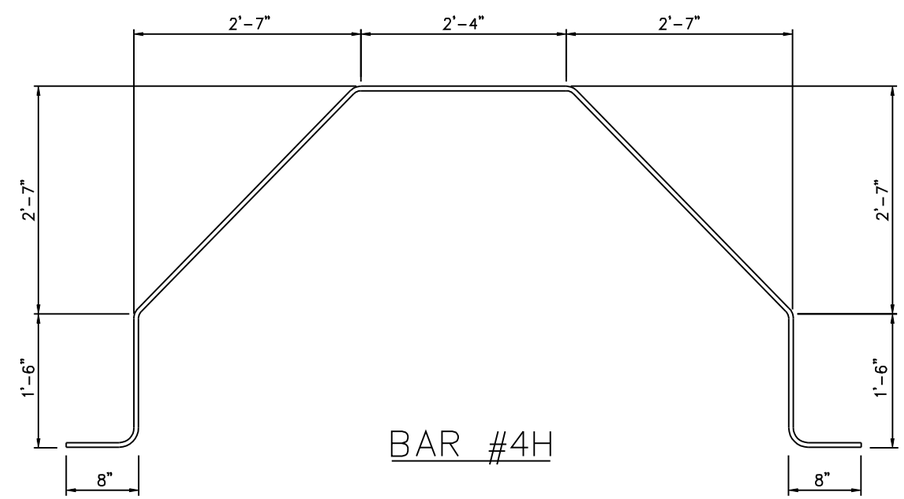

BAR #4H

CONTRACTOR TO ADJUST LIGHT POLE LOCATION FROM THAT SHOWN ON PLANS TO THE CENTER OF THE 20'-0" LONG C.I.P. BARRIER.

DATE : 01-01-05

INTERIM STANDARD IN ENGLISH UNITS APPLICABLE TO DESIGN STANDARDS BOOKLET PUBLISHED IN EITHER ENGLISH OR METRIC UNITS.

STATE OF FLORIDA DEPARTMENT OF TRANSPORTATION

RETAINING WALL SYSTEMS
THE REINFORCED EARTH COMPANY
REINFORCED EARTH WALL

INTERIM STANDARD

SHEET NOS. 1 - 16 OF 16 ARE A REPLACEMENT OF INDEX NO. 5015 OF THE DESIGN STANDARDS BOOKLET DATED JANUARY 2000.

APPROVED BY
William N. Nickas, P.E.
State Structures Design Engineer

REVISION NO.	SHEET NO.	INDEX NO.
04	13 of 16	05015

FINANCIAL PROJECT ID	STATE PROJ. NO.	SHEET NO.

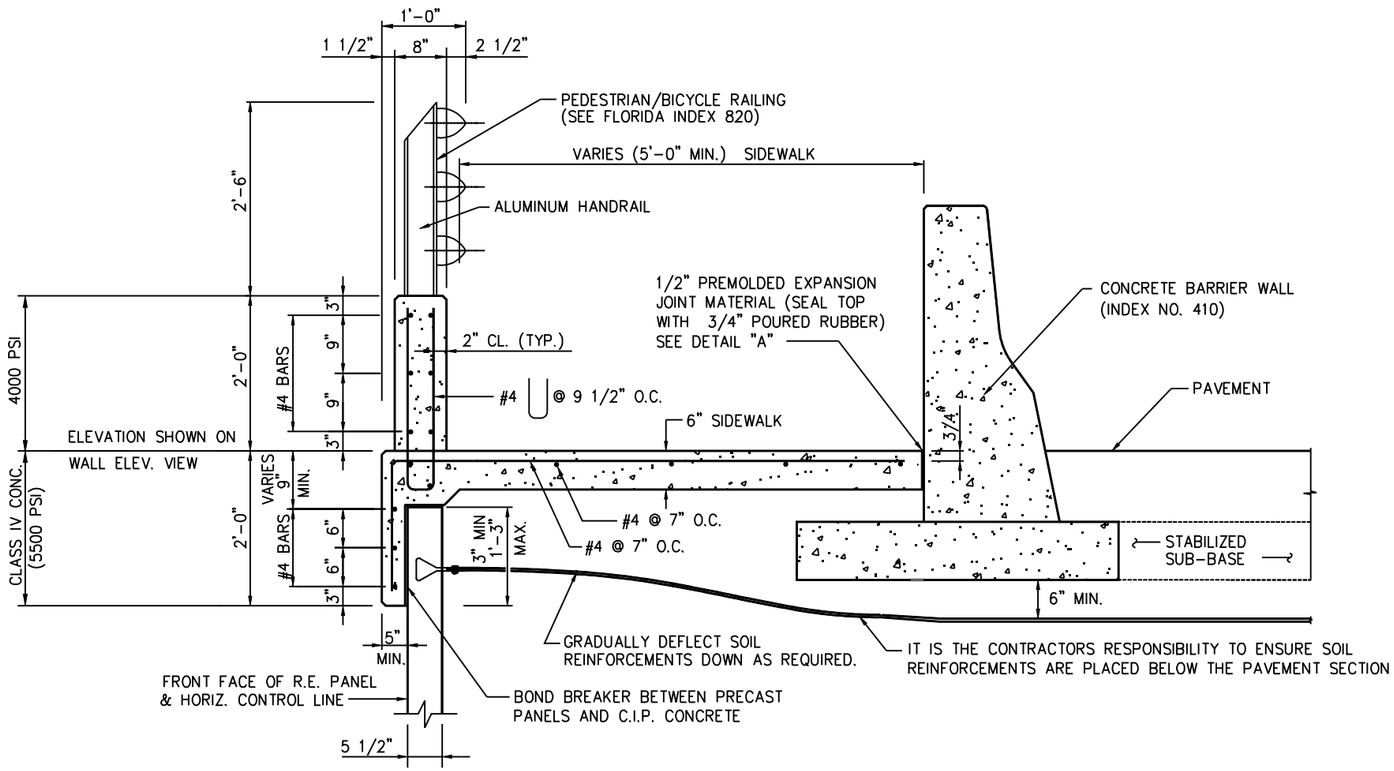

C.I.P. PARAPET DETAIL W/ HANDRAIL

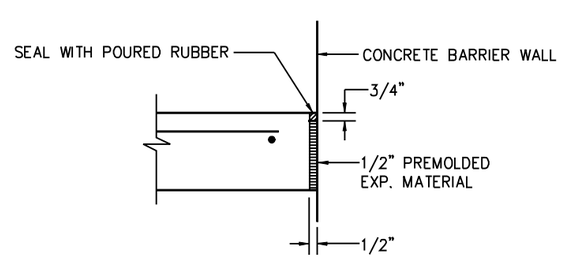

DETAIL "A"

THIS SYSTEM SHALL BE USED IN SLIGHTLY OR MODERATELY AGGRESSIVE ENVIRONMENTS ONLY

CRUCIFORM AND SQUARE PANELS

DATE : 01-01-05

INTERIM STANDARD IN ENGLISH UNITS APPLICABLE TO DESIGN STANDARDS BOOKLET PUBLISHED IN EITHER ENGLISH OR METRIC UNITS.

STATE OF FLORIDA DEPARTMENT OF TRANSPORTATION

RETAINING WALL SYSTEMS
THE REINFORCED EARTH COMPANY
REINFORCED EARTH WALL

INTERIM STANDARD

SHEET NOS. 1 - 16 OF 16 ARE A REPLACEMENT OF INDEX NO. 5015 OF THE DESIGN STANDARDS BOOKLET DATED JANUARY 2000.

APPROVED BY
William N. Nickas, P.E.
State Structures Design Engineer

REVISION NO.	SHEET NO.	INDEX NO.
04	14 of 16	05015

FINANCIAL PROJECT ID	STATE PROJ. NO.	SHEET NO.

TYPICAL PANELS

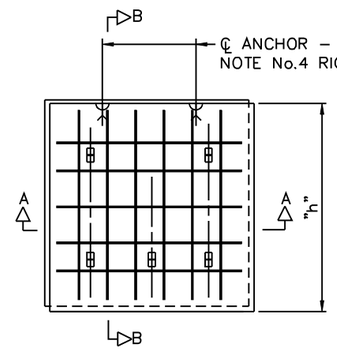

A-5-R5 & H-5-R5

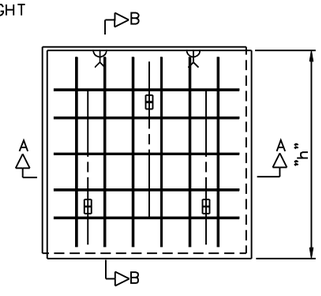

A-3-R5

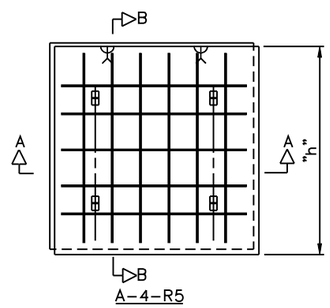

A-4-R5

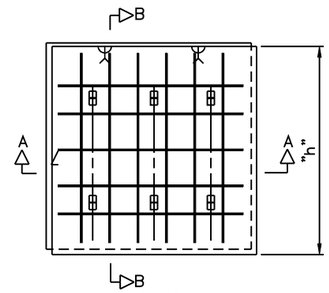

A-6-R5

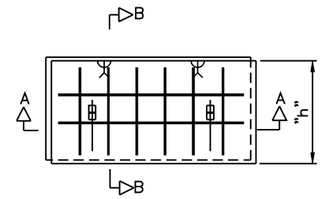

B-2-R5 & D-2-R5

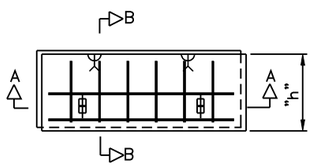

C-2-R5

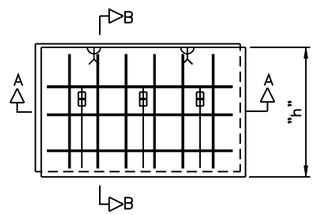

E-3-R5

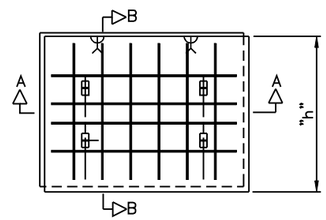

F-4-R5 & Q-4-R5

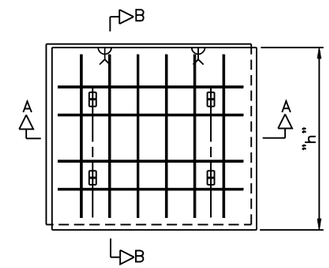

G-4-R5

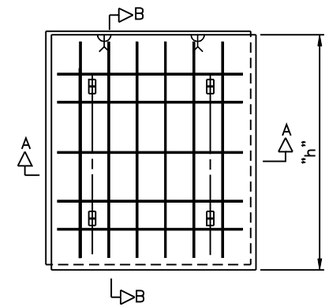

K-4-R5

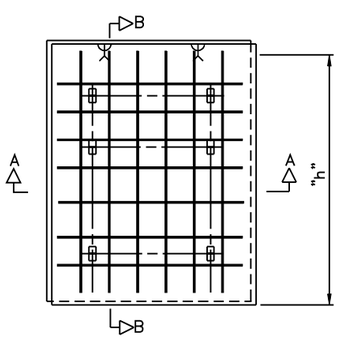

L-6-R5

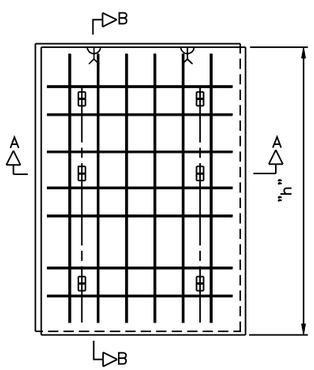

M-6-R5

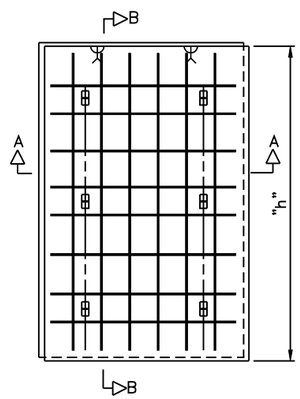

N-6-R5

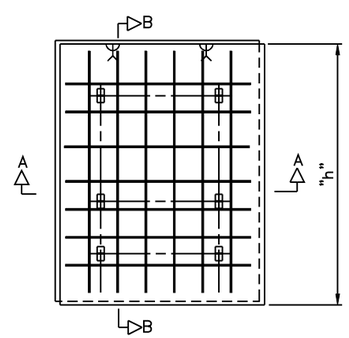

P-6-R5

NOTES:

1. REINFORCEMENT SHOWN SHALL COMPLY TO THE ASTM A615, GRADE 60 STANDARDS. ALTERNATE REINFORCEMENT MAY BE DEFORMED WELDED WIRE FABRIC AS INDICATED IN THE TABLE BELOW, THIS FABRIC SHALL COMPLY TO ASTM A497. REBAR LAYOUT WILL BE DETAILED AND SHOWN ON PANEL SHOP DRAWINGS, IF WELDED FABRIC IS TO BE USED THE SIZE SHOULD BE DETERMINED BASED ON THE PANEL SHAPE AND REQUIRED MINIMUM EDGE DISTANCE.
2. 1/2" x 1/2" CHAMFER SHALL BE PROVIDED ON ALL EXPOSED EDGES (FRONT FACE ONLY).
3. ALL PANEL TYPES AND OTHER RELATED ELEMENTS WILL BE DETAILED ON SHOP DRAWINGS.
4. ALL PANELS EXCEPT TYPES M, N, NII, NJJ, NI & NJ SHALL HAVE TWO BURKE 1-TON SPREAD ANCHORS. PANEL TYPES M, N, NII, NJJ, NI & NJ SHALL HAVE TWO BURKE 2-TON ERECTION HEAD ANCHORS WITH BOTH TENSION AND SHEAR BARS.
5. PANEL DESIGN STRUCTURAL THICKNESS IS 5 1/2" MINIMUM, THIS THICKNESS MUST INCREASE TO ACCOMMODATE ANY ARCHITECTURAL SCULPTURED FINISH.
6. ACTUAL LOCATION OF REBARS WILL BE ADJUSTED TO ACCOMMODATE PANEL CASTING.
7. PANEL REINFORCEMENT SHALL BE PLACED WITH A MINIMUM 1 3/16" CLEARANCE FROM THE TIE STRIPS.

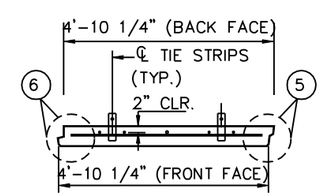

SECTION A-A

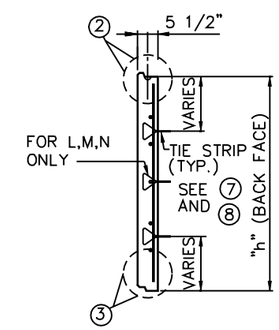

SECTION B-B

PANEL THICKNESS	REINFORCEMENT DESIGNATION	PANEL REINFORCEMENT (FOR PANEL TYPE "A")	MAXIMUM ALLOWABLE HORIZONTAL STRESS AT FACING (KSF)
5 1/2" (MIN.)	R5	6-#3 VERTICAL 5-#3 HORIZONTAL	1.20
		WIRE MESH ALTERNATE: 6x6 D6.2xD6.2	
	R7	6-#4 VERTICAL 5-#4 HORIZONTAL	3.00

PANEL TYPE	"h"
A & H	4'-10 1/4"
B & D	2'-4 3/4"
C	1'-9 1/2"
E	3'-0 1/4"
F & Q	3'-7 1/2"
G	4'-3"
K	5'-5 3/4"
L & P	6'-1"
M	6'-8 1/2"
N	7'- 3 3/4"

NOTE:
CONCRETE COVER ON ALL REINFORCEMENT TO BE 2" MIN.

DATE : 01-01-05

INTERIM STANDARD IN ENGLISH UNITS APPLICABLE TO DESIGN STANDARDS BOOKLET PUBLISHED IN EITHER ENGLISH OR METRIC UNITS.

STATE OF FLORIDA DEPARTMENT OF TRANSPORTATION

RETAINING WALL SYSTEMS
THE REINFORCED EARTH COMPANY
REINFORCED EARTH WALL

INTERIM STANDARD

SHEET NOS. 1 - 16 OF 16 ARE A REPLACEMENT OF INDEX NO. 5015 OF THE DESIGN STANDARDS BOOKLET DATED JANUARY 2000.

APPROVED BY
William N. Nickas, P.E.
State Structures Design Engineer

REVISION NO.	SHEET NO.	INDEX NO.
04	15 of 16	05015

FINANCIAL PROJECT ID	STATE PROJ. NO.	SHEET NO.

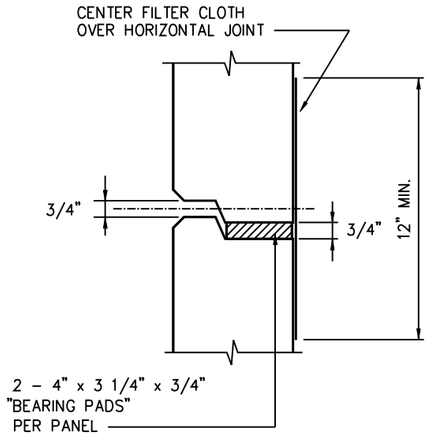

1 HORIZONTAL JOINT

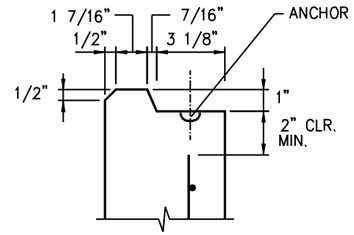

2 SECTION @ PANEL TOP

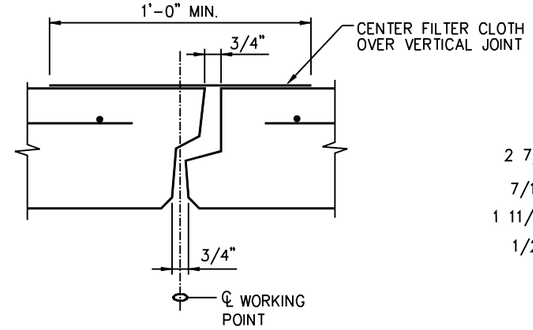

4 VERTICAL JOINT

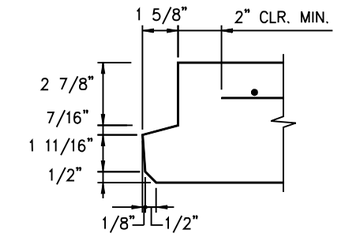

6 SECTION @ PANEL LEFT SIDE

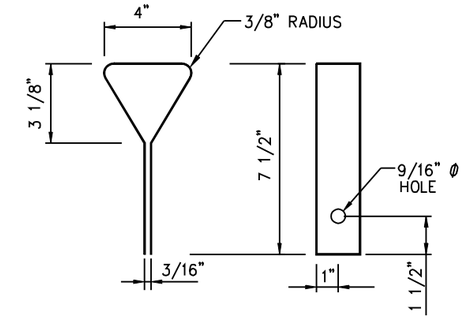

8 TIE STRIP DETAIL

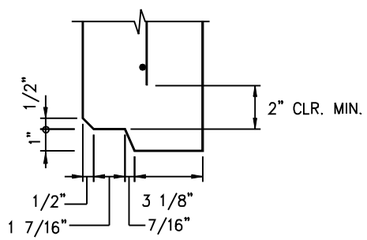

3 SECTION @ PANEL BOTTOM

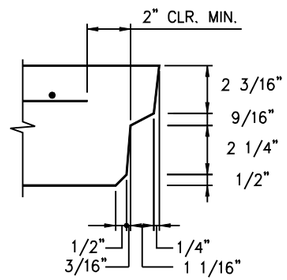

5 SECTION @ PANEL RIGHT SIDE

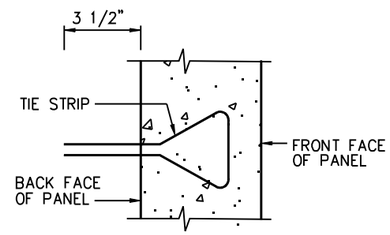

7 PARTIAL SECTION @ TIE STRIP

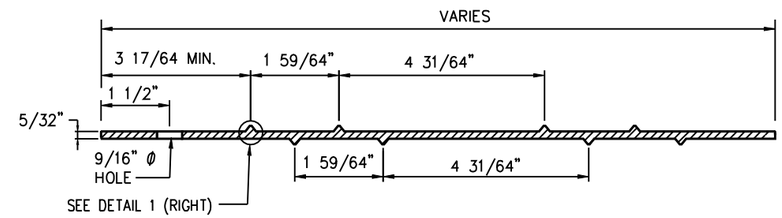

REINFORCING STRIP DETAIL

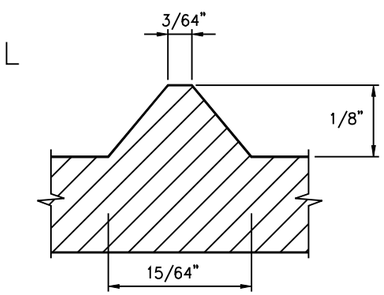

DETAIL 1

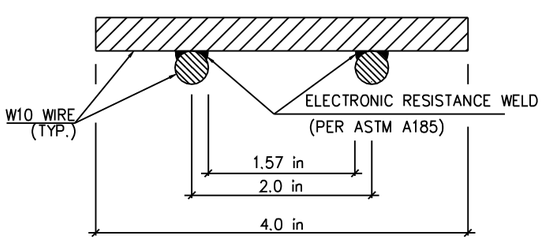

SECTION B–B

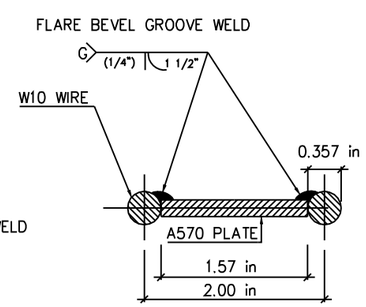

SECTION A–A

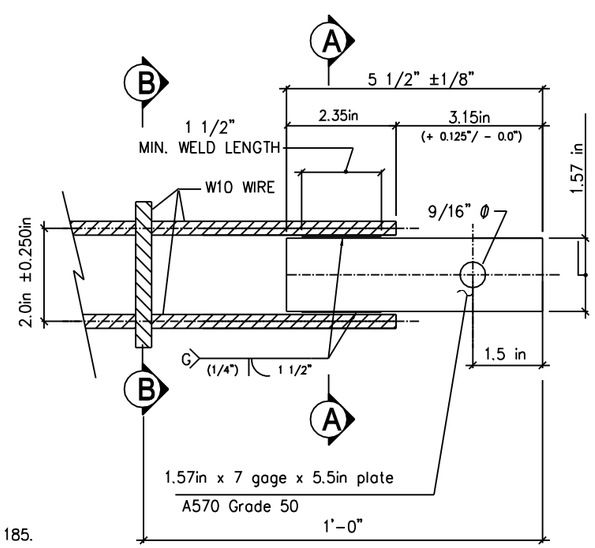

US PATENT # 5,807,030

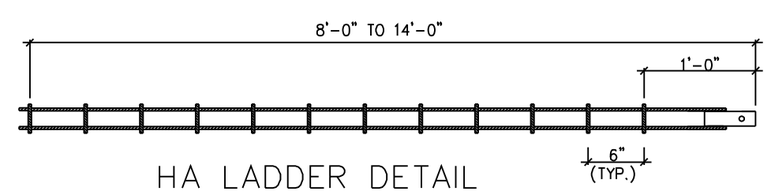

HA LADDER DETAIL

NOTES:

1. PLATE = ASTM A570 GRADE 50 – 7 GAGE
2. ALL WIRE SIZES = W10 – ASTM A82 GRADE 65
3. ALL PARTS GALVANIZED TO ASTM A123
4. WELDING OF WIRE TO WIRE – AS PER ASTM A 185.
5. WELDING OF WIRE TO PLATE – AS PER AWS PARTIAL PENETRATION FLARE BEVEL GROOVE WELD

HIGH ADHERANCE (HA) LADDER DETAILS

THIS SYSTEM SHALL BE USED IN SLIGHTLY OR MODERATELY AGGRESSIVE ENVIRONMENTS ONLY

SQUARE PANELS

DATE : 01-01-05

INTERIM STANDARD IN ENGLISH UNITS APPLICABLE TO DESIGN STANDARDS BOOKLET PUBLISHED IN EITHER ENGLISH OR METRIC UNITS.

STATE OF FLORIDA DEPARTMENT OF TRANSPORTATION

RETAINING WALL SYSTEMS
THE REINFORCED EARTH COMPANY
REINFORCED EARTH WALL

INTERIM STANDARD

SHEET NOS. 1 - 16 OF 16 ARE A REPLACEMENT OF INDEX NO. 5015 OF THE DESIGN STANDARDS BOOKLET DATED JANUARY 2000.

APPROVED BY
William N. Nickas, P.E.
State Structures Design Engineer

REVISION NO.	SHEET NO.	INDEX NO.
04	16 of 16	05015