FINANCIAL PROJECT ID	SHEET NO.

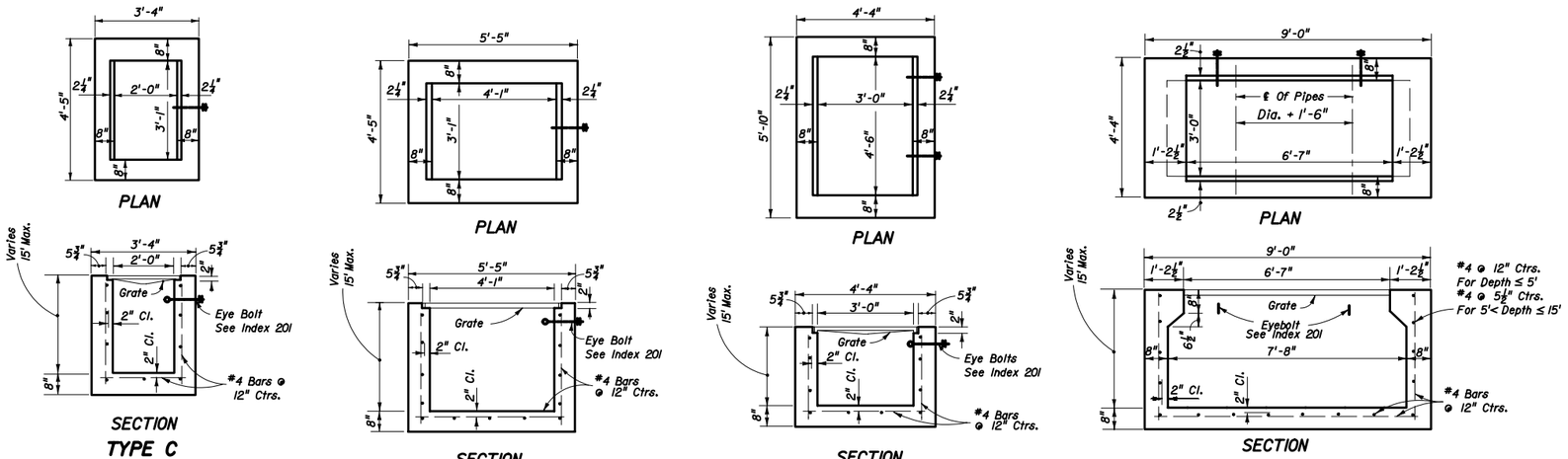

TYPE C

Recommended Maximum Pipe Size:
2'-0" Wall 18" Pipe
3'-1" Wall 24" Pipe (18" where an 18" pipe enters a 2'-0" wall)

TYPE D

Recommended Maximum Pipe Size:
3'-1" Wall-24" Pipe
4'-1" Wall-36" Pipe

TYPE E

Recommended Maximum Pipe Size:
3'-0" Wall-24" Pipe
4'-6" Wall-36" Pipe

TYPE H

Recommended Maximum Pipe Size:
3'-0" Wall-24" Pipe
7'-8" Wall-1-66" Pipe
2-30" Pipe

INLETS

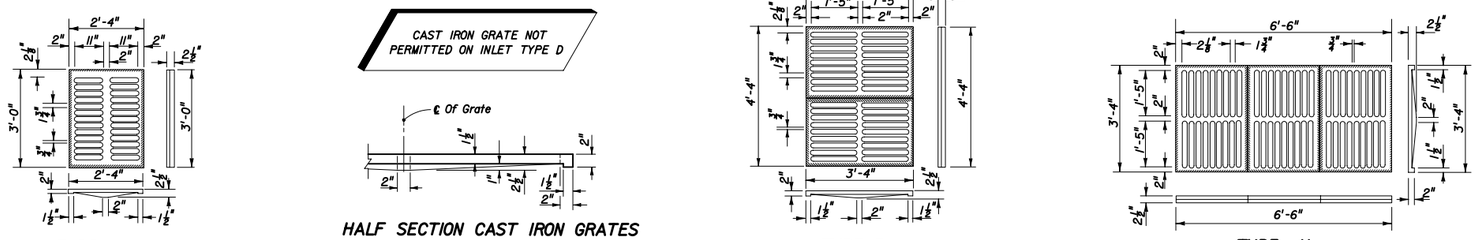

TYPE C
Approx. Weight 235 Lbs.

TYPE E
Approx. Weight 465 Lbs.

TYPE H
Approx. Weight 725 Lbs.

CAST IRON GRATES

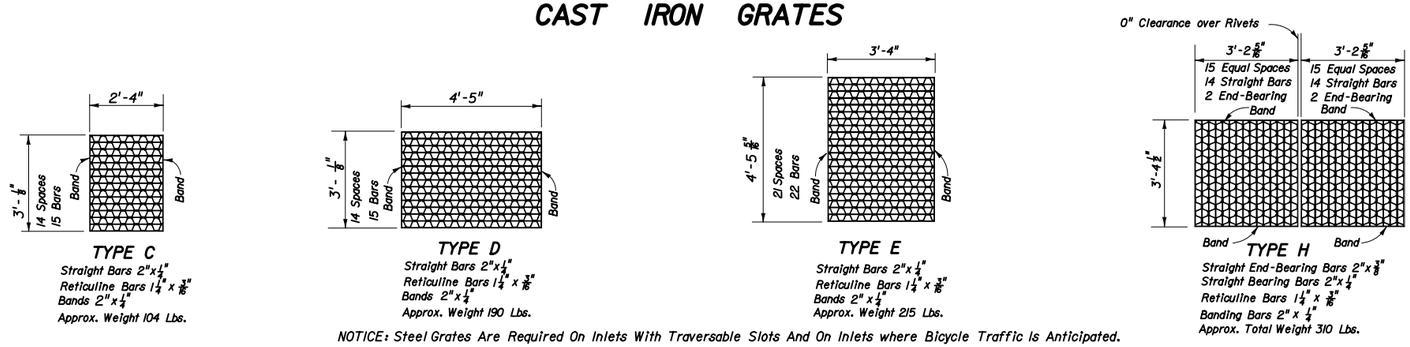

TYPE C
Straight Bars 2"x¼"
Reticuline Bars 1¼" x 3/16"
Bands 2"x¼"
Approx. Weight 104 Lbs.

TYPE D
Straight Bars 2"x¼"
Reticuline Bars 1¼" x 3/16"
Bands 2"x¼"
Approx. Weight 190 Lbs.

TYPE E
Straight Bars 2"x¼"
Reticuline Bars 1¼" x 3/16"
Bands 2" x ¼"
Approx. Weight 215 Lbs.

TYPE H
Straight End-Bearing Bars 2"x⅜"
Straight Bearing Bars 2"x¼"
Reticuline Bars 1¼" x 3/16"
Banding Bars 2" x ¼"
Approx. Total Weight 310 Lbs.

NOTICE: Steel Grates Are Required On Inlets With Traversable Slots And On Inlets where Bicycle Traffic Is Anticipated.

STEEL GRATES

GENERAL NOTES

1. These inlets are suitable for bicycle traffic and are to be used in ditches, medians and other areas subject to infrequent traffic loadings but are not to be placed in areas subject to any heavy wheel loads. This inlet may be placed in areas subject to occasional pedestrian traffic such as landscaped areas and pavement areas where pedestrians can walk around the inlet.
2. Inlets subject to minimal debris should be constructed without slots. Where debris is a problem inlets should be constructed with slots. Slotted inlets located within roadway clear zones and areas subject to bicycles and/or pedestrians shall have traversable slots. The traversable slot modification is not adaptable to inlet Type H. Slots may be constructed at either or both ends as shown on plans.
3. Steel grates are to be used on all inlets where bicycle traffic is anticipated. Steel grates are to be used on all inlets with traversable slots. Either cast iron or steel grates may be used on inlets without slots where bicycle traffic is not anticipated. Either cast iron or steel grates may be used on all inlets with non-traversable slots. Subject to the selection described above, when Alternate G grate is specified in the plans, either the steel grate, hot dipped galvanized after fabrication, or the cast iron grate may be used, unless the plans stipulate the particular type.
4. Recommended maximum pipe sizes shown are for concrete pipe. Size for other types of pipe must be checked for fit.
5. All exposed corners and edges of concrete are to be chamfered ¾".
6. Concrete inlet pavement to be used on inlets without slots and inlets with non-traversable slots only when called for in the plans; but required on all traversable slot inlets. Cost to be included in contract unit price for inlets. Quantities shown are for information only.
7. Traversable slots constructed in existing inlets shall be paid for as inlets partial. For conversion work and method of payment see 'TRAVERSABLE SLOT INLETS (PARTIAL) FOR EXISTING INLETS'.
8. Sodding to be used on all inlets not located in paved areas and paid for under contract concrete inlet pavement unit price for Sodding, SY.
9. For supplementary details see Index No. 201.

INTERIM STANDARD IN ENGLISH UNITS APPLICABLE TO DESIGN STANDARDS BOOKLET PUBLISHED IN ENGLISH UNITS.

Date: 07-01-05

STATE OF FLORIDA DEPARTMENT OF TRANSPORTATION
ROAD DESIGN

DITCH BOTTOM INLETS TYPES C, D, E & H

INTERIM STANDARD

THIS INDEX IS A SUPPLEMENT TO THE DESIGN STANDARDS, BOOKLET DATED JANUARY 2004

APPROVED BY
STATE DRAINAGE ENGINEER

REVISION NO.	SHEET NO.	INDEX NO.
05	1 of 5	0232

$$$$$$$$STIME$$$$$$$ $$$$$$$$DGNSPECIFICATION$$$$$$$$