FINANCIAL PROJECT ID	STATE PROJ. NO.	SHEET NO.

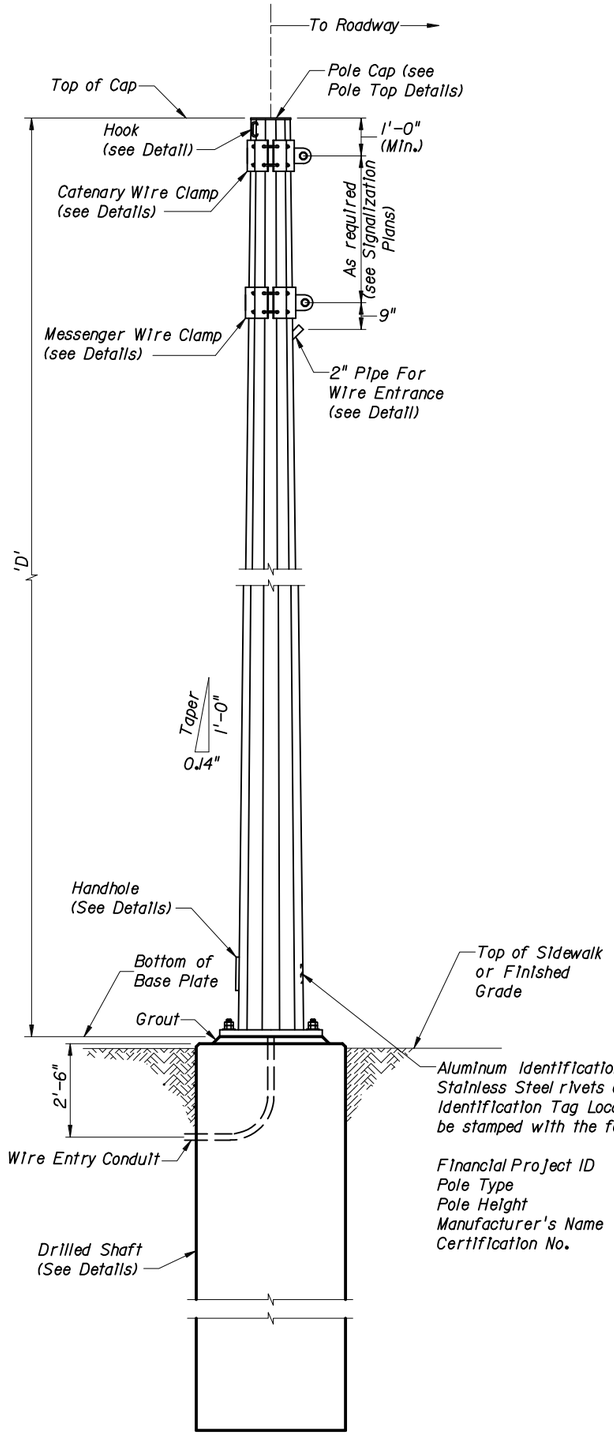

ELEVATION

Aluminum Identification Tag Not to Exceed 2" x 4". Secure to Shaft by 0.125" Stainless Steel rivets or screws. Fabricators to provide details for approval. Identification Tag Located on Inside of Pole visible from handhole. Tag to be stamped with the following information :

Financial Project ID
Pole Type
Pole Height
Manufacturer's Name
Certification No.

SELECTION PROCEDURE

1. Determine the required pole height and bending moment at the pole base using a design wind speed in conformance with the "Plans Preparation Manual", Chapter 29, with a 30 percent gust factor.
2. Enter the Pole Moment Capacity Table, and determine the required Pole Type and wall thickness.
3. Enter the Pole Type and height designation in the signalization Plans for each strain pole.
   Example: From design: required height = 23'-6",
   base moment = 198.0 klp-ft
   From table: use NS-VII-24
4. Refer to the Table of Variables for the required pole diameter, base plate and drilled shaft dimensions.

MINIMUM REQUIRED MOMENT CAPACITY (klp-ft)

	TYPE OF POLE						
D (ft.)	NS-IV	NS-V	NS-VI	NS-VII	NS-VIII	NS-IX	NS-X
20	33.0	106.0	152.0	210.0	266.0	330.0	390.0
22	36.8	111.2	158.7	218.0	274.9	340.3	401.7
24	40.6	116.4	165.3	226.0	283.9	350.7	413.3
26	44.4	121.6	172.0	234.0	292.8	361.0	425.0
28	48.2	126.8	178.7	242.0	301.7	371.3	436.7
30	52.0	132.0	185.3	250.0	310.7	381.7	448.3
32	55.8	137.2	192.0	258.0	319.6	392.0	460.0
34	59.6	142.4	198.7	266.0	328.5	402.3	471.7
36	63.4	147.6	205.3	274.0	337.5	412.7	483.3
38	67.2	152.8	212.0	282.0	346.4	423.0	495.0
40	71.0	158.0	218.7	290.0	355.3	433.3	506.7
42	74.8	163.2	225.3	298.0	364.3	443.7	518.3
44	78.6	168.4	232.0	306.0	373.2	454.0	530.0
46	82.4	173.6	238.7	314.0	382.1	464.3	541.7
48	86.2	178.8	245.3	322.0	391.1	474.7	553.3
50	90.0	184.0	252.0	330.0	400.0	485.0	565.0

0.239 Inch Wall Thickness

0.313 Inch Wall Thickness

STEEL STRAIN POLE NOTES

1. Signal Structure Materials shall be as follows:

Poles	-->	ASTM A607 Grade 50, 55 or 60 (less than 1/4") or ASTM A572 Grade 50 or 60 (1/4" and over) or ASTM A595 Grade A (55 ksi yield) or Grade B (60 ksi yield)
Steel Plates	->	ASTM A709 Grade 36
Weld Metal	->	E70XX
Bolts (except Anchor Bolts)	->	ASTM A325, Type 1
Anchor Bolts	->	ASTM F1554 Grade 55
Nuts for Anchor Bolts	->	ASTM A563 Grade A Heavy Hex
Washers for Anchor Bolts	->	ASTM F436 Type 1
Handhole Frame	->	ASTM A709 Grade 36
Handhole Cover	->	ASTM A607 Grade 50, 55 or 60
Aluminum Caps and Covers	->	ASTM B26 (356-T6)
Stainless Steel Screws	->	AISI Type 316

2. All Steel Items shall be Galvanized as follows:

All Nuts, Bolts and Washers	->	ASTM A153 Class C or D depending on size
All other Steel Items	->	ASTM A123

3. Concrete shall be Class IV (Drilled Shaft) with a minimum 28-day Compressive Strength (f'c) of 4,000 psi for all environmental classifications.
4. Reinforcing Steel shall be ASTM A615-96 Grade 60.
5. Grout shall have a minimum 28-day Compressive Strength of 5,000 psi and shall meet the requirements of Section 934. Grout after pole is set and properly plumbed.
6. A design wind speed of 100 mph with a 30% gust factor for wind loading on the pole was included in the design.
7. The Pole shall be tapered with the diameter changing at a rate of 0.14 inch per foot.
8. Except for anchor bolts, all bolt hole diameters shall be equal to the bolt diameter plus 1/16", prior to galvanizing. Hole diameters for anchor bolts shall not exceed the bolt diameter plus 1/2".
9. The foundation for the Strain Pole Structure shall be constructed in accordance with Section 455 of the FDOT Specifications except that no payment for the foundation shall be made under Section 455. The cost of providing the foundation shall be included in the pay item for providing the complete Strain Pole Structure. For foundation design assumptions, refer to the Foundation Notes
10. The pole shall be free of transverse welds except at the base.
11. Poles constructed out of two or more sections with overlapping splices are not permitted.
12. The strain pole shall not be erected until the foundation concrete has been allowed to cure for a minimum of seven days.
13. No field welding on any part of the pole is permitted.
14. For clamp spacing, cable sizes and forces, signal and sign mounting locations and details see the Signalization Plans.
15. All welding shall conform to American Welding Society Structural Welding Code (Steel) ANSI/AWS D1.1 (current edition).
16. See Standard Index No. 17727 for grounding detail and span wire installation details.
17. Locate handhole 180° from 2 inch wire entrance pipe.

INTERIM STANDARD IN ENGLISH UNITS APPLICABLE TO ROADWAY AND TRAFFIC DESIGN STANDARD BOOKLETS PUBLISHED IN EITHER ENGLISH OR METRIC UNITS.

THE SEALED RECORD OF THIS STANDARD IS ON FILE IN THE ROADWAY DESIGN OFFICE.

Date: 9-26-00

STATE OF FLORIDA DEPARTMENT OF TRANSPORTATION

STEEL STRAIN POLE ELEVATION AND NOTES

INTERIM STANDARD

WHEN INCLUDED IN THE PLANS SHEET NOS. 1-3 OF 3 ARE A SUPPLEMENT TO THE ROADWAY AND TRAFFIC DESIGN STANDARDS. ENGLISH AND METRIC BOOKLETS DATED JANUARY 2000.

APPROVED BY W. N. Bhatt
State Structures Design Engineer

REVISION NO.	SHEET NO.	INDEX NO.
	1 of 3	17723

FINANCIAL PROJECT ID	STATE PROJ. NO.	SHEET NO.

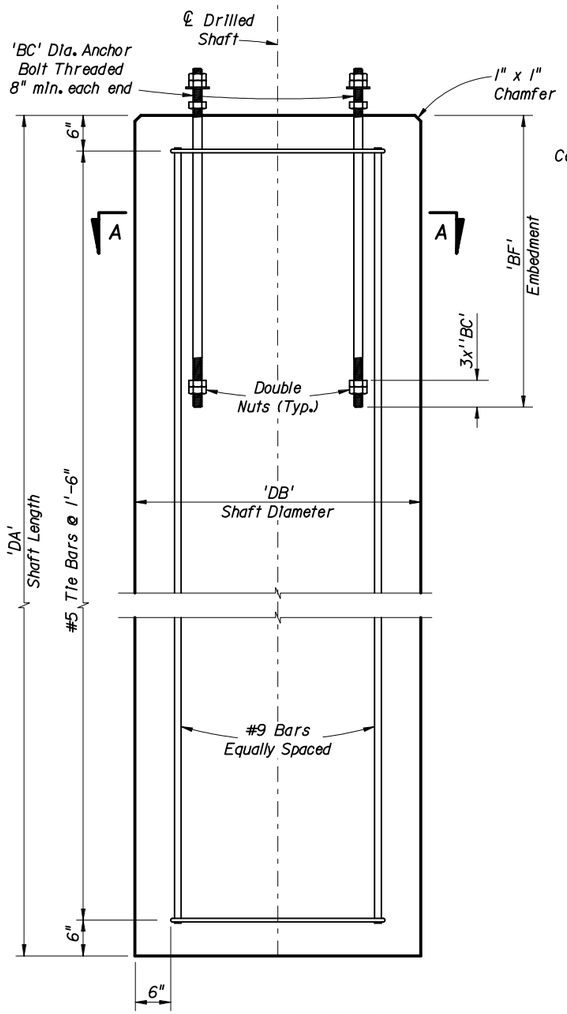

DRILLED SHAFT ELEVATION
(See Table for number of #9 bars.)

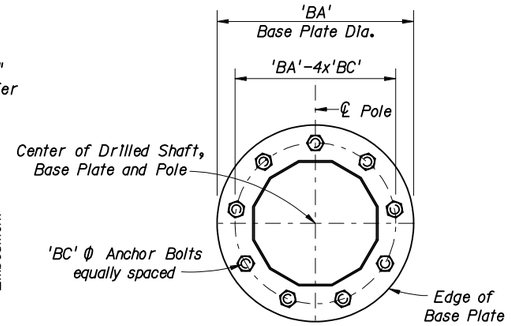

VIEW B-B

NOTE: Number of bolts shown for illustration purposes only. (See Tabel for actual quantity)

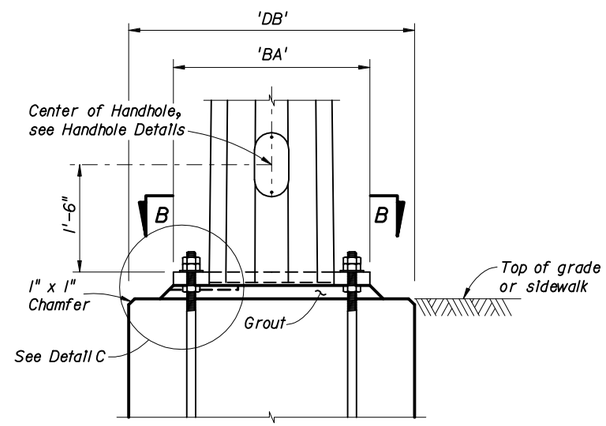

PARTIAL ELEVATION
(Showing Base Plate, Anchor bolts and Handhole)

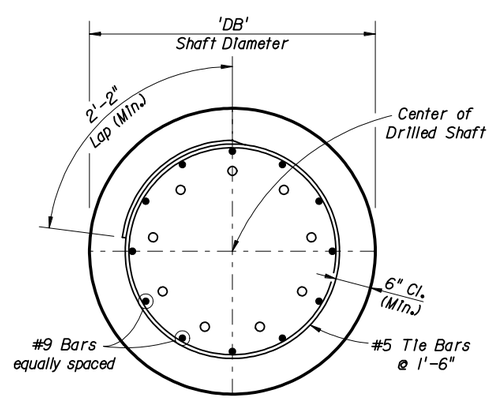

SECTION A-A

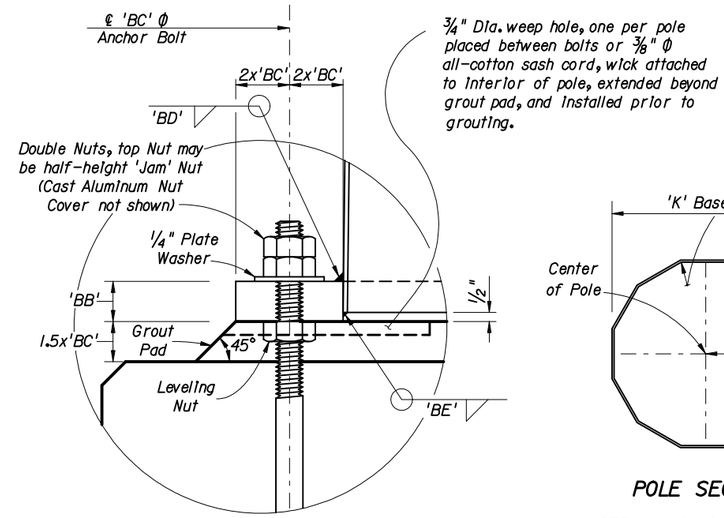

DETAIL C

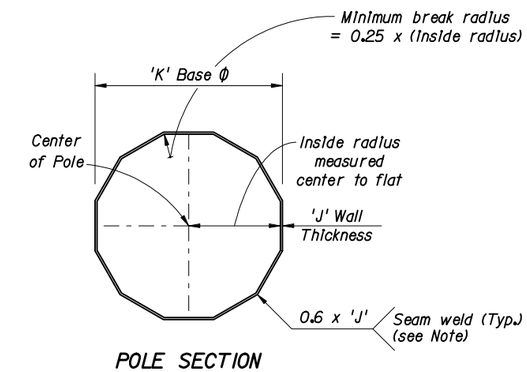

POLE SECTION

NOTE: Longitudinal seam welds within 6" of circumferential welds shall be complete penetration welds.

TABLE OF STRAIN POLE VARIABLES

POLE TYPE	POLE		BASE CONNECTION							SHAFT		
	J (In.)	K (In.)	No. of Bolts	BA (In.)	BB (In.)	BC (In.)	BD (In.)	BE (In.)	BF (In.)	DA (ft)	DB (ft)	No. of #9 bars
NS-IV	J = 0.239	14	6	25	2.125	1.375	0.313	0.188	36	10	3.5	14
NS-V		16	8	27	2.250	1.375	0.375	0.188	47	12.5	3.5	14
NS-VI		18	8	30	2.375	1.500	0.438	0.188	54	14	3.5	14
NS-VII		21	10	33	2.250	1.500	0.375	0.188	49	15	4	19
NS-VIII		23	12	34	2.250	1.375	0.375	0.188	52	16	4	19
NS-IX		25	12	37	2.250	1.500	0.375	0.188	50	16	4.5	23
NS-X		27	12	39	2.375	1.500	0.375	0.188	52	17	4.5	23
NS-V	J = 0.313	16	8	28	2.375	1.500	0.438	0.250	47	12.5	3.5	14
NS-VI		18	10	30	2.375	1.500	0.500	0.250	54	14	3.5	14
NS-VII		21	12	33	2.375	1.500	0.500	0.250	49	15	4	19
NS-VIII		23	12	35	2.500	1.500	0.500	0.250	52	16	4	19
NS-IX		25	12	39	2.625	1.750	0.500	0.250	50	16	4.5	23
NS-X		27	12	41	2.750	1.750	0.500	0.250	52	17	4.5	23

FOUNDATION NOTES:
The foundations for Steel Strain Poles are pre-designed and are based upon the following conservative soil criteria which covers the great majority of soil types found in Florida:

Classification = Cohesionless (Fine Sand)
Friction Angle = 30 Degrees (30°)
Unit Weight = 50 lbs./cu. ft. (assumed saturated)

Only in cases where the Designer considers the soil types at the specific site location to be of lesser strength properties should an analysis be required. Auger borings, SPT borings or CPT soundings may be utilized as needed to verify the assumed soil properties, and at relatively uniform sites, a single boring or sounding may cover several foundations. Furthermore, borings in the area that were performed for the other purposes may be used to confirm the assumed soil properties.

INTERIM STANDARD IN ENGLISH UNITS APPLICABLE TO ROADWAY AND TRAFFIC DESIGN STANDARD BOOKLETS PUBLISHED IN EITHER ENGLISH OR METRIC UNITS.

THE SEALED RECORD OF THIS STANDARD IS ON FILE IN THE ROADWAY DESIGN OFFICE.

STATE OF FLORIDA DEPARTMENT OF TRANSPORTATION

STEEL STRAIN POLE
BASE DETAILS AND TABLE OF VARIABLES

INTERIM STANDARD

WHEN INCLUDED IN THE PLANS SHEET NOS. 1-3 OF 3 ARE A SUPPLEMENT TO THE ROADWAY AND TRAFFIC DESIGN STANDARDS. ENGLISH AND METRIC BOOKLETS DATED JANUARY 2000.

APPROVED BY W. N. Phillips
State Structures Design Engineer

REVISION NO.	SHEET NO.	INDEX NO.
	2 of 3	17723

Date: 9-26-00

FINANCIAL PROJECT ID	STATE PROJ. NO.	SHEET NO.

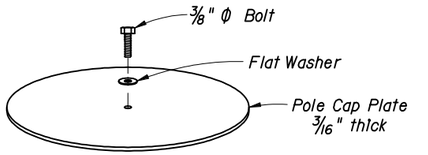

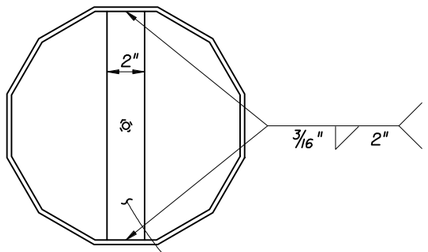

TOP VIEW

1/4" x 2" Lifting Bar with 5/16" Φ hole and 3/8" Nut tack welded to underside of bar

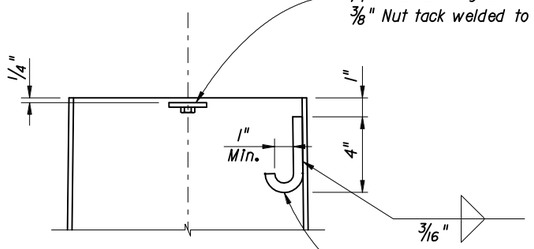

POLE TOP CUT-AWAY
(Option 'a')

'J' Hook for wiring, 1/2" Φ commercial grade hot rolled bar welded to inside of pole.

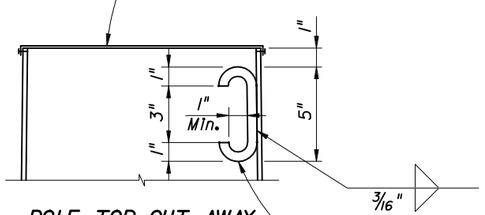

POLE TOP CUT-AWAY
(Option 'b')

'C' Hook for wiring and lifting, 1/2" Φ commercial grade hot rolled bar welded to inside of pole.

POLE TOP NOTE:
Any combination of the above two options may be used, provided both lifting and wiring is accommodated.

NOTE: A properly sized Service Head (Weather Head), shall be installed and fastened securely on to the standard pipe for each pole location. At locations other than service entrance, the service head face is to be left closed to outside atmosphere. Service entrance installation per Index No. 17727.

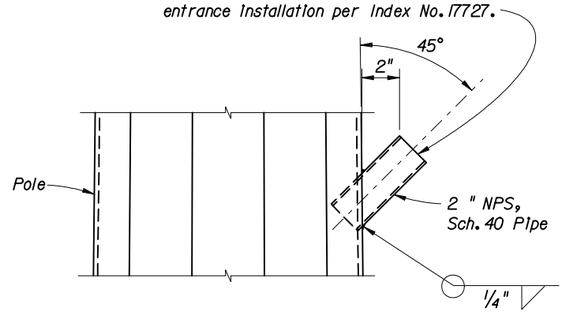

WIRE ENTRANCE DETAILS

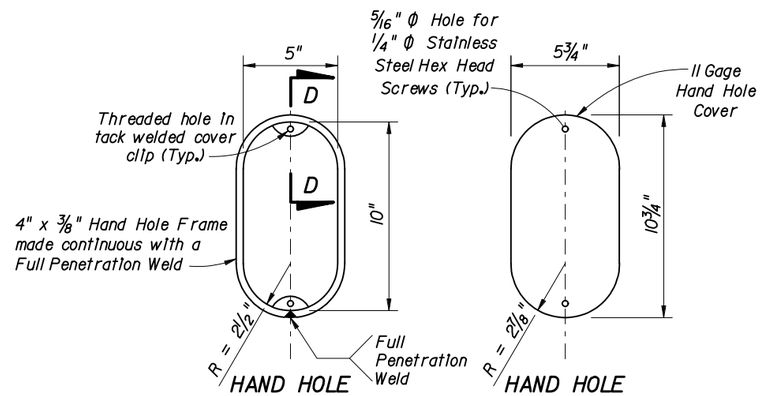

HAND HOLE FRAME

HAND HOLE COVER

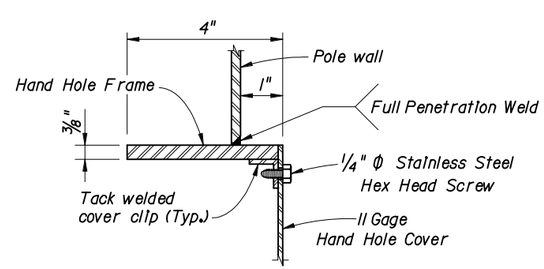

SECTION D-D
(thru Hand Hole)

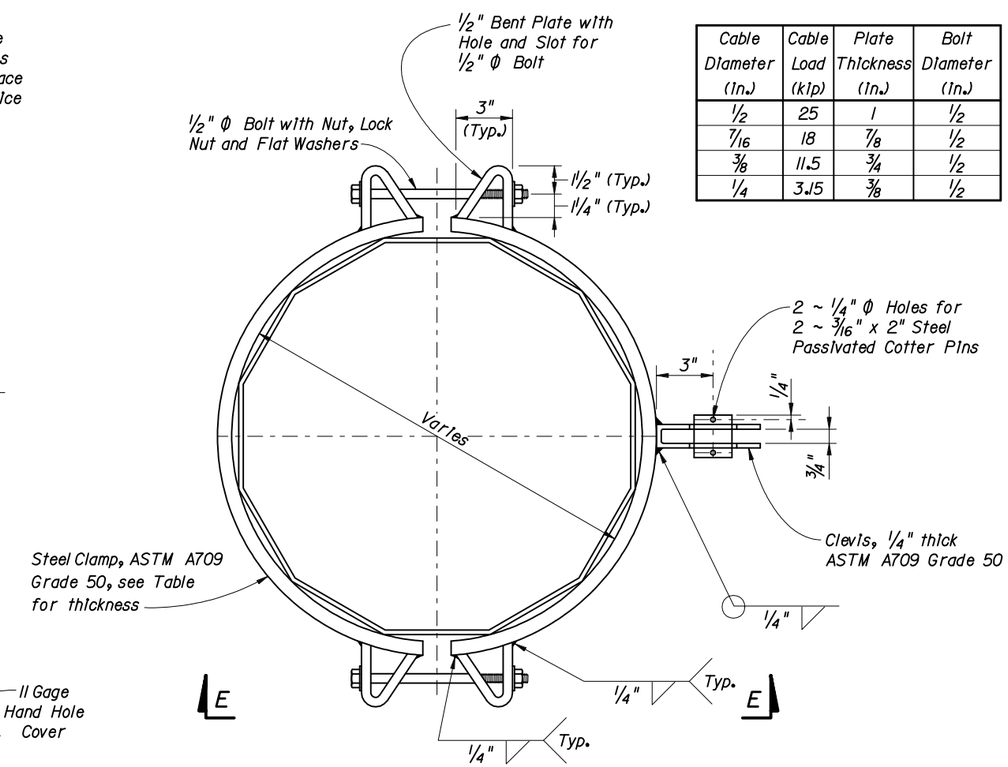

Cable Diameter (In.)	Cable Load (kip)	Plate Thickness (In.)	Bolt Diameter (In.)
1/2	25	1	1/2
7/16	18	7/8	1/2
3/8	11.5	3/4	1/2
1/4	3.15	3/8	1/2

CATENARY AND MESSENGER WIRE CLAMPS

NOTE: Clamps have been sized for Design Cable Loads shown in the Table, and a Maximum Pole Diameter at the Clamp location of 2'-1".

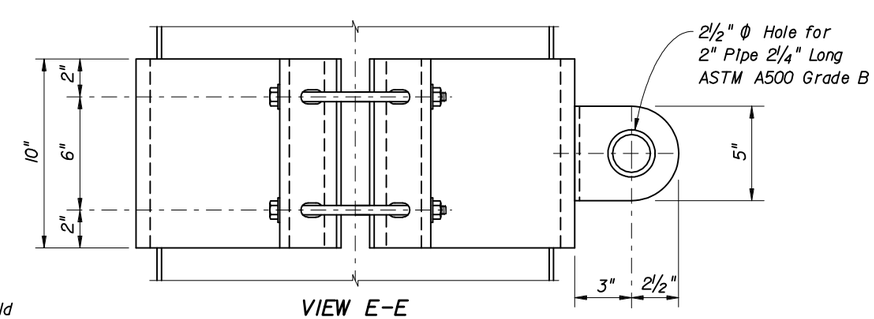

VIEW E-E

INTERIM STANDARD IN ENGLISH UNITS APPLICABLE TO ROADWAY AND TRAFFIC DESIGN STANDARD BOOKLETS PUBLISHED IN EITHER ENGLISH OR METRIC UNITS.

THE SEALED RECORD OF THIS STANDARD IS ON FILE IN THE ROADWAY DESIGN OFFICE.

Date: 9-26-00

STATE OF FLORIDA DEPARTMENT OF TRANSPORTATION

STEEL STRAIN POLE ATTACHMENT DETAILS

INTERIM STANDARD

WHEN INCLUDED IN THE PLANS SHEET NOS. 1-3 OF 3 ARE A SUPPLEMENT TO THE ROADWAY AND TRAFFIC DESIGN STANDARDS, ENGLISH AND METRIC BOOKLETS DATED JANUARY 2000.

APPROVED BY W. Y. Bates
State Structures Design Engineer

REVISION NO.	SHEET NO.	INDEX NO.
	3 of 3	17723