FINANCIAL PROJECT ID	STATE PROJ. NO.	SHEET NO.

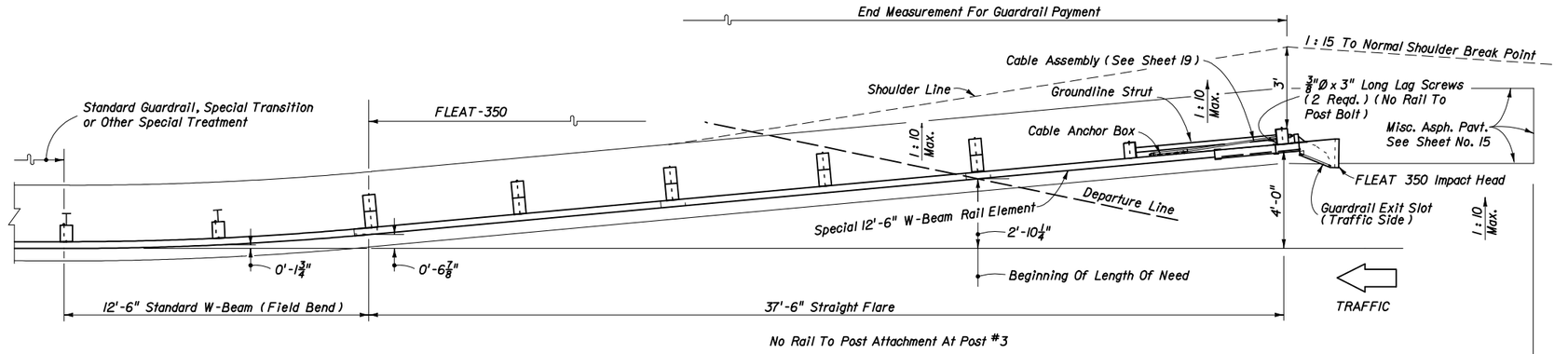

No Rail To Post Attachment At Post #3

PLAN

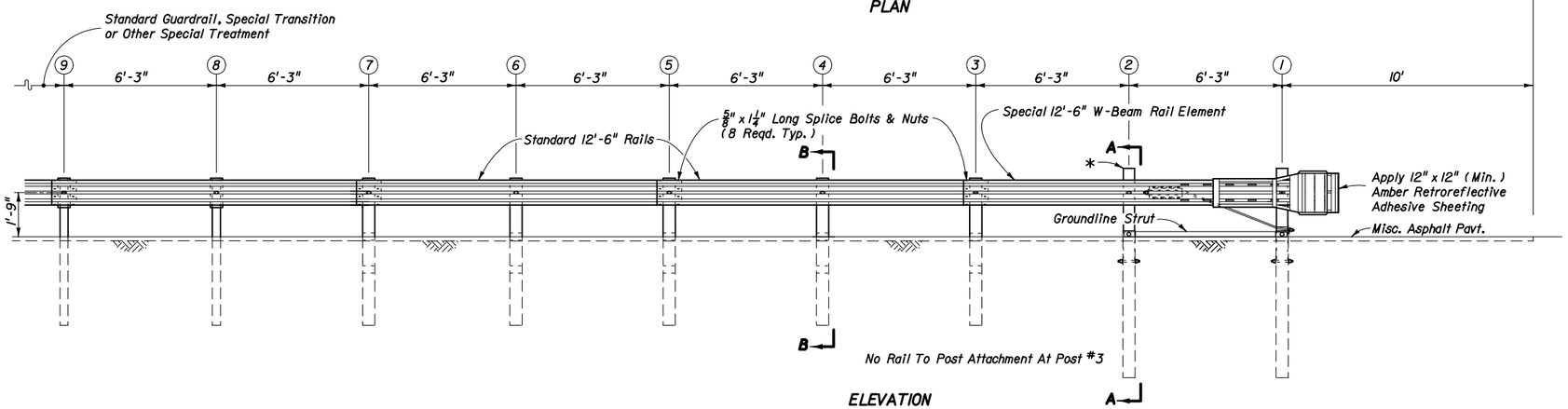

No Rail To Post Attachment At Post #3

ELEVATION

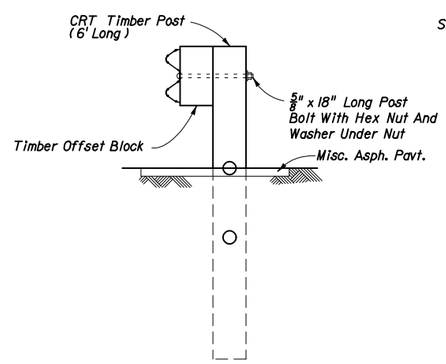

Note: Do not attach rail to block at post location 3.

SECTION BB
TYPICAL POST NOS. 3, 4, 5, 6 AND 7

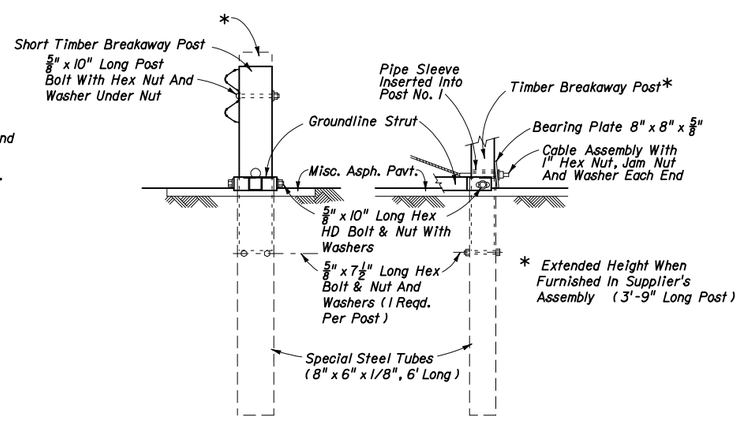

SECTION AA
POST NO. 2

PARTIAL VIEW
POST NO. 1

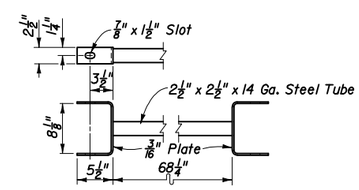

GROUNDLINE STRUT

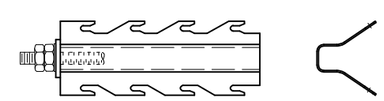

BACK VIEW **SECTION**

Cable Anchor Bracket Is Attached To W-Beam Panel By 8 Shoulder Bolts

CABLE ANCHOR BOX

'FLEAT-350' NOTES

1. The guardrail end anchorage system represented on this standard drawing is a proprietary design by Road Systems, Inc. and marketed under the trade name FLEAT-350. Any infringement on the rights of the designer shall be the sole responsibility of the user.
2. This standard drawing is produced by the Florida Department Of Transportation solely for the use by the Department and its assignees. This standard drawing provides the general graphics and information necessary to field identify component parts of the FLEAT-350 and their incorporation into a whole system.
3. This standard drawing is sufficient for plan details for the FLEAT-350 when installed in connection with shoulder guardrail and precludes the requirement for shop drawing submittals unless the plans otherwise call for such submittals. The FLEAT-350 shall be assembled in accordance with the manufacturer's detailed drawings, procedures and specifications.
4. The FLEAT-350 is intended for use as an approach end guardrail anchorage for shoulder guardrail. The effective length of the FLEAT-350 is 37.5' including one 12.5' special W-Beam panel plus two 12.5' standard W-Beam panels outside of any other standard guardrail, guardrail transitions or other special treatments. The alignment of the FLEAT-350 is a straight flare with an upstream offset of 4' and a downstream offset of 0'-6 7/8" from the normal guardrail alignment.
5. The FLEAT-350 can not be used in medians where horizontal clearance requires the use of a backrail.
6. Posts at location Nos. 1 and 2 must be timber breakaway posts with special length steel foundation tubes without soil plates. The posts at location Nos. 3, 4, 5, 6, and 7 shall be CRT timber posts.
7. See the General Notes for galvanizing requirements of metallic components.
8. If the plans call for the 'FLEAT-350' at a specific location, substitution with other end anchorage assemblies will not be permitted unless approved by the Engineer . If the plans call for end anchorage assembly 'flared' at a specific location, the contractor has the option to construct any FDOT approved flared assembly. Where a flared end anchorage is called for in the plans, any approved substitution with a parallel end anchorage will not be eligible for VECP consideration.
9. The FLEAT-350 shall be paid for under the contract unit price for Guardrail, End Anchorage Assembly (Flared), EA and shall be full compensation for furnishing and installing all components in accordance with the plans; the manufacturer's detail drawings, procedures and specifications and this Index.

DESIGN NOTES

1. The FLEAT-350 is suitable for all design speeds.

THE SEALED RECORD OF THIS STANDARD IS ON FILE IN THE ROADWAY DESIGN OFFICE.

INTERIM STANDARD IN ENGLISH UNITS APPLICABLE TO ROADWAY AND TRAFFIC DESIGN STANDARDS BOOKLETS PUBLISHED IN EITHER ENGLISH OR METRIC UNITS

END ANCHORAGE ASSEMBLY TYPE FLEAT-350

Revised: 01-31-02

STATE OF FLORIDA DEPARTMENT OF TRANSPORTATION

GUARDRAIL

INTERIM STANDARD

THIS SHEET IS A SUPPLEMENT TO INDEX NO. 400 (SHEET 30 OF 31) OF THE ROADWAY AND TRAFFIC DESIGN STANDARDS, BOOKLETS DATED JANUARY 2000.

APPROVED BY Roadway Design Engineer

REVISION NO.	SHEET NO.	INDEX NO.
	30 of 31	0400