FINANCIAL PROJECT ID	STATE PROJ. NO.	SHEET NO.

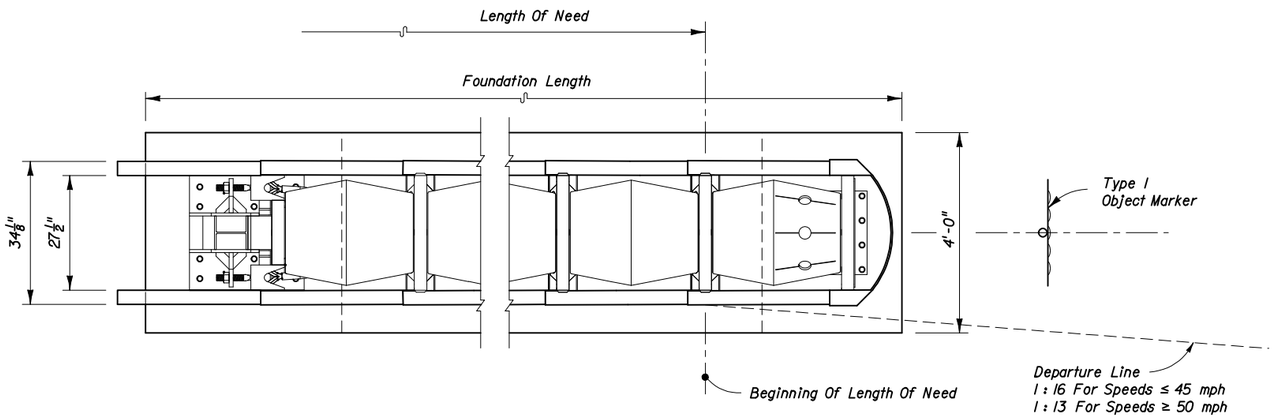

UNIT PLAN

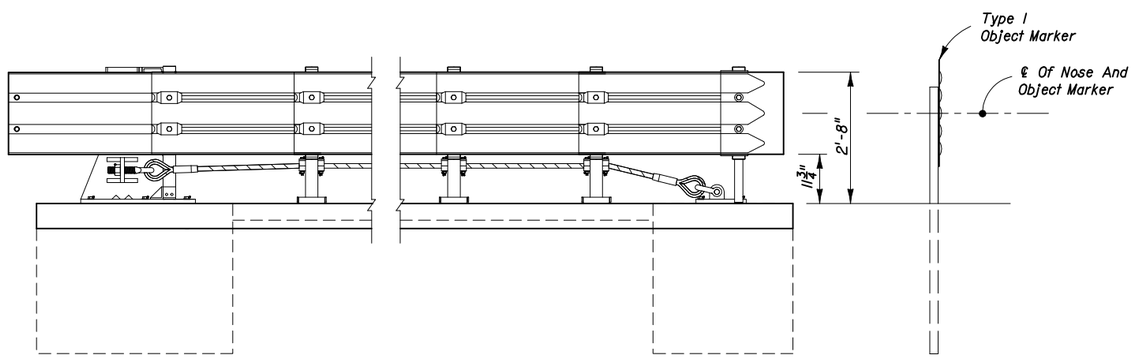

UNIT ELEVATION

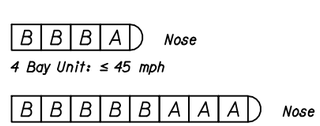

A = Type "A" EAC

B = Type "B" EAC

TAU-II CONFIGURATIONS

GENERAL SYSTEM FEATURES

GENERAL NOTES

1. The energy absorbing system represented on this standard is a proprietary design by Barrier Systems, Inc. and marketed under the trade name TAU-II. Any infringement on the rights of the designer shall be the sole responsibility of the user.

2. This standard is produced by the Florida Department of Transportation solely for use by the Department and its assignees.

3. The TAU-II is a redirective non-gating crash cushion produced in two models, each model designed to shield narrow hazards. The TAU-II TL-3 (8 bay model) may be used on Florida highways for all speeds. The TAU-II TL-2 (4 bay model) is limited to use on Florida highways with speeds of 45 mph or less.

4. The TAU-II is supplied in a single width of 27 1/2".

5. There are two types of Energy Absorbing Cartridges (EAC) used in the TAU-II crash cushions. They are to be placed according to the manufacturer's specifications and in the configurations illustrated below.

6. Permanent and portable portland cement concrete foundations shall be constructed with 4000 psi minimum compressive strength concrete. Reinforcing steel shall be in accordance with the schedule on this index.

7. The TAU-II 'Compact Backup' is the primary backup to be used on Florida Department of Transportation projects. Use of concrete backups shall be called out in the plans for site specific construction; concrete backup connections shall meet the guidelines of this index and must meet manufacturer's specifications, installation guidelines and transition hardware requirements.

8. The TAU-II shall be constructed parallel to the approach travel lane and on cross slopes 1:10 or flatter.

9. All metallic components shall meet the galvanizing requirements for guardrail, Index No. 400.

10. A yellow Type I Object Marker shall be centered 3' in front of the nose of the TAU-II. Mounting hardware shall be in conformance with Index Nos. 11860 and 11865. The cost of the Object Marker shall be included in the cost of the TAU-II system.

11. Quantity for payment is based on each independent location as called for in the plans or as directed by the Engineer. The cost for manufacturer's transition hardware, foundations and subgrade preparation will be included in the cost for the TAU-II system.

    Permanent systems will be paid for under the contract unit price for Impact Attenuator Vehicular (TAU-II), EA; temporary units will be paid for under the contract unit price for Vehicular Impact Attenuator (Temporary) (TAU-II), LO, or when the TAU-II system is used as an option in accordance with Index No. 415, it will be paid for under the contract unit price for Vehicular Impact Attenuator (Temporary) (Redirective), LO.

DESIGN NOTES AND GUIDELINES

1. The beginning length of need shall be at the point of intersection between the face of the cushion and the transverse centerline of the diaphragm back of cartridge No. 1.

2. The TAU-II System is designed to cushion automobile end-on hits and to redirect automobiles from side hits. The TAU-II is designed to shield fixed hazards or the ends of other temporary and permanent barrier systems. The number of bays to be used in a specific unit will be determined by the design speed, except where the Engineer determines that another speed is more applicable.

3. The TAU-II is a restorable system that is particularly suited to shielding hazards subject to high speed traffic, high volume traffic, and/or traffic with a history of frequent errant vehicle departures from the roadway or the potential exists for such departures. The TAU-II is particularly suited to shielding hazards where the approach space is limited; and, is particularly suited to conditions where the terminal must be located close to the traffic lane.

4. Currently the Department does not recognize other proprietary items as being equally suitable alternatives to the TAU-II, and until such alternatives are available, the TAU-II need not be bid against other proprietary items. However, for temporary use where the TAU-II and other approved redirective crash cushions meet or exceed the minimum requirements for a specific location, the approved crash cushions will be considered optional systems and paid for as described in General Note 11 above.

THE SEALED RECORD OF THIS SHEET IS ON FILE IN THE ROADWAY DESIGN OFFICE.

INTERIM STANDARD IN ENGLISH UNITS APPLICABLE TO ROADWAY AND TRAFFIC DESIGN STANDARD BOOKLET PUBLISHED IN METRIC UNITS.

Date: 11-14-02

STATE OF FLORIDA DEPARTMENT OF TRANSPORTATION

TAU-II

INTERIM STANDARD

THIS INDEX IS A SUPPLEMENT TO THE ROADWAY AND TRAFFIC DESIGN STANDARDS, BOOKLET DATED JANUARY 2000.

APPROVED BY
Roadway Design Engineer

REVISION NO.	SHEET NO.	INDEX NO.
	1 of 8	441

FINANCIAL PROJECT ID	STATE PROJ. NO.	SHEET NO.

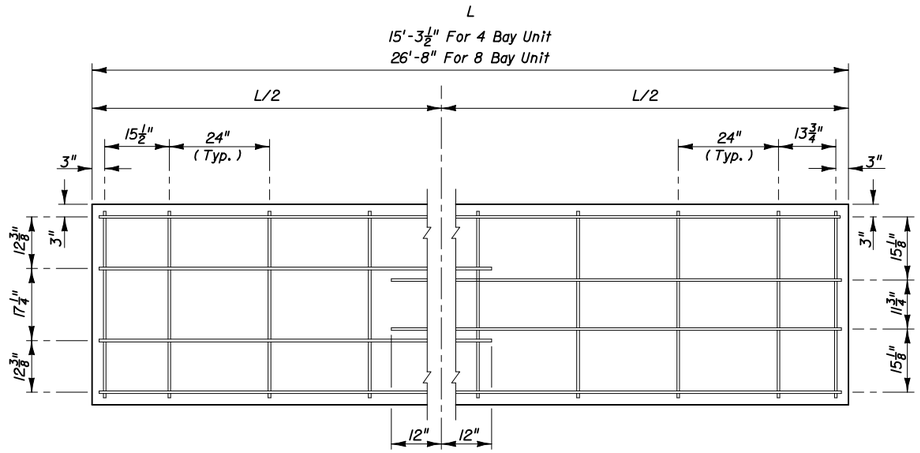

UNIT PLAN

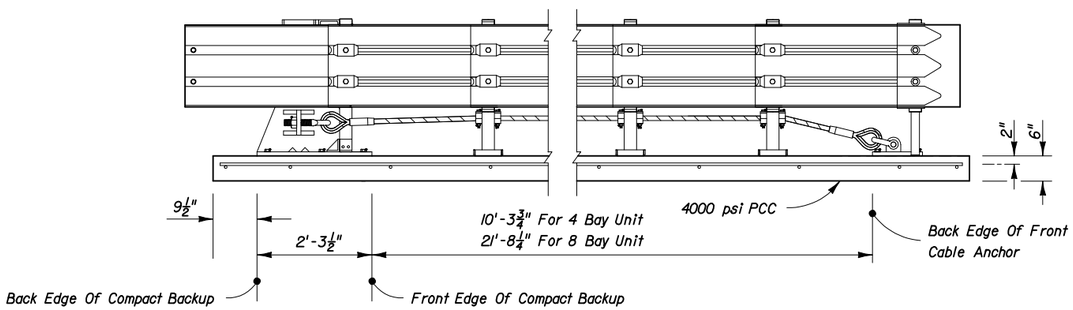

UNIT ELEVATION

REINFORCED CONCRETE PAD

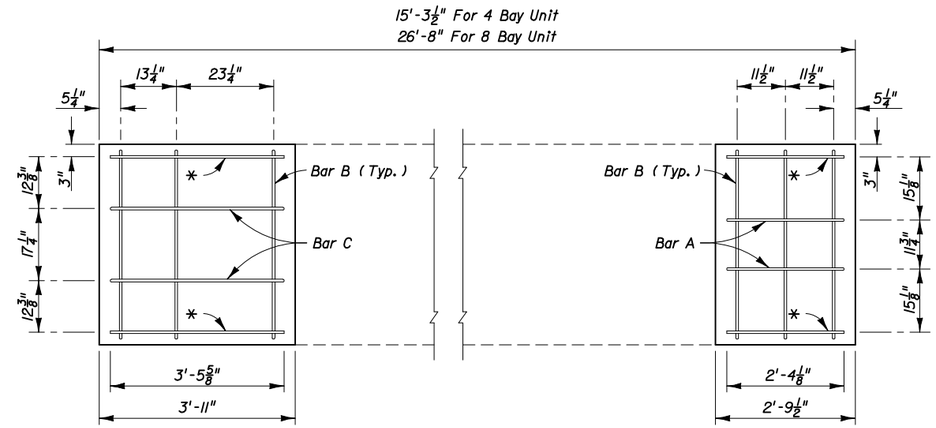

* Straight Bar

UNIT PLAN

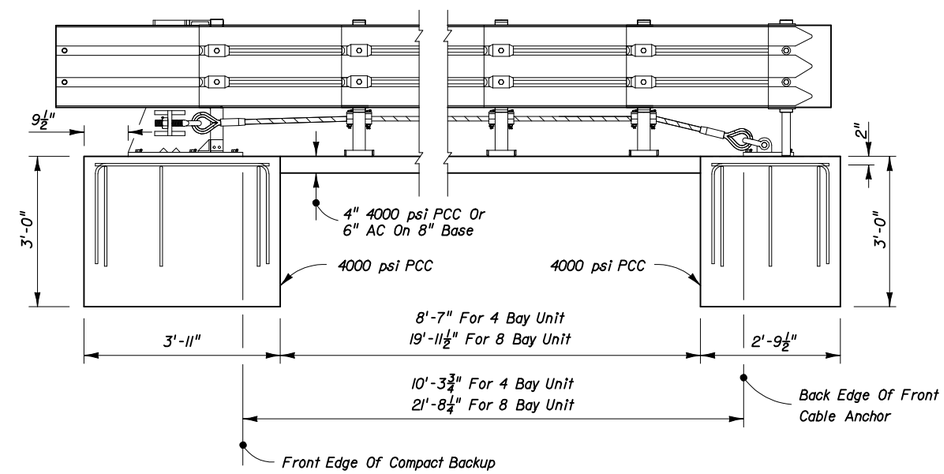

UNIT ELEVATION

CONCRETE ANCHOR BLOCKS

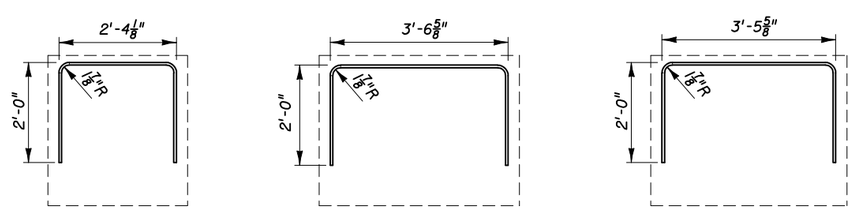

Bar A
SIDE VIEW

Bar B
FRONT VIEW

Bar C
SIDE VIEW

Note: All reinforcement #5 bars. All dimensions out to out.

BENDING DIAGRAM

THE SEALED RECORD OF THIS SHEET IS ON FILE IN THE ROADWAY DESIGN OFFICE.

INTERIM STANDARD IN ENGLISH UNITS APPLICABLE TO ROADWAY AND TRAFFIC DESIGN STANDARD BOOKLET PUBLISHED IN METRIC UNITS.

REINFORCED CONCRETE PAD OR ANCHOR BLOCKS OR CONCRETE ROADWAY PAVEMENT OR BRIDGE DECK

FOUNDATIONS

Date: 11-14-02

STATE OF FLORIDA DEPARTMENT OF TRANSPORTATION

TAU-II

INTERIM STANDARD

THIS INDEX IS A SUPPLEMENT TO THE ROADWAY AND TRAFFIC DESIGN STANDARDS, BOOKLET DATED JANUARY 2000.

APPROVED BY
Roadway Design Engineer

REVISION NO.	SHEET NO.	INDEX NO.
	2 of 8	441

FINANCIAL PROJECT ID	STATE PROJ. NO.	SHEET NO.

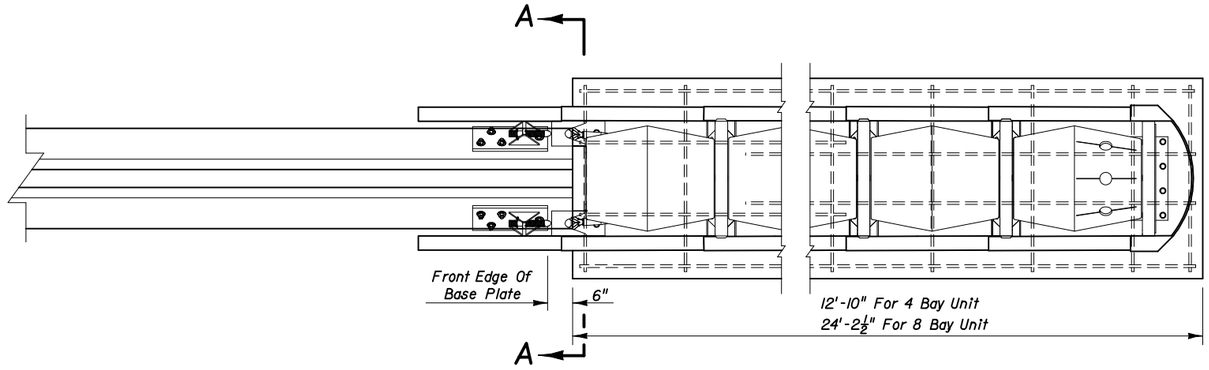

UNIT PLAN

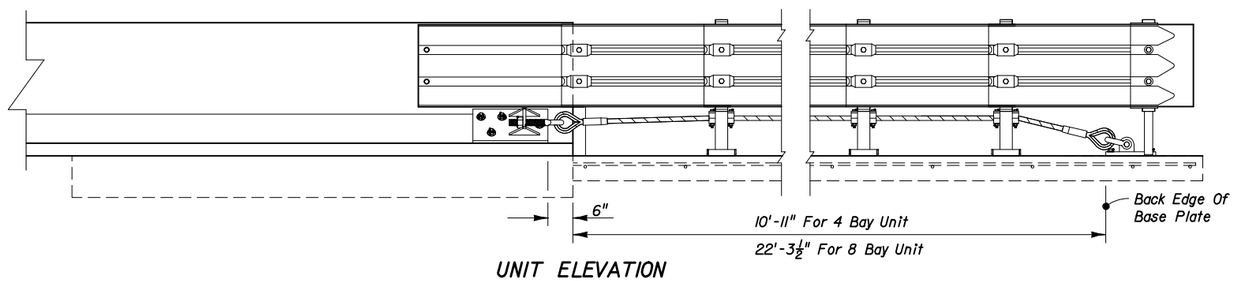

UNIT ELEVATION
CONCRETE PAD

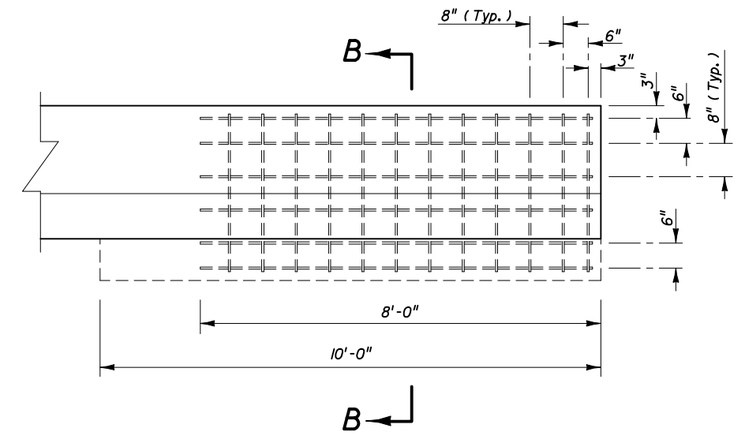

UNIT ELEVATION
WALL REINFORCEMENT

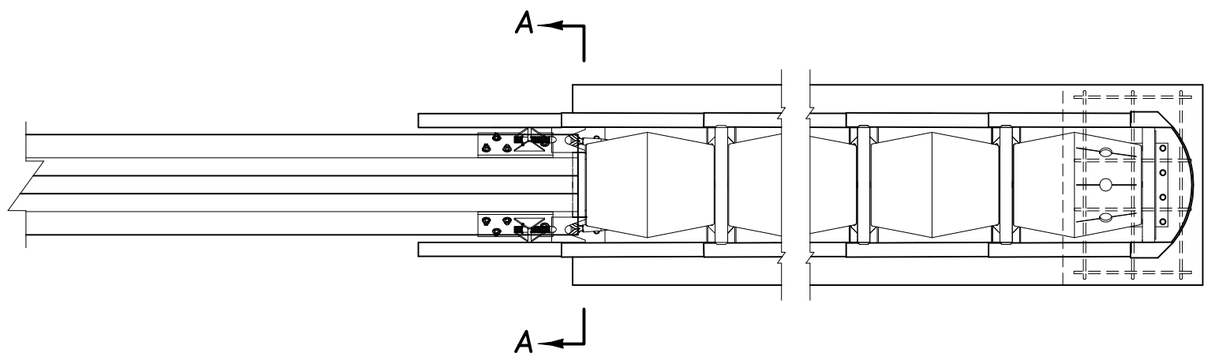

UNIT PLAN

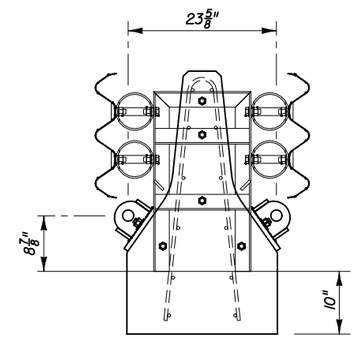

ENLARGED
SECTION AA

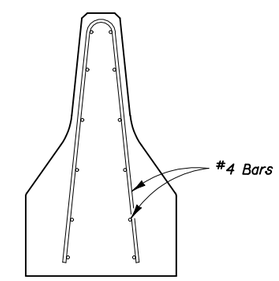

ENLARGED
SECTION BB

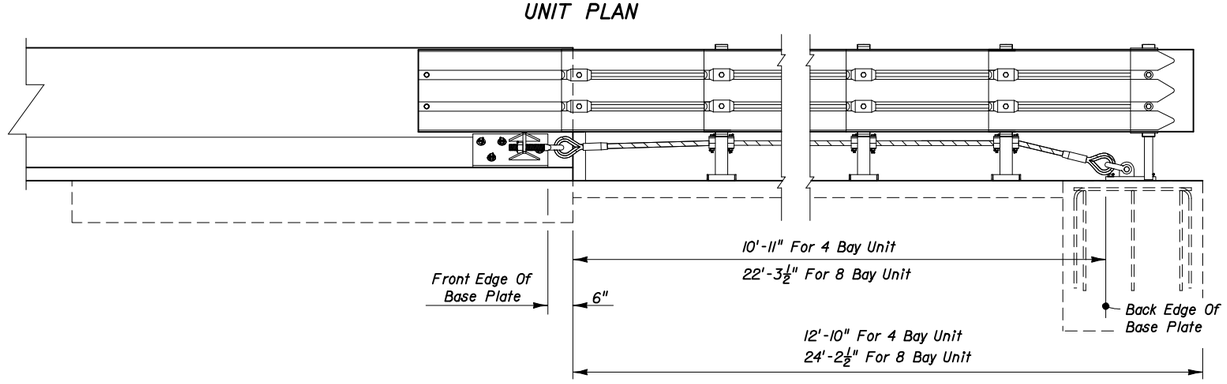

UNIT ELEVATION
CONCRETE ANCHOR BLOCK

PERMANENT CONCRETE BARRIER WALL BACKUP

Date: 11-14-02

THE SEALED RECORD OF THIS SHEET IS ON FILE IN THE ROADWAY DESIGN OFFICE.

INTERIM STANDARD IN ENGLISH UNITS APPLICABLE TO ROADWAY AND TRAFFIC DESIGN STANDARD BOOKLET PUBLISHED IN METRIC UNITS.

STATE OF FLORIDA DEPARTMENT OF TRANSPORTATION

TAU-II

INTERIM STANDARD

THIS INDEX IS A SUPPLEMENT TO THE ROADWAY AND TRAFFIC DESIGN STANDARDS, BOOKLET DATED JANUARY 2000.

APPROVED BY
Roadway Design Engineer

REVISION NO.	SHEET NO.	INDEX NO.
	3 of 8	441

FINANCIAL PROJECT ID	STATE PROJ. NO.	SHEET NO.

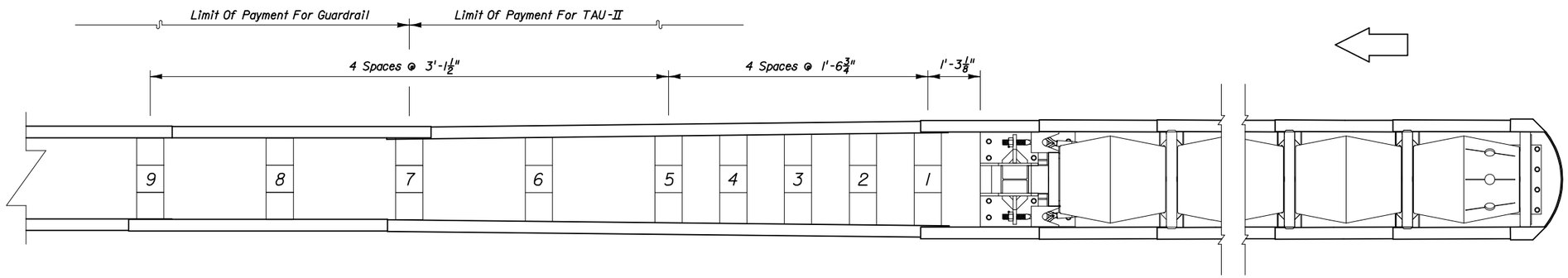

UNIT PLAN

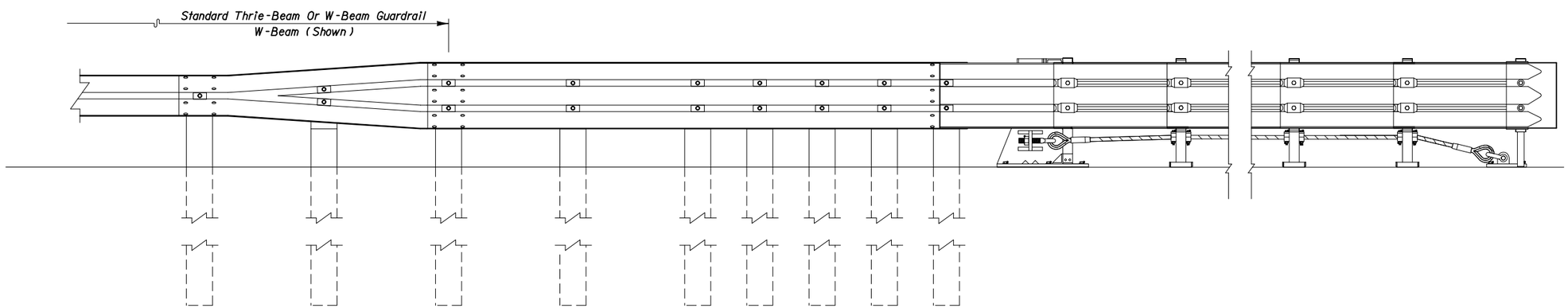

UNIT ELEVATION

THE SEALED RECORD OF THIS SHEET IS ON FILE IN THE ROADWAY DESIGN OFFICE.

INTERIM STANDARD IN ENGLISH UNITS APPLICABLE TO ROADWAY AND TRAFFIC DESIGN STANDARD BOOKLET PUBLISHED IN METRIC UNITS.

TRANSITION TO DOUBLE FACE GUARDRAIL

Date: 11-14-02

STATE OF FLORIDA DEPARTMENT OF TRANSPORTATION

TAU-II

INTERIM STANDARD

THIS INDEX IS A SUPPLEMENT TO THE ROADWAY AND TRAFFIC DESIGN STANDARDS, BOOKLET DATED JANUARY 2000.

APPROVED BY Roadway Design Engineer

REVISION NO.	SHEET NO.	INDEX NO.
	4 of 8	441

FINANCIAL PROJECT ID	STATE PROJ. NO.	SHEET NO.

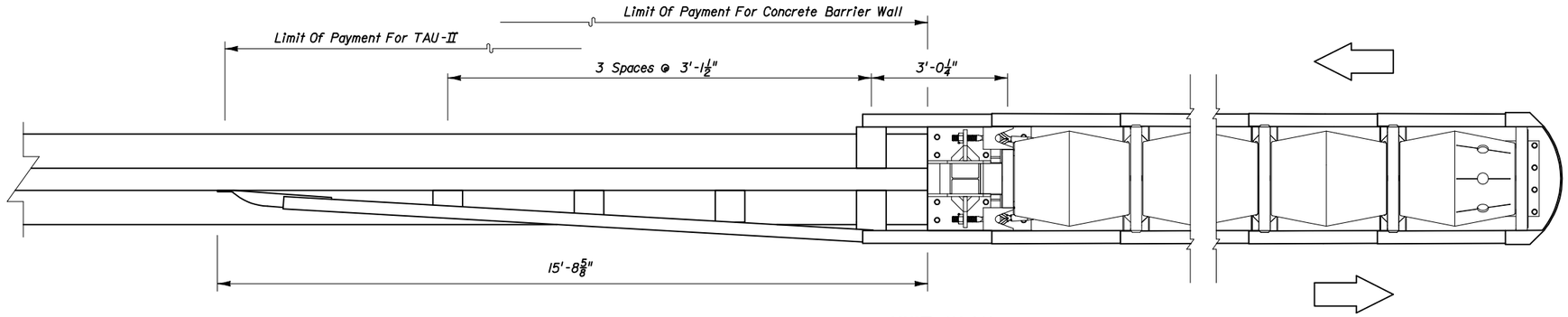

UNIT PLAN

Approach Two-Way Traffic

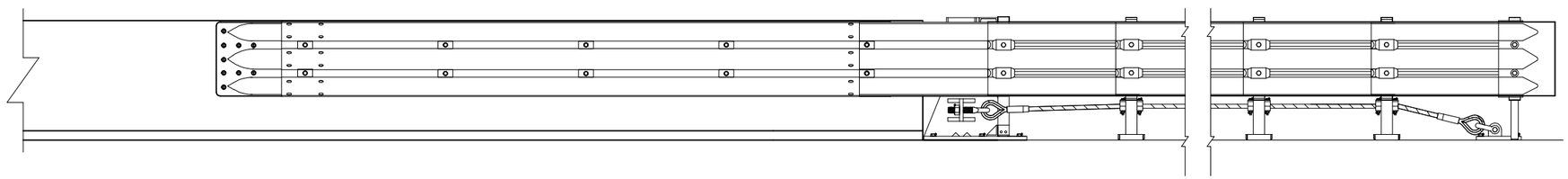

UNIT ELEVATION

COMPACT BACKUP

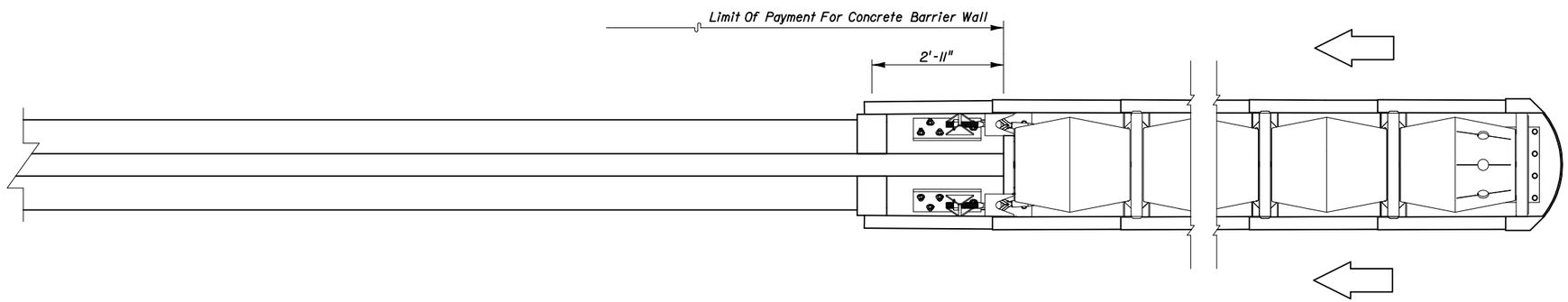

UNIT PLAN

Approach One-Way Traffic

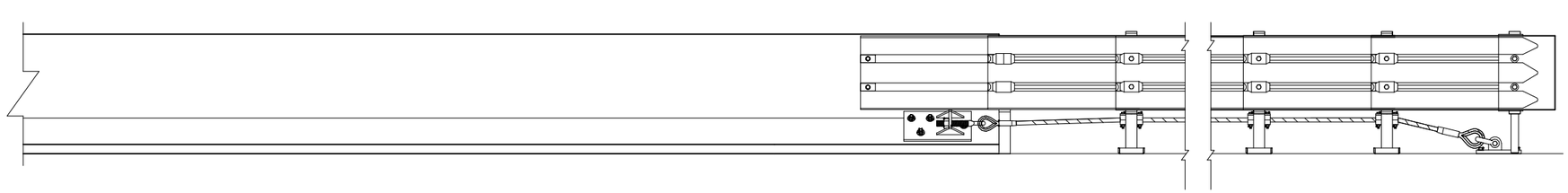

UNIT ELEVATION

WALL BACKUP

THE SEALED RECORD OF THIS SHEET IS ON FILE IN THE ROADWAY DESIGN OFFICE.

INTERIM STANDARD IN ENGLISH UNITS APPLICABLE TO ROADWAY AND TRAFFIC DESIGN STANDARD BOOKLET PUBLISHED IN METRIC UNITS.

TRANSITION TO PERMANENT CONCRETE BARRIER WALL

Date: 11-14-02

STATE OF FLORIDA DEPARTMENT OF TRANSPORTATION

TAU-II

INTERIM STANDARD

THIS INDEX IS A SUPPLEMENT TO THE ROADWAY AND TRAFFIC DESIGN STANDARDS, BOOKLET DATED JANUARY 2000.

APPROVED BY Roadway Design Engineer

REVISION NO.	SHEET NO.	INDEX NO.
	5 of 8	441

FINANCIAL PROJECT ID	STATE PROJ. NO.	SHEET NO.

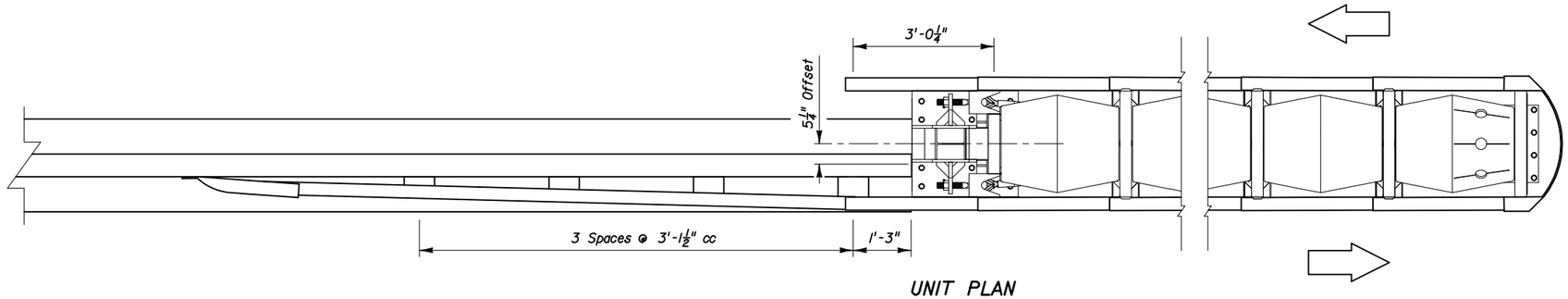

UNIT PLAN

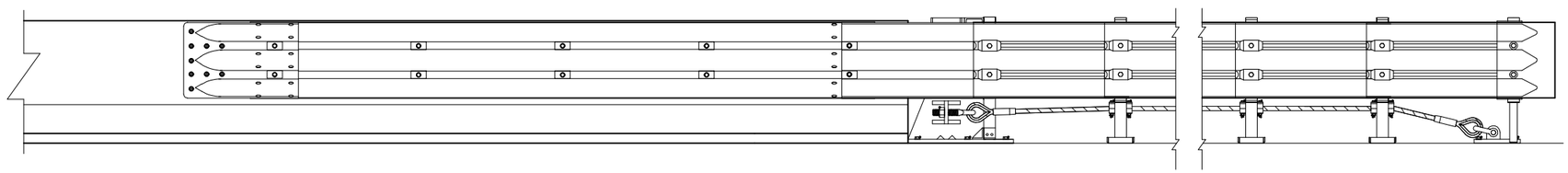

UNIT ELEVATION

COMPACT BACKUP, SYMMETRICAL OR OFFSET (OFFSET SHOWN)

Approach Two-Way Traffic

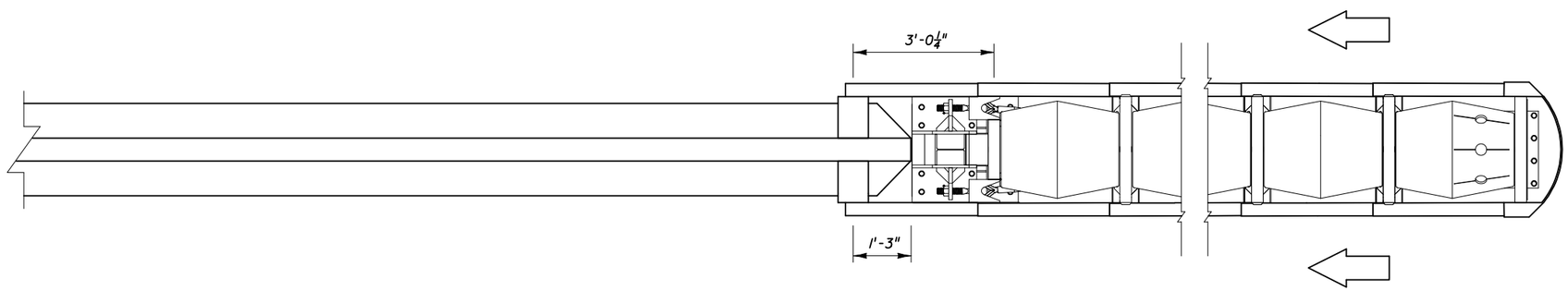

UNIT PLAN

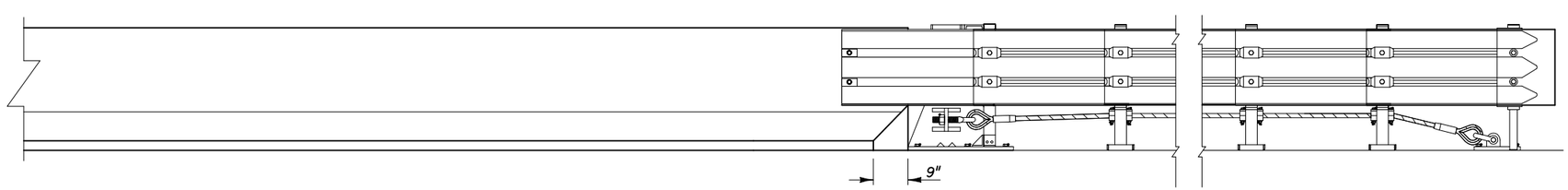

UNIT ELEVATION

COMPACT BACKUP, CENTERED

Approach One-Way Traffic

THE SEALED RECORD OF THIS SHEET IS ON FILE IN THE ROADWAY DESIGN OFFICE.

INTERIM STANDARD IN ENGLISH UNITS APPLICABLE TO ROADWAY AND TRAFFIC DESIGN STANDARD BOOKLET PUBLISHED IN METRIC UNITS.

TRANSITION TO SAFETY SHAPE PERMANENT CONCRETE BARRIER WALL

Date: 11-14-02

STATE OF FLORIDA DEPARTMENT OF TRANSPORTATION

TAU-II

INTERIM STANDARD

THIS INDEX IS A SUPPLEMENT TO THE ROADWAY AND TRAFFIC DESIGN STANDARDS, BOOKLET DATED JANUARY 2000.

APPROVED BY Roadway Design Engineer

REVISION NO.	SHEET NO.	INDEX NO.
	6 of 8	441

FINANCIAL PROJECT ID	STATE PROJ. NO.	SHEET NO.

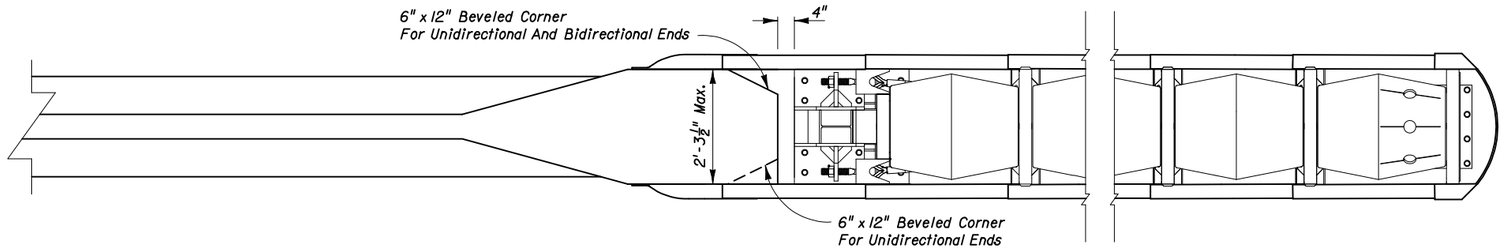

UNIT PLAN

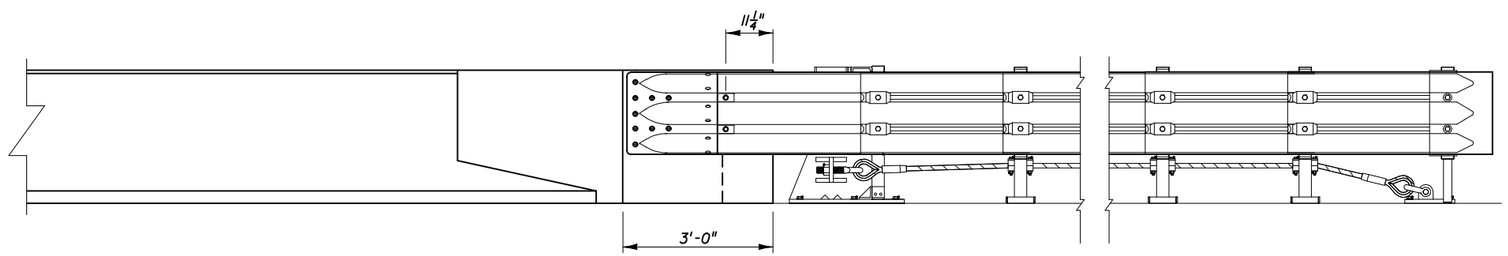

UNIT ELEVATION

COMPACT BACKUP, CONCRETE END SHOE TO BULBED END BARRIER

THE SEALED RECORD OF THIS SHEET IS ON FILE IN THE ROADWAY DESIGN OFFICE.

INTERIM STANDARD IN ENGLISH UNITS APPLICABLE TO ROADWAY AND TRAFFIC DESIGN STANDARD BOOKLET PUBLISHED IN METRIC UNITS.

TRANSITION TO PERMANENT CONCRETE BARRIER WALL

Date: 11-14-02

STATE OF FLORIDA DEPARTMENT OF TRANSPORTATION

TAU-II

INTERIM STANDARD

THIS INDEX IS A SUPPLEMENT TO THE ROADWAY AND TRAFFIC DESIGN STANDARDS, BOOKLET DATED JANUARY 2000.

APPROVED BY
Roadway Design Engineer

REVISION NO.	SHEET NO.	INDEX NO.
	7 of 8	441

FINANCIAL PROJECT ID	STATE PROJ. NO.	SHEET NO.

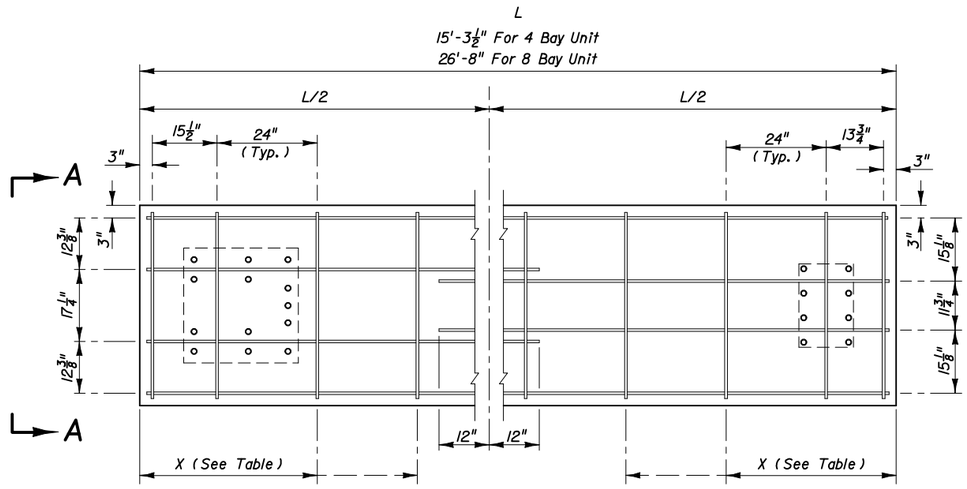

Note: All reinforcement #5 bars.

UNIT PLAN

PICKUP POINT LOCATIONS		
No. Of Bays	Pad Length, L	Pickup Points, X
4	15'-3½"	42" ± 2"
8	26'-8"	66" ± 2"

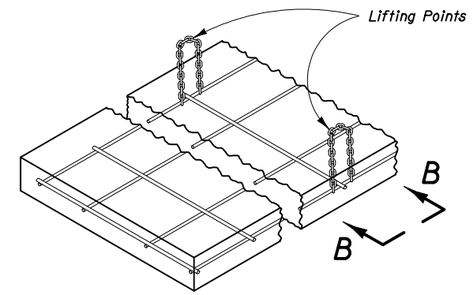

VIEW AA

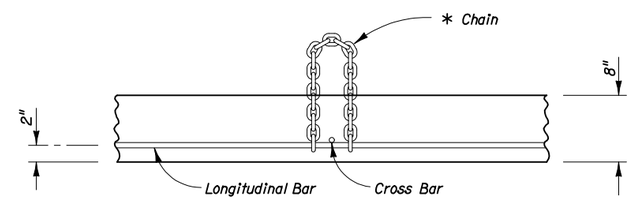

* ½" Proof Coil Chain Must Meet The Requirements Of ASTM A413 Grade 28.
The Minimum Length Is 15 Links And The Rebar Will Be Inserted Through Both End Links As Shown.

ENLARGED
VIEW BB

INTERIM STANDARD IN ENGLISH UNITS APPLICABLE TO ROADWAY AND TRAFFIC DESIGN STANDARD BOOKLET PUBLISHED IN METRIC UNITS.

PORTABLE REINFORCED CONCRETE PAD

Date: 11-14-02

STATE OF FLORIDA DEPARTMENT OF TRANSPORTATION

TAU-II

INTERIM STANDARD

THIS INDEX IS A SUPPLEMENT TO THE ROADWAY AND TRAFFIC DESIGN STANDARDS, BOOKLET DATED JANUARY 2000.

APPROVED BY
Roadway Design Engineer

REVISION NO.	SHEET NO.	INDEX NO.
	8 of 8	441