FINANCIAL PROJECT ID	STATE PROJ. NO.	SHEET NO.

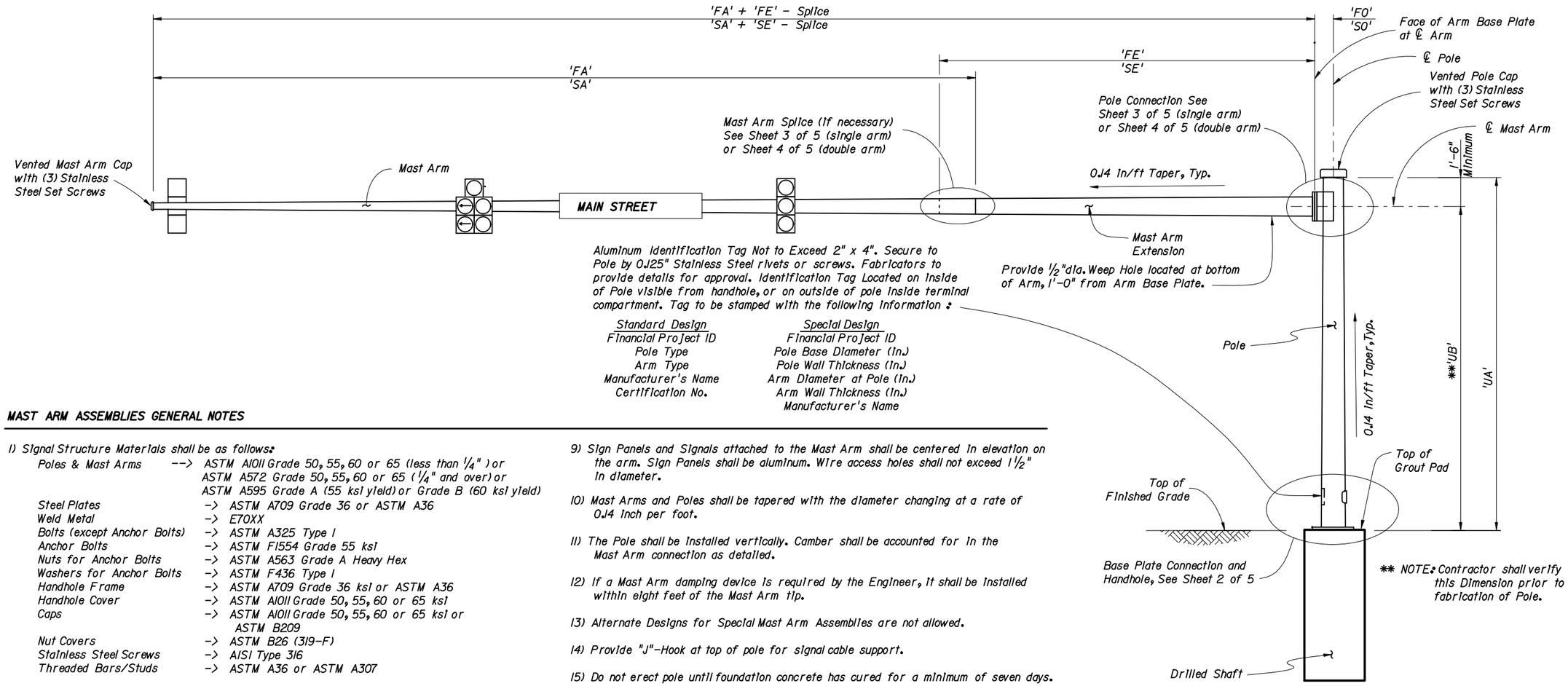

Aluminum Identification Tag Not to Exceed 2" x 4". Secure to Pole by 0.25" Stainless Steel rivets or screws. Fabricators to provide details for approval. Identification Tag Located on Inside of Pole visible from handhole, or on outside of pole inside terminal compartment. Tag to be stamped with the following information :

Standard Design	Special Design
Financial Project ID	Financial Project ID
Pole Type	Pole Base Diameter (In.)
Arm Type	Pole Wall Thickness (In.)
Manufacturer's Name	Arm Diameter at Pole (In.)
Certification No.	Arm Wall Thickness (In.)
	Manufacturer's Name

ELEVATION VIEW

(Single Arm Shown, Double Arm Similar)
(Luminaire Arm Not Shown)

MAST ARM ASSEMBLIES GENERAL NOTES

1) Signal Structure Materials shall be as follows:

Poles & Mast Arms	-->	ASTM A1011 Grade 50, 55, 60 or 65 (less than 1/4") or ASTM A572 Grade 50, 55, 60 or 65 (1/4" and over) or ASTM A595 Grade A (55 ksi yield) or Grade B (60 ksi yield)
Steel Plates	->	ASTM A709 Grade 36 or ASTM A36
Weld Metal	->	E70XX
Bolts (except Anchor Bolts)	->	ASTM A325 Type I
Anchor Bolts	->	ASTM F1554 Grade 55 ksi
Nuts for Anchor Bolts	->	ASTM A563 Grade A Heavy Hex
Washers for Anchor Bolts	->	ASTM F436 Type I
Handhole Frame	->	ASTM A709 Grade 36 ksi or ASTM A36
Handhole Cover	->	ASTM A1011 Grade 50, 55, 60 or 65 ksi
Caps	->	ASTM A1011 Grade 50, 55, 60 or 65 ksi or ASTM B209
Nut Covers	->	ASTM B26 (319-F)
Stainless Steel Screws	->	AISI Type 316
Threaded Bars/Studs	->	ASTM A36 or ASTM A307

2) Reinforcing Steel shall be ASTM A615-96, Grade 60 ksi.

3) Concrete shall be Class IV (Drilled Shaft) with a minimum 28-day compressive strength of 4,000 psi for all environmental classifications.

4) Grout shall have a minimum 28-day compressive strength of 5,000 psi and shall meet the requirements of Section 934.

5) All welding shall conform to American Welding Society Structural Welding Code (Steel) ANSI/AWS D1.1 (current edition).

6) All steel items shall be galvanized as follows:

All Nuts, Bolts, Washers and Threaded Bars/Studs	->	ASTM A153 Class C or D depending on size
All other steel items (including Pole & Mast Arm)	->	ASTM A123

7) Locate handhole 180° from arm on single arm poles or 180° from first arm of double arm poles or see special instructions on Mast Arm Tabulation Sheet.

8) Except for Anchor Bolts, all bolt hole diameters shall be equal to the bolt diameter plus 1/16" , prior to galvanizing. Hole diameters for Anchor Bolts shall not exceed the bolt diameter plus 1/2".

9) Sign Panels and Signals attached to the Mast Arm shall be centered in elevation on the arm. Sign Panels shall be aluminum. Wire access holes shall not exceed 1 1/2" in diameter.

10) Mast Arms and Poles shall be tapered with the diameter changing at a rate of 0.14 inch per foot.

11) The Pole shall be installed vertically. Camber shall be accounted for in the Mast Arm connection as detailed.

12) If a Mast Arm damping device is required by the Engineer, it shall be installed within eight feet of the Mast Arm tip.

13) Alternate Designs for Special Mast Arm Assemblies are not allowed.

14) Provide "J"-Hook at top of pole for signal cable support.

15) Do not erect pole until foundation concrete has cured for a minimum of seven days.

16) First and Second Arm Camber Angle = 2°.

17) Details for the Ground Rod, Signal and Sign Locations, Signal Head Attachment, Sign Attachment, Pedestrian Head Attachment, and Foundation Conduit are not shown for clarity.

18) Work this index with Structures Standard Nos. S-1700 and S-1710 as necessary.

THE SEALED RECORD OF THIS STANDARD IS ON FILE IN THE ROADWAY DESIGN OFFICE.

INTERIM STANDARD IN ENGLISH UNITS APPLICABLE TO ROADWAY AND TRAFFIC DESIGN STANDARD BOOKLETS PUBLISHED IN EITHER ENGLISH OR METRIC UNITS.

TYPICAL ELEVATION AND NOTES

Date: 7-17-02

STATE OF FLORIDA DEPARTMENT OF TRANSPORTATION

MAST ARM ASSEMBLIES

INTERIM STANDARD

THIS INDEX IS A SUPPLEMENT TO THE DESIGN STANDARDS, BOOKLET DATED JANUARY 2002.

APPROVED BY Robert E. Nichols for
State Structures Design Engineer

REVISION NO.	SHEET NO.	INDEX NO.
	1 of 5	017745

FINANCIAL PROJECT ID	STATE PROJ. NO.	SHEET NO.

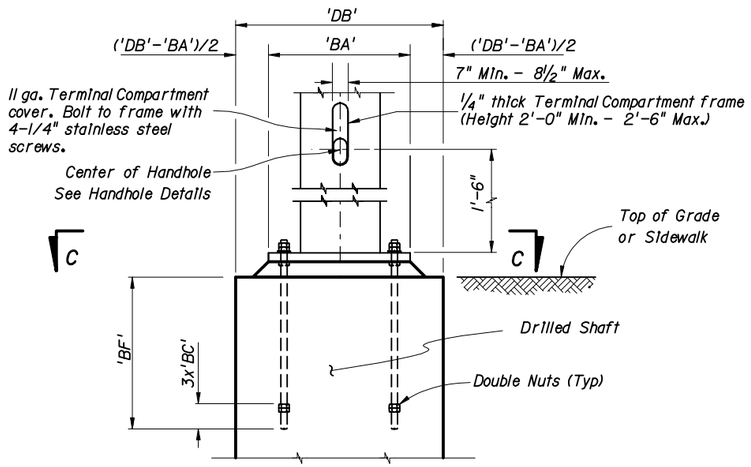

BASE PLATE AND ANCHORAGE ELEVATION
(Reinforcement Not Shown)

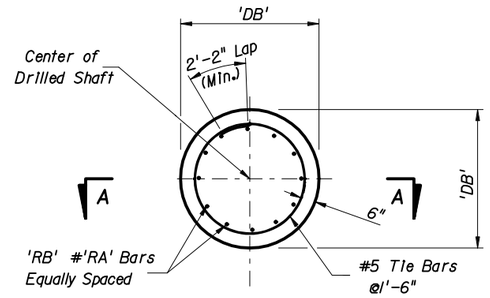

FOUNDATION PLAN
Note: 6" min. cover on Shaft Reinforcement

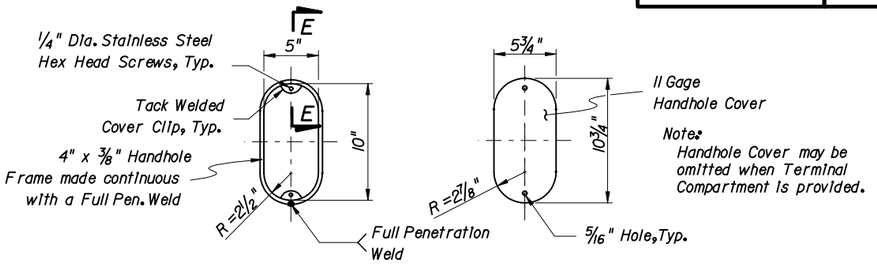

Handhole Frame
(w/Terminal Compartment Omitted)

Handhole Cover

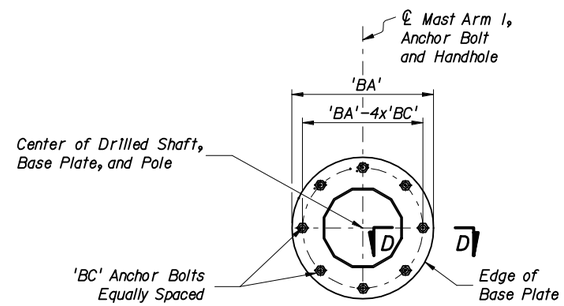

SECTION C-C
(8 Anchor Bolts)

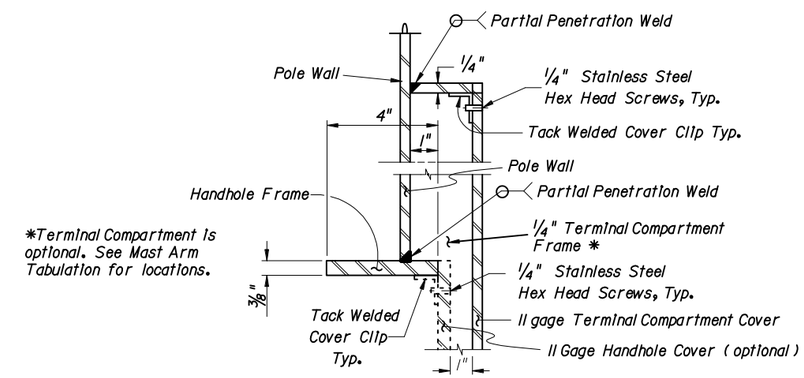

SECTION E-E
(thru Handhole & Terminal Compartment)

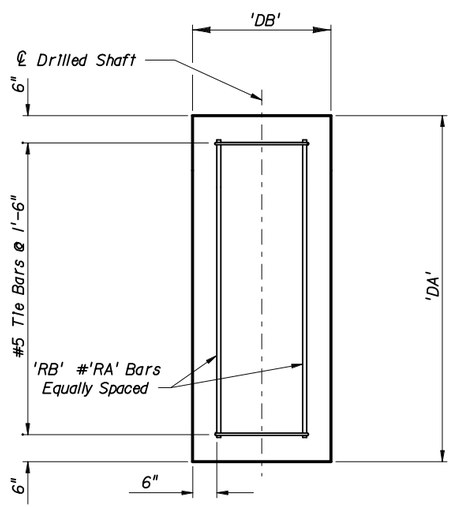

SECTION A-A

NOTE: See Index Nos. 17742 and 17743 and Structures Standard Drawing S-1710 for actual quantity of bolts.

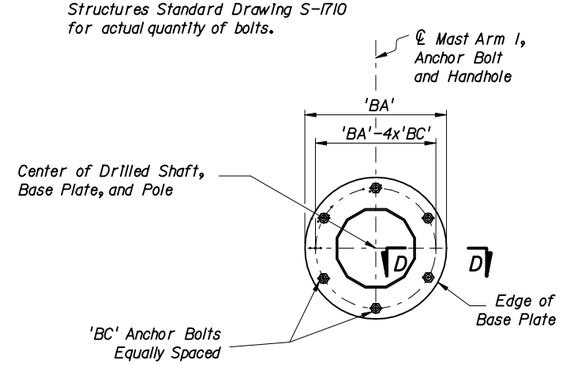

SECTION C-C
(6 Anchor Bolts)

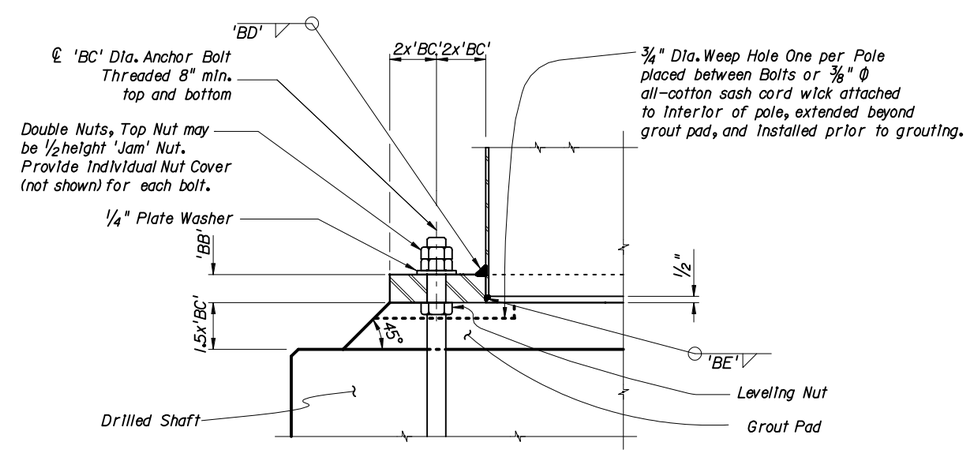

SECTION D-D

TYPICAL FOUNDATION AND BASE PLATE DETAILS

THE SEALED RECORD OF THIS STANDARD IS ON FILE IN THE ROADWAY DESIGN OFFICE.

INTERIM STANDARD IN ENGLISH UNITS APPLICABLE TO ROADWAY AND TRAFFIC DESIGN STANDARD BOOKLETS PUBLISHED IN EITHER ENGLISH OR METRIC UNITS.

Date: 7-17-02

STATE OF FLORIDA DEPARTMENT OF TRANSPORTATION

MAST ARM ASSEMBLIES

INTERIM STANDARD

THIS INDEX IS A SUPPLEMENT TO THE DESIGN STANDARDS, BOOKLET DATED JANUARY 2002.

APPROVED BY Robert E. Nicholy Jr.
State Structures Design Engineer

REVISION NO.	SHEET NO.	INDEX NO.
	2 of 5	017745

FINANCIAL PROJECT ID	STATE PROJ. NO.	SHEET NO.

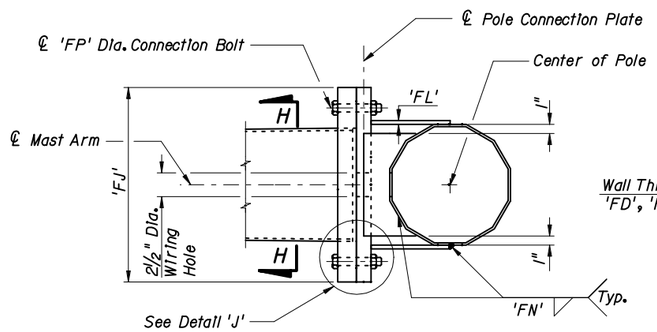

SECTION F-F

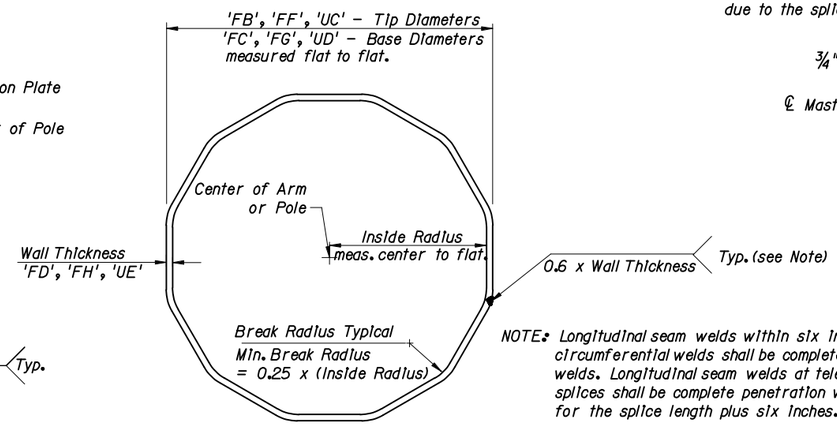

SECTION H-H

NOTE: Longitudinal seam welds within six inches of circumferential welds shall be complete penetration welds. Longitudinal seam welds at telescopic field splices shall be complete penetration welds for the splice length plus six inches.

The 'Slip Joint' splice shall be a tight fit with no change in the Mast Arm slope due to the splice.

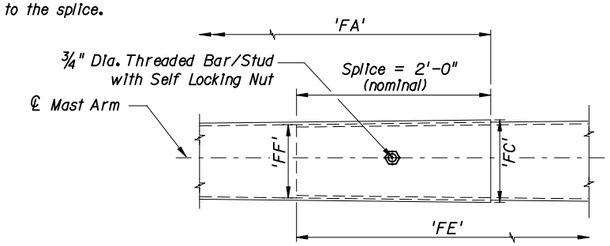

Arm Splice Detail

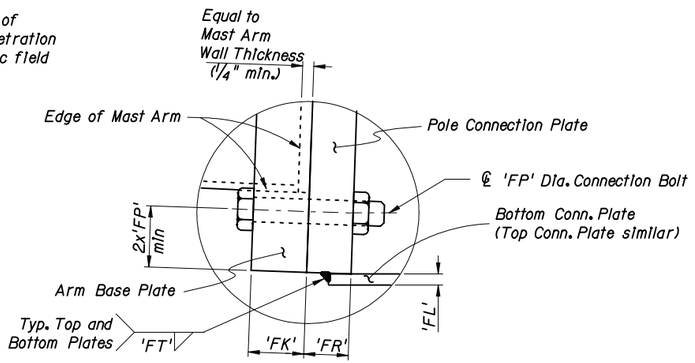

DETAIL 'I'

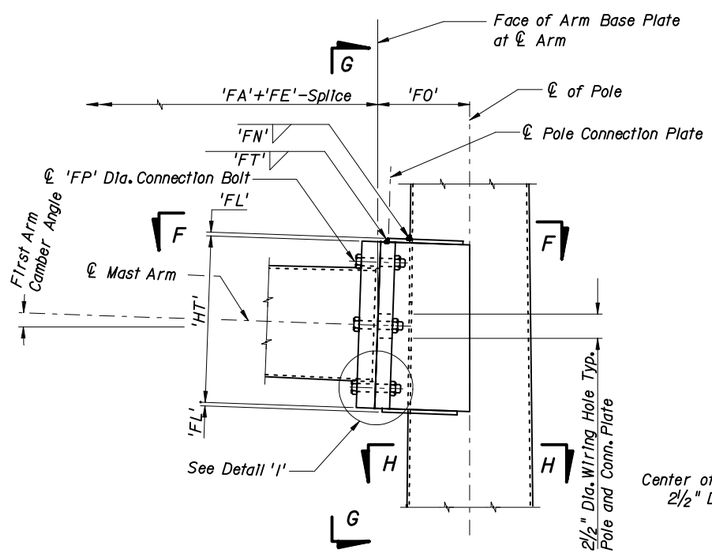

ELEVATION
(Single Arm Connection)

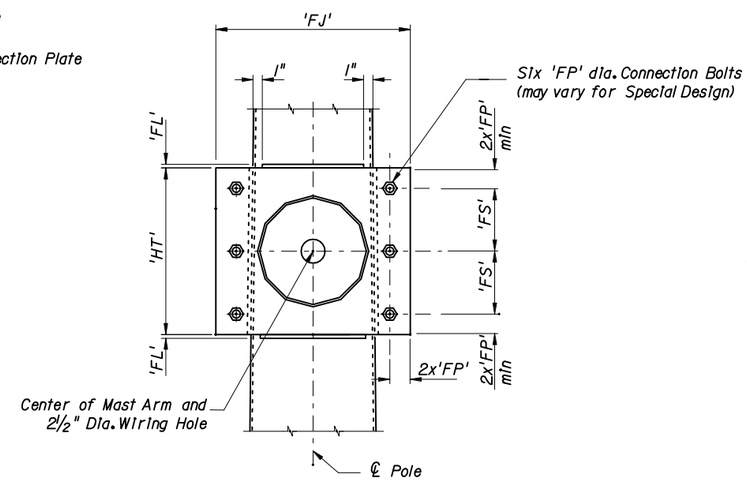

SECTION G-G

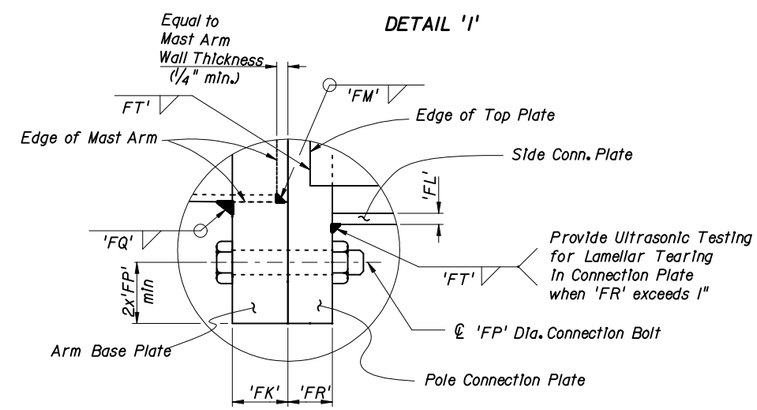

DETAIL 'J'

NOTE:
1. Details shown on this sheet are for 12 sided pole sections. However, sections with more than 12 sides and round sections are permitted provided outside diameter and wall thickness are not reduced.
2. Mast Arm and Connection Plates shall be match marked to ensure proper assembly.

THE SEALED RECORD OF THIS STANDARD IS ON FILE IN THE ROADWAY DESIGN OFFICE.

INTERIM STANDARD IN ENGLISH UNITS APPLICABLE TO ROADWAY AND TRAFFIC DESIGN STANDARD BOOKLETS PUBLISHED IN EITHER ENGLISH OR METRIC UNITS.

TYPICAL SINGLE ARM CONNECTION DETAILS

Date: 7-17-02

STATE OF FLORIDA DEPARTMENT OF TRANSPORTATION

MAST ARM ASSEMBLIES

INTERIM STANDARD

THIS INDEX IS A SUPPLEMENT TO THE DESIGN STANDARDS, BOOKLET DATED JANUARY 2002.

APPROVED BY Robert E. Nichols Jr.
State Structures Design Engineer

REVISION NO.	SHEET NO.	INDEX NO.
	3 of 5	017745

FINANCIAL PROJECT ID	STATE PROJ. NO.	SHEET NO.

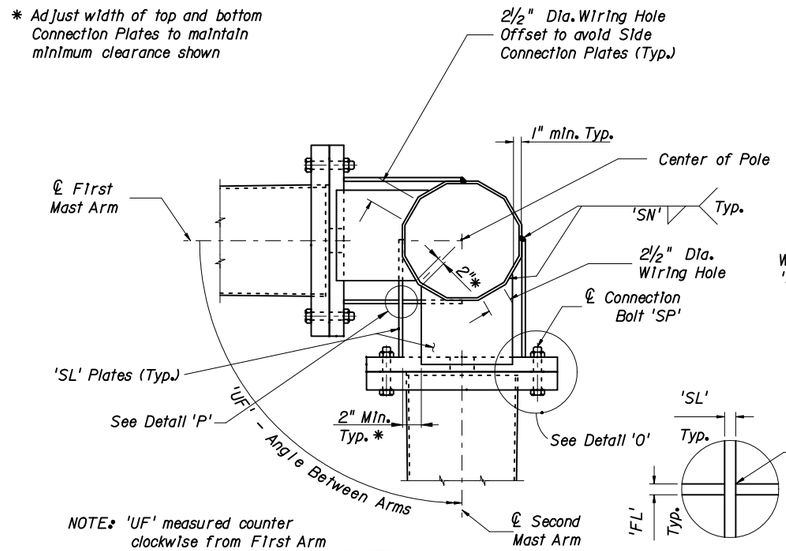

SECTION K-K

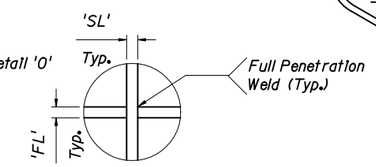

DETAIL 'P'

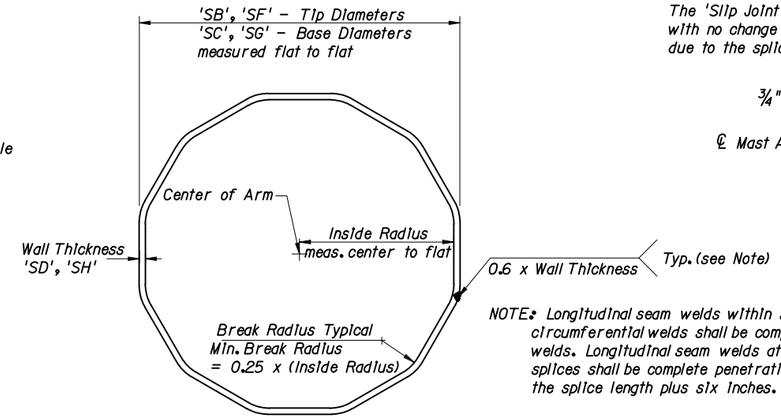

SECTION M-M

NOTE: Longitudinal seam welds within six inches of circumferential welds shall be complete penetration welds. Longitudinal seam welds at telescopic field splices shall be complete penetration welds for the splice length plus six inches.

The 'Slip Joint' splice shall be a tight fit with no change in the Mast Arm slope due to the splice.

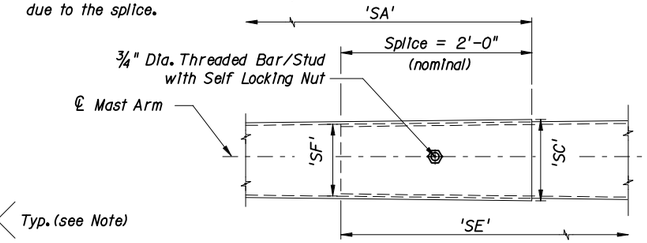

Arm Splice Detail

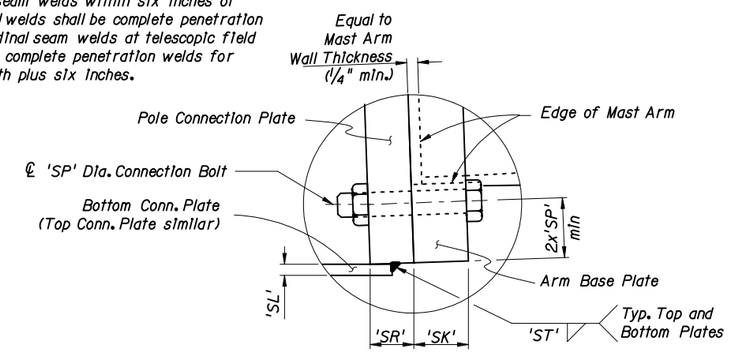

DETAIL 'N'

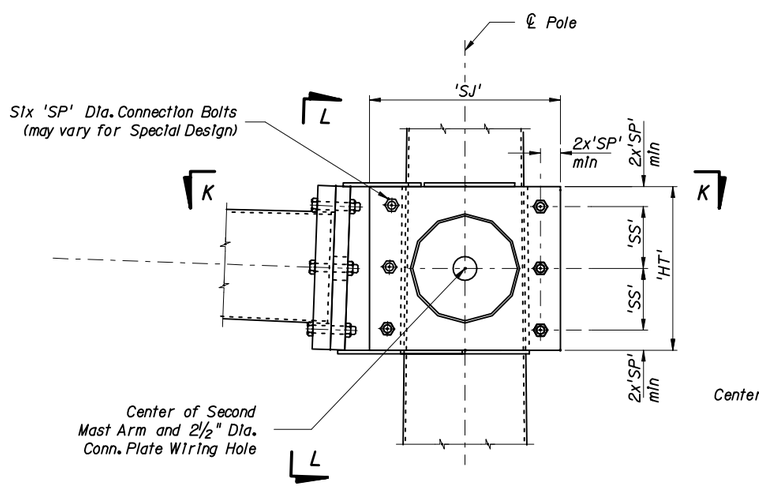

ELEVATION
(Double Arm Connection)

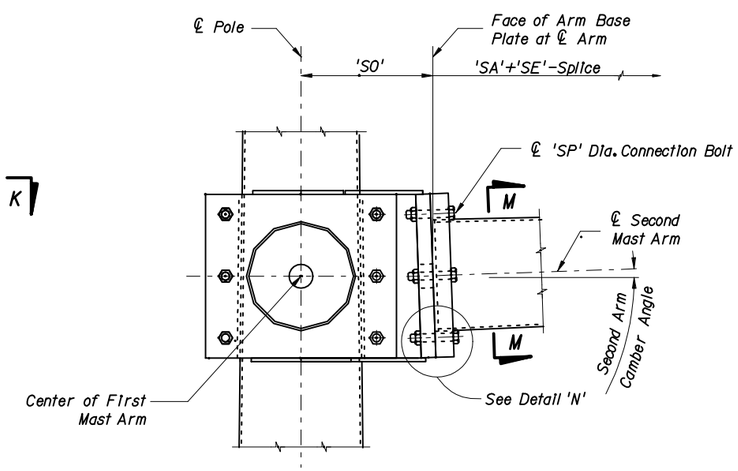

SECTION L-L

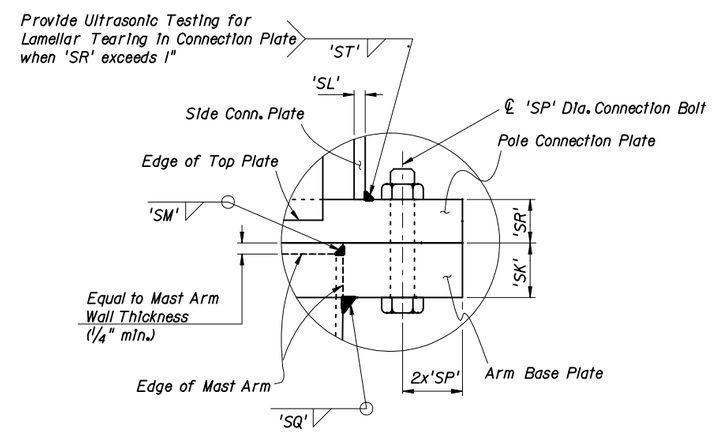

DETAIL 'O'

NOTE:
1. Details shown on this sheet are for 12 sided pole sections. However, sections with more than 12 sides and round sections are permitted provided outside diameter and wall thickness are not reduced.
2. Mast Arm and Connection Plates shall be match marked to ensure proper assembly.

THE SEALED RECORD OF THIS STANDARD IS ON FILE IN THE ROADWAY DESIGN OFFICE.

INTERIM STANDARD IN ENGLISH UNITS APPLICABLE TO ROADWAY AND TRAFFIC DESIGN STANDARD BOOKLETS PUBLISHED IN EITHER ENGLISH OR METRIC UNITS.

TYPICAL DOUBLE ARM CONNECTION DETAILS

Date: 7-17-02

STATE OF FLORIDA DEPARTMENT OF TRANSPORTATION

MAST ARM ASSEMBLIES

INTERIM STANDARD

THIS INDEX IS A SUPPLEMENT TO THE DESIGN STANDARDS, BOOKLET DATED JANUARY 2002.

APPROVED BY Robert E. Nicholz Jr. State Structures Design Engineer

REVISION NO.	SHEET NO.	INDEX NO.
	4 of 5	017745

FINANCIAL PROJECT ID	STATE PROJ. NO.	SHEET NO.

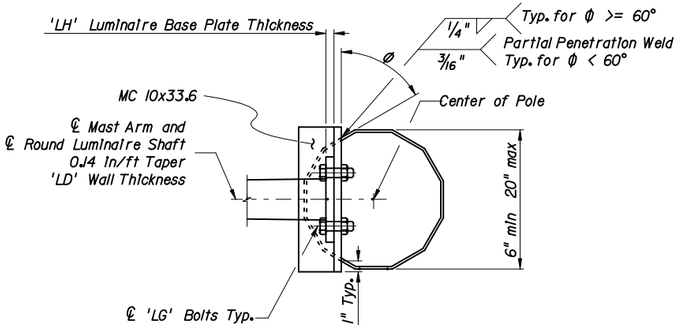

SECTION A-A

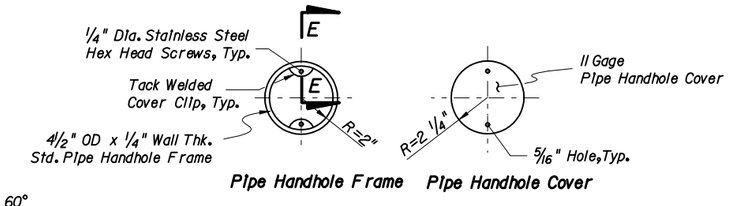

Pipe Handhole Frame Pipe Handhole Cover

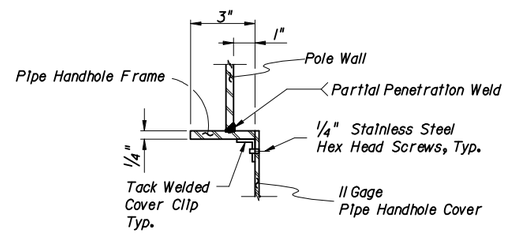

SECTION E-E
(thru Pipe Handhole)

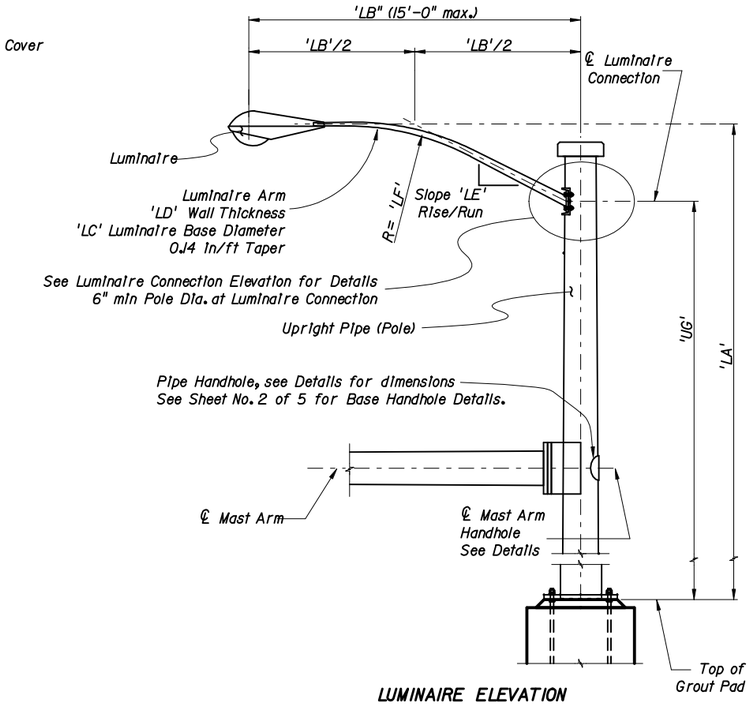

LUMINAIRE ELEVATION

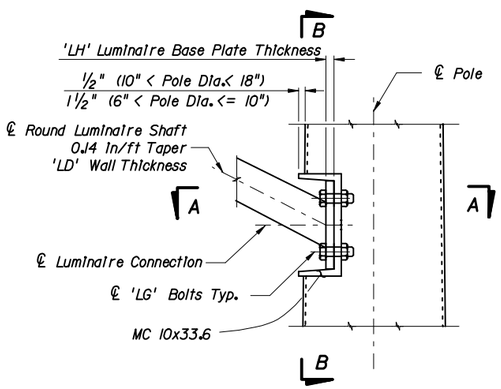

LUMINAIRE CONNECTION ELEVATION

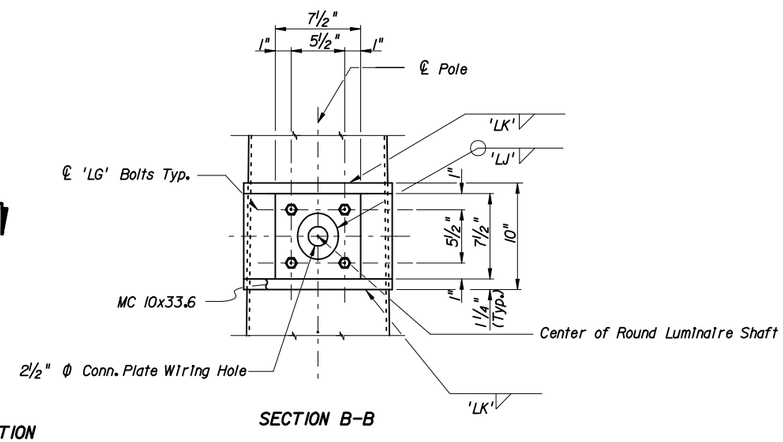

SECTION B-B

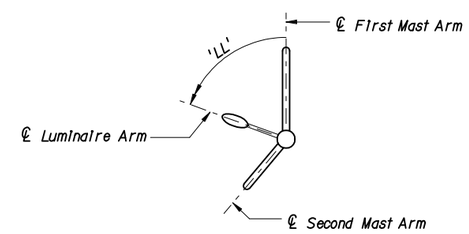

LUMINAIRE ORIENTATION

NOTE: The Pole shown on this sheet is a 12 sided section. However, sections with more than 12 sides and round sections are permitted provided outside diameter and wall thickness are not reduced

NOTE: The Fabricator may substitute a 1/2" thick bent plate with the same flange width, height, and length as the MC 10x33.6 Channel section.

NOTES:

1. Luminaire type and Luminaire to Arm Connection Details can be found elsewhere.
2. Align Luminaire Arm with single Mast Arm or first Arm of Double Mast Arm unless indicated otherwise in plans.

THE SEALED RECORD OF THIS STANDARD IS ON FILE IN THE ROADWAY DESIGN OFFICE.

INTERIM STANDARD IN ENGLISH UNITS APPLICABLE TO ROADWAY AND TRAFFIC DESIGN STANDARD BOOKLETS PUBLISHED IN EITHER ENGLISH OR METRIC UNITS.

STATE OF FLORIDA DEPARTMENT OF TRANSPORTATION

MAST ARM ASSEMBLIES

INTERIM STANDARD

THIS INDEX IS A SUPPLEMENT TO THE DESIGN STANDARDS, BOOKLET DATED JANUARY 2002.

APPROVED BY Robert E. Nichols Jr.
State Structures Design Engineer

REVISION NO.	SHEET NO.	INDEX NO.
	5 of 5	017745

TYPICAL LUMINAIRE ARM AND CONNECTION DETAILS

Date: 7-17-02