FINANCIAL PROJECT ID	STATE PROJ. NO.	SHEET NO.

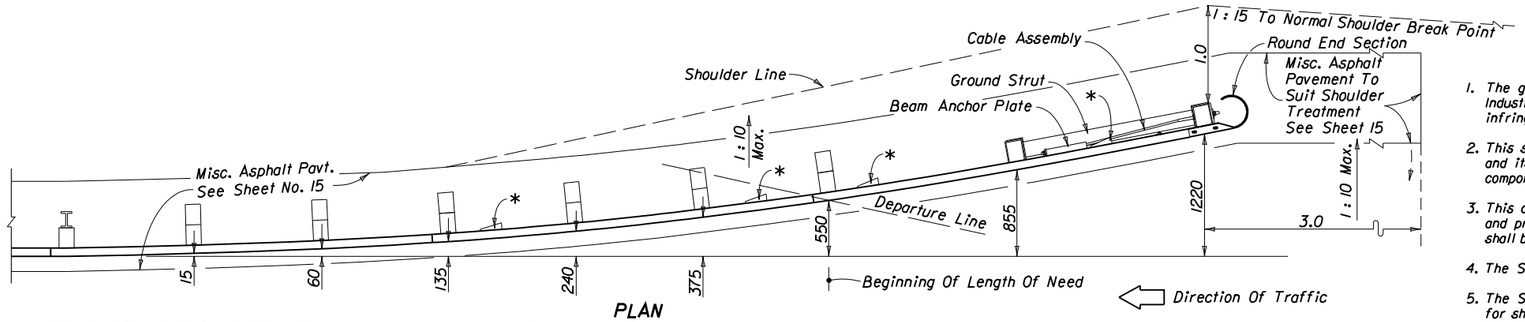

PLAN

*Slotguards (See Below Right)

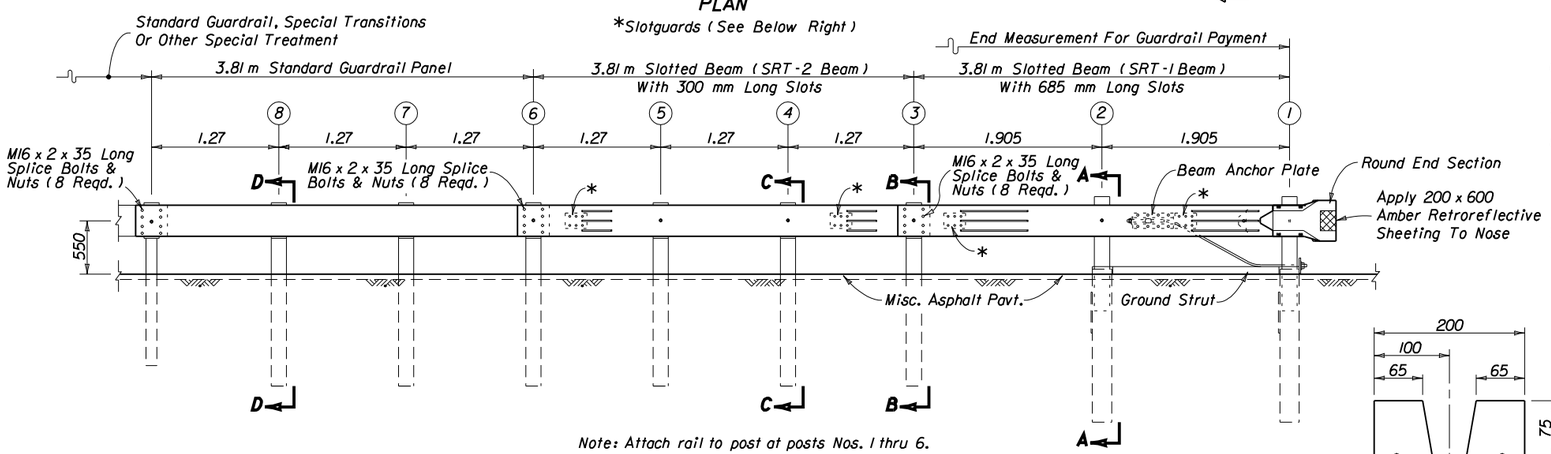

Note: Attach rail to post at posts Nos. 1 thru 6.

ELEVATION

** Extended Height When Furnished In Suppliers Assembly (1145 mm Long)

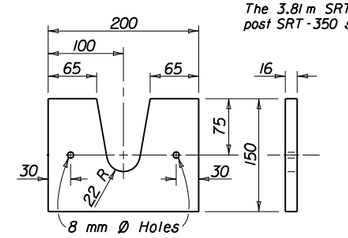

SLOTTED BEARING PLATE

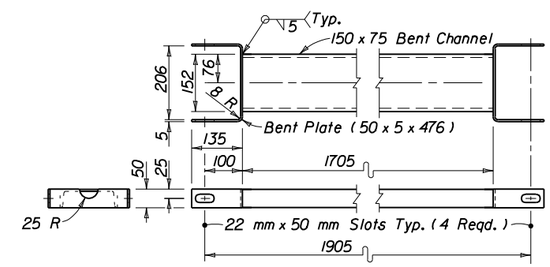

GROUND STRUT

SRT-350 NOTES

1. The guardrail end anchorage system represented on this drawing is a proprietary eight (8) post design by Trinity Industries, Inc. and marketed by Syro, Inc. under the trade name SRT-350, short for Slotted Rail Terminal. Any infringement on the rights of the designer shall be the sole responsibility of the user.
2. This standard drawing is produced by the Florida Department Of Transportation solely for use by the Department and its assignees. This standard drawing provides the general graphics and information necessary to field identify component parts of the SRT-350 and their incorporation into a whole system.
3. This drawing is sufficient for plan details for the SRT-350 when installed in connection with shoulder guardrail and precludes the requirement for shop drawing submittals unless called for elsewhere in the plans. The SRT-350 shall be assembled in accordance with the manufacturer's detailed drawings, procedures and specifications.
4. The SRT-350 can not be used in medians where horizontal clearance requires the use of a backrail.
5. The SRT-350 is suitable for all design speeds. The SRT-350 is intended for use as an approach end anchorage for shoulder guardrail. Its alignment is a parabolic flare from the normal guardrail alignment with an effective length of 11.43 m including two special slotted W-Beam panels and one standard W-Beam panel outside of any standard guardrail, guardrail transitions or other special treatments.
6. Posts 1 and 2 must be timber breakaway posts each with a 19 mm steel strap located approximately 25 mm below the post bolt and a steel foundation tube. CRT breakaway posts shall be used at all other locations within the system.
7. See the General Notes for galvanizing requirements of metallic component.
8. If the plans call for the SRT-350 at a specific location, substitutions with other end anchorage assemblies will not be permitted unless approved by the Engineer. If the plans call for end anchorage assembly 'flared' at a specific location, the contractor has the option to construct any FDOT approved flared assembly. Where a flared end anchorage is called for in the plans, any approved substitution with a parallel end anchorage will not be eligible for VECP consideration.
9. The SRT-350 shall be paid for under the contract unit price for Guardrail, End Anchorage Assembly (Flared), EA and shall be full compensation for furnishing and installing all components in accordance with the plans; the manufacturer's detail drawings, procedures and specifications and this Index.

SLOTTED BEAM NOTES

The 3.81 m SRT-1 and SRT-2 beams can be used for the repair or replacement of slotted rails in existing 9 or 10 post SRT-350 systems.

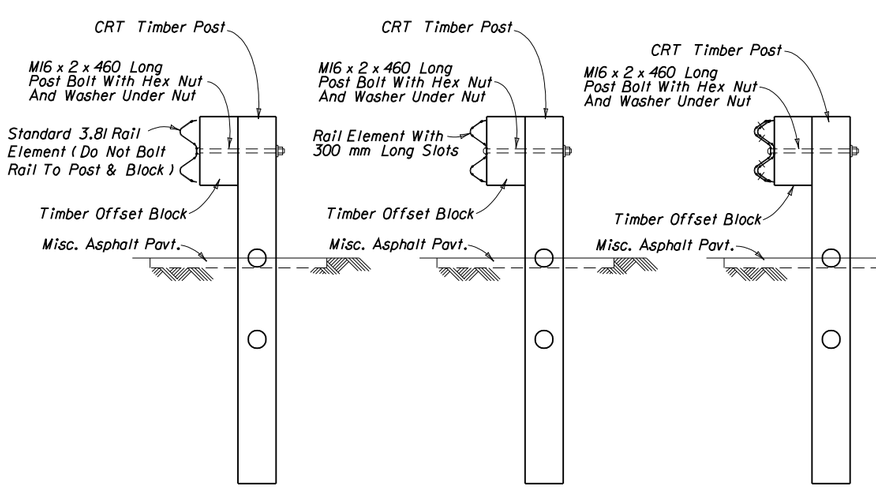

SECTION DD
POSTS NOS. 7 & 8

SECTION CC
POSTS NOS. 4 & 5

SECTION BB
POSTS NOS. 3 & 6

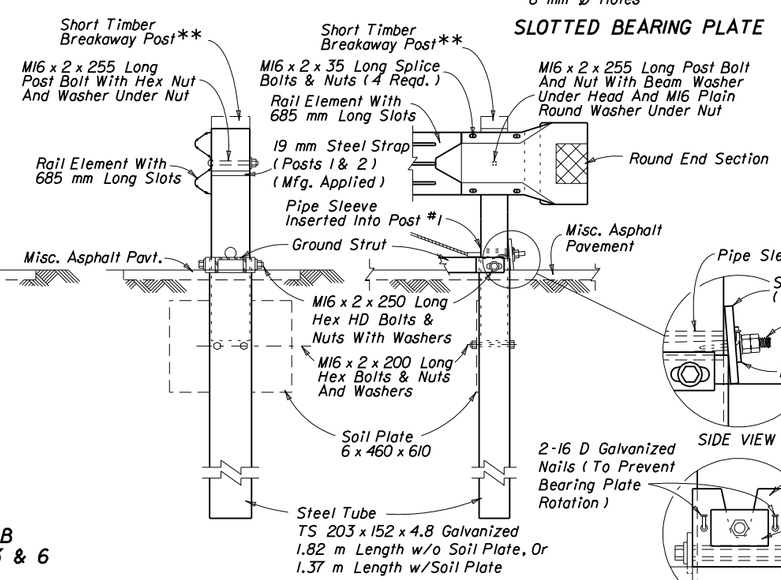

SECTION AA
POST NO. 2

POST NO. 1

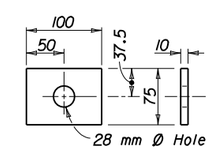

PLATE WASHER

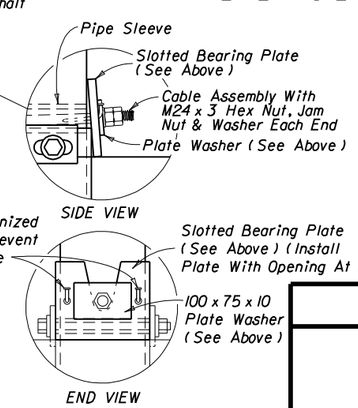

BEARING PLATE ORIENTATION

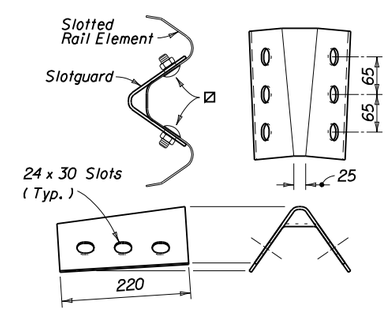

☒ Assemble With M16 x 2 x 35 mm Long Oval Shoulder Button Head Bolts And Nuts (6 Reqd.).

SLOTGUARD

THE SEALED RECORD OF THIS STANDARD IS ON FILE IN THE ROADWAY DESIGN OFFICE.

END ANCHORAGE ASSEMBLY TYPE SRT-350 (8 POST SYSTEM)

REVISED 5/5/00

STATE OF FLORIDA DEPARTMENT OF TRANSPORTATION
ROAD DESIGN

GUARDRAIL

INTERIM STANDARD

THIS SHEET REPLACES INDEX NO. 400 (SHEET 26 OF 31) OF THE METRIC ROADWAY AND TRAFFIC DESIGN STANDARDS, BOOKLET DATED JANUARY 2000.

APPROVED BY
STATE ROADWAY DESIGN ENGINEER

REVISION NO.	SHEET NO.	INDEX NO.
00	26 of 31	0400