FINANCIAL PROJECT ID	STATE PROJ. NO.	SHEET NO.

SPEED/CLASSIFICATION LOOP ASSEMBLY WITH AXLE SENSORS PLACEMENT DETAIL

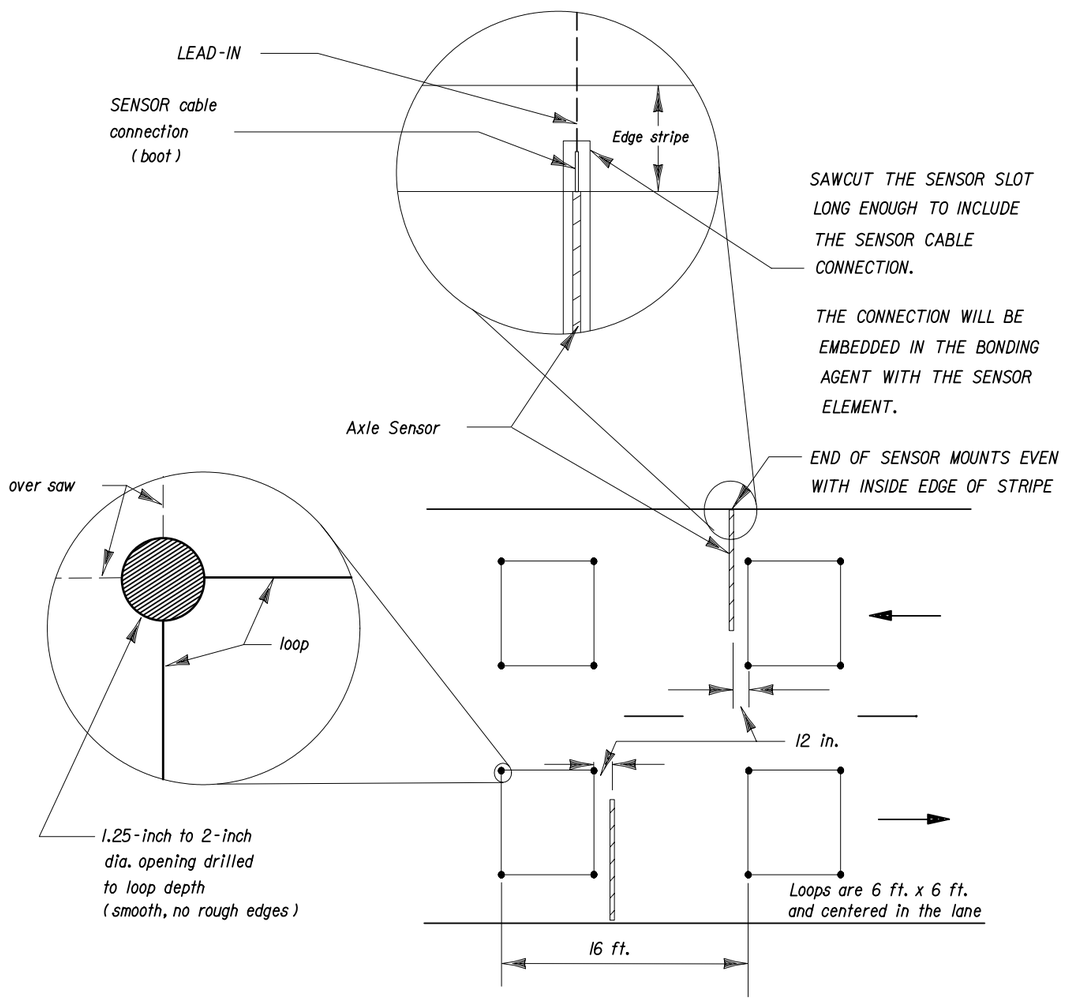

Note:

Loop slots shall be 0.25 inches wide (max.) by 1.5 inches to 2 inches deep. Four turns of #12 AWG, type XHHW stranded copper wire shall be placed in the slot. Backer rod shall be used to hold the loop wire in the bottom of the slot.

Loop leads shall be twisted at the rate of 10 to 12 twists per foot. The twisted pair shall extend to the pull box with three feet of spare length coiled in the pull box.

All leads (inductive loop & vehicle sensor) shall be identified according to the lane numbering convention shown on sheet 8 and 9.

TYPICAL UNENCAPSULATED CLASS II VEHICLE SENSOR

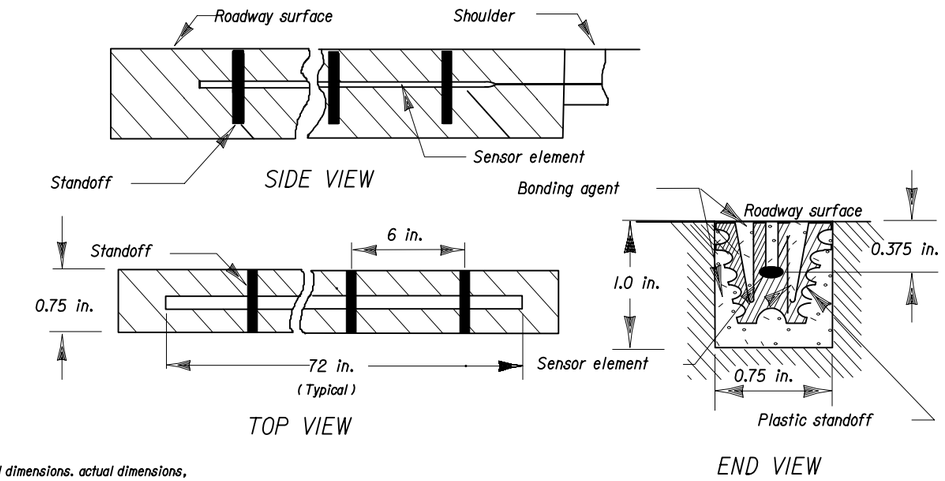

Note:
These are typical dimensions. actual dimensions, element cross-sections and standoffs may vary depending on manufacturer and model.

LOOP WIRE / HOMERUN CABLE SPLICES

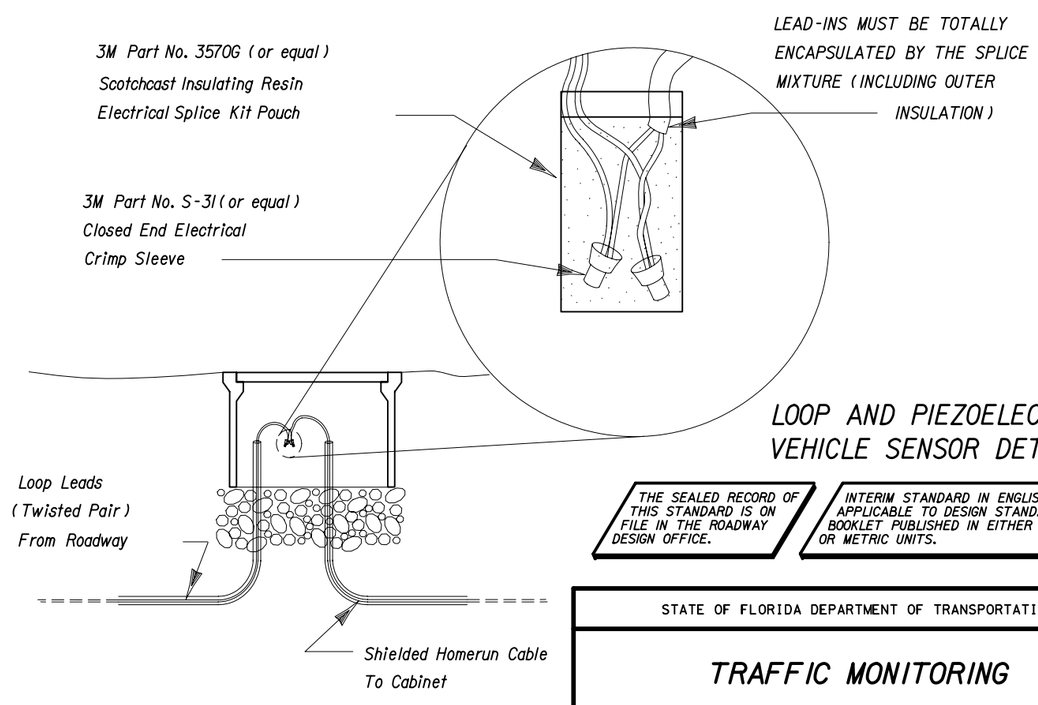

LOOP AND PIEZOELECTRIC VEHICLE SENSOR DETAIL

THE SEALED RECORD OF THIS STANDARD IS ON FILE IN THE ROADWAY DESIGN OFFICE.

INTERIM STANDARD IN ENGLISH UNITS APPLICABLE TO DESIGN STANDARDS BOOKLET PUBLISHED IN EITHER ENGLISH OR METRIC UNITS.

STATE OF FLORIDA DEPARTMENT OF TRANSPORTATION

TRAFFIC MONITORING

INTERIM STANDARD

THIS SHEET REPLACES EXISTING SHEET 5 OF 9 TO THE DESIGN STANDARDS, BOOKLET DATED JANUARY 2000.

APPROVED BY
Manager Traffic Data Section

REVISION NO.	SHEET NO.	INDEX NO.
04	5 of 9	017900

Revised: 01-01-05