FINANCIAL PROJECT ID	STATE PROJ. NO.	SHEET NO.

CONSTRUCTION REQUIREMENTS FOR PLACEMENT OF TENSAR® GEOGRIDS AND BACKFILL SOILS FOR TENSAR PRECAST CONCRETE WALLS
TENSAR MSE RETAINING WALL SYSTEM

1.0 MATERIALS

1.1 GEOGRID REINFORCEMENT SHALL BE TENSAR UNIAXIAL GEOGRID MANUFACTURED BY THE TENSAR CORPORATION, MORROW, GEORGIA.

1.2 BODKIN BARS SHALL BE 4 ½". x ¼" x 54" HDPE BARS MANUFACURED BY TENSAR CORPORATION, MORROW, GEORGIA.

1.3 GEOTEXTILE SHALL BE 6 OZ/SY NON-WOVEN NEEDLE PUNCHED POLYPROPYLENE GEOTEXTILE WITH MINIMUM PERMITIVITY OF $1.0sec^{-1}$.

1.4 BACKFILL MATERIAL SHALL BE IN ACCORDANCE WITH SECTION 548 OF STANDARD SPECIFICATIONS.

1.5 TENSAR EARTH TECHNOLOGIES, INC. SHALL PROVIDE TO THE CONTRACTOR THE FOLLOWING MATERIALS ONLY

- PRECAST CONCRETE FACING PANELS
- SOIL REINFORCING GEOGRIDS, ROLL FORM
- CONNECTION DEVICES
- BEARING PADS
- JOINT COVER FABRIC
- PRECAST COPING, PARAPET, OR TRAFFIC BARRIER (OPTIONAL)

2.0 TECHNICAL REQUIREMENTS

2.1 FILL MATERIALS SHALL FIRST BE PLACED FROM NEAR THE BACK FACE OF THE WALL AND THEN TOWARDS THE TAILS OF THE GEOGRID TO ENSURE TENSIONING.

2.2 FILL SHALL BE COMPACTED AS SPECIFIED IN SECTION 548 OF THE FDOT STANDARD SPECIFICATIONS FOR ROAD AND BRIDGE CONSTRUCTION.

2.3 AN APPROVED SET OF SHOP DRAWINGS AND CONTRACT SPECIFICATIONS SHALL BE ON-SITE AT ALL TIMES DURING CONSTRUCTION OF THE TENSAR RETAINING WALL.

3.0 GEOGRID PLACEMENT

3.1 TENSAR GEOGRID SHALL BE PLACED AT THE LOCATIONS AND ELEVATIONS SHOWN ON THE SHOP DRAWINGS.

3.2 TENSAR GEOGRID LENGTH SHALL BE AS SHOWN ON THE CONSTRUCTION DRAWINGS. REINFORCED FILL ZONE LENGTH IS MEASURED FROM THE FRONT FACE OF THE WALL, EXTENDING TO THE TAIL OF THE GEOGRIDS.

3.2.1 TENSAR GEOGRID REINFORCEMENT SHALL BE CONTINUOUS THROUGHOUT THEIR EMBEDMENT LENGTH(S). THE BODKIN CONNECTION SHALL NOT BE UTILIZED FOR SPLICING GEOGRID UNLESS APPROVED BY THE ENGINEER PRIOR TO CONSTRUCTION.

3.2.2 IF PRE-APPROVED, TENSAR UNIAXIAL GEOGRIDS MAY BE SPLICED UTILIZING THE BODKIN CONNECTION DETAIL. NO MORE THAN ONE SPLICE SHALL BE ALLOWED IN ANY ONE LENGTH OF REINFORCEMENT AND NO SPLICE SHALL BE ALLOWED FOR GEOGRIDS LESS THAN 6 FEET IN LENGTH (EACH). NO SPLICE SHALL BE PLACED HORIZONTALLY OR VERTICALLY ADJACENT TO ANOTHER SPLICE.

3.3 PRIOR TO PLACING FILL ON THE GEOGRID, THE GEOGRID SHALL BE CONNECTED TO THE PANELS PER THE PANEL CONNECTION DETAIL (SEE TYPICAL DETAILS). IMMEDIATELY PRIOR TO AND DURING THE INITIAL PLACEMENT OF FILL ON EACH SECTION OF GEOGRID, THE GEOGRID SHALL BE PULLED TAUT TO REMOVE SLACK IN THE GEOGRID AND CONNECTION.

3.4 TRACKED CONSTRUCTION EQUIPMENT SHALL NOT BE OPERATED DIRECTLY ON THE GEOGRID. A MINIMUM BACKFILL THICKNESS OF 6 INCHES IS REQUIRED FOR OPERATION OF TRACKED VEHICLES OVER THE GEOGRID. TURNING OF TRACKED VEHICLES SHOULD BE KEPT TO A MINIMUM TO PREVENT TRACKS FROM DISPLACING THE FILL AND/OR THE GEOGRID.

3.5 RUBBER-TIRED VEHICLES MAY PASS OVER THE GEOGRID REINFORCEMENT AT SLOW SPEEDS, LESS THAN 10 MPH. SUDDEN BRAKING AND SHARP TURNING SHALL BE AVOIDED.

3.6 TENSAR UNIAXIAL GEOGRID SHALL BE ROLLED OUT WITH THE LONG AXIS OF THE APERTURES (MACHINE DIRECTION) PERPENDICULAR TO THE WALL FACE.

4.0 CHANGES TO GEOGRID LAYOUT OR PLACEMENT

4.1 NO CHANGES TO THE TENSAR GEOGRID LAYOUT, INCLUDING, BUT NOT LIMITED TO, LENGTH, GEOGRID TYPE, OR ELEVATION SHALL BE MADE WITHOUT THE EXPRESSED PRIOR WRITTEN CONSENT OF TENSAR EARTH TECHNOLOGIES, INC.

5.0 DRAINAGE

5.1 AT THE END OF EACH WORK DAY, THE BACKFILL SURFACE SHALL BE GRADED AWAY FROM THE WALL FACE AT A MINIMUM OF 2 PERCENT SLOPE AND A TEMPORARY SOIL BERM SHALL BE CONSTRUCTED NEAR THE WALL CREST TO PREVENT SURFACE WATER RUNOFF FROM OVERTOPPING THE WALL.

5.2 AT THE END OF EACH WORKDAY, BACKFILL SURFACE SHALL BE COMPACTED WITH A SMOOTH WHEEL ROLLER TO MINIMIZE PONDING OF WATER AND SATURATION OF THE BACKFILL.

5.3 THE TENSAR REINFORCED WALL HAS BEEN DESIGNED ON THE ASSUMPTION THAT THE REINFORCED BACKFILL MATERIAL SHALL BE FREE OF SUBSURFACE SEEPAGE. PERMANENT SUBSURFACE WATER (SEEPAGE) COLLECTION AND DIVERSION SHALL BE THE RESPONSIBILITY OF OTHERS.

5.4 THE CONTRACTOR SHALL BE RESPONSIBLE FOR DRAINAGE CONTROL AS NEEDED DURING CONSTRUCTION.

6.0 DESIGN PARAMETERS

6.1 SOIL PARAMETERS

SEE WALL CONTROL DRAWINGS FOR SOIL CHARACTERISTICS OF FOUNDATION MATERIAL TO BE USED IN THE DESIGN OF THE WALL SYSTEM.

6.1.1 THE CONTRACTOR SHALL VERIFY THAT THE SOIL MATERIALS COMPLY WITH THE DESIGN PARAMETERS AS STATED IN THE CONTROL DRAWINGS.

6.2 DESIGN:

THE DESIGN CONTAINED ON THESE DRAWNGS IS BASED ON INFORMATION PROVIDED BY OTHERS. ON THE BASIS OF THIS INFORMATION, TENSAR EARTH TECHNOLOGIES, INC. IS RESPONSIBLE FOR INTERNAL STABILITY OF THE STRUCTURE ONLY. TENSAR EARTH TECHNOLOGIES, INC. ACCEPTS NO LIABILITY OR RESPONSIBILITY FOR EXTERNAL STABILITY, GLOBAL STABILITY AND FOUNDATION.

6.2.1 FACTORS OF SAFETY:

6.2.1.1 INTERNAL STABILITY:

MAXIMUM GEOGRID DESIGN STRENGTH	= 0.19 ULT
MINIMUM FACTOR OF SAFETY FOR GEOGRID PULLOUT	= 1.5
MINIMUM FACTOR OF SAFETY FOR SLIDING AT LOWEST GEOGRID	= 1.5
SOIL-GEOGRID INTERACTION COEFFICIENT FOR UXMSE GEOGRID	= 0.55 - 0.8
PERCENT COVERAGE OF GEOGRID	= 89%

6.2.1.2 SLIDING AND OVERTURNING:

MINIMUM FACTOR OF SAFETY FOR SLIDING AT BASE	= 1.5
MINIMUM FACTOR OF SAFETY FOR OVERTURNING	= 2.0

SLIDING AND OVERTURNING ARE THE RESPONSIBILITY OF OTHERS. THE EVALUATION OF SLIDING AND OVERTURNING AND THEIR EFFECT ON THE TENSAR RETAINING WALL SYSTEM SHALL BE THE RESPONSIBILITY OF OTHERS. TENSAR EARTH TECHNOLOGIES, INC. ACCEPTS NO LIABILITY OR RESPONSIBILITY FOR SLIDING OR OVERTURNING.

6.2.1.3 GLOBAL STABILITY:

GLOBAL STABILITY INCLUDING SLOPE STABILITY IS THE RESPONSIBILITY OF OTHERS. THE EVALUATION OF GLOBAL STABILITY AND ITS EFFECT ON THE TENSAR RETAINING WALL SYSTEM SHALL BE THE RESPONSIBILITY OF OTHERS. TENSAR EARTH TECHNOLOGIES, INC. ACCEPTS NO LIABILITY OR RESPONSIBILITY FOR GLOBAL STABILITY.

6.2.1.4 FOUNDATION:

FOUNDATION INCLUDING FOUNDATION PREPARATION AND THE EVALUATION OF BEARING CAPACITY, TOTAL AND DIFFERENTIAL SETTLEMENT AND THEIR EFFECT ON THE TENSAR RETAINING WALL SYSTEM SHALL BE THE RESPONSIBILITY OF OTHERS. TENSAR EARTH TECHNOLOGIES, INC. ACCEPTS NO LIABILITY OR RESPONSIBILITY FOR FOUNDATION.

MINIMUM FACTOR OF SAFETY FOR BEARING = 2.5

6.3 SURCHARGE LOADING = 250 psf

6.4 HYDROSTATIC DESIGN = NONE

6.5 SEISMIC DESIGN = NONE

7.0 SPECIAL PROVISIONS

7.1 WALL ELEVATION VIEWS AND LOCATIONS AND GEOMETRY OF EXISTING STRUCTURES MUST BE VERIFIED BY THE CONTRACTOR PRIOR TO CONSTRUCTION.

7.2 TENSAR EARTH TECHNOLOGIES, INC. ASSUMES NO LIABILITY FOR INTERPRETATION OR VERIFICATION OF SUBSURFACE CONDITIONS, SUITABILITY OF SOIL DESIGN PARAMETERS AND INTERPRETATION OF SUBSURFACE OF GROUND WATER CONDITIONS.

7.3 THE CONTRACTOR IS RESPOSIBLE FOR REVIEWING AND VERIFYING THAT THE ACTUAL SITE CONDITIONS ARE AS DESCRIBED IN SECTION 6.0 PRIOR TO AND DURING CONSTRUCTION. THE OWNER OR OWNER'S REPRESENTATIVE SHALL BE ON-SITE TO ASSURE THE PROVISIONS IN THE CONSTRUCTION NOTES ARE FOLLOWED.

7.4 THE SOIL DESIGN PARAMETERS STATED IN SECTION 6.0 SHALL BE VERIFIED BY THE CONTRACTOR PRIOR TO CONSTRUCTION.

7.5 ANY REVISIONS TO DESIGN PARAMETERS STATED IN SECTION 6.0 OR STRUCTURE GEOMETRY SHALL REQUIRE DESIGN MODIFICATIONS PRIOR TO PROCEEDING WITH CONSTRUCTION.

7.6 SEE CONTROL DRAWINGS, FDOT STANDARD SPECIFICATIONS AND PROJECT SPECIAL PROVISIONS FOR ADDITIONAL REQUIRED MATERIALS AND METHODS.

7.7 A COPY OF THE TENSAR EARTH TECHNOLOGIES, INC. "ARES RETAINING WALL SYSTEM INSTALLATION GUIDELINES" SHALL BE ON-SITE AT ALL TIMES DURING WALL CONSTRUCTION.

THIS SYSTEM MAY BE USED IN ALL ENVIRONMENTS

THIS DESIGN IS BASED UPON SPECIFIC PROPERTIES OF TENSAR PRODUCTS (GEOGRIDS, DRAINAGE COMPOSITES AND EROSION MEDIA), WHICH ARE PROPRIETARY TO THE TENSAR CORPORATION 1210 CITIZENS PARKWAY, MORROW GA. 30260. ANY SUBSTITUTION OF THE SPECIFIED PRODUCTS WILL INVALIDATE THIS DESIGN. THIS DRAWING IS BEING FURNISHED FOR USE ON THIS SPECIFIC PROJECT ONLY. ANY PARTY ACCEPTING THIS DOCUMENT DOES SO IN CONFIDENCE AND AGREES THAT IT SHALL NOT BE DUPLICATED WHOLE OR IN PART, NOR DISCLOSED TO OTHERS, WITHOUT THE CONSENT OF TENSAR EARTH TECHNOLOGIES, INC.

©2003, TENSAR EARTH TECHNOLOGIES, INC.

Tensar •

Tensar Earth Technologies, Inc.
5883 Glenridge Drive, Ste 200
Atlanta, Georgia 30328
(404) 250-1290

DATE : 01-01-05

INTERIM STANDARD IN ENGLISH UNITS APPLICABLE TO DESIGN STANDARDS BOOKLET PUBLISHED IN EITHER ENGLISH OR METRIC UNITS.

STATE OF FLORIDA DEPARTMENT OF TRANSPORTATION

RETAINING WALL SYSTEMS
TENSAR EARTH TECHNOLOGIES
MSE RETAINING WALL

INTERIM STANDARD

SHEET NOS. 1 - 16 OF 16 ARE A REPLACEMENT OF INDEX NO. 5025 OF THE DESIGN STANDARDS BOOKLET DATED JANUARY 2000.

APPROVED BY
William N. Nickas, P.E.
State Structures Design Engineer

REVISION NO.	SHEET NO.	INDEX NO.
04	1 of 16	05025

FINANCIAL PROJECT ID	STATE PROJ. NO.	SHEET NO.

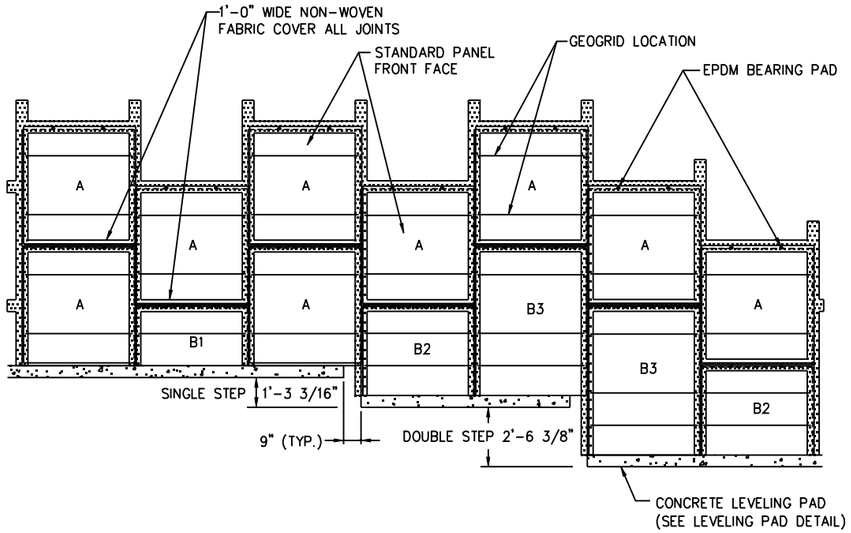

TYPICAL LEVELING PAD STEP AND FABRIC COVERAGE DETAIL

NOT TO SCALE

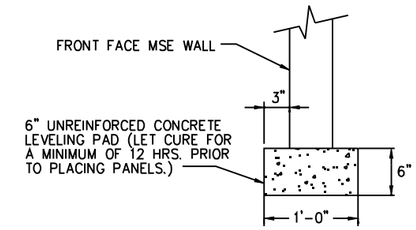

LEVELING PAD DETAIL

NOT TO SCALE

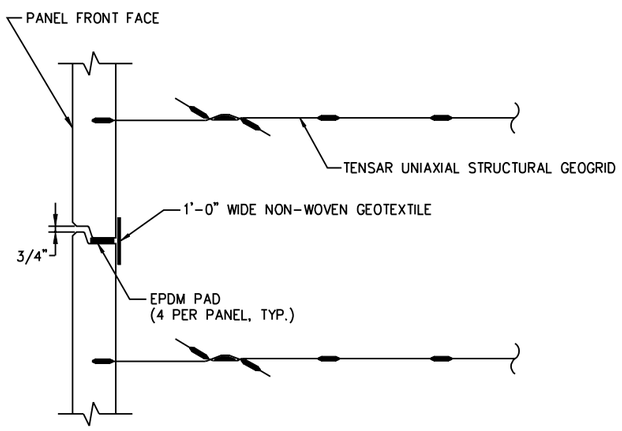

HORIZONTAL JOINT DETAIL

NOT TO SCALE

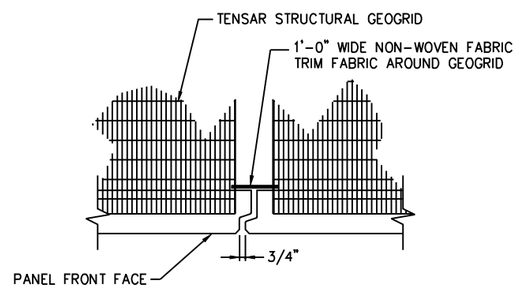

VERTICAL JOINT DETAIL

NOT TO SCALE

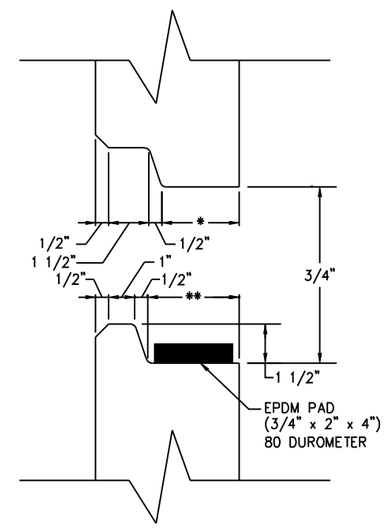

PANEL JOINT DETAIL

NOT TO SCALE

* - 3" FOR MODERATELY & SLIGHTLY AGGRESSIVE ENVIRONMENT
- 4 3/8" FOR EXTREMELY AGGRESSIVE ENVIRONMENT

** - 3 1/2" FOR MODERATELY & SLIGHTLY AGGRESSIVE ENVIRONMENT
- 4 7/8" FOR EXTREMELY AGGRESSIVE ENVIRONMENT

THIS SYSTEM MAY BE USED IN ALL ENVIRONMENTS

THIS DESIGN IS BASED UPON SPECIFIC PROPERTIES OF TENSAR PRODUCTS (GEOGRIDS, DRAINAGE COMPOSITES AND EROSION MEDIA), WHICH ARE PROPRIETARY TO THE TENSAR CORPORATION 1210 CITIZENS PARKWAY, MORROW GA. 30260. ANY SUBSTITUTION OF THE SPECIFIED PRODUCTS WILL INVALIDATE THIS DESIGN. THIS DRAWING IS BEING FURNISHED FOR USE ON THIS SPECIFIC PROJECT ONLY. ANY PARTY ACCEPTING THIS DOCUMENT DOES SO IN CONFIDENCE AND AGREES THAT IT SHALL NOT BE DUPLICATED WHOLE OR IN PART, NOR DISCLOSED TO OTHERS, WITHOUT THE CONSENT OF TENSAR EARTH TECHNOLOGIES, INC.

©2003, TENSAR EARTH TECHNOLOGIES, INC.

Tensar

Tensar Earth Technologies, Inc.
5883 Glenridge Drive, Ste 200
Atlanta, Georgia 30328
(404) 250-1290

DATE : 01-01-05

INTERIM STANDARD IN ENGLISH UNITS APPLICABLE TO DESIGN STANDARDS BOOKLET PUBLISHED IN EITHER ENGLISH OR METRIC UNITS.

STATE OF FLORIDA DEPARTMENT OF TRANSPORTATION

RETAINING WALL SYSTEMS TENSAR EARTH TECHNOLOGIES MSE RETAINING WALL

INTERIM STANDARD

SHEET NOS. 1 - 16 OF 16 ARE A REPLACEMENT OF INDEX NO. 5025 OF THE DESIGN STANDARDS BOOKLET DATED JANUARY 2000.

APPROVED BY
William N. Nickas, P.E.
State Structures Design Engineer

REVISION NO.	SHEET NO.	INDEX NO.
04	2 of 16	05025

FINANCIAL PROJECT ID	STATE PROJ. NO.	SHEET NO.

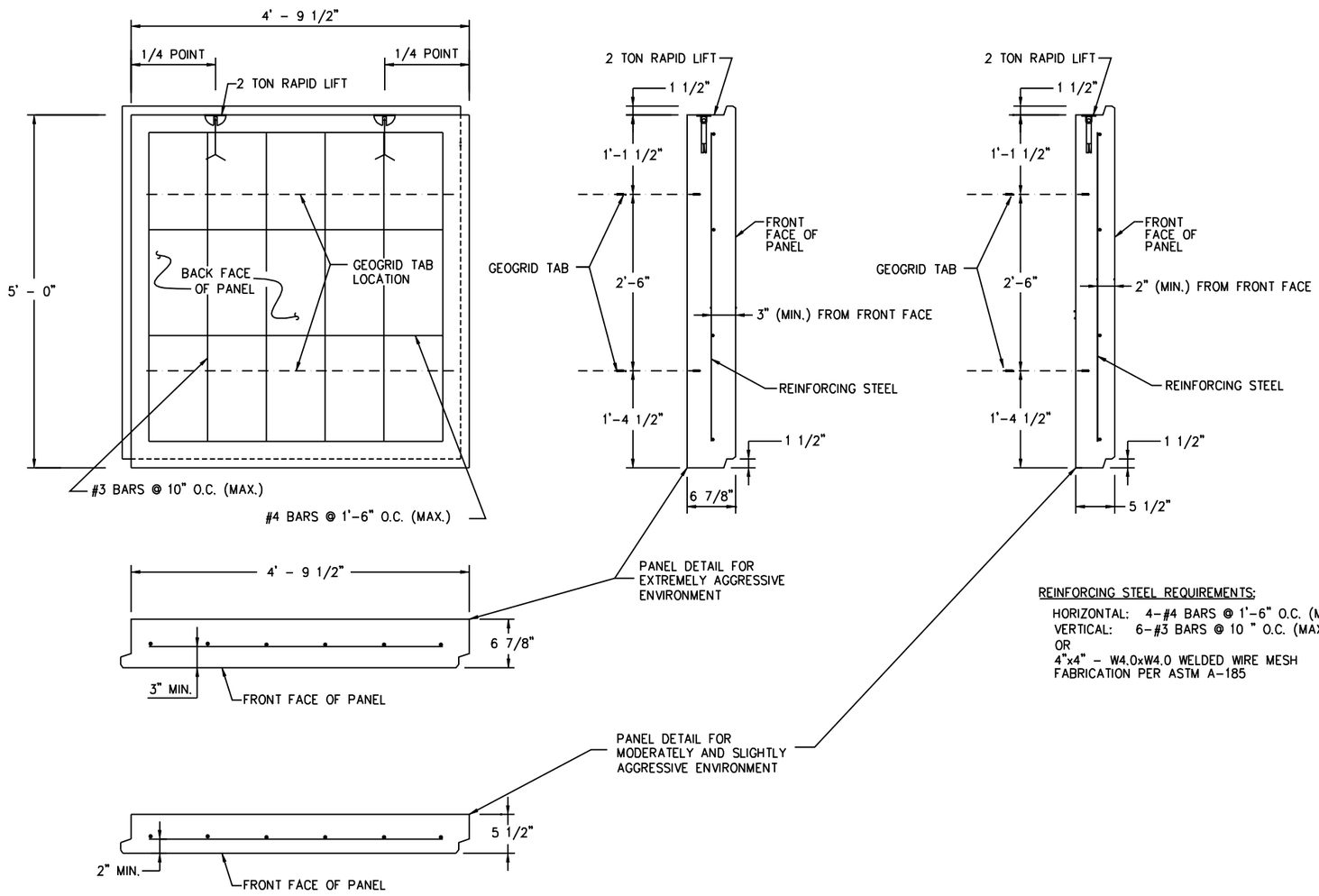

REINFORCING STEEL REQUIREMENTS:

HORIZONTAL: 4-#4 BARS @ 1'-6" O.C. (MAX.)
VERTICAL: 6-#3 BARS @ 10 " O.C. (MAX.)
OR
4"x4" - W4.0xW4.0 WELDED WIRE MESH
FABRICATION PER ASTM A-185

TYPICAL PANEL DETAILS - STANDARD A PANEL SHOWING BAR REINFORCING

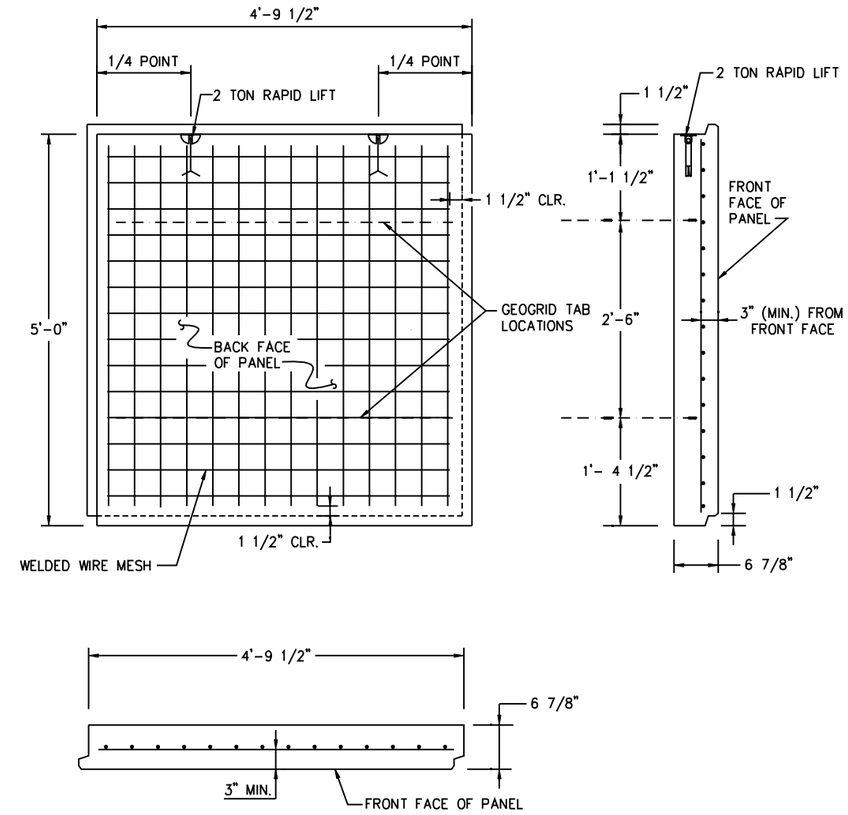

TYPICAL PANEL DETAILS - STANDARD A PANEL SHOWING WELDED WIRE MESH REINFORCING

EXTREMELY AGRESSIVE PANEL SHOWN, MODERATELY AND SLIGHTLY AGRESSIVE PANEL SIMILAR

THIS SYSTEM MAY BE USED IN ALL ENVIRONMENTS

THIS DESIGN IS BASED UPON SPECIFIC PROPERTIES OF TENSAR PRODUCTS (GEOGRIDS, DRAINAGE COMPOSITES AND EROSION MEDIA), WHICH ARE PROPRIETARY TO THE TENSAR CORPORATION 1210 CITIZENS PARKWAY, MORROW GA. 30260. ANY SUBSTITUTION OF THE SPECIFIED PRODUCTS WILL INVALIDATE THIS DESIGN. THIS DRAWING IS BEING FURNISHED FOR USE ON THIS SPECIFIC PROJECT ONLY. ANY PARTY ACCEPTING THIS DOCUMENT DOES SO IN CONFIDENCE AND AGREES THAT IT SHALL NOT BE DUPLICATED WHOLE OR IN PART, NOR DISCLOSED TO OTHERS, WITHOUT THE CONSENT OF TENSAR EARTH TECHNOLOGIES, INC.

©2003, TENSAR EARTH TECHNOLOGIES, INC.

Tensar

Tensar Earth Technologies, Inc.
5883 Glenridge Drive, Ste 200
Atlanta, Georgia 30328
(404) 250-1290

DATE : 01-01-05

INTERIM STANDARD IN ENGLISH UNITS APPLICABLE TO DESIGN STANDARDS BOOKLET PUBLISHED IN EITHER ENGLISH OR METRIC UNITS.

STATE OF FLORIDA DEPARTMENT OF TRANSPORTATION

RETAINING WALL SYSTEMS TENSAR EARTH TECHNOLOGIES MSE RETAINING WALL

INTERIM STANDARD

SHEET NOS. 1 - 16 OF 16 ARE A REPLACEMENT OF INDEX NO. 5025 OF THE DESIGN STANDARDS BOOKLET DATED JANUARY 2000.

APPROVED BY
William N. Nickas, P.E.
State Structures Design Engineer

REVISION NO.	SHEET NO.	INDEX NO.
04	3 of 16	05025

FINANCIAL PROJECT ID	STATE PROJ. NO.	SHEET NO.

TO FORM A PANEL BODKIN CONNECTION FOR CONNECTING TO FACING PANEL:

1. BEND THE LAST APERTURE OF REINFORCING GEOGRID AS SHOWN.

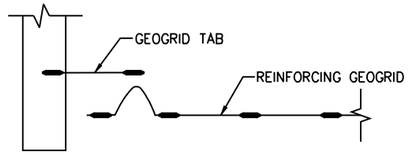

2. PASS THE RIBS OF THE BENT APERTURES THROUGH THE RIBS OF THE GEOGRID TAB AND INSERT THE BODKIN BAR INTO THE SPACE BETWEEN THE TWO GEOGRID LAYERS.

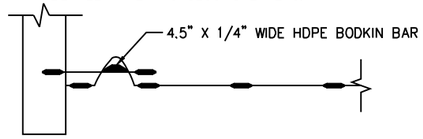

3. PULL REINFORCING GEOGRID TAUT TO TENSION CONNECTION.

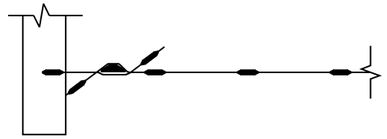

PANEL BODKIN CONNECTION
NOT TO SCALE

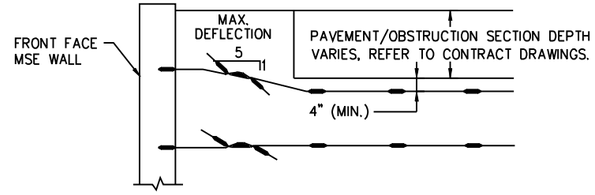

HORIZONTAL PAVEMENT STRUCTURE

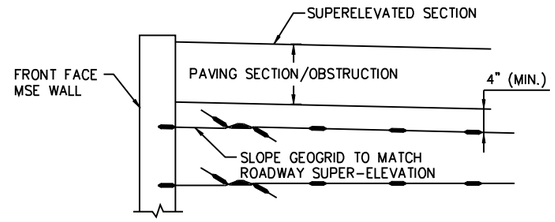

SUPER-ELEVATED PAVEMENT/OBSTRUCTION STRUCTURE

NOTE:
CONTRACTOR IS RESPONSIBLE TO COORDINATE THE PLACEMENT OF THE GEOGRID TO AVOID CONFLICT WITH THE CONTRACT PAVEMENT/OBSTRUCTION SECTION. GEOGRID MUST BE SEPARATED FROM THE PAVEMENT/OBSTRUCTION SECTION BY A MINIMUM OF 4".

GEOGRID PLACEMENT AT PAVEMENT/OBSTRUCTION SECTION
NOT TO SCALE

TO FORM A BODKIN CONNECTION FOR SPLICING GEOGRID:

1. BEND THE LAST APERTURE OF ONE PIECE OF GEOGRID AS SHOWN.

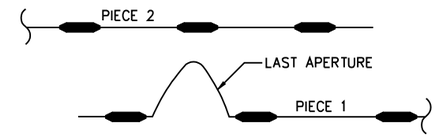

2. PASS THE RIBS OF THE BENT APERTURES THROUGH THE RIBS OF THE SECOND PIECE OF GEOGRID AND INSERT THE BODKIN BAR INTO THE SPACE BETWEEN THE TWO GEOGRID LAYERS.

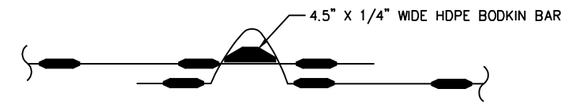

3. PULL GEOGRID TAUT TO TENSION CONNECTION.

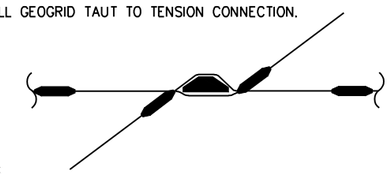

NOTE:
IT IS RECOMMENDED THAT THE SPLICED GEOGRID PIECE ON EITHER SIDE OF THE BODKIN CONNECTION BE AT LEAST 6 FEET LONG UNLESS THE GEOGRID TERMINATES IN A FIXED CONNECTION

GEOGRID SPLICE BODKIN CONNECTION
NOT TO SCALE

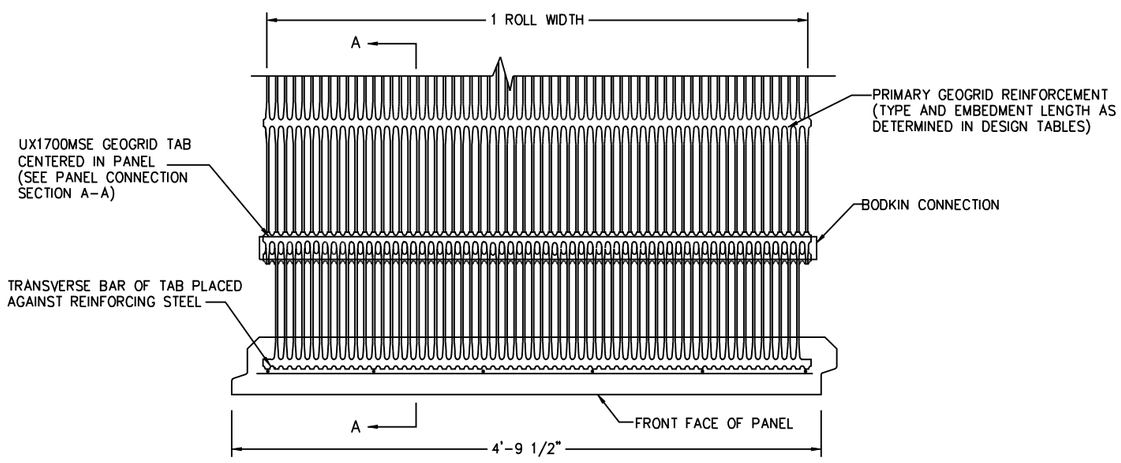

CONNECTION DETAIL PLAN VIEW (89% COVERAGE)
MAXIMUM COVERAGE
NOT TO SCALE

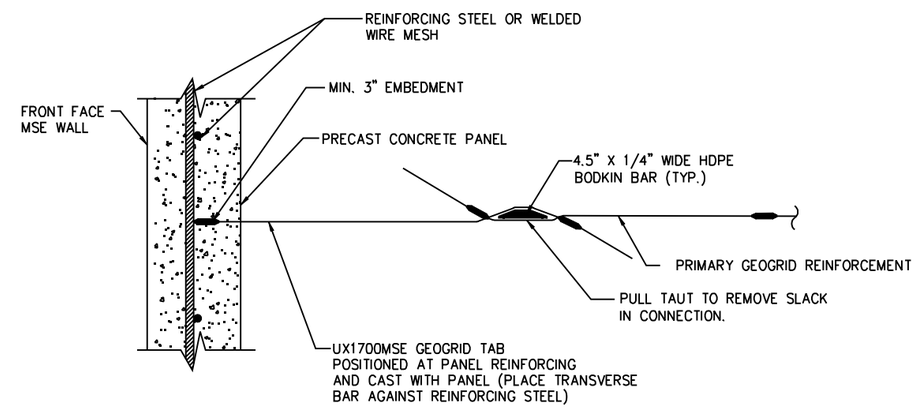

PANEL CONNECTION SECTION (A-A)
NOT TO SCALE

THIS SYSTEM MAY BE USED IN ALL ENVIRONMENTS

THIS DESIGN IS BASED UPON SPECIFIC PROPERTIES OF TENSAR PRODUCTS (GEOGRIDS, DRAINAGE COMPOSITES AND EROSION MEDIA), WHICH ARE PROPRIETARY TO THE TENSAR CORPORATION 1210 CITIZENS PARKWAY, MORROW GA. 30260. ANY SUBSTITUTION OF THE SPECIFIED PRODUCTS WILL INVALIDATE THIS DESIGN. THIS DRAWING IS BEING FURNISHED FOR USE ON THIS SPECIFIC PROJECT ONLY. ANY PARTY ACCEPTING THIS DOCUMENT DOES SO IN CONFIDENCE AND AGREES THAT IT SHALL NOT BE DUPLICATED WHOLE OR IN PART, NOR DISCLOSED TO OTHERS, WITHOUT THE CONSENT OF TENSAR EARTH TECHNOLOGIES, INC.

©2003, TENSAR EARTH TECHNOLOGIES, INC.

Tensar

Tensar Earth Technologies, Inc.
5883 Glenridge Drive, Ste 200
Atlanta, Georgia 30328
(404) 250-1290

DATE : 01-01-05

INTERIM STANDARD IN ENGLISH UNITS APPLICABLE TO DESIGN STANDARDS BOOKLET PUBLISHED IN EITHER ENGLISH OR METRIC UNITS.

STATE OF FLORIDA DEPARTMENT OF TRANSPORTATION

RETAINING WALL SYSTEMS
TENSAR EARTH TECHNOLOGIES
MSE RETAINING WALL

INTERIM STANDARD

SHEET NOS. 1 - 16 OF 16 ARE A REPLACEMENT OF INDEX NO. 5025 OF THE DESIGN STANDARDS BOOKLET DATED JANUARY 2000.

APPROVED BY
William N. Nickas, P.E.
State Structures Design Engineer

REVISION NO.	SHEET NO.	INDEX NO.
04	4 of 16	05025

FINANCIAL PROJECT ID	STATE PROJ. NO.	SHEET NO.

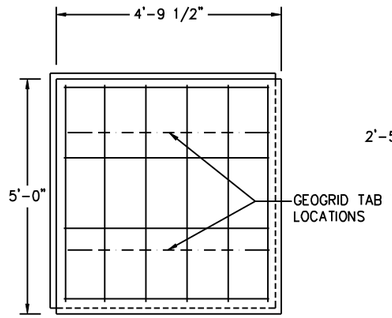

STANDARD A PANEL

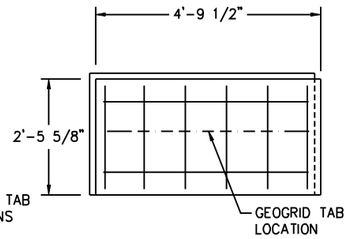

STANDARD B1 PANEL

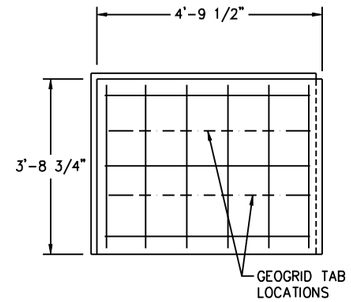

STANDARD B2 PANEL

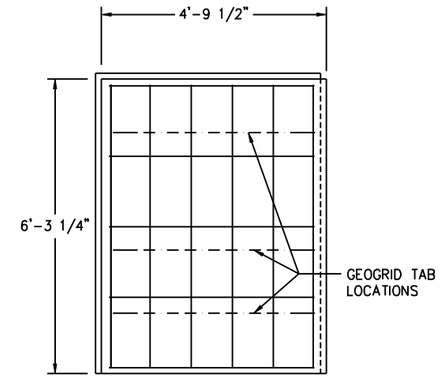

STANDARD B3 PANEL

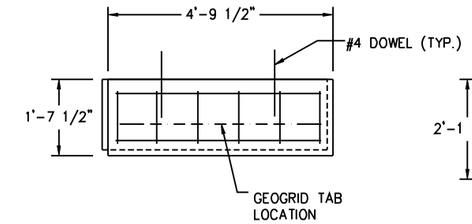

STANDARD T18 PANEL

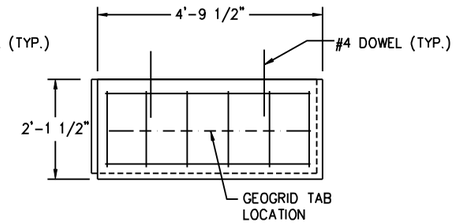

STANDARD T24 PANEL

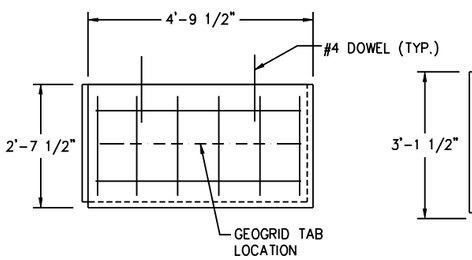

STANDARD T30 PANEL

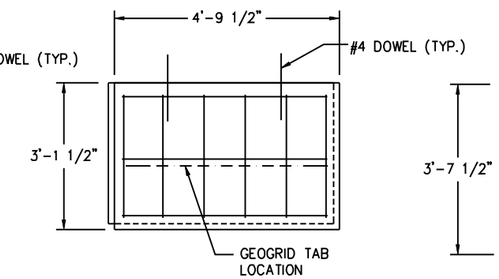

STANDARD T36 PANEL

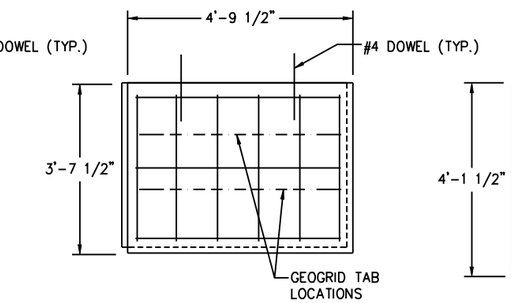

STANDARD T42 PANEL

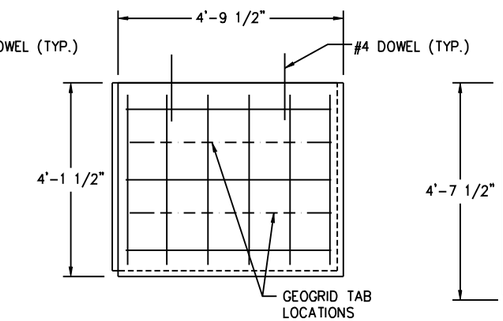

STANDARD T48 PANEL

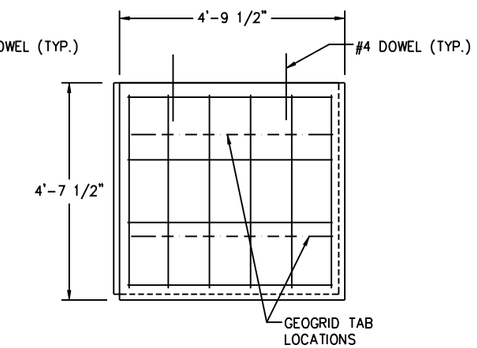

STANDARD T54 PANEL

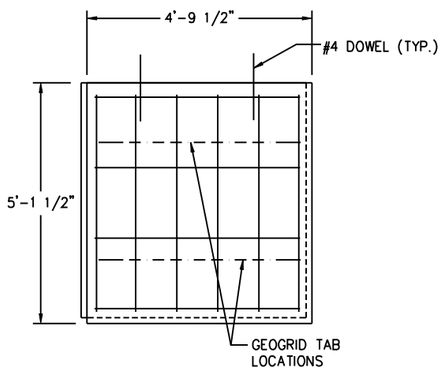

STANDARD T60 PANEL

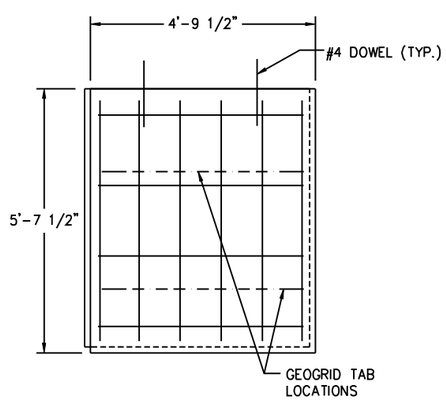

STANDARD T66 PANEL

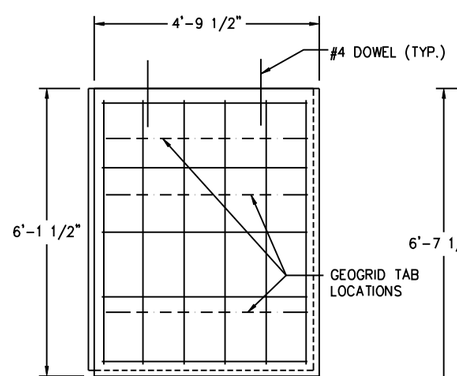

STANDARD T72 PANEL

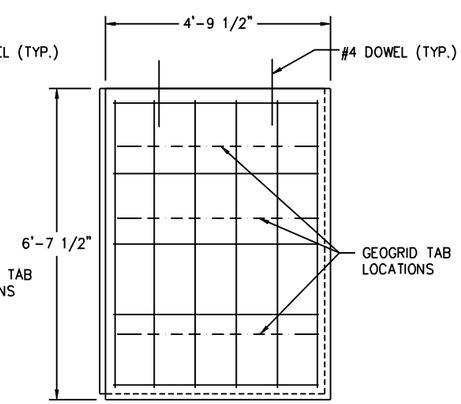

STANDARD T78 PANEL

ALL PANELS ARE SHOWN BACK FACE VIEW

REINFORCING STEEL REQUIREMENTS
STANDARD STEEL LAYOUT
HORIZONTAL: #4 BARS (60 KSI) @ 1' - 6"O.C. (MAX.)
VERTICAL: #3 BARS (60 KSI) @ 10" O.C. (MAX.)
OR
STANDARD WWF LAYOUT
4X4-W4.0XW4.0 WELDED WIRE MESH
FABRICATION PER ASTM A-185

NOTE: ALL TOP PANELS WILL HAVE 2 #4 DOWELS CAST 6" INTO THE TOP OF EACH PANEL

THIS SYSTEM MAY BE USED IN ALL ENVIRONMENTS

THIS DESIGN IS BASED UPON SPECIFIC PROPERTIES OF TENSAR PRODUCTS (GEOGRIDS, DRAINAGE COMPOSITES AND EROSION MEDIA), WHICH ARE PROPRIETARY TO THE TENSAR CORPORATION 1210 CITIZENS PARKWAY, MORROW GA. 30260. ANY SUBSTITUTION OF THE SPECIFIED PRODUCTS WILL INVALIDATE THIS DESIGN. THIS DRAWING IS BEING FURNISHED FOR USE ON THIS SPECIFIC PROJECT ONLY. ANY PARTY ACCEPTING THIS DOCUMENT DOES SO IN CONFIDENCE AND AGREES THAT IT SHALL NOT BE DUPLICATED WHOLE OR IN PART, NOR DISCLOSED TO OTHERS, WITHOUT THE CONSENT OF TENSAR EARTH TECHNOLOGIES, INC.

©2003, TENSAR EARTH TECHNOLOGIES, INC.

Tensar

Tensar Earth Technologies, Inc.
5883 Glenridge Drive, Ste 200
Atlanta, Georgia 30328
(404) 250-1290

DATE : 01-01-05

INTERIM STANDARD IN ENGLISH UNITS APPLICABLE TO DESIGN STANDARDS BOOKLET PUBLISHED IN EITHER ENGLISH OR METRIC UNITS.

STATE OF FLORIDA DEPARTMENT OF TRANSPORTATION

RETAINING WALL SYSTEMS TENSAR EARTH TECHNOLOGIES MSE RETAINING WALL

INTERIM STANDARD

APPROVED BY
William N. Nickas, P.E.
State Structures Design Engineer

SHEET NOS. 1 - 16 OF 16 ARE A REPLACEMENT OF INDEX NO. 5025 OF THE DESIGN STANDARDS BOOKLET DATED JANUARY 2000.

REVISION NO.	SHEET NO.	INDEX NO.
04	5 of 16	05025

FINANCIAL PROJECT ID	STATE PROJ. NO.	SHEET NO.

NOTE:
EXPANSION JOINTS IN C.I.P. COPING SHALL BE AT 6 PANEL INTERVALS. COPING JOINTS MUST COINCIDE WITH PANEL JOINTS ON FRONT FACE AND SHALL BE PERPENDICULAR TO SLOPE LINE. REINFORCING STEEL SHALL BE STOPPED 2" SHORT OF EITHER SIDE OF THE EXPANSION JOINT. CONTRACTION JOINTS IN BETWEEN THE EXPANSION JOINTS SHALL BE PLACED AT 2 PANEL INTERVALS.

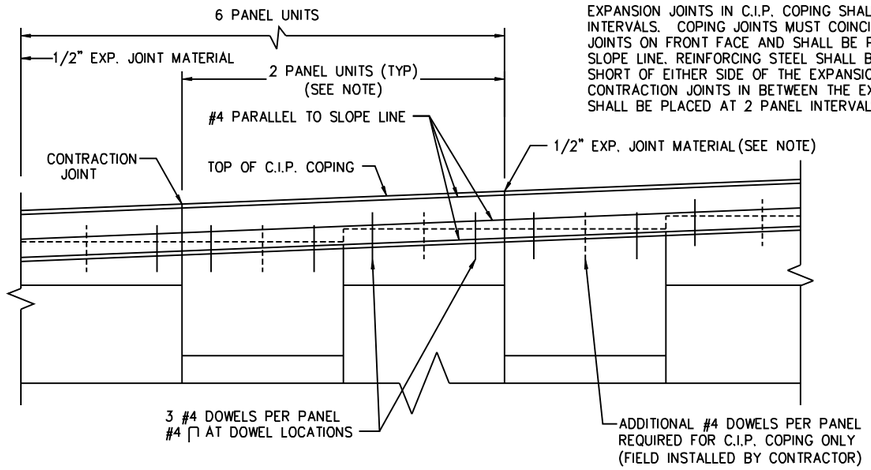

C.I.P. COPING PARTIAL ELEVATION VIEW
NOT TO SCALE

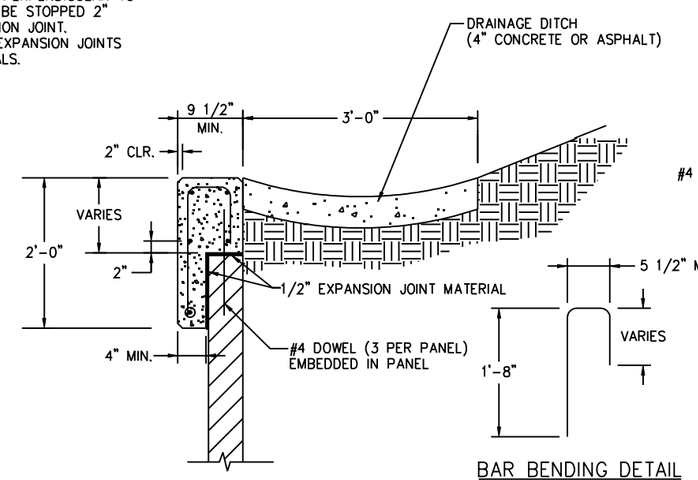

BAR BENDING DETAIL

C.I.P COPING WITH SWALE
NOT TO SCALE

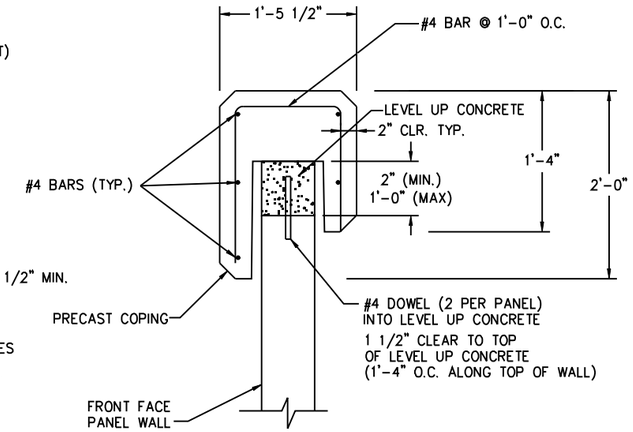

PRECAST COPING SECTION
NOT TO SCALE

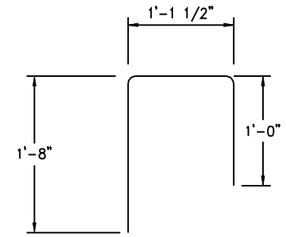

BAR BENDING DETAIL

NOTE:
ALL OPEN JOINTS IN THE PRECAST COPING SHALL BE FILLED 3/4" BACKING PAD AND CAULKED WITH SILICONE SEALANT. MATERIALS BY CONTRACTOR.

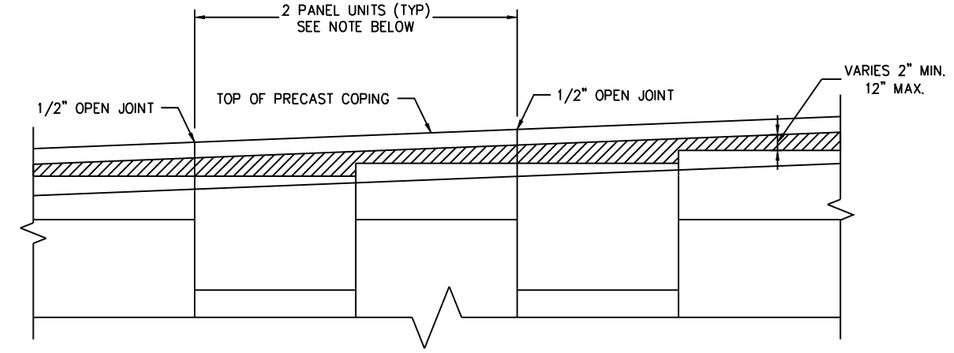

PRECAST COPING PARTIAL ELEVATION VIEW
NOT TO SCALE

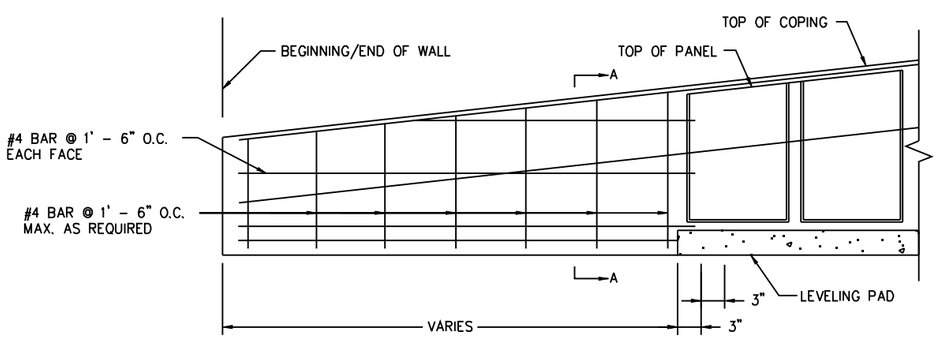

COPING ENCLOSURE DETAIL
NOT TO SCALE

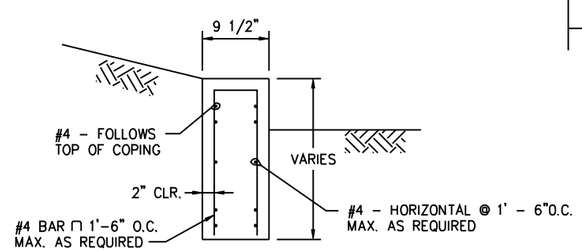

SECTION A-A

THIS SYSTEM MAY BE USED IN ALL ENVIRONMENTS

THIS DESIGN IS BASED UPON SPECIFIC PROPERTIES OF TENSAR PRODUCTS (GEOGRIDS, DRAINAGE COMPOSITES AND EROSION MEDIA), WHICH ARE PROPRIETARY TO THE TENSAR CORPORATION 1210 CITIZENS PARKWAY, MORROW GA. 30260. ANY SUBSTITUTION OF THE SPECIFIED PRODUCTS WILL INVALIDATE THIS DESIGN. THIS DRAWING IS BEING FURNISHED FOR USE ON THIS SPECIFIC PROJECT ONLY. ANY PARTY ACCEPTING THIS DOCUMENT DOES SO IN CONFIDENCE AND AGREES THAT IT SHALL NOT BE DUPLICATED WHOLE OR IN PART, NOR DISCLOSED TO OTHERS, WITHOUT THE CONSENT OF TENSAR EARTH TECHNOLOGIES, INC.

©2003, TENSAR EARTH TECHNOLOGIES, INC.

Tensar

Tensar Earth Technologies, Inc.
5883 Glenridge Drive, Ste 200
Atlanta, Georgia 30328
(404) 250-1290

DATE : 01-01-05

INTERIM STANDARD IN ENGLISH UNITS APPLICABLE TO DESIGN STANDARDS BOOKLET PUBLISHED IN EITHER ENGLISH OR METRIC UNITS.

STATE OF FLORIDA DEPARTMENT OF TRANSPORTATION

RETAINING WALL SYSTEMS
TENSAR EARTH TECHNOLOGIES
MSE RETAINING WALL

INTERIM STANDARD

SHEET NOS. 1 - 16 OF 16 ARE A REPLACEMENT OF INDEX NO. 5025 OF THE DESIGN STANDARDS BOOKLET DATED JANUARY 2000.

APPROVED BY
William N. Nickas, P.E.
State Structures Design Engineer

REVISION NO.	SHEET NO.	INDEX NO.
04	6 of 16	05025

FINANCIAL PROJECT ID	STATE PROJ. NO.	SHEET NO.

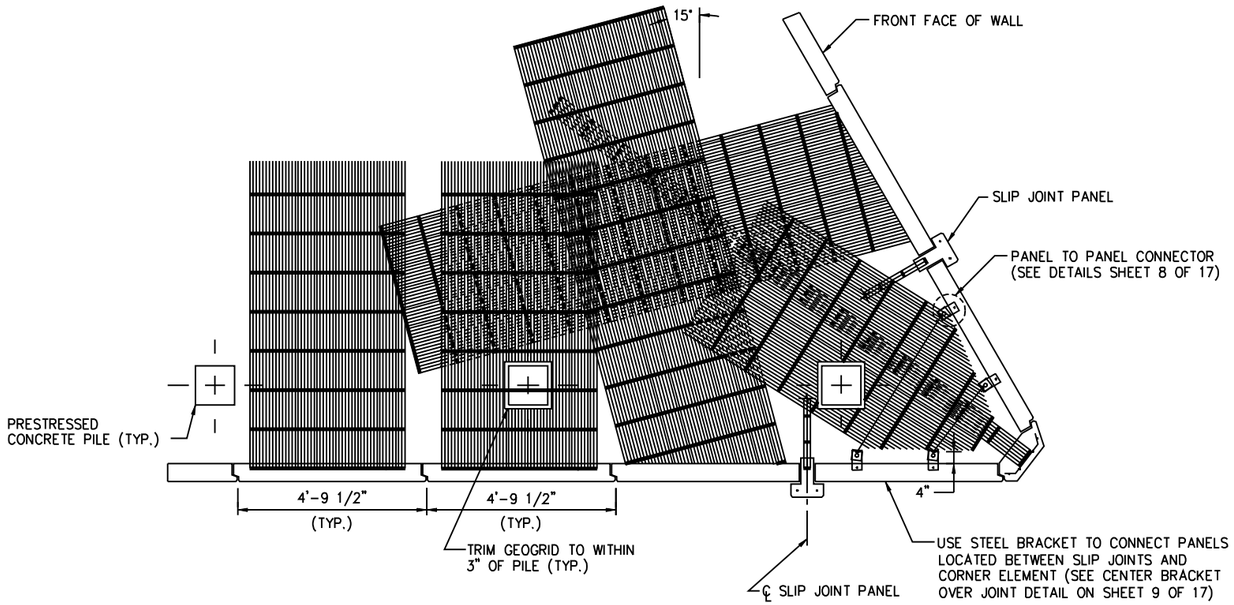

ACUTE CORNER LESS THAN 75° – SKEWED GEOGRID UNDER PILE CAP

(SEE DETAIL BELOW FOR BIN REINFORCEMENT)

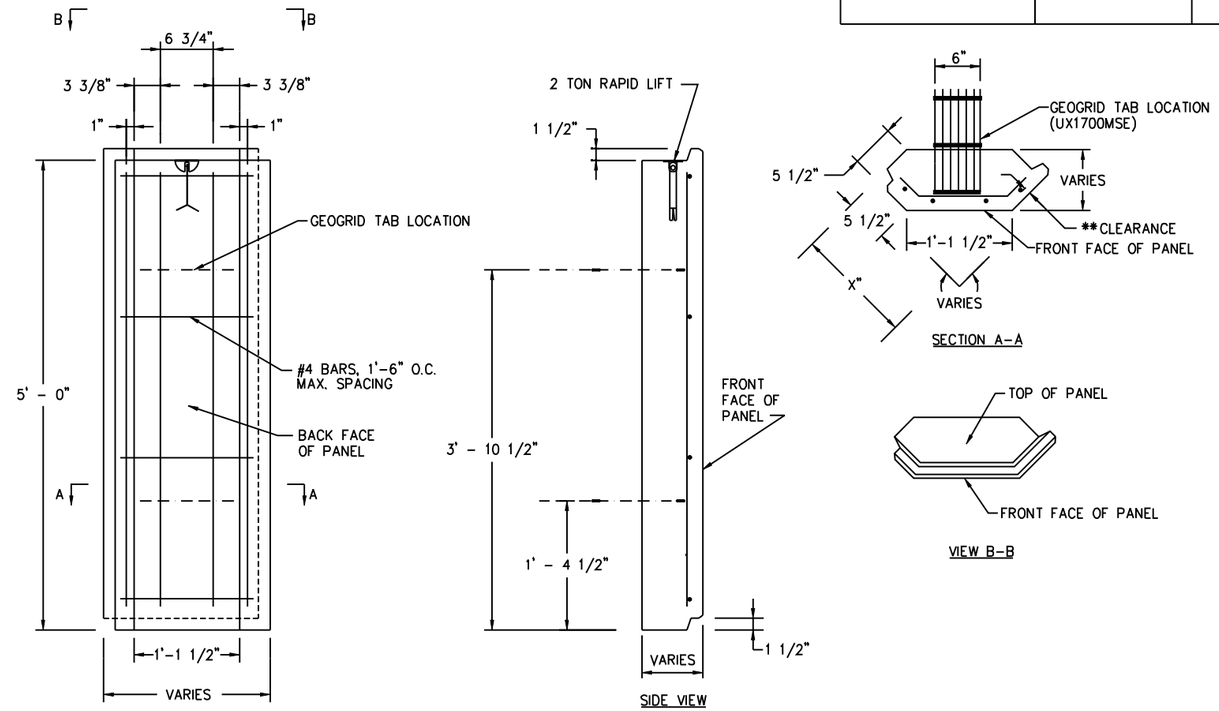

TYPICAL CORNER ELEMENT DETAIL

** VARIES
3" FOR EXTREMELY AGGRESSIVE ENVIRONMENTS
2" FOR MODERATELY OR SLIGHTLY AGGRESSIVE ENVIRONMENTS

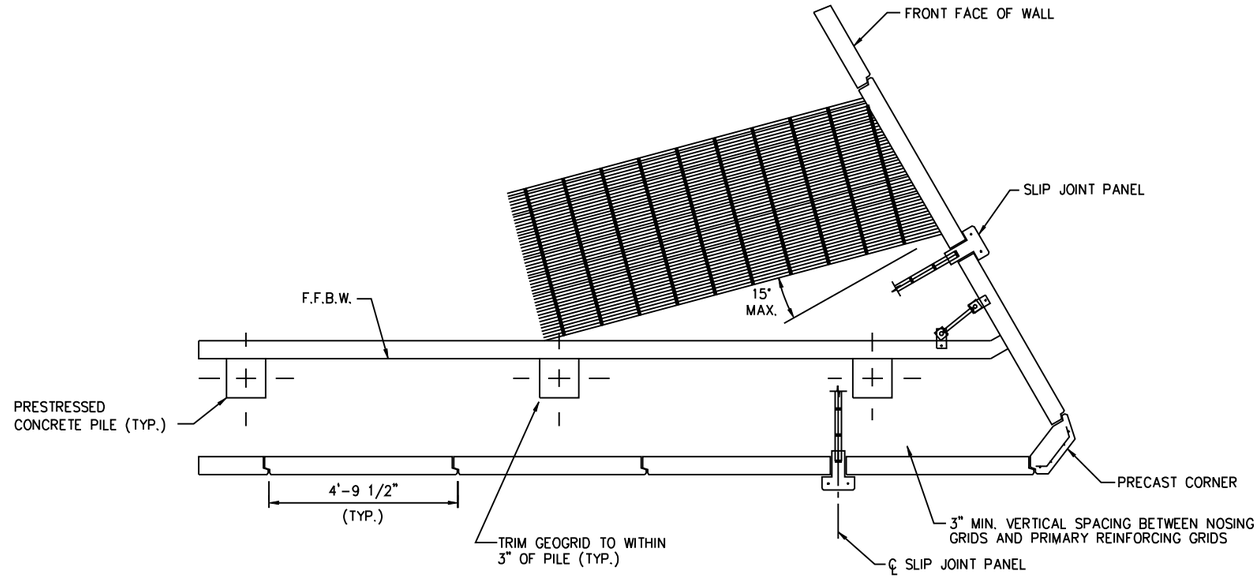

EXAMPLE ACUTE CORNER – SKEWED GEOGRID AT ABUTMENT LEVEL

NOT TO SCALE

THIS SYSTEM MAY BE USED IN ALL ENVIRONMENTS

THIS DESIGN IS BASED UPON SPECIFIC PROPERTIES OF TENSAR PRODUCTS (GEOGRIDS, DRAINAGE COMPOSITES AND EROSION MEDIA), WHICH ARE PROPRIETARY TO THE TENSAR CORPORATION 1210 CITIZENS PARKWAY, MORROW GA. 30260. ANY SUBSTITUTION OF THE SPECIFIED PRODUCTS WILL INVALIDATE THIS DESIGN. THIS DRAWING IS BEING FURNISHED FOR USE ON THIS SPECIFIC PROJECT ONLY. ANY PARTY ACCEPTING THIS DOCUMENT DOES SO IN CONFIDENCE AND AGREES THAT IT SHALL NOT BE DUPLICATED WHOLE OR IN PART, NOR DISCLOSED TO OTHERS, WITHOUT THE CONSENT OF TENSAR EARTH TECHNOLOGIES, INC.

©2003, TENSAR EARTH TECHNOLOGIES, INC.

Tensar

Tensar Earth Technologies, Inc.
5883 Glenridge Drive, Ste 200
Atlanta, Georgia 30328
(404) 250-1290

DATE : 01-01-05

INTERIM STANDARD IN ENGLISH UNITS APPLICABLE TO DESIGN STANDARDS BOOKLET PUBLISHED IN EITHER ENGLISH OR METRIC UNITS.

STATE OF FLORIDA DEPARTMENT OF TRANSPORTATION

RETAINING WALL SYSTEMS TENSAR EARTH TECHNOLOGIES MSE RETAINING WALL

INTERIM STANDARD

SHEET NOS. 1 - 16 OF 16 ARE A REPLACEMENT OF INDEX NO. 5025 OF THE DESIGN STANDARDS BOOKLET DATED JANUARY 2000.

APPROVED BY
William N. Nickas, P.E.
State Structures Design Engineer

REVISION NO.	SHEET NO.	INDEX NO.
04	7 of 16	05025

FINANCIAL PROJECT ID	STATE PROJ. NO.	SHEET NO.

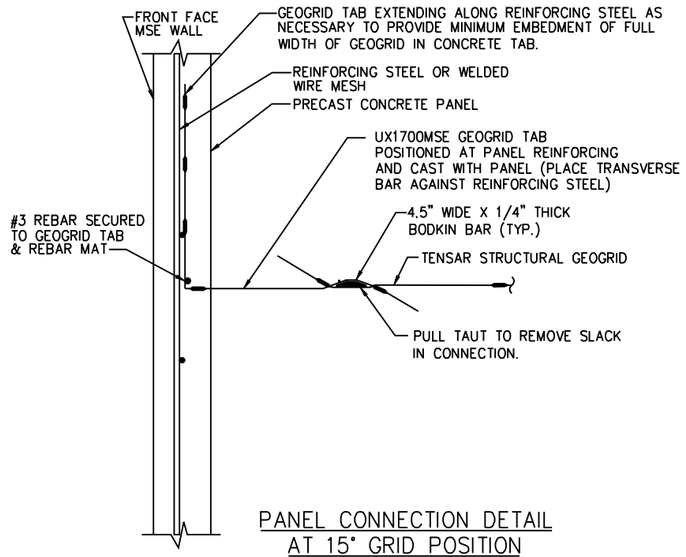

PANEL CONNECTION DETAIL
AT 15° GRID POSITION
(SECTION A–A)
NOT TO SCALE

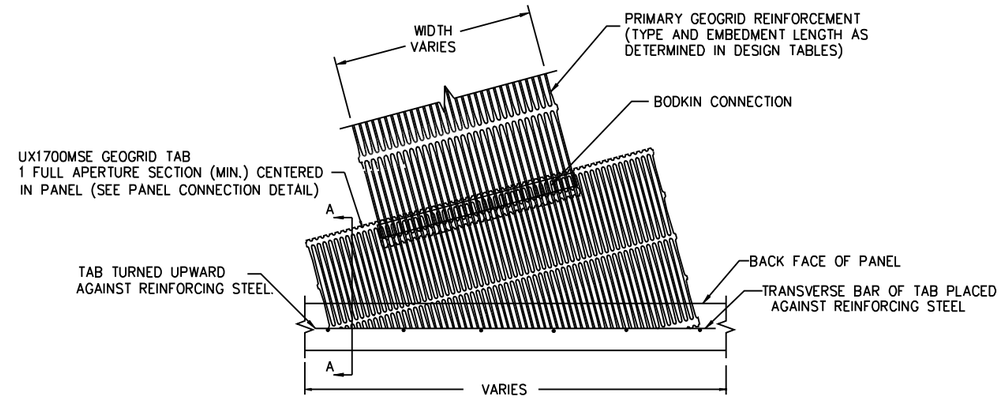

CONNECTION DETAIL PLAN VIEW AT 15° GRID POSITION
NOT TO SCALE

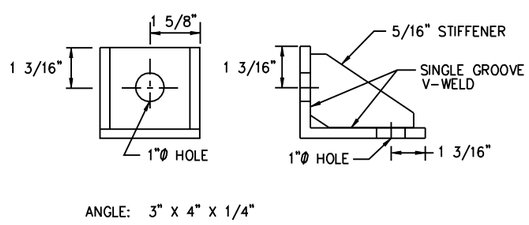

CONNECTION BOX
NOT TO SCALE

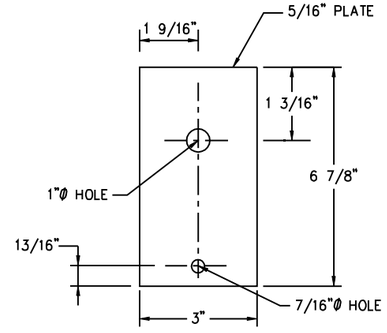

ATTACHMENT PLATE
NOT TO SCALE

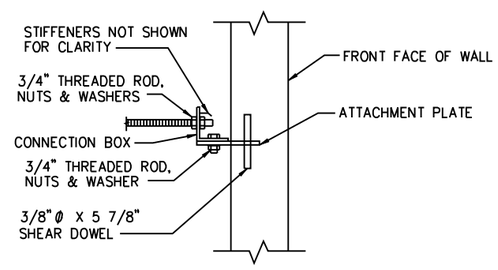

PANEL TO PANEL ATTACHMENT

FABRICATION ATTACHMENT STEEL NOTES:

1. ALL FABRICATED STEEL PARTS SHALL BE HOT DIP GALVANIZED AFTER FABRICATION FOR MODERATELY OR SLIGHTLY AGGRESSIVE ENVIRONMENTS.
2. ALL FABRICATED STEEL PARTS SHALL BE FABRICATED FROM 316 L GRADE STAINLESS STEEL OR HOT DIP GALVANIZED AND FIELD COAL TAR EPOXY COATED FOR USE IN 100 YR FLOOD PLAIN + 2' (SALT WATER ZONE OF INFLUENCE)
3. ALL DIMENSIONS ARE MINIMUM REQUIRED

THIS SYSTEM MAY BE USED IN ALL ENVIRONMENTS

THIS DESIGN IS BASED UPON SPECIFIC PROPERTIES OF TENSAR PRODUCTS (GEOGRIDS, DRAINAGE COMPOSITES AND EROSION MEDIA), WHICH ARE PROPRIETARY TO THE TENSAR CORPORATION 1210 CITIZENS PARKWAY, MORROW GA. 30260. ANY SUBSTITUTION OF THE SPECIFIED PRODUCTS WILL INVALIDATE THIS DESIGN. THIS DRAWING IS BEING FURNISHED FOR USE ON THIS SPECIFIC PROJECT ONLY. ANY PARTY ACCEPTING THIS DOCUMENT DOES SO IN CONFIDENCE AND AGREES THAT IT SHALL NOT BE DUPLICATED WHOLE OR IN PART, NOR DISCLOSED TO OTHERS, WITHOUT THE CONSENT OF TENSAR EARTH TECHNOLOGIES, INC.

©2003, TENSAR EARTH TECHNOLOGIES, INC.

Tensar •
Tensar Earth Technologies, Inc.
5883 Glenridge Drive, Ste 200
Atlanta, Georgia 30328
(404) 250-1290

DATE : 01-01-05

INTERIM STANDARD IN ENGLISH UNITS APPLICABLE TO DESIGN STANDARDS BOOKLET PUBLISHED IN EITHER ENGLISH OR METRIC UNITS.

STATE OF FLORIDA DEPARTMENT OF TRANSPORTATION

RETAINING WALL SYSTEMS TENSAR EARTH TECHNOLOGIES MSE RETAINING WALL

INTERIM STANDARD

SHEET NOS. 1 - 16 OF 16 ARE A REPLACEMENT OF INDEX NO. 5025 OF THE DESIGN STANDARDS BOOKLET DATED JANUARY 2000.

APPROVED BY
William N. Nickas, P.E.
State Structures Design Engineer

REVISION NO.	SHEET NO.	INDEX NO.
04	8 of 16	05025

FINANCIAL PROJECT ID	STATE PROJ. NO.	SHEET NO.

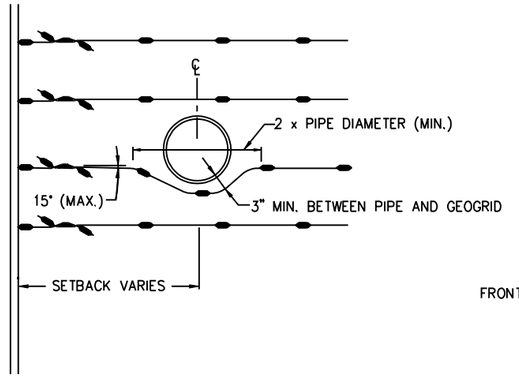

TYPICAL OBSTRUCTION AVOIDANCE DETAIL

NOT TO SCALE

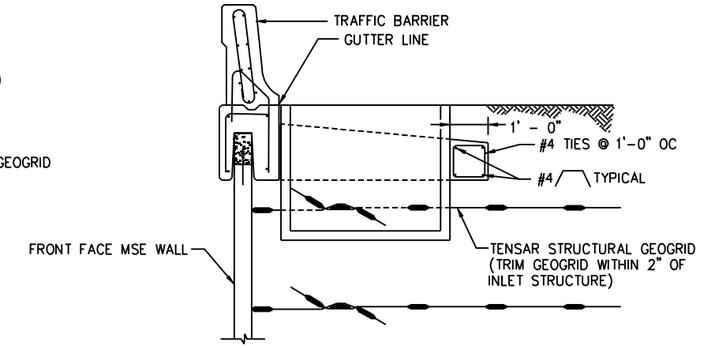

CONNECTION DETAILS
SECTION A–A

NOT TO SCALE

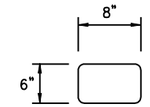

BAR BENDING
DETAIL

NOT TO SCALE

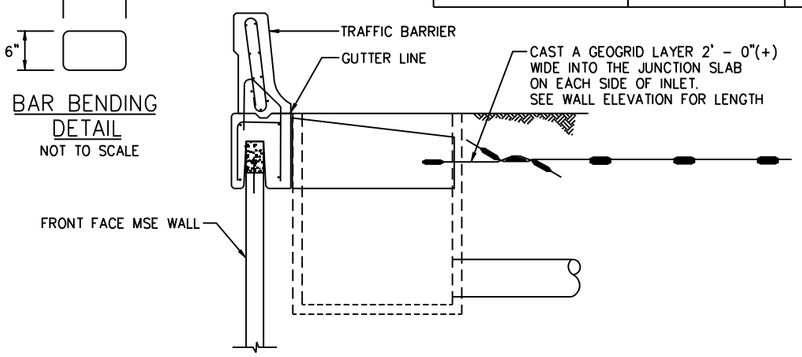

DETAIL OF TENSAR PANELS @ INLETS
SECTION B–B

NOT TO SCALE

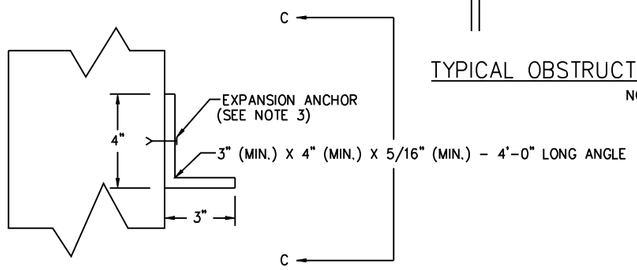

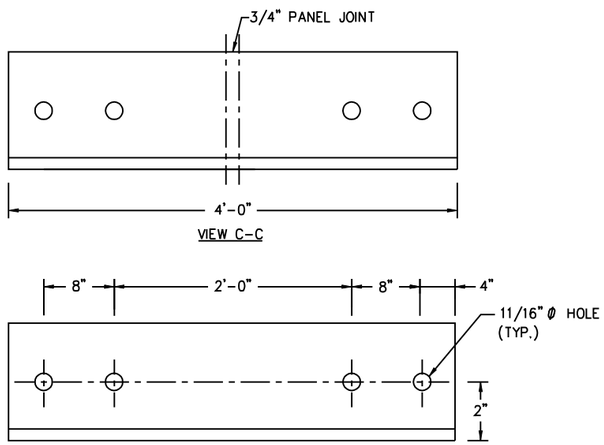

NOTES:

1. ALL FABRICATED STEEL PARTS SHALL BE HOT DIP GALVANIZED AFTER FABRICATION FOR MODERATELY OR SLIGHTLY AGGRESSIVE ENVIRONMENTS.
2. ALL FABRICATED STEEL PARTS SHALL BE FABRICATED FROM 316 L GRADE STAINLESS STEEL OR HOT DIP GALVANIZED AND FIELD COAL TAR EPOXY COATED FOR USE IN 100 YR FLOOD PLAIN + 2' (SALT WATER ZONE OF INFLUENCE).
3. ANCHOR SHALL BE HILTI HSLG RM 10/20 STAINLESS OR APPROVED EQUAL.

CENTER BRACKET OVER JOINT DETAIL

NOT TO SCALE

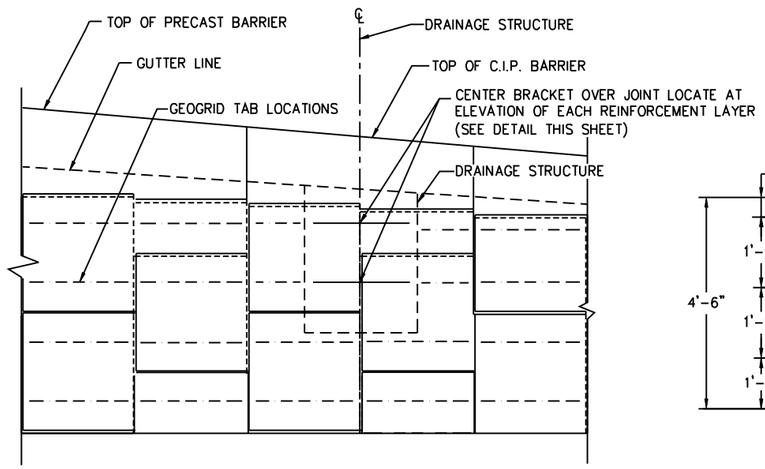

PARTIAL ELEVATION – WALL @ DRAINAGE INLET

NOT TO SCALE

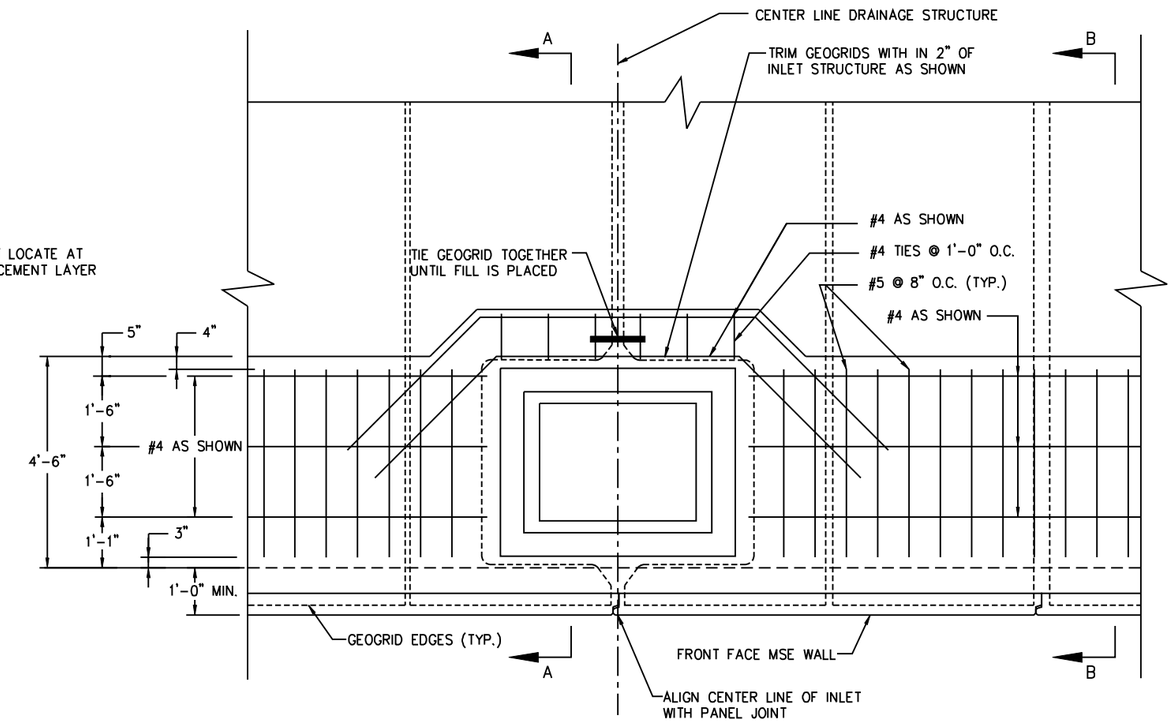

PARTIAL PLAN – WALL @ DRAINAGE INLET

NOT TO SCALE

THIS SYSTEM MAY BE USED IN ALL ENVIRONMENTS

THIS DESIGN IS BASED UPON SPECIFIC PROPERTIES OF TENSAR PRODUCTS (GEOGRIDS, DRAINAGE COMPOSITES AND EROSION MEDIA), WHICH ARE PROPRIETARY TO THE TENSAR CORPORATION 1210 CITIZENS PARKWAY, MORROW GA. 30260. ANY SUBSTITUTION OF THE SPECIFIED PRODUCTS WILL INVALIDATE THIS DESIGN. THIS DRAWING IS BEING FURNISHED FOR USE ON THIS SPECIFIC PROJECT ONLY. ANY PARTY ACCEPTING THIS DOCUMENT DOES SO IN CONFIDENCE AND AGREES THAT IT SHALL NOT BE DUPLICATED WHOLE OR IN PART, NOR DISCLOSED TO OTHERS, WITHOUT THE CONSENT OF TENSAR EARTH TECHNOLOGIES, INC.

©2003, TENSAR EARTH TECHNOLOGIES, INC.

Tensar

Tensar Earth Technologies, Inc.
5883 Glenridge Drive, Ste 200
Atlanta, Georgia 30328
(404) 250-1290

DATE : 01-01-05

INTERIM STANDARD IN ENGLISH UNITS APPLICABLE TO DESIGN STANDARDS BOOKLET PUBLISHED IN EITHER ENGLISH OR METRIC UNITS.

STATE OF FLORIDA DEPARTMENT OF TRANSPORTATION

RETAINING WALL SYSTEMS
TENSAR EARTH TECHNOLOGIES
MSE RETAINING WALL

INTERIM STANDARD

SHEET NOS. 1 - 16 OF 16 ARE A REPLACEMENT OF INDEX NO. 5025 OF THE DESIGN STANDARDS BOOKLET DATED JANUARY 2000.

APPROVED BY
William N. Nickas, P.E.
State Structures Design Engineer

REVISION NO.	SHEET NO.	INDEX NO.
04	9 of 16	05025

FINANCIAL PROJECT ID	STATE PROJ. NO.	SHEET NO.

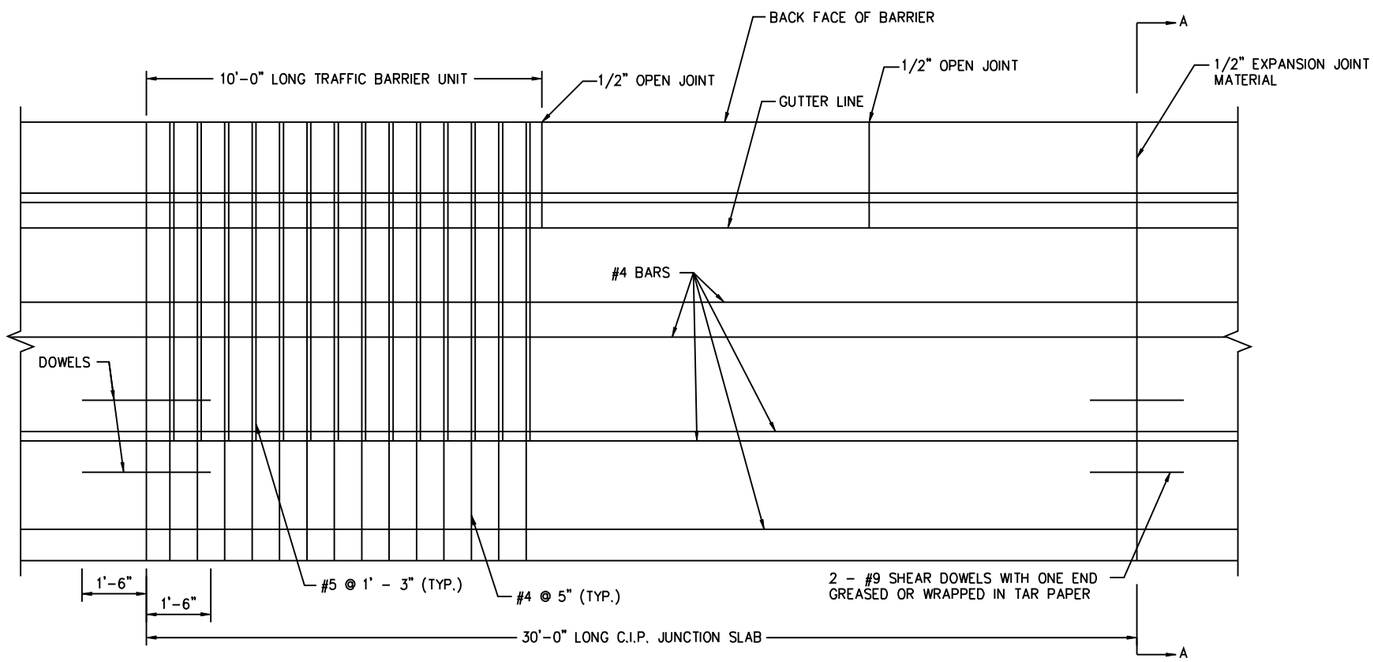

PLAN VIEW
PRECAST TRAFFIC BARRIER WITH C.I.P. JUNCTION SLAB
NOT TO SCALE

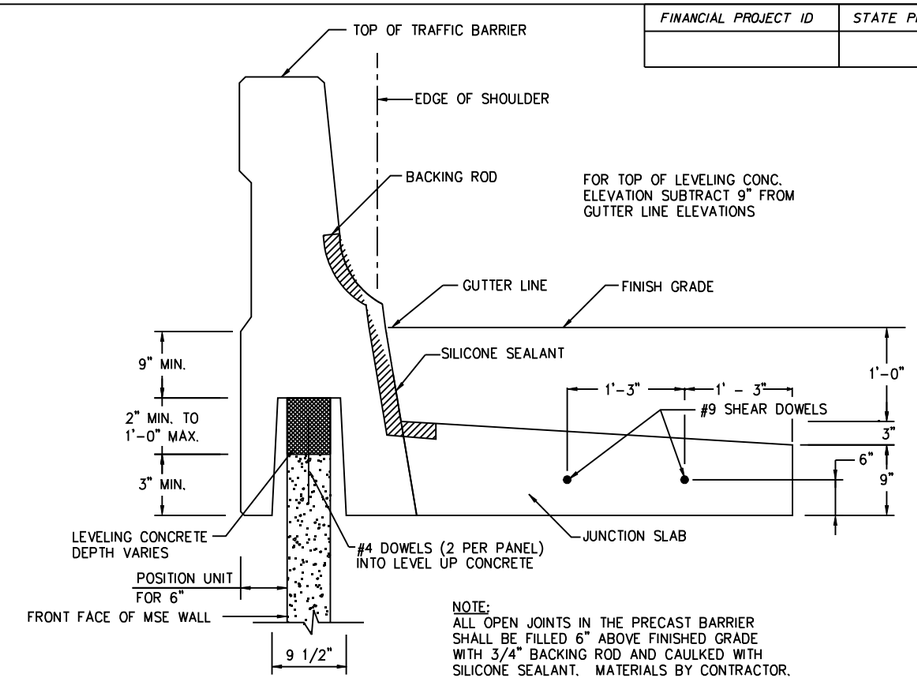

NOTE:
ALL OPEN JOINTS IN THE PRECAST BARRIER SHALL BE FILLED 6" ABOVE FINISHED GRADE WITH 3/4" BACKING ROD AND CAULKED WITH SILICONE SEALANT. MATERIALS BY CONTRACTOR.

SECTION A-A AT PRECAST TRAFFIC BARRIER WITH C.I.P JUNCTION SLAB
NOT TO SCALE

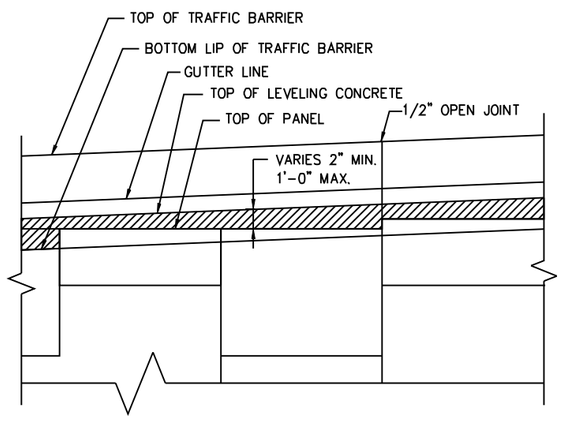

PRECAST TRAFFIC BARRIER PARTIAL ELEVATION VIEW
NOT TO SCALE

THIS SYSTEM MAY BE USED IN ALL ENVIRONMENTS

THIS DESIGN IS BASED UPON SPECIFIC PROPERTIES OF TENSAR PRODUCTS (GEOGRIDS, DRAINAGE COMPOSITES AND EROSION MEDIA), WHICH ARE PROPRIETARY TO THE TENSAR CORPORATION 1210 CITIZENS PARKWAY, MORROW GA. 30260. ANY SUBSTITUTION OF THE SPECIFIED PRODUCTS WILL INVALIDATE THIS DESIGN. THIS DRAWING IS BEING FURNISHED FOR USE ON THIS SPECIFIC PROJECT ONLY. ANY PARTY ACCEPTING THIS DOCUMENT DOES SO IN CONFIDENCE AND AGREES THAT IT SHALL NOT BE DUPLICATED WHOLE OR IN PART, NOR DISCLOSED TO OTHERS, WITHOUT THE CONSENT OF TENSAR EARTH TECHNOLOGIES, INC.

©2003, TENSAR EARTH TECHNOLOGIES, INC.

Tensar

Tensar Earth Technologies, Inc.
5883 Glenridge Drive, Ste 200
Atlanta, Georgia 30328
(404) 250-1290

DATE : 01-01-05

INTERIM STANDARD IN ENGLISH UNITS APPLICABLE TO DESIGN STANDARDS BOOKLET PUBLISHED IN EITHER ENGLISH OR METRIC UNITS.

STATE OF FLORIDA DEPARTMENT OF TRANSPORTATION

RETAINING WALL SYSTEMS TENSAR EARTH TECHNOLOGIES MSE RETAINING WALL

INTERIM STANDARD

SHEET NOS. 1 - 16 OF 16 ARE A REPLACEMENT OF INDEX NO. 5025 OF THE DESIGN STANDARDS BOOKLET DATED JANUARY 2000.

APPROVED BY
William N. Nickas, P.E.
State Structures Design Engineer

REVISION NO.	SHEET NO.	INDEX NO.
04	10 of 16	05025

FINANCIAL PROJECT ID	STATE PROJ. NO.	SHEET NO.

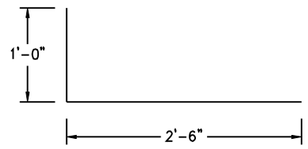

BAR 5A

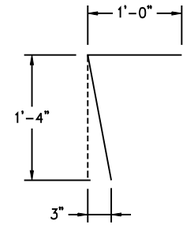

BAR 5B

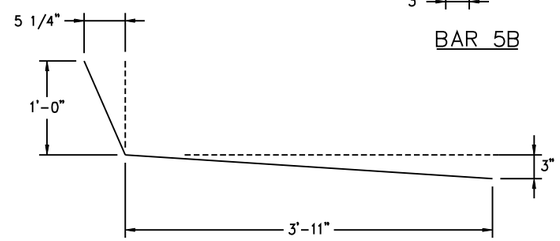

BAR 5C

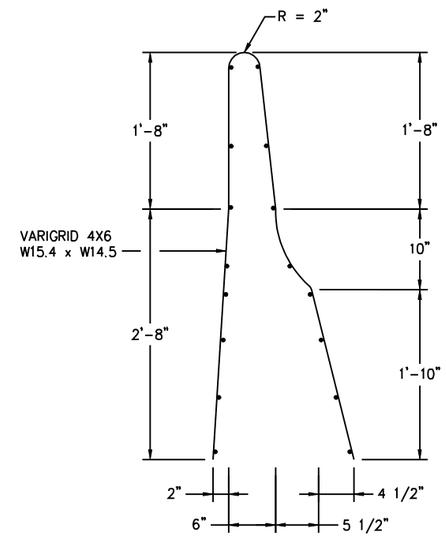

BAR 5RE

WELDED WIRE FABRIC SHALL CONFORM TO ASTM A497.

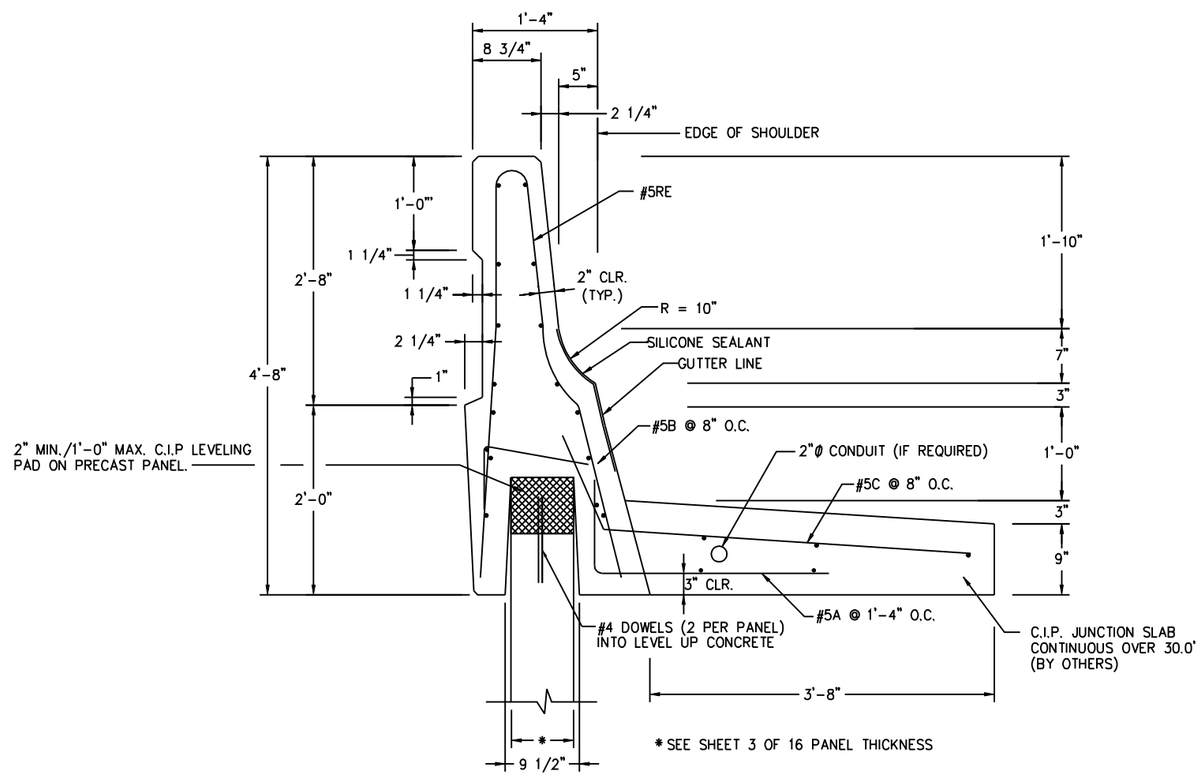

* SEE SHEET 3 OF 16 PANEL THICKNESS

MARK	QUANTITY	REMARKS
5A	8	3'-6" LONG
5B	16	2'-4" LONG
5C	16	5'-0" LONG
A	VARIGRID	W14.5 @ 6" O.C.
B	VARIGRID	W15.4 @ 4" O.C.

NOTES:

1. 1/2" CHAMFER ALL AROUND EACH FACE (EXPOSED SURFACES)
2. ALL LONGITUDINAL BARS IN THE MOMENT SLAB SHALL BE #4 WITH MAXIMUM SPACING OF 1'-6" O.C.

THIS SYSTEM MAY BE USED IN ALL ENVIRONMENTS

PRECAST BARRIER WITH C.I.P. SLAB – VARIGRID BARRIER REINFORCEMENT

NOT TO SCALE

THIS DESIGN IS BASED UPON SPECIFIC PROPERTIES OF TENSAR PRODUCTS (GEOGRIDS, DRAINAGE COMPOSITES AND EROSION MEDIA), WHICH ARE PROPRIETARY TO THE TENSAR CORPORATION 1210 CITIZENS PARKWAY, MORROW GA. 30260. ANY SUBSTITUTION OF THE SPECIFIED PRODUCTS WILL INVALIDATE THIS DESIGN. THIS DRAWING IS BEING FURNISHED FOR USE ON THIS SPECIFIC PROJECT ONLY. ANY PARTY ACCEPTING THIS DOCUMENT DOES SO IN CONFIDENCE AND AGREES THAT IT SHALL NOT BE DUPLICATED WHOLE OR IN PART, NOR DISCLOSED TO OTHERS, WITHOUT THE CONSENT OF TENSAR EARTH TECHNOLOGIES, INC.

©2003, TENSAR EARTH TECHNOLOGIES, INC.

Tensar

Tensar Earth Technologies, Inc.
5883 Glenridge Drive, Ste 200
Atlanta, Georgia 30328
(404) 250-1290

DATE : 01-01-05

INTERIM STANDARD IN ENGLISH UNITS APPLICABLE TO DESIGN STANDARDS BOOKLET PUBLISHED IN EITHER ENGLISH OR METRIC UNITS.

STATE OF FLORIDA DEPARTMENT OF TRANSPORTATION

RETAINING WALL SYSTEMS TENSAR EARTH TECHNOLOGIES MSE RETAINING WALL

INTERIM STANDARD

SHEET NOS. 1 - 16 OF 16 ARE A REPLACEMENT OF INDEX NO. 5025 OF THE DESIGN STANDARDS BOOKLET DATED JANUARY 2000.

APPROVED BY
William N. Nickas, P.E.
State Structures Design Engineer

REVISION NO.	SHEET NO.	INDEX NO.
04	11 of 16	05025

FINANCIAL PROJECT ID	STATE PROJ. NO.	SHEET NO.

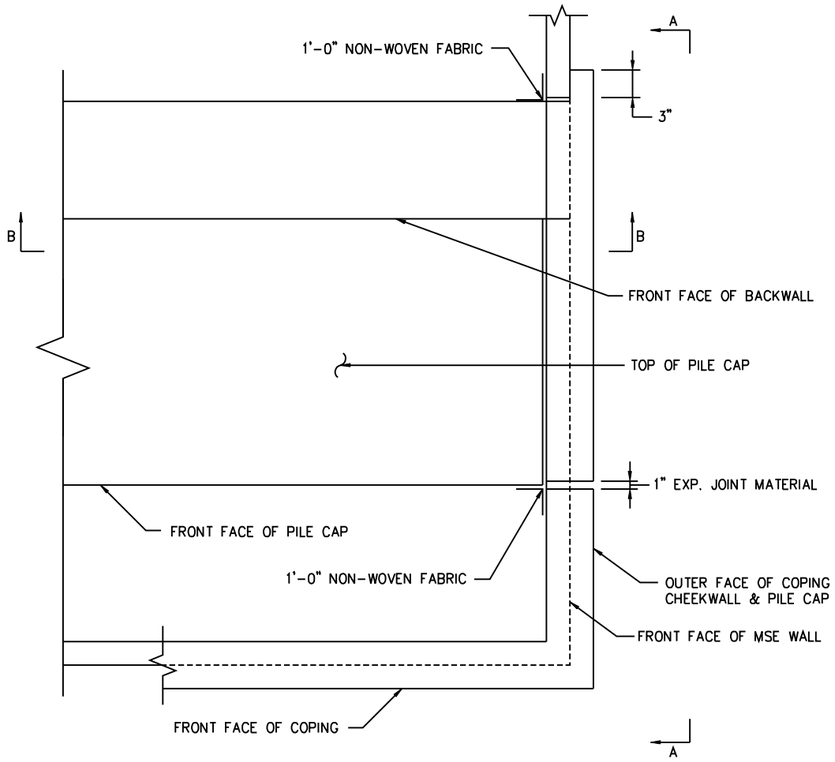

PLAN VIEW @ ENDBENT
NOT TO SCALE

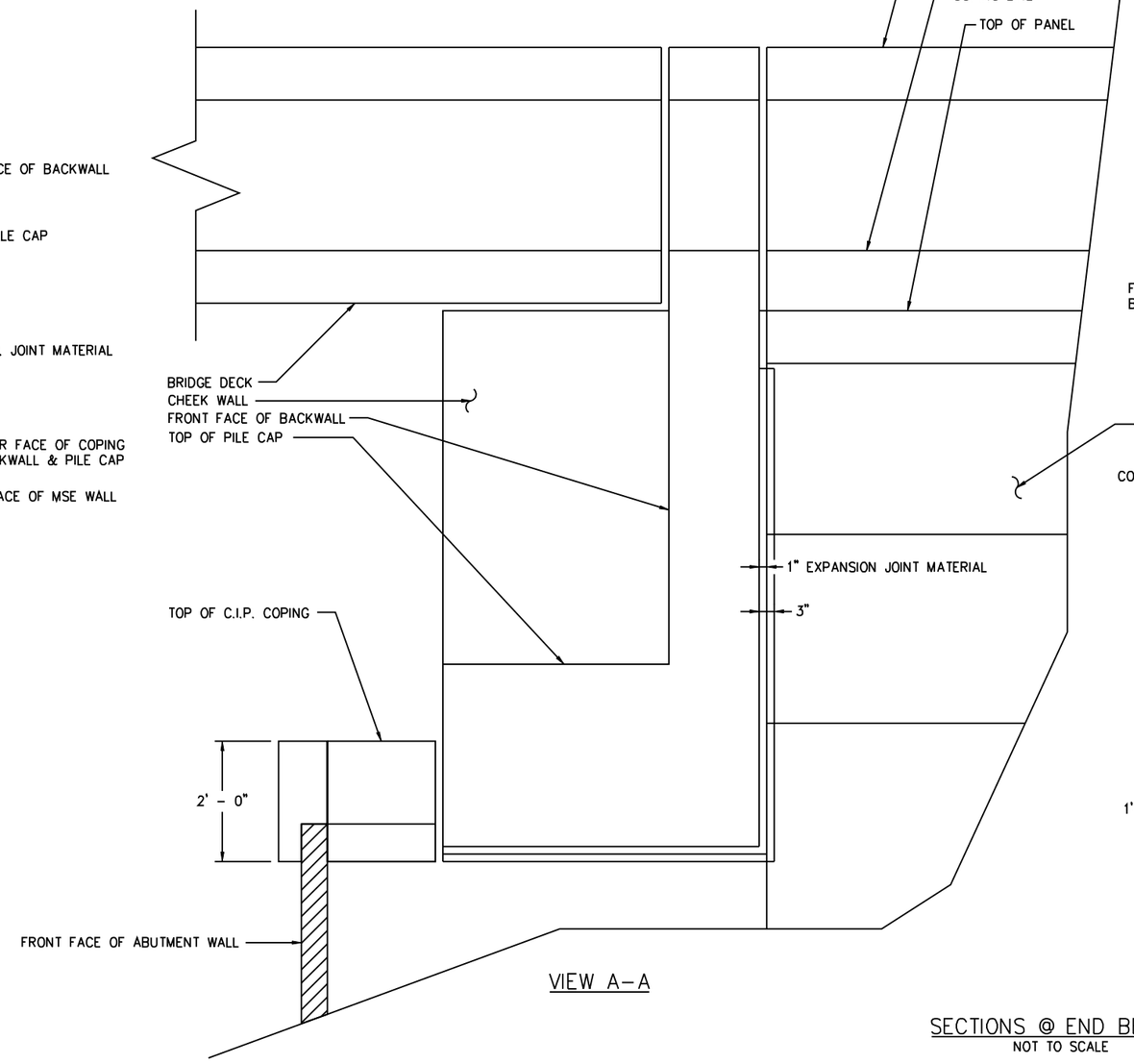

VIEW A-A

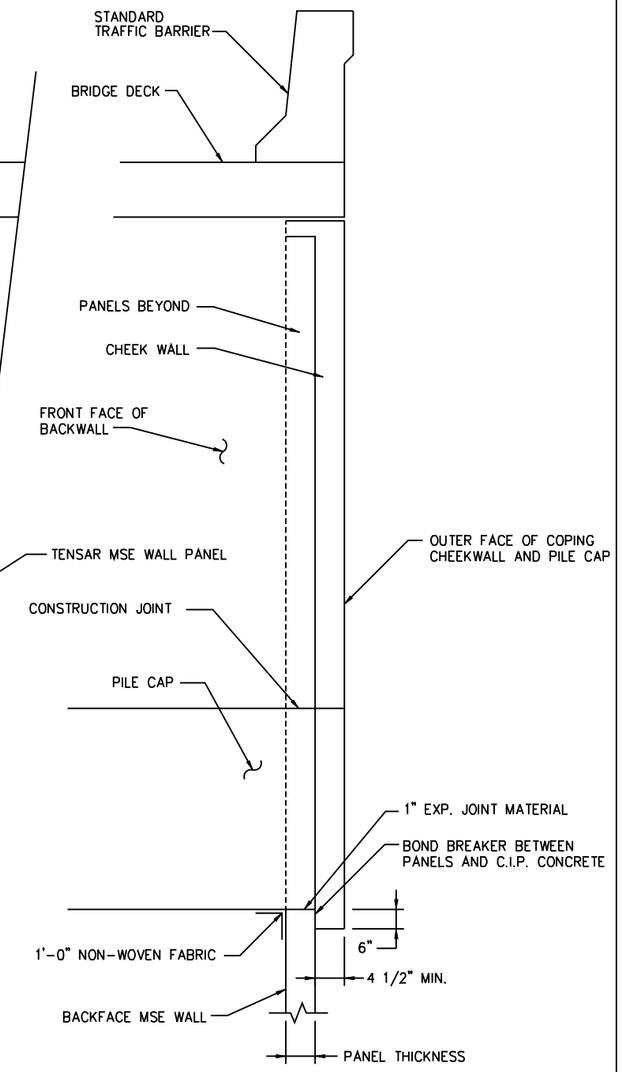

SECTION B-B

SECTIONS @ END BENT
NOT TO SCALE

THIS SYSTEM MAY BE USED IN ALL ENVIRONMENTS

THIS DESIGN IS BASED UPON SPECIFIC PROPERTIES OF TENSAR PRODUCTS (GEOGRIDS, DRAINAGE COMPOSITES AND EROSION MEDIA), WHICH ARE PROPRIETARY TO THE TENSAR CORPORATION 1210 CITIZENS PARKWAY, MORROW GA. 30260. ANY SUBSTITUTION OF THE SPECIFIED PRODUCTS WILL INVALIDATE THIS DESIGN. THIS DRAWING IS BEING FURNISHED FOR USE ON THIS SPECIFIC PROJECT ONLY. ANY PARTY ACCEPTING THIS DOCUMENT DOES SO IN CONFIDENCE AND AGREES THAT IT SHALL NOT BE DUPLICATED WHOLE OR IN PART, NOR DISCLOSED TO OTHERS, WITHOUT THE CONSENT OF TENSAR EARTH TECHNOLOGIES, INC.

©2003, TENSAR EARTH TECHNOLOGIES, INC.

Tensar

Tensar Earth Technologies, Inc.
5883 Glenridge Drive, Ste 200
Atlanta, Georgia 30328
(404) 250-1290

DATE : 01-01-05

INTERIM STANDARD IN ENGLISH UNITS APPLICABLE TO DESIGN STANDARDS BOOKLET PUBLISHED IN EITHER ENGLISH OR METRIC UNITS.

STATE OF FLORIDA DEPARTMENT OF TRANSPORTATION

RETAINING WALL SYSTEMS TENSAR EARTH TECHNOLOGIES MSE RETAINING WALL

INTERIM STANDARD

SHEET NOS. 1 - 16 OF 16 ARE A REPLACEMENT OF INDEX NO. 5025 OF THE DESIGN STANDARDS BOOKLET DATED JANUARY 2000.

APPROVED BY
William N. Nickas, P.E.
State Structures Design Engineer

REVISION NO.	SHEET NO.	INDEX NO.
04	12 of 16	05025

FINANCIAL PROJECT ID	STATE PROJ. NO.	SHEET NO.

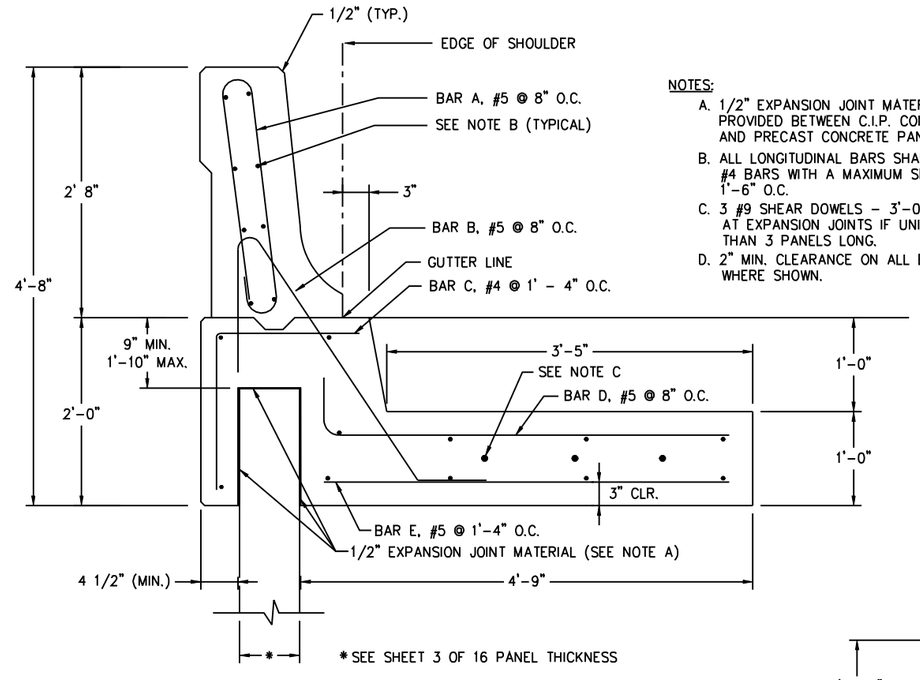

NOTES:

A. 1/2" EXPANSION JOINT MATERIAL SHALL BE PROVIDED BETWEEN C.I.P. CONCRETE AND PRECAST CONCRETE PANEL.

B. ALL LONGITUDINAL BARS SHALL BE #4 BARS WITH A MAXIMUM SPACING 1'-6" O.C.

C. 3 #9 SHEAR DOWELS - 3'-0" LONG REQ'D AT EXPANSION JOINTS IF UNIT IS LESS THAN 3 PANELS LONG.

D. 2" MIN. CLEARANCE ON ALL BARS EXCEPT WHERE SHOWN.

C.I.P. CONCRETE TRAFFIC BARRIER

NOT TO SCALE

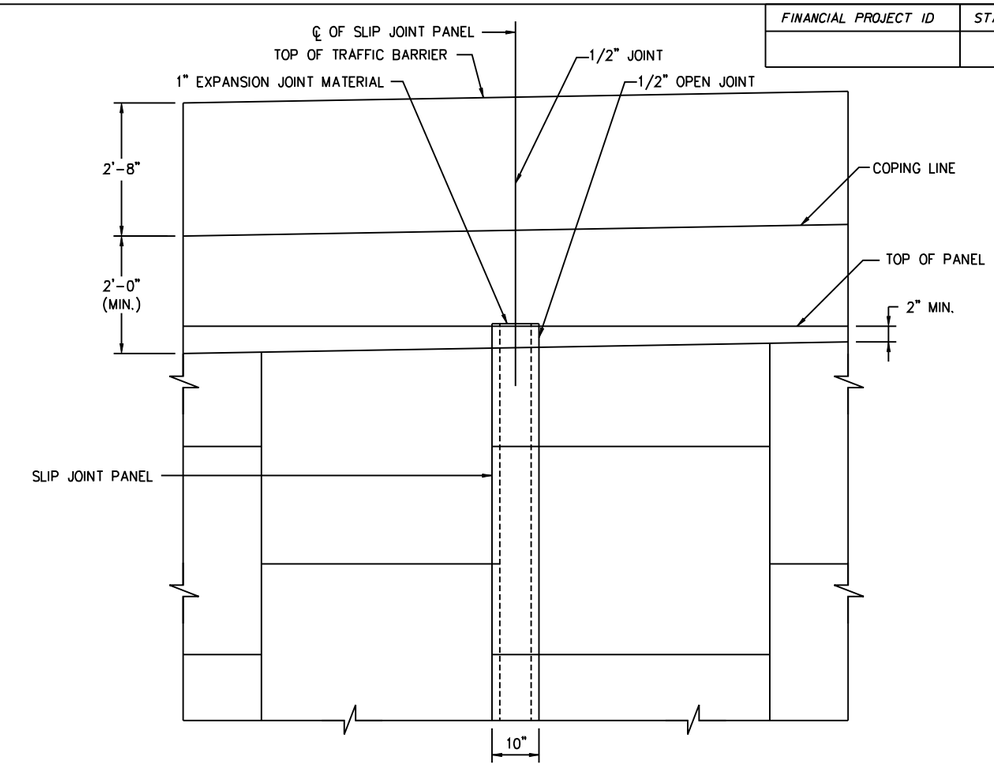

C.I.P. TRAFFIC BARRIER OVER SLIP JOINT PANEL

NOT TO SCALE

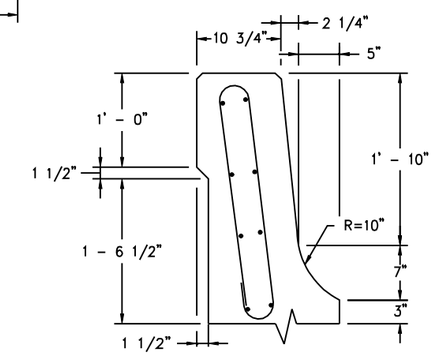

TRAFFIC BARRIER PARAPET DETAIL

NOT TO SCALE

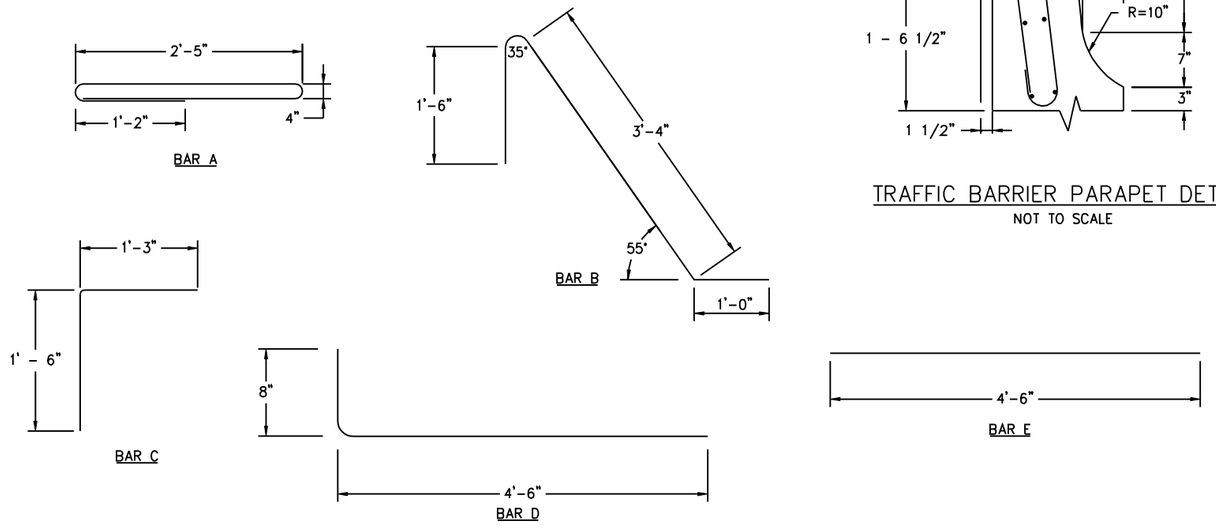

BAR BENDING DETAIL

NOT TO SCALE

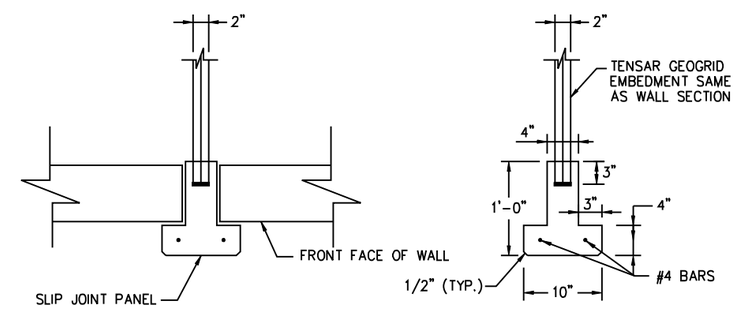

SLIP JOINT DETAIL

NOT TO SCALE

THIS SYSTEM MAY BE USED IN ALL ENVIRONMENTS

THIS DESIGN IS BASED UPON SPECIFIC PROPERTIES OF TENSAR PRODUCTS (GEOGRIDS, DRAINAGE COMPOSITES AND EROSION MEDIA), WHICH ARE PROPRIETARY TO THE TENSAR CORPORATION 1210 CITIZENS PARKWAY, MORROW GA. 30260. ANY SUBSTITUTION OF THE SPECIFIED PRODUCTS WILL INVALIDATE THIS DESIGN. THIS DRAWING IS BEING FURNISHED FOR USE ON THIS SPECIFIC PROJECT ONLY. ANY PARTY ACCEPTING THIS DOCUMENT DOES SO IN CONFIDENCE AND AGREES THAT IT SHALL NOT BE DUPLICATED WHOLE OR IN PART, NOR DISCLOSED TO OTHERS, WITHOUT THE CONSENT OF TENSAR EARTH TECHNOLOGIES, INC.

©2003, TENSAR EARTH TECHNOLOGIES, INC.

Tensar

Tensar Earth Technologies, Inc.
5883 Glenridge Drive, Ste 200
Atlanta, Georgia 30328
(404) 250-1290

DATE : 01-01-05

INTERIM STANDARD IN ENGLISH UNITS APPLICABLE TO DESIGN STANDARDS BOOKLET PUBLISHED IN EITHER ENGLISH OR METRIC UNITS.

STATE OF FLORIDA DEPARTMENT OF TRANSPORTATION

RETAINING WALL SYSTEMS TENSAR EARTH TECHNOLOGIES MSE RETAINING WALL

INTERIM STANDARD

SHEET NOS. 1 - 16 OF 16 ARE A REPLACEMENT OF INDEX NO. 5025 OF THE DESIGN STANDARDS BOOKLET DATED JANUARY 2000.

APPROVED BY
William N. Nickas, P.E.
State Structures Design Engineer

REVISION NO.	SHEET NO.	INDEX NO.
04	13 of 16	05025

FINANCIAL PROJECT ID	STATE PROJ. NO.	SHEET NO.

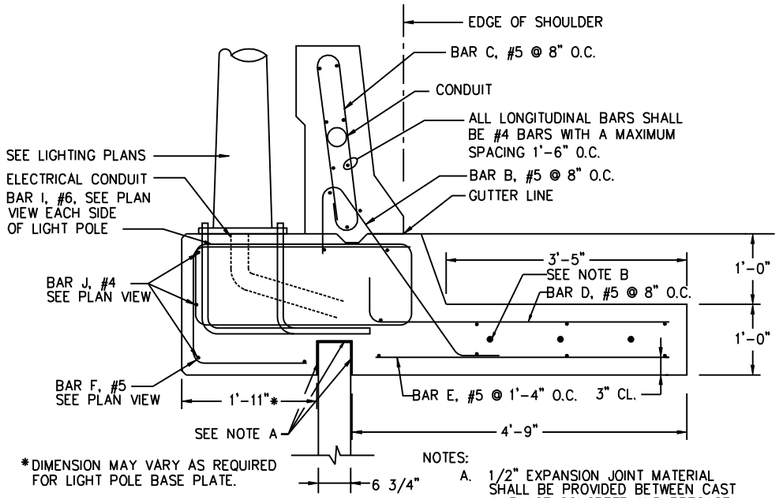

*DIMENSION MAY VARY AS REQUIRED FOR LIGHT POLE BASE PLATE.

NOTES:

A. 1/2" EXPANSION JOINT MATERIAL SHALL BE PROVIDED BETWEEN CAST IN PLACE CONCRETE AND PRECAST CONCRETE PANEL.

B. 3 #9 SHEAR DOWELS – 3' LONG REQ'D AT EXPANSION JOINTS IF UNIT IS LESS THAN 3 PANELS LONG.

C. MAINTAIN A 2" MIN. CLEARANCE ON ALL BARS. EXCEPT WHERE NOTED OTHERWISE.

C.I.P. BARRIER AND JUNCTION SLAB DETAIL AT LIGHT POLE

NOT TO SCALE

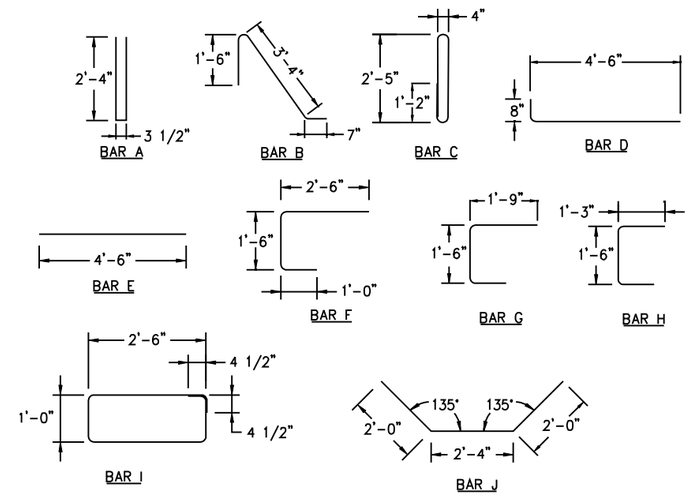

BAR BENDING DETAIL

NOT TO SCALE

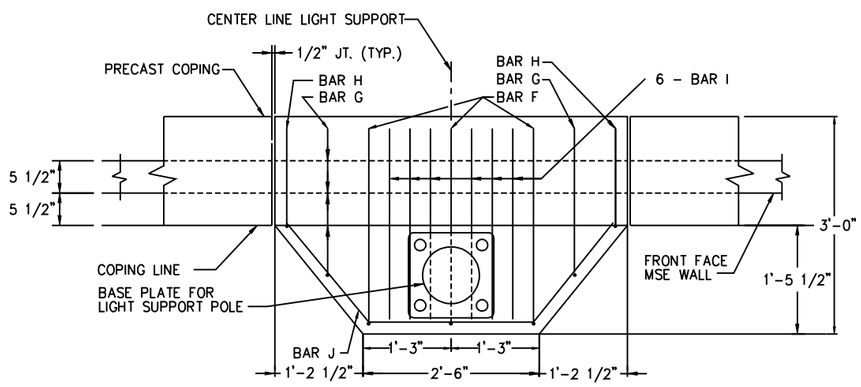

PLAN VIEW

NOT TO SCALE

NOTE:
REBAR IN BARRIER AND JUNCTION SLAB NOT SHOWN FOR CLARITY

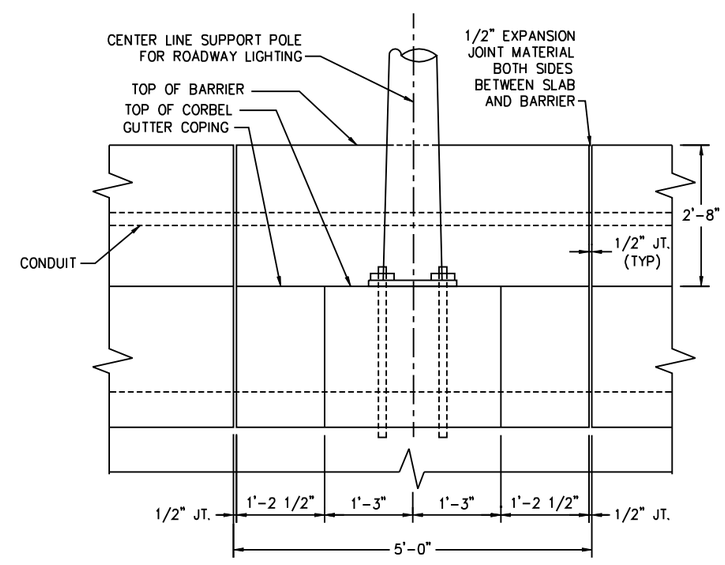

NOTE:
REFER TO LIGHT POLE PILASTER DETAILS IN BRIDGE PLANS FOR NOTES AND ADDITIONAL DETAILS (ANCHOR BOLTS, CONDUIT, JUNCTION BOXES, ETC.)

PARTIAL ELEVATION

THIS SYSTEM MAY BE USED IN ALL ENVIRONMENTS

DATE : 01-01-05

INTERIM STANDARD IN ENGLISH UNITS APPLICABLE TO DESIGN STANDARDS BOOKLET PUBLISHED IN EITHER ENGLISH OR METRIC UNITS.

STATE OF FLORIDA DEPARTMENT OF TRANSPORTATION

RETAINING WALL SYSTEMS TENSAR EARTH TECHNOLOGIES MSE RETAINING WALL

INTERIM STANDARD

SHEET NOS. 1 - 16 OF 16 ARE A REPLACEMENT OF INDEX NO. 5025 OF THE DESIGN STANDARDS BOOKLET DATED JANUARY 2000.

APPROVED BY
William N. Nickas, P.E.
State Structures Design Engineer

REVISION NO.	SHEET NO.	INDEX NO.
04	14 of 16	05025

THIS DESIGN IS BASED UPON SPECIFIC PROPERTIES OF TENSAR PRODUCTS (GEOGRIDS, DRAINAGE COMPOSITES AND EROSION MEDIA), WHICH ARE PROPRIETARY TO THE TENSAR CORPORATION 1210 CITIZENS PARKWAY, MORROW GA. 30260. ANY SUBSTITUTION OF THE SPECIFIED PRODUCTS WILL INVALIDATE THIS DESIGN. THIS DRAWING IS BEING FURNISHED FOR USE ON THIS SPECIFIC PROJECT ONLY. ANY PARTY ACCEPTING THIS DOCUMENT DOES SO IN CONFIDENCE AND AGREES THAT IT SHALL NOT BE DUPLICATED WHOLE OR IN PART, NOR DISCLOSED TO OTHERS, WITHOUT THE CONSENT OF TENSAR EARTH TECHNOLOGIES, INC.

©2003, TENSAR EARTH TECHNOLOGIES, INC.

Tensar

Tensar Earth Technologies, Inc.
5883 Glenridge Drive, Ste 200
Atlanta, Georgia 30328
(404) 250-1290

FINANCIAL PROJECT ID	STATE PROJ. NO.	SHEET NO.

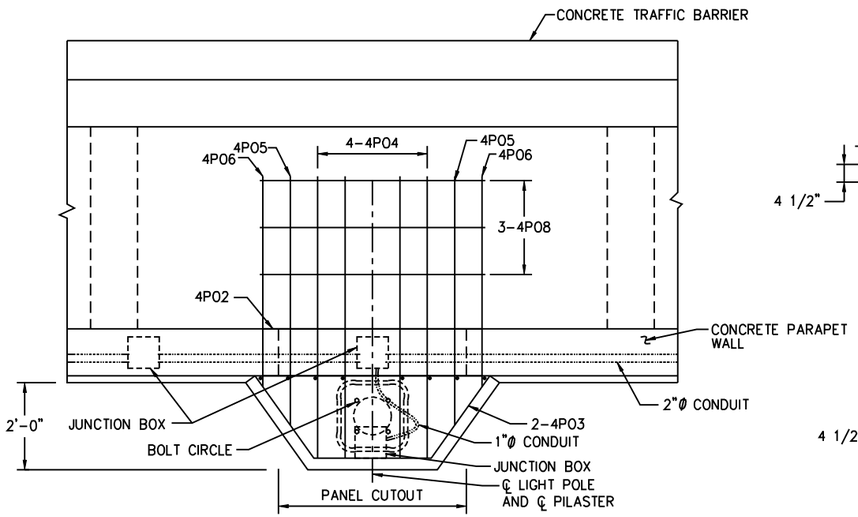

PLAN VIEW

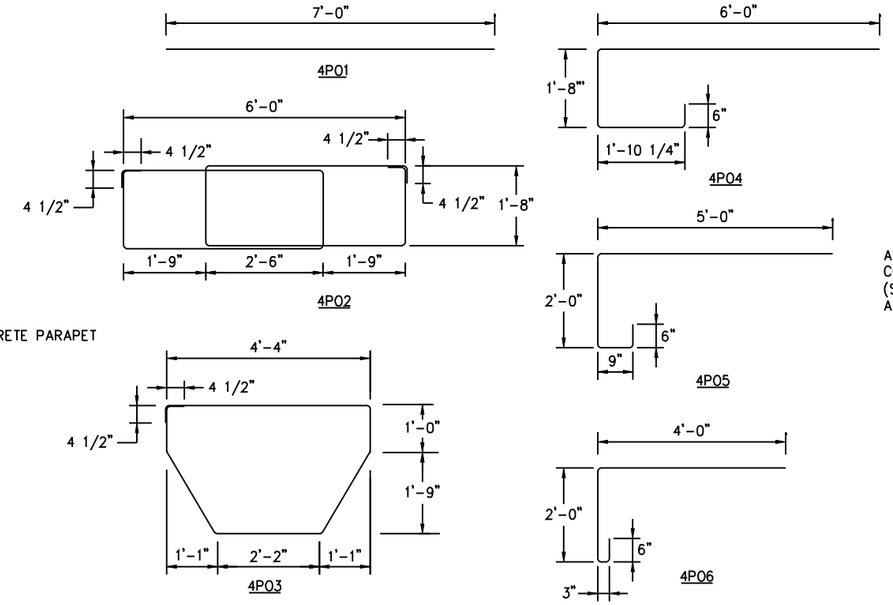

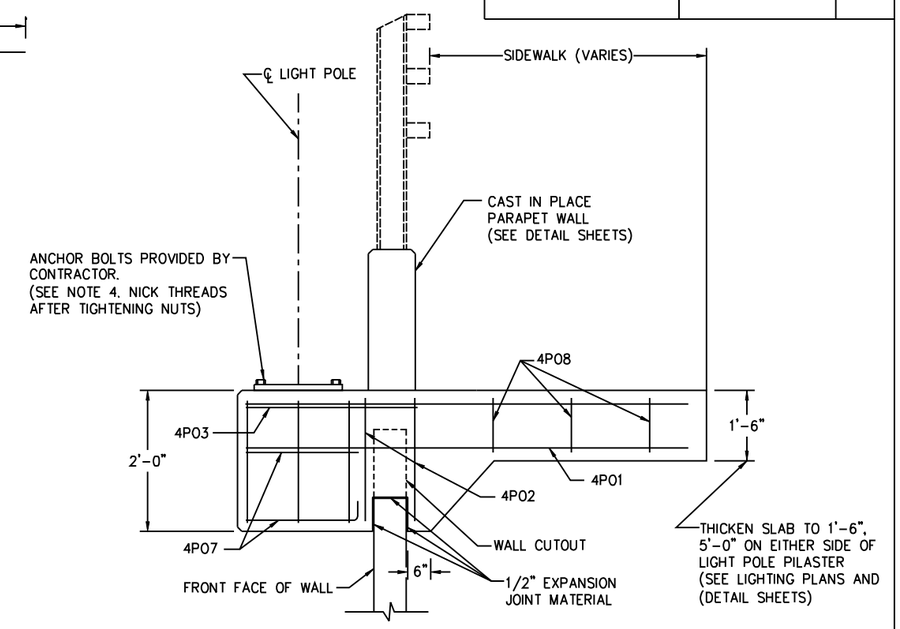

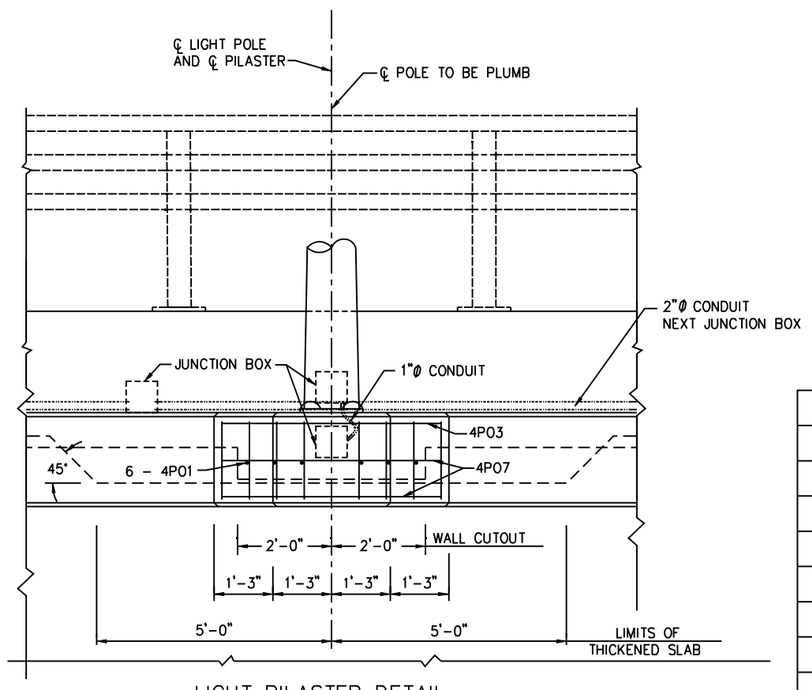

LIGHT PILASTER DETAIL

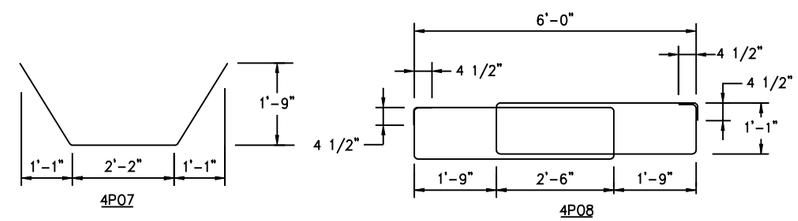

BAR BENDING DIAGRAM

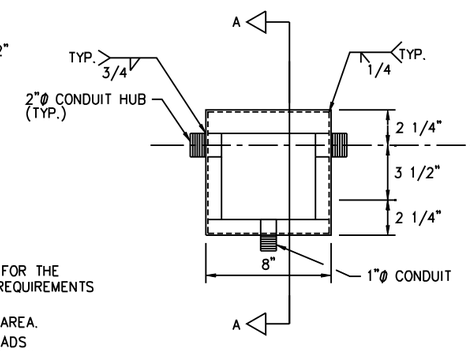

FRONT VIEW
JUNCTION BOX
(COVER REMOVED)

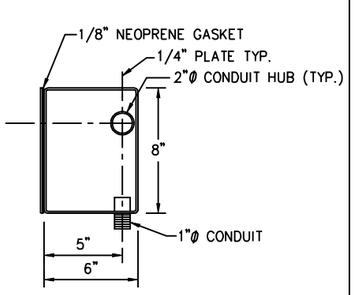

SECTION A–A

BILL OF REINFORCING STEEL			
MARK	SIZE	NO. REQUIRED	LENGTH
4P01	4	6	7'-0"
4P02	4	2	25-2"
4P03	4	1	13'-4 1/2"
4P04	4	4	10'-1/2"
4P05	4	2	8'-3"
4P06	4	2	6'-9"
4P07	4	2	6'-4"
4P08	4	3	22'-10"

1. ADDITIONAL CONCRETE AND REINFORCING STEEL REQUIRED FOR THE CONSTRUCTION OF THE PILASTER SHALL MEET THE SAME REQUIREMENTS AS THAT OF THE PARAPET WALL.
2. TOP OF PILASTER SHALL BE FINISHED TO A TRULY LEVEL AREA.
3. LIGHT POLE PILASTER IS DESIGNED TO RESIST WORKING LOADS (IN ANT DIRECTION) FROM THE LIGHT POLE APPLIED AT THE TOP OF THE PILASTER AS FOLLOWS:

LONGITUDINAL MOMENT	=	30,000 FT. POUNDS
TRANSVERSE MOMENT	=	6,000 FT. POUNDS
LONGITUDINAL SHEAR	=	1,000 POUNDS
TRANSVERSE SHEAR	=	200 POUNDS
TORSION	=	3,000 FT. POUNDS
AXIAL	=	400 POUNDS

IF THE LIGHT POLE PROVIDED APPLIES LOADS THAT ARE IN EXCESS OF THOSE SHOWN ABOVE, THE CONTRACTOR SHALL REDESIGN THE PILASTER AND SUBMIT HIS DESIGN TO THE DEPARTMENT FOR REVIEW, THE CONTRACTOR'S REDESIGN SHALL BE PREPARED, SIGNED AND SEALED BY A PROFESSIONAL ENGINEER REGISTERED IN THE STATE OF FLORIDA, AND QUALIFIED TO PERFORM THE WORK.

4. THE CONTRACTOR IS RESPONSIBLE FOR PROVIDING ANCHOR BOLTS THAT EFFECTIVELY TRANSMIT THE LIGHT POLE LOADS TO THE PILASTER AND THAT FIT THE REINFORCING CAGE, CALCULATIONS SIGNED AND SEALED BY A PROFESSIONAL ENGINEER REGISTERED IN THE STATE OF FLORIDA SHALL BE SUBMITTED BY THE CONTRACTOR TO THE DEPARTMENT FOR REVIEW AND APPROVAL SHOWING THAT THESE REQUIREMENTS HAVE BEEN MET PRIOR TO CONSTRUCTION.
5. STEEL FOR JUNCTION BOXES SHALL CONFORM WITH ASTM-A36, THE BOXES SHALL BE HOT DIP GALVANIZED AFTER FABRICATION. IN LIEU OF STEEL BOXES THE CONTRACTOR MAY SUBMIT FOR APPROVAL MOLDED P.V.C. BOXES (SCHEDULE 80.)
6. ALL CONDUITS SHALL BE RIGID GALVANIZED STEEL OR SCHEDULE 80 P.V.C.
7. THE COST OF ANCHOR BOLTS SHALL BE INCLUDED IN THE BID PRICE FOR LIGHT POLES.
8. PAYMENT: THE COST OF ALL LABOR, CONCRETE AND REINFORCING STEEL REQUIRED FOR THE CONSTRUCTION OF THE PILASTERS AND ALL CONDUITS. EXPANSION COUPLINGS, JUNCTION BOXES AND MISCELLANEOUS HARDWARE REQUIRED FOR COMPLETION OF THE ELECTRICAL INSTALLATION WITHIN THE LIMITS SHOWN ON THIS SHEET, SHALL BE INCLUDED IN THE CONTRACTOR'S BID PRICE FOR THE MSE WALLS.

THIS SYSTEM MAY BE USED IN ALL ENVIRONMENTS

THIS DESIGN IS BASED UPON SPECIFIC PROPERTIES OF TENSAR PRODUCTS (GEOGRIDS, DRAINAGE COMPOSITES AND EROSION MEDIA), WHICH ARE PROPRIETARY TO THE TENSAR CORPORATION 1210 CITIZENS PARKWAY, MORROW GA. 30260. ANY SUBSTITUTION OF THE SPECIFIED PRODUCTS WILL INVALIDATE THIS DESIGN. THIS DRAWING IS BEING FURNISHED FOR USE ON THIS SPECIFIC PROJECT ONLY. ANY PARTY ACCEPTING THIS DOCUMENT DOES SO IN CONFIDENCE AND AGREES THAT IT SHALL NOT BE DUPLICATED WHOLE OR IN PART, NOR DISCLOSED TO OTHERS, WITHOUT THE CONSENT OF TENSAR EARTH TECHNOLOGIES, INC.

©2003, TENSAR EARTH TECHNOLOGIES, INC.

Tensar

Tensar Earth Technologies, Inc.
5883 Glenridge Drive, Ste 200
Atlanta, Georgia 30328
(404) 250-1290

DATE : 01-01-05

INTERIM STANDARD IN ENGLISH UNITS APPLICABLE TO DESIGN STANDARDS BOOKLET PUBLISHED IN EITHER ENGLISH OR METRIC UNITS.

STATE OF FLORIDA DEPARTMENT OF TRANSPORTATION

RETAINING WALL SYSTEMS
TENSAR EARTH TECHNOLOGIES
MSE RETAINING WALL

INTERIM STANDARD

SHEET NOS. 1 - 16 OF 16 ARE A REPLACEMENT OF INDEX NO. 5025 OF THE DESIGN STANDARDS BOOKLET DATED JANUARY 2000.

APPROVED BY
William N. Nickas, P.E.
State Structures Design Engineer

REVISION NO.	SHEET NO.	INDEX NO.
04	15 of 16	05025

FINANCIAL PROJECT ID	STATE PROJ. NO.	SHEET NO.

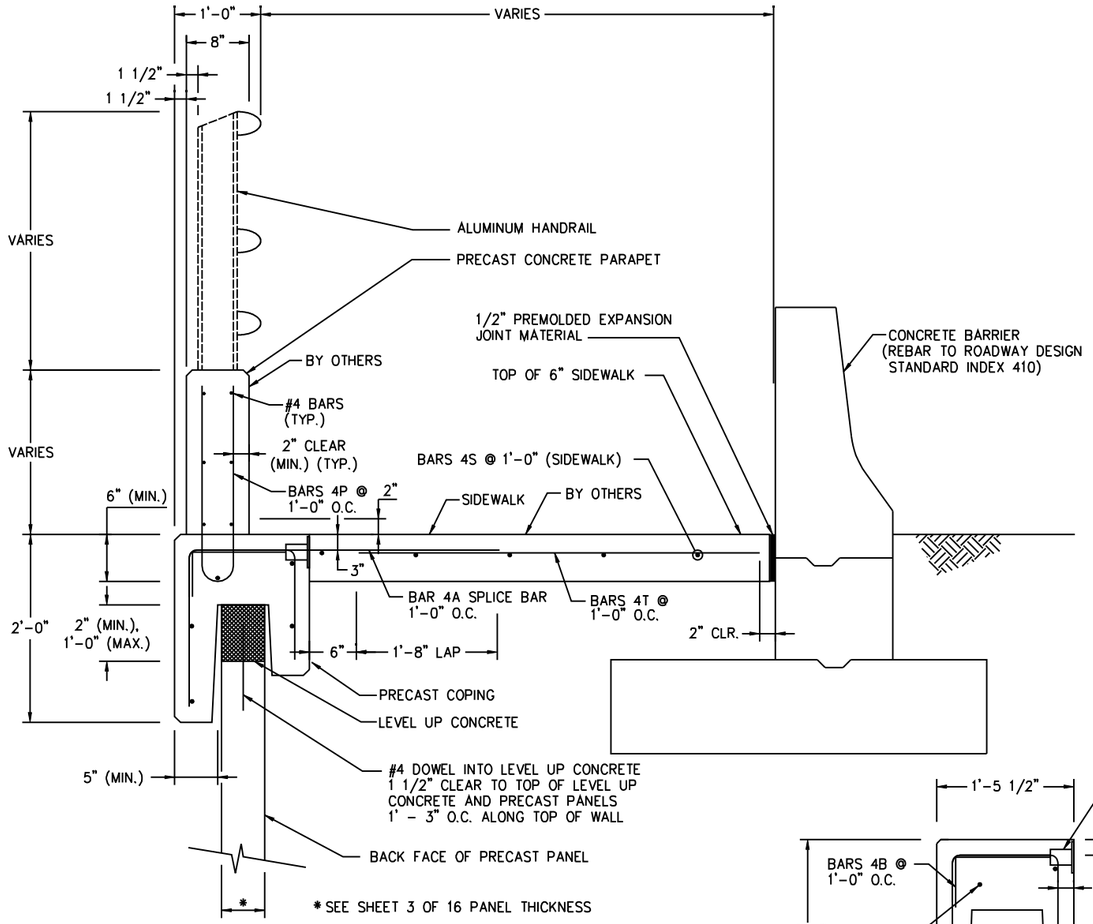

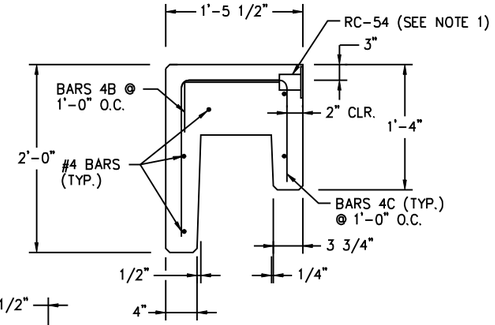

PRECAST COPING

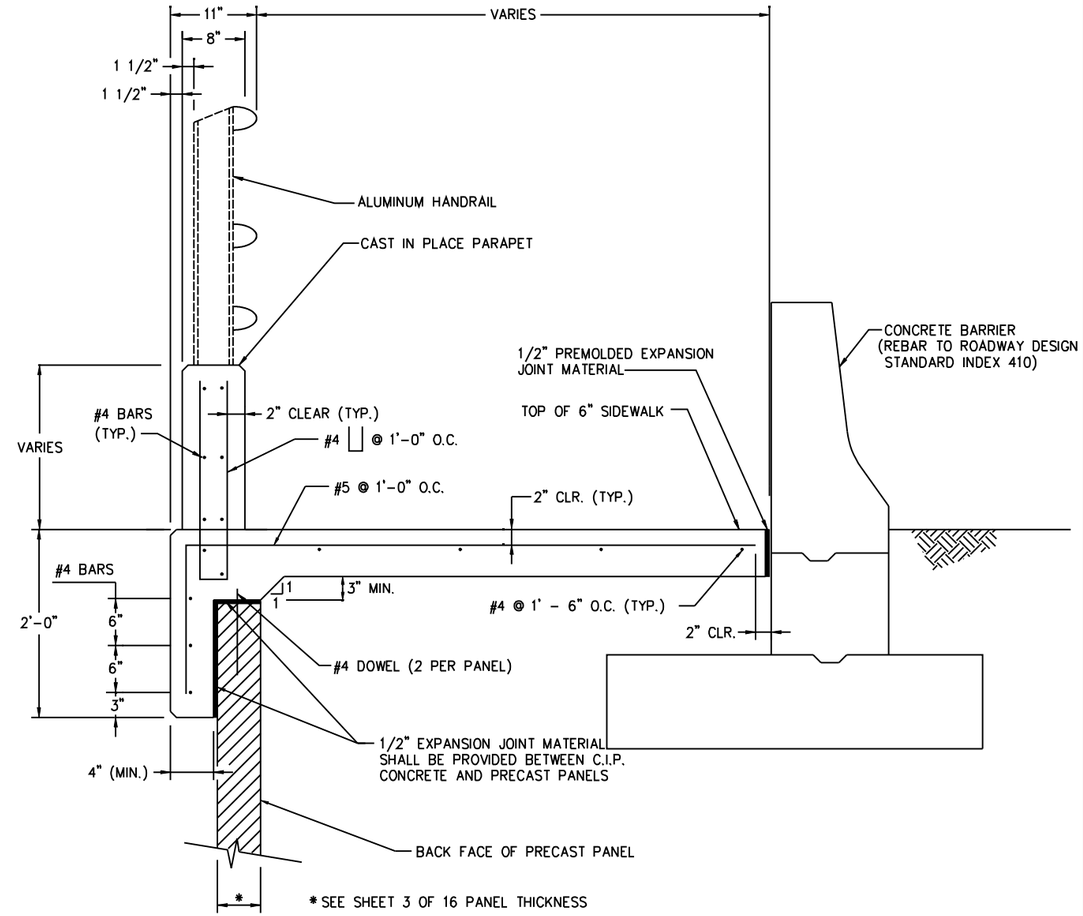

C.I.P. PARAPET DETAIL

NOT TO SCALE

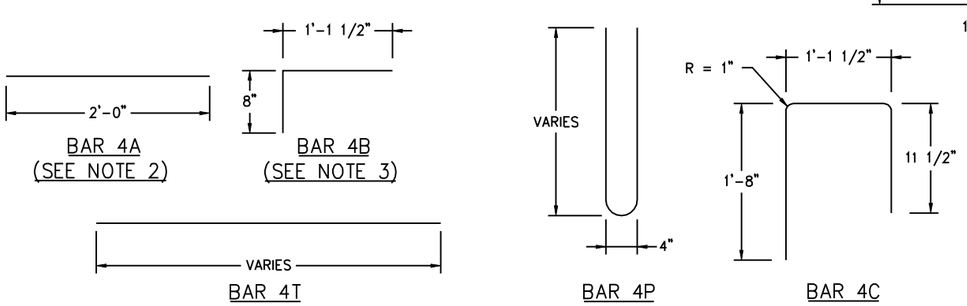

BAR 4A (SEE NOTE 2) | BAR 4B (SEE NOTE 3) | BAR 4T | BAR 4P | BAR 4C

BAR BENDING DETAIL

NOTES:

1. RC-54, MEADOW BURKE SMOOTH COUPLER/FLANGE.
2. BAR 4A, #4 MEADOW BURKE SPLICE BAR C = 2'.
3. BAR 4B, MEADOW BURKE SETTING BAR A = 1'-2", B = 8".
4. ALL BARS ARE #4 UNLESS OTHERWISE NOTED.
5. OVERALL LENGTH OF COPING PIECES WILL BE 9'-0"

PRECAST SADDLE WITH C.I.P. PARAPET AND SIDEWALK DETAIL

NOT TO SCALE

THIS SYSTEM MAY BE USED IN ALL ENVIRONMENTS

THIS DESIGN IS BASED UPON SPECIFIC PROPERTIES OF TENSAR PRODUCTS (GEOGRIDS, DRAINAGE COMPOSITES AND EROSION MEDIA), WHICH ARE PROPRIETARY TO THE TENSAR CORPORATION 1210 CITIZENS PARKWAY, MORROW GA. 30260. ANY SUBSTITUTION OF THE SPECIFIED PRODUCTS WILL INVALIDATE THIS DESIGN. THIS DRAWING IS BEING FURNISHED FOR USE ON THIS SPECIFIC PROJECT ONLY. ANY PARTY ACCEPTING THIS DOCUMENT DOES SO IN CONFIDENCE AND AGREES THAT IT SHALL NOT BE DUPLICATED WHOLE OR IN PART, NOR DISCLOSED TO OTHERS, WITHOUT THE CONSENT OF TENSAR EARTH TECHNOLOGIES, INC.

©2003, TENSAR EARTH TECHNOLOGIES, INC.

Tensar

Tensar Earth Technologies, Inc.
5883 Glenridge Drive, Ste 200
Atlanta, Georgia 30328
(404) 250-1290

DATE : 01-01-05

INTERIM STANDARD IN ENGLISH UNITS APPLICABLE TO DESIGN STANDARDS BOOKLET PUBLISHED IN EITHER ENGLISH OR METRIC UNITS.

STATE OF FLORIDA DEPARTMENT OF TRANSPORTATION

RETAINING WALL SYSTEMS TENSAR EARTH TECHNOLOGIES MSE RETAINING WALL

INTERIM STANDARD

SHEET NOS. 1 - 16 OF 16 ARE A REPLACEMENT OF INDEX NO. 5025 OF THE DESIGN STANDARDS BOOKLET DATED JANUARY 2000.

APPROVED BY
William N. Nickas, P.E.
State Structures Design Engineer

REVISION NO.	SHEET NO.	INDEX NO.
04	16 of 16	05025