FINANCIAL PROJECT ID	STATE PROJ. NO.	SHEET NO.

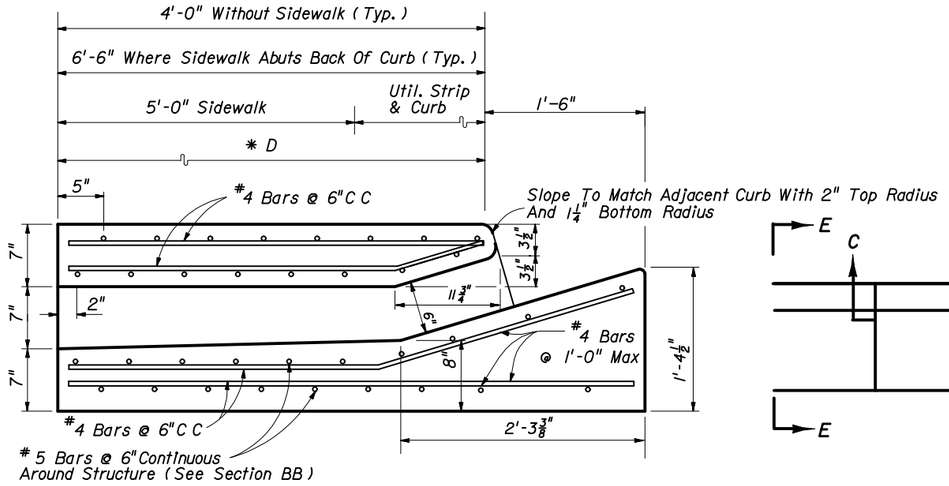

SECTION AA

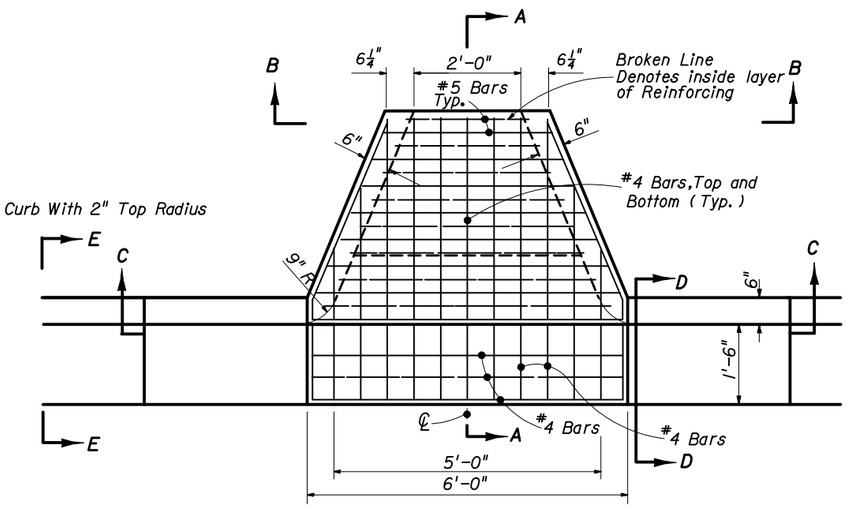

TOP VIEW

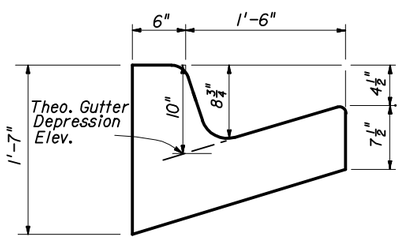

SECTION DD

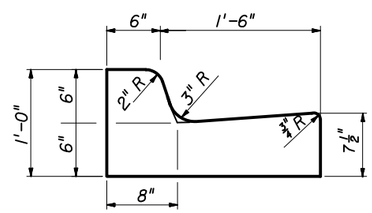

Curb And Gutter Type F

SECTION EE

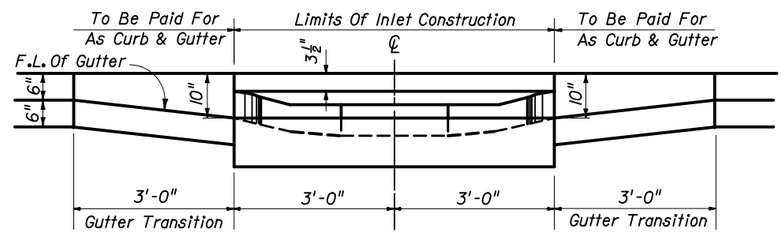

SECTION CC

SINGLE BARREL FLUME

GENERAL NOTES

1. The finished grade and slope of the inlet top are to conform with the finished cross slope and grade of the proposed sidewalk and/or border.
2. When inlets are to be constructed on a curve, refer to the plans to determine the radius and, where necessary, modify the inlet details accordingly. Bend steel when necessary.
3. All steel shall have 1¼" minimum cover unless otherwise shown. Inlets can be either cast-in-place or precast concrete. Chamfer all exposed edges ¾".
4. All reinforcement is ASTM A615/A615M Grade 60 steel, either smooth or deformed. Equivalent area grade 40 steel or 65 ksi welded wire fabric may be substituted.
5. Precasting of this inlet will be permitted. Precast units shall conform to the dimensions shown or in accordance with approved shop drawings. Request for shop drawing approval shall be directed to the State Drainage Engineer.
6. Inlets to be paid for under the contract unit price for Inlets (Closed Flume) EA.

DESIGN NOTES

1. These inlets are designed for use with Type F curb and gutter only. The Single Barrel Flume is intended for locations with light to moderate flows. Multiple Barrel Flumes must be selected to meet design heavy flows.
2. Designer must specify Flume Type, "D" dimension and number of barrels in plans.
3. Designer must specify where energy dissipating bricks are required.

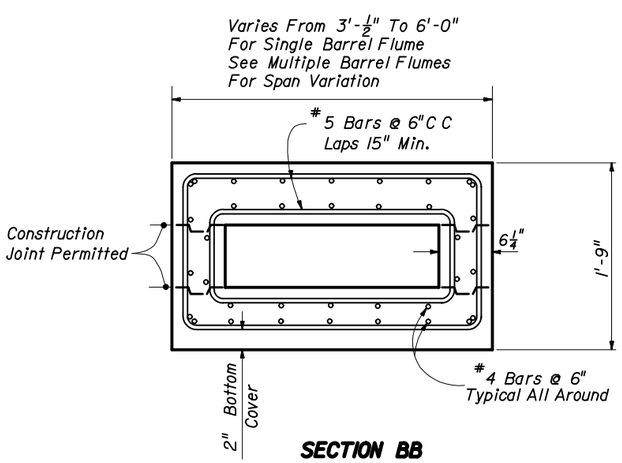

SECTION BB

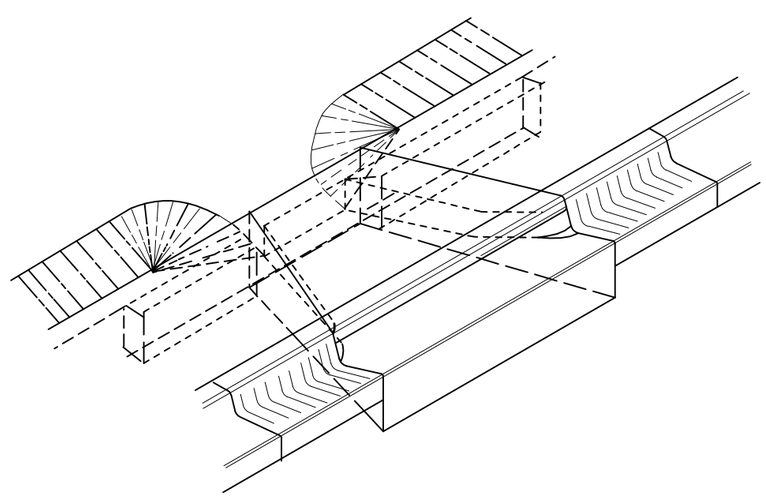

SINGLE BARREL FLUME DEPICTED

FLUME W/SIDEWALK
INLET (CLOSED FLUME) TYPE I

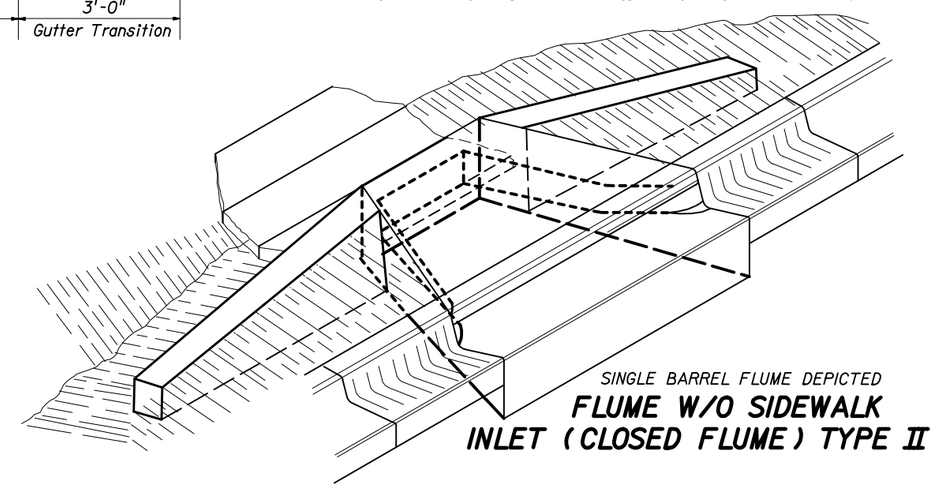

SINGLE BARREL FLUME DEPICTED

FLUME W/O SIDEWALK
INLET (CLOSED FLUME) TYPE II

THE SEALED RECORD OF THIS STANDARD IS ON FILE IN THE ROADWAY DESIGN OFFICE.

INTERIM STANDARD IN ENGLISH UNITS APPLICABLE TO ROADWAY AND TRAFFIC DESIGN STANDARD BOOKLETS PUBLISHED IN EITHER ENGLISH OR METRIC UNITS.

Date: 12-04-00

STATE OF FLORIDA DEPARTMENT OF TRANSPORTATION

CLOSED FLUME INLET

INTERIM STANDARD

INDEX NO. 216 (SHEETS 1-3 OF 3) IS A SUPPLEMENT TO THE METRIC ROADWAY AND TRAFFIC DESIGN STANDARDS, BOOKLET DATED JANUARY 2000.

APPROVED BY S. A. McLemore
State Drainage Engineer

REVISION NO.	SHEET NO.	INDEX NO.
	1 of 3	216

FINANCIAL PROJECT ID	STATE PROJ. NO.	SHEET NO.

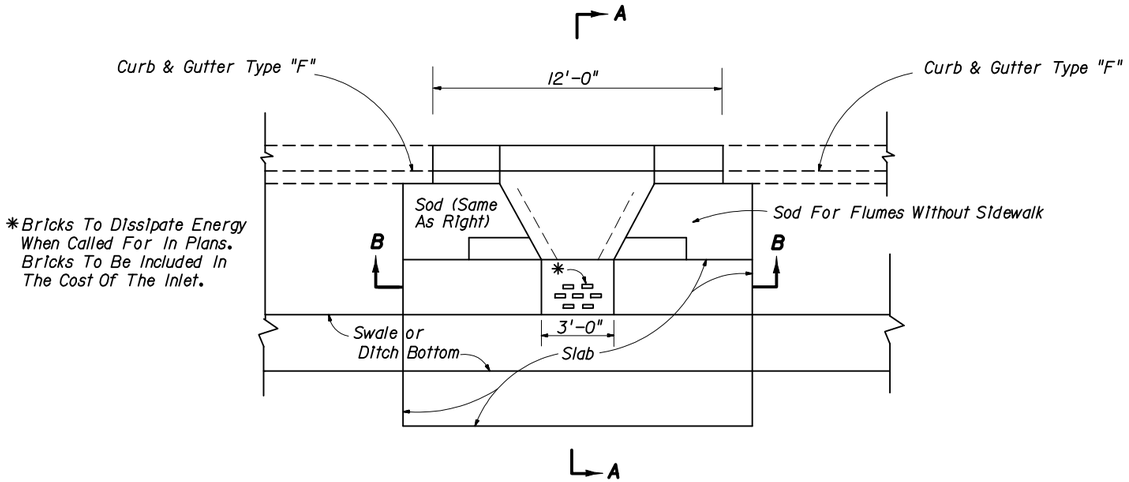

SINGLE BARREL FLUME DEPICTED

PLAN

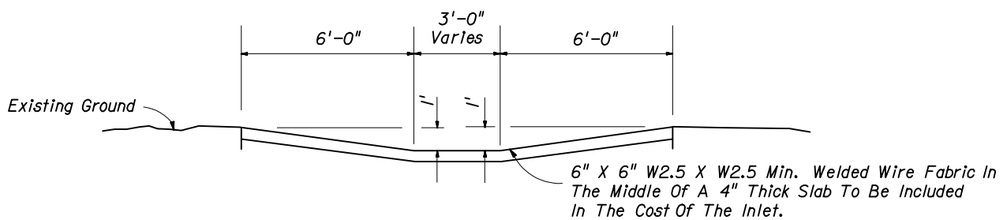

SINGLE BARREL FLUME DEPICTED

SECTION BB

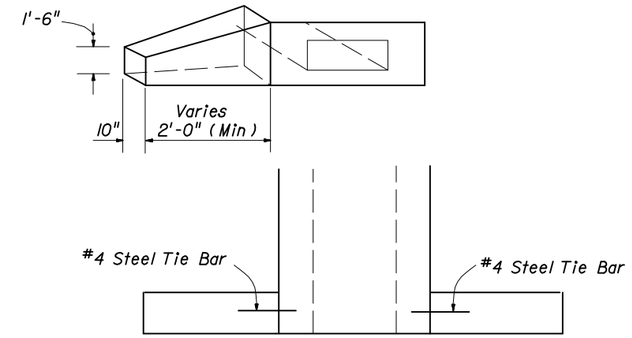

SINGLE BARREL FLUME DEPICTED

ENDWALL

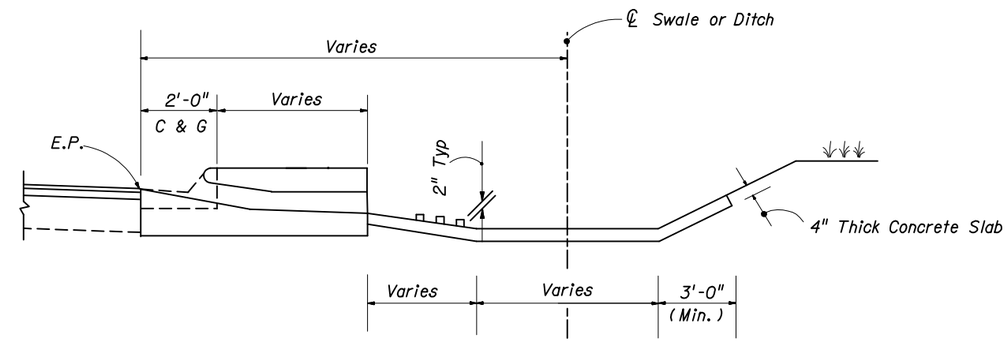

Ditch Pavement To Be Adjusted When Inlet Present

SECTION AA

SLOPES, DITCH APRON AND ENDWALLS

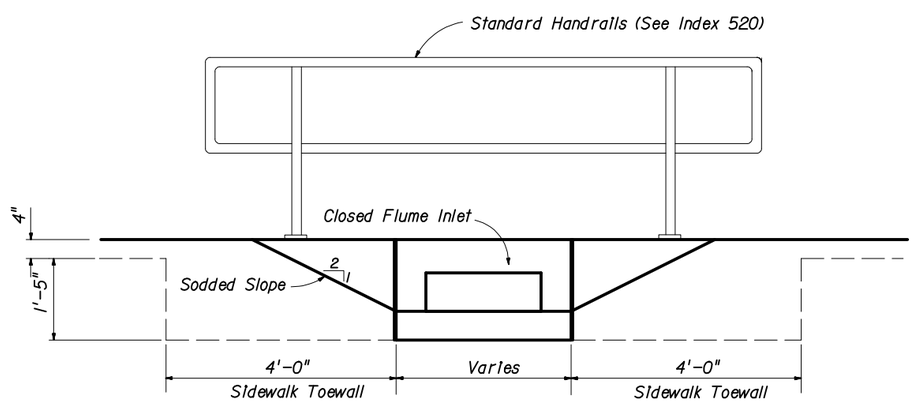

SINGLE BARREL FLUME DEPICTED

ELEVATION

HANDRAIL FOR FLUME IN SIDEWALK

GENERAL NOTES

1. Chamfer all exposed edges $\frac{3}{4}$"

INTERIM STANDARD IN ENGLISH UNITS APPLICABLE TO ROADWAY AND TRAFFIC DESIGN STANDARD BOOKLETS PUBLISHED IN EITHER ENGLISH OR METRIC UNITS.

THE SEALED RECORD OF THIS STANDARD IS ON FILE IN THE ROADWAY DESIGN OFFICE.

Date: 12-04-00

STATE OF FLORIDA DEPARTMENT OF TRANSPORTATION
ROAD DESIGN

CLOSED FLUME INLET

INTERIM STANDARD

INDEX NO. 216 (SHEETS 1-3 OF 3) IS A SUPPLEMENT TO THE METRIC ROADWAY AND TRAFFIC DESIGN STANDARDS, BOOKLET DATED JANUARY 2000.

APPROVED BY S. A. McKenzie
State Drainage Engineer

REVISION NO.	SHEET NO.	INDEX NO.
	2 of 3	216

FINANCIAL PROJECT ID	STATE PROJ. NO.	SHEET NO.

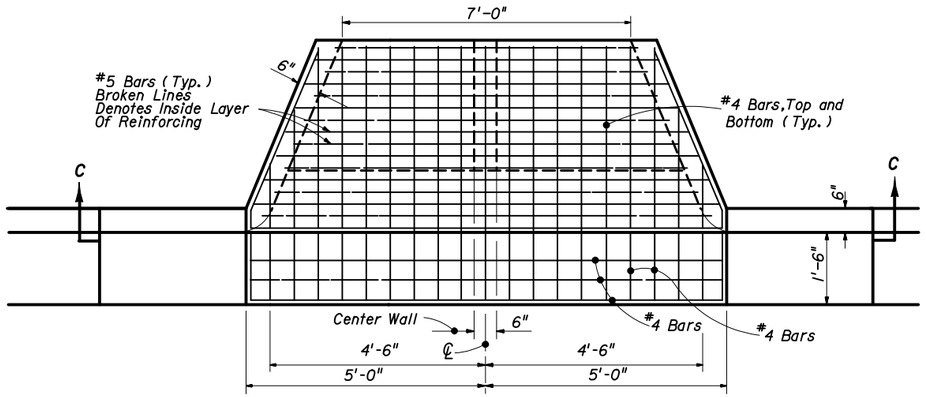

TOP VIEW

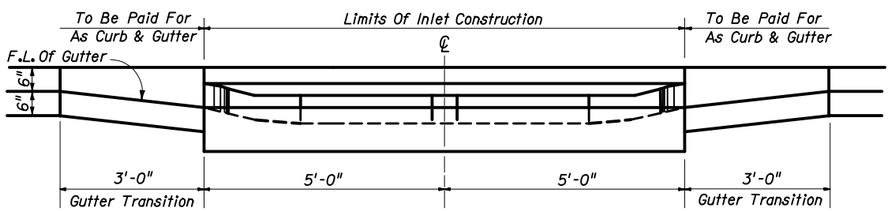

SECTION CC

DOUBLE BARREL FLUME

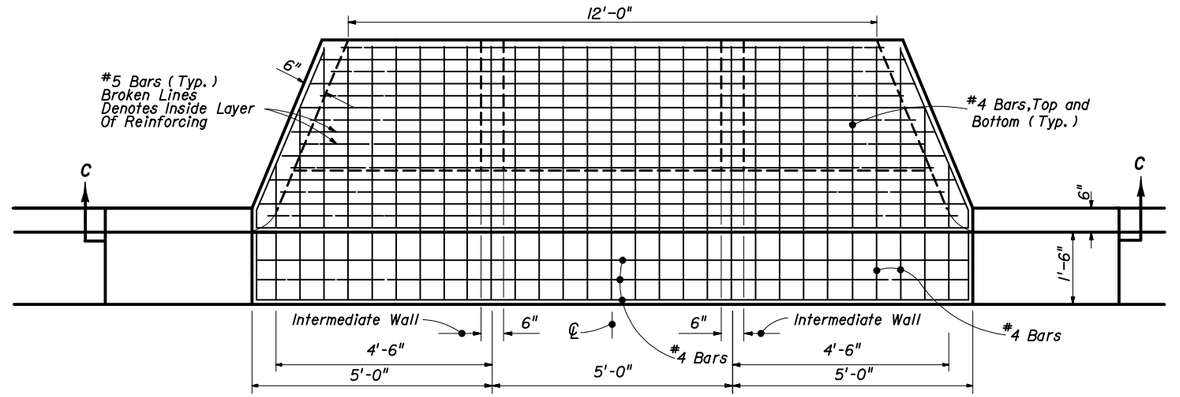

TOP VIEW

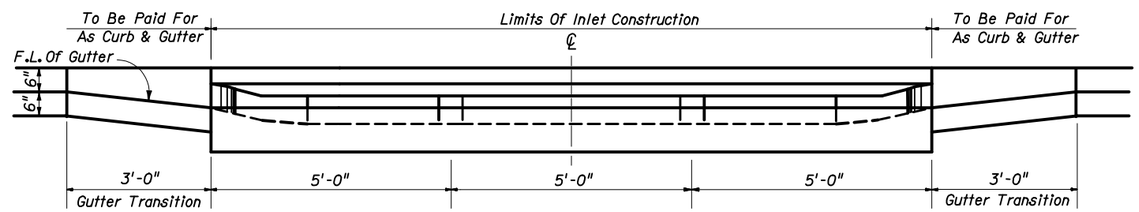

SECTION CC

TRIPLE BARREL FLUME

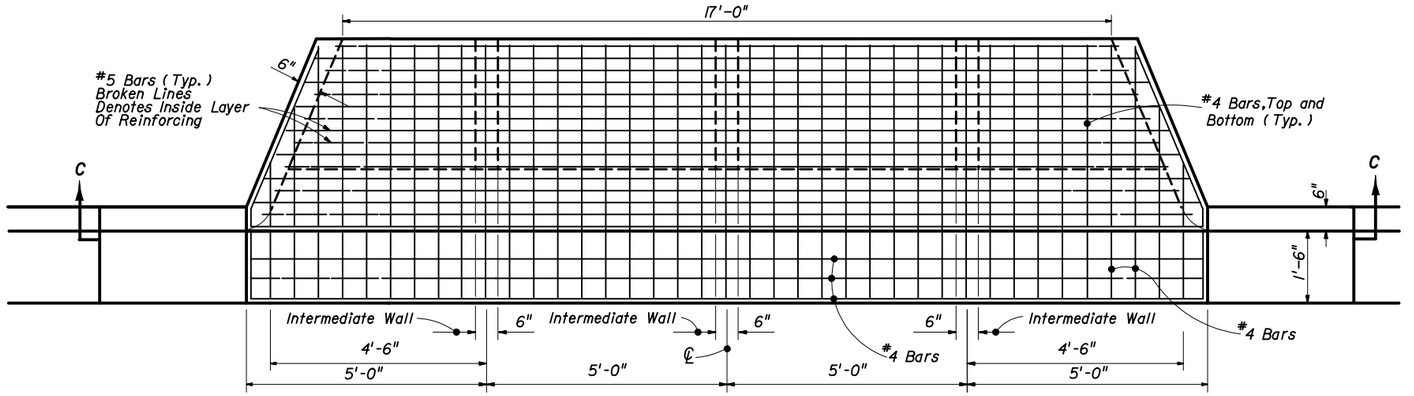

TOP VIEW

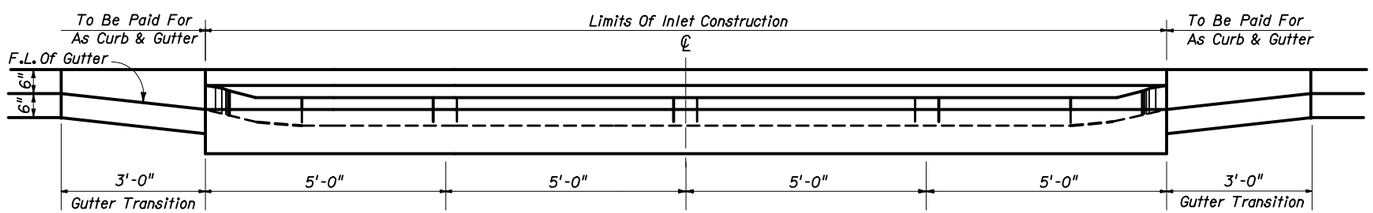

SECTION CC

QUADRUPLE BARREL FLUME

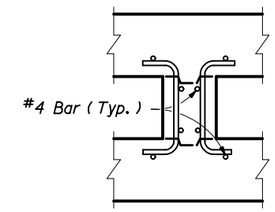

INTER WALL REINFORCING

NOTE: See Single Barrel Flume For Base Dimensions.

THE SEALED RECORD OF THIS STANDARD IS ON FILE IN THE ROADWAY DESIGN OFFICE.

INTERIM STANDARD IN ENGLISH UNITS APPLICABLE TO ROADWAY AND TRAFFIC DESIGN STANDARD BOOKLETS PUBLISHED IN EITHER ENGLISH OR METRIC UNITS.

STATE OF FLORIDA DEPARTMENT OF TRANSPORTATION
ROAD DESIGN

CLOSED FLUME INLET

INTERIM STANDARD

INDEX NO. 216 (SHEETS 1-3 OF 3) IS A SUPPLEMENT TO THE METRIC ROADWAY AND TRAFFIC DESIGN STANDARDS, BOOKLET DATED JANUARY 2000.

APPROVED BY S. A. McClemore
State Drainage Engineer

REVISION NO.	SHEET NO.	INDEX NO.
	3 of 3	216

Date: 12-04-00