FINANCIAL PROJECT ID	STATE PROJ. NO.	SHEET NO.

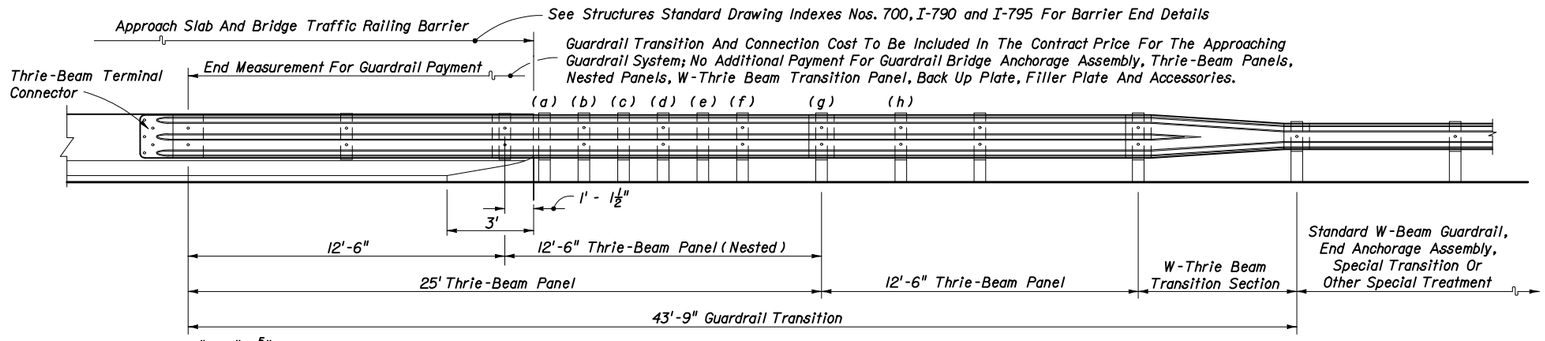

ELEVATION

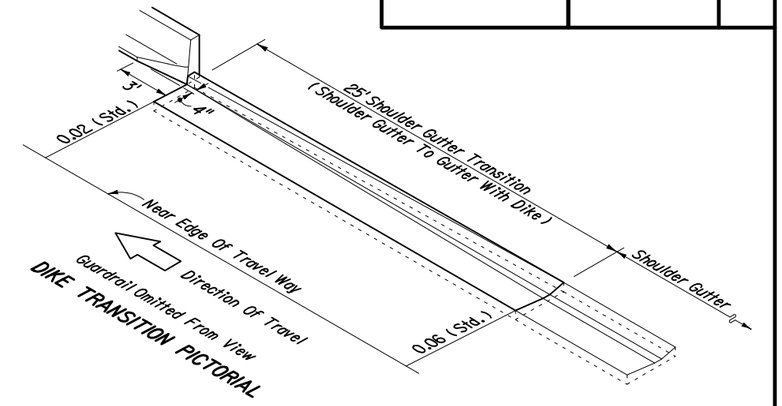

DIKE TRANSITION PICTORIAL

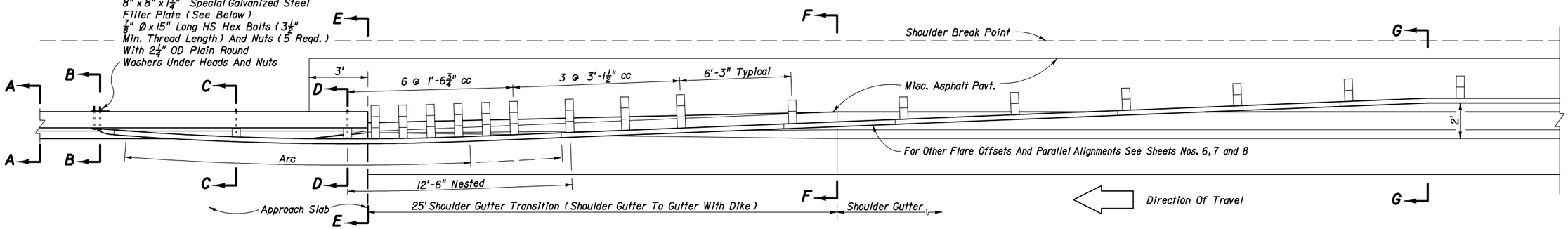

PLAN - GUARDRAIL, SHOULDER GUTTER AND SHOULDER TRANSITIONS

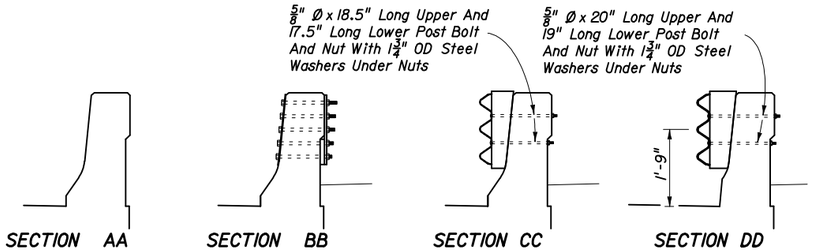

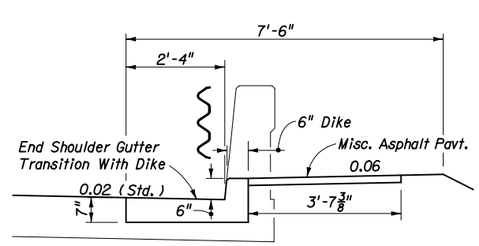

SECTION EE

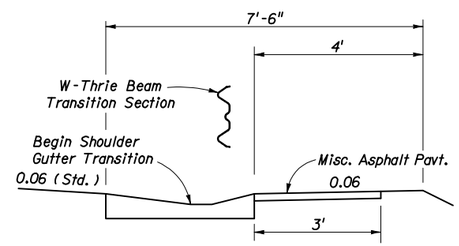

SECTION FF

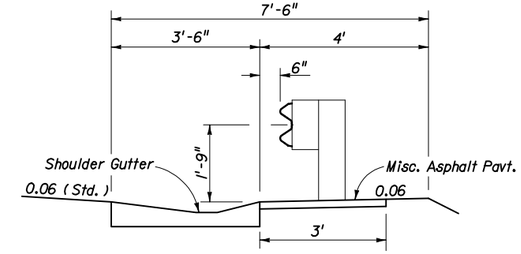

SECTION GG

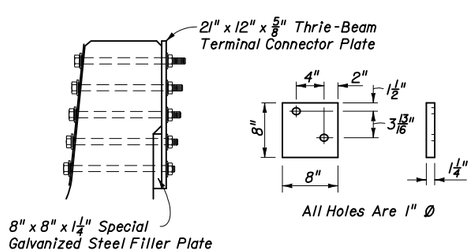

SPECIAL GALVANIZED STEEL FILLER PLATE FOR USE AT SECTION BB

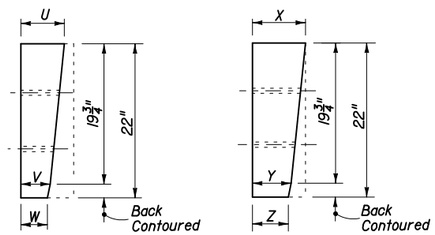

BLOCK FOR SECTION CC

BLOCK FOR SECTION DD

THRIE-BEAM OFFSET BLOCKS FIELD TRIMMED FOR USE AT SECTIONS CC & DD

APPLICATIONS	SECTION CC			SECTION DD		
	U	V	W	X	Y	Z
Single Face Guardrail	6⅛"	4⅛"	3⅝"	7½" nom.	5½" nom.	5" nom.
Double Face Guardrail With Timber Posts	5⅛"	3⅛"	2⅝"	6½" nom.	4½" nom.	4" nom.
Double Face Guardrail With Steel Posts	4⅜"	2⅜"	1⅞"	5¾"	3¾"	3¼"

For Double Face Guardrail Connections To Median Bridge Traffic Railing Barrier, See Index No. 410 'Guardrail Connection To Concrete Barrier Wall Approach Ends'.

GUARDRAIL TRANSITION NOTE

When shoulder gutter is required, the 25' long dike transition, shown in the 'PLAN' and 'PICTORIAL' above, is required. Double offset blocks are shown for guardrail installations adjacent to shoulder gutter/dike transitions; single offset blocks shall be installed in absence of shoulder gutter. Nested rails shall not be bolted to the blocks and posts at posts (a), (c), and (e). One 16d galvanized nail shall be driven between each post and block, and between double blocks, in order to prevent block rotation, see '16d NAIL FOR PREVENTION OF OFFSET BLOCK ROTATION', this Index.

THE SEALED RECORD OF THIS STANDARD IS ON FILE IN THE ROADWAY DESIGN OFFICE.

INTERIM STANDARD IN ENGLISH UNITS APPLICABLE TO ROADWAY AND TRAFFIC DESIGN STANDARD BOOKLETS PUBLISHED IN EITHER ENGLISH OR METRIC UNITS.

GUARDRAIL APPROACH TRANSITION AND CONNECTION FOR BRIDGES WITH SAFETY SHAPE TRAFFIC RAILING BARRIERS EXTENDING FULL LENGTH OF APPROACH SLAB

DETAIL J

Revised: 12-28-01

STATE OF FLORIDA DEPARTMENT OF TRANSPORTATION

GUARDRAIL

INTERIM STANDARD

THIS SHEET IS A REPLACEMENT FOR INDEX NO. 400, (SHEET 12 OF 31) OF THE METRIC ROADWAY AND TRAFFIC DESIGN STANDARDS, BOOKLET DATED JANUARY 2000.

APPROVED BY Roadway Design Engineer

REVISION NO.	SHEET NO.	INDEX NO.
	12 of 31	0400