FINANCIAL PROJECT ID	STATE PROJ. NO.	SHEET NO.

SSL

Specializing in Construction Products

4740 Scotts Valley Drive, Suite "E"
Scotts Valley, California 95066
Telephone 831/430-9300
FAX 831/430-9340

GENERAL NOTES

DESIGN CRITERIA

1. DESIGN IS BASED ON THE ASSUMPTION THAT MATERIAL WITHIN THE REINFORCED SOIL VOLUME, METHODS OF CONSTRUCTION AND QUALITY OF PREFABRICATED MATERIALS SHALL CONFORM TO THE CONTRACING AGENCY'S TECHNICAL SPECIFICATIONS FOR MSE EARTH WALLS.

2. FACTORS OF SAFETY

   OVERTURNING = 2.0
   INTERNAL PULLOUT = 1.5 (ALLOW DEFORMATION OF 3/4")
   OVERAL STABILITY = 1.5
   SLIDING = 1.5
   BEARING = 2.5

   ALLOWABLE STRESS IN REINFORCING MESH AT END OF DESIGN LIFE = 0.47 Fy

3. SOIL CHARACTERISTICS ASSUMED FOR DESIGN:

   SOIL PARAMETERS:

   SEE WALL CONTROL DRAWINGS FOR SOIL CHARACTERISTICS OF FOUNDATION MATERIAL TO BE USED IN THE DESIGN OF THE WALL SYSTEM, THE CONTRACTOR SHALL PROVIDE SOIL DESIGN PARAMETERS FOR BACKFILL MATERIAL BASED ON THE ACTUAL SOIL CHARACTERISTICS UTILIZED AT THE SITE, THE VALUES OF ϕ, C, AND γ SHALL BE PROVIDED IN THE SHOP DRAWINGS.

4. THE MAXIMUM APPLIED BEARING PRESSURE AT THE FOUNDATION LEVEL IS AS SHOWN ON THE WALL ELEVATIONS FOR EACH DESIGN CASE. IT IS THE RESPOSIBILITY OF OTHERS TO DETERMINE THAT THIS APPLIED BEARING PRESSURE IS ALLOWABLE FOR THAT LOCATION.

5. ANY UNSUITABLE FOUNDATION MATERIAL BELOW THE REINFORCED SOIL VOLUME, AS DETERMINED BY THE ENGINEER, SHALL BE EXCAVATED AND REPLACED WITH SUITABLE MATERIAL OR OTHERWISE STABILIZED AS DIRECTED BY THE ENGINEER.

REINFORCING ELEMENTS

6. REINFORCING MESH ELEMENTS SHALL BE SHOP FABRICATED FROM COLD DRAWN STEEL ROD CONFORMING TO THE MINIMUM REQUIREMENTS OF ASTM A-82 AND SHALL BE WELDED AT THE JUNCTIONS BETWEEN LONGITUDINAL AND TRANSVERSE WIRES IN ACCORDANCE WITH ASTM A-185. GALVANIZATION SHALL BE APPLIED AFTER MESH FABRICATION AND BENDING AND SHALL CONFORM TO THE MINIMUM REQUIREMENTS OF ASTM A-123.

DESIGN

7. THE DESIGN CONTAINED ON THESE DRAWINGS IS BASED ON INFORMATION PROVIDED BY OTHERS. ON THE BASIS OF THIS INFORMATION, SSL CONSTRUCTION IS RESPONSIBLE FOR INTERNAL STABILITY OF THE STRUCTURE ONLY. EXTERNAL STABILITY DESIGN INCLUDING FOUNDATION AND SLOPE STABILITY IS THE RESPONSIBILITY OF OTHERS.

WALL CONSTRUCTION

8. CURVES IN THE WALL WILL BE FORMED BY A SERIES OF SHORT CORDS, OF 4' - 11 1/4" EACH, TO MATCH THE DESIRED WALL ALIGNMENT.

9. FOR LOCATION AND ALIGNMENT OF MSE WALLS, SEE WALL CONTROL DRAWINGS.

10. IF MANHOLES AND DROP INLETS ARE PRESENT, THEY SHALL BE LOCATED AS SHOWN ON WALL ELEVATIONS.

11. IF PILES ARE LOCATED WITHIN THE REINFORCED SOIL VOLUME, THEY SHALL BE DRIVEN PRIOR TO CONSTRUCTION OF THE MSE WALL, UNLESS A METHOD TO PROTECT THE STRUCTURE, WHICH IS ACCEPTABLE TO SSL CONSTRUCTION AND THE ENGINEER, IS PROPOSED AND APPROVED IN WRITING.

12. BACKFILL MATERIAL SHALL BE COMPACTED IN ACCORDANCE WITH SPECIFICATION SECTION 548 TO A LEVEL OF 2' (+/-) ABOVE THE MESH CONNECTION IN THE PANELS. INSTALLATION OF REINFORCING MESH SHALL BE PERMITTED ONLY AFTER PLACEMENT AND COMPACTION OF THE BACKFILL MATERIAL HAS REACHED THE REQURIED LEVEL.

13. WALL CONSTRUCTION SHALL BE IN ACCORDANCE WITH SPECIFICATION SECTION 548.

14. IT IS THE CONTRACTOR'S RESPONSIBILITY TO DETERMINE THE LOCATION OF ANY GUARDRAIL POSTS BEHIND THE MSE PANELS. PRIOR TO PLACEMENT OF THE TOP LAYER OF REINFORCING MESH, INDIVIDUAL REINFORMING MESH MAY BE CUT AND SKEWED TO AVOID THE POST LOCATIONS IF AUTHORIZED BY THE ENGINEER ON THE SHOP DRAWINGS. NO CUTTING OF REINFORCING MESH IS ALLOWED UNLESS SHOWN ON THE SHOP DRAWINGS AND APPROVED BY THE ENGINEER. THE CONTRACTOR, AT THE CONTRACTOR'S EXPENSE, SHALL REPAIR ANY DAMAGE DONE TO THE REINFORCING MESH DUE TO THE INSTALLATION OF GUARDRAIL POSTS.

WALL CONSTRUCITON CON'T

15. IF EXISTING STRUCTURES, PIPES, FOUNDATIONS, OR GUARDRAIL POSTS, WHICH ARE WITHIN THE REINFORCED SOIL VOLUME, INTERFERE WITH THE NORMAL PLACEMENT OF REINFORCING MESH AND SPECIFIC DIRECTION HAS NOT BEEN PROVIDED ON THE PLANS, THE CONTRACTOR SHALL NOTIFY THE ENGINEER TO DETERMINE WHAT COURSE OF ACTION SHOULD BE TAKEN.

16. TOP PANELS, BENEATH PRECAST COPING, SHALL BE CAST TO FOLLOW THE PROFILE OF THE WALL.

17. FOR ADDITIONAL INFORMATION PERTAINING TO WALL CONSTRUCITON PLEASE REFER TO THE SSL CONSTRUCTION MANUAL.

18. THE CONTRACTOR IS RESPONSIBLE FOR GRADUALLY DEFLECTING UPPER REINFORCING MESH DOWNWARD TO AVOID CONFLICTS WITH PAVING AND SUBRADE PREPARATION. THE CONTRACTOR'S ATTENTION IS DIRECTED ESPECIALLY TO SITUATIONS WHERE ROADWAY SUPERELEVATION AND/OR SOIL MIXING ARE ANTICIPATED.

19. IF WALL DESIGN HEIGHT IS IN EXCESS OF 20' - 0", THE FINISHED GRADE IN FRONT OF THE WALL SHALL BE PLACED AND COMPACTED BEFORE CONSTRUCTION OF THE WALL EXCEEDS 20/ - 0". FINISHED GRADE SHALL BE COMPACTED TO 95% OF T-180 UNLESS OTHERWISE DIRECTED BY THE ENGINEER.

MATERIALS NOTES

NOMINAL MESH LENGTHS

20. THE REINFORCING MESH LENGTH SHOWN ON THE PLANS, MEASURED FROM BACK FACE OF PANEL, ARE THE NOMINAL LENGTHS REQUIRED BY CALCULATIONS. THE ACTUAL FABRICATED REINFORMING MESH LENGTHS ARE OFTEN LONGER (UP TO 6") DUE TO MANUFACTURING TOLERANCES. THE REQUIRED HORIZONTAL LIMIT OF GRANULAR BACKFILL IS EQUAL TO THE NOMINAL REINFORCING MESH LENGTH. ADDITIONAL GRANULAR BACKFILL BEYOND THE NOMINAL REINFORCING MESH LENGTH IS NOT REQUIRED BY CALULATIONS.

REINFORCED BACKFILL QUANTITY

21. THE REINFORCED BACKFILL QUANTITIY INDICATED BY SSL CONSTRUCTION IS CALCULATED BY MULTIPLYING THE NOMINAL MESH LENGTHS SHOWN ON THE PLANS BY THEIR TRIBUTARY WALL SURFACE AREA AND CONVERTING THE RESULT TO A NEATER CUBIC FOOT QUANTITY. THIS INFORMATION IS FURNISHED FOR THE CONTRACTOR'S INFORMATION ONLY AND IS NOT INTENDED TO PRESENT THE ACTUAL QUANTITIES REQURED TO COMPLETE THE WORK. THE CONTRACTOR MUST CALCULATE HIS OWN EXCAVATION AND BACKFILL QUANTITIES BASED UPON THE SPECIFIC CONDITIONS OF THE PROJECT.

PANEL FINISH

22. THE FINISH OF THE PRECAST PANEL SHALL BE PLAIN STEEL FORM FINISH UNLESS OTHERWISE SPECIFIED ON THE WALL CONTROL DRAWINGS.

NOTE TO CONTRACTORS

23. ONLY THE FOLLOWING MATERIALS ARE SUPPLIED BY SSL CONSTRUCITON.

    PRECAST PANEL (PER SPECIFICATION SECTION 548)
    REINFORCING MESH & CONNECTION PIN
    HDPE BEARING PAD (NOMINAL 4.0 MELT / .950 DENSITY)
    NON-WOVEN FILTER CLOTH AND ADHESIVE (FOR PANEL JOINTS ONLY)

    ANY OTHER MATERIALS CALLED FOR IN THE CONTRACT PLANS OR SPECIFICATIONS ARE TO BE SUPPLIED BY THE CONTRACTOR. ANY JOINT MATERIALS SHOWN AT THE INTERFACE OF PRECAST PANELS AND CAST-IN-PLACE CONCRETE STRUCTURES ARE TO BE SUPPLIED BY THE ERECTION CONTRACTOR. ALL SANDBLASTING, PAINTING, SEALERS OR OTHER SPECIALLY APPLIED COATINGS ARE ALSO SUPPLIED / INSTALLED BY THE CONTRACTOR IN THE FIELD FOLLOWING PANEL ERECTION.

24. SSL CONSTRUCTION SUPPLIES PRECAST CONCRETE FACING PANELS AND ACCESSORIES TO BE USED IN CONJUNCTION WITH OTHER MATERIALS IN THE CONSTRUCTION OF THE MSE WALLS DETAILED HERIN. THE CONSTRUCTION AND QUALITY CONTROL PROCEDURES MANAL FURNISHED BY SSL CONSTRUCITON IS INTEDED TO PROVIDE GENERAL EXPLANATION OF THE SYSTEM. IT IS THE CONTRACTOR'S OBLIGATION TO DEVISE AND EXECUTE A PROJECT SPECIFIC ERECTION SEQUENCE, PANEL UNLOADING, HANDLING AND BRACING SYSTEM, AND FALL PROTECTION SYSTEM. THE BRACING SYSTEM SHOWN IN THE CONSTRUCTION AND QUALITY CONTROL PROCEDURES MANUAL IS GENERAL IN NATURE AND DOES NOT ACCOUNT FOR PROJECT SPECIFIC CRITERIA. COMPLIANCE WITH THE GUIDELINES IN THIS MANUAL DOES NOT RELIEVE THE CONTRACTOR OF ITS RESPONSIBILITY TO ADHERE TO THE PROJECT PLANS, SPECIFICATIONS AND CONTRACT DOCUMENTS OR COMPLIANCE WITH ALL FALL PROTECTION, SAFETY, LAWS, STANDARDS, AND PROCEDURES AT THE JOB SITE. CONTRACTOR'S SHOULD TAKE SPECIAL PRECAUTIONS TO PREVENT THE PANELS FROM SHIFTING OR FALLING DURING THE ERECTION PROCESS.

THIS SYSTEM SHALL BE USED IN SLIGHTLY OR MODERATELY AGGRESSIVE ENVIRONMENTS ONLY.

THE DESIGN OF ALL MSE PLUS™ WALLS IS BASED ON THE ASSUMPTION THAT ALL MATERIALS, INCLUDING THE BACKFILL AND METHODS OF CONSTRUCTION, CONFORM TO THE SPECIFICATIONS FOR MSE PLUS™ RETAINING WALLS AND THE PROJECT BID DOCUMENTS

THESE DRAWINGS, AS WELL AS THE DESIGN, ARE CERTIFIED WITH RESPECT TO THE INTERNAL STABILITY OF THE MSE PLUS™ STRUCTURES ONLY. EXTERNAL STABILITY INCLUDING, BUT NOT LIMITED TO, SLOPE AND FOUNDATION STABILITY IS THE RESPONSIBILITY OF THE OWNER AND THE ENGINEER FOR THE OWNER.

DATE : 01-01-05

INTERIM STANDARD IN ENGLISH UNITS APPLICABLE TO DESIGN STANDARDS BOOKLET PUBLISHED IN EITHER ENGLISH OR METIRC UNITS.

STATE OF FLORIDA DEPARTMENT OF TRANSPORTATION

RETAINING WALL SYSTEMS
SSL
MSE PLUS WALL SYSTEM

INTERIM STANDARD

Index No. 5035 (Sheets 1 - 14 of 14) is a supplement to the metric Roadway and Traffic Design Standards Booklet dated January 2000.

APPROVED BY
William N. Nickas, P.E.
State Structures Design Engineer

REVISION NO.	SHEET NO.	INDEX NO.
04	1 of 14	5035

FINANCIAL PROJECT ID	STATE PROJ. NO.	SHEET NO.

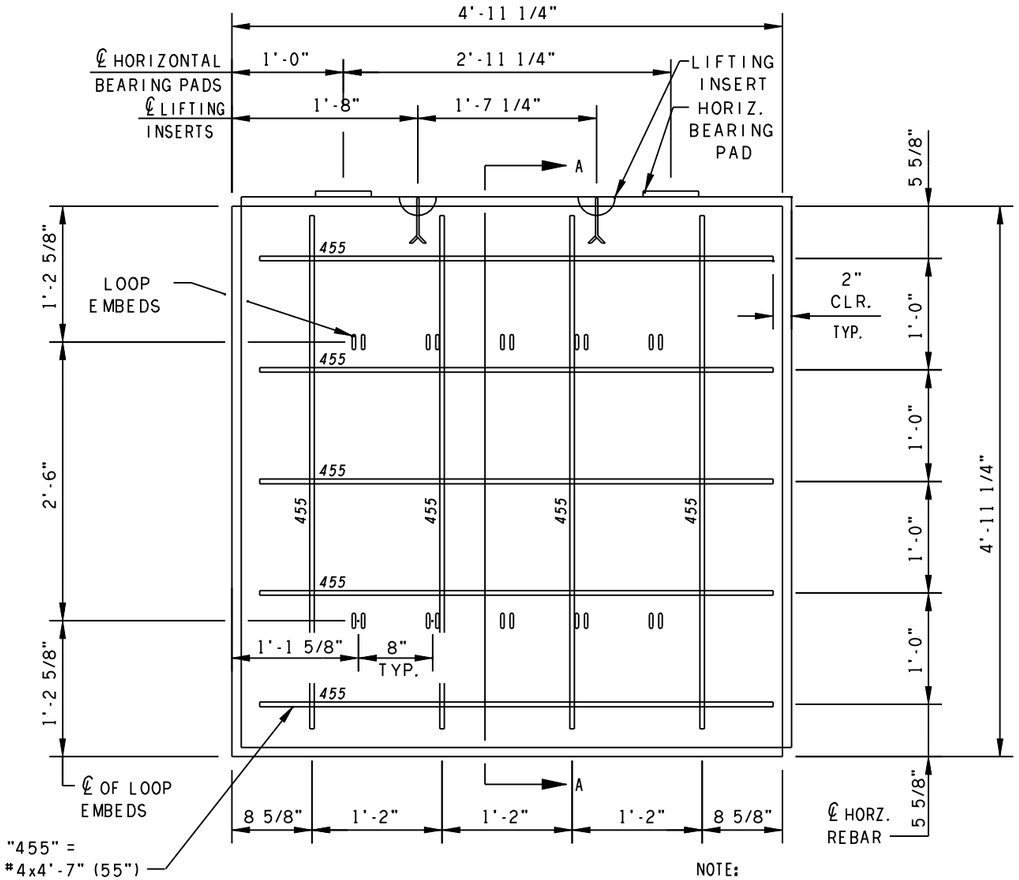

STANDARD PANEL

Back Face View

NOTE:
PANEL SHOWN FOR W11 WIRE ATTACHMENT ONLY. (SEE NOTE 6, SHEET 2 OF 2 FOR REINFORCEMENT OPTIONS)

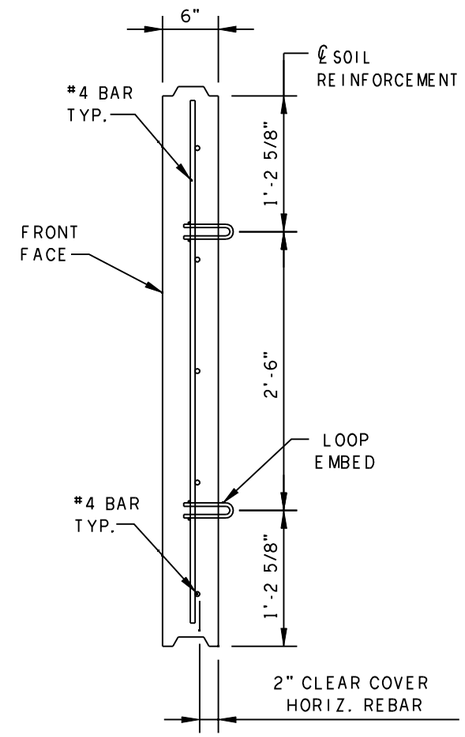

SECTION A-A

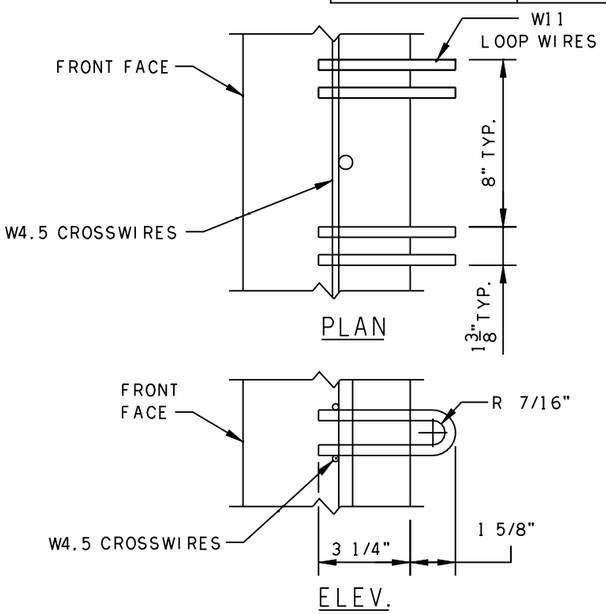

LOOP EMBED DETAIL

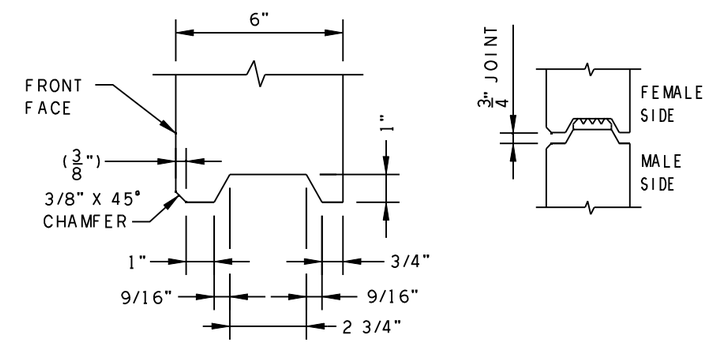

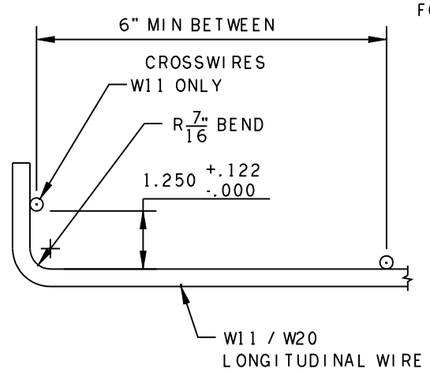

WIRE MESH LOOP DETAIL

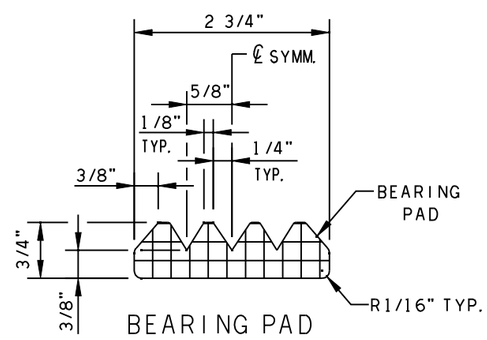

BEARING PAD DETAIL

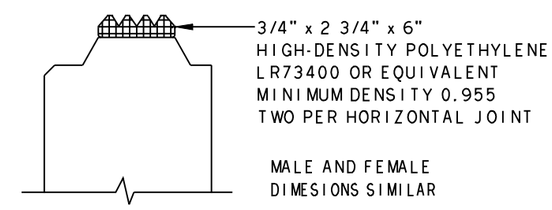

HORIZONTAL PANEL JOINT DETAIL

THIS SYSTEM SHALL BE USED IN SLIGHTLY OR MODERATELY AGGRESSIVE ENVIRONMENTS ONLY.

THE DESIGN OF ALL MSE PLUS™ WALLS IS BASED ON THE ASSUMPTION THAT ALL MATERIALS, INCLUDING THE BACKFILL AND METHODS OF CONSTRUCTION, CONFORM TO THE SPECIFICATIONS FOR MSE PLUS™ RETAINING WALLS AND THE PROJECT BID DOCUMENTS

THESE DRAWINGS, AS WELL AS THE DESIGN, ARE CERTIFIED WITH RESPECT TO THE INTERNAL STABILITY OF THE MSE PLUS™ STRUCTURES ONLY. EXTERNAL STABILITY INCLUDING, BUT NOT LIMITED TO, SLOPE AND FOUNDATION STABILITY IS THE RESPONSIBILITY OF THE OWNER AND THE ENGINEER FOR THE OWNER.

DATE : 01-01-05

INTERIM STANDARD IN ENGLISH UNITS APPLICABLE TO DESIGN STANDARDS BOOKLET PUBLISHED IN EITHER ENGLISH OR METRIC UNITS.

STATE OF FLORIDA DEPARTMENT OF TRANSPORTATION

RETAINING WALL SYSTEMS
SSL
MSE PLUS WALL SYSTEM

INTERIM STANDARD

Index No. 5035 (Sheets 1 - 14 of 14) is a supplement to the metric Roadway and Traffic Design Standards Booklet dated January 2000.

APPROVED BY
William N. Nickas, P.E.
State Structures Design Engineer

REVISION NO.	SHEET NO.	INDEX NO.
04	2 of 14	5035

FINANCIAL PROJECT ID	STATE PROJ. NO.	SHEET NO.

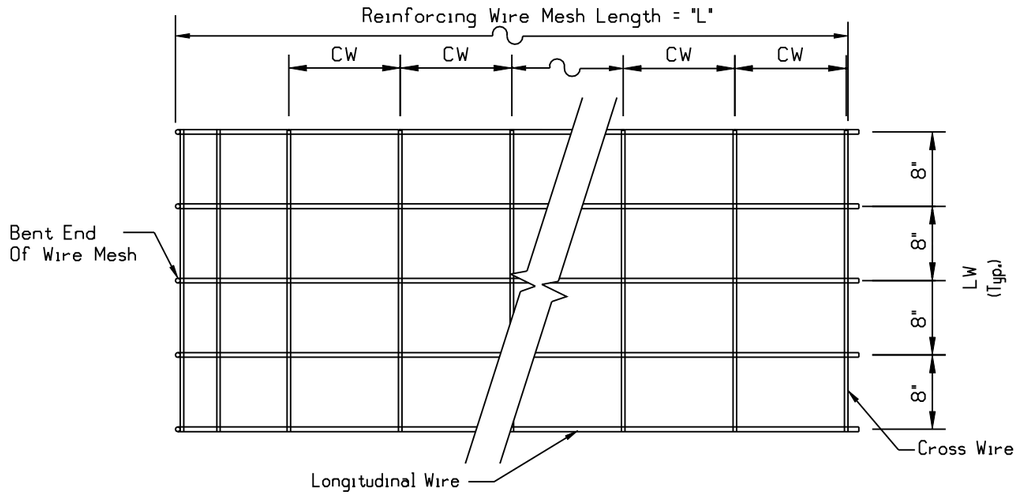

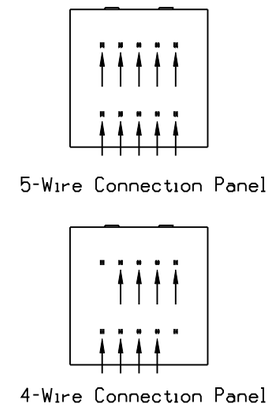

EXAMPLE WIRE MESH DESIGNATION: 4W11XW11X1.0

- Spacing (Ft.) Of Cross Wires (CW) (See Note)
- Size Of Cross Wires (CS)
- Size Of Longitudinal Wires (LS)
- No. Of Longitudinal Wires

NOTE: For Example Above, Equivalent Wire Mesh Designation = 8 x 12 - W11 x W11 x 24" x "L"
(LW) (CW) (LS) (CS)
SHEET LENGTH
SHEET WIDTH

NOTE:
Cross Wire Spacing Varies 6" to 3'-0" In 6" Increments.

REINFORCING MESH DETAIL

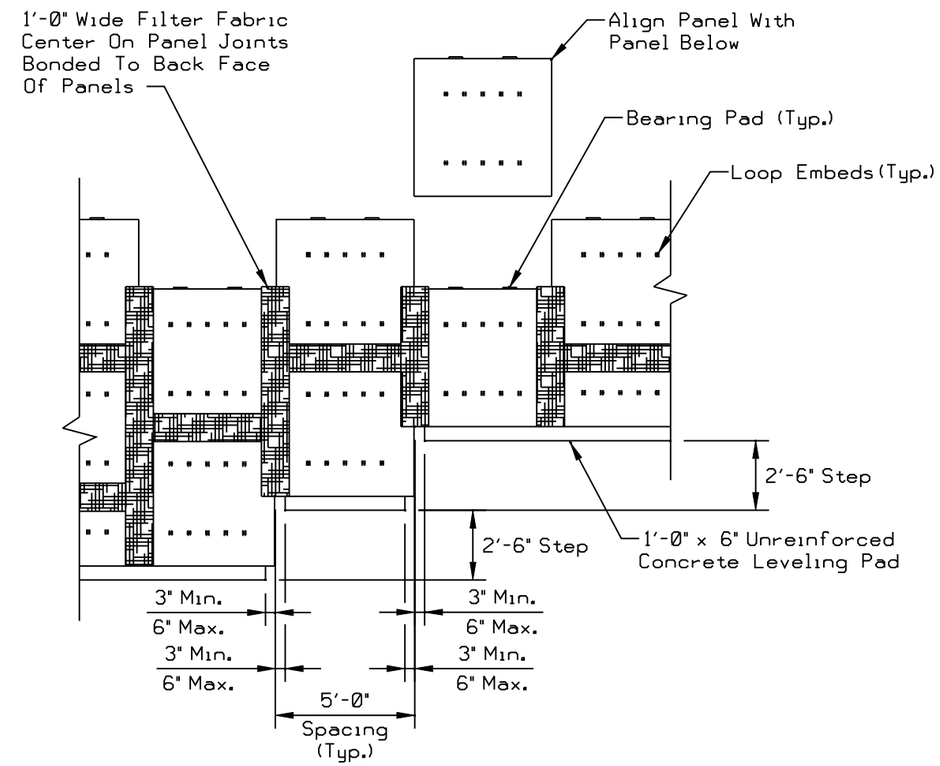

FILTER FABRIC DETAIL AND PANEL PLACEMENT

Back Face View

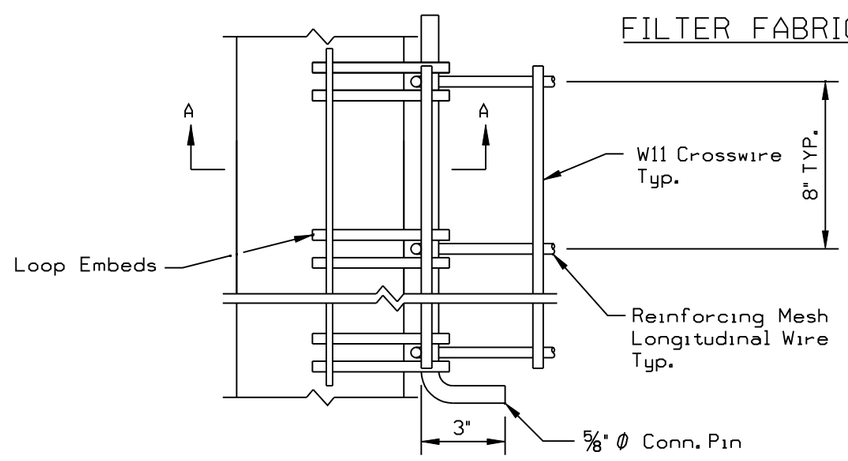

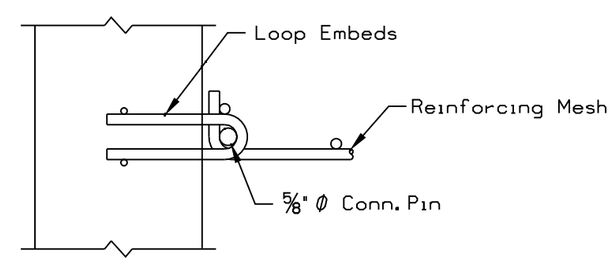

SECTION A-A

REINFORCING MESH CONNECTOR BAR DETAIL

NOTES:

1. Panel Reinforcement Bars Shall Be Deformed Billet-Steel Bars For Concrete Reinforcement Conforming To The Specification Of ASTM Designation A615, Grade 60, Including Supplementary Requirement S1 Or Low Alloy Steel Deformed Bars Conforming To The Specifications Of ASTM Designation Designation A706.
2. W11 And W20 Steel Wire Shall Conform To The ASTM Designation A82. The Welded Wire Mat And Loop Embed Shall Be Welded In Accordance With ASTM Designation A185.
3. The Loop Embed, Reinforcing Mesh & Connector Bars Shall Be Galvanized In Accordance With ASTM Designation A123, After Bending.
4. Concrete Panels To Be Made With Class IV Concrete And Have A 28 Day Compressive Strength Of 5500psi.
5. All Panel Reinforcement Must Have A Minimum Of 2" Cover With Concrete On All Sides.
6. Concrete Panels With W11 Mesh Attached Shall Be Cast With 4 Vertical And 5 Horizontal Rebar. Panels With W20 Mesh Attached Shall Be Cast With 6 Vertical And 9 Horizontal Rebar.
7. When Cast In Place Coping Is Used In Conjunction With The MSE Wall, The Top Panels Shall Be Cast With 2 ea. #4 Dowel Bars At 2'-6" On Center, Embedded A Minimum Of 1'-3" Into The Top Surface Of The Panel For Attachment To The Coping Element.

THE DESIGN OF ALL MSE PLUS™ WALLS IS BASED ON THE ASSUMPTION THAT ALL MATERIALS, INCLUDING THE BACKFILL AND METHODS OF CONSTRUCTION, CONFORM TO THE SPECIFICATIONS FOR MSE PLUS™ RETAINING WALLS AND THE PROJECT BID DOCUMENTS

THESE DRAWINGS, AS WELL AS THE DESIGN, ARE CERTIFIED WITH RESPECT TO THE INTERNAL STABILITY OF THE MSE PLUS™ STRUCTURES ONLY. EXTERNAL STABILITY INCLUDING, BUT NOT LIMITED TO, SLOPE AND FOUNDATION STABILITY IS THE RESPONSIBILITY OF THE OWNER AND THE ENGINEER FOR THE OWNER.

THIS SYSTEM SHALL BE USED IN SLIGHTLY OR MODERATELY AGGRESSIVE ENVIRONMENTS ONLY.

DATE: 01-01-05

INTERIM STANDARD IN ENGLISH UNITS APPLICABLE TO DESIGN STANDARDS BOOKLET PUBLISHED IN EITHER ENGLISH OR METRIC UNITS.

STATE OF FLORIDA DEPARTMENT OF TRANSPORTATION

RETAINING WALL SYSTEMS
SSL
MSE PLUS WALL SYSTEM

INTERIM STANDARD

Index No. 5035 (Sheets 1 - 14 of 14) is a supplement to the metric Roadway and Traffic Design Standards Booklet dated January 2000.

APPROVED BY
William N. Nickas, P.E.
State Structures Design Engineer

REVISION NO.	SHEET NO.	INDEX NO.
04	3 of 14	5035

FINANCIAL PROJECT ID	STATE PROJ. NO.	SHEET NO.

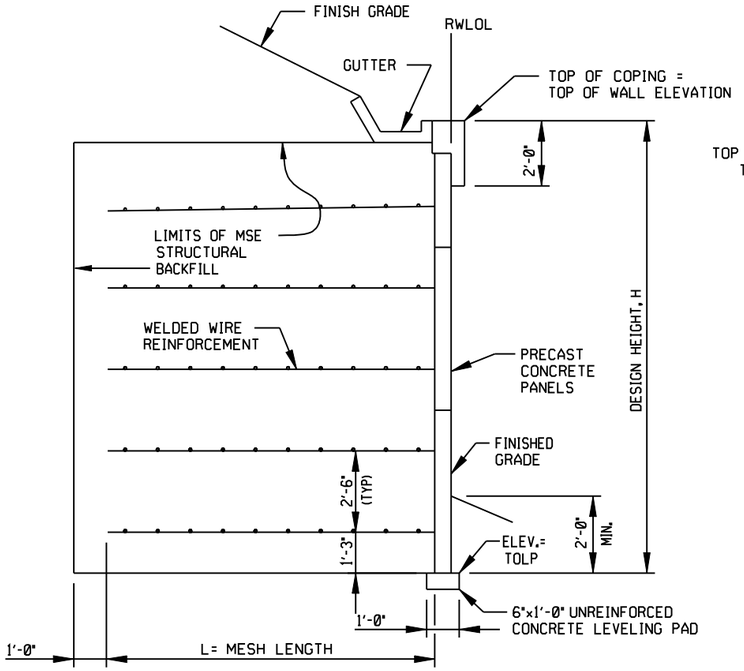

TYPICAL SECTION AT COPING

NOTE:

See Contract Plans For Details On Excavation Below The Wall and Underdrain Requierments.

TOLP = TOP OF LEVELING PAD

RWLOL = Retaining Wall Layout Line

Layout Line = Front Face Of Nominal 6" Thick Panel

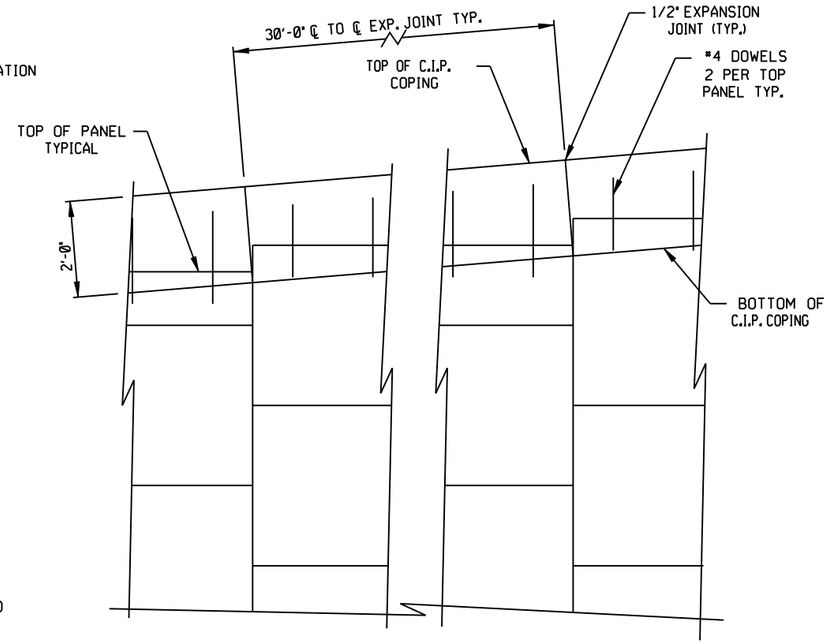

PARTIAL ELEVATION C.I.P. COPING

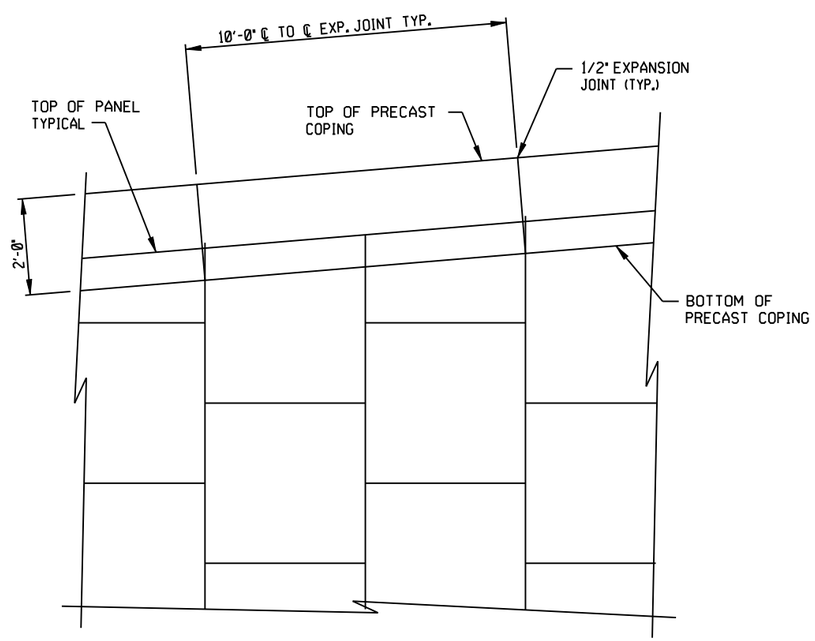

PARTIAL ELEVATION PRECAST COPING

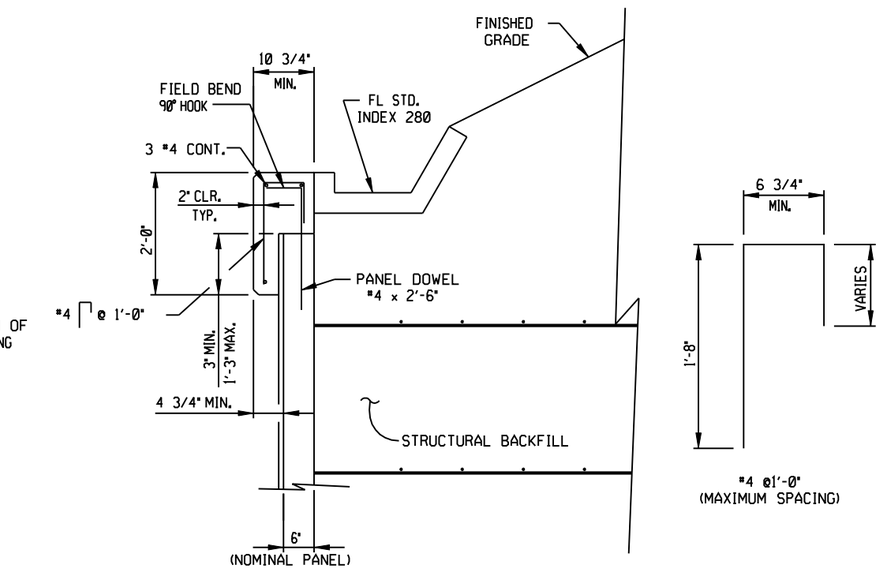

NOTES: PROVIDE 1/2" EXPANSION JOINT IN COPING AT 30'-0" MAXIMUM

C.I.P. COPING DETAIL

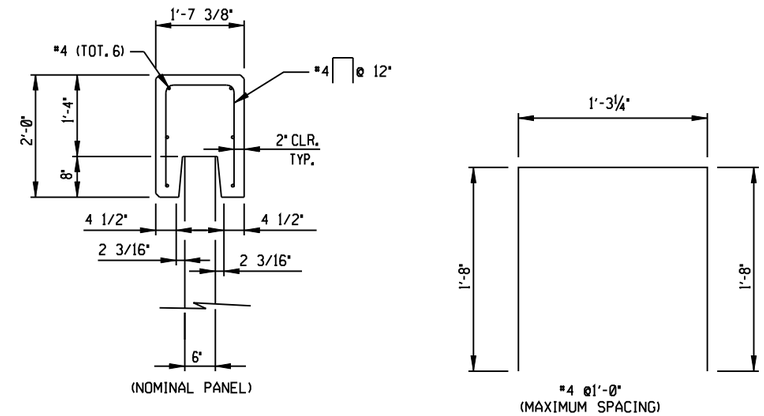

NOTES: CAST UNIT 10'-0" LONG TYPICAL

PRECAST COPING DETAIL

THIS SYSTEM SHALL BE USED IN SLIGHTLY OR MODERATELY AGGRESSIVE ENVIRONMENTS ONLY.

THE DESIGN OF ALL MSE PLUS® WALLS IS BASED ON THE ASSUMPTION THAT ALL MATERIALS, INCLUDING THE BACKFILL AND METHODS OF CONSTRUCTION, CONFORM TO THE SPECIFICATIONS FOR MSE PLUS® RETAINING WALLS AND THE PROJECT BID DOCUMENTS

THESE DRAWINGS, AS WELL AS THE DESIGN, ARE CERTIFIED WITH RESPECT TO THE INTERNAL STABILITY OF THE MSE PLUS® STRUCTURES ONLY. EXTERNAL STABILITY INCLUDING, BUT NOT LIMITED TO, SLOPE AND FOUNDATION STABILITY IS THE RESPONSIBILITY OF THE OWNER AND THE ENGINEER FOR THE OWNER.

DATE : 01-01-05

INTERIM STANDARD IN ENGLISH UNITS APPLICABLE TO DESIGN STANDARDS BOOKLET PUBLISHED IN EITHER ENGLISH OR METRIC UNITS.

STATE OF FLORIDA DEPARTMENT OF TRANSPORTATION

RETAINING WALL SYSTEMS SSL MSE PLUS WALL SYSTEM

INTERIM STANDARD

Index No. 5035 (Sheets 1 - 14 of 14) is a supplement to the metric Roadway and Traffic Design Standards Booklet dated January 2000.

APPROVED BY
William N. Nickas, P.E.
State Structures Design Engineer

REVISION NO.	SHEET NO.	INDEX NO.
04	4 of 14	5035

FINANCIAL PROJECT ID	STATE PROJ. NO.	SHEET NO.

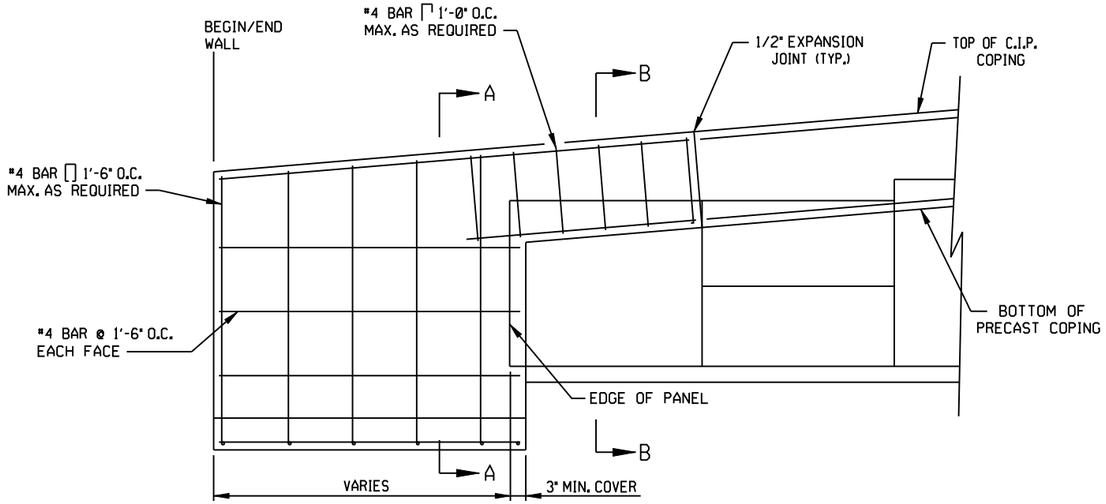

COPING END WALL AT C.I.P. COPING

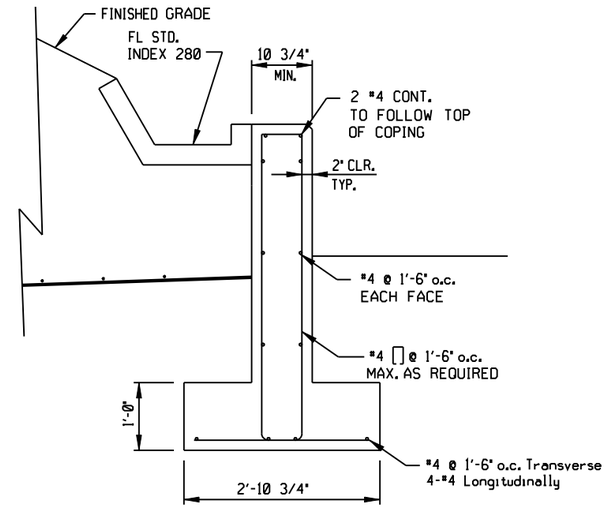

SECTION A-A

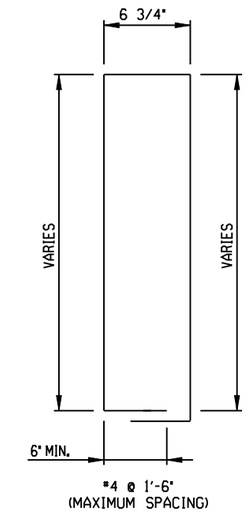

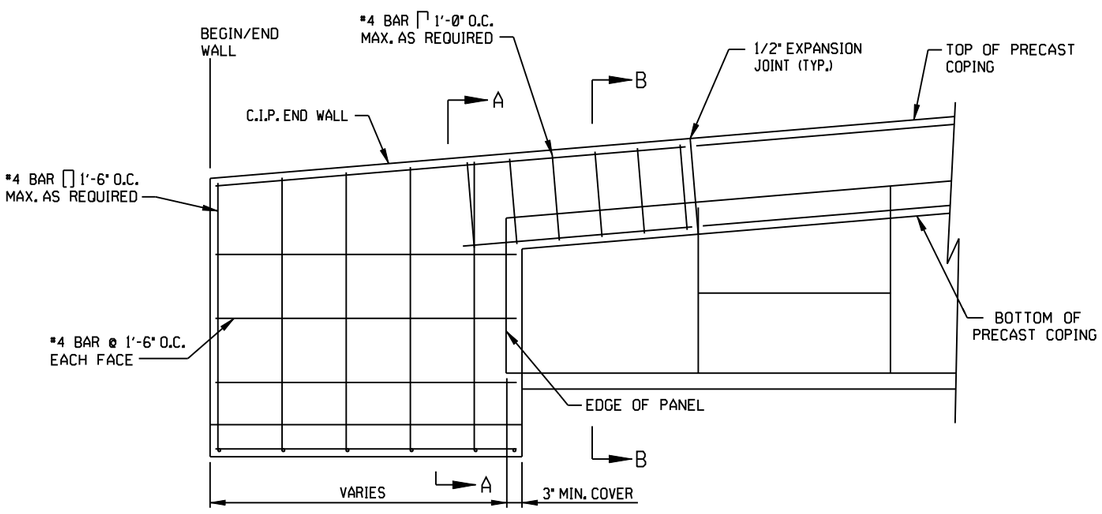

COPING END WALL AT PRECAST COPING

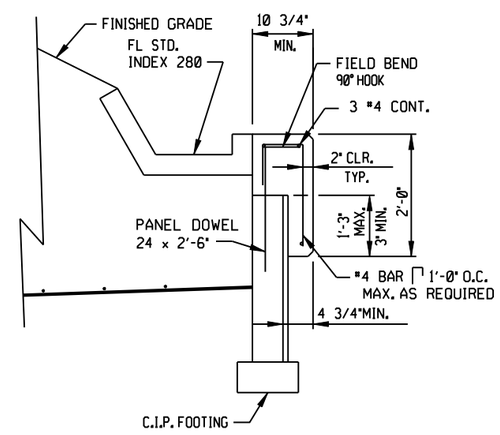

SECTION B-B

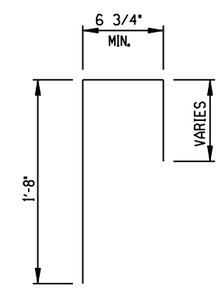

THIS SYSTEM SHALL BE USED IN SLIGHTLY OR MODERATELY AGGRESSIVE ENVIRONMENTS ONLY.

THE DESIGN OF ALL MSE PLUS™ WALLS IS BASED ON THE ASSUMPTION THAT ALL MATERIALS, INCLUDING THE BACKFILL AND METHODS OF CONSTRUCTION, CONFORM TO THE SPECIFICATIONS FOR MSE PLUS™ RETAINING WALLS AND THE PROJECT BID DOCUMENTS

THESE DRAWINGS, AS WELL AS THE DESIGN, ARE CERTIFIED WITH RESPECT TO THE INTERNAL STABILITY OF THE MSE PLUS™ STRUCTURES ONLY. EXTERNAL STABILITY INCLUDING, BUT NOT LIMITED TO, SLOPE AND FOUNDATION STABILITY IS THE RESPONSIBILITY OF THE OWNER AND THE ENGINEER FOR THE OWNER.

DATE : 01-01-05

INTERIM STANDARD IN ENGLISH UNITS APPLICABLE TO DESIGN STANDARDS BOOKLET PUBLISHED IN EITHER ENGLISH OR METRIC UNITS.

STATE OF FLORIDA DEPARTMENT OF TRANSPORTATION

RETAINING WALL SYSTEMS SSL MSE PLUS WALL SYSTEM

INTERIM STANDARD

Index No. 5035 (Sheets 1 - 14 of 14) is a supplement to the metric Roadway and Traffic Design Standards Booklet dated January 2000.

APPROVED BY
William N. Nickas, P.E.
State Structures Design Engineer

REVISION NO.	SHEET NO.	INDEX NO.
04	5 of 14	5035

FINANCIAL PROJECT ID	STATE PROJ. NO.	SHEET NO.

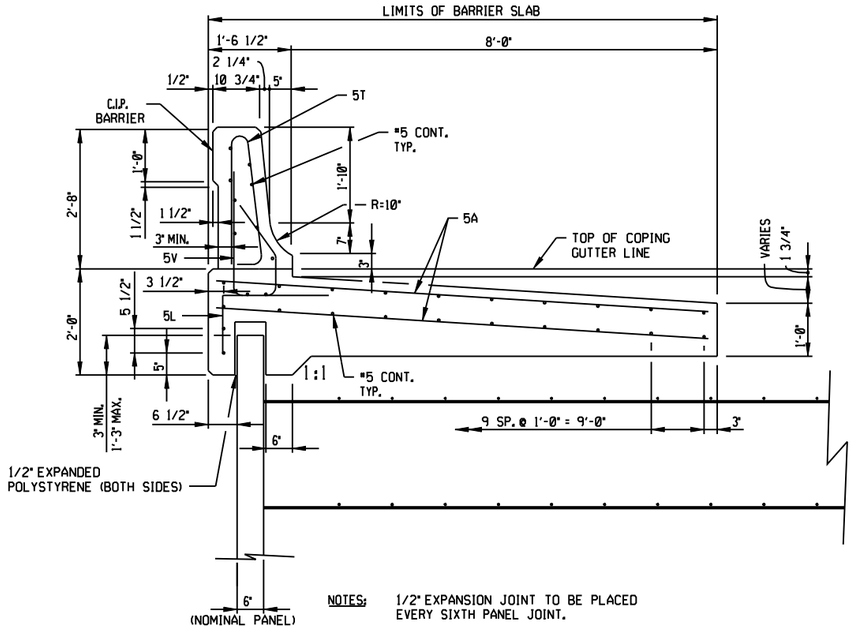

NOTES: 1/2" EXPANSION JOINT TO BE PLACED EVERY SIXTH PANEL JOINT.

FOR ADDITIONAL C.I.P. BARRIER DETAILS SEE FDOT TRAFFIC RAILING STANDARD DRAWINGS

C.I.P. BARRIER SLAB

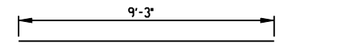

5A - #5 @ 6" O.C.

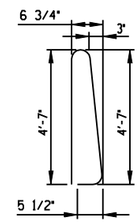

5T - #5 @ 8" O.C.

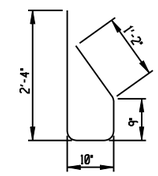

5V - #5 @ 8" O.C.

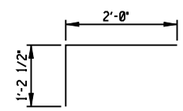

5L - #5 @ 6" O.C.

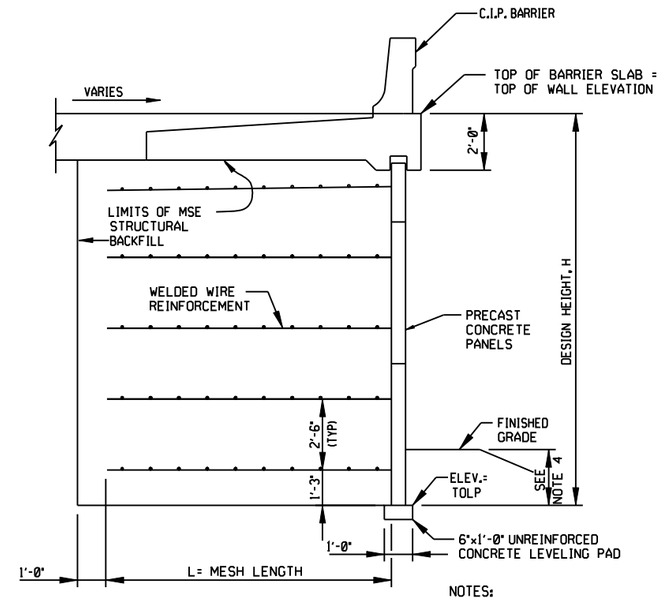

TYPICAL SECTION AT BARRIER SLAB

NOTES:

1. See Contract Drawings For Any Additional Details Not Shown.
2. For Leveling Pad Details See Sheet FL3.
3. TOLP = Top Of Leveling Pad
4. Minimum Embedment Below Finished Grade At Bottom Of Wall To Be Determined By EOR And Shown On Contract Plans. Dimensions Shall Be 2'-0" Minimum.

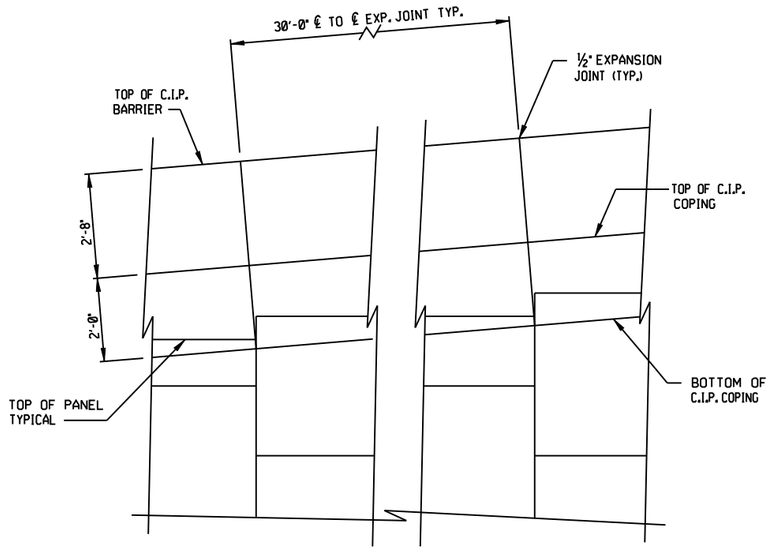

PARTIAL ELEVATION C.I.P. BARRIER

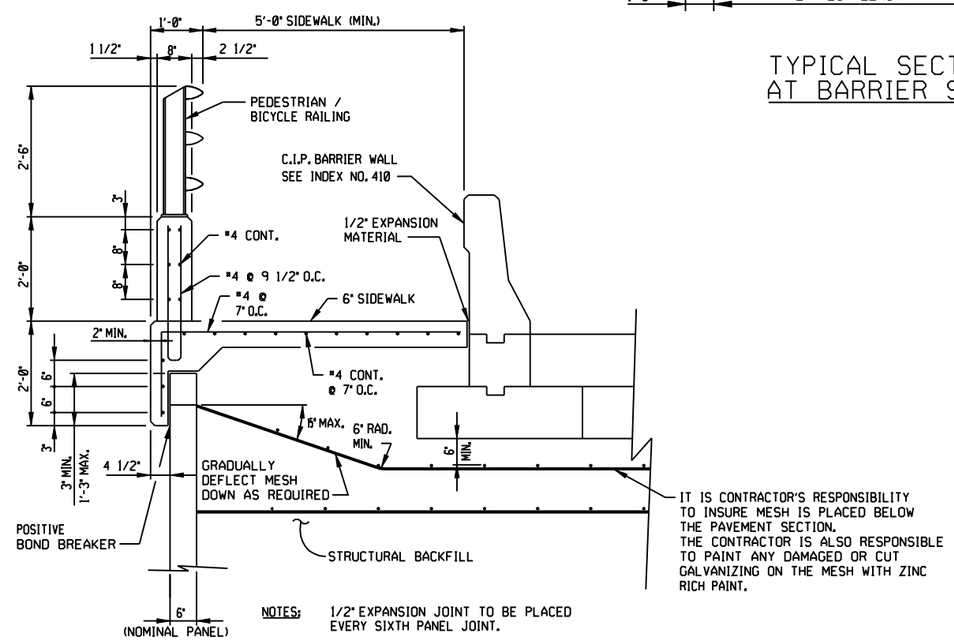

NOTES: 1/2" EXPANSION JOINT TO BE PLACED EVERY SIXTH PANEL JOINT.

MESH IS NOT TO BENT WITH LESS THAN A 6" RADIUS TO AVOID DAMAGE TO GALVANIZING.

C.I.P. PARAPET W/ HANDRAIL

THIS SYSTEM SHALL BE USED IN SLIGHTLY OR MODERATELY AGGRESSIVE ENVIRONMENTS ONLY.

THE DESIGN OF ALL MSE PLUS™ WALLS IS BASED ON THE ASSUMPTION THAT ALL MATERIALS, INCLUDING THE BACKFILL AND METHODS OF CONSTRUCTION, CONFORM TO THE SPECIFICATIONS FOR MSE PLUS™ RETAINING WALLS AND THE PROJECT BID DOCUMENTS

THESE DRAWINGS, AS WELL AS THE DESIGN, ARE CERTIFIED WITH RESPECT TO THE INTERNAL STABILITY OF THE MSE PLUS™ STRUCTURES ONLY. EXTERNAL STABILITY INCLUDING, BUT NOT LIMITED TO, SLOPE AND FOUNDATION STABILITY IS THE RESPONSIBILITY OF THE OWNER AND THE ENGINEER FOR THE OWNER.

DATE : 01-01-05

INTERIM STANDARD IN ENGLISH UNITS APPLICABLE TO DESIGN STANDARDS BOOKLET PUBLISHED IN EITHER ENGLISH OR METRIC UNITS.

STATE OF FLORIDA DEPARTMENT OF TRANSPORTATION

RETAINING WALL SYSTEMS SSL MSE PLUS WALL SYSTEM

INTERIM STANDARD

Index No. 5035 (Sheets 1 - 14 of 14) is a supplement to the metric Roadway and Traffic Design Standards Booklet dated January 2000.

APPROVED BY
William N. Nickas, P.E.
State Structures Design Engineer

REVISION NO.	SHEET NO.	INDEX NO.
04	6 of 14	5035

FINANCIAL PROJECT ID	STATE PROJ. NO.	SHEET NO.

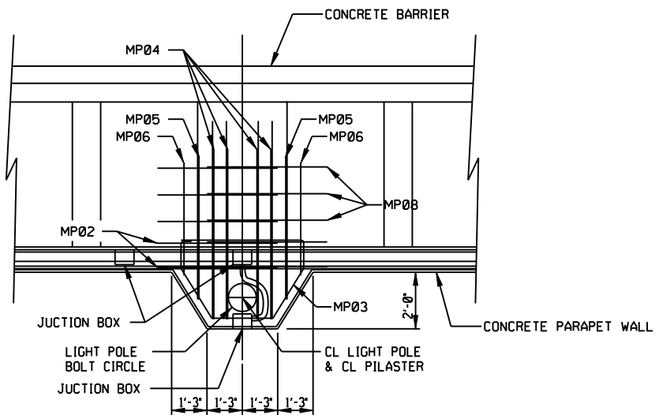

PLAN

NOTES:

1. ADDITIONAL CONCRETE AND REINFORCING STEEL REQUIRED FOR THE CONSTRUCTION OF THE PILASTER SHALL MEET THE SAME REQUIREMENTS AS THAT OF THE PARAPET WALL.

2. TOP OF PILASTER SHALL BE FINISHED TO A TRUE LEVEL AREA.

3. LIGHT POLE PILASTER IS DESIGNED TO RESIST WORKING LOADS (IN ANY DIRECTION) FROM THE LIGHT POLE APPLIED AT THE TOP OF THE PILASTER AS FOLLOWS:

LONGITUDINAL MOMENT	= 30,000 FT. - POUNDS
TRANSVERSE MOMENT	= 6000 FT. - POUNDS
LONGITUDINAL SHEAR	= 1000 POUNDS
TRANSVERSE SHEAR	= 200 POUNDS
TORSION	= 3,000 FT. - POUNDS
AXIAL	= 400 POUNDS

IF THE LIGHT POLE PROVIDED APPLIES LOADS THAT ARE IN EXCESS OF THOSE SHOWN ABOVE. THE CONTRACTOR SHALL REDESIGN THE PILASTER AND SUBMIT HIS DESIGN TO THE DEPARTMENT FOR REVIEW. THE CONTRACTOR'S REDESIGN SHALL BE PREPARED, SIGNED AND SEALED BY A PROFESSIONAL ENGINEER REGISTERED IN THE STATE OF FLORIDA QUALIFIED TO PERFORM THE WORK.

4. THE CONTRACTOR IS RESPONSIBLE FOR PROVIDING ANCHOR BOLTS THAT EFFECTIVELY TRANSMIT THE LIGHT POLE LOADS TO THE PILASTER AND THAT FIT THE REINFORCING CAGE. CALCULATIONS SIGNED AND SEALED BY A PROFESSIONAL ENGINEER REGISTERED IN THE STATE OF FLORIDA SHALL BE SUBMITTED BY THE CONTRACTOR TO THE DEPARTMENT FOR REVIEW AND APPROVAL SHOWING THAT THESE REQUIREMENTS HAVE BEEN MET PRIOR TO CONSTRUCTION.

5. STEEL FOR JUCTION BOXES SHALL CONFORM WITH ASTM-A36M. THE BOXES SHALL BE HOT DIP GALVANIZED AFTER FABRICATION. IN LIEU OF STEEL BOXES THE CONTRACTOR MAY SUBMIT FOR APPROVAL MOLDED P.V.C. BOXES (SCHEDULE 80).

6. ALL CONDUITS SHALL BE RIGID GALVANIZED STEEL OR SCHEDULE 80 P.V.C.

7. THE COST OF ANCHOR BOLTS SHALL BE INCLUDED IN THE BID PRICE FOR LIGHT POLES.

8. PAYMENT: THE COST OF ALL LABOR, CONCRETE AND REINFORCING STEEL REQUIRED FOR THE CONSTRUCTION OF THE PILASTERS AND ALL CONDUITS. EXPANSION COUPLINGS, JUCTION BOXES AND MISCELLANEOUS HARDWARE REQUIRED FOR COMPLETION OF THE ELECTRICAL INSTALLATION SHALL BE WITHIN THE BID PRICE FOR THE MSE WALLS.

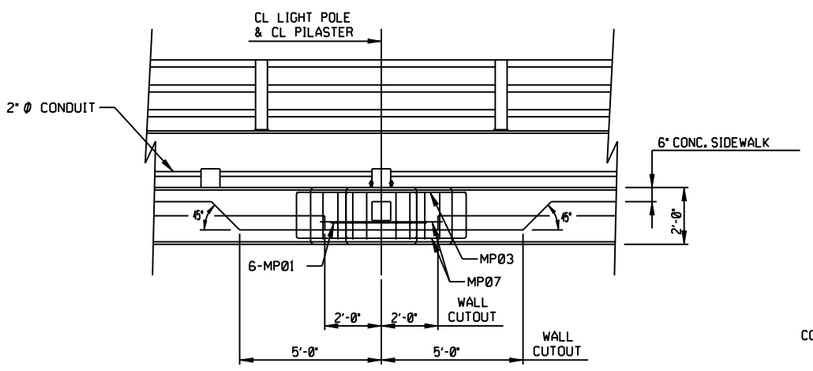

LIGHT PILASTER ELEVATION

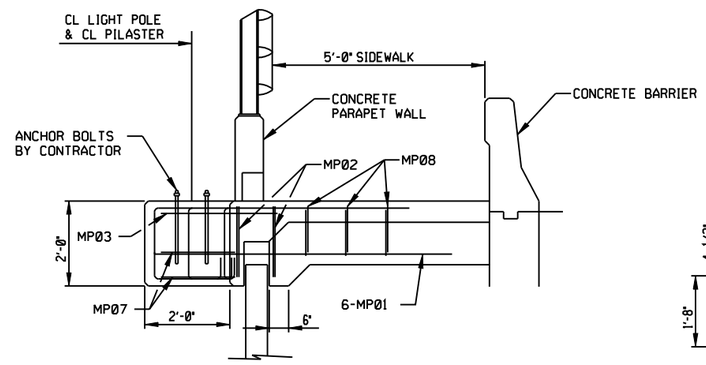

LIGHT PILASTER DETAILS

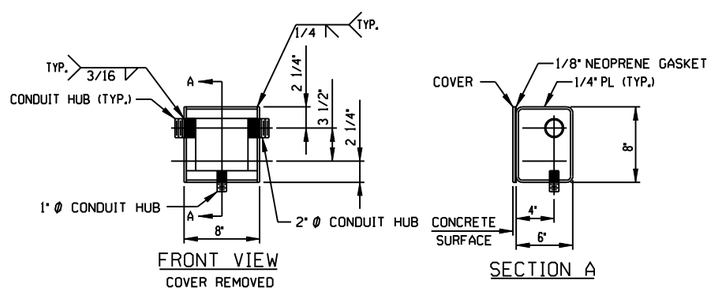

FRONT VIEW
COVER REMOVED

SECTION A

JUCTION BOX DETAILS

JUNCTION BOX TO BE MANUFACTURED BY OTHERS

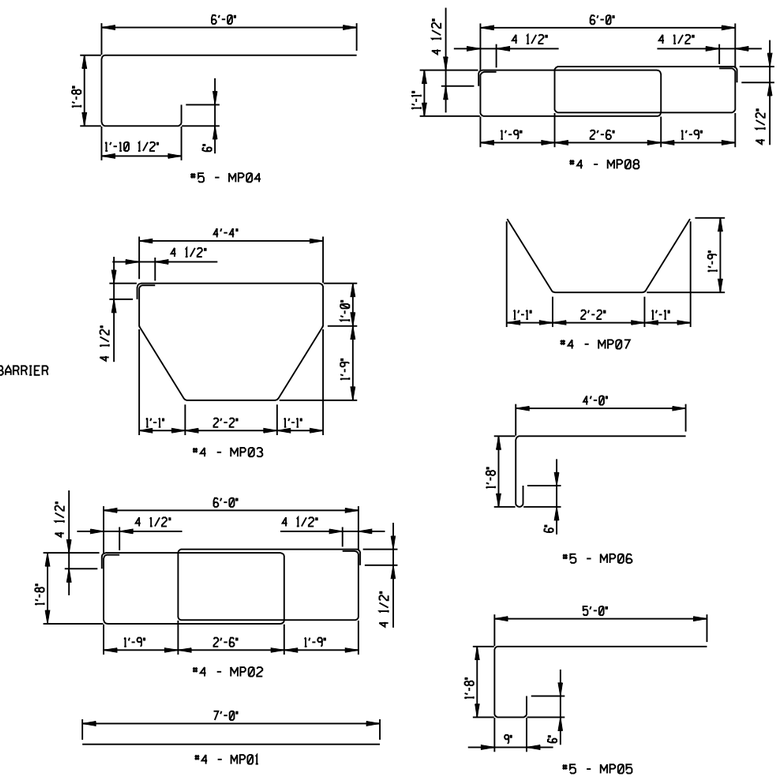

REBAR DETAILS

THIS SYSTEM SHALL BE USED IN SLIGHTLY OR MODERATELY AGGRESSIVE ENVIRONMENTS ONLY.

THE DESIGN OF ALL MSE PLUS™ WALLS IS BASED ON THE ASSUMPTION THAT ALL MATERIALS, INCLUDING THE BACKFILL AND METHODS OF CONSTRUCTION, CONFORM TO THE SPECIFICATIONS FOR MSE PLUS™ RETAINING WALLS AND THE PROJECT BID DOCUMENTS

THESE DRAWINGS, AS WELL AS THE DESIGN, ARE CERTIFIED WITH RESPECT TO THE INTERNAL STABILITY OF THE MSE PLUS™ STRUCTURES ONLY. EXTERNAL STABILITY INCLUDING, BUT NOT LIMITED TO, SLOPE AND FOUNDATION STABILITY IS THE RESPONSIBILITY OF THE OWNER AND THE ENGINEER FOR THE OWNER.

DATE : 01-01-05

INTERIM STANDARD IN ENGLISH UNITS APPLICABLE TO DESIGN STANDARDS BOOKLET PUBLISHED IN EITHER ENGLISH OR METRIC UNITS.

STATE OF FLORIDA DEPARTMENT OF TRANSPORTATION

RETAINING WALL SYSTEMS
SSL
MSE PLUS WALL SYSTEM

INTERIM STANDARD

Index No. 5035 (Sheets 1 - 14 of 14) is a supplement to the metric Roadway and Traffic Design Standards Booklet dated January 2000.

APPROVED BY
William N. Nickas, P.E.
State Structures Design Engineer

REVISION NO.	SHEET NO.	INDEX NO.
04	7 of 14	5035

FINANCIAL PROJECT ID	STATE PROJ. NO.	SHEET NO.

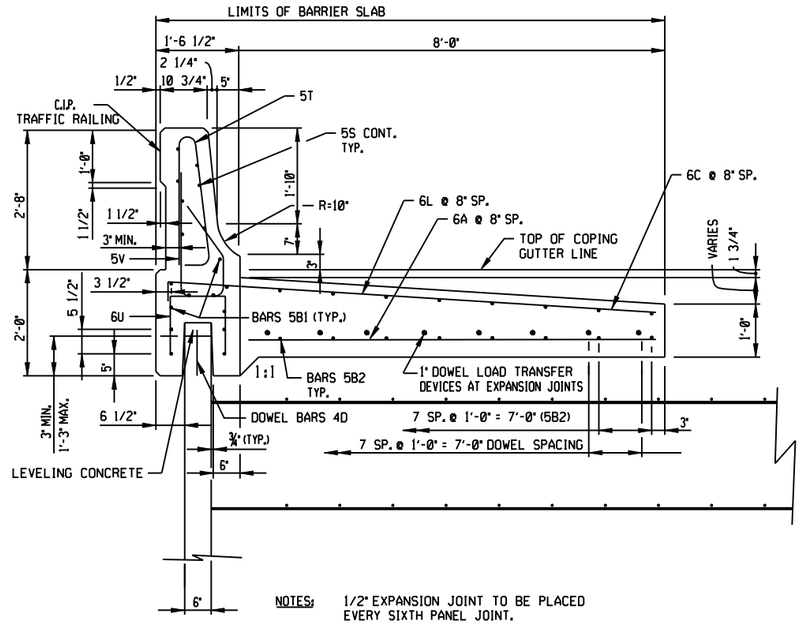

NOTES: 1/2" EXPANSION JOINT TO BE PLACED EVERY SIXTH PANEL JOINT.

FOR ADDITIONAL DETAILS SEE FLORIDA STANDARD DRAWINGS

PRECAST BARRIER SLAB

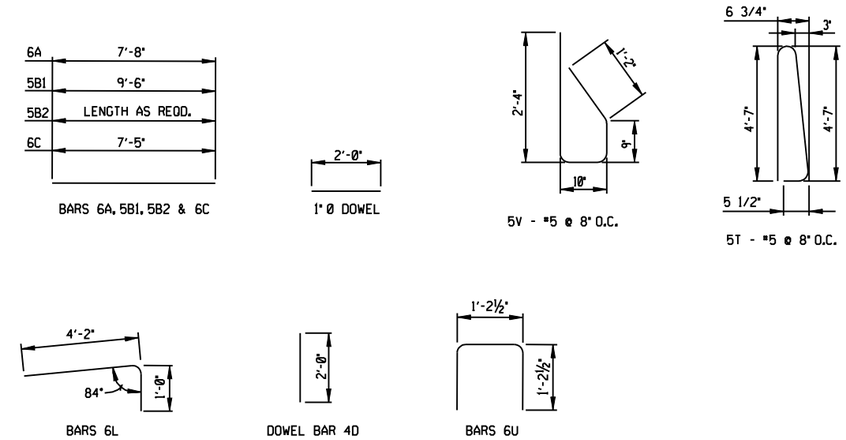

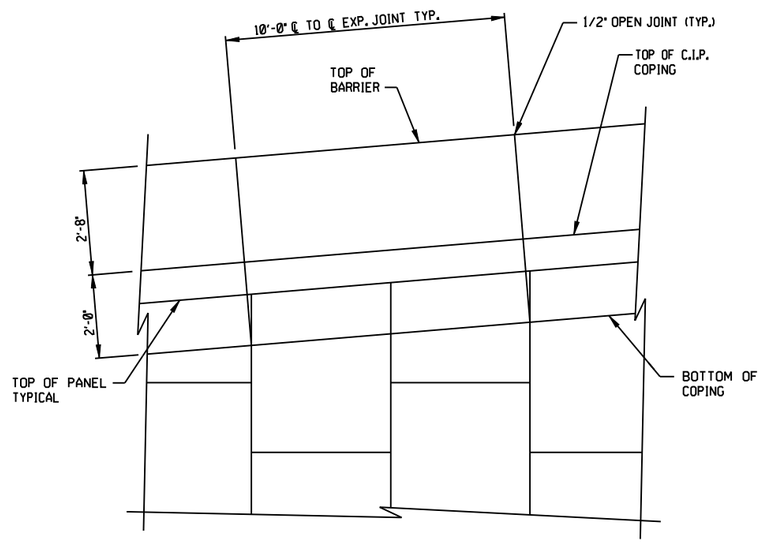

PARTIAL ELEVATION PRECAST BARRIER

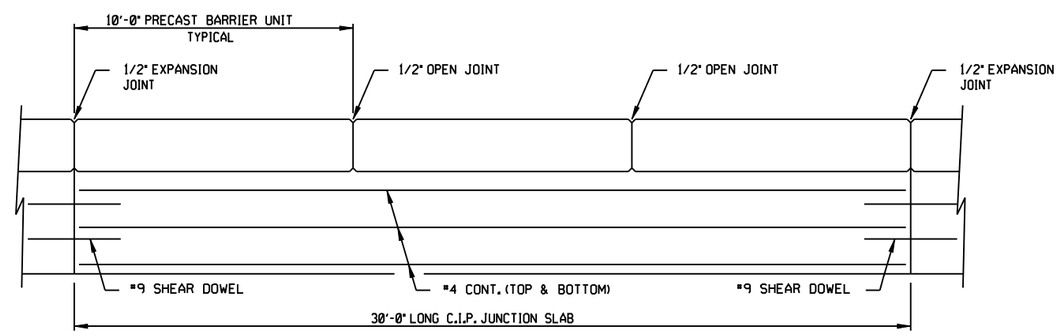

PRECAST BARRIER SLAB PLAN

THIS SYSTEM SHALL BE USED IN SLIGHTLY OR MODERATELY AGGRESSIVE ENVIRONMENTS ONLY.

THE DESIGN OF ALL MSE PLUS™ WALLS IS BASED ON THE ASSUMPTION THAT ALL MATERIALS, INCLUDING THE BACKFILL AND METHODS OF CONSTRUCTION, CONFORM TO THE SPECIFICATIONS FOR MSE PLUS™ RETAINING WALLS AND THE PROJECT BID DOCUMENTS

THESE DRAWINGS, AS WELL AS THE DESIGN, ARE CERTIFIED WITH RESPECT TO THE INTERNAL STABILITY OF THE MSE PLUS™ STRUCTURES ONLY. EXTERNAL STABILITY INCLUDING, BUT NOT LIMITED TO, SLOPE AND FOUNDATION STABILITY IS THE RESPONSIBILITY OF THE OWNER AND THE ENGINEER FOR THE OWNER.

DATE : 01-01-05

INTERIM STANDARD IN ENGLISH UNITS APPLICABLE TO DESIGN STANDARDS BOOKLET PUBLISHED IN EITHER ENGLISH OR METRIC UNITS.

STATE OF FLORIDA DEPARTMENT OF TRANSPORTATION

RETAINING WALL SYSTEMS SSL MSE PLUS WALL SYSTEM

INTERIM STANDARD

Index No. 5035 (Sheets 1 - 14 of 14) is a supplement to the metric Roadway and Traffic Design Standards Booklet dated January 2000.

APPROVED BY
William N. Nickas, P.E.
State Structures Design Engineer

REVISION NO.	SHEET NO.	INDEX NO.
04	8 of 14	5035

FINANCIAL PROJECT ID	STATE PROJ. NO.	SHEET NO.

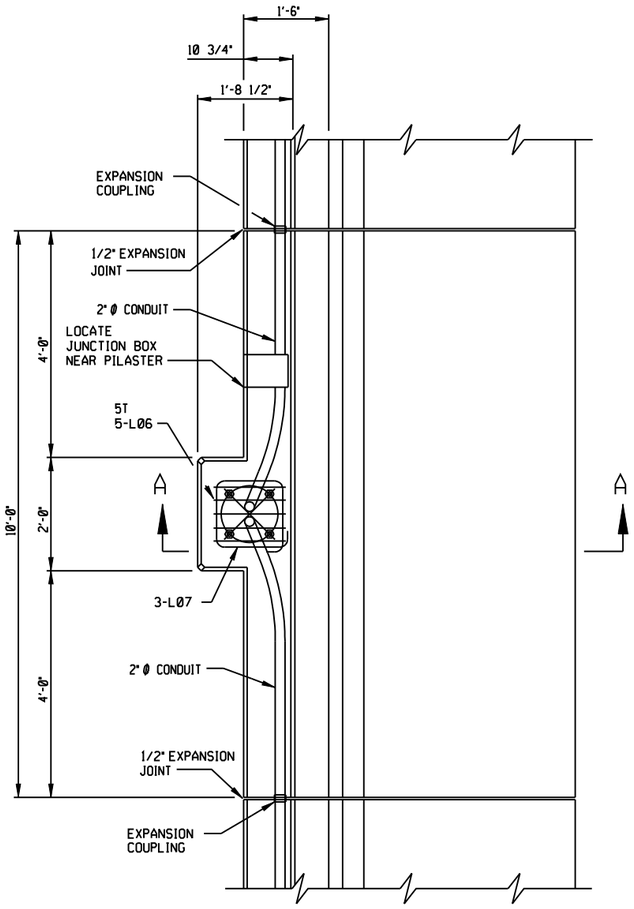

C.I.P. LIGHT POLE

ALL REBAR BY OTHERS
LIGHT POLE/BARRIER COPING

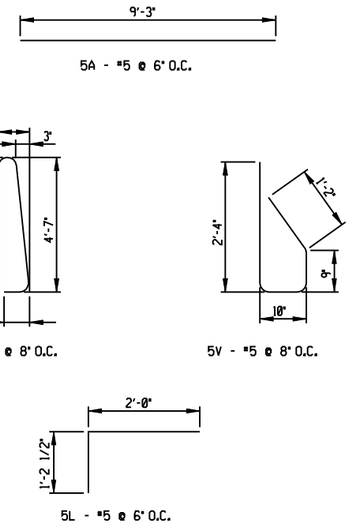

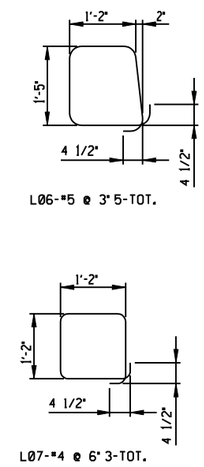

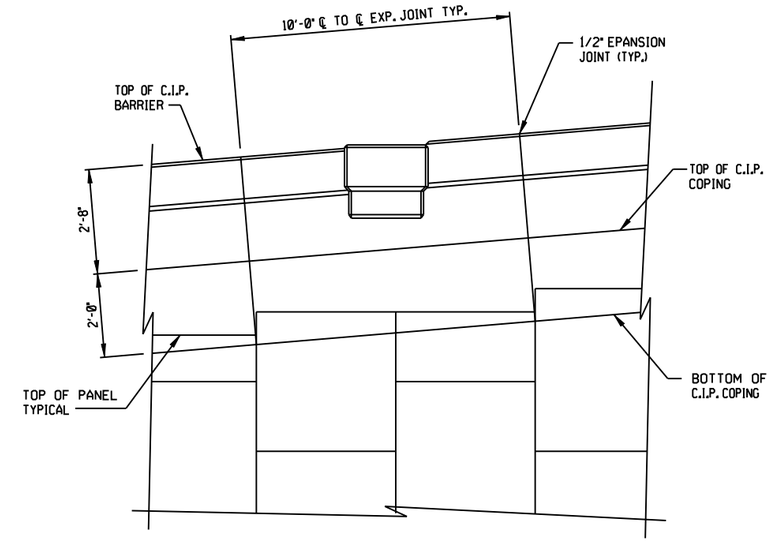

PARTIAL ELEVATION AT LIGHT POLE

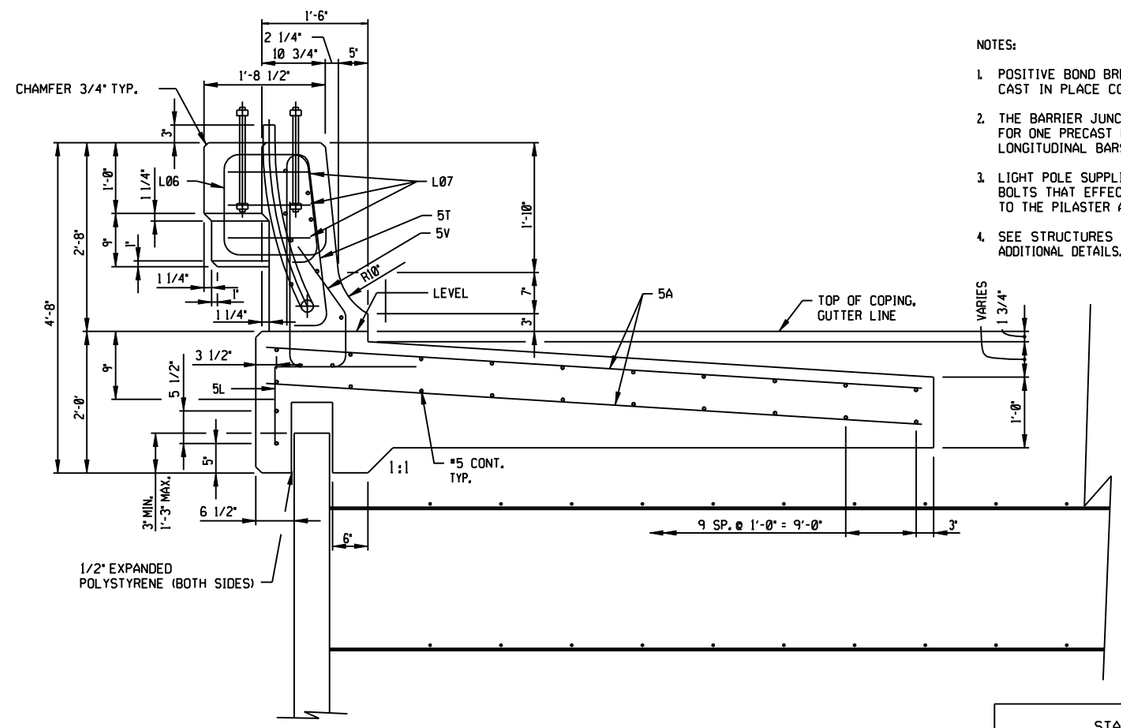

NOTES:

1. POSITIVE BOND BREAKER SHALL BE PROVIDED BETWEEN CAST IN PLACE CONCRETE AND PRECAST CONCRETE PANELS.
2. THE BARRIER JUNCTION SLAB SHALL HAVE THESE DIMENSIONS FOR ONE PRECAST UNIT EITHER SIDE OF LIGHT POLE BARRIER, LONGITUDINAL BARS SHALL BE AS SHOWN.
3. LIGHT POLE SUPPLIER IS RESPONSIBLE FOR PROVIDING ANCHOR BOLTS THAT EFFECTIVELY TRANSMIT THE LIGHT POLE LOADS TO THE PILASTER AND FIT THE REINFORCING CAGE.
4. SEE STRUCTURES STANDARD DRAWINGS FOR ADDITIONAL DETAILS.

THIS SYSTEM SHALL BE USED IN SLIGHTLY OR MODERATELY AGGRESSIVE ENVIRONMENTS ONLY.

THE DESIGN OF ALL MSE PLUS™ WALLS IS BASED ON THE ASSUMPTION THAT ALL MATERIALS, INCLUDING THE BACKFILL AND METHODS OF CONSTRUCTION, CONFORM TO THE SPECIFICATIONS FOR MSE PLUS™ RETAINING WALLS AND THE PROJECT BID DOCUMENTS

THESE DRAWINGS, AS WELL AS THE DESIGN, ARE CERTIFIED WITH RESPECT TO THE INTERNAL STABILITY OF THE MSE PLUS™ STRUCTURES ONLY. EXTERNAL STABILITY INCLUDING, BUT NOT LIMITED TO, SLOPE AND FOUNDATION STABILITY IS THE RESPONSIBILITY OF THE OWNER AND THE ENGINEER FOR THE OWNER.

DATE : 01-01-05

INTERIM STANDARD IN ENGLISH UNITS APPLICABLE TO DESIGN STANDARDS BOOKLET PUBLISHED IN EITHER ENGLISH OR METRIC UNITS.

STATE OF FLORIDA DEPARTMENT OF TRANSPORTATION

RETAINING WALL SYSTEMS SSL MSE PLUS WALL SYSTEM

INTERIM STANDARD

Index No. 5035 (Sheets 1 - 14 of 14) is a supplement to the metric Roadway and Traffic Design Standards Booklet dated January 2000.

APPROVED BY
William N. Nickas, P.E.
State Structures Design Engineer

REVISION NO.	SHEET NO.	INDEX NO.
04	9 of 14	5035

FINANCIAL PROJECT ID	STATE PROJ. NO.	SHEET NO.

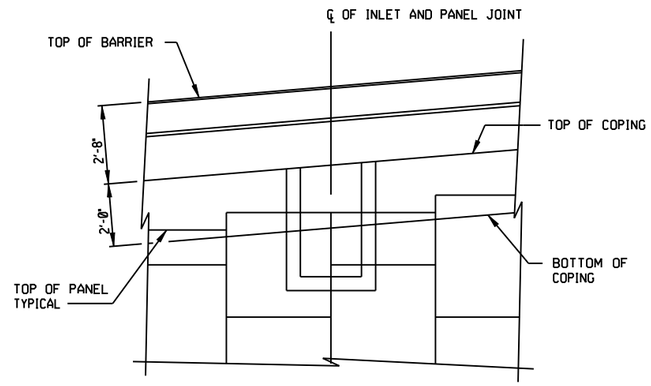

PARTIAL ELEVATION AT DRAINAGE INLET

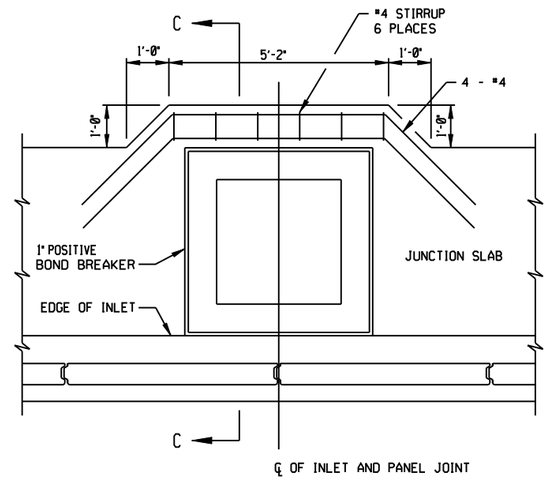

PARTIAL PLAN - JUNCTION SLAB AROUND INLET

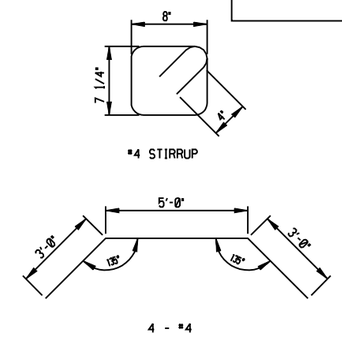

NOTES:

OBSTRUCTION SHALL BE CONSTRUCTED BEFORE WALL INSTALLATION OR, VOID FORMER SHALL BE INSTALLED DURING BACKFILL PLACEMENT. VOID FORMER NOT SUPPLIED BY SSL.

ALL OBSTRUCTIONS TO BE CONSTRUCTED OR PLACED PRIOR TO ANY CAST-IN-PLACE BARRIER OR COPING IS POURED.

DAMAGED GALV. SHALL BE COATED WITH ZINC RICH PAINT.

REVISED MESH TO BE SHOWN ON APPROVED SHOP DRAWINGS.

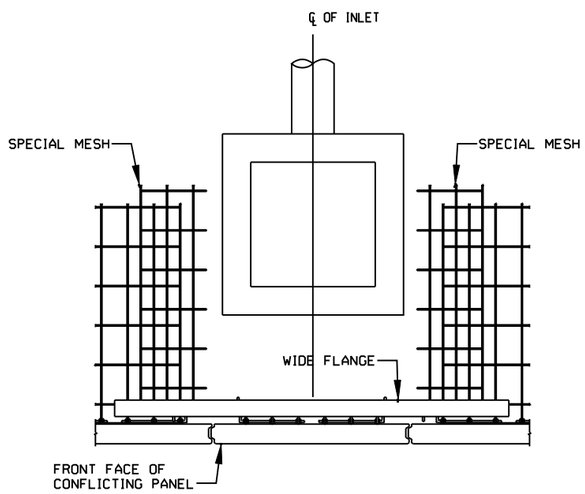

DRAINAGE INLET OBSTRUCTION DETAILS

NOTE:

4" MIN. BACKFILL SHALL BE PLACED BETWEEN MESH CONNECTED TO PANELS AND THE STRUCTURAL FRAME.

SEE "END BENT AND CORNER DETAILS 2 OF 2" FOR STRUCTURAL FRAME DETAILS

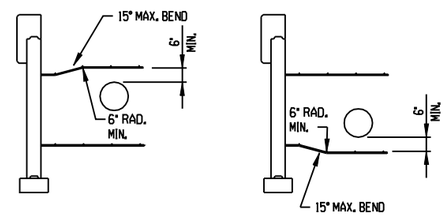

OBSTRUCTION DETAIL (HORIZONTAL)

MESH IS NOT TO BENT WITH LESS THAN A 6" RADIUS TO AVOID DAMAGE TO GALVANIZING.

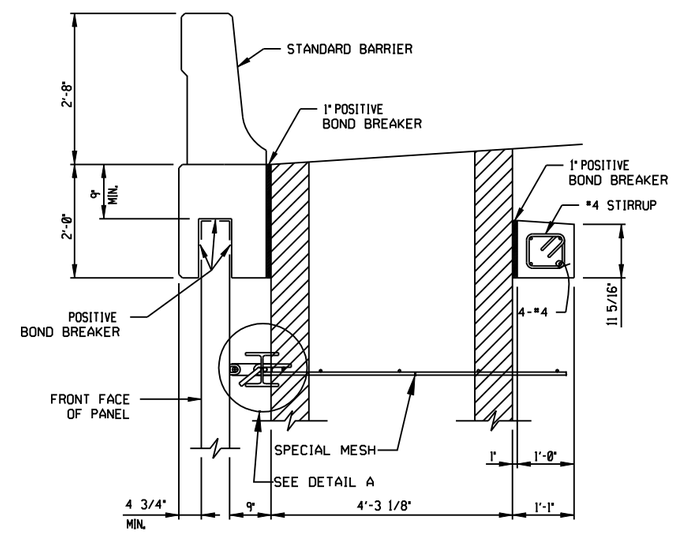

SECTION C-C

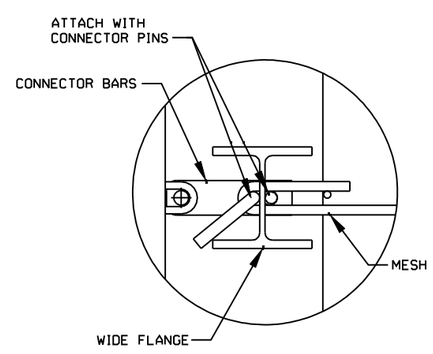

DETAIL A

THIS SYSTEM SHALL BE USED IN SLIGHTLY OR MODERATELY AGGRESSIVE ENVIRONMENTS ONLY.

THE DESIGN OF ALL MSE PLUS™ WALLS IS BASED ON THE ASSUMPTION THAT ALL MATERIALS, INCLUDING THE BACKFILL AND METHODS OF CONSTRUCTION, CONFORM TO THE SPECIFICATIONS FOR MSE PLUS™ RETAINING WALLS AND THE PROJECT BID DOCUMENTS

THESE DRAWINGS, AS WELL AS THE DESIGN, ARE CERTIFIED WITH RESPECT TO THE INTERNAL STABILITY OF THE MSE PLUS™ STRUCTURES ONLY. EXTERNAL STABILITY INCLUDING, BUT NOT LIMITED TO, SLOPE AND FOUNDATION STABILITY IS THE RESPONSIBILITY OF THE OWNER AND THE ENGINEER FOR THE OWNER.

DATE : 01-01-05

INTERIM STANDARD IN ENGLISH UNITS APPLICABLE TO DESIGN STANDARDS BOOKLET PUBLISHED IN EITHER ENGLISH OR METRIC UNITS.

STATE OF FLORIDA DEPARTMENT OF TRANSPORTATION

RETAINING WALL SYSTEMS
SSL
MSE PLUS WALL SYSTEM

INTERIM STANDARD

Index No. 5035 (Sheets 1 - 14 of 14) is a supplement to the metric Roadway and Traffic Design Standards Booklet dated January 2000.

APPROVED BY
William N. Nickas, P.E.
State Structures Design Engineer

REVISION NO.	SHEET NO.	INDEX NO.
04	10 of 14	5035

FINANCIAL PROJECT ID	STATE PROJ. NO.	SHEET NO.

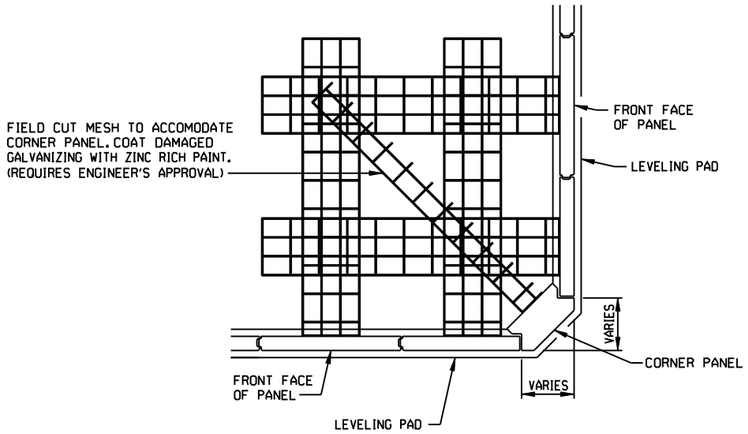

PLAN AT 90° OR GREATER CORNER

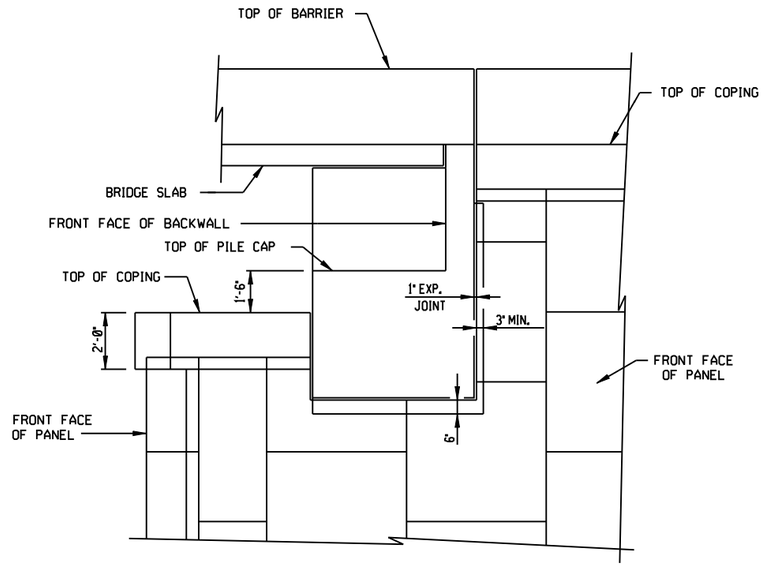

VIEW A-A

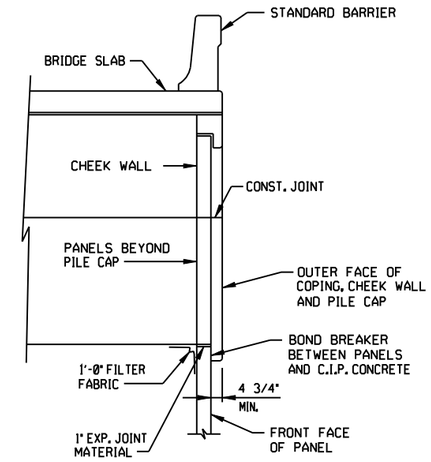

SECTION B-B

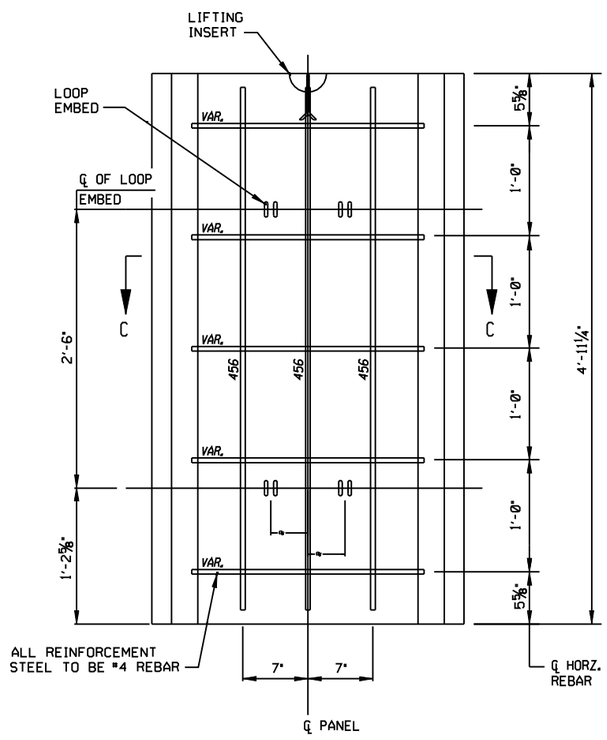

ELEVATION

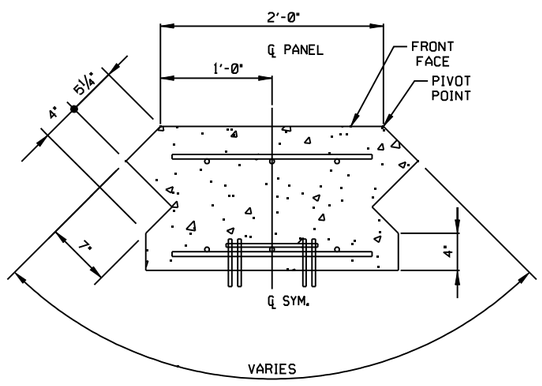

SECTION C-C

CORNER PANEL DETAILS

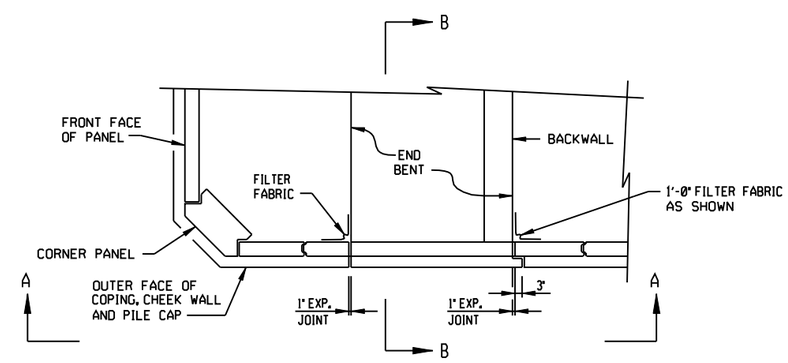

PLAN VIEW AT END BENT

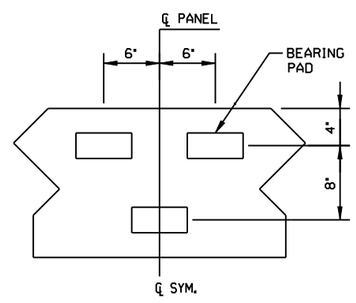

BEARING PAD PLACEMENT

THIS SYSTEM SHALL BE USED IN SLIGHTLY OR MODERATELY AGGRESSIVE ENVIRONMENTS ONLY.

THE DESIGN OF ALL MSE PLUS™ WALLS IS BASED ON THE ASSUMPTION THAT ALL MATERIALS, INCLUDING THE BACKFILL AND METHODS OF CONSTRUCTION, CONFORM TO THE SPECIFICATIONS FOR MSE PLUS™ RETAINING WALLS AND THE PROJECT BID DOCUMENTS

THESE DRAWINGS, AS WELL AS THE DESIGN, ARE CERTIFIED WITH RESPECT TO THE INTERNAL STABILITY OF THE MSE PLUS™ STRUCTURES ONLY. EXTERNAL STABILITY INCLUDING, BUT NOT LIMITED TO, SLOPE AND FOUNDATION STABILITY IS THE RESPONSIBILITY OF THE OWNER AND THE ENGINEER FOR THE OWNER.

DATE : 01-01-05

INTERIM STANDARD IN ENGLISH UNITS APPLICABLE TO DESIGN STANDARDS BOOKLET PUBLISHED IN EITHER ENGLISH OR METRIC UNITS.

STATE OF FLORIDA DEPARTMENT OF TRANSPORTATION

RETAINING WALL SYSTEMS SSL MSE PLUS WALL SYSTEM

INTERIM STANDARD

Index No. 5035 (Sheets 1 - 14 of 14) is a supplement to the metric Roadway and Traffic Design Standards Booklet dated January 2000.

APPROVED BY
William N. Nickas, P.E.
State Structures Design Engineer

REVISION NO.	SHEET NO.	INDEX NO.
04	11 of 14	5035

FINANCIAL PROJECT ID	STATE PROJ. NO.	SHEET NO.

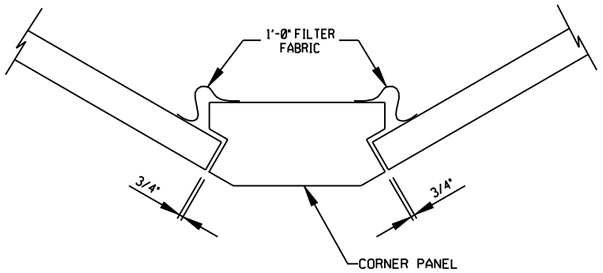

TYPICAL CORNER DETAIL

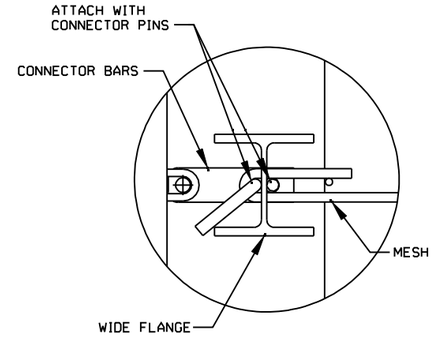

DETAIL A

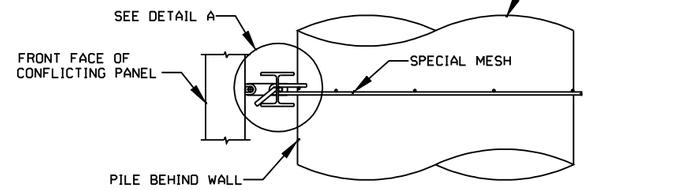

STRUCTURAL FRAME SECTION

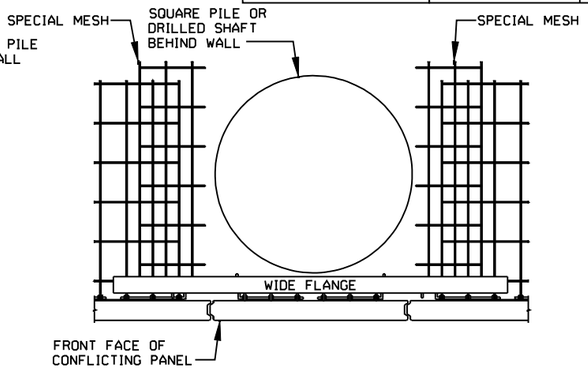

STRUCTURAL FRAME

NOTE:

4" MIN. BACKFILL SHALL BE PLACED BETWEEN MESH CONNECTED TO PANELS AND THE STRUCTURAL FRAME.

ABUTMENT PILE OBSTRUCTION DETAILS

FOR ABUTMENT DRILL SHAFTS AND SQUARE PILES THAT ARE 36" IN DIAMETER OR LARGER

NOTES:

SEE APPROVED SHOP DRAWINGS FOR SPECIFIC CORNER PANEL DETAILS AND CONNECTING ROD DETAILS.

ANY CUTTING OF MESH MUST BE APPROVED BY ENGINEER AS SHOWN ON APPROVED SHOP DRAWINGS.

CUT MESH OR DAMAGED GALV. SHALL BE COATED WITH ZINC RICH PAINT.

REVISED MESH TO BE SHOWN ON APPROVED SHOP DRAWINGS.

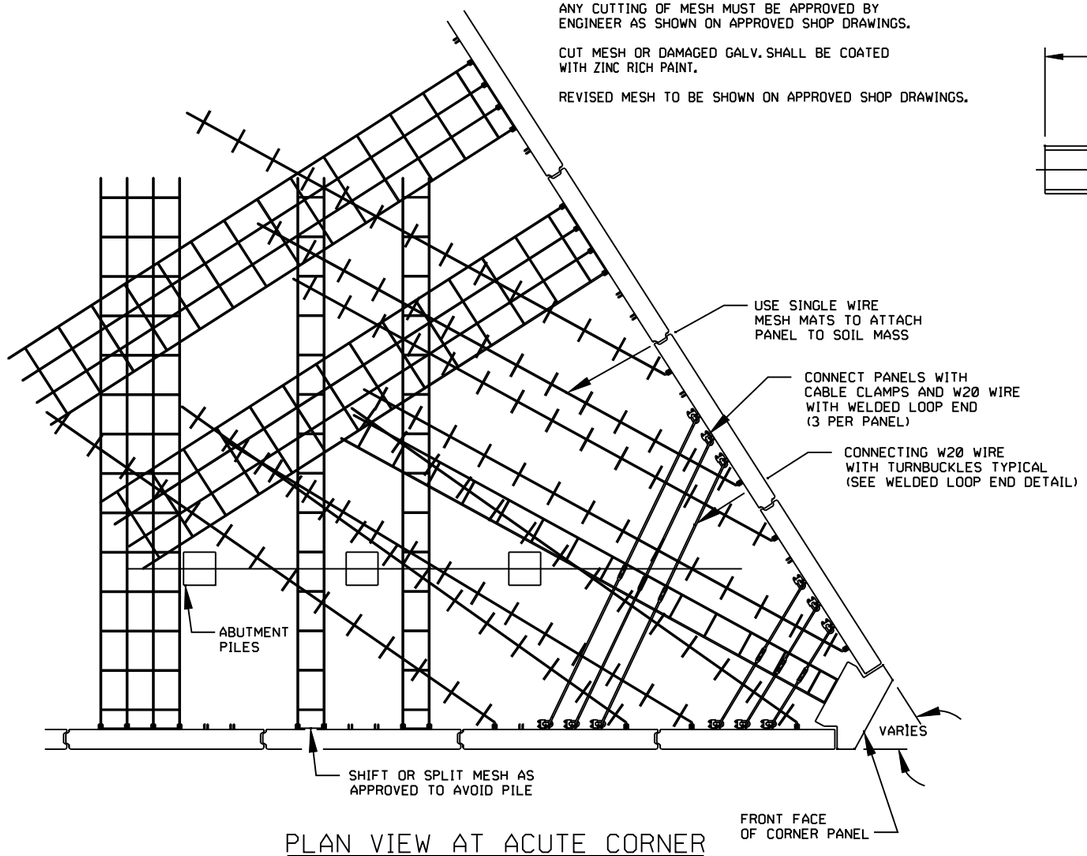

PLAN VIEW AT ACUTE CORNER

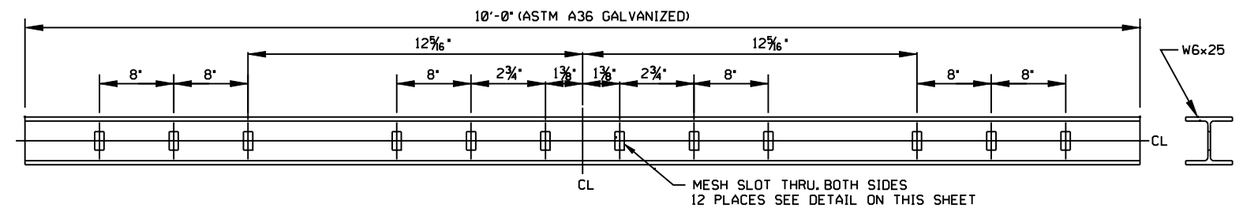

SPLICE FLANGE

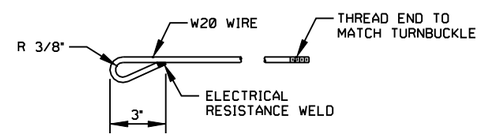

WELDED LOOP END DETAIL

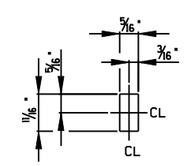

MESH SLOT DETAIL

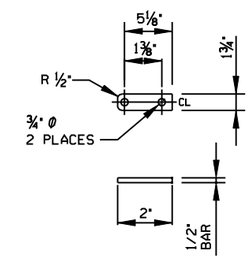

CONNECTOR BAR

ASTM A36 GALVANIZED

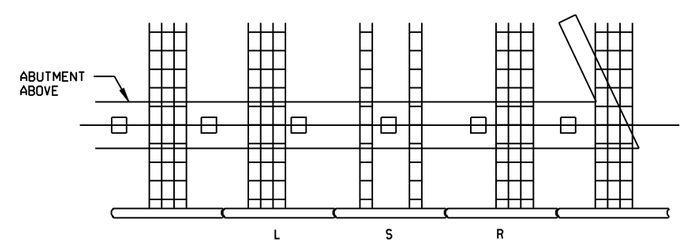

PLAN VIEW AT PILE BENT

FOR BENT DRILL SHAFTS THAT ARE LESS THAN 36" IN DIAMETER AND 18" AND 24" AND SQUARE PILES

THIS SYSTEM SHALL BE USED IN SLIGHTLY OR MODERATELY AGGRESSIVE ENVIRONMENTS ONLY.

LEGEND

L = SHIFT MESH TO THE LEFT TO AVOID PILE
R = SHIFT MESH TO THE RIGHT TO AVOID PILE
S = SPLIT MESH AND SHIFT TO THE OUTSIDE TO AVOID PILE

THE DESIGN OF ALL MSE PLUS™ WALLS IS BASED ON THE ASSUMPTION THAT ALL MATERIALS, INCLUDING THE BACKFILL AND METHODS OF CONSTRUCTION, CONFORM TO THE SPECIFICATIONS FOR MSE PLUS™ RETAINING WALLS AND THE PROJECT BID DOCUMENTS

THESE DRAWINGS, AS WELL AS THE DESIGN, ARE CERTIFIED WITH RESPECT TO THE INTERNAL STABILITY OF THE MSE PLUS™ STRUCTURES ONLY. EXTERNAL STABILITY INCLUDING, BUT NOT LIMITED TO, SLOPE AND FOUNDATION STABILITY IS THE RESPONSIBILITY OF THE OWNER AND THE ENGINEER FOR THE OWNER.

DATE : 01-01-05

INTERIM STANDARD IN ENGLISH UNITS APPLICABLE TO DESIGN STANDARDS BOOKLET PUBLISHED IN EITHER ENGLISH OR METRIC UNITS.

STATE OF FLORIDA DEPARTMENT OF TRANSPORTATION

RETAINING WALL SYSTEMS SSL MSE PLUS WALL SYSTEM

INTERIM STANDARD

Index No. 5035 (Sheets 1 - 14 of 14) is a supplement to the metric Roadway and Traffic Design Standards Booklet dated January 2000.

APPROVED BY
William N. Nickas, P.E.
State Structures Design Engineer

REVISION NO.	SHEET NO.	INDEX NO.
04	12 of 14	5035

FINANCIAL PROJECT ID	STATE PROJ. NO.	SHEET NO.

TYPE-A

SHOWN FROM BACK FACE

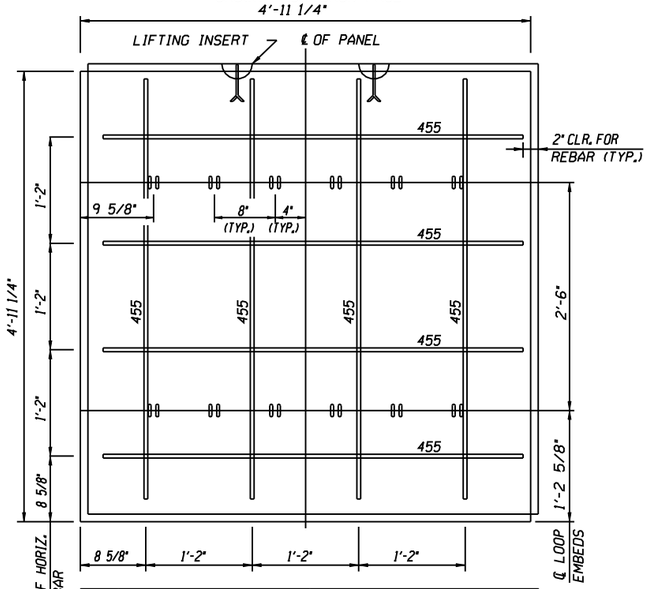

Qt.	Item	Description
4	Vertical Bar	#4 Bar - 4'-7" Long
4	Horizontal Bar	#4 Bar - 4'-7" Long
2	Lifting Insert	1 Ton Burke
2	Loop Embeds	6 Connection Embed

TYPE-T1

SHOWN FROM BACK FACE

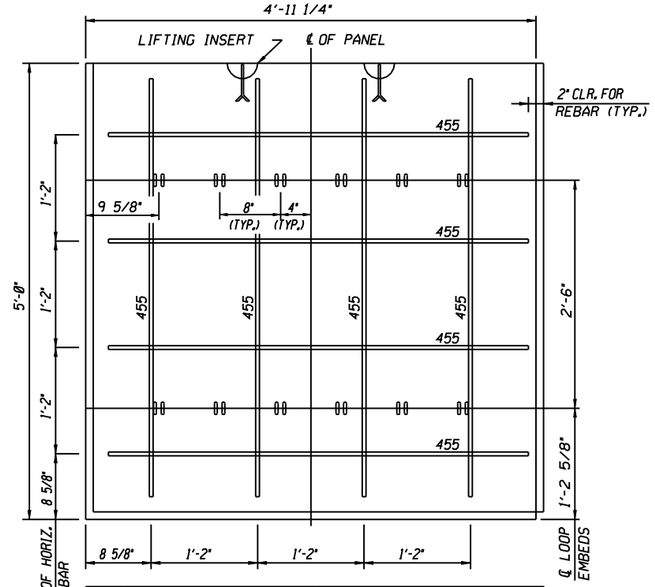

Qt.	Item	Description
4	Vertical Bar	#4 Bar - 4'-7" Long
4	Horizontal Bar	#4 Bar - 4'-7" Long
2	Lifting Insert	1 Ton Burke
2	Loop Embeds	6 Connection Embed

TYPE-T

SHOWN FROM BACK FACE

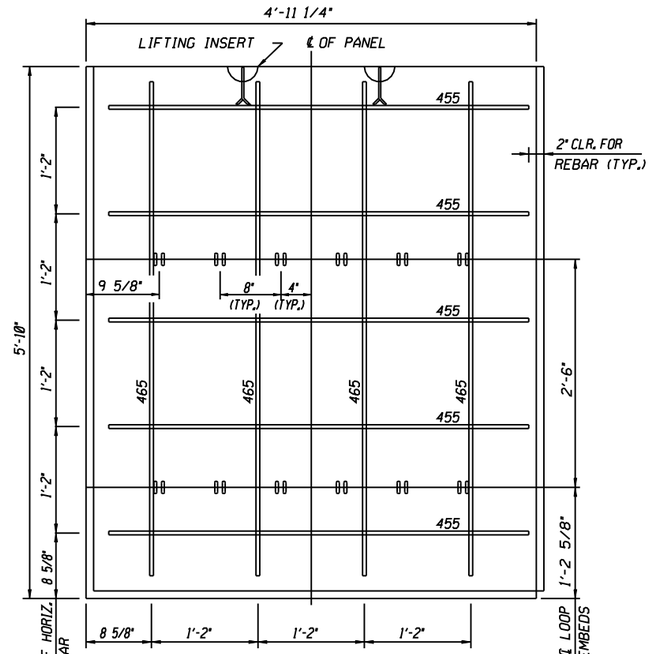

Qt.	Item	Description
4	Vertical Bar	#4 Bar - 5'-5" Long
5	Horizontal Bar	#4 Bar - 4'-7" Long
2	Lifting Insert	1 Ton Burke
2	Loop Embeds	6 Connection Embed

TYPE-A2

SHOWN FROM BACK FACE

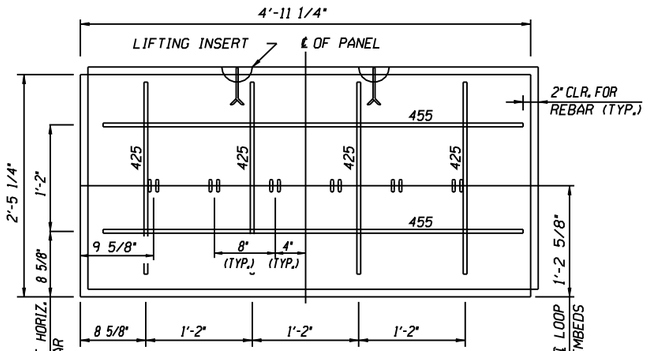

Qt.	Item	Description
4	Vertical Bar	#4 Bar - 2'-1" Long
2	Horizontal Bar	#4 Bar - 4'-7" Long
2	Lifting Insert	1 Ton Burke
1	Loop Embeds	6 Connection Embed

TYPE-T2

SHOWN FROM BACK FACE

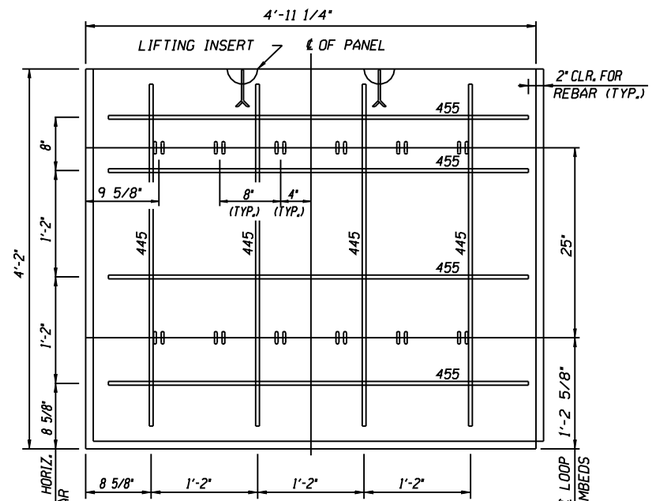

Qt.	Item	Description
4	Vertical Bar	#4 Bar - 3'-9" Long
4	Horizontal Bar	#4 Bar - 4'-7" Long
2	Lifting Insert	1 Ton Burke
2	Loop Embeds	6 Connection Embed

THIS SYSTEM SHALL BE USED IN SLIGHTLY OR MODERATELY AGGRESSIVE ENVIRONMENTS ONLY.

THE DESIGN OF ALL MSE PLUS™ WALLS IS BASED ON THE ASSUMPTION THAT ALL MATERIALS, INCLUDING THE BACKFILL AND METHODS OF CONSTRUCTION, CONFORM TO THE SPECIFICATIONS FOR MSE PLUS™ RETAINING WALLS AND THE PROJECT BID DOCUMENTS

THESE DRAWINGS, AS WELL AS THE DESIGN, ARE CERTIFIED WITH RESPECT TO THE INTERNAL STABILITY OF THE MSE PLUS™ STRUCTURES ONLY. EXTERNAL STABILITY INCLUDING, BUT NOT LIMITED TO, SLOPE AND FOUNDATION STABILITY IS THE RESPONSIBILITY OF THE OWNER AND THE ENGINEER FOR THE OWNER.

DATE : 01-01-05

INTERIM STANDARD IN ENGLISH UNITS APPLICABLE TO DESIGN STANDARDS BOOKLET PUBLISHED IN EITHER ENGLISH OR METRIC UNITS.

STATE OF FLORIDA DEPARTMENT OF TRANSPORTATION

RETAINING WALL SYSTEMS
SSL
MSE PLUS WALL SYSTEM

INTERIM STANDARD

Index No. 5035 (Sheets 1 - 14 of 14) is a supplement to the metric Roadway and Traffic Design Standards Booklet dated January 2000.

APPROVED BY
William N. Nickas, P.E.
State Structures Design Engineer

REVISION NO.	SHEET NO.	INDEX NO.
04	13 of 14	5035

FINANCIAL PROJECT ID	STATE PROJ. NO.	SHEET NO.

TYPE-T3

SHOWN FROM BACK FACE

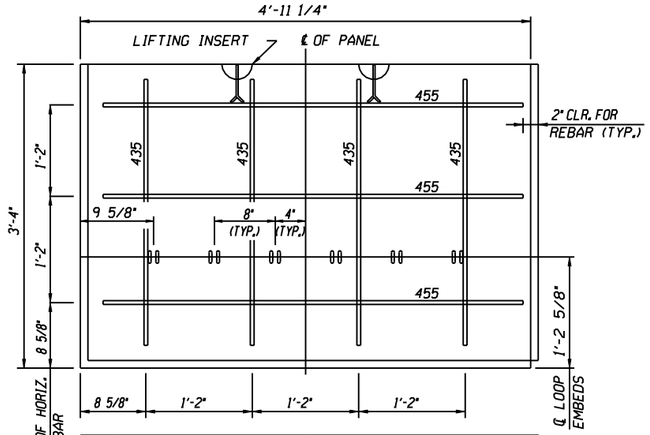

Qt.	Item	Description
4	Vertical Bar	#4 Bar - 2'-11" Long
3	Horizontal Bar	#4 Bar - 4'-7" Long
2	Lifting Insert	1 Ton Burke
1	Loop Embeds	6 Connection Embed

TYPE-T4

SHOWN FROM BACK FACE

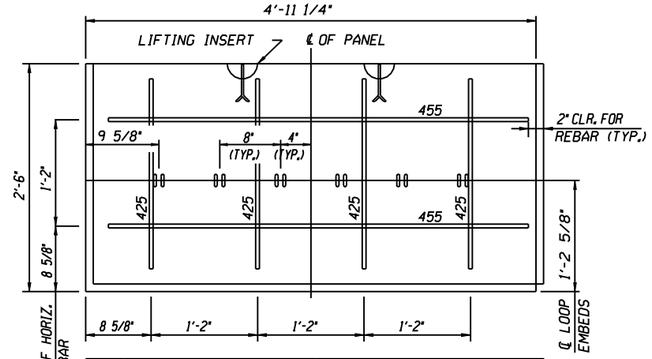

Qt.	Item	Description
4	Vertical Bar	#4 Bar - 2'-1" Long
2	Horizontal Bar	#4 Bar - 4'-7" Long
2	Lifting Insert	1 Ton Burke
1	Loop Embeds	6 Connection Embed

TYPE-T5

SHOWN FROM BACK FACE

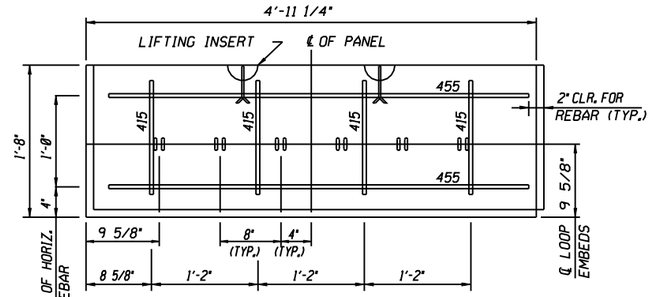

Qt.	Item	Description
4	Vertical Bar	#4 Bar - 1'-3" Long
2	Horizontal Bar	#4 Bar - 4'-7" Long
2	Lifting Insert	1 Ton Burke
1	Loop Embeds	6 Connection Embed

NOTES :

1. All Panel Reinforcing Steel To Be #4 Bars.
2. All Dimensions Shown Are To Front Face Of Panel, Unless Otherwise Noted.
3. Reinforcement For Partial Panels To Be Proportional To Full Panels.
4. All Reinforcing Bars Are To Be 2" Minimum Clear To The Sises Of The Panel.
5. All Panels Are To Be Properly Marked On The Back Face As Shown.
6. Reinforcement Lables Indicate Bar Size And Length.

THIS SYSTEM SHALL BE USED IN SLIGHTLY OR MODERATELY AGGRESSIVE ENVIRONMENTS ONLY.

THE DESIGN OF ALL MSE PLUS™ WALLS IS BASED ON THE ASSUMPTION THAT ALL MATERIALS, INCLUDING THE BACKFILL AND METHODS OF CONSTRUCTION, CONFORM TO THE SPECIFICATIONS FOR MSE PLUS™ RETAINING WALLS AND THE PROJECT BID DOCUMENTS

THESE DRAWINGS, AS WELL AS THE DESIGN, ARE CERTIFIED WITH RESPECT TO THE INTERNAL STABILITY OF THE MSE PLUS™ STRUCTURES ONLY. EXTERNAL STABILITY INCLUDING, BUT NOT LIMITED TO, SLOPE AND FOUNDATION STABILITY IS THE RESPONSIBILITY OF THE OWNER AND THE ENGINEER FOR THE OWNER.

DATE : 01-01-05

INTERIM STANDARD IN ENGLISH UNITS APPLICABLE TO DESIGN STANDARDS BOOKLET PUBLISHED IN EITHER ENGLISH OR METRIC UNITS.

STATE OF FLORIDA DEPARTMENT OF TRANSPORTATION

RETAINING WALL SYSTEMS SSL MSE PLUS WALL SYSTEM

INTERIM STANDARD

Index No. 5035 (Sheets 1 - 14 of 14) is a supplement to the metric Roadway and Traffic Design Standards Booklet dated January 2000.

APPROVED BY
William N. Nickas, P.E.
State Structures Design Engineer

REVISION NO.	SHEET NO.	INDEX NO.
04	14 of 14	5035