FINANCIAL PROJECT ID	STATE PROJ. NO.	SHEET NO.

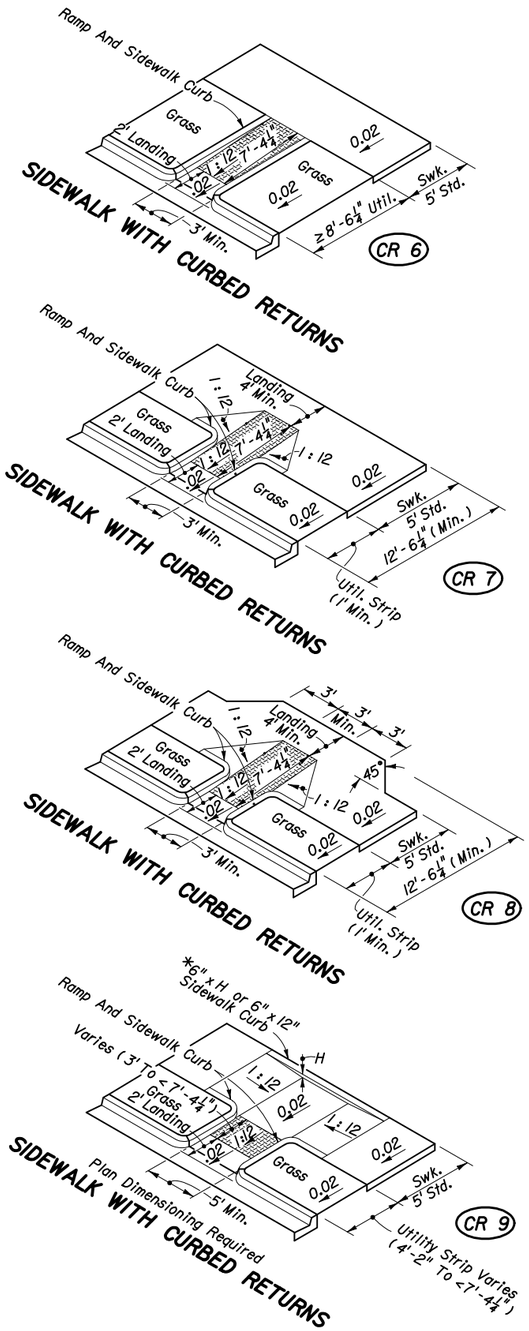

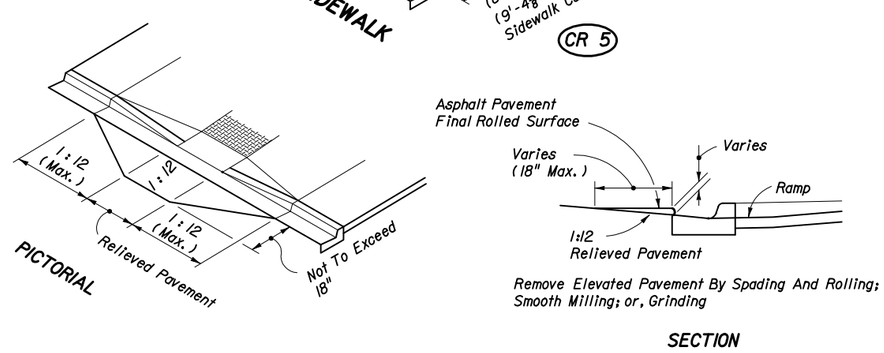

PAVEMENT RELIEF AT LIP OF CURB

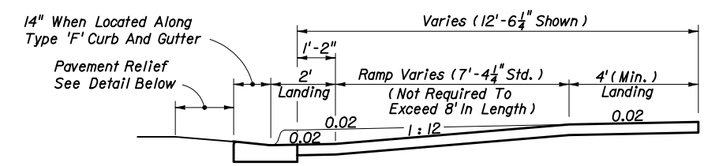

SECTION THROUGH RAMP RUN AND LANDINGS WITH UPPER LANDING AT NORMAL SIDEWALK ELEVATION

* For BACK OF SIDEWALK CURB OR BUFFER TRANSITION And For RAMP AND SIDEWALK CURB OPTIONS See Sheet 4.

THE SEALED RECORD OF THIS STANDARD IS ON FILE IN THE ROADWAY DESIGN OFFICE.

INTERIM STANDARD IN ENGLISH UNITS APPLICABLE TO ROADWAY AND TRAFFIC DESIGN STANDARD BOOKLETS PUBLISHED IN EITHER ENGLISH OR METRIC UNITS.

DIMENSIONAL FEATURES FOR PUBLIC SIDEWALK CURB RAMPS WHERE RAMP AND LANDING DEPTH ARE NOT RESTRICTED BY RIGHT OF WAY

Revised: 7-10-01

STATE OF FLORIDA DEPARTMENT OF TRANSPORTATION

PUBLIC SIDEWALK CURB RAMPS

INTERIM STANDARD

THIS INDEX IS A SUPPLEMENT TO THE ROADWAY AND TRAFFIC DESIGN STANDARDS, BOOKLETS DATED JANUARY 2000.

APPROVED BY
State Roadway Design Engineer

REVISION NO.	SHEET NO.	INDEX NO.
	2 of 5	0304