CONTRACT PLANS COMPONENTS

ROADWAY PLANS
SIGNING AND PAVEMENT MARKING PLANS
INTELLIGENT TRANSPORTATION SYSTEMS PLANS
LIGHTING PLANS
STRUCTURE PLANS

A DETAILED INDEX APPEARS ON THE
KEY SHEET OF EACH COMPONENT

INDEX OF ROADWAY PLANS

SHEET NO.	SHEET DESCRIPTION
1	KEY SHEET
1A	NOTES TO REVIEWERS
2	SIGNATURE SHEET
3 - 14	DRAINAGE MAP
15	INTERCHANGE DRAINAGE MAP
16 - 27	TYPICAL SECTIONS
28 - 33	TYPICAL SECTION DETAILS
34	OPTIONAL MATERIAL TABULATION
35 - 36	PROJECT LAYOUT
37 - 42	CURVE AND COORDINATE DATA
43 - 47	PROJECT NETWORK CONTROL
48	GENERAL NOTES
49 - 86	ROADWAY PLANS
87 - 123	DRAINAGE PLANS
124 - 157	ROADWAY PROFILES
158 - 162	RAMP TERMINAL DETAILS
163 - 170	INTERSECTION DETAILS
171 - 180	ORGANIC MATERIAL DELINEATION PLAN
181	SPECIAL DETAILS
182 - 191	POND DETAILS
192 - 198	POND SOIL SURVEY
199 - 208	DRAINAGE DETAILS
209 - 257	DRAINAGE PROFILES
258 - 319	DRAINAGE STRUCTURES
320 - 336	DRAINAGE SUMMARY TABLES
337 - 338	CROSS SECTION PATTERN LINES
339	ROADWAY SOIL SURVEY
340 - 463	CROSS SECTIONS
464 - 465	DRIVEWAY HALF SECTIONS
466 - 468	STORMWATER POLLUTION PREVENTION PLAN
469 - 504	EROSION CONTROL PLANS
505 - 708	TEMPORARY TRAFFIC CONTROL PLAN
709 - 739	UTILITY ADJUSTMENTS
740 - 742	VERIFIED UTILITY LOCATES

DEVELOPMENTAL STANDARD PLANS (DSP):

DS528-001	DIRECTIONAL INDICATOR
D450001	HIGH TENSION CABLE BARRIER

GOVERNING STANDARD PLANS:

Florida Department of Transportation, FY2024-2025 Standard Plans for Road and Bridge Construction and applicable Interim Revisions (IRs).

Standard Plans for Road Construction and associated IRs are available at the following website: http://www.fdot.gov/design/standardplans

APPLICABLE IRs: IR - -

Standard Plans for Bridge Construction are included in the Structures Plans Component

GOVERNING STANDARD SPECIFICATIONS:

Florida Department of Transportation, FY 2024-2025 Standard Specifications for Road and Bridge Construction at the following website:
http://www.fdot.gov/programmanagement/Implemented/SpecBooks

STATE OF FLORIDA

DEPARTMENT OF TRANSPORTATION

CONTRACT PLANS

FINANCIAL PROJECT ID 430185-3-52-01

(FEDERAL FUNDS)

POLK COUNTY (16320)

STATE ROAD NO. 400

I-4 AT SR 33 INTERCHANGE MODIFICATION

THIS PROJECT TO BE LET TO CONTRACT WITH
FPID: 430185-3-56-01, 430185-3-56-03, 430185-3-56-04, 430185-3-56-05
430185-4-52-01, 430185-4-56-01, 430185-4-56-02, 430185-4-56-03,
430185-4-56-04, 430185-7-52-01, 201214-8-52-01

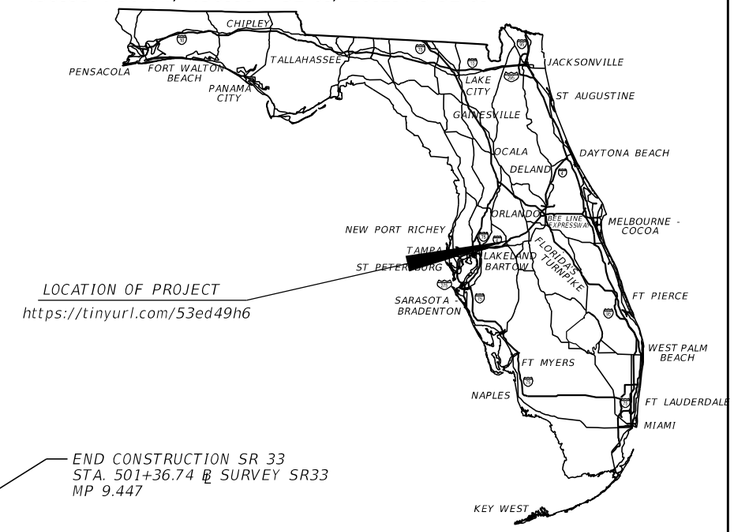

LOCATION OF PROJECT
https://tinyurl.com/53ed49h6

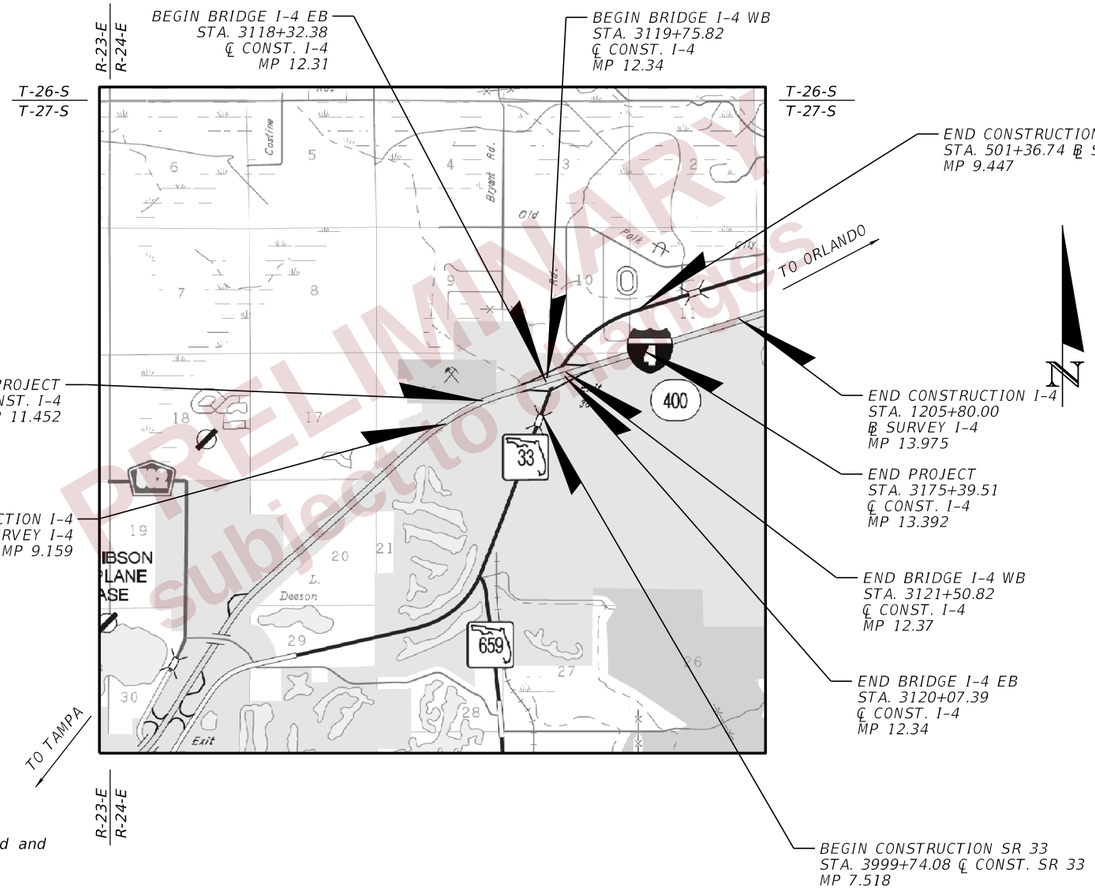

PHASE IV PLANS
FEBRUARY 29, 2024

ROADWAY PLANS
ENGINEER OF RECORD:

DEBANANDA PANIGRAHI, P.E.
LICENSE NUMBER 68318
H. W. LOCHNER
4350 W. CYPRESS STREET, SUITE 800
TAMPA, FLORIDA 33607
CONTRACT NO.: C9C38
VENDOR NO.: VF362338811001

FDOT PROJECT MANAGER:

DOUG BURKHART, P.E.

CONSTRUCTION CONTRACT NO.	FISCAL YEAR	SHEET NO.
T000	25	1

PRELIMINARY
subject to change

THE OFFICIAL RECORD OF THIS SHEET IS THE ELECTRONIC FILE DIGITALLY SIGNED AND SEALED UNDER RULE 61G15-23.004, F.A.C.

3/1/2024 10:39:58 AM JTAGLIAFERRO
C:\pw_working\lochner-pw-01\dms18802\KEYSRD01.dgn

NOTES TO REVIEWERS

1. THIS SUBMITTAL ADDRESSES ALL COMMENTS RECEIVED ON THE PHASE IIIR PLANS FOR THE 430185-3 PROJECT. OTHER MAJOR CHANGES RELATE TO THE INCREASE IN HORIZONTAL CURVE LENGTHS OF SOME INTERSTATE RAMPS TO MEET CRITERIA. RAMP B ALIGNMENT HAS BEEN CHANGED SLIGHTLY TO MEET REQUIRMENTS OF STANDARD INDEX 525-001 AND SHOULDER ROCKING UPDATED TO BE CONSISTENT WITH APPROVED DESIGN VARIATION. OTHER CHNAGES THAT WERE SUBMITTED AS A SEPARATE SUBMITTAL INCLUDE ADDITION OF TRUCK APRONS AT ROUNDABOUTS AND ADDITION OF SIGNAL AT TOMKOW ROAD.

2. PLANS HAVE BEEN DEVELOPED UTILIZING FDM SERIES 300. SUPPLEMENT TO ORIGINAL SCOPE DOES NOT INCLUDE UPDATING TO LATEST FDM 900 SERIES.

PRELIMINARY
subject to changes

REVISIONS				ENGINEER OF RECORD	STATE OF FLORIDA DEPARTMENT OF TRANSPORTATION			NOTES TO REVIEWERS	SHEET NO.
DATE	DESCRIPTION	DATE	DESCRIPTION	DEBANANDA PANIGRAHI, P.E. LICENSE NUMBER 68318 H. W. LOCHNER 4300 W. CYPRESS STREET, SUITE 500 TAMPA, FLORIDA 33607	ROAD NO.	COUNTY	FINANCIAL PROJECT ID		1A
					SR 400	POLK	430185-3-52-01		

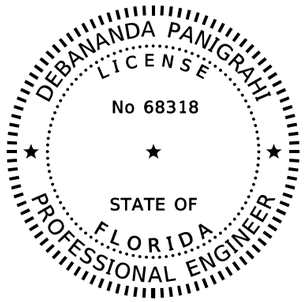

THIS DOCUMENT HAS BEEN DIGITALLY SIGNED AND SEALED BY:

ON THE DATE ADJACENT TO THE SEAL

PRINTED COPIES OF THIS DOCUMENT ARE NOT CONSIDERED SIGNED AND SEALED. THE SIGNATURE MUST BE VERIFIED ON THE ELECTRONIC DOCUMENTS.

LOCHNER
4300 W. CYPRESS STREET, SUITE 500
TAMPA, FL 33607
CERTIFICATE OF AUTHORIZATION NO. 894
DEBANANDA PANIGRAHI, P.E. NO. 68318

THE ABOVE NAMED PROFESSIONAL ENGINEER SHALL BE RESPONSIBLE FOR THE FOLLOWING SHEETS IN ACCORDANCE WITH RULE 61G15-23.004, F.A.C.

ROADWAY PLANS

SHEET NO.	SHEET DESCRIPTION
1	KEY SHEET
2	SIGNATURE SHEET
16 - 27	TYPICAL SECTIONS
28 - 33	TYPICAL SECTION DETAILS
35 - 36	PROJECT LAYOUT
37 - 42	CURVE AND COORDINATE DATA
43 - 47	PROJECT NETWORK CONTROL
48	GENERAL NOTES
49 - 86	ROADWAY PLANS
124 - 157	ROADWAY PROFILES
158 - 162	RAMP TERMINAL DETAILS
163 - 170	INTERSECTION DETAILS
181	SPECIAL DETAILS
337 - 338	CROSS SECTION PATTERN LINES
340 - 463	CROSS SECTIONS
464 - 465	DRIVEWAY HALF SECTIONS
709 - 739	UTILITY ADJUSTMENTS
740 - 742	VERIFIED UTILITY LOCATES

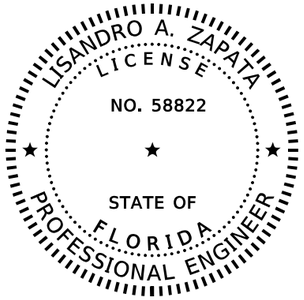

THIS DOCUMENT HAS BEEN DIGITALLY SIGNED AND SEALED BY:

ON THE DATE ADJACENT TO THE SEAL

PRINTED COPIES OF THIS DOCUMENT ARE NOT CONSIDERED SIGNED AND SEALED. THE SIGNATURE MUST BE VERIFIED ON THE ELECTRONIC DOCUMENTS.

LOCHNER
4300 W. CYPRESS STREET, SUITE 500
TAMPA, FL 33607
CERTIFICATE OF AUTHORIZATION NO. 894
LISANDRO A. ZAPATA, P.E. NO. 58822

THE ABOVE NAMED PROFESSIONAL ENGINEER SHALL BE RESPONSIBLE FOR THE FOLLOWING SHEETS IN ACCORDANCE WITH RULE 61G15-23.004, F.A.C.

ROADWAY PLANS

SHEET NO.	SHEET DESCRIPTION
2	SIGNATURE SHEET
3 - 14	DRAINAGE MAPS
15	INTERCHANGE DRAINAGE MAP
34	OPTIONAL MATERIAL TABULATION
87 - 123	DRAINAGE PLANS
182 - 191	POND DETAILS
199 - 208	DRAINAGE DETAILS
209 - 257	DRAINAGE PROFILES
258 - 319	DRAINAGE STRUCTURES
320 - 336	DRAINAGE SUMMARY TABLES
466 - 468	STORMWATER POLLUTION PREVENTION PLAN
469 - 504	EROSION CONTROL PLANS

PRELIMINARY
subject to changes

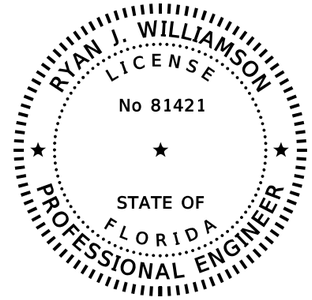

THIS DOCUMENT HAS BEEN DIGITALLY SIGNED AND SEALED BY:

ON THE DATE ADJACENT TO THE SEAL

PRINTED COPIES OF THIS DOCUMENT ARE NOT CONSIDERED SIGNED AND SEALED. THE SIGNATURE MUST BE VERIFIED ON THE ELECTRONIC DOCUMENTS.

BURGESS & NIPLE, INC.
1800 PEMBROOK DRIVE, SUITE 265
ORLANDO, FL 32810
CERTIFICATE OF AUTHORIZATION NO. 9853
RYAN J WILLIAMSON, P.E. NO. 81421

THE ABOVE NAMED PROFESSIONAL ENGINEER SHALL BE RESPONSIBLE FOR THE FOLLOWING SHEETS IN ACCORDANCE WITH RULE 61G15-23.004, F.A.C.

ROADWAY PLANS

SHEET NO.	SHEET DESCRIPTION
2	SIGNATURE SHEET
505 - 708	TEMPORARY TRAFFIC CONTROL PLAN

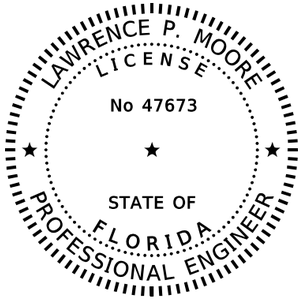

THIS DOCUMENT HAS BEEN DIGITALLY SIGNED AND SEALED BY:

ON THE DATE ADJACENT TO THE SEAL

PRINTED COPIES OF THIS DOCUMENT ARE NOT CONSIDERED SIGNED AND SEALED. THE SIGNATURE MUST BE VERIFIED ON THE ELECTRONIC DOCUMENTS.

TIERRA, INC.
7351 TEMPLE TERRACE HIGHWAY
TAMPA, FLORIDA 33637
CERTIFICATE OF AUTHORIZATION; 6486
LAWRENCE P. MOORE, P.E. NO. 47673

THE ABOVE NAMED PROFESSIONAL ENGINEER SHALL BE RESPONSIBLE FOR THE FOLLOWING SHEETS IN ACCORDANCE WITH RULE 61G15-23.004, F.A.C.

ROADWAY PLANS

SHEET NO.	SHEET DESCRIPTION
2	SIGNATURE SHEET
171 - 180	ORGANIC MATERIAL DELINEATION PLAN
192 - 198	POND SOIL SURVEY
339	ROADWAY SOIL SURVEY

REVISIONS			
DATE	DESCRIPTION	DATE	DESCRIPTION

ENGINEER OF RECORD

DEBANANDA PANIGRAHI, P.E.
LICENSE NUMBER 68318
H. W. LOCHNER
4300 W. CYPRESS STREET, SUITE 500
TAMPA, FLORIDA 33607

STATE OF FLORIDA
DEPARTMENT OF TRANSPORTATION

ROAD NO.	COUNTY	FINANCIAL PROJECT ID
SR 400	POLK	430185-3-52-01

SIGNATURE SHEET

SHEET NO. 2

JTAGLIAFERRO 3/1/2024 10:40:30 AM c:\pw_working\lochner-pw-01\dms18802\SIGNRD01.DGN

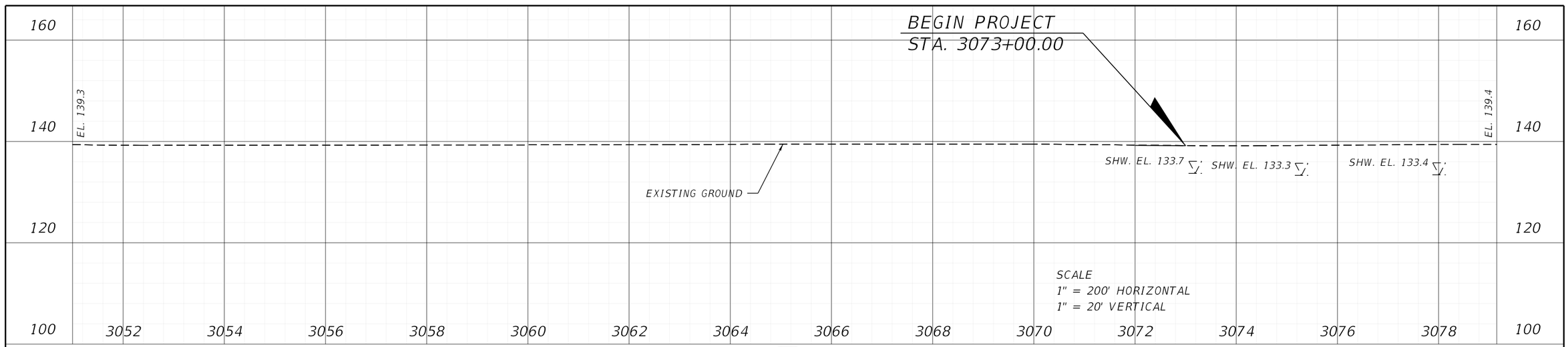

DO NOT USE THE INFORMATION ON THIS SHEET FOR CONSTRUCTION PURPOSES. THIS SHEET IS IN THE PLANS FOR DOCUMENTATION AND TO ASSIST CONSTRUCTION PERSONNEL WITH DRAINAGE CONCERNS

BEGIN PROJECT
BEGIN OVERBUILD SR 400 (I-4) WB
BEGIN RECONSTRUCTION SR 400 (I-4) EB
END MLLING AND RESURFACING EB
STA. 3073+00.00 ℄ CONST. I-4 =
STA. 3998+57.07 ℄ CONST. I-4 EB 1 =
STA. 1073+09.57 ℄ SURVEY I-4

BEGIN MILLING & RESURFACING
STA. 1055+00.00

SR 400/I-4 WB
SR 400/I-4 EB
℄ SURVEY I-4
LA R/W LINE
℄ CONST. I-4 EB-1
℄ CONST. I-4
OUC UTILITY EASEMENT
OFFSITE AREA
100.36 AC
BASIN 1200
18.08 AC
FDOT SWM POND 12
MATCHLINE STA. 3079+15.00
1" = 200'
N

BEGIN CONSTRUCTION
STA. 952+00.00

PRELIMINARY
Subject to changes

REVISIONS				ENGINEER OF RECORD	STATE OF FLORIDA DEPARTMENT OF TRANSPORTATION			DRAINAGE MAP (01)	SHEET NO.
DATE	DESCRIPTION	DATE	DESCRIPTION	LISANDRO ZAPATA, P.E. LICENSE NUMBER 58822 H. W. LOCHNER 4300 W. CYPRESS STREET, SUITE 500 TAMPA, FLORIDA 33607	ROAD NO.	COUNTY	FINANCIAL PROJECT ID		3
					SR 400	POLK	430185-3-52-01		

THE OFFICIAL RECORD OF THIS SHEET IS THE ELECTRONIC FILE DIGITALLY SIGNED AND SEALED UNDER RULE 61G15-23.004, F.A.C.

2/29/2024 4:21:11 PM JTAGLIAFERRO
c:\pw_working\lochner-pw-01\dms18776\DRWPRD02.dgn

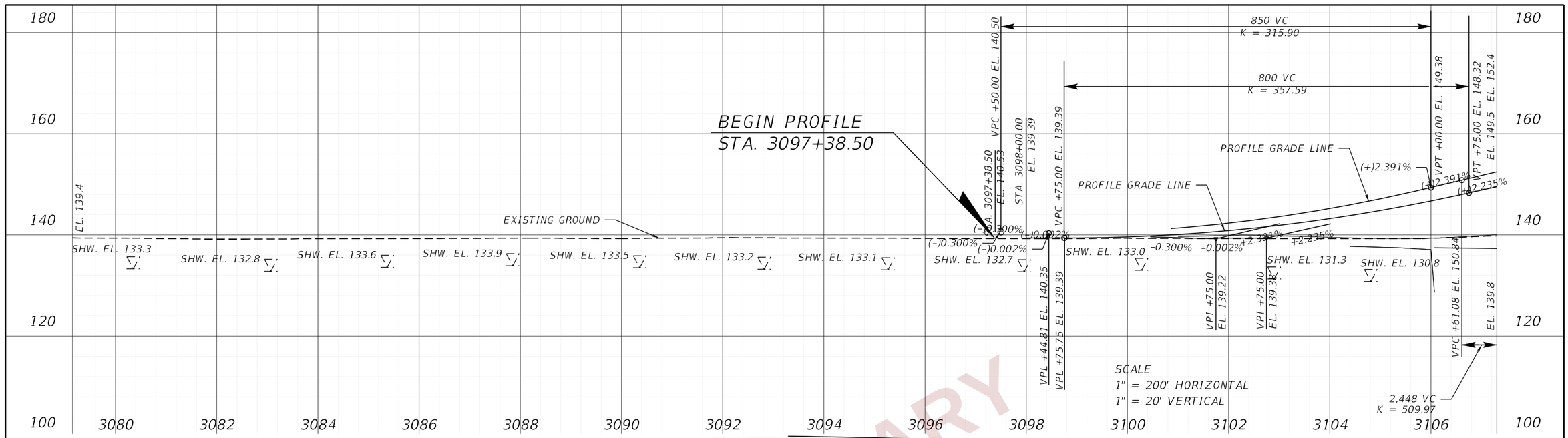

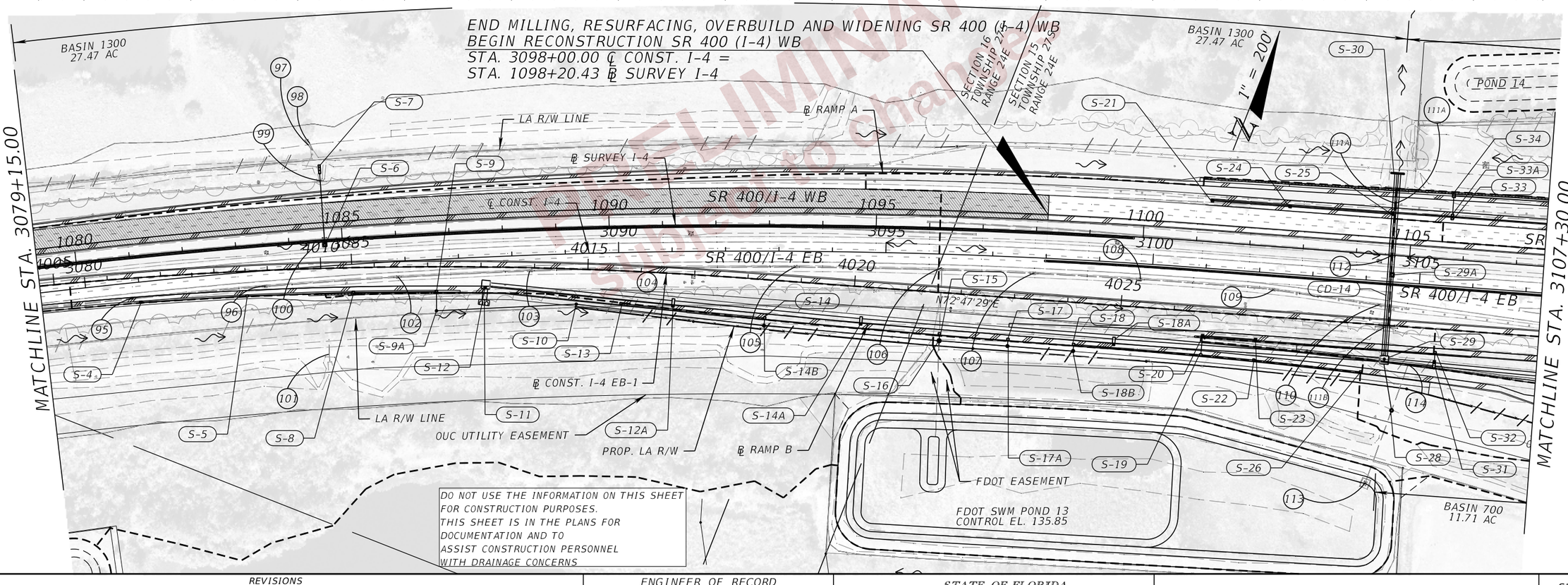

PRELIMINARY
Subject to change

REVISIONS			
DATE	DESCRIPTION	DATE	DESCRIPTION

ENGINEER OF RECORD

LISANDRO ZAPATA, P.E.
LICENSE NUMBER 58822
H. W. LOCHNER
4300 W. CYPRESS STREET, SUITE 500
TAMPA, FLORIDA 33607

STATE OF FLORIDA
DEPARTMENT OF TRANSPORTATION

ROAD NO.	COUNTY	FINANCIAL PROJECT ID
SR 400	POLK	430185-3-52-01

DRAINAGE MAP (02)

SHEET NO. 4

THE OFFICIAL RECORD OF THIS SHEET IS THE ELECTRONIC FILE DIGITALLY SIGNED AND SEALED UNDER RULE 61G15-23.004, F.A.C.

2/29/2024 4:21:14 PM JTAGLIAFERRO
c:\pw_working\lochner-pw-01\dms18776\DRWPRD02.dgn

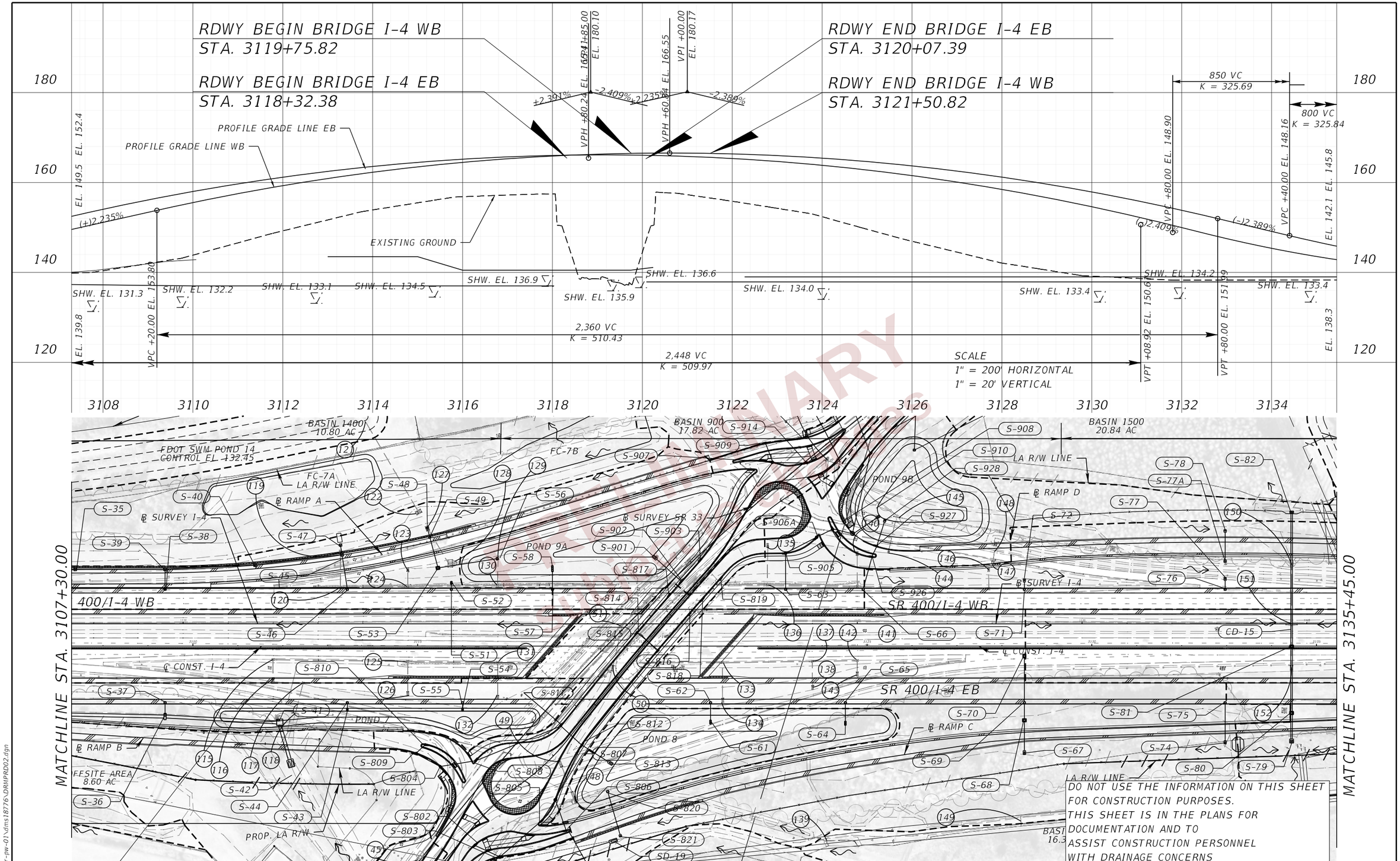

DO NOT USE THE INFORMATION ON THIS SHEET FOR CONSTRUCTION PURPOSES. THIS SHEET IS IN THE PLANS FOR DOCUMENTATION AND TO ASSIST CONSTRUCTION PERSONNEL WITH DRAINAGE CONCERNS

THE OFFICIAL RECORD OF THIS SHEET IS THE ELECTRONIC FILE DIGITALLY SIGNED AND SEALED UNDER RULE 61G15-23.004, F.A.C.

REVISIONS			
DATE	DESCRIPTION	DATE	DESCRIPTION

ENGINEER OF RECORD
LISANDRO ZAPATA, P.E.
LICENSE NUMBER 58822
H. W. LOCHNER
4300 W. CYPRESS STREET, SUITE 500
TAMPA, FLORIDA 33607

STATE OF FLORIDA
DEPARTMENT OF TRANSPORTATION

ROAD NO.	COUNTY	FINANCIAL PROJECT ID
SR 400	POLK	430185-3-52-01

DRAINAGE MAP (03)

SHEET NO.
5

2/29/2024 4:21:19 PM JTAGLIAFERRO
c:\pw_working\lochner-pw-01\dms18776\DRMPRD02.dgn

850 VC
K = 325.69
800 VC
K = 325.84
EL. 142.1 EL. 145.8
PROFILE GRADE LINE
PROFILE GRADE LINE
VPT +30.00 EL. 139.51
VPT +40.00 EL. 138.88
STA. 3145+00.00
EL. 139.05 STA. 3145+22.47
EL. 140.50
END PROFILE
STA. 3145+22.47
EXISTING GROUND
EL. 139.5
-2.409%
-2.389%
+0.201%
+0.067%
(+0.201%
(+0.067%
EL. 138.3
VPI +05.00
EL. 138.66
VPI +40.00
EL. 138.61
VPL +64.68 EL. 139.45
VPL +18.28 EL. 138.87
SHW. EL. 133.4
SHW. EL. 133.5
SHW. EL. 133.7
SHW. EL. 133.6
SHW. EL. 135.3
SHW. EL. 136.0
SHW. EL. 135.1
SHW. EL. 135.7
SHW. EL. 137.2
SHW. EL. 136.7
160
140
120
100
3136
3138
3140
3142
3144
3146
3148
3150
3152
3154
3156
3158
3160
3162

SCALE
1" = 200' HORIZONTAL
1" = 20' VERTICAL

BASIN 1500
20.84 AC
BASIN 1600
59.22 AC
1" = 200'
FDOT SWM POND 15
CONTROL EL. 134.15
SECTION 10
TOWNSHIP 27S
RANGE 24E
SECTION 15
TOWNSHIP 27S
RANGE 24E
LA R/W LINE
SECTION 10
TOWNSHIP 27S
RANGE 24E
SECTION 11
TOWNSHIP 27S
RANGE 24E
FC-14
℄ RAMP D
℄ SURVEY I-4
SR 400/I-4 WB
℄ CONST. I-4
SR 400/I-4 EB
℄ RAMP C
LA R/W LINE
℄ CONST. I-4 EB 2
S-83
S-83A
S-83B
S-84
S-85
S-86
S-86A
S-87
S-88
S-89
S-90
S-91
S-92
S-93
S-94
S-95
S-96
S-97
S-99
177
154
155
153
156
157
158
MATCHLINE STA. 3135+45.00
MATCHLINE STA. 3163+60.00
FDOT EASEMENT
R/W LINE
FDOT SWM POND 16
CONTROL EL. 136.95
SECTION 15
TOWNSHIP 27S
RANGE 24E
SECTION 14
TOWNSHIP 27S
RANGE 24E

END RECONSTRUCTION SR 400 (I-4) WB
BEGIN MILLING, RESURFACING, OVERBUILD AND WIDENING
SR 400 (I-4) WB =
STA. 3145+00.00 ℄ CONST. I-4 =
STA. 1145+21.66 ℄ SURVEY I-4

DO NOT USE THE INFORMATION ON THIS SHEET
FOR CONSTRUCTION PURPOSES.
THIS SHEET IS IN THE PLANS FOR
DOCUMENTATION AND TO
ASSIST CONSTRUCTION PERSONNEL
WITH DRAINAGE CONCERNS

PRELIMINARY
Subject to Changes

REVISIONS			
DATE	DESCRIPTION	DATE	DESCRIPTION

ENGINEER OF RECORD
LISANDRO ZAPATA, P.E.
LICENSE NUMBER 58822
H. W. LOCHNER
4300 W. CYPRESS STREET, SUITE 500
TAMPA, FLORIDA 33607

STATE OF FLORIDA
DEPARTMENT OF TRANSPORTATION

ROAD NO.	COUNTY	FINANCIAL PROJECT ID
SR 400	POLK	430185-3-52-01

DRAINAGE MAP (04)

SHEET NO. 6

THE OFFICIAL RECORD OF THIS SHEET IS THE ELECTRONIC FILE DIGITALLY SIGNED AND SEALED UNDER RULE 61G15-23.004, F.A.C.

2/29/2024 4:21:22 PM JTAGLIAFERRO
c:\pw_working\lochner-pw-01\dms18776\DRMPRD02.dgn

160
140
120
100

EXISTING GROUND

END PROJECT
STA. 3175+39.51

SHW. EL. 134.7
SHW. EL. 134.8
SHW. EL. 134.6
SHW. EL. 134.7
SHW. EL. 137.4

3164 3166 3168 3170 3172 3174

SCALE
1" = 200' HORIZONTAL
1" = 20' VERTICAL

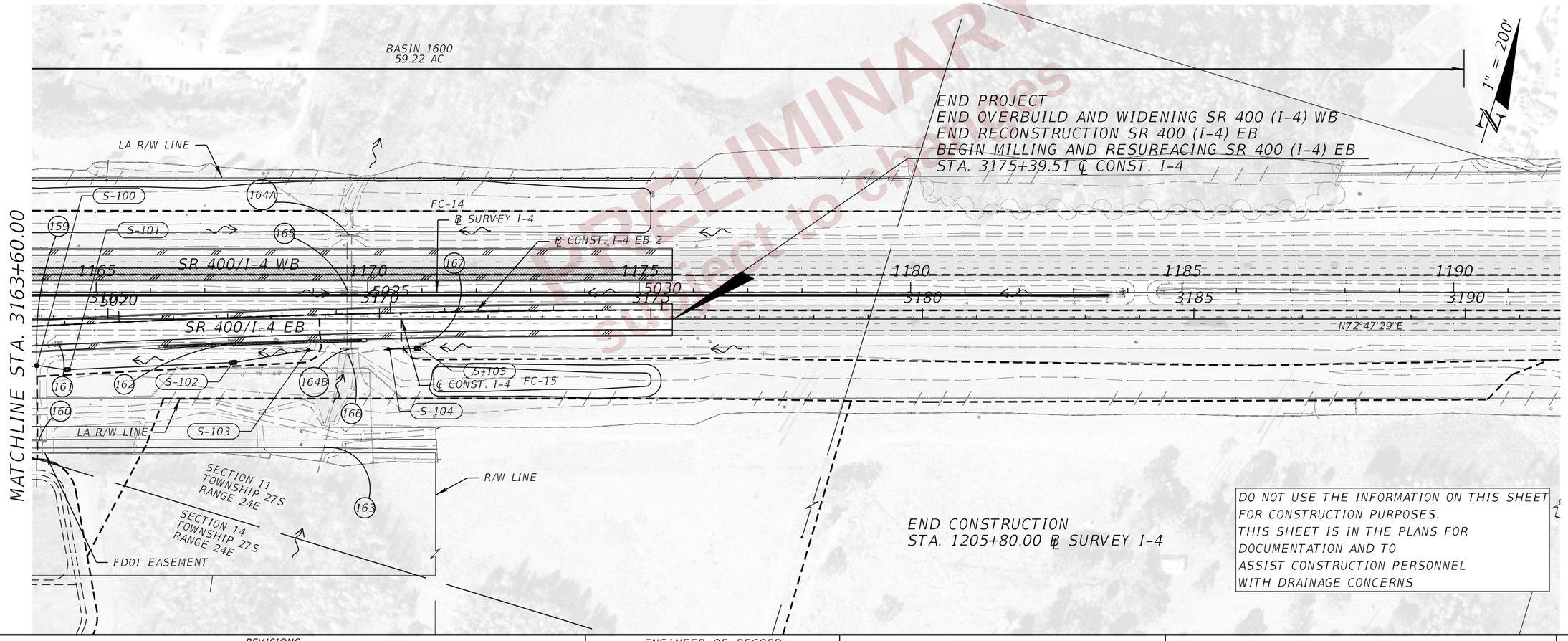

PRELIMINARY
Subject to change

REVISIONS				ENGINEER OF RECORD	STATE OF FLORIDA DEPARTMENT OF TRANSPORTATION			DRAINAGE MAP (05)	SHEET NO.
DATE	DESCRIPTION	DATE	DESCRIPTION	LISANDRO ZAPATA, P.E. LICENSE NUMBER 58822 H. W. LOCHNER 4300 W. CYPRESS STREET, SUITE 500 TAMPA, FLORIDA 33607	ROAD NO.	COUNTY	FINANCIAL PROJECT ID		7
					SR 400	POLK	430185-3-52-01		

THE OFFICIAL RECORD OF THIS SHEET IS THE ELECTRONIC FILE DIGITALLY SIGNED AND SEALED UNDER RULE 61G15-23.004, F.A.C.

2/29/2024 4:21:25 PM JTAGLIAFERRO
c:\pw_working\lochner-pw-01\dms18776\DRMPRD02.dgn

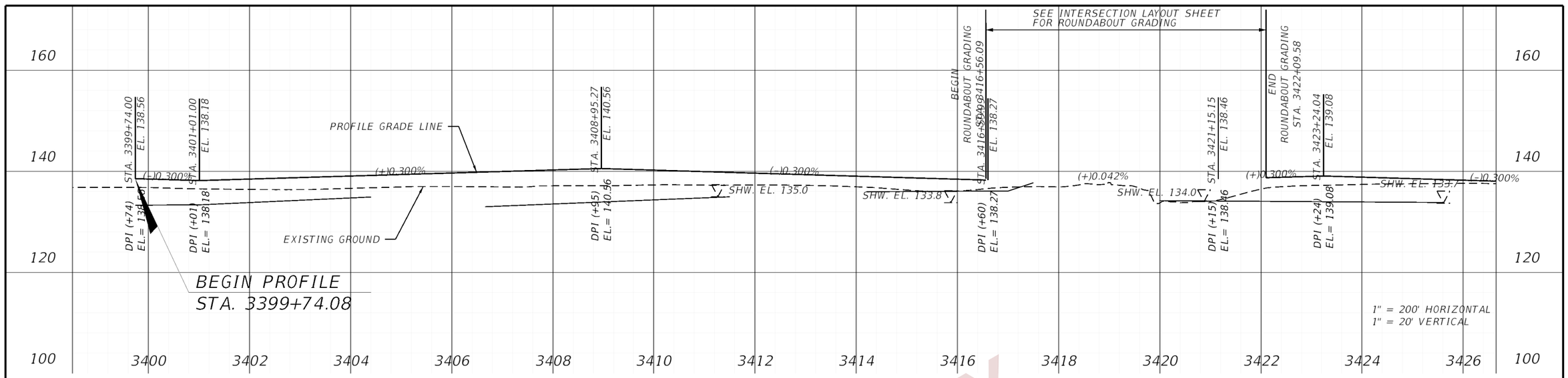

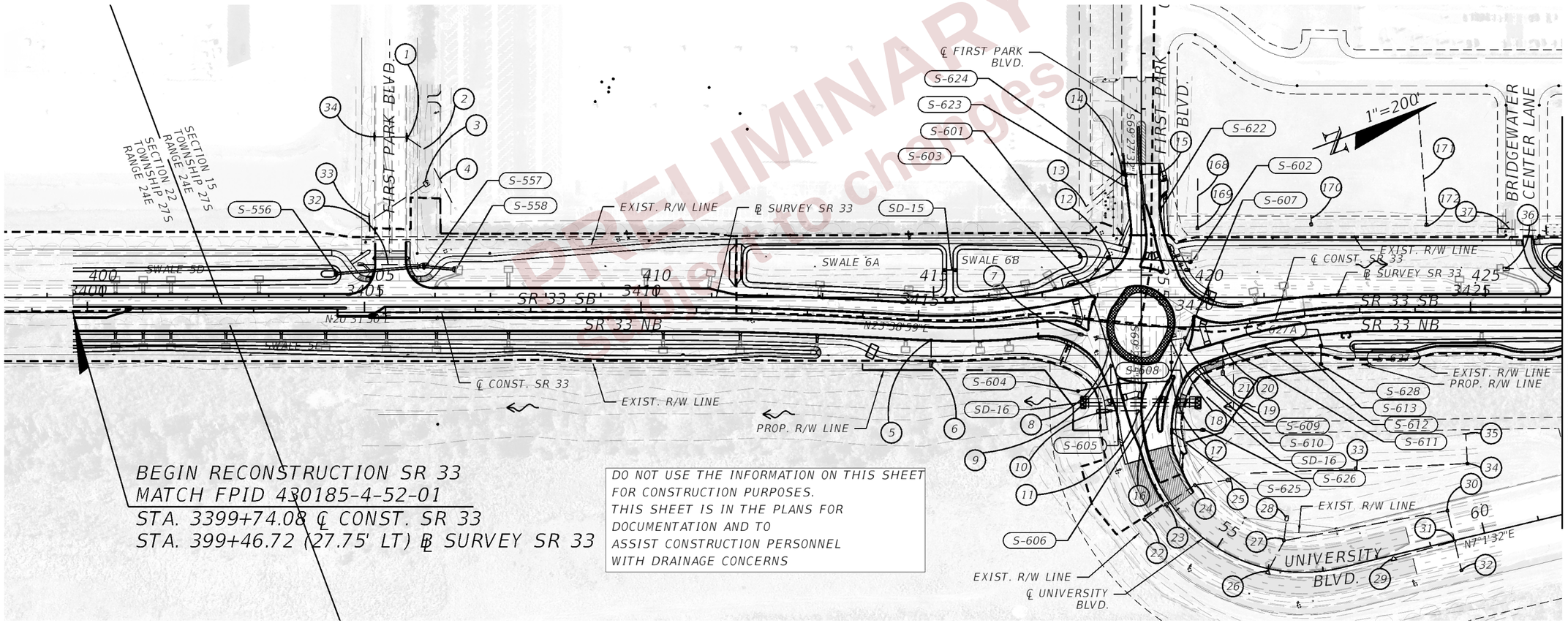

BEGIN RECONSTRUCTION SR 33
MATCH FPID 430185-4-52-01
STA. 3399+74.08 ℄ CONST. SR 33
STA. 399+46.72 (27.75' LT) ℄ SURVEY SR 33

DO NOT USE THE INFORMATION ON THIS SHEET FOR CONSTRUCTION PURPOSES. THIS SHEET IS IN THE PLANS FOR DOCUMENTATION AND TO ASSIST CONSTRUCTION PERSONNEL WITH DRAINAGE CONCERNS

PRELIMINARY
Subject to changes

REVISIONS			
DATE	DESCRIPTION	DATE	DESCRIPTION

ENGINEER OF RECORD
LISANDRO ZAPATA, P.E.
LICENSE NUMBER 58822
H. W. LOCHNER
4300 W. CYPRESS STREET, SUITE 500
TAMPA, FLORIDA 33607

STATE OF FLORIDA
DEPARTMENT OF TRANSPORTATION

ROAD NO.	COUNTY	FINANCIAL PROJECT ID
SR 400	POLK	430185-3-52-01

DRAINAGE MAP (06)

SHEET NO. 8

THE OFFICIAL RECORD OF THIS SHEET IS THE ELECTRONIC FILE DIGITALLY SIGNED AND SEALED UNDER RULE 61G15-23.004, F.A.C.

2/29/2024 4:21:46 PM JTAGLIAFERRO
C:\pw working\lochner-pw-01\dms18776\DRMPRD01.dgn

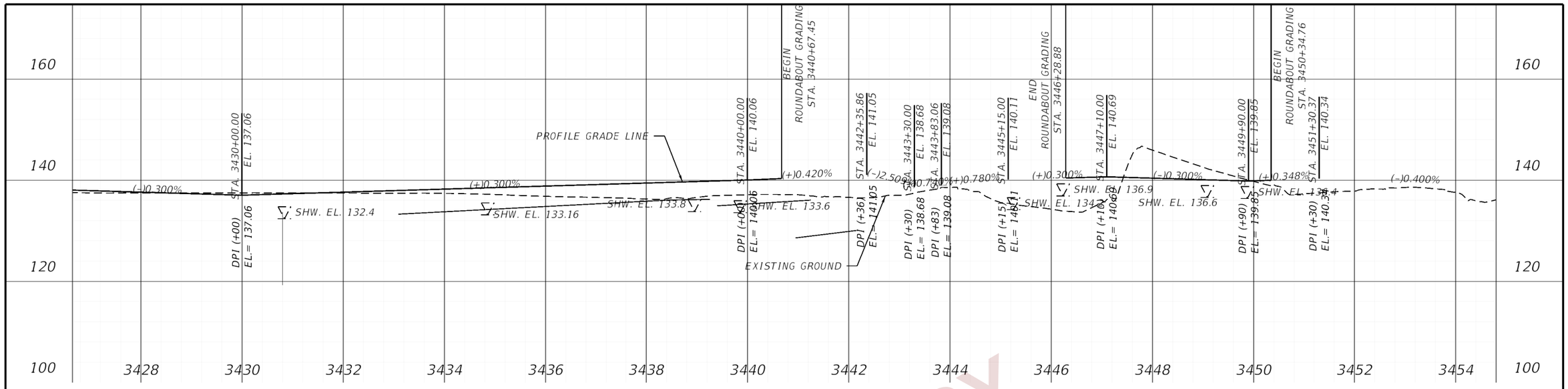

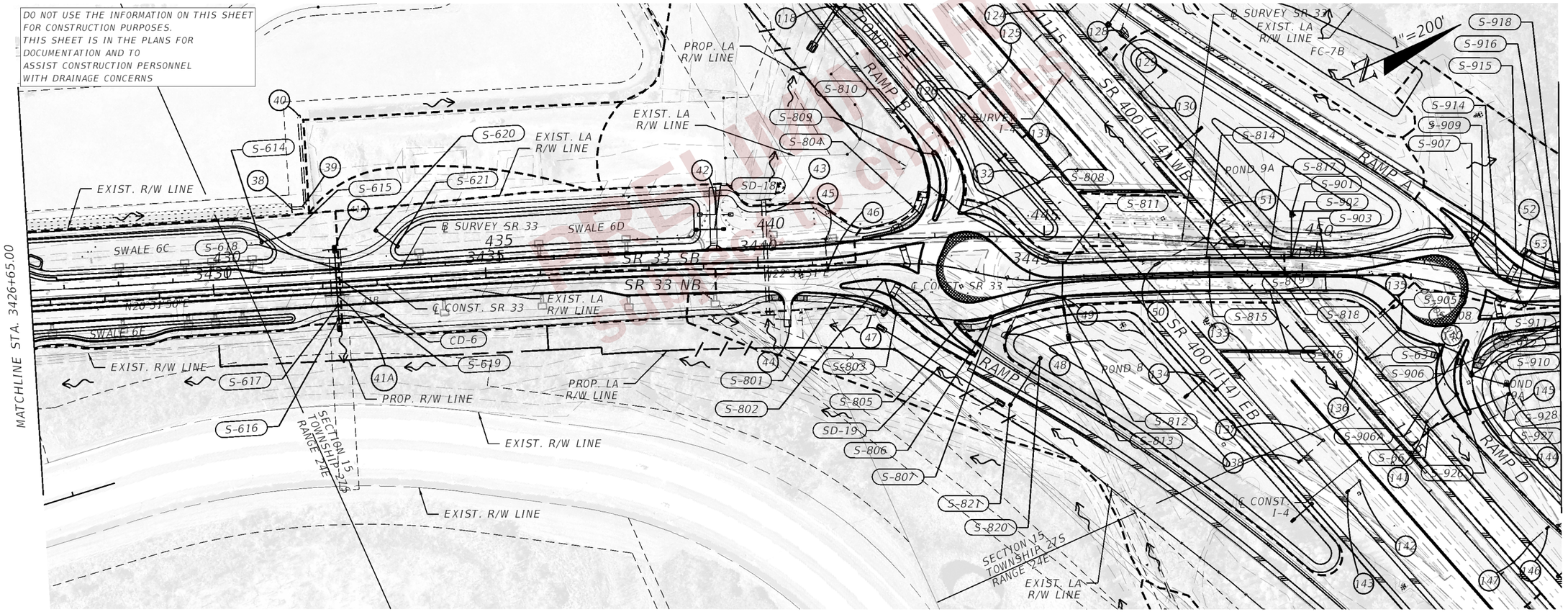

PRELIMINARY
Not for Construction

REVISIONS				ENGINEER OF RECORD	STATE OF FLORIDA DEPARTMENT OF TRANSPORTATION			DRAINAGE MAP (07)	SHEET NO.
DATE	DESCRIPTION	DATE	DESCRIPTION	LISANDRO ZAPATA, P.E. LICENSE NUMBER 58822 H. W. LOCHNER 4300 W. CYPRESS STREET, SUITE 500 TAMPA, FLORIDA 33607	ROAD NO.	COUNTY	FINANCIAL PROJECT ID		9
					SR 400	POLK	430185-3-52-01		

THE OFFICIAL RECORD OF THIS SHEET IS THE ELECTRONIC FILE DIGITALLY SIGNED AND SEALED UNDER RULE 61G15-23.004, F.A.C.

2/29/2024 4:21:50 PM JTAGLIAFERRO
C:\pw_working\lochner-pw-01\dms18776\DRMPRD01.dgn

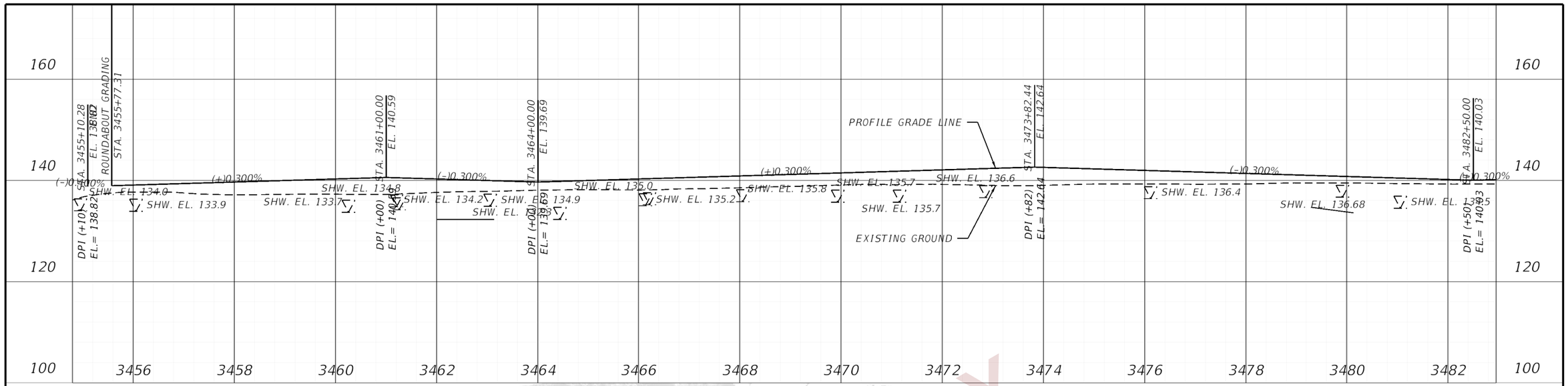

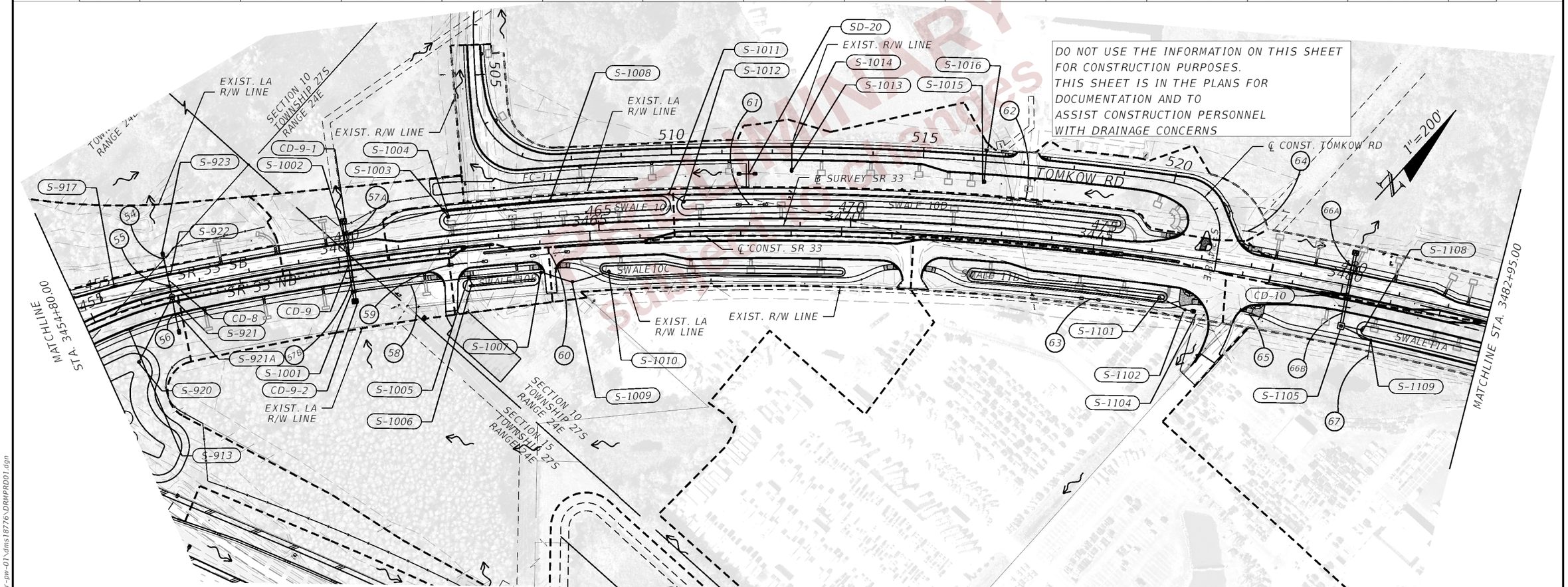

DO NOT USE THE INFORMATION ON THIS SHEET FOR CONSTRUCTION PURPOSES. THIS SHEET IS IN THE PLANS FOR DOCUMENTATION AND TO ASSIST CONSTRUCTION PERSONNEL WITH DRAINAGE CONCERNS

REVISIONS				ENGINEER OF RECORD	STATE OF FLORIDA DEPARTMENT OF TRANSPORTATION			DRAINAGE MAP (08)	SHEET NO.
DATE	DESCRIPTION	DATE	DESCRIPTION	LISANDRO ZAPATA, P.E. LICENSE NUMBER 58822 H. W. LOCHNER 4300 W. CYPRESS STREET, SUITE 500 TAMPA, FLORIDA 33607	ROAD NO.	COUNTY	FINANCIAL PROJECT ID		10
					SR 400	POLK	430185-3-52-01		

2/29/2024 4:21:55 PM JTAGLIAFERRO
c:\pw_working\lochner-pw-01\dms\18776\DRMPRD01.dgn

THE OFFICIAL RECORD OF THIS SHEET IS THE ELECTRONIC FILE DIGITALLY SIGNED AND SEALED UNDER RULE 61G15-23.004, F.A.C.

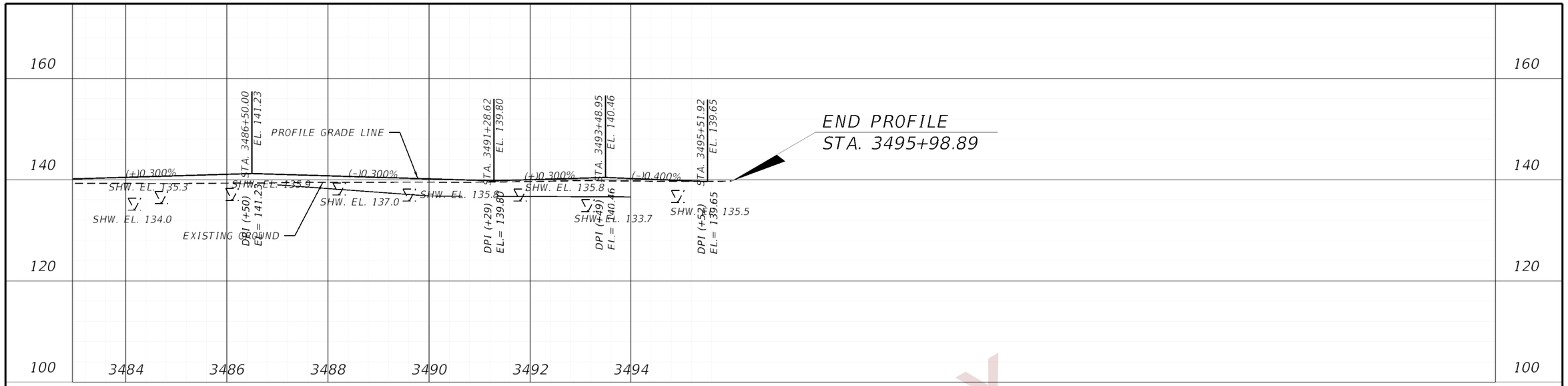

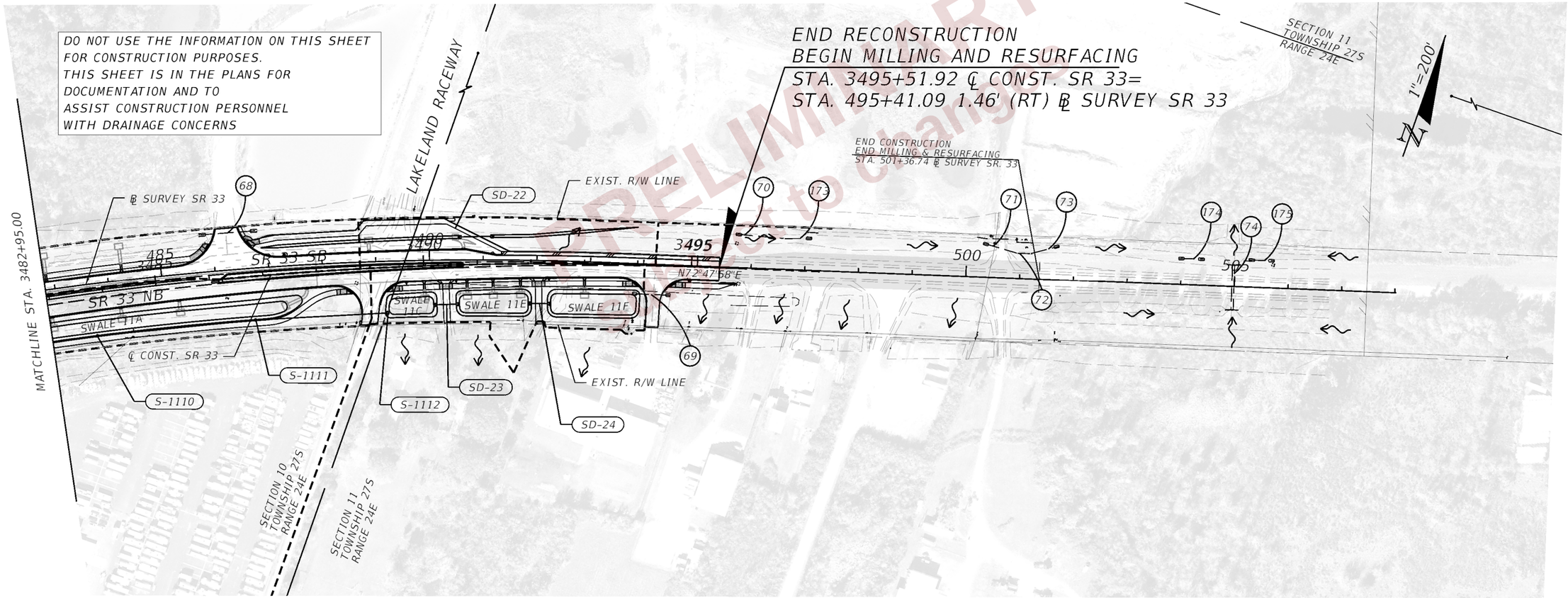

REVISIONS				ENGINEER OF RECORD	STATE OF FLORIDA DEPARTMENT OF TRANSPORTATION			DRAINAGE MAP (09)	SHEET NO.
DATE	DESCRIPTION	DATE	DESCRIPTION	LISANDRO ZAPATA, P.E. LICENSE NUMBER 58822 H. W. LOCHNER 4300 W. CYPRESS STREET, SUITE 500 TAMPA, FLORIDA 33607	ROAD NO.	COUNTY	FINANCIAL PROJECT ID		11
					SR 400	POLK	430185-3-52-01		

THE OFFICIAL RECORD OF THIS SHEET IS THE ELECTRONIC FILE DIGITALLY SIGNED AND SEALED UNDER RULE 61G15-23.004, F.A.C.

2/29/2024 4:22:00 PM JTAGLIAFERRO
c:\pw_working\lochner-pw-01\dms18776\DRMPRD01.dgn

SUMMARY OF FLOOD DATA
FINANCIAL PROJECT ID 430185-3-52-01

STRUCTURE NO.	STATION	DESIGN FLOOD		BASE FLOOD		OVERTOPPING FLOOD				GREATEST FLOOD			
		2% PROB	50 YR FREQ	1% PROB	100 YR FREQ								
		DISCHARGE	STAGE	DISCHARGE	STAGE	DISCHARGE	STAGE	PROB %	FREQ YR	DISCHARGE	STAGE	PROB %	FREQ YR
CD-6	3432+25	3.75 cfs	134.01	4.52 cfs	134.02	--	--	--	--	6.31 cfs	134.04	0.2	500
CD-7	3440+15	89.45 cfs	135.45	89.45 cfs	135.45	--	--	--	--	89.45 cfs	135.45	0.2	500
CD-8	3456+61	3.94 cfs	133.24	4.40 cfs	133.29	--	--	--	--	5.47 cfs	133.38	0.2	500
CD-9	3460+20	27.96 cfs	133.64	28.39 cfs	133.65	--	--	--	--	29.39 cfs	133.70	0.2	500
CD-10	3480+13	15.10 cfs	134.71	16.80 cfs	134.78	--	--	--	--	20.75 cfs	134.94	0.2	500
S-29 (CD-14)	3104+45	176.80 cfs	131.40	176.80 cfs	131.40	--	--	--	--	176.80 cfs	131.40	0.2	500
CD-15	3134+45	11.16 cfs	133.85	12.51 cfs	133.94	--	--	--	--	15.64 cfs	134.15	0.2	500
CD-16	3169+45	51.80 cfs	136.01	58.09 cfs	136.04	--	--	--	--	72.70 cfs	136.10	0.2	500

NOTE: THE HYDRAULIC DATA IS SHOWN FOR INFORMATIONAL PURPOSES ONLY, TO INDICATE THE FLOOD DISCHARGES AND WATER SURFACE ELEVATIONS WHICH MAY BE ANTICIPATED IN ANY GIVEN YEAR. THIS DATA WAS GENERATED USING HIGHLY VARIABLE FACTORS DETERMINED BY A STUDY OF THE WATERSHED. MANY JUDGEMENTS AND ASSUMPTIONS ARE REQUIRED TO ESTABLISH THESE FACTORS. THE RESULTANT HYDRAULIC DATA IS SENSITIVE TO CHANGES, PARTICULARLY OF ANTECEDENT CONDITIONS, URBANIZATION, CHANNELIZATION, AND LAND USE. USERS OF THIS DATA ARE CAUTIONED AGAINST THE ASSUMPTION OF PRECISION WHICH CAN NOT BE ATTAINED. DISCHARGES ARE IN CUBIC FEET PER SECOND (CFS) AND STAGES ARE IN FEET, NAVD 88.

DEFINITIONS:

DESIGN FLOOD: THE FLOOD SELECTED BY F.D.O.T. TO BE UTILIZED TO ASSURE A STANDARD LEVEL OF HYDRAULIC PERFORMANCE.

BASE FLOOD: THE FLOOD HAVING A 1% CHANCE OF BEING EXCEEDED IN ANY YEAR. (100 YR. FREQUENCY)

OVERTOPPING FLOOD: THE FLOOD WHERE FLOW OCCURS (A) OVER THE HIGHWAY (B) OVER A WATERSHED DIVIDE OR (C) THRU EMERGENCY RELIEF STRUCTURES.

GREATEST FLOOD: THE MOST SEVERE FLOOD WHICH CAN BE PREDICTED WHERE OVERTOPPING IS NOT PRACTICABLE, NORMALLY ONE WITH A 0.2% CHANCE OF BEING EXCEEDED IN ANY YEAR. (500 YR. FREQUENCY)

PREPARED BY: LISANDRO A. ZAPATA

DATE: 08/01/2022

PRELIMINARY Subject to changes

THE OFFICIAL RECORD OF THIS SHEET IS THE ELECTRONIC FILE DIGITALLY SIGNED AND SEALED UNDER RULE 61G15-23.004, F.A.C.

REVISIONS				ENGINEER OF RECORD	STATE OF FLORIDA DEPARTMENT OF TRANSPORTATION			DRAINAGE MAP (10) FLOOD DATA	SHEET NO.
DATE	DESCRIPTION	DATE	DESCRIPTION	LISANDRO ZAPATA, P.E. LICENSE NUMBER 58822 H. W. LOCHNER 4300 W. CYPRESS STREET, SUITE 500 TAMPA, FLORIDA 33607	ROAD NO.	COUNTY	FINANCIAL PROJECT ID		12
					SR 400	POLK	430185-3-52-01		

1 CURB INLET
INLET EL. = 136.89
15" RCP FL 133.14 S
18" RCP FL 131.27 E

2 PIPE END
18" RCP FL 130.98 W

3 CONTROL STRUCTURE
TOP EL. = 137.14
WEIR EL. = 132.16
72" RCP FL 128.86 S

4 SIDE DRAIN
48" RCP FL 128.76 E
48" RCP FL 129.58 W

5 CONTROL STRUCTURE
GRATE EL. = 134.50
24" RCP FL 130.93 E

6 MES
24" RCP FL 130.78 W

7 MES
18" RCP FL 131.79 E

8 GRATE INLET
GRATE EL. = 135.99
18" RCP FL 132.26 W
18" RCP FL 132.34 E

9 GRATE INLET
GRATE EL. = 136.32
18" RCP FL 132.62 W
18" RCP FL 132.65 E

10 GRATE INLET
GRATE EL. = 138.90
18" RCP FL 134.58 W
18" RCP FL 134.63 N

11 CURB INLET
TOP EL. = 140.46
18" RCP FL 134.59 S

12 SIDE DRAIN
18" RCP FL 134.45 N
18" RCP FL 134.19 S

13 PIPE END
24" RCP FL 132.40 W

14 CURB INLET
INLET EL. = 137.05
24" RCP FL 132.28 E
18" RCP FL 132.49 N

15 CURB INLET
INLET EL. = 137.04
18" RCP FL 132.59 S

16 CROSS DRAIN
(3)-48" RCP FL 125.53 N
(3)-48" RCP FL 125.75 S

17 GRATE INLET
GRATE EL. = 135.72
18" RCP FL 132.00 W

18 GRATE INLET
GRATE EL. = 135.50
18" RCP FL 132.27 E
18" RCP FL 132.19 N

19 MES
18" RCP FL 132.21 S

20 CONTROL STRUCTURE
GRATE EL. = 134.66
24" RCP FL 130.83 E

21 MES
24" RCP FL 130.71 W

22 GRATE INLET
GRATE EL. = 144.49
18" RCP FL 139.23 N

23 CURB INLET
TOP EL. = 144.96
18" RCP FL 138.63 S
18" RCP FL 137.82 N

24 GRATE INLET
GRATE EL. = 140.40
18" RCP FL 136.83 S
18" RCP FL 136.82 N

25 MES
18" RCP FL 136.75 S

26 CURB INLET
TOP EL. = 148.64
18" RCP FL 141.96 N

27 GRATE INLET
GRATE EL. = 144.33
18" RCP FL 140.48 E
24" RCP FL 140.41 W
18" RCP FL 140.95 N

28 MES
24" RCP FL 136.47 N

29 CURB INLET
INLET EL. = 147.68
18" RCP FL 143.60 N

30 GRATE INLET
GRATE EL. = 146.03
18" RCP FL 142.62 S
18" RCP FL 142.68 E

31 MANHOLE
TOP EL. = 148.91
18" RCP FL 142.72 W
18" RCP FL 143.32 S
18" RCP FL 142.77 E

32 GRATE INLET
GRATE EL. = 145.97
18" RCP FL 142.91 W

33 MANHOLE
TOP EL. = 137.10
6" PVC FL 133.04 S
6" PVC FL 133.05 N

34 CONTROL STRUCTURE
GRATE EL. = 138.94
6" PVC FL 132.45 S
24" RCP FL 130.96 W

35 ENDWALL
24" RCP FL 129.03 E

36 SIDE DRAIN
19"x30" ERCP FL 133.84 N
19"x30" ERCP FL 133.72 S

37 SIDE DRAIN
19"x30" ERCP FL 134.38 N
19"x30" ERCP FL 134.06 S

38 ENDWALL
(2)-30" CPP FL 133.86 N

39 MANHOLE
TOP EL. = 138.96
(2)-30" CPP FL 133.98 S
(2)-30" CPP FL 133.90 W

40 MANHOLE
TOP EL. = 138.21
(2)-30" CPP FL 133.32 E
UNKNOWN FL N

41A BRIDGE CULVERT
(2)-10'x3' CBC FL 130.68 E

41B BRIDGE CULVERT
(2)-10'x3' CBC FL 131.90 W

42 SIDE DRAIN
24" RCP FL 134.29 N
24" RCP FL 134.46 S

43 ENDWALL
(2)-48" CMP FL 124.92 E
(2)-48" CMP FL 125.14 W

44 SIDE DRAIN
48" RCP FL 127.54 N
48" RCP FL 128.60 S

45 CURB INLET
GRATE EL. = 138.23
15" RCP FL 134.71 E

46 PIPE END
15" RCP FL 134.49 W

47 SIDE DRAIN
36" CMP FL 129.95 N
36" CMP FL 130.59 S

48 U-ENDWALL WITH GRATE (?)
24" RCP FL 133.01 W

49 GRATE INLET
GRATE EL. = 135.71
24" RCP FL 133.43 E

50 U-ENDWALL
15" RCP FL 134.04 N

51 CURB INLET
INLET EL. = 138.09
15" RCP FL UNKNOWN S

52 CURB INLET
TOP EL. = 138.46
15" RCP FL 133.70 E

53 ENDWALL
18" RCP FL 133.54 W

54 PIPE END
24" RCP FL 131.94 E

55 CURB INLET
GRATE EL. = 137.89
24" RCP FL 132.12 W
24" RCP FL 132.12 E

56 PIPE END
24" RCP FL 132.06 W

57A BOX CULVERT
4'x2' CBC FL 131.99 E

57B BOX CULVERT
4'x2' CBC FL 132.19 W

58 CONTROL STRUCTURE
NO DATA

59 SIDE DRAIN
18" RCP FL 134.18 N
18" RCP FL 135.03 S

60 SIDE DRAIN
18" RCP FL 135.26 N
18" RCP FL 135.66 S

61 SIDE DRAIN
18" RCP FL 136.36 N
18" RCP FL 136.43 S

62 SIDE DRAIN
18" RCP FL 136.33 N
18" RCP FL 136.12 S

63 SIDE DRAIN
18" RCP FL 135.11 N
18" RCP FL 135.13 S

64 SIDE DRAIN
18" RCP FL 136.37 N
18" RCP FL 135.59 S

65 SIDE DRAIN
(2)-18" RCP FL 134.21 N
(2)-18" RCP FL 134.64 S

66A BOX CULVERT
4'x2' CBC FL 134.68 E

66B BOX CULVERT
4'x2' CBC FL 134.38 W

67 SIDE DRAIN
18" CMP FL 134.71 E
18" CMP FL 134.42 W

68 SIDE DRAIN
24" RCP FL 135.29 N
24" RCP FL 135.40 S

69 SIDE DRAIN
14"X23" ERCP FL 136.21 N
14"X23" ERCP FL 135.66 S

70 PIPE
18" RCP FL 135.56 W
18" RCP FL 135.08 E

71 PIPE
18" RCP FL 135.62 W
18" RCP FL 135.60 E

72 MANHOLE
RIM EL. = 138.30
18" RCP FL 135.52 W
18" RCPP FL 135.52 E

73 MAN HOLE
RIM EL. = 138.30
18" RCP FL 135.57 W
18" RCP FL 135.52 E

74 BOX CULVERT
4'x2' CBC FL 132.92 E
4'x2' CBC FL 132.87 W

75 GRATE INLET
GRATE EL. = 138.00
30" RCP FL 132.58 W
30" RCP FL 132.66 E

76 GRATE INLET
GRATE EL. = 140.40
30" RCP FL 132.79 W
24" RCP FL 132.82 E

77 GRATE INLET
GRATE EL. = 137.88
24" RCP FL 133.30 W
24" RCP FL 133.21 E

78 GRATE INLET
GRATE EL. = 137.85
24" RCP FL 133.39 W

79 GRATE INLET
GRATE EL. = 135.89

80 BOX CULVERT
8'x5' CBC FL 129.90 N
8'x5' CBC FL 130.13 S

81 GRATE INLET
GRATE EL. = 135.75

82 GRATE INLET
GRATE EL. = 137.88
18" RCP FL 133.77 E

83 GRATE INLET
GRATE EL. = 137.94
18" RCP FL 133.70 W
24" RCP FL 133.62 E

84 GRATE INLET
GRATE EL. = 138.03
24" RCP FL 133.22 W
24" RCP FL 133.09 E

85 PIPE
36" CMP FL 129.17 N
36" CMP FL UNKNOWN S

86 PIPE
30" CMP FL 133.79 N
30" CMP FL 132.38 S

87 GRATE INLET
GRATE EL. = 137.99
24" RCP FL 132.92 W
24" RCP FL 132.87 E

88 GRATE INLET
GRATE EL. = 138.06
24" RCP FL 132.59 W
24" RCP FL 132.66 E

89 GRATE INLET
GRATE EL. = 137.81
24" RCP FL 132.28 W
24" RCP FL 132.35 E

90 PIPE
30" CMP FL 131.59 N
30" CMP FL 131.04 S

91 GRATE INLET
GRATE EL. = 137.81
24" RCP FL 131.96 W
18" RCP FL 133.17 E
UNKNOWN FL 128.32 S

PRELIMINARY
Subject to changes

THE OFFICIAL RECORD OF THIS SHEET IS THE ELECTRONIC FILE DIGITALLY SIGNED AND SEALED UNDER RULE 61G15-23.004, F.A.C.

REVISIONS			
DATE	DESCRIPTION	DATE	DESCRIPTION

ENGINEER OF RECORD
LISANDRO ZAPATA, P.E.
LICENSE NUMBER 58822
H. W. LOCHNER
4300 W. CYPRESS STREET, SUITE 500
TAMPA, FLORIDA 33607

STATE OF FLORIDA
DEPARTMENT OF TRANSPORTATION

ROAD NO.	COUNTY	FINANCIAL PROJECT ID
SR 400	POLK	430185-3-52-01

DRAINAGE MAP (11)
EXISTING STRUCTURES

SHEET NO. 13

JTAGLIAFERRO 2/29/2024 4:22:33 PM c:\pw_working\lochner-pw-01\dms18776\drmprd11.dgn

92 SIDE DRAIN
(2)-24" CMP FL 134.31 E
(2)-24" CMP FL 134.54 W

93 GRATE INLET
GRATE EL. = 137.66
18" RCP FL 133.44 W
18" RCP FL 133.49 E

94 GRATE INLET
GRATE EL. = 137.94
18" RCP FL 133.95 W

95 GRATE INLET
GRATE EL. = 137.95
18" RCP FL 133.69 E

96 GRATE INLET
GRATE EL. = 137.90
18" RCP FL 133.33 W
24" RCP FL 133.25 E

97 PIPE
12" DIP FL 131.06 N
12" DIP FL UNKNOWN S

98 PIPE
12" DIP FL 130.90 N
12" DIP FL UNKNOWN S

99 ENDWALL
15" RCP FL 132.49 S

100 GRATE INLET
GRATE EL. = 135.26
15" RCP FL 131.71 N

101 PIPE
30" CMP FL 131.35 N
30" CMP FL 131.34 S

102 GRATE INLET
GRATE EL. = 137.93
24" RCP FL 132.92 W
24" RCP FL 132.91 E

103 GRATE INLET
GRATE EL. = 137.83
24" RCP FL 132.74 W
24" RCP FL 132.81 E

104 GRATE INLET
GRATE EL. = 137.85
24" RCP FL 132.72 W
24" RCP FL 132.68 E

105 GRATE INLET
GRATE EL. = 137.98
24" RCP FL 132.53 W
24" RCP FL 132.41 E

106 GRATE INLET
GRATE EL. = 137.99
24" RCP FL 128.68 W
24" RCP FL 128.74 E

107 GRATE INLET
GRATE EL. = 137.88
24" RCP FL 132.70 W
24" RCP FL 132.82 E

108 GRATE INLET
GRATE EL. = 137.93
24" RCP FL 132.90 W
24" RCP FL 132.86 E

109 GRATE INLET
GRATE EL. = 137.64
24" RCP FL 133.32 W
18" RCP FL 133.26 E

110 GRATE INLET
GRATE EL. = 137.48
18" RCP FL 133.70 W

111A BOX CULVERT
(2)-4'x4' CBC FL 124.95 S

111B BOX CULVERT
(2)-4'x4' CBC FL 125.28 N

112 GRATE INLET
GRATE EL. = 135.88

113 GRATE INLET
GRATE EL. = 136.98
18" RCP FL 133.95 N

114 PIPE END
18" RCP FL 129.36 S

115 GRATE INLET
GRATE EL. = 147.17
15" CMP FL 143.63 S

116 U-END WALL
15" CMP FL 138.59 N

117 GRATE INLET
GRATE EL. = 136.87
24" RCP FL 132.24 S

118 END WALL
24" RCP FL 132.75 N

119 U-END WALL
18" RCP FL 136.19 S

120 GRATE INLET
GRATE EL. = 148.25
18" RCP FL 144.15 N

121 PIPE END
24" RCP FL 129.51 S

122 GRATE INLET
GRATE EL. = 134.29
24" RCP FL 130.77 N

123 U-END WALL
15" CMP FL 139.54 S

124 GRATE INLET
GRATE EL. = 151.91
15" CMP FL 148.06 N

125 GRATE INLET
GRATE EL. = 153.80
15" CMP FL 149.78 S

126 U-END WALL
15" CMP FL 137.29 N

127 MES
24" RCP FL 134.27 S

128 MES
24" RCP FL 135.69 N

129 U-END WALL
15" RCP FL 135.52 S

130 GRATE INLET
GRATE EL. = 154.99
15" RCP FL 151.17 N

131 GRATE INLET
GRATE EL. = 156.00
15" CPP FL 151.74 N

132 U-END WALL
15" CPP FL 138.14 N

133 GRATE INLET
GRATE EL. = 154.49
15" CPP FL 150.77 S

134 U-END WALL
15" CPP FL 135.30 N

135 U-END WALL
15" CPP FL 135.94 S

136 GRATE INLET
GRATE EL. = 154.85
15" CPP FL 150.84 N

137 GRATE INLET
GRATE EL. = 151.49
15" CPP FL 144.58 S

138 U-END WALL
15" CPP FL 139.42 N

139 PIPE
48" CMP FL 130.00 E
48" CMP FL 130.08 W

140 U-END WALL
15" CPP FL 135.26 S

141 GRATE INLET
GRATE EL. = 151.68
15" CPP FL 150.26 N

142 GRATE INLET
GRATE EL. = 148.96
15" CPP FL 145.12 S

143 U-END WALL
15" CPP FL 141.27 N

144 GRATE INLET
GRATE EL. = 135.87
24" RCP FL 132.33 N

145 END WALL
24" RCP FL 131.86 S

146 U-END WALL
15" CPP FL 136.38 S

147 GRATE INLET
GRATE EL. = 144.12
15" CPP FL 140.86 N

148 SIDE DRAIN
18" RCP FL 134.91 N
18" RCP FL 134.82 S

149 PIPE
20" DIP FL 131.87 N
20" DIP FL 131.99 S

150 MES
18" RCP FL 131.46 S

151 GRATE INLET
GRATE EL. = 135.98
18" RCP FL 134.01 N
24" STEEL FL 134.23 S

152 MES
24" STEEL FL 134.15 N

153 SIDE DRAIN
(2)-24" CPP FL 133.70 E
(2)-24" CPP FL 133.65 W

154 GRATE INLET
GRATE EL. = 134.56
UNKNOWN

155 GRATE INLET
GRATE EL. = 134.25
UNKNOWN

156 PIPE
18" DIP FL 132.23 N
18" DIP FL 132.65 S

157 PIPE
14"X23" RCP FL 137.52 N
14"X23" RCP FL 137.20 S

158 GRATE INLET
GRATE EL. = 135.28
24" RCP FL 130.33 E

159 MANHOLE
TOP EL. = 138.35
UNKNOWN

160 SIDE DRAIN
18" RCP FL 136.88 E
18" RCP FL 136.76 W

161 GRATE INLET
GRATE EL. = 137.41
36" RCP FL 128.11 W
36" RCP FL 128.09 E

162 GRATE INLET
GRATE EL. = 137.11
36" RCP FL 128.13 W
36" RCP FL 128.07 E

163 PIPE
24" RCP FL 132.40 N
24" RCP FL 132.42 S

164A BOX CULVERT
8'x3' CBC FL 133.42 S

164B BOX CULVERT
8'x3' CBC FL 132.90 N

165 GRATE INLET
GRATE EL. = 136.71

166 MANHOLE
TOP EL. = 133.08
36" RCP FL 128.55 W
36" RCP FL 128.42 E

167 GRATE INLET
GRATE EL. = 136.39
36" RCP FL 128.16 W

168 PIPE
18" CPP FL 134.43 W
18" CPP FL 134.23 E

169 GRATE INLET
GRATE EL. = 137.75
18" CPP FL 134.23 W
18" CPP FL 134.07 E

170 GRATE INLET
GRATE EL. = 137.59
18" CPP FL 134.28 W
18" CPP FL 134.02 E

171 PIPE
15" CPP FL 134.67 W
15" CPP FL 134.21 E

172 GRATE INLET
GRATE EL. = 137.16
15" CPP FL 134.22 E
15" CPP FL 134.15 W

173 GRATE INLET
GRATE EL. = 138.60
18" RCP FL 136.21 E
18" RCP FL 135.96 W

174 PIPE
15" RCP FL 135.10 W
15" RCP FL 134.94 E

175 PIPE
18" RCP FL 133.89 W
18" RCP FL 133.85 E

176 GRATE INLET
GRATE EL. = 136.75
24" RCP FL 131.39 S

177 GRATE INLET
GRATE EL. = XXX
XX RCP FL XX X

PRELIMINARY
subject to changes

THE OFFICIAL RECORD OF THIS SHEET IS THE ELECTRONIC FILE DIGITALLY SIGNED AND SEALED UNDER RULE 61G15-23.004, F.A.C.

REVISIONS			
DATE	DESCRIPTION	DATE	DESCRIPTION

ENGINEER OF RECORD
LISANDRO ZAPATA, P.E.
LICENSE NUMBER 58822
H. W. LOCHNER
4300 W. CYPRESS STREET, SUITE 500
TAMPA, FLORIDA 33607

STATE OF FLORIDA
DEPARTMENT OF TRANSPORTATION

ROAD NO.	COUNTY	FINANCIAL PROJECT ID
SR 400	POLK	430185-3-52-01

DRAINAGE MAP (12)
EXISTING STRUCTURES

SHEET NO. 14

DATE OF AERIAL: 2020

1" = 200'

BEGIN BRIDGE I-4 WB
STA. 3118+75.82 ℄ CONST. I-4

END BRIDGE I-4 WB
STA. 3121+50.82 ℄ CONST. I-4

BEGIN BRIDGE I-4 EB
STA. 3118+32.38 ℄ CONST. I-4

END BRIDGE I-4 EB
STA. 3120+07.39 ℄ CONST. I-4

SR 400/I-4 WB

SR 400/I-4 EB

℄ CONST. I-4

℄ CONST. SR 33 NB

℄ SURVEY I-4

℄ SURVEY SR 33

℄ RAMP A

℄ RAMP B

℄ RAMP C

℄ RAMP D

R/W LINE

LA R/W LINE

PROP. LA R/W

FC-7A

FC-7B

POND 14

FDOT SWM POND 14
CONTROL EL. 132.45

POND 7

POND 8

POND 9A

POND 9B

POND 9C

POND 9B

POND 9A

POND 9C

POND 9B

POND 9A

POND 9C

POND 9B

POND 9A

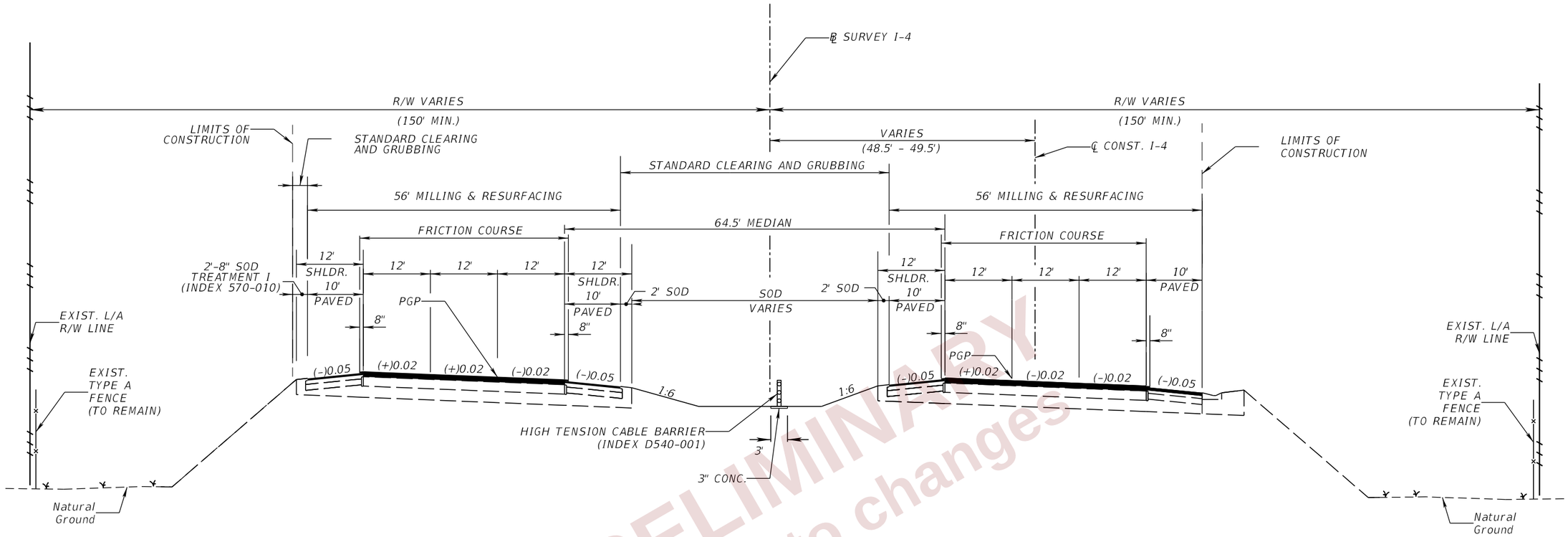

TYPICAL SECTION NO. 1
SR 400 / I-4 MAINLINE
STA. 1055+00.00TO STA. 1073+09.57
STA. 1175+61.20 TO STA. 1197+00.00
℄ SURVEY I-4

FUNCTIONAL MILLING

MILL EXISTING ASPHALT PAVEMENT FOR DEPTH (2.25")

FUNCTIONAL RESURFACING

TYPE SP STRUCTURAL COURSE (TRAFFIC E) (1.5") (PG 76-22)
AND FRICTION COURSE FC-5 (3/4") (PG 76-22) (8.0" ONTO SHLDR.)

I-4 MAINLINE SHOULDER PAVEMENT MILLING

MILL EXISTING ASPHALT PAVEMENT FOR DEPTH (1.5")

I-4 MAINLINE SHOULDER PAVEMENT RESURFACING

TYPE SP STRUCTURAL COURSE (TRAFFIC C) (1.5")
GROUND-IN RUMBLE STRIPS (INDEX 546-010)

TRAFFIC DATA

CURRENT YEAR = 2019 AADT = 90,000
ESTIMATED OPENING YEAR = 2027 AADT = 104,700
ESTIMATED DESIGN YEAR = 2047 AADT = 141,400
K = 9.0% D = 55.7% T = 13.3% (24 HOUR)
DESIGN HOUR T = 6.6%
DESIGN SPEED = 70 MPH
CONTEXT CLASSIFICATION = N/A (L/A FACILITY)

PRELIMINARY subject to changes

REVISIONS			
DATE	DESCRIPTION	DATE	DESCRIPTION

ENGINEER OF RECORD
DEBANANDA PANIGRAHI, P.E.
LICENSE NUMBER 68318
H. W. LOCHNER
4300 W. CYPRESS STREET, SUITE 500
TAMPA, FLORIDA 33607

STATE OF FLORIDA
DEPARTMENT OF TRANSPORTATION

ROAD NO.	COUNTY	FINANCIAL PROJECT ID
SR 400	POLK	430185-3-52-01

TYPICAL SECTIONS (1)

SHEET NO. 16

THE OFFICIAL RECORD OF THIS SHEET IS THE ELECTRONIC FILE DIGITALLY SIGNED AND SEALED UNDER RULE 61G15-23.004, F.A.C.

JBLOUNT 2/26/2024 4:50:42 PM c:\pw_working\lochner-pw-01\dms18802\typsrd02.dgn

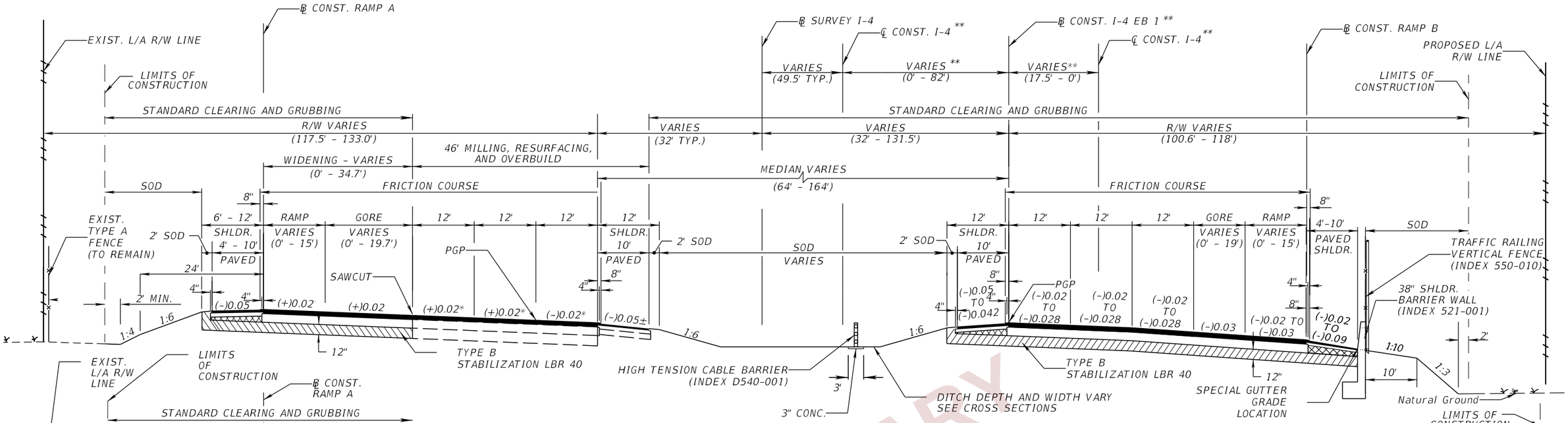

DETAIL 1
STA. 3091+00.00 TO STA. 3101+00.00

DETAIL 2
STA. 3073+00.00 TO STA. 3088+54.82

TYPICAL SECTION NO. 2
SR 400 / I-4 MAINLINE
WESTBOUND
STA. 3073+00.00 TO STA. 3101+00.00
EASTBOUND
STA. 3073+00.00 TO STA. 3100+86.15

WIDENING (WB ONLY)
OPTIONAL BASE GROUP 12 WITH
TYPE SP STRUCTURAL COURSE (TRAFFIC E) (2.0")
TYPE SP STRUCTURAL COURSE (TRAFFIC E) (3.0") (PG 76-22)
AND FRICTION COURSE FC-5 (3/4") (PG 76-22) (8.0" ONTO SHLDR.)

MILLING (WB ONLY)
MILL EXISTING ASPHALT PAVEMENT FOR DEPTH (3.75")

RESURFACING (WB ONLY)
OVERBUILD - TYPE SP STRUCTURAL COURSE (TRAFFIC E) (1.5" TO 2.36")
TYPE SP STRUCTURAL COURSE (TRAFFIC E) (3.0") (PG 76-22)
AND FRICTION COURSE FC-5 (3/4") (PG 76-22) (8.0" ONTO SHLDR.)

I-4 MAINLINE SHOULDER PAVEMENT MILLING (WB ONLY)
MILL EXISTING ASPHALT PAVEMENT FOR DEPTH (1.5")

I-4 MAINLINE SHOULDER PAVEMENT RESURFACING (WB ONLY)
OVERBUILD - TYPE SP STRUCTURAL COURSE (TRAFFIC C) (0" TO 2.36")
TYPE SP STRUCTURAL COURSE (TRAFFIC C) (1.5")
GROUND-IN RUMBLE STRIPS (INDEX 546-010)

NEW CONSTRUCTION (EB ONLY)
OPTIONAL BASE GROUP 12 WITH
TYPE SP STRUCTURAL COURSE (TRAFFIC E) (2.0")
TYPE SP STRUCTURAL COURSE (TRAFFIC E) (3.0") (PG 76-22)
AND FRICTION COURSE FC-5 (3/4") (PG 76-22) (8.0" ONTO SHLDR.)

SHOULDER PAVEMENT (ALL NEW SHOULDERS)
OPTIONAL BASE GROUP 2 WITH
TYPE SP STRUCTURAL COURSE (TRAFFIC C) (3.0")
GROUND-IN RUMBLE STRIPS (INDEX 546-010)

TRAFFIC DATA
CURRENT YEAR = 2019 AADT = 90,000
ESTIMATED OPENING YEAR = 2027 AADT = 104,700
ESTIMATED DESIGN YEAR = 2047 AADT = 141,400
K = 9.0% D = 55.7% T = 13.3% (24 HOUR)
DESIGN HOUR T = 6.6%
DESIGN SPEED = 70 MPH
CONTEXT CLASSIFICATION = N/A (L/A FACILITY)

NOTES:
*1. NEW CONSTRUCTION WITH 0.02 CROSS SLOPE FROM STA. 3098+00.00 TO STA. 3101+00.00
**2. ℄ CONST. I-4 EB 1 IS 17.5' LT. AT STA. 3073+00.00
℄ CONST. I-4 EB 1 IS 0' RT. AT STA. 3083+51.21
℄ CONST. I-4 EB 1 IS 82' RT. AT STA. 3100+86.15
3. ACTUAL WIDTH OF BASE WIDENING MAY VARY DUE TO ACTUAL EXISTING PAVMENT WIDTH. A UNIFORM WIDTH BASE WIDENING STRIP MAY BE CONSTRUCTED AT NO ADDITIONAL COMPENSATION.

LEGEND
AT THE CONTRACTOR'S OPTION THIS AREA MAY BE CONSTRUCTED OF OPTIONAL BASE MATERIAL AT NO ADDITIONAL COMPENSATION.

NOT TO SCALE

PRELIMINARY subject to changes

REVISIONS			
DATE	DESCRIPTION	DATE	DESCRIPTION

ENGINEER OF RECORD
DEBANANDA PANIGRAHI, P.E.
LICENSE NUMBER 68318
H. W. LOCHNER
4300 W. CYPRESS STREET, SUITE 500
TAMPA, FLORIDA 33607

STATE OF FLORIDA
DEPARTMENT OF TRANSPORTATION

ROAD NO.	COUNTY	FINANCIAL PROJECT ID
SR 400	POLK	430185-3-52-01

TYPICAL SECTIONS (2)

SHEET NO. 17

JBLOUNT 2/26/2024 4:50:42 PM c:\pw_working\lochner-pw-01\dms18802\typsrd02.dgn

THE OFFICIAL RECORD OF THIS SHEET IS THE ELECTRONIC FILE DIGITALLY SIGNED AND SEALED UNDER RULE 61G15-23.004, F.A.C.

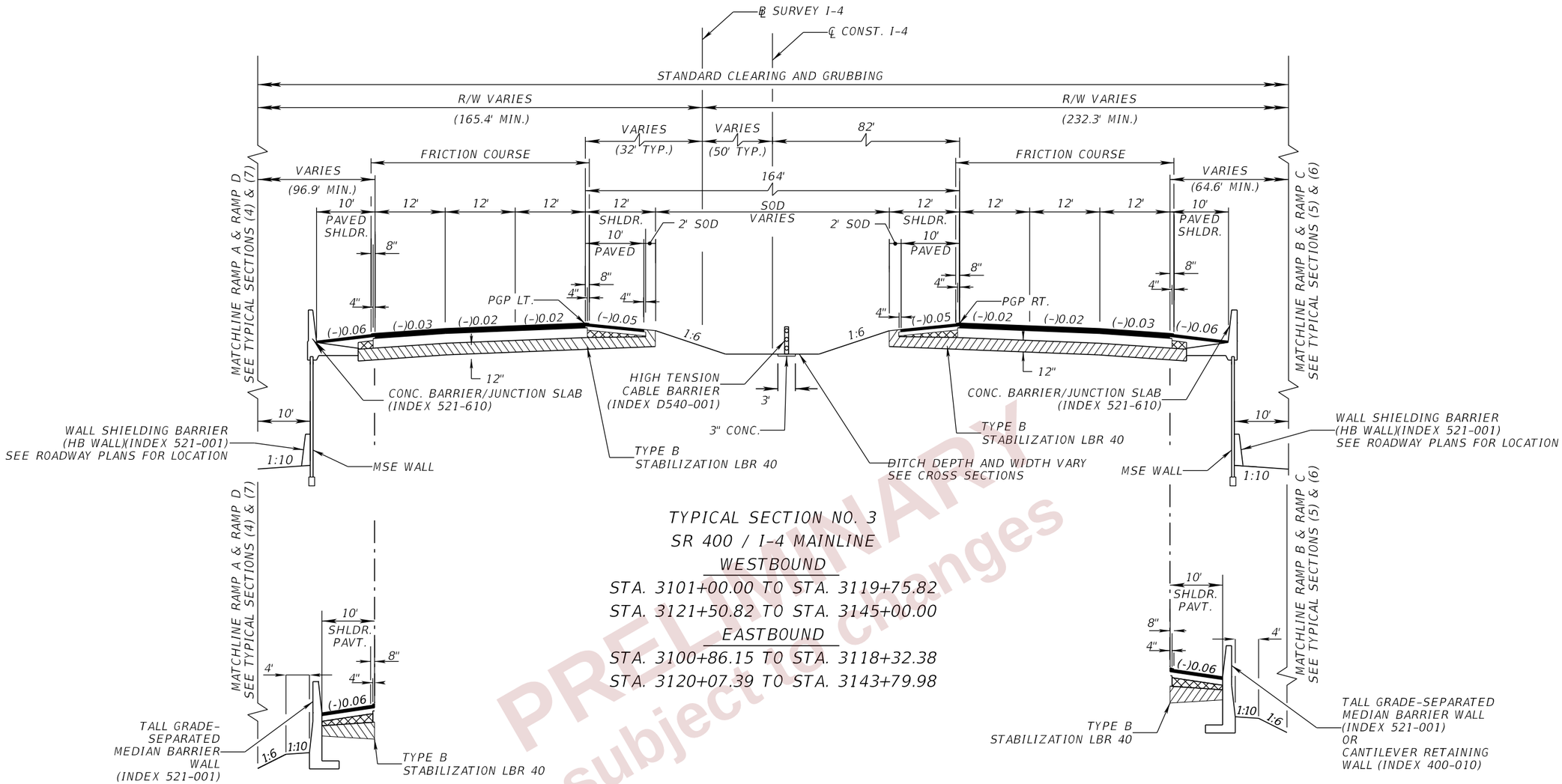

TYPICAL SECTION NO. 3
SR 400 / I-4 MAINLINE
WESTBOUND
STA. 3101+00.00 TO STA. 3119+75.82
STA. 3121+50.82 TO STA. 3145+00.00
EASTBOUND
STA. 3100+86.15 TO STA. 3118+32.38
STA. 3120+07.39 TO STA. 3143+79.98

DETAIL 1
STA. 3101+00.00 TO STA. 3105+00.00
STA. 3136+20.00 TO STA. 3142+64.08

DETAIL 2
STA. 3101+00.00 TO STA. 3103+90.00
STA. 3136+20.00 TO STA. 3143+00.00

NEW CONSTRUCTION
OPTIONAL BASE GROUP 12 WITH
TYPE SP STRUCTURAL COURSE (TRAFFIC E) (2.0")
TYPE SP STRUCTURAL COURSE (TRAFFIC E) (3.0") (PG 76-22)
AND FRICTION COURSE FC-5 (3/4") (PG 76-22) (8.0" ONTO SHLDR.)

SHOULDER PAVEMENT
OPTIONAL BASE GROUP 2 WITH
TYPE SP STRUCTURAL COURSE (TRAFFIC C) (3.0")
GROUND-IN RUMBLE STRIPS (INDEX 546-010)

TRAFFIC DATA
CURRENT YEAR = 2019 AADT = 90,000
ESTIMATED OPENING YEAR = 2027 AADT = 104,700
ESTIMATED DESIGN YEAR = 2047 AADT = 141,400
K = 9.0% D = 55.7% T = 13.3% (24 HOUR)
DESIGN HOUR T = 6.6%
DESIGN SPEED = 70 MPH
CONTEXT CLASSIFICATION = N/A (L/A FACILITY)

PAVEMENT DESIGN NOTES:
PROPOSED APPROACH SLABS TO INCLUDE ASPHALT OVERLAY [FRICTION COURSE FC-5 (3/4") (PG76-22), TYPE SP STRUCTURAL COURSE (TRAFFIC E) (3")], OBG 2 (MIN.) AND STABILIZATION 12" TYPE B LBR 40

LEGEND
AT THE CONTRACTOR'S OPTION THIS AREA MAY BE CONSTRUCTED OF OPTIONAL BASE MATERIAL AT NO ADDITIONAL COMPENSATION.

NOT TO SCALE

PRELIMINARY subject to changes

REVISIONS			
DATE	DESCRIPTION	DATE	DESCRIPTION

ENGINEER OF RECORD
DEBANANDA PANIGRAHI, P.E.
LICENSE NUMBER 68318
H. W. LOCHNER
4300 W. CYPRESS STREET, SUITE 500
TAMPA, FLORIDA 33607

STATE OF FLORIDA
DEPARTMENT OF TRANSPORTATION

ROAD NO.	COUNTY	FINANCIAL PROJECT ID
SR 400	POLK	430185-3-52-01

TYPICAL SECTIONS (3)

SHEET NO. 18

JBLOUNT 2/26/2024 4:50:42 PM c:\pw_working\lochner-pw-01\dms18802\typsrd02.dgn

THE OFFICIAL RECORD OF THIS SHEET IS THE ELECTRONIC FILE DIGITALLY SIGNED AND SEALED UNDER RULE 61G15-23.004, F.A.C.

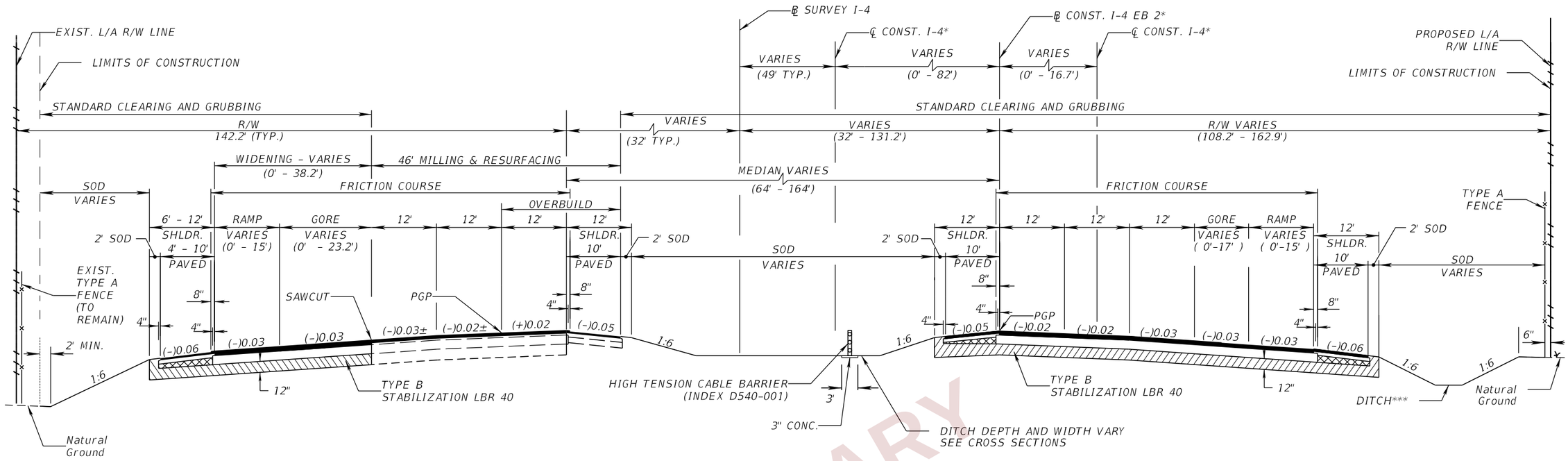

TYPICAL SECTION NO. 4
SR 400 / I-4 MAINLINE
WESTBOUND
STA. 3145+00.00 TO STA. 3175+39.51
EASTBOUND
STA. 3143+79.98 TO STA. 3175+39.51

PRELIMINARY
Subject to Changes

TRAFFIC DATA

CURRENT YEAR = 2019 AADT = 90,000
ESTIMATED OPENING YEAR = 2027 AADT = 104,700
ESTIMATED DESIGN YEAR = 2047 AADT = 141,400
K = 9.0% D = 55.7% T = 13.3% (24 HOUR)
DESIGN HOUR T = 6.6%
DESIGN SPEED = 70 MPH
CONTEXT CLASSIFICATION = N/A (L/A FACILITY)

WIDENING (WB ONLY)

OPTIONAL BASE GROUP 12 WITH
TYPE SP STRUCTURAL COURSE (TRAFFIC E) (2.0")
TYPE SP STRUCTURAL COURSE (TRAFFIC E) (3.0") (PG 76-22)
AND FRICTION COURSE FC-5 (TRAFFIC E) (3/4") (PG 76-22) (8.0" ONTO SHLDR.)

MILLING (WB ONLY)

MILL EXISTING ASPHALT PAVEMENT FOR DEPTH (3.75")

RESURFACING (WB ONLY)

OVERBUILD - TYPE SP STRUCTURAL COURSE (TRAFFIC E) (1.5" TO 2.36")
TYPE SP STRUCTURAL COURSE (TRAFFIC E) (3.0") (PG 76-22)
AND FRICTION COURSE FC-5 (3/4") (PG 76-22) (8.0" ONTO SHLDR.)

I-4 MAINLINE SHOULDER PAVEMENT MILLING (WB ONLY)

MILL EXISTING ASPHALT PAVEMENT FOR DEPTH (1.5")

I-4 MAINLINE SHOULDER PAVEMENT RESURFACING (WB ONLY)

OVERBUILD - TYPE SP STRUCTURAL COURSE (TRAFFIC C) (0" TO 2.29")
TYPE SP STRUCTURAL COURSE (TRAFFIC C) (1.5")
GROUND-IN RUMBLE STRIPS (INDEX 546-010)

LEGEND

AT THE CONTRACTOR'S OPTION THIS AREA MAY BE CONSTRUCTED OF OPTIONAL BASE MATERIAL AT NO ADDITIONAL COMPENSATION.

NEW CONSTRUCTION (EB ONLY)

OPTIONAL BASE GROUP 12 WITH
TYPE SP STRUCTURAL COURSE (TRAFFIC E) (2.0")**
TYPE SP STRUCTURAL COURSE (TRAFFIC E) (3.0") (PG 76-22)
AND FRICTION COURSE FC-5 (3/4") (PG 76-22) (8.0" ONTO SHLDR.)

SHOULDER PAVEMENT (ALL NEW SHOULDERS)

OPTIONAL BASE GROUP 2 WITH
TYPE SP STRUCTURAL COURSE (TRAFFIC C) (3.0")
GROUND-IN RUMBLE STRIPS (INDEX 546-010)

NOTES:

*1. ℄ CONST. I-4 EB 2 IS 82' RT. AT STA. 3145+22.47
℄ CONST. I-4 EB 2 IS 0' RT. AT STA. 3166+54.95
℄ CONST. I-4 EB 2 IS 16.7' LT. AT STA. 3175+39.51

2. ACTUAL WIDTH OF BASE WIDENING MAY VARY DUE TO ACTUAL EXISTING PAVMENT WIDTH. A UNIFORM WIDTH BASE WIDENING STRIP MAY BE CONSTRUCTED AT NO ADDITIONAL COMPENSATION.

***3. DITCH DEPTH AND WIDTH VARY, FOR DITCH ELEVATIONS, SEE RAMP PROFILE SHEETS AND CROSS SECTIONS

**4. TYPE SP STRUCTURAL COURSE (TRAFFIC E) (3.5") INSTEAD OF 2.0" TO BE UTILIZED BETWEEN STA. 3157+00.00 AND STA. 3175+39.51.

NOT TO SCALE

REVISIONS			
DATE	DESCRIPTION	DATE	DESCRIPTION

ENGINEER OF RECORD
DEBANANDA PANIGRAHI, P.E.
LICENSE NUMBER 68318
H. W. LOCHNER
4300 W. CYPRESS STREET, SUITE 500
TAMPA, FLORIDA 33607

STATE OF FLORIDA
DEPARTMENT OF TRANSPORTATION

ROAD NO.	COUNTY	FINANCIAL PROJECT ID
SR 400	POLK	430185-3-52-01

TYPICAL SECTIONS (4)

SHEET NO. 19

JBLOUNT 2/26/2024 4:50:42 PM c:\pw_working\lochner-pw-01\dms18802\typsrd02.dgn

THE OFFICIAL RECORD OF THIS SHEET IS THE ELECTRONIC FILE DIGITALLY SIGNED AND SEALED UNDER RULE 61G15-23.004, F.A.C.

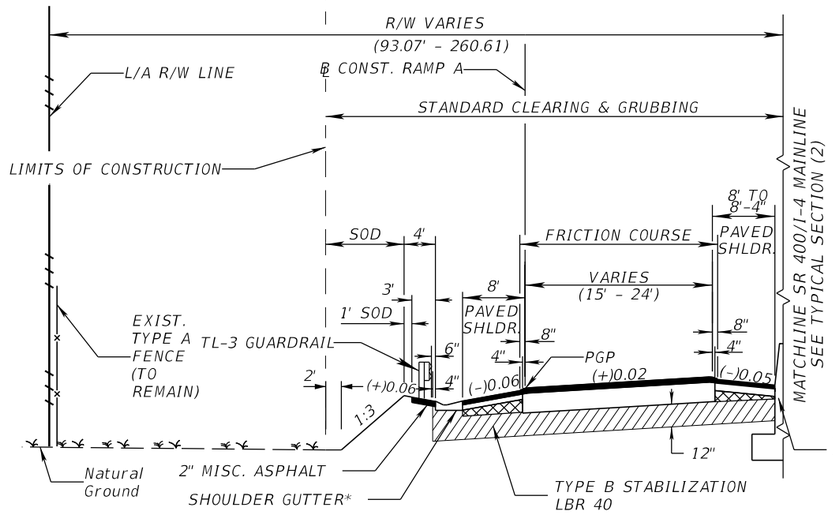

TYPICAL SECTION NO. 4A
RAMP A
STA. 112+95.00 TO STA. 123+35.68

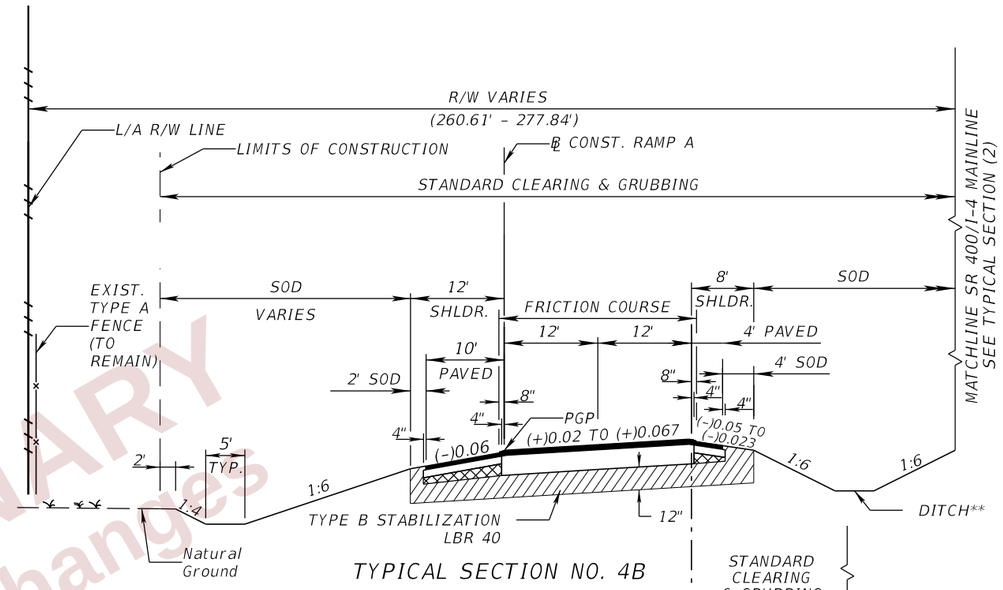

TYPICAL SECTION NO. 4B
RAMP A
STA. 123+35.68 TO STA. 133+80.00*

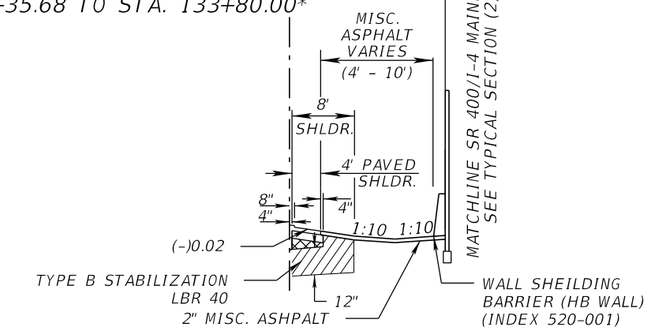

DETAIL 1
STA. 122+95.00 TO STA. 123+85.62

TRAFFIC DATA

CURRENT YEAR = 2019 AADT = 4,500
ESTIMATED OPENING YEAR = 2027 AADT = 6,300
ESTIMATED DESIGN YEAR = 2047 AADT = 11,000
K = 9.0% D = 99.9% T = 13.3% (24 HOUR)
DESIGN HOUR T = 6.65%
DESIGN SPEED = 50 MPH
CONTEXT CLASSIFICATION = N/A (L/A FACILITY)

NEW CONSTRUCTION

OPTIONAL BASE GROUP 12 WITH
TYPE SP STRUCTURAL COURSE (TRAFFIC C) (4.0")
AND FRICTION COURSE FC-5 (3/4") (PG 76-22) (8.0" ONTO SHOULDER)

SHOULDER PAVEMENT

OPTIONAL BASE GROUP 1 WITH
TYPE SP STRUCTURAL COURSE (TRAFFIC C) (1.5")

NOTES:

*1. SHOULDER GUTTER SHOWN ON TYPICAL SECTION 4A EXTENDS TO STA. 127+69.05

**2. DITCH DEPTH AND WIDTH VARY, FOR DITCH ELEVATIONS, SEE RAMP PROFILE SHEETS AND CROSS SECTIONS.

LEGEND

AT THE CONTRACTOR'S OPTION THIS AREA MAY BE CONSTRUCTED OF OPTIONAL BASE MATERIAL AT NO ADDITIONAL COMPENSATION.

NOT TO SCALE

PRELIMINARY
subject to changes

REVISIONS				ENGINEER OF RECORD	STATE OF FLORIDA DEPARTMENT OF TRANSPORTATION			TYPICAL SECTIONS (5)	SHEET NO.
DATE	DESCRIPTION	DATE	DESCRIPTION	DEBANANDA PANIGRAHI, P.E. LICENSE NUMBER 68318 H. W. LOCHNER 4300 W. CYPRESS STREET, SUITE 500 TAMPA, FLORIDA 33607	ROAD NO.	COUNTY	FINANCIAL PROJECT ID		20
					SR 400	POLK	430185-3-52-01		

THE OFFICIAL RECORD OF THIS SHEET IS THE ELECTRONIC FILE DIGITALLY SIGNED AND SEALED UNDER RULE 61G15-23.004, F.A.C.

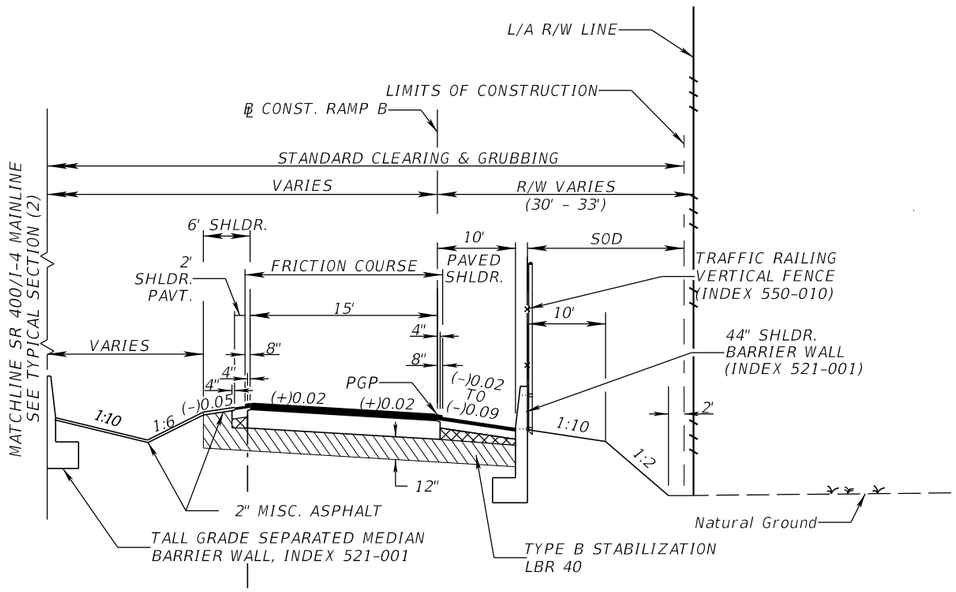

TYPICAL SECTION NO. 5A
RAMP B
STA. 208+76.20 TO STA. 218+50.00

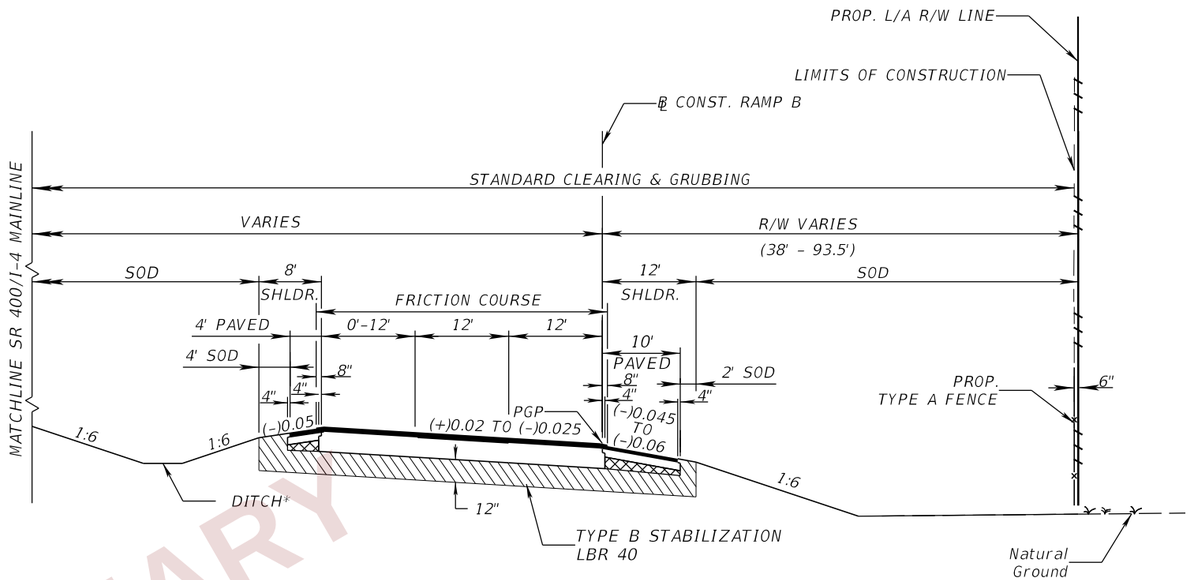

TYPICAL SECTION NO. 5B
RAMP B
STA. 218+50.00 TO STA. STA. 225+43.30

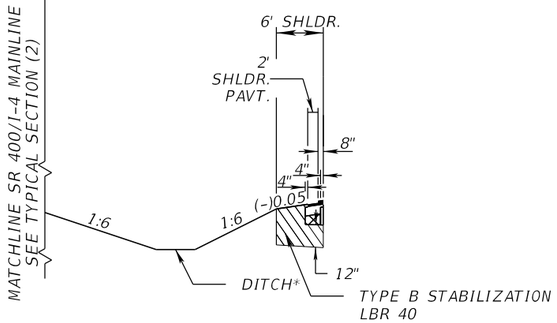

DETAIL 1
STA. 216+80.00 TO STA. 218+50.00

NEW CONSTRUCTION

OPTIONAL BASE GROUP 12 WITH
TYPE SP STRUCTURAL COURSE (TRAFFIC C) (4.0")
AND FRICTION COURSE FC-5 (3/4") (PG 76-22) (8.0" ONTO SHOULDER)

SHOULDER PAVEMENT

OPTIONAL BASE GROUP 1 WITH
TYPE SP STRUCTURAL COURSE (TRAFFIC C) (1.5")

TRAFFIC DATA

CURRENT YEAR = 2019 AADT = 3,500
ESTIMATED OPENING YEAR = 2027 AADT = 5,600
ESTIMATED DESIGN YEAR = 2047 AADT = 11,000
K = 9.0% D = 99.9% T = 13.3% (24 HOUR)
DESIGN HOUR T = 6.65%
DESIGN SPEED = 50 MPH
CONTEXT CLASSIFICATION = N/A (L/A FACILITY)

NOTES:
1. *BASELINE CONSTRUCTION SHIFTS 9' RIGHT AT 218+50.00*
*2. *DITCH DEPTH AND WIDTH VARY, FOR DITCH ELEVATIONS, SEE RAMP PROFILE SHEETS AND CROSS SECTIONS.*

LEGEND
AT THE CONTRACTOR'S OPTION THIS AREA MAY BE CONSTRUCTED OF OPTIONAL BASE MATERIAL AT NO ADDITIONAL COMPENSATION.

NOT TO SCALE

PRELIMINARY
subject to changes

REVISIONS			
DATE	DESCRIPTION	DATE	DESCRIPTION

ENGINEER OF RECORD
DEBANANDA PANIGRAHI, P.E.
LICENSE NUMBER 68318
H. W. LOCHNER
4300 W. CYPRESS STREET, SUITE 500
TAMPA, FLORIDA 33607

STATE OF FLORIDA
DEPARTMENT OF TRANSPORTATION

ROAD NO.	COUNTY	FINANCIAL PROJECT ID
SR 400	POLK	430185-3-52-01

TYPICAL SECTIONS (6)

SHEET NO. 21

JBLOUNT 2/26/2024 4:50:43 PM c:\pw_working\lochner-pw-01\dms18802\typsrd02.dgn

THE OFFICIAL RECORD OF THIS SHEET IS THE ELECTRONIC FILE DIGITALLY SIGNED AND SEALED UNDER RULE 61G15-23.004, F.A.C.

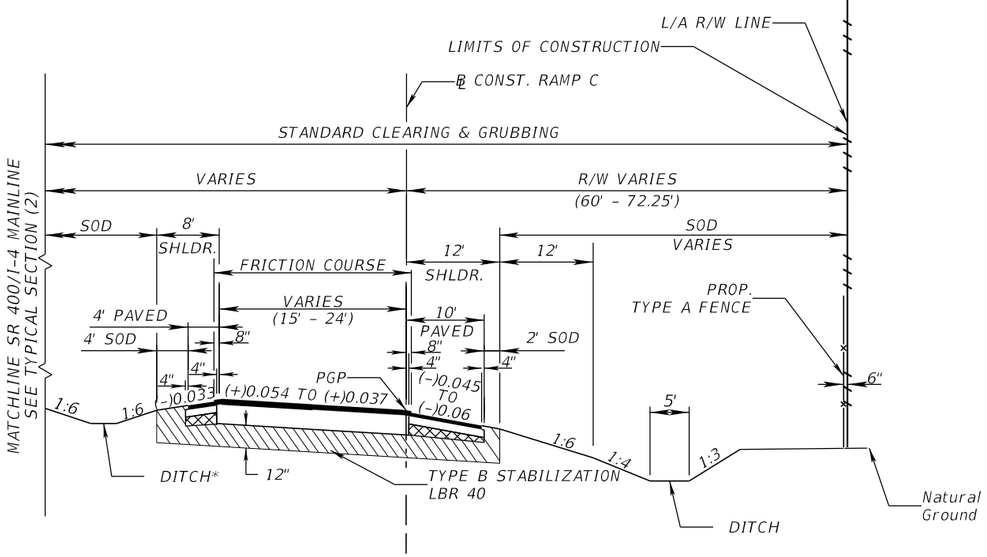

TYPICAL SECTION NO. 6A
RAMP C
STA. 305+50.00 TO STA. 316+79.56

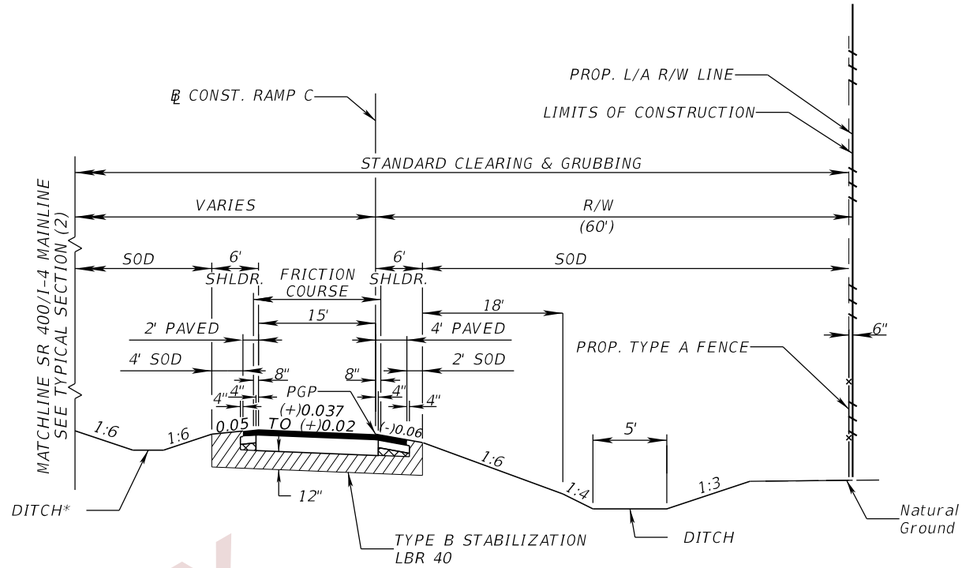

TYPICAL SECTION NO. 6B
RAMP C
STA. 316+79.56 TO STA. 331+12.10

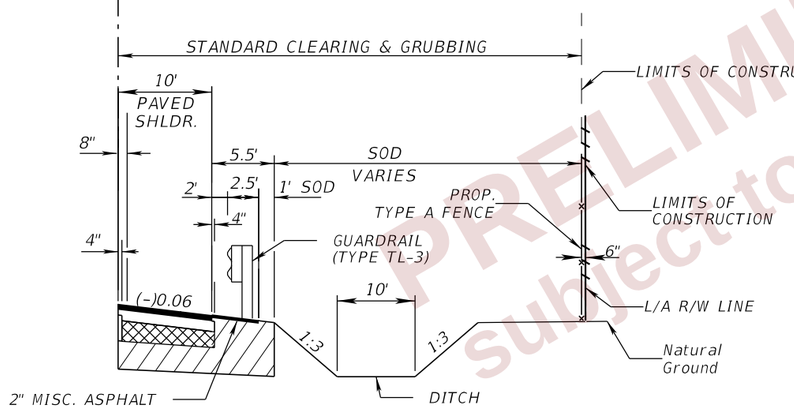

DETAIL 1
STA. 305+50.00 TO STA. 308+40.00

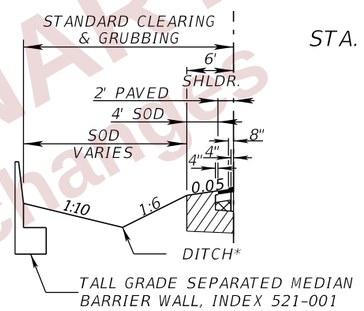

DETAIL 2
STA. 327+20.00 TO STA. 329+65.00

TRAFFIC DATA

CURRENT YEAR = 2019 AADT = 3,100
ESTIMATED OPENING YEAR = 2027 AADT = 5,200
ESTIMATED DESIGN YEAR = 2047 AADT = 10,600
K = 9.0% D = 99.9% T = 13.3% (24 HOUR)
DESIGN HOUR T = 6.65%
DESIGN SPEED = 50 MPH
CONTEXT CLASSIFICATION = N/A (L/A FACILITY)

NEW CONSTRUCTION

OPTIONAL BASE GROUP 12 WITH
TYPE SP STRUCTURAL COURSE (TRAFFIC C) (4.0")
AND FRICTION COURSE FC-5 (3/4") (PG 76-22) (8.0" ONTO SHOULDER)

SHOULDER PAVEMENT

OPTIONAL BASE GROUP 1 WITH
TYPE SP STRUCTURAL COURSE (TRAFFIC C) (1.5")

NOTES:

*1. DITCH DEPTH AND WIDTH VARY, FOR DITCH ELEVATIONS, SEE RAMP PROFILE SHEETS AND CROSS SECTIONS.

LEGEND

AT THE CONTRACTOR'S OPTION THIS AREA MAY BE CONSTRUCTED OF OPTIONAL BASE MATERIAL AT NO ADDITIONAL COMPENSATION.

NOT TO SCALE

PRELIMINARY subject to changes

REVISIONS				ENGINEER OF RECORD	STATE OF FLORIDA DEPARTMENT OF TRANSPORTATION			TYPICAL SECTIONS (7)	SHEET NO.
DATE	DESCRIPTION	DATE	DESCRIPTION	DEBANANDA PANIGRAHI, P.E. LICENSE NUMBER 68318 H. W. LOCHNER 4300 W. CYPRESS STREET, SUITE 500 TAMPA, FLORIDA 33607	ROAD NO.	COUNTY	FINANCIAL PROJECT ID		22
					SR 400	POLK	430185-3-52-01		

JBLOUNT 2/26/2024 4:50:43 PM c:\pw_working\lochner-pw-01\dms18802\typsrd02.dgn

THE OFFICIAL RECORD OF THIS SHEET IS THE ELECTRONIC FILE DIGITALLY SIGNED AND SEALED UNDER RULE 61G15-23.004, F.A.C.

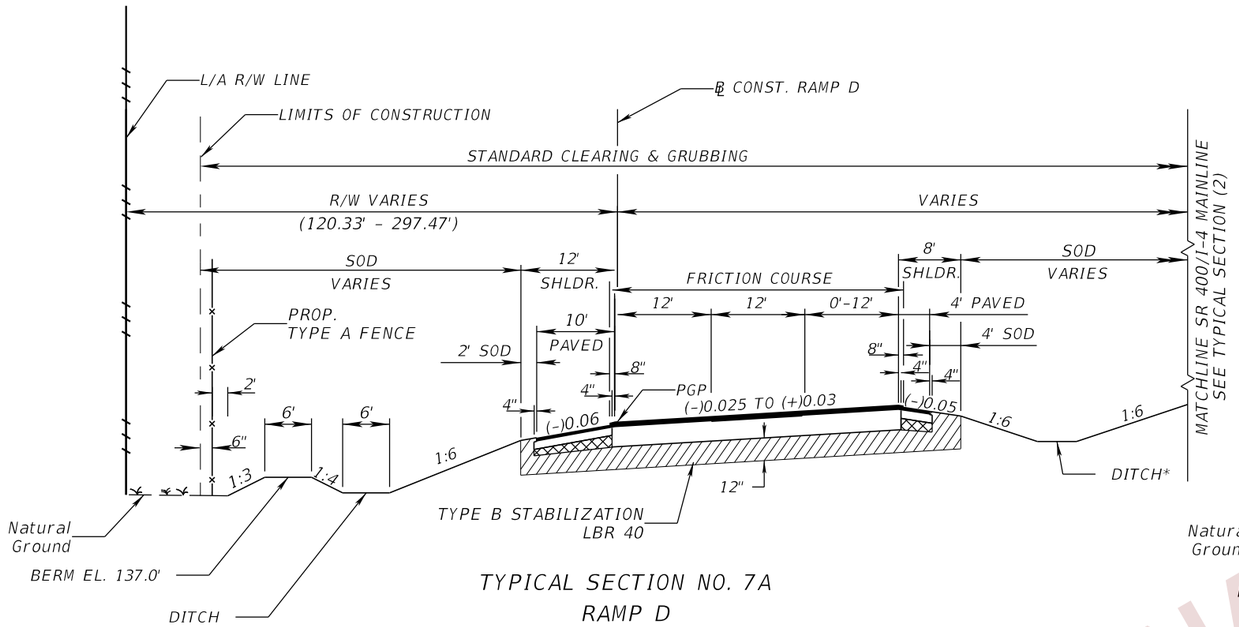

TYPICAL SECTION NO. 7A
RAMP D
STA. 402+40.98 TO STA. 412+96.54

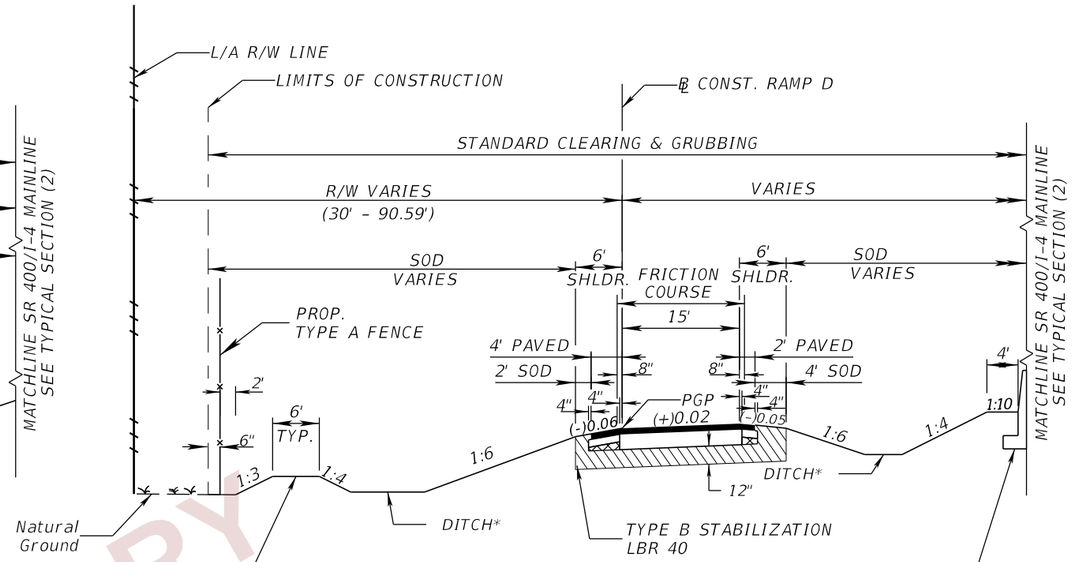

TYPICAL SECTION NO. 7B
RAMP D
STA. 412+96.54 TO STA. 420+80.69

**TALL GRADE-SEPARATED MEDIAN
BARRIER WALL
(INDEX 521-001)
OR
38" SHOULDER BARRIER WALL
(INDEX 521-001)

NEW CONSTRUCTION

OPTIONAL BASE GROUP 12 WITH
TYPE SP STRUCTURAL COURSE (TRAFFIC C) (4.0")
AND FRICTION COURSE FC-5 (3/4") (PG 76-22) (8.0" ONTO SHOULDER)

SHOULDER PAVEMENT

OPTIONAL BASE GROUP 1 WITH
TYPE SP STRUCTURAL COURSE (TRAFFIC C) (1.5")

TRAFFIC DATA

CURRENT YEAR = 2019 AADT = 3,300
ESTIMATED OPENING YEAR = 2027 AADT = 5,300
ESTIMATED DESIGN YEAR = 2047 AADT = 10,600
K = 9.0% D = 99.9% T = 13.3% (24 HOUR)
DESIGN HOUR T = 6.6%
DESIGN SPEED = 50 MPH
CONTEXT CLASSIFICATION = N/A (L/A FACILITY)

NOTES:

1. BASELINE CONSTRUCTION SHIFTS 9' RIGHT AT 412+96.54
*2. DITCH DEPTH AND WIDTH VARY, FOR DITCH ELEVATIONS, SEE RAMP PROFILE SHEETS AND CROSS SECTIONS.
**3. ELEVATION OF BERM TO BE THE SAME ELEVATION AS INSIDE SHOULDER BREAK POINT ON RAMP D.

LEGEND

AT THE CONTRACTOR'S OPTION THIS AREA MAY BE CONSTRUCTED OF OPTIONAL BASE MATERIAL AT NO ADDITIONAL COMPENSATION.

NOT TO SCALE

PRELIMINARY
subject to changes

REVISIONS			
DATE	DESCRIPTION	DATE	DESCRIPTION

ENGINEER OF RECORD
DEBANANDA PANIGRAHI, P.E.
LICENSE NUMBER 68318
H. W. LOCHNER
4300 W. CYPRESS STREET, SUITE 500
TAMPA, FLORIDA 33607

STATE OF FLORIDA
DEPARTMENT OF TRANSPORTATION

ROAD NO.	COUNTY	FINANCIAL PROJECT ID
SR 400	POLK	430185-3-52-01

TYPICAL SECTIONS (8)

SHEET NO. 23

JBLOUNT 2/26/2024 4:50:43 PM c:\pw_working\lochner-pw-01\dms18802\typsrd02.dgn

THE OFFICIAL RECORD OF THIS SHEET IS THE ELECTRONIC FILE DIGITALLY SIGNED AND SEALED UNDER RULE 61G15-23.004, F.A.C.

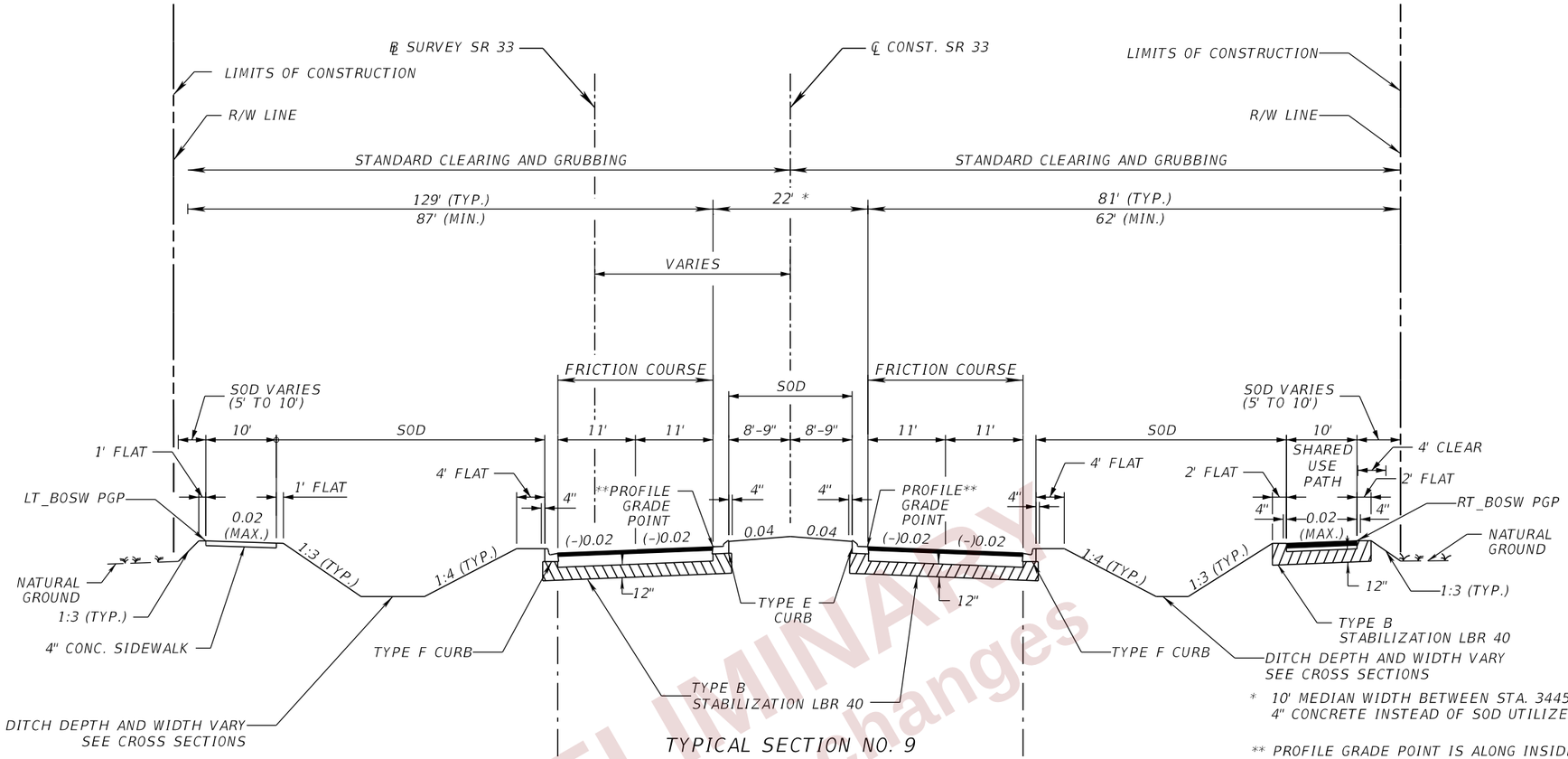

TYPICAL SECTION NO. 9
SR 33
STA. 3399+74.08 TO STA. 3490+74.20

* 10' MEDIAN WIDTH BETWEEN STA. 3445+51.88 AND STA. 3451+53.77. 4" CONCRETE INSTEAD OF SOD UTILIZED AT THIS LOCATION.

** PROFILE GRADE POINT IS ALONG INSIDE EDGE OF TRAVEL LANE BETWEEN 3480+57.07 AND 3490+74.20 AS MEDIAN WIDTH TRANSITIONS FROM 22' TO 10'

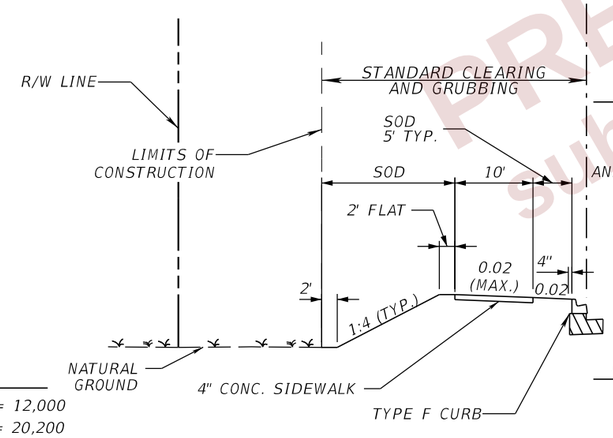

DETAIL 1
STA. 3442+06.29 TO STA. 3460+43.23
STA. 3478+18.00 TO STA. 3486+10.00

NEW CONSTRUCTION

OPTIONAL BASE GROUP 10 WITH
TYPE SP STRUCTURAL COURSE (TRAFFIC E) (2.5")
AND FRICTION COURSE FC-12.5 (TRAFFIC E) (1.5") (PG 76-22)

SHARED USE PATH

OPTIONAL BASE GROUP 1 WITH
TYPE SP STRUCTURAL COURSE (TRAFFIC B) (1.5")

NEW CONSTRUCTION - ASPHALT BASE

OPTIONAL BASE GROUP 11 (TYPE B-12.5 ONLY) WITH
TYPE SP STRUCTURAL COURSE (TRAFFIC E) (2.5")
AND FRICTION COURSE FC-12.5 (TRAFFIC E) (1.5") (PG 76-22)

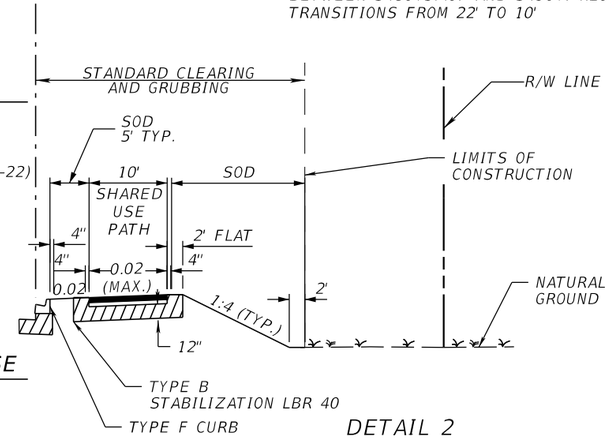

DETAIL 2
STA. 3399+74.08 TO STA. 3413+68.54
STA. 3440+69.37 TO STA. 3464+01.53

* SEE ROADWAY PLANS FOR LIMITS OF ASPHALT BASE OPTION

TRAFFIC DATA

CURRENT YEAR = 2019 AADT = 12,000
ESTIMATED OPENING YEAR = 2027 AADT = 20,200
ESTIMATED DESIGN YEAR = 2047 AADT = 41,000
K = 9.0% D = 55.7% T = 13.3% (24 HOUR)
DESIGN HOUR T = 6.65%
DESIGN SPEED = 45 MPH
CONTEXT CLASSIFICATION = C3C

PAVEMENT DESIGN NOTES:

1. RECONSTRUCTION ON FIRST PARK BLVD. AND UNIVERSITY BLVD. TO UTILIZE THE SAME PAVEMENT DESIGN AS SR33 NEW CONSTRUCTION.
2. MILLING AND RESURFACING ON FIRST PARK BLVD., BRIDGEWATER CENTER LANE AND UNIVERSITY BLVD. TO UTILIZE 1.5" MILLING AND RESURFACED WITH 1.5" FC-12.5 (TRAFFIC E) (PG76-22). OVERBUILD ON UNIVERSITY BLVD. TO UTILIZE TYPE SP STRUCTURAL COURSE (TRAFFIC E)

NOT TO SCALE

PRELIMINARY subject to change

REVISIONS				ENGINEER OF RECORD	STATE OF FLORIDA DEPARTMENT OF TRANSPORTATION			TYPICAL SECTIONS (9)	SHEET NO.
DATE	DESCRIPTION	DATE	DESCRIPTION	DEBANANDA PANIGRAHI, P.E. LICENSE NUMBER 68318 H. W. LOCHNER 4300 W. CYPRESS STREET, SUITE 500 TAMPA, FLORIDA 33607	ROAD NO.	COUNTY	FINANCIAL PROJECT ID		24
					SR 400	POLK	430185-3-52-01		

JBLOUNT 2/26/2024 4:50:44 PM c:\pw_working\lochner-pw-01\dms18802\typsrd02.dgn

THE OFFICIAL RECORD OF THIS SHEET IS THE ELECTRONIC FILE DIGITALLY SIGNED AND SEALED UNDER RULE 61G15-23.004, F.A.C.

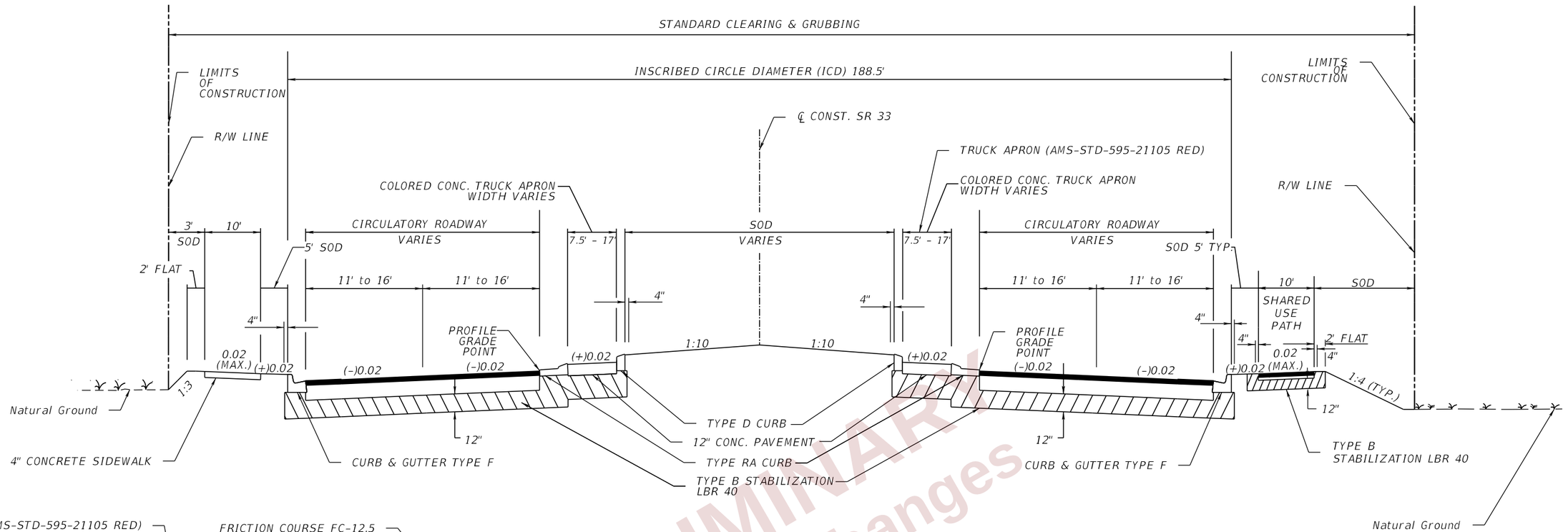

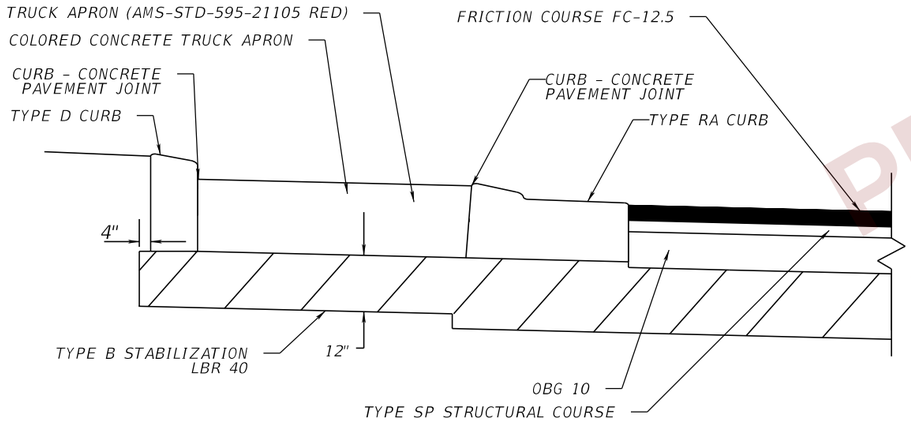

CONCRETE TRUCK APRON DETAIL
IN INSCRIBED CIRCLE

TRAFFIC DATA

CURRENT YEAR = 2019 AADT = 12,000
ESTIMATED OPENING YEAR = 2027 AADT = 20,200
ESTIMATED DESIGN YEAR = 2047 AADT = 41,000
K = 9.0% D = 55.7% T = 13.3% (24 HOUR)
DESIGN HOUR T = 6.65%
DESIGN SPEED = 30 MPH
CONTEXT CLASSIFICATION = C3C

TYPICAL SECTION NO. 10

UNIVERSITY ROUNDABOUT
STA. 3418+42 TO STA. 3419+64

SOUTH I-4 RAMPS ROUNDABOUT
STA. 3443+28 TO STA. 3444+40

NORTH I-4 RAMPS ROUNDABOUT
STA. 3451+96 TO STA. 3453+08

NEW CONSTRUCTION

OPTIONAL BASE GROUP 10 WITH
TYPE SP STRUCTURAL COURSE (TRAFFIC E) (2.5")
AND FRICTION COURSE FC-12.5 (TRAFFIC E) (1.5") (PG 76-22)

SHARED USE PATH

OPTIONAL BASE GROUP 1 WITH
TYPE SP STRUCTURAL COURSE (TRAFFIC B) (1.5")

NEW CONSTRUCTION - ASPHALT BASE*

OPTIONAL BASE GROUP 11 (TYPE B-12.5 ONLY) WITH
TYPE SP STRUCTURAL COURSE (TRAFFIC E) (2.5")
AND FRICTION COURSE FC-12.5 (TRAFFIC E) (1.5") (PG 76-22)

* SEE ROADWAY PLANS FOR LIMITS OF ASPHALT BASE OPTION

NOT TO SCALE

PRELIMINARY
subject to changes

REVISIONS			
DATE	DESCRIPTION	DATE	DESCRIPTION

ENGINEER OF RECORD
DEBANANDA PANIGRAHI, P.E.
LICENSE NUMBER 68318
H. W. LOCHNER
4300 W. CYPRESS STREET, SUITE 500
TAMPA, FLORIDA 33607

STATE OF FLORIDA
DEPARTMENT OF TRANSPORTATION

ROAD NO.	COUNTY	FINANCIAL PROJECT ID
SR 400	POLK	430185-3-52-01

TYPICAL SECTIONS (10)

SHEET NO. 25

JBLOUNT 2/26/2024 4:50:44 PM c:\pw_working\lochner-pw-01\dms18802\typsrd02.dgn

THE OFFICIAL RECORD OF THIS SHEET IS THE ELECTRONIC FILE DIGITALLY SIGNED AND SEALED UNDER RULE 61G15-23.004, F.A.C.

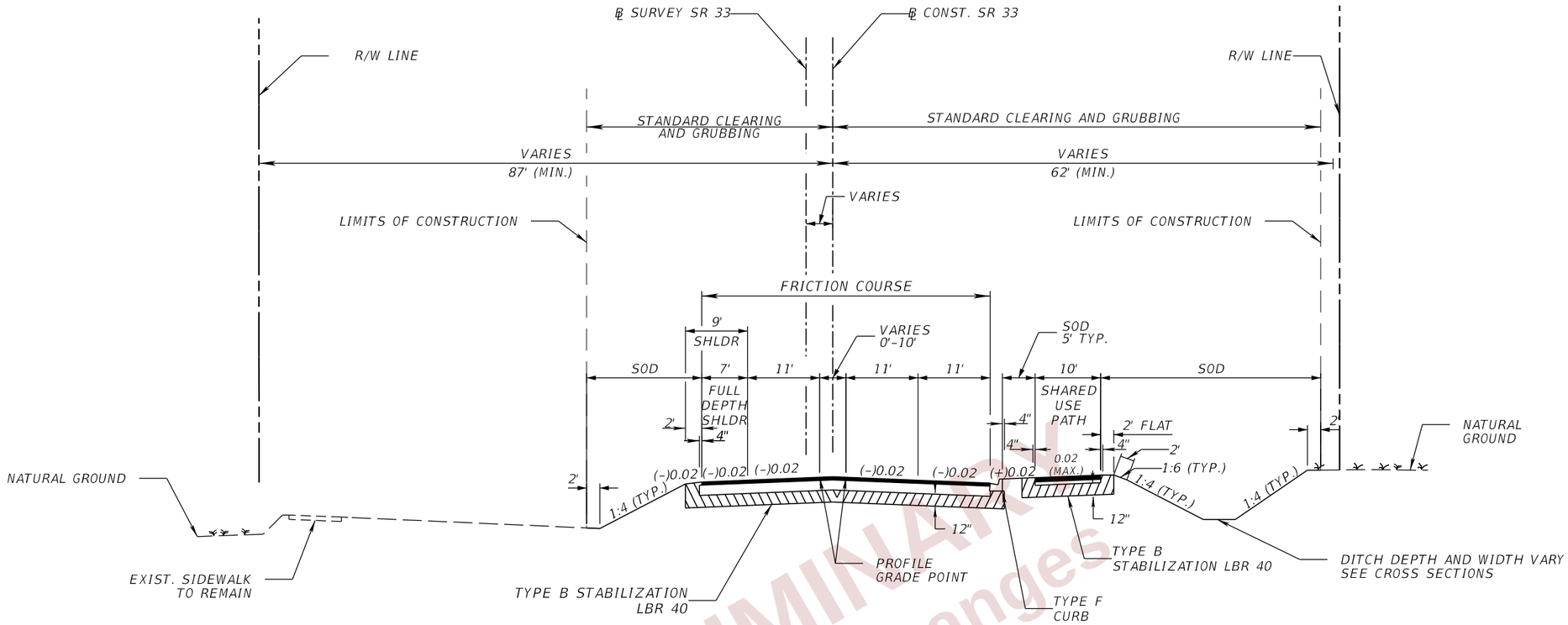

TYPICAL SECTION NO. 11
SR 33
STA. 3490+74.20 TO STA. 3495+98.89*

NEW CONSTRUCTION - ASPHALT BASE

OPTIONAL BASE GROUP 11 (TYPE B-12.5 ONLY) WITH
TYPE SP STRUCTURAL COURSE (TRAFFIC E) (2.5")
AND FRICTION COURSE FC-12.5 (TRAFFIC E) (1.5") (PG 76-22)

FUNCTIONAL MILLING

MILL EXISTING PAVEMENT (1.5") (FOR DEPTH)

SHARED USE PATH

OPTIONAL BASE GROUP 1 WITH
TYPE SP STRUCTURAL COURSE (TRAFFIC B) (1.5")

FUNCTIONAL RESURFACING

FRICTION COURSE FC-12.5 (TRAFFIC E) (PG 76-22) (1.5")

TRAFFIC DATA

CURRENT YEAR = 2019 AADT = 12,000
ESTIMATED OPENING YEAR = 2027 AADT = 20,200
ESTIMATED DESIGN YEAR = 2047 AADT = 41,000
K = 9.0% D = 55.7% T = 13.3% (24 HOUR)
DESIGN HOUR T = 6.65%
DESIGN SPEED = 45 MPH
CONTEXT CLASSIFICATION = C3C

* FUNCTIONAL MILLING AND RESURFACING OF EXISTING PAVEMENT AND SHOULDER EXTENDS FROM STA. 3495+51.92 TO STA. 501+36.74 ℄ SURVEY SR 33

NOT TO SCALE

PRELIMINARY
subject to changes

REVISIONS				ENGINEER OF RECORD	STATE OF FLORIDA DEPARTMENT OF TRANSPORTATION			TYPICAL SECTIONS (11)	SHEET NO.
DATE	DESCRIPTION	DATE	DESCRIPTION	DEBANANDA PANIGRAHI, P.E. LICENSE NUMBER 68318 H. W. LOCHNER 4300 W. CYPRESS STREET, SUITE 500 TAMPA, FLORIDA 33607	ROAD NO.	COUNTY	FINANCIAL PROJECT ID		26
					SR 400	POLK	430185-3-52-01		

JBLOUNT 2/26/2024 4:50:44 PM c:\pw_working\lochner-pw-01\dms18802\typsrd02.dgn

THE OFFICIAL RECORD OF THIS SHEET IS THE ELECTRONIC FILE DIGITALLY SIGNED AND SEALED UNDER RULE 61G15-23.004, F.A.C.

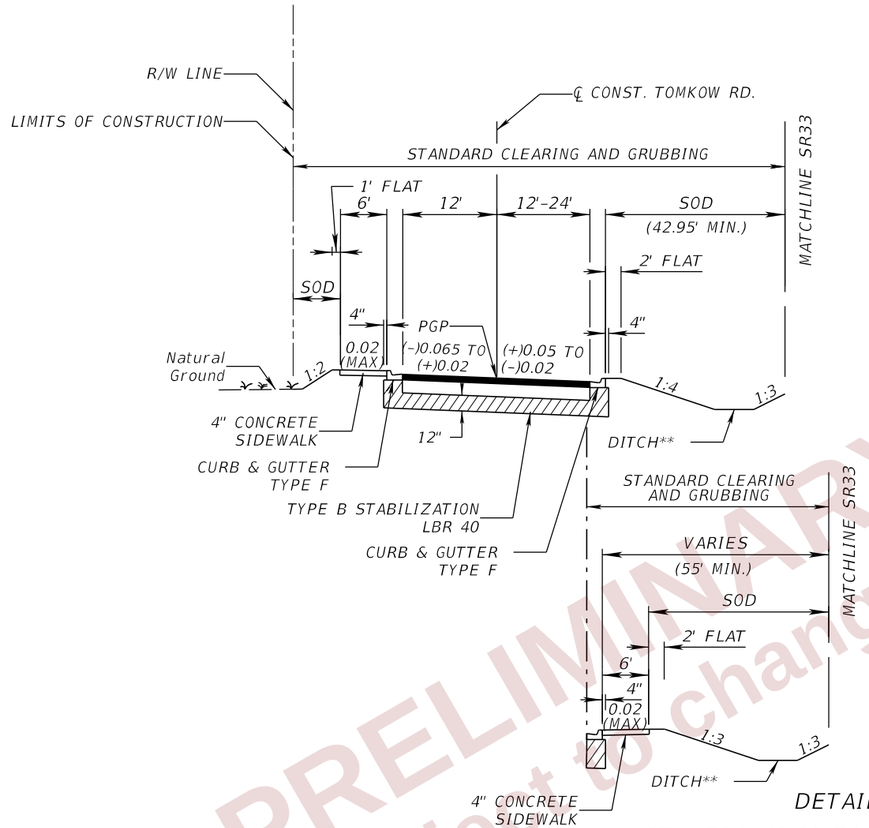

DETAIL 1

STA. 504+40.00 TO STA. 511+53.07

TYPICAL SECTION NO. 11

TOMKOW ROAD

STA. 504+40.00 TO STA. 522+23.76

NOTES:

**1. DITCH DEPTH AND WIDTH VARY, FOR DITCH ELEVATIONS, SEE RAMP PROFILE SHEETS AND CROSS SECTIONS.

TRAFFIC DATA N/A*

DESIGN SPEED = 40 MPH
CONTEXT CLASSIFICATION = C2T

* DESIGN SPEED 20 MPH IN CURVED SECTIONS

NEW CONSTRUCTION

OPTIONAL BASE GROUP 6 WITH
TYPE SP STRUCTURAL COURSE (TRAFFIC C) (2.0") (PG 76-22)

PRELIMINARY subject to changes

REVISIONS				ENGINEER OF RECORD	STATE OF FLORIDA DEPARTMENT OF TRANSPORTATION			TYPICAL SECTIONS (12)	SHEET NO.
DATE	DESCRIPTION	DATE	DESCRIPTION	DEBANANDA PANIGRAHI, P.E. LICENSE NUMBER 68318 H. W. LOCHNER 4300 W. CYPRESS STREET, SUITE 500 TAMPA, FLORIDA 33607	ROAD NO.	COUNTY	FINANCIAL PROJECT ID		
					SR 400	POLK	430185-3-52-01		27

JBLOUNT 2/26/2024 4:50:44 PM c:\pw_working\lochner-pw-01\dms18802\typsrd02.dgn

THE OFFICIAL RECORD OF THIS SHEET IS THE ELECTRONIC FILE DIGITALLY SIGNED AND SEALED UNDER RULE 61G15-23.004, F.A.C.

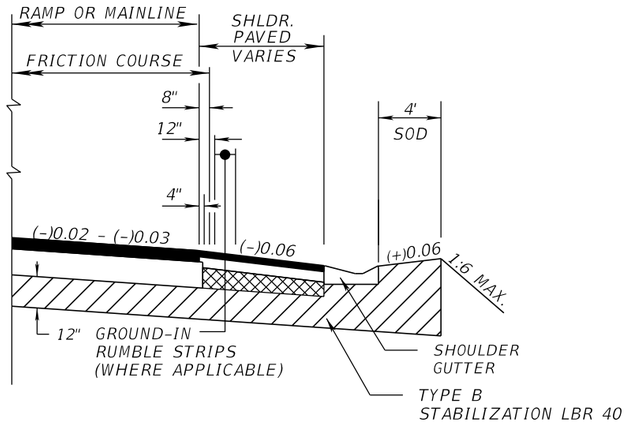

SHLDR. GUTTER (WITHOUT GUARDRAIL) DETAIL

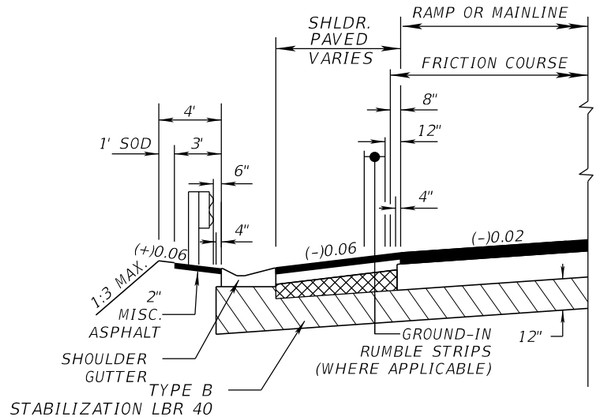

SHOULDER GUTTER (WITH GUARDRAIL) DETAIL

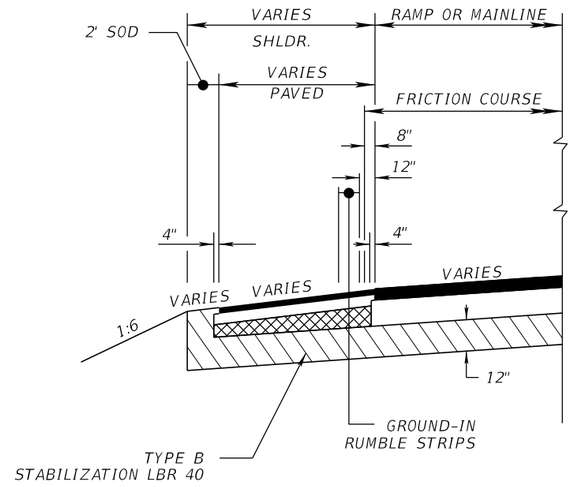

SHOULDER PAVEMENT DETAIL

(OUTSIDE SHOULDER SHOWN. INSIDE SHOULDERS SIMILAR.)

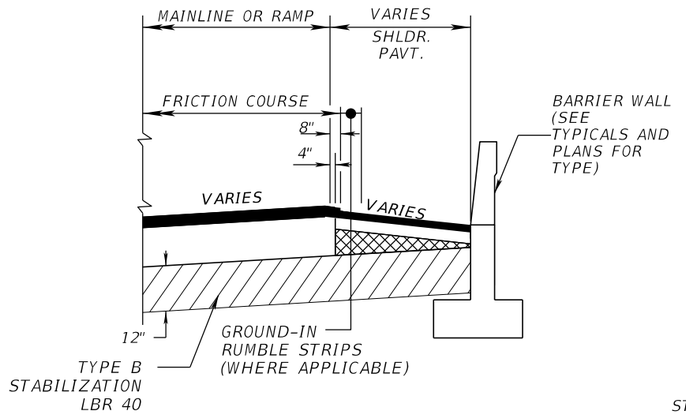

BARRIER WALL DETAIL

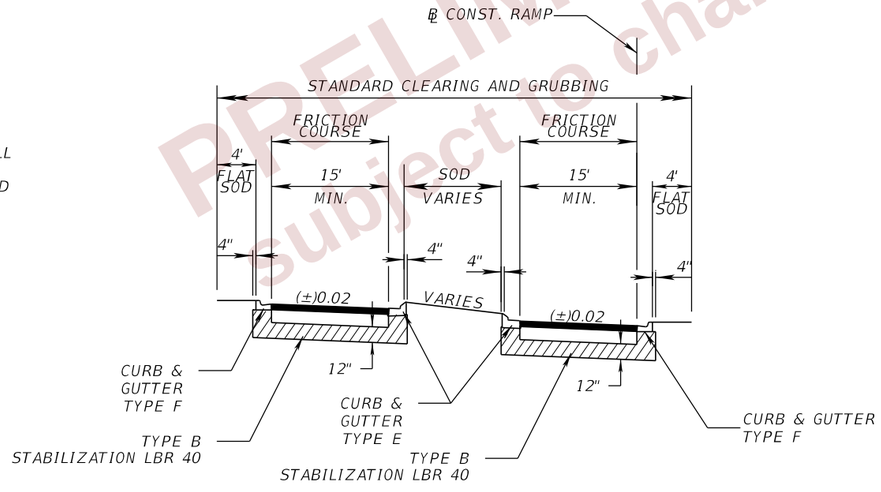

RAMP DETAIL AT ROUNDABOUT*

*UTILIZE PAVMENT DESIGN SHOWN ON TYPICAL SECTION (8) FOR THOSE LOCATIONS

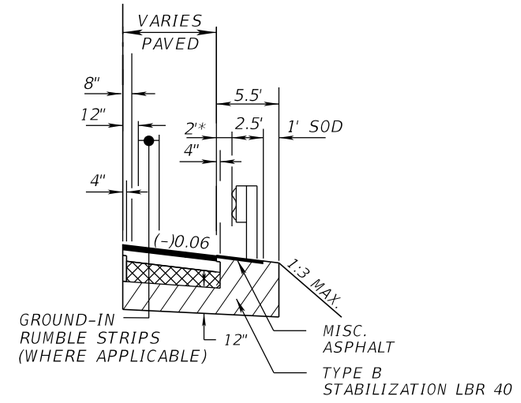

SHOULDER PAVEMENT WITH GUARDRAIL

* 4' AT LOCATIONS ALONG RAMP A

LEGEND

AT THE CONTRACTOR'S OPTION THIS AREA MAY BE CONSTRUCTED OF OPTIONAL BASE MATERIAL AT NO ADDITIONAL COMPENSATION.

NOTE:

1. SEE TYPICAL SECTIONS AND ROADWAY PLANS FOR LOCATION OF DETAILS.

NOT TO SCALE

PRELIMINARY subject to changes

REVISIONS				ENGINEER OF RECORD	STATE OF FLORIDA DEPARTMENT OF TRANSPORTATION			TYPICAL SECTION DETAILS (01)	SHEET NO.
DATE	DESCRIPTION	DATE	DESCRIPTION	DEBANANDA PANIGRAHI, P.E. LICENSE NUMBER 68318 H. W. LOCHNER 4300 W. CYPRESS STREET, SUITE 500 TAMPA, FLORIDA 33607	ROAD NO.	COUNTY	FINANCIAL PROJECT ID		28
					SR 400	POLK	430185-3-52-01		

THE OFFICIAL RECORD OF THIS SHEET IS THE ELECTRONIC FILE DIGITALLY SIGNED AND SEALED UNDER RULE 61G15-23.004, F.A.C.

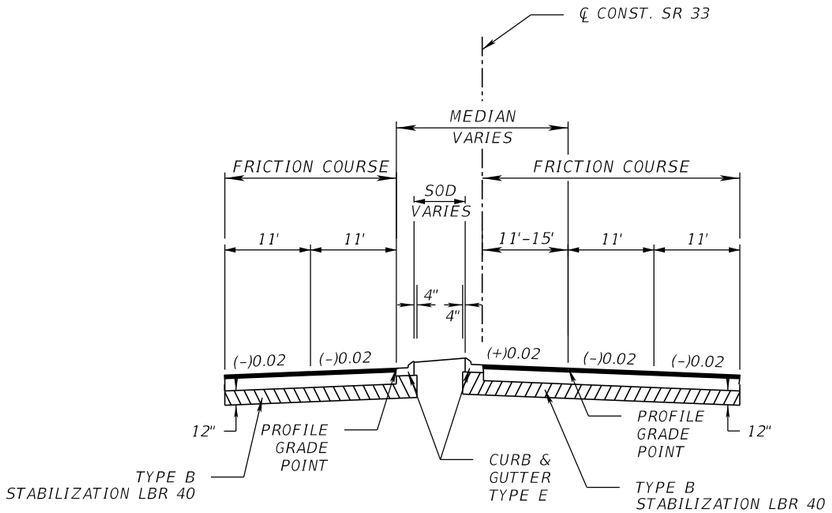

TURN LANE AND CURB/GUTTER DETAIL SR 33

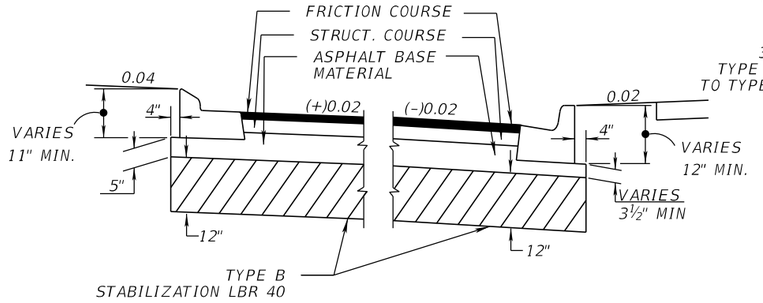

ASPHALT BASE CURB PAD DETAIL SR 33

TO BE USED WITHIN LIMITS OF ASPHALT BASE OPTION

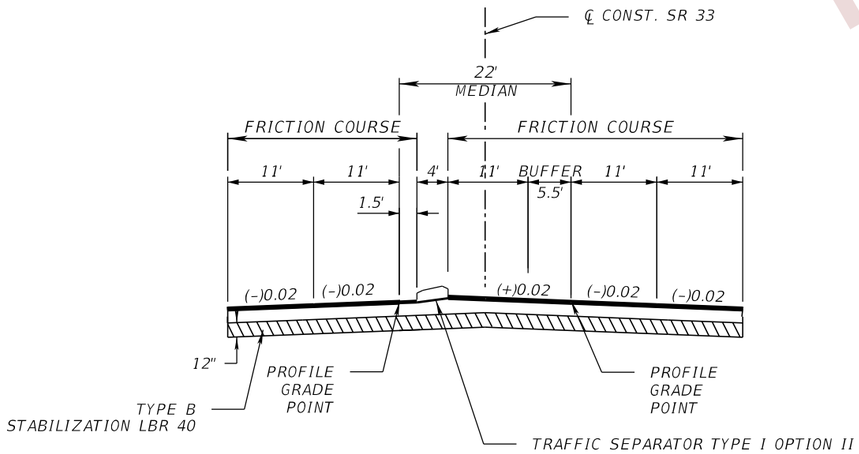

TURN LANE AND TRAFFIC SEPARATOR DETAIL SR 33

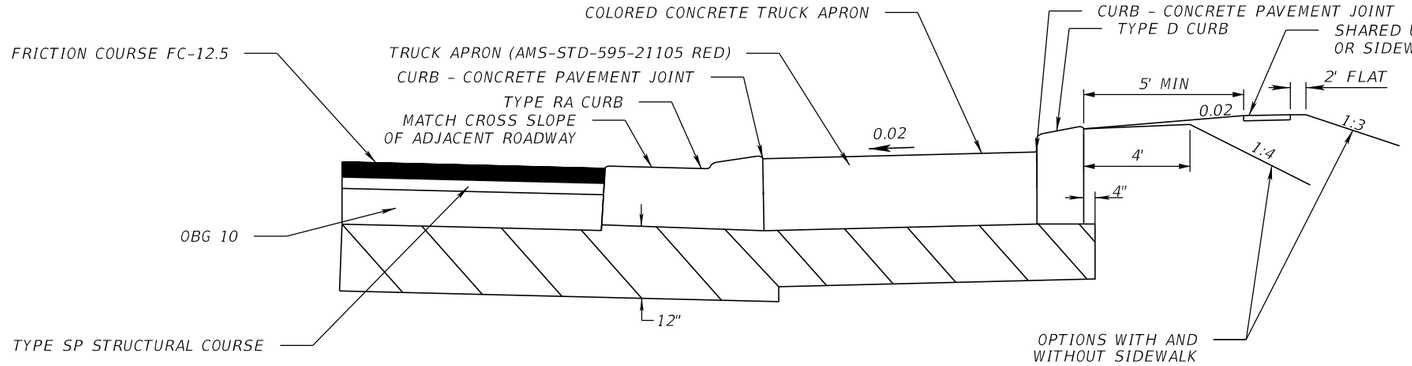

CONCRETE TRUCK APRON DETAIL
AT OUTSIDE CORNER OF ROUNDABOUT

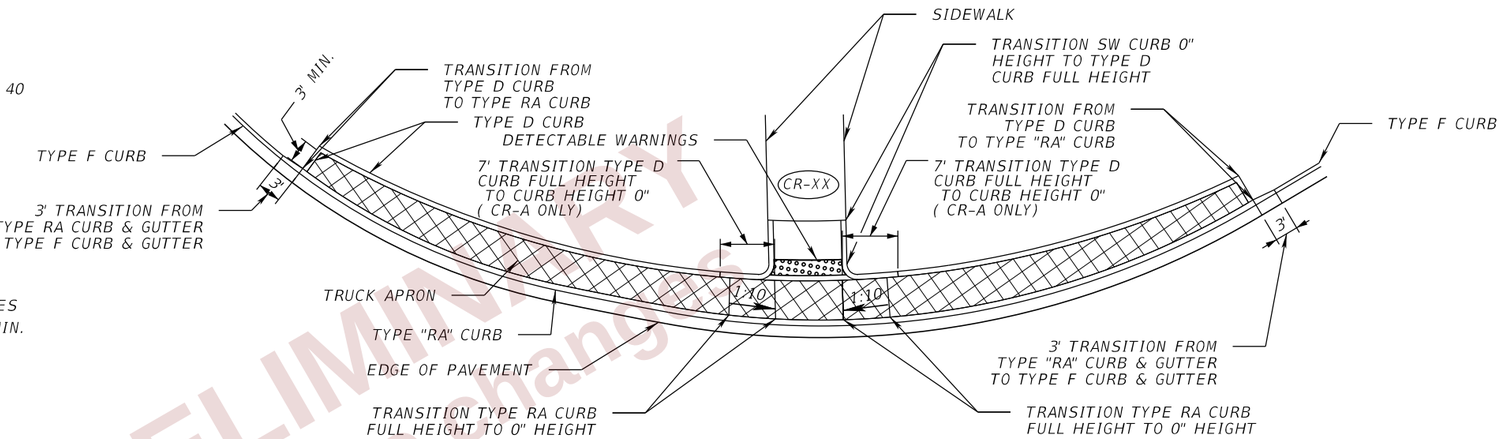

PLAN VIEW CONC. TRUCK APRON DETAIL
AT OUTSIDE CORNER OF ROUNDABOUTS

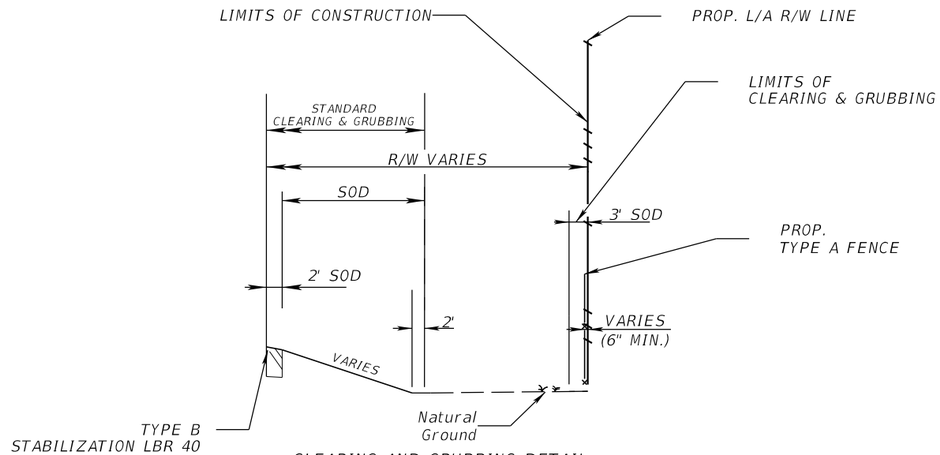

CLEARING AND GRUBBING DETAIL

NOTE:

1. SEE TYPICAL SECTIONS AND ROADWAY PLANS FOR LOCATION OF DETAILS.

PRELIMINARY subject to change

THE OFFICIAL RECORD OF THIS SHEET IS THE ELECTRONIC FILE DIGITALLY SIGNED AND SEALED UNDER RULE 61G15-23.004, F.A.C.

REVISIONS			
DATE	DESCRIPTION	DATE	DESCRIPTION

ENGINEER OF RECORD
DEBANANDA PANIGRAHI, P.E.
LICENSE NUMBER 68318
H. W. LOCHNER
4300 W. CYPRESS STREET, SUITE 500
TAMPA, FLORIDA 33607

STATE OF FLORIDA
DEPARTMENT OF TRANSPORTATION

ROAD NO.	COUNTY	FINANCIAL PROJECT ID
SR 400	POLK	430185-3-52-01

TYPICAL SECTION DETAILS (02)

SHEET NO. 29

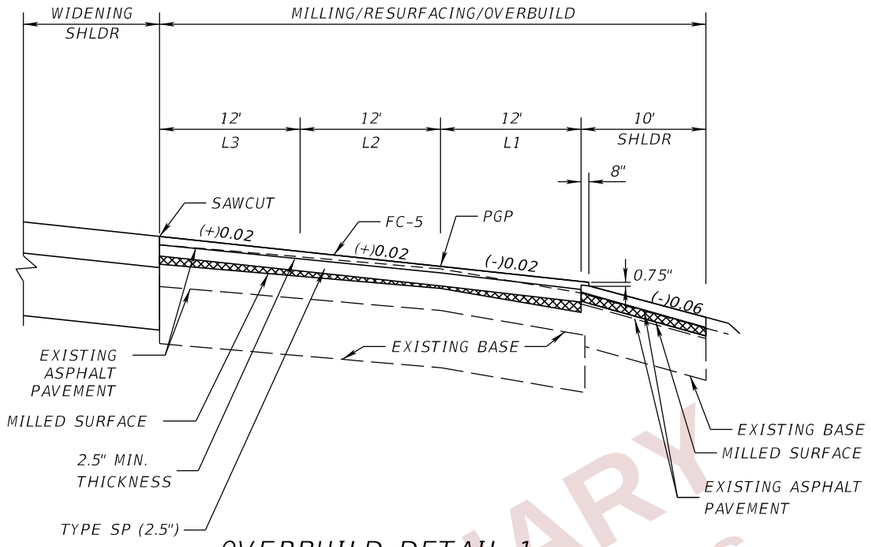

OVERBUILD DETAIL 1
I-4 WESTBOUND
STA. 1073+00.00 TO STA. 1098+20.43

OVERBUILD LIMITS

NOTE: OVERBUILD THICKNESS OF SHOULDER SHOULD MATCH OVERBUILD THICKNESS OF L1 AT LOCATION OF MAX OVERBUILD DEPTH SHOWN IN TABLE.

PRELIMINARY Subject to changes

OVERBUILD DETAILS

LOCATION		EXIST. SLOPE (%)	PROPOSED SLOPE (%)	MAX. DEPTH OF OVERBUILD (IN.)	LOCATION OF MAX. OVERBUILD DEPTH	WIDTH OF OVERBUILD (FT.)	AREA OF OVERBUILD (SQ. FT.)
STATION	LANE						
1073+00.00	L3.	2.00%	EXIST	0	N/A	12.00	
1074+00.00	L3.	1.83%	1.81%	0.15	12.00' (LT)	12.00	0.14
1075+00.00	L3.	2.38%	1.78%	0.64	12.00' (LT)	12.00	0.32
1076+00.00	L3.	1.93%	1.77%	1.12	12.00' (LT)	12.00	1.01
1077+00.00	L3.	1.98%	1.75%	1.16	12.00' (LT)	12.00	1.00
1078+00.00	L3.	1.92%	2.00%	1.44	24.00' (LT)	12.00	1.38
1079+00.00	L3.	1.84%	2.00%	0.98	24.00' (LT)	12.00	0.86
1080+00.00	L3.	1.58%	2.00%	0.96	24.00' (LT)	12.00	0.66
1081+00.00	L3.	2.06%	2.00%	0.81	12.00' (LT)	12.00	0.77
1082+00.00	L3.	1.72%	2.00%	1.96	24.00' (LT)	12.00	1.75
1083+00.00	L3.	1.62%	2.00%	1.74	24.00' (LT)	12.00	1.46
1084+00.00	L3.	1.68%	2.00%	1.12	24.00' (LT)	12.00	0.89
1085+00.00	L3.	1.52%	2.00%	0.98	24.00' (LT)	12.00	0.63
1086+00.00	L3.	1.63%	2.00%	0.72	24.00' (LT)	12.00	0.45
1087+00.00	L3.	2.00%	2.00%	0.61	24.00' (LT)	12.00	0.61
1088+00.00	L3.	2.14%	2.00%	1.05	12.00' (LT)	12.00	0.95
1089+00.00	L3.	2.35%	2.00%	0.69	12.00' (LT)	12.00	0.45
1090+00.00	L3.	1.86%	2.00%	0.53	24.00' (LT)	12.00	0.44
1091+00.00	L3.	1.65%	2.00%	0.61	24.00' (LT)	12.00	0.37
1092+00.00	L3.	1.52%	2.00%	0.77	24.00' (LT)	12.00	0.43
1093+00.00	L3.	1.88%	2.00%	0.15	24.00' (LT)	12.00	0.07
1094+00.00	L3.	1.77%	2.00%	0.56	24.00' (LT)	12.00	0.38
1095+00.00	L3.	1.70%	2.00%	0.76	24.00' (LT)	12.00	0.53
1096+00.00	L3.	1.81%	2.00%	0.71	24.00' (LT)	12.00	0.57
1097+00.00	L3.	1.99%	2.00%	0.67	24.00' (LT)	12.00	0.66
1098+00.00	L3.	1.81%	2.00%	0.84	24.00' (LT)	12.00	0.69
1098+20.43	L3.	2.00%	EXIST	0.00	N/A	12.00	

OVERBUILD DETAILS

LOCATION		EXIST. SLOPE (%)	PROPOSED SLOPE (%)	MAX. DEPTH OF OVERBUILD (IN.)	LOCATION OF MAX. OVERBUILD DEPTH	DEPTH OF PROFILE GRADE POINT (IN.)	WIDTH OF OVERBUILD (FT.)	AREA OF OVERBUILD (SQ. FT.)
STATION	LANE							
1073+00.00	L2.	2.00%	EXIST	0	N/A		12.00	
1074+00.00	L2.	2.23%	2.00%	0.48	00.00' (LT)	0.48	12.00	0.32
1075+00.00	L2.	1.99%	2.00%	0.64	12.00' (LT)	0.63	12.00	0.64
1076+00.00	L2.	1.77%	2.00%	1.12	12.00' (LT)	0.79	12.00	0.96
1077+00.00	L2.	1.82%	2.00%	1.16	12.00' (LT)	0.91	12.00	1.04
1078+00.00	L2.	1.89%	2.00%	1.32	12.00' (LT)	1.17	12.00	1.24
1079+00.00	L2.	1.86%	2.00%	0.75	12.00' (LT)	0.55	12.00	0.65
1080+00.00	L2.	1.76%	2.00%	0.35	12.00' (LT)	0.01	12.00	0.18
1081+00.00	L2.	1.79%	2.00%	0.81	12.00' (LT)	0.51	12.00	0.66
1082+00.00	L2.	1.76%	2.00%	1.55	12.00' (LT)	1.21	12.00	1.38
1083+00.00	L2.	1.62%	2.00%	1.19	12.00' (LT)	0.63	12.00	0.91
1084+00.00	L2.	1.60%	2.00%	0.66	12.00' (LT)	0.09	12.00	0.38
1085+00.00	L2.	1.73%	2.00%	0.29	12.00' (LT)	0.10	12.00	0.14
1086+00.00	L2.	1.86%	2.00%	0.19	12.00' (LT)	0.02	12.00	0.09
1087+00.00	L2.	1.97%	2.00%	0.61	12.00' (LT)	0.56	12.00	0.58
1088+00.00	L2.	2.14%	2.00%	1.25	00.00' (LT)	1.25	12.00	1.15
1089+00.00	L2.	2.03%	2.00%	0.76	00.00' (LT)	0.76	12.00	0.73
1090+00.00	L2.	1.86%	2.00%	0.34	12.00' (LT)	0.15	12.00	0.24
1091+00.00	L2.	1.90%	2.00%	0.12	12.00' (LT)	0.01	12.00	0.06
1092+00.00	L2.	2.03%	2.00%	0.14	00.00' (LT)	0.14	12.00	0.12
1093+00.00	L2.	2.06%	2.00%	0.05	00.00' (LT)	0.05	12.00	0.03
1094+00.00	L2.	1.99%	2.00%	0.21	12.00' (LT)	0.19	12.00	0.20
1095+00.00	L2.	1.89%	2.00%	0.30	12.00' (LT)	0.14	12.00	0.22
1096+00.00	L2.	1.81%	2.00%	0.42	12.00' (LT)	0.14	12.00	0.28
1097+00.00	L2.	1.78%	2.00%	0.65	12.00' (LT)	0.32	12.00	0.48
1098+00.00	L2.	1.82%	2.00%	0.55	12.00' (LT)	0.29	12.00	0.42
1098+20.43	L2.	2.00%	EXIST	0.00	N/A		12.00	

OVERBUILD DETAILS

LOCATION		EXIST. SLOPE (%)	PROPOSED SLOPE (%)	MAX. DEPTH OF OVERBUILD (IN.)	LOCATION OF MAX. OVERBUILD DEPTH	DEPTH OF PROFILE GRADE POINT (IN.)	WIDTH OF OVERBUILD (FT.)	AREA OF OVERBUILD (SQ. FT.)
STATION	LANE							
1073+00.00	L1.	2.00%	EXIST	0	N/A		12.00	0.00
1074+00.00	L1.	2.01%	2.00%	0.49	12.00' (RT)	0.48	12.00	0.49
1075+00.00	L1.	1.62%	2.00%	0.63	00.00' (LT)	0.63	12.00	0.36
1076+00.00	L1.	2.23%	2.00%	1.12	12.00' (RT)	0.79	12.00	0.96
1077+00.00	L1.	1.84%	2.00%	0.91	00.00' (LT)	0.91	12.00	0.80
1078+00.00	L1.	1.95%	2.00%	1.17	00.00' (LT)	1.17	12.00	1.13
1079+00.00	L1.	2.11%	2.00%	0.72	12.00' (RT)	0.55	12.00	0.63
1080+00.00	L1.	2.51%	2.00%	0.75	12.00' (RT)	0.01	12.00	0.38
1081+00.00	L1.	2.18%	2.00%	0.77	12.00' (RT)	0.51	12.00	0.64
1082+00.00	L1.	2.51%	2.00%	1.94	12.00' (RT)	1.21	12.00	1.58
1083+00.00	L1.	3.20%	2.00%	2.36	12.00' (RT)	0.63	12.00	1.50
1084+00.00	L1.	2.46%	2.00%	0.76	12.00' (RT)	0.09	12.00	0.42
1085+00.00	L1.	2.81%	2.00%	1.07	12.00' (RT)	0.10	12.00	0.53
1086+00.00	L1.	2.67%	2.00%	0.94	12.00' (RT)	0.02	12.00	0.47
1087+00.00	L1.	2.01%	2.00%	0.57	12.00' (RT)	0.56	12.00	0.56
1088+00.00	L1.	2.12%	2.00%	1.42	12.00' (RT)	1.25	12.00	1.33
1089+00.00	L1.	1.81%	2.00%	0.76	00.00' (LT)	0.76	12.00	0.63
1090+00.00	L1.	2.56%	2.00%	0.97	12.00' (RT)	0.15	12.00	0.56
1091+00.00	L1.	2.94%	2.00%	1.36	12.00' (RT)	0.01	12.00	0.68
1092+00.00	L1.	2.76%	2.00%	1.24	12.00' (RT)	0.14	12.00	0.69
1093+00.00	L1.	2.50%	2.00%	0.77	12.00' (RT)	0.05	12.00	0.41
1094+00.00	L1.	2.82%	2.00%	1.36	12.00' (RT)	0.19	12.00	0.78
1095+00.00	L1.	2.84%	2.00%	1.34	12.00' (RT)	0.14	12.00	0.74
1096+00.00	L1.	2.59%	2.00%	0.98	12.00' (RT)	0.14	12.00	0.56
1097+00.00	L1.	2.95%	2.00%	1.62	12.00' (RT)	0.32	12.00	0.97
1098+00.00	L1.	2.84%	2.00%	1.38	12.00' (RT)	0.29	12.00	0.84
1098+20.43	L1.	2.00%	EXIST	0.00	N/A		12.00	0.00

THE OFFICIAL RECORD OF THIS SHEET IS THE ELECTRONIC FILE DIGITALLY SIGNED AND SEALED UNDER RULE 61G15-23.004, F.A.C.

DATE	DESCRIPTION	DATE	DESCRIPTION

ENGINEER OF RECORD
DEBANANDA PANIGRAHI, P.E.
LICENSE NUMBER 68318
H. W. LOCHNER
4300 W. CYPRESS STREET, SUITE 500
TAMPA, FLORIDA 33607

STATE OF FLORIDA
DEPARTMENT OF TRANSPORTATION

ROAD NO.	COUNTY	FINANCIAL PROJECT ID
SR 400	POLK	430185-3-52-01

TYPICAL SECTION DETAILS (04)

SHEET NO. 30

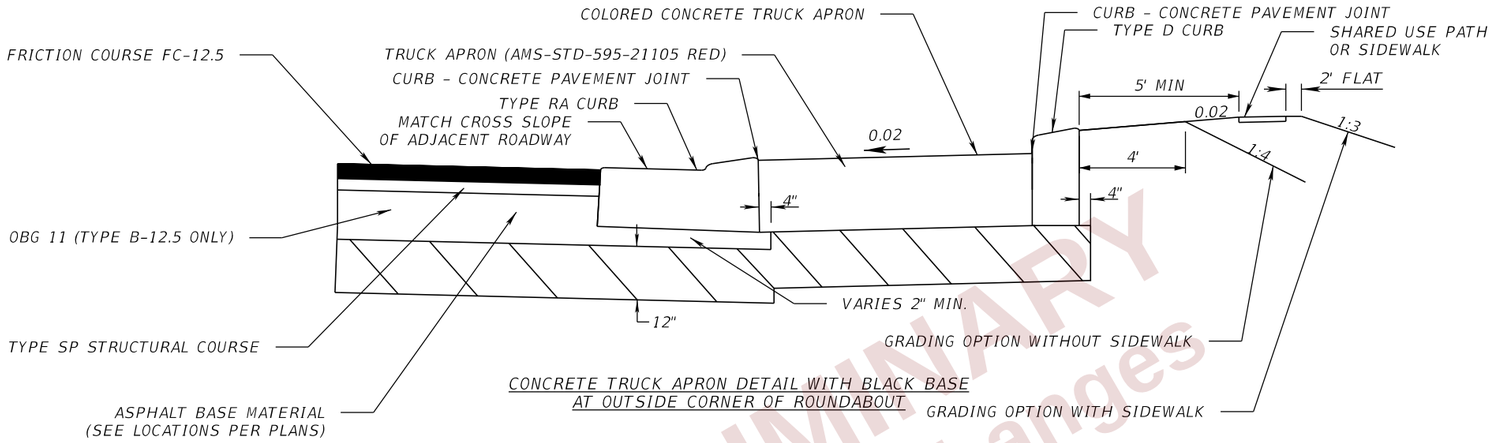

CONCRETE TRUCK APRON DETAIL WITH BLACK BASE
AT OUTSIDE CORNER OF ROUNDABOUT

PRELIMINARY
subject to changes

THE OFFICIAL RECORD OF THIS SHEET IS THE ELECTRONIC FILE DIGITALLY SIGNED AND SEALED UNDER RULE 61G15-23.004, F.A.C.

REVISIONS			
DATE	DESCRIPTION	DATE	DESCRIPTION

ENGINEER OF RECORD
DEBANANDA PANIGRAHI, P.E.
LICENSE NUMBER 68318
H. W. LOCHNER
4300 W. CYPRESS STREET, SUITE 500
TAMPA, FLORIDA 33607

STATE OF FLORIDA
DEPARTMENT OF TRANSPORTATION

ROAD NO.	COUNTY	FINANCIAL PROJECT ID
SR 400	POLK	430185-3-52-01

TYPICAL SECTION DETAILS (03)

SHEET NO. 31

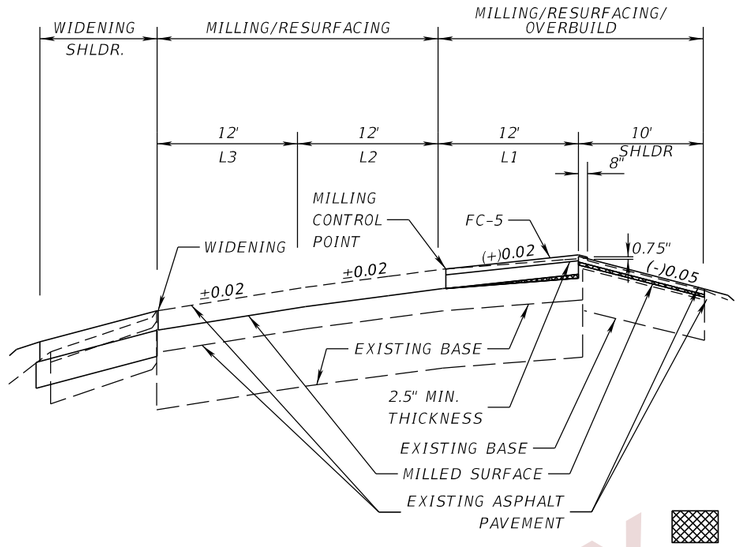

OVERBUILD LIMITS

OVERBUILD DETAIL 2
I-4 WESTBOUND
STA. 1145+21.66 TO STA. 1175+61.20

NOTE: OVERBUILD THICKNESS OF SHOULDER SHOULD MATCH OVERBUILD THICKNESS OF L1 AT LOCATION OF MAX OVERBUILD DEPTH SHOWN IN TABLE.

PRELIMINARY subject to changes

OVERBUILD DETAILS

LOCATION		EXIST. SLOPE (%)	PROPOSED SLOPE (%)	MAX. DEPTH OF OVERBUILD (IN.)	LOCATION OF MAX. OVERBUILD DEPTH	WIDTH OF OVERBUILD (FT.)	AREA OF OVERBUILD (SQ. FT.)
STATION	LANE						
1145+21.66	L1.	-2.00%	EXIST	0	N/A	12.00	0
1146+00.00	L1.	-1.64%	-2.00%	0.40	12.00' (RT)	12.00	0.20
1147+00.00	L1.	-2.11%	-2.10%	0.00	12.00' (RT)	12.00	0.00
1148+00.00	L1.	-1.52%	-2.00%	0.60	12.00' (RT)	12.00	0.30
1149+00.00	L1.	-0.95%	-2.00%	1.43	12.00' (RT)	12.00	0.71
1150+00.00	L1.	-0.33%	-2.00%	2.29	12.00' (RT)	12.00	1.15
1151+00.00	L1.	-0.99%	-2.00%	1.36	12.00' (RT)	12.00	0.68
1152+00.00	L1.	-1.56%	-2.00%	0.59	12.00' (RT)	12.00	0.30
1153+00.00	L1.	-1.88%	-2.00%	0.13	12.00' (RT)	12.00	0.06
1154+00.00	L1.	-1.61%	-2.00%	0.49	12.00' (RT)	12.00	0.24
1155+00.00	L1.	-1.58%	-2.00%	0.52	12.00' (RT)	12.00	0.26
1156+00.00	L1.	-1.53%	-2.00%	0.57	12.00' (RT)	12.00	0.28
1157+00.00	L1.	-1.27%	-2.00%	0.91	12.00' (RT)	12.00	0.46
1158+00.00	L1.	-1.11%	-2.00%	1.11	12.00' (RT)	12.00	0.56
1159+00.00	L1.	-1.19%	-2.00%	0.99	12.00' (RT)	12.00	0.50
1160+00.00	L1.	-1.39%	-2.00%	0.77	12.00' (RT)	12.00	0.38
1161+00.00	L1.	-1.98%	-2.00%	0.00	12.00' (RT)	12.00	0.00
1162+00.00	L1.	-1.19%	-2.00%	1.05	12.00' (RT)	12.00	0.52
1163+00.00	L1.	-1.10%	-2.00%	1.16	12.00' (RT)	12.00	0.58
1164+00.00	L1.	-1.45%	-2.00%	0.64	12.00' (RT)	12.00	0.32
1165+00.00	L1.	-1.18%	-2.00%	1.00	12.00' (RT)	12.00	0.50
1166+00.00	L1.	-1.26%	-2.00%	0.91	12.00' (RT)	12.00	0.46
1167+00.00	L1.	-1.34%	-2.00%	0.77	12.00' (RT)	12.00	0.38
1168+00.00	L1.	-1.59%	-2.00%	0.40	12.00' (RT)	12.00	0.20
1169+00.00	L1.	-1.62%	-2.00%	0.41	12.00' (RT)	12.00	0.21
1170+00.00	L1.	-1.15%	-2.00%	1.07	12.00' (RT)	12.00	0.53
1171+00.00	L1.	-1.00%	-2.00%	1.32	12.00' (RT)	12.00	0.66
1172+00.00	L1.	-1.27%	-2.00%	0.85	12.00' (RT)	12.00	0.42
1173+00.00	L1.	-0.92%	-2.00%	1.40	12.00' (RT)	12.00	0.70
1174+00.00	L1.	-1.21%	-2.00%	1.01	12.00' (RT)	12.00	0.51
1175+00.00	L1.	-1.74%	-2.00%	0.22	12.00' (RT)	12.00	0.11
1175+61.20	L1.	-2.00%	EXIST	0.00	N/A	12.00	0

THE OFFICIAL RECORD OF THIS SHEET IS THE ELECTRONIC FILE DIGITALLY SIGNED AND SEALED UNDER RULE 61G15-23.004, F.A.C.

REVISIONS			
DATE	DESCRIPTION	DATE	DESCRIPTION

ENGINEER OF RECORD
DEBANANDA PANIGRAHI, P.E.
LICENSE NUMBER 68318
H. W. LOCHNER
4300 W. CYPRESS STREET, SUITE 500
TAMPA, FLORIDA 33607

STATE OF FLORIDA
DEPARTMENT OF TRANSPORTATION

ROAD NO.	COUNTY	FINANCIAL PROJECT ID
SR 400	POLK	430185-3-52-01

TYPICAL SECTION DETAILS (05)

SHEET NO. 32

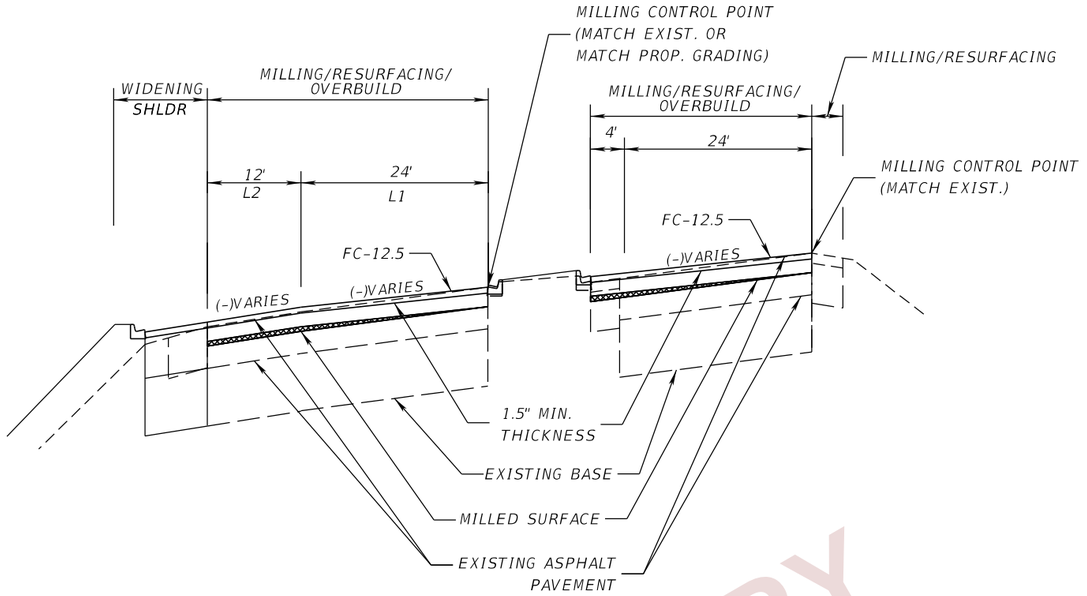

OVERBUILD LIMITS

OVERBUILD DETAIL 3
UNIVERSITY BLVD.
STA. 52+80.00 TO STA. 53+92.10 WB
STA. 52+90.99 TO STA. 53+78.45 EB

UNIVERSITY WB OVERBUILD DETAILS

LOCATION		EXIST. SLOPE (%)	PROPOSED SLOPE (%)	MAX. DEPTH OF OVERBUILD (IN.)	LOCATION OF MAX. OVERBUILD DEPTH	WIDTH OF OVERBUILD (FT.)	AREA OF OVERBUILD (SQ. FT.)
STATION	LANE						
			EXIST	N/A	N/A	N/A	0.00
52+80.00	L2	3.20%	3.70%	8.54	0.00 (RT)	12.00	8.05
53+00.00	L2	3.82%	4.56%	7.73	0.00 (RT)	12.00	7.08
53+42.64	L2	4.62%	5.15%	3.50	0.00 (RT)	12.00	3.06
53+92.10	L2	5.07%	EXIST	N/A	N/A	12.00	0.00

UNIVERSITY WB OVERBUILD DETAILS

LOCATION		EXIST. SLOPE (%)	PROPOSED SLOPE (%)	MAX. DEPTH OF OVERBUILD (IN.)	LOCATION OF MAX. OVERBUILD DEPTH	WIDTH OF OVERBUILD (FT.)	AREA OF OVERBUILD (SQ. FT.)
STATION	LANE						
			EXIST	N/A	N/A	N/A	0.00
52+80.00	L1	3.42%	2.00%	8.54	24.00' (LT)	24.00	12.98
53+00.00	L1	4.41%	2.01%	7.73	24.00' (LT)	24.00	8.55
53+42.64	L1	4.79%	3.72%	3.50	24.00' (LT)	24.00	3.98
53+92.10	L1	4.80%	EXIST	N/A	N/A	24.00	0.00

UNIVERSITY EB OVERBUILD DETAILS

LOCATION		EXIST. SLOPE (%)	PROPOSED SLOPE (%)	MAX. DEPTH OF OVERBUILD (IN.)	LOCATION OF MAX. OVERBUILD DEPTH	WIDTH OF OVERBUILD (FT.)	AREA OF OVERBUILD (SQ. FT.)
STATION	LANE						
			EXIST	N/A	N/A	N/A	0.00
52+90.99		3.52%	3.51%	0.01	28.00' (LT)	28.00	0.01
53+00.00		3.77%	3.74%	0.08	28.00' (LT)	28.00	0.10
53+50.00		4.60%	4.57%	0.09	28.00' (LT)	28.00	0.11
53+78.45		4.55%	EXIST.	EXIST.	EXIST.	28.00	0.00

PRELIMINARY
Subject to Changes

THE OFFICIAL RECORD OF THIS SHEET IS THE ELECTRONIC FILE DIGITALLY SIGNED AND SEALED UNDER RULE 61G15-23.004, F.A.C.

REVISIONS			
DATE	DESCRIPTION	DATE	DESCRIPTION

ENGINEER OF RECORD
DEBANANDA PANIGRAHI, P.E.
LICENSE NUMBER 68318
H. W. LOCHNER
4300 W. CYPRESS STREET, SUITE 500
TAMPA, FLORIDA 33607

STATE OF FLORIDA
DEPARTMENT OF TRANSPORTATION

ROAD NO.	COUNTY	FINANCIAL PROJECT ID
SR 400	POLK	430185-3-52-01

TYPICAL SECTION DETAILS (06)

SHEET NO. 33

GENERAL NOTES

1. The Contractor may use any of the optional pipe materials tabulated for a given structure. Only the material options tabulated for a given structure can be used.

2. Adjustment to the bid quantities, prices and payment will not be allowed due to increase or decrease in structure size, shape, length, width, depth or accessory construction necessary to accommodate the use of an optional pipe material other than the "plotted" option; likewise there will be no added or reduced compensation for structure alterations required to relieve utility conflicts which arise from the use of an optional material other than the "plotted" option.

3. Adjustment to the bid quantities, prices and payment will not be allowed due to increased or decreased excavation, bedding, borrow, backfilling, compaction, special installation requirements or disposal of excess materials due to use of any of the pipe optional materials. Likewise, adjustment in the quantities, prices and payment will not be allowed due to differences in end treatment size or types, pipe length, alternate jointing and connecting materials, saddles, cradles, filter fabrics, shoring or similar features due to the use of an optional material other than the "plotted" option.

4. If adjustments are required due to plan errors or omissions or authorized field changes, the "plotted" material and not the material elected by the Contractor would be used to establish new pay quantities.

5. The Contractor shall notify the Department in writing as to which optional pipe material he chooses to use at the preconstruction conference. Once identified the contactor may not change pipe material selected without the approval of the Engineer.

6. Pipe shapes other than round (Ellipitical/Arch) are summarized and paid for using equivalent round pipe diameter.

OPTIONAL MATERIALS TABULATION

STRUCTURE	SIZE (IN)	MATERIAL	PLOTTED	AS BUILT	REMARKS
Group 1	18	RCP, CLASS II	X		
		NRCP			
		HDPE, CL II			
		SRAP, 14 GA			
		PP, CLASS II			
		PVC ASTM F-949			
		DIP			VERTICAL DRAIN
Group 2	24-36	RCP, CLASS II	X		
		NRCP			
		SRASP, 12 GA			
		SRAP, 14 GA			
		HDPE, CL II			
		PP, CLASS II			
		PVC ASTM F-949			
Group 3	42	RCP, CLASS II	X		
		SRASP, 12 GA			
		SRAP, 14 GA			
		HDPE, CL II			
		PP, CLASS II			
Group 4	48, 60	RCP, CLASS II	X		
		SRASP, 12 GA			
		SRAP, 12 GA			
		HDPE, CL II			
		PP, CLASS II			
Group 5	14X23, 24x38	ERCP, CLASS III	X		
Group 6	19X30, 48x76	ERCP, CLASS III	X		
Group 7	18, 24, 30, 36	PP, Class II			WALL ZONE PIPE
		PVC ASTM F-949	X		
		SP			

PRELIMINARY subject to changes

THE OFFICIAL RECORD OF THIS SHEET IS THE ELECTRONIC FILE DIGITALLY SIGNED AND SEALED UNDER RULE 61G15-23.004, F.A.C.

REVISIONS			
DATE	DESCRIPTION	DATE	DESCRIPTION

ENGINEER OF RECORD
LISANDRO ZAPATA, P.E.
LICENSE NUMBER 58822
H. W. LOCHNER
4300 W. CYPRESS STREET, SUITE 500
TAMPA, FLORIDA 33607

STATE OF FLORIDA
DEPARTMENT OF TRANSPORTATION

ROAD NO.	COUNTY	FINANCIAL PROJECT ID
SR 400	POLK	430185-3-52-01

OPTIONAL MATERIALS TABULATION

SHEET NO. 34

BEGIN PROJECT
STA. 3073+00.00 ℄ CONST. I-4 =
STA. 3998+57.07 ℄ CONST. I-4 EB 1 =
STA. 1073+09.57 ℄ SURVEY I-4

STA. 3120+02.82 ℄ CONST. I-4 =
STA. 3448+16.21 ℄ CONST. SR 33

STA. 136+83.39 ℄ CONST. RAMP A =
STA. 454+53.64 ℄ SURVEY SR 33

STA. 399+79.02
℄ CONST. RAMP D =
STA. 453+58.43
℄ SURVEY SR 33

STA. 4009+09.65 ℄ CONST. I-4 EB1 =
STA. 3083+51.21 ℄ CONST. I-4.

STA. 228+02.44
℄ CONST. RAMP B =
STA. 442+41.58
℄ SURVEY SR 33

STA. 303+04.57 ℄ CONST. RAMP C =
STA. 441+52.01 ℄ SURVEY SR 33

BEGIN CONSTRUCTION
STA. 952+00.00 ℄ SURVEY I-4

STA. 3419+03.72 ℄ CONST. SR 33 =
STA. 50+52.15 ℄ UNIVERSITY BLVD.

BEGIN RECONSTRUCTION SR 33
MATCH FPID 430185-4-52-01
STA. 3399+74.08 ℄ CONST. SR 33
STA. 399+46.72 (27.75' LT) ℄ SURVEY SR 33

SR 400 (I-4)
SR 33
UNIVERSITY BLVD.
FIRST PARK BLVD.
MATCHLINE E-E
MATCHLINE A-A
MATCHLINE B-B
MATCHLINE C-C

BL_SURVEY_I4_C1
BL_EB1_C1
BL_EB1_C2
BL_RAMPA_C1
BL_RAMPA_C2
BL_RAMPA_C3
BL_RAMPA_C4
BL_RAMP_B_C1
BL_RAMP_B_C2
BL_RAMP_B_C3
BL_RAMP_B_C4
BL_RAMP_B_C5
BL_RAMP_B_C6
BL_RAMP_B_C7
BL_RAMP_C_C1
BL_RAMP_C_C2
BL_RAMP_C_C3
BL_RAMP_C_C4
BL_RAMP_D_C1
BL_RAMP_D_C2
BL_RAMP_D_C3
BL_RAMP_D_C4
CL_CONST_I-4_C1
CL_CONST_SR33_C1
CL_CONST_SR33_C2
CL_CONST_SR33_C3
CL_CONST_SR33_C4
CL_CONST_SR33_C5
CL_CONST_SR33_C6
CL_CONST_SR33_C7
CL_CONST_SR33_C8
CL_CONST_SR33_C9
CL_CONST_SR33_C10
CL_CONST_SR33_C11
CL_CONST_SR33_C12
CL_CONST_SR33_C13
CL_CONST_UNIVERSITY_C1

1" = 400'

(XX) PLAN SHEET NUMBER
[XX] PROFILE SHEET NUMBER
[XXXXXXX] CURVE NUMBER

PRELIMINARY
subject to change

REVISIONS				ENGINEER OF RECORD	STATE OF FLORIDA DEPARTMENT OF TRANSPORTATION			PROJECT LAYOUT (1)	SHEET NO.
DATE	DESCRIPTION	DATE	DESCRIPTION	DEBANANDA PANIGRAHI, P.E. LICENSE NUMBER 68318 H. W. LOCHNER 4300 W. CYPRESS STREET, SUITE 500 TAMPA, FLORIDA 33607	ROAD NO.	COUNTY	FINANCIAL PROJECT ID		35
					SR 400	POLK	430185-3-52-01		

JBLOUNT 2/26/2024 4:51:04 PM c:\pw_working\lochner-pw-01\dms18802\playrd01.dgn

THE OFFICIAL RECORD OF THIS SHEET IS THE ELECTRONIC FILE DIGITALLY SIGNED AND SEALED UNDER RULE 61G15-23.004, F.A.C.

CL_CONST_TOMKOW_C1
CL_CONST_TOMKOW_C2
CL_CONST_TOMKOW_C3
CL_CONST_TOMKOW_C4
CL_CONST_TOMKOW_C5
CL_CONST_TOMKOW_C6
CL_CONST_SR33_C16
CL_CONST_SR33_C15
CL_CONST_SR33_C14
BL_RAMP_D_C5
BL_RAMP_D_C6
BL_RAMP_C_C5
BL_EB2_C1
BL_RAMP_C_C6
BL_EB2_C2

1" = 400'

END RECONSTRUCTION
STA. 3495+51.92 ℄ CONST. SR. 33=
STA. 495+41.09 1.46' (RT) ℄ SURVEY SR.33

END CONSTRUCTION
STA. 501+36.74 ℄ SURVEY SR.33

STA. 477+29.12 ℄ SURVEY SR 33 =
STA. 522+04.76 ℄ CONST. TOMKOW RD.

STA. 5021+34.43 ℄ CONST. I-4 EB2 =
STA. 3166+54.95 ℄ CONST. I-4.

END CONSTRUCTION
STA. 1205+80.00
℄ SURVEY I-4 (400)

END PROJECT
STA. 3175+39.51 ℄ CONST. I-4
= STA. 5030+19.21 ℄ CONST. I-4 EB

SR 33
SR 400 (I-4)
MATCHLINE F-F
MATCHLINE A-A
MATCHLINE B-B

PRELIMINARY
Subject to changes

(XX) PLAN SHEET NUMBER
XX PROFILE SHEET NUMBER
XXXXXXX CURVE NUMBER

REVISIONS			
DATE	DESCRIPTION	DATE	DESCRIPTION

ENGINEER OF RECORD
DEBANANDA PANIGRAHI, P.E.
LICENSE NUMBER 68318
H. W. LOCHNER
4300 W. CYPRESS STREET, SUITE 500
TAMPA, FLORIDA 33607

STATE OF FLORIDA
DEPARTMENT OF TRANSPORTATION

ROAD NO.	COUNTY	FINANCIAL PROJECT ID
SR 400	POLK	430185-3-52-01

PROJECT LAYOUT (2)

SHEET NO. 36

JBLOUNT 2/26/2024 4:51:22 PM c:\pw_working\lochner-pw-01\dms18802\playrd02.dgn

THE OFFICIAL RECORD OF THIS SHEET IS THE ELECTRONIC FILE DIGITALLY SIGNED AND SEALED UNDER RULE 61G15-23.004, F.A.C.

BLSUR_I-4					
COORDINATE DATA					
ALIGNMENT	CURVE NUMBER	CONTROL POINT	STATION	COORDINATES	
				NORTH	EAST
BL_Survey_I4		START	1049+20.000	1380544.130	682604.757
BL_Survey_I4	C-1	PC	1050+28.914	1380617.871	682684.910
BL_Survey_I4	C-1	HPI	1076+12.602	1382367.168	684586.332
BL_Survey_I4	C-1	CC		1372184.697	690443.385
BL_Survey_I4	C-1	PT	1101+11.305	1383131.270	687054.447

BLSUR_I-4											
CURVE DATA											
CURVE NO.	LINE	PC	PI	PT	DELTA	DEGREE	TANGENT	LENGTH	RADIUS	e	DESIGN SPEED
C1	BL_Survey_I4	1050+28.914	1076+12.602	1101+11.305	25° 24 ' 43"	0° 30 ' 0"	2583.688	5082.391	11459.16	N/A	N/A

BLSUR-SR33					
COORDINATE DATA					
ALIGNMENT	CURVE NUMBER	CONTROL POINT	STATION	COORDINATES	
				NORTH	EAST
BL_Survey_SR33	C-1	PC	226+86.220	1370238.624	673963.511
BL_Survey_SR33	C-1	HPI	242+93.915	1371362.098	675113.506
BL_Survey_SR33	C-1	CC		1366140.217	677967.403
BL_Survey_SR33	C-1	PT	258+20.999	1371723.311	676680.097
BL_Survey_SR33	C-2	PC	323+51.885	1373190.651	683044.010
BL_Survey_SR33	C-2	HPI	344+03.674	1373651.641	685043.341
BL_Survey_SR33	C-2	CC		1376912.713	682185.806
BL_Survey_SR33	C-2	PT	361+17.590	1375573.111	685762.918
BL_Survey_SR33		HPI	416+66.580	1380766.072	687707.644
BL_Survey_SR33	C-3	PC	440+89.266	1383034.882	688557.296
BL_Survey_SR33	C-3	HPI	469+00.430	1385667.496	689543.191
BL_Survey_SR33	C-3	CC		1381025.479	693922.964
BL_Survey_SR33	C-3	PT	493+16.157	1386498.806	692228.628

BLSUR-SR33											
CURVE DATA											
CURVE NO.	LINE	PC	PI	PT	DELTA	DEGREE	TANGENT	LENGTH	RADIUS	e	DESIGN SPEED
C1	BL_Survey_SR33	226+86.220	242+93.915	258+20.999	31° 20 ' 53"	1° 0 ' 0"	1607.695	3134.779	5729.58	N/A	N/A
C2	BL_Survey_SR33	323+51.885	344+03.674	361+17.590	56° 29 ' 10"	1° 30 ' 0"	2051.789	3765.705	3819.72	N/A	N/A
C3	BL_Survey_SR33	440+89.266	469+00.430	493+16.157	52° 16 ' 8"	1° 0 ' 0"	2811.165	5226.891	5729.58	N/A	N/A

PRELIMINARY
subject to changes

THE OFFICIAL RECORD OF THIS SHEET IS THE ELECTRONIC FILE DIGITALLY SIGNED AND SEALED UNDER RULE 61G15-23.004, F.A.C.

2/26/2024 4:51:56 PM JBLOUNT
c:\pw_working\lochner-pw-01\dms18802\curcrd01.dgn

REVISIONS			
DATE	DESCRIPTION	DATE	DESCRIPTION

ENGINEER OF RECORD
DEBANANDA PANIGRAHI, P.E.
LICENSE NUMBER 68318
H. W. LOCHNER
4300 W. CYPRESS STREET, SUITE 500
TAMPA, FLORIDA 33607

STATE OF FLORIDA
DEPARTMENT OF TRANSPORTATION

ROAD NO.	COUNTY	FINANCIAL PROJECT ID
SR 400	POLK	430185-3-52-01

CURVE AND COORDINATE DATA (01)

SHEET NO. 37

CL_CONST_I4					
COORDINATE DATA					
ALIGNMENT	CURVE NUMBER	CONTROL POINT	STATION	COORDINATES	
				NORTH	EAST
CL_CONST_I4	C-1	PC	3051+00.000	1380629.026	682770.837
CL_CONST_I4	C-1	HPI	3076+33.606	1382333.234	684645.626
CL_CONST_I4	C-1	CC		1372194.245	690438.166
CL_CONST_I4	C-1	PT	3100+86.155	1383082.803	687065.813

CL_CONST_I4											
CURVE DATA											
CURVE NO.	LINE	PC	PI	PT	DELTA	DEGREE	TANGENT	LENGTH	RADIUS	e	DESIGN SPEED
C1	CL_CONST_I4	3051+00.000	3076+33.606	3100+86.155	25° 3 ' 47"	0° 30 ' 11"	2533.606	4986.155	11398.84	-0.028	70 MPH

BL_EB1					
COORDINATE DATA					
ALIGNMENT	CURVE NUMBER	CONTROL POINT	STATION	COORDINATES	
				NORTH	EAST
BL_EB1	C-1	PC	3997+56.910	1381905.733	684436.553
BL_EB1	C-1	HPI	3998+78.458	1381969.631	684539.950
BL_EB1	C-1	CC		1372194.245	690438.166
BL_EB1	C-1	PCC	3999+99.996	1382031.314	684644.683
BL_EB1	C-2	PCC	3999+99.996	1382031.314	684644.683
BL_EB1	C-2	HPI	4008+96.851	1382486.444	685417.474
BL_EB1	C-2	CC		1375396.476	688552.231
BL_EB1	C-2	PT	4017+85.661	1382751.779	686274.181

BL_EB1											
CURVE DATA											
CURVE NO.	LINE	PC	PI	PT	DELTA	DEGREE	TANGENT	LENGTH	RADIUS	e	DESIGN SPEED
C1	BL_EB1	3997+56.910	3998+78.458	3999+99.996	1° 13 ' 12"	0° 30 ' 7"	121.548	243.086	11416.32	-0.028	70 MPH
C2	BL_EB1	3999+99.996	4008+96.851	4017+85.661	13° 17 ' 13"	0° 44 ' 38"	896.855	1785.665	7700	-0.028	70 MPH

BL_EB2					
COORDINATE DATA					
ALIGNMENT	CURVE NUMBER	CONTROL POINT	STATION	COORDINATES	
				NORTH	EAST
BL_EB2	C-1	PC	5000+00.000	1384316.959	691327.789
BL_EB2	C-1	HPI	5007+51.981	1384539.433	692046.107
BL_EB2	C-1	CC		1406209.016	684547.483
BL_EB2	C-1	PRC	5015+03.423	1384808.517	692748.296
BL_EB2	C-2	PRC	5015+03.423	1384808.517	692748.296
BL_EB2	C-2	HPI	5022+61.590	1385079.814	693456.261
BL_EB2	C-2	CC		1363374.401	700961.991
BL_EB2	C-2	PT	5030+19.206	1385303.803	694180.586

BL_EB2											
CURVE DATA											
CURVE NO.	LINE	PC	PI	PT	DELTA	DEGREE	TANGENT	LENGTH	RADIUS	e	DESIGN SPEED
C1	BL_EB2	5000+00.000	5007+51.981	5015+03.423	3° 45 ' 32"	0° 15 ' 0"	751.981	1503.423	22918	NC	70 MPH
C2	BL_EB2	5015+03.423	5022+61.590	5030+19.206	3° 47 ' 2"	0° 15 ' 0"	758.167	1515.782	22954	NC	70 MPH

PRELIMINARY
subject to changes

THE OFFICIAL RECORD OF THIS SHEET IS THE ELECTRONIC FILE DIGITALLY SIGNED AND SEALED UNDER RULE 61G15-23.004, F.A.C.

2/26/2024 4:51:57 PM JBLOUNT
c:\pw_working\lochner-pw-01\dms18802\curcrd01.dgn

REVISIONS			
DATE	DESCRIPTION	DATE	DESCRIPTION

ENGINEER OF RECORD
JERRY WAYNE STOKES, P.E.
LICENSE NUMBER 58436
H. W. LOCHNER
4300 W. CYPRESS STREET, SUITE 500
TAMPA, FLORIDA 33607

STATE OF FLORIDA
DEPARTMENT OF TRANSPORTATION

ROAD NO.	COUNTY	FINANCIAL PROJECT ID
SR 400	POLK	430185-3-52-01

CURVE AND COORDINATE DATA (02)

SHEET NO. 38

BL_RAMPA					
COORDINATE DATA					
ALIGNMENT	CURVE NUMBER	CONTROL POINT	STATION	COORDINATES	
				NORTH	EAST
BL_RAMP_A	C-1	PC	100+85.720	1382806.104	685902.145
BL_RAMP_A	C-1	HPI	106+83.867	1383051.824	686447.491
BL_RAMP_A	C-1	CC		1373948.694	689893.072
BL_RAMP_A	C-1	PT	112+80.506	1383228.787	687018.861
BL_RAMP_A		HPI	118+79.107	1383414.461	687587.938
BL_RAMP_A	C-2	PC	121+03.553	1383480.863	687802.336
BL_RAMP_A	C-2	HPI	125+19.227	1383603.841	688199.403
BL_RAMP_A	C-2	CC		1386155.519	686973.955
BL_RAMP_A	C-2	PT	129+28.874	1383836.866	688543.619
BL_RAMP_A	C-3	PC	134+79.476	1384145.53	688999.568
BL_RAMP_A	C-3	HPI	135+06.029	1384160.415	689021.556
BL_RAMP_A	C-3	CC		1383897.103	689167.746
BL_RAMP_A	C-3	PT	135+32.443	1384171.207	689045.816
BL_RAMP_A	C-4	PC	135+79.659	1384190.397	689088.956
BL_RAMP_A	C-4	HPI	136+32.053	1384211.692	689136.827
BL_RAMP_A	C-4	CC		1384350.291	689017.83
BL_RAMP_A	C-4	PT	136+81.473	1384255.789	689165.12

BL_RAMPA											
CURVE DATA											
CURVE NO.	LINE	PC	PI	PT	DELTA	DEGREE	TANGENT	LENGTH	RADIUS	e	DESIGN SPEED
C1	BL_RAMP_A	100+85.720	106+83.867	112+80.506	7° 2 ' 46"	0° 35 ' 24"	598.147	1194.786	9715	0.02	55 MPH
C2	BL_RAMP_A	121+03.553	125+19.227	129+28.874	16° 53 ' 17"	2° 2 ' 46"	415.675	825.321	2800	0.049	55 MPH
C3	BL_RAMP_A	134+79.476	135+06.029	135+32.443	10° 6 ' 58"	19° 5 ' 56"	26.552	52.967	300	NC*	20 MPH
C4	BL_RAMP_A	135+79.659	136+32.053	136+81.473	33° 20 ' 6"	32° 44 ' 24"	52.394	101.814	175	NC*	20 MPH

BL_RAMP_B					
COORDINATE DATA					
ALIGNMENT	CURVE NUMBER	CONTROL POINT	STATION	COORDINATES	
				NORTH	EAST
BL_RAMP_B		START	199+08.580	1382568.088	685849.478
BL_RAMP_B	C-1	PC	202+73.753	1382666.376	686201.174
BL_RAMP_B	C-1	HPI	206+50.156	1382767.687	686563.687
BL_RAMP_B	C-1	CC		1408669.991	678933.988
BL_RAMP_B	C-1	PRC	210+26.510	1382879.064	686923.235
BL_RAMP_B	C-2	PRC	210+26.510	1382879.064	686923.235
BL_RAMP_B	C-2	HPI	214+25.950	1382997.258	687304.788
BL_RAMP_B	C-2	CC		1372371.649	690178.113
BL_RAMP_B	C-2	PRC	218+25.040	1383087.466	687693.909
BL_RAMP_B	C-3	PRC	218+25.040	1383087.466	687693.909
BL_RAMP_B	C-3	HPI	218+37.340	1383090.244	687705.891
BL_RAMP_B	C-3	CC		1398470.508	684127.721
BL_RAMP_B	C-3	PCC	218+49.640	1383093.04	687717.869
BL_RAMP_B	C-4	PCC	218+49.640	1383084.276	687719.915
BL_RAMP_B	C-4	HPI	222+13.301	1383166.956	688074.053
BL_RAMP_B	C-4	CC		1398470.508	684127.721
BL_RAMP_B	C-4	PRC	225+76.834	1383265.841	688424.012
BL_RAMP_B	C-5	PRC	225+76.834	1383265.841	688424.012
BL_RAMP_B	C-5	HPI	226+30.130	1383280.333	688475.3
BL_RAMP_B	C-5	CC		1383073.377	688478.395
BL_RAMP_B	C-5	PCC	226+81.005	1383267.382	688526.998
BL_RAMP_B	C-6	PCC	226+81.005	1383267.382	688526.998
BL_RAMP_B	C-6	HPI	227+19.117	1383258.12	688563.968
BL_RAMP_B	C-6	CC		1383163.589	688500.995
BL_RAMP_B	C-6	PCC	227+54.231	1383227.573	688586.758
BL_RAMP_B	C-7	PCC	227+54.231	1383227.573	688586.758
BL_RAMP_B	C-7	HPI	227+79.503	1383207.317	688601.869
BL_RAMP_B	C-7	CC		1383188.704	688534.659
BL_RAMP_B	C-7	PT	228+02.436	1383182.173	688599.33

BL_RAMP_B											
CURVE DATA											
CURVE NO.	LINE	PC	PI	PT	DELTA	DEGREE	TANGENT	LENGTH	RADIUS	e	DESIGN SPEED
C1	BL_RAMP_B	202+73.753	206+50.156	210+26.510	1° 35 ' 49"	0° 12 ' 43"	376.403	752.757	27000	NC	55 MPH
C2	BL_RAMP_B	210+26.510	214+25.950	218+25.040	4° 9 ' 32"	0° 31 ' 16"	399.441	798.53	11000	NC	55 MPH
C3	BL_RAMP_B	218+25.040	218+37.340	218+49.640	0° 5 ' 20"	0° 21 ' 47"	12.3	24.6	15791	NC	55 MPH
C4	BL_RAMP_B	218+49.640	222+13.301	225+76.834	2° 38 ' 13"	0° 21 ' 47"	363.661	727.194	15800	-0.02	55 MPH
C5	BL_RAMP_B	225+76.834	226+30.130	226+81.005	29° 50 ' 35"	28° 38 ' 53"	53.296	104.171	200	-0.02	20 MPH
C6	BL_RAMP_B	226+81.005	227+19.117	227+54.231	39° 12 ' 40"	53° 32 ' 49"	38.112	73.226	107	NC*	20 MPH
C7	BL_RAMP_B	227+54.231	227+79.503	228+02.436	42° 29 ' 28"	88° 8 ' 49"	25.272	48.205	65	NC*	20 MPH

* SEE GRADING SHEET

PRELIMINARY
subject to change

THE OFFICIAL RECORD OF THIS SHEET IS THE ELECTRONIC FILE DIGITALLY SIGNED AND SEALED UNDER RULE 61G15-23.004, F.A.C.

2/26/2024 4:51:57 PM JBLOUNT
c:\pw_working\lochner-pw-01\dms188023\curcrd01.dgn

REVISIONS				ENGINEER OF RECORD	STATE OF FLORIDA DEPARTMENT OF TRANSPORTATION			CURVE AND COORDINATE DATA (03)	SHEET NO.
DATE	DESCRIPTION	DATE	DESCRIPTION	DEBANANDA PANIGRAHI, P.E. LICENSE NUMBER 68318 H. W. LOCHNER 4300 W. CYPRESS STREET, SUITE 500 TAMPA, FLORIDA 33607	ROAD NO.	COUNTY	FINANCIAL PROJECT ID		39
					SR 400	POLK	430185-3-52-01		

BL_RAMP_C					
COORDINATE DATA					
ALIGNMENT	CURVE NUMBER	CONTROL POINT	STATION	COORDINATES	
				NORTH	EAST
BL_RAMP_C	C-1	PC	303+04.574	1383056.489	688675.296
BL_RAMP_C	C-1	HPI	303+47.703	1383093.669	688697.154
BL_RAMP_C	C-1	CC		1382985.524	688796.003
BL_RAMP_C	C-1	PT	303+88.250	1383112.106	688736.144
BL_RAMP_C	C-2	PC	304+26.973	1383128.66	688771.15
BL_RAMP_C	C-2	HPI	304+57.394	1383141.665	688798.651
BL_RAMP_C	C-2	CC		1383399.865	688642.901
BL_RAMP_C	C-2	PT	304+87.608	1383159.926	688822.982
BL_RAMP_C		HPI	305+36.410	1383189.22	688862.014
BL_RAMP_C	C-3	PC	306+59.411	1383263.054	688960.39
BL_RAMP_C	C-3	HPI	308+04.815	1383350.335	689076.683
BL_RAMP_C	C-3	CC		1381263.559	690461.063
BL_RAMP_C	C-3	PCC	309+49.891	1383423.546	689202.311
BL_RAMP_C	C-4	PCC	309+49.891	1383423.546	689202.311
BL_RAMP_C	C-4	HPI	310+78.314	1383488.207	689313.267
BL_RAMP_C	C-4	CC		1380123.329	691125.542
BL_RAMP_C	C-4	PT	312+06.639	1383545.269	689428.316
BL_RAMP_C	C-5	PC	315+05.647	1383675.711	689697.371
BL_RAMP_C	C-5	HPI	315+92.618	1383708.152	689778.065
BL_RAMP_C	C-5	CC		1380123.329	691125.542
BL_RAMP_C	C-5	PT	316+79.559	1383736.896	689860.149
BL_RAMP_C		HPI	324+01.272	1383975.423	690541.306
BL_RAMP_C		HPI	331+12.103	1384210.017	691212.31
BL_RAMP_C	C-6	PC	340+80.991	1384529.777	692126.912
BL_RAMP_C	C-6	HPI	341+85.507	1384564.271	692225.572
BL_RAMP_C	C-6	CC		1406209.017	684547.483
BL_RAMP_C	C-6	PT	342+90.021	1384599.66	692323.914

BL_RAMP_C											
CURVE DATA											
CURVE NO.	LINE	PC	PI	PT	DELTA	DEGREE	TANGENT	LENGTH	RADIUS	e	DESIGN SPEED
C1	BL_RAMP_C	303+04.574	303+47.703	303+88.250	34° 14 ' 20"	40° 55 ' 8"	43.129	83.676	140.022	NC*	20 MPH
C2	BL_RAMP_C	304+26.973	304+57.394	304+87.608	11° 34 ' 48"	19° 5 ' 56"	30.421	60.635	300	NC*	20 MPH
C3	BL_RAMP_C	306+59.411	308+04.815	309+49.891	6° 39 ' 25"	2° 17 ' 31"	145.404	290.48	2500	0.054	50 MPH
C4	BL_RAMP_C	309+49.891	310+78.314	312+06.639	3° 51 ' 4"	1° 30 ' 0"	128.422	256.748	3819.719	0.037	50 MPH
C5	BL_RAMP_C	315+05.647	315+92.618	316+79.559	2° 36 ' 11"	1° 29 ' 46"	86.971	173.912	3828.719	0.037	50 MPH
C6	BL_RAMP_C	340+80.991	341+85.507	342+90.021	0° 31 ' 16"	0° 14 ' 56"	104.516	209.03	22966	NC	50 MPH

BL_RAMP_D											
CURVE DATA											
CURVE NO.	LINE	PC	PI	PT	DELTA	DEGREE	TANGENT	LENGTH	RADIUS	e	DESIGN SPEED
C1	BL_RAMP_D	399+79.318	400+14.080	400+43.161	56° 16 ' 34"	88° 8 ' 49"	34.762	63.843	65	NC*	20 MPH
C2	BL_RAMP_D	400+43.161	400+77.763	401+10.092	35° 50 ' 24"	53° 32 ' 49"	34.601	66.931	107	NC*	20 MPH
C3	BL_RAMP_D	401+10.092	401+52.145	401+92.990	23° 44 ' 53"	28° 38 ' 53"	42.053	82.898	200	NC*	20 MPH
C4	BL_RAMP_D	401+92.990	402+17.156	402+41.282	5° 40 ' 12"	11° 44 ' 28"	24.166	48.292	488	NC	20 MPH
C5	BL_RAMP_D	406+22.617	409+59.807	412+96.562	5° 2 ' 17"	0° 44 ' 53"	337.19	673.945	7664	-0.02	55 MPH
C6	BL_RAMP_D	412+96.562	413+72.662	414+48.757	1° 8 ' 20"	0° 44 ' 53"	76.1	152.195	7655	-0.02	55 MPH

BL_RAMP_D					
COORDINATE DATA					
ALIGNMENT	CURVE NUMBER	CONTROL POINT	STATION	COORDINATES	
				NORTH	EAST
BL_RAMP_D	C-1	PC	399+79.016	1384106.876	689218.068
BL_RAMP_D	C-1	HPI	400+13.778	1384072.892	689210.753
BL_RAMP_D	C-1	CC		1384093.197	689281.613
BL_RAMP_D	C-1	PCC	400+42.859	1384047.94	689234.956
BL_RAMP_D	C-2	PCC	400+42.859	1384047.94	689234.956
BL_RAMP_D	C-2	HPI	400+77.460	1384023.104	689259.048
BL_RAMP_D	C-2	CC		1384122.44	689311.76
BL_RAMP_D	C-2	PCC	401+09.790	1384017.076	689293.12
BL_RAMP_D	C-3	PCC	401+09.790	1384017.076	689293.12
BL_RAMP_D	C-3	HPI	401+51.843	1384009.75	689334.53
BL_RAMP_D	C-3	CC		1384214.018	689327.961
BL_RAMP_D	C-3	PCC	401+92.688	1384019.722	689375.383
BL_RAMP_D	C-4	PCC	401+92.688	1384019.722	689375.383
BL_RAMP_D	C-4	HPI	402+16.854	1384025.452	689398.86
BL_RAMP_D	C-4	CC		1384493.805	689259.672
BL_RAMP_D	C-4	PT	402+40.980	1384033.473	689421.655
BL_RAMP_D	C-5	PC	407+25.381	1384194.261	689878.593
BL_RAMP_D	C-5	HPI	410+11.198	1384289.133	690148.204
BL_RAMP_D	C-5	CC		1378766.494	691788.529
BL_RAMP_D	C-5	PCC	412+96.545	1384356.819	690425.891
BL_RAMP_D	C-6	PCC	412+96.545	1384348.075	690428.022
BL_RAMP_D	C-6	HPI	413+21.117	1384353.894	690451.896
BL_RAMP_D	C-6	CC		1378766.494	691788.529
BL_RAMP_D	C-6	PT	413+45.690	1384359.509	690475.818

* SEE GRADING SHEET

PRELIMINARY subject to change

THE OFFICIAL RECORD OF THIS SHEET IS THE ELECTRONIC FILE DIGITALLY SIGNED AND SEALED UNDER RULE 61G15-23.004, F.A.C.

2/26/2024 4:51:58 PM JBLOUNT
c:\pw_working\lochner-pw-01\dms138802\curcrd01.dgn

REVISIONS			
DATE	DESCRIPTION	DATE	DESCRIPTION

ENGINEER OF RECORD
DEBANANDA PANIGRAHI, P.E.
LICENSE NUMBER 68318
H. W. LOCHNER
4300 W. CYPRESS STREET, SUITE 500
TAMPA, FLORIDA 33607

STATE OF FLORIDA
DEPARTMENT OF TRANSPORTATION

ROAD NO.	COUNTY	FINANCIAL PROJECT ID
SR 400	POLK	430185-3-52-01

CURVE AND COORDINATE DATA (04)

SHEET NO. 40

CL_CONST_SR33 COORDINATE DATA					
ALIGNMENT	CURVE NO.	CONTROL POINT	STATION	COORDINATES	
				NORTH	EAST
CL_CONST_SR33		START	3259+00.000	1371714.020	676763.314
CL_CONST_SR33	C-1	PC	3323+51.885	1373163.610	683050.245
CL_CONST_SR33	C-1	HPI	3344+18.580	1373627.949	685064.101
CL_CONST_SR33	C-1	CC		1376912.713	682185.806
CL_CONST_SR33	C-1	PT	3361+44.947	1375563.379	685788.905
CL_CONST_SR33		HPI	3399+73.997	1379149.228	687131.779
CL_CONST_SR33	C-2	PC	3410+02.834	1380112.718	687492.599
CL_CONST_SR33	C-2	HPI	3412+07.034	1380303.948	687564.214
CL_CONST_SR33	C-2	CC		1377482.417	694516.239
CL_CONST_SR33	C-2	PT	3414+11.133	1380490.999	687646.127
CL_CONST_SR33	C-3	PC	3415+11.978	1380583.374	687686.581
CL_CONST_SR33	C-3	HPI	3415+94.825	1380659.264	687719.815
CL_CONST_SR33	C-3	CC		1380980.106	686780.642
CL_CONST_SR33	C-3	PRC	3416+77.287	1380739.625	687739.959
CL_CONST_SR33	C-4	PRC	3416+77.287	1380739.625	687739.959
CL_CONST_SR33	C-4	HPI	3417+43.222	1380803.581	687755.992
CL_CONST_SR33	C-4	CC		1380618.047	688224.953
CL_CONST_SR33	C-4	PRC	3418+08.401	1380861.195	687788.056
CL_CONST_SR33	C-5	PRC	3418+08.401	1380861.195	687788.056
CL_CONST_SR33	C-5	HPI	3419+83.875	1381014.523	687873.389
CL_CONST_SR33	C-5	CC		1381409.554	686802.748
CL_CONST_SR33	C-5	PRC	3421+56.557	1381186.531	687908.094
CL_CONST_SR33	C-6	PRC	3421+56.557	1381186.531	687908.094
CL_CONST_SR33	C-6	HPI	3422+35.464	1381263.879	687923.701
CL_CONST_SR33	C-6	CC		1380990.925	688877.558
CL_CONST_SR33	C-6	PT	3423+14.037	1381337.774	687951.374
CL_CONST_SR33	C-7	PC	3434+75.110	1382425.102	688358.570
CL_CONST_SR33	C-7	HPI	3436+78.939	1382615.985	688430.055
CL_CONST_SR33	C-7	CC		1378318.676	699323.877
CL_CONST_SR33	C-7	PT	3438+82.727	1382804.265	688508.139
CL_CONST_SR33	C-8	PC	3442+59.895	1383152.658	688652.628
CL_CONST_SR33	C-8	HPI	3443+29.564	1383217.013	688679.317
CL_CONST_SR33	C-8	CC		1382961.114	689114.484
CL_CONST_SR33	C-8	PRC	3443+98.342	1383271.620	688722.583

CL_CONST_SR33 COORDINATE DATA					
ALIGNMENT	CURVE NO.	CONTROL POINT	STATION	COORDINATES	
				NORTH	EAST
CL_CONST_SR33	C-9	PRC	3443+98.342	1383271.620	688722.583
CL_CONST_SR33	C-9	HPI	3444+75.721	1383332.270	688770.636
CL_CONST_SR33	C-9	CC		1383582.126	688330.682
CL_CONST_SR33	C-9	PRC	3445+51.882	1383404.608	688798.109
CL_CONST_SR33	C-10	PRC	3445+51.882	1383404.608	688798.109
CL_CONST_SR33	C-10	HPI	3448+53.017	1383686.124	688905.022
CL_CONST_SR33	C-10	CC		1380962.554	695228.345
CL_CONST_SR33	C-10	PCC	3451+53.767	1383957.220	689036.129
CL_CONST_SR33	C-11	PCC	3451+53.767	1383957.220	689036.129
CL_CONST_SR33	C-11	HPI	3452+31.288	1384027.009	689069.880
CL_CONST_SR33	C-11	CC		1383739.532	689486.253
CL_CONST_SR33	C-11	PRC	3453+07.585	1384083.301	689123.179
CL_CONST_SR33	C-12	PRC	3453+07.585	1384083.301	689123.179
CL_CONST_SR33	C-12	HPI	3454+01.330	1384151.374	689187.632
CL_CONST_SR33	C-12	CC		1384427.070	688760.105
CL_CONST_SR33	C-12	PRC	3454+92.923	1384238.171	689223.049
CL_CONST_SR33	C-13	PRC	3454+92.923	1384238.171	689223.049
CL_CONST_SR33	C-13	HPI	3455+76.384	1384315.446	689254.580
CL_CONST_SR33	C-13	CC		1383977.867	689860.985
CL_CONST_SR33	C-13	PCC	3456+59.036	1384382.958	689303.650
CL_CONST_SR33	C-14	PCC	3456+59.036	1384382.958	689303.650
CL_CONST_SR33	C-14	HPI	3461+68.217	1384794.837	689603.018
CL_CONST_SR33	C-14	CC		1381025.479	693922.964
CL_CONST_SR33	C-14	PCC	3466+74.711	1385147.253	689970.534
CL_CONST_SR33	C-15	PCC	3466+74.711	1385147.253	689970.534
CL_CONST_SR33	C-15	HPI	3473+69.282	1385627.975	690471.866
CL_CONST_SR33	C-15	CC		1381024.784	693923.523
CL_CONST_SR33	C-15	PCC	3480+57.065	1385974.529	691073.804
CL_CONST_SR33	C-16	PCC	3480+57.065	1385974.529	691073.804
CL_CONST_SR33	C-16	HPI	3487+73.486	1386331.985	691694.678
CL_CONST_SR33	C-16	CC		1380408.534	694278.317
CL_CONST_SR33	C-16	PT	3494+84.007	1386543.843	692379.057

* NORMAL CROWN FOR FULL LENGTH OF PROJECT ALONG SR 33

CL_CONST_SR33 CURVE DATA									
CURVE NO.	LINE	PC	PI	PT	DELTA	DEGREE	TANGENT	LENGTH	RADIUS
C1	CL_CONST_SR33	3323+51.885	3344+18.580	3361+44.947	56° 29 ' 10"	1° 29 ' 20"	2066.695	3793.063	3847.47
C2	CL_CONST_SR33	3410+02.834	3412+07.034	3414+11.133	3° 7 ' 8"	0° 45 ' 50"	204.2	408.299	7500
C3	CL_CONST_SR33	3415+11.978	3415+94.825	3416+77.287	9° 34 ' 37"	5° 47 ' 35"	82.847	165.309	989
C4	CL_CONST_SR33	3416+77.287	3417+43.222	3418+08.401	15° 1 ' 30"	11° 27 ' 32"	65.936	131.114	500
C5	CL_CONST_SR33	3418+08.401	3419+83.875	3421+56.557	17° 41 ' 24"	5° 4 ' 52"	175.474	348.156	1127.622
C6	CL_CONST_SR33	3421+56.557	3422+35.464	3423+14.037	9° 7 ' 23"	5° 47 ' 35"	78.907	157.48	989
C7	CL_CONST_SR33	3434+75.110	3436+78.939	3438+82.727	1° 59 ' 42"	0° 29 ' 20"	203.829	407.617	11709
C8	CL_CONST_SR33	3442+59.895	3443+29.564	3443+98.342	15° 51 ' 54"	11° 27 ' 32"	69.669	138.447	500
C9	CL_CONST_SR33	3443+98.342	3444+75.721	3445+51.882	17° 35 ' 38"	11° 27 ' 32"	77.379	153.54	500
C10	CL_CONST_SR33	3445+51.882	3448+53.017	3451+53.767	5° 0 ' 50"	0° 49 ' 59"	301.134	601.884	6878.34
C11	CL_CONST_SR33	3451+53.767	3452+31.288	3453+07.585	17° 37 ' 34"	11° 27 ' 32"	77.522	153.818	500
C12	CL_CONST_SR33	3453+07.585	3454+01.330	3454+92.923	21° 14 ' 17"	11° 27 ' 32"	93.745	185.338	500
C13	CL_CONST_SR33	3454+92.923	3455+76.384	3456+59.036	13° 48 ' 50"	8° 18 ' 58"	83.461	166.113	689
C14	CL_CONST_SR33	3456+59.036	3461+68.217	3466+74.711	10° 11 ' 28"	1° 0 ' 11"	509.181	1015.675	5710.58
C15	CL_CONST_SR33	3466+74.711	3473+69.282	3480+57.065	13° 52 ' 1"	1° 0 ' 11"	694.571	1382.354	5711.469
C16	CL_CONST_SR33	3480+57.065	3487+73.486	3494+84.007	12° 43 ' 48"	0° 53 ' 31"	716.421	1426.942	6422.555

PRELIMINARY PLANS subject to change

REVISIONS			
DATE	DESCRIPTION	DATE	DESCRIPTION

ENGINEER OF RECORD
DEBANANDA PANIGRAHI, P.E.
LICENSE NUMBER 68318
H. W. LOCHNER
4300 W. CYPRESS STREET, SUITE 500
TAMPA, FLORIDA 33607

STATE OF FLORIDA
DEPARTMENT OF TRANSPORTATION

ROAD NO.	COUNTY	FINANCIAL PROJECT ID
SR 400	POLK	430185-3-52-01

CURVE AND COORDINATE DATA (05)

SHEET NO. 41

THE OFFICIAL RECORD OF THIS SHEET IS THE ELECTRONIC FILE DIGITALLY SIGNED AND SEALED UNDER RULE 61G15-23.004, F.A.C.

2/26/2024 4:51:59 PM JBLOUNT
c:\pw_working\lochner-pw-01\dms18802\curcrd01.dgn

CL_CONST_TOMKOW					
COORDINATE DATA					
ALIGNMENT	CURVE NUMBER	CONTROL POINT	STATION	COORDINATES	
				NORTH	EAST
CL_CONST_TOMKOW	C-1	PC	500+00.000	1385552.626	689244.714
CL_CONST_TOMKOW	C-1	HPI	502+19.213	1385333.454	689248.942
CL_CONST_TOMKOW	C-1	CC		1385563.619	689814.608
CL_CONST_TOMKOW	C-1	PCC	504+18.548	1385173.594	689398.940
CL_CONST_TOMKOW	C-2	PCC	504+18.548	1385173.594	689398.940
CL_CONST_TOMKOW	C-2	HPI	504+81.135	1385127.953	689441.765
CL_CONST_TOMKOW	C-2	CC		1386413.728	690720.611
CL_CONST_TOMKOW	C-2	PCC	505+43.672	1385085.375	689487.637
CL_CONST_TOMKOW	C-3	PCC	505+43.672	1385085.375	689487.637
CL_CONST_TOMKOW	C-3	HPI	506+81.403	1384991.676	689588.584
CL_CONST_TOMKOW	C-3	CC		1385187.985	689582.879
CL_CONST_TOMKOW	C-3	PRC	507+61.296	1385091.078	689683.920
CL_CONST_TOMKOW	C-4	PRC	507+61.296	1385091.078	689683.920
CL_CONST_TOMKOW	C-4	HPI	513+60.058	1385523.216	690098.376
CL_CONST_TOMKOW	C-4	CC		1381025.479	693922.963
CL_CONST_TOMKOW	C-4	PCC	519+54.698	1385862.831	690591.506
CL_CONST_TOMKOW	C-5	PCC	519+54.698	1385862.831	690591.506
CL_CONST_TOMKOW	C-5	HPI	519+90.759	1385883.285	690621.205
CL_CONST_TOMKOW	C-5	CC		1385533.398	690818.384
CL_CONST_TOMKOW	C-5	PCC	520+26.626	1385898.098	690654.084
CL_CONST_TOMKOW	C-6	PCC	520+26.626	1385898.098	690654.084
CL_CONST_TOMKOW	C-6	HPI	521+08.022	1385931.531	690728.297
CL_CONST_TOMKOW	C-6	CC		1385811.481	690693.105
CL_CONST_TOMKOW	C-6	PT	521+61.228	1385863.322	690772.714

CL_CONST_TOMKOW											
CURVE DATA											
CURVE NO.	LINE	PC	PI	PT	DELTA	DEGREE	TANGENT	LENGTH	RADIUS	e	DESIGN SPEED
C1	CL_CONST_TOMKOW	500+00.00	502+19.213	504+18.548	42° 4 ' 19"	10° 3 ' 7"	219.213	418.548	570	N/A	20 MPH
C2	CL_CONST_TOMKOW	504+18.548	504+81.135	505+43.672	3° 57 ' 22"	3° 9 ' 40"	62.587	125.124	1812.387	N/A	20 MPH
C3	CL_CONST_TOMKOW	505+43.672	506+81.403	507+61.296	89° 3 ' 50"	40° 55 ' 34"	137.731	217.624	140	N/A	20 MPH
C4	CL_CONST_TOMKOW	507+61.296	513+60.058	519+54.698	11° 38 ' 28"	0° 58 ' 30"	598.762	1193.402	5873.55	N/A	20 MPH
C5	CL_CONST_TOMKOW	519+54.698	519+90.759	520+26.626	10° 18 ' 11"	14° 19 ' 26"	36.061	71.928	400	N/A	20 MPH
C6	CL_CONST_TOMKOW	520+26.626	521+08.022	521+61.228	81° 10 ' 48"	60° 18 ' 40"	81.396	134.602	95	N/A	20 MPH

CL_CONST_FIRST_PARK					
COORDINATE DATA					
ALIGNMENT	CURVE NUMBER	CONTROL POINT	STATION	COORDINATES	
				NORTH	EAST
CL_CONST_FIRST_PARK		START	30+00.000	1381153.879	687276.250
CL_CONST_FIRST_PARK		HPI	30+90.046	1381122.284	687360.572

CL_CONST_UNIVERSITY					
COORDINATE DATA					
ALIGNMENT	CURVE NUMBER	CONTROL POINT	STATION	COORDINATES	
				NORTH	EAST
CL_CONST_UNIVERSITY		START	50+00.000	1380964.631	687782.002
CL_CONST_UNIVERSITY	C-1	PC	52+05.698	1380892.486	687974.633
CL_CONST_UNIVERSITY	C-1	HPI	55+75.189	1380762.895	688320.653
CL_CONST_UNIVERSITY	C-1	CC		1381165.235	688076.783
CL_CONST_UNIVERSITY	C-1	PT	57+31.849	1381129.612	688365.846

CL_CONST_UNIVERSITY											
CURVE DATA											
CURVE NO.	LINE	PC	PI	PT	DELTA	DEGREE	TANGENT	LENGTH	RADIUS	e	DESIGN SPEED
C1	CL_CONST_UNIVERSITY	52+05.698	55+75.189	57+31.849	103° 30 ' 22"	19° 40 ' 19"	369.491	526.151	291.25	N/A	N/A

PRELIMINARY
subject to changes

THE OFFICIAL RECORD OF THIS SHEET IS THE ELECTRONIC FILE DIGITALLY SIGNED AND SEALED UNDER RULE 61G15-23.004, F.A.C.

2/26/2024 4:51:59 PM JBLOUNT
c:\pw_working\lochner-pw-01\dms18802\curcrd01.dgn

REVISIONS				ENGINEER OF RECORD	STATE OF FLORIDA DEPARTMENT OF TRANSPORTATION			CURVE AND COORDINATE DATA (06)	SHEET NO.
DATE	DESCRIPTION	DATE	DESCRIPTION	DEBANANDA PANIGRAHI, P.E. LICENSE NUMBER 68318 H. W. LOCHNER 4300 W. CYPRESS STREET, SUITE 500 TAMPA, FLORIDA 33607	ROAD NO.	COUNTY	FINANCIAL PROJECT ID		42
					SR 400	POLK	430185-3-52-01		

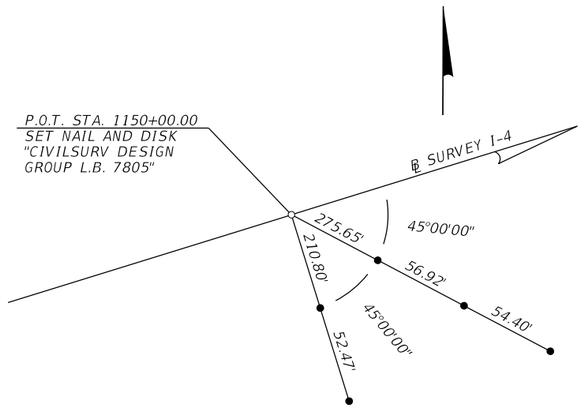

P.O.T. STA. 1150+00.00

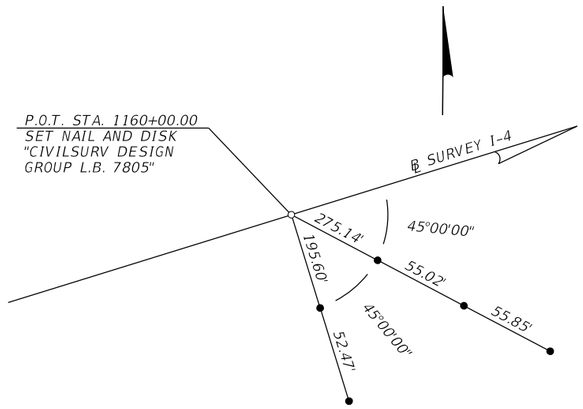

P.O.T. STA. 1160+00.00

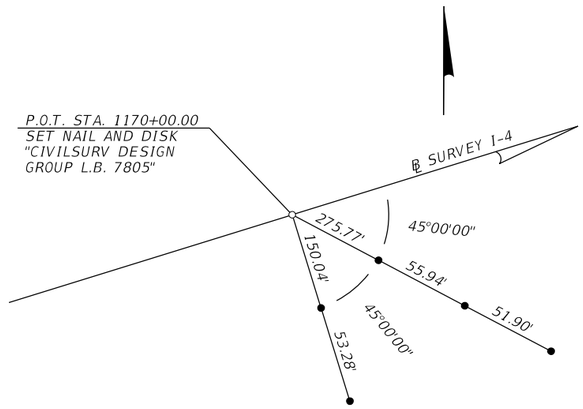

P.O.T. STA. 1170+00.00

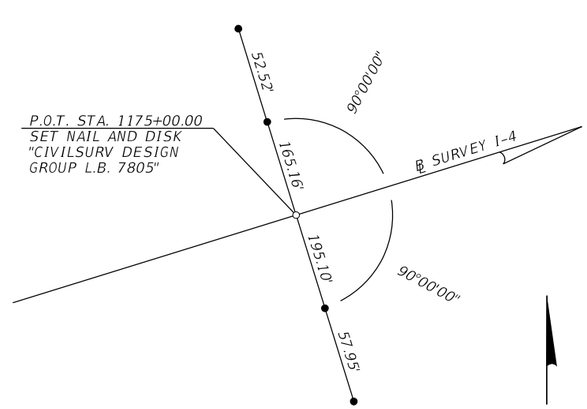

P.O.T. STA. 1175+00.00

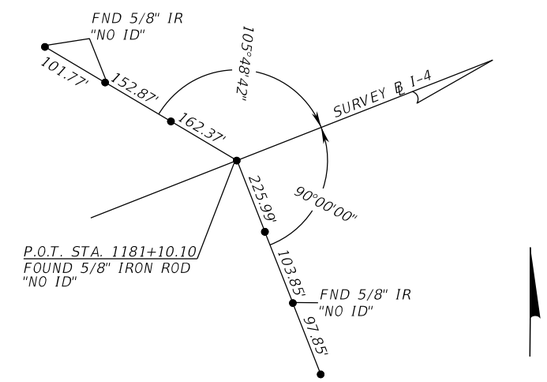

P.O.T. STA. 1181+10.10

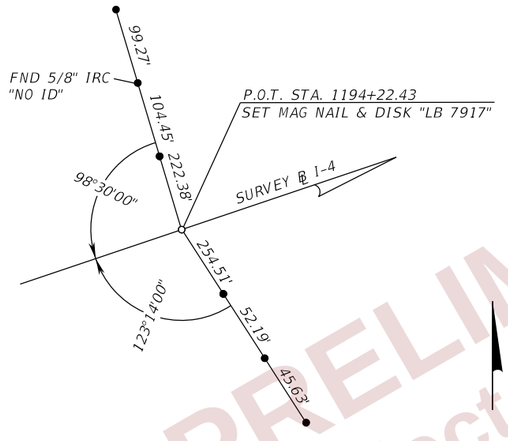

P.O.T. STA. 1194+22.43

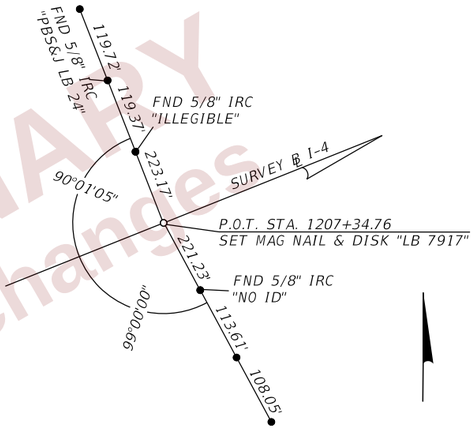

P.O.T. STA. 1207+34.76

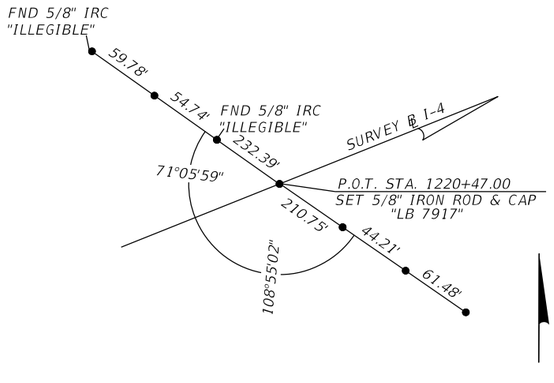

P.O.T. STA. 1220+47.00

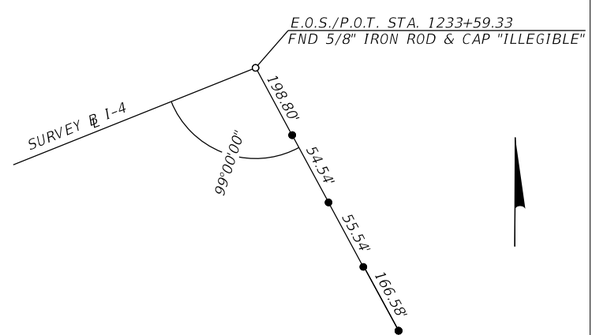

E.O.S./P.O.T. STA. 1233+59.33

PROJECT CONTROL NOTES:

1. ALL SURVEY INFORMATION WAS OBTAINED FROM A LICENSED FLORIDA PROFESSIONAL SURVEYOR AND MAPPER AND UTILIZED AS SUPPORING DATA IN THE PRODUCTION OF DESIGN PLANS AND FOR CONSTRUCTION ON SUBJECT PROJECT.

THE PROFFESSIONAL SURVEYOR AND MAPPER OF RECORD IS:
CHRISTOPHER J. BOSSHART, P.S.M.
P.S.M. NO.: 7150
MCKIM & CREED, INC.
3903 NORTHDALE BOULEVARD, SUITE 115E

LEGEND

○	=	SET NAIL AND CIVILSURV DESIGN GROUP L.B. 7805 DISK
●		(UNLESS OTHERWISE NOTED)
	=	SET 5/8" IRON ROD AND CIVILSURV REFERENCE CAP (UNLESS OTHERWISE NOTED)
L.B.	=	LICENSED BUSINESS
FND	=	FOUND
P.C.	=	POINT OF CURVE
P.I.	=	POINT OF INTERSECTION
P.T.	=	POINT OF TANGENT
P.O.T.	=	POINT ON TANGENT
P.O.C.	=	POINT ON CURVE
STA.	=	STATION
T.C.	=	TANGENT CURVE

I-4 (SR 400)

PRELIMINARY
Subject to changes

THE OFFICIAL RECORD OF THIS SHEET IS THE ELECTRONIC FILE DIGITALLY SIGNED AND SEALED UNDER RULE 61G15-23.004, F.A.C.

REVISIONS				ENGINEER OF RECORD	STATE OF FLORIDA DEPARTMENT OF TRANSPORTATION				SHEET NO.
DATE	DESCRIPTION	DATE	DESCRIPTION	DEBANANDA PANIGRAHI, P.E. LICENSE NUMBER 68318 H. W. LOCHNER 4300 W. CYPRESS STREET, SUITE 500 TAMPA, FLORIDA 33607	ROAD NO.	COUNTY	FINANCIAL PROJECT ID	PROJECT NETWORK CONTROL (01)	43
					SR 400	POLK	430185-3-52-01		

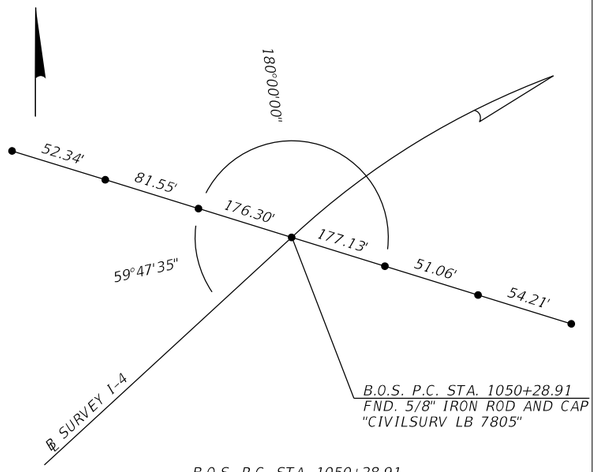

B.O.S. P.C. STA. 1050+28.91

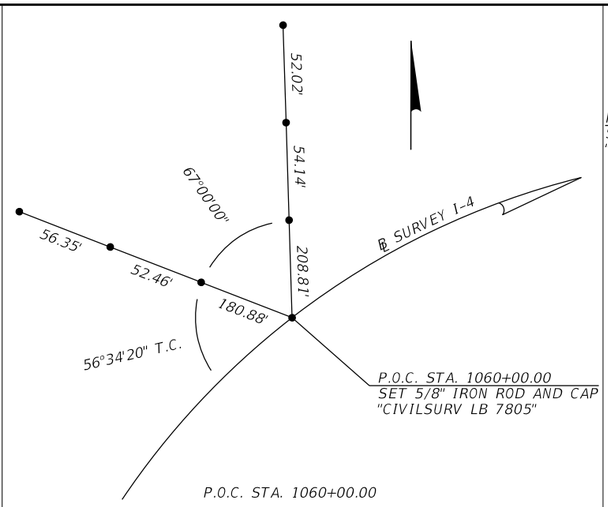

P.O.C. STA. 1060+00.00

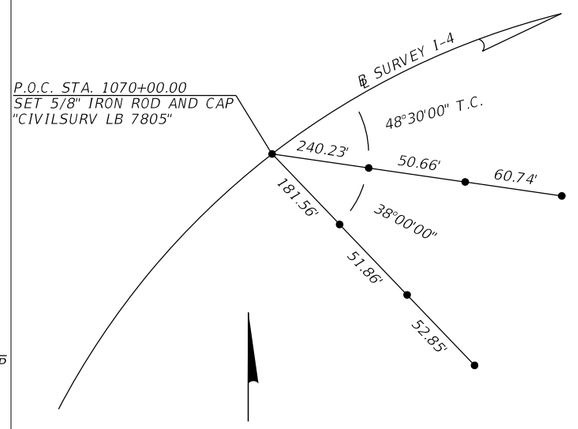

P.O.C. STA. 1070+00.00

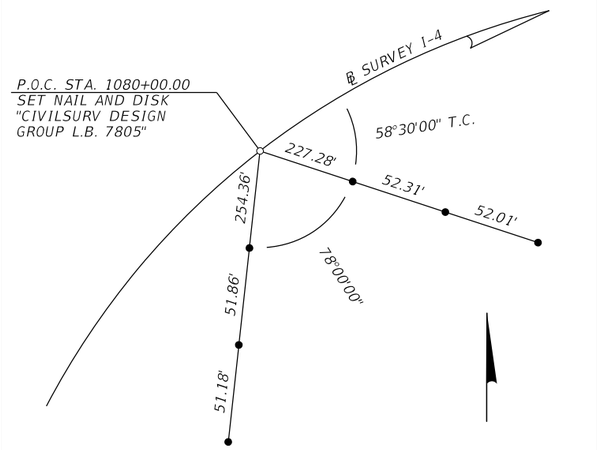

P.O.C. STA. 1080+00.00

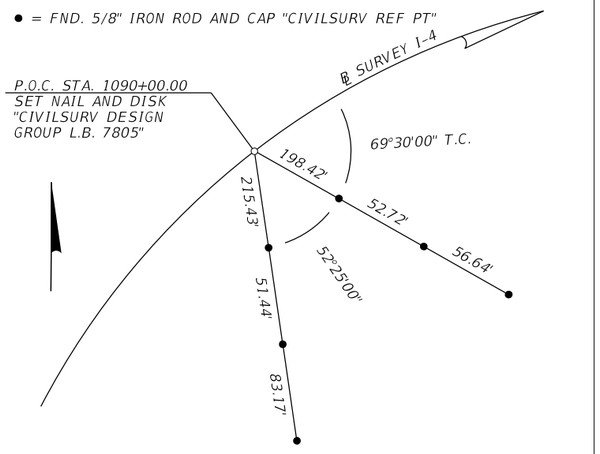

P.O.C. STA. 1090+00.00

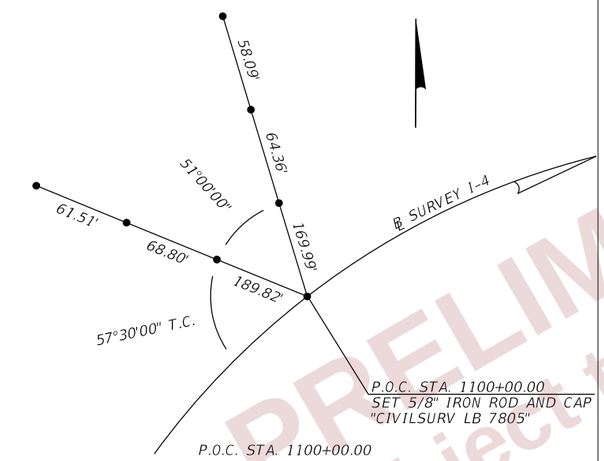

P.O.C. STA. 1100+00.00

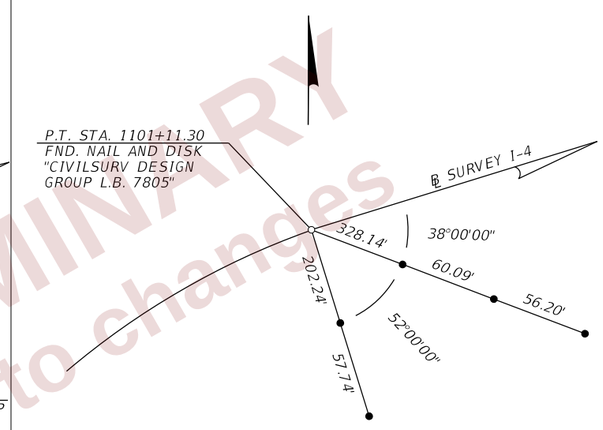

P.T. STA. 1101+11.30

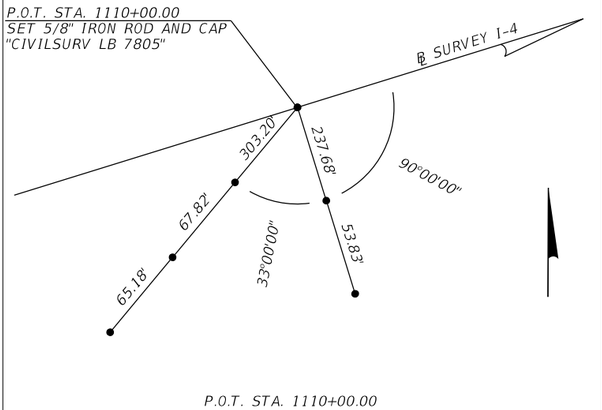

P.O.T. STA. 1110+00.00

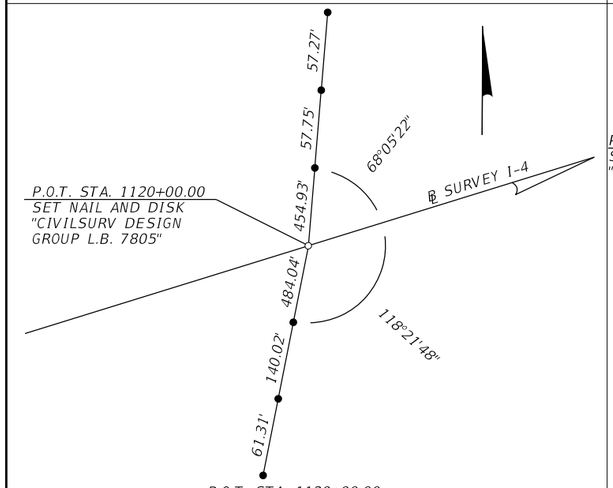

P.O.T. STA. 1120+00.00

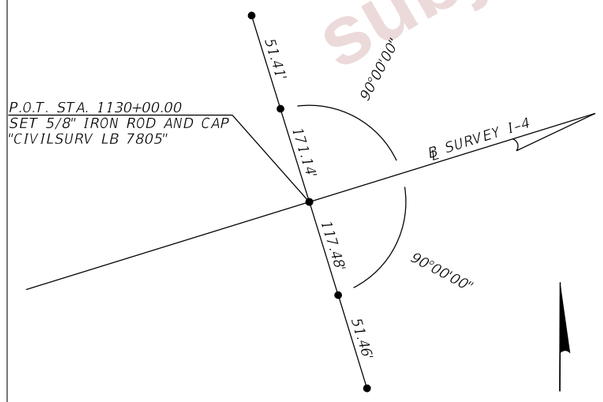

P.O.T. STA. 1130+00.00

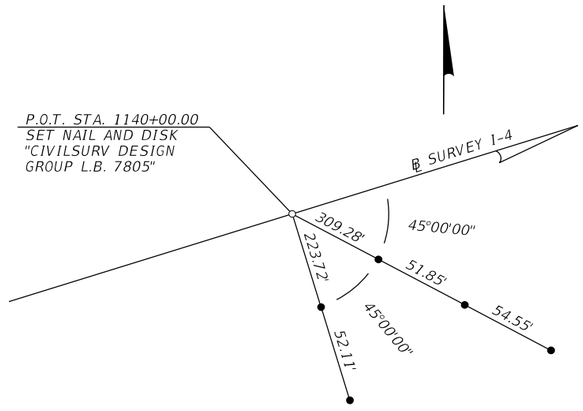

P.O.T. STA. 1140+00.00

LEGEND

○	=	SET NAIL AND CIVILSURV DESIGN GROUP L.B. 7805 DISK (UNLESS OTHERWISE NOTED)
●	=	SET 5/8" IRON ROD AND CIVILSURV REFERENCE CAP (UNLESS OTHERWISE NOTED)
L.B.	=	LICENSED BUSINESS
FND	=	FOUND
P.C.	=	POINT OF CURVE
P.I.	=	POINT OF INTERSECTION
P.T.	=	POINT OF TANGENT
P.O.T.	=	POINT ON TANGENT
P.O.C.	=	POINT ON CURVE
STA.	=	STATION
T.C.	=	TANGENT CURVE

I-4 (SR 400)

PRELIMINARY
subject to changes

THE OFFICIAL RECORD OF THIS SHEET IS THE ELECTRONIC FILE DIGITALLY SIGNED AND SEALED UNDER RULE 61G15-23.004, F.A.C.

REVISIONS			
DATE	DESCRIPTION	DATE	DESCRIPTION

ENGINEER OF RECORD
DEBANANDA PANIGRAHI, P.E.
LICENSE NUMBER 68318
H. W. LOCHNER
4300 W. CYPRESS STREET, SUITE 500
TAMPA, FLORIDA 33607

STATE OF FLORIDA
DEPARTMENT OF TRANSPORTATION

ROAD NO.	COUNTY	FINANCIAL PROJECT ID
SR 400	POLK	430185-3-52-01

PROJECT NETWORK CONTROL (02)

SHEET NO. 44

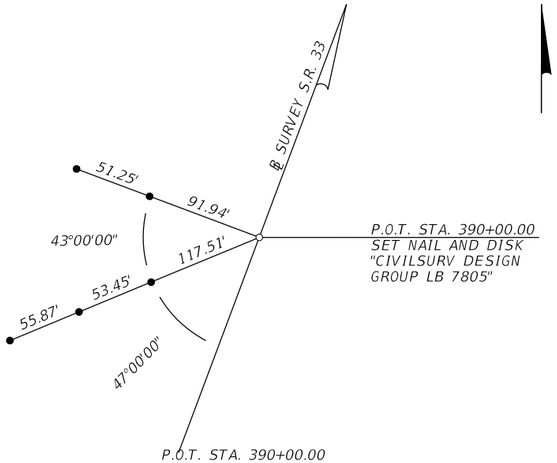

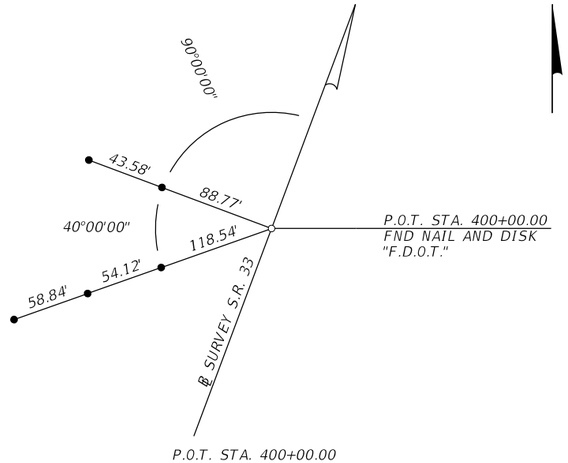

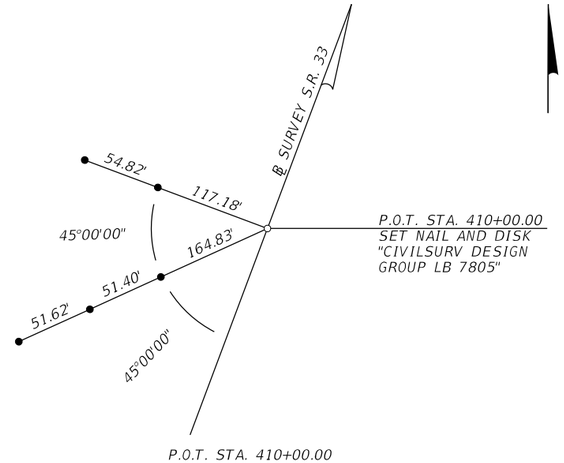

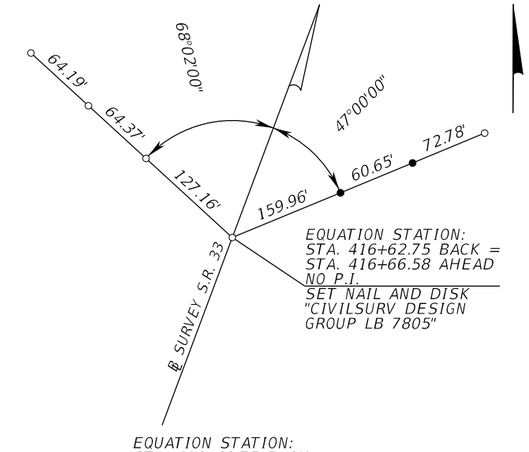

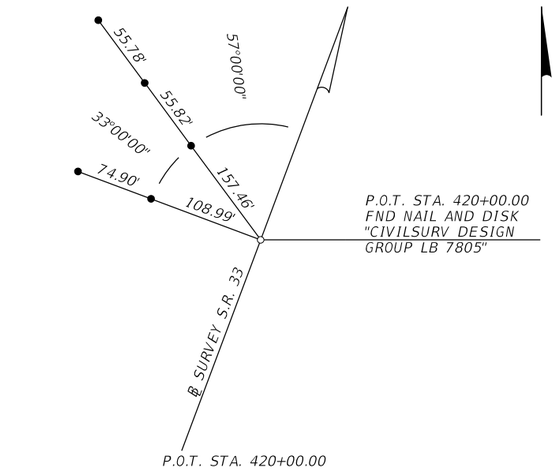

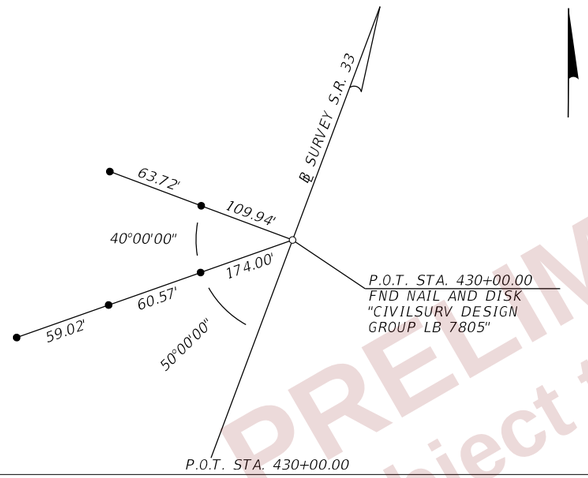

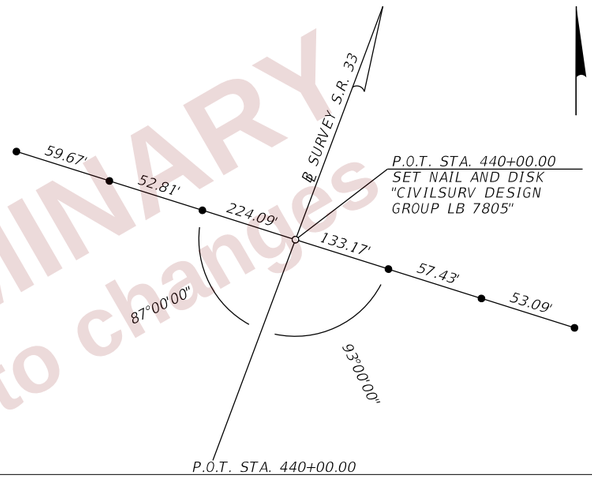

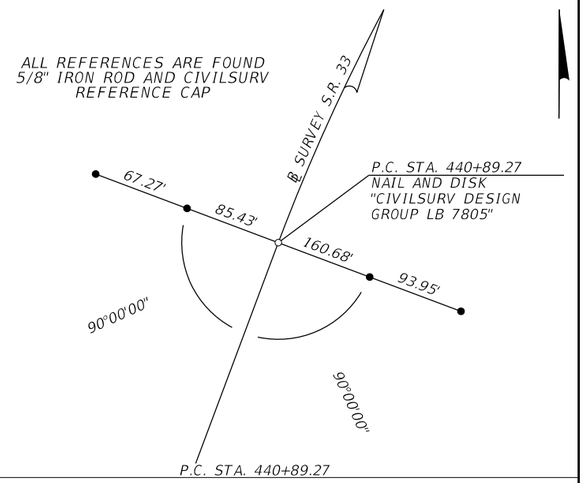

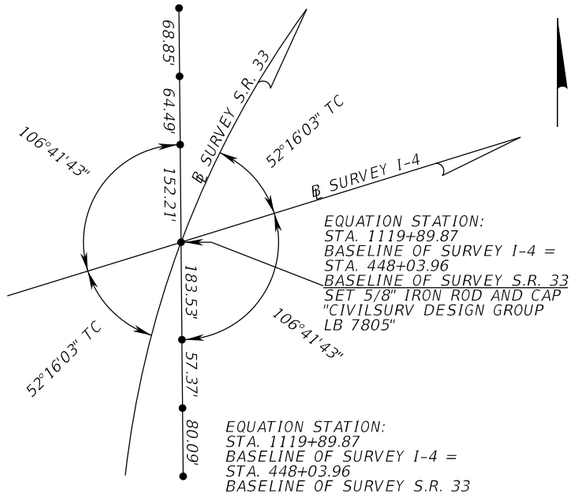

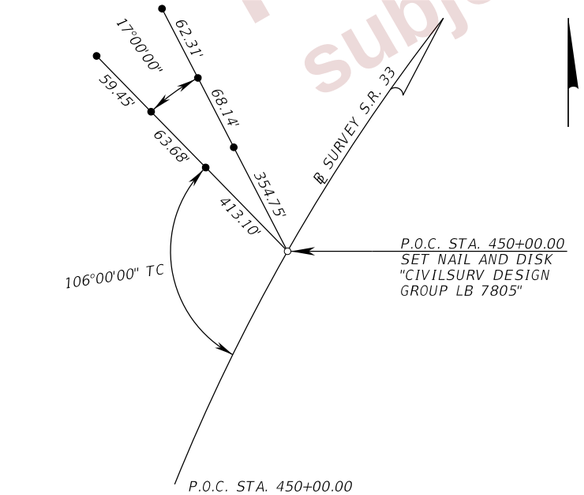

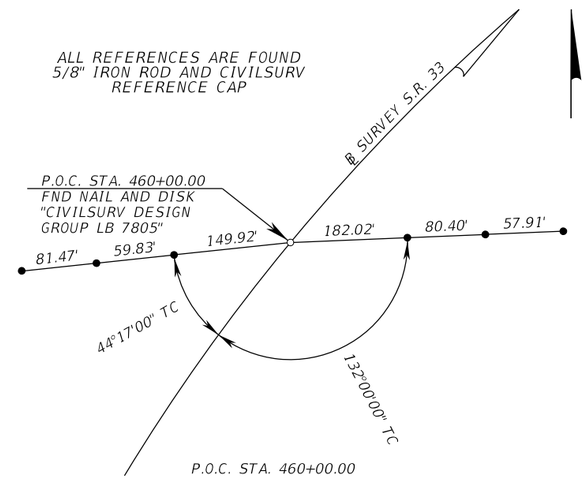

LEGEND

○	=	SET NAIL AND CIVILSURV DESIGN GROUP L.B. 7805 DISK (UNLESS OTHERWISE NOTED)
●	=	SET 5/8" IRON ROD AND CIVILSURV REFERENCE CAP (UNLESS OTHERWISE NOTED)
L.B.	=	LICENSED BUSINESS
FND	=	FOUND
P.C.	=	POINT OF CURVE
P.I.	=	POINT OF INTERSECTION
P.T.	=	POINT OF TANGENT
P.O.T.	=	POINT ON TANGENT
P.O.C.	=	POINT ON CURVE
STA.	=	STATION
T.C.	=	TANGENT CURVE

SR 33

PRELIMINARY
subject to changes

THE OFFICIAL RECORD OF THIS SHEET IS THE ELECTRONIC FILE DIGITALLY SIGNED AND SEALED UNDER RULE 61G15-23.004, F.A.C.

REVISIONS			
DATE	DESCRIPTION	DATE	DESCRIPTION

ENGINEER OF RECORD
DEBANANDA PANIGRAHI, P.E.
LICENSE NUMBER 68318
H. W. LOCHNER
4300 W. CYPRESS STREET, SUITE 500
TAMPA, FLORIDA 33607

STATE OF FLORIDA
DEPARTMENT OF TRANSPORTATION

ROAD NO.	COUNTY	FINANCIAL PROJECT ID
SR 400	POLK	430185-3-52-01

PROJECT NETWORK CONTROL (03)

SHEET NO. 45

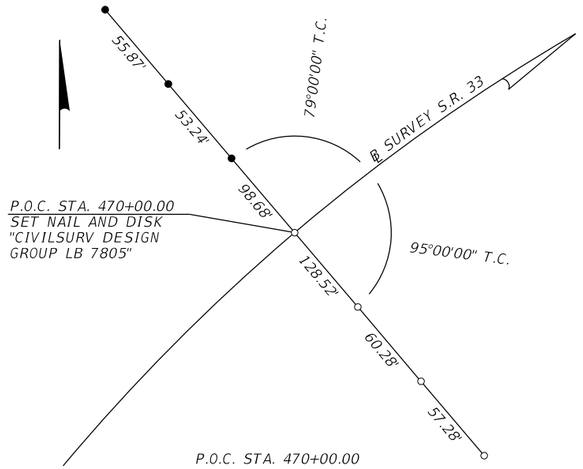

P.O.C. STA. 470+00.00

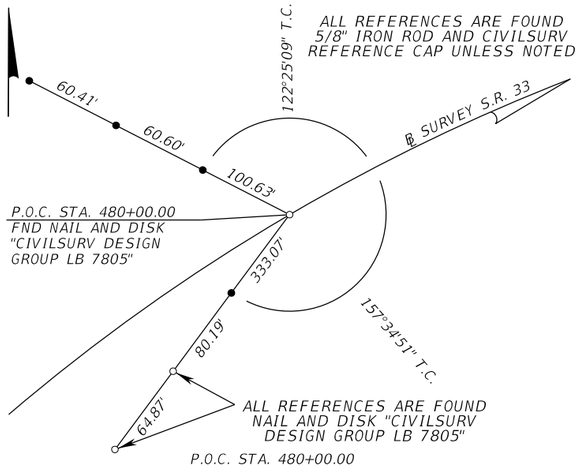

P.O.C. STA. 480+00.00

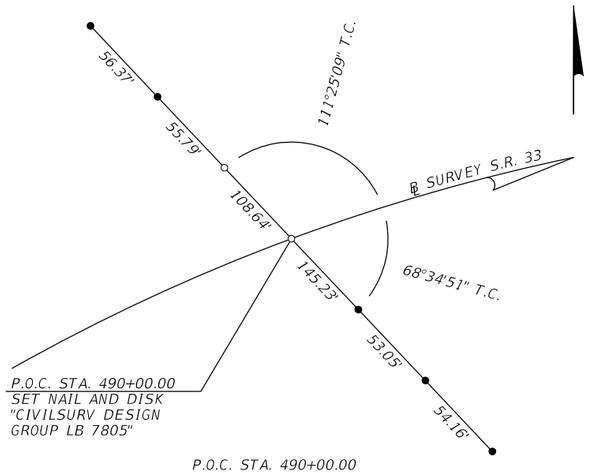

P.O.C. STA. 490+00.00

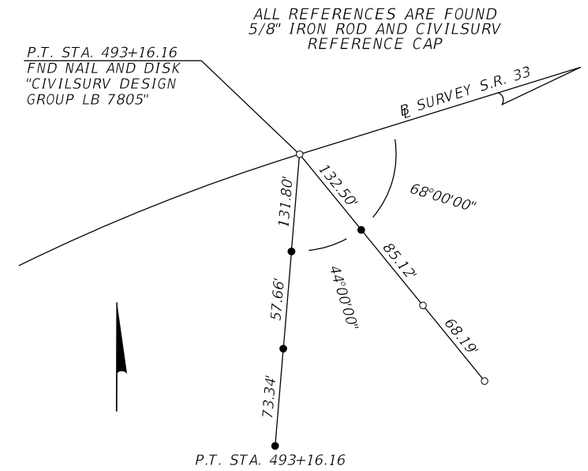

P.T. STA. 493+16.16

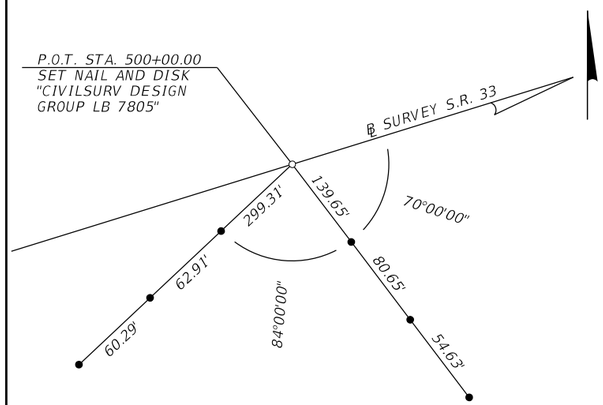

P.O.T. STA. 500+00.00

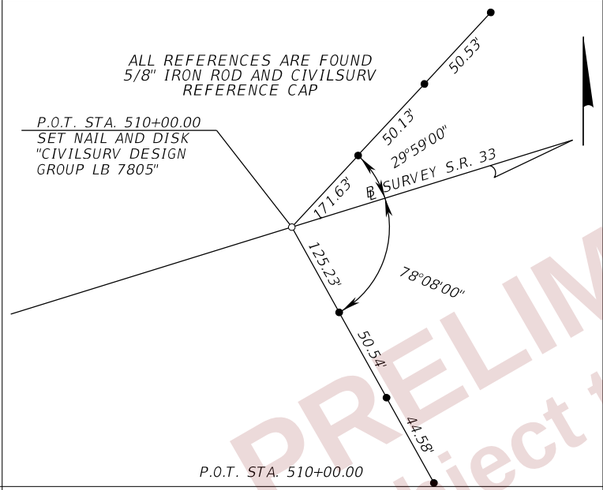

P.O.T. STA. 510+00.00

PRELIMINARY
subject to changes

LEGEND

○	=	SET NAIL AND CIVILSURV DESIGN GROUP L.B. 7805 DISK (UNLESS OTHERWISE NOTED)
●	=	SET 5/8" IRON ROD AND CIVILSURV REFERENCE CAP (UNLESS OTHERWISE NOTED)
L.B.	=	LICENSED BUSINESS
FND	=	FOUND
P.C.	=	POINT OF CURVE
P.I.	=	POINT OF INTERSECTION
P.T.	=	POINT OF TANGENT
P.O.T.	=	POINT ON TANGENT
P.O.C.	=	POINT ON CURVE
STA.	=	STATION
T.C.	=	TANGENT CURVE

SR 33

REVISIONS			
DATE	DESCRIPTION	DATE	DESCRIPTION

ENGINEER OF RECORD
DEBANANDA PANIGRAHI, P.E.
LICENSE NUMBER 68318
H. W. LOCHNER
4300 W. CYPRESS STREET, SUITE 500
TAMPA, FLORIDA 33607

STATE OF FLORIDA
DEPARTMENT OF TRANSPORTATION

ROAD NO.	COUNTY	FINANCIAL PROJECT ID
SR 400	POLK	430185-3-52-01

PROJECT NETWORK CONTROL (04)

SHEET NO. 46

JBLOUNT 2/26/2024 4:52:17 PM c:\pw_working\lochner-pw-01\dms18817\CTLSRD01.dgn

THE OFFICIAL RECORD OF THIS SHEET IS THE ELECTRONIC FILE DIGITALLY SIGNED AND SEALED UNDER RULE 61G15-23.004, F.A.C.

BENCHMARKS

PROJECT VERTICAL CONTROL							
NAME	(NAD 83 / 2011)		(NAVD88)	SURVEY ℄	STATION	OFFSET	DESCRIPTION
	NORTHING (Y)	EASTING (X)	ELEVATION				
BM 4000	1380414	682688	140.613	SR 400 (I-4)	1048+93	152.4 RT.	SET 4"X4" CONC. MON. WITH STANDARD FDOT BRASS DISK STAMPED "BM 4000"
BM 4001	1381001	683363	134.977	SR 400 (I-4)	1057+98	151.1 RT.	SET 4"X4" CONC. MON. WITH STANDARD FDOT BRASS DISK STAMPED "BM 4001"
BM 4002	1381559	684199	135.873	SR 400 (I-4)	1068+18	195.5 RT.	SET 4"X4" CONC. MON. WITH STANDARD FDOT BRASS DISK STAMPED "BM 4002"
BM 4003	1382076	685024	135.366	SR 400 (I-4)	1078+07	180.6 RT.	SET 4"X4" CONC. MON. WITH STANDARD FDOT BRASS DISK STAMPED "BM 4003"
BM 4004	1382493	685916	138.309	SR 400 (I-4)	1088+09	200.6 RT.	SET 4"X4" CONC. MON. WITH STANDARD FDOT BRASS DISK STAMPED "BM 4004"
BM 4005	1382856	686822	134.108	SR 400 (I-4)	1098+02	190.5 RT.	SET 4"X4" CONC. MON. WITH STANDARD FDOT BRASS DISK STAMPED "BM 4005"
BM 4006	1383086	687790	135.062	SR 400 (I-4)	1108+00	260.9 RT.	SET 4"X4" CONC. MON. WITH STANDARD FDOT BRASS DISK STAMPED "BM 4006"
BM 113 RESET	1383286	689126	137.072	SR 400 (I-4)	1121+35	464.7 RT.	SET 4"X4" CONC. MON. WITH STANDARD FDOT BRASS DISK STAMPED "BM 113 RESET"
BM 114 RESET	1383642	690047	134.083	SR 400 (I-4)	1131+21	397.1 RT.	SET 4"X4" CONC. MON. WITH STANDARD FDOT BRASS DISK STAMPED "BM 114 RESET"
BM 115 RESET	1384026	690969	135.359	SR 400 (I-4)	1141+16	303.2 RT.	SET 4"X4" CONC. MON. WITH STANDARD FDOT BRASS DISK STAMPED "BM 115 RESET"
BM 116 RESET	1384384	691903	137.557	SR 400 (I-4)	1151+13	237.5 RT.	SET 4"X4" CONC. MON. WITH STANDARD FDOT BRASS DISK STAMPED "BM 116 RESET"
BM 117 RESET	1384687	692862	139.617	SR 400 (I-4)	1161+20	231.2 RT.	SET 4"X4" CONC. MON. WITH STANDARD FDOT BRASS DISK STAMPED "BM 117 RESET"
BM 118 RESET	1384986	693820	136.922	SR 400 (I-4)	1171+23	228.5 RT.	SET 4"X4" CONC. MON. WITH STANDARD FDOT BRASS DISK STAMPED "BM 118 RESET"
BM 119	1385283	694779	141.656	SR 400 (I-4)	1181+26	229.3 RT.	FOUND 4"X4" CONC. MON. WITH STANDARD FDOT BRASS DISK STAMPED "BM 119"
BM 4007	1385609	695780	139.626	SR 400 (I-4)	1191+79	213.8 RT.	SET 4"X4" CONC. MON. WITH STANDARD FDOT BRASS DISK STAMPED "BM 4007"
BM 4008	1385900	696792	136.263	SR 400 (I-4)	1202+32	235.1 RT.	SET 4"X4" CONC. MON. WITH STANDARD FDOT BRASS DISK STAMPED "BM 4008"
BM 4009	1386219	697751	138.834	SR 400 (I-4)	1212+42	213.7 RT.	SET 4"X4" CONC. MON. WITH STANDARD FDOT BRASS DISK STAMPED "BM 4009"
BM 4010	1386501	698764	138.459	SR 400 (I-4)	1222+94	243.7 RT.	SET 4"X4" CONC. MON. WITH STANDARD FDOT BRASS DISK STAMPED "BM 4010"
BM 4011	1386812	699766	138.447	SR 400 (I-4)	1233+43	243.6 RT.	SET 4"X4" CONC. MON. WITH STANDARD FDOT BRASS DISK STAMPED "BM 4011"

PROJECT VERTICAL CONTROL							
NAME	(NAD 83 / 2011)		(NAVD88)	SURVEY ℄	STATION	OFFSET	DESCRIPTION
	NORTHING (Y)	EASTING (X)	ELEVATION				
BM 43 RESET	1379348	687083	134.749	SR 33	401+16	87.3 LT.	SET 4"X4" CONC. MON. WITH STANDARD FDOT BRASS DISK STAMPED "BM 43 RESET"
BM 44	1380097	687373	136.071	SR 33	409+19	79.1 LT.	FOUND 4"X4" CONC. MON. WITH STANDARD FDOT BRASS DISK STAMPED "BM 44"
BM 45 RESET	1380828	687613	137.561	SR 33	416+91	110.6 LT.	SET 4"X4" CONC. MON. WITH STANDARD FDOT BRASS DISK STAMPED "BM 45 RESET"
BM 46 RESET	1381685	687904	138.122	SR 33	425+96	138.4 LT.	SET 4"X4" CONC. MON. WITH STANDARD FDOT BRASS DISK STAMPED "BM 46 RESET"
BM 47	1382358	688220	136.037	SR 33	433+37	78.9 LT.	FOUND 4"X4" CONC. MON. WITH STANDARD FDOT BRASS DISK STAMPED "BM 47"
BM 48 RESET	1382936	688392	136.779	SR 33	439+39	120.1 LT.	SET 4"X4" CONC. MON. WITH STANDARD FDOT BRASS DISK STAMPED "BM 48 RESET"
14 72 A22	1383645	688725	157.560	SR 33	447+11	91.1 LT.	FOUND 4"X4" CONC. MON. WITH STANDARD FDOT BRASS DISK STAMPED "I4 72 A22"
BM 18	1384277	689109	133.744	SR 33	454+40	80.0 LT.	FOUND 4"X4" CONC. MON. WITH STANDARD FDOT BRASS DISK STAMPED "BM 18"
BM 19	1385053	689744	134.328	SR 33	464+31	74.6 LT.	FOUND 4"X4" CONC. MON. WITH STANDARD FDOT BRASS DISK STAMPED "BM 19"
BM 474	1385554	690603	137.123	SR 33	474+12	114.5 LT.	FOUND 4"X4" CONC. MON. WITH STANDARD FDOT BRASS DISK STAMPED "BM 474"
BM 484	1386065	691454	136.521	SR 33	484+26	118.0 RT.	FOUND 4"X4" CONC. MON. WITH STANDARD FDOT BRASS DISK STAMPED "BM 484"
BM 22 (FPID 429284)	1386596	692310	134.448	SR 33	494+22	68.5 LT.	FOUND 4"X4" CONC. MON. WITH STANDARD FDOT BRASS DISK STAMPED "BM 22"

PRELIMINARY
Subject to changes

THE OFFICIAL RECORD OF THIS SHEET IS THE ELECTRONIC FILE DIGITALLY SIGNED AND SEALED UNDER RULE 61G15-23.004, F.A.C.

REVISIONS			
DATE	DESCRIPTION	DATE	DESCRIPTION

ENGINEER OF RECORD
DEBANANDA PANIGRAHI, P.E.
LICENSE NUMBER 68318
H. W. LOCHNER
4300 W. CYPRESS STREET, SUITE 500
TAMPA, FLORIDA 33607

STATE OF FLORIDA
DEPARTMENT OF TRANSPORTATION

ROAD NO.	COUNTY	FINANCIAL PROJECT ID
SR 400	POLK	430185-3-52-01

PROJECT NETWORK CONTROL (05)

SHEET NO. 47

GENERAL NOTES:

1. BENCHMARK ELEVATIONS SHOWN ON THE PLANS ARE NORTH AMERICAN VERTICAL DATUM 1988 (NAVD88).

2. ANY PUBLIC LAND CORNER OR BENCHMARK WITHIN THE LIMITS OF CONSTRUCTION IS TO BE PROTECTED. IF A CORNER MONUMENT IS IN DANGER OF BEING DESTROYED AND HAS NOT BEEN PROPERLY REFERENCED, THE ENGINEER WILL NOTIFY THE DISTRICT LOCATION SURVEYOR, DISTRICT VII SURVEY DEPARTMENT.

3. CONTACT PROPERTY OWNERS TWO WEEKS PRIOR TO CLEARING AND GRUBBING EXISTING SPRINKLER SYSTEMS, SIGNS, OR LANDSCAPING TO BE REMOVED WITHIN THE PROJECT LIMITS.

4. REPORT ANY KNOWN OR SUSPECTED HAZARDOUS MATERIAL FOUND ON THE PROJECT TO THE PROJECT ENGINEER, WHO SHALL DIRECT THE CONTRACTOR TO PROTECT THE AREA OF KNOWN OR SUSPECTED CONTAMINATION FROM FURTHER ACCESS. THE PROJECT ENGINEER IS TO NOTIFY THE DCIC OF THE DISCOVERY. THE DCIC WILL ARRANGE FOR INVESTIGATION, INDENTIFICATION, AND REMEDIATION OF THE HAZARDOUS MATERIAL. DO NOT RETURN TO THE AREA OF CONTAMINATION UNTIL APPROVED TO DO SO BY THE PROJECT ENGINEER, WHO WILL BE ADVISED BY THE DCIC.

5. ALL DRAINAGE PIPES AND STRUCTURES TO BE REMOVED UNLESS OTHERWISE NOTED.

6. THE CONTRACTOR IS RESPONSIBLE FOR OBTAINING ALL REQUIRED PERMITS FOR THE INSTALLATION AND OPERATION OF DEWATERING AND/OR GROUND WATER CONTROL SYSTEMS, INCLUDING BUT NOT LIMITED TO ACQUISITION OF A WATER USE PERMIT FROM THE SOUTHWEST FLORIDA WATER MANAGEMENT DISTRICT.

7. ALL TYPE F CURB END TREATMENTS SHALL BE FLARED UNLESS NOTED OTHERWISE IN THE PLANS OR UNLESS PROPOSED CURB IS MATCHING EXISTING CURB.

8. ALL SURVEY INFORMATION WAS OBTAINED FROM A LICENSED FLORIDA PROFESSIONAL SURVEYOR AND MAPPER AND UTILIZED AS SUPPORTING DATA IN THE PRODUCTION OF DESIGN PLANS AND FOR CONSTRUCTION ON SUBJECT PROJECT.
THE PROFESSIONAL SURVEYOR AND MAPPER OF RECORD IS:
CHRISTOPHER J. BOSSHART, P.S.M.
P.S.M. NO.: 7150
MCKIM & CREED, INC.
3903 NORTHDALE BOULEVARD, SUITE 115E
TAMPA, FLORIDA 33624
CERTIFICATE OF AUTHORIZATION: 7917T

9. FOLLOWING NON-STANDARD ABBREVIATIONS HAVE BEEN USED IN THE PLANS:
MB WALL: TALL GRADE-SEPARTED MEDIAN BARRIER WALL (STANDARD PLANS INDEX 521-001)
HB WALL: 38" WALL SHIELDING BARRIER WALL (STANDARD PLANS INDEX 521-001)
BOSW: BACK OF SIDEWALK
HTCB: HIGH TENSION CABLE BARRIER

10. FOR INFORMATION ABOUT ITS FACILITIES, CONTACT KEVIN MCCAFFREY AT 813-620-3938 X320.

11. ALL CURB CUT RAMPS ALONG SHARED USE PATH AND 10' SIDEWALK TO BE 10' WIDE.

12. ALL PROPOSED TRAFFIC SEPARATORS ON THIS PROJECT TO BE TYPE 1 OPTION II UNLESS NOTED OTHERWISE IN THE PLANS.

PRELIMINARY
subject to changes

THE OFFICIAL RECORD OF THIS SHEET IS THE ELECTRONIC FILE DIGITALLY SIGNED AND SEALED UNDER RULE 61G15-23.004, F.A.C.

REVISIONS			
DATE	DESCRIPTION	DATE	DESCRIPTION

ENGINEER OF RECORD
DEBANANDA PANIGRAHI, P.E.
LICENSE NUMBER 68318
H. W. LOCHNER
4300 W. CYPRESS STREET, SUITE 500
TAMPA, FLORIDA 33607

STATE OF FLORIDA
DEPARTMENT OF TRANSPORTATION

ROAD NO.	COUNTY	FINANCIAL PROJECT ID
SR 400	POLK	430185-3-52-01

GENERAL NOTES

SHEET NO. 48

1" = 100'

1050+34.95
150.00' (LT)

1050+78.40
150.00' (LT)

1054+08.85
150.00' (LT)

EXIST. L/A R/W LINE

BEGIN MILLING & RESURFACING
STA. 1055+00.00

1045+56.65
11.91' (LT)

BEGIN HTCB
LENGTH OF NEED
STA. 1045+84.67, 12.97' (LT)

℄ SURVEY I-4

1050+29.01
6.07' (LT)

HIGH TENSION
CABLE BARRIER

EXIST. CABLE
BARRIER (TO REMAIN)

1045

1050

N47°23'10"E

HTCB
END TERMINAL
ASSEMBLY

BL_SURVEY_I4_C1

EXIST. CABLE
BARRIER (TO BE REMOVED)

3" CONC. (3' WIDE)

1055

3.00'

3054+83.04
46.67' (LT)

3055

BEGIN CONSTRUCTION
STA. 952+00.00

PC STA. 28.91

ITS SIGN STRUCTURE

℄ CONST. I-4

BEGIN ℄ CONST. I-4
STA. 3051+00.00 ℄ CONST. I-4 =
STA. 1051+00.00, 49.75' (RT) ℄ SURVEY I-4

ITS CONTROLLER CABINET

BM 4000

EXIST. L/A R/W LINE

10.0' 248.8'

36.0'

10.0' 10.0'

36.0'

100.4' 8.0'

MATCH LINE STA. 1057+00.00

EXIST. L/A R/W LINE

1097+68.15
304.04' (RT)

OE

LEGEND

MILLING & RESURFACING

WETLAND/SURFACE WATERS/OTHER SURFACE WATERS JURISDICTIONAL LIMITS

PRELIMINARY
subject to change

THE OFFICIAL RECORD OF THIS SHEET IS THE ELECTRONIC FILE DIGITALLY SIGNED AND SEALED UNDER RULE 61G15-23.004, F.A.C.

REVISIONS			
DATE	DESCRIPTION	DATE	DESCRIPTION

ENGINEER OF RECORD
DEBANANDA PANIGRAHI, P.E.
LICENSE NUMBER 68318
H. W. LOCHNER
4300 W. CYPRESS STREET, SUITE 500
TAMPA, FLORIDA 33607

STATE OF FLORIDA
DEPARTMENT OF TRANSPORTATION

ROAD NO.	COUNTY	FINANCIAL PROJECT ID
SR 400	POLK	430185-3-52-01

ROADWAY PLANS (01)

SHEET NO. 49

2/29/2024 4:24:27 PM JTAGLIAFERRO
c:\pw_working\lochner-pw-01\dms18802\PLANRD02.dgn

1" = 100'

EXIST. L/A R/W LINE

1067+65.46
150.00' (LT)

EXIST. CABLE
BARRIER (TO BE REMOVED)

3" CONC. (3' WIDE)

HIGH TENSION CABLE BARRIER

℄ SURVEY I-4

℄ CONST. I-4

1060 1065 1070

3060 3065 3070

10.0' 36.0' 10.0' 10.0' 199.6' 10.0' 36.0' 10.0' 199.5'

3.00'

100.4' 8.0' 8.0' 100.5'

EXIST. L/A R/W LINE

BM 4002

MATCH LINE
STA. 1057+00.00

MATCH LINE STA. 1072+00.00

OE

LEGEND

MILLING & RESURFACING

WETLAND/SURFACE WATERS/OTHER SURFACE WATERS JURISDICTIONAL LIMITS

PRELIMINARY
subject to changes

THE OFFICIAL RECORD OF THIS SHEET IS THE ELECTRONIC FILE DIGITALLY SIGNED AND SEALED UNDER RULE 61G15-23.004, F.A.C.

2/29/2024 4:24:28 PM JTAGLIAFERRO
c:\pw_working\lochner-pw-01\dms18802\PLANRD02.dgn

REVISIONS			
DATE	DESCRIPTION	DATE	DESCRIPTION

ENGINEER OF RECORD
DEBANANDA PANIGRAHI, P.E.
LICENSE NUMBER 68318
H. W. LOCHNER
4300 W. CYPRESS STREET, SUITE 500
TAMPA, FLORIDA 33607

STATE OF FLORIDA
DEPARTMENT OF TRANSPORTATION

ROAD NO.	COUNTY	FINANCIAL PROJECT ID
SR 400	POLK	430185-3-52-01

ROADWAY PLANS (02)

SHEET NO. 50

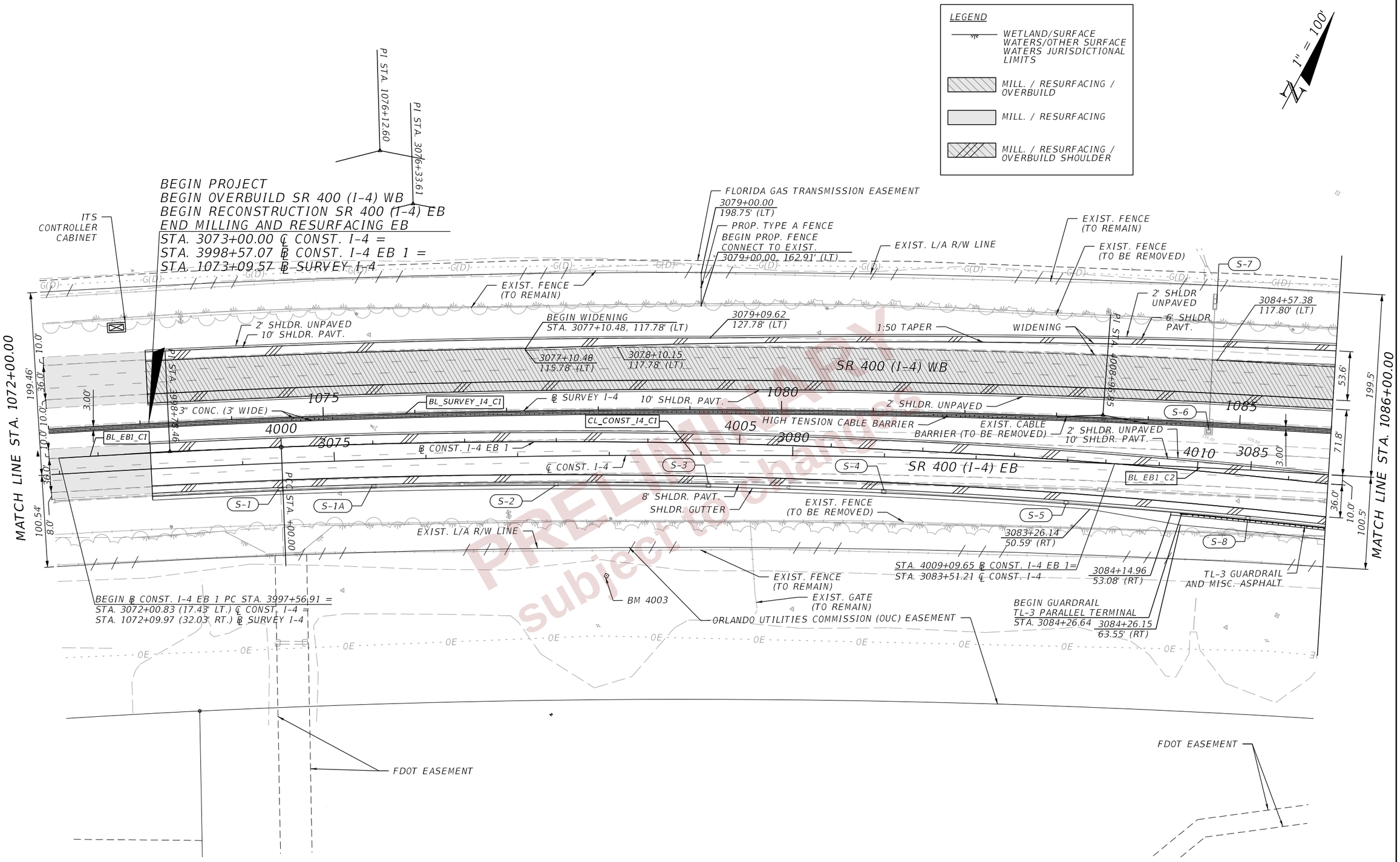

THE OFFICIAL RECORD OF THIS SHEET IS THE ELECTRONIC FILE DIGITALLY SIGNED AND SEALED UNDER RULE 61G15-23.004, F.A.C.

REVISIONS				ENGINEER OF RECORD	STATE OF FLORIDA DEPARTMENT OF TRANSPORTATION			ROADWAY PLANS (03)	SHEET NO.
DATE	DESCRIPTION	DATE	DESCRIPTION	DEBANANDA PANIGRAHI, P.E. LICENSE NUMBER 68318 H. W. LOCHNER 4300 W. CYPRESS STREET, SUITE 500 TAMPA, FLORIDA 33607	ROAD NO.	COUNTY	FINANCIAL PROJECT ID		51
					SR 400	POLK	430185-3-52-01		

2/29/2024 4:24:28 PM JTAGLIAFERRO
C:\pw_working\lochner-pw-01\dms18802\PLANRD02.dgn

END MILLING, RESURFACING, OVERBUILD AND WIDENING SR 400 (I-4) WB
BEGIN RECONSTRUCTION SR 400 (I-4) WB
STA. 3098+00.00 ℄ CONST. I-4 =
STA. 1098+20.43 ℄ SURVEY I-4

1" = 100'

END PROP. FENCE
108+35.75, 52.24' (LT)
PROPOSED FENCE TYPE A
BEGIN PROP. FENCE
107+76.64, 47.94' (LT)
EXIST. FENCE
(TO BE REMOVED)
PI STA. 106+83.87
HTCB
END TERMINAL
ASSEMBLY
END HTCB
LENGTH OF NEED
STA.3099+34.78, 46.63' (LT)
EXIST. FENCE
(TO REMAIN)

BEGIN ℄ RAMP A STA. 100+85.72 =
STA. 1089+21.81 (83.51' LT.) ℄ SURVEY I-4 =
STA. 3089+05.27 (133.00' LT.) ℄ CONST. I-4

EXIST. L/A R/W LINE
EXIST. FENCE
(TO REMAIN)
FLORIDA GAS TRANSMISSION EASEMENT
2' SHLDR. UNPAVED
6' SHLDR. PAVT.
EXIST. FENCE
(TO BE REMOVED)
1:50 TAPER
3089+05.27
147.83' (LT)
WIDENING
BL_RAMPA_C1
106+22.77
15.00' (RT)
2' SHLDR UNPAVED
6 SHLDR. PAVT.
℄ CONST. RAMP A
RAMP A
105
110

MATCH LINE STA. 1086+00.00
199.5'
53.6'
81.8'
3.00'
10.0'
36.0'
100.5'

SR 400 (I-4) WB
60'
10' SHLDR. PAVT.
SAWCUT
3094+35.62
117.89' (LT)
EXIST. CABLE BARRIER
(TO BE REMOVED)
3098+00.00
117.95' (LT)
SAWCUT
2' SHLDR UNPAVED
℄ SURVEY I-4
2' SHLDR. UNPAVED
10' SHLDR. PAVT.
1090
1095
1100
BL_SURVEY_I4_C1
EXIST. CABLE
BARRIER (TO BE REMOVED)
3' CONC.
(3' WIDE)
HIGH TENSION CABLE BARRIER
CL_CONST_I4_C1
HIGH TENSION CABLE BARRIER
HTCB
END TERMINAL
ASSEMBLY
3099+62.67
45.14' (LT)
3097+97.00
6.50' (RT)
BL_EB1_C2
3090
3095
4015
EXIST. FENCE
(TO BE REMOVED)
℄ CONST. I-4
10' SHLDR. PAVT.
2' SHLDR UNPAVED
℄ CONST. I-4 EB 1
4015+24.87
36.00' (RT)
1096+44.31
150.00' (RT)
4022+93.63
48.00' (RT)
BEGIN HTCB
LENGTH OF NEED
3098+25.01, 5.00' (RT)
4020
4025
S-9
S-12
S-13
200
205
210
BL_RAMP_B_C1
SR 400 (I-4) EB
1096+44.26
154.86' (RT)
N74°23'10"E
N72°47'29"E
208+76.74
15.00' (LT)
S-14
S-14A
S-15
S-17
S-18
S-18A
WALL CRW5
S-10
S-12A
PI STA. 1089+48.66
RAMP B
10'
BERM
S-9A
S-11
EXIST. L/A
R/W LINE
BM 4004
EXIST. FENCE
(TO REMAIN)
1089+33.57
150.00' (RT)
END GUARDRAIL
CONNECT TO RIGID BARRIER (INDEX 536-001)
END SHLDR. GUTTER
BEGIN 38" SHLDR BARRIER WALL
STA. 3086+99.89
PROP. TYPE A
FENCE
EXIST. FENCE
(TO BE REMOVED)
1091+55.84
180.57' (RT)
PROP. L/A R/W LINE
44" SHLDR. BARRIER
S-14B
℄ CONST. RAMP B
END WALL CRW5
BEGIN VARIABLE HEIGHT MB WALL
202+73.75, 11.50' (RT)
PI STA. 206+50.16
EX-13
S-16
FENCE
GATE
(TYPE A,
18'
OPENING)
BM
4005
S-18B
PROPOSED FENCE
S-17A
ITS CONTROLLER CABINET
PRC STA. +26.51
BL_RAMP_B_C2
ORLANDO UTILITIES COMMISSION (OUC) EASEMENT
EASEMENT
FDOT DRAINAGE
EASEMENT
PROP. L/A
R/W LINE

MATCH LINE STA. 1100+00.00
15.0'
20.3'
218.5'
36.0'
82.0'
81.5'
124.8'
36.0'
15.0'
19.0'
56.7'
5.00'

① BEGIN ℄ RAMP B STA. 199+08.58 =
STA. 1088+71.12 (110.25' RT) ℄ SURVEY I-4 =
STA. 3088+54.82 (60.76' RT) ℄ CONST. I-4 =
STA. 4014+15.53 (36.00' RT) ℄ CONST. I-4 EB 1

② END 38" SHLDR. BARRIER WALL
BEGIN WALL CRW5
STA. 3087+84.52

③ BEGIN FENCE REMOVAL
STA. 3089+17.01, 100.51' (RT)

④ END VARIABLE HEIGHT MB WALL
BEGIN 44" SHLDR. BARRIER WALL
STA. 203+60.00, 11.25' (RT)

⑤ END TYPE A FENCE
BEGIN FENCE (BARRIER MOUNTED)
STA. 3095+47.83, 149.09' (RT)

⑥ STA. 3095+46.69
167.79' (RT)

LEGEND
WETLAND/SURFACE WATERS/OTHER SURFACE WATERS JURISDICTIONAL LIMITS
MILL. / RESURFACING / OVERBUILD
MILL. / RESURFACING / OVERBUILD SHOULDER

Preliminary Not for Construction

REVISIONS			
DATE	DESCRIPTION	DATE	DESCRIPTION

ENGINEER OF RECORD
DEBANANDA PANIGRAHI, P.E.
LICENSE NUMBER 68318
H. W. LOCHNER
4300 W. CYPRESS STREET, SUITE 500
TAMPA, FLORIDA 33607

STATE OF FLORIDA
DEPARTMENT OF TRANSPORTATION

ROAD NO.	COUNTY	FINANCIAL PROJECT ID
SR 400	POLK	430185-3-52-01

ROADWAY PLANS (04)

SHEET NO. 52

THE OFFICIAL RECORD OF THIS SHEET IS THE ELECTRONIC FILE DIGITALLY SIGNED AND SEALED UNDER RULE 61G15-23.004, F.A.C.

2/29/2024 4:24:29 PM JTAGLIAFERRO
c:\pw_working\lochner-pw-01\dms18802\PLANROD2.dgn

LEGEND

WETLAND/SURFACE WATERS/OTHER SURFACE WATERS JURISDICTIONAL LIMITS

EXIST. R/W LINE

FDOT EASEMENT

1104+97.53 402.19' (LT)

1104+97.53 245.13' (LT)

1104+97.53 178.74' (LT)

① END ℄ CONST. I-4 EB 1 STA. 4026+39.79 = STA. 3100+86.15 (82.00' RT.) ℄ CONST. I-4 = STA. 1101+07.80 (131.66' RT.) ℄ SURVEY I-4

② ℄ RAMP B SHIFT 9' RT STR. 218+49.64 = 1107+33.48' RT ℄ SURVEY I-4

1" = 100'

N

EXIST. FENCE (TO REMAIN)

EXIST. L/A R/W LINE

BEGIN TL-3 GUARDRAIL W/ TRAILING ANCHORAGE END TERMINAL STA. 112+82.74

BEGIN MB WALL STA. 3101+00.00

END MB WALL BEGIN RETAINING WALL W1C WITH HB WALL AT BOTTOM STA. 3105+00.00

S-30

2' SHLDR. UNPAVED

6' SHLDR. PAVT.

EXIST. L/A R/W LINE

112+80.39 8.00' (LT)

112+72.52 15.38' (LT)

BL_RAMPA_C1

℄ CONST. RAMP A

BEGIN SHLDR GUTTER STA. 114+40.26

115

8' SHLDR. PAVT.

S-34

SHLDR. GUTTER

S-35

120

PC STA. +03.55

S-39

TL-3 GUARDRAIL AND 3' MISC. ASPHALT

BL_RAMPA_C2

S-40

S-45

125

S-47

4' SHLDR. PAVT.

4' SHLDR. UNPAVED

PI STA. 125+19.23

MB WALL

8.33' SHLDR. PAVT.

N71°55'48"E

112+40.00 6.00' (LT)

112+72.53 14.38' (LT)

S-21

S-24

S-25

S-33A

S-33

N72°47'29"E

8' SHLDR. PAVT.

10' SHLDR. PAVT.

RAMP A

122+34.09 35.08' (RT)

S-38

CONST. HB WALL

CONST. WALL W1C

2" MISC. ASPHALT

123+84.29 46.29' (RT)

S-46

RT STA. 1100+80.51

RT STA. 1101+09.11

1105

1110

BL_SURVEY_I4_C1

CD-14

2' SHLDR. UNPAVED

CL_CONST_I4_C1

3100

3105

℄ CONST. I-4

EXIST. CABLE BARRIER (TO BE REMOVED)

10' SHLDR. PAVT.

3110

℄ SURVEY I-4

N72°47'53"E

END HB WALL STA. 3113+70.56

3" CONC. (3' WIDE)

S-29A

END MB WALL BEGIN RETAINING WALL W2A WITH HB WALL STA. 3102+80.00

HIGH TENSION CABLE BARRIER

END HB WALL STA. 3106+06.99

EXIST. FENCE (TO BE REMOVED)

217+99.99 17.00' (LT)

N72°47'29"E

10' SHLDR. PAVT.

WALL W2A

S-44

PI STA. 111+30.30

PI STA. 114+36.15

CRASH CUSHION (TL-3 NARROW) EXIST. FENCE (TO BE REMOVED)

℄ CONST. I-4 EB 1

N72°47'29"E

2" MISC. ASPHALT

S-20

S-23

S-29

S-31

S-32

PRC STA. +25.04

PCC STA. +49.64

218+49.64 19.00' (LT)

S-37

SR 400 (I-4) EB

S-41

S-43

PROPOSED FENCE

215

℄ CONST. RAMP B 1108+69.98 220.53' (RT)

4' SHLDR. UNPAVED

222+47.48 24.00' (LT)

2' SHLDR. PAVT.

S-26

220

S-36

1110+46.07 242.21' (RT)

RAMP B

1113+03.21 256.66' (RT)

225

3101+00.00 118.00' (RT)

212+36.39 17.00' (LT)

1100+21.08 231.32' (RT)

S-22

BEGIN MB WALL STA. 3101+00.00

S-19

BL_RAMP_B_C2

214+15.82 17.00' (LT)

7609' R

10' BERM

S-28

44" SHLDR. BARRIER

10' SHLDR. PAVT.

1105+12.58 247.38' (RT)

FENCE GATE (TYPE A, 18' OPENING)

EXIST. L/A R/W LINE

PI STA. 218+37.74

EASEMENT

BM 4006

220+79.31 14.00' (RT)

4' SHLDR. PAVT.

PI STA. 222+13.30

10' SHLDR. PAVT.

2' SHLDR. UNPAVED

5849' R

EXIST. L/A R/W LINE

1112+99.92 317.53' (RT)

217+99.14 0.00' (LT)

218+04.65 10.00' (RT)

INCIDENT MANAGEMENT SITE

220+99.85 10.00' (RT)

S-42

1113+70.95 321.52' (RT)

END 44" SHLDR. BARRIER

END FENCE(BARRIER MOUNTED)

BEGIN TYPE A FENCE 216+71.5 , 9.30' (RT)

EASEMENT LINE

EASEMENT

218+70.15 14.00' (RT)

PROP. L/A R/W LINE

224+07.17 36.00' (LT)

EASEMENT LINE

EXISTING GATE (TO REMAIN)

PROP. L/A R/W LINE

ORLANDO UTILITIES COMMISSION (OUC) EASEMENT

BL_RAMP_B_C3

EXIST. FENCE (TO BE REMOVED)

END FENCE REMOVAL STA. 223+09.13, 85.69' (RT)

PROP. TYPE A FENCE

1110+27.51 347.00' (RT)

PROP. L/A R/W LINE

EXIST. FENCE (TO REMAIN)

EX-113

MATCH LINE STA. 1100+00.00

MATCH LINE STA. 1114+00.00

218.5'

20.3' 15.0'

36.0'

82.0'

124.8'

81.5'

5.00'

36.0'

19.0' 15.0'

431.2'

24.3'

59.9'

36.0'

82.0'

5.00'

82.0'

36.0'

70.0'

280.9'

36.0'

THE OFFICIAL RECORD OF THIS SHEET IS THE ELECTRONIC FILE DIGITALLY SIGNED AND SEALED UNDER RULE 61G15-23.004, F.A.C.

REVISIONS				ENGINEER OF RECORD	STATE OF FLORIDA DEPARTMENT OF TRANSPORTATION			ROADWAY PLANS (05)	SHEET NO.
DATE	DESCRIPTION	DATE	DESCRIPTION	DEBANANDA PANIGRAHI, P.E. LICENSE NUMBER 68318 H. W. LOCHNER 4300 W. CYPRESS STREET, SUITE 500 TAMPA, FLORIDA 33607	ROAD NO.	COUNTY	FINANCIAL PROJECT ID		53
					SR 400	POLK	430185-3-52-01		

2/29/2024 4:24:29 PM JTAGLIAFERRO
c:\pw_working\lochner-pw-01\dms18802\PLANRD02.dgn

MATCH LINE STA. 1114+00.00

MATCH LINE STA. 134+00.00 ROADWAY PLANS (22)

① END HTCB LENGTH OF NEED STA. 3117+15.00, 5.00' (RT)
② STA. 3117+43.00, 6.50' (RT)
③ STA. 3117+57.00, 6.50' (RT)
④ BEGIN HTCB LENGTH OF NEED STA. 3122+8500, 5.00' (RT)
⑤ HTCB END TERMINAL ASSEMBLY

1" = 100'

1115+27.12
407.05' (LT)
EXIST. L/A R/W LINE

EXIST. FENCE (TO REMAIN)

END TL-3 GUARDRAIL W/ PARALLEL APPROACH TERMINAL STA. 128+24.97

PT STA. +28.87

℄ CONST. RAMP A

2' SHLDR. UNPAVED
10' PAVED SHLDR.

N55°54'11"E

TL-3 GUARDRAIL
END SHLDR. GUTTER STA. 127+68.90

SHLDR. GUTTER
S-48
S-49

1' SHLDR. UNPAVED
8' SHLDR. PAVT.

128+36.55
14.50' (LT)

130

RAMP A

4' SHLDR. PAVT.
4' SHLDR. UNPAVED

STA. 1119+89.87 ℄ SURVEY I-4 =
STA. 448+03.96 ℄ SURVEY SR 33

BEGIN BRIDGE I-4 WB
STA. 3119+75.82
℄ CONST. I-4

133+78.08
0.00' (LT)

CURB & GUTTER TYPE F

133+71.25
28.53' (RT)

CURB & GUTTER TYPE F

STA. 1120+66.67 ℄ SURVEY I-4 =
STA. 3448+81.20 ℄ CONST. SR 33

SEE ROADWAY PLANS (20 TO 22)

SR 33 SB

1127+12.87
437.85' (LT)
PROPOSED FENCE TYPE A
EXIST. L/A R/W LINE

1127+43.70
333.63' (LT)
404+01.11'
161.69' (LT)

EXIST. FENCE (TO BE REMOVED)

RAMP D N70°36'50"E

SEE ROADWAY PLANS (32)

431.2'
24.4'
50.2'
36.0'
82.0'
36.0'
70.0'
36.0'
379.0'
34.3'
82.0'
36.0'
285.6'
15.0'

BL_RAMPA_C3
S-53
S-56
S-57
S-58
BEGIN APPROACH SLAB STA. 3119+36.94
WALL W1C
TL-3 GUARDRAIL
BEGIN TL-3 GUARDRAIL W/ TRAILING ANCHORAGE END TERMINAL STA. 3118+01.68, 70.00' (LT)
10' SHLDR. PAVT.
WALL W1C
S-51
S-52
MISC. ASPHALT 3117+51.61 70.00' (LT)
WALL W1A 3118+35.98 70.00' (LT)
BEGIN BRIDGE I-4 EB STA. 3118+32.38 ℄ CONST. I-4
1115
EXIST. CABLE BARRIER (TO BE REMOVED)
3114+35.31 67.50' (RT) (3' WIDE)
3" CONC.
HIGH TENSION CABLE BARRIER
HTCB END TERMINAL ASSEMBLY
2' SHLDR. UNPAVED
10' SHLDR. PAVT.
3115
3117+91.61 66.00' (LT)
134°25'50"
1120
130°49'39"
N72°47'53"E
WALL W3C
3120
STA. 3119+19.55 ℄ CONST. I-4 =
STA. 447+34.60 ℄ SURVEY SR 33
N72°47'29"E
END BRIDGE I-4 WB
STA. 3121+50.82 ℄ CONST. I-4
STA. 3120+02.82 ℄ CONST. I-4 =
STA. 3448+16.21 ℄ CONST. SR 33
WALL W4A
TL-3 GUARDRAIL
BEGIN TL-3 GUARDRAIL W/ PARALLEL APPROACH TERMINAL
3114+46.87, 69.06' (RT)
3116+63.51
MISC. ASPHALT 70.00' (RT)
3117+13.51 72.00' (RT)
TL-3 GUARDRAIL
1' SHLDR. UNPAVED
10' SHLDR. PAVT.
10' SHLDR. PAVT.
BEGIN APPROACH SLAB STA. 3117+93.50
WALL W2C
S-55
S-54
WALL W2A
445
RAMP B
SEE ROADWAY PLANS (32)
PROP. FENCE TYPE A
SR 33 SB
SEE ROADWAY PLANS (20 TO 22)
SR 33 NB
1114+24.23
356.72' (RT)
END TYPE A FENCE STA. 226+50.47, 37.00' (RT)
NOTE:
SEE ROADWAY PLANS (18) FOR ADDITIONAL INFORMATION DETAILS ALONG I-4 AND SR33
MATCH LINE STA. 305+70.00 ROADWAY PLANS (20)
S-820
S-821
SD-19A
306+59.41
10.00' (RT)
PC STA. 306+59.41
N53°6'39"E
TL-3 GUARDRAIL AND MISC. ASPHALT
445+58.06
404.62' (RT)
BM 113 RESET
PI STA. 308+01.81
308+50.06
14.50' (RT)
309+49.89
28.00' (LT)
END APPROACH SLAB
3120+61.26, 82.00' (RT)
ITS CONTROLLER CABINET
S-61
END BRIDGE I-4 EB
STA. 3120+22.38
℄ CONST. I-4
PC STA. 308+49.89
S-62
S-65
S-64
EXIST. FENCE (TO BE REMOVED)
PI STA. 310+76.31
3844' R
4' SHLDR. UNPAVED
4' SHLDR. PAVT.
PC STA. 311+65
N64°8'7"E
310
312+06.55
10.00' (RT)
℄ CONST. RAMP C
10' SHLDR. PAVT.
2' SHLDR. UNPAVED
BL_RAMP_C_C4
309+49.89
10.00' (RT)
1124+78.84
382.65' (RT)
PROPOSED FENCE
EXIST. L/A R/W LINE
PT STA. +06.64
BL_RAMP_C_C3
END TL-3 GUARDRAIL W/ TRAILING ANCHORAGE END TERMINAL STA. 308+40.02
ORLANDO UTILITIES COMMISSION (OUC) EASEMENT
EASEMENT LINE
RAMP C

SR 400 (I-4) WB
END APPROACH SLAB
STA. 312204.70, 82.00' (LT)
3125+36.42
64.03' (LT)
WALL W3A
S-63
S-66
10' SHLDR. PAVT.
CONST. WALL W3A
10' SHLDR. PAVT
3125+47.90
67.50' (LT)
2' SHLDR. UNPAVED
3125+96.16
70.00' (LT)
1125
TL-3 GUARDRAIL
EXIST. CABLE BARRIER (TO BE REMOVED)
1' SHLDR. UNPAVED
3122+69.70
72.00' (LT)
℄ SURVEY I-4
3123+25.32
69.73' (LT)
3124+83.21
66.50' (LT)
END TL-3 GUARDRAIL W/ PARALLEL END TERMINAL
STA. 3125+36.34
3125
3" CONC. (3' WIDE)
℄ CONST. I-4
HIGH TENSION CABLE BARRIER
2' SHLDR. UNPAVED
10' SHLDR. PAVT.
SR 400 (I-4) EB
S-65
CONST. WALL W4C
10' SHLDR. PAVT.
4' SHLDR. UNPAVED
4' SHLDR. PAVT.

LEGEND
WETLAND/SURFACE WATERS/OTHER SURFACE WATERS JURISDICTIONAL LIMITS

PRELIMINARY Subject to change

MATCH LINE STA. 1128+00.00

THE OFFICIAL RECORD OF THIS SHEET IS THE ELECTRONIC FILE DIGITALLY SIGNED AND SEALED UNDER RULE 61G15-23.004, F.A.C.

REVISIONS			
DATE	DESCRIPTION	DATE	DESCRIPTION

ENGINEER OF RECORD
DEBANANDA PANIGRAHI, P.E.
LICENSE NUMBER 68318
H. W. LOCHNER
4300 W. CYPRESS STREET, SUITE 500
TAMPA, FLORIDA 33607

STATE OF FLORIDA
DEPARTMENT OF TRANSPORTATION

ROAD NO.	COUNTY	FINANCIAL PROJECT ID
SR 400	POLK	430185-3-52-01

ROADWAY PLANS (06)

SHEET NO. 54

2/29/2024 4:24:30 PM JTAGLIAFERRO
c:\pw_working\lochner-pw-01\dms18802\PLANRD02.dgn

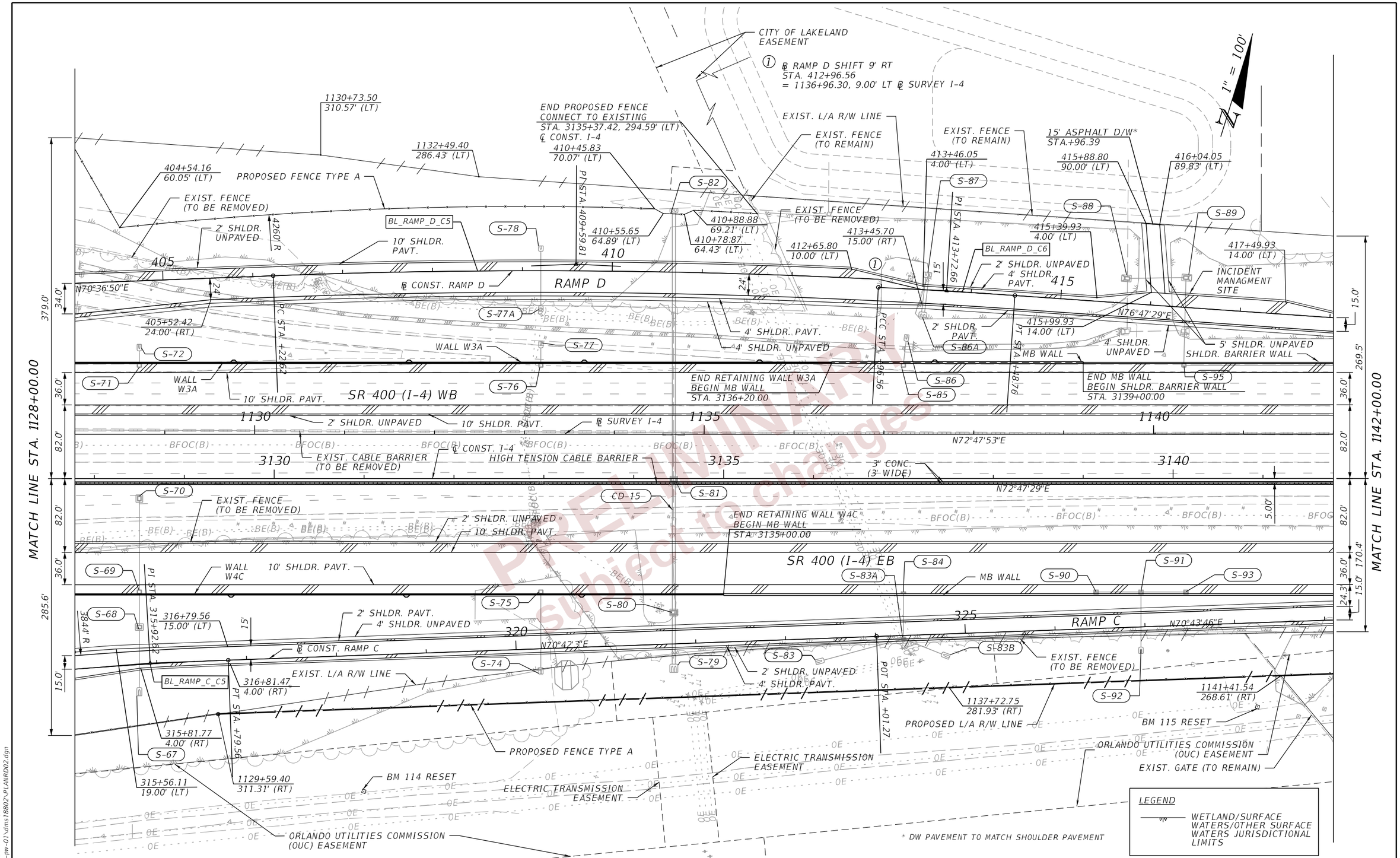

THE OFFICIAL RECORD OF THIS SHEET IS THE ELECTRONIC FILE DIGITALLY SIGNED AND SEALED UNDER RULE 61G15-23.004, F.A.C.

REVISIONS			
DATE	DESCRIPTION	DATE	DESCRIPTION

ENGINEER OF RECORD
DEBANANDA PANIGRAHI, P.E.
LICENSE NUMBER 68318
H. W. LOCHNER
4300 W. CYPRESS STREET, SUITE 500
TAMPA, FLORIDA 33607

STATE OF FLORIDA
DEPARTMENT OF TRANSPORTATION

ROAD NO.	COUNTY	FINANCIAL PROJECT ID
SR 400	POLK	430185-3-52-01

ROADWAY PLANS (07)

SHEET NO.
55

2/29/2024 4:24:31 PM JTAGLIAFERRO
c:\pw_working\lochner-pw-01\dms18802\PLANRD02.dgn

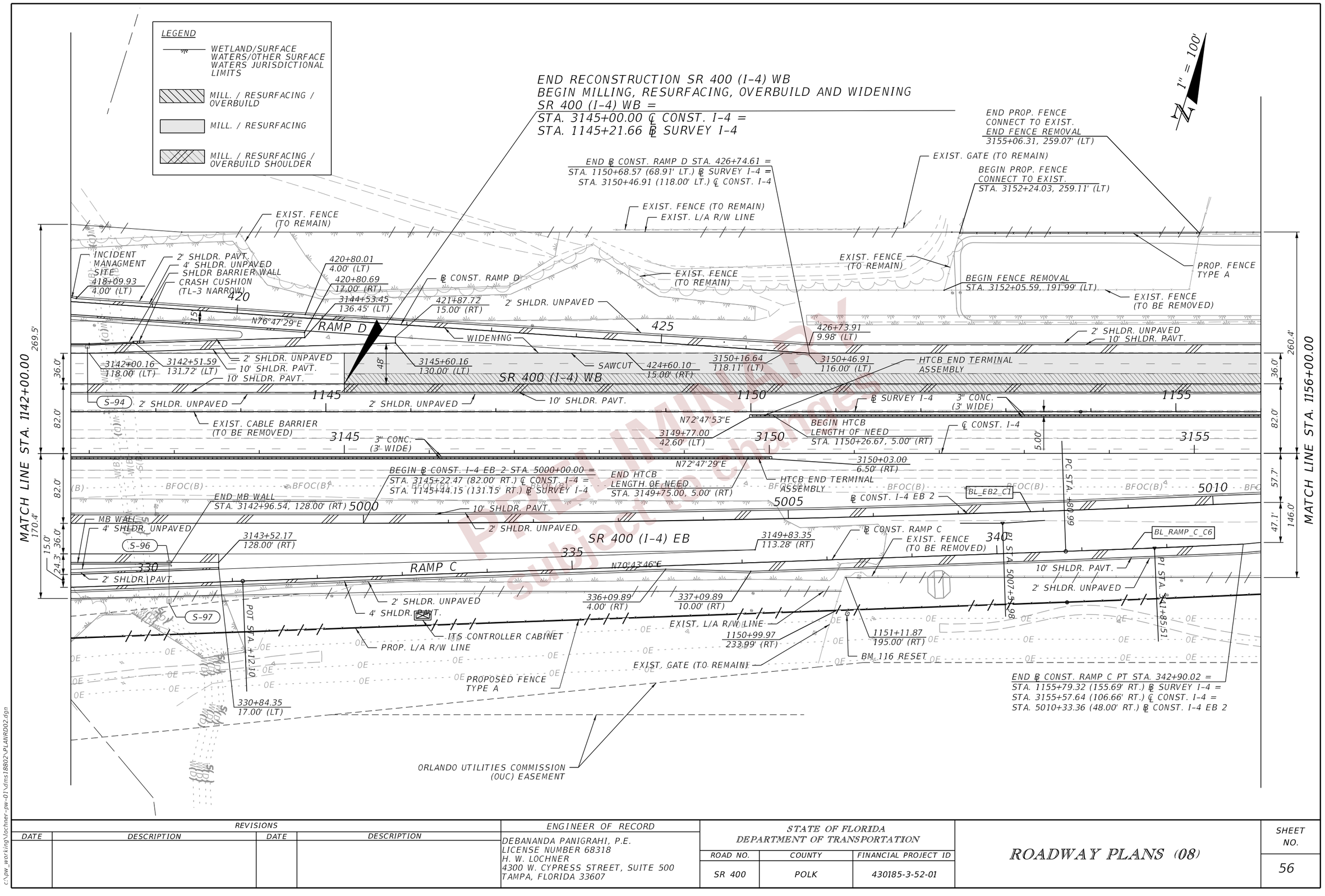

REVISIONS				ENGINEER OF RECORD	STATE OF FLORIDA DEPARTMENT OF TRANSPORTATION			ROADWAY PLANS (08)	SHEET NO.
DATE	DESCRIPTION	DATE	DESCRIPTION	DEBANANDA PANIGRAHI, P.E. LICENSE NUMBER 68318 H. W. LOCHNER 4300 W. CYPRESS STREET, SUITE 500 TAMPA, FLORIDA 33607	ROAD NO.	COUNTY	FINANCIAL PROJECT ID		56
					SR 400	POLK	430185-3-52-01		

2/29/2024 4:24:31 PM JTAGLIAFERRO
c:\pw_working\lochner-pw-01\dms18802\PLANRD02.dgn

THE OFFICIAL RECORD OF THIS SHEET IS THE ELECTRONIC FILE DIGITALLY SIGNED AND SEALED UNDER RULE 61G15-23.004, F.A.C.

1" = 100'

BEGIN FENCE REMOVAL
BEGIN PROP. FENCE
CONNECT TO EXIST
STA. 3167+89.01, 259.18' (LT)

PROP. FENCE TYPE A

EXIST. FENCE
(TO REMAIN)

EXIST. L/A R/W LINE

EXIST. FENCE
(TO BE REMOVED)

2' SHLDR. UNPAVED

10' SHLDR. PAVT.

SAWCUT

SR 400 (I-4) WB

CD-16

℄ SURVEY I-4

EXIST. CABLE BARRIER
(TO BE REMOVED)

℄ CONST. I-4

5.00'

2' SHLDR. UNPAVED

10' SHLDR. PAVT.

3" CONC.
(3' WIDE)

BL_EB2_C2

HIGH TENSION CABLE BARRIER

N72°47'53"E

N72°47'29"E

STA. 5021+36.74 ℄ CONST. I-4 EB2 =
STA. 3166+57.26 ℄ CONST. I-4

GUARDRAIL AND
MISC. ASPHALT

S-103

S-102

SPECIAL GUARDRAIL POSTS

BEGIN TL-3 GUARDRAIL
W/ APPROACH PARALLEL END TERMINAL
STA. 5020+81.54

END TL-3 GUARDRAIL
W/ PARALLEL END TERMINAL
(TYPE II)
STA. 5024+44.59

℄ CONST. I-4 EB 2

SR 400 (I-4) EB

2' SHLDR. UNPAVED
10' SHLDR. PAVT.

BL_EB2_C1

5013+33.83
36.00' (RT)

5020+26.61
48.00' (RT)

5020+71.51
50.50' (RT)

3166+35.81
52.28' (RT)

5024+54.61
50.50' (RT)

S-99

S-101

S-100

ITS CONTROLLER CABINET

PROPOSED FENCE
TYPE A

1157+84.08
195.00' (RT)

EXIST. FENCE
(TO BE REMOVED)

EXIST. FENCE (TO REMAIN)

PROP. L/A R/W LINE

END PROPOSED FENCE
MATCH EXISTING
STA. 5013+43.10

BM 117 RESET

EXIST. L/A R/W LINE

1157+84.08
205.60' (RT)

FDOT EASEMENT

EXIST. GATE (TO REMAIN)

ORLANDO UTILITIES
COMMISSION
(OUC) EASEMENT

FDOT DRAINAGE
EASEMENT

PRC STA. +03.42

MATCH LINE STA. 1156+00.00

260.4'
36.0'
82.0'
57.7'
47.1'
146.0'

MATCH LINE STA. 1170+00.00

260.2'
36.0'
72.0'
10.0'
26.0'
146.1'

1160 1165 3160 3165 5015 5020

LEGEND

WETLAND/SURFACE WATERS/OTHER SURFACE WATERS JURISDICTIONAL LIMITS

MILL. / RESURFACING / OVERBUILD

MILL. / RESURFACING

MILL. / RESURFACING / OVERBUILD SHOULDER

PRELIMINARY
subject to change

THE OFFICIAL RECORD OF THIS SHEET IS THE ELECTRONIC FILE DIGITALLY SIGNED AND SEALED UNDER RULE 61G15-23.004, F.A.C.

REVISIONS			
DATE	DESCRIPTION	DATE	DESCRIPTION

ENGINEER OF RECORD
DEBANANDA PANIGRAHI, P.E.
LICENSE NUMBER 68318
H. W. LOCHNER
4300 W. CYPRESS STREET, SUITE 500
TAMPA, FLORIDA 33607

STATE OF FLORIDA
DEPARTMENT OF TRANSPORTATION

ROAD NO.	COUNTY	FINANCIAL PROJECT ID
SR 400	POLK	430185-3-52-01

ROADWAY PLANS (09)

SHEET NO. 57

2/29/2024 4:24:32 PM JTAGLIAFERRO
c:\pw_working\lochner-pw-01\dms18802\PLANRD02.dgn

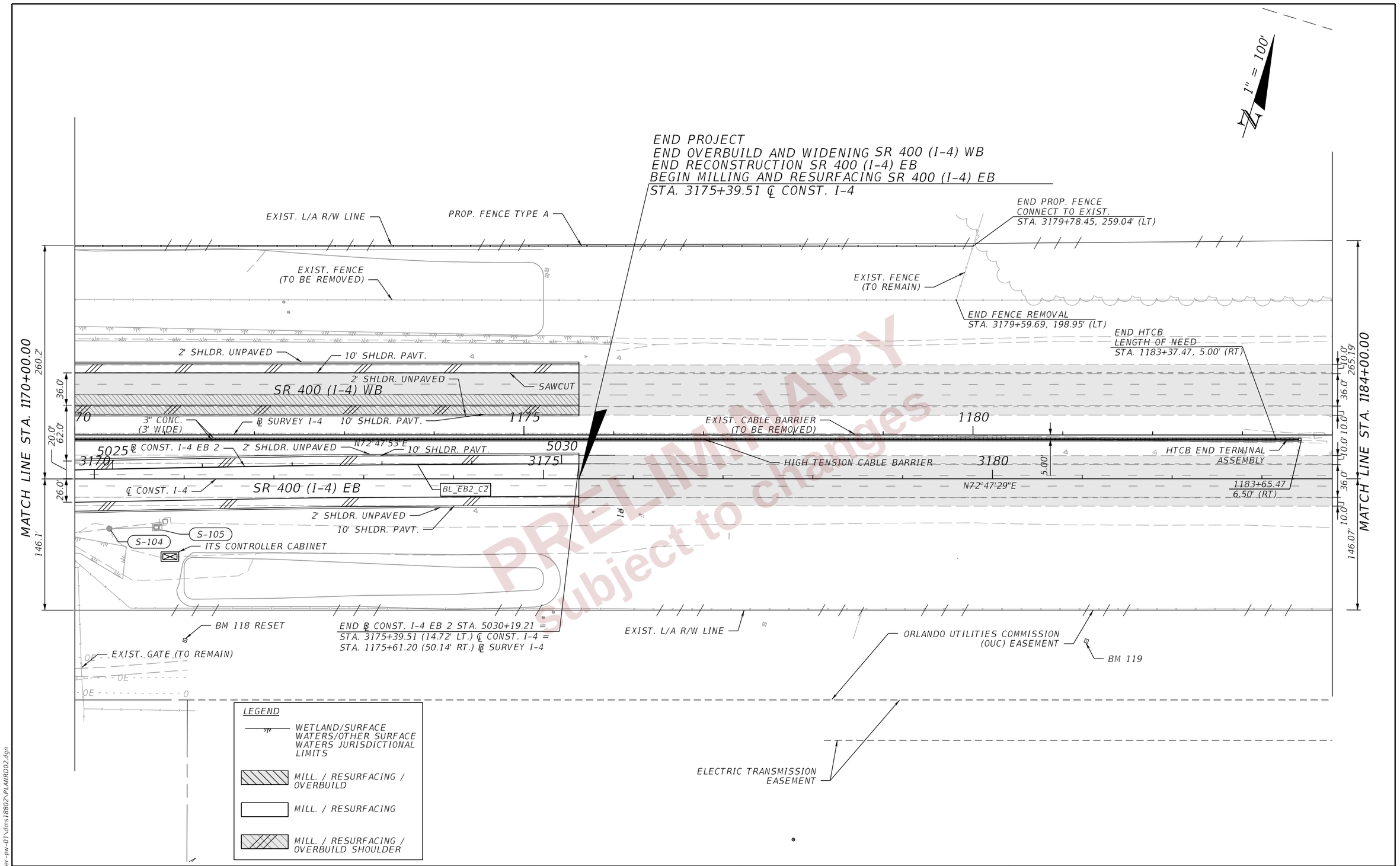

THE OFFICIAL RECORD OF THIS SHEET IS THE ELECTRONIC FILE DIGITALLY SIGNED AND SEALED UNDER RULE 61G15-23.004, F.A.C.

2/29/2024 4:24:32 PM JTAGLIAFERRO
c:\pw_working\lochner-pw-01\dms18802\PLANRD02.dgn

REVISIONS			
DATE	DESCRIPTION	DATE	DESCRIPTION

ENGINEER OF RECORD
DEBANANDA PANIGRAHI, P.E.
LICENSE NUMBER 68318
H. W. LOCHNER
4300 W. CYPRESS STREET, SUITE 500
TAMPA, FLORIDA 33607

STATE OF FLORIDA
DEPARTMENT OF TRANSPORTATION

ROAD NO.	COUNTY	FINANCIAL PROJECT ID
SR 400	POLK	430185-3-52-01

ROADWAY PLANS (10)

SHEET NO.
58

1" = 100'

1191+45.30
222.28' (LT)

1193+79.42
222.95' (LT)

EXIST. FENCE
(TO REMAIN)

EXIST. L/A R/W LINE

265.19'

MATCH LINE STA. 1184+00.00

10.0'
36.0'
10.0'
10.0'
36.0'
10.0'
146.30'

END MILLING & RESURFACING
STA. 1197+00.00

1185 1190 1195

℄ SURVEY I-4

N72°47'53"E

3185 3190 3195

N72°47'29"E

℄ CONST. I-4

END CONSTRUCTION
STA. 1205+80.00 ℄ SURVEY I-4

EXIST. L/A R/W LINE

ORLANDO UTILITIES COMMISSION
(OUC) EASEMENT

EXIST. FENCE
(TO REMAIN)

ELECTRIC TRANSMISSION
EASEMENT

LEGEND

MILLING & RESURFACING

WETLAND/SURFACE WATERS/OTHER SURFACE WATERS JURISDICTIONAL LIMITS

PRELIMINARY
subject to changes

THE OFFICIAL RECORD OF THIS SHEET IS THE ELECTRONIC FILE DIGITALLY SIGNED AND SEALED UNDER RULE 61G15-23.004, F.A.C.

REVISIONS				ENGINEER OF RECORD	STATE OF FLORIDA DEPARTMENT OF TRANSPORTATION			ROADWAY PLANS (11)	SHEET NO.
DATE	DESCRIPTION	DATE	DESCRIPTION	DEBANANDA PANIGRAHI, P.E. LICENSE NUMBER 68318 H. W. LOCHNER 4300 W. CYPRESS STREET, SUITE 500 TAMPA, FLORIDA 33607	ROAD NO.	COUNTY	FINANCIAL PROJECT ID		59
					SR 400	POLK	430185-3-52-01		

2/29/2024 4:24:33 PM JTAGLIAFERRO
c:\pw_working\lochner-pw-01\dms18802\PLANROD02.dgn

1" = 40'

EXIST. R/W LINE

FPID 430185-4-52-01

BM 43 RESET

Exist. 5' ± Sidewalk (REMOVE)

10' SIDEWALK (D)

F-543 F-545 F-547 F-549

CURB & GUTTER TYPE F

399 400 401 402 403

℄ SURVEY SR 33

N20°31'50"E

TRAFFIC SEPARATOR (4' WIDE)

SR 33 SB

CURB & GUTTER TYPE E

3400+68.55
8.75' (LT)

3400+79.51
11.00' (LT)

3399 3400 3401 3402 3403 3404

SOD

3400+79.51
5.50' (LT)

℄ CONST. SR 33

N20°31'50"E

4" CONC.

SR 33 NB

3400+34.08
11.00' (RT)

3400+79.51
3.99' (LT)

CURB & GUTTER TYPE F

POT STA. 74+00

F-544 F-546 F-548 F-548A F-550

10' SHARED USED PATH

WETLAND JURISDICTIONAL LIMIT

EXIST. R/W LINE

114.7'
23.5'
4.0'
5.5'
33.0'
92.3'

MATCH LINE STA. 3404+00.00

LEGEND

WETLAND/SURFACE WATERS/OTHER SURFACE WATERS JURISDICTIONAL LIMITS

BEGIN RECONSTRUCTION SR 33
MATCH FPID 430185-4-52-01
STA. 3399+74.08 ℄ CONST. SR 33
STA. 399+46.72 (27.75' LT) ℄ SURVEY SR 33

PRELIMINARY subject to change

THE OFFICIAL RECORD OF THIS SHEET IS THE ELECTRONIC FILE DIGITALLY SIGNED AND SEALED UNDER RULE 61G15-23.004, F.A.C.

REVISIONS				ENGINEER OF RECORD	STATE OF FLORIDA DEPARTMENT OF TRANSPORTATION			ROADWAY PLANS (12)	SHEET NO.
DATE	DESCRIPTION	DATE	DESCRIPTION	DEBANANDA PANIGRAHI, P.E. LICENSE NUMBER 68318 H. W. LOCHNER 4300 W. CYPRESS STREET, SUITE 500 TAMPA, FLORIDA 33607	ROAD NO.	COUNTY	FINANCIAL PROJECT ID		60
					SR 400	POLK	430185-3-52-01		

2/29/2024 4:24:53 PM JTAGLIAFERRO
c:\pw_working\lochner-pw-01\dms18802\PLANRD01.dgn

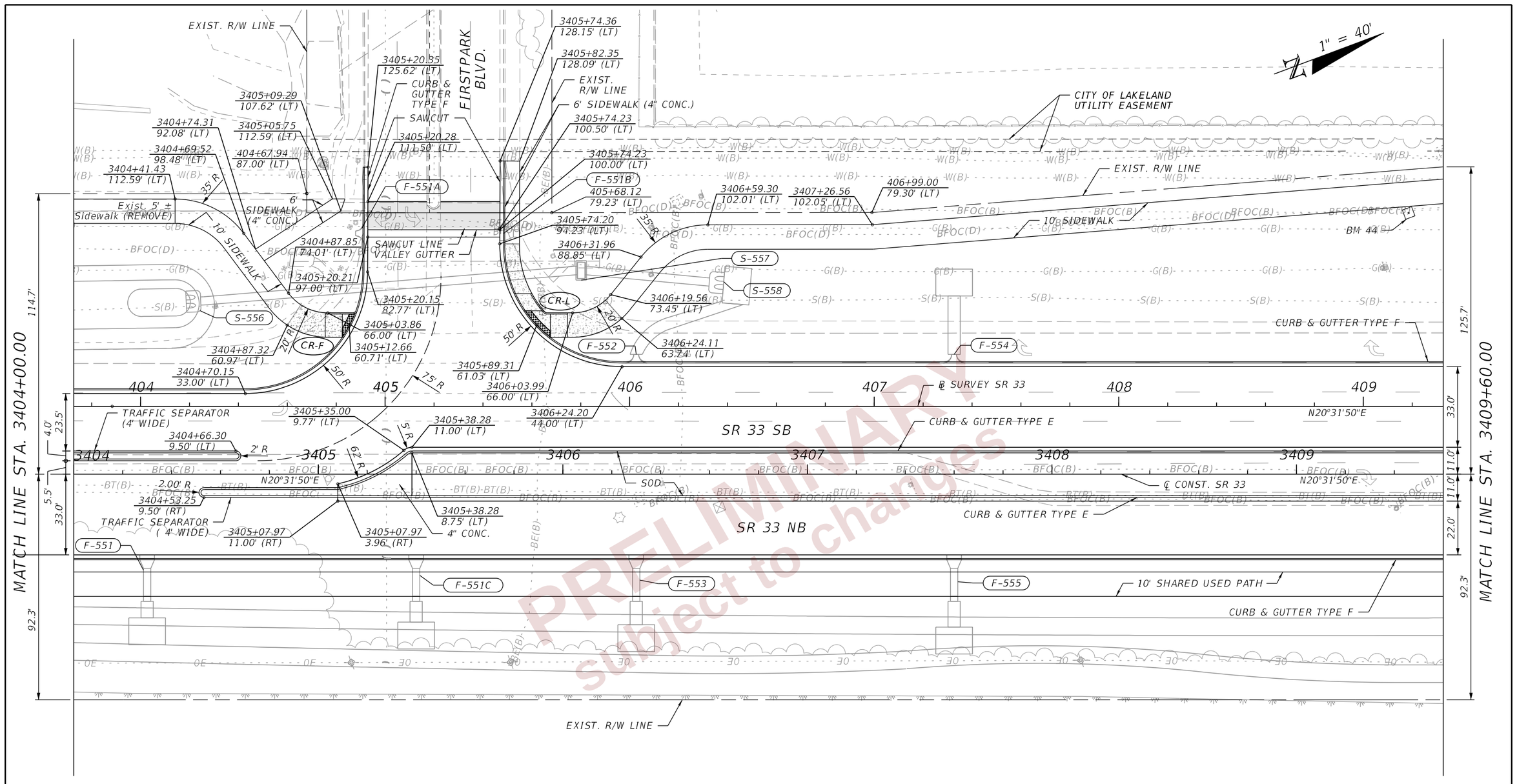

PRELIMINARY
Subject to changes

LEGEND

- MILLING & RESURFACING
- DETECTABLE WARNINGS
- 6" CONCRETE
- WETLAND/SURFACE WATERS/OTHER SURFACE WATERS JURISDICTIONAL LIMITS

REVISIONS			
DATE	DESCRIPTION	DATE	DESCRIPTION

ENGINEER OF RECORD

DEBANANDA PANIGRAHI, P.E.
LICENSE NUMBER 68318
H. W. LOCHNER
4300 W. CYPRESS STREET, SUITE 500
TAMPA, FLORIDA 33607

STATE OF FLORIDA
DEPARTMENT OF TRANSPORTATION

ROAD NO.	COUNTY	FINANCIAL PROJECT ID
SR 400	POLK	430185-3-52-01

ROADWAY PLANS (13)

SHEET NO. 61

THE OFFICIAL RECORD OF THIS SHEET IS THE ELECTRONIC FILE DIGITALLY SIGNED AND SEALED UNDER RULE 61G15-23.004, F.A.C.

2/29/2024 4:24:53 PM JTAGLIAFERRO
c:\pw_working\lochner-pw-01\dms18802\PLANRD01.dgn

409+87.29
102.37' (LT)

3410+09.22
124.68' (LT)

EXIST. R/W LINE

412+42.04
112.26' (LT)

3412+64.64
139.66' (LT)

10' SIDEWALK

1" = 40'

MATCH LINE STA. 3409+60.00

125.7'

33.0'

11.0'

11.0'

22.0'

92.3'

3241.88' R

3246.88' R

CURB & GUTTER TYPE F

F-556

3411+21.91
44.00' (LT)

F-601

3411+73.32
33.00' (LT)

410

411

412

PT STA. 3412+07.03

N20°31'50"E

℄ SURVEY SR 33

SR 33 SB

F-602

413

414

F-603

PC STA. 3414+11.98

3414+75.47
33.00' (LT)

3414+83.37
11.00' (LT)

978' R

1000' R

22.3'

11.0'

11.6'

3410

3411

3412

3413

3414

3415

CURB & GUTTER TYPE E

SOD

N20°31'50"E

CL_CONST_SR33_C2

℄ CONST. SR 33

N23°38'59"E

CL_CONST_SR33_C3

3415+11.98
11.00' (RT)

CURB & GUTTER TYPE E

SR 33 NB

CURB & GUTTER TYPE F

PC STA. +02.83

PT STA. +11.13

1000' R

22.0'

157.1'

75.3'

MATCH LINE STA. 3415+20.00

F-557

10' SHARED USED PATH

F-558

F-559

3413+68.85
49.88' (RT)

90' R

F-559A

F-560

1058' R

3414+10.72
60.18' (RT)

110' R

3414+58.48
72.59' (RT)

413+72.09
120.00' (RT)

413+72.09
132.00' (RT)

PROP. R/W

EXIST. R/W LINE

LEGEND

WETLAND/SURFACE WATERS/OTHER SURFACE WATERS JURISDICTIONAL LIMITS

PRELIMINARY PLANS
subject to changes

THE OFFICIAL RECORD OF THIS SHEET IS THE ELECTRONIC FILE DIGITALLY SIGNED AND SEALED UNDER RULE 61G15-23.004, F.A.C.

REVISIONS				ENGINEER OF RECORD	STATE OF FLORIDA DEPARTMENT OF TRANSPORTATION				SHEET NO.
DATE	DESCRIPTION	DATE	DESCRIPTION	DEBANANDA PANIGRAHI, P.E. LICENSE NUMBER 68318 H. W. LOCHNER 4300 W. CYPRESS STREET, SUITE 500 TAMPA, FLORIDA 33607	ROAD NO.	COUNTY	FINANCIAL PROJECT ID	ROADWAY PLANS (14)	62
					SR 400	POLK	430185-3-52-01		

2/29/2024 4:24:54 PM JTAGLIAFERRO
c:\pw_working\lochner-pw-01\dms18802\PLANRD01.dgn

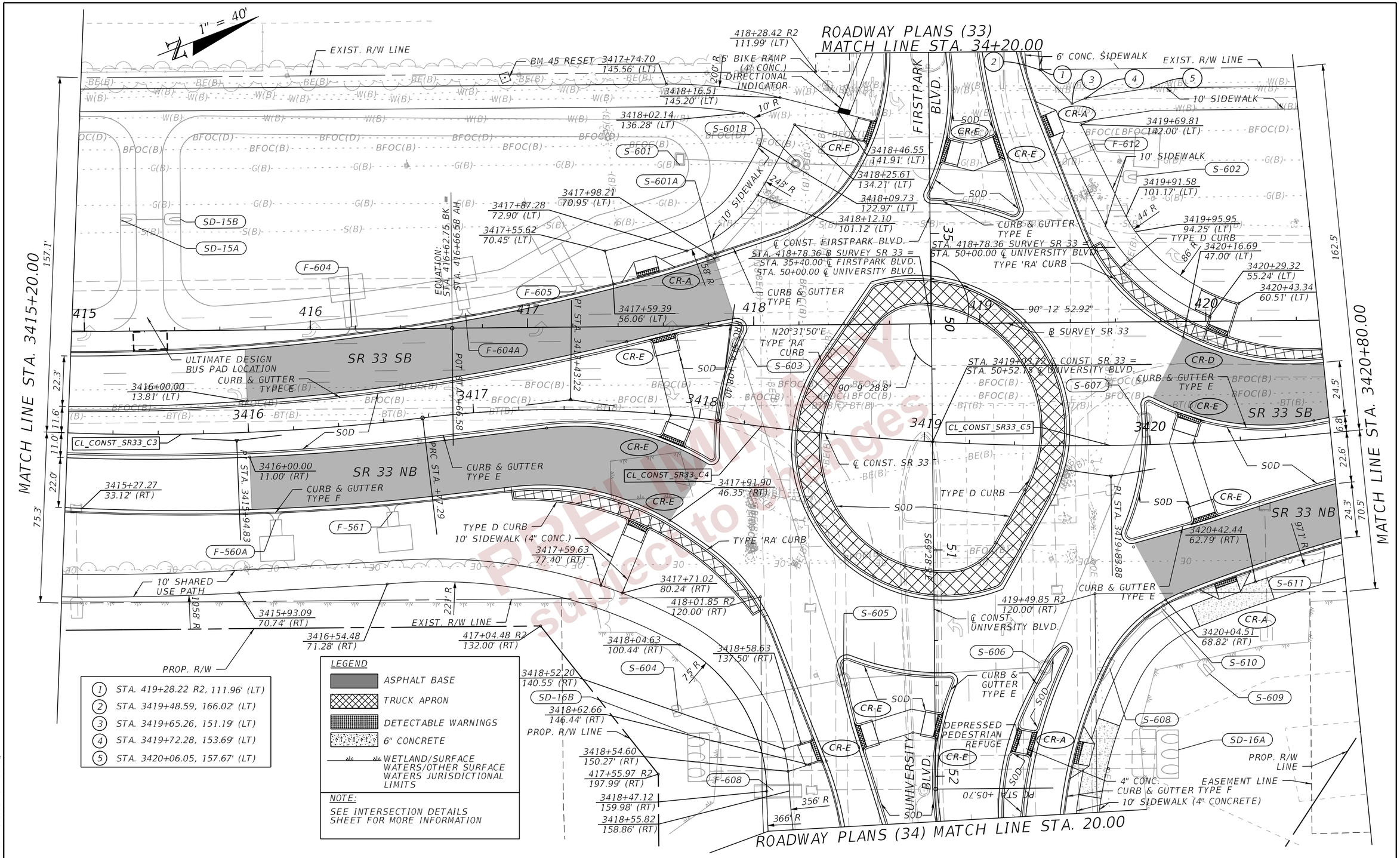

PDF Limited Copy subject to changes

THE OFFICIAL RECORD OF THIS SHEET IS THE ELECTRONIC FILE DIGITALLY SIGNED AND SEALED UNDER RULE 61G15-23.004, F.A.C.

2/29/2024 4:24:54 PM JTAGLIAFERRO
c:\pw_working\lochner-pw-01\dms18802\PLANR001.dgn

REVISIONS				ENGINEER OF RECORD	STATE OF FLORIDA DEPARTMENT OF TRANSPORTATION				SHEET NO.
DATE	DESCRIPTION	DATE	DESCRIPTION	DEBANANDA PANIGRAHI, P.E. LICENSE NUMBER 68318 H. W. LOCHNER 4300 W. CYPRESS STREET, SUITE 500 TAMPA, FLORIDA 33607	ROAD NO.	COUNTY	FINANCIAL PROJECT ID	ROADWAY PLANS (15)	63
					SR 400	POLK	430185-3-52-01		

1" = 40'

EXIST. R/W LINE

Exist. 5' ± Sidewalk (REMOVE)

10' SIDEWALK

EXIST. SW TO REMAIN

425+37.13 R2
111.93' (LT)

3425+69.94
136.42' (LT)

5' SIDEWALK (4" CONC.)

3425+69.72
131.43' (LT)

3425+82.66
121.43' (LT)

3425+95.01
139.50' (LT)

BM 46 RESET

BRIDGEWATER CENTER LANE

93.23' R

15'

78.23' R

3426+39.02
70.29' (LT)

3426+39.59
51.34' (LT)

10.00' R

F-619

TYPE D CURB

F-613

F-615

F-617

CURB & GUTTER TYPE F

421

422

423

424

425

426

3423+03.47
33.06' (LT)

3423+14.04
11.00' (LT)

℄ SURVEY SR 33

SR 33 SB

N20°31'50"E

CURB & GUTTER TYPE E

3426+34.08
33.00' (LT)

TYPE 'RA' CURB

3421+19.08
33.81' (LT)

3421+31.30
10.41' (LT)

1000' R

1022' R

3422+00.00
11.00' (LT)

PI STA. 3422+35.46

3421

3422

3423

3424

3425

3426

℄ CONST. SR 33

CL_CONST_SR33_C6

S-613

3422+00.00
14.13' (RT)

PRC STA. +59.56

978' R

1000' R

PT STA. +44.04

S0D

3423+40.15
11.00' (RT)

CURB & GUTTER TYPE E

SR 33 NB

CURB & GUTTER TYPE F

ITS SIGN STRUCTURE

F-618

210' R

200' R

ULTIMATE DESIGN BUS PAD LOCATION

ITS CONTROLLER CABINET

S-627A

S-627

3423+47.64
33.00' (RT)

S-612

3421+52.87
60.39' (RT)

3421+06.44
59.77' (RT)

3422+09.32
67.59' (RT)

100' R

10' SHARED USED PATH

3423+81.95
83.25' (RT)

3424+49.02
72.25' (RT)

3425+28.53
72.25' (RT)

3424+17.08
77.49' (RT)

3425+60.47
77.49' (RT)

3425+95.61
83.25' (RT)

3426+28.48
83.25' (RT)

110' R

EXIST. R/W LINE

S-628

3422+43.15
75.66' (RT)

3422+77.55
82.63' (RT)

422+93.86 R2
120.00' (RT)

420+90.60 R2
146.07' (RT)

PROP. R/W LINE

EASEMENT LINE

MATCH LINE STA. 3420+80.00

MATCH LINE STA. 3426+40.00

162.5'

24.5'

6.8'

22.6'

24.3'

70.5'

139.7'

22.0'

11.0'

11.0'

92.3'

LEGEND

- MILLING & RESURFACING
- DETECTABLE WARNINGS
- ASPHALT BASE
- 6" CONCRETE
- WETLAND/SURFACE WATERS/OTHER SURFACE WATERS JURISDICTIONAL LIMITS

1. STA. 3426+10.08, 139.50' (LT)
2. STA. 3426+23.72, 139.67' (LT)
3. STA. 3426+24.61, 133.33' (LT)
4. STA. 3426+12.64, 139.78' (LT)
5. STA. 3426+17.72, 122.94' (LT)

PRELIMINARY
Plans subject to change

THE OFFICIAL RECORD OF THIS SHEET IS THE ELECTRONIC FILE DIGITALLY SIGNED AND SEALED UNDER RULE 61G15-23.004, F.A.C.

2/29/2024 4:24:55 PM JTAGLIAFERRO
c:\pw_working\lochner-pw-01\dms18802\PLANRD01.dgn

REVISIONS				ENGINEER OF RECORD	STATE OF FLORIDA DEPARTMENT OF TRANSPORTATION			ROADWAY PLANS (16)	SHEET NO.
DATE	DESCRIPTION	DATE	DESCRIPTION	DEBANANDA PANIGRAHI, P.E. LICENSE NUMBER 68318 H. W. LOCHNER 4300 W. CYPRESS STREET, SUITE 500 TAMPA, FLORIDA 33607	ROAD NO.	COUNTY	FINANCIAL PROJECT ID		64
					SR 400	POLK	430185-3-52-01		

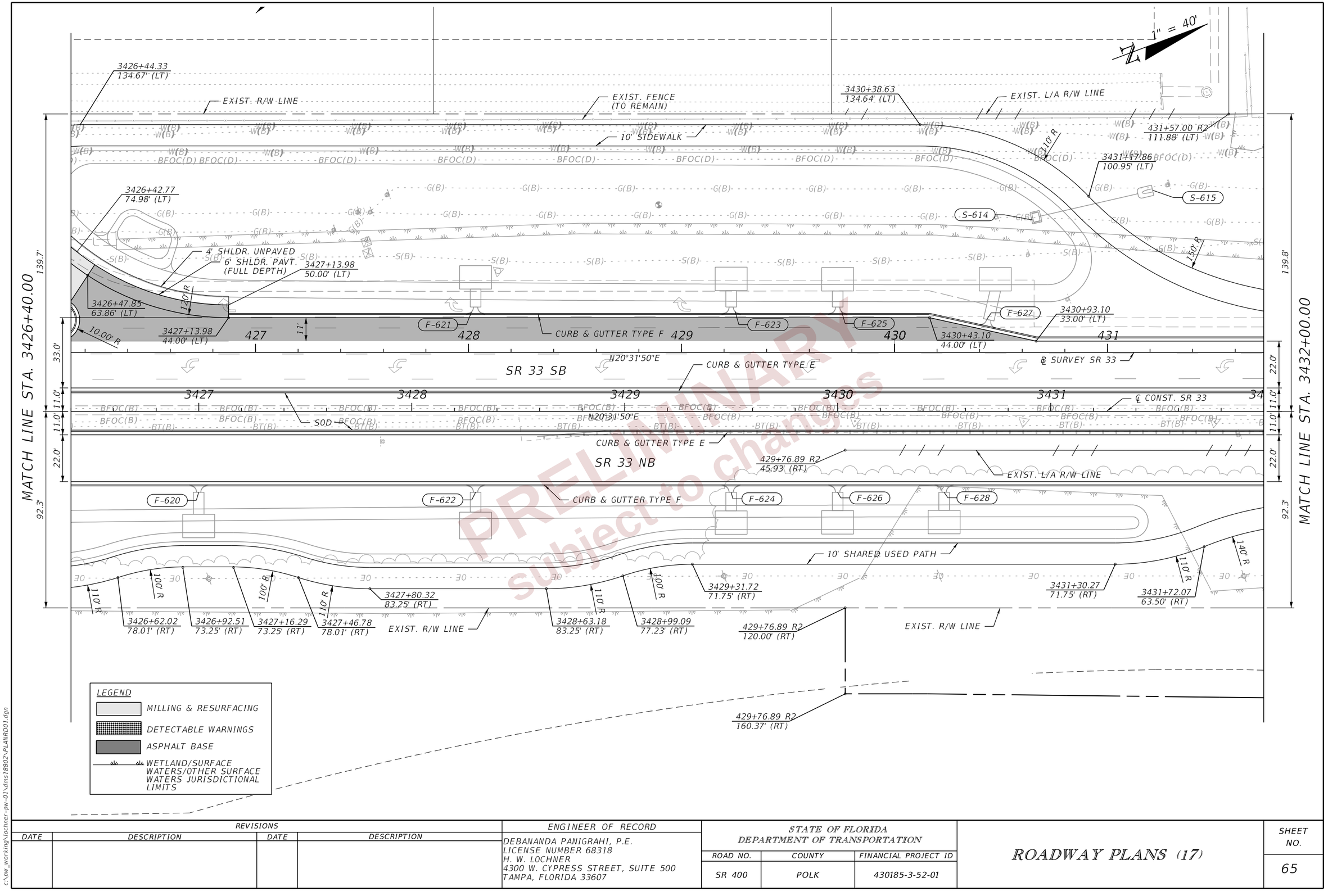

PRELIMINARY
subject to changes

REVISIONS			
DATE	DESCRIPTION	DATE	DESCRIPTION

ENGINEER OF RECORD

DEBANANDA PANIGRAHI, P.E.
LICENSE NUMBER 68318
H. W. LOCHNER
4300 W. CYPRESS STREET, SUITE 500
TAMPA, FLORIDA 33607

STATE OF FLORIDA
DEPARTMENT OF TRANSPORTATION

ROAD NO.	COUNTY	FINANCIAL PROJECT ID
SR 400	POLK	430185-3-52-01

ROADWAY PLANS (17)

SHEET NO. 65

THE OFFICIAL RECORD OF THIS SHEET IS THE ELECTRONIC FILE DIGITALLY SIGNED AND SEALED UNDER RULE 61G15-23.004, F.A.C.

2/29/2024 4:24:55 PM JTAGLIAFERRO
c:\pw_working\lochner-pw-01\dms18802\PLANROD1.dgn

1" = 40'

EXIST. FENCE (TO REMAIN)

EXIST. L/A R/W LINE

3434+13.16
134.62' (LT)

10' SIDEWALK

3433+33.93
100.93' (LT)

110' R

S-620

BM 47

CD-6A

150' R

S-621

F-629

CURB & GUTTER TYPE F

F-631

S-618

MATCH LINE STA. 3432+00.00

139.8'

153.3'

MATCH LINE STA. 3436+60.00

22.0'

11.0'

11.0'

22.0'

℄ SURVEY SR 33

SR 33 SB

CURB & GUTTER TYPE E

N20°31'50"E

℄ CONST. SR 33

N20°31'50"E

SOD

CL_CONST_SR33_C7

CURB & GUTTER TYPE E

SR 33 NB

EXIST. L/A R/W LINE

PC STA. 435+15.11

S-617

CURB & GUTTER TYPE F

F-630

F-632

S-619

S-616

140' R

92.3'

90.8'

3433+00.35
74.84' (RT)

CD-6

110' R

10' SHARED USED PATH

435+79.32 R2
120.00' (RT)

EXIST. R/W LINE

3433+60.91
93.00' (RT)

435+79.32 R2
166.92' (RT)

PROP. R/W LINE

PROP. L/A R/W LINE

DRAINAGE EASEMENT

EASEMENT LINE

LEGEND

WETLAND/SURFACE WATERS/OTHER SURFACE WATERS JURISDICTIONAL LIMITS

PRELIMINARY subject to changes

THE OFFICIAL RECORD OF THIS SHEET IS THE ELECTRONIC FILE DIGITALLY SIGNED AND SEALED UNDER RULE 61G15-23.004, F.A.C.

REVISIONS				ENGINEER OF RECORD	STATE OF FLORIDA DEPARTMENT OF TRANSPORTATION				SHEET NO.
DATE	DESCRIPTION	DATE	DESCRIPTION	DEBANANDA PANIGRAHI, P.E. LICENSE NUMBER 68318 H. W. LOCHNER 4300 W. CYPRESS STREET, SUITE 500 TAMPA, FLORIDA 33607	ROAD NO.	COUNTY	FINANCIAL PROJECT ID	ROADWAY PLANS (18)	66
					SR 400	POLK	430185-3-52-01		

2/29/2024 4:24:56 PM JTAGLIAFERRO
c:\pw_working\lochner-pw-01\dms18802\PLANRD01.dgn

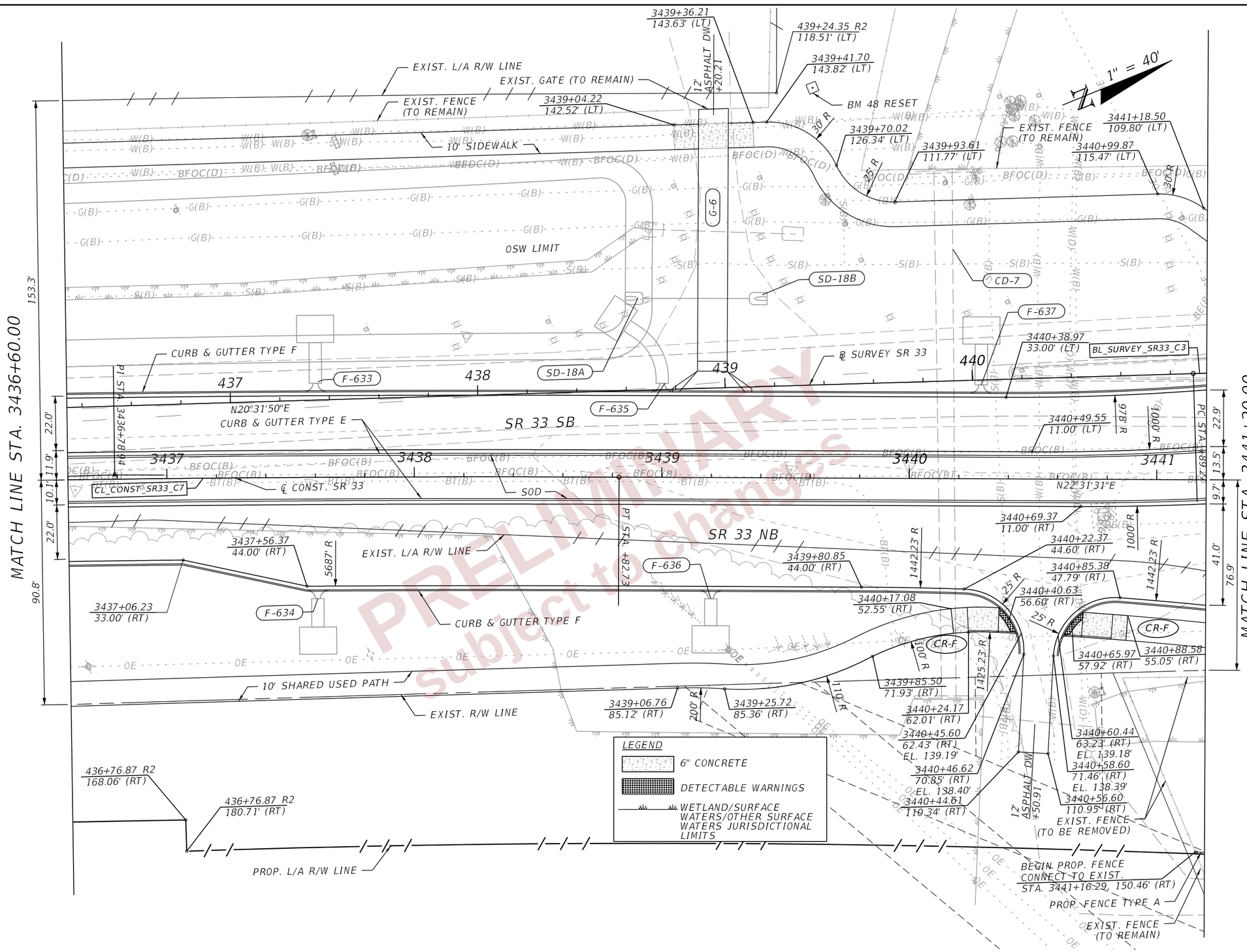

PRELIMINARY subject to changes

THE OFFICIAL RECORD OF THIS SHEET IS THE ELECTRONIC FILE DIGITALLY SIGNED AND SEALED UNDER RULE 61G15-23.004, F.A.C.

REVISIONS				ENGINEER OF RECORD	STATE OF FLORIDA DEPARTMENT OF TRANSPORTATION			ROADWAY PLANS (19)	SHEET NO.
DATE	DESCRIPTION	DATE	DESCRIPTION	DEBANANDA PANIGRAHI, P.E. LICENSE NUMBER 68318 H. W. LOCHNER 4300 W. CYPRESS STREET, SUITE 500 TAMPA, FLORIDA 33607	ROAD NO.	COUNTY	FINANCIAL PROJECT ID		
					SR 400	POLK	430185-3-52-01		67

2/29/2024 4:24:56 PM JTAGLIAFERRO
C:\pw_working\lochner-pw-01\dms18802\PLANRD01.dgn

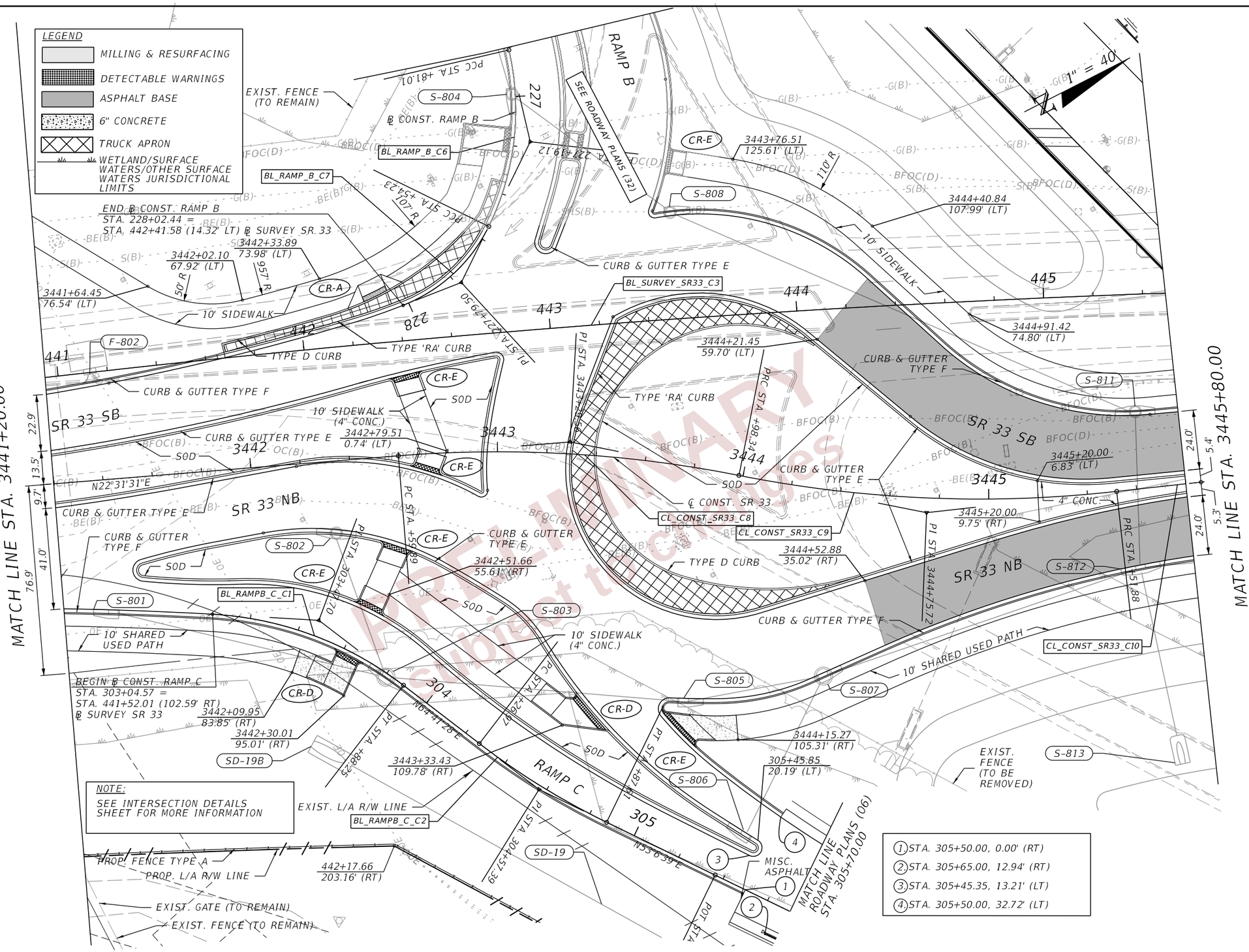

PRELIMINARY Subject to change

REVISIONS				ENGINEER OF RECORD	STATE OF FLORIDA DEPARTMENT OF TRANSPORTATION			ROADWAY PLANS (20)	SHEET NO.
DATE	DESCRIPTION	DATE	DESCRIPTION	DEBANANDA PANIGRAHI, P.E. LICENSE NUMBER 68318 H. W. LOCHNER 4300 W. CYPRESS STREET, SUITE 500 TAMPA, FLORIDA 33607	ROAD NO.	COUNTY	FINANCIAL PROJECT ID		68
					SR 400	POLK	430185-3-52-01		

THE OFFICIAL RECORD OF THIS SHEET IS THE ELECTRONIC FILE DIGITALLY SIGNED AND SEALED UNDER RULE 61G15-23.004, F.A.C.

2/29/2024 4:24:57 PM JTAGLIAFERRO
c:\pw_working\lochner-pw-01\dms18802\PLANRD01.dgn

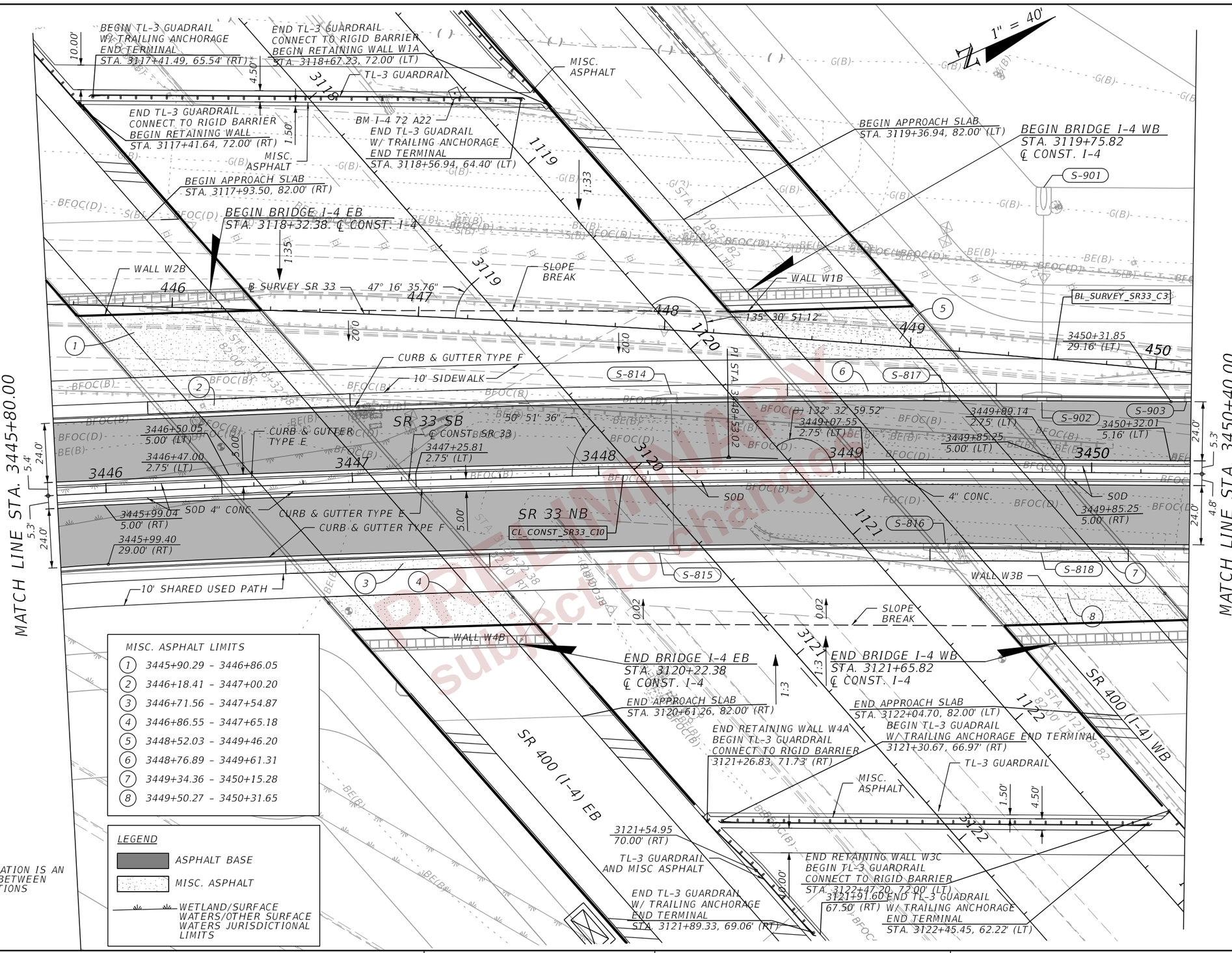

PRELIMINARY subject to change

THE OFFICIAL RECORD OF THIS SHEET IS THE ELECTRONIC FILE DIGITALLY SIGNED AND SEALED UNDER RULE 61G15-23.004, F.A.C.

REVISIONS				ENGINEER OF RECORD	STATE OF FLORIDA DEPARTMENT OF TRANSPORTATION			ROADWAY PLANS (21)	SHEET NO.
DATE	DESCRIPTION	DATE	DESCRIPTION	DEBANANDA PANIGRAHI, P.E. LICENSE NUMBER 68318 H. W. LOCHNER 4300 W. CYPRESS STREET, SUITE 500 TAMPA, FLORIDA 33607	ROAD NO.	COUNTY	FINANCIAL PROJECT ID		69
					SR 400	POLK	430185-3-52-01		

2/29/2024 4:24:58 PM JTAGLIAFERRO
c:\pw_working\lochner-pw-01\dms18802\PLANRD01.dgn

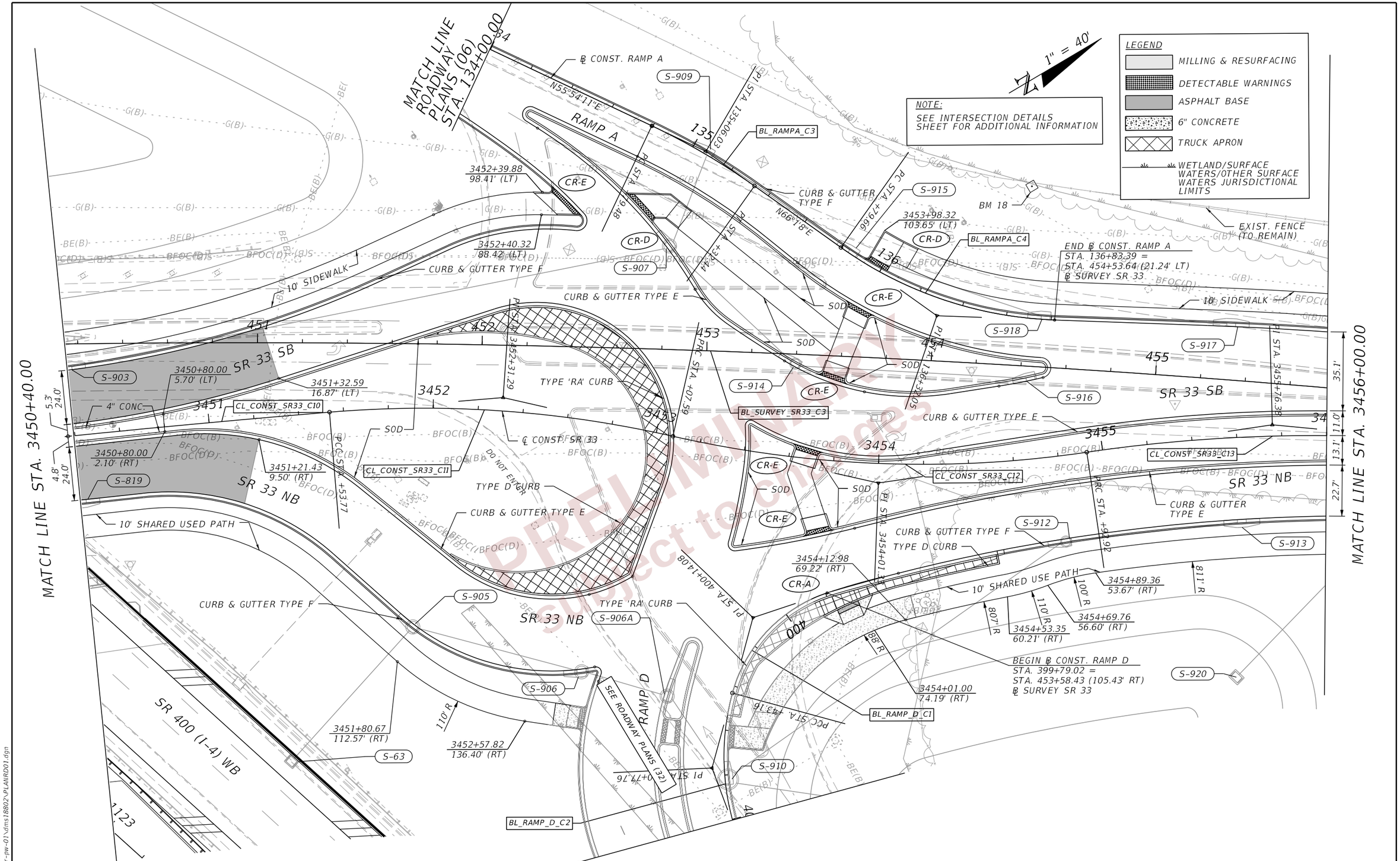

PRELIMINARY subject to changes

THE OFFICIAL RECORD OF THIS SHEET IS THE ELECTRONIC FILE DIGITALLY SIGNED AND SEALED UNDER RULE 61G15-23.004, F.A.C.

2/29/2024 4:24:58 PM JTAGLIAFERRO
c:\pw_working\lochner-pw-01\dms18802\PLANRD01.dgn

REVISIONS			
DATE	DESCRIPTION	DATE	DESCRIPTION

ENGINEER OF RECORD
DEBANANDA PANIGRAHI, P.E.
LICENSE NUMBER 68318
H. W. LOCHNER
4300 W. CYPRESS STREET, SUITE 500
TAMPA, FLORIDA 33607

STATE OF FLORIDA
DEPARTMENT OF TRANSPORTATION

ROAD NO.	COUNTY	FINANCIAL PROJECT ID
SR 400	POLK	430185-3-52-01

ROADWAY PLANS (22)

SHEET NO.
70

1" = 40'

EXIST. L/A R/W LINE

EXIST. FENCE (TO REMAIN)

BEGIN PROP. FENCE CONNECT TO EXIST. STA. 3456+43.74, 90.69' (LT)

END PROP. FENCE CONNECT TO EXIST. STA. 3458+66.78, 102.36' (LT)

PROP. FENCE TYPE A

EXIST. GATE (TO REMAIN)

EXIST. FENCE (TO REMAIN)

BEGIN PROP. FENCE CONNECT TO EXIST. STA. 3459+56.08, 97.75' (LT)

EXIST. FENCE (TO BE REMOVED)

PROP. FENCE TYPE A

3461+14.79
115.35' (LT)

3461+51.80
93.99' (LT)

S-923

3456+83.50
96.73' (LT)

3456+54.05
80.38' (LT)

3456+68.47
80.39' (LT)

EXIST. FENCE (TO BE REMOVED)

CD-9A

3460+31.92
82.43' (LT)

3460+08.02
82.26' (LT)

3460+96.73
77.23' (LT)

100' R

3460+43.23
61.00' (LT)

100' R

S-1002

F-1002

F-1004

F-1006

10' SIDEWALK

CURB & GUTTER TYPE F

3461+23.26
33.00' (LT)

3460+77.89
44.00' (LT)

3456+59.04
11.00' (LT)

S-922

CD-8

CD-9

℄ SURVEY SR 33

BL_SURVEY_SR33_C3

CURB & GUTTER TYPE E

℄ CONST. SR 33

CL_CONST_SR33_C14

CL_CONST_SR33_C13

SOD

S-921

3456+93.73
11.00' (RT)

SR 33 NB

SR 33 SB

CURB & GUTTER TYPE F

10' SHARED USED PATH

S-921A

F-1003

F-1005

F-1007

S-1001

CD-8A

CD-9B

461+06.10
120.00' (RT)

END PROP. FENCE CONNECT TO EXIST. STA. 3456+70.10, 123.79' (RT)

PROP. FENCE TYPE A

EXIST. L/A R/W LINE

456+48.40
143.54' (RT)

CITY OF LAKELAND UTILITY EASEMENT

461+27.04
143.54' (RT)

EXIST. L/A R/W LINE

456 457 458 459 460 461

3457 3458 3459 3460 3461

MATCH LINE STA. 3456+00.00

MATCH LINE STA. 3461+60.00

165.0'

150.7'

101.0'

35.1'

11.0'

13.1'

22.7'

22.0'

11.0'

11.0'

22.0'

700' R

800' R

50' R

LEGEND

WETLAND/SURFACE WATERS/OTHER SURFACE WATERS JURISDICTIONAL LIMITS

PRELIMINARY subject to changes

THE OFFICIAL RECORD OF THIS SHEET IS THE ELECTRONIC FILE DIGITALLY SIGNED AND SEALED UNDER RULE 61G15-23.004, F.A.C.

2/29/2024 4:24:59 PM JTAGLIAFERRO
c:\pw_working\lochner-pw-01\dms18802\PLANRD01.dgn

REVISIONS				ENGINEER OF RECORD	STATE OF FLORIDA DEPARTMENT OF TRANSPORTATION			ROADWAY PLANS (23)	SHEET NO.
DATE	DESCRIPTION	DATE	DESCRIPTION	DEBANANDA PANIGRAHI, P.E. LICENSE NUMBER 68318 H. W. LOCHNER 4300 W. CYPRESS STREET, SUITE 500 TAMPA, FLORIDA 33607	ROAD NO.	COUNTY	FINANCIAL PROJECT ID		71
					SR 400	POLK	430185-3-52-01		

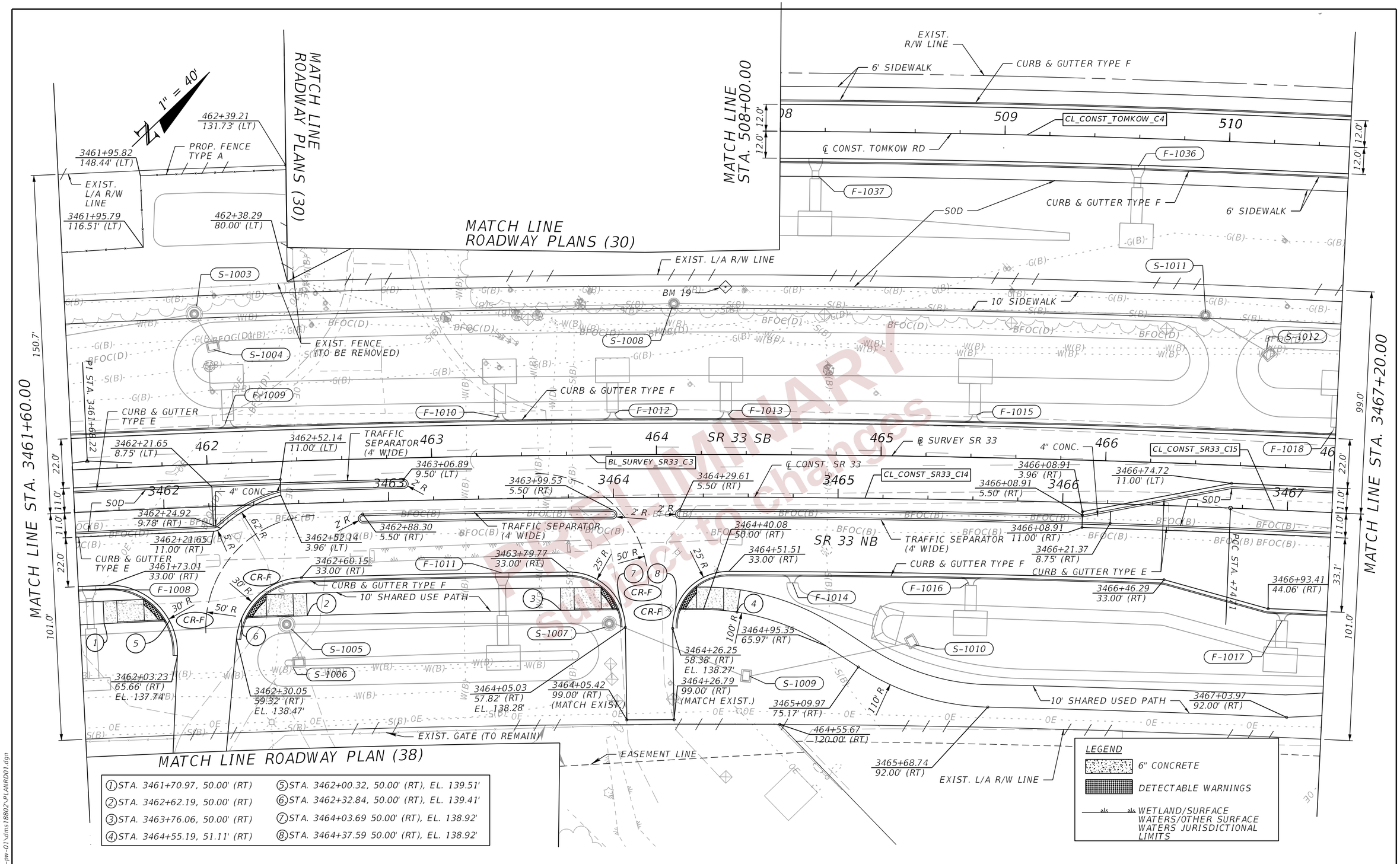

PRELIMINARY subject to changes

THE OFFICIAL RECORD OF THIS SHEET IS THE ELECTRONIC FILE DIGITALLY SIGNED AND SEALED UNDER RULE 61G15-23.004, F.A.C.

2/29/2024 4:24:59 PM JTAGLIAFERRO
c:\pw_working\lochner-pw-01\dms18802\PLANRD01.dgn

REVISIONS			
DATE	DESCRIPTION	DATE	DESCRIPTION

ENGINEER OF RECORD
DEBANANDA PANIGRAHI, P.E.
LICENSE NUMBER 68318
H. W. LOCHNER
4300 W. CYPRESS STREET, SUITE 500
TAMPA, FLORIDA 33607

STATE OF FLORIDA
DEPARTMENT OF TRANSPORTATION

ROAD NO.	COUNTY	FINANCIAL PROJECT ID
SR 400	POLK	430185-3-52-01

ROADWAY PLANS (24)

SHEET NO.
72

1" = 40'

PI STA. 513+60.06

EXIST. R/W LINE

S-1014

CURB & GUTTER TYPE F

6' CONC. SIDEWALK

S-1016

511 512 513 514 515 516

CL_CONST_TOMKOW_C4

TOMKOW RD

℄ CONST. TOMKOW RD

514+97.83
12.00' (RT)

12.0' 12.0'

12.0'

24.0'

F-1035

511+48.05
20.00' (RT)

511+53.07
14.00' (RT)

F-1034

S-1013

F-1033

F-1032A

F-1032

F-1031

S-1015

6' SIDEWALK

SD-20B

SD-20A

SD-20

5' SIDEWALK (4" CONC.)

5'

CURB & GUTTER TYPE F

515+47.85
24.00' (RT)

SOD

EXIST.
L/A R/W
LINE

467+87.63
80.00' (LT)

3468+16.65
94.00' (LT)

10' SIDEWALK

99.0'

189.0'

F-1018

CURB & GUTTER TYPE F

F-1020

F-1022

F-1023

22.0'

7 468 469 SR 33 SB 470 ℄ SURVEY SR 33 471 472

BL_SURVEY_SR33_C3

22.0'

11.0'

11.0'

33.1'

101.0'

3468 3469 3470 3471 3472

CL_CONST_SR33_C15

SOD

℄ CONST. SR 33

3471+59.96
0.00' (LT)

3472+02.75
33.00' (RT)

33.0'

CURB & GUTTER TYPE E

SR 33 NB

3471+11.75
11.00' (RT)

3470+86.45
44.00' (RT)

CURB & GUTTER
TYPE F

CURB & GUTTER TYPE F

F-1021

CR-F

40' R

3471+68.34
56.06' (RT)

3471+64.06
61.26' (RT)
EL. 140.98'

F-1101

F-1019

3471+11.13
55.67' (RT)

3471+26.03
81.81' (RT)
EL. 138.83'

3471+62.39
76.68' (RT)
EL. 139.32'

100' R

3471+14.44
61.21' (RT)

10' SHARED USED PATH

110' R

3472+16.71
75.02' (RT)

3470+01.92
92.00' (RT)

EXIST. R/W LINE

CITY OF LAKELAND UTILITY EASEMENT

3470+52.38
79.89' (RT)

3470+66.33
72.73' (RT)

3471+18.81
61.23' (RT)
EL. 140.84'

3471+88.61
63.97' (RT)

3471+13.94
99.00' (RT)

3471+78.28
99.00' (RT)

3472+71.51
89.50' (RT)

3467+69.81
92.00' (RT)

3467+53.28
90.00' (RT)

EXIST. L/A R/W LINE

3467+24.86
90.00' (RT)

LEGEND

6" CONCRETE

DETECTABLE WARNINGS

WETLAND/SURFACE WATERS/OTHER SURFACE WATERS JURISDICTIONAL LIMITS

MATCH LINE STA. 3467+20.00

MATCH LINE STA. 3472+80.00

PRELIMINARY subject to change

THE OFFICIAL RECORD OF THIS SHEET IS THE ELECTRONIC FILE DIGITALLY SIGNED AND SEALED UNDER RULE 61G15-23.004, F.A.C.

REVISIONS				ENGINEER OF RECORD	STATE OF FLORIDA DEPARTMENT OF TRANSPORTATION				SHEET NO.
DATE	DESCRIPTION	DATE	DESCRIPTION	DEBANANDA PANIGRAHI, P.E. LICENSE NUMBER 68318 H. W. LOCHNER 4300 W. CYPRESS STREET, SUITE 500 TAMPA, FLORIDA 33607	ROAD NO.	COUNTY	FINANCIAL PROJECT ID	ROADWAY PLANS (25)	73
					SR 400	POLK	430185-3-52-01		

2/29/2024 4:25:00 PM JTAGLIAFERRO
c:\pw_working\lochner-pw-01\dms18802\PLAVRD01.dgn

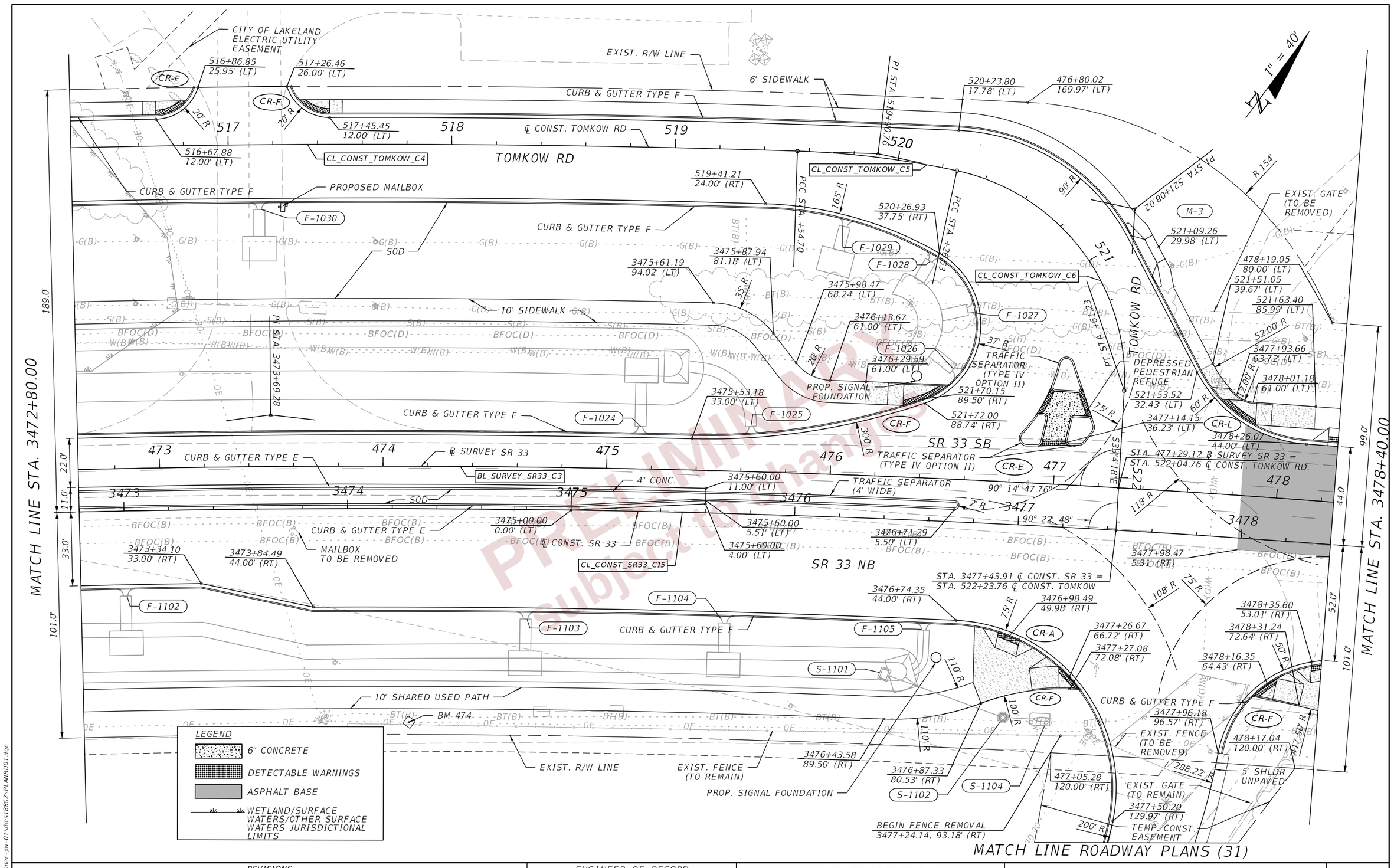

REVISIONS				ENGINEER OF RECORD	STATE OF FLORIDA DEPARTMENT OF TRANSPORTATION			ROADWAY PLANS (26)	SHEET NO.
DATE	DESCRIPTION	DATE	DESCRIPTION	DEBANANDA PANIGRAHI, P.E. LICENSE NUMBER 68318 H. W. LOCHNER 4300 W. CYPRESS STREET, SUITE 500 TAMPA, FLORIDA 33607	ROAD NO.	COUNTY	FINANCIAL PROJECT ID		74
					SR 400	POLK	430185-3-52-01		

2/29/2024 4:25:01 PM JTAGLIAFERRO
c:\pw_working\lochner-pw-01\dms18802\PLANRD01.dgn

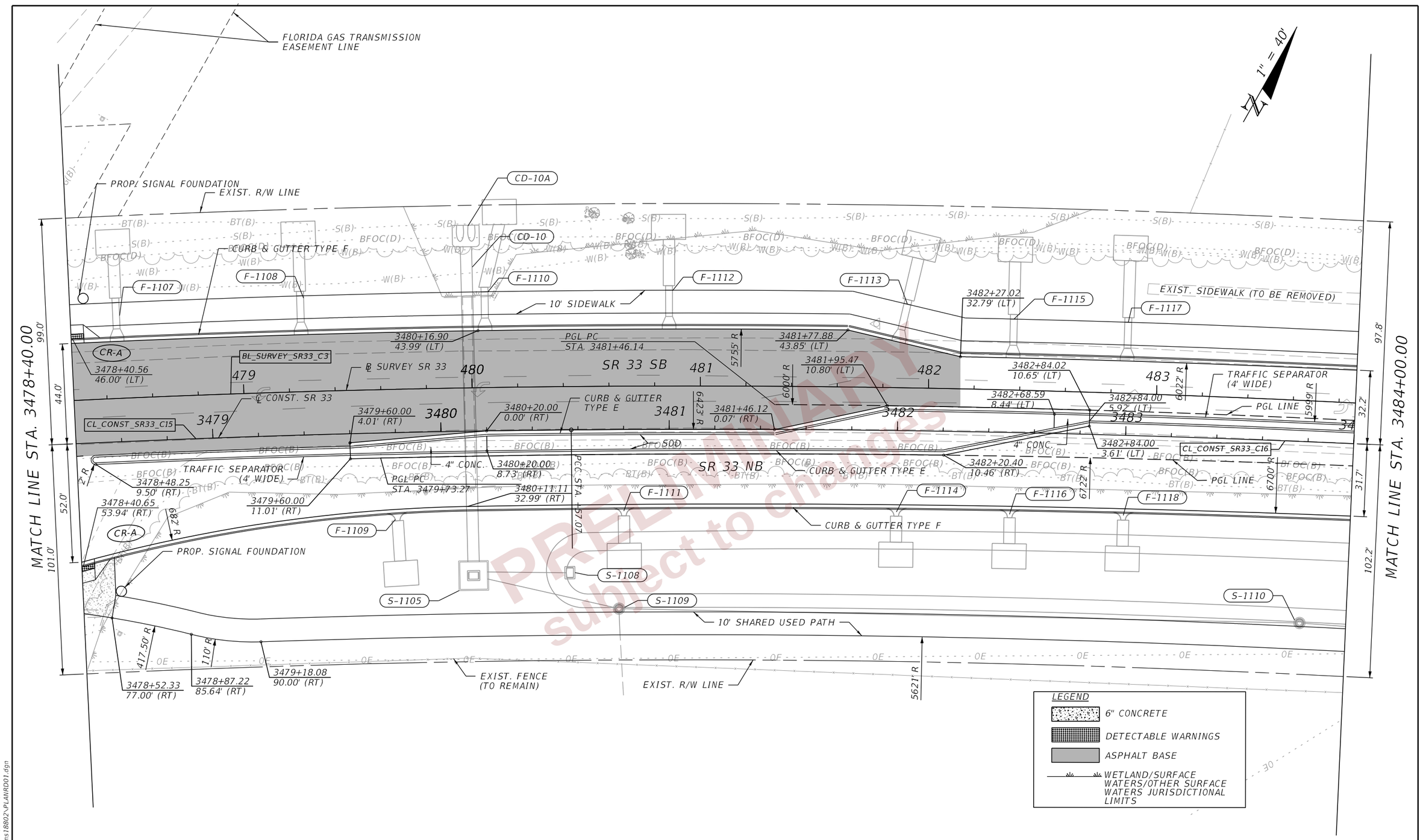

PRELIMINARY subject to change

REVISIONS				ENGINEER OF RECORD	STATE OF FLORIDA DEPARTMENT OF TRANSPORTATION				SHEET NO.
DATE	DESCRIPTION	DATE	DESCRIPTION	DEBANANDA PANIGRAHI, P.E. LICENSE NUMBER 68318 H. W. LOCHNER 4300 W. CYPRESS STREET, SUITE 500 TAMPA, FLORIDA 33607	ROAD NO.	COUNTY	FINANCIAL PROJECT ID	ROADWAY PLANS (27)	75
					SR 400	POLK	430185-3-52-01		

THE OFFICIAL RECORD OF THIS SHEET IS THE ELECTRONIC FILE DIGITALLY SIGNED AND SEALED UNDER RULE 61G15-23.004, F.A.C.

2/29/2024 4:25:01 PM JTAGLIAFERRO
c:\pw_working\lochner-pw-01\dms18802\PLANR001.dgn

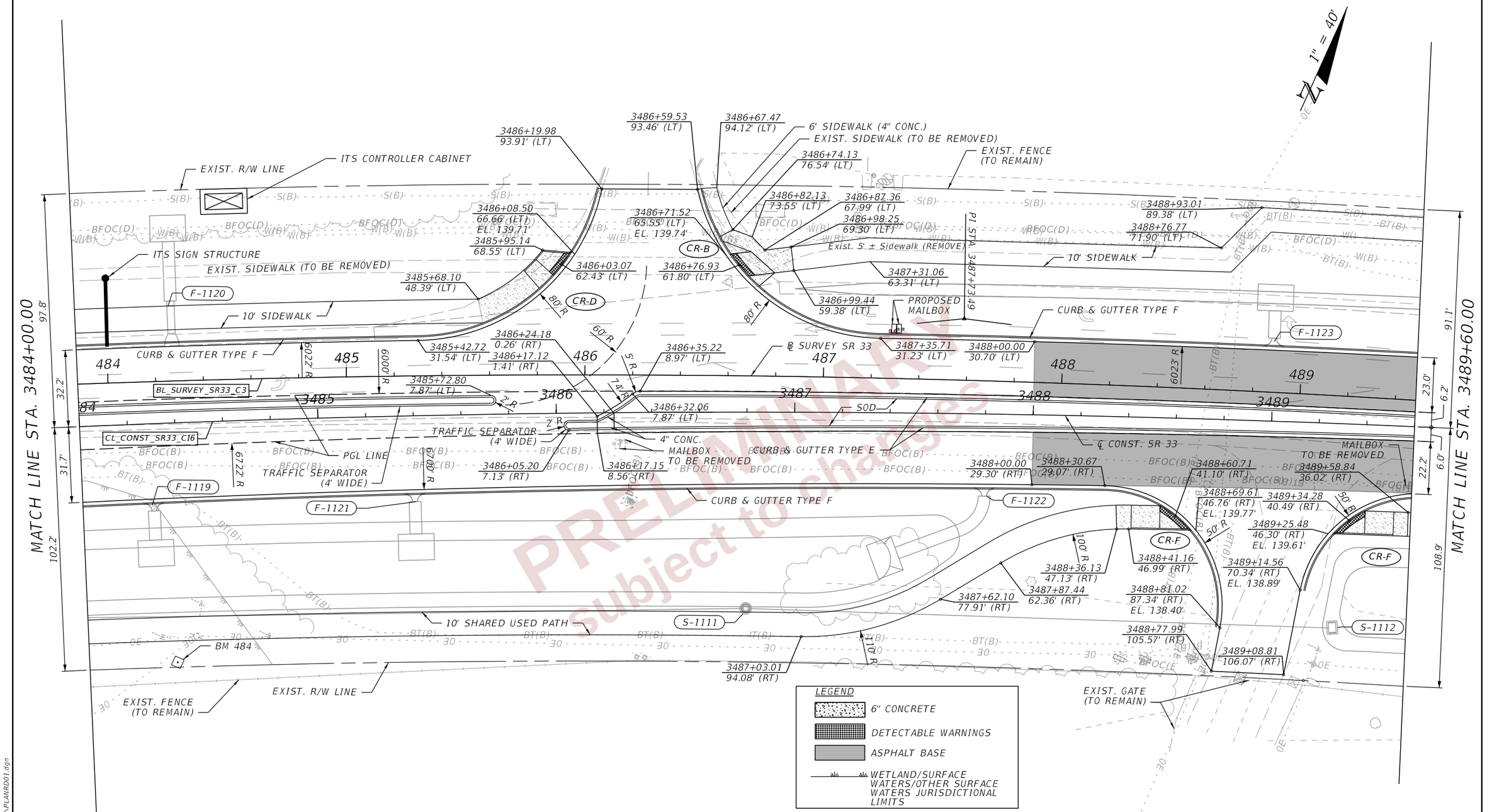

PRELIMINARY subject to changes

REVISIONS			
DATE	DESCRIPTION	DATE	DESCRIPTION

ENGINEER OF RECORD
DEBANANDA PANIGRAHI, P.E.
LICENSE NUMBER 68318
H. W. LOCHNER
4300 W. CYPRESS STREET, SUITE 500
TAMPA, FLORIDA 33607

STATE OF FLORIDA
DEPARTMENT OF TRANSPORTATION

ROAD NO.	COUNTY	FINANCIAL PROJECT ID
SR 400	POLK	430185-3-52-01

ROADWAY PLANS (28)

SHEET NO. 76

THE OFFICIAL RECORD OF THIS SHEET IS THE ELECTRONIC FILE DIGITALLY SIGNED AND SEALED UNDER RULE 61G15-23.004, F.A.C.

2/29/2024 4:25:02 PM JTAGLIAFERRO
c:\pw_working\lochner-pw-01\dms18802\PLANROO1.dgn

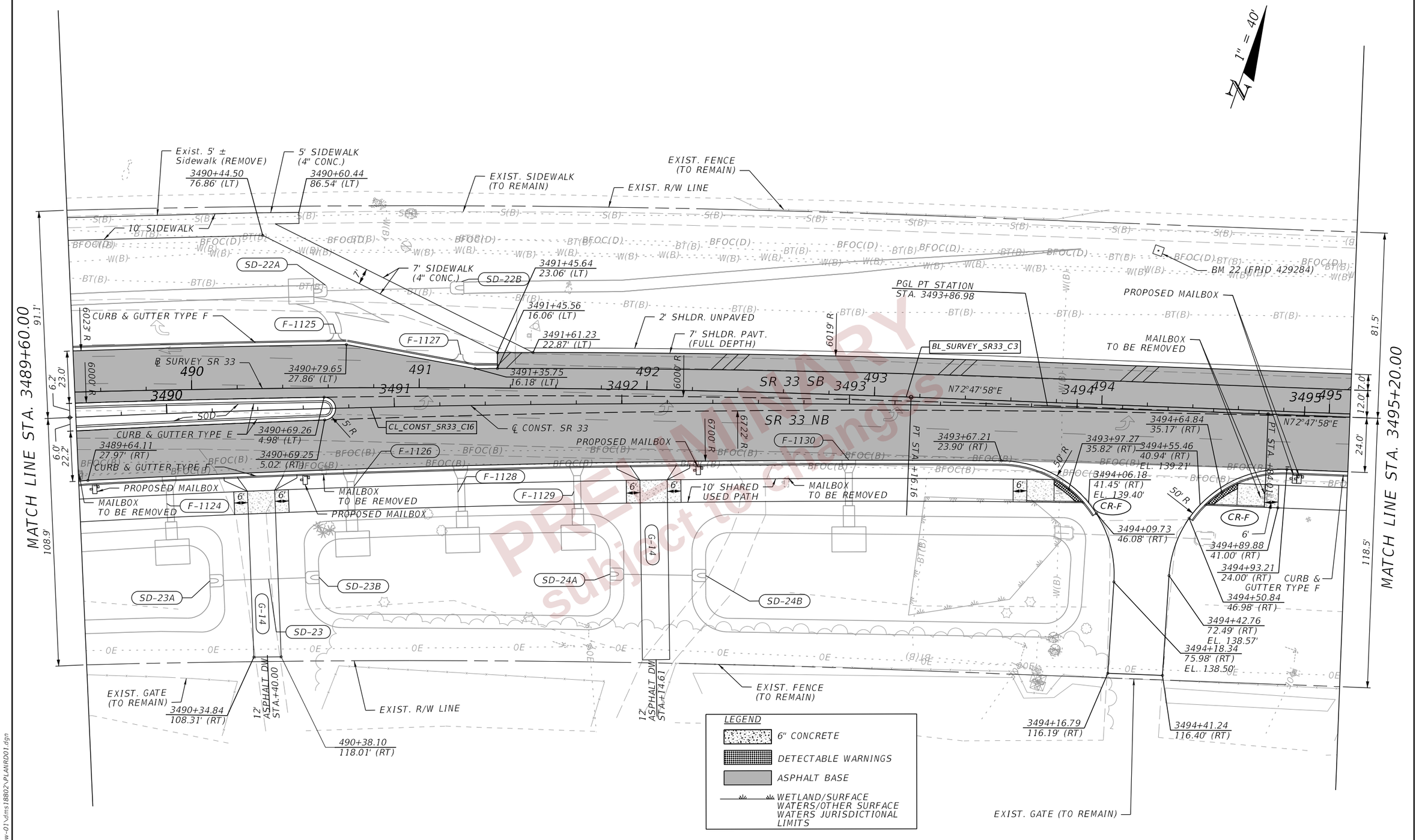

PRELIMINARY
subject to change

THE OFFICIAL RECORD OF THIS SHEET IS THE ELECTRONIC FILE DIGITALLY SIGNED AND SEALED UNDER RULE 61G15-23.004, F.A.C.

2/29/2024 4:25:02 PM JTAGLIAFERRO
c:\pw_working\lochner-pw-01\dms18802\PLANRD01.dgn

REVISIONS			
DATE	DESCRIPTION	DATE	DESCRIPTION

ENGINEER OF RECORD
DEBANANDA PANIGRAHI, P.E.
LICENSE NUMBER 68318
H. W. LOCHNER
4300 W. CYPRESS STREET, SUITE 500
TAMPA, FLORIDA 33607

STATE OF FLORIDA
DEPARTMENT OF TRANSPORTATION

ROAD NO.	COUNTY	FINANCIAL PROJECT ID
SR 400	POLK	430185-3-52-01

ROADWAY PLANS (29)

SHEET NO. 77

1" = 40'

EXIST. R/W LINE

EXIST. SIDEWALK (TO REMAIN)

END RECONSTRUCTION
BEGIN MILLING AND RESURFACING
STA. 3495+51.92 ℄ CONST. SR. 33=
STA. 495+41.09 1.46' (RT) ℄ SURVEY SR. 33

3495+52.02
19.00' (LT)

℄ CONST. SR 33

PGL POT
STA. 0+00.00

℄ SURVEY SR 33

496 497 498 499 500

N72°47'58"E

END ℄ CONST. SR-33
STA. 3495+98.89 ℄ CONST. SR. 33 =
STA. 495+88.05 (1.46' RT) ℄ SURVEY SR. 33

PGL PT
STA. 0+00.00

CURB & GUTTER TYPE F

3495+51.92
23.99' (RT)

END SHARED USE PATH
CONNECT TO EXIST. SHOULDER
3495+85.63, 28.78' (RT)

SHOULDER WATER TO DRAIN OVER SHARED USE PATH

3495+51.92
41.00' (RT)

10' SHARED USED PATH

EXIST. FENCE (TO REMAIN)

EXIST. GATE (TO REMAIN)

EXIST. R/W LINE

EXIST. GATE (TO REMAIN)

81.5'
12.0'
7.0'
24.0'
118.5'

MATCH LINE STA. 3495+20.00

80.0'
120.0'

MATCH LINE STA. 500+69.17

LEGEND

- BLACK BASE
- MILLING & RESURFACING
- WETLAND/SURFACE WATERS/OTHER SURFACE WATERS JURISDICTIONAL LIMITS

PRELIMINARY
subject to changes

THE OFFICIAL RECORD OF THIS SHEET IS THE ELECTRONIC FILE DIGITALLY SIGNED AND SEALED UNDER RULE 61G15-23.004, F.A.C.

REVISIONS			
DATE	DESCRIPTION	DATE	DESCRIPTION

ENGINEER OF RECORD

DEBANANDA PANIGRAHI, P.E.
LICENSE NUMBER 68318
H. W. LOCHNER
4300 W. CYPRESS STREET, SUITE 500
TAMPA, FLORIDA 33607

STATE OF FLORIDA
DEPARTMENT OF TRANSPORTATION

ROAD NO.	COUNTY	FINANCIAL PROJECT ID
SR 400	POLK	430185-3-52-01

ROADWAY PLANS (30)

SHEET NO. 78

2/29/2024 4:25:03 PM JTAGLIAFERRO
c:\pw_working\lochner-pw-01\dms18802\PLANRD01.dgn

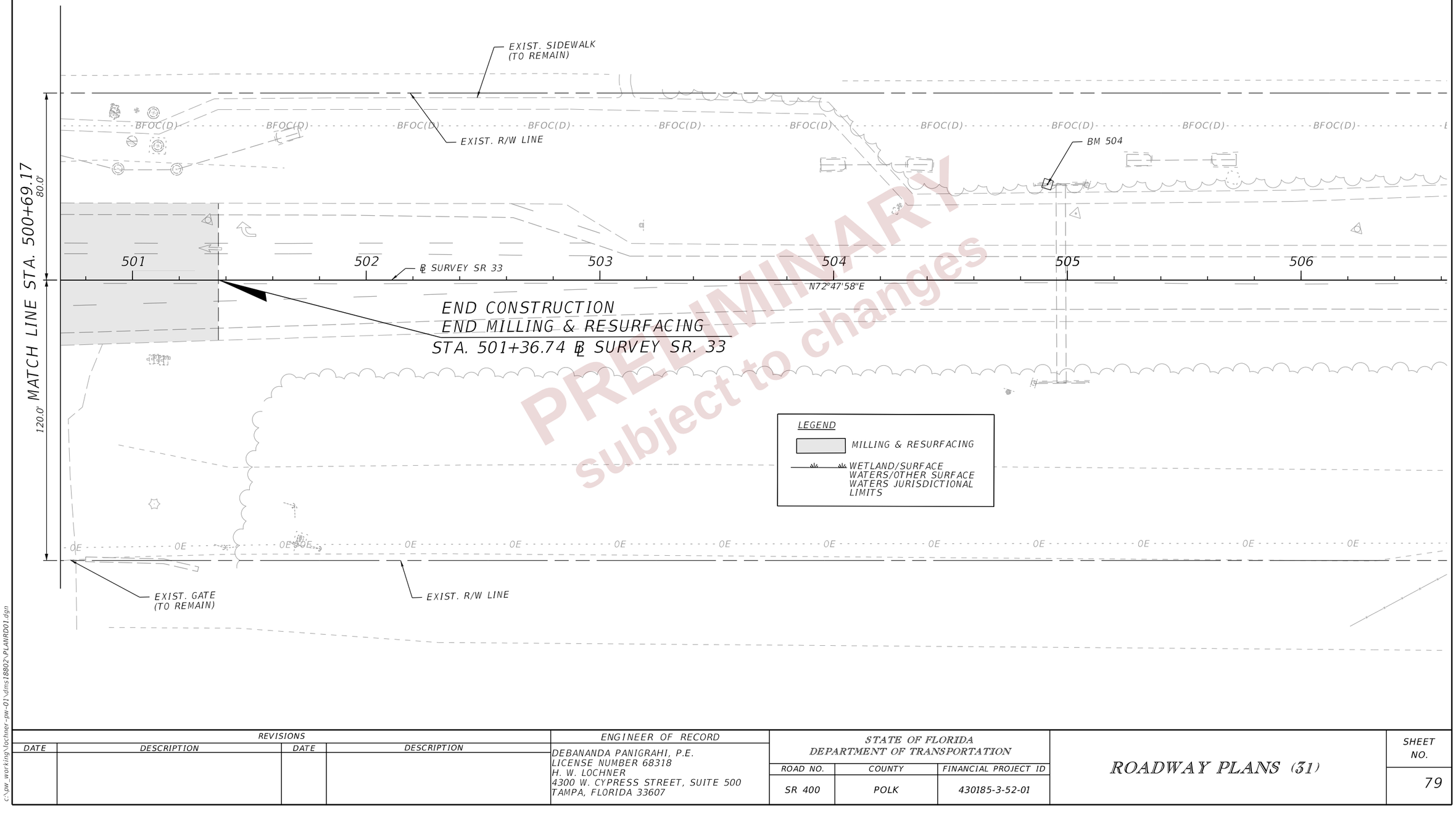

PRELIMINARY
subject to changes

REVISIONS			
DATE	DESCRIPTION	DATE	DESCRIPTION

ENGINEER OF RECORD
DEBANANDA PANIGRAHI, P.E.
LICENSE NUMBER 68318
H. W. LOCHNER
4300 W. CYPRESS STREET, SUITE 500
TAMPA, FLORIDA 33607

STATE OF FLORIDA
DEPARTMENT OF TRANSPORTATION

ROAD NO.	COUNTY	FINANCIAL PROJECT ID
SR 400	POLK	430185-3-52-01

ROADWAY PLANS (31)

SHEET NO. 79

THE OFFICIAL RECORD OF THIS SHEET IS THE ELECTRONIC FILE DIGITALLY SIGNED AND SEALED UNDER RULE 61G15-23.004, F.A.C.

2/29/2024 4:25:03 PM JTAGLIAFERRO
c:\pw_working\lochner-pw-01\dms18802\PLANRD01.dgn

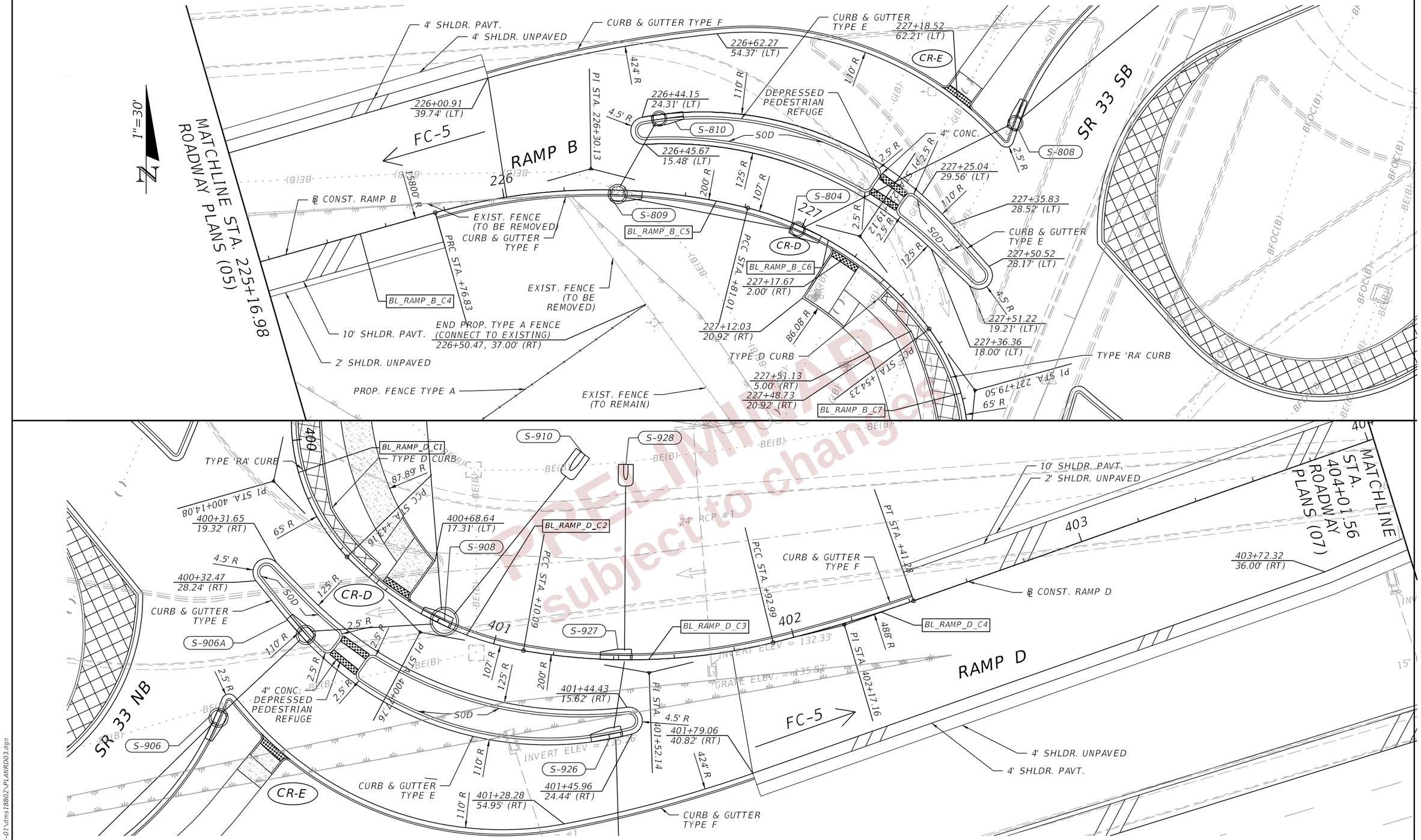

PRELIMINARY subject to change

REVISIONS				ENGINEER OF RECORD	STATE OF FLORIDA DEPARTMENT OF TRANSPORTATION			ROADWAY PLANS (32)	SHEET NO.
DATE	DESCRIPTION	DATE	DESCRIPTION	DEBANANDA PANIGRAHI, P.E. LICENSE NUMBER 68318 H. W. LOCHNER 4300 W. CYPRESS STREET, SUITE 500 TAMPA, FLORIDA 33607	ROAD NO.	COUNTY	FINANCIAL PROJECT ID		
					SR 400	POLK	430185-3-52-01		80

THE OFFICIAL RECORD OF THIS SHEET IS THE ELECTRONIC FILE DIGITALLY SIGNED AND SEALED UNDER RULE 61G15-23.004, F.A.C.

2/29/2024 4:25:25 PM JTAGLIAFERRO
c:\pw_working\lochner-pw-01\dms18802\PLANRD03.dgn

1. STA. 33+27.46, 44.13' (LT)
2. STA. 33+52.20, 42.79' (LT)
3. END CURB & GUTTER TYPE F MATCH EXISTING STA. 33+25.99, 47.55' (LT)
4. END CURB & GUTTER TYPE F MATCH EXISTING STA. 33+48.40, 47.90' (LT)
5. STA. 33+19.70, 45.79' (LT)
6. 7.00' R
7. 30.00' R

1"=40'

EXIST. R/W LINE

BEGIN 6' SIDEWALK MATCH EXISTING
STA. 32+98.24
℄ FIRSTPARK BLVD.

END MILLING, RESURFACING & WIDENING
BEGIN RECONSTRUCTION
STA. 32+98.24
℄ FIRSTPARK BLVD.

419+28.29 R2
441.41' (LT)

DRAINAGE EASEMENT
EXIST. SIDEWALK TO REMAIN

BEGIN MILLING AND RESURFACING
STA. 31+43.27
℄ CONST. FIRSTPARK BLVD.

BEGIN ℄ CONST. FIRSTPARK BLVD.
STA. 30+00.00
STA. 418+78.46, 540.00' (LT)
℄ SURVEY SR 33

30 31 32 33 34

S69°28'5"E

PI STA. +90.05

℄ CONST. FIRSTPARK BLVD.

FIRSTPARK BLVD.

BEGIN WIDENING
STA. 32+21.59

32+32.97
2.54' (RT)
EL. 138.47'

32+37.00
2.54' (RT)

794' R

2' R

S69°27'32"E

32+32.96
6.54' (RT)
EL. 138.66'

32+37.00
6.54' (RT)

TRAFFIC SEPARATOR
(4' WIDE)

PROPOSED MAILBOX

32+80.15
31.72' (RT)

419+52.09 R2
124.09' (LT)

CURB & GUTTER TYPE F

6' SIDEWALK
(4" CONC.)

TEMP. CONST. EASEMENT

33+46.78
47.88' (LT)

33+62.88
46.45' (LT)

33+27.35
47.60' (LT)

CR-E

CR-F

CURB & GUTTER TYPE F

EX-15

33+61.68
31.93' (LT)

VALLEY GUTTER

S-622

34+15.21
23.14' (LT)

250' R

15.1'

42.3'

16.1'

33+26.89
2.54' (LT)

33+71.66
9.16' (LT)

SOD

33+72.45
2.18' (LT)

33+27.35
1.44' (RT)

CURB & GUTTER TYPE E

100' R

24.7'

57.5'

33+97.63
20.97' (RT)

34+09.59
17.66' (RT)

S-624

S-623

MAILBOX TO BE RMOVED

CURB & GUTTER TYPE F

5' SIDEWALK

418+28.51 R2
604.48' (LT)

EXIST. R/W LINE

DRAINAGE EASEMENT

MATCH LINE STA. 34+20.00
SEE ROADWAY PLANS (15)

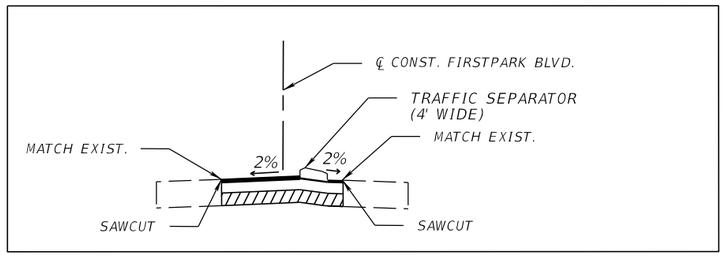

SECTION A-A

LEGEND
- MILLING & RESURFACING
- 6" CONCRETE
- WIDENING

PRELIMINARY subject to changes

THE OFFICIAL RECORD OF THIS SHEET IS THE ELECTRONIC FILE DIGITALLY SIGNED AND SEALED UNDER RULE 61G15-23.004, F.A.C.

REVISIONS				ENGINEER OF RECORD	STATE OF FLORIDA DEPARTMENT OF TRANSPORTATION			ROADWAY PLANS (33)	SHEET NO.
DATE	DESCRIPTION	DATE	DESCRIPTION	DEBANANDA PANIGRAHI, P.E. LICENSE NUMBER 68318 H. W. LOCHNER 4300 W. CYPRESS STREET, SUITE 500 TAMPA, FLORIDA 33607	ROAD NO.	COUNTY	FINANCIAL PROJECT ID		81
					SR 400	POLK	430185-3-52-01		

2/29/2024 4:25:48 PM JTAGLIAFERRO
c:\pw_working\lochner-pw-01\dms18802\PLANRD01.dgn

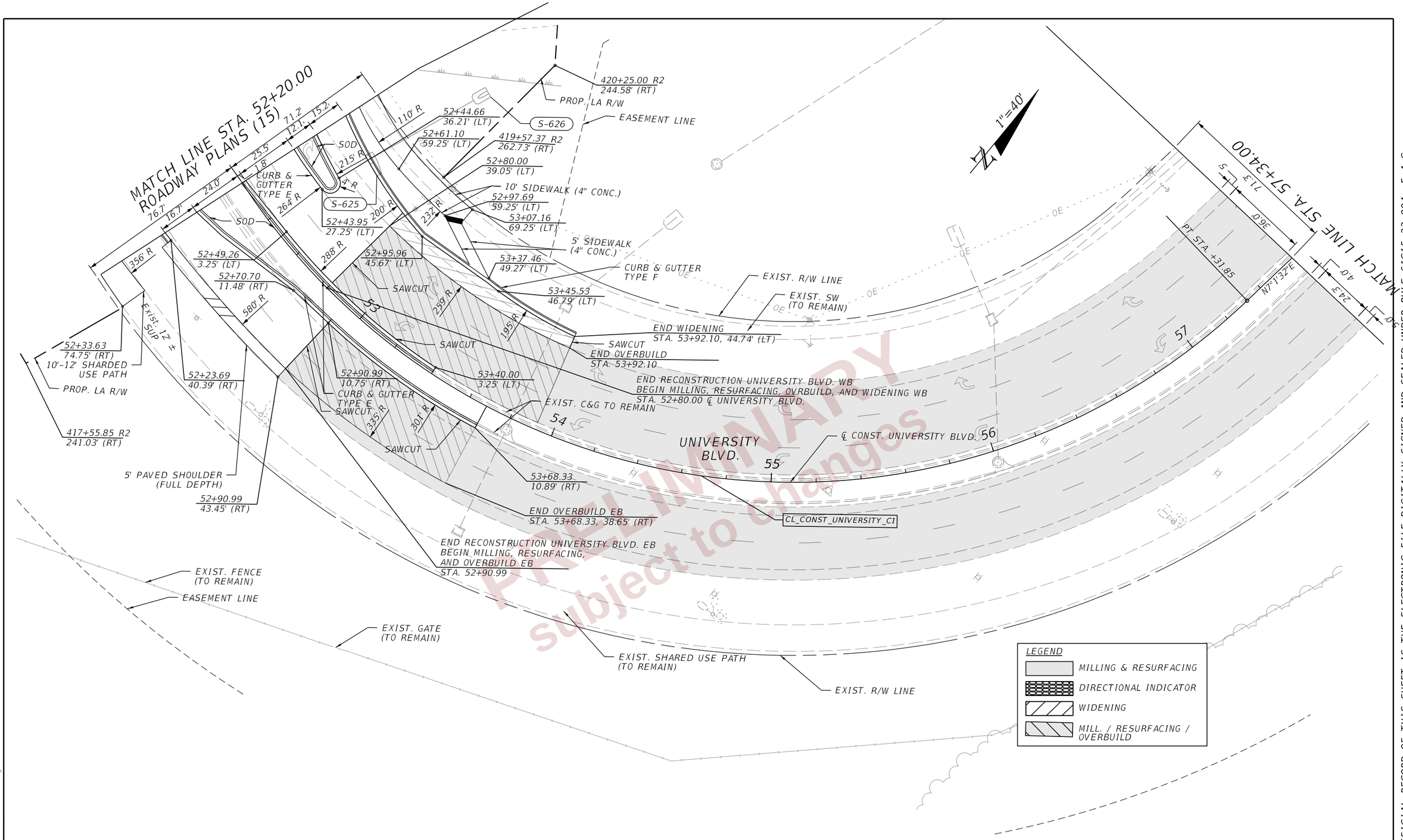

PRELIMINARY
subject to changes

REVISIONS				ENGINEER OF RECORD	STATE OF FLORIDA DEPARTMENT OF TRANSPORTATION				SHEET NO.
DATE	DESCRIPTION	DATE	DESCRIPTION	DEBANANDA PANIGRAHI, P.E. LICENSE NUMBER 68318 H. W. LOCHNER 4300 W. CYPRESS STREET, SUITE 500 TAMPA, FLORIDA 33607	ROAD NO.	COUNTY	FINANCIAL PROJECT ID	ROADWAY PLANS (34)	82
					SR 400	POLK	430185-3-52-01		

THE OFFICIAL RECORD OF THIS SHEET IS THE ELECTRONIC FILE DIGITALLY SIGNED AND SEALED UNDER RULE 61G15-23.004, F.A.C.

2/29/2024 4:25:48 PM JTAGLIAFERRO
c:\pw_working\lochner-pw-01\dms18802\PLANRD01.dgn

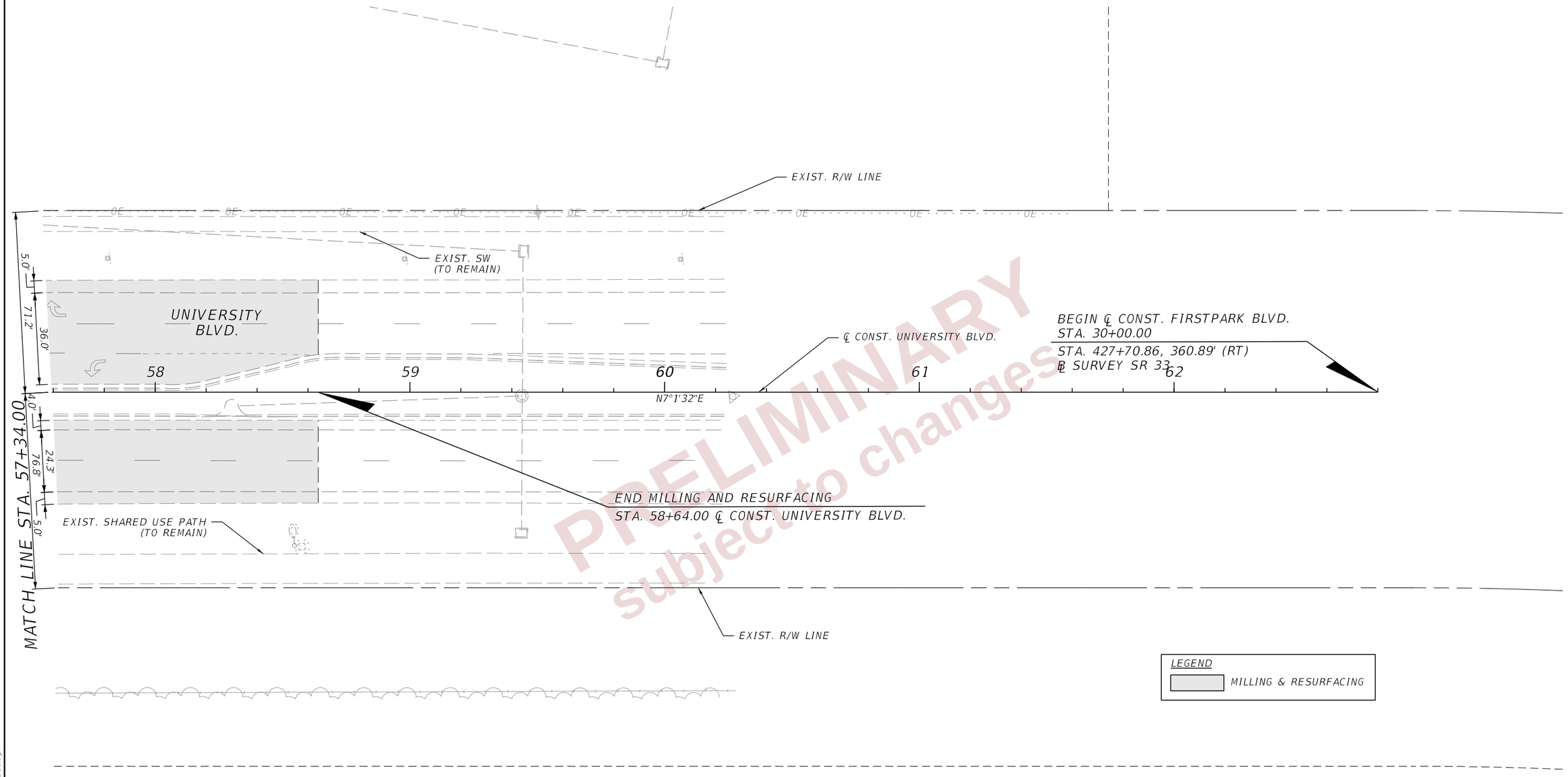

PRELIMINARY
subject to changes

REVISIONS				ENGINEER OF RECORD	STATE OF FLORIDA DEPARTMENT OF TRANSPORTATION			ROADWAY PLANS (35)	SHEET NO.
DATE	DESCRIPTION	DATE	DESCRIPTION	DEBANANDA PANIGRAHI, P.E. LICENSE NUMBER 68318 H. W. LOCHNER 4300 W. CYPRESS STREET, SUITE 500 TAMPA, FLORIDA 33607	ROAD NO.	COUNTY	FINANCIAL PROJECT ID		83
					SR 400	POLK	430185-3-52-01		

THE OFFICIAL RECORD OF THIS SHEET IS THE ELECTRONIC FILE DIGITALLY SIGNED AND SEALED UNDER RULE 61G15-23.004, F.A.C.

2/29/2024 4:25:49 PM JTAGLIAFERRO
c:\pw_working\lochner-pw-01\dms18802\PLANRD01.dgn

MATCH LINE STA. 508+00.00

26.0'
64.0'
12.0'
12.0'

507+76.95
12.00' (LT)

464+27.99
169.97' (LT)

5861.55' R
PRC STA. +61.30

+61.30
12.00' (RT)

EXIST. L/A R/W LINE

BM 19

CL_CONST_TOMKOW_C4

CL_CONST_TOMKOW_C3

BEGIN RECONSTRUCTION
STA. 504+40.00
℄ CONST. TOMKOW RD.

463+60.57
202.52' (LT)

MATCH LINE
ROADWAY PLANS (24)

EXIST. R/W LINE

463+40.14
261.97' (LT)

463+41.05
366.59' (LT)

504+40.00
12.00' (LT)

507+05.84
25.14' (RT)

CURB & GUTTER TYPE F

463+18.39
366.85' (LT)

F-1040

F-1038

6' SIDEWALK

140' R

CL_CONST_TOMKOW_C1

CL_CONST_TOMKOW_C2

PCC STA. +18.55

PCC STA. +41.67

600' R

502

503

504

505

506

507

TOMKOW RD

505+48.08
17.06' (LT)

462+38.29
80.00' (LT)

85' R

PROP. TYPE A FENCE

506+04.20
25.94' (RT)

PI STA. 506+81.40

PI STA. 507+19.21

1800' R

504+40.00
12.00' (RT)

504+50.99
12.00' (LT)

PI STA. 504+81.13

CURB & GUTTER TYPE F

6' SIDEWALK

END TYPE A FENCE
CONNECT TO EXIST.
STA. 506+42.21, 97.97' (RT)

462+39.21
131.73' (LT)

1824.39' R

EXIST. R/W LINE

EXIST. FENCE
(TO REMAIN)

MATCH LINE
ROADWAY PLANS (24)

LEGEND

WETLAND / OSW / SW LINE

PRELIMINARY
subject to change

REVISIONS				ENGINEER OF RECORD	STATE OF FLORIDA DEPARTMENT OF TRANSPORTATION			ROADWAY PLANS (36)	SHEET NO.
DATE	DESCRIPTION	DATE	DESCRIPTION	DEBANANDA PANIGRAHI, P.E. LICENSE NUMBER 68318 H. W. LOCHNER 4300 W. CYPRESS STREET, SUITE 500 TAMPA, FLORIDA 33607	ROAD NO.	COUNTY	FINANCIAL PROJECT ID		84
					SR 400	POLK	430185-3-52-01		

THE OFFICIAL RECORD OF THIS SHEET IS THE ELECTRONIC FILE DIGITALLY SIGNED AND SEALED UNDER RULE 61G15-23.004, F.A.C.

2/29/2024 4:25:49 PM JTAGLIAFERRO
c:\pw_working\lochner-pw-01\dms18802\PLANRD01.dgn

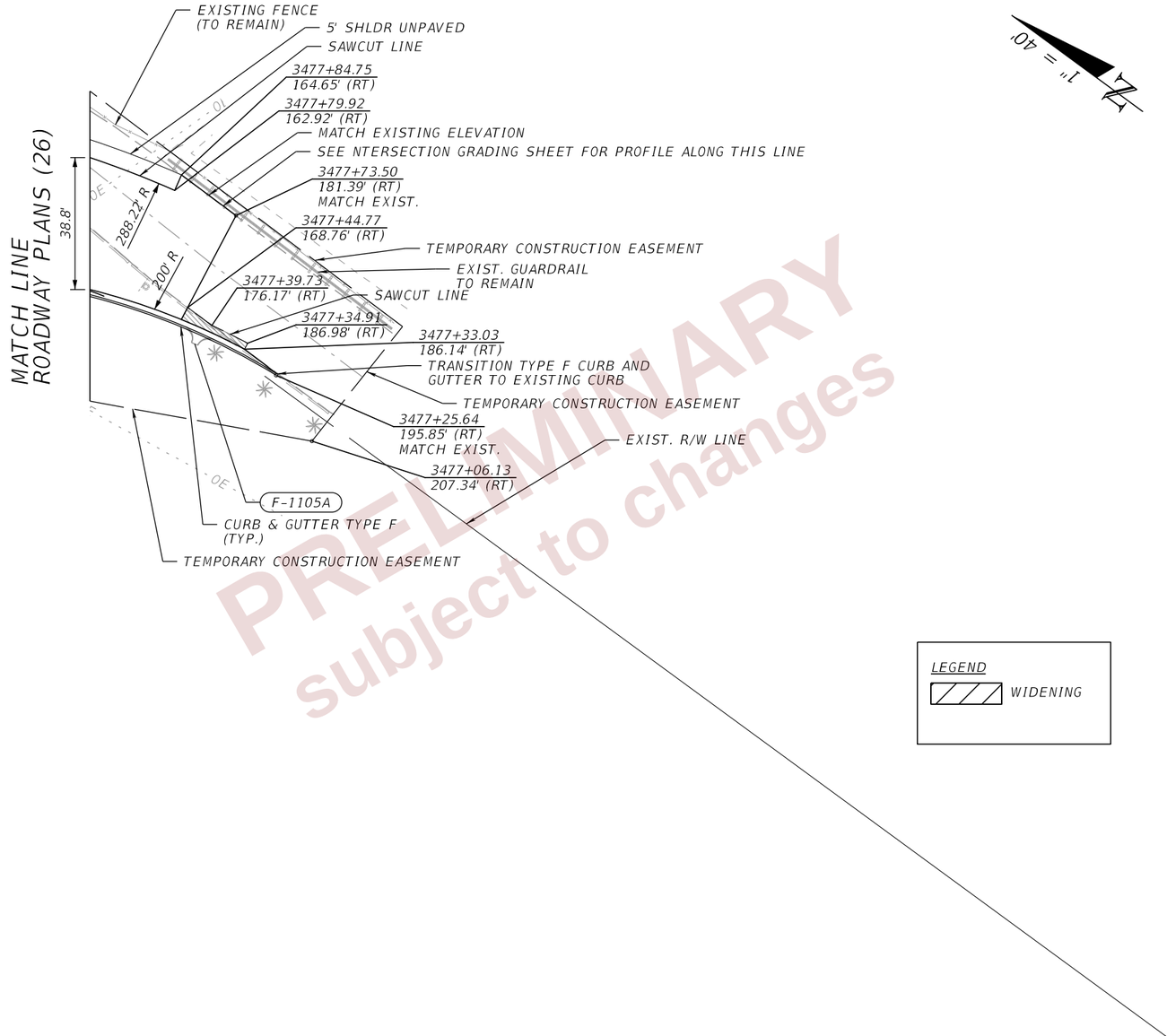

PRELIMINARY
subject to changes

REVISIONS				ENGINEER OF RECORD	STATE OF FLORIDA DEPARTMENT OF TRANSPORTATION			ROADWAY PLANS (37)	SHEET NO.
DATE	DESCRIPTION	DATE	DESCRIPTION	DEBANANDA PANIGRAHI, P.E. LICENSE NUMBER 68318 H. W. LOCHNER 4300 W. CYPRESS STREET, SUITE 500 TAMPA, FLORIDA 33607	ROAD NO.	COUNTY	FINANCIAL PROJECT ID		85
					SR 400	POLK	430185-3-52-01		

THE OFFICIAL RECORD OF THIS SHEET IS THE ELECTRONIC FILE DIGITALLY SIGNED AND SEALED UNDER RULE 61G15-23.004, F.A.C.

2/29/2024 4:25:50 PM JTAGLIAFERRO
c:\pw_working\lochner-pw-01\dms18802\PLANRD01.dgn

MATCH LINE ROADWAY PLANS (24)

3462+22.70
116.34' (RT)

EASEMENT LINE

3462+42.49
120.13' (RT)

37.73' R

7.50' R

CITY OF LAKELAND
UTILITY EASEMENT

461+27.04
143.54' (RT)

3462+01.57
133.49' (RT)

3462+08.88
149.73' (RT)

3462+33.83
123.94' (RT)

EXIST. L/A R/W LINE
END RECONSTRUCTION
BEGIN MILLING
& RESURFACING
STA. 3461+98.81, 115.88' (RT)

EXISTING FENCE
(TO REMAIN)

PARK AND RIDE

3461+96.24
160.78' (RT)

3463+42.18
224.19' (RT)

EXISTING FENCE
(TO REMAIN)

END MILLING & RESURFACING
STA. 3462+95.29, 266.82' (RT)

1"=40'

LEGEND

MILLING
MILL EXISTING ASPHALT PAVEMENT (4")

RESURFACING
TYPE SP STRUCTURAL COURSE (TRAFFIC B) (4")

WETLAND/SURFACE
WATERS/OTHER SURFACE
WATERS JURISDICTIONAL
LIMITS

PRELIMINARY
subject to changes

THE OFFICIAL RECORD OF THIS SHEET IS THE ELECTRONIC FILE DIGITALLY SIGNED AND SEALED UNDER RULE 61G15-23.004, F.A.C.

REVISIONS				ENGINEER OF RECORD	STATE OF FLORIDA DEPARTMENT OF TRANSPORTATION			ROADWAY PLANS (38)	SHEET NO.
DATE	DESCRIPTION	DATE	DESCRIPTION	DEBANANDA PANIGRAHI, P.E. LICENSE NUMBER 68318 H. W. LOCHNER 4300 W. CYPRESS STREET, SUITE 500 TAMPA, FLORIDA 33607	ROAD NO.	COUNTY	FINANCIAL PROJECT ID		86
					SR 400	POLK	430185-3-52-01		

2/29/2024 4:25:50 PM JTAGLIAFERRO
c:\pw_working\lochner-pw-01\dms18802\PLANRD01.dgn

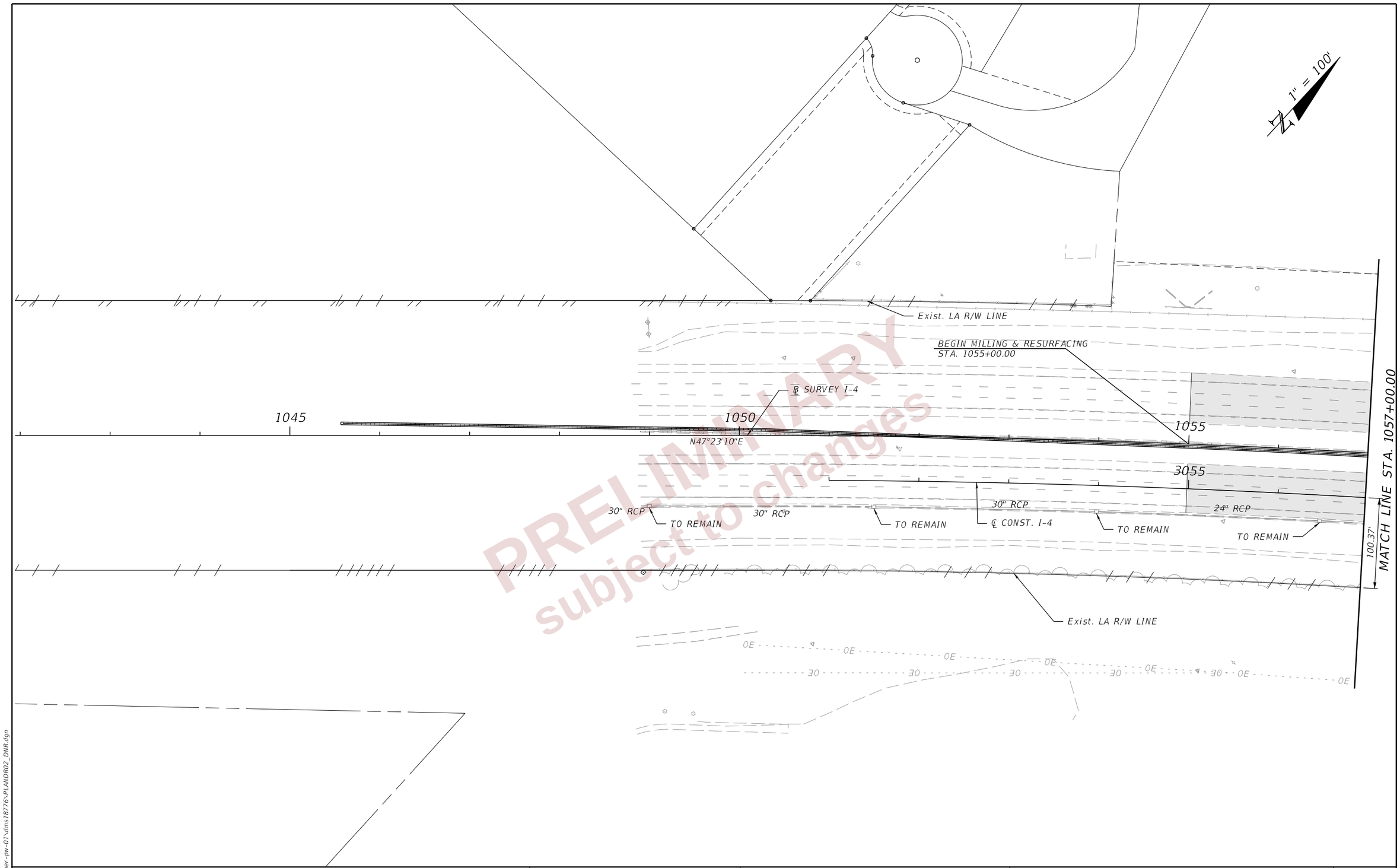

PRELIMINARY
subject to changes

THE OFFICIAL RECORD OF THIS SHEET IS THE ELECTRONIC FILE DIGITALLY SIGNED AND SEALED UNDER RULE 61G15-23.004, F.A.C.

2/26/2024 3:51:11 PM JBLOUNT
c:\pw_working\lochner-pw-01\dms18776\PLANDR02_DNR.dgn

REVISIONS			
DATE	DESCRIPTION	DATE	DESCRIPTION

ENGINEER OF RECORD
LISANDRO ZAPATA, P.E.
LICENSE NUMBER 58822
H. W. LOCHNER
4300 W. CYPRESS STREET, SUITE 500
TAMPA, FLORIDA 33607

STATE OF FLORIDA
DEPARTMENT OF TRANSPORTATION

ROAD NO.	COUNTY	FINANCIAL PROJECT ID
SR 400	POLK	430185-3-52-01

DRAINAGE PLANS (01)

SHEET NO. 87

1" = 100'

Exist. LA R/W LINE

TO REMAIN

8' W

5' H

1060

1065

1070

℄ SURVEY I-4

3060

3065

3070

199.46'

24" RCP

18" RCP

24" RCP

24" RCP

24" RCP

24" RCP

TO REMAIN

TO REMAIN

TO REMAIN

TO REMAIN

℄ CONST. I-4

TO REMAIN

TO REMAIN

TO REMAIN

100.37'

100.54'

Exist. LA R/W LINE

MATCH LINE STA. 1057+00.00

MATCH LINE STA. 1072+00.00

OE

PRELIMINARY
subject to changes

THE OFFICIAL RECORD OF THIS SHEET IS THE ELECTRONIC FILE DIGITALLY SIGNED AND SEALED UNDER RULE 61G15-23.004, F.A.C.

2/26/2024 3:51:12 PM JBLOUNT
c:\pw_working\lochner-pw-01\dms18776\PLANDR02_DNR.dgn

REVISIONS			
DATE	DESCRIPTION	DATE	DESCRIPTION

ENGINEER OF RECORD
LISANDRO ZAPATA, P.E.
LICENSE NUMBER 58822
H. W. LOCHNER
4300 W. CYPRESS STREET, SUITE 500
TAMPA, FLORIDA 33607

STATE OF FLORIDA
DEPARTMENT OF TRANSPORTATION

ROAD NO.	COUNTY	FINANCIAL PROJECT ID
SR 400	POLK	430185-3-52-01

DRAINAGE PLANS (02)

SHEET NO. 88

1" = 100'

WETLAND #11 JURISDICTIONAL LIMITS

EXIST. L/A R/W LINE

134' OF 24" PIPE
CONC. JACK & BORE

S-7

S-6

SR 400 (I-4) WB

℄ SURVEY I-4

℄ CONST. I-4 EB 1

℄ CONST. I-4

SR 400 (I-4) EB

1075 1080 1085

4000 4005

3075 3080 4010 3085

MATCH LINE STA. 1072+00.00

199.46'

100.54'

24" RCP

TO REMAIN

TO REMAIN

S-1

195' OF 18" PIPE

162' OF 18" PIPE

S-3

S-4

196' OF 18" PIPE

S-5

195' OF 18" PIPE

S-8

30" RCP

S-1A

S-2

98' OF 24" PIPE

5' OF 30" PIPE WITH
CONC. JACKET TIE-IN

SW #12 JURISDICTIONAL LIMITS

TO REMAIN
24" CMP

TO REMAIN

FDOT DRAINAGE EASEMENT

152' OF 18" PIPE

53.6'

71.8'

36.0'

10.1'

100.5'

199.5'

MATCH LINE STA. 1086+00.00

PRELIMINARY
subject to change

THE OFFICIAL RECORD OF THIS SHEET IS THE ELECTRONIC FILE DIGITALLY SIGNED AND SEALED UNDER RULE 61G15-23.004, F.A.C.

REVISIONS				ENGINEER OF RECORD	STATE OF FLORIDA DEPARTMENT OF TRANSPORTATION			DRAINAGE PLANS (03)	SHEET NO.
DATE	DESCRIPTION	DATE	DESCRIPTION	LISANDRO ZAPATA, P.E. LICENSE NUMBER 58822 H. W. LOCHNER 4300 W. CYPRESS STREET, SUITE 500 TAMPA, FLORIDA 33607	ROAD NO.	COUNTY	FINANCIAL PROJECT ID		89
					SR 400	POLK	430185-3-52-01		

2/26/2024 3:51:14 PM JBLOUNT
c:\pw_working\lochner-pw-01\dms18802\PLANRD02.dgn

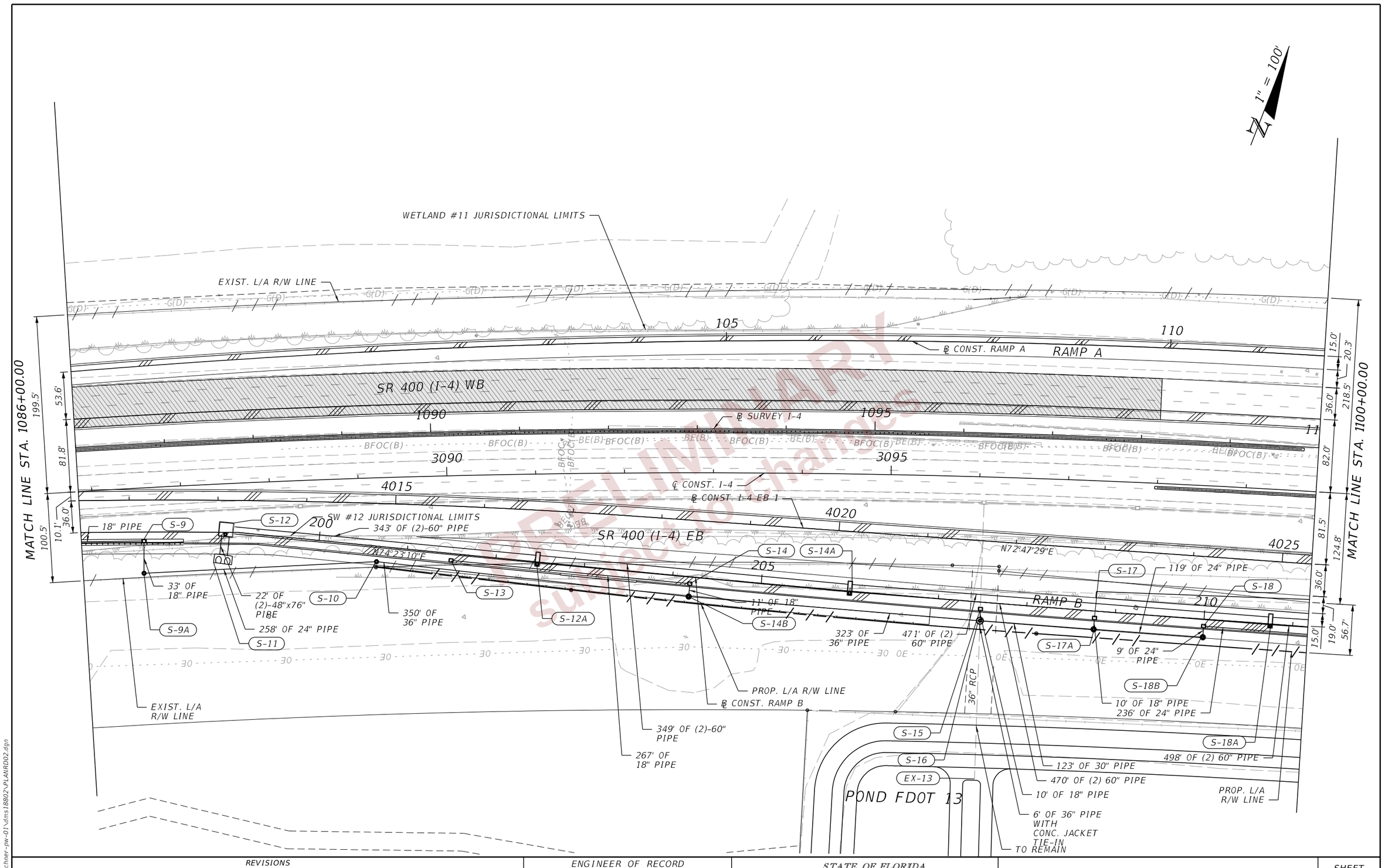

THE OFFICIAL RECORD OF THIS SHEET IS THE ELECTRONIC FILE DIGITALLY SIGNED AND SEALED UNDER RULE 61G15-23.004, F.A.C.

REVISIONS			
DATE	DESCRIPTION	DATE	DESCRIPTION

ENGINEER OF RECORD
LISANDRO ZAPATA, P.E.
LICENSE NUMBER 58822
H. W. LOCHNER
4300 W. CYPRESS STREET, SUITE 500
TAMPA, FLORIDA 33607

STATE OF FLORIDA
DEPARTMENT OF TRANSPORTATION

ROAD NO.	COUNTY	FINANCIAL PROJECT ID
SR 400	POLK	430185-3-52-01

DRAINAGE PLANS (04)

SHEET NO.
90

2/26/2024 3:51:15 PM JBLOUNT
c:\pw_working\lochner-pw-01\dms18802\PLANRD02.dgn

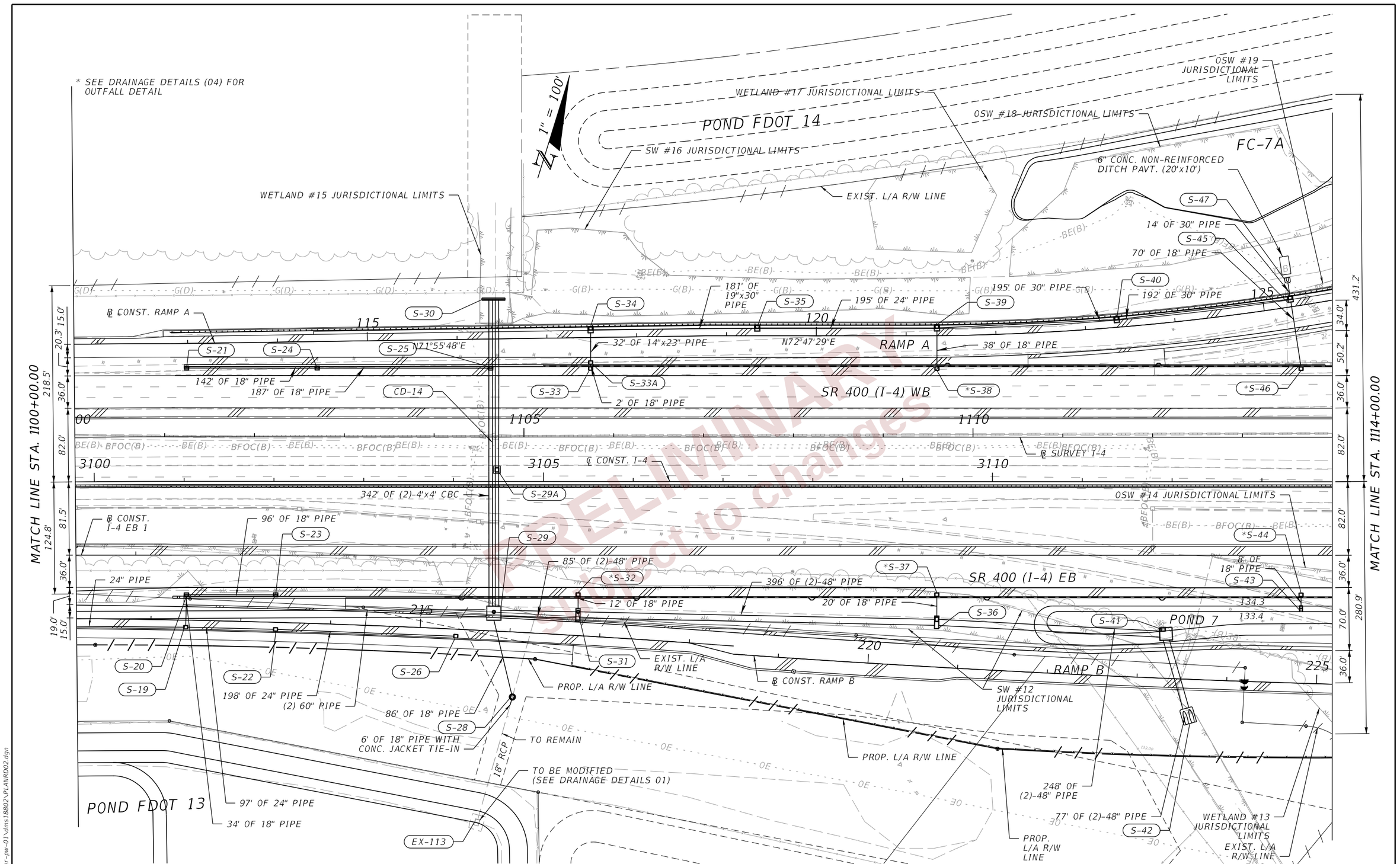

PRELIMINARY
Subject to changes

REVISIONS			
DATE	DESCRIPTION	DATE	DESCRIPTION

ENGINEER OF RECORD

LISANDRO ZAPATA, P.E.
LICENSE NUMBER 58822
H. W. LOCHNER
4300 W. CYPRESS STREET, SUITE 500
TAMPA, FLORIDA 33607

STATE OF FLORIDA
DEPARTMENT OF TRANSPORTATION

ROAD NO.	COUNTY	FINANCIAL PROJECT ID
SR 400	POLK	430185-3-52-01

DRAINAGE PLANS (05)

SHEET NO. 91

THE OFFICIAL RECORD OF THIS SHEET IS THE ELECTRONIC FILE DIGITALLY SIGNED AND SEALED UNDER RULE 61G15-23.004, F.A.C.

2/26/2024 3:51:16 PM JBLOUNT
c:\pw_working\lochner-pw-01\dms18802\PLANRD02.dgn

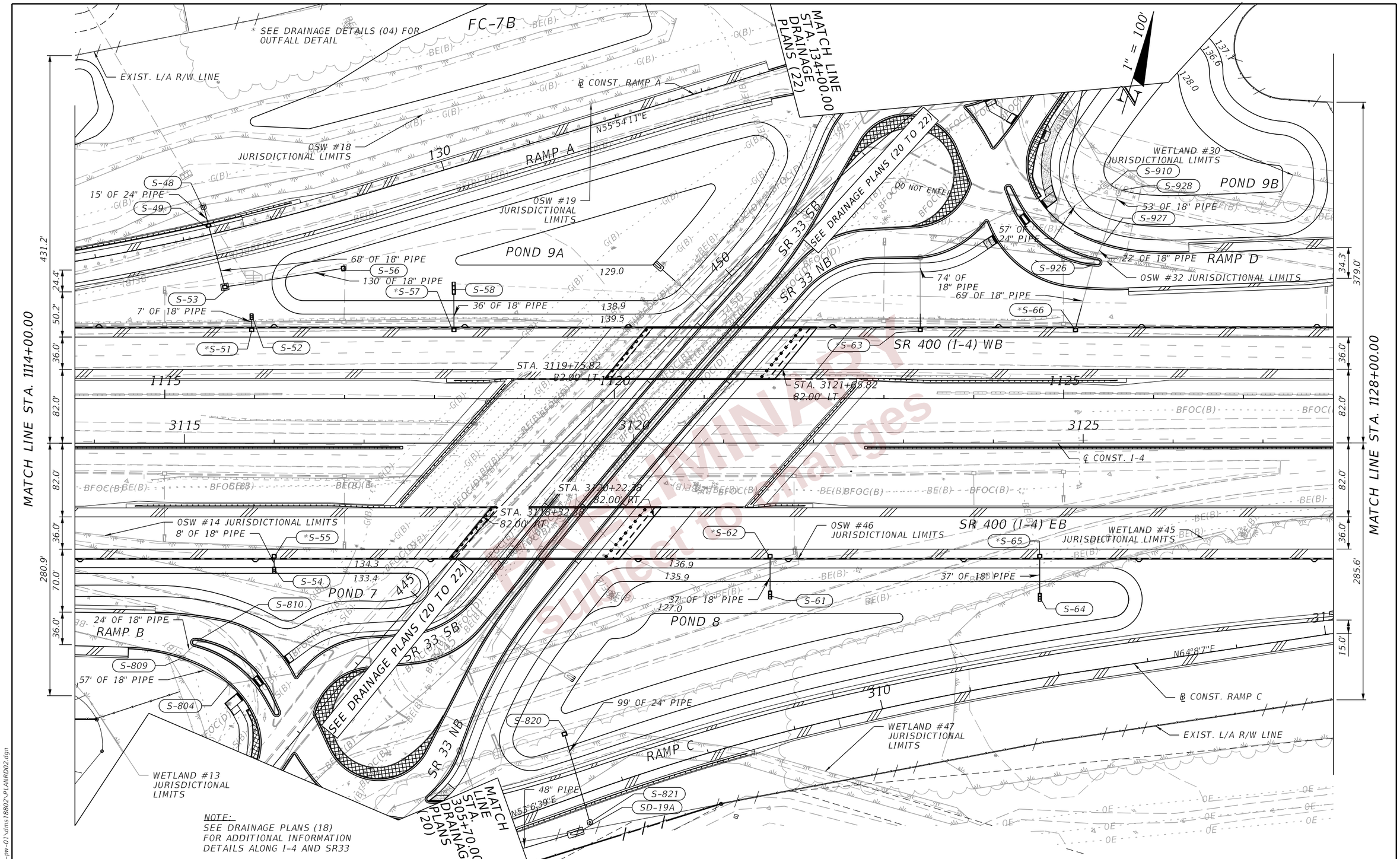

NOTE:
SEE DRAINAGE PLANS (18) FOR ADDITIONAL INFORMATION DETAILS ALONG I-4 AND SR33

PRELIMINARY Subject to changes

THE OFFICIAL RECORD OF THIS SHEET IS THE ELECTRONIC FILE DIGITALLY SIGNED AND SEALED UNDER RULE 61G15-23.004, F.A.C.

REVISIONS			
DATE	DESCRIPTION	DATE	DESCRIPTION

ENGINEER OF RECORD
LISANDRO ZAPATA, P.E.
LICENSE NUMBER 58822
H. W. LOCHNER
4300 W. CYPRESS STREET, SUITE 500
TAMPA, FLORIDA 33607

STATE OF FLORIDA
DEPARTMENT OF TRANSPORTATION

ROAD NO.	COUNTY	FINANCIAL PROJECT ID
SR 400	POLK	430185-3-52-01

DRAINAGE PLANS (06)

SHEET NO. 92

2/29/2024 7:29:09 PM ANDRES.FERNANDEZ
c:\pw_working\lochner-pw-01\dms18802\PLANRD02.dgn

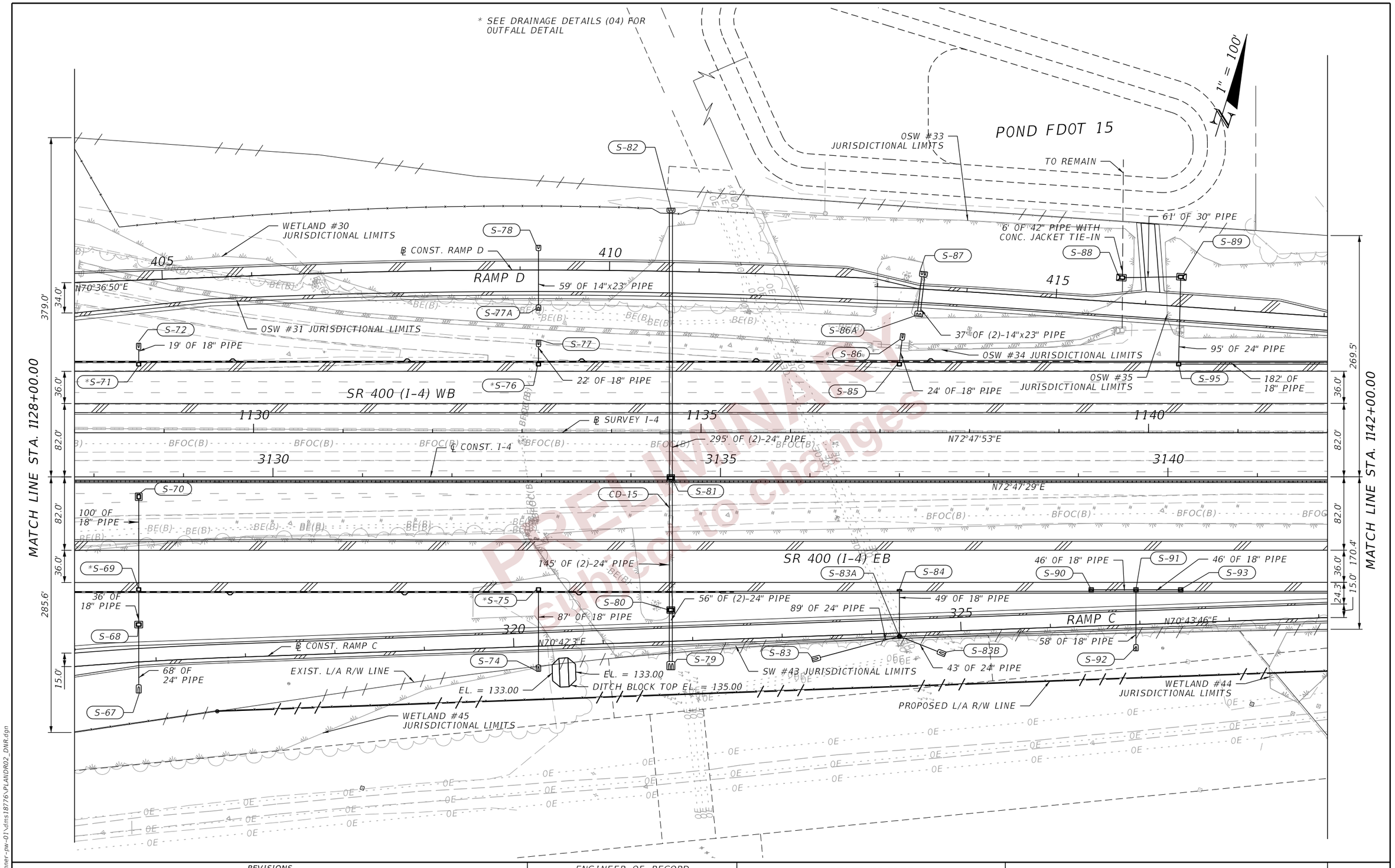

PRELIMINARY
subject to changes

REVISIONS			
DATE	DESCRIPTION	DATE	DESCRIPTION

ENGINEER OF RECORD

LISANDRO ZAPATA, P.E.
LICENSE NUMBER 58822
H. W. LOCHNER
4300 W. CYPRESS STREET, SUITE 500
TAMPA, FLORIDA 33607

STATE OF FLORIDA
DEPARTMENT OF TRANSPORTATION

ROAD NO.	COUNTY	FINANCIAL PROJECT ID
SR 400	POLK	430185-3-52-01

DRAINAGE PLANS (07)

SHEET NO. 93

THE OFFICIAL RECORD OF THIS SHEET IS THE ELECTRONIC FILE DIGITALLY SIGNED AND SEALED UNDER RULE 61G15-23.004, F.A.C.

2/26/2024 3:51:18 PM JBLOUNT
c:\pw_working\lochner-pw-01\dms18776\PLANDR02_DNR.dgn

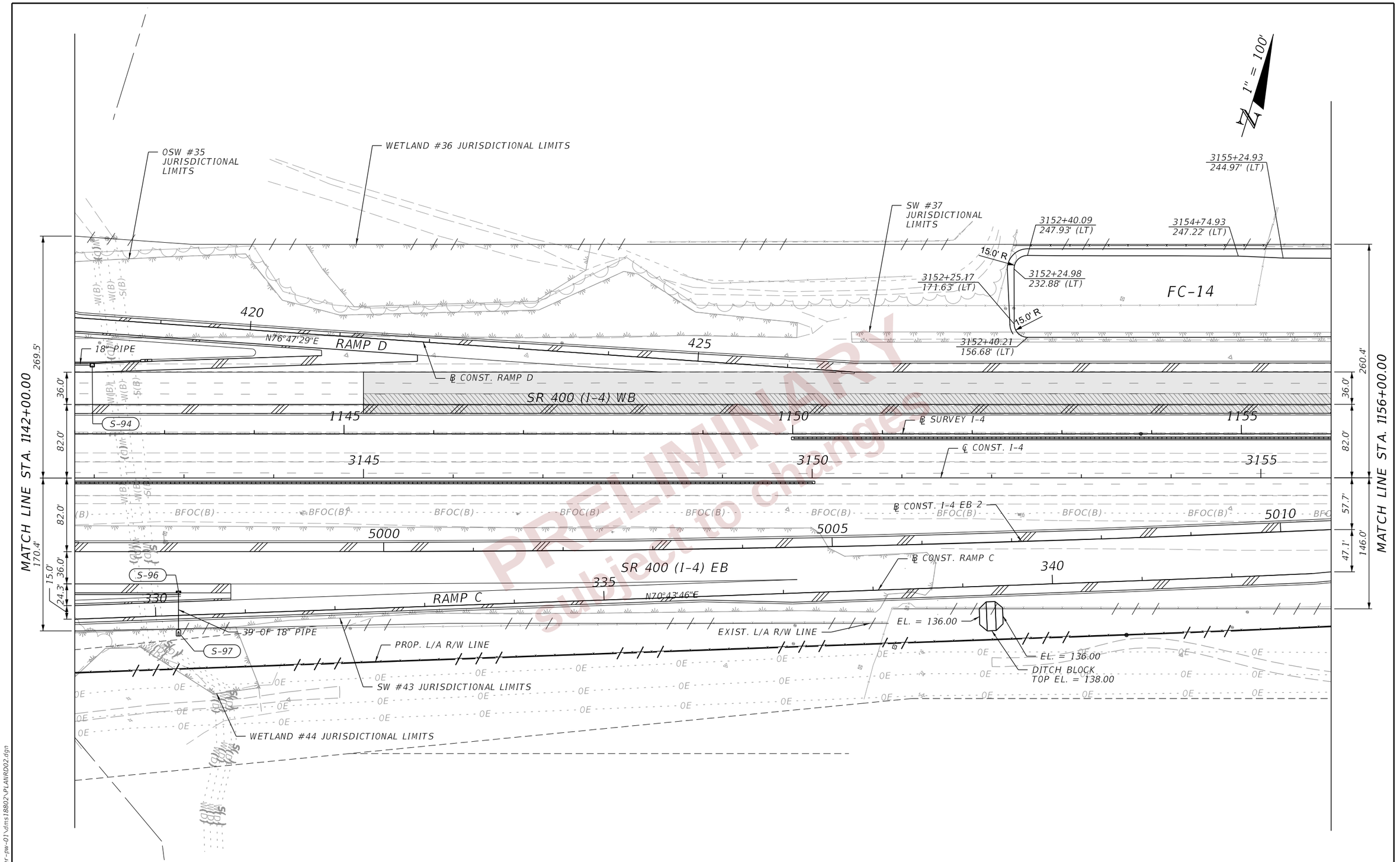

THE OFFICIAL RECORD OF THIS SHEET IS THE ELECTRONIC FILE DIGITALLY SIGNED AND SEALED UNDER RULE 61G15-23.004, F.A.C.

2/26/2024 3:51:19 PM JBLOUNT
c:\pw_working\lochner-pw-01\dms18802\PLANRD02.dgn

REVISIONS			
DATE	DESCRIPTION	DATE	DESCRIPTION

ENGINEER OF RECORD
LISANDRO ZAPATA, P.E.
LICENSE NUMBER 58822
H. W. LOCHNER
4300 W. CYPRESS STREET, SUITE 500
TAMPA, FLORIDA 33607

STATE OF FLORIDA
DEPARTMENT OF TRANSPORTATION

ROAD NO.	COUNTY	FINANCIAL PROJECT ID
SR 400	POLK	430185-3-52-01

DRAINAGE PLANS (08)

SHEET NO.
94

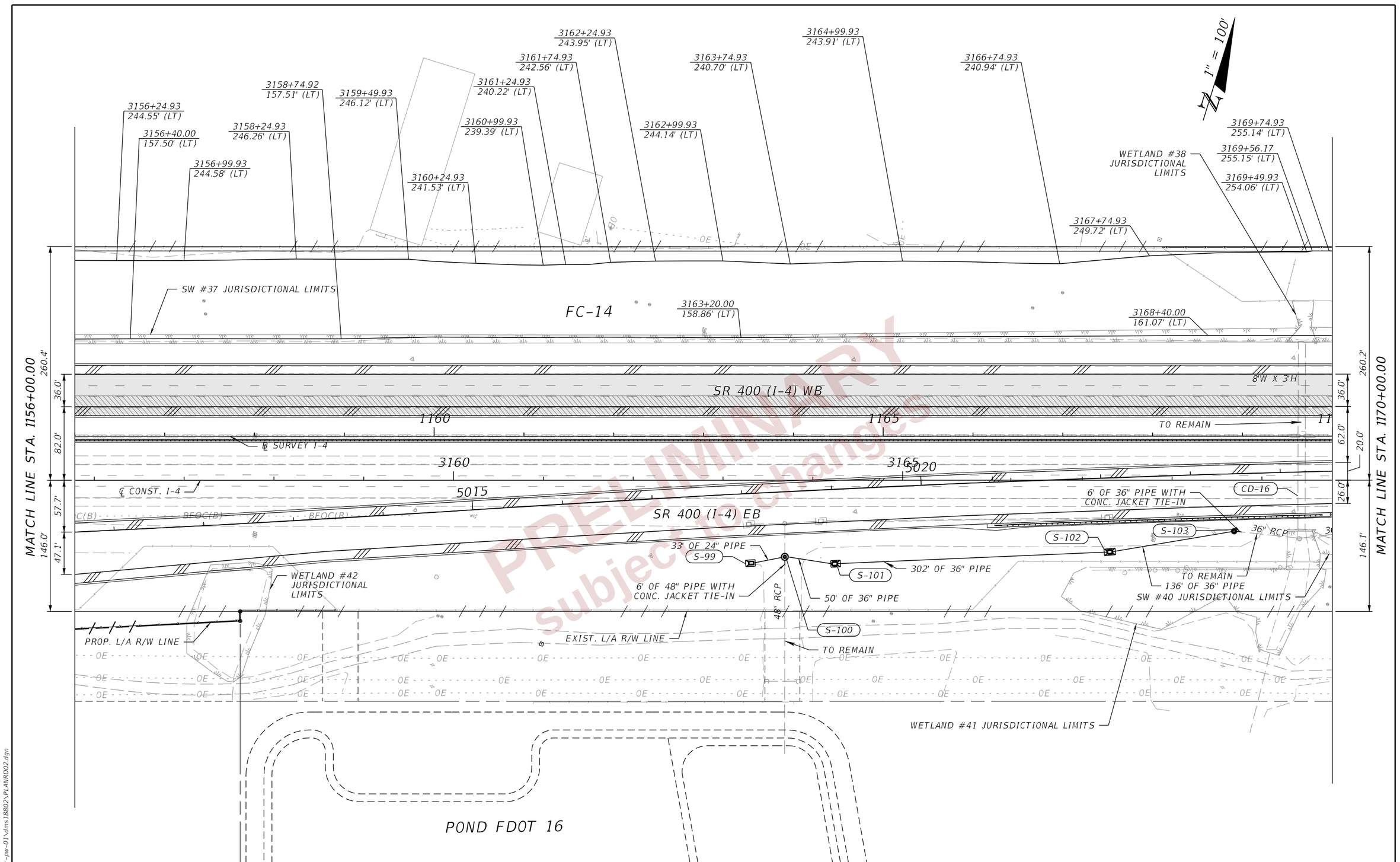

PRELIMINARY
subject to change

REVISIONS				ENGINEER OF RECORD	STATE OF FLORIDA DEPARTMENT OF TRANSPORTATION			DRAINAGE PLANS (09)	SHEET NO.
DATE	DESCRIPTION	DATE	DESCRIPTION	LISANDRO ZAPATA, P.E. LICENSE NUMBER 58822 H. W. LOCHNER 4300 W. CYPRESS STREET, SUITE 500 TAMPA, FLORIDA 33607	ROAD NO.	COUNTY	FINANCIAL PROJECT ID		95
					SR 400	POLK	430185-3-52-01		

THE OFFICIAL RECORD OF THIS SHEET IS THE ELECTRONIC FILE DIGITALLY SIGNED AND SEALED UNDER RULE 61G15-23.004, F.A.C.

2/26/2024 3:51:20 PM JBLOUNT
c:\pw_working\lochner-pw-01\dms18802\PLANRD02.dgn

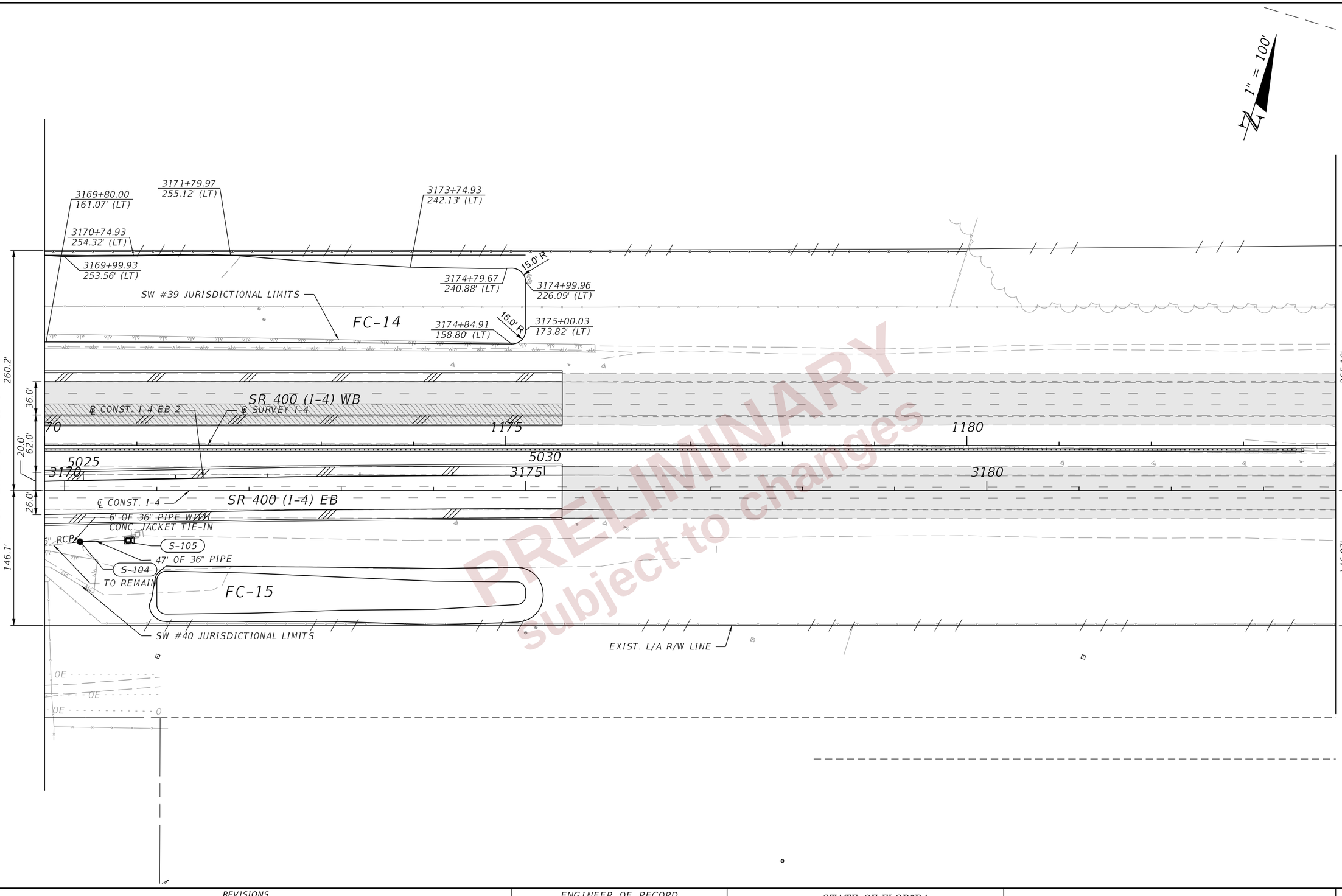

PRELIMINARY
subject to changes

REVISIONS			
DATE	DESCRIPTION	DATE	DESCRIPTION

ENGINEER OF RECORD

LISANDRO ZAPATA, P.E.
LICENSE NUMBER 58822
H. W. LOCHNER
4300 W. CYPRESS STREET, SUITE 500
TAMPA, FLORIDA 33607

STATE OF FLORIDA
DEPARTMENT OF TRANSPORTATION

ROAD NO.	COUNTY	FINANCIAL PROJECT ID
SR 400	POLK	430185-3-52-01

DRAINAGE PLANS (10)

SHEET NO. 96

THE OFFICIAL RECORD OF THIS SHEET IS THE ELECTRONIC FILE DIGITALLY SIGNED AND SEALED UNDER RULE 61G15-23.004, F.A.C.

2/26/2024 3:51:21 PM JBLOUNT
c:\pw_working\lochner-pw-01\dms18802\PLANRD02.dgn

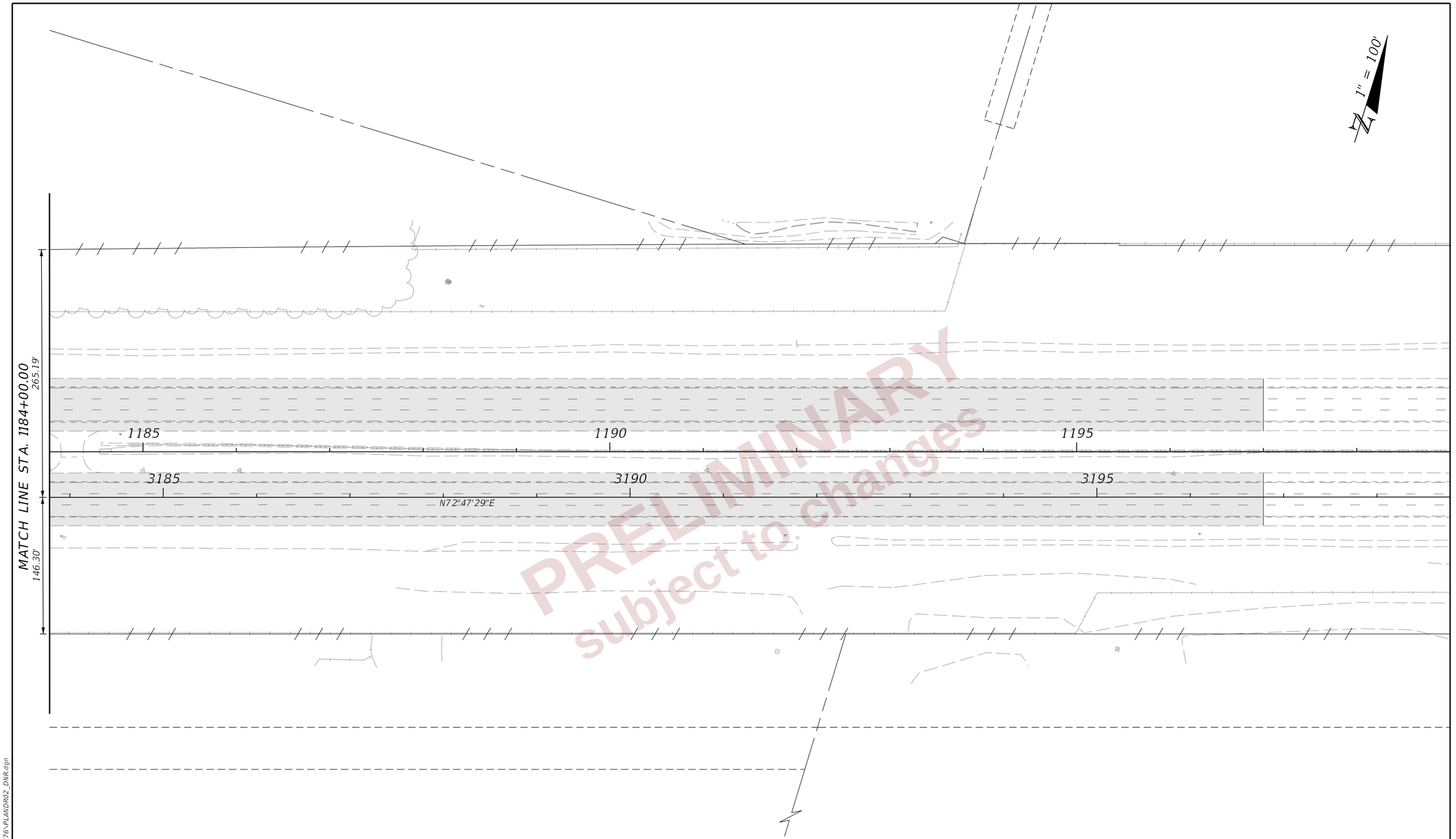

PRELIMINARY
subject to changes

THE OFFICIAL RECORD OF THIS SHEET IS THE ELECTRONIC FILE DIGITALLY SIGNED AND SEALED UNDER RULE 61G15-23.004, F.A.C.

REVISIONS				ENGINEER OF RECORD	STATE OF FLORIDA DEPARTMENT OF TRANSPORTATION				SHEET NO.
DATE	DESCRIPTION	DATE	DESCRIPTION	LISANDRO ZAPATA, P.E. LICENSE NUMBER 58822 H. W. LOCHNER 4300 W. CYPRESS STREET, SUITE 500 TAMPA, FLORIDA 33607	ROAD NO.	COUNTY	FINANCIAL PROJECT ID	DRAINAGE PLANS (11)	97
					SR 400	POLK	430185-3-52-01		

2/26/2024 3:51:22 PM JBLOUNT
c:\pw_working\lochner-pw-01\dms18776\PLANDR02_DNR.dgn

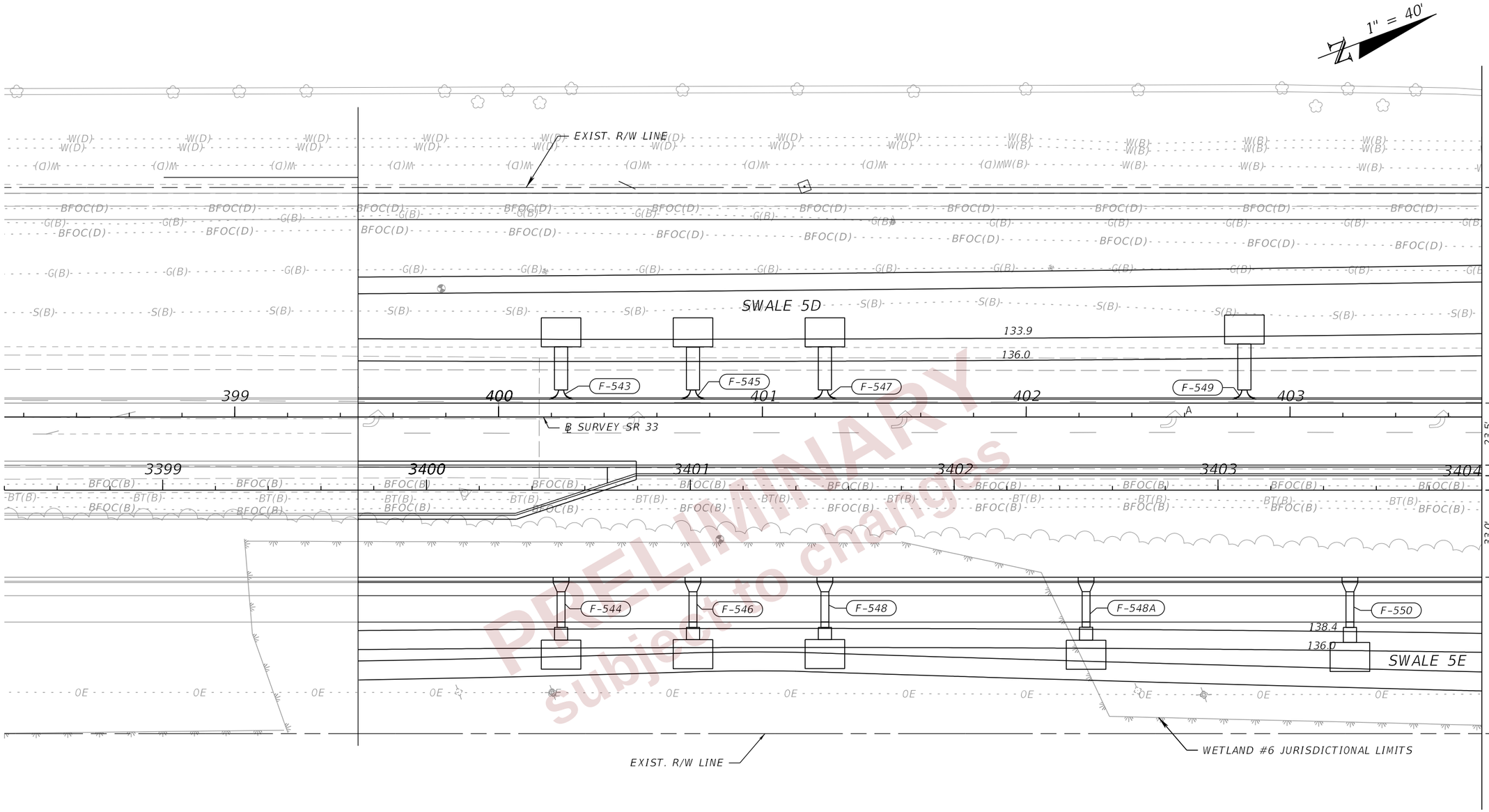

PRELIMINARY
subject to change

THE OFFICIAL RECORD OF THIS SHEET IS THE ELECTRONIC FILE DIGITALLY SIGNED AND SEALED UNDER RULE 61G15-23.004, F.A.C.

REVISIONS				ENGINEER OF RECORD	STATE OF FLORIDA DEPARTMENT OF TRANSPORTATION			DRAINAGE PLANS (12)	SHEET NO.
DATE	DESCRIPTION	DATE	DESCRIPTION	LISANDRO ZAPATA, P.E. LICENSE NUMBER 58822 H. W. LOCHNER 4300 W. CYPRESS STREET, SUITE 500 TAMPA, FLORIDA 33607	ROAD NO.	COUNTY	FINANCIAL PROJECT ID		98
					SR 400	POLK	430185-3-52-01		

2/26/2024 3:51:54 PM JBLOUNT
c:\pw_working\lochner-pw-01\dms18802\PLANRD01.dgn

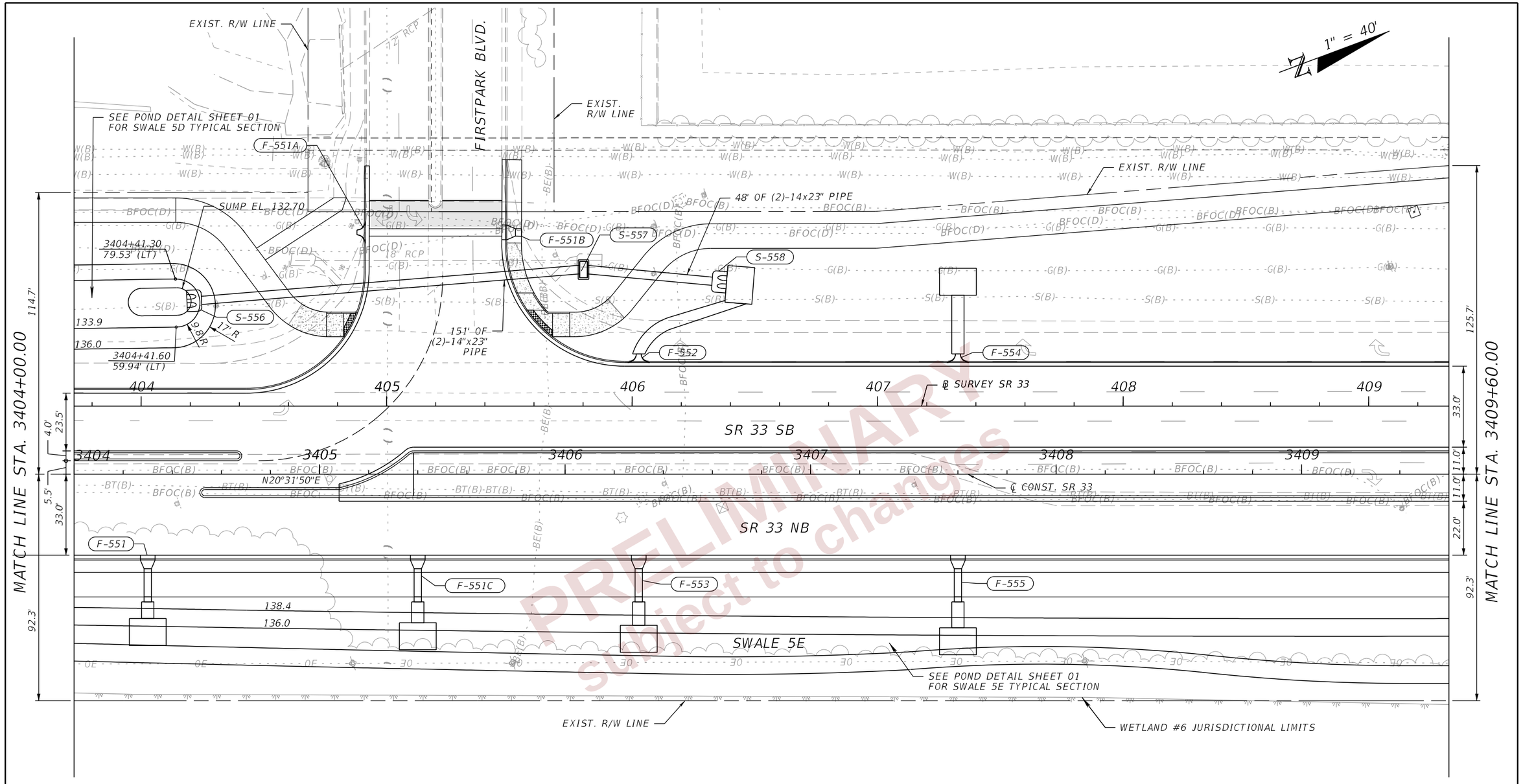

PRELIMINARY
subject to changes

REVISIONS				ENGINEER OF RECORD	STATE OF FLORIDA DEPARTMENT OF TRANSPORTATION			DRAINAGE PLANS (13)	SHEET NO.
DATE	DESCRIPTION	DATE	DESCRIPTION	LISANDRO ZAPATA, P.E. LICENSE NUMBER 58822 H. W. LOCHNER 4300 W. CYPRESS STREET, SUITE 500 TAMPA, FLORIDA 33607	ROAD NO.	COUNTY	FINANCIAL PROJECT ID		99
					SR 400	POLK	430185-3-52-01		

THE OFFICIAL RECORD OF THIS SHEET IS THE ELECTRONIC FILE DIGITALLY SIGNED AND SEALED UNDER RULE 61G15-23.004, F.A.C.

2/26/2024 3:51:55 PM JBLOUNT
c:\pw_working\lochner-pw-01\dms18802\PLANRD01.dgn

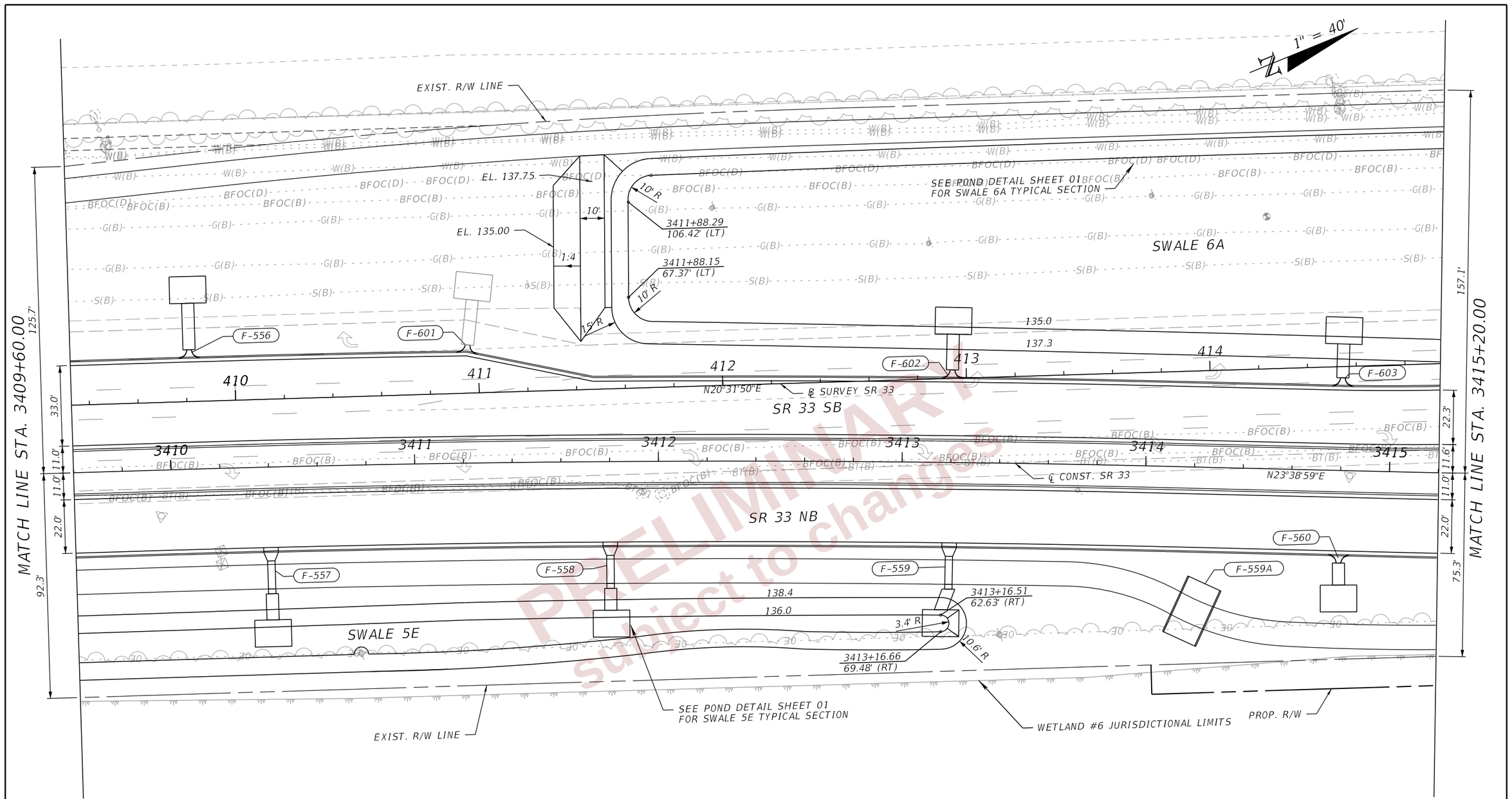

PRELIMINARY
subject to changes

THE OFFICIAL RECORD OF THIS SHEET IS THE ELECTRONIC FILE DIGITALLY SIGNED AND SEALED UNDER RULE 61G15-23.004, F.A.C.

REVISIONS				ENGINEER OF RECORD	STATE OF FLORIDA DEPARTMENT OF TRANSPORTATION			DRAINAGE PLANS (14)	SHEET NO.
DATE	DESCRIPTION	DATE	DESCRIPTION	LISANDRO ZAPATA, P.E. LICENSE NUMBER 58822 H. W. LOCHNER 4300 W. CYPRESS STREET, SUITE 500 TAMPA, FLORIDA 33607	ROAD NO.	COUNTY	FINANCIAL PROJECT ID		100
					SR 400	POLK	430185-3-52-01		

2/26/2024 3:51:56 PM JBLOUNT
c:\pw_working\lochner-pw-01\dms18802\PLANRD01.dgn

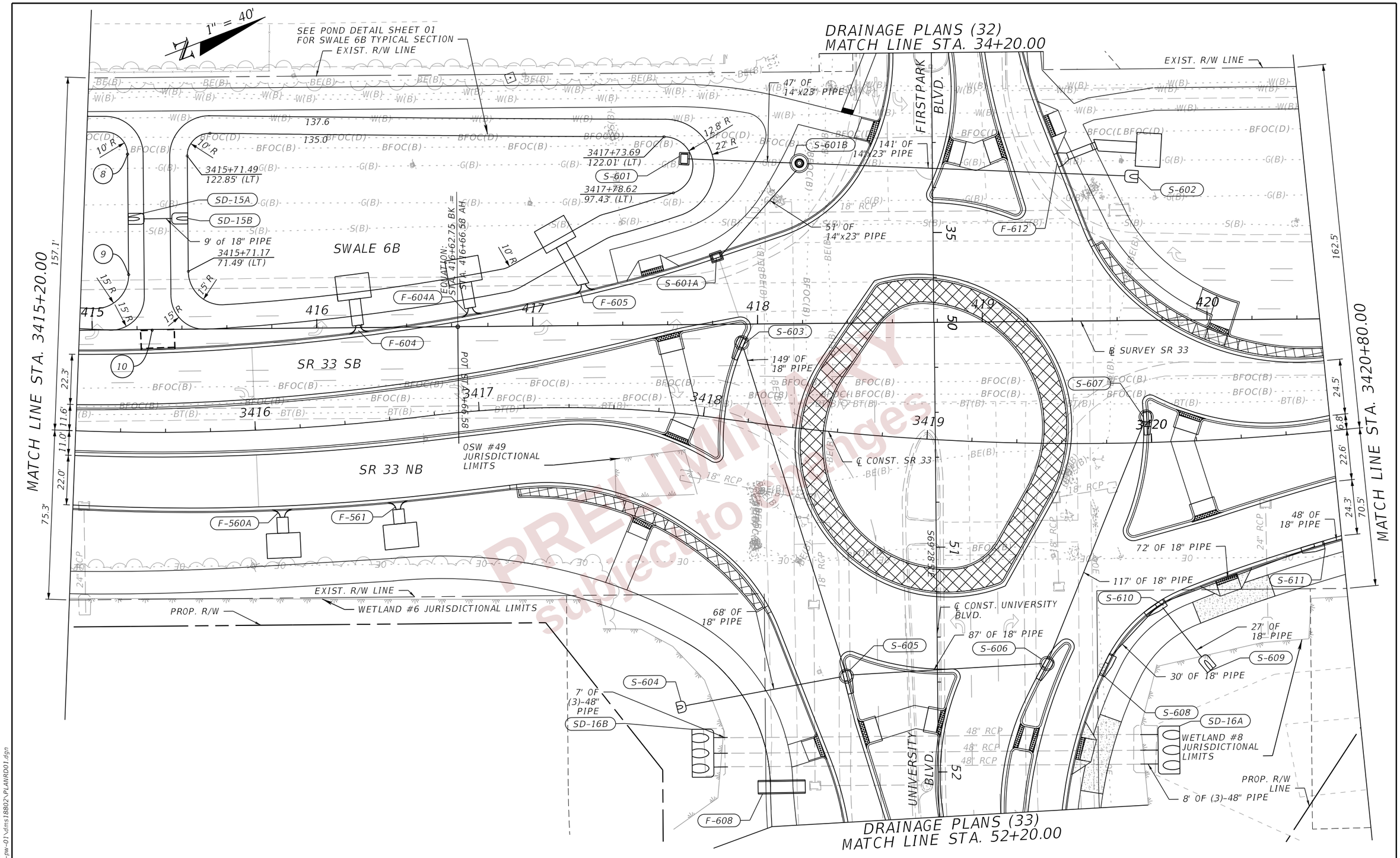

THE OFFICIAL RECORD OF THIS SHEET IS THE ELECTRONIC FILE DIGITALLY SIGNED AND SEALED UNDER RULE 61G15-23.004, F.A.C.

REVISIONS			
DATE	DESCRIPTION	DATE	DESCRIPTION

ENGINEER OF RECORD
LISANDRO ZAPATA, P.E.
LICENSE NUMBER 58822
H. W. LOCHNER
4300 W. CYPRESS STREET, SUITE 500
TAMPA, FLORIDA 33607

STATE OF FLORIDA
DEPARTMENT OF TRANSPORTATION

ROAD NO.	COUNTY	FINANCIAL PROJECT ID
SR 400	POLK	430185-3-52-01

DRAINAGE PLANS (15)

SHEET NO.
101

2/26/2024 3:51:57 PM JBLOUNT
c:\pw_working\lochner-pw-01\dms18802\PLANRD01.dgn

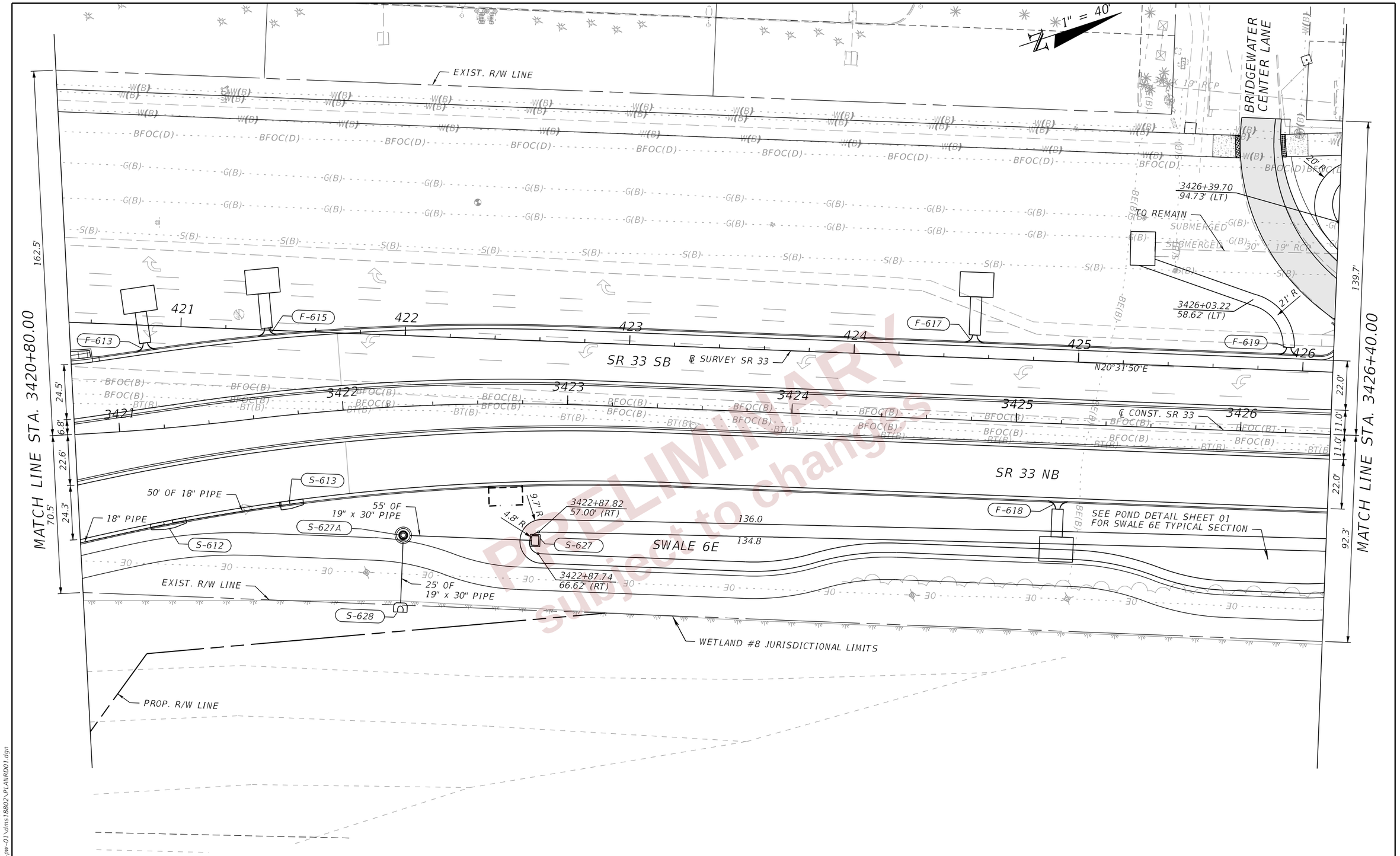

PRELIMINARY
subject to changes

REVISIONS				ENGINEER OF RECORD	STATE OF FLORIDA DEPARTMENT OF TRANSPORTATION			DRAINAGE PLANS (16)	SHEET NO.
DATE	DESCRIPTION	DATE	DESCRIPTION	LISANDRO ZAPATA, P.E. LICENSE NUMBER 58822 H. W. LOCHNER 4300 W. CYPRESS STREET, SUITE 500 TAMPA, FLORIDA 33607	ROAD NO.	COUNTY	FINANCIAL PROJECT ID		102
					SR 400	POLK	430185-3-52-01		

2/26/2024 3:51:58 PM JBLOUNT
c:\pw_working\lochner-pw-01\dms18802\PLANRD01.dgn

THE OFFICIAL RECORD OF THIS SHEET IS THE ELECTRONIC FILE DIGITALLY SIGNED AND SEALED UNDER RULE 61G15-23.004, F.A.C.

1" = 40'

30" CPP
30" CPP

3426+50.45
116.40' (LT)

EXIST. R/W LINE

EXIST. L/A R/W LINE

136.8
134.8

13.5 R

TO REMAIN

134.8

SUMP EL. 133.72
SEE POND DETAILS (03)

SWALE 6C

OSW #9 JURISDICTIONAL LIMITS

46' OF 18" PIPE

S-615

OSW #10
JURISDICTIONAL LIMITS

S-614

3431+09.15
81.46' (LT)

13.5 R

3430+98.65
59.49' (LT)

20' R

F-621 F-623 F-625 F-627

427 428 429 430 431

N20°31'50"E

℄ SURVEY SR 33

SR 33 SB

3427 3428 3429 3430 3431

℄ CONST. SR 33

N20°31'50"E

MATCH LINE STA. 3426+40.00

139.7'

33.0'

11.0'

11.0'

22.0'

SEE POND DETAIL SHEET 01
FOR SWALE 6E TYPICAL SECTION

SR 33 NB

EXIST. L/A R/W LINE

F-620 F-622 F-624 F-626 F-628

136.0
134.8

SWALE 6E

3431+38.87
49.48' (RT)

8' R
28' R

3431+39.10
55.03' (RT)

92.3'

EXIST. R/W LINE

WETLAND #8 JURISDICTIONAL LIMITS

EXIST. R/W LINE

EASEMENT LINE

EASEMENT LINE

MATCH LINE STA. 3432+00.00

139.8'

22.0'

11.0'

11.0'

92.3'

PRELIMINARY
subject to changes

THE OFFICIAL RECORD OF THIS SHEET IS THE ELECTRONIC FILE DIGITALLY SIGNED AND SEALED UNDER RULE 61G15-23.004, F.A.C.

2/26/2024 3:51:59 PM JBLOUNT
c:\pw_working\lochner-pw-01\dms18802\PLANRD01.dgn

REVISIONS				ENGINEER OF RECORD	STATE OF FLORIDA DEPARTMENT OF TRANSPORTATION			DRAINAGE PLANS (17)	SHEET NO.
DATE	DESCRIPTION	DATE	DESCRIPTION	LISANDRO ZAPATA, P.E. LICENSE NUMBER 58822 H. W. LOCHNER 4300 W. CYPRESS STREET, SUITE 500 TAMPA, FLORIDA 33607	ROAD NO.	COUNTY	FINANCIAL PROJECT ID		103
					SR 400	POLK	430185-3-52-01		

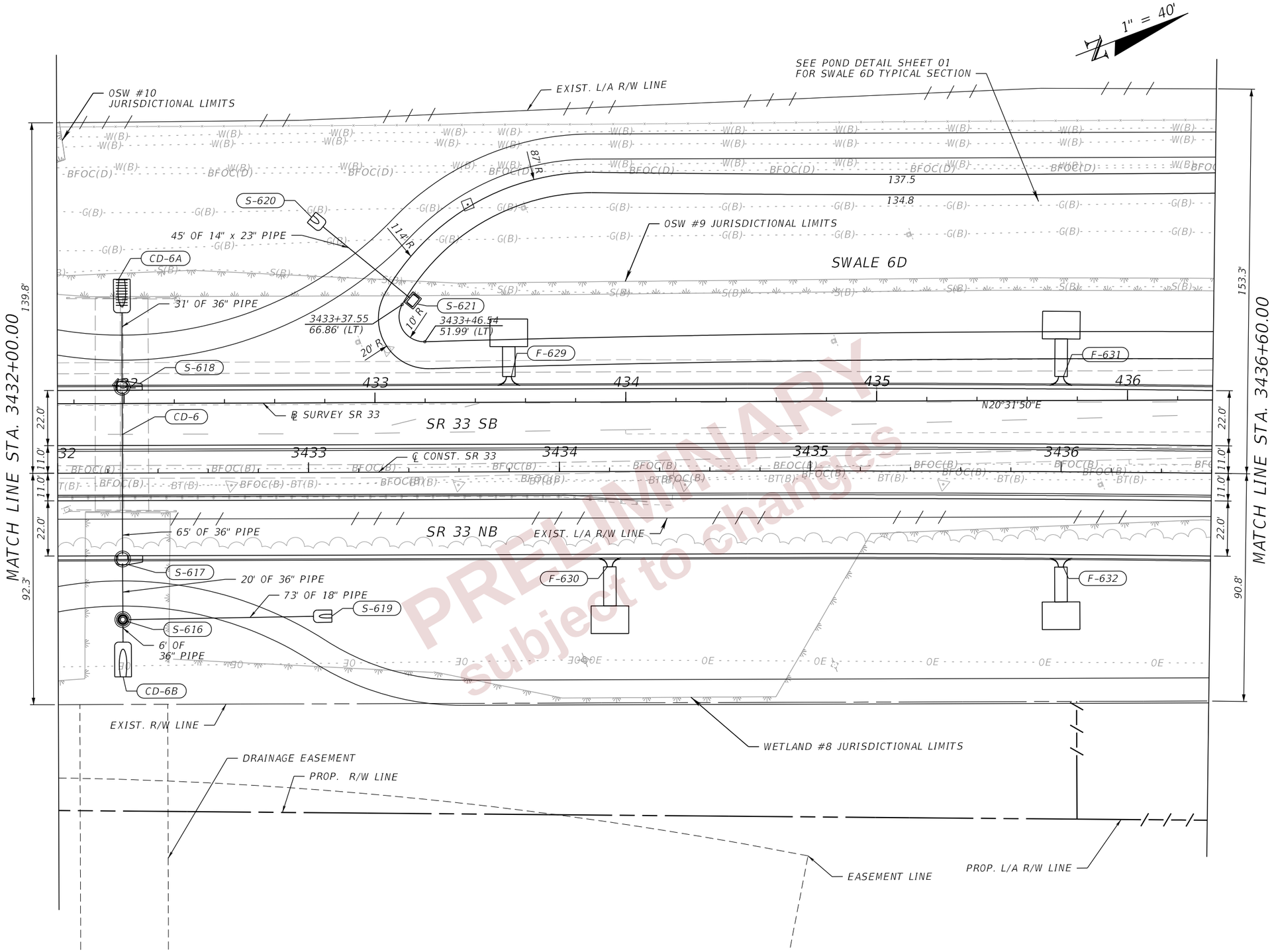

PRELIMINARY
subject to changes

REVISIONS				ENGINEER OF RECORD	STATE OF FLORIDA DEPARTMENT OF TRANSPORTATION			DRAINAGE PLANS (18)	SHEET NO.
DATE	DESCRIPTION	DATE	DESCRIPTION	LISANDRO ZAPATA, P.E. LICENSE NUMBER 58822 H. W. LOCHNER 4300 W. CYPRESS STREET, SUITE 500 TAMPA, FLORIDA 33607	ROAD NO.	COUNTY	FINANCIAL PROJECT ID		104
					SR 400	POLK	430185-3-52-01		

THE OFFICIAL RECORD OF THIS SHEET IS THE ELECTRONIC FILE DIGITALLY SIGNED AND SEALED UNDER RULE 61G15-23.004, F.A.C.

2/26/2024 3:52:00 PM JBLOUNT
c:\pw_working\lochner-pw-01\dms18802\PLANRD01.dgn

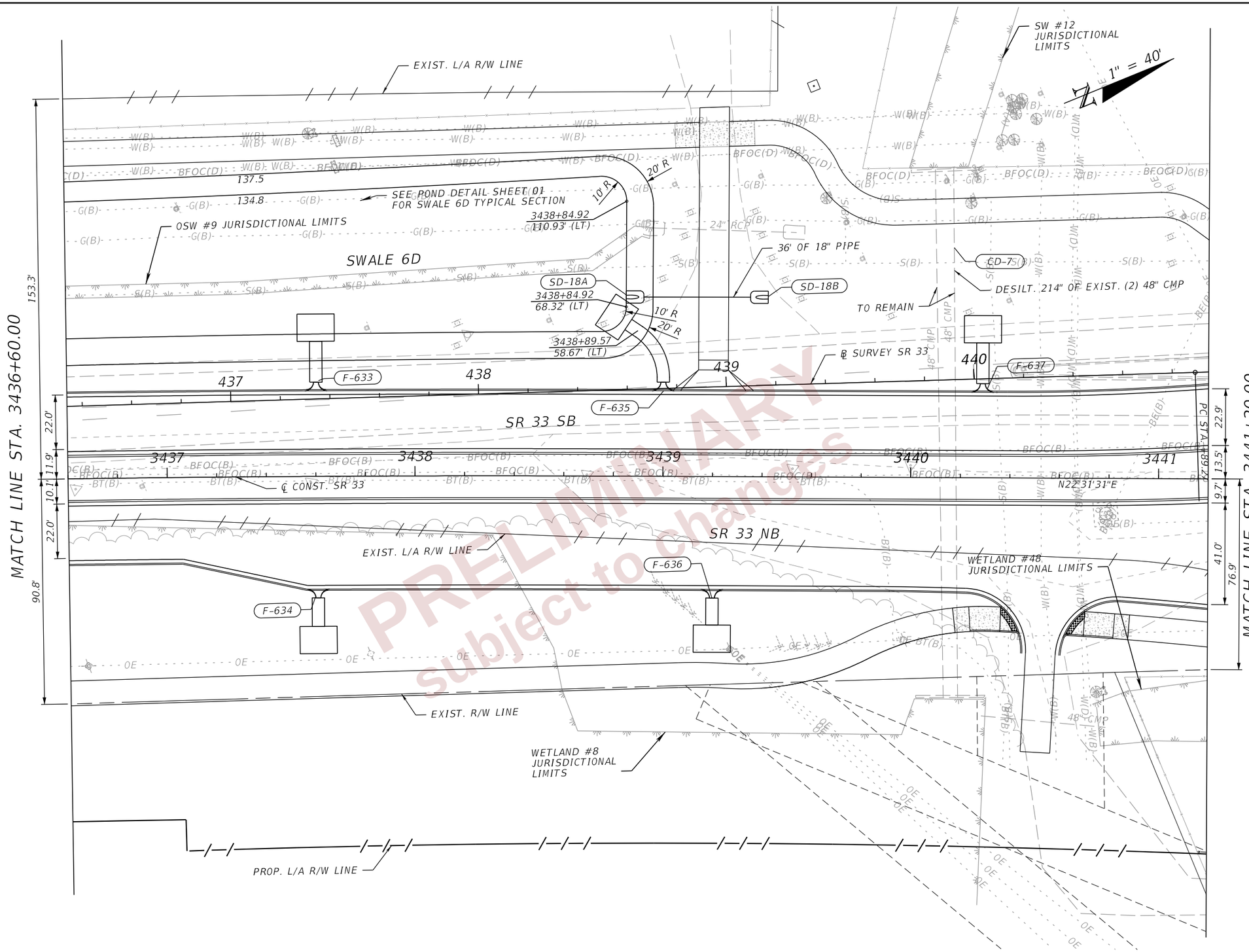

PRELIMINARY subject to changes

THE OFFICIAL RECORD OF THIS SHEET IS THE ELECTRONIC FILE DIGITALLY SIGNED AND SEALED UNDER RULE 61G15-23.004, F.A.C.

REVISIONS				ENGINEER OF RECORD	STATE OF FLORIDA DEPARTMENT OF TRANSPORTATION			DRAINAGE PLANS (19)	SHEET NO.
DATE	DESCRIPTION	DATE	DESCRIPTION	LISANDRO ZAPATA, P.E. LICENSE NUMBER 58822 H. W. LOCHNER 4300 W. CYPRESS STREET, SUITE 500 TAMPA, FLORIDA 33607	ROAD NO.	COUNTY	FINANCIAL PROJECT ID		105
					SR 400	POLK	430185-3-52-01		

2/26/2024 3:52:01 PM JBLOUNT
C:\pw_working\lochner-pw-01\dms18802\PLANRD01.dgn

SEE DRAINAGE PLANS (06)

18" PIPE

S-804

℄ CONST. RAMP B

227

RAMP B

POND 7

TO REMAIN

1" = 40'

WETLAND #13
JURISDICTIONAL LIMITS

S-808

76' OF 18" PIPE

OSW #14
JURISDICTIONAL
LIMITS

445

444

443

442

441

228

F-802

200' OF 24" PIPE

268' OF
24" PIPE

S-811

MATCH LINE STA. 3441+20.00

22.9'
13.5'
9.7'
76.9'
41.0'

SR 33 SB

SR 33 NB

3442

3443

3444

3445

60' OF
24" PIPE

24.0'
5.4'
5.3'
24.0'

MATCH LINE STA. 3445+80.00

S-801

S-802

57' OF 18" PIPE

S-803

OSW #46
JURISDICTIONAL LIMITS

S-812

109' OF 18" PIPE

WETLAND #47 JURISDICTIONAL LIMITS

57' OF 18" PIPE

115' OF 18" PIPE

S-805

S-807

131' OF 24" PIPE

66' OF 30" PIPE

304

36" CMP

24" RCP

3444+88.89
101.69' (RT)

POND 8

SD-19B

236' OF
48" PIPE

EXIST.
L/A R/W
LINE

RAMP C

305

68' OF
18" PIPE

S-813

WETLAND #48
JURISDICTIONAL LIMITS

S-806

PROP. L/A R/W LINE

MATCH LINE
DRAINAGE PLANS (06)
STA. 305+70.00

(1)	STA. 305+50.00, 15.50' (RT)
(2)	STA. 305+65.00, 12.94' (RT)
(3)	STA. 305+45.35, 13.21' (LT)
(4)	STA. 305+45.85, 20.19' (LT)

PRELIMINARY
Subject to changes

REVISIONS			
DATE	DESCRIPTION	DATE	DESCRIPTION

ENGINEER OF RECORD

LISANDRO ZAPATA, P.E.
LICENSE NUMBER 58822
H. W. LOCHNER
4300 W. CYPRESS STREET, SUITE 500
TAMPA, FLORIDA 33607

STATE OF FLORIDA
DEPARTMENT OF TRANSPORTATION

ROAD NO.	COUNTY	FINANCIAL PROJECT ID
SR 400	POLK	430185-3-52-01

DRAINAGE PLANS (20)

SHEET NO.
106

THE OFFICIAL RECORD OF THIS SHEET IS THE ELECTRONIC FILE DIGITALLY SIGNED AND SEALED UNDER RULE 61G15-23.004, F.A.C.

2/29/2024 8:56:47 PM ANDRES.FERNANDEZ
c:\pw_working\lochner-pw-01\dms18802\PLANRD01.dgn

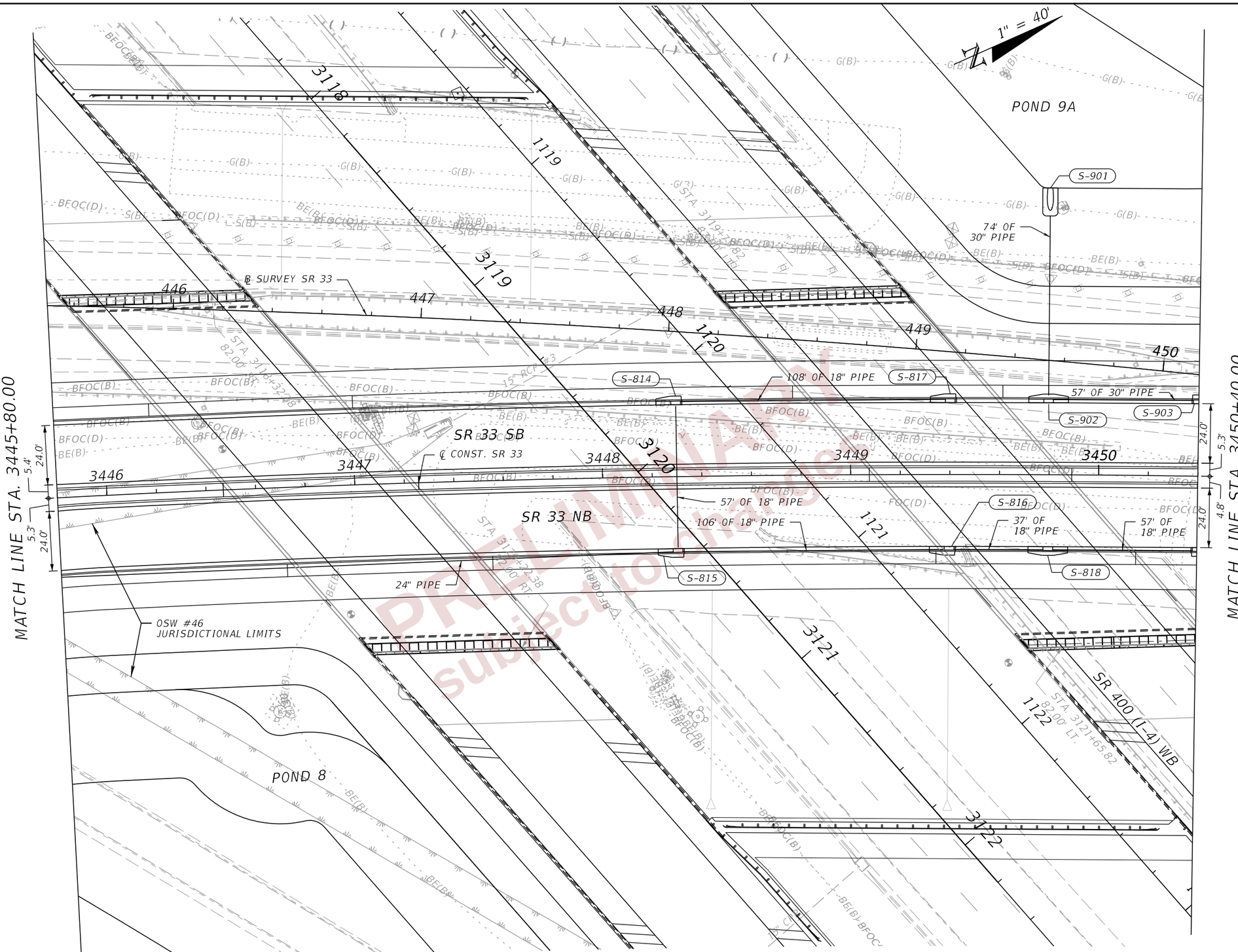

PRELIMINARY
subject to change

REVISIONS				ENGINEER OF RECORD	STATE OF FLORIDA DEPARTMENT OF TRANSPORTATION			DRAINAGE PLANS (21)	SHEET NO.
DATE	DESCRIPTION	DATE	DESCRIPTION	LISANDRO ZAPATA, P.E. LICENSE NUMBER 58822 H. W. LOCHNER 4300 W. CYPRESS STREET, SUITE 500 TAMPA, FLORIDA 33607	ROAD NO.	COUNTY	FINANCIAL PROJECT ID		107
					SR 400	POLK	430185-3-52-01		

2/26/2024 3:52:03 PM JBLOUNT
c:\pw_working\lochner-pw-01\dms18802\PLANRD01.dgn

THE OFFICIAL RECORD OF THIS SHEET IS THE ELECTRONIC FILE DIGITALLY SIGNED AND SEALED UNDER RULE 61G15-23.004, F.A.C.

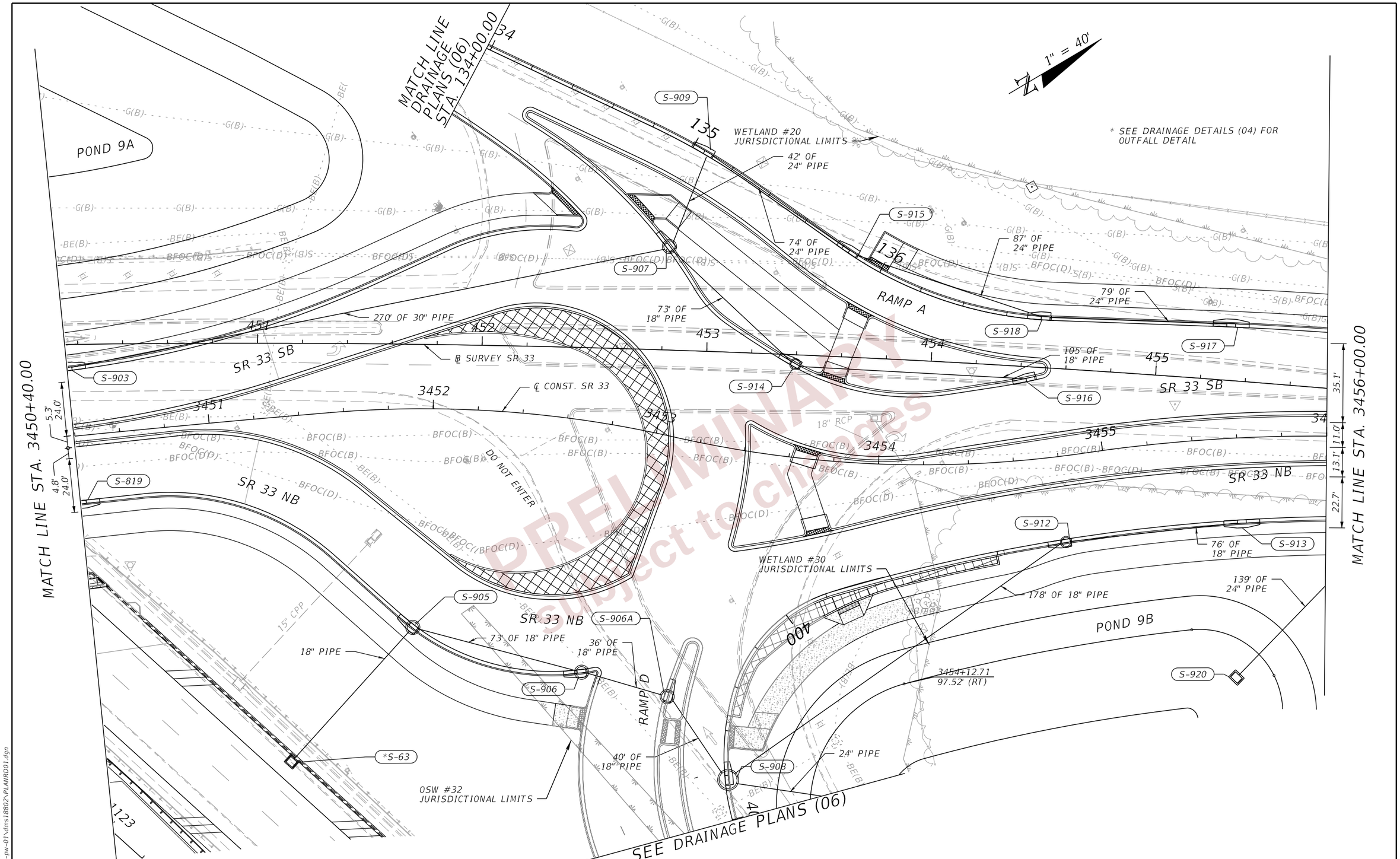

THE OFFICIAL RECORD OF THIS SHEET IS THE ELECTRONIC FILE DIGITALLY SIGNED AND SEALED UNDER RULE 61G15-23.004, F.A.C.

REVISIONS			
DATE	DESCRIPTION	DATE	DESCRIPTION

ENGINEER OF RECORD
LISANDRO ZAPATA, P.E.
LICENSE NUMBER 58822
H. W. LOCHNER
4300 W. CYPRESS STREET, SUITE 500
TAMPA, FLORIDA 33607

STATE OF FLORIDA
DEPARTMENT OF TRANSPORTATION

ROAD NO.	COUNTY	FINANCIAL PROJECT ID
SR 400	POLK	430185-3-52-01

DRAINAGE PLANS (22)

SHEET NO.
108

2/26/2024 3:52:04 PM JBLOUNT
c:\pw_working\lochner-pw-01\dms18802\PLANRD01.dgn

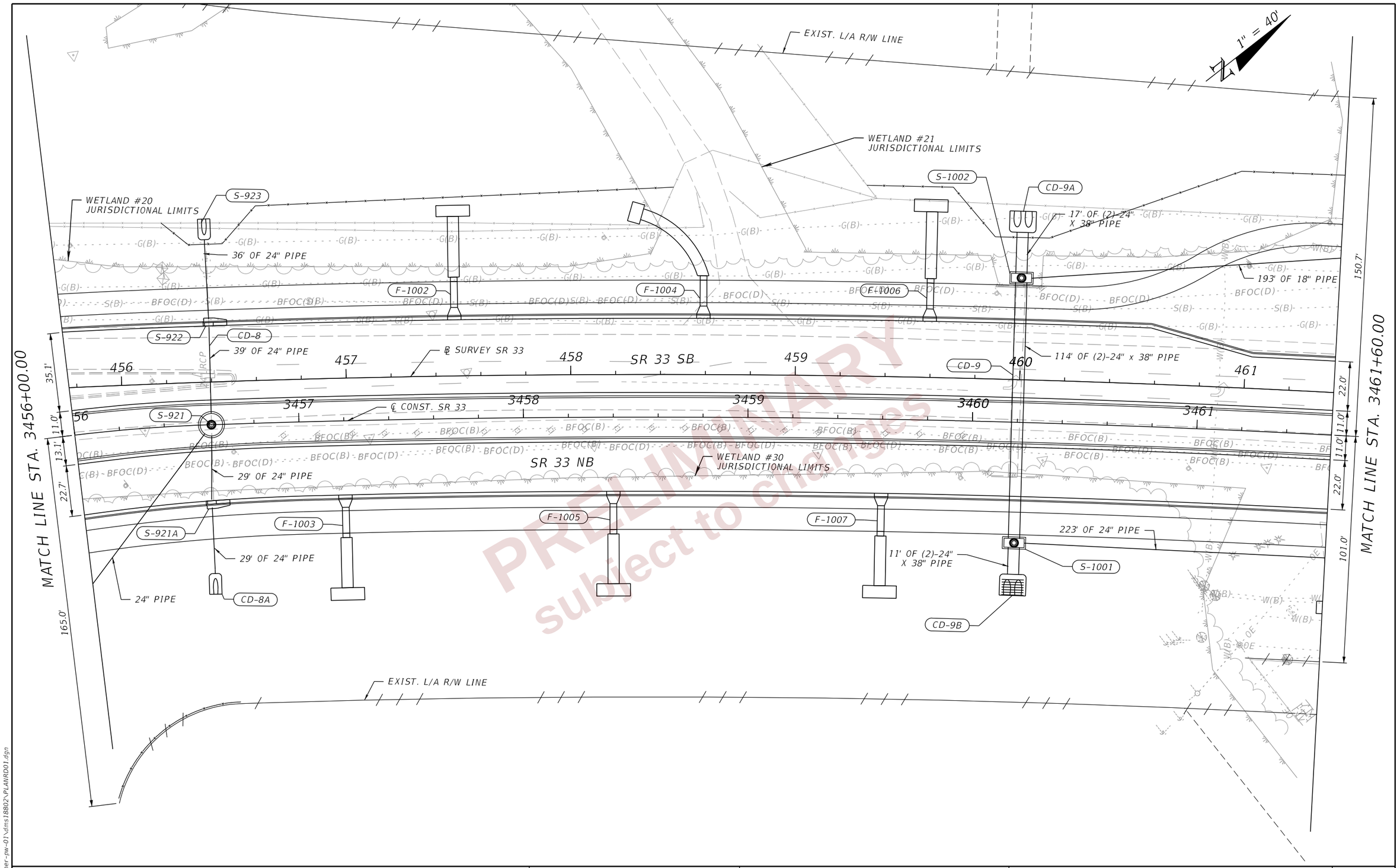

THE OFFICIAL RECORD OF THIS SHEET IS THE ELECTRONIC FILE DIGITALLY SIGNED AND SEALED UNDER RULE 61G15-23.004, F.A.C.

REVISIONS			
DATE	DESCRIPTION	DATE	DESCRIPTION

ENGINEER OF RECORD
LISANDRO ZAPATA, P.E.
LICENSE NUMBER 58822
H. W. LOCHNER
4300 W. CYPRESS STREET, SUITE 500
TAMPA, FLORIDA 33607

STATE OF FLORIDA
DEPARTMENT OF TRANSPORTATION

ROAD NO.	COUNTY	FINANCIAL PROJECT ID
SR 400	POLK	430185-3-52-01

DRAINAGE PLANS (23)

SHEET NO.
109

2/26/2024 3:52:05 PM JBLOUNT
c:\pw_working\lochner-pw-01\dms18802\PLANRD01.dgn

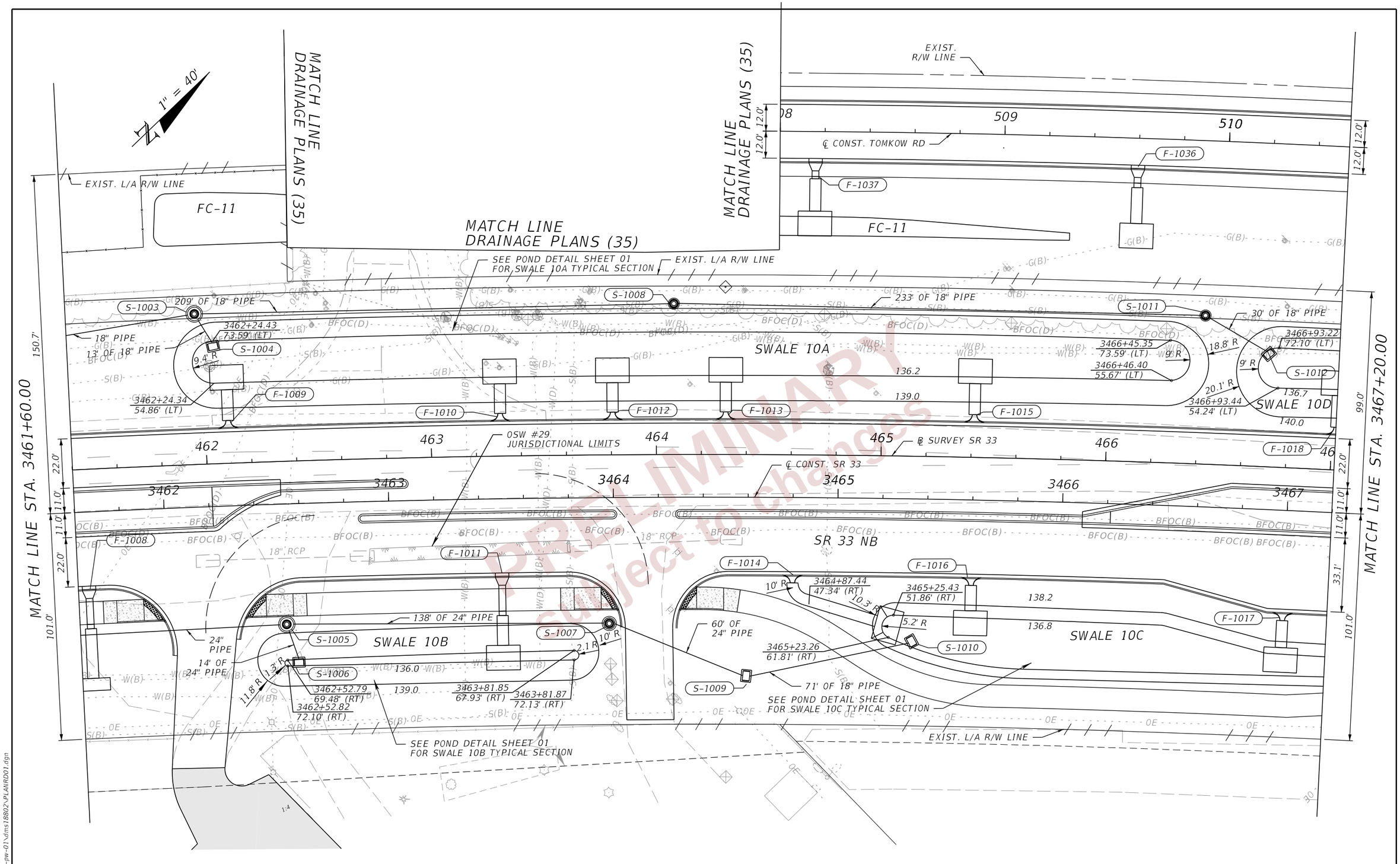

THE OFFICIAL RECORD OF THIS SHEET IS THE ELECTRONIC FILE DIGITALLY SIGNED AND SEALED UNDER RULE 61G15-23.004, F.A.C.

2/26/2024 3:52:06 PM JBLOUNT
c:\pw_working\lochner-pw-01\dms18802\PLANRD01.dgn

REVISIONS			
DATE	DESCRIPTION	DATE	DESCRIPTION

ENGINEER OF RECORD
LISANDRO ZAPATA, P.E.
LICENSE NUMBER 58822
H. W. LOCHNER
4300 W. CYPRESS STREET, SUITE 500
TAMPA, FLORIDA 33607

STATE OF FLORIDA
DEPARTMENT OF TRANSPORTATION

ROAD NO.	COUNTY	FINANCIAL PROJECT ID
SR 400	POLK	430185-3-52-01

DRAINAGE PLANS (24)

SHEET NO.
110

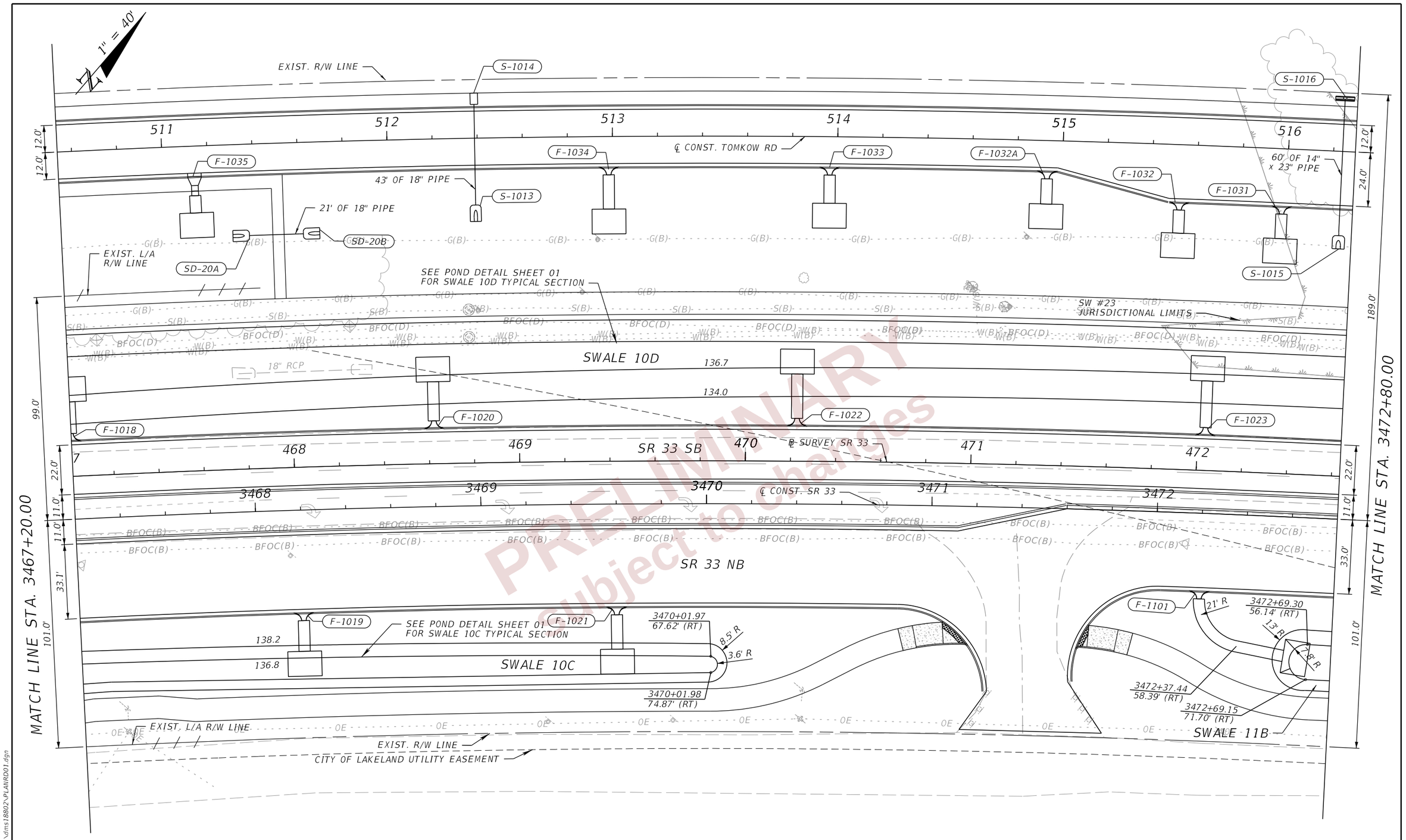

PRELIMINARY subject to change

THE OFFICIAL RECORD OF THIS SHEET IS THE ELECTRONIC FILE DIGITALLY SIGNED AND SEALED UNDER RULE 61G15-23.004, F.A.C.

REVISIONS				ENGINEER OF RECORD	STATE OF FLORIDA DEPARTMENT OF TRANSPORTATION			DRAINAGE PLANS (25)	SHEET NO.
DATE	DESCRIPTION	DATE	DESCRIPTION	LISANDRO ZAPATA, P.E. LICENSE NUMBER 58822 H. W. LOCHNER 4300 W. CYPRESS STREET, SUITE 500 TAMPA, FLORIDA 33607	ROAD NO.	COUNTY	FINANCIAL PROJECT ID		111
					SR 400	POLK	430185-3-52-01		

2/26/2024 3:52:07 PM JBLOUNT
c:\pw_working\lochner-pw-01\dms18802\PLANROD1.dgn

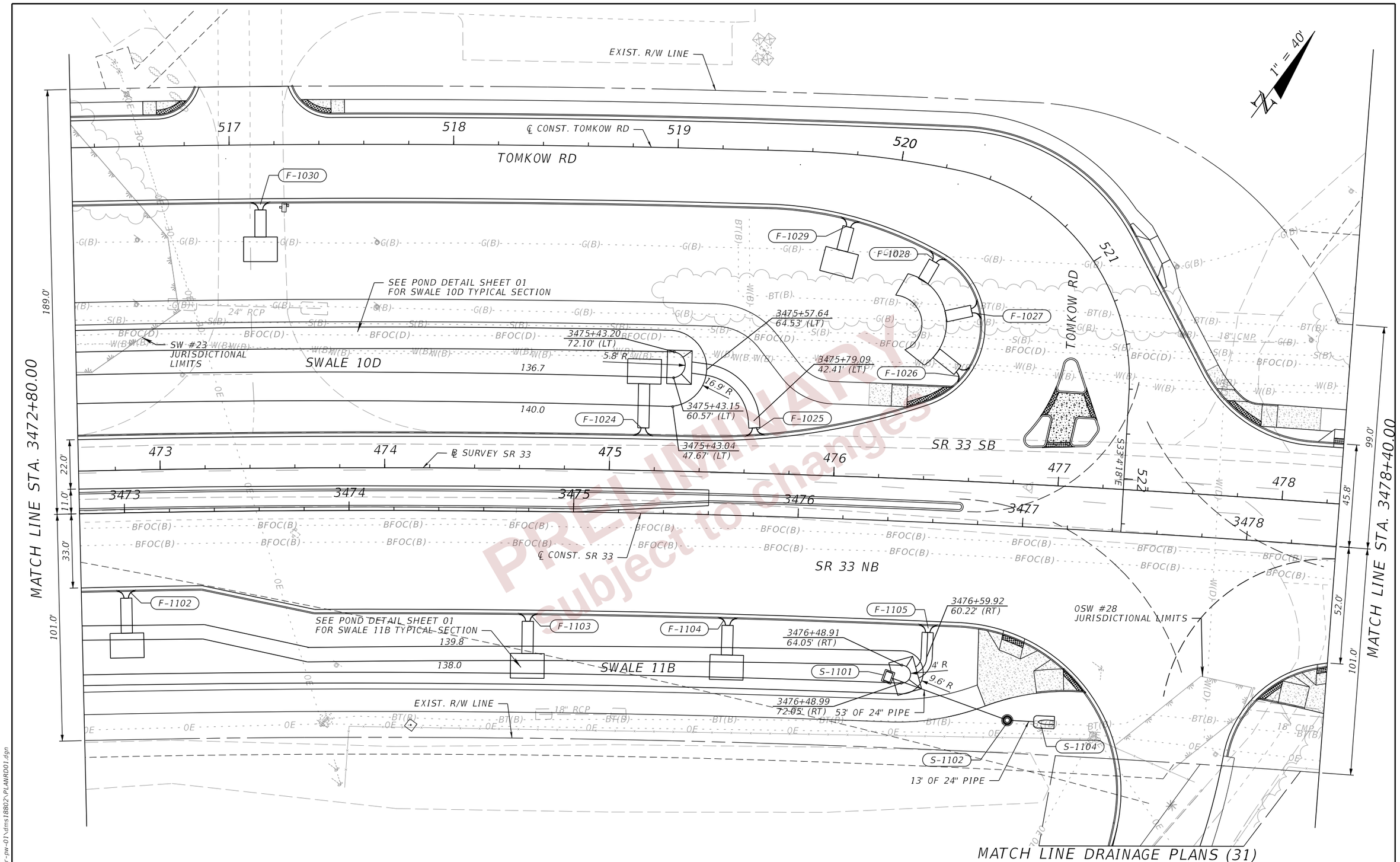

THE OFFICIAL RECORD OF THIS SHEET IS THE ELECTRONIC FILE DIGITALLY SIGNED AND SEALED UNDER RULE 61G15-23.004, F.A.C.

REVISIONS			
DATE	DESCRIPTION	DATE	DESCRIPTION

ENGINEER OF RECORD

LISANDRO ZAPATA, P.E.
LICENSE NUMBER 58822
H. W. LOCHNER
4300 W. CYPRESS STREET, SUITE 500
TAMPA, FLORIDA 33607

STATE OF FLORIDA
DEPARTMENT OF TRANSPORTATION

ROAD NO.	COUNTY	FINANCIAL PROJECT ID
SR 400	POLK	430185-3-52-01

DRAINAGE PLANS (26)

SHEET NO. 112

2/26/2024 3:52:08 PM JBLOUNT
c:\pw_working\lochner-pw-01\dms18802\PLANRD01.dgn

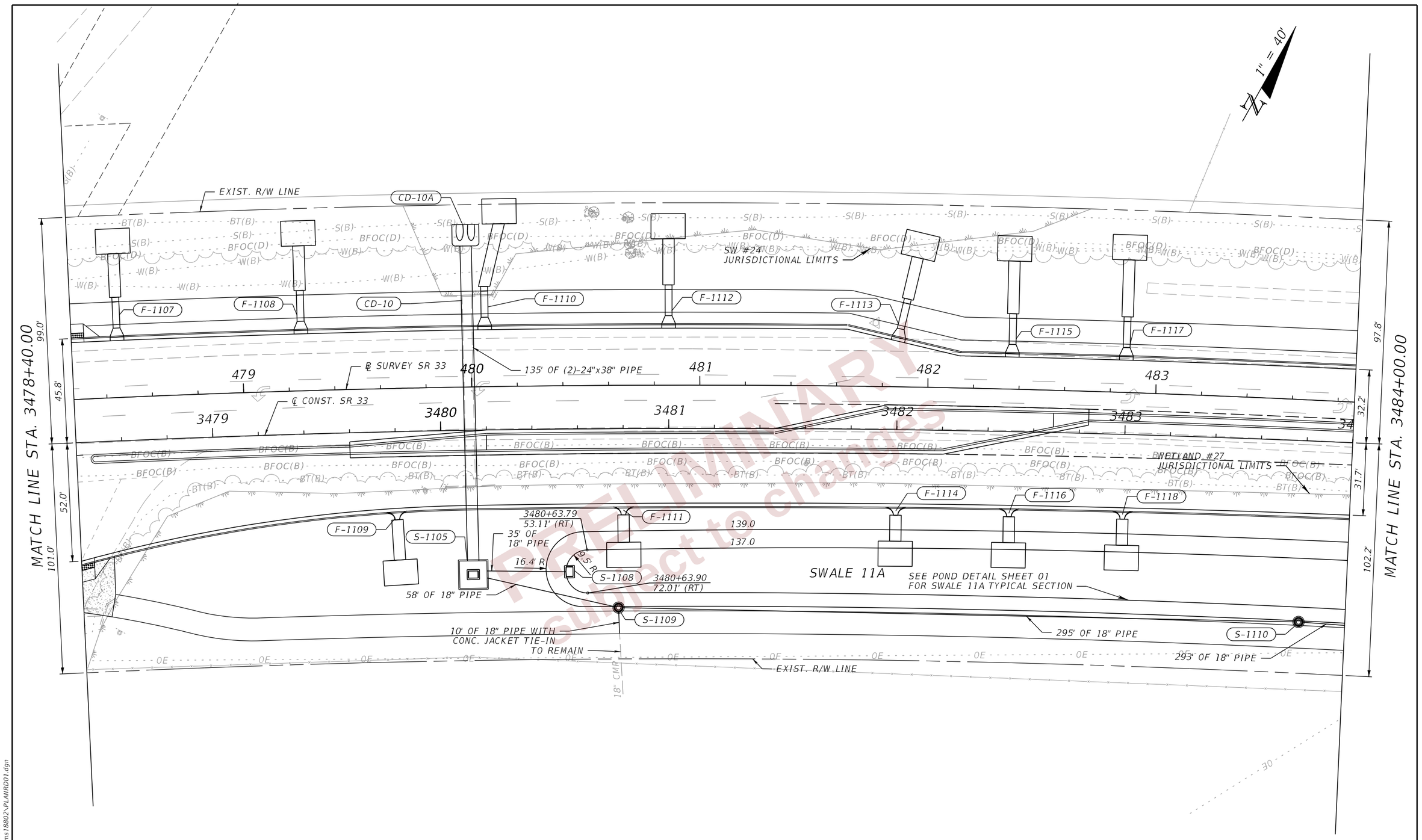

PRELIMINARY
subject to changes

REVISIONS				ENGINEER OF RECORD	STATE OF FLORIDA DEPARTMENT OF TRANSPORTATION			DRAINAGE PLANS (27)	SHEET NO.
DATE	DESCRIPTION	DATE	DESCRIPTION	LISANDRO ZAPATA, P.E. LICENSE NUMBER 58822 H. W. LOCHNER 4300 W. CYPRESS STREET, SUITE 500 TAMPA, FLORIDA 33607	ROAD NO.	COUNTY	FINANCIAL PROJECT ID		113
					SR 400	POLK	430185-3-52-01		

THE OFFICIAL RECORD OF THIS SHEET IS THE ELECTRONIC FILE DIGITALLY SIGNED AND SEALED UNDER RULE 61G15-23.004, F.A.C.

2/26/2024 3:52:09 PM JBLOUNT
c:\pw_working\lochner-pw-01\dms18802\PLANROD01.dgn

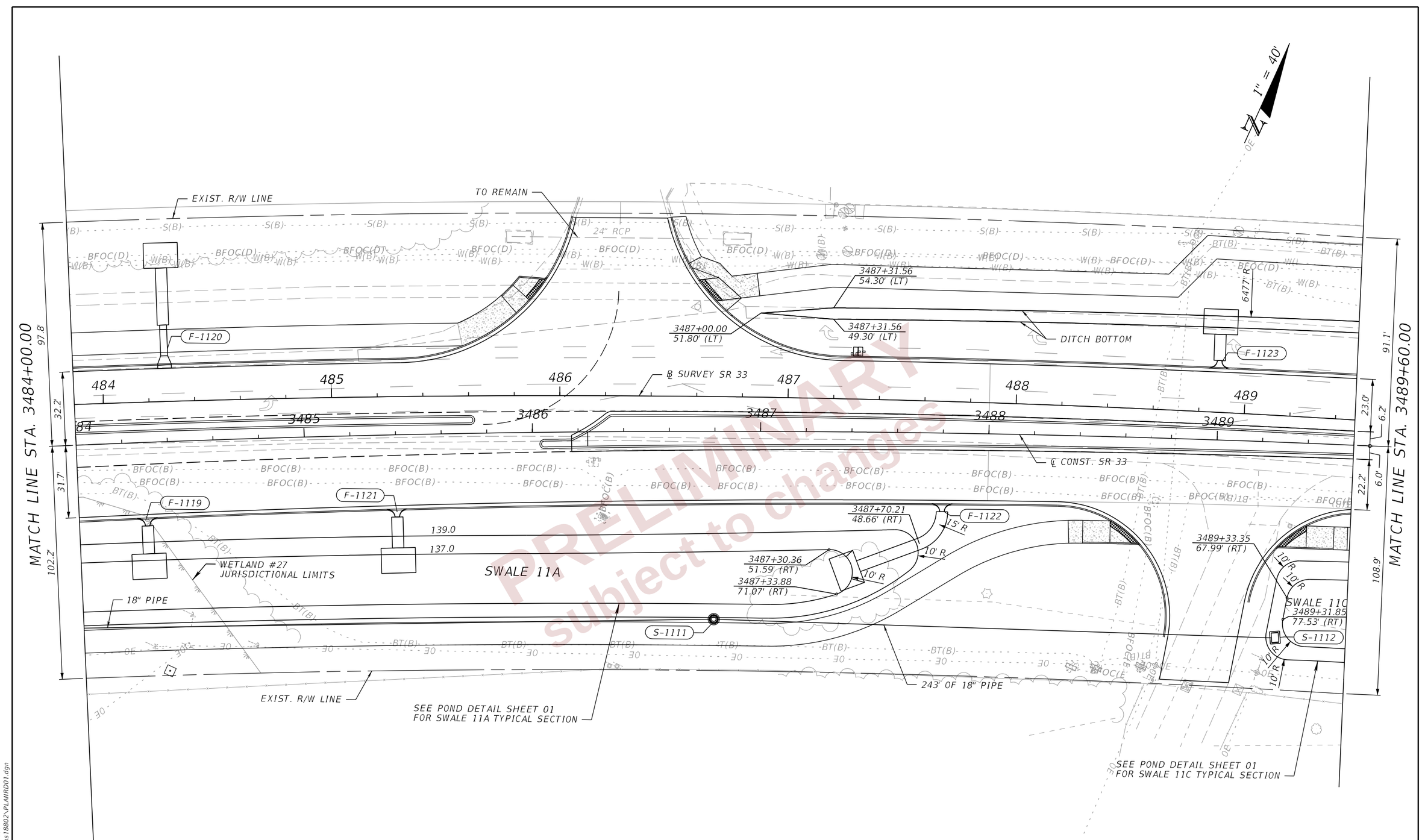

REVISIONS				ENGINEER OF RECORD	STATE OF FLORIDA DEPARTMENT OF TRANSPORTATION			DRAINAGE PLANS (28)	SHEET NO.
DATE	DESCRIPTION	DATE	DESCRIPTION	LISANDRO ZAPATA, P.E. LICENSE NUMBER 58822 H. W. LOCHNER 4300 W. CYPRESS STREET, SUITE 500 TAMPA, FLORIDA 33607	ROAD NO.	COUNTY	FINANCIAL PROJECT ID		114
					SR 400	POLK	430185-3-52-01		

2/26/2024 3:52:10 PM JBLOUNT
c:\pw_working\lochner-pw-01\dms18802\PLANROD1.dgn

THE OFFICIAL RECORD OF THIS SHEET IS THE ELECTRONIC FILE DIGITALLY SIGNED AND SEALED UNDER RULE 61G15-23.004, F.A.C.

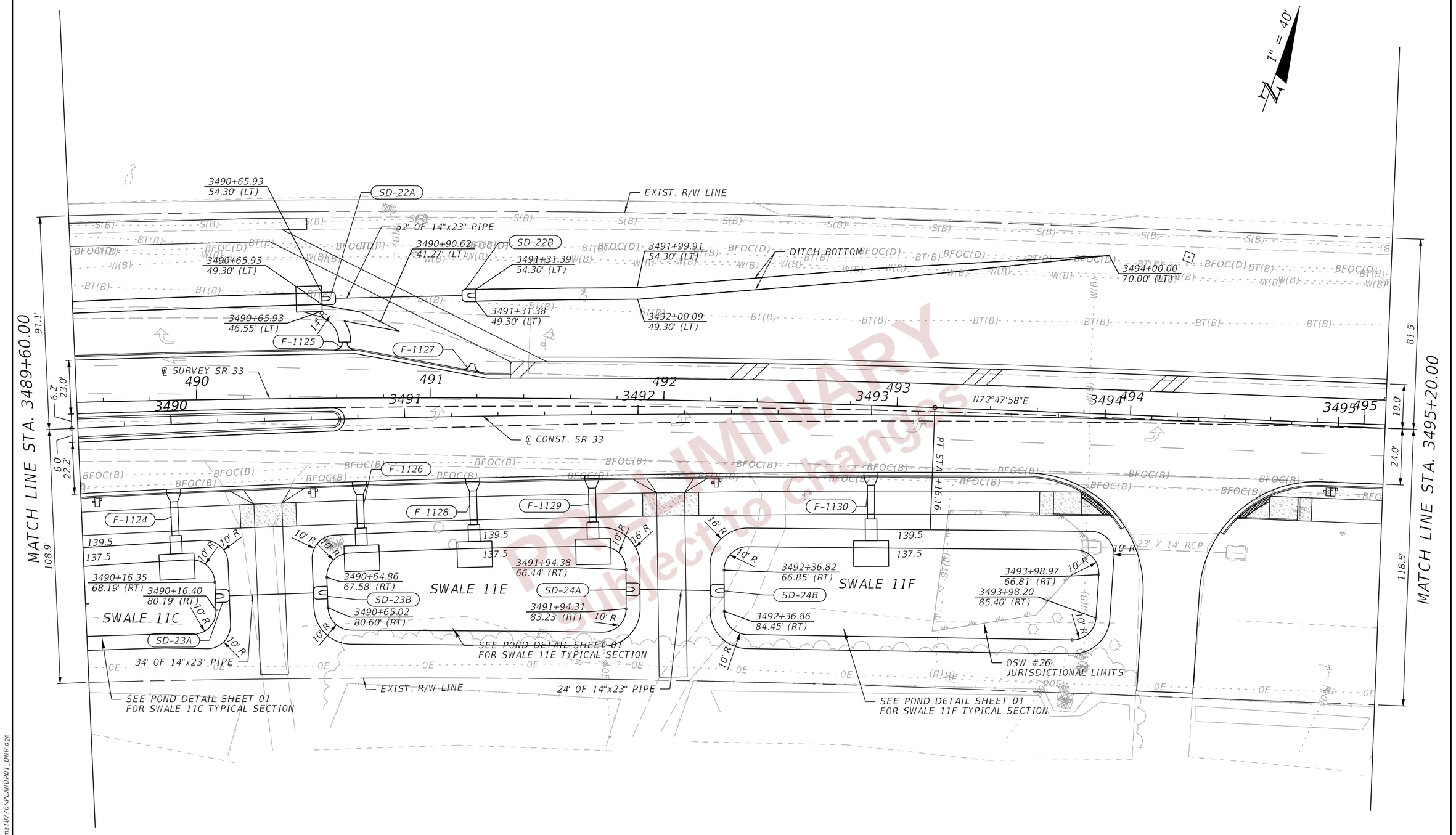

PRELIMINARY
Subject to changes

THE OFFICIAL RECORD OF THIS SHEET IS THE ELECTRONIC FILE DIGITALLY SIGNED AND SEALED UNDER RULE 61G15-23.004, F.A.C.

REVISIONS				ENGINEER OF RECORD	STATE OF FLORIDA DEPARTMENT OF TRANSPORTATION			DRAINAGE PLANS (29)	SHEET NO.
DATE	DESCRIPTION	DATE	DESCRIPTION	LISANDRO ZAPATA, P.E. LICENSE NUMBER 58822 H. W. LOCHNER 4300 W. CYPRESS STREET, SUITE 500 TAMPA, FLORIDA 33607	ROAD NO.	COUNTY	FINANCIAL PROJECT ID		115
					SR 400	POLK	430185-3-52-01		

2/26/2024 3:52:11 PM JBLOUNT
c:\pw_working\lochner-pw-01\dms18776\PLANDR01_DNR.dgn

1" = 40'

MATCH LINE STA. 3495+20.00

MATCH LINE STA. 500+69.17

81.5'

19.0'

24.0'

118.5'

80.0'

120.0'

EXIST. R/W LINE

TO REMAIN

TO REMAIN

TO REMAIN

18" RCP

18" RCP

18" RCP

℄ CONST. SR 33

℄ SURVEY SR 33

496

497

498

499

500

N72°47'58"E

N72°47'58"E

BFOC(B)

BFOC(D)

BT(B)

W(B)

S(B)

OE

EXIST. R/W LINE

PRELIMINARY
subject to changes

REVISIONS				ENGINEER OF RECORD	STATE OF FLORIDA DEPARTMENT OF TRANSPORTATION			DRAINAGE PLANS (30)	SHEET NO.
DATE	DESCRIPTION	DATE	DESCRIPTION	LISANDRO ZAPATA, P.E. LICENSE NUMBER 58822 H. W. LOCHNER 4300 W. CYPRESS STREET, SUITE 500 TAMPA, FLORIDA 33607	ROAD NO.	COUNTY	FINANCIAL PROJECT ID		116
					SR 400	POLK	430185-3-52-01		

THE OFFICIAL RECORD OF THIS SHEET IS THE ELECTRONIC FILE DIGITALLY SIGNED AND SEALED UNDER RULE 61G15-23.004, F.A.C.

2/26/2024 3:52:11 PM JBLOUNT
c:\pw_working\lochner-pw-01\dms18802\PLANRD01.dgn

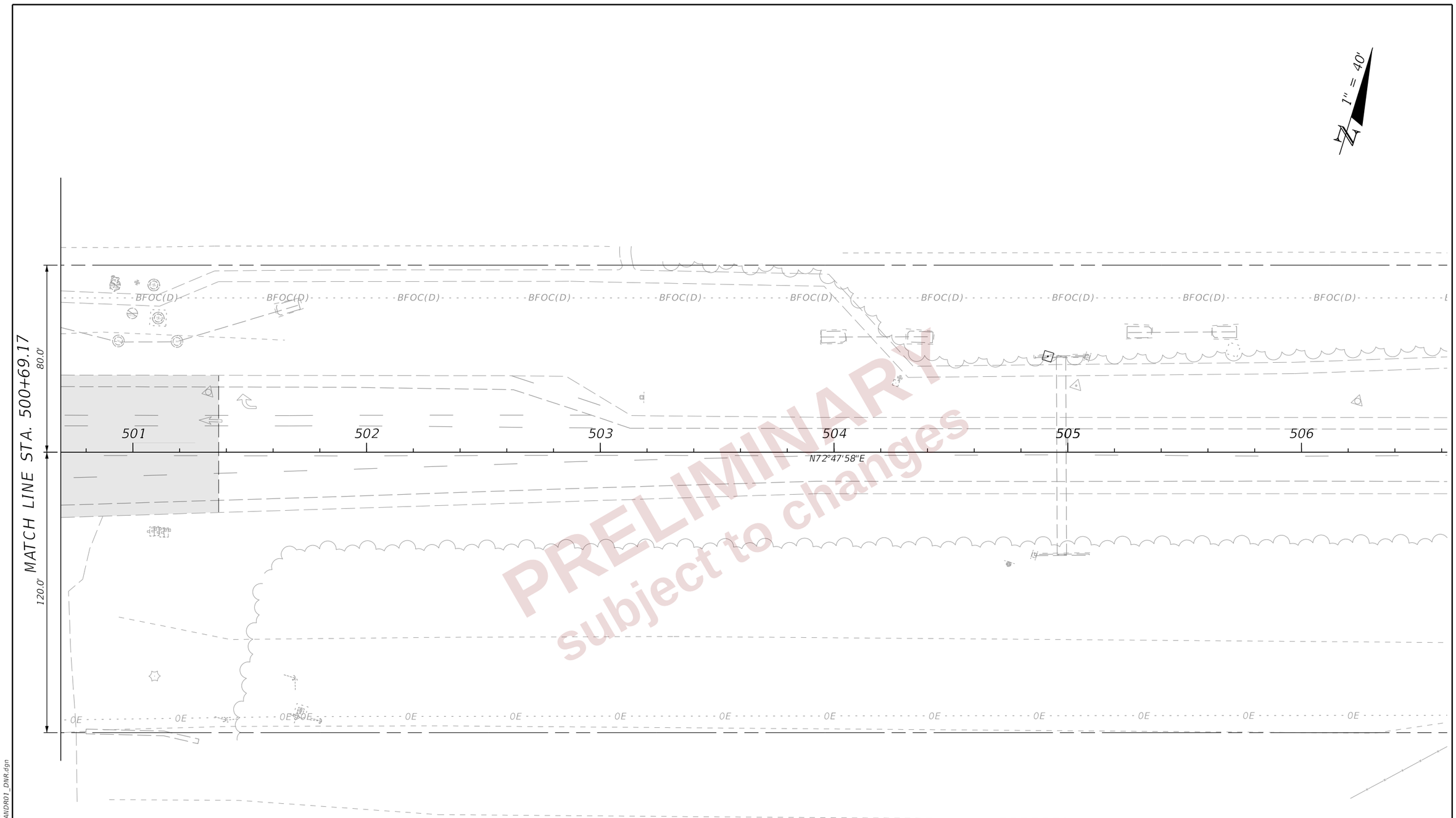

PRELIMINARY
subject to changes

REVISIONS				ENGINEER OF RECORD	STATE OF FLORIDA DEPARTMENT OF TRANSPORTATION			DRAINAGE PLANS (31)	SHEET NO.
DATE	DESCRIPTION	DATE	DESCRIPTION	LISANDRO ZAPATA, P.E. LICENSE NUMBER 58822 H. W. LOCHNER 4300 W. CYPRESS STREET, SUITE 500 TAMPA, FLORIDA 33607	ROAD NO.	COUNTY	FINANCIAL PROJECT ID		117
					SR 400	POLK	430185-3-52-01		

THE OFFICIAL RECORD OF THIS SHEET IS THE ELECTRONIC FILE DIGITALLY SIGNED AND SEALED UNDER RULE 61G15-23.004, F.A.C.

2/29/2024 1:00:52 PM JTAGLIAFERRO
c:\pw_working\lochner-pw-01\dms18776\PLANDR01_DNR.dgn

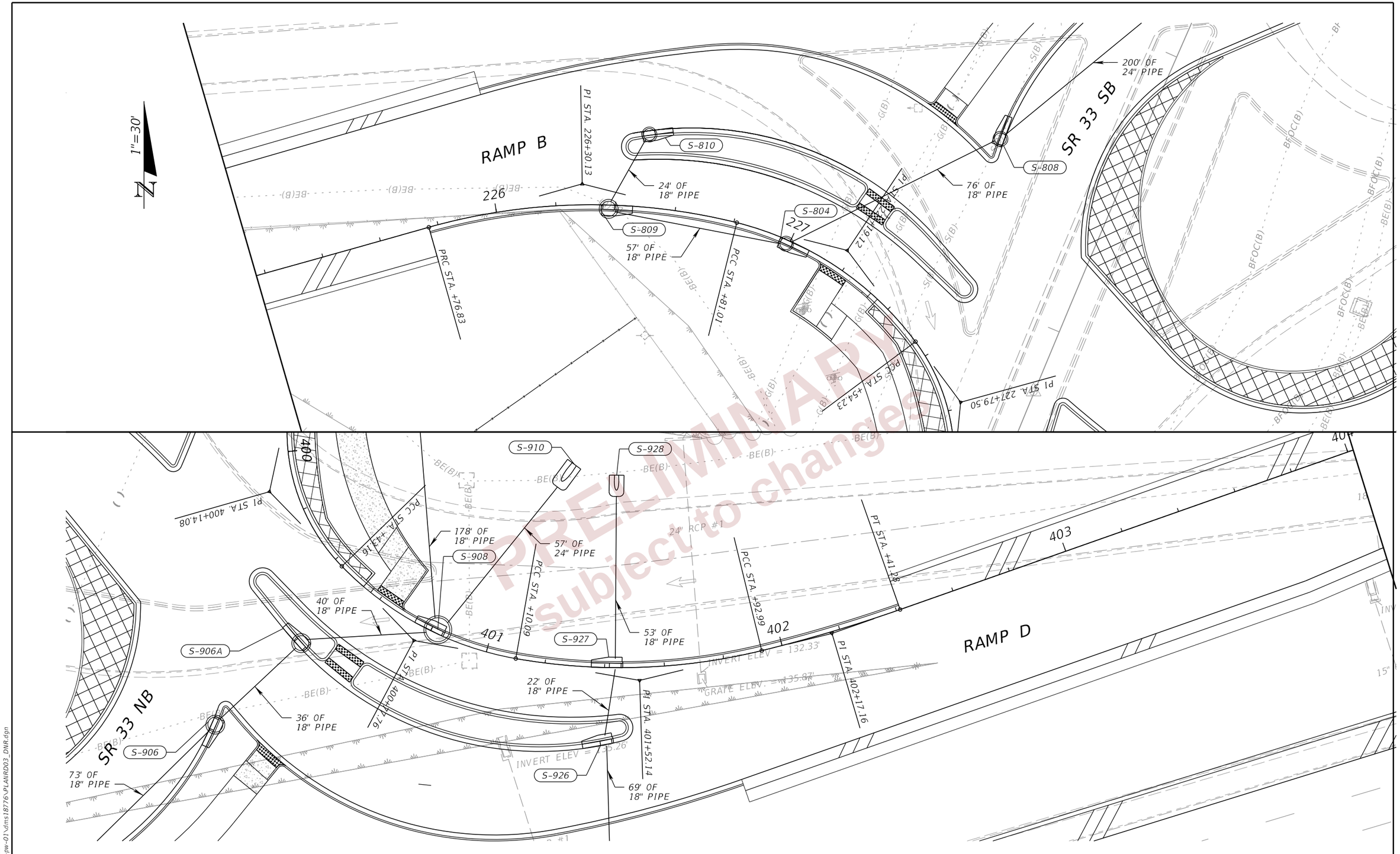

THE OFFICIAL RECORD OF THIS SHEET IS THE ELECTRONIC FILE DIGITALLY SIGNED AND SEALED UNDER RULE 61G15-23.004, F.A.C.

REVISIONS			
DATE	DESCRIPTION	DATE	DESCRIPTION

ENGINEER OF RECORD
LISANDRO ZAPATA, P.E.
LICENSE NUMBER 58822
H. W. LOCHNER
4300 W. CYPRESS STREET, SUITE 500
TAMPA, FLORIDA 33607

STATE OF FLORIDA
DEPARTMENT OF TRANSPORTATION

ROAD NO.	COUNTY	FINANCIAL PROJECT ID
SR 400	POLK	430185-3-52-01

DRAINAGE PLANS (32)

SHEET NO.
118

2/29/2024 1:07:28 PM JTAGLIAFERRO
c:\pw_working\lochner-pw-01\dms18776\PLANRD03_DNR.dgn

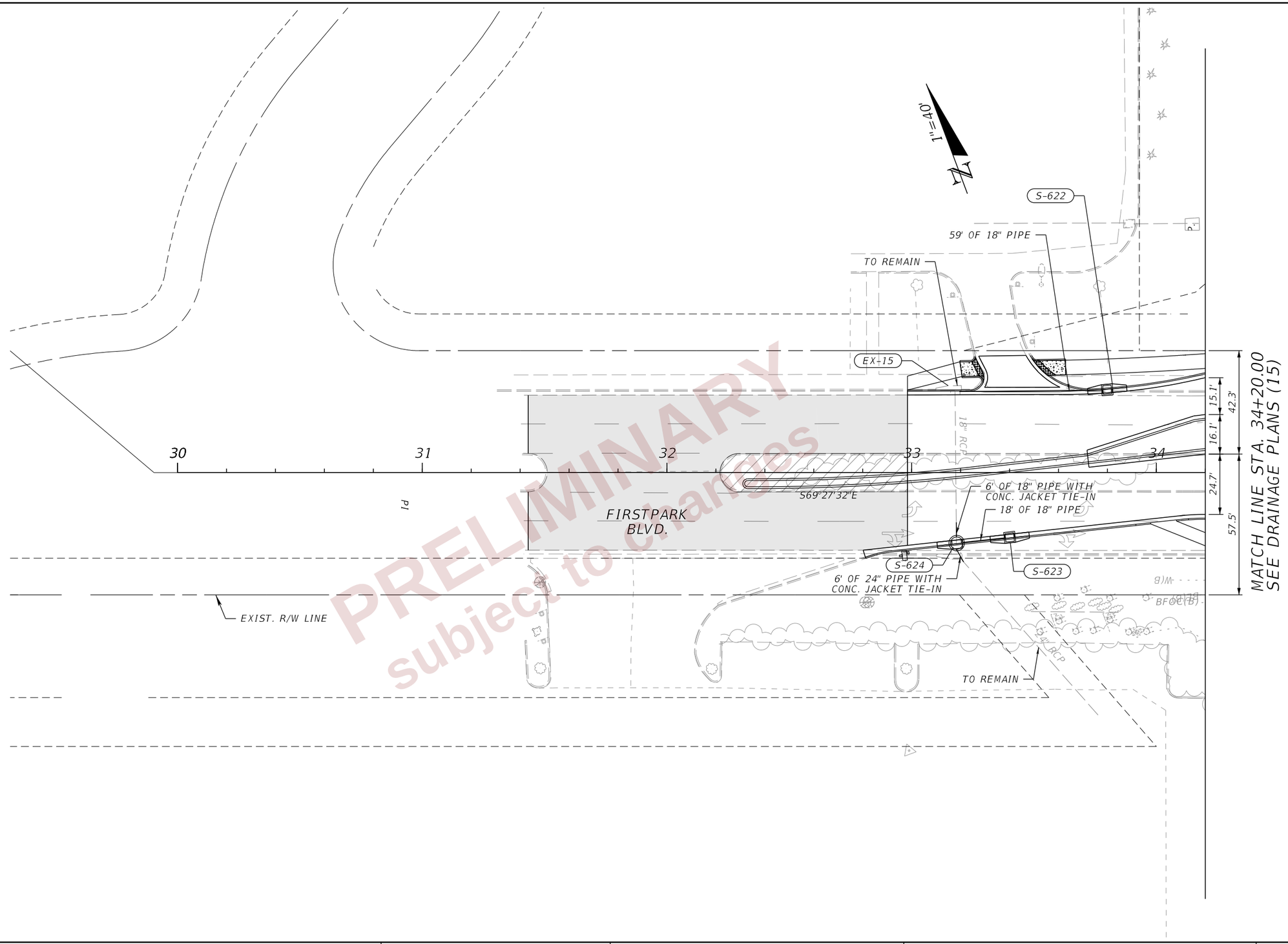

PRELIMINARY
subject to changes

REVISIONS				ENGINEER OF RECORD	STATE OF FLORIDA DEPARTMENT OF TRANSPORTATION			DRAINAGE PLANS (33)	SHEET NO.
DATE	DESCRIPTION	DATE	DESCRIPTION	LISANDRO ZAPATA, P.E. LICENSE NUMBER 58822 H. W. LOCHNER 4300 W. CYPRESS STREET, SUITE 500 TAMPA, FLORIDA 33607	ROAD NO.	COUNTY	FINANCIAL PROJECT ID		119
					SR 400	POLK	430185-3-52-01		

THE OFFICIAL RECORD OF THIS SHEET IS THE ELECTRONIC FILE DIGITALLY SIGNED AND SEALED UNDER RULE 61G15-23.004, F.A.C.

2/29/2024 1:01:31 PM JTAGLIAFERRO
c:\pw_working\lochner-pw-01\dms18802\PLANRD01.dgn

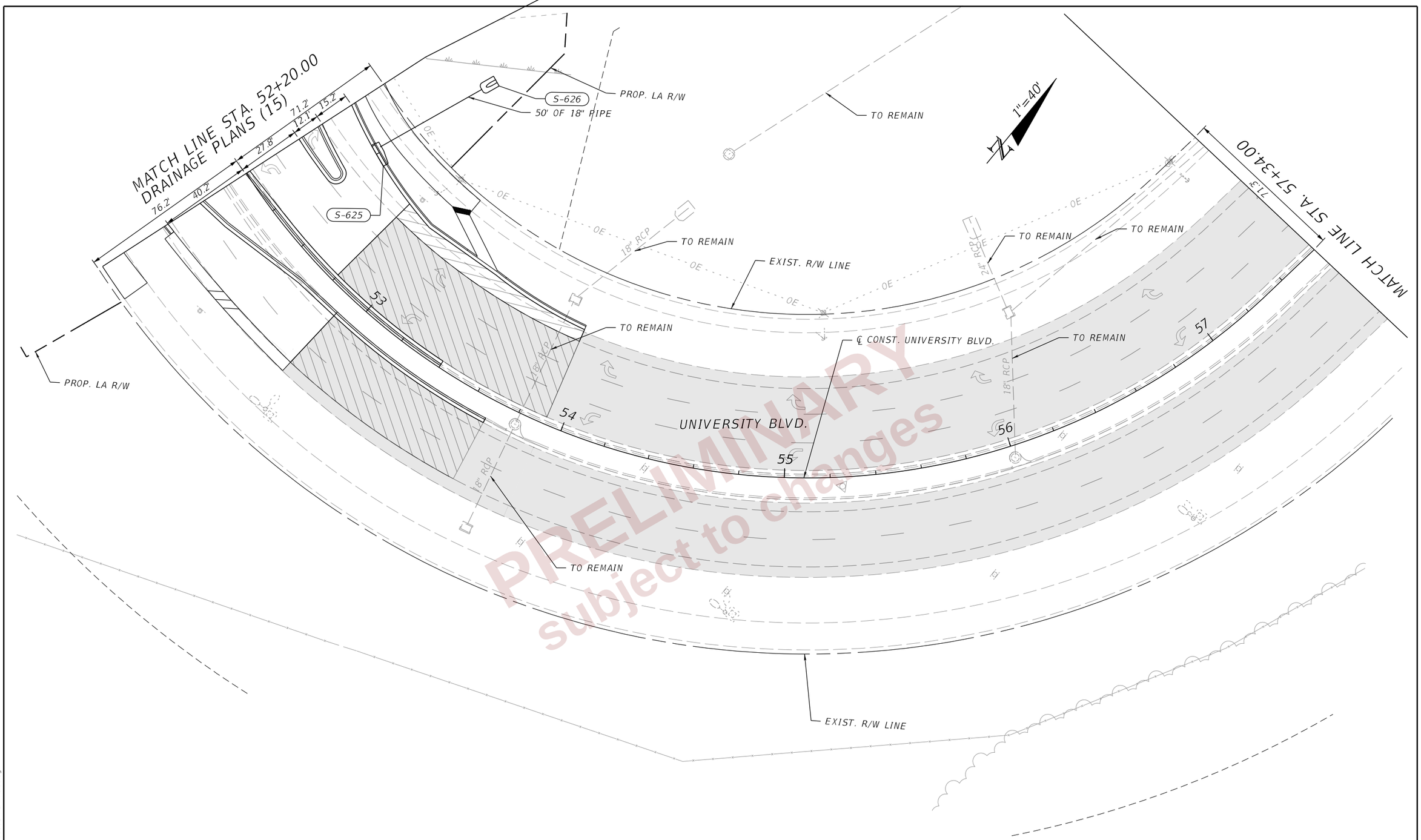

PRELIMINARY
subject to changes

REVISIONS				ENGINEER OF RECORD	STATE OF FLORIDA DEPARTMENT OF TRANSPORTATION			DRAINAGE PLANS (34)	SHEET NO.
DATE	DESCRIPTION	DATE	DESCRIPTION	DEBANANDA PANIGRAHI, P.E. LICENSE NUMBER 68318 H. W. LOCHNER 4300 W. CYPRESS STREET, SUITE 500 TAMPA, FLORIDA 33607	ROAD NO.	COUNTY	FINANCIAL PROJECT ID		120
					SR 400	POLK	430185-3-52-01		

THE OFFICIAL RECORD OF THIS SHEET IS THE ELECTRONIC FILE DIGITALLY SIGNED AND SEALED UNDER RULE 61G15-23.004, F.A.C.

2/29/2024 1:01:32 PM JTAGLIAFERRO
c:\pw_working\lochner-pw-01\dms18802\PLANRD01.dgn

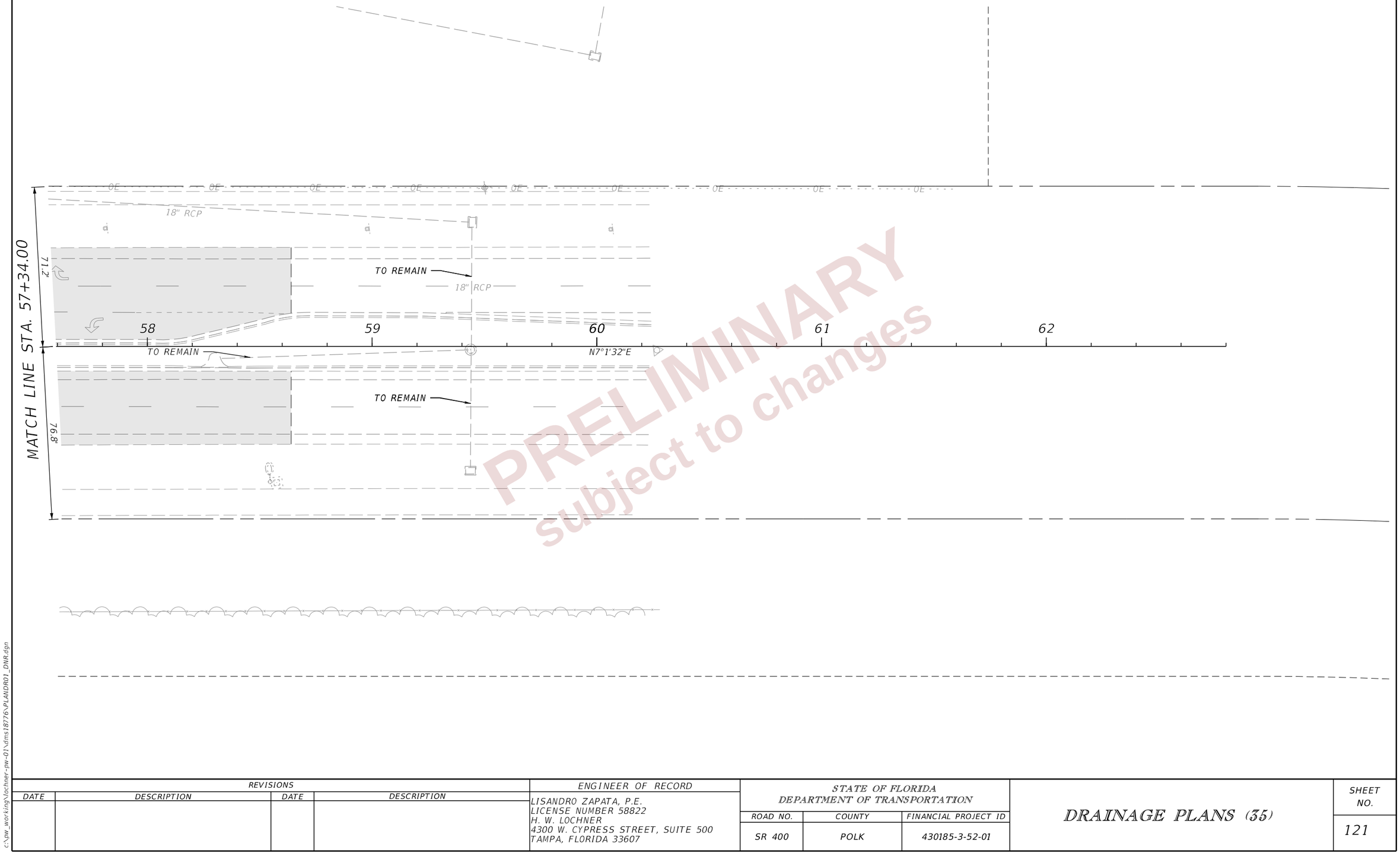

PRELIMINARY
subject to changes

REVISIONS				ENGINEER OF RECORD	STATE OF FLORIDA DEPARTMENT OF TRANSPORTATION			DRAINAGE PLANS (35)	SHEET NO.
DATE	DESCRIPTION	DATE	DESCRIPTION	LISANDRO ZAPATA, P.E. LICENSE NUMBER 58822 H. W. LOCHNER 4300 W. CYPRESS STREET, SUITE 500 TAMPA, FLORIDA 33607	ROAD NO.	COUNTY	FINANCIAL PROJECT ID		121
					SR 400	POLK	430185-3-52-01		

THE OFFICIAL RECORD OF THIS SHEET IS THE ELECTRONIC FILE DIGITALLY SIGNED AND SEALED UNDER RULE 61G15-23.004, F.A.C.

2/29/2024 1:01:32 PM JTAGLIAFERRO
c:\pw_working\lochner-pw-01\dms18776\PLANDR01_DNR.dgn

MATCH LINE STA. 508+00.00

26.0'
64.0'
12.0'
12.0'

EXIST. L/A R/W LINE

MATCH LINE
DRAINAGE PLANS (24)

S-1008

EXIST. R/W LINE

502
503
504
505
506
507

TOMKOW RD

F-1040
F-1038

FC-11

℄ CONST. TOMKOW RD

TO REMAIN

24" CPP

TO REMAIN

EXIST. R/W LINE

MATCH LINE
DRAINAGE PLANS (24)

PRELIMINARY
subject to changes

THE OFFICIAL RECORD OF THIS SHEET IS THE ELECTRONIC FILE DIGITALLY SIGNED AND SEALED UNDER RULE 61G15-23.004, F.A.C.

REVISIONS				ENGINEER OF RECORD	STATE OF FLORIDA DEPARTMENT OF TRANSPORTATION			DRAINAGE PLANS (36)	SHEET NO.
DATE	DESCRIPTION	DATE	DESCRIPTION	LISANDRO ZAPATA, P.E. LICENSE NUMBER 58822 H. W. LOCHNER 4300 W. CYPRESS STREET, SUITE 500 TAMPA, FLORIDA 33607	ROAD NO.	COUNTY	FINANCIAL PROJECT ID		122
					SR 400	POLK	430185-3-52-01		

2/29/2024 1:01:32 PM JTAGLIAFERRO
c:\pw_working\lochner-pw-01\dms18802\PLANRD01.dgn

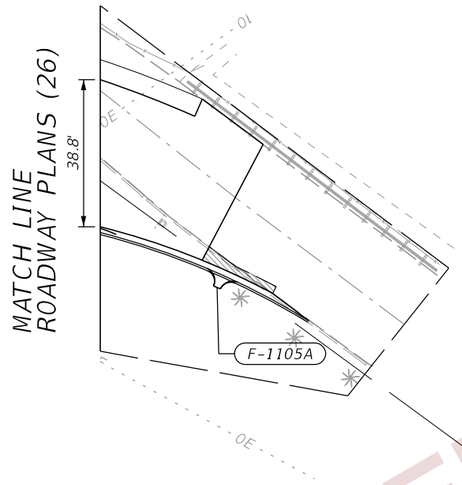

PRELIMINARY
subject to changes

REVISIONS				ENGINEER OF RECORD	STATE OF FLORIDA DEPARTMENT OF TRANSPORTATION			DRAINAGE PLANS (37)	SHEET NO.
DATE	DESCRIPTION	DATE	DESCRIPTION	LISANDRO ZAPATA, P.E. LICENSE NUMBER 58822 H. W. LOCHNER 4300 W. CYPRESS STREET, SUITE 500 TAMPA, FLORIDA 33607	ROAD NO.	COUNTY	FINANCIAL PROJECT ID		123
					SR 400	POLK	430185-3-52-01		

THE OFFICIAL RECORD OF THIS SHEET IS THE ELECTRONIC FILE DIGITALLY SIGNED AND SEALED UNDER RULE 61G15-23.004, F.A.C.

2/29/2024 1:01:33 PM JTAGLIAFERRO
c:\pw_working\lochner-pw-01\dms18802\PLANRD01.dgn

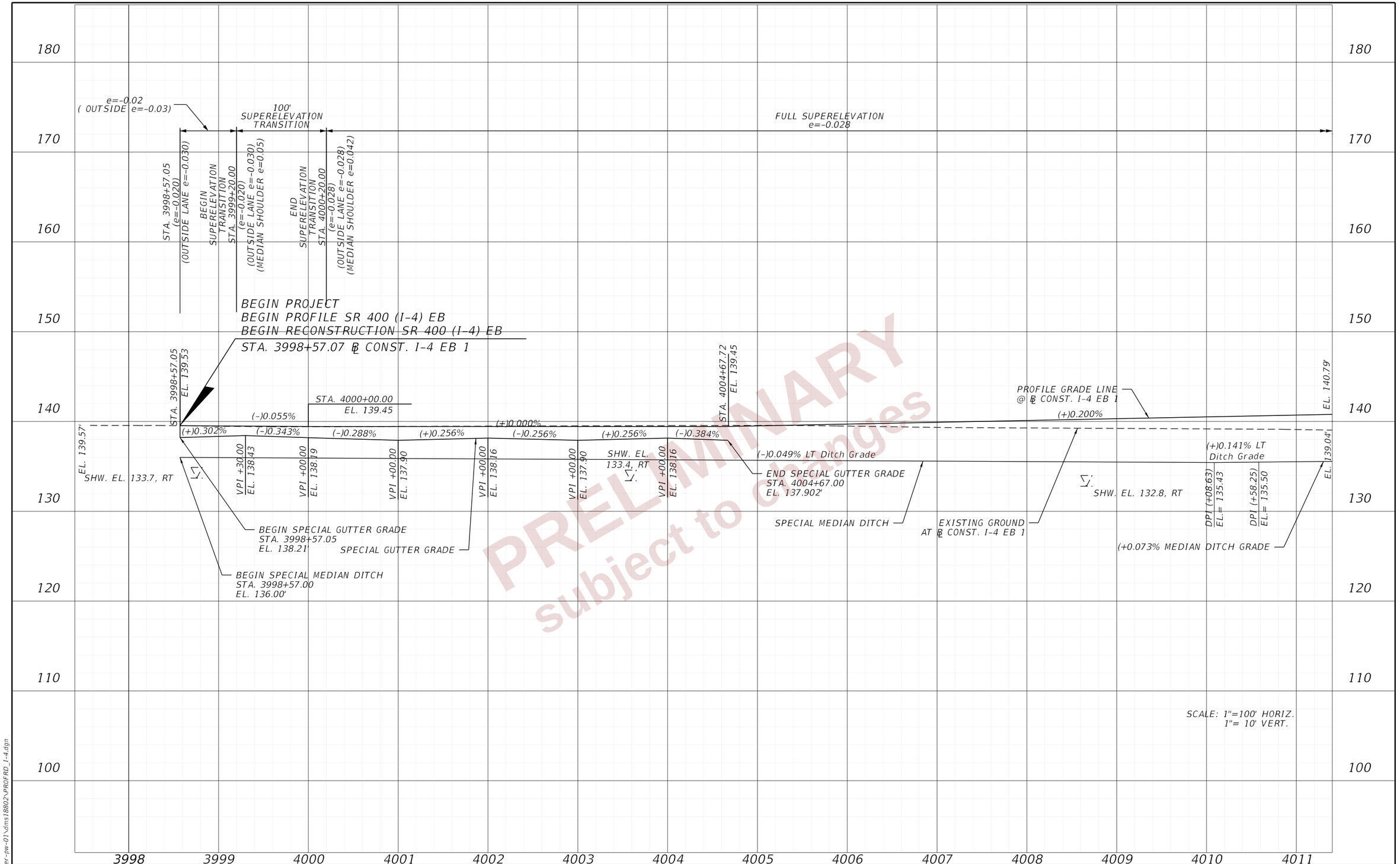

PRELIMINARY
subject to changes

REVISIONS			
DATE	DESCRIPTION	DATE	DESCRIPTION

ENGINEER OF RECORD

DEBANANDA PANIGRAHI, P.E.
LICENSE NUMBER 68318
H. W. LOCHNER
4300 W. CYPRESS STREET, SUITE 500
TAMPA, FLORIDA 33607

STATE OF FLORIDA
DEPARTMENT OF TRANSPORTATION

ROAD NO.	COUNTY	FINANCIAL PROJECT ID
SR 400	POLK	430185-3-52-01

ROADWAY PROFILES (01)
I-4 EASTBOUND

SHEET NO. 124

THE OFFICIAL RECORD OF THIS SHEET IS THE ELECTRONIC FILE DIGITALLY SIGNED AND SEALED UNDER RULE 61G15-23.004, F.A.C.

2/26/2024 4:54:45 PM JBLOUNT
c:\pw_working\lochner-pw-01\dms18802\PROFRD_I-4.dgn

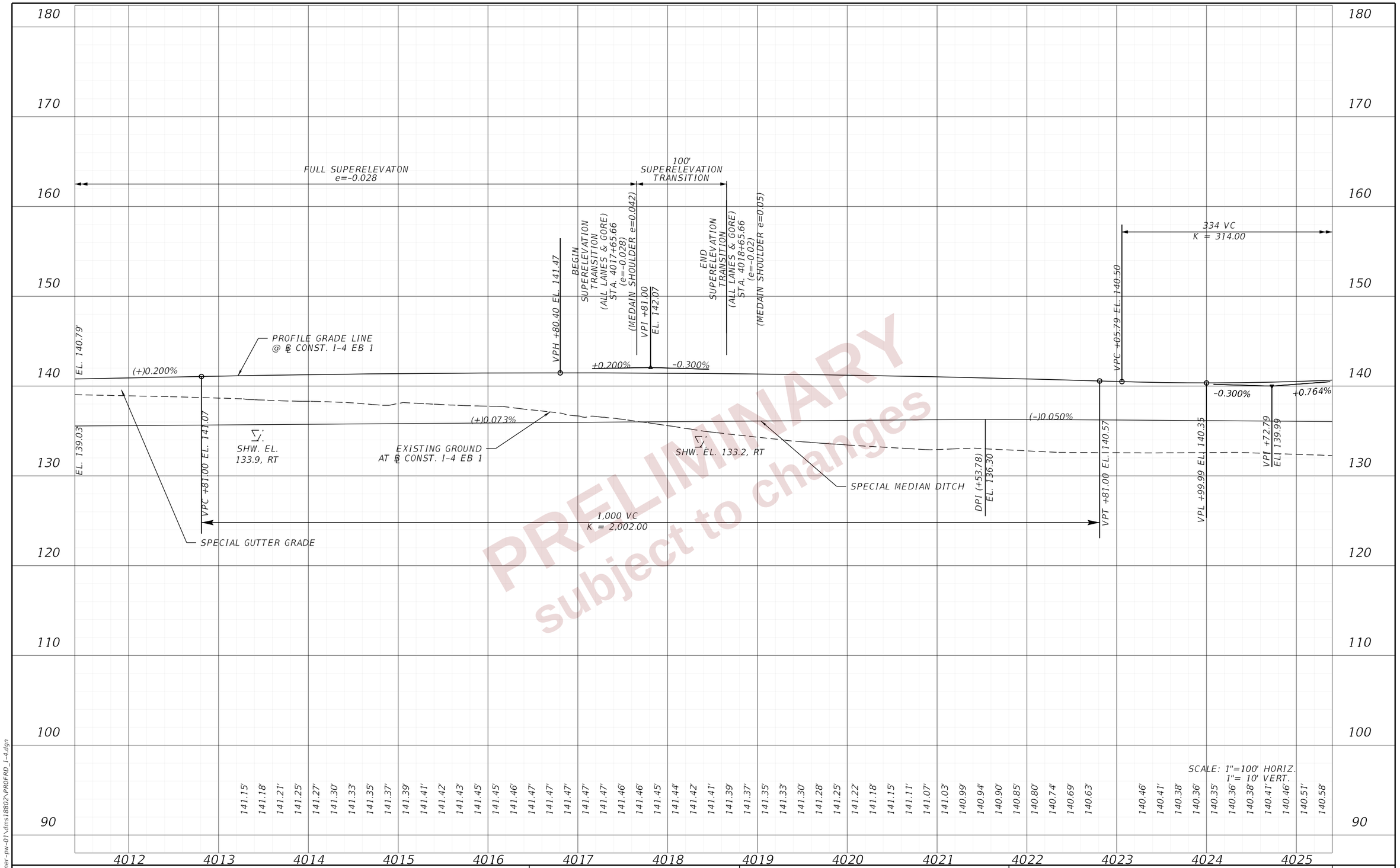

PRELIMINARY
subject to changes

REVISIONS			
DATE	DESCRIPTION	DATE	DESCRIPTION

ENGINEER OF RECORD

DEBANANDA PANIGRAHI, P.E.
LICENSE NUMBER 68318
H. W. LOCHNER
4300 W. CYPRESS STREET, SUITE 500
TAMPA, FLORIDA 33607

STATE OF FLORIDA
DEPARTMENT OF TRANSPORTATION

ROAD NO.	COUNTY	FINANCIAL PROJECT ID
SR 400	POLK	430185-3-52-01

ROADWAY PROFILES (02)
I-4 EASTBOUND

SHEET NO. 125

THE OFFICIAL RECORD OF THIS SHEET IS THE ELECTRONIC FILE DIGITALLY SIGNED AND SEALED UNDER RULE 61G15-23.004, F.A.C.

2/26/2024 4:54:46 PM JBLOUNT
c:\pw_working\lochner-pw-01\dms18802\PROFRD_I-4.dgn

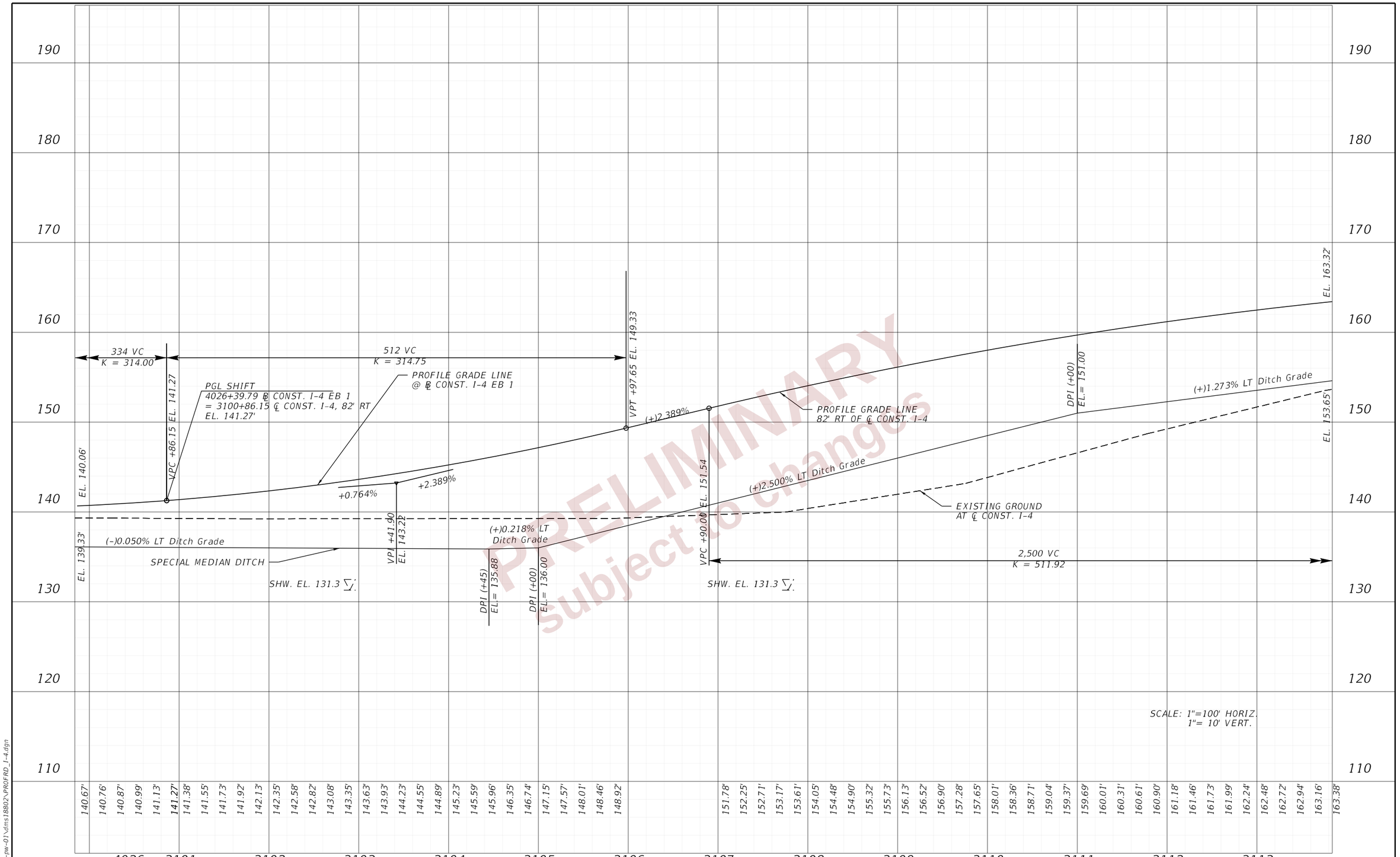

PRELIMINARY
Subject to changes

REVISIONS			
DATE	DESCRIPTION	DATE	DESCRIPTION

ENGINEER OF RECORD
DEBANANDA PANIGRAHI, P.E.
LICENSE NUMBER 68318
H. W. LOCHNER
4300 W. CYPRESS STREET, SUITE 500
TAMPA, FLORIDA 33607

STATE OF FLORIDA
DEPARTMENT OF TRANSPORTATION

ROAD NO.	COUNTY	FINANCIAL PROJECT ID
SR 400	POLK	430185-3-52-01

ROADWAY PROFILES (03)
I-4 EASTBOUND

SHEET NO. 126

THE OFFICIAL RECORD OF THIS SHEET IS THE ELECTRONIC FILE DIGITALLY SIGNED AND SEALED UNDER RULE 61G15-23.004, F.A.C.

2/26/2024 4:55:45 PM JBLOUNT
c:\pw_working\lochner-pw-01\dms18802\PROFRD_I-4.dgn

100' CROSS SLOPE TRANSITION INSIDE SHOULDER
BEGIN TRANSITION STA. 3116+90.00 (e=-0.05)
END TRANSITION STA. 3117+90.00 (e=0.02)
100' CROSS SLOPE TRANSITION OUTSIDE LANE AND SHOULDER
BEGIN TRANSITION STA. 3116+50.50 (OUTSIDE LANE, e=0.03) (OUTSIDE SHOULDER e=0.06)
END TRANSITION STA. 3117+50.50 (OUTSIDE LANE, e=0.02) (OUTSIDE SHOULDER e=0.02)
VPI +40.00 EL. 181.40
+2.389%
-2.494%
VPH +13.05 EL. 166.15
100' CROSS SLOPE TRANSITION INSIDE SHOULDER
BEGIN TRANSITION STA. 3120+75.00 (e=0.02)
END TRANSITION STA. 3121+75.00 (e=-0.05)
100' CROSS SLOPE TRANSITION OUTSIDE LANE AND SHOULDER
BEGIN TRANSITION STA. 3120+41.50 (OUTSIDE LANE, e=0.02) (OUTSIDE SHOULDER e=0.02)
END TRANSITION STA. 3121+41.50 (OUTSIDE LANE, e=0.03) (OUTSIDE SHOULDER e=0.06)
EL. 163.32'
DPI +82.00 EL. 165.00
DPI +00.00 EL. 165.00
DPI +50.00 EL. 158.20
(+)5.303%
(+)1.273%
PROFILE GRADE LINE 82' RT OF ℄ CONST. I-4
EL. 158.89'
(-)6.000%
DPI +50.00 EL. 156.00
SPECIAL MEDIAN DITCH
(-)1.429%
EL. 153.64'
SPECIAL MEDIAN DITCH
EXISTING GROUND AT ℄ CONST. I-4
16' - 9" MIN. VC
BEGIN APPROACH SLAB STA. 3117+93.51 ℄ CONST. I-4
END APPROACH SLAB STA. 3120+61.26 ℄ CONST. I-4
END BRIDGE I-4 EB STA. 3120+22.39 ℄ CONST. I-4
BEGIN BRIDGE I-4 EB STA. 3118+32.38 ℄ CONST. I-4
2,500 VC
K = 511.92
EL. 142.42'
SCALE: 1"=100' HORIZ.
1"= 10' VERT.

190 180 170 160 150 140 130 120 110

163.58' 163.78' 163.97' 164.15' 164.32' 164.48' 164.64' 164.79' 164.93' 165.07' 165.19' 165.31' 165.42' 165.53' 165.62' 165.71' 165.79' 165.86' 165.92' 165.98' 166.03' 166.07' 166.10' 166.12' 166.14' 166.15' 166.15' 166.14' 166.13' 166.11' 166.08' 166.04' 165.99' 165.94' 165.88' 165.81' 165.73' 165.65' 165.56' 165.45' 165.35' 165.23' 165.11' 164.97' 164.84' 164.69' 164.53' 164.37' 164.20' 164.02' 163.83' 163.64' 163.44' 163.23' 163.01' 162.79' 162.55' 162.31' 162.06' 161.81' 161.54' 161.27' 160.99' 160.70' 160.41' 160.10' 159.79' 159.47' 159.14' 158.81'

3114 3115 3116 3117 3118 3119 3120 3121 3122 3123 3124 3125 3126 3127

PRELIMINARY subject to change

THE OFFICIAL RECORD OF THIS SHEET IS THE ELECTRONIC FILE DIGITALLY SIGNED AND SEALED UNDER RULE 61G15-23.004, F.A.C.

2/26/2024 4:55:48 PM JBLOUNT
c:\pw_working\lochner-pw-01\dms18802\PROFRD_I-4.dgn

REVISIONS			
DATE	DESCRIPTION	DATE	DESCRIPTION

ENGINEER OF RECORD
DEBANANDA PANIGRAHI, P.E.
LICENSE NUMBER 68318
H. W. LOCHNER
4300 W. CYPRESS STREET, SUITE 500
TAMPA, FLORIDA 33607

STATE OF FLORIDA
DEPARTMENT OF TRANSPORTATION

ROAD NO.	COUNTY	FINANCIAL PROJECT ID
SR 400	POLK	430185-3-52-01

ROADWAY PROFILES (04)
I-4 EASTBOUND

SHEET NO. 127

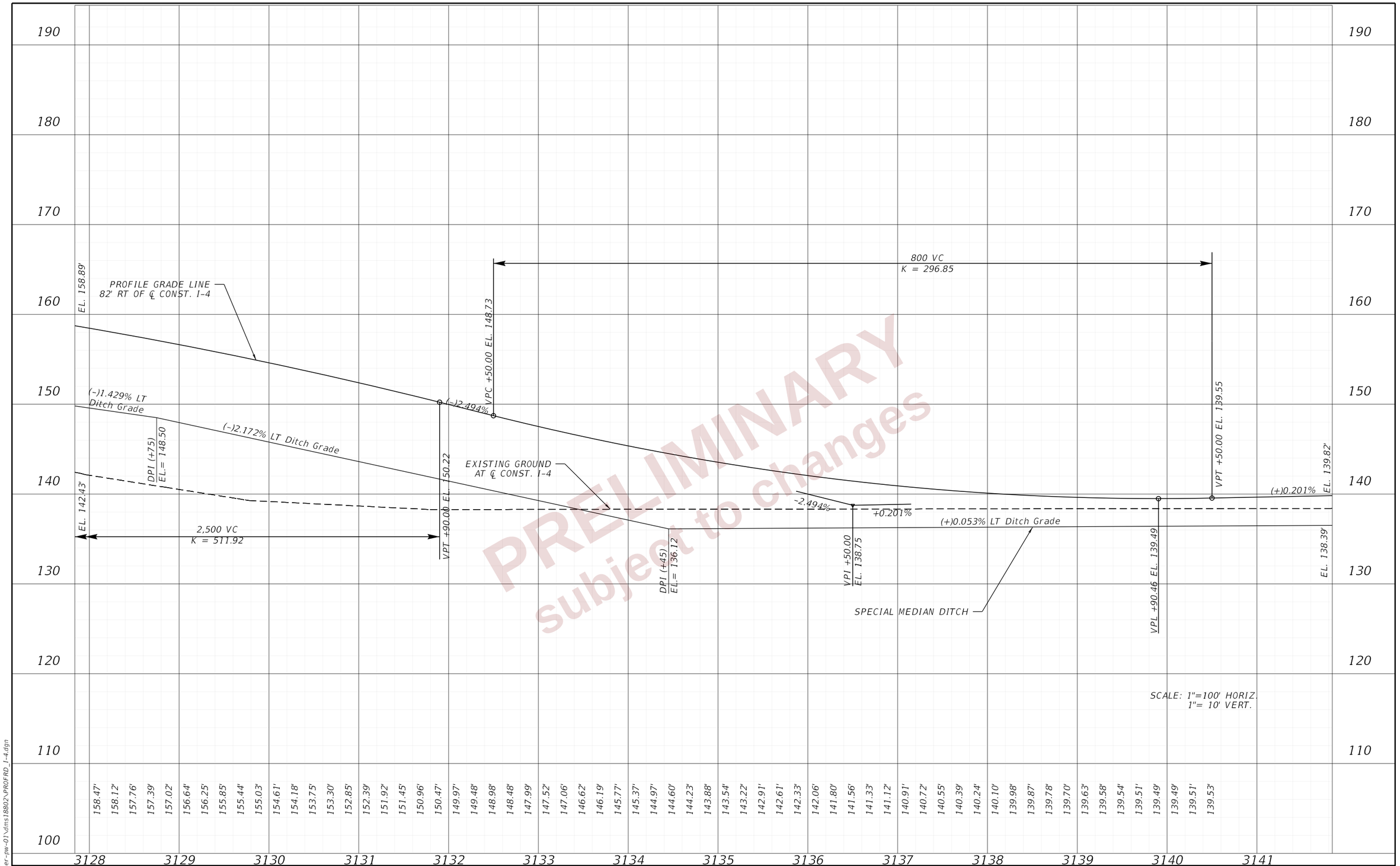

PRELIMINARY
subject to changes

SCALE: 1"=100' HORIZ.
1"= 10' VERT.

REVISIONS			
DATE	DESCRIPTION	DATE	DESCRIPTION

ENGINEER OF RECORD
DEBANANDA PANIGRAHI, P.E.
LICENSE NUMBER 68318
H. W. LOCHNER
4300 W. CYPRESS STREET, SUITE 500
TAMPA, FLORIDA 33607

STATE OF FLORIDA
DEPARTMENT OF TRANSPORTATION

ROAD NO.	COUNTY	FINANCIAL PROJECT ID
SR 400	POLK	430185-3-52-01

ROADWAY PROFILES (05)
I-4 EASTBOUND

SHEET NO. 128

THE OFFICIAL RECORD OF THIS SHEET IS THE ELECTRONIC FILE DIGITALLY SIGNED AND SEALED UNDER RULE 61G15-23.004, F.A.C.

2/26/2024 4:55:49 PM JBLOUNT
c:\pw_working\lochner-pw-01\dms18802\PROFRD_I-4.dgn

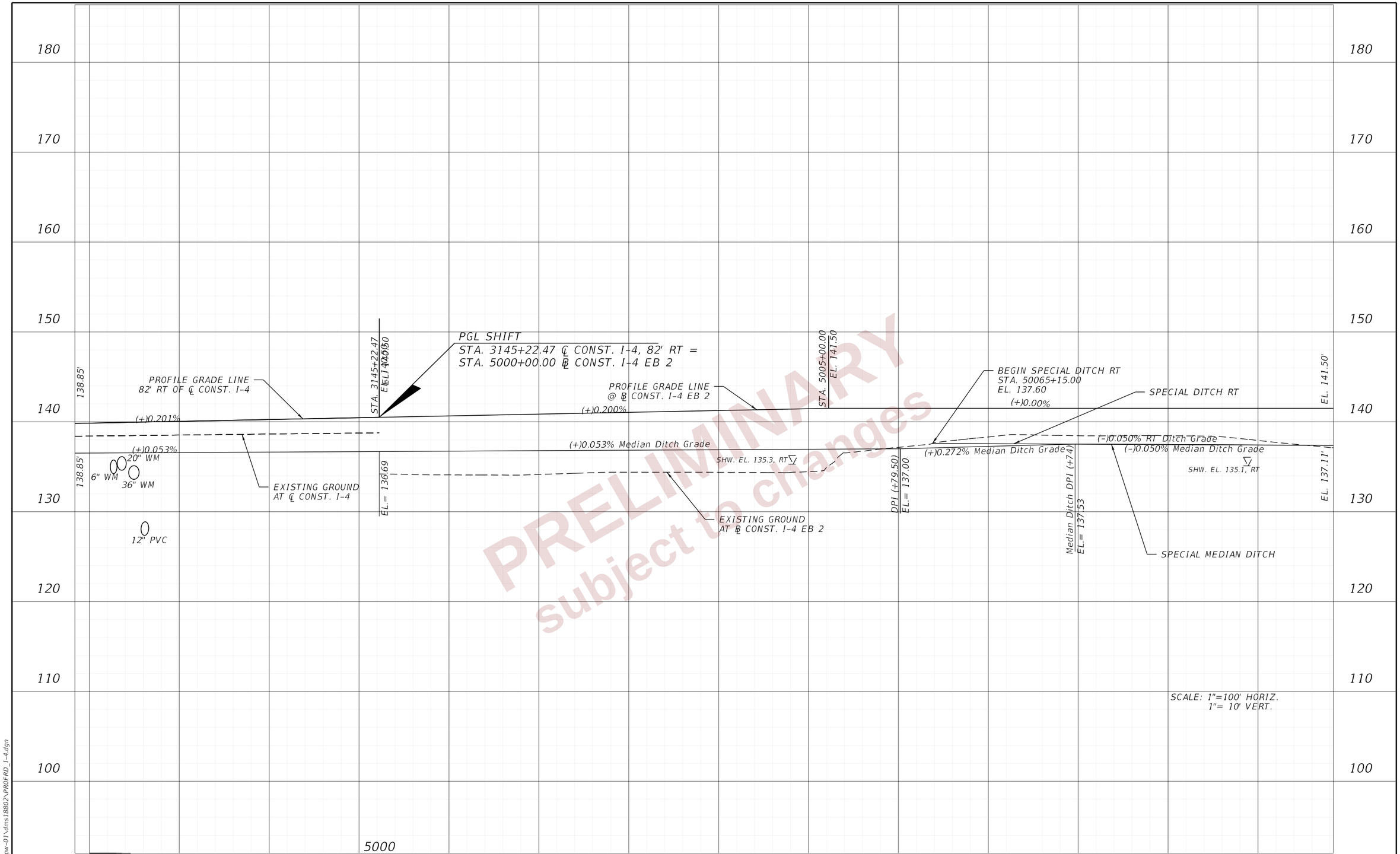

PRELIMINARY
subject to changes

REVISIONS			
DATE	DESCRIPTION	DATE	DESCRIPTION

ENGINEER OF RECORD

DEBANANDA PANIGRAHI, P.E.
LICENSE NUMBER 68318
H. W. LOCHNER
4300 W. CYPRESS STREET, SUITE 500
TAMPA, FLORIDA 33607

STATE OF FLORIDA
DEPARTMENT OF TRANSPORTATION

ROAD NO.	COUNTY	FINANCIAL PROJECT ID
SR 400	POLK	430185-3-52-01

ROADWAY PROFILES (06)
I-4 EASTBOUND

SHEET NO. 129

THE OFFICIAL RECORD OF THIS SHEET IS THE ELECTRONIC FILE DIGITALLY SIGNED AND SEALED UNDER RULE 61G15-23.004, F.A.C.

2/29/2024 2:42:44 PM JBLOUNT
c:\pw_working\lochner-pw-01\dms18802\PROFRD_I-4.dgn

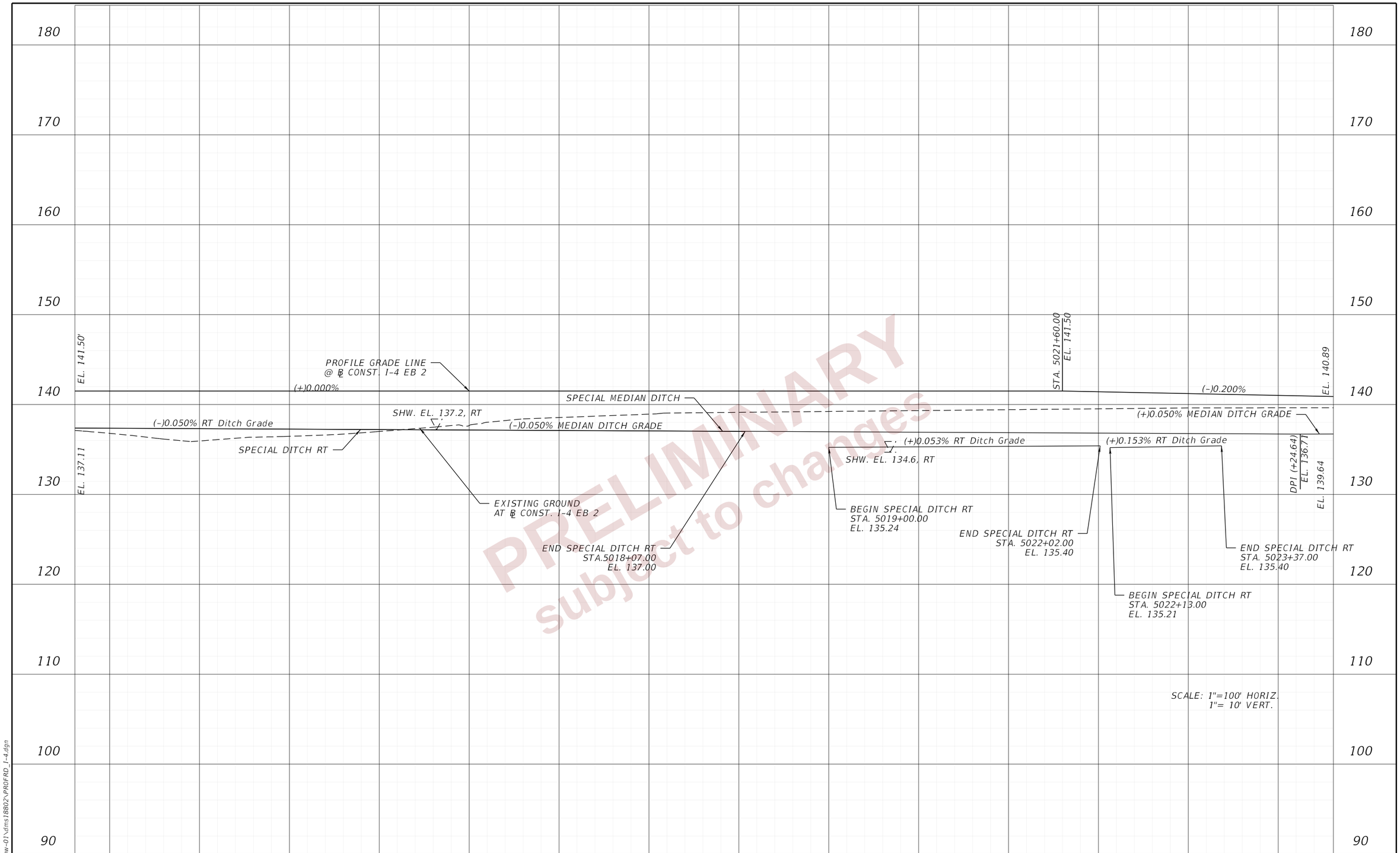

PRELIMINARY
subject to changes

REVISIONS			
DATE	DESCRIPTION	DATE	DESCRIPTION

ENGINEER OF RECORD
DEBANANDA PANIGRAHI, P.E.
LICENSE NUMBER 68318
H. W. LOCHNER
4300 W. CYPRESS STREET, SUITE 500
TAMPA, FLORIDA 33607

STATE OF FLORIDA
DEPARTMENT OF TRANSPORTATION

ROAD NO.	COUNTY	FINANCIAL PROJECT ID
SR 400	POLK	430185-3-52-01

ROADWAY PROFILES (07)
I-4 EASTBOUND

SHEET NO. 130

THE OFFICIAL RECORD OF THIS SHEET IS THE ELECTRONIC FILE DIGITALLY SIGNED AND SEALED UNDER RULE 61G15-23.004, F.A.C.

2/29/2024 10:06:37 PM ANDRES.FERNANDEZ
c:\pw_working\lochner-pw-01\dms18802\PROFRD_I-4.dgn

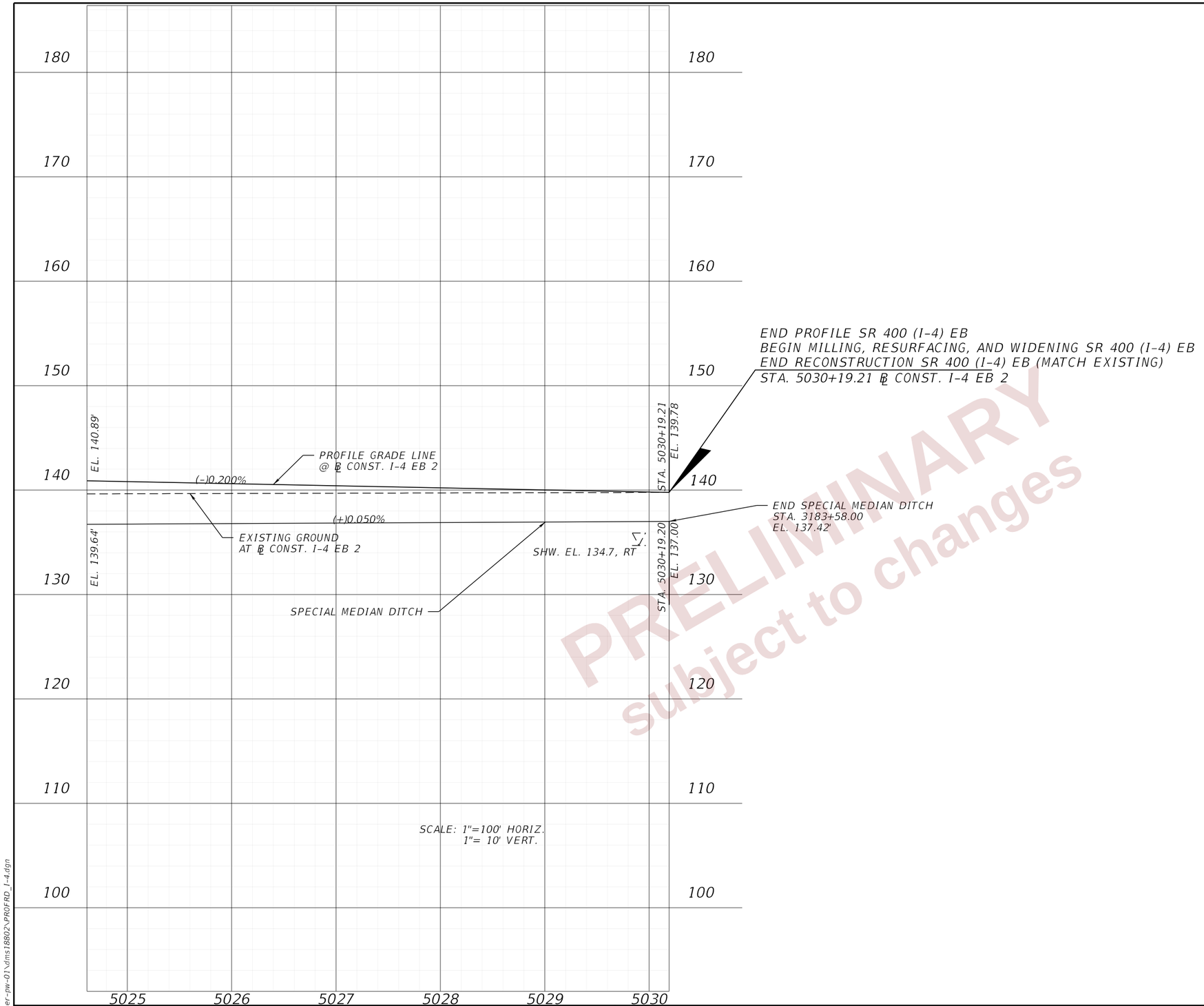

PRELIMINARY
subject to changes

REVISIONS				ENGINEER OF RECORD	STATE OF FLORIDA DEPARTMENT OF TRANSPORTATION			ROADWAY PROFILES (08) I-4 EASTBOUND	SHEET NO.
DATE	DESCRIPTION	DATE	DESCRIPTION	DEBANANDA PANIGRAHI, P.E. LICENSE NUMBER 68318 H. W. LOCHNER 4300 W. CYPRESS STREET, SUITE 500 TAMPA, FLORIDA 33607	ROAD NO.	COUNTY	FINANCIAL PROJECT ID		131
					SR 400	POLK	430185-3-52-01		

THE OFFICIAL RECORD OF THIS SHEET IS THE ELECTRONIC FILE DIGITALLY SIGNED AND SEALED UNDER RULE 61G15-23.004, F.A.C.

2/29/2024 10:06:38 PM ANDRES.FERNANDEZ
c:\pw_working\lochner-pw-01\dms18802\PROFRD_I-4.dgn

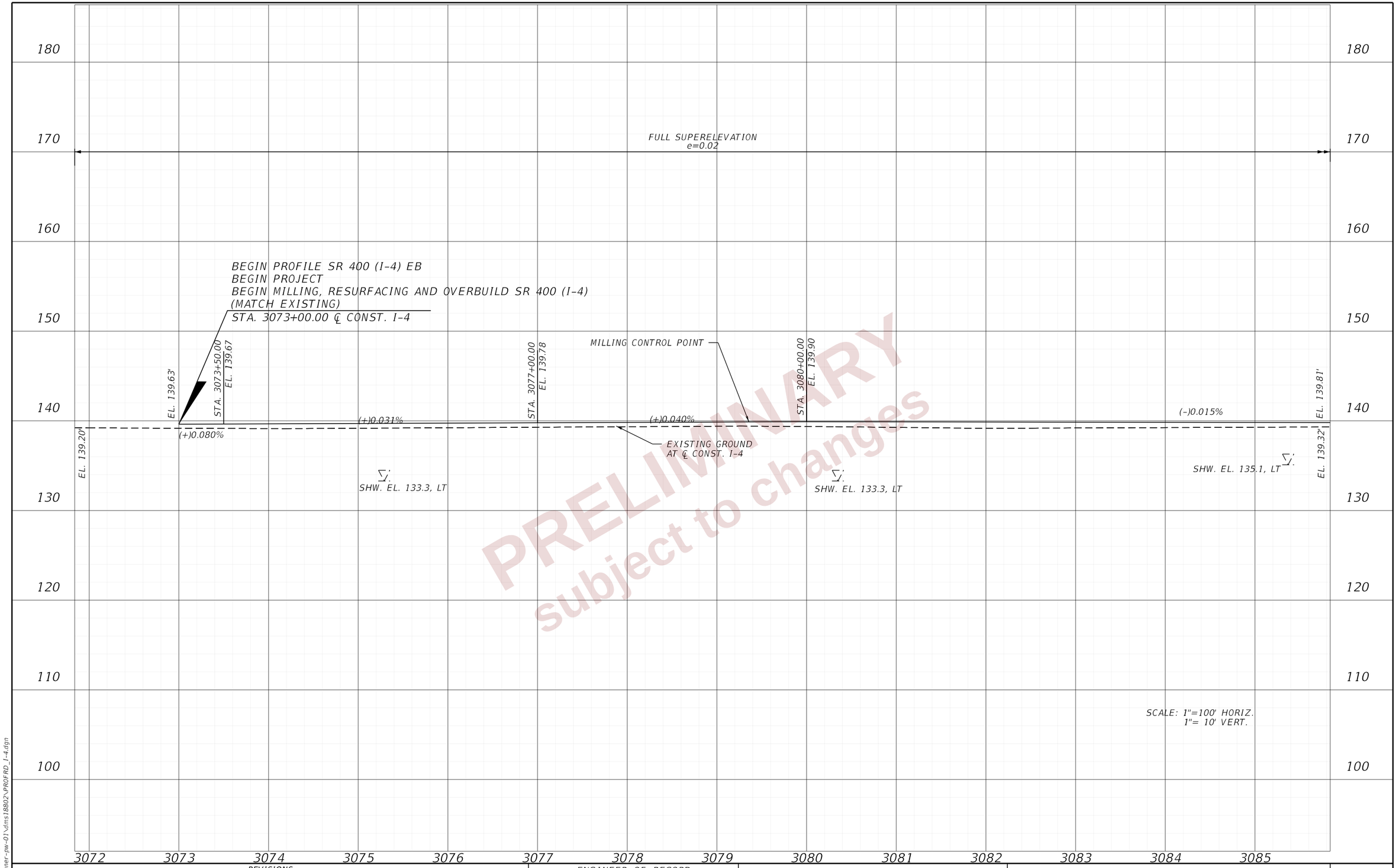

PRELIMINARY
subject to changes

REVISIONS			
DATE	DESCRIPTION	DATE	DESCRIPTION

ENGINEER OF RECORD

DEBANANDA PANIGRAHI, P.E.
LICENSE NUMBER 68318
H. W. LOCHNER
4300 W. CYPRESS STREET, SUITE 500
TAMPA, FLORIDA 33607

STATE OF FLORIDA
DEPARTMENT OF TRANSPORTATION

ROAD NO.	COUNTY	FINANCIAL PROJECT ID
SR 400	POLK	430185-3-52-01

ROADWAY PROFILES (09)
I-4 WESTBOUND

SHEET NO. 132

THE OFFICIAL RECORD OF THIS SHEET IS THE ELECTRONIC FILE DIGITALLY SIGNED AND SEALED UNDER RULE 61G15-23.004, F.A.C.

2/26/2024 4:55:50 PM JBLOUNT
c:\pw_working\lochner-pw-01\dms18802\PROFRD_I-4.dgn

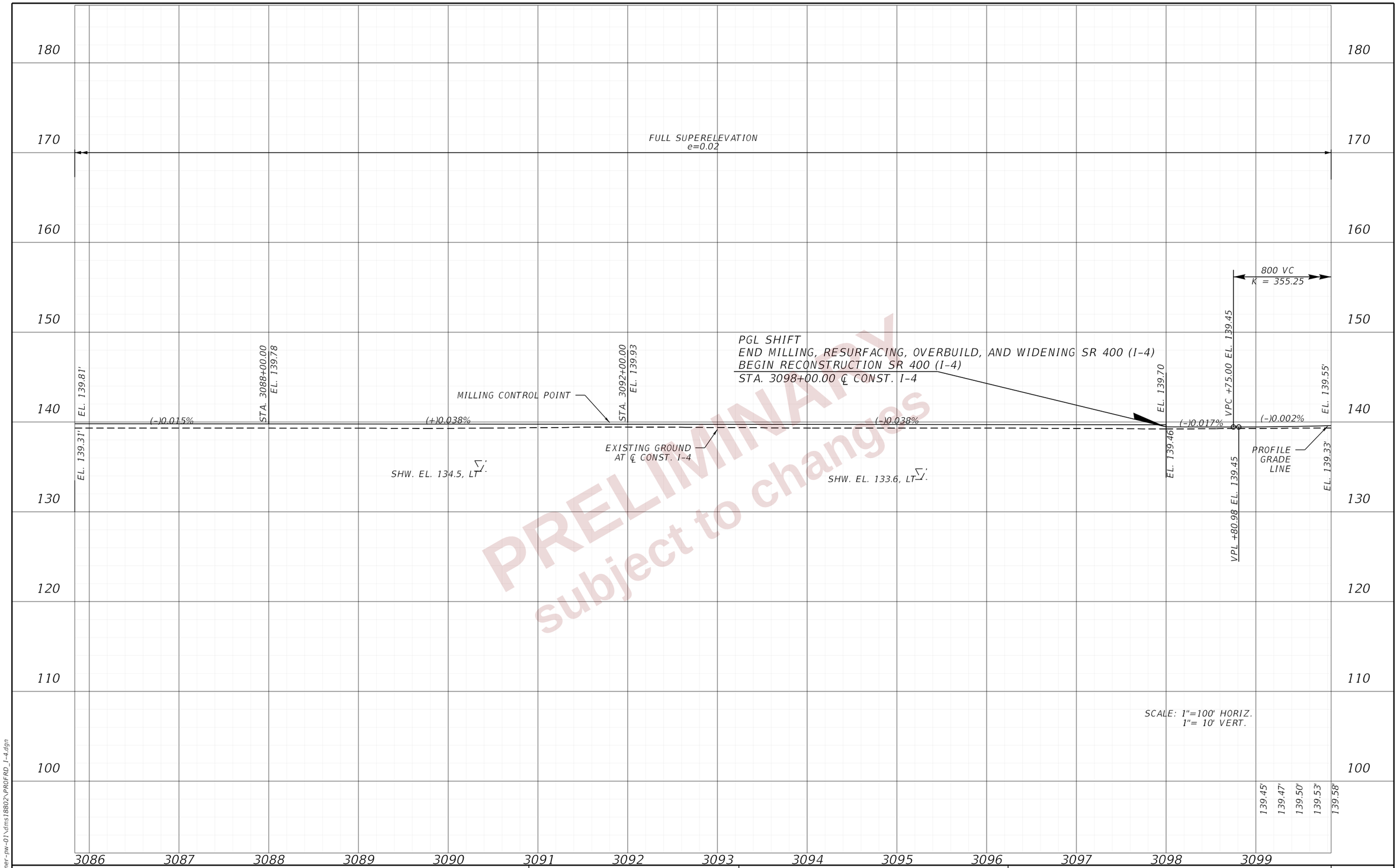

PRELIMINARY
subject to changes

REVISIONS			
DATE	DESCRIPTION	DATE	DESCRIPTION

ENGINEER OF RECORD
DEBANANDA PANIGRAHI, P.E.
LICENSE NUMBER 68318
H. W. LOCHNER
4300 W. CYPRESS STREET, SUITE 500
TAMPA, FLORIDA 33607

STATE OF FLORIDA
DEPARTMENT OF TRANSPORTATION

ROAD NO.	COUNTY	FINANCIAL PROJECT ID
SR 400	POLK	430185-3-52-01

ROADWAY PROFILES (10)
I-4 WESTBOUND

SHEET NO. 133

THE OFFICIAL RECORD OF THIS SHEET IS THE ELECTRONIC FILE DIGITALLY SIGNED AND SEALED UNDER RULE 61G15-23.004, F.A.C.

2/26/2024 4:55:51 PM JBLOUNT
C:\pw_working\lochner-pw-01\dms18802\PROFRD_I-4.dgn

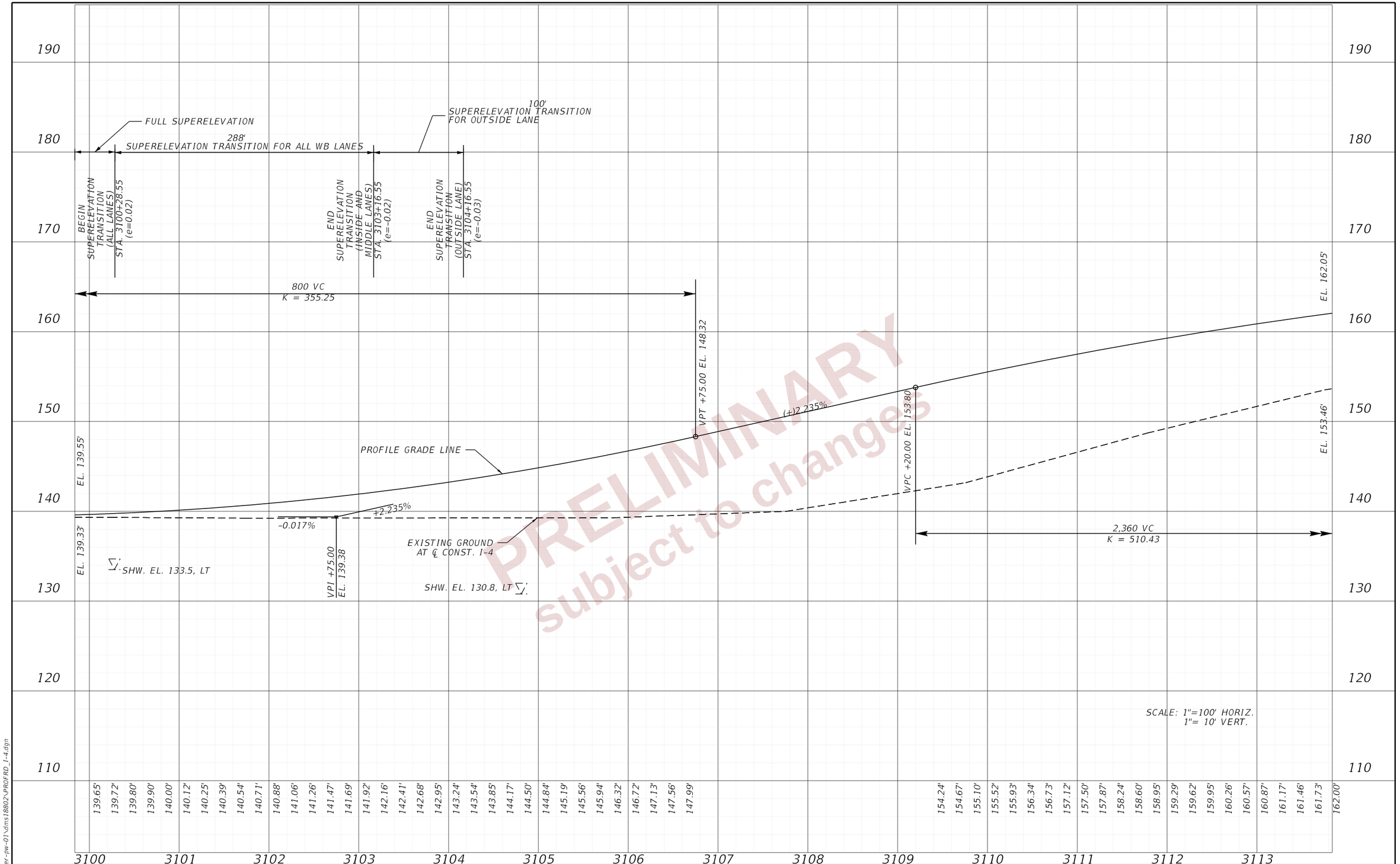

PRELIMINARY subject to changes

REVISIONS			
DATE	DESCRIPTION	DATE	DESCRIPTION

ENGINEER OF RECORD
DEBANANDA PANIGRAHI, P.E.
LICENSE NUMBER 68318
H. W. LOCHNER
4300 W. CYPRESS STREET, SUITE 500
TAMPA, FLORIDA 33607

STATE OF FLORIDA
DEPARTMENT OF TRANSPORTATION

ROAD NO.	COUNTY	FINANCIAL PROJECT ID
SR 400	POLK	430185-3-52-01

ROADWAY PROFILES (11)
I-4 WESTBOUND

SHEET NO. 134

THE OFFICIAL RECORD OF THIS SHEET IS THE ELECTRONIC FILE DIGITALLY SIGNED AND SEALED UNDER RULE 61G15-23.004, F.A.C.

2/26/2024 4:55:51 PM JBLOUNT
c:\pw_working\lochner-pw-01\dms18802\PROFRD_I-4.dgn

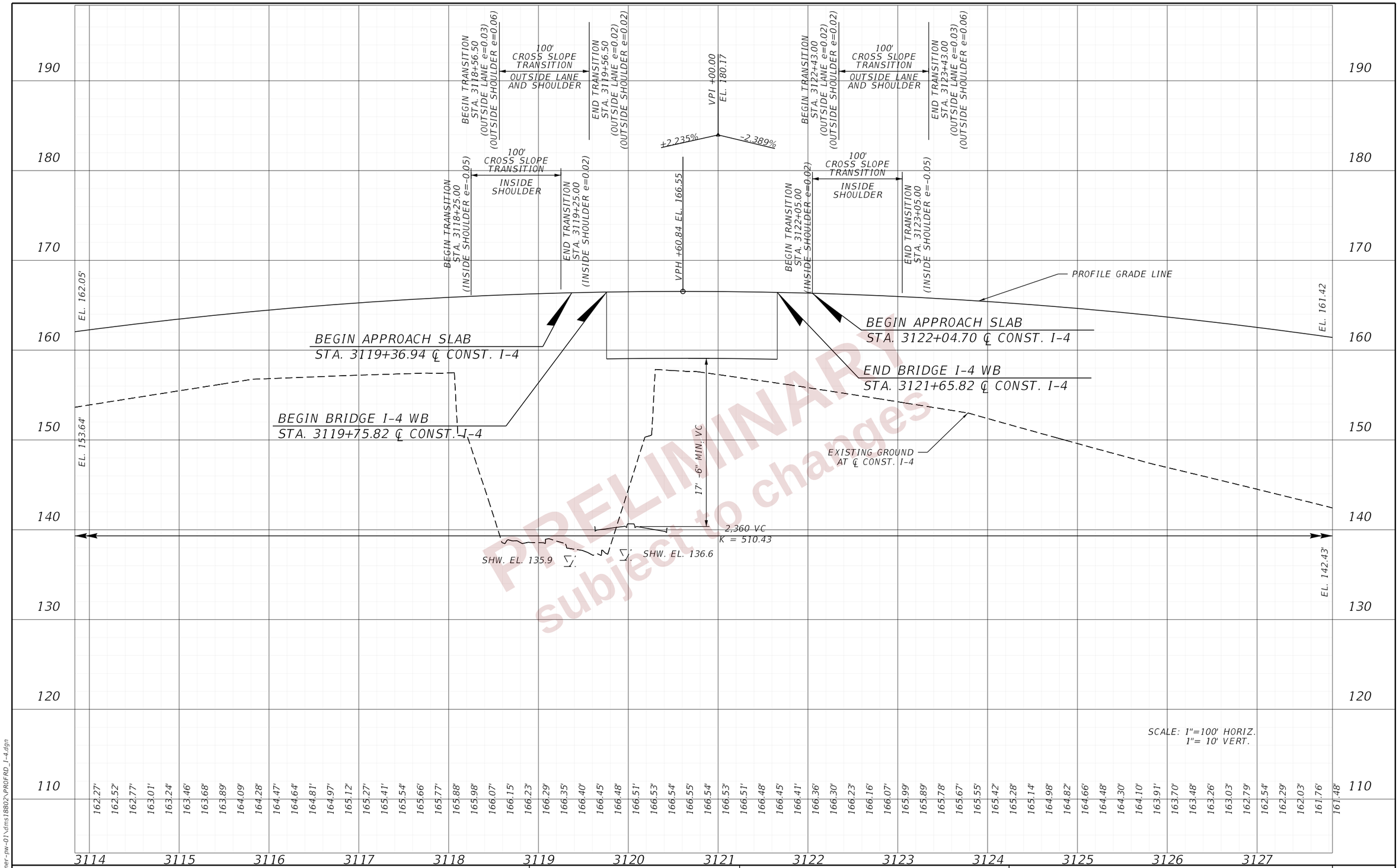

SCALE: 1"=100' HORIZ.
1"= 10' VERT.

PRELIMINARY
subject to changes

REVISIONS			
DATE	DESCRIPTION	DATE	DESCRIPTION

ENGINEER OF RECORD

DEBANANDA PANIGRAHI, P.E.
LICENSE NUMBER 68318
H. W. LOCHNER
4300 W. CYPRESS STREET, SUITE 500
TAMPA, FLORIDA 33607

STATE OF FLORIDA
DEPARTMENT OF TRANSPORTATION

ROAD NO.	COUNTY	FINANCIAL PROJECT ID
SR 400	POLK	430185-3-52-01

ROADWAY PROFILES (12)
I-4 WESTBOUND

SHEET NO. 135

THE OFFICIAL RECORD OF THIS SHEET IS THE ELECTRONIC FILE DIGITALLY SIGNED AND SEALED UNDER RULE 61G15-23.004, F.A.C.

2/26/2024 4:55:52 PM JBLOUNT
C:\pw_working\lochner-pw-01\dms18802\PROFRD_I-4.dgn

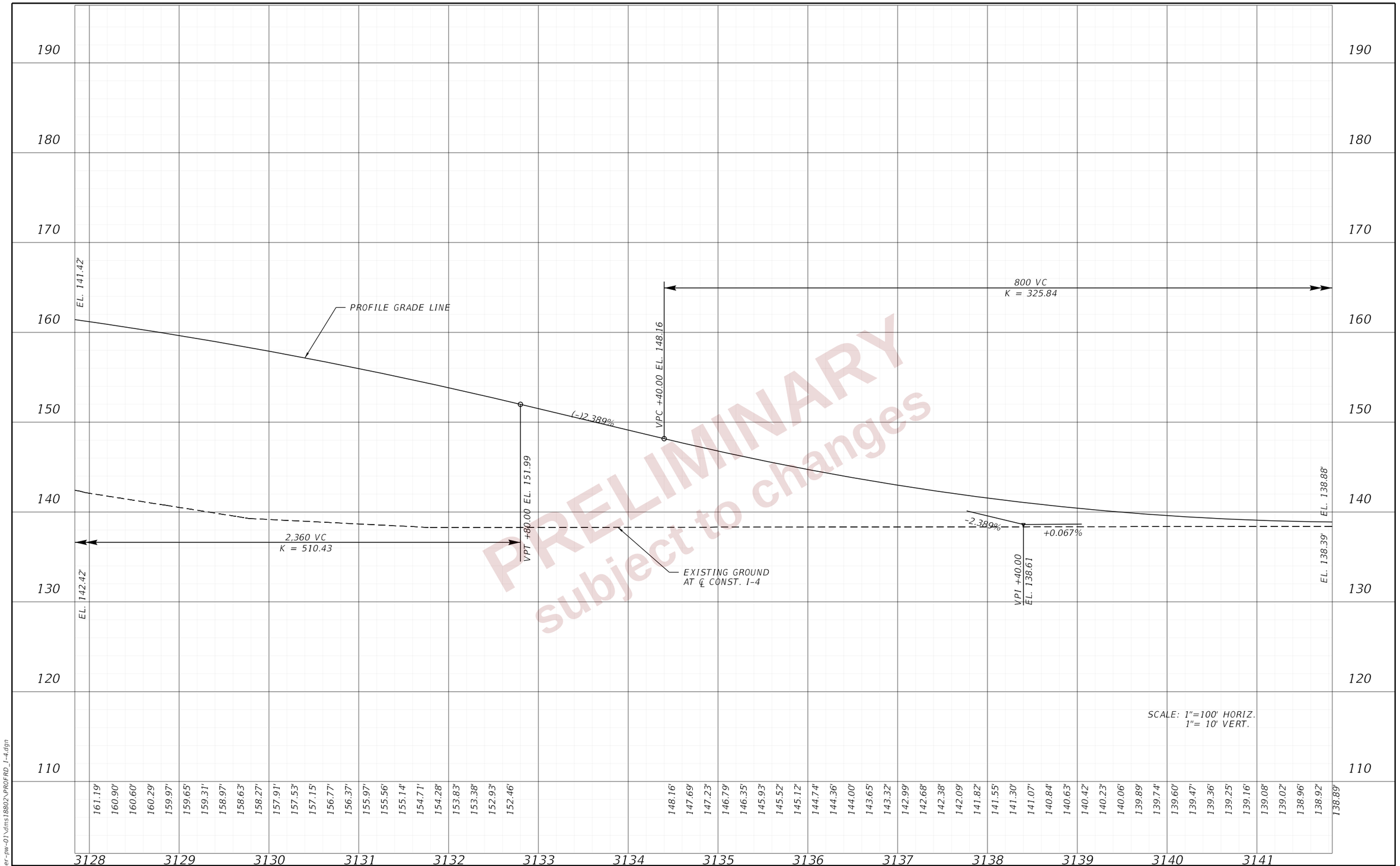

PRELIMINARY
subject to changes

SCALE: 1"=100' HORIZ.
1"= 10' VERT.

THE OFFICIAL RECORD OF THIS SHEET IS THE ELECTRONIC FILE DIGITALLY SIGNED AND SEALED UNDER RULE 61G15-23.004, F.A.C.

REVISIONS				ENGINEER OF RECORD	STATE OF FLORIDA DEPARTMENT OF TRANSPORTATION			ROADWAY PROFILES (13) I-4 WESTBOUND	SHEET NO.
DATE	DESCRIPTION	DATE	DESCRIPTION	DEBANANDA PANIGRAHI, P.E. LICENSE NUMBER 68318 H. W. LOCHNER 4300 W. CYPRESS STREET, SUITE 500 TAMPA, FLORIDA 33607	ROAD NO.	COUNTY	FINANCIAL PROJECT ID		136
					SR 400	POLK	430185-3-52-01		

2/26/2024 4:55:52 PM JBLOUNT
c:\pw_working\lochner-pw-01\dms18802\PROFRD_I-4.dgn

180
170
160
150
140
130
120
110
100
90

800 VC
K = 325.84

EL. 138.88'

VPT +40.00 EL. 138.88

PROFILE GRADE LINE

(+)0.067%

STA. 3145+00.00
EL. 139.05

END PROFILE SR 400 (I-4) WB
END RECONSTRUCTION SR 400 (I-4) WB
BEGIN MILLING, RESURFACING, OVERBUILD AND WIDENING SR 400 (I-4) WB
(MATCH EXISTING)
STA. 3145+00.00 ℄ CONST. I-4

EL. 138.39'

VPL +18.28 EL. 138.87

138.87'

138.87'

EXISTING GROUND
AT ℄ CONST. I-4

SHW. EL. 136.0, LT

EL. 139.53'

3142 3143 3144 3145 3146 3147 3148 3149 3150 3151 3152 3153 3154 3155

PRELIMINARY
subject to changes

SCALE: 1"=100' HORIZ.
1"= 10' VERT.

REVISIONS				ENGINEER OF RECORD	STATE OF FLORIDA DEPARTMENT OF TRANSPORTATION			ROADWAY PROFILES (14) I-4 WESTBOUND	SHEET NO.
DATE	DESCRIPTION	DATE	DESCRIPTION	DEBANANDA PANIGRAHI, P.E. LICENSE NUMBER 68318 H. W. LOCHNER 4300 W. CYPRESS STREET, SUITE 500 TAMPA, FLORIDA 33607	ROAD NO.	COUNTY	FINANCIAL PROJECT ID		137
					SR 400	POLK	430185-3-52-01		

THE OFFICIAL RECORD OF THIS SHEET IS THE ELECTRONIC FILE DIGITALLY SIGNED AND SEALED UNDER RULE 61G15-23.004, F.A.C.

2/26/2024 4:55:53 PM JBLOUNT
c:\pw_working\lochner-pw-01\dms18802\PROFRD_I-4.dgn

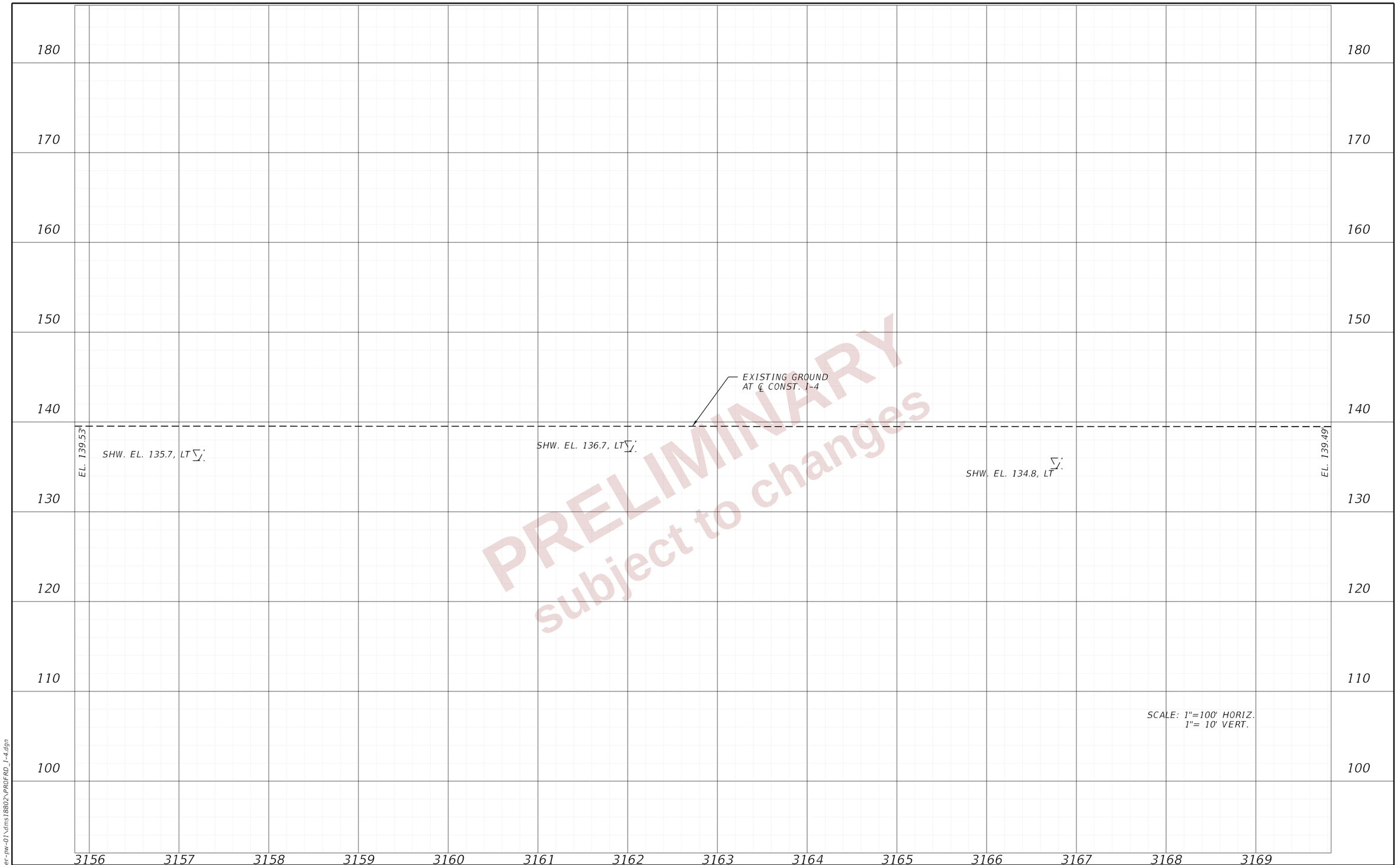

PRELIMINARY
subject to changes

THE OFFICIAL RECORD OF THIS SHEET IS THE ELECTRONIC FILE DIGITALLY SIGNED AND SEALED UNDER RULE 61G15-23.004, F.A.C.

2/26/2024 4:55:53 PM JBLOUNT
c:\pw_working\lochner-pw-01\dms18802\PROFRD_I-4.dgn

REVISIONS			
DATE	DESCRIPTION	DATE	DESCRIPTION

ENGINEER OF RECORD
DEBANANDA PANIGRAHI, P.E.
LICENSE NUMBER 68318
H. W. LOCHNER
4300 W. CYPRESS STREET, SUITE 500
TAMPA, FLORIDA 33607

STATE OF FLORIDA
DEPARTMENT OF TRANSPORTATION

ROAD NO.	COUNTY	FINANCIAL PROJECT ID
SR 400	POLK	430185-3-52-01

ROADWAY PROFILES (15)
I-4 WESTBOUND

SHEET NO.
138

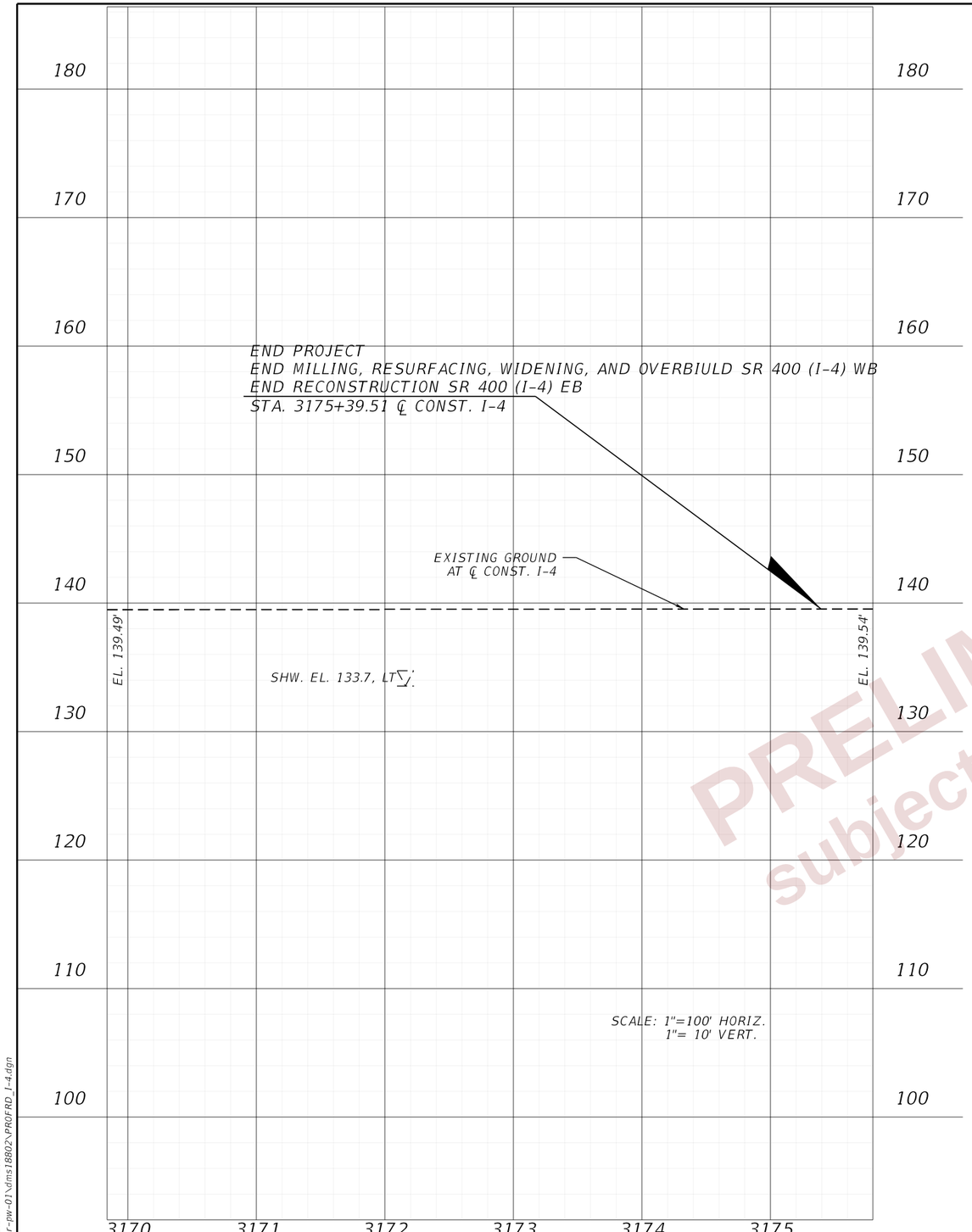

PRELIMINARY
subject to changes

REVISIONS				ENGINEER OF RECORD	STATE OF FLORIDA DEPARTMENT OF TRANSPORTATION			ROADWAY PROFILES (16) I-4 WESTBOUND	SHEET NO.
DATE	DESCRIPTION	DATE	DESCRIPTION	DEBANANDA PANIGRAHI, P.E. LICENSE NUMBER 68318 H. W. LOCHNER 4300 W. CYPRESS STREET, SUITE 500 TAMPA, FLORIDA 33607	ROAD NO.	COUNTY	FINANCIAL PROJECT ID		139
					SR 400	POLK	430185-3-52-01		

THE OFFICIAL RECORD OF THIS SHEET IS THE ELECTRONIC FILE DIGITALLY SIGNED AND SEALED UNDER RULE 61G15-23.004, F.A.C.

2/26/2024 4:55:54 PM JBLOUNT
c:\pw_working\lochner-pw-01\dms18802\PROFRD_I-4.dgn

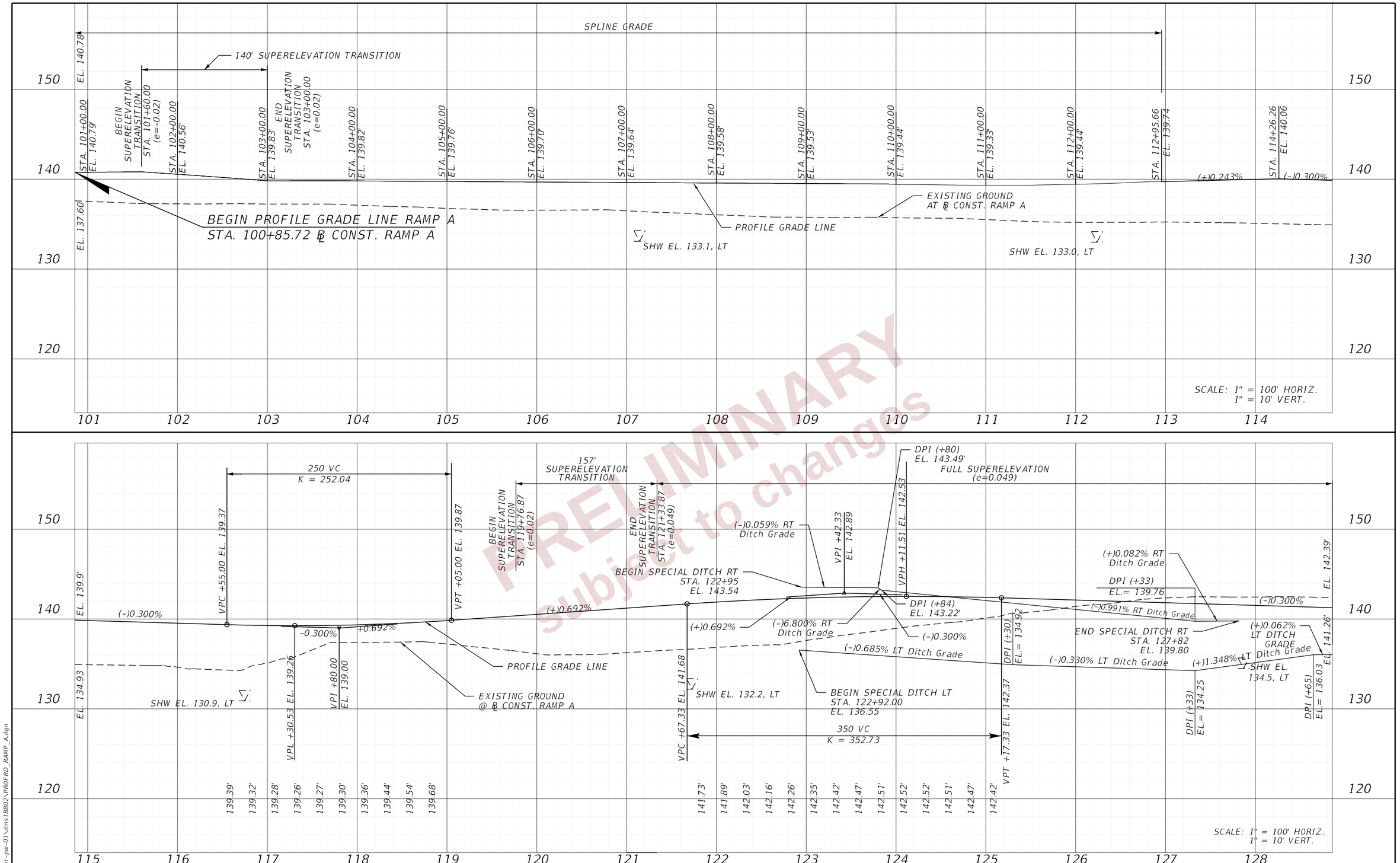

PRELIMINARY
Subject to changes

REVISIONS			
DATE	DESCRIPTION	DATE	DESCRIPTION

ENGINEER OF RECORD

DEBANANDA PANIGRAHI, P.E.
LICENSE NUMBER 68318
H. W. LOCHNER
4300 W. CYPRESS STREET, SUITE 500
TAMPA, FLORIDA 33607

STATE OF FLORIDA
DEPARTMENT OF TRANSPORTATION

ROAD NO.	COUNTY	FINANCIAL PROJECT ID
SR 400	POLK	430185-3-52-01

ROADWAY PROFILES (17)
RAMP A

SHEET NO. 140

THE OFFICIAL RECORD OF THIS SHEET IS THE ELECTRONIC FILE DIGITALLY SIGNED AND SEALED UNDER RULE 61G15-23.004, F.A.C.

2/23/2024 11:41:53 AM JBLOUNT
c:\pw_working\lochner-pw-01\dms18802\PROFRD_RAMP_A.dgn

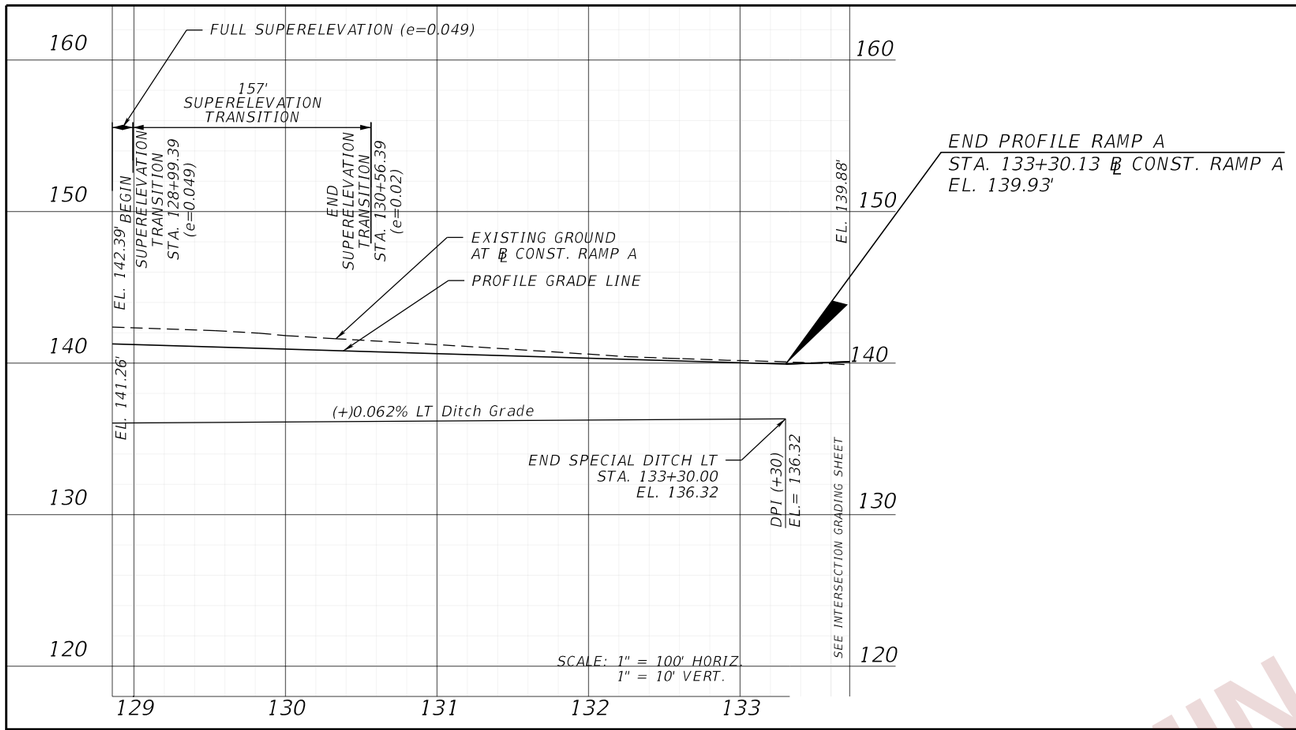

PRELIMINARY
subject to changes

SCALE: 1" = 100' HORIZ.
1" = 10' VERT.

REVISIONS				ENGINEER OF RECORD	STATE OF FLORIDA DEPARTMENT OF TRANSPORTATION			ROADWAY PROFILES (18) RAMP A	SHEET NO.
DATE	DESCRIPTION	DATE	DESCRIPTION	DEBANANDA PANIGRAHI, P.E. LICENSE NUMBER 68318 H. W. LOCHNER 4300 W. CYPRESS STREET, SUITE 500 TAMPA, FLORIDA 33607	ROAD NO.	COUNTY	FINANCIAL PROJECT ID		141
					SR 400	POLK	430185-3-52-01		

THE OFFICIAL RECORD OF THIS SHEET IS THE ELECTRONIC FILE DIGITALLY SIGNED AND SEALED UNDER RULE 61G15-23.004, F.A.C.

2/22/2024 9:47:01 AM JBLOUNT
c:\pw_working\lochner-pw-01\dms18802\PROFRD_RAMP_A.dgn

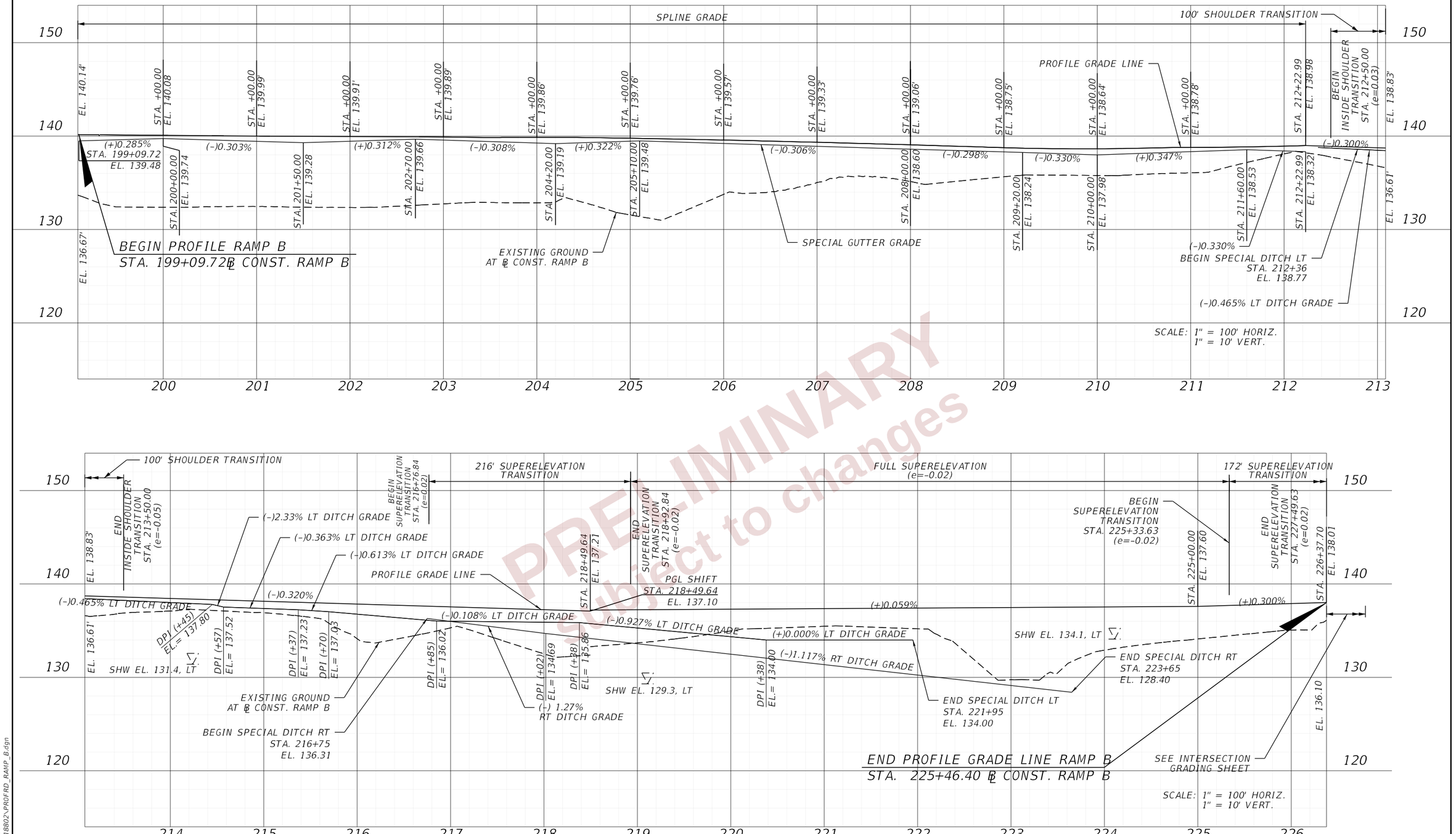

PRELIMINARY
Subject to changes

REVISIONS			
DATE	DESCRIPTION	DATE	DESCRIPTION

ENGINEER OF RECORD
DEBANANDA PANIGRAHI, P.E.
LICENSE NUMBER 68318
H. W. LOCHNER
4300 W. CYPRESS STREET, SUITE 500
TAMPA, FLORIDA 33607

STATE OF FLORIDA
DEPARTMENT OF TRANSPORTATION

ROAD NO.	COUNTY	FINANCIAL PROJECT ID
SR 400	POLK	430185-3-52-01

ROADWAY PROFILE (19)
RAMP B

SHEET NO. 142

THE OFFICIAL RECORD OF THIS SHEET IS THE ELECTRONIC FILE DIGITALLY SIGNED AND SEALED UNDER RULE 61G15-23.004, F.A.C.

2/22/2024 9:47:20 AM JBLOUNT
C:\pw_working\lochner-pw-01\dms18802\PROFRD_RAMP_B.dgn

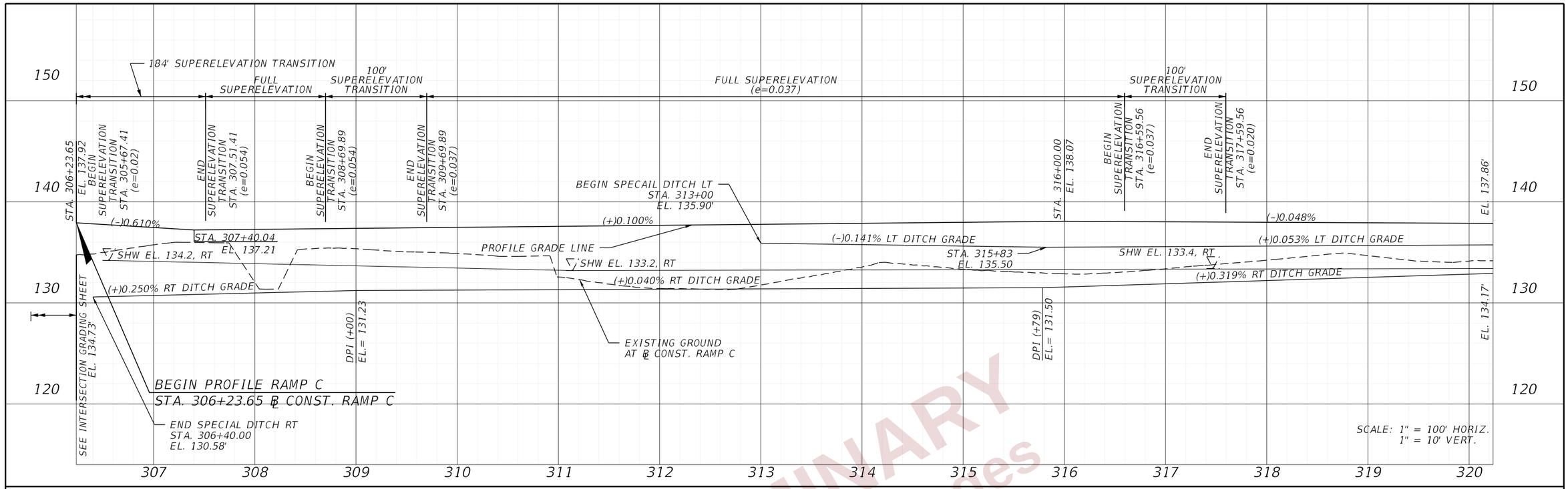

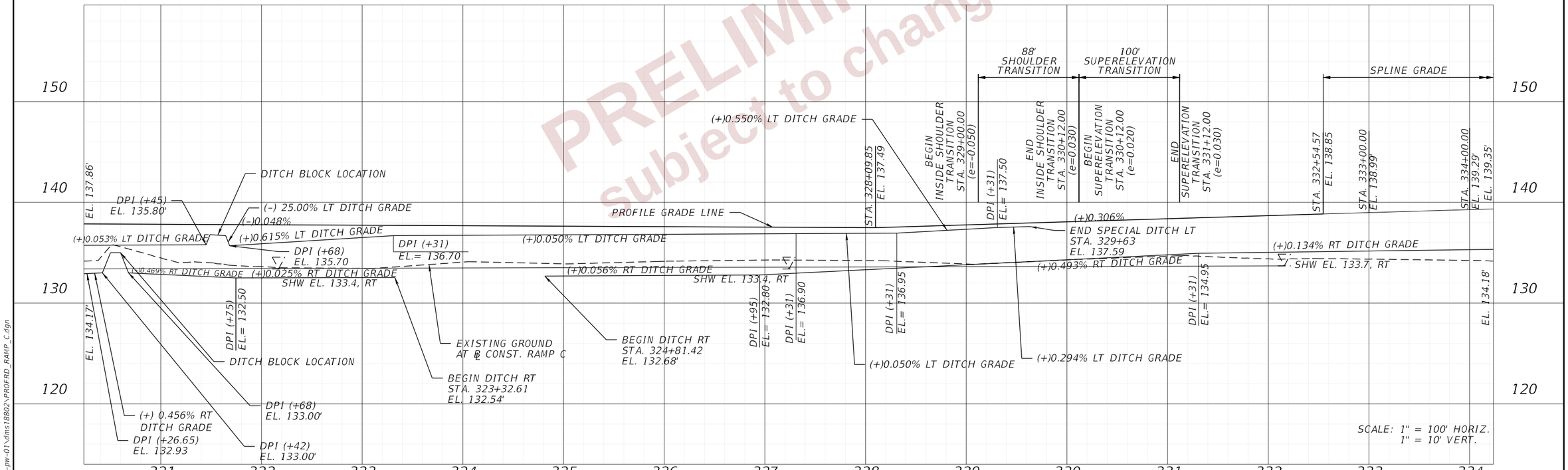

PRELIMINARY
subject to changes

REVISIONS			
DATE	DESCRIPTION	DATE	DESCRIPTION

ENGINEER OF RECORD

DEBANANDA PANIGRAHI, P.E.
LICENSE NUMBER 68318
H. W. LOCHNER
4300 W. CYPRESS STREET, SUITE 500
TAMPA, FLORIDA 33607

STATE OF FLORIDA
DEPARTMENT OF TRANSPORTATION

ROAD NO.	COUNTY	FINANCIAL PROJECT ID
SR 400	POLK	430185-3-52-01

ROADWAY PROFILES (20)
RAMP C

SHEET NO. 143

2/22/2024 9:47:42 AM JBLOUNT
c:\pw_working\lochner-pw-01\dms18802\PROFRD_RAMP_C.dgn

THE OFFICIAL RECORD OF THIS SHEET IS THE ELECTRONIC FILE DIGITALLY SIGNED AND SEALED UNDER RULE 61G15-23.004, F.A.C.

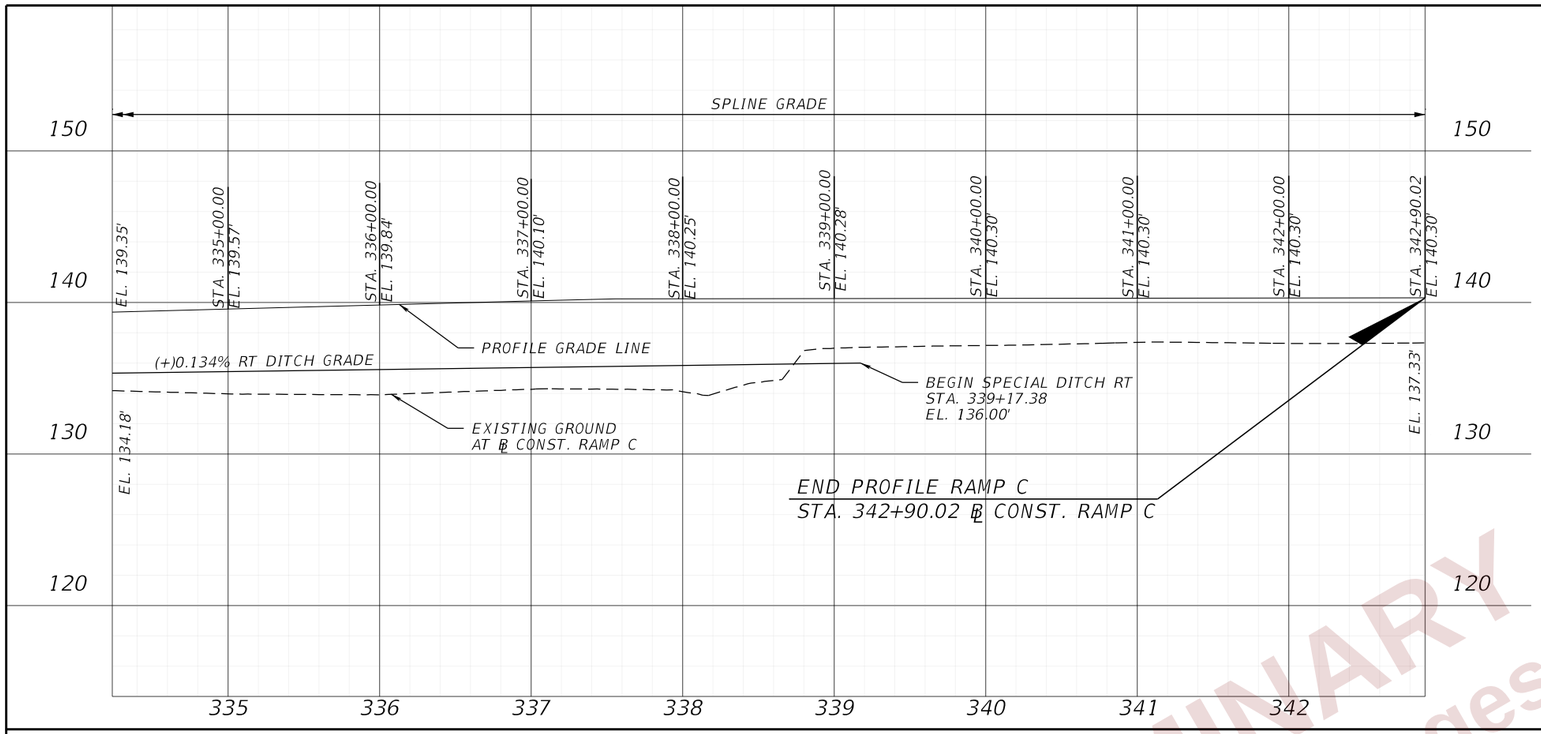

SCALE: 1" = 100' HORIZ.
1" = 10' VERT.

PRELIMINARY
subject to changes

THE OFFICIAL RECORD OF THIS SHEET IS THE ELECTRONIC FILE DIGITALLY SIGNED AND SEALED UNDER RULE 61G15-23.004, F.A.C.

REVISIONS			
DATE	DESCRIPTION	DATE	DESCRIPTION

ENGINEER OF RECORD
DEBANANDA PANIGRAHI, P.E.
LICENSE NUMBER 68318
H. W. LOCHNER
4300 W. CYPRESS STREET, SUITE 500
TAMPA, FLORIDA 33607

STATE OF FLORIDA
DEPARTMENT OF TRANSPORTATION

ROAD NO.	COUNTY	FINANCIAL PROJECT ID
SR 400	POLK	430185-3-52-01

ROADWAY PROFILES (21)
RAMP C

SHEET NO. 144

2/22/2024 9:47:45 AM JBLOUNT
c:\pw_working\lochner-pw-01\dms18802\PROFRD_RAMP_C.dgn

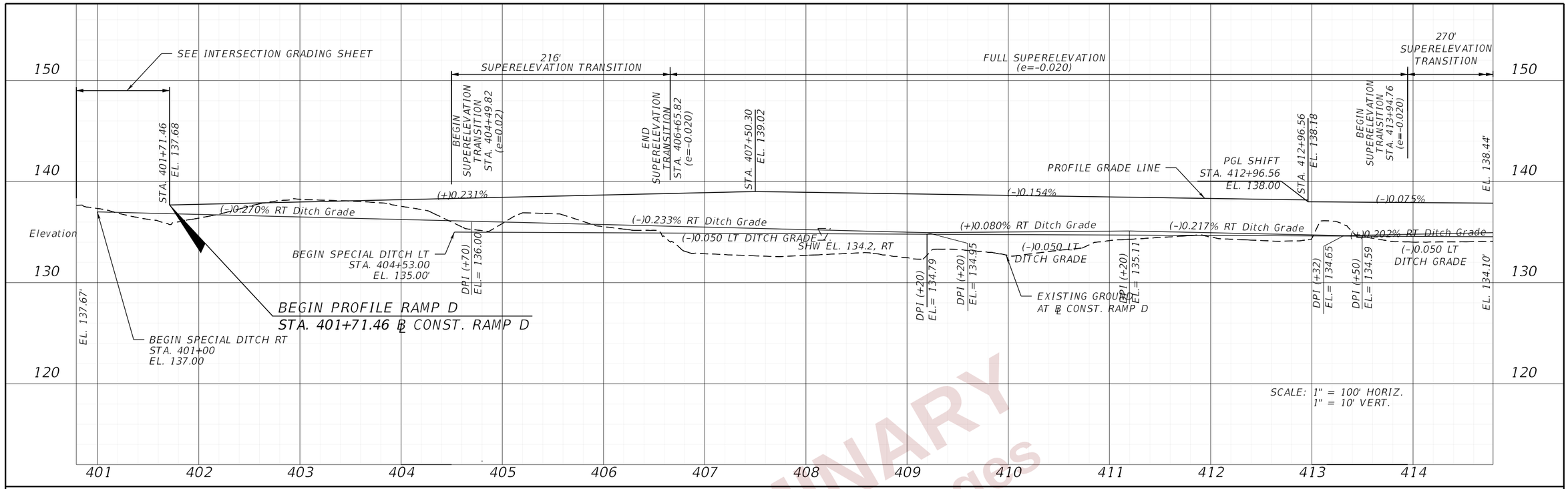

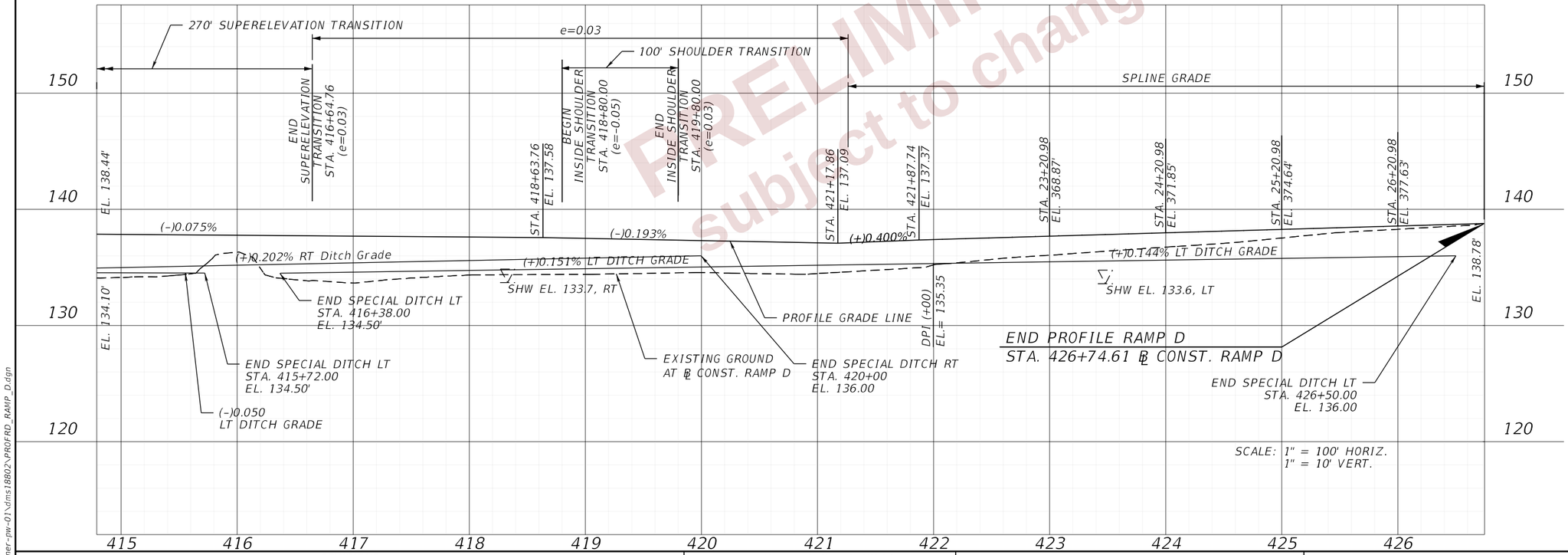

PRELIMINARY
subject to changes

REVISIONS				ENGINEER OF RECORD	STATE OF FLORIDA DEPARTMENT OF TRANSPORTATION			ROADWAY PROFILES (22) RAMP D	SHEET NO.
DATE	DESCRIPTION	DATE	DESCRIPTION	DEBANANDA PANIGRAHI, P.E. LICENSE NUMBER 68318 H. W. LOCHNER 4300 W. CYPRESS STREET, SUITE 500 TAMPA, FLORIDA 33607	ROAD NO.	COUNTY	FINANCIAL PROJECT ID		145
					SR 400	POLK	430185-3-52-01		

THE OFFICIAL RECORD OF THIS SHEET IS THE ELECTRONIC FILE DIGITALLY SIGNED AND SEALED UNDER RULE 61G15-23.004, F.A.C.

2/22/2024 9:48:04 AM JBLOUNT
c:\pw_working\lochner-pw-01\dms18802\PROFRD_RAMP_D.dgn

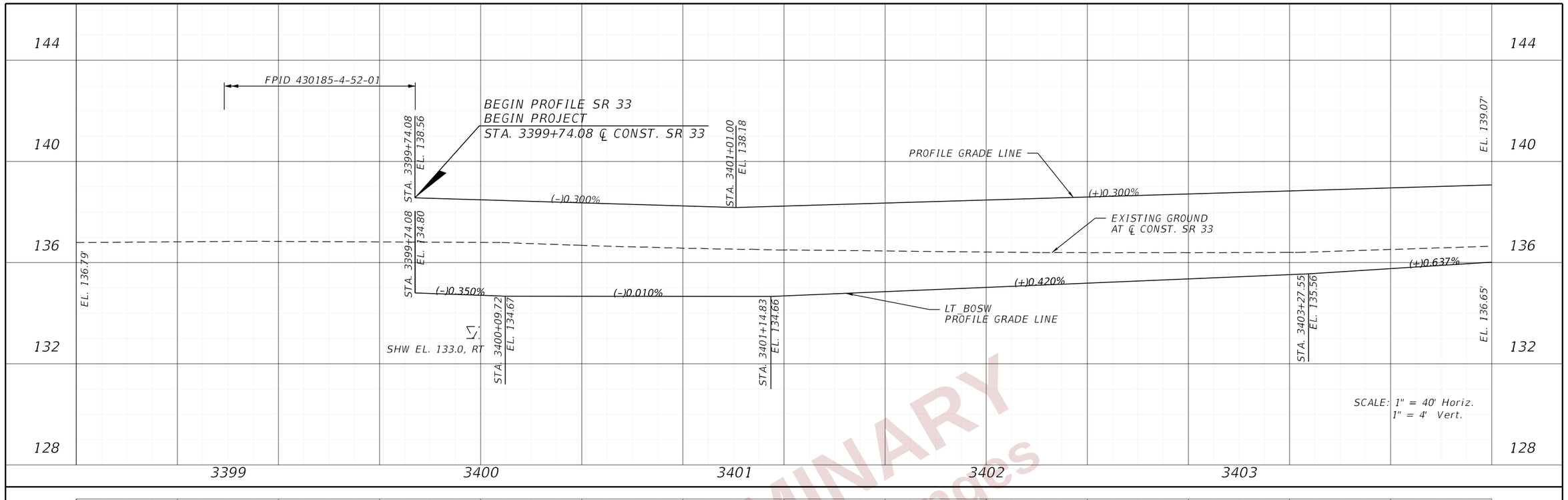

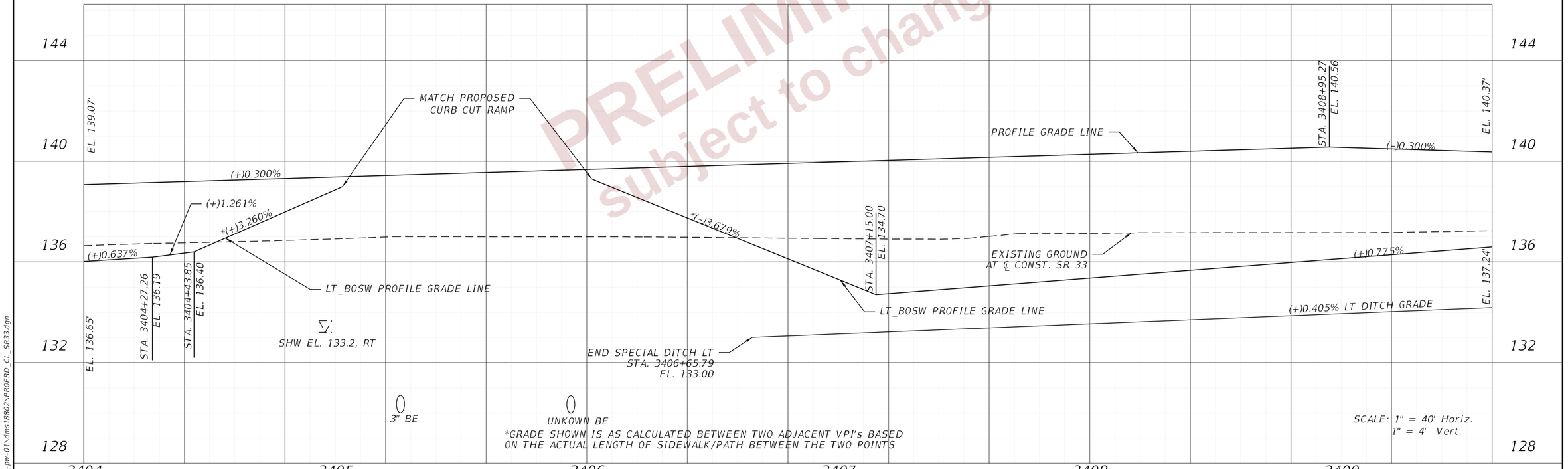

*GRADE SHOWN IS AS CALCULATED BETWEEN TWO ADJACENT VPI's BASED ON THE ACTUAL LENGTH OF SIDEWALK/PATH BETWEEN THE TWO POINTS

PRELIMINARY
subject to changes

REVISIONS				ENGINEER OF RECORD	STATE OF FLORIDA DEPARTMENT OF TRANSPORTATION			ROADWAY PROFILES (23) SR 33	SHEET NO.
DATE	DESCRIPTION	DATE	DESCRIPTION	DEBANANDA PANIGRAHI, P.E. LICENSE NUMBER 68318 H. W. LOCHNER 4300 W. CYPRESS STREET, SUITE 500 TAMPA, FLORIDA 33607	ROAD NO.	COUNTY	FINANCIAL PROJECT ID		146
					SR 400	POLK	430185-3-52-01		

THE OFFICIAL RECORD OF THIS SHEET IS THE ELECTRONIC FILE DIGITALLY SIGNED AND SEALED UNDER RULE 61G15-23.004, F.A.C.

2/26/2024 4:57:27 PM JBLOUNT
c:\pw_working\lochner-pw-01\dms18802\PROFRD_CL_SR33.dgn

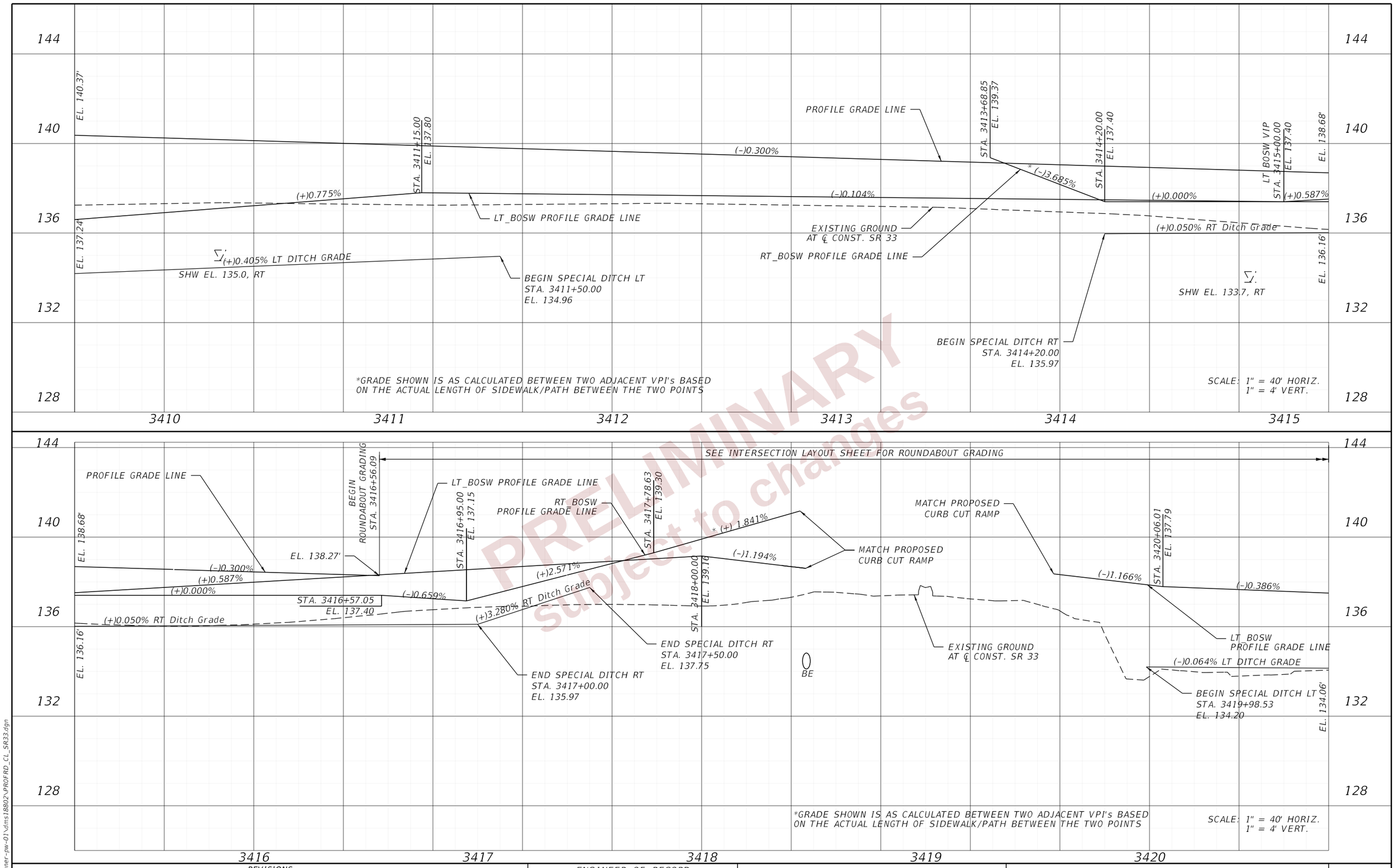

PRELIMINARY
subject to changes

REVISIONS			
DATE	DESCRIPTION	DATE	DESCRIPTION

ENGINEER OF RECORD

DEBANANDA PANIGRAHI, P.E.
LICENSE NUMBER 68318
H. W. LOCHNER
4300 W. CYPRESS STREET, SUITE 500
TAMPA, FLORIDA 33607

STATE OF FLORIDA
DEPARTMENT OF TRANSPORTATION

ROAD NO.	COUNTY	FINANCIAL PROJECT ID
SR 400	POLK	430185-3-52-01

ROADWAY PROFILES (24)
SR 33

SHEET NO. 147

2/26/2024 4:57:27 PM JBLOUNT
c:\pw_working\lochner-pw-01\dms18802\PROFRD_CL_SR33.dgn

THE OFFICIAL RECORD OF THIS SHEET IS THE ELECTRONIC FILE DIGITALLY SIGNED AND SEALED UNDER RULE 61G15-23.004, F.A.C.

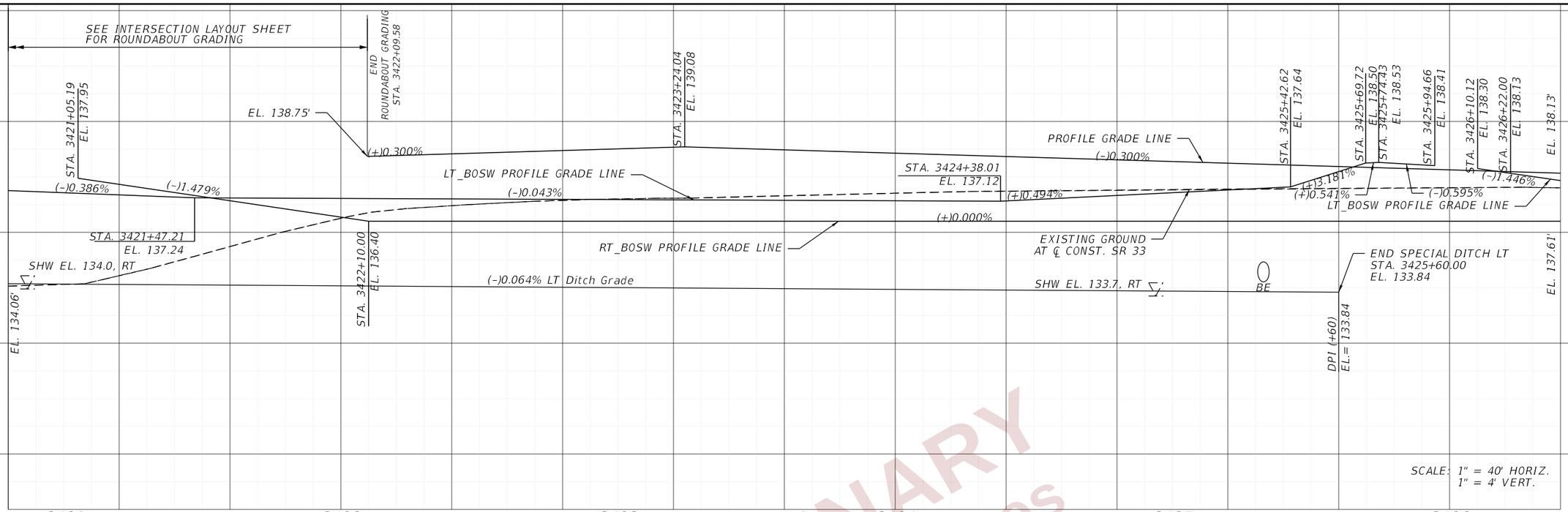

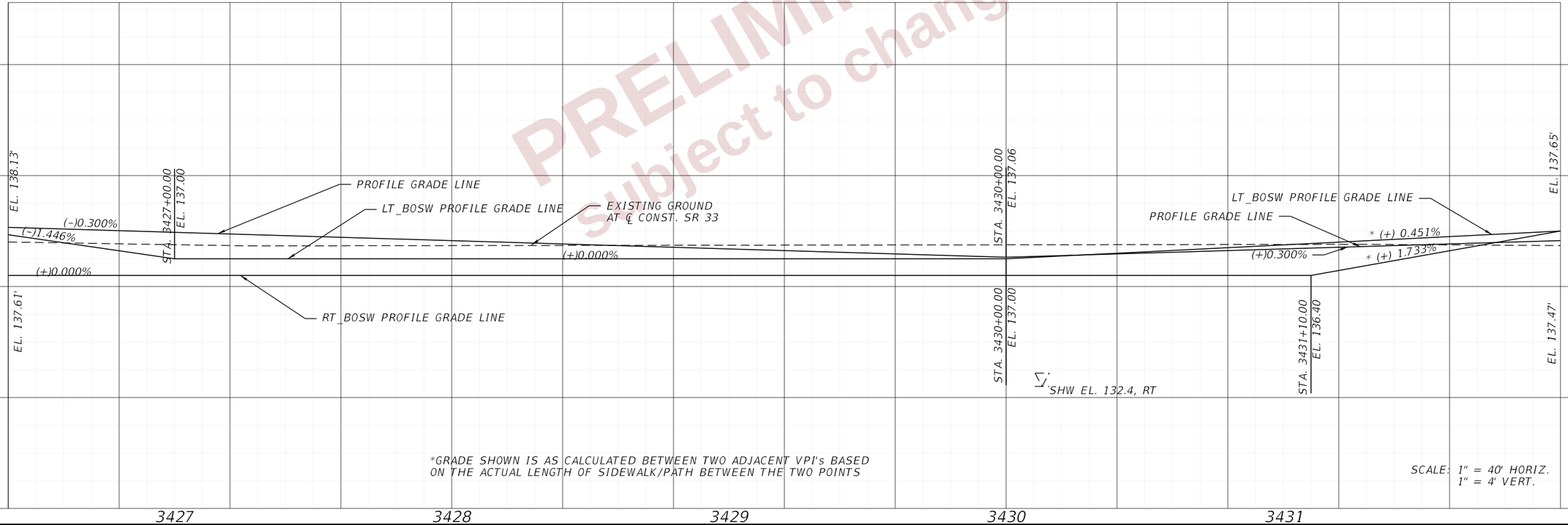

*GRADE SHOWN IS AS CALCULATED BETWEEN TWO ADJACENT VPI's BASED ON THE ACTUAL LENGTH OF SIDEWALK/PATH BETWEEN THE TWO POINTS

PRELIMINARY
subject to changes

REVISIONS			
DATE	DESCRIPTION	DATE	DESCRIPTION

ENGINEER OF RECORD
DEBANANDA PANIGRAHI, P.E.
LICENSE NUMBER 68318
H. W. LOCHNER
4300 W. CYPRESS STREET, SUITE 500
TAMPA, FLORIDA 33607

STATE OF FLORIDA
DEPARTMENT OF TRANSPORTATION

ROAD NO.	COUNTY	FINANCIAL PROJECT ID
SR 400	POLK	430185-3-52-01

ROADWAY PROFILES (25)
SR 33

SHEET NO. 148

THE OFFICIAL RECORD OF THIS SHEET IS THE ELECTRONIC FILE DIGITALLY SIGNED AND SEALED UNDER RULE 61G15-23.004, F.A.C.

2/26/2024 4:57:27 PM JBLOUNT
c:\pw_working\lochner-pw-01\dms18802\PROFRD_CL_SR33.dgn

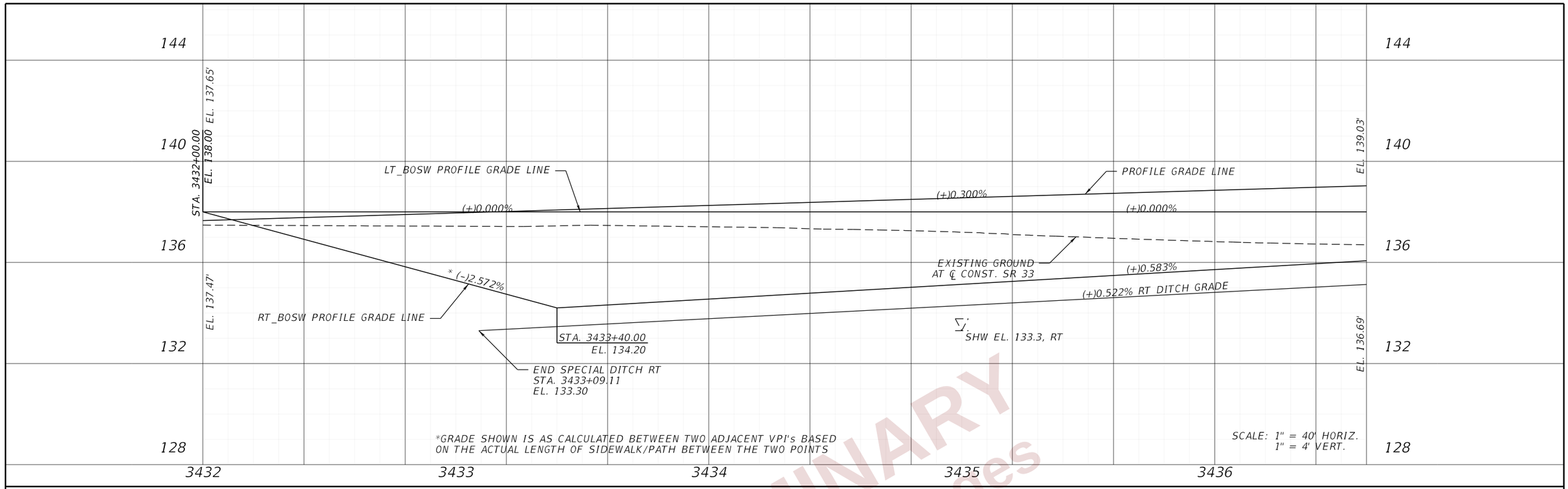

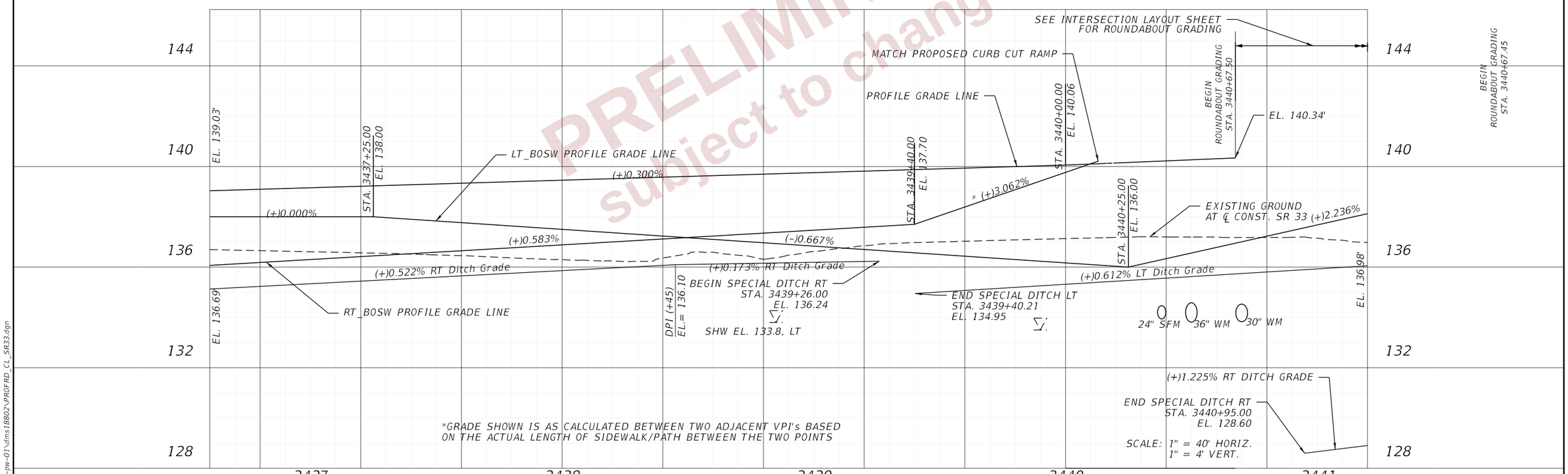

PRELIMINARY
subject to changes

REVISIONS			
DATE	DESCRIPTION	DATE	DESCRIPTION

ENGINEER OF RECORD

DEBANANDA PANIGRAHI, P.E.
LICENSE NUMBER 68318
H. W. LOCHNER
4300 W. CYPRESS STREET, SUITE 500
TAMPA, FLORIDA 33607

STATE OF FLORIDA
DEPARTMENT OF TRANSPORTATION

ROAD NO.	COUNTY	FINANCIAL PROJECT ID
SR 400	POLK	430185-3-52-01

ROADWAY PROFILES (26)
SR 33

SHEET NO. 149

2/27/2024 8:10:59 AM JBLOUNT
c:\pw_working\lochner-pw-01\dms18802\PROFRD_CL_SR33.dgn

THE OFFICIAL RECORD OF THIS SHEET IS THE ELECTRONIC FILE DIGITALLY SIGNED AND SEALED UNDER RULE 61G15-23.004, F.A.C.

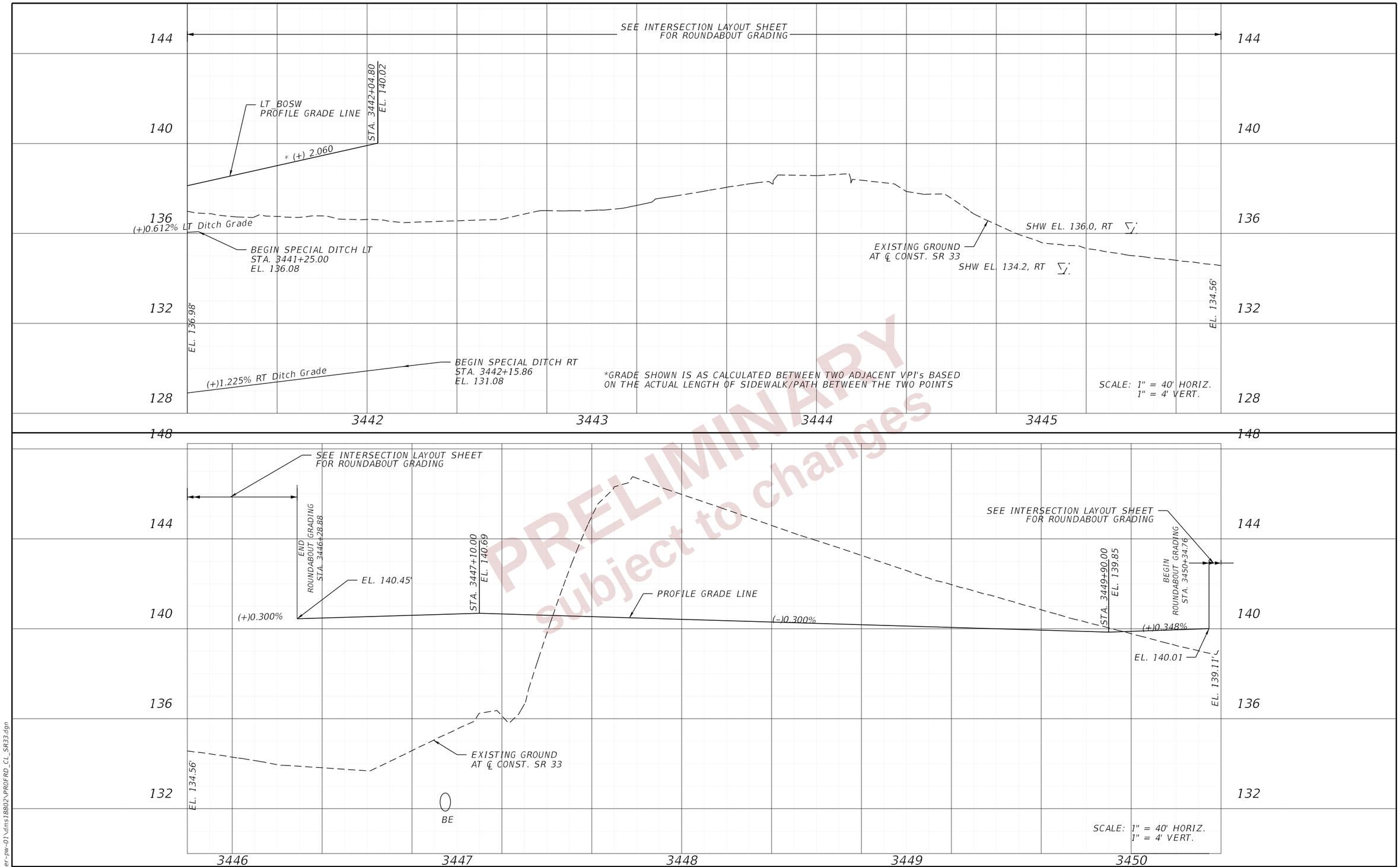

PRELIMINARY
subject to changes

REVISIONS			
DATE	DESCRIPTION	DATE	DESCRIPTION

ENGINEER OF RECORD

DEBANANDA PANIGRAHI, P.E.
LICENSE NUMBER 68318
H. W. LOCHNER
4300 W. CYPRESS STREET, SUITE 500
TAMPA, FLORIDA 33607

STATE OF FLORIDA
DEPARTMENT OF TRANSPORTATION

ROAD NO.	COUNTY	FINANCIAL PROJECT ID
SR 400	POLK	430185-3-52-01

ROADWAY PROFILES (27)
SR 33

SHEET NO. 150

THE OFFICIAL RECORD OF THIS SHEET IS THE ELECTRONIC FILE DIGITALLY SIGNED AND SEALED UNDER RULE 61G15-23.004, F.A.C.

2/27/2024 8:10:59 AM JBLOUNT
c:\pw_working\lochner-pw-01\dms18802\PROFRD_CL_SR33.dgn

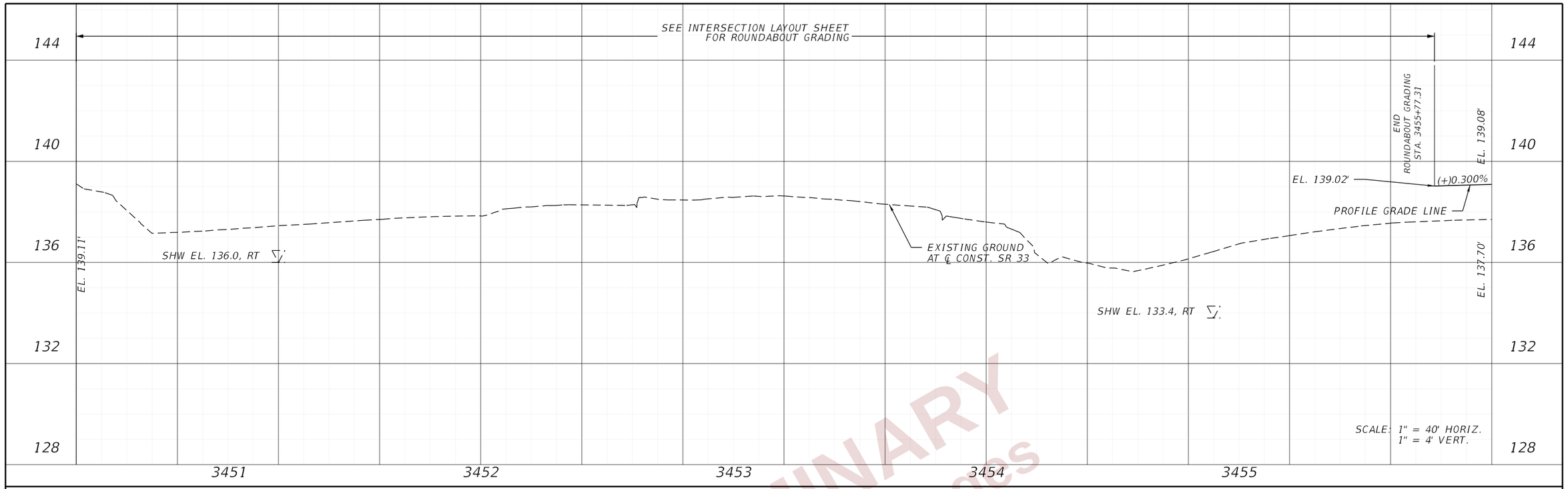

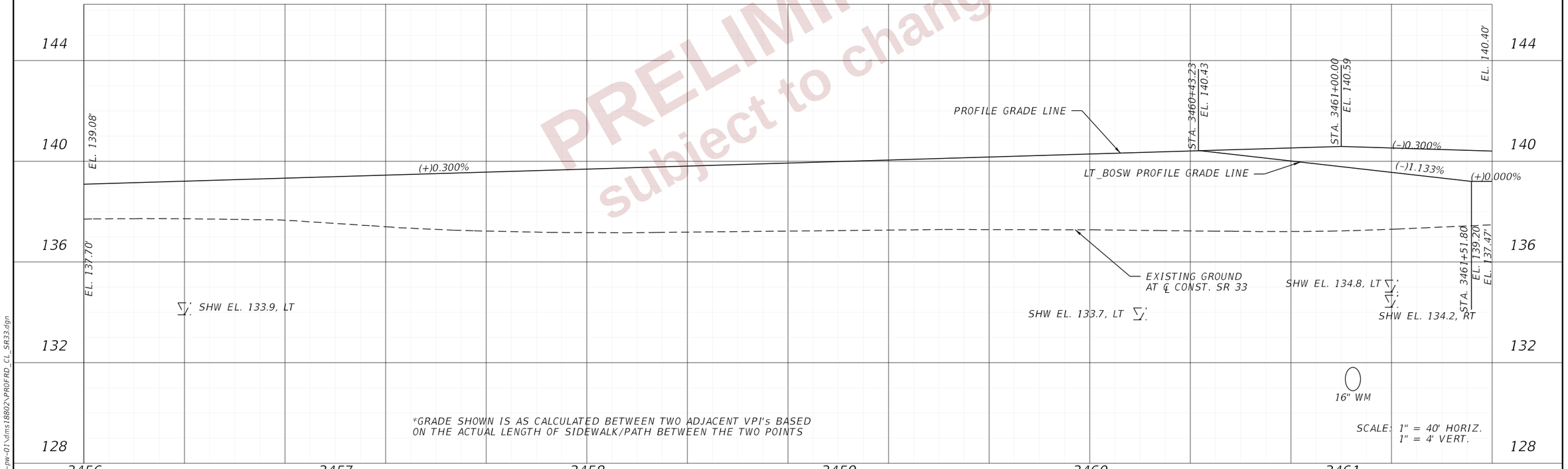

PRELIMINARY
subject to changes

*GRADE SHOWN IS AS CALCULATED BETWEEN TWO ADJACENT VPI's BASED ON THE ACTUAL LENGTH OF SIDEWALK/PATH BETWEEN THE TWO POINTS

REVISIONS				ENGINEER OF RECORD	STATE OF FLORIDA DEPARTMENT OF TRANSPORTATION			ROADWAY PROFILES (28) SR 33	SHEET NO.
DATE	DESCRIPTION	DATE	DESCRIPTION	DEBANANDA PANIGRAHI, P.E. LICENSE NUMBER 68318 H. W. LOCHNER 4300 W. CYPRESS STREET, SUITE 500 TAMPA, FLORIDA 33607	ROAD NO.	COUNTY	FINANCIAL PROJECT ID		151
					SR 400	POLK	430185-3-52-01		

THE OFFICIAL RECORD OF THIS SHEET IS THE ELECTRONIC FILE DIGITALLY SIGNED AND SEALED UNDER RULE 61G15-23.004, F.A.C.

2/27/2024 8:10:59 AM JBLOUNT
c:\pw_working\lochner-pw-01\dms18802\PROFRD_CL_SR33.dgn

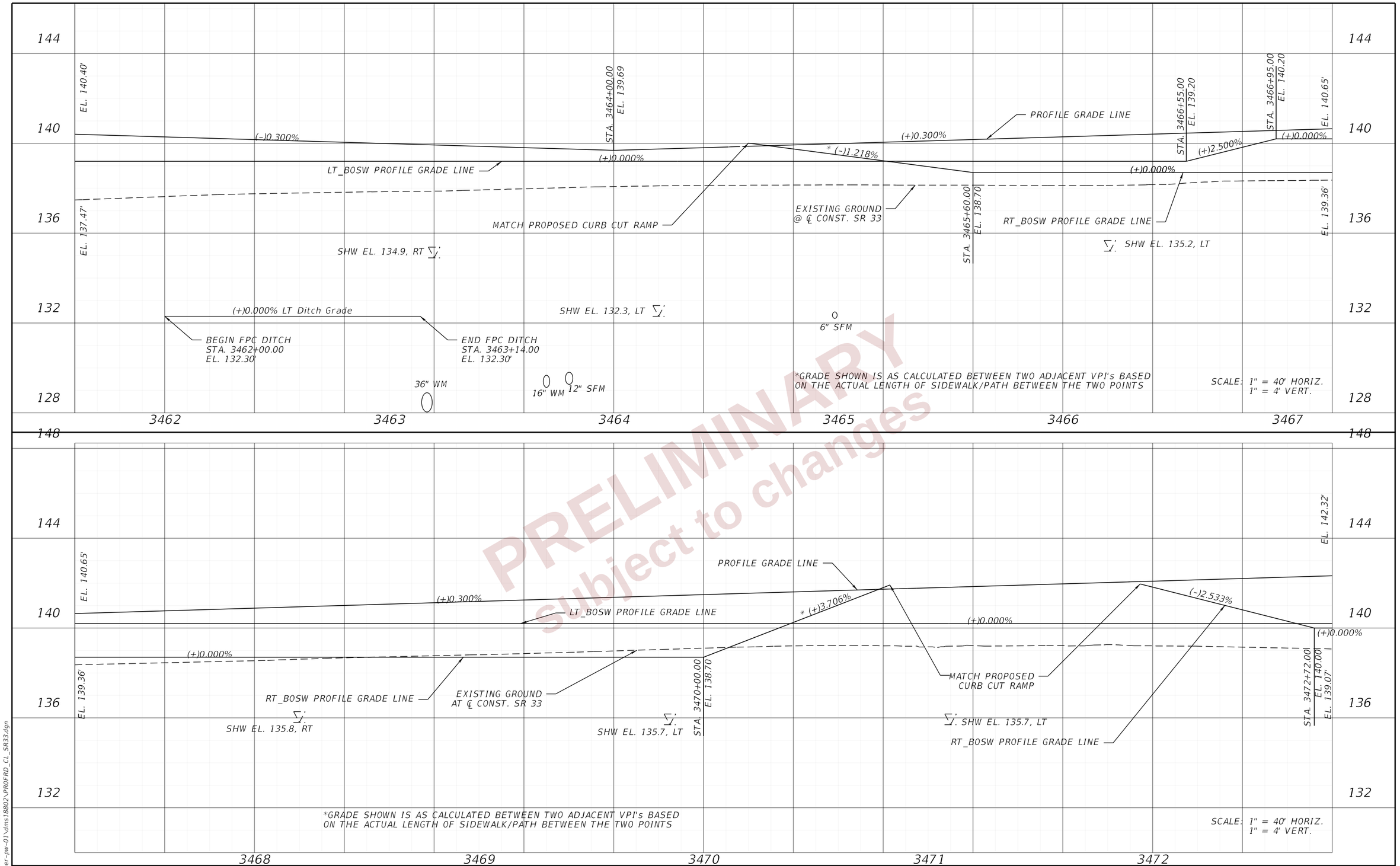

PRELIMINARY
subject to changes

THE OFFICIAL RECORD OF THIS SHEET IS THE ELECTRONIC FILE DIGITALLY SIGNED AND SEALED UNDER RULE 61G15-23.004, F.A.C.

2/27/2024 8:12:27 AM JBLOUNT
c:\pw_working\lochner-pw-01\dms18802\PROFRD_CL_SR33.dgn

REVISIONS			
DATE	DESCRIPTION	DATE	DESCRIPTION

ENGINEER OF RECORD
DEBANANDA PANIGRAHI, P.E.
LICENSE NUMBER 68318
H. W. LOCHNER
4300 W. CYPRESS STREET, SUITE 500
TAMPA, FLORIDA 33607

STATE OF FLORIDA
DEPARTMENT OF TRANSPORTATION

ROAD NO.	COUNTY	FINANCIAL PROJECT ID
SR 400	POLK	430185-3-52-01

ROADWAY PROFILES (29)
SR 33

SHEET NO. 152

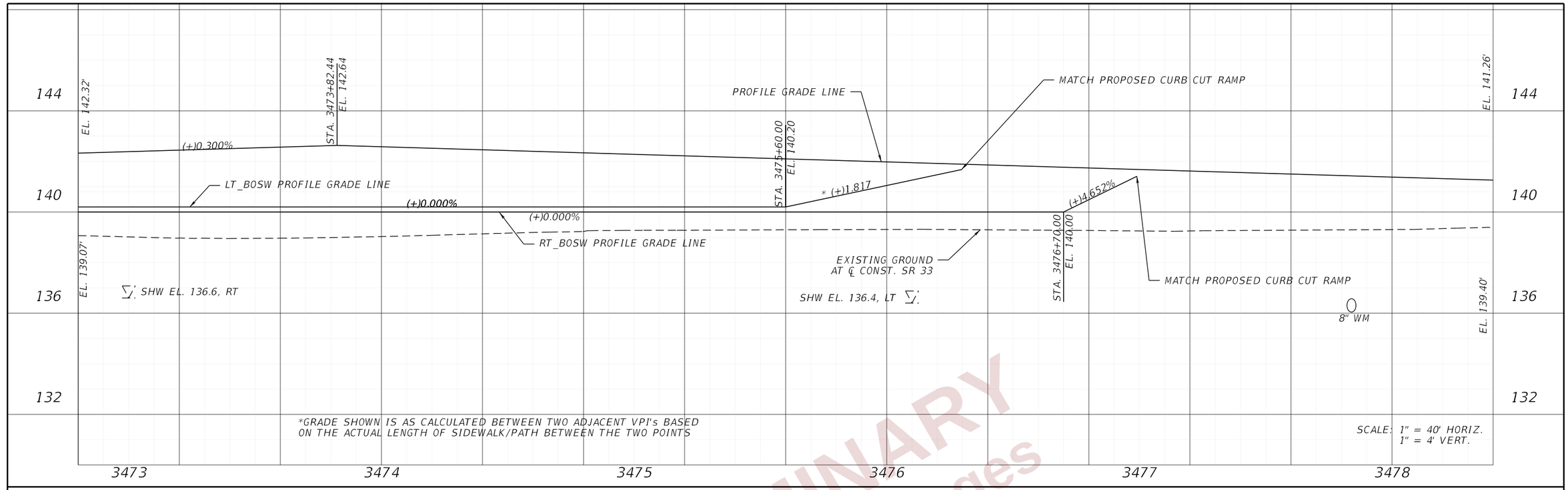

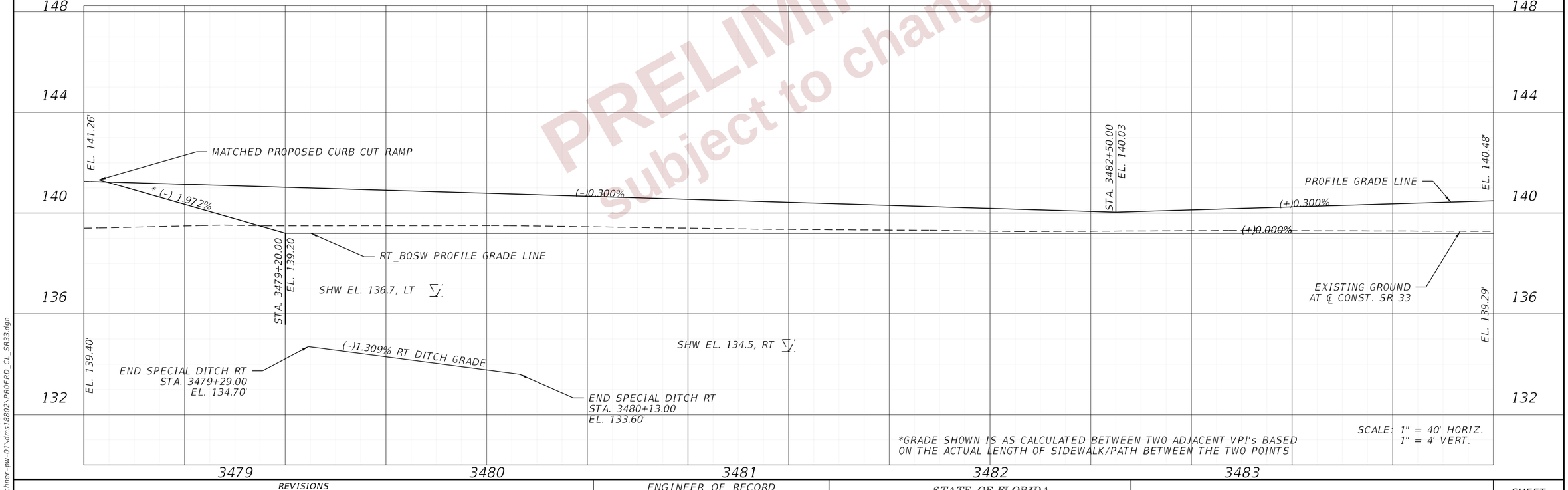

PRELIMINARY
subject to changes

THE OFFICIAL RECORD OF THIS SHEET IS THE ELECTRONIC FILE DIGITALLY SIGNED AND SEALED UNDER RULE 61G15-23.004, F.A.C.

REVISIONS			
DATE	DESCRIPTION	DATE	DESCRIPTION

ENGINEER OF RECORD
DEBANANDA PANIGRAHI, P.E.
LICENSE NUMBER 68318
H. W. LOCHNER
4300 W. CYPRESS STREET, SUITE 500
TAMPA, FLORIDA 33607

STATE OF FLORIDA
DEPARTMENT OF TRANSPORTATION

ROAD NO.	COUNTY	FINANCIAL PROJECT ID
SR 400	POLK	430185-3-52-01

ROADWAY PROFILES (30)
SR 33

SHEET NO. 153

2/26/2024 4:57:30 PM JBLOUNT
C:\pw_working\lochner-pw-01\dms18802\PROFRD_CL_SR33.dgn

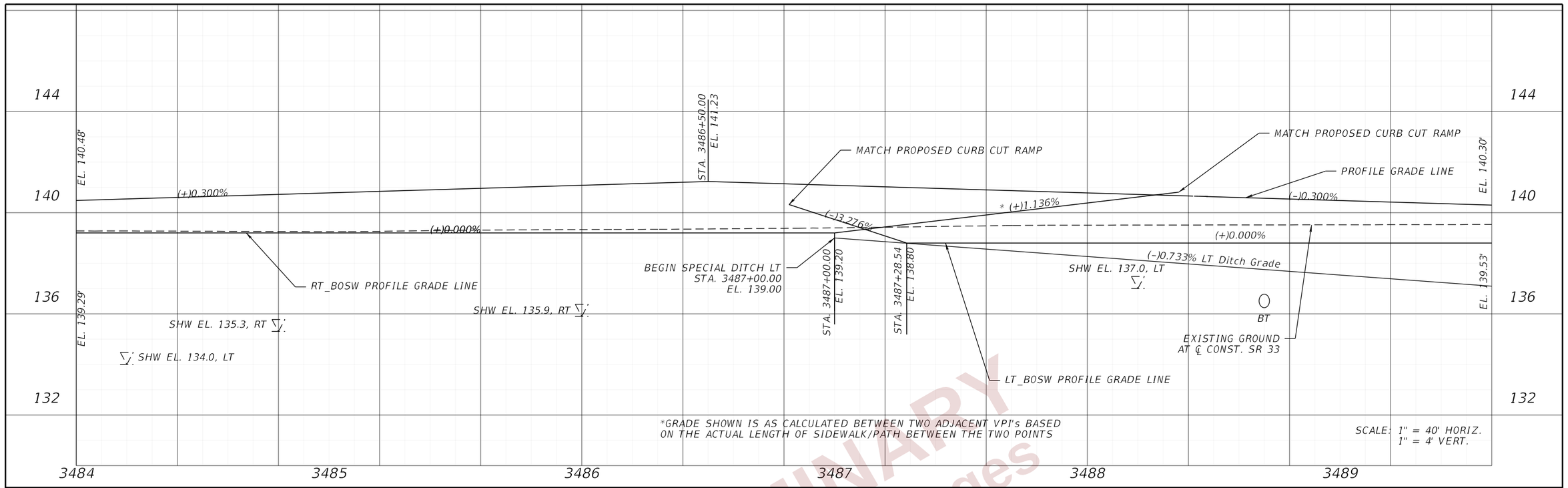

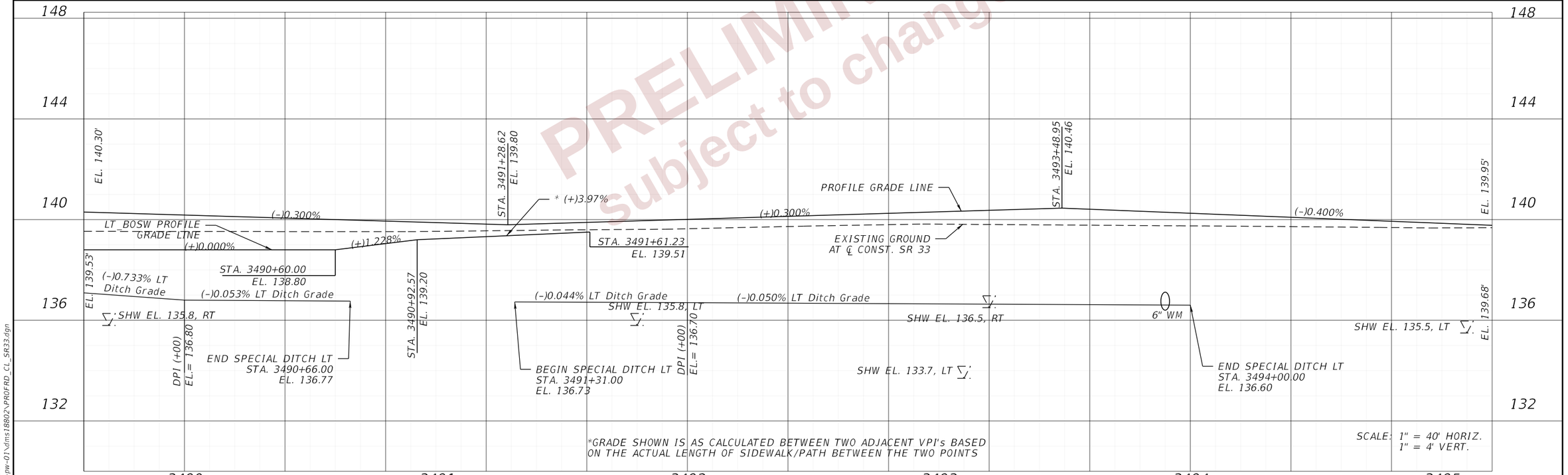

PRELIMINARY
subject to changes

REVISIONS				ENGINEER OF RECORD	STATE OF FLORIDA DEPARTMENT OF TRANSPORTATION			ROADWAY PROFILES (31) SR 33	SHEET NO.
DATE	DESCRIPTION	DATE	DESCRIPTION	DEBANANDA PANIGRAHI, P.E. LICENSE NUMBER 68318 H. W. LOCHNER 4300 W. CYPRESS STREET, SUITE 500 TAMPA, FLORIDA 33607	ROAD NO.	COUNTY	FINANCIAL PROJECT ID		154
					SR 400	POLK	430185-3-52-01		

THE OFFICIAL RECORD OF THIS SHEET IS THE ELECTRONIC FILE DIGITALLY SIGNED AND SEALED UNDER RULE 61G15-23.004, F.A.C.

2/26/2024 4:57:30 PM JBLOUNT
c:\pw_working\lochner-pw-01\dms18802\PROFRD_CL_SR33.dgn

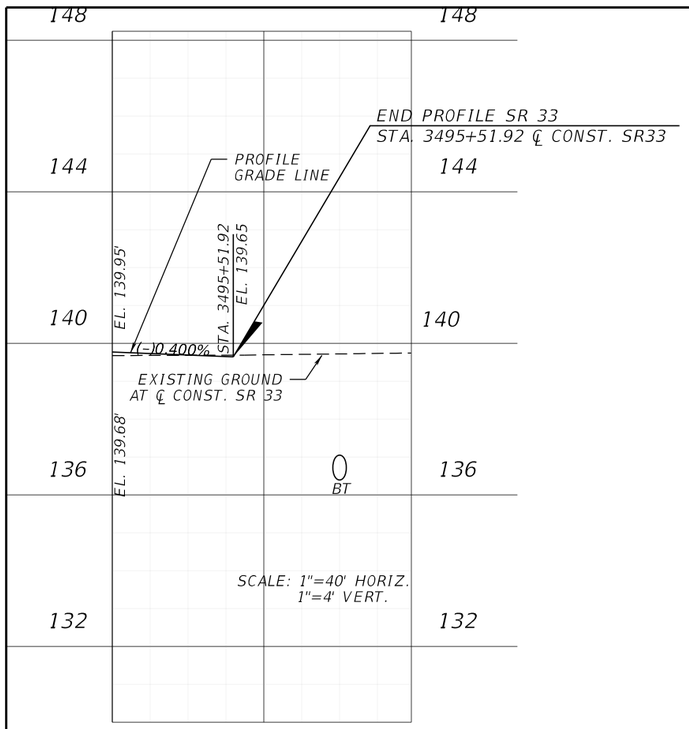

PRELIMINARY
subject to changes

THE OFFICIAL RECORD OF THIS SHEET IS THE ELECTRONIC FILE DIGITALLY SIGNED AND SEALED UNDER RULE 61G15-23.004, F.A.C.

2/26/2024 4:57:31 PM JBLOUNT
c:\pw_working\lochner-pw-01\dms18802\PROFRD_CL_SR33.dgn

REVISIONS			
DATE	DESCRIPTION	DATE	DESCRIPTION

ENGINEER OF RECORD
DEBANANDA PANIGRAHI, P.E.
LICENSE NUMBER 68318
H. W. LOCHNER
4300 W. CYPRESS STREET, SUITE 500
TAMPA, FLORIDA 33607

STATE OF FLORIDA
DEPARTMENT OF TRANSPORTATION

ROAD NO.	COUNTY	FINANCIAL PROJECT ID
SR 400	POLK	430185-3-52-01

ROADWAY PROFILES (32)
SR 33

SHEET NO. 155

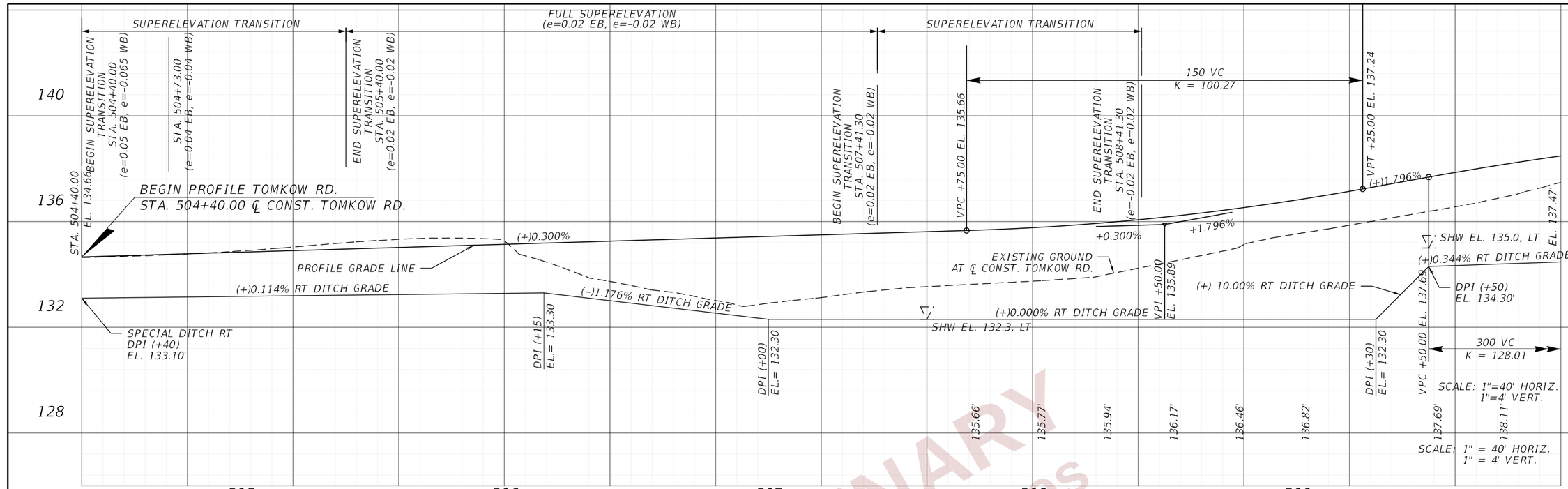

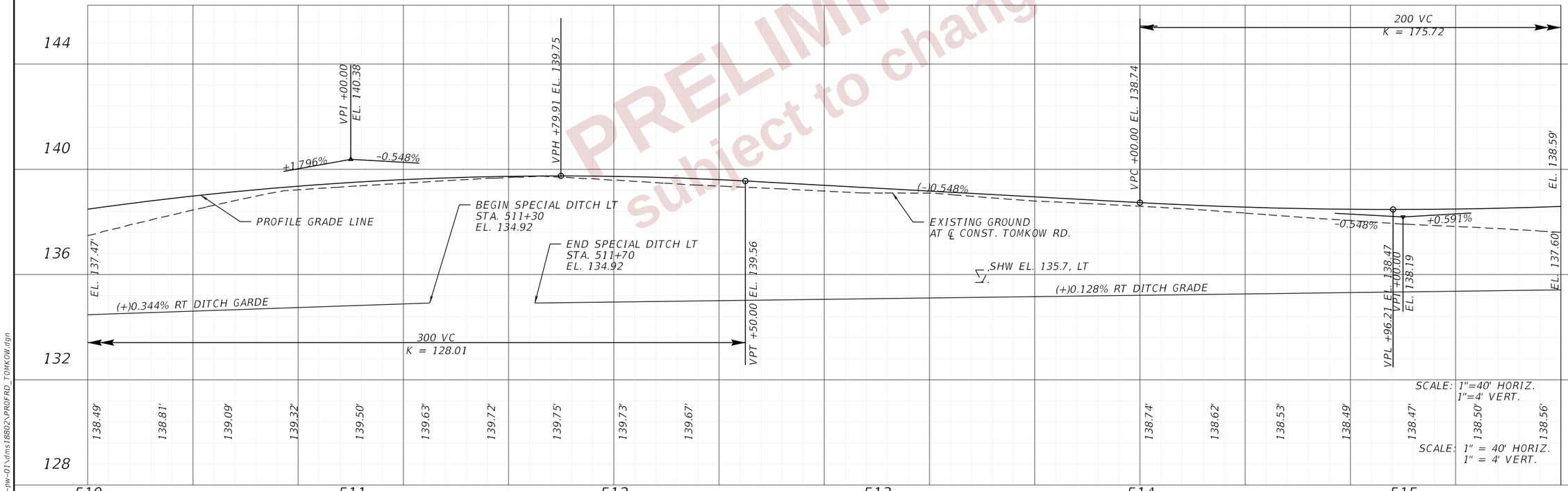

PRELIMINARY
subject to changes

REVISIONS			
DATE	DESCRIPTION	DATE	DESCRIPTION

ENGINEER OF RECORD
DEBANANDA PANIGRAHI, P.E.
LICENSE NUMBER 68318
H. W. LOCHNER
4300 W. CYPRESS STREET, SUITE 500
TAMPA, FLORIDA 33607

STATE OF FLORIDA
DEPARTMENT OF TRANSPORTATION

ROAD NO.	COUNTY	FINANCIAL PROJECT ID
SR 400	POLK	430185-3-52-01

ROADWAY PROFILES (33)
TOMKOW RD.

SHEET NO. 156

THE OFFICIAL RECORD OF THIS SHEET IS THE ELECTRONIC FILE DIGITALLY SIGNED AND SEALED UNDER RULE 61G15-23.004, F.A.C.

2/26/2024 4:57:49 PM JBLOUNT
c:\pw_working\lochner-pw-01\dms18802\PROFRD_TOMKOW.dgn

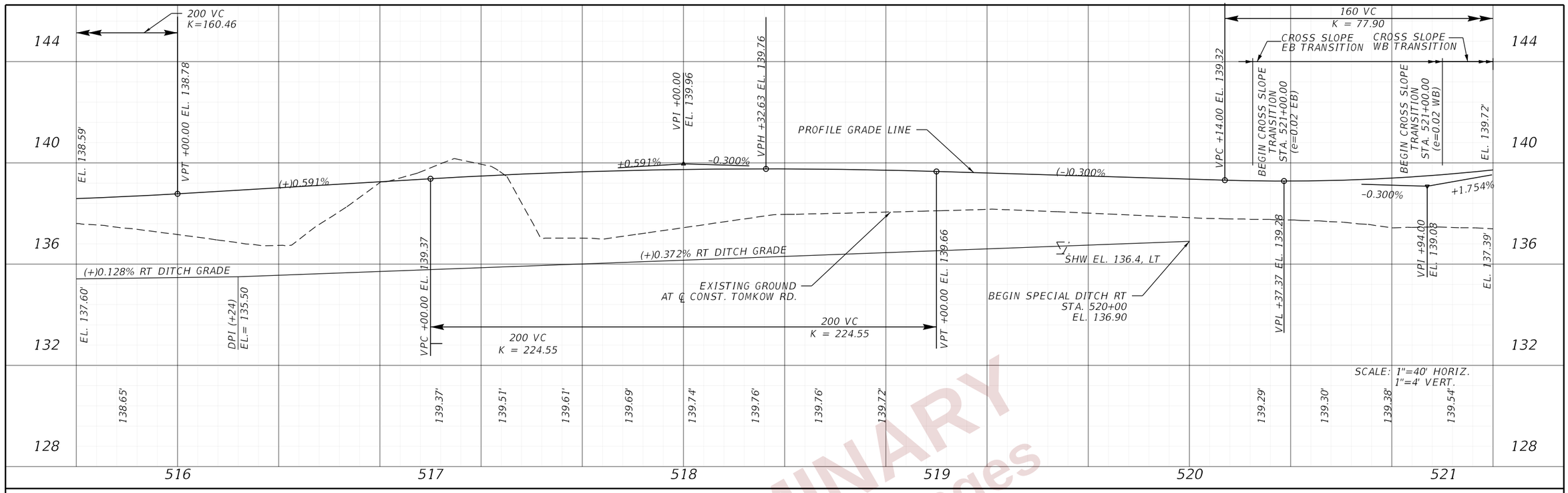

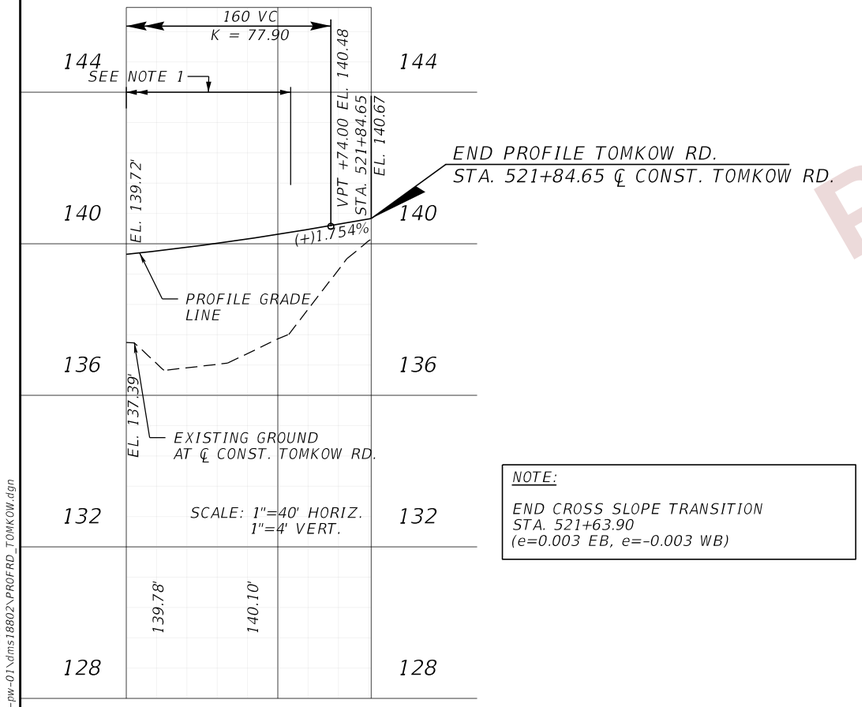

END PROFILE TOMKOW RD.
STA. 521+84.65 ℄ CONST. TOMKOW RD.

NOTE:

END CROSS SLOPE TRANSITION
STA. 521+63.90
(e=0.003 EB, e=-0.003 WB)

PRELIMINARY
subject to changes

REVISIONS				ENGINEER OF RECORD	STATE OF FLORIDA DEPARTMENT OF TRANSPORTATION			ROADWAY PROFILES (34) TOMKOW RD.	SHEET NO.
DATE	DESCRIPTION	DATE	DESCRIPTION	DEBANANDA PANIGRAHI, P.E. LICENSE NUMBER 68318 H. W. LOCHNER 4300 W. CYPRESS STREET, SUITE 500 TAMPA, FLORIDA 33607	ROAD NO.	COUNTY	FINANCIAL PROJECT ID		157
					SR 400	POLK	430185-3-52-01		

THE OFFICIAL RECORD OF THIS SHEET IS THE ELECTRONIC FILE DIGITALLY SIGNED AND SEALED UNDER RULE 61G15-23.004, F.A.C.

2/26/2024 4:57:49 PM JBLOUNT
c:\pw_working\lochner-pw-01\dms18802\PROFRD_TOMKOW.dgn

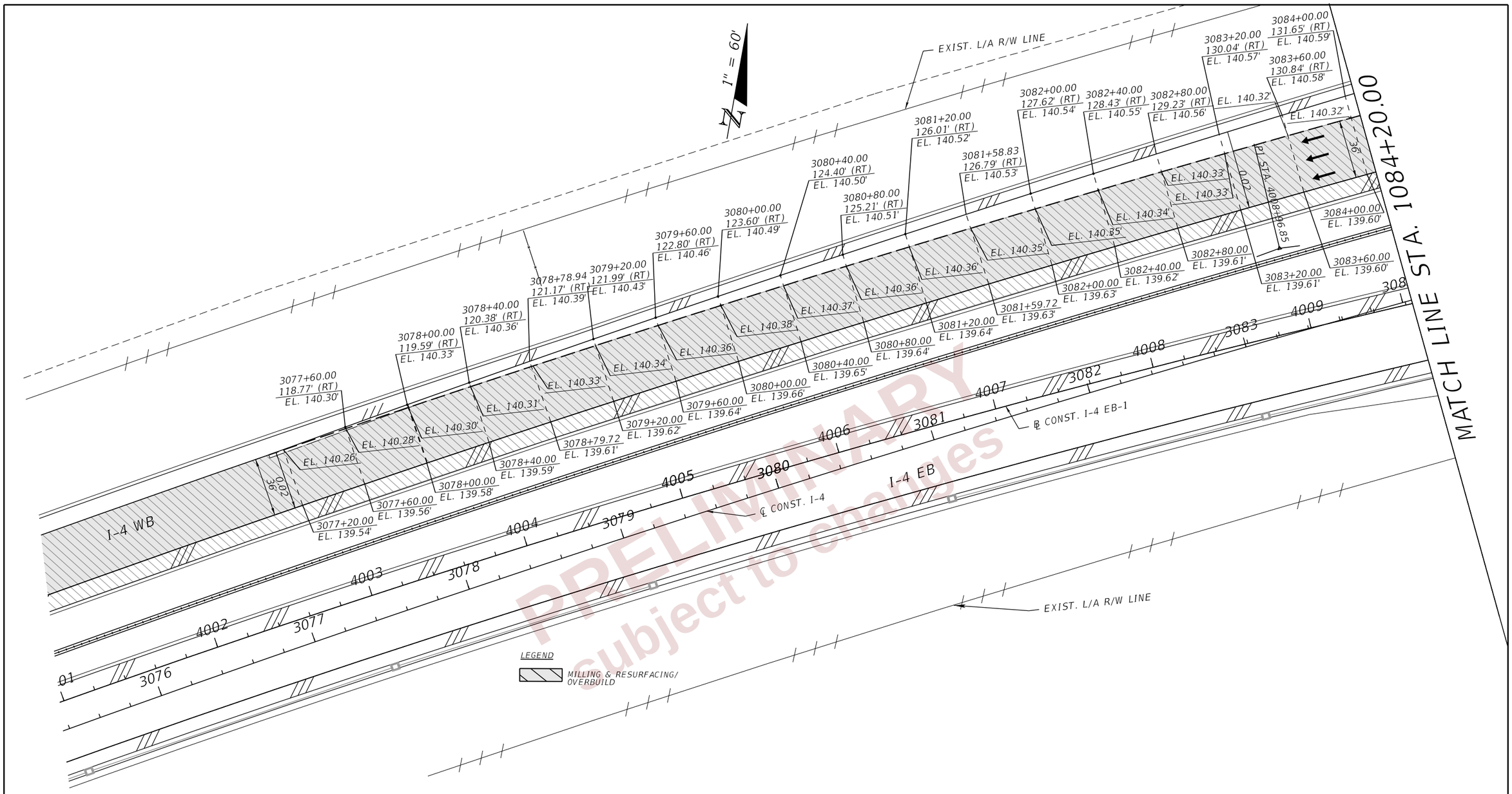

PRELIMINARY subject to changes

REVISIONS			
DATE	DESCRIPTION	DATE	DESCRIPTION

ENGINEER OF RECORD
DEBANANDA PANIGRAHI, P.E.
LICENSE NUMBER 68318
H. W. LOCHNER
4300 W. CYPRESS STREET, SUITE 500
TAMPA, FLORIDA 33607

STATE OF FLORIDA
DEPARTMENT OF TRANSPORTATION

ROAD NO.	COUNTY	FINANCIAL PROJECT ID
SR 400	POLK	430185-3-52-01

RAMP TERMINAL DETAIL (01)
RAMP A

SHEET NO. 158

THE OFFICIAL RECORD OF THIS SHEET IS THE ELECTRONIC FILE DIGITALLY SIGNED AND SEALED UNDER RULE 61G15-23.004, F.A.C.

2/14/2024 4:02:53 PM JBLOUNT
c:\pw_working\lochner-pw-01\dms18802\TEXTRD09.dgn

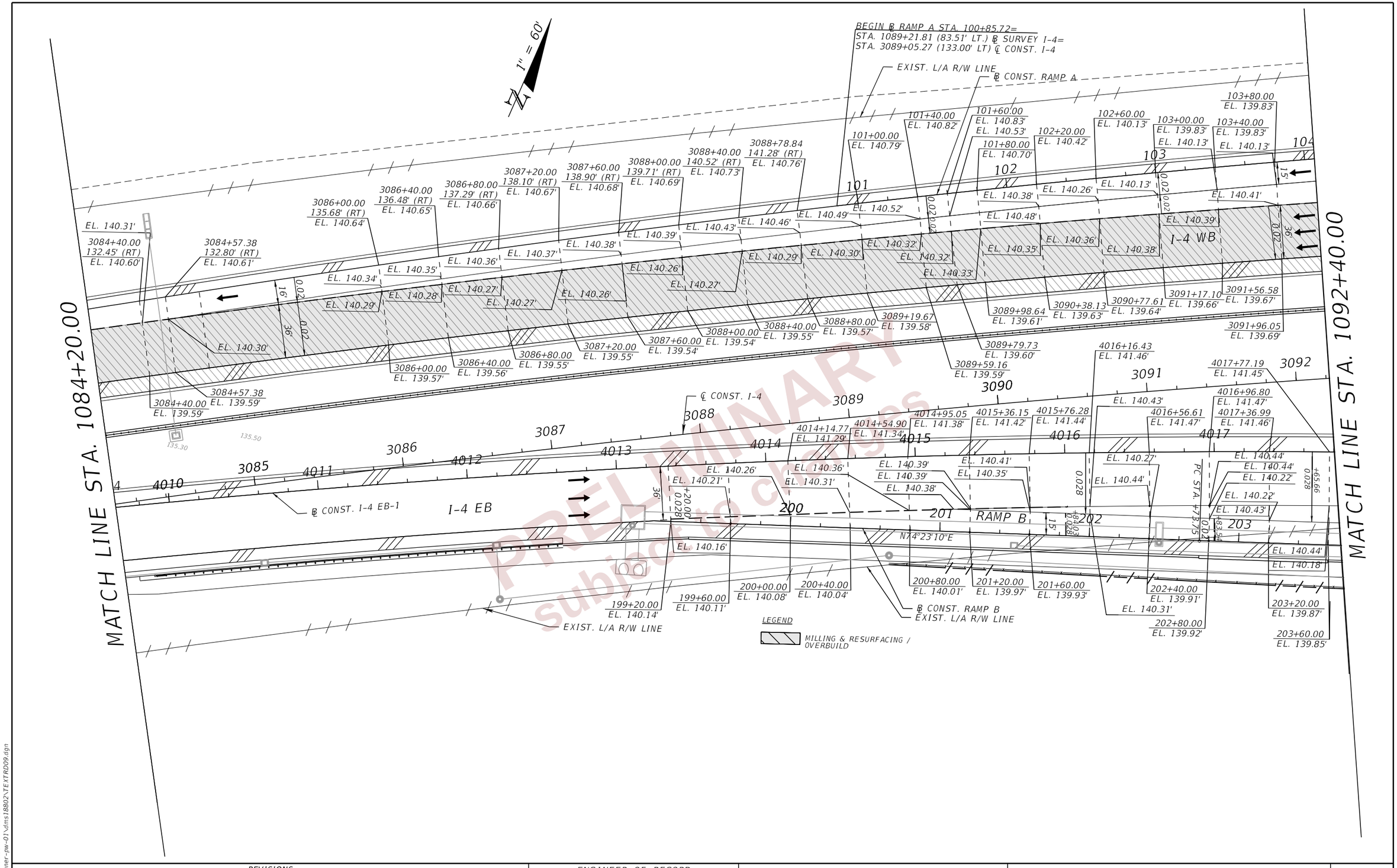

REVISIONS				ENGINEER OF RECORD	STATE OF FLORIDA DEPARTMENT OF TRANSPORTATION			RAMP TERMINAL DETAIL (02) RAMP A AND RAMP B	SHEET NO.
DATE	DESCRIPTION	DATE	DESCRIPTION	DEBANANDA PANIGRAHI, P.E. LICENSE NUMBER 68318 H. W. LOCHNER 4300 W. CYPRESS STREET, SUITE 500 TAMPA, FLORIDA 33607	ROAD NO.	COUNTY	FINANCIAL PROJECT ID		159
					SR 400	POLK	430185-3-52-01		

2/14/2024 4:14:08 PM JBLOUNT
c:\pw_working\lochner-pw-01\dms18802\TEXTRD09.dgn

THE OFFICIAL RECORD OF THIS SHEET IS THE ELECTRONIC FILE DIGITALLY SIGNED AND SEALED UNDER RULE 61G15-23.004, F.A.C.

MATCH LINE STA. 1092+40.00

1" = 60'

EXIST. L/A R/W LINE

℄ CONST. RAMP A

℄ CONST. RAMP A

℄ CONST. I-4

℄ CONST. I-4 EB-1

℄ CONST. I-4 EB1

END ℄ CONST. EB 1 STA. 4026+39.79= STA. 1101+07.80 (131.66' RT.) ℄ SURVEY. I

PI STA. 106+83.87

PI STA. 206+50.16

PRC STA. +26.51

℄ RAMP B

PROP. L/A R/W LINE

LEGEND

MILLING & RESURFACING / OVERBUILD

N72°47'29"E

RAMP B

104+20.00 EL. 139.81'
104+60.00 EL. 139.78'
105+00.00 EL. 139.76'
105+40.00 EL. 139.73'
105+80.00 EL. 139.71'
106+22.77 EL. 139.68'
106+60.00 EL. 139.66'
107+00.00 EL. 139.64'
107+40.00 EL. 139.61'
107+80.00 EL. 139.59'
108+20.00 EL. 139.57'
108+60.00 EL. 139.55'
109+00.00 EL. 139.53'
109+40.00 EL. 139.51'
109+80.00 EL. 139.49'
110+20.00 EL. 139.41'
110+60.00 EL. 139.37'
111+00.00 EL. 139.33'
111+40.00 EL. 139.34'
111+80.00 EL. 139.40'
112+20.00 EL. 139.49'
112+60.00 EL. 139.64'

105 106 107 108 109 110 111 112

EL. 140.06' EL. 140.03' EL. 140.01' EL. 139.98' EL. 139.96' EL. 139.94' EL. 139.91' EL. 139.89' EL. 139.87' EL. 140.20' EL. 140.18' EL. 140.03' EL. 140.10' EL. 139.70' EL. 140.34' EL. 140.20'

EL. 140.11' EL. 140.08' EL. 140.30' EL. 140.29' EL. 140.27' EL. 140.24' EL. 140.23' EL. 140.21' EL. 140.11' EL. 140.06' EL. 140.05'

EL. 140.38' EL. 140.36' EL. 140.35' EL. 140.33' EL. 140.32' EL. 140.26'

EL. 140.39'

EL. 139.85' EL. 139.83' EL. 139.81' EL. 139.79' EL. 139.71' EL. 139.67' EL. 139.63' EL. 139.64' EL. 139.79' EL. 139.94'

3092+75.01 EL. 139.66'
3092+35.53 EL. 139.67'
3093+14.48 EL. 139.64'
3093+53.95 EL. 139.63'
3093+93.42 EL. 139.62'
3094+35.62 EL. 139.60'
3094+72.36 EL. 139.58'
3095+11.83 EL. 139.57'
3095+51.30 EL. 139.55'
3095+90.76 EL. 139.54'
3096+30.23 EL. 139.52'
3096+69.69 EL. 139.51'
3097+09.15 EL. 139.49'
3097+48.62 EL. 139.48'
3097+88.08 EL. 139.44'
3098+27.54 EL. 139.38'
3098+67.00 EL. 139.38'
3099+06.46 EL. 139.40'
3099+45.92 EL. 139.45'
3099+85.38 EL. 139.56'
3100+24.84 EL. 139.70'
3100+64.30 EL. 139.89'

3093 3094 3095 3096 3097 3098 3099 3100

4018+57.18 EL. 141.39'
4018+17.21 EL. 141.42'
4018+97.40 EL. 141.35'
4019+37.12 EL. 141.31'
4019+77.09 EL. 141.25'
4020+17.31 EL. 141.19'
4020+57.03 EL. 141.12'
4020+97.01 EL. 141.04'
4021+36.98 EL. 140.95'
4021+76.96 EL. 140.85'
4022+17.09 EL. 140.75'
4022+56.91 EL. 140.64'
4022+93.63 EL. 140.53'
4023+36.86 EL. 140.42'
4023+76.84 EL. 140.36'
4024+16.82 EL. 140.36'
4024+56.35 EL. 140.41'
4024+96.88 EL. 140.50'
4025+36.93 EL. 140.65'
4025+76.98 EL. 140.85'
4026+17.03 EL. 141.10'

4018 4019 4020 4021 4022 4023 4024 4025 4026

EL. 140.18' EL. 140.51' EL. 140.47' EL. 140.41' EL. 140.35' EL. 140.20' EL. 140.02' EL. 140.28' EL. 140.11' EL. 139.91' EL. 139.80' EL. 139.69' EL. 139.58' EL. 139.52' EL. 139.52' EL. 139.57' EL. 139.66' EL. 139.83' EL. 140.27' EL. 140.01'

EL. 140.09' EL. 140.02' EL. 139.93' EL. 139.85' EL. 139.76' EL. 139.56' EL. 139.46' EL. 139.35' EL. 139.23' EL. 139.12' EL. 139.01' EL. 138.95' EL. 139.00' EL. 139.10' EL. 139.12' EL. 139.19' EL. 139.22'

EL. 140.16' EL. 139.66' EL. 138.95'

204 205 206 207 208 209 210 211 212

204+00.00 EL. 139.85'
204+40.00 EL. 139.85'
204+80.00 EL. 139.80'
205+20.00 EL. 139.73'
205+60.00 EL. 139.65'
206+00.00 EL. 139.57'
206+40.00 EL. 139.48'
206+80.00 EL. 139.38'
207+20.00 EL. 139.28'
207+60.00 EL. 139.17'
208+00.00 EL. 139.06'
208+40.00 EL. 138.94'
208+76.83 EL. 138.82'
209+20.00 EL. 138.70'
209+60.00 EL. 138.64'
210+00.00 EL. 138.64'
210+40.00 EL. 138.68'
210+80.00 EL. 138.78'
211+20.00 EL. 138.79'
211+60.00 EL. 138.83'
212+00.00 EL. 138.92'

15' 36' 0.02 0.02 0.02

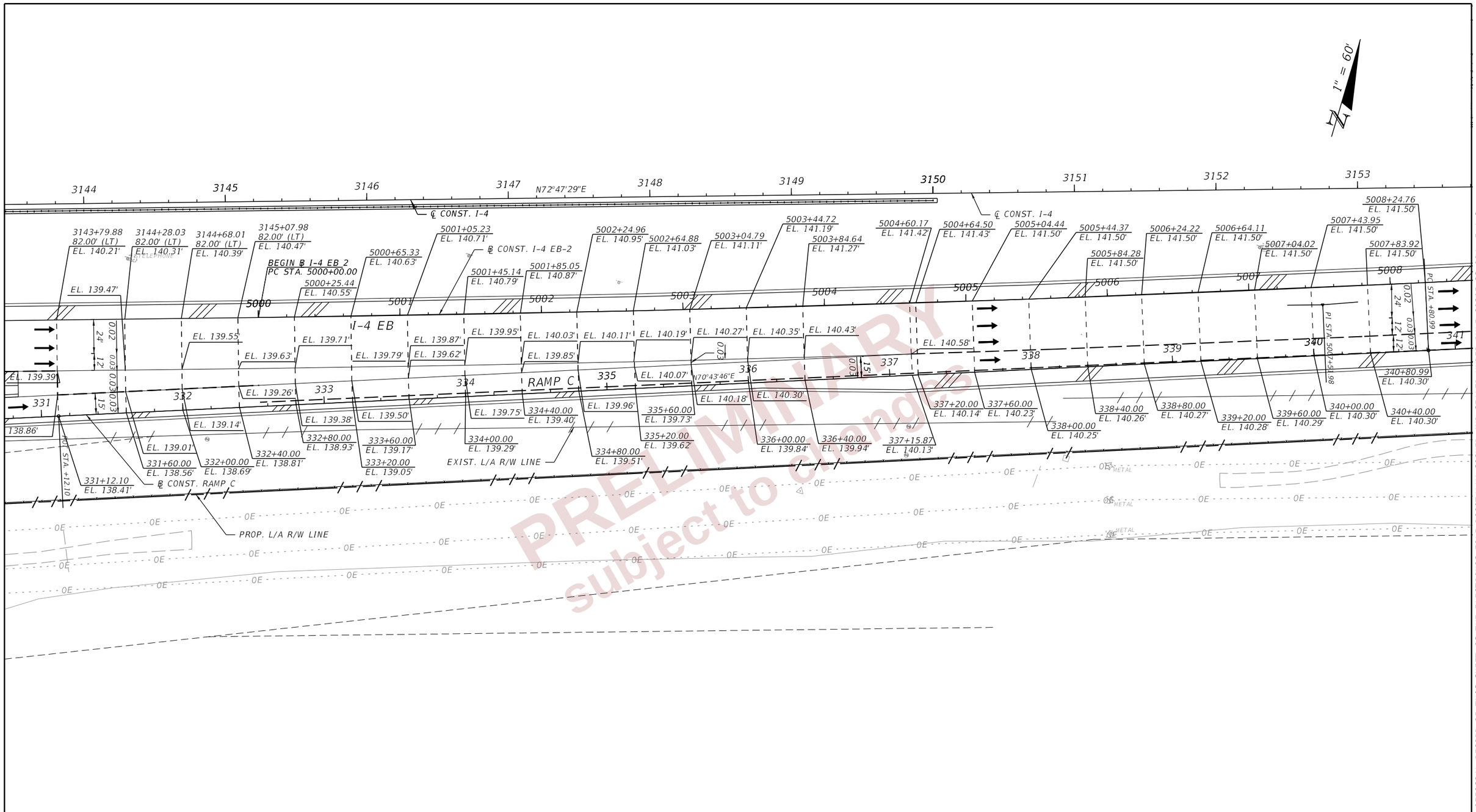

PRELIMINARY
subject to change

THE OFFICIAL RECORD OF THIS SHEET IS THE ELECTRONIC FILE DIGITALLY SIGNED AND SEALED UNDER RULE 61G15-23.004, F.A.C.

REVISIONS				ENGINEER OF RECORD	STATE OF FLORIDA DEPARTMENT OF TRANSPORTATION			RAMP TERMINAL DETAILS (04) RAMP C	SHEET NO.
DATE	DESCRIPTION	DATE	DESCRIPTION	DEBANANDA PANIGRAHI, P.E. LICENSE NUMBER 68318 H. W. LOCHNER 4300 W. CYPRESS STREET, SUITE 500 TAMPA, FLORIDA 33607	ROAD NO.	COUNTY	FINANCIAL PROJECT ID		161
					SR 400	POLK	430185-3-52-01		

JBLOUNT 2/22/2024 2:24:13 PM c:\pw_working\lochner-pw-01\dms18802\intdrd03.dgn

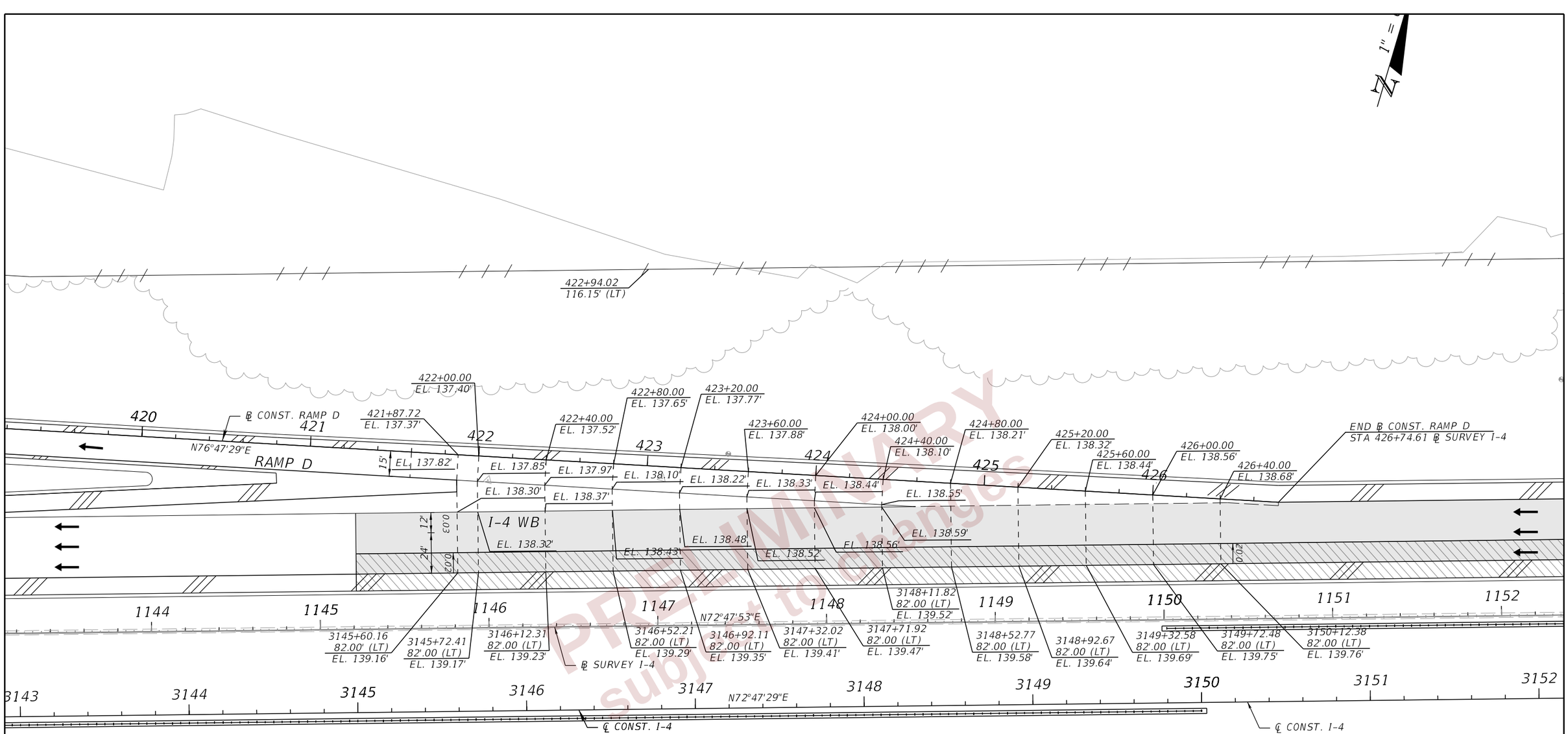

PRELIMINARY
subject to changes

REVISIONS			
DATE	DESCRIPTION	DATE	DESCRIPTION

ENGINEER OF RECORD

DEBANANDA PANIGRAHI, P.E.
LICENSE NUMBER 68318
H. W. LOCHNER
4300 W. CYPRESS STREET, SUITE 500
TAMPA, FLORIDA 33607

STATE OF FLORIDA
DEPARTMENT OF TRANSPORTATION

ROAD NO.	COUNTY	FINANCIAL PROJECT ID
SR 400	POLK	430185-3-52-01

RAMP TERMINAL DETAILS (05)
RAMP D

SHEET NO. 162

JBLOUNT 2/22/2024 2:25:56 PM c:\pw_working\lochner-pw-01\dms18802\intdrd04.dgn

THE OFFICIAL RECORD OF THIS SHEET IS THE ELECTRONIC FILE DIGITALLY SIGNED AND SEALED UNDER RULE 61G15-23.004, F.A.C.

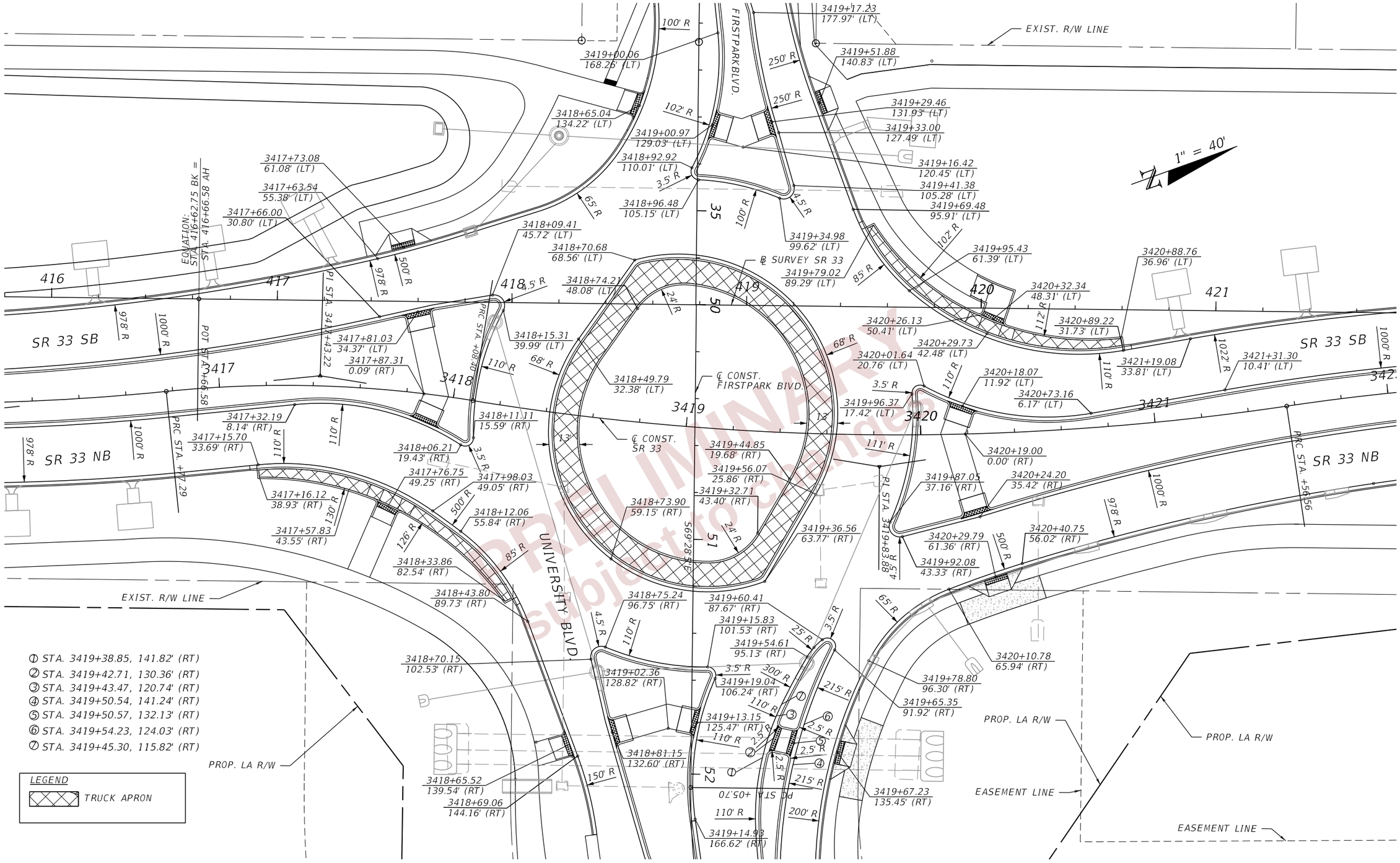

PRELIMINARY Subject to Change

REVISIONS			
DATE	DESCRIPTION	DATE	DESCRIPTION

ENGINEER OF RECORD

DEBANANDA PANIGRAHI, P.E.
LICENSE NUMBER 68318
H. W. LOCHNER
4300 W. CYPRESS STREET, SUITE 500
TAMPA, FLORIDA 33607

STATE OF FLORIDA
DEPARTMENT OF TRANSPORTATION

ROAD NO.	COUNTY	FINANCIAL PROJECT ID
SR 400	POLK	430185-3-52-01

INTERSECTION DETAILS (01) GEOMETRY

SHEET NO. 163

THE OFFICIAL RECORD OF THIS SHEET IS THE ELECTRONIC FILE DIGITALLY SIGNED AND SEALED UNDER RULE 61G15-23.004, F.A.C.

2/29/2024 5:08:04 PM BHORTON
c:\pw_working\lochner-pw-01\dms18802\intdrc08.dgn

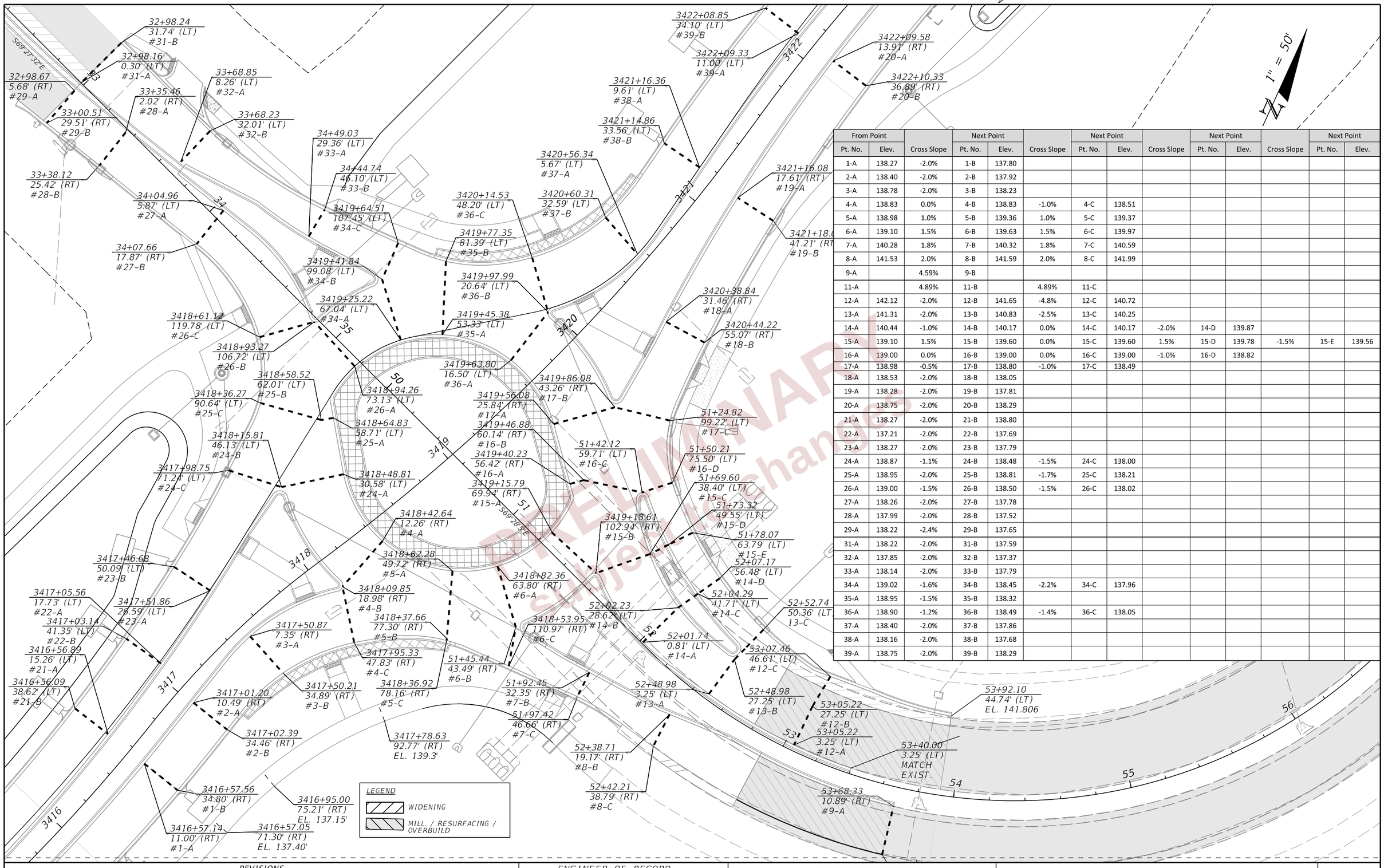

From Point			Next Point			Next Point			Next Point			Next Point	
Pt. No.	Elev.	Cross Slope	Pt. No.	Elev.	Cross Slope	Pt. No.	Elev.	Cross Slope	Pt. No.	Elev.	Cross Slope	Pt. No.	Elev.
1-A	138.27	-2.0%	1-B	137.80									
2-A	138.40	-2.0%	2-B	137.92									
3-A	138.78	-2.0%	3-B	138.23									
4-A	138.83	0.0%	4-B	138.83	-1.0%	4-C	138.51						
5-A	138.98	1.0%	5-B	139.36	1.0%	5-C	139.37						
6-A	139.10	1.5%	6-B	139.63	1.5%	6-C	139.97						
7-A	140.28	1.8%	7-B	140.32	1.8%	7-C	140.59						
8-A	141.53	2.0%	8-B	141.59	2.0%	8-C	141.99						
9-A		4.59%	9-B										
11-A		4.89%	11-B		4.89%	11-C							
12-A	142.12	-2.0%	12-B	141.65	-4.8%	12-C	140.72						
13-A	141.31	-2.0%	13-B	140.83	-2.5%	13-C	140.25						
14-A	140.44	-1.0%	14-B	140.17	0.0%	14-C	140.17	-2.0%	14-D	139.87			
15-A	139.10	1.5%	15-B	139.60	0.0%	15-C	139.60	1.5%	15-D	139.78	-1.5%	15-E	139.56
16-A	139.00	0.0%	16-B	139.00	0.0%	16-C	139.00	-1.0%	16-D	138.82			
17-A	138.98	-0.5%	17-B	138.80	-1.0%	17-C	138.49						
18-A	138.53	-2.0%	18-B	138.05									
19-A	138.28	-2.0%	19-B	137.81									
20-A	138.75	-2.0%	20-B	138.29									
21-A	138.27	-2.0%	21-B	138.80									
22-A	137.21	-2.0%	22-B	137.69									
23-A	138.27	-2.0%	23-B	137.79									
24-A	138.87	-1.1%	24-B	138.48	-1.5%	24-C	138.00						
25-A	138.95	-2.0%	25-B	138.81	-1.7%	25-C	138.21						
26-A	139.00	-1.5%	26-B	138.50	-1.5%	26-C	138.02						
27-A	138.26	-2.0%	27-B	137.78									
28-A	137.99	-2.0%	28-B	137.52									
29-A	138.22	-2.4%	29-B	137.65									
31-A	138.22	-2.0%	31-B	137.59									
32-A	137.85	-2.0%	32-B	137.37									
33-A	138.14	-2.0%	33-B	137.79									
34-A	139.02	-1.6%	34-B	138.45	-2.2%	34-C	137.96						
35-A	138.95	-1.5%	35-B	138.32									
36-A	138.90	-1.2%	36-B	138.49	-1.4%	36-C	138.05						
37-A	138.40	-2.0%	37-B	137.86									
38-A	138.16	-2.0%	38-B	137.68									
39-A	138.75	-2.0%	39-B	138.29									

PRELIMINARY
subject to change

THE OFFICIAL RECORD OF THIS SHEET IS THE ELECTRONIC FILE DIGITALLY SIGNED AND SEALED UNDER RULE 61G15-23.004, F.A.C.

REVISIONS			
DATE	DESCRIPTION	DATE	DESCRIPTION

ENGINEER OF RECORD
DEBANANDA PANIGRAHI, P.E.
LICENSE NUMBER 68318
H. W. LOCHNER
4300 W. CYPRESS STREET, SUITE 500
TAMPA, FLORIDA 33607

STATE OF FLORIDA
DEPARTMENT OF TRANSPORTATION

ROAD NO.	COUNTY	FINANCIAL PROJECT ID
SR 400	POLK	430185-3-52-01

INTERSECTION DETAILS (02) GRADING

SHEET NO. 164

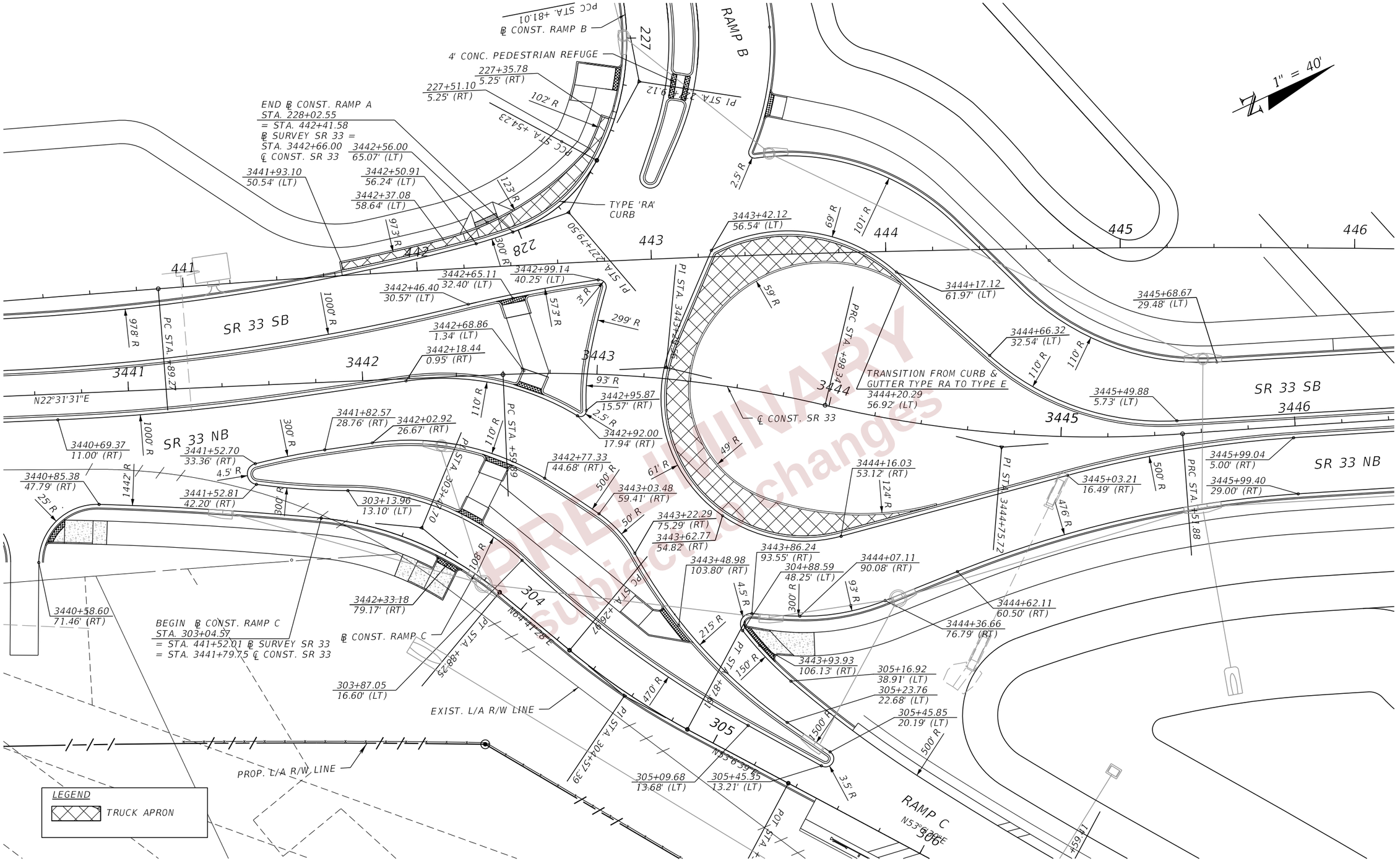

PRELIMINARY
Subject to changes

THE OFFICIAL RECORD OF THIS SHEET IS THE ELECTRONIC FILE DIGITALLY SIGNED AND SEALED UNDER RULE 61G15-23.004, F.A.C.

2/29/2024 5:08:55 PM BHORTON
c:\pw_working\lochner-pw-01\dms18802\intdrd08.dgn

REVISIONS			
DATE	DESCRIPTION	DATE	DESCRIPTION

ENGINEER OF RECORD
DEBANANDA PANIGRAHI, P.E.
LICENSE NUMBER 68318
H. W. LOCHNER
4300 W. CYPRESS STREET, SUITE 500
TAMPA, FLORIDA 33607

STATE OF FLORIDA
DEPARTMENT OF TRANSPORTATION

ROAD NO.	COUNTY	FINANCIAL PROJECT ID
SR 400	POLK	430185-3-52-01

INTERSECTION DETAILS (03)
GEOMETRY

SHEET NO.
165

From Point		Cross	Next Point		Cross	Next Point		Cross	Next Point		Cross	Next Point	
Pt. No.	Elev.	Slope	Pt. No.	Elev.	Slope	Pt. No.	Elev.	Slope	Pt. No.	Elev.	Slope	Pt. No.	Elev.
1-A	140.34	-2.00%	1-B	139.86	-2.00%	1-C	139.62						
2-A	140.14	-2.40%	2-B	139.58	-0.50%	2-C	139.52	-1.50%	2-D	139.34			
3-A	140.10	-3.00%	3-B	139.29	-0.50%	3-C	139.15	-1.50%	3-D	138.90			
4-A	140.50	-2.00%	4-B	139.86	-1.50%	4-C	139.41	-1.00%	4-D	139.07	-2.00%	4-E	138.73
5-A	140.35	-2.00%	5-B	139.61	-1.00%	5-C	139.24	-1.50%	5-D	139.01			
6-A	140.25	-2.50%	6-B	139.45	-1.70%	6-C	139.17	-0.20%	6-D	139.12	-2.00%	6-E	138.81
7-A	139.33	-2.20%	7-B	139.00	-1.20%	7-C	138.87	-2.00%	7-D	138.60			
8-A	139.13	-2.00%	8-B	138.87	-2.00%	8-C	138.48						
9-A	138.99	-2.00%	9-B	138.74	-2.00%	9-C	138.38						
10-A	138.49	-3.04%	10-B	138.13	-3.04%	10-C	137.70						
11-A	140.18	-2.00%	11-B	139.54									
12-A	140.18	0.00%	12-B	140.18	-1.50%	12-C	139.75						
13-A	140.33	-1.50%	13-B	139.96									
14-A	140.07	-2.00%	14-B	139.59									
15-A	140.45	-2.00%	15-B	139.97									
21-A	140.34	-2.00%	21-B	139.89									
22-A	139.81	-2.30%	22-B	139.25									
23-A	140.40	-1.50%	23-B	139.92	-2.00%	23-C	139.36	-2.50%	23-D	139.04			
24-A	140.30	-2.10%	24-B	139.55	-2.50%	24-C	139.33	-2.00%	24-D	138.94			
25-A	140.20	-1.70%	25-B	139.66	-2.00%	25-C	139.06	0.50%	25-D	139.11	-2.00%	25-E	138.75
26-A	139.34	-2.00%	26-B	138.73	-1.00%	26-C	138.60	-2.00%	26-D	138.24			
27-A	138.95	-2.00%	27-B	138.46	-2.00%	27-C	138.01						
31-A	140.20	-1.00%	31-B	139.88									
32-A	140.01	-1.50%	32-B	139.56									
33-A	139.98	-2.50%	33-B	139.38									
34-A	140.45	-2.00%	34-B	139.97									

1" = 50'

RAMP B 226

226+37.70
22.60' (LT)
#27-B

226+33.50
46.18' (LT)
#27-A

226+37.70
0.00' (RT)
#27-C

226+97.64
18.00' (LT)
#26-C

226+97.64
30.67' (LT)
#26-B

226+97.64
0.00' (RT)
#26-D

226+96.55
60.98' (LT)
#26-A

227+34.62
18.00' (LT)
#25-D

227+34.62
28.65' (LT)
#25-C

227+34.62
0.00' (RT)
#25-E

3443+50.22
96.72' (LT)
#25-B

227+52.14
19.37' (LT)
#24-C

3443+59.13
66.44' (LT)
#25-A

227+52.14
0.00' (RT)
#24-D

3443+99.21
101.15' (LT)
#31-B

227+66.84
0.00' (LT)
#23-D

3442+50.83
56.22' (LT)
22-B

3443+00.05
72.79' (LT)
#23-C

3443+94.19
69.63' (LT)
#31-A

3442+55.58
32.28' (LT)
22-A

3443+19.88
81.55' (LT)
#24-B

3443+08.75
46.44' (LT)
#23-B

3443+42.12
56.54' (LT)
#24-A

3445+62.74
29.72' (LT)
#33-B

3446+28.95
29.03' (LT)
#34-B

3445+02.38
47.19' (LT)
#32-B

3440+66.30
33.38' (LT)
#21-B

3442+33.56
0.44' (RT)
#3-A

3443+29.14
15.03' (RT)
#4-A

3443+36.68
36.40' (LT)
#23-A

3446+28.88
5.03' (LT)
#34-A

3440+66.92
11.15' (LT)
#21-A

3442+96.45
20.52' (RT)
#4-B

3444+87.53
20.32' (LT)
#32-A

3445+62.43
5.56' (LT)
#33-A

3446+28.88
5.00' (RT)
#15-A

3445+56.13
6.71' (RT)
#14-A

3446+28.88
29.00' (RT)
#15-B

3445+58.05
30.66' (RT)
#14-B

3442+32.60
27.65' (RT)
#3-B

3443+48.64
46.46' (RT)
#5-A

3443+72.29
58.00' (RT)
#6-A

3444+43.05
39.45' (RT)
#12-B

3444+86.32
21.98' (RT)
#13-A

3441+46.63
8.01' (RT)
#2-A

3443+94.73
59.79' (RT)
#11-A

3440+67.50
11.00' (RT)
#1-A

3441+48.43
31.27' (RT)
#2-B

3443+13.77
66.49' (RT)
#5-B

3444+93.37
45.22' (RT)
#13-B

3440+67.45
34.58' (RT)
#1-B

303+04.57
15.45' (LT)
#2-C

3442+78.90
45.58' (RT)
#4-C

3443+61.69
88.70' (RT)
#6-B

3443+98.47
92.03' (RT)
#11-B

3444+53.10
66.00' (RT)
#12-C

3440+66.74
46.56' (RT)
#1-C

303+04.57
3.71' (LT)
#2-D

303+43.34
16.80' (LT)
#3-C

304+56.90
38.81' (LT)
#6-C

3444+09.26
118.25' (RT)
#7-A

303+80.55
17.07' (LT)
#4-D

303+43.34
0.00' (LT)
#3-D

305+51.38
32.51' (LT)
#8-A

303+80.55
0.00' (RT)
#4-E

305+49.48
19.81' (LT)
#8-B

304+54.66
15.70' (LT)
#6-D

305+14.16
24.05' (LT)
#7-B

306+24.28
26.05' (LT)
#10-A

304+11.26
15.63' (LT)
#5-C

305+68.28
30.28' (LT)
#9-A

305+13.36
13.63' (LT)
#7-C

306+23.65
14.07' (LT)
#10-B

304+11.26
0.00' (LT)
#5-D

304+54.66
0.00' (RT)
#6-E

305+66.88
18.13' (LT)
#9-B

305+13.36
0.00' (RT)
#7-D

305+49.48
0.00' (LT)
#8-C

306+23.65
0.00' (RT)
#10-C

305+66.41
0.00' (RT)
#9-C

SR 33

3440 3441 3442 3443 3444 3445 3446 3447

N22°31'31"E

N64°41'08"E

N53°6'39"E

N51°38'08"E

304 305 306

RAMP C

PRELIMINARY
Subject to changes

THE OFFICIAL RECORD OF THIS SHEET IS THE ELECTRONIC FILE DIGITALLY SIGNED AND SEALED UNDER RULE 61G15-23.004, F.A.C.

REVISIONS			
DATE	DESCRIPTION	DATE	DESCRIPTION

ENGINEER OF RECORD
DEBANANDA PANIGRAHI, P.E.
LICENSE NUMBER 68318
H. W. LOCHNER
4300 W. CYPRESS STREET, SUITE 500
TAMPA, FLORIDA 33607

STATE OF FLORIDA
DEPARTMENT OF TRANSPORTATION

ROAD NO.	COUNTY	FINANCIAL PROJECT ID
SR 400	POLK	430185-3-52-01

INTERSECTION DETAILS (04) GRADING

SHEET NO. 166

BHORTON 2/29/2024 5:09:29 PM c:\pw_working\lochner-pw-01\dms18802\intdrd05.dgn

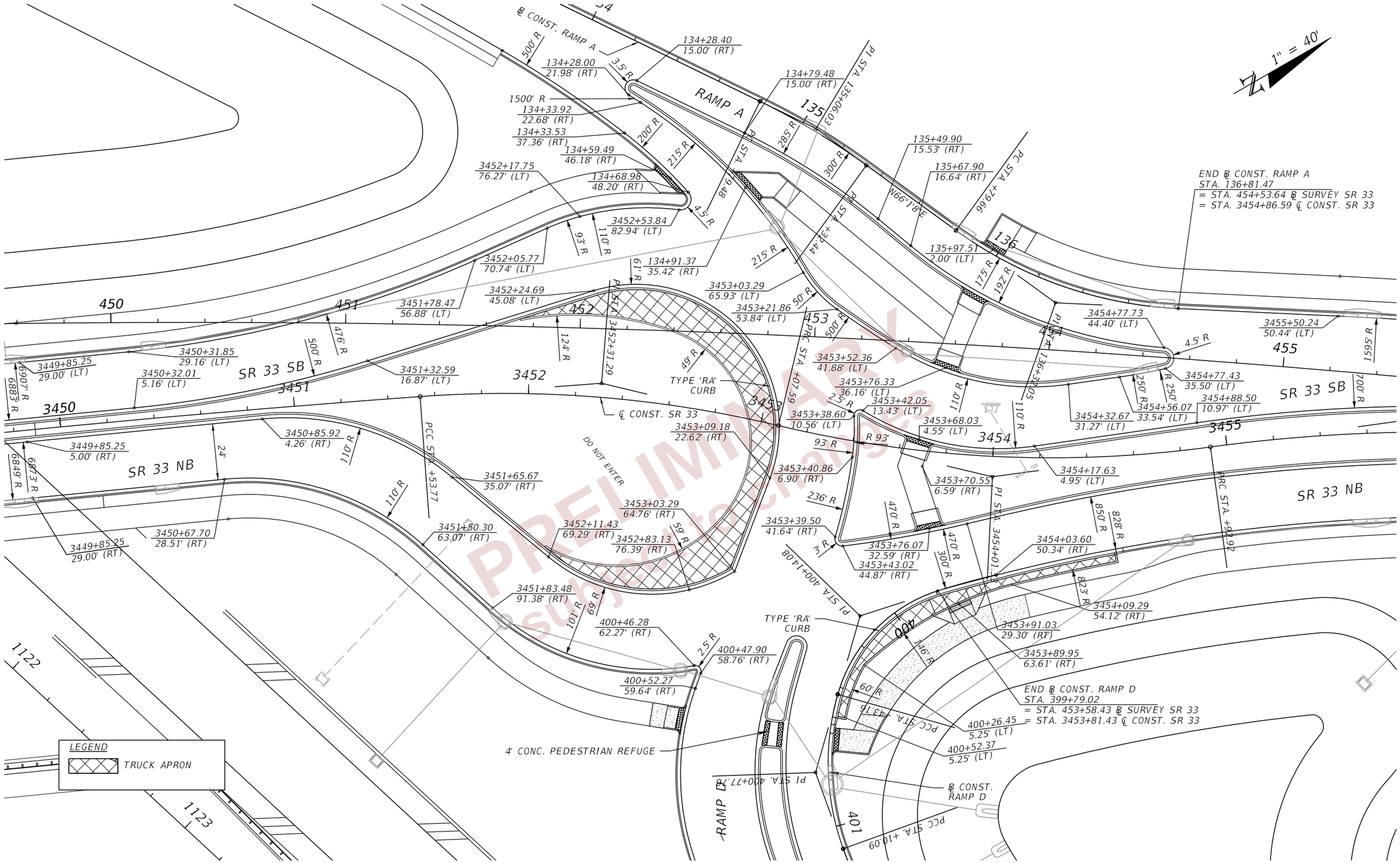

REVISIONS			
DATE	DESCRIPTION	DATE	DESCRIPTION

ENGINEER OF RECORD

DEBANANDA PANIGRAHI, P.E.
LICENSE NUMBER 68318
H. W. LOCHNER
4300 W. CYPRESS STREET, SUITE 500
TAMPA, FLORIDA 33607

STATE OF FLORIDA
DEPARTMENT OF TRANSPORTATION

ROAD NO.	COUNTY	FINANCIAL PROJECT ID
SR 400	POLK	430185-3-52-01

INTERSECTION DETAILS (05)
GEOMETRY

SHEET NO. 167

THE OFFICIAL RECORD OF THIS SHEET IS THE ELECTRONIC FILE DIGITALLY SIGNED AND SEALED UNDER RULE 61G15-23.004, F.A.C.

2/29/2024 5:09:46 PM BHORTON
C:\pw_working\lochner-pw-01\dms18802\vtdr0108.dgn

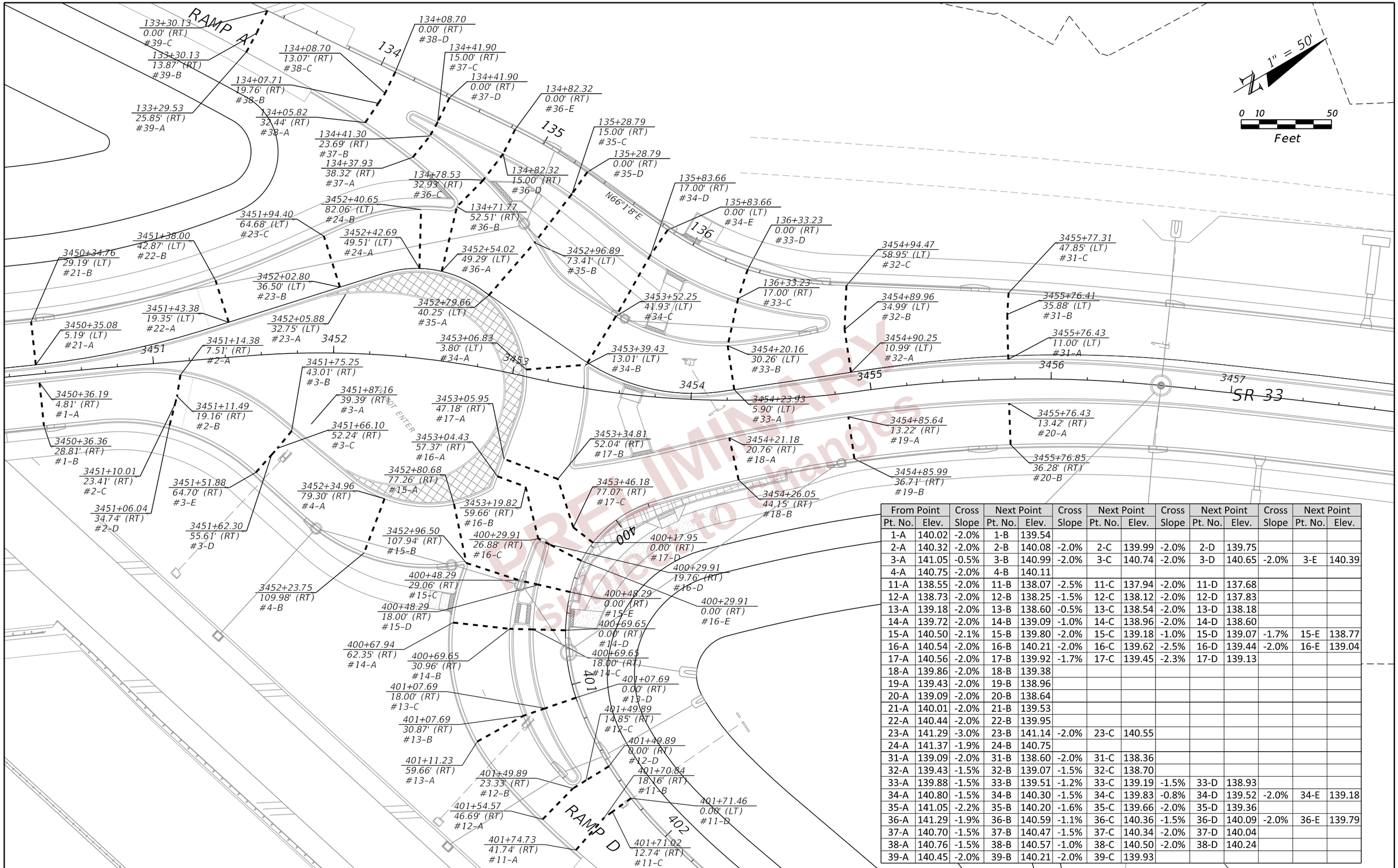

From Point		Cross	Next Point		Cross	Next Point		Cross	Next Point		Cross	Next Point	
Pt. No.	Elev.	Slope	Pt. No.	Elev.	Slope	Pt. No.	Elev.	Slope	Pt. No.	Elev.	Slope	Pt. No.	Elev.
1-A	140.02	-2.0%	1-B	139.54									
2-A	140.32	-2.0%	2-B	140.08	-2.0%	2-C	139.99	-2.0%	2-D	139.75			
3-A	141.05	-0.5%	3-B	140.99	-2.0%	3-C	140.74	-2.0%	3-D	140.65	-2.0%	3-E	140.39
4-A	140.75	-2.0%	4-B	140.11									
11-A	138.55	-2.0%	11-B	138.07	-2.5%	11-C	137.94	-2.0%	11-D	137.68			
12-A	138.73	-2.0%	12-B	138.25	-1.5%	12-C	138.12	-2.0%	12-D	137.83			
13-A	139.18	-2.0%	13-B	138.60	-0.5%	13-C	138.54	-2.0%	13-D	138.18			
14-A	139.72	-2.0%	14-B	139.09	-1.0%	14-C	138.96	-2.0%	14-D	138.60			
15-A	140.50	-2.1%	15-B	139.80	-2.0%	15-C	139.18	-1.0%	15-D	139.07	-1.7%	15-E	138.77
16-A	140.54	-2.0%	16-B	140.21	-2.0%	16-C	139.62	-2.5%	16-D	139.44	-2.0%	16-E	139.04
17-A	140.56	-2.0%	17-B	139.92	-1.7%	17-C	139.45	-2.3%	17-D	139.13			
18-A	139.86	-2.0%	18-B	139.38									
19-A	139.43	-2.0%	19-B	138.96									
20-A	139.09	-2.0%	20-B	138.64									
21-A	140.01	-2.0%	21-B	139.53									
22-A	140.44	-2.0%	22-B	139.95									
23-A	141.29	-3.0%	23-B	141.14	-2.0%	23-C	140.55						
24-A	141.37	-1.9%	24-B	140.75									
31-A	139.09	-2.0%	31-B	138.60	-2.0%	31-C	138.36						
32-A	139.43	-1.5%	32-B	139.07	-1.5%	32-C	138.70						
33-A	139.88	-1.5%	33-B	139.51	-1.2%	33-C	139.19	-1.5%	33-D	138.93			
34-A	140.80	-1.5%	34-B	140.30	-1.5%	34-C	139.83	-0.8%	34-D	139.52	-2.0%	34-E	139.18
35-A	141.05	-2.2%	35-B	140.20	-1.6%	35-C	139.66	-2.0%	35-D	139.36			
36-A	141.29	-1.9%	36-B	140.59	-1.1%	36-C	140.36	-1.5%	36-D	140.09	-2.0%	36-E	139.79
37-A	140.70	-1.5%	37-B	140.47	-1.5%	37-C	140.34	-2.0%	37-D	140.04			
38-A	140.76	-1.5%	38-B	140.57	-1.0%	38-C	140.50	-2.0%	38-D	140.24			
39-A	140.45	-2.0%	39-B	140.21	-2.0%	39-C	139.93						

PRELIMINARY
Subject to change

THE OFFICIAL RECORD OF THIS SHEET IS THE ELECTRONIC FILE DIGITALLY SIGNED AND SEALED UNDER RULE 61G15-23.004, F.A.C.

REVISIONS			
DATE	DESCRIPTION	DATE	DESCRIPTION

ENGINEER OF RECORD
DEBANANDA PANIGRAHI, P.E.
LICENSE NUMBER 68318
H. W. LOCHNER
4300 W. CYPRESS STREET, SUITE 500
TAMPA, FLORIDA 33607

STATE OF FLORIDA
DEPARTMENT OF TRANSPORTATION

ROAD NO.	COUNTY	FINANCIAL PROJECT ID
SR 400	POLK	430185-3-52-01

INTERSECTION DETAILS (06) GRADING

SHEET NO. 168

BHORTON 2/29/2024 5:10:18 PM c:\pw_working\lochner-pw-01\dms18802\intdrd06.dgn

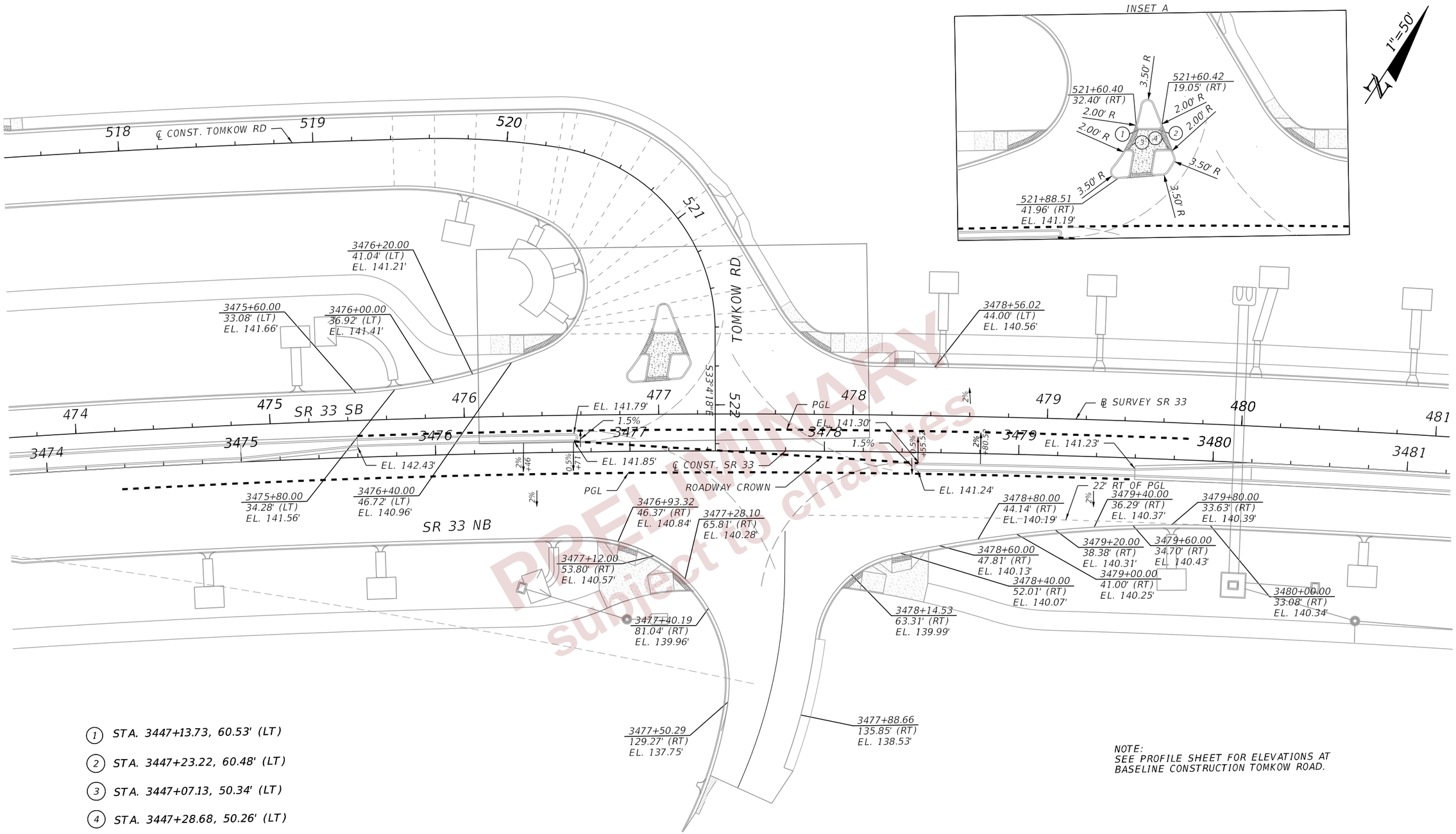

PRELIMINARY
subject to change

THE OFFICIAL RECORD OF THIS SHEET IS THE ELECTRONIC FILE DIGITALLY SIGNED AND SEALED UNDER RULE 61G15-23.004, F.A.C.

REVISIONS				ENGINEER OF RECORD	STATE OF FLORIDA DEPARTMENT OF TRANSPORTATION			INTERSECTION DETAIL (07) GEOMETRY & GRADING	SHEET NO.
DATE	DESCRIPTION	DATE	DESCRIPTION	DEBANANDA PANIGRAHI, P.E. LICENSE NUMBER 68318 H. W. LOCHNER 4300 W. CYPRESS STREET, SUITE 500 TAMPA, FLORIDA 33607	ROAD NO.	COUNTY	FINANCIAL PROJECT ID		169
					SR 400	POLK	430185-3-52-01		

2/29/2024 5:10:37 PM BHORTON
c:\pw_working\lochner-pw-01\dms18802\INTDRD09.dgn

SR 33 AT FIRSTPARK BLVD.

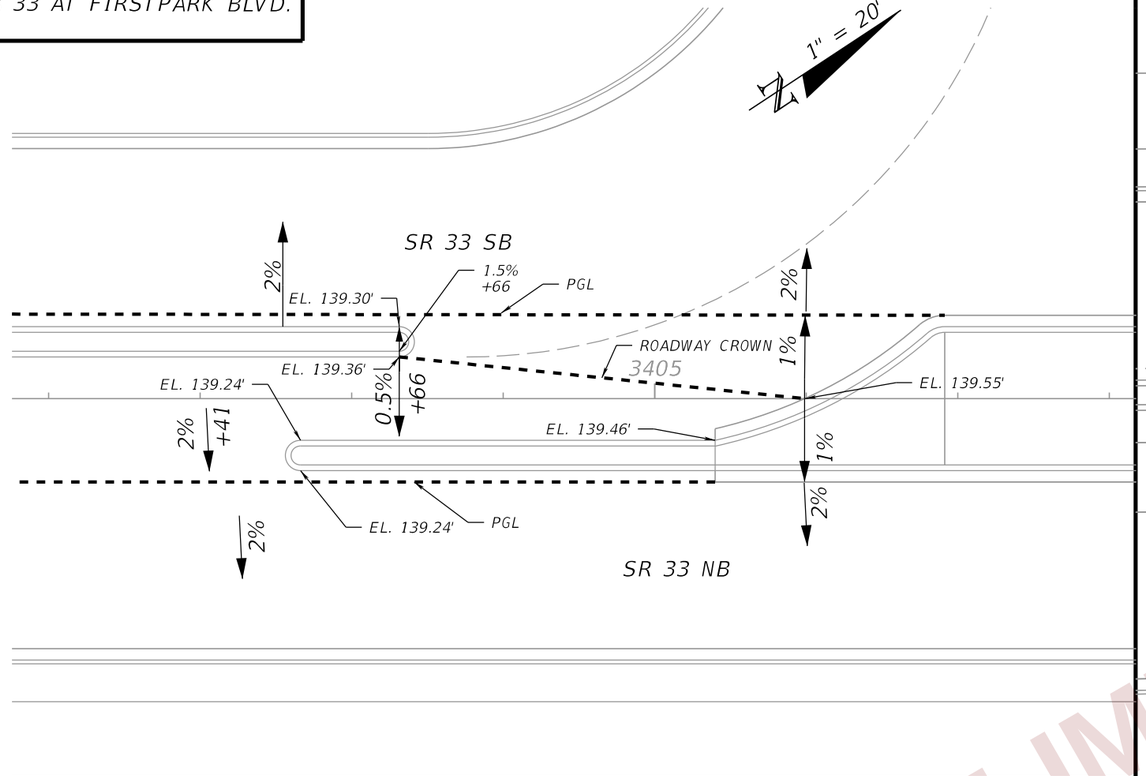

SR 33 AT GOURMENT FOODS INTERNATIONAL LAKELAND

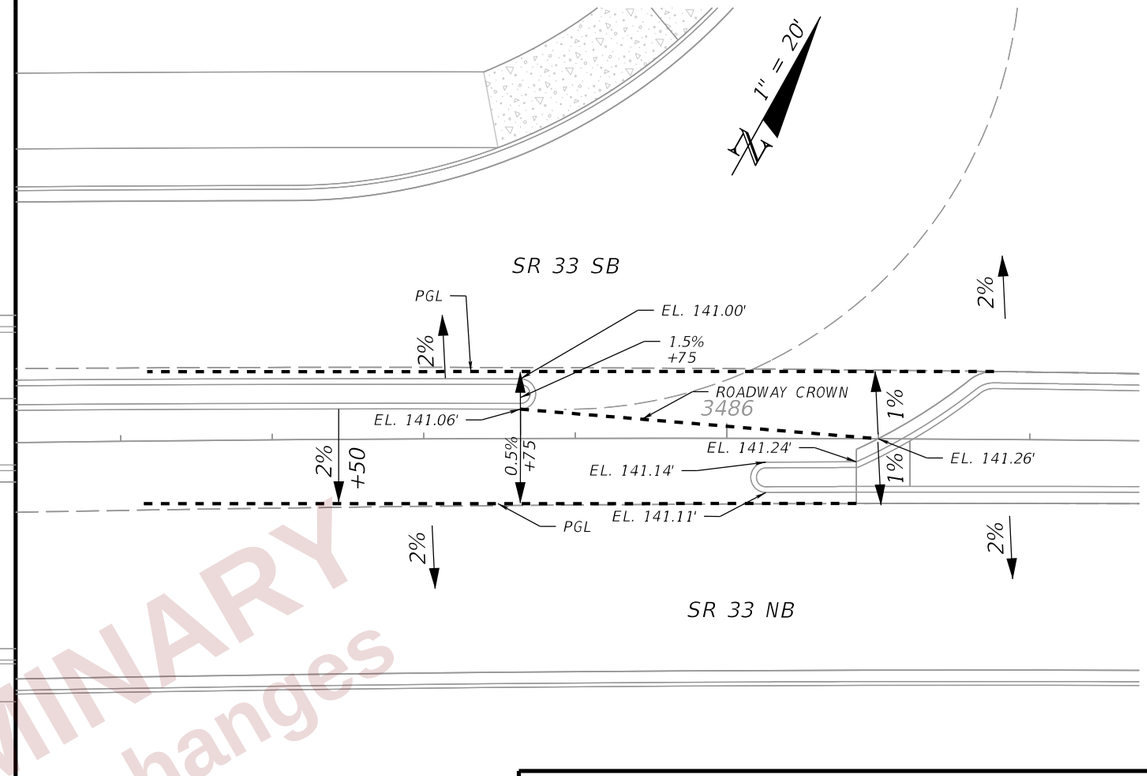

SR 33 AT PARK AND RIDE

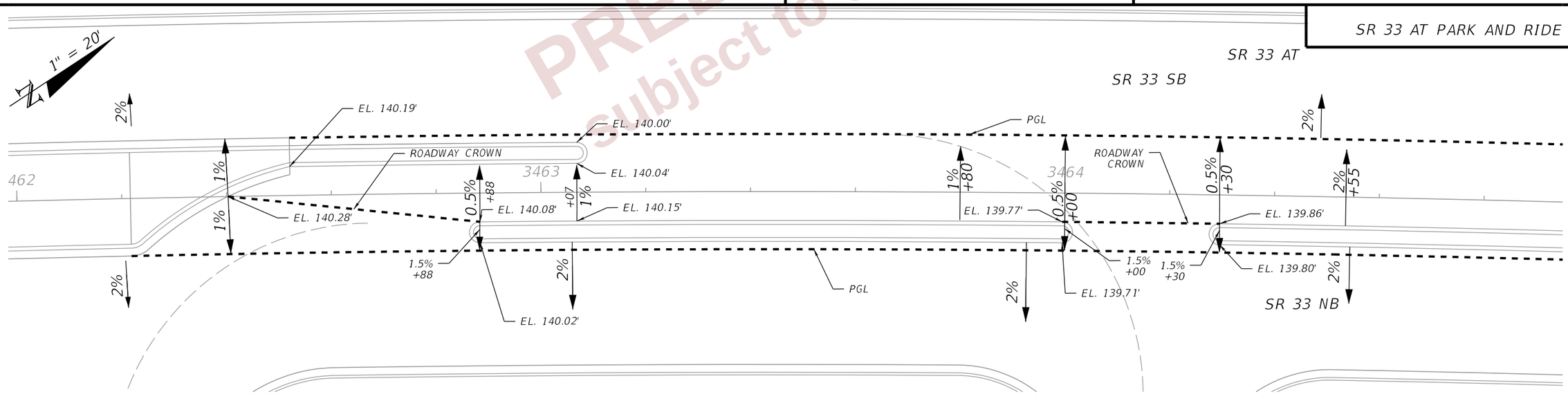

PRELIMINARY
subject to changes

REVISIONS				ENGINEER OF RECORD	STATE OF FLORIDA DEPARTMENT OF TRANSPORTATION			INTERSECTION DEATILS (08) SR33 MEDIAN OPENING GRADING	SHEET NO.
DATE	DESCRIPTION	DATE	DESCRIPTION	DEBANANDA PANIGRAHI, P.E. LICENSE NUMBER 68318 H. W. LOCHNER 4300 W. CYPRESS STREET, SUITE 500 TAMPA, FLORIDA 33607	ROAD NO.	COUNTY	FINANCIAL PROJECT ID		170
					SR 400	POLK	430185-3-52-01		

THE OFFICIAL RECORD OF THIS SHEET IS THE ELECTRONIC FILE DIGITALLY SIGNED AND SEALED UNDER RULE 61G15-23.004, F.A.C.

2/29/2024 5:10:54 PM BHORTON
c:\pw_working\lochner-pw-01\dms18802\INTDRD11.dgn

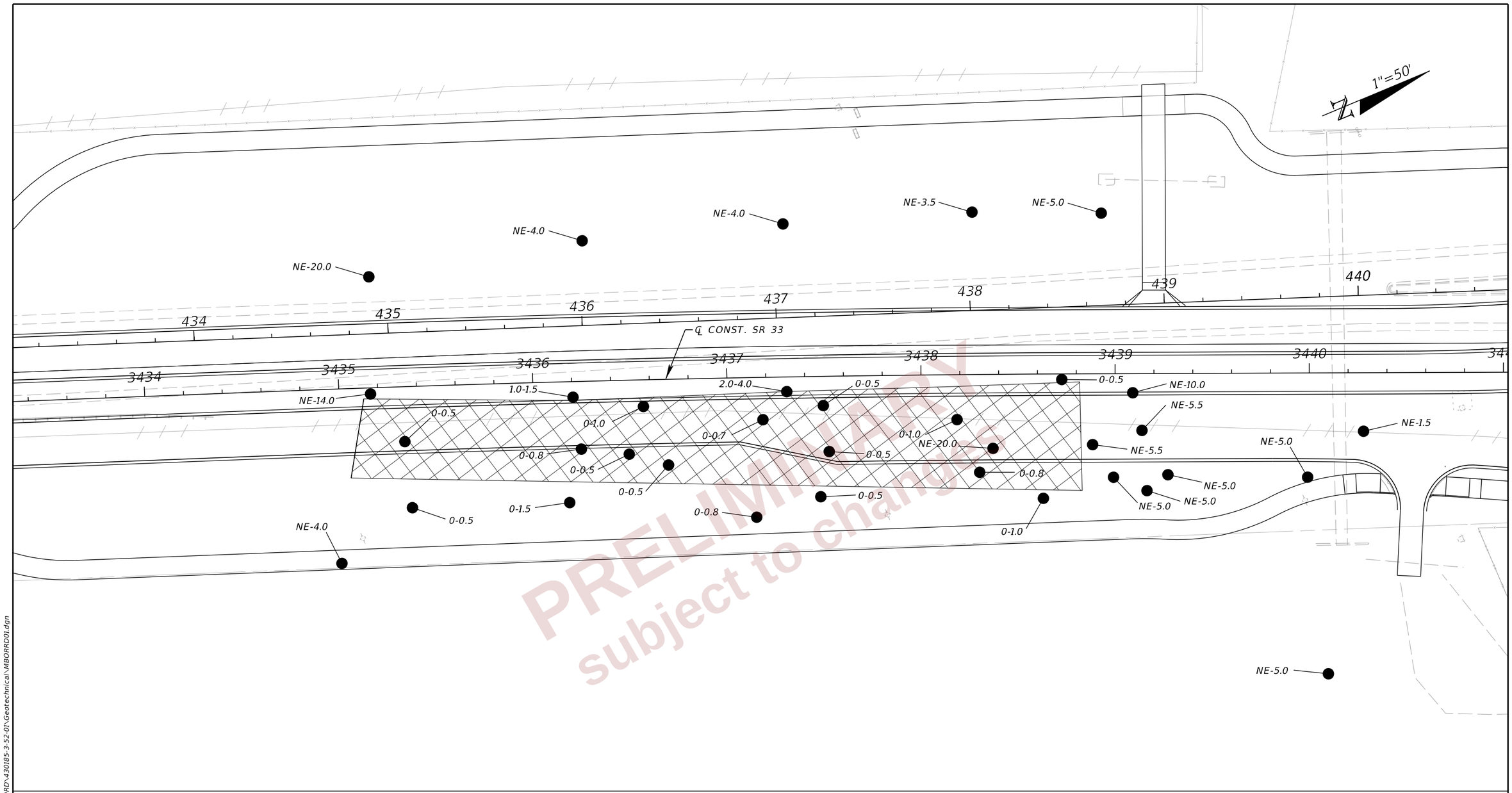

PRELIMINARY
subject to change

LEGEND

1.0-2.0 — ORGANIC MATERIAL ENCOUNTERED WITHIN A DEPTH OF 1.0 TO 2.0 FEET BELOW EXISTING GRADE

NE-5.0 — ORGANIC MATERIAL NOT ENCOUNTERED TO A DEPTH OF 5.0 FEET BELOW EXISTING GRADE

APPROXIMATE LIMITS OF ORGANIC MATERIAL REMOVAL

SR 33

REVISIONS			
DATE	DESCRIPTION	DATE	DESCRIPTION

LAWRENCE P. MOORE, P.E.
P.E. LICENSE NUMBER 47673
TIERRA, INC.
7351 TEMPLE TERRACE HIGHWAY
TAMPA, FLORIDA 33637

STATE OF FLORIDA
DEPARTMENT OF TRANSPORTATION

ROAD NO.	COUNTY	FINANCIAL PROJECT ID
SR 400	POLK	430185-3-52-01

ORGANIC MATERIAL DELINEATION PLAN (1)

SHEET NO. 171

THE OFFICIAL RECORD OF THIS SHEET IS THE ELECTRONIC FILE DIGITALLY SIGNED AND SEALED UNDER RULE 61G15-23.004, F.A.C.

2/16/2023 12:05:34 PM bsawaska
J:\65II\2014 Files\65II-14-074 SR 33 at I-4\430185320\ORD\430185-3-52-01\Geotechnical\MBORR001.dgn

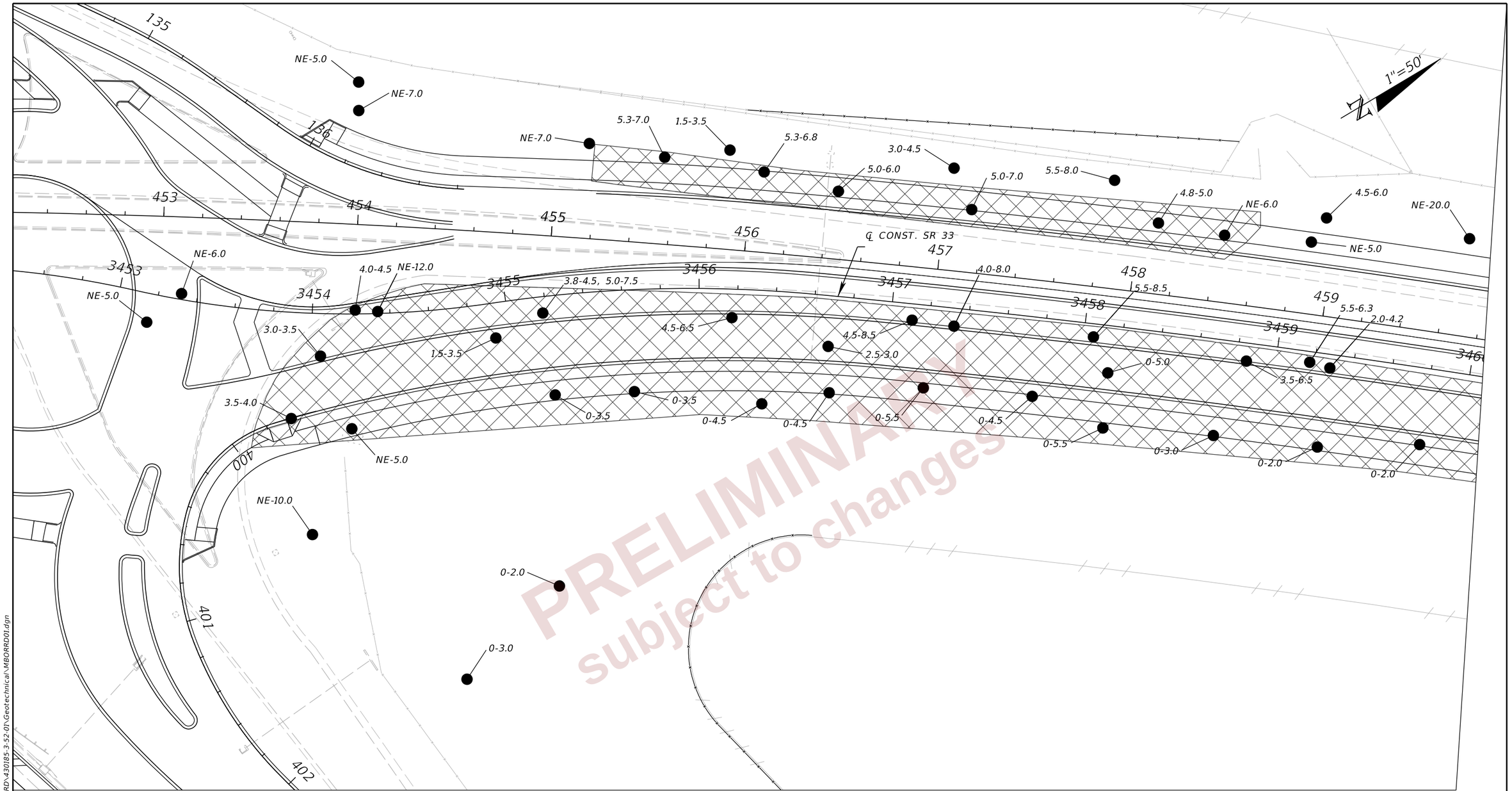

PRELIMINARY
subject to changes

LEGEND

1.0-2.0	ORGANIC MATERIAL ENCOUNTERED WITHIN A DEPTH OF 1.0 TO 2.0 FEET BELOW EXISTING GRADE
NE-5.0	ORGANIC MATERIAL NOT ENCOUNTERED TO A DEPTH OF 5.0 FEET BELOW EXISTING GRADE
	APPROXIMATE LIMITS OF ORGANIC MATERIAL REMOVAL

SR 33/RAMP A/RAMP D

REVISIONS			
DATE	DESCRIPTION	DATE	DESCRIPTION

LAWRENCE P. MOORE, P.E.
P.E. LICENSE NUMBER 47673
TIERRA, INC.
7351 TEMPLE TERRACE HIGHWAY
TAMPA, FLORIDA 33637

STATE OF FLORIDA
DEPARTMENT OF TRANSPORTATION

ROAD NO.	COUNTY	FINANCIAL PROJECT ID
SR 400	POLK	430185-3-52-01

ORGANIC MATERIAL DELINEATION PLAN (2)

SHEET NO. 172

THE OFFICIAL RECORD OF THIS SHEET IS THE ELECTRONIC FILE DIGITALLY SIGNED AND SEALED UNDER RULE 61G15-23.004, F.A.C.

2/16/2023 12:05:34 PM bsawaska
J:\65II\2014 Files\65II-14-074 SR 33 at I-4\430185352O1\ORD\430185-3-52-01\Geotechnical\MBORRD01.dgn

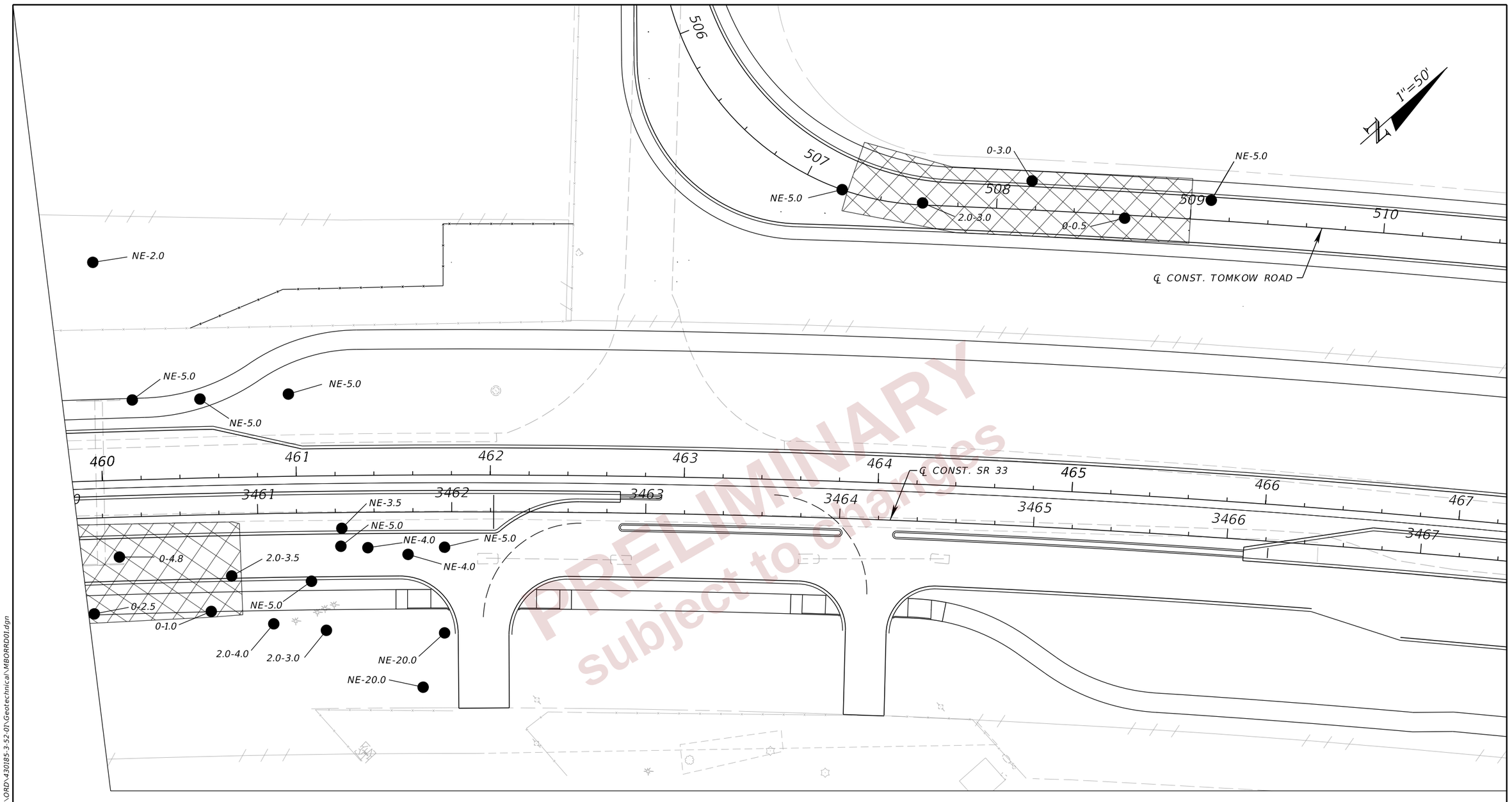

PRELIMINARY
subject to changes

LEGEND

1.0-2.0	ORGANIC MATERIAL ENCOUNTERED WITHIN A DEPTH OF 1.0 TO 2.0 FEET BELOW EXISTING GRADE
NE-5.0	ORGANIC MATERIAL NOT ENCOUNTERED TO A DEPTH OF 5.0 FEET BELOW EXISTING GRADE
	APPROXIMATE LIMITS OF ORGANIC MATERIAL REMOVAL

SR 33/TOMKOW RD

REVISIONS			
DATE	DESCRIPTION	DATE	DESCRIPTION

LAWRENCE P. MOORE, P.E.
P.E. LICENSE NUMBER 47673
TIERRA, INC.
7351 TEMPLE TERRACE HIGHWAY
TAMPA, FLORIDA 33637

STATE OF FLORIDA
DEPARTMENT OF TRANSPORTATION

ROAD NO.	COUNTY	FINANCIAL PROJECT ID
SR 400	POLK	430185-3-52-01

ORGANIC MATERIAL DELINEATION PLAN (3)

SHEET NO. 173

THE OFFICIAL RECORD OF THIS SHEET IS THE ELECTRONIC FILE DIGITALLY SIGNED AND SEALED UNDER RULE 61G15-23.004, F.A.C.

2/16/2023 12:05:35 PM bswaska
J:\65II\2014 Files\65II-14-074 SR 33 at I-4\430185320 1\ORD\430185-3-52-01\Geotechnical\MBORRD01.dgn

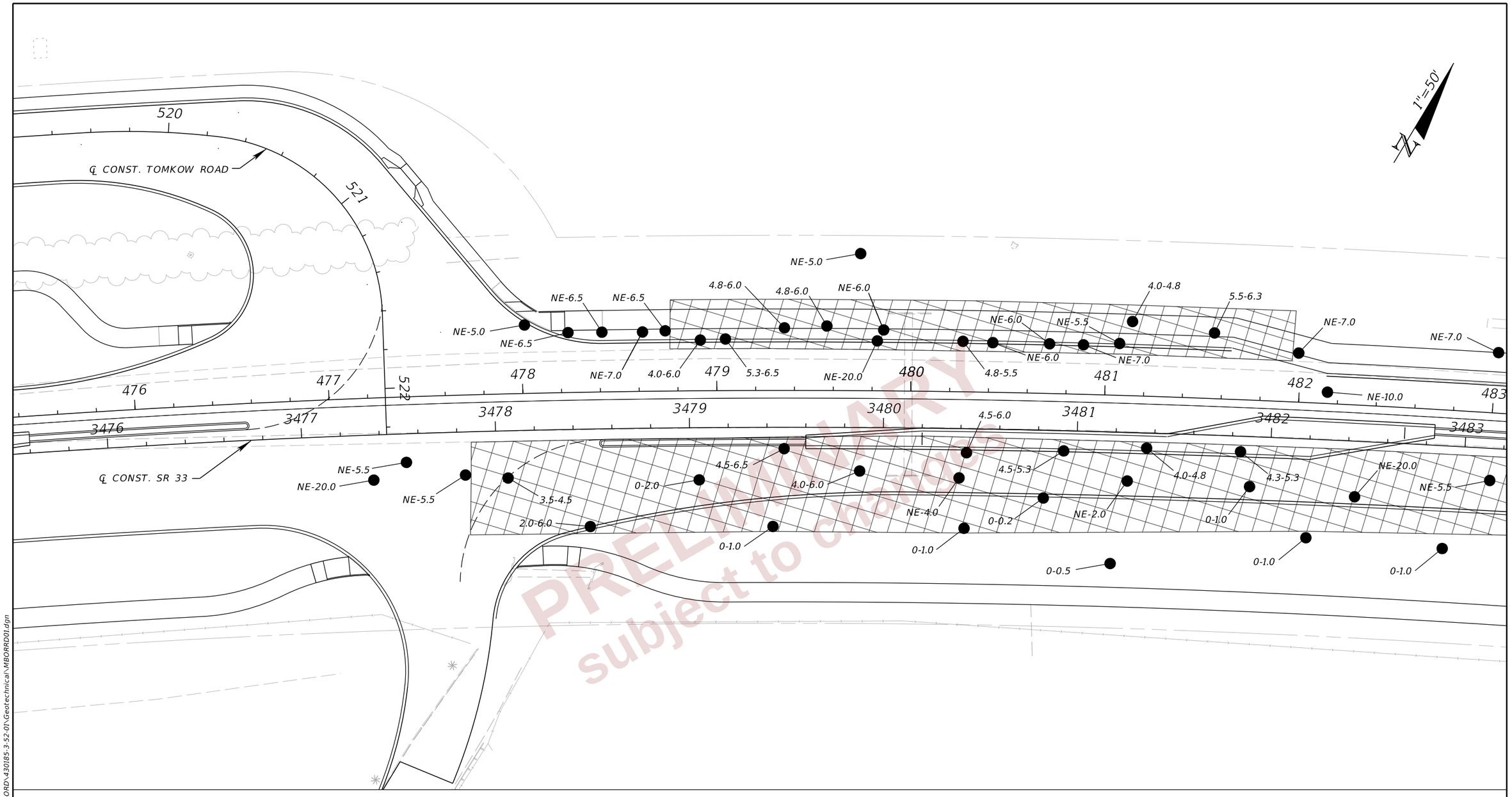

LEGEND

1.0-2.0	ORGANIC MATERIAL ENCOUNTERED WITHIN A DEPTH OF 1.0 TO 2.0 FEET BELOW EXISTING GRADE
NE-5.0	ORGANIC MATERIAL NOT ENCOUNTERED TO A DEPTH OF 5.0 FEET BELOW EXISTING GRADE
	APPROXIMATE LIMITS OF ORGANIC MATERIAL REMOVAL

SR 33/TOMKOW RD

REVISIONS			
DATE	DESCRIPTION	DATE	DESCRIPTION

LAWRENCE P. MOORE, P.E.
P.E. LICENSE NUMBER 47673
TIERRA, INC.
7351 TEMPLE TERRACE HIGHWAY
TAMPA, FLORIDA 33637

STATE OF FLORIDA
DEPARTMENT OF TRANSPORTATION

ROAD NO.	COUNTY	FINANCIAL PROJECT ID
SR 400	POLK	430185-3-52-01

ORGANIC MATERIAL DELINEATION PLAN (4)

SHEET NO. 174

THE OFFICIAL RECORD OF THIS SHEET IS THE ELECTRONIC FILE DIGITALLY SIGNED AND SEALED UNDER RULE 61G15-23.004, F.A.C.

2/16/2023 12:05:36 PM bsawaska
J:\65II\2014 Files\65II-14-074 SR 33 at I-4\430185320\ORD\430185-3-52-01\Geotechnical\MBORRD01.dgn

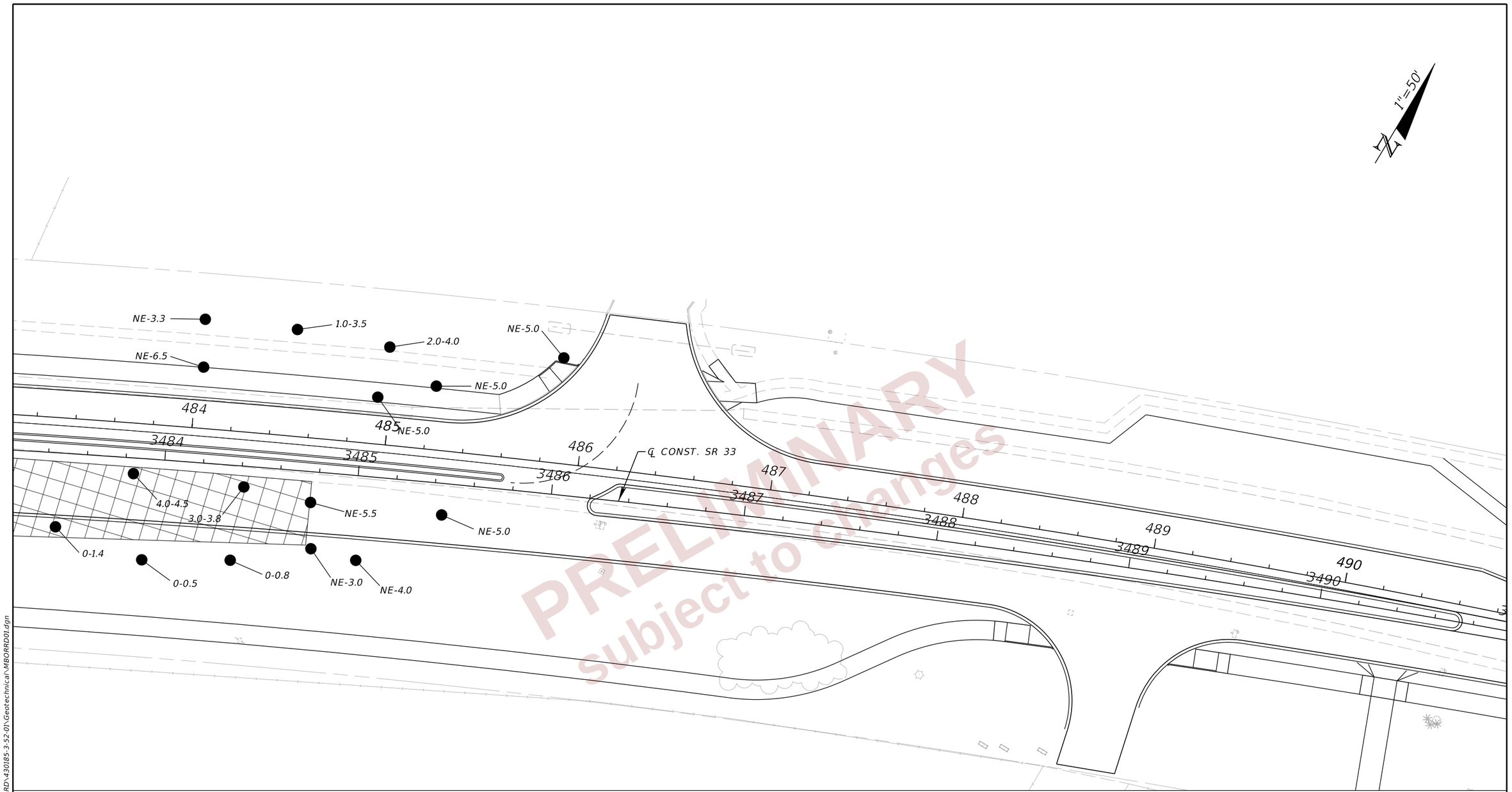

PRELIMINARY
subject to changes

LEGEND

1.0-2.0 ●	ORGANIC MATERIAL ENCOUNTERED WITHIN A DEPTH OF 1.0 TO 2.0 FEET BELOW EXISTING GRADE
NE-5.0 ●	ORGANIC MATERIAL NOT ENCOUNTERED TO A DEPTH OF 5.0 FEET BELOW EXISTING GRADE
▨	APPROXIMATE LIMITS OF ORGANIC MATERIAL REMOVAL

SR 33

REVISIONS			
DATE	DESCRIPTION	DATE	DESCRIPTION

LAWRENCE P. MOORE, P.E.
P.E. LICENSE NUMBER 47673
TIERRA, INC.
7351 TEMPLE TERRACE HIGHWAY
TAMPA, FLORIDA 33637

STATE OF FLORIDA
DEPARTMENT OF TRANSPORTATION

ROAD NO.	COUNTY	FINANCIAL PROJECT ID
SR 400	POLK	430185-3-52-01

ORGANIC MATERIAL DELINEATION PLAN (5)

SHEET NO. 175

THE OFFICIAL RECORD OF THIS SHEET IS THE ELECTRONIC FILE DIGITALLY SIGNED AND SEALED UNDER RULE 61G15-23.004, F.A.C.

2/16/2023 12:05:36 PM bsawaska
J:\65II\2014 Files\65II-14-074 SR 33 at I-4\430185320I\ORD\430185-3-52-01\Geotechnical\MBORRD01.dgn

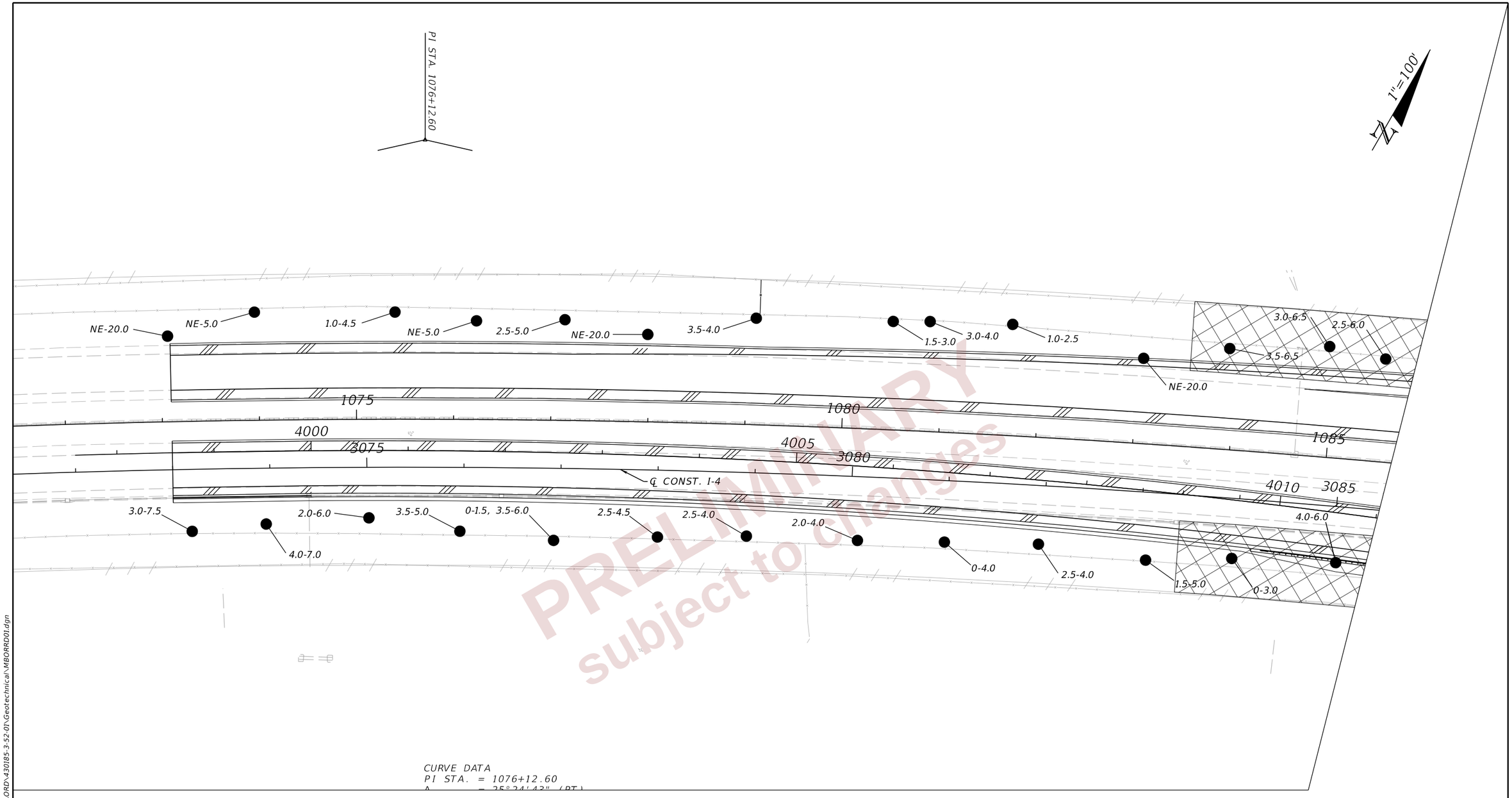

PRELIMINARY
subject to changes

LEGEND

1.0-2.0 — ORGANIC MATERIAL ENCOUNTERED WITHIN A DEPTH OF 1.0 TO 2.0 FEET BELOW EXISTING GRADE

NE-5.0 — ORGANIC MATERIAL NOT ENCOUNTERED TO A DEPTH OF 5.0 FEET BELOW EXISTING GRADE

APPROXIMATE LIMITS OF ORGANIC MATERIAL REMOVAL

I-4

REVISIONS			
DATE	DESCRIPTION	DATE	DESCRIPTION

LAWRENCE P. MOORE, P.E.
P.E. LICENSE NUMBER 47673
TIERRA, INC.
7351 TEMPLE TERRACE HIGHWAY
TAMPA, FLORIDA 33637

STATE OF FLORIDA
DEPARTMENT OF TRANSPORTATION

ROAD NO.	COUNTY	FINANCIAL PROJECT ID
SR 33	POLK	430185-3-52-01

ORGANIC MATERIAL DELINEATION PLAN (1)

SHEET NO. 176

THE OFFICIAL RECORD OF THIS SHEET IS THE ELECTRONIC FILE DIGITALLY SIGNED AND SEALED UNDER RULE 61G15-23.004, F.A.C.

2/16/2023 12:05:37 PM bsawaska
J:\65II\2014 Files\65II-14-074 SR 33 at I-4\430185320\ORD\430185-3-52-01\Geotechnical\MBORRD01.dgn

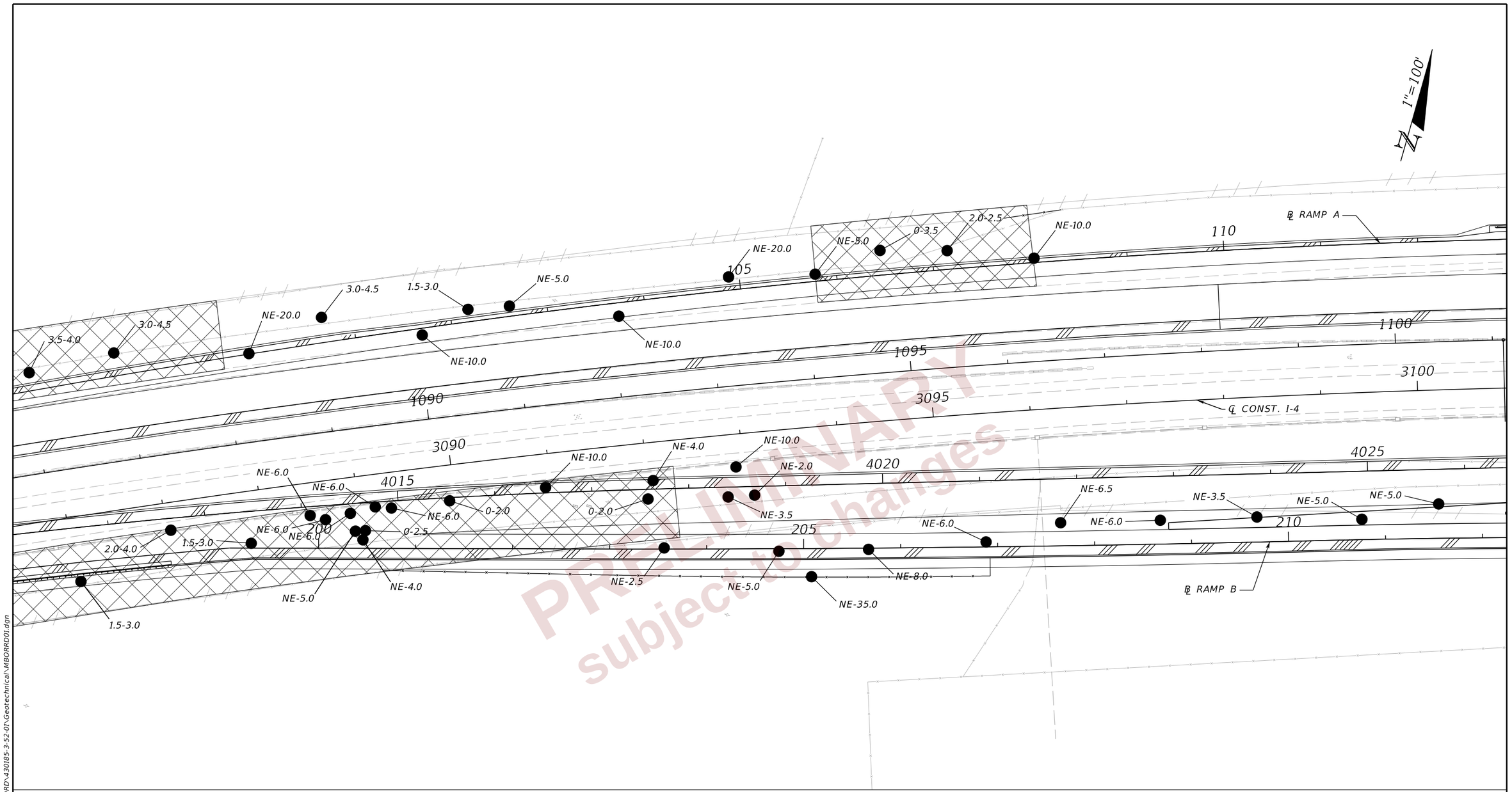

PRELIMINARY
subject to change

LEGEND

1.0-2.0 — ORGANIC MATERIAL ENCOUNTERED WITHIN A DEPTH OF 1.0 TO 2.0 FEET BELOW EXISTING GRADE

NE-5.0 — ORGANIC MATERIAL NOT ENCOUNTERED TO A DEPTH OF 5.0 FEET BELOW EXISTING GRADE

APPROXIMATE LIMITS OF ORGANIC MATERIAL REMOVAL

I-4/RAMP A/RAMP B

REVISIONS			
DATE	DESCRIPTION	DATE	DESCRIPTION

LAWRENCE P. MOORE, P.E.
P.E. LICENSE NUMBER 47673
TIERRA, INC.
7351 TEMPLE TERRACE HIGHWAY
TAMPA, FLORIDA 33637

STATE OF FLORIDA
DEPARTMENT OF TRANSPORTATION

ROAD NO.	COUNTY	FINANCIAL PROJECT ID
SR 33	POLK	430185-3-52-01

ORGANIC MATERIAL DELINEATION PLAN (2)

SHEET NO. 177

THE OFFICIAL RECORD OF THIS SHEET IS THE ELECTRONIC FILE DIGITALLY SIGNED AND SEALED UNDER RULE 61G15-23.004, F.A.C.

2/16/2023 12:05:40 PM bswaska
J:\65II\2014 Files\65II-14-074 SR 33 at I-4\4301853520\ORD\430185-3-52-01\Geotechnical\MBORRD01.dgn

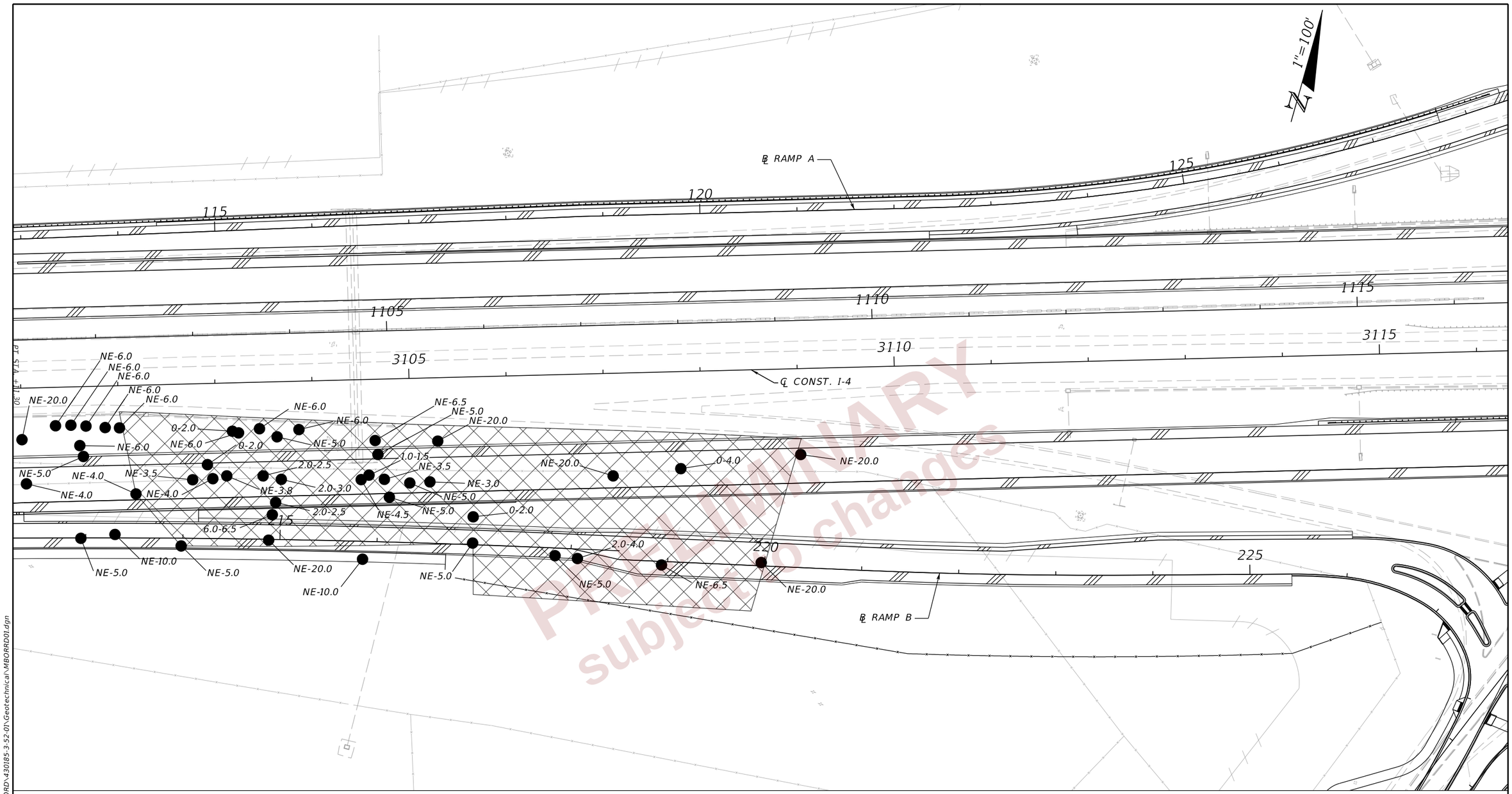

PRELIMINARY
Plans subject to changes

LEGEND

1.0-2.0 — ORGANIC MATERIAL ENCOUNTERED WITHIN A DEPTH OF 1.0 TO 2.0 FEET BELOW EXISTING GRADE

NE-5.0 — ORGANIC MATERIAL NOT ENCOUNTERED TO A DEPTH OF 5.0 FEET BELOW EXISTING GRADE

APPROXIMATE LIMITS OF ORGANIC MATERIAL REMOVAL

I/4/RAMP A/RAMP B

REVISIONS			
DATE	DESCRIPTION	DATE	DESCRIPTION

LAWRENCE P. MOORE, P.E.
P.E. LICENSE NUMBER 47673
TIERRA, INC.
7351 TEMPLE TERRACE HIGHWAY
TAMPA, FLORIDA 33637

STATE OF FLORIDA
DEPARTMENT OF TRANSPORTATION

ROAD NO.	COUNTY	FINANCIAL PROJECT ID
SR 400	POLK	430185-3-52-01

ORGANIC MATERIAL DELINEATION PLAN (3)

SHEET NO. 178

THE OFFICIAL RECORD OF THIS SHEET IS THE ELECTRONIC FILE DIGITALLY SIGNED AND SEALED UNDER RULE 61G15-23.004, F.A.C.

2/16/2023 12:05:38 PM bswaska
J:\65II\2014 Files\65II-14-074 SR 33 at I-4\430185320\ORD\430185-3-52-01\Geotechnical\MBORRD01.dgn

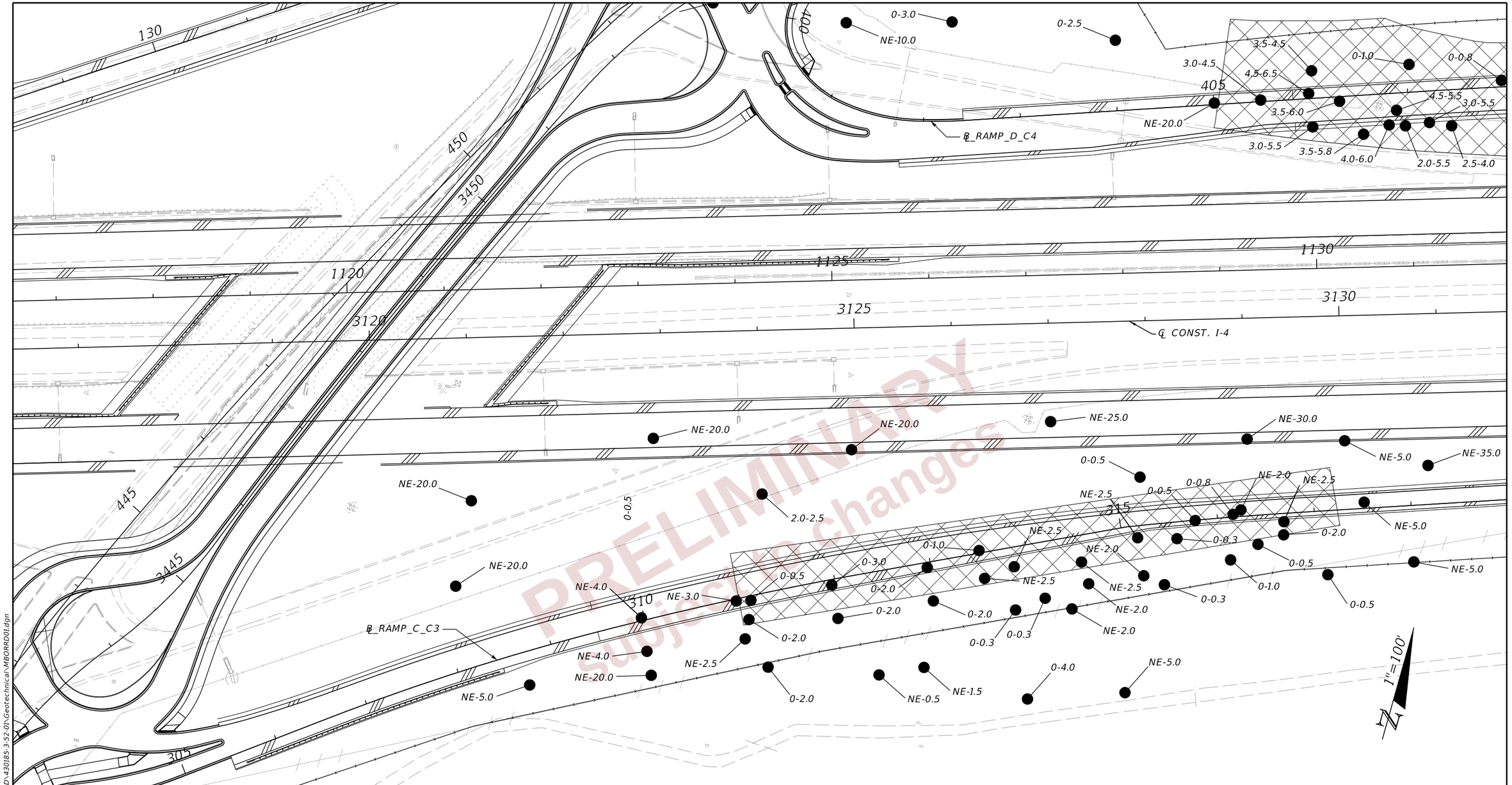

LEGEND

1.0-2.0 — ORGANIC MATERIAL ENCOUNTERED WITHIN A DEPTH OF 1.0 TO 2.0 FEET BELOW EXISTING GRADE

NE-5.0 — ORGANIC MATERIAL NOT ENCOUNTERED TO A DEPTH OF 5.0 FEET BELOW EXISTING GRADE

APPROXIMATE LIMITS OF ORGANIC MATERIAL REMOVAL

I/4/RAMP A/RAMP C/RAMP D

REVISIONS			
DATE	DESCRIPTION	DATE	DESCRIPTION

LAWRENCE P. MOORE, P.E.
P.E. LICENSE NUMBER 47673
TIERRA, INC.
7351 TEMPLE TERRACE HIGHWAY
TAMPA, FLORIDA 33637

STATE OF FLORIDA
DEPARTMENT OF TRANSPORTATION

ROAD NO.	COUNTY	FINANCIAL PROJECT ID
SR 400	POLK	430185-3-52-01

ORGANIC MATERIAL DELINEATION PLAN (4)

SHEET NO. 179

PRELIMINARY
subject to change

THE OFFICIAL RECORD OF THIS SHEET IS THE ELECTRONIC FILE DIGITALLY SIGNED AND SEALED UNDER RULE 61G15-23.004, F.A.C.

2/16/2023 12:05:40 PM bsawaska
J:\65II\2014 Files\65II-14-074 SR 33 at I-4\430185320\ORD\430185-3-52-01\Geotechnical\MBORRD01.dgn

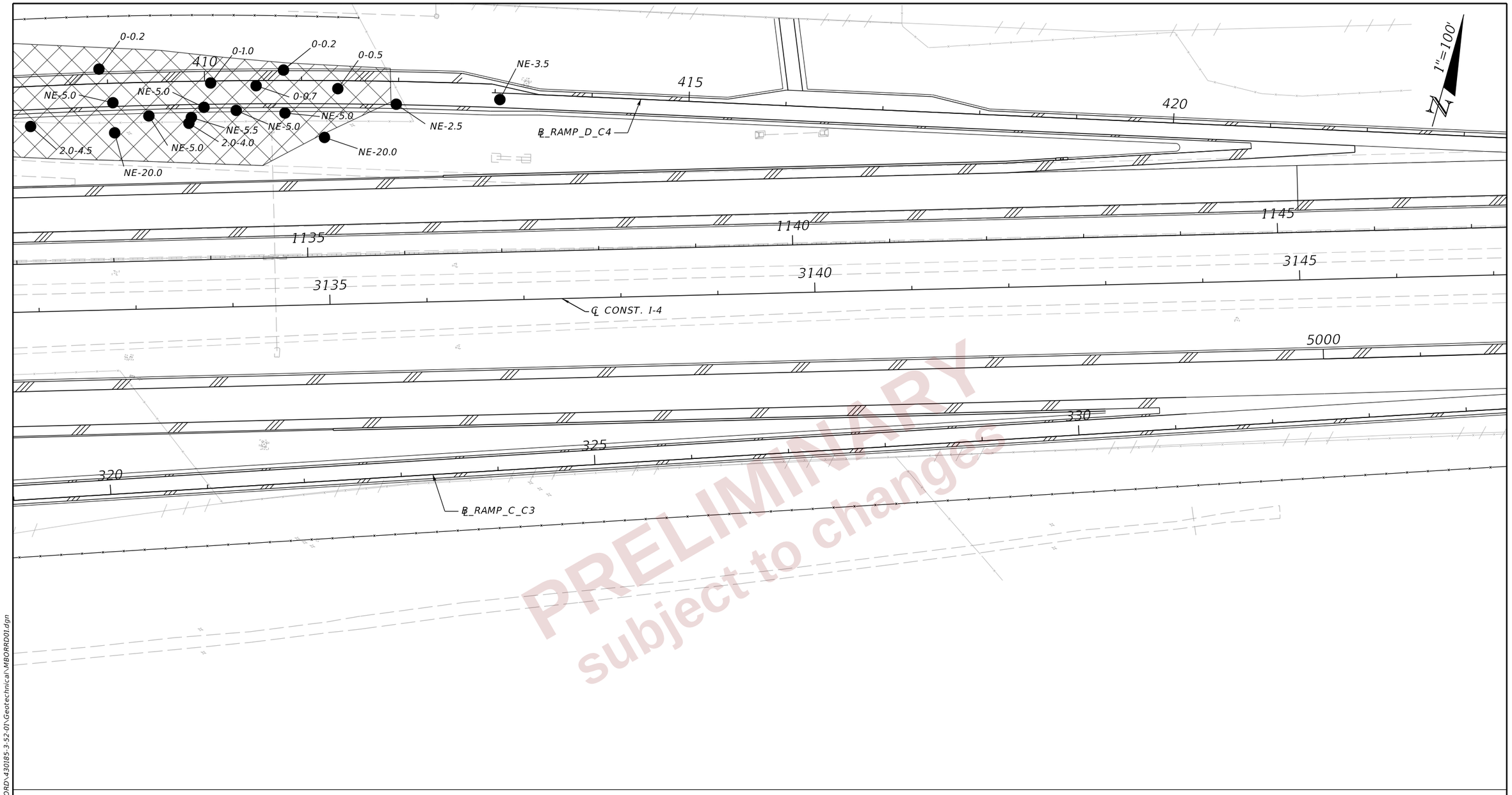

PRELIMINARY
subject to changes

LEGEND

1.0-2.0	ORGANIC MATERIAL ENCOUNTERED WITHIN A DEPTH OF 1.0 TO 2.0 FEET BELOW EXISTING GRADE
NE-5.0	ORGANIC MATERIAL NOT ENCOUNTERED TO A DEPTH OF 5.0 FEET BELOW EXISTING GRADE
	APPROXIMATE LIMITS OF ORGANIC MATERIAL REMOVAL

I-4/RAMP C/RAMP D

REVISIONS			
DATE	DESCRIPTION	DATE	DESCRIPTION

LAWRENCE P. MOORE, P.E.
P.E. LICENSE NUMBER 47673
TIERRA, INC.
7351 TEMPLE TERRACE HIGHWAY
TAMPA, FLORIDA 33637

STATE OF FLORIDA
DEPARTMENT OF TRANSPORTATION

ROAD NO.	COUNTY	FINANCIAL PROJECT ID
SR 400	POLK	430185-3-52-01

ORGANIC MATERIAL DELINEATION PLAN (5)

SHEET NO. 180

THE OFFICIAL RECORD OF THIS SHEET IS THE ELECTRONIC FILE DIGITALLY SIGNED AND SEALED UNDER RULE 61G15-23.004, F.A.C.

2/16/2023 12:05:41 PM bsawaska
J:\651\2014 Files\651I-14-074 SR 33 at I-4\4301853520\ORD\430185-3-52-01\Geotechnical\MBORRD01.dgn

GEOTECHNICAL INFORMATION – END TERMINAL FOUNDATIONS

Table Date 1/9/15

Soil Description		Begin of Run				End of Run			
		Medium Dense to Dense Sand	Medium Dense Sand		Design Groundwater Depth (ft)	Medium Dense to Dense Sand	Medium Dense Sand		Design Groundwater Depth (ft)
Depth Below Existing Ground Line (ft.)	HTCB Run No. 1	0 – 23.5	23.5 – 35.0		0	0 – 23.5	23.5 – 35.0		0
	HTCB Run No. 2	0 – 23.5	23.5 – 35.0		0	0 – 23.5	23.5 – 35.0		0
	HTCB Run No. 3	0 – 23.5	23.5 – 35.0		0	0 – 23.5	23.5 – 35.0		0
	HTCB Run No. 4	0 – 23.5	23.5 – 35.0		0	0 – 23.5	23.5 – 35.0		0
Total Unit Weight (pcf)		115	105		——	115	105		——
Effective Unit Weight (pcf)		53	43		——	53	43		——
Cohesion (psf)		0	0		——	0	0		——
Internal Friction Angle (deg)		31	29		——	31	29		——

SUMMARY OF HTCB LOCATIONS AND FOUNDATIONS

Table Date 1/9/15

HTCB Run No.	GENERAL HTCB SEGMENTS		Line Post Foundation Type (*)	SPECIAL LINE POST SPACING		
	Begin Station	End Station		Post Spacing (ft)	Begin Station	End Station
1	1048+30.00	1099+81.00	2	——	——	——
2	1098+20.00	1117+62.00	2	——	——	——
3	1122+82.00	1150+22.00	2	——	——	——
4	1150+00.00	1183+62.00	2	——	——	——

(*) See "GEOTECHNICAL INFORMATION – LINE POST FOUNDATIONS" Data Table
1 = Unsaturated
2 = Saturated
SD#__ = Special Design (_____)
SD#__ = Special Design (_____)

GEOTECHNICAL INFORMATION – LINE POST FOUNDATIONS

Table Date 1/9/15

	Unsaturated Sand	Saturated Sand	SD#__	SD#__
Design Groundwater Depth (ft)	N/A	0	——	——
Total Unit Weight (pcf)	112	112	——	——
Effective Unit Weight (pcf)	N/A	50	——	——
Cohesion (psf)	0	0	——	——
Internal Friction Angle (deg)	30	30	——	——

NOTE:
SD# corresponds to the Special Design Number shown on the "SUMMARY OF HTCB LOCATIONS AND FOUNDATIONS" Data Table.

NOTES:

1. See Developmental Standard Plans 540-001 for General Notes and Details (Sheet _#_).
2. See Shop Drawings for End Terminal and Line Post Foundation Details.

HIGH TENSION CABLE BARRIER (HTCB) DESIGN DATA TABLES
HTCB Run No. 1 through 4

PRELIMINARY subject to changes

THE OFFICIAL RECORD OF THIS SHEET IS THE ELECTRONIC FILE DIGITALLY SIGNED AND SEALED UNDER RULE 61G15-23.004, F.A.C.

2/1/2024 12:20:35 PM JBLOUNT
c:\pw_working\lochner-pw-01\dms18802\HTCB_TABLES.dgn

REVISIONS				ENGINEER OF RECORD	STATE OF FLORIDA DEPARTMENT OF TRANSPORTATION				SHEET NO.
DATE	DESCRIPTION	DATE	DESCRIPTION	DEBANANDA PANIGRAHI, P.E. LICENSE NUMBER 68318 H. W. LOCHNER 4300 W. CYPRESS STREET, SUITE 500 TAMPA, FLORIDA 33607	ROAD NO.	COUNTY	FINANCIAL PROJECT ID	SPECIAL DETAILS HTCB GEOTECHNICAL DATA	181
					SR 400	POLK	430185-3-52-01		

SWALE 6A SECTION

DHWL = 135.48'
(25YR/24HR)

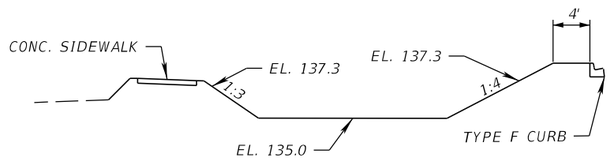

SWALE 6B SECTION

DHWL = 135.48'
(25YR/24HR)

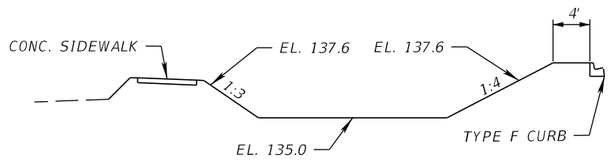

SWALE 6C SECTION

DHWL = 135.74'
(25YR/24HR)

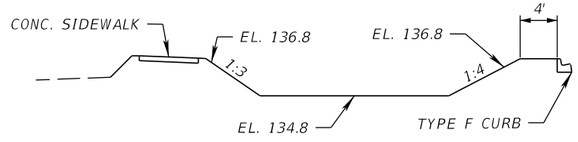

SWALE 6D SECTION

DHWL = 135.25'
(25YR/24HR)

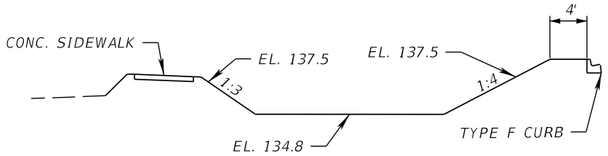

SWALE 6E SECTION

DHWL = 135.75'
(25YR/24HR)

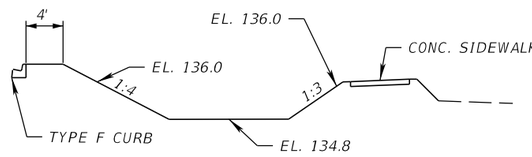

SWALE 10A SECTION

DHWL = 137.63'
(25YR/24HR)

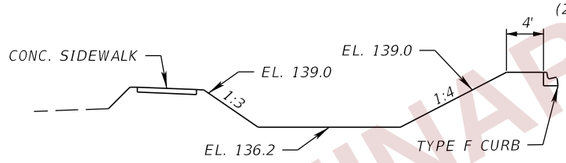

SWALE 10B SECTION

DHWL = 137.30'
(25YR/24HR)

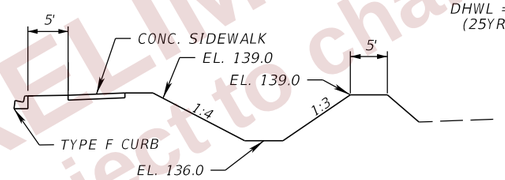

SWALE 10C SECTION

DHWL = 138.09'
(25YR/24HR)

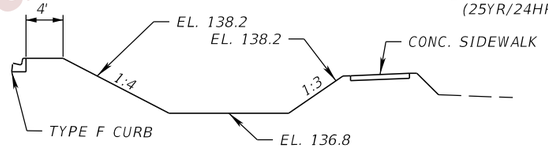

SWALE 10D SECTION

DHWL = 138.36'
(25YR/24HR)

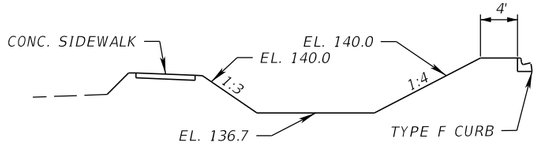

SWALE 11A SECTION

DHWL = 138.37'
(25YR/24HR)

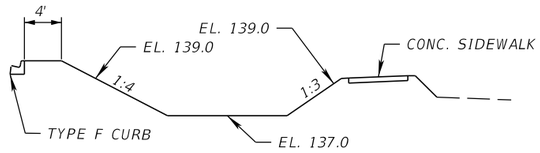

SWALE 11B SECTION

DHWL = 139.19'
(25YR/24HR)

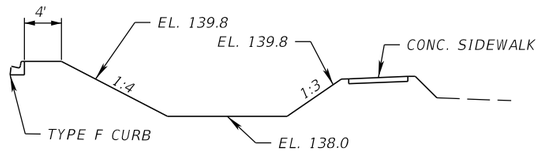

SWALE 11C SECTION

DHWL = 138.34'
(25YR/24HR)

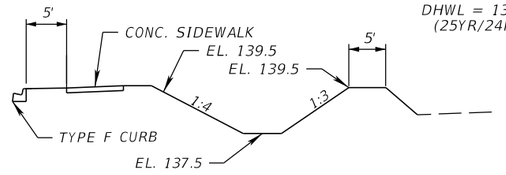

SWALE 11E SECTION

DHWL = 138.34'
(25YR/24HR)

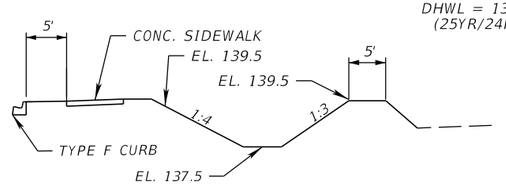

POND 11F SECTION

DHWL = 138.34'
(25YR/24HR)

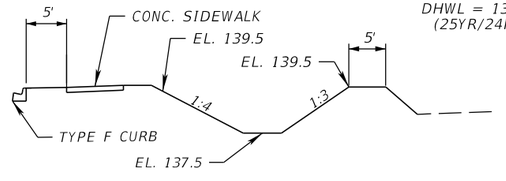

PRELIMINARY
subject to changes

THE OFFICIAL RECORD OF THIS SHEET IS THE ELECTRONIC FILE DIGITALLY SIGNED AND SEALED UNDER RULE 61G15-23.004, F.A.C.

2/29/2024 5:11:10 PM BHORTON
c:\pw_working\lochner-pw-01\dms18776\DRDTRD10.dgn

REVISIONS			
DATE	DESCRIPTION	DATE	DESCRIPTION

ENGINEER OF RECORD
LISANDRO ZAPATA, P.E.
LICENSE NUMBER 58822
H. W. LOCHNER
4300 W. CYPRESS STREET, SUITE 500
TAMPA, FLORIDA 33607

STATE OF FLORIDA
DEPARTMENT OF TRANSPORTATION

ROAD NO.	COUNTY	FINANCIAL PROJECT ID
SR 400	POLK	430185-3-52-01

POND DETAILS (01)
POND TYPICAL SECTIONS

SHEET NO. 182

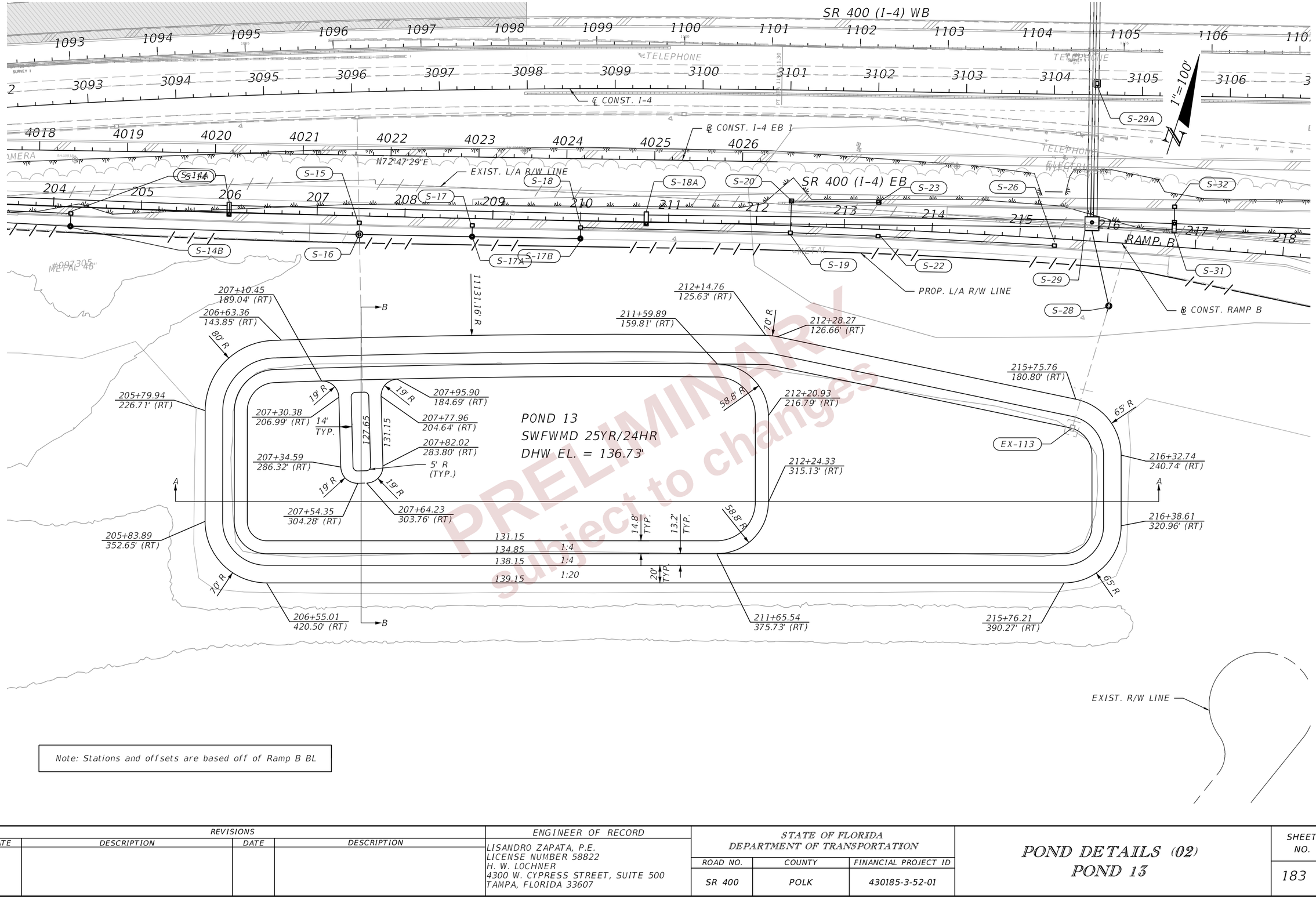

Note: Stations and offsets are based off of Ramp B BL

PRELIMINARY
subject to changes

THE OFFICIAL RECORD OF THIS SHEET IS THE ELECTRONIC FILE DIGITALLY SIGNED AND SEALED UNDER RULE 61G15-23.004, F.A.C.

2/29/2024 5:11:26 PM BHORTON
c:\pw_working\lochner-pw-01\dms18776\DRDTRD01.dgn

REVISIONS				ENGINEER OF RECORD	STATE OF FLORIDA DEPARTMENT OF TRANSPORTATION				SHEET NO.
DATE	DESCRIPTION	DATE	DESCRIPTION	LISANDRO ZAPATA, P.E. LICENSE NUMBER 58822 H. W. LOCHNER 4300 W. CYPRESS STREET, SUITE 500 TAMPA, FLORIDA 33607	ROAD NO.	COUNTY	FINANCIAL PROJECT ID	POND DETAILS (02) POND 13	183
					SR 400	POLK	430185-3-52-01		

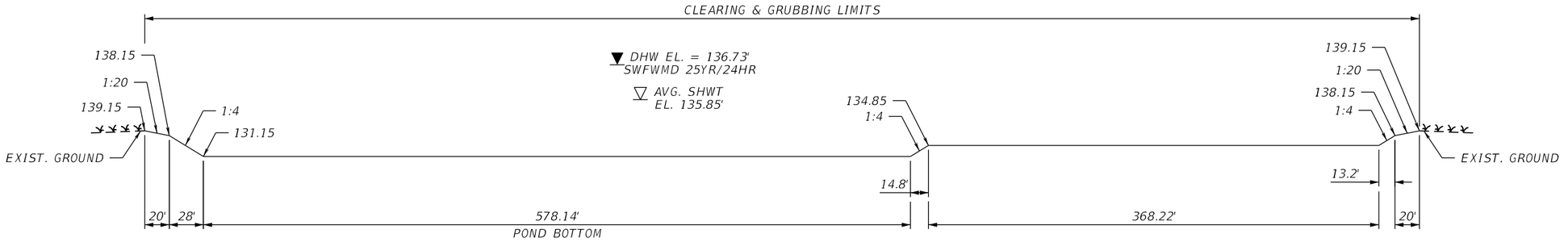

SECTION A-A

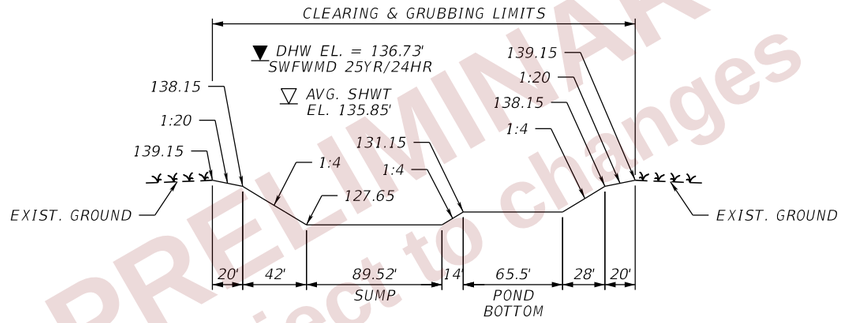

SECTION B-B

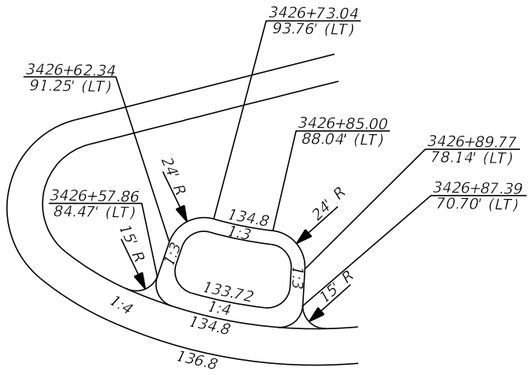

SUMP DETAIL
SWALE 6C

PRELIMINARY
subject to changes

REVISIONS			
DATE	DESCRIPTION	DATE	DESCRIPTION

ENGINEER OF RECORD

LISANDRO ZAPATA, P.E.
LICENSE NUMBER 58822
H. W. LOCHNER
4300 W. CYPRESS STREET, SUITE 500
TAMPA, FLORIDA 33607

STATE OF FLORIDA
DEPARTMENT OF TRANSPORTATION

ROAD NO.	COUNTY	FINANCIAL PROJECT ID
SR 400	POLK	430185-3-52-01

POND DETAILS (03)
POND 13

SHEET NO. 184

THE OFFICIAL RECORD OF THIS SHEET IS THE ELECTRONIC FILE DIGITALLY SIGNED AND SEALED UNDER RULE 61G15-23.004, F.A.C.

2/29/2024 5:11:27 PM BHORTON
c:\pw_working\lochner-pw-01\dms18776\DROTR001.dgn

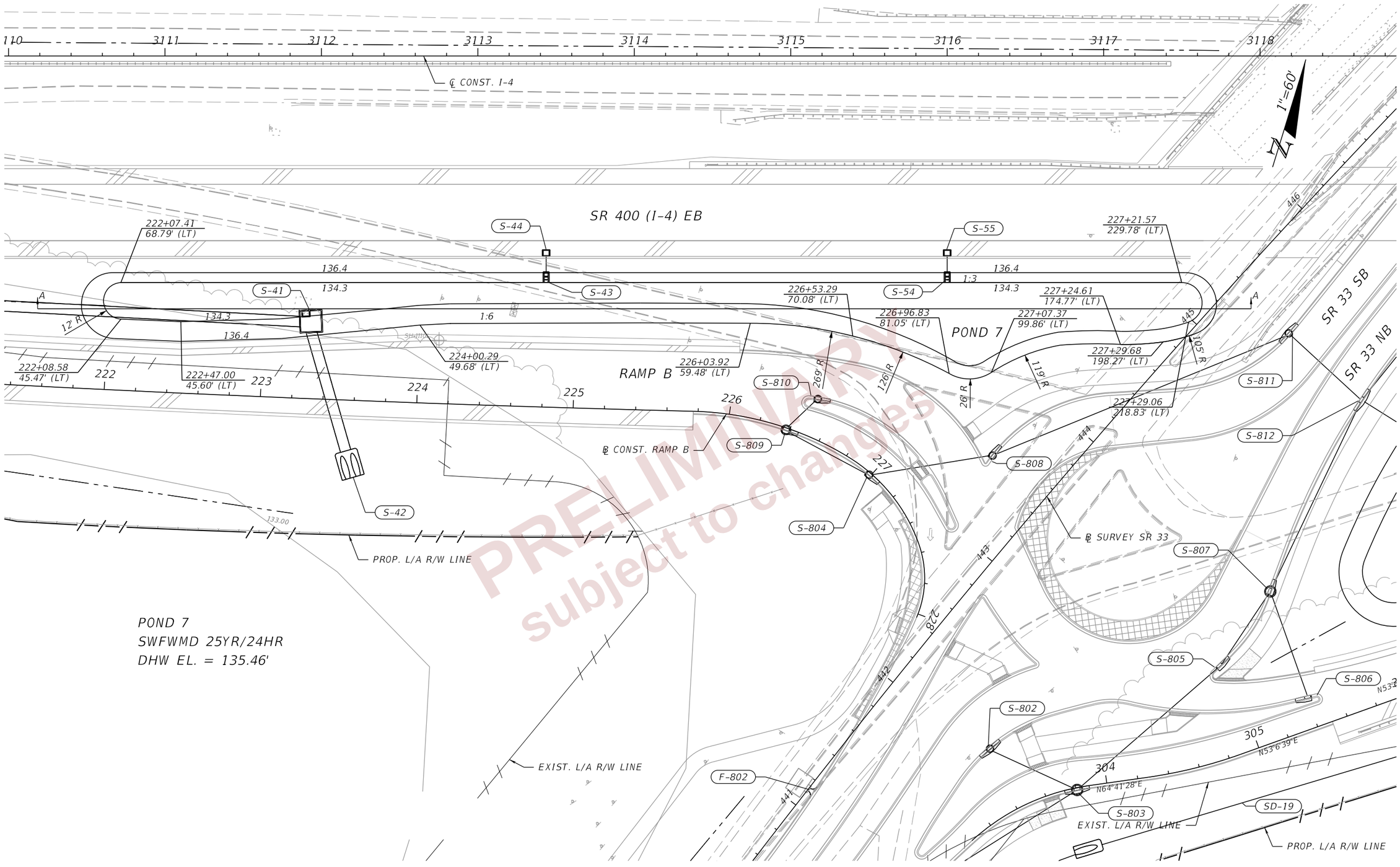

POND 7
SWFWMD 25YR/24HR
DHW EL. = 135.46'

PRELIMINARY
subject to changes

REVISIONS				ENGINEER OF RECORD	STATE OF FLORIDA DEPARTMENT OF TRANSPORTATION				SHEET NO.
DATE	DESCRIPTION	DATE	DESCRIPTION	LISANDRO ZAPATA, P.E. LICENSE NUMBER 58822 H. W. LOCHNER 4300 W. CYPRESS STREET, SUITE 500 TAMPA, FLORIDA 33607	ROAD NO.	COUNTY	FINANCIAL PROJECT ID	POND DETAILS (04) POND 7	185
					SR 400	POLK	430185-3-52-01		

THE OFFICIAL RECORD OF THIS SHEET IS THE ELECTRONIC FILE DIGITALLY SIGNED AND SEALED UNDER RULE 61G15-23.004, F.A.C.

2/29/2024 5:11:43 PM BHORTON
c:\pw_working\lochner-pw-01\dms18776\DRDTRD02.dgn

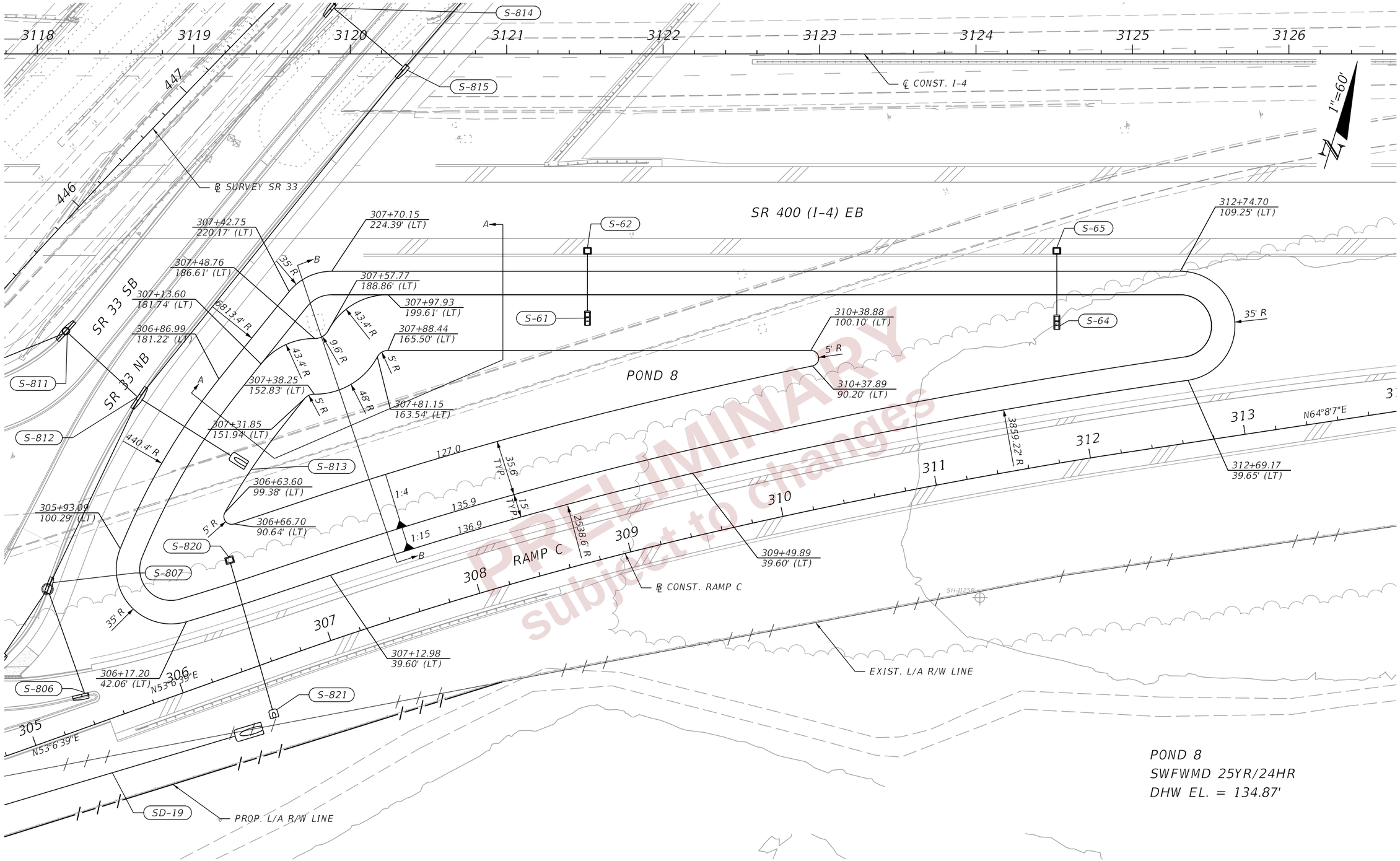

REVISIONS				ENGINEER OF RECORD	STATE OF FLORIDA DEPARTMENT OF TRANSPORTATION				SHEET NO.
DATE	DESCRIPTION	DATE	DESCRIPTION	LISANDRO ZAPATA, P.E. LICENSE NUMBER 58822 H. W. LOCHNER 4300 W. CYPRESS STREET, SUITE 500 TAMPA, FLORIDA 33607	ROAD NO.	COUNTY	FINANCIAL PROJECT ID	POND DETAILS (05) POND 8	186
					SR 400	POLK	430185-3-52-01		

2/29/2024 5:11:59 PM BHORTON
c:\pw_working\lochner-pw-01\dms18776\DRDTR003.dgn

THE OFFICIAL RECORD OF THIS SHEET IS THE ELECTRONIC FILE DIGITALLY SIGNED AND SEALED UNDER RULE 61G15-23.004, F.A.C.

POND 7

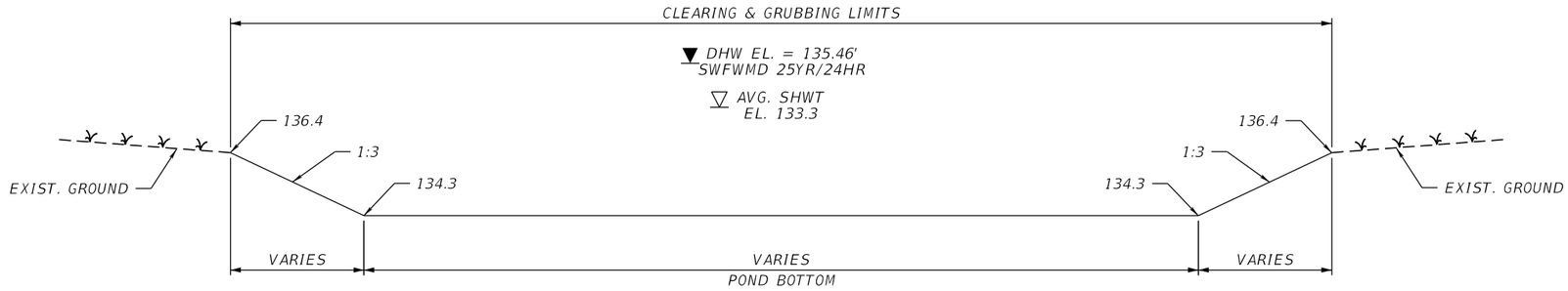

SECTION A-A

POND 8

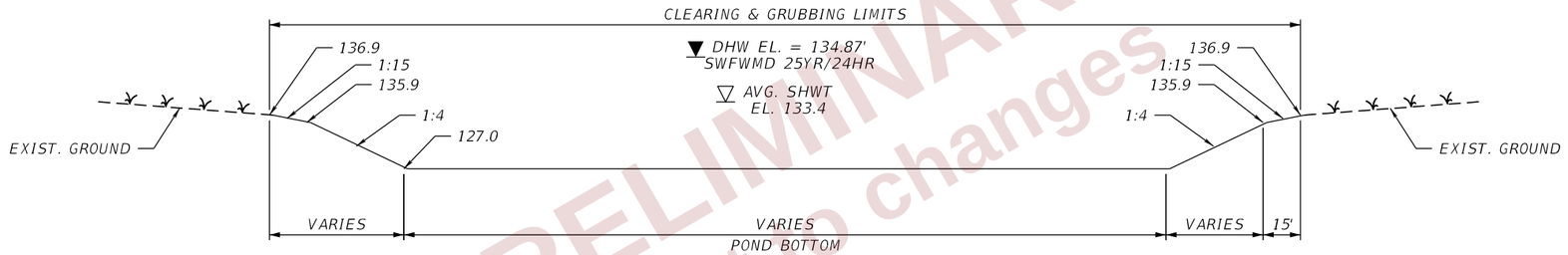

SECTION A-A

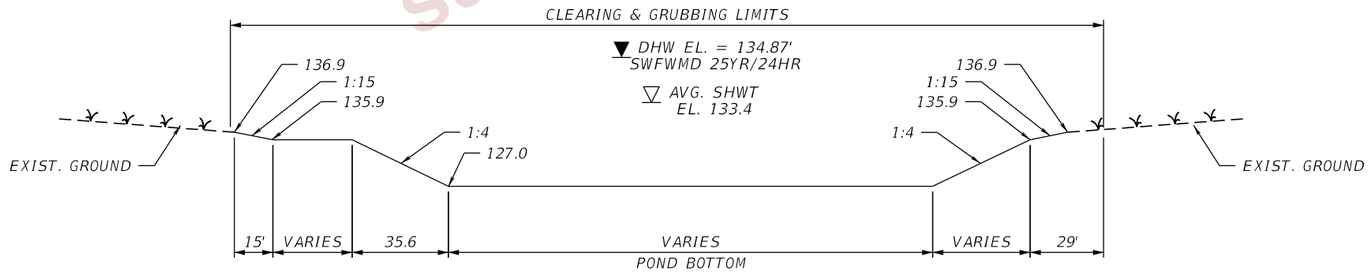

SECTION B-B

PRELIMINARY
subject to changes

REVISIONS				ENGINEER OF RECORD	STATE OF FLORIDA DEPARTMENT OF TRANSPORTATION			POND DETAILS (06) POND 7 & POND 8	SHEET NO.
DATE	DESCRIPTION	DATE	DESCRIPTION	LISANDRO ZAPATA, P.E. LICENSE NUMBER 58822 H. W. LOCHNER 4300 W. CYPRESS STREET, SUITE 500 TAMPA, FLORIDA 33607	ROAD NO.	COUNTY	FINANCIAL PROJECT ID		187
					SR 400	POLK	430185-3-52-01		

THE OFFICIAL RECORD OF THIS SHEET IS THE ELECTRONIC FILE DIGITALLY SIGNED AND SEALED UNDER RULE 61G15-23.004, F.A.C.

2/29/2024 5:12:00 PM BHORTON
c:\pw_working\lochner-pw-01\dms18776\DROTRD03.dgn

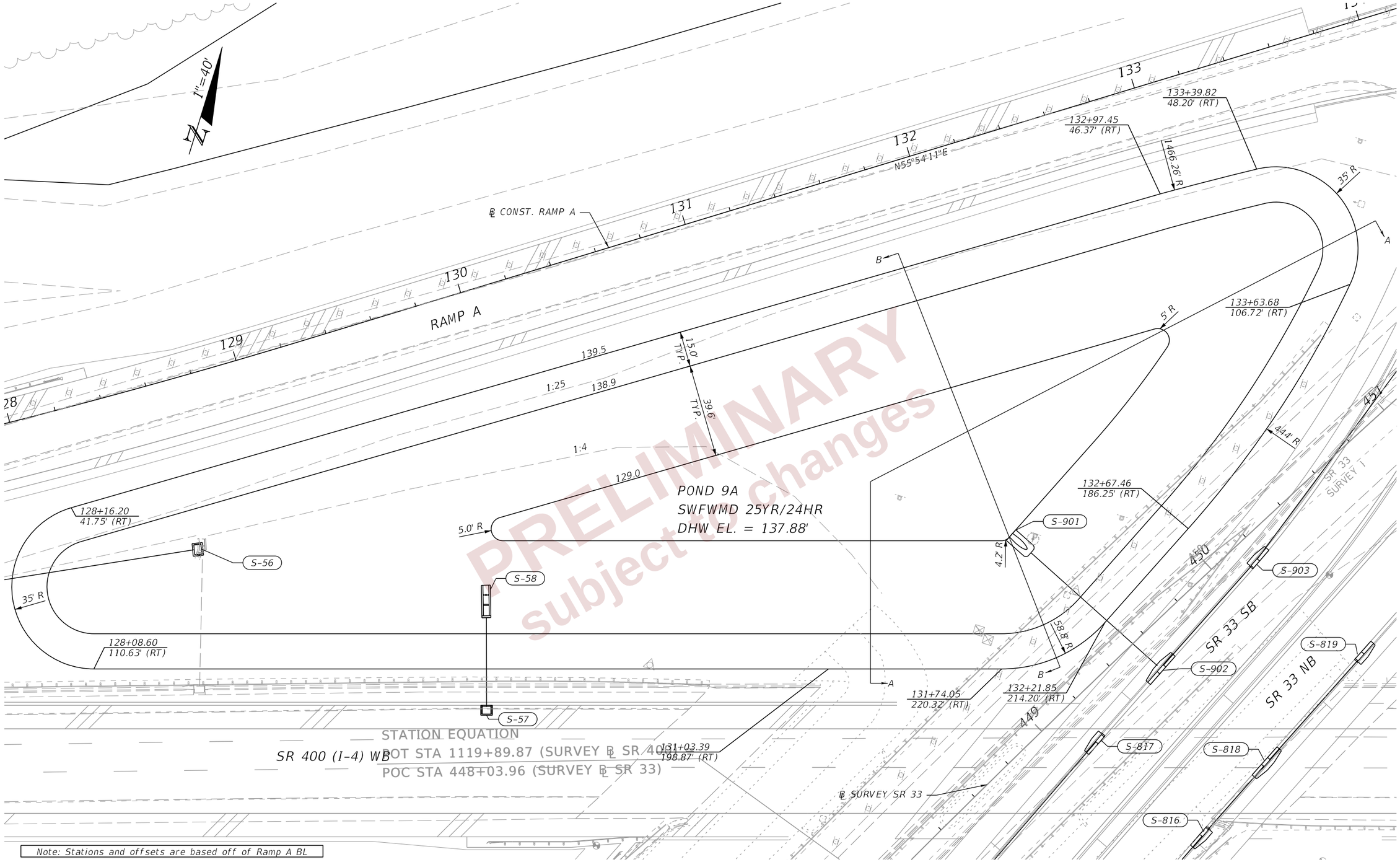

Note: Stations and offsets are based off of Ramp A BL

REVISIONS				ENGINEER OF RECORD	STATE OF FLORIDA DEPARTMENT OF TRANSPORTATION			POND DETAILS (07) POND 9A	SHEET NO.
DATE	DESCRIPTION	DATE	DESCRIPTION	LISANDRO ZAPATA, P.E. LICENSE NUMBER 58822 H. W. LOCHNER 4300 W. CYPRESS STREET, SUITE 500 TAMPA, FLORIDA 33607	ROAD NO.	COUNTY	FINANCIAL PROJECT ID		188
					SR 400	POLK	430185-3-52-01		

THE OFFICIAL RECORD OF THIS SHEET IS THE ELECTRONIC FILE DIGITALLY SIGNED AND SEALED UNDER RULE 61G15-23.004, F.A.C.

2/29/2024 5:12:17 PM BHORTON
c:\pw_working\lochner-pw-01\dms18776\DRDTRD04.dgn

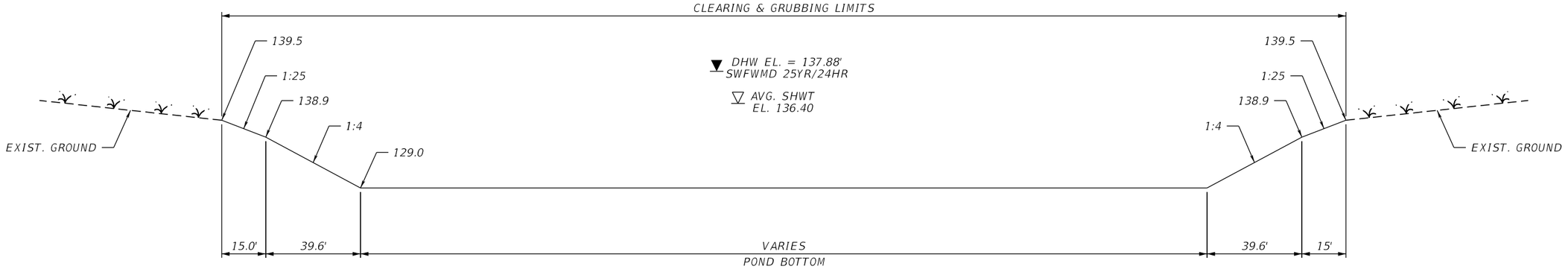

SECTION A-A

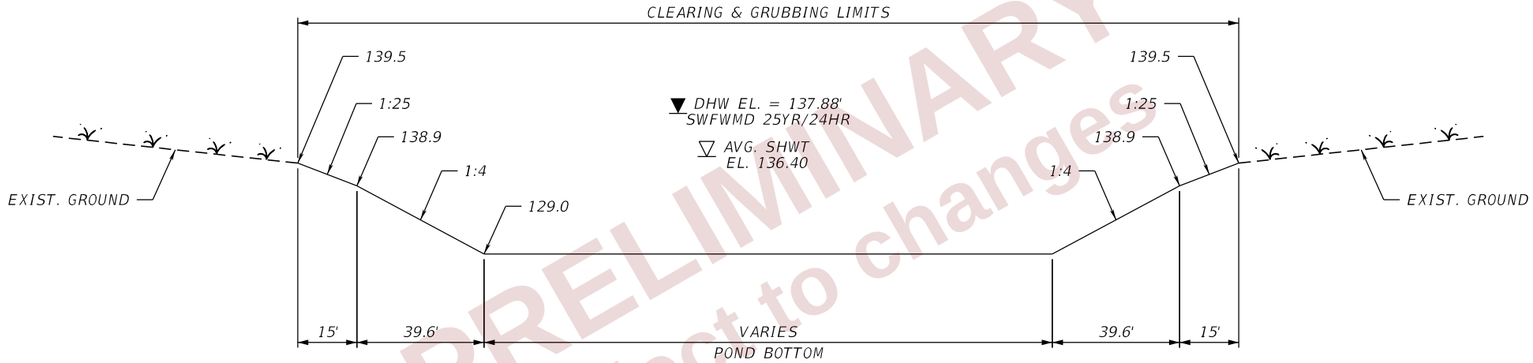

SECTION B-B

PRELIMINARY
subject to changes

REVISIONS				ENGINEER OF RECORD	STATE OF FLORIDA DEPARTMENT OF TRANSPORTATION			POND DETAILS (08) POND 9A	SHEET NO.
DATE	DESCRIPTION	DATE	DESCRIPTION	LISANDRO ZAPATA, P.E. LICENSE NUMBER 58822 H. W. LOCHNER 4300 W. CYPRESS STREET, SUITE 500 TAMPA, FLORIDA 33607	ROAD NO.	COUNTY	FINANCIAL PROJECT ID		189
					SR 400	POLK	430185-3-52-01		

THE OFFICIAL RECORD OF THIS SHEET IS THE ELECTRONIC FILE DIGITALLY SIGNED AND SEALED UNDER RULE 61G15-23.004, F.A.C.

2/29/2024 5:12:17 PM BHORTON
c:\pw_working\lochner-pw-01\dms18776\DRDTRD04.dgn

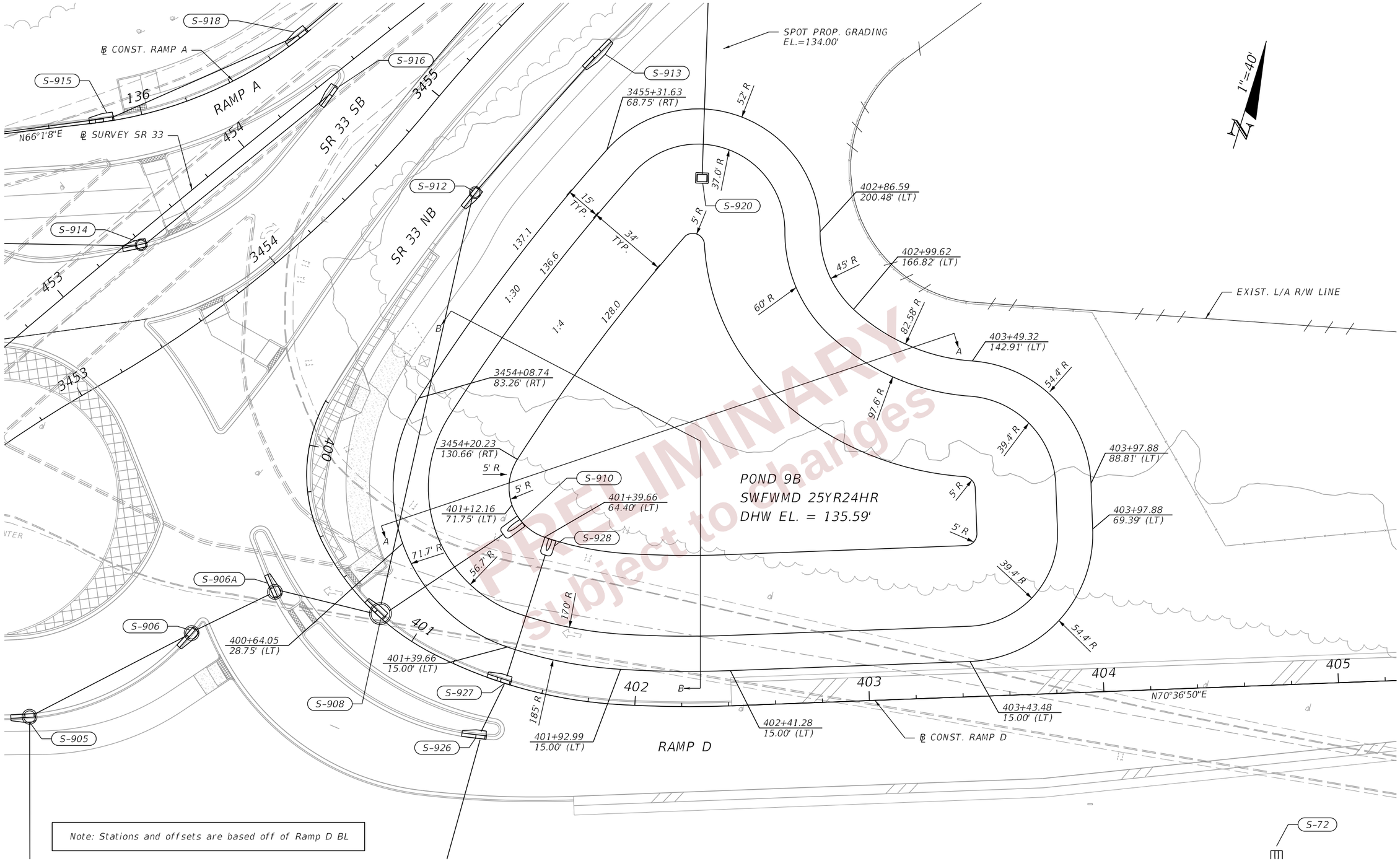

PRELIMINARY
subject to changes

REVISIONS				ENGINEER OF RECORD	STATE OF FLORIDA DEPARTMENT OF TRANSPORTATION			POND DETAILS (09) POND 9B	SHEET NO.
DATE	DESCRIPTION	DATE	DESCRIPTION	LISANDRO ZAPATA, P.E. LICENSE NUMBER 58822 H. W. LOCHNER 4300 W. CYPRESS STREET, SUITE 500 TAMPA, FLORIDA 33607	ROAD NO.	COUNTY	FINANCIAL PROJECT ID		190
					SR 400	POLK	430185-3-52-01		

THE OFFICIAL RECORD OF THIS SHEET IS THE ELECTRONIC FILE DIGITALLY SIGNED AND SEALED UNDER RULE 61G15-23.004, F.A.C.

2/29/2024 5:12:33 PM BHORTON
c:\pw_working\lochner-pw-01\dms18776\DRDTR005.dgn

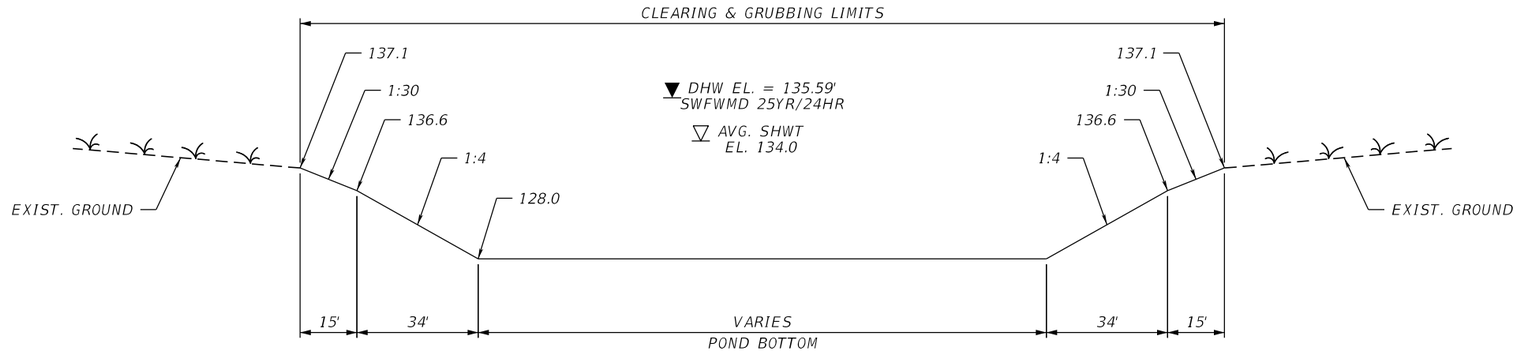

SECTION A-A

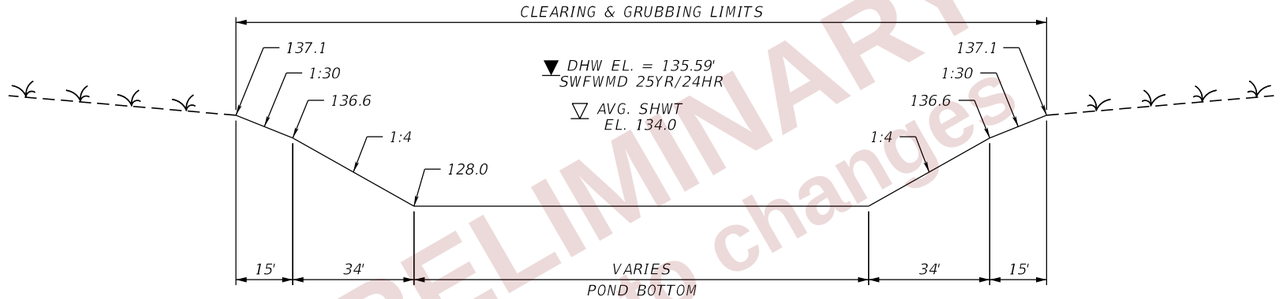

SECTION B-B

PRELIMINARY
subject to changes

REVISIONS				ENGINEER OF RECORD	STATE OF FLORIDA DEPARTMENT OF TRANSPORTATION				SHEET NO.
DATE	DESCRIPTION	DATE	DESCRIPTION	LISANDRO ZAPATA, P.E. LICENSE NUMBER 58822 H. W. LOCHNER 4300 W. CYPRESS STREET, SUITE 500 TAMPA, FLORIDA 33607	ROAD NO.	COUNTY	FINANCIAL PROJECT ID	POND DETAILS (10) POND 9B	191
					SR 400	POLK	430185-3-52-01		

THE OFFICIAL RECORD OF THIS SHEET IS THE ELECTRONIC FILE DIGITALLY SIGNED AND SEALED UNDER RULE 61G15-23.004, F.A.C.

2/29/2024 5:12:33 PM BHORTON
c:\pw_working\lochner-pw-01\dms18776\DRDTRD05.dgn

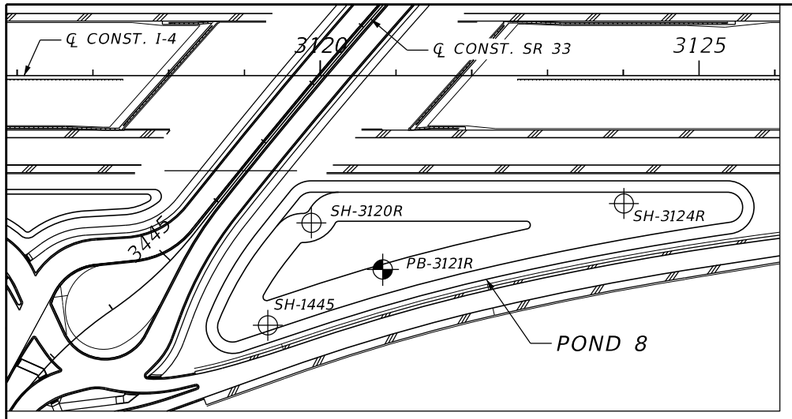

BORING LOCATION PLAN

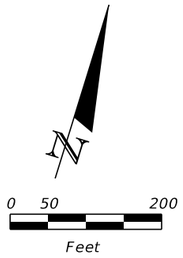

NOTES:

1. BASED ON A REVIEW OF THE "POTENTIOMETRIC SURFACE OF THE UPPER FLORIDAN AQUIFER, WEST-CENTRAL FLORIDA" MAPS PUBLISHED BY THE USGS, THE POTENTIOMETRIC SURFACE ELEVATION OF THE UPPER FLORIDAN AQUIFER IN THE PROJECT VICINITY IS REPORTED UP TO APPROXIMATELY +130 FEET, NGVD 29.
2. THE LOCATIONS OF THE BORINGS WERE PROVIDED BY THE PROJECT SURVEYOR, McKIM AND CREED.

LEGEND

1.	LIGHT GRAY TO DARK BROWN FINE SAND TO SAND WITH SILT (A-3/A-2-4)
2.	LIGHT GRAY TO DARK BROWN SILTY SAND (A-2-4)
3.	LIGHT GRAY TO BROWN TO RED SILTY SAND TO CLAYEY SAND (A-2-4/A-2-6)
4.	LIGHT GRAY TO BROWN TO RED CLAYEY SAND TO SANDY CLAY (A-4/A-6/A-7-6)
5.	LIGHT GRAY TO PALE BROWN TO PALE BLUE-GREEN TO DARK GREEN CLAYEY SAND TO CLAY (A-2-7/A-7-5/A-7-6)
6.	DARK BROWN TO BLACK SAND TO SILT WITH ORGANICS TO HIGHLY ORGANIC MATERIAL (A-8)
7.	LIGHT GRAY TO DARK BROWN FINE SAND TO SILTY SAND WITH CLAY NODULES, OCCASIONALLY WITH LIMEROCK (FILL) (A-2-4)
8.	WEATHERED LIMESTONE
A-3	AASHTO GROUP SYMBOL AS DETERMINED BY VISUAL REVIEW AND LABORATORY TESTING ON SELECTED SAMPLES FOR CONFIRMATION OF VISUAL REVIEW.
N	NUMBERS TO THE LEFT OF BORINGS INDICATE SPT VALUE FOR 12 INCHES OF PENETRATION (UNLESS OTHERWISE NOTED).
HA	HAND AUGERED TO VERIFY UTILITY CLEARANCE
-200	PERCENT PASSING #200 SIEVE
NMC	NATURAL MOISTURE CONTENT (%)
LL	LIQUID LIMIT (%)
PI	PLASTICITY INDEX (%)
OC	ORGANIC CONTENT (%)
NAVD 88	NORTH AMERICAN VERTICAL DATUM OF 1988
NGVD 29	NATIONAL GEODETIC VERTICAL DATUM OF 1929
	APPROXIMATE SPT BORING LOCATION
	APPROXIMATE AUGER BORING LOCATION
	GROUNDWATER LEVEL ENCOUNTERED DURING FIELD EXPLORATIONS
	ESTIMATED SEASONAL HIGH GROUNDWATER TABLE
	ESTIMATED SEASONAL HIGH GROUNDWATER TABLE AT OR ABOVE EXISTING GROUND SURFACE
GNE	GROUNDWATER NOT ENCOUNTERED
GNA	GROUNDWATER NOT APPARENT DUE TO THE INTRODUCTION OF DRILLING FLUID.
CAVE-IN	BORING TERMINATED DUE TO GROUNDWATER INTRUSION RESULTING IN BOREHOLE CAVE-IN
℄ SURVEY SR 33	BASELINE OF SURVEY OF SR 33
℄ CONST. I-4	CENTERLINE OF CONSTRUCTION OF I-4

BOR # SH-1445
STA. 3119+31
REF. ℄ CONST. I-4
OFF. 330' RT.
ELEV. 134.7
DATE 8/12/2014

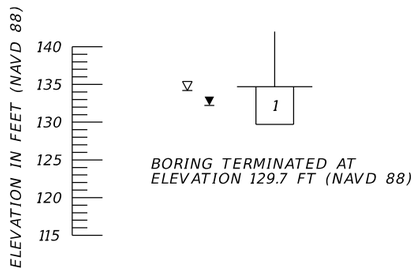

BORING TERMINATED AT ELEVATION 129.7 FT (NAVD 88)

BOR # SH-3120R
STA. 3119+88
REF. ℄ CONST. I-4
OFF. 194' RT.
ELEV. 134.8
DATE 11/18/2015

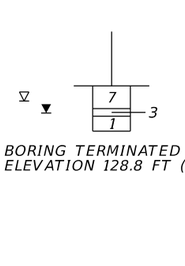

BORING TERMINATED AT ELEVATION 128.8 FT (NAVD 88)

BOR # PB-3121R
STA. 3120+83
REF. ℄ CONST. I-4
OFF. 256' RT.
ELEV. 136.7
DATE 10/16/2015
DRILLER J. ERICKSON
HAMMER AUTOMATIC
RIG D-25

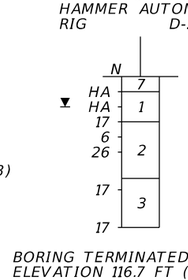

BORING TERMINATED AT ELEVATION 116.7 FT (NAVD 88)

BOR # SH-3124R
STA. 3124+01
REF. ℄ CONST. I-4
OFF 169' RT.
ELEV. 134.4
DATE 10/5/2015

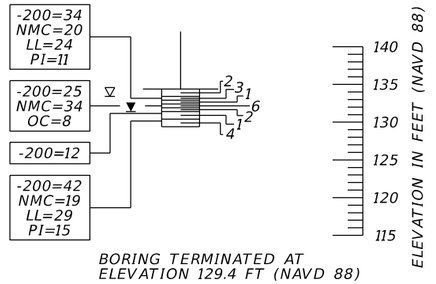

BORING TERMINATED AT ELEVATION 129.4 FT (NAVD 88)

	SAFETY HAMMER	AUTOMATIC HAMMER
GRANULAR MATERIALS- RELATIVE DENSITY	SPT N-VALUE (BLOWS/FT.)	SPT N-VALUE (BLOWS/FT.)
VERY LOOSE	LESS THAN 4	LESS THAN 3
LOOSE	4 to 10	3 to 8
MEDIUM DENSE	10 to 30	8 to 24
DENSE	30 to 50	24 to 40
VERY DENSE	GREATER THAN 50	GREATER THAN 40
SILTS AND CLAYS CONSISTENCY	SPT N-VALUE (BLOWS/FT.)	SPT N-VALUE (BLOWS/FT.)
VERY SOFT	LESS THAN 2	LESS THAN 1
SOFT	2 to 4	1 to 3
FIRM	4 to 8	3 to 6
STIFF	8 to 15	6 to 12
VERY STIFF	15 to 30	12 to 24
HARD	GREATER THAN 30	GREATER THAN 24

POND 8

PRELIMINARY
subject to changes

REVISIONS			
DATE	DESCRIPTION	DATE	DESCRIPTION

LAWRENCE P. MOORE, P.E.
P.E. LICENSE NUMBER 47673
TIERRA, INC.
7351 TEMPLE TERRACE HIGHWAY
TAMPA, FLORIDA 33637

STATE OF FLORIDA
DEPARTMENT OF TRANSPORTATION

ROAD NO.	COUNTY	FINANCIAL PROJECT ID
SR 400	POLK	430185-3-52-01

POND SOIL SURVEY (1)

SHEET NO. 192

THE OFFICIAL RECORD OF THIS SHEET IS THE ELECTRONIC FILE DIGITALLY SIGNED AND SEALED UNDER RULE 61G15-23.004, F.A.C.

8/5/2022 3:38:11 PM bgarcia
J:\6511\2014 Files\6511-14-074 SR 33 at I-4\430185352O1\ORD\430185-3-52-01\Geotechnical\PBORRD01.dgn

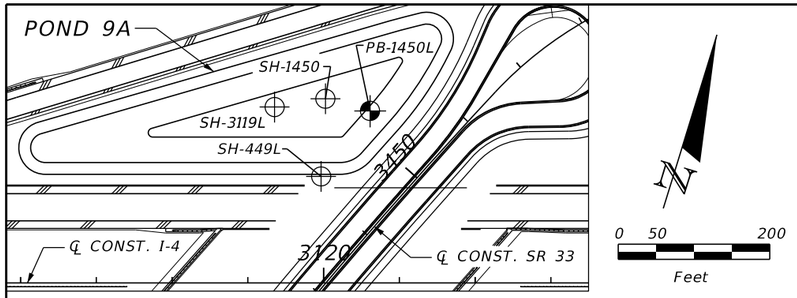

BORING LOCATION PLAN

NOTES:

1. BASED ON A REVIEW OF THE "POTENTIOMETRIC SURFACE OF THE UPPER FLORIDAN AQUIFER, WEST-CENTRAL FLORIDA" MAPS PUBLISHED BY THE USGS, THE POTENTIOMETRIC SURFACE ELEVATION OF THE UPPER FLORIDAN AQUIFER IN THE PROJECT VICINITY IS REPORTED UP TO APPROXIMATELY +130 FEET, NGVD 29.
2. THE LOCATIONS OF THE BORINGS WERE PROVIDED BY THE PROJECT SURVEYOR, McKIM AND CREED.

LEGEND

1. LIGHT GRAY TO DARK BROWN FINE SAND TO SAND WITH SILT (A-3/A-2-4)
2. LIGHT GRAY TO DARK BROWN SILTY SAND (A-2-4)
3. LIGHT GRAY TO BROWN TO RED SILTY SAND TO CLAYEY SAND (A-2-4/A-2-6)
4. LIGHT GRAY TO BROWN TO RED CLAYEY SAND TO SANDY CLAY (A-4/A-6/A-7-6)
5. LIGHT GRAY TO PALE BROWN TO PALE BLUE-GREEN TO DARK GREEN CLAYEY SAND TO CLAY (A-2-7/A-7-5/A-7-6)
6. DARK BROWN TO BLACK SAND TO SILT WITH ORGANICS TO HIGHLY ORGANIC MATERIAL (A-8)
7. LIGHT GRAY TO DARK BROWN FINE SAND TO SILTY SAND WITH CLAY NODULES, OCCASIONALLY WITH LIMEROCK (FILL) (A-2-4)
8. WEATHERED LIMESTONE

A-3	AASHTO GROUP SYMBOL AS DETERMINED BY VISUAL REVIEW AND LABORATORY TESTING ON SELECTED SAMPLES FOR CONFIRMATION OF VISUAL REVIEW.
N	NUMBERS TO THE LEFT OF BORINGS INDICATE SPT VALUE FOR 12 INCHES OF PENETRATION (UNLESS OTHERWISE NOTED).
HA	HAND AUGERED TO VERIFY UTILITY CLEARANCE
-200	PERCENT PASSING #200 SIEVE
NMC	NATURAL MOISTURE CONTENT (%)
LL	LIQUID LIMIT (%)
PI	PLASTICITY INDEX (%)
OC	ORGANIC CONTENT (%)
NAVD 88	NORTH AMERICAN VERTICAL DATUM OF 1988
NGVD 29	NATIONAL GEODETIC VERTICAL DATUM OF 1929
⊕	APPROXIMATE SPT BORING LOCATION
⊕	APPROXIMATE AUGER BORING LOCATION
▼	GROUNDWATER LEVEL ENCOUNTERED DURING FIELD EXPLORATIONS
▽	ESTIMATED SEASONAL HIGH GROUNDWATER TABLE
▽+	ESTIMATED SEASONAL HIGH GROUNDWATER TABLE AT OR ABOVE EXISTING GROUND SURFACE
GNE	GROUNDWATER NOT ENCOUNTERED
GNA	GROUNDWATER NOT APPARENT DUE TO THE INTRODUCTION OF DRILLING FLUID.
CAVE-IN	BORING TERMINATED DUE TO GROUNDWATER INTRUSION RESULTING IN BOREHOLE CAVE-IN
℄ SURVEY SR 33	BASELINE OF SURVEY OF SR 33
℄ CONST. I-4	CENTERLINE OF CONSTRUCTION OF I-4

BOR # SH-3119L
STA. 3119+35
REF. ℄ CONST. I-4
OFF. 232' LT.
ELEV. 138.0
DATE 11/12/2015

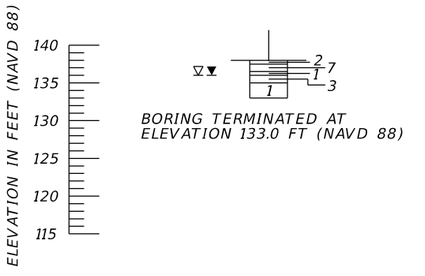

BORING TERMINATED AT ELEVATION 133.0 FT (NAVD 88)

BOR # SH-1450
STA. 3120+02
REF. ℄ CONST. I-4
OFF. 243' LT.
ELEV. 137.9
DATE 11/12/2015

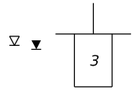

BORING TERMINATED AT ELEVATION 130.9 FT (NAVD 88)

BOR # SH-449L
STA. 448+88
REF. ℄ SURVEY SR 33
OFF. 45' LT.
ELEV. 138.1
DATE 11/12/2015

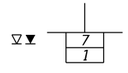

CAVE-IN

BORING TERMINATED AT ELEVATION 134.1 FT (NAVD 88)

BOR # PB-450L
STA. 449+93
REF. ℄ SURVEY SR 33
OFF. 63' LT.
ELEV. 138.0
DATE 10/14/2015
DRILLER J. ERICKSON
HAMMER AUTOMATIC
RIG D-25

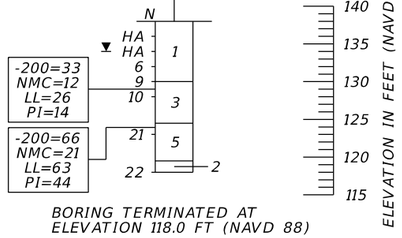

BORING TERMINATED AT ELEVATION 118.0 FT (NAVD 88)

	SAFETY HAMMER	AUTOMATIC HAMMER
GRANULAR MATERIALS- RELATIVE DENSITY	SPT N-VALUE (BLOWS/FT.)	SPT N-VALUE (BLOWS/FT.)
VERY LOOSE	LESS THAN 4	LESS THAN 3
LOOSE	4 to 10	3 to 8
MEDIUM DENSE	10 to 30	8 to 24
DENSE	30 to 50	24 to 40
VERY DENSE	GREATER THAN 50	GREATER THAN 40
SILTS AND CLAYS CONSISTENCY	SPT N-VALUE (BLOWS/FT.)	SPT N-VALUE (BLOWS/FT.)
VERY SOFT	LESS THAN 2	LESS THAN 1
SOFT	2 to 4	1 to 3
FIRM	4 to 8	3 to 6
STIFF	8 to 15	6 to 12
VERY STIFF	15 to 30	12 to 24
HARD	GREATER THAN 30	GREATER THAN 24

POND 9A

PRELIMINARY
Subject to changes

THE OFFICIAL RECORD OF THIS SHEET IS THE ELECTRONIC FILE DIGITALLY SIGNED AND SEALED UNDER RULE 61G15-23.004, F.A.C.

8/5/2022 3:38:30 PM bgarcia
J:\6511\2014 Files\6511-14-074 SR 33 at I-4\4301853520\ORD\430185-3-52-01\Geotechnical\PBORRD01.dgn

REVISIONS			
DATE	DESCRIPTION	DATE	DESCRIPTION

LAWRENCE P. MOORE, P.E.
P.E. LICENSE NUMBER 47673
TIERRA, INC.
7351 TEMPLE TERRACE HIGHWAY
TAMPA, FLORIDA 33637

STATE OF FLORIDA
DEPARTMENT OF TRANSPORTATION

ROAD NO.	COUNTY	FINANCIAL PROJECT ID
SR 400	POLK	430185-3-52-01

POND SOIL SURVEY (2)

SHEET NO. 193

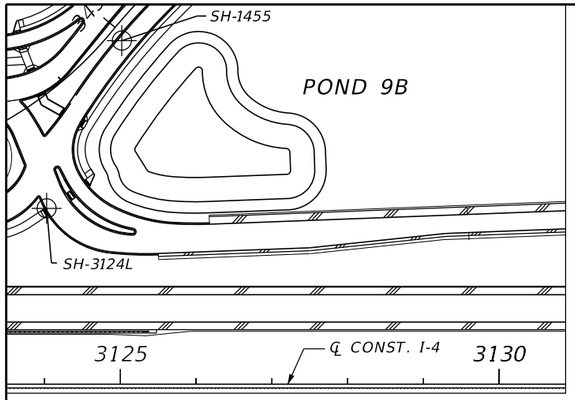

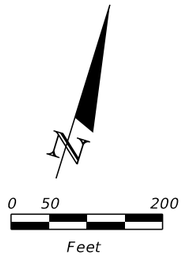

BORING LOCATION PLAN

NOTES:

1. BASED ON A REVIEW OF THE "POTENTIOMETRIC SURFACE OF THE UPPER FLORIDAN AQUIFER, WEST-CENTRAL FLORIDA" MAPS PUBLISHED BY THE USGS, THE POTENTIOMETRIC SURFACE ELEVATION OF THE UPPER FLORIDAN AQUIFER IN THE PROJECT VICINITY IS REPORTED UP TO APPROXIMATELY +130 FEET, NGVD 29.
2. THE LOCATIONS OF THE BORINGS WERE PROVIDED BY THE PROJECT SURVEYOR, McKIM AND CREED.

LEGEND

1. LIGHT GRAY TO DARK BROWN FINE SAND TO SAND WITH SILT (A-3/A-2-4)
2. LIGHT GRAY TO DARK BROWN SILTY SAND (A-2-4)
3. LIGHT GRAY TO BROWN TO RED SILTY SAND TO CLAYEY SAND (A-2-4/A-2-6)
4. LIGHT GRAY TO BROWN TO RED CLAYEY SAND TO SANDY CLAY (A-4/A-6/A-7-6)
5. LIGHT GRAY TO PALE BROWN TO PALE BLUE-GREEN TO DARK GREEN CLAYEY SAND TO CLAY (A-2-7/A-7-5/A-7-6)
6. DARK BROWN TO BLACK SAND TO SILT WITH ORGANICS TO HIGHLY ORGANIC MATERIAL (A-8)
7. LIGHT GRAY TO DARK BROWN FINE SAND TO SILTY SAND WITH CLAY NODULES, OCCASIONALLY WITH LIMEROCK (FILL) (A-2-4)
8. WEATHERED LIMESTONE

A-3	AASHTO GROUP SYMBOL AS DETERMINED BY VISUAL REVIEW AND LABORATORY TESTING ON SELECTED SAMPLES FOR CONFIRMATION OF VISUAL REVIEW.
N	NUMBERS TO THE LEFT OF BORINGS INDICATE SPT VALUE FOR 12 INCHES OF PENETRATION (UNLESS OTHERWISE NOTED).
HA	HAND AUGERED TO VERIFY UTILITY CLEARANCE
-200	PERCENT PASSING #200 SIEVE
NMC	NATURAL MOISTURE CONTENT (%)
LL	LIQUID LIMIT (%)
PI	PLASTICITY INDEX (%)
OC	ORGANIC CONTENT (%)
NAVD 88	NORTH AMERICAN VERTICAL DATUM OF 1988
NGVD 29	NATIONAL GEODETIC VERTICAL DATUM OF 1929
⊕	APPROXIMATE SPT BORING LOCATION
⊕	APPROXIMATE AUGER BORING LOCATION
▼	GROUNDWATER LEVEL ENCOUNTERED DURING FIELD EXPLORATIONS
▽	ESTIMATED SEASONAL HIGH GROUNDWATER TABLE
▽+	ESTIMATED SEASONAL HIGH GROUNDWATER TABLE AT OR ABOVE EXISTING GROUND SURFACE
GNE	GROUNDWATER NOT ENCOUNTERED
GNA	GROUNDWATER NOT APPARENT DUE TO THE INTRODUCTION OF DRILLING FLUID.
CAVE-IN	BORING TERMINATED DUE TO GROUNDWATER INTRUSION RESULTING IN BOREHOLE CAVE-IN
℄ SURVEY SR 33	BASELINE OF SURVEY OF SR 33
℄ CONST. I-4	CENTERLINE OF CONSTRUCTION OF I-4

BOR # SH-3124L
STA. 3124+03
REF. ℄ CONST. I-4
OFF. 232' LT.
ELEV. 136.0
DATE 10/6/2015

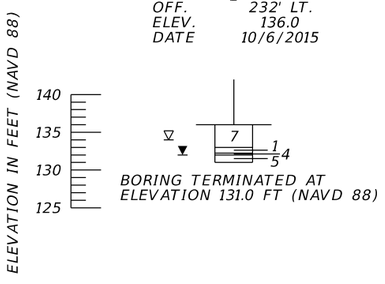

BORING TERMINATED AT ELEVATION 131.0 FT (NAVD 88)

BOR # SH-1455
STA. 3125+02
REF. ℄ CONST. I-4
OFF. 453' LT.
ELEV. 133.4
DATE 8/13/2014

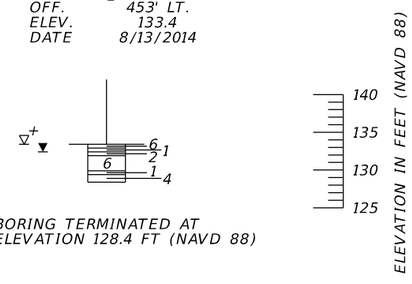

BORING TERMINATED AT ELEVATION 128.4 FT (NAVD 88)

	SAFETY HAMMER	AUTOMATIC HAMMER
GRANULAR MATERIALS-RELATIVE DENSITY	SPT N-VALUE (BLOWS/FT.)	SPT N-VALUE (BLOWS/FT.)
VERY LOOSE	LESS THAN 4	LESS THAN 3
LOOSE	4 to 10	3 to 8
MEDIUM DENSE	10 to 30	8 to 24
DENSE	30 to 50	24 to 40
VERY DENSE	GREATER THAN 50	GREATER THAN 40
SILTS AND CLAYS CONSISTENCY	SPT N-VALUE (BLOWS/FT.)	SPT N-VALUE (BLOWS/FT.)
VERY SOFT	LESS THAN 2	LESS THAN 1
SOFT	2 to 4	1 to 3
FIRM	4 to 8	3 to 6
STIFF	8 to 15	6 to 12
VERY STIFF	15 to 30	12 to 24
HARD	GREATER THAN 30	GREATER THAN 24

POND 9B

PRELIMINARY
subject to changes

REVISIONS			
DATE	DESCRIPTION	DATE	DESCRIPTION

LAWRENCE P. MOORE, P.E.
P.E. LICENSE NUMBER 47673
TIERRA, INC.
7351 TEMPLE TERRACE HIGHWAY
TAMPA, FLORIDA 33637

STATE OF FLORIDA
DEPARTMENT OF TRANSPORTATION

ROAD NO.	COUNTY	FINANCIAL PROJECT ID
SR 400	POLK	430185-3-52-01

POND SOIL SURVEY (3)

SHEET NO. 194

THE OFFICIAL RECORD OF THIS SHEET IS THE ELECTRONIC FILE DIGITALLY SIGNED AND SEALED UNDER RULE 61G15-23.004, F.A.C.

8/5/2022 3:38:44 PM bgarcia
J:\6511\2014 Files\6511-14-074 SR 33 at I-4\430185320\ORD\430185-3-52-01\Geotechnical\PBORRD01.dgn

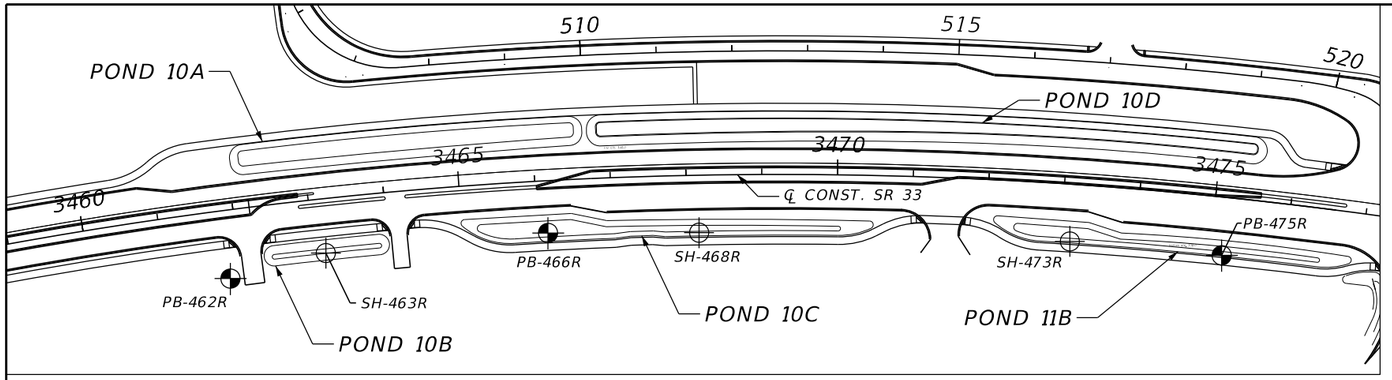

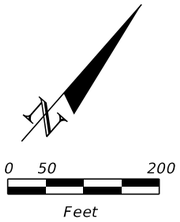

BORING LOCATION PLAN

NOTES:

1. BASED ON A REVIEW OF THE "POTENTIOMETRIC SURFACE OF THE UPPER FLORIDAN AQUIFER, WEST-CENTRAL FLORIDA" MAPS PUBLISHED BY THE USGS, THE POTENTIOMETRIC SURFACE ELEVATION OF THE UPPER FLORIDAN AQUIFER IN THE PROJECT VICINITY IS REPORTED UP TO APPROXIMATELY +130 FEET, NGVD 29.
2. THE LOCATIONS OF THE BORINGS WERE PROVIDED BY THE PROJECT SURVEYOR, McKIM AND CREED.

LEGEND

1. LIGHT GRAY TO DARK BROWN FINE SAND TO SAND WITH SILT (A-3/A-2-4)
2. LIGHT GRAY TO DARK BROWN SILTY SAND (A-2-4)
3. LIGHT GRAY TO BROWN TO RED SILTY SAND TO CLAYEY SAND (A-2-4/A-2-6)
4. LIGHT GRAY TO BROWN TO RED CLAYEY SAND TO SANDY CLAY (A-4/A-6/A-7-6)
5. LIGHT GRAY TO PALE BROWN TO PALE BLUE-GREEN TO DARK GREEN CLAYEY SAND TO CLAY (A-2-7/A-7-5/A-7-6)
6. DARK BROWN TO BLACK SAND TO SILT WITH ORGANICS TO HIGHLY ORGANIC MATERIAL (A-8)
7. LIGHT GRAY TO DARK BROWN FINE SAND TO SILTY SAND WITH CLAY NODULES, OCCASIONALLY WITH LIMEROCK (FILL) (A-2-4)
8. WEATHERED LIMESTONE

A-3	AASHTO GROUP SYMBOL AS DETERMINED BY VISUAL REVIEW AND LABORATORY TESTING ON SELECTED SAMPLES FOR CONFIRMATION OF VISUAL REVIEW.
N	NUMBERS TO THE LEFT OF BORINGS INDICATE SPT VALUE FOR 12 INCHES OF PENETRATION (UNLESS OTHERWISE NOTED).
HA	HAND AUGERED TO VERIFY UTILITY CLEARANCE
-200	PERCENT PASSING #200 SIEVE
NMC	NATURAL MOISTURE CONTENT (%)
LL	LIQUID LIMIT (%)
PI	PLASTICITY INDEX (%)
OC	ORGANIC CONTENT (%)
NAVD 88	NORTH AMERICAN VERTICAL DATUM OF 1988
NGVD 29	NATIONAL GEODETIC VERTICAL DATUM OF 1929
⊕	APPROXIMATE SPT BORING LOCATION
⊕	APPROXIMATE AUGER BORING LOCATION
▼	GROUNDWATER LEVEL ENCOUNTERED DURING FIELD EXPLORATIONS
▽	ESTIMATED SEASONAL HIGH GROUNDWATER TABLE
▽+	ESTIMATED SEASONAL HIGH GROUNDWATER TABLE AT OR ABOVE EXISTING GROUND SURFACE
GNE	GROUNDWATER NOT ENCOUNTERED
GNA	GROUNDWATER NOT APPARENT DUE TO THE INTRODUCTION OF DRILLING FLUID.
CAVE-IN	BORING TERMINATED DUE TO GROUNDWATER INTRUSION RESULTING IN BOREHOLE CAVE-IN
℄ SURVEY SR 33	BASELINE OF SURVEY OF SR 33
℄ CONST. I-4	CENTERLINE OF CONSTRUCTION OF I-4

BOR # PB-462R
STA. 461+65
REF. ℄ SURVEY SR 33
OFF. 109' RT.
ELEV. 135.0
DATE 10/20/2015
DRILLER J. ERICKSON
HAMMER AUTOMATIC
RIG D-25

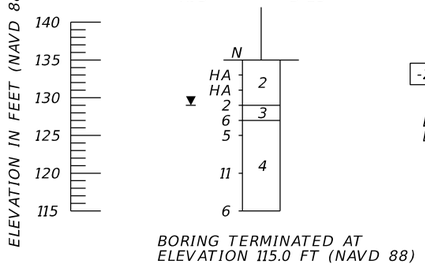

BORING TERMINATED AT ELEVATION 115.0 FT (NAVD 88)

BOR # SH-463R
STA. 462+96
REF. ℄ SURVEY SR 33
OFF. 91' RT.
ELEV. 134.9
DATE 10/5/2015

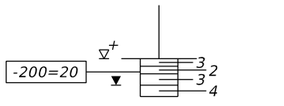

BORING TERMINATED AT ELEVATION 129.9 FT (NAVD 88)

BOR # PB-466R
STA. 465+95
REF. ℄ SURVEY SR 33
OFF. 88' RT.
ELEV. 137.4
DATE 10/16/2015
DRILLER J. ERICKSON
HAMMER AUTOMATIC
RIG D-25

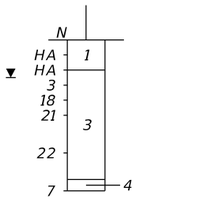

BORING TERMINATED AT ELEVATION 117.4 FT (NAVD 88)

BOR # SH-468R
STA. 467+98
REF. ℄ SURVEY SR 33
OFF 95' RT.
ELEV. 138.3
DATE 10/5/2015

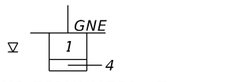

BORING TERMINATED AT ELEVATION 133.3 FT (NAVD 88)

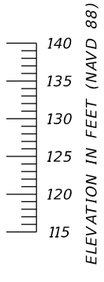

	SAFETY HAMMER	AUTOMATIC HAMMER
GRANULAR MATERIALS- RELATIVE DENSITY	SPT N-VALUE (BLOWS/FT.)	SPT N-VALUE (BLOWS/FT.)
VERY LOOSE	LESS THAN 4	LESS THAN 3
LOOSE	4 to 10	3 to 8
MEDIUM DENSE	10 to 30	8 to 24
DENSE	30 to 50	24 to 40
VERY DENSE	GREATER THAN 50	GREATER THAN 40
SILTS AND CLAYS CONSISTENCY	SPT N-VALUE (BLOWS/FT.)	SPT N-VALUE (BLOWS/FT.)
VERY SOFT	LESS THAN 2	LESS THAN 1
SOFT	2 to 4	1 to 3
FIRM	4 to 8	3 to 6
STIFF	8 to 15	6 to 12
VERY STIFF	15 to 30	12 to 24
HARD	GREATER THAN 30	GREATER THAN 24

PRELIMINARY
subject to changes

PONDS 10A, 10B, 10C, 10D & 11B

REVISIONS			
DATE	DESCRIPTION	DATE	DESCRIPTION

LAWRENCE P. MOORE, P.E.
P.E. LICENSE NUMBER 47673
TIERRA, INC.
7351 TEMPLE TERRACE HIGHWAY
TAMPA, FLORIDA 33637

STATE OF FLORIDA
DEPARTMENT OF TRANSPORTATION

ROAD NO.	COUNTY	FINANCIAL PROJECT ID
SR 400	POLK	430185-3-52-01

POND SOIL SURVEY (4)

SHEET NO. 195

THE OFFICIAL RECORD OF THIS SHEET IS THE ELECTRONIC FILE DIGITALLY SIGNED AND SEALED UNDER RULE 61G15-23.004, F.A.C.

8/5/2022 3:39:06 PM bgarcia
J:\6511\2014 Files\6511-14-074 SR 33 at I-4\430185352O1\ORD\430185-3-52-01\Geotechnical\PBORRD01.dgn

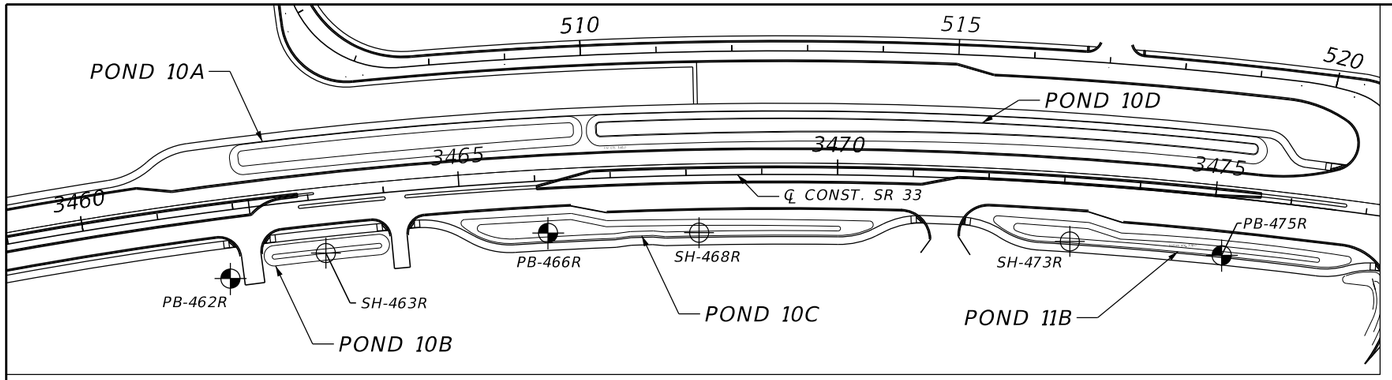

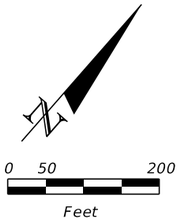

BORING LOCATION PLAN

NOTES:

1. BASED ON A REVIEW OF THE "POTENTIOMETRIC SURFACE OF THE UPPER FLORIDAN AQUIFER, WEST-CENTRAL FLORIDA" MAPS PUBLISHED BY THE USGS, THE POTENTIOMETRIC SURFACE ELEVATION OF THE UPPER FLORIDAN AQUIFER IN THE PROJECT VICINITY IS REPORTED UP TO APPROXIMATELY +130 FEET, NGVD 29.
2. THE LOCATIONS OF THE BORINGS WERE PROVIDED BY THE PROJECT SURVEYOR, McKIM AND CREED.

LEGEND

1. LIGHT GRAY TO DARK BROWN FINE SAND TO SAND WITH SILT (A-3/A-2-4)
2. LIGHT GRAY TO DARK BROWN SILTY SAND (A-2-4)
3. LIGHT GRAY TO BROWN TO RED SILTY SAND TO CLAYEY SAND (A-2-4/A-2-6)
4. LIGHT GRAY TO BROWN TO RED CLAYEY SAND TO SANDY CLAY (A-4/A-6/A-7-6)
5. LIGHT GRAY TO PALE BROWN TO PALE BLUE-GREEN TO DARK GREEN CLAYEY SAND TO CLAY (A-2-7/A-7-5/A-7-6)
6. DARK BROWN TO BLACK SAND TO SILT WITH ORGANICS TO HIGHLY ORGANIC MATERIAL (A-8)
7. LIGHT GRAY TO DARK BROWN FINE SAND TO SILTY SAND WITH CLAY NODULES, OCCASIONALLY WITH LIMEROCK (FILL) (A-2-4)
8. WEATHERED LIMESTONE

A-3	AASHTO GROUP SYMBOL AS DETERMINED BY VISUAL REVIEW AND LABORATORY TESTING ON SELECTED SAMPLES FOR CONFIRMATION OF VISUAL REVIEW.
N	NUMBERS TO THE LEFT OF BORINGS INDICATE SPT VALUE FOR 12 INCHES OF PENETRATION (UNLESS OTHERWISE NOTED).
HA	HAND AUGERED TO VERIFY UTILITY CLEARANCE
-200	PERCENT PASSING #200 SIEVE
NMC	NATURAL MOISTURE CONTENT (%)
LL	LIQUID LIMIT (%)
PI	PLASTICITY INDEX (%)
OC	ORGANIC CONTENT (%)
NAVD 88	NORTH AMERICAN VERTICAL DATUM OF 1988
NGVD 29	NATIONAL GEODETIC VERTICAL DATUM OF 1929
⊕	APPROXIMATE SPT BORING LOCATION
⊕	APPROXIMATE AUGER BORING LOCATION
▼	GROUNDWATER LEVEL ENCOUNTERED DURING FIELD EXPLORATIONS
▽	ESTIMATED SEASONAL HIGH GROUNDWATER TABLE
▽+	ESTIMATED SEASONAL HIGH GROUNDWATER TABLE AT OR ABOVE EXISTING GROUND SURFACE
GNE	GROUNDWATER NOT ENCOUNTERED
GNA	GROUNDWATER NOT APPARENT DUE TO THE INTRODUCTION OF DRILLING FLUID.
CAVE-IN	BORING TERMINATED DUE TO GROUNDWATER INTRUSION RESULTING IN BOREHOLE CAVE-IN
℄ SURVEY SR 33	BASELINE OF SURVEY OF SR 33
℄ CONST. I-4	CENTERLINE OF CONSTRUCTION OF I-4

BOR # SH-473R
STA. 472+96
REF. ℄ SURVEY SR 33
OFF 95' RT.
ELEV. 136.6
DATE 10/5/2015

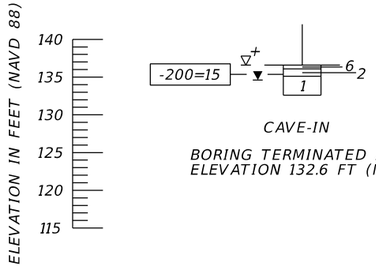

BOR # PB-475R
STA. 475+00
REF. ℄ SURVEY SR 33
OFF 96' RT.
ELEV. 137.3
DATE 10/16/2015
DRILLER J. ERICKSON
HAMMER AUTOMATIC
RIG D-25

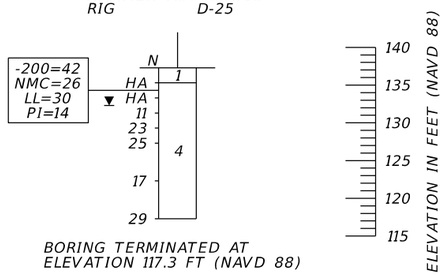

	SAFETY HAMMER	AUTOMATIC HAMMER
GRANULAR MATERIALS-RELATIVE DENSITY	SPT N-VALUE (BLOWS/FT.)	SPT N-VALUE (BLOWS/FT.)
VERY LOOSE	LESS THAN 4	LESS THAN 3
LOOSE	4 to 10	3 to 8
MEDIUM DENSE	10 to 30	8 to 24
DENSE	30 to 50	24 to 40
VERY DENSE	GREATER THAN 50	GREATER THAN 40
SILTS AND CLAYS CONSISTENCY	SPT N-VALUE (BLOWS/FT.)	SPT N-VALUE (BLOWS/FT.)
VERY SOFT	LESS THAN 2	LESS THAN 1
SOFT	2 to 4	1 to 3
FIRM	4 to 8	3 to 6
STIFF	8 to 15	6 to 12
VERY STIFF	15 to 30	12 to 24
HARD	GREATER THAN 30	GREATER THAN 24

PONDS 10A, 10B, 10C, 10D & 11B

PRELIMINARY
subject to changes

REVISIONS			
DATE	DESCRIPTION	DATE	DESCRIPTION

LAWRENCE P. MOORE, P.E.
P.E. LICENSE NUMBER 47673
TIERRA, INC.
7351 TEMPLE TERRACE HIGHWAY
TAMPA, FLORIDA 33637

STATE OF FLORIDA
DEPARTMENT OF TRANSPORTATION

ROAD NO.	COUNTY	FINANCIAL PROJECT ID
SR 400	POLK	430185-3-52-01

POND SOIL SURVEY (5)

SHEET NO. 196

THE OFFICIAL RECORD OF THIS SHEET IS THE ELECTRONIC FILE DIGITALLY SIGNED AND SEALED UNDER RULE 61G15-23.004, F.A.C.

8/5/2022 3:39:55 PM bgarcia
J:\6511\2014 Files\6511-14-074 SR 33 at I-4\430185320I\ORD\430185-3-52-01\Geotechnical\PB0RRD01.dgn

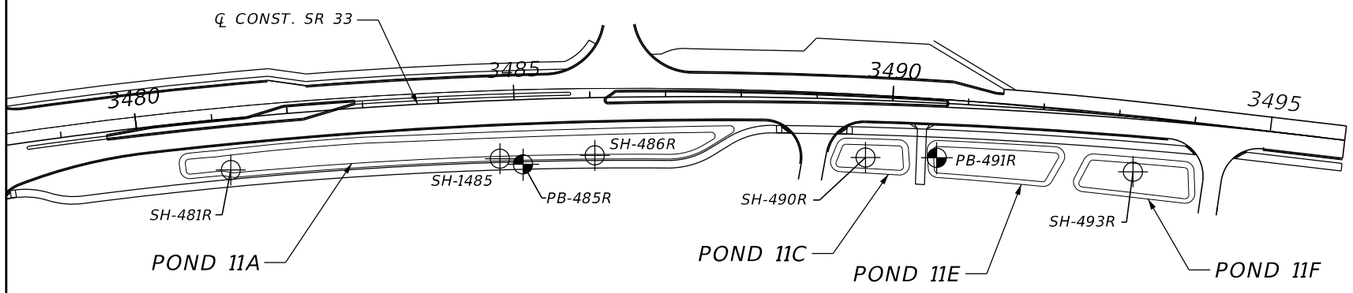

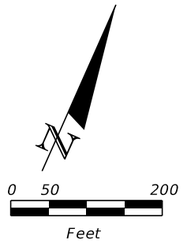

BORING LOCATION PLAN

NOTES:

1. BASED ON A REVIEW OF THE "POTENTIOMETRIC SURFACE OF THE UPPER FLORIDAN AQUIFER, WEST-CENTRAL FLORIDA" MAPS PUBLISHED BY THE USGS, THE POTENTIOMETRIC SURFACE ELEVATION OF THE UPPER FLORIDAN AQUIFER IN THE PROJECT VICINITY IS REPORTED UP TO APPROXIMATELY +130 FEET, NGVD 29.
2. THE LOCATIONS OF THE BORINGS WERE PROVIDED BY THE PROJECT SURVEYOR, McKIM AND CREED.

LEGEND

1. LIGHT GRAY TO DARK BROWN FINE SAND TO SAND WITH SILT (A-3/A-2-4)
2. LIGHT GRAY TO DARK BROWN SILTY SAND (A-2-4)
3. LIGHT GRAY TO BROWN TO RED SILTY SAND TO CLAYEY SAND (A-2-4/A-2-6)
4. LIGHT GRAY TO BROWN TO RED CLAYEY SAND TO SANDY CLAY (A-4/A-6/A-7-6)
5. LIGHT GRAY TO PALE BROWN TO PALE BLUE-GREEN TO DARK GREEN CLAYEY SAND TO CLAY (A-2-7/A-7-5/A-7-6)
6. DARK BROWN TO BLACK SAND TO SILT WITH ORGANICS TO HIGHLY ORGANIC MATERIAL (A-8)
7. LIGHT GRAY TO DARK BROWN FINE SAND TO SILTY SAND WITH CLAY NODULES, OCCASIONALLY WITH LIMEROCK (FILL) (A-2-4)
8. WEATHERED LIMESTONE

A-3	AASHTO GROUP SYMBOL AS DETERMINED BY VISUAL REVIEW AND LABORATORY TESTING ON SELECTED SAMPLES FOR CONFIRMATION OF VISUAL REVIEW.
N	NUMBERS TO THE LEFT OF BORINGS INDICATE SPT VALUE FOR 12 INCHES OF PENETRATION (UNLESS OTHERWISE NOTED).
HA	HAND AUGERED TO VERIFY UTILITY CLEARANCE
-200	PERCENT PASSING #200 SIEVE
NMC	NATURAL MOISTURE CONTENT (%)
LL	LIQUID LIMIT (%)
PI	PLASTICITY INDEX (%)
OC	ORGANIC CONTENT (%)
NAVD 88	NORTH AMERICAN VERTICAL DATUM OF 1988
NGVD 29	NATIONAL GEODETIC VERTICAL DATUM OF 1929
⊕	APPROXIMATE SPT BORING LOCATION
⊕	APPROXIMATE AUGER BORING LOCATION
▼	GROUNDWATER LEVEL ENCOUNTERED DURING FIELD EXPLORATIONS
▽	ESTIMATED SEASONAL HIGH GROUNDWATER TABLE
▽+	ESTIMATED SEASONAL HIGH GROUNDWATER TABLE AT OR ABOVE EXISTING GROUND SURFACE
GNE	GROUNDWATER NOT ENCOUNTERED
GNA	GROUNDWATER NOT APPARENT DUE TO THE INTRODUCTION OF DRILLING FLUID.
CAVE-IN	BORING TERMINATED DUE TO GROUNDWATER INTRUSION RESULTING IN BOREHOLE CAVE-IN
℄ SURVEY SR 33	BASELINE OF SURVEY OF SR 33
℄ CONST. I-4	CENTERLINE OF CONSTRUCTION OF I-4

PRELIMINARY
subject to changes

BOR # SH-481R
STA. 481+05
REF. ℄ SURVEY SR 33
OFF 87' RT.
ELEV. 134.5
DATE 10/5/2015

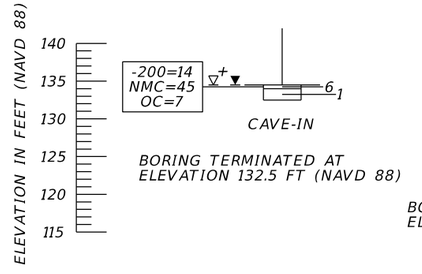

BORING TERMINATED AT ELEVATION 132.5 FT (NAVD 88)

BOR # SH-1485
STA. 484+66
REF. ℄ SURVEY SR 33
OFF 94' RT.
ELEV. 135.3
DATE 8/13/2014

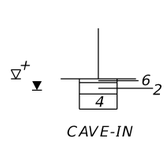

BORING TERMINATED AT ELEVATION 131.3 FT (NAVD 88)

BOR # PB-485R
STA. 484+97
REF. ℄ SURVEY SR 33
OFF 102' RT.
ELEV. 136.1
DATE 10/16/2015
DRILLER J. ERICKSON
HAMMER AUTOMATIC
RIG D-25

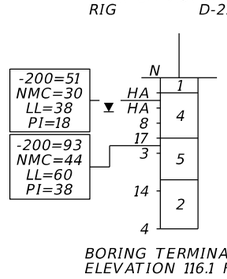

BORING TERMINATED AT ELEVATION 116.1 FT (NAVD 88)

BOR # SH-486R
STA. 485+94
REF. ℄ SURVEY SR 33
OFF 92' RT.
ELEV. 136.4
DATE 10/5/2015

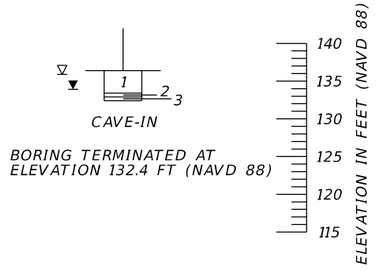

BORING TERMINATED AT ELEVATION 132.4 FT (NAVD 88)

	SAFETY HAMMER	AUTOMATIC HAMMER
GRANULAR MATERIALS- RELATIVE DENSITY	SPT N-VALUE (BLOWS/FT.)	SPT N-VALUE (BLOWS/FT.)
VERY LOOSE	LESS THAN 4	LESS THAN 3
LOOSE	4 to 10	3 to 8
MEDIUM DENSE	10 to 30	8 to 24
DENSE	30 to 50	24 to 40
VERY DENSE	GREATER THAN 50	GREATER THAN 40
SILTS AND CLAYS CONSISTENCY	SPT N-VALUE (BLOWS/FT.)	SPT N-VALUE (BLOWS/FT.)
VERY SOFT	LESS THAN 2	LESS THAN 1
SOFT	2 to 4	1 to 3
FIRM	4 to 8	3 to 6
STIFF	8 to 15	6 to 12
VERY STIFF	15 to 30	12 to 24
HARD	GREATER THAN 30	GREATER THAN 24

PONDS 11A. 11C, 11E & 11F

REVISIONS			
DATE	DESCRIPTION	DATE	DESCRIPTION

LAWRENCE P. MOORE, P.E.
P.E. LICENSE NUMBER 47673
TIERRA, INC.
7351 TEMPLE TERRACE HIGHWAY
TAMPA, FLORIDA 33637

STATE OF FLORIDA
DEPARTMENT OF TRANSPORTATION

ROAD NO.	COUNTY	FINANCIAL PROJECT ID
SR 400	POLK	430185-3-52-01

POND SOIL SURVEY (6)

SHEET NO. 197

THE OFFICIAL RECORD OF THIS SHEET IS THE ELECTRONIC FILE DIGITALLY SIGNED AND SEALED UNDER RULE 61G15-23.004, F.A.C.

8/5/2022 3:40:11 PM bgarcia
J:\6511\2014 Files\6511-14-074 SR 33 at I-4\4301853520\ORD\430185-3-52-01\Geotechnical\PBORRD01.dgn

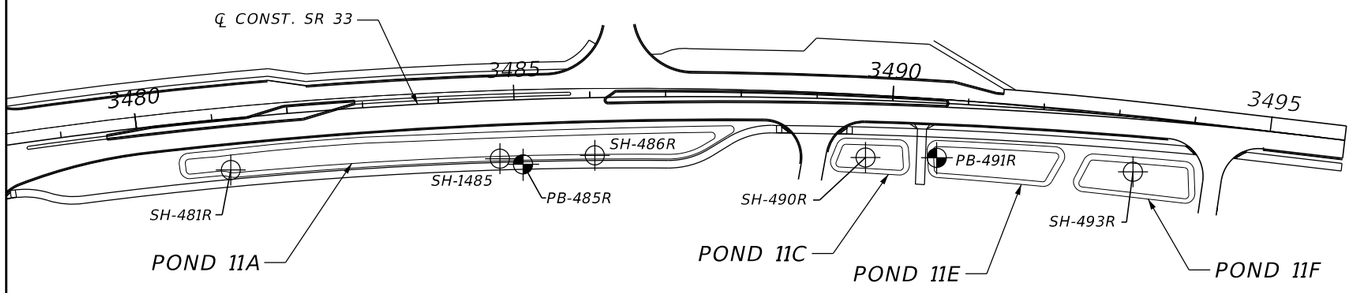

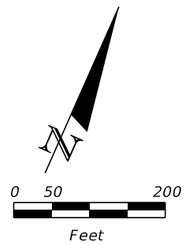

BORING LOCATION PLAN

NOTES:

1. BASED ON A REVIEW OF THE "POTENTIOMETRIC SURFACE OF THE UPPER FLORIDAN AQUIFER, WEST-CENTRAL FLORIDA" MAPS PUBLISHED BY THE USGS, THE POTENTIOMETRIC SURFACE ELEVATION OF THE UPPER FLORIDAN AQUIFER IN THE PROJECT VICINITY IS REPORTED UP TO APPROXIMATELY +130 FEET, NGVD 29.
2. THE LOCATIONS OF THE BORINGS WERE PROVIDED BY THE PROJECT SURVEYOR, McKIM AND CREED.

LEGEND

1. LIGHT GRAY TO DARK BROWN FINE SAND TO SAND WITH SILT (A-3/A-2-4)
2. LIGHT GRAY TO DARK BROWN SILTY SAND (A-2-4)
3. LIGHT GRAY TO BROWN TO RED SILTY SAND TO CLAYEY SAND (A-2-4/A-2-6)
4. LIGHT GRAY TO BROWN TO RED CLAYEY SAND TO SANDY CLAY (A-4/A-6/A-7-6)
5. LIGHT GRAY TO PALE BROWN TO PALE BLUE-GREEN TO DARK GREEN CLAYEY SAND TO CLAY (A-2-7/A-7-5/A-7-6)
6. DARK BROWN TO BLACK SAND TO SILT WITH ORGANICS TO HIGHLY ORGANIC MATERIAL (A-8)
7. LIGHT GRAY TO DARK BROWN FINE SAND TO SILTY SAND WITH CLAY NODULES, OCCASIONALLY WITH LIMEROCK (FILL) (A-2-4)
8. WEATHERED LIMESTONE

A-3	AASHTO GROUP SYMBOL AS DETERMINED BY VISUAL REVIEW AND LABORATORY TESTING ON SELECTED SAMPLES FOR CONFIRMATION OF VISUAL REVIEW.
N	NUMBERS TO THE LEFT OF BORINGS INDICATE SPT VALUE FOR 12 INCHES OF PENETRATION (UNLESS OTHERWISE NOTED).
HA	HAND AUGERED TO VERIFY UTILITY CLEARANCE
-200	PERCENT PASSING #200 SIEVE
NMC	NATURAL MOISTURE CONTENT (%)
LL	LIQUID LIMIT (%)
PI	PLASTICITY INDEX (%)
OC	ORGANIC CONTENT (%)
NAVD 88	NORTH AMERICAN VERTICAL DATUM OF 1988
NGVD 29	NATIONAL GEODETIC VERTICAL DATUM OF 1929
⊕	APPROXIMATE SPT BORING LOCATION
⊕	APPROXIMATE AUGER BORING LOCATION
▼	GROUNDWATER LEVEL ENCOUNTERED DURING FIELD EXPLORATIONS
▽	ESTIMATED SEASONAL HIGH GROUNDWATER TABLE
$▽^{+}$	ESTIMATED SEASONAL HIGH GROUNDWATER TABLE AT OR ABOVE EXISTING GROUND SURFACE
GNE	GROUNDWATER NOT ENCOUNTERED
GNA	GROUNDWATER NOT APPARENT DUE TO THE INTRODUCTION OF DRILLING FLUID.
CAVE-IN	BORING TERMINATED DUE TO GROUNDWATER INTRUSION RESULTING IN BOREHOLE CAVE-IN
℄ SURVEY SR 33	BASELINE OF SURVEY OF SR 33
℄ CONST. I-4	CENTERLINE OF CONSTRUCTION OF I-4

BOR # SH-490R
STA. 489+57
REF. ℄ SURVEY SR 33
OFF 87' RT.
ELEV. 137.3
DATE 10/5/2015

BORING TERMINATED AT ELEVATION 132.3 FT (NAVD 88)

BOR # PB-491R
STA. 490+52
REF. ℄ SURVEY SR 33
OFF 81' RT.
ELEV. 137.1
DATE 10/15/2015
DRILLER J. ERICKSON
HAMMER AUTOMATIC
RIG D-25

BORING TERMINATED AT ELEVATION 117.1 FT (NAVD 88)

BOR # SH-493R
STA. 493+15
REF. ℄ SURVEY SR 33
OFF 76' RT.
ELEV. 136.5
DATE 10/5/2015

BORING TERMINATED AT ELEVATION 133.5 FT (NAVD 88)

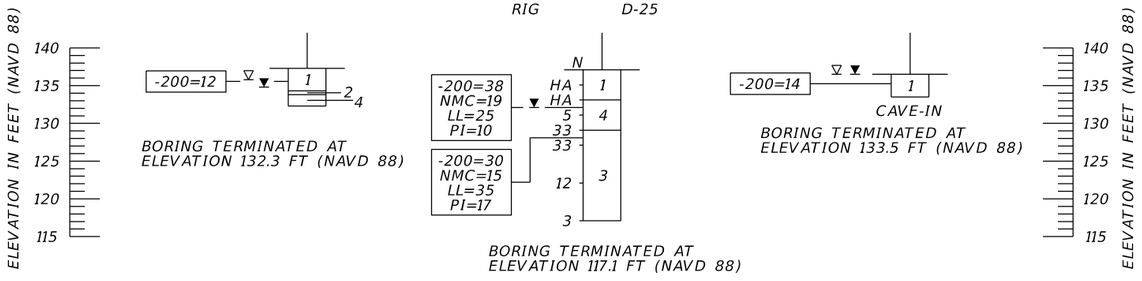

	SAFETY HAMMER	AUTOMATIC HAMMER
GRANULAR MATERIALS- RELATIVE DENSITY	SPT N-VALUE (BLOWS/FT.)	SPT N-VALUE (BLOWS/FT.)
VERY LOOSE	LESS THAN 4	LESS THAN 3
LOOSE	4 to 10	3 to 8
MEDIUM DENSE	10 to 30	8 to 24
DENSE	30 to 50	24 to 40
VERY DENSE	GREATER THAN 50	GREATER THAN 40
SILTS AND CLAYS CONSISTENCY	SPT N-VALUE (BLOWS/FT.)	SPT N-VALUE (BLOWS/FT.)
VERY SOFT	LESS THAN 2	LESS THAN 1
SOFT	2 to 4	1 to 3
FIRM	4 to 8	3 to 6
STIFF	8 to 15	6 to 12
VERY STIFF	15 to 30	12 to 24
HARD	GREATER THAN 30	GREATER THAN 24

PONDS 11A. 11C, 11E & 11F

PRELIMINARY
subject to changes

REVISIONS			
DATE	DESCRIPTION	DATE	DESCRIPTION

LAWRENCE P. MOORE, P.E.
P.E. LICENSE NUMBER 47673
TIERRA, INC.
7351 TEMPLE TERRACE HIGHWAY
TAMPA, FLORIDA 33637

STATE OF FLORIDA
DEPARTMENT OF TRANSPORTATION

ROAD NO.	COUNTY	FINANCIAL PROJECT ID
SR 400	POLK	430185-3-52-01

POND SOIL SURVEY (7)

SHEET NO. 198

THE OFFICIAL RECORD OF THIS SHEET IS THE ELECTRONIC FILE DIGITALLY SIGNED AND SEALED UNDER RULE 61G15-23.004, F.A.C.

8/5/2022 3:40:26 PM bgarcia
J:\6511\2014 Files\6511-14-074 SR 33 at I-4\430185320\ORD\430185-3-52-01\Geotechnical\PBORRD01.dgn

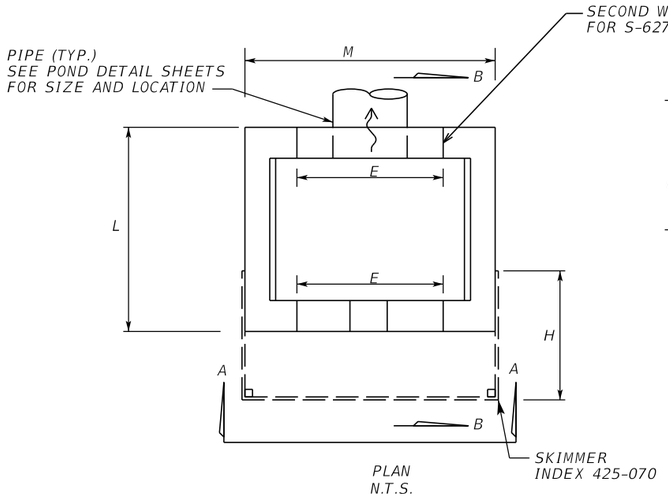

PLAN
N.T.S.

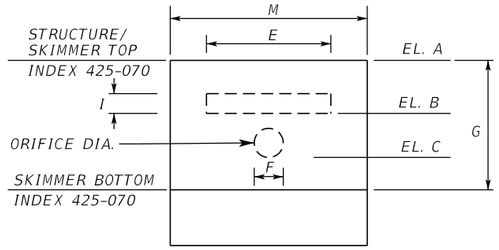

TYPE A
SECTION A-A (W/WEIR OR ORIFICE)
N.T.S.

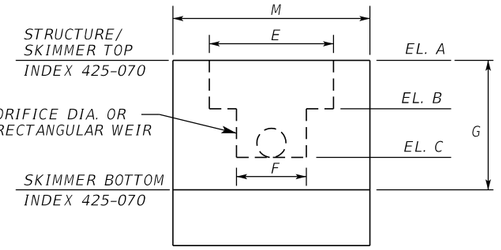

TYPE B
SECTION A-A (W/WEIR OR ORIFICE)
N.T.S.

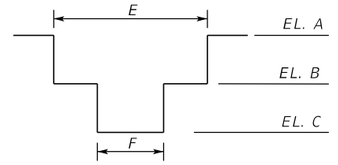

POND 16 WEIR SLOT DETAIL
N.T.S.

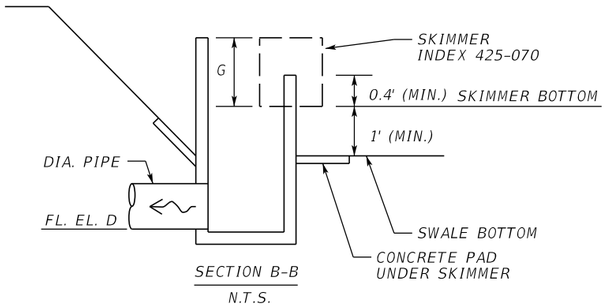

SECTION B-B
N.T.S.

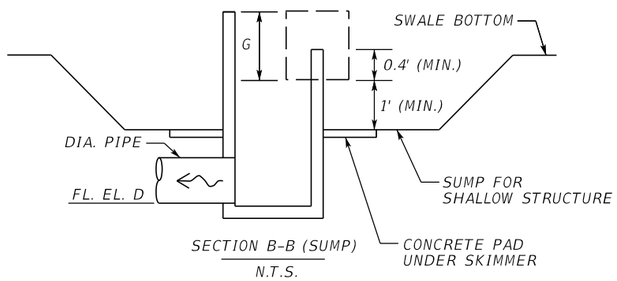

SECTION B-B (SUMP)
N.T.S.

CONTROL STRUCTURE: INLET TYPE D (MODIFY)

CONTROL STRUCTURE	POND SWALE	ELEVATION				DIMENSION									NOTE
		A	B	C	D	E	F	DIA.	G	H	I		L	M	
S-601	6A/B	136.30	135.30	---	134.50	1.00'	---	14"x23"	---	---	---	---	4'-1"	3'-1"	TYPE B
S-614	6C	136.00	135.00	---	132.10	1.00'	---	18"	---	---	---	---	4'-1"	3'-1"	TYPE B
S-621	6D	136.00	135.00	---	132.08	1.00'	---	14"x23"	---	---	---	---	4'-1"	3'-1"	TYPE B
S-627	6E	135.40	135.00	---	131.48	(2) 2.25'	---	19"x30"	---	---	---	---	4'-1"	3'-1"	TYPE B
S-41	7	135.30	134.65	---	128.20	(2) 1.50'	---	(2)-48"	---	---	---	---	4'-1"	3'-1"	TYPE B
S-820	8	134.50	133.80	133.40	131.30	1.00'	2.76"	24"	1.50'	28"	0.4'	---	4'-1"	3'-1"	TYPE A
S-56	9A	138.00	136.80	136.40	134.51	1.00'	2.52"	18"	2.00'	28"	0.4'	---	4'-1"	3'-1"	TYPE A
S-920	9B	135.30	134.30	134.00	132.15	1.50'	2.04"	24"	2.00'	31"	---	---	4'-1"	3'-1"	TYPE B
S-1004	10A	138.50	136.80	---	132.70	0.50'	---	18"	---	---	---	---	4'-1"	3'-1"	TYPE B
S-1006	10B	138.37	136.20	---	132.99	0.50'	---	24"	---	---	---	---	4'-1"	3'-1"	TYPE B
S-1010	10C	137.90	137.20	---	134.26	1.50'	---	18"	---	---	---	---	4'-1"	3'-1"	TYPE B
S-1012	10D	139.50	137.20	---	133.99	0.50'	---	18"	---	---	---	---	4'-1"	3'-1"	TYPE B
S-1108	11A	138.25	137.20	---	134.10	0.50'	---	18"	---	---	---	---	4'-1"	3'-1"	TYPE B
S-1101	11B	139.20	138.40	---	134.50	2.50'	---	24"	---	---	---	---	4'-1"	3'-1"	TYPE B
S-1112	11CEF	139.00	137.75	---	135.53	1.00'	---	18"	---	---	---	---	4'-1"	3'-1"	TYPE B
EX-113	13	Exist.	Exist.	Exist.	Exist.	Exist.	6.0" W	18"	Exist.	Exist.	---	---	4'-1"	3'-1"	
EX-176	14	134.50	132.80	Exist.	Exist.	Exist.	3.12"	24"	---	Exist.	---	---	4'-1"	3'-1"	New Skimmer top elev.
EX-177	15	Exist.	134.70	Exist.	Exist.	2.70'	2.46"	24"	Exist.	Exist.	---	---	4'-1"	3'-1"	

CONTROL STRUCTURE: WEIR SLOT

CONTROL STRUCTURE	POND SWALE	ELEVATION				DIMENSION									NOTE
		A	B	C		E	F								
P16	16	Exist.	137.15	Exist.		Exist.	Exist.								

PRELIMINARY
subject to change

THE OFFICIAL RECORD OF THIS SHEET IS THE ELECTRONIC FILE DIGITALLY SIGNED AND SEALED UNDER RULE 61G15-23.004, F.A.C.

2/29/2024 5:12:50 PM BHORTON
c:\pw_working\lochner-pw-01\dms18776\DRDTR006.dgn

REVISIONS				ENGINEER OF RECORD	STATE OF FLORIDA DEPARTMENT OF TRANSPORTATION			DRAINAGE DETAILS (01)	SHEET NO.
DATE	DESCRIPTION	DATE	DESCRIPTION	LISANDRO ZAPATA, P.E. LICENSE NUMBER 58822 H. W. LOCHNER 4300 W. CYPRESS STREET, SUITE 500 TAMPA, FLORIDA 33607	ROAD NO.	COUNTY	FINANCIAL PROJECT ID		199
					SR 400	POLK	430185-3-52-01		

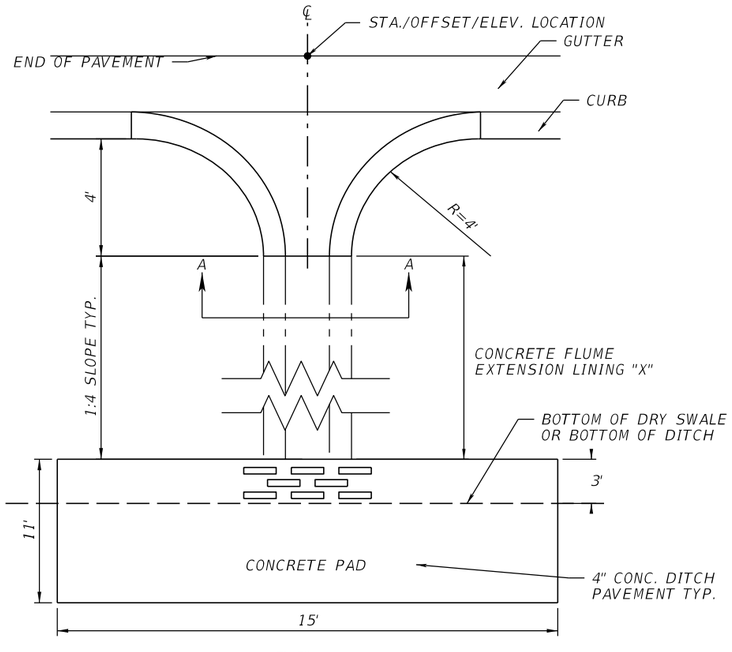

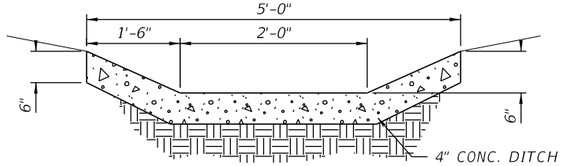

SECTION A-A

OPEN & CLOSED FLUME DETAIL
(SEE INDEX 520-010 FOR DIMENSIONS)

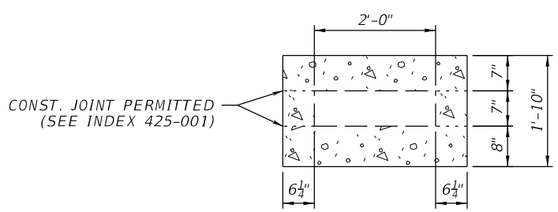

SECTION B-B

SINGLE CLOSED FLUME AND SHARED USE PATH
(SEE INDEX 425-061 FOR DIMENSIONS)

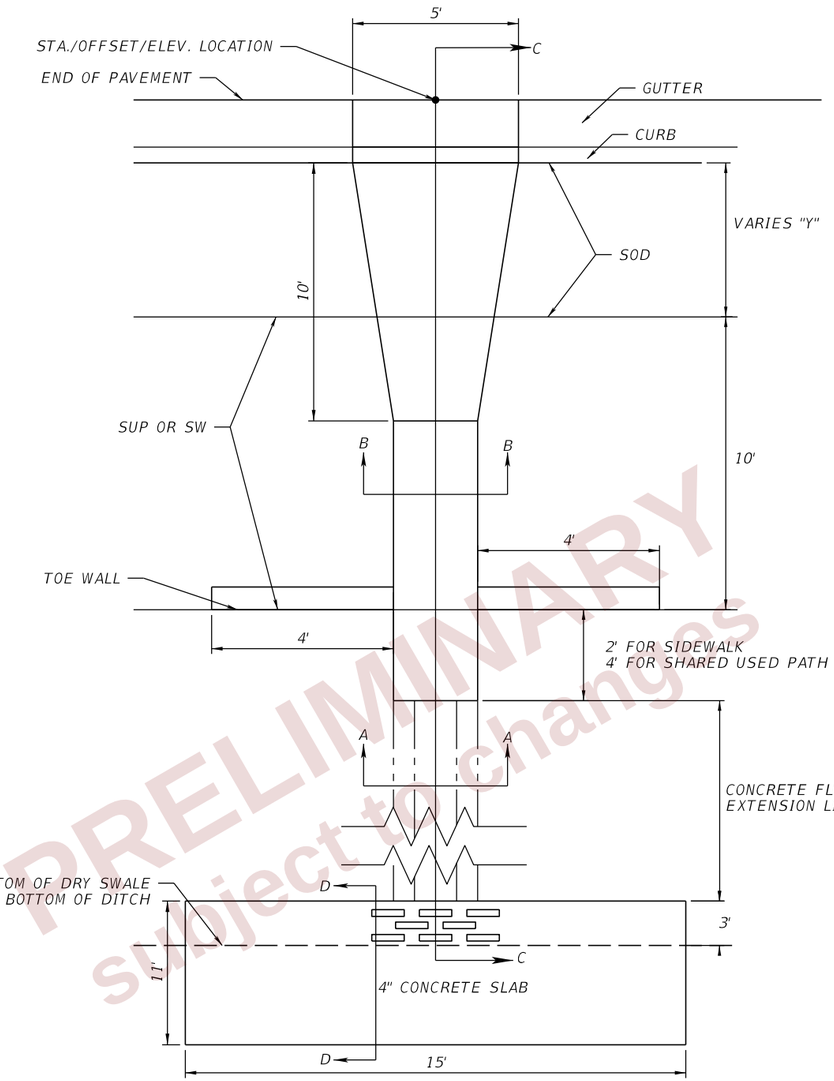

SINGLE CLOSED FLUME AND SUP OR SW
(SEE INDEX 425-061 FOR DIMENSIONS)

4" CONCRETE SLAB

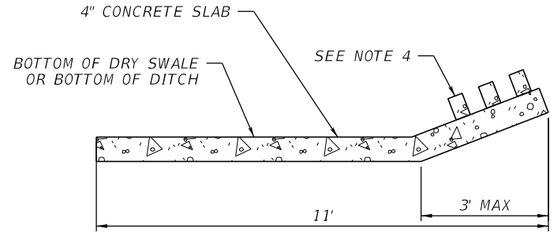

FOR WIDE SWALES/DITCHES

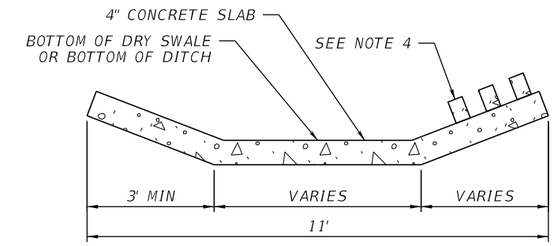

FOR NARROW SWALES/DITCHES

SECTION D-D

NOTES:
1. SEE DRAINAGE STRUCTURE DATA TABLE REMARKS FOR "X" AND "Y" DIMENSIONS.
2. SEE DRAINAGE DETAIL (03) FOR SECTION C-C, D-D, AND E-E.
3. SEE INDEX 425-061 FOR REINFORCING DETAILS. MAINTAIN 1¼" COVER FOR REINFORCING IN THE TOP SLAB.
4. INSTALL ENERGY DISSIPATOR (SEE INDEX 425-061 SHEET 4 FOR DETAILS)

PRELIMINARY
subject to changes

THE OFFICIAL RECORD OF THIS SHEET IS THE ELECTRONIC FILE DIGITALLY SIGNED AND SEALED UNDER RULE 61G15-23.004, F.A.C.

2/29/2024 5:13:06 PM BHORTON
c:\pw_working\lochner-pw-01\dms18776\DRDTRD07.dgn

REVISIONS				ENGINEER OF RECORD	STATE OF FLORIDA DEPARTMENT OF TRANSPORTATION			DRAINAGE DETAILS (02)	SHEET NO.
DATE	DESCRIPTION	DATE	DESCRIPTION	LISANDRO ZAPATA, P.E. LICENSE NUMBER 58822 H. W. LOCHNER 4300 W. CYPRESS STREET, SUITE 500 TAMPA, FLORIDA 33607	ROAD NO.	COUNTY	FINANCIAL PROJECT ID		200
					SR 400	POLK	430185-3-52-01		

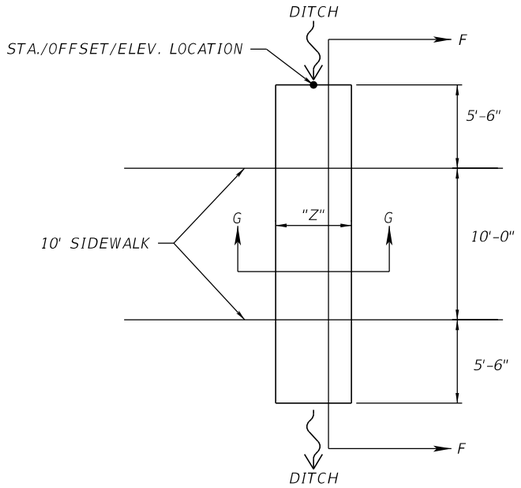

PLAN VIEW

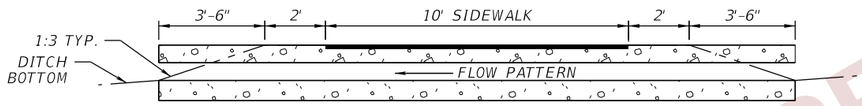

SECTION F-F

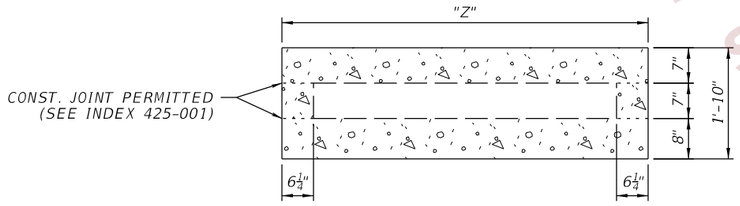

SECTION G-G

SINGLE CLOSED FLUME FROM DITCH

NOTES:
1. SEE DRAINAGE STRUCTURE DATA TABLE REMARKS FOR "X", "Y", AND "Z" DIMENSIONS.
2. SEE INDEX 425-061 FOR REINFORCING DETAILS. MAINTAIN 1¼" COVER FOR REINFORCING IN THE TOP SLAB.

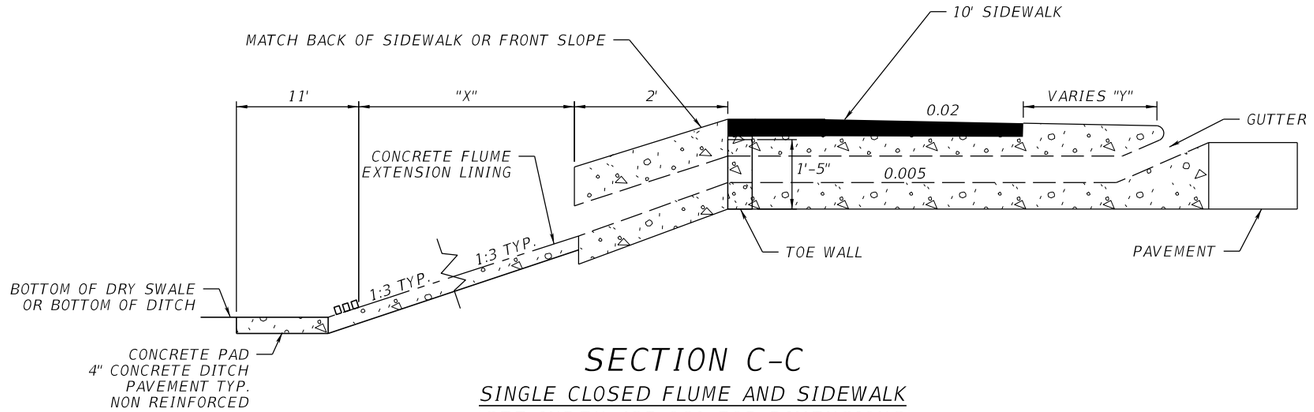

SECTION C-C

SINGLE CLOSED FLUME AND SIDEWALK
(SEE INDEX 425-061 FOR DIMENSIONS)

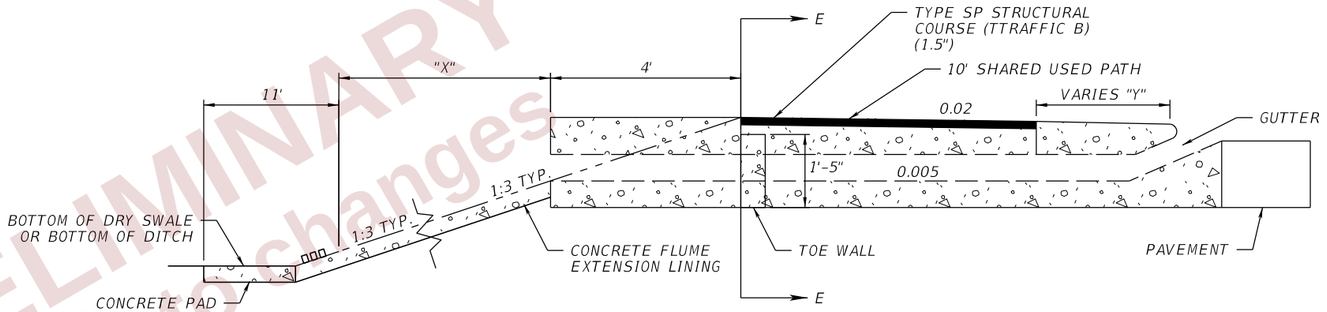

SECTION C-C

SINGLE CLOSED FLUME AND SHARED USED PATH
(SEE INDEX 425-061 FOR DIMENSIONS)

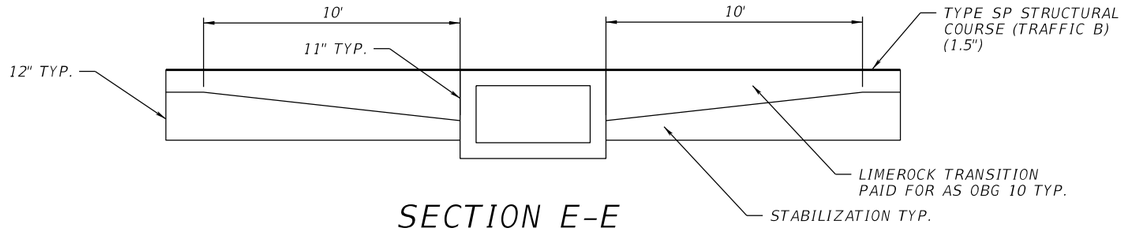

SECTION E-E

SINGLE CLOSED FLUME AND SHARED USED PATH
(SEE INDEX 425-061 FOR DIMENSIONS)

PRELIMINARY
subject to changes

THE OFFICIAL RECORD OF THIS SHEET IS THE ELECTRONIC FILE DIGITALLY SIGNED AND SEALED UNDER RULE 61G15-23.004, F.A.C.

2/29/2024 5:13:07 PM BHORTON
c:\pw_working\lochner-pw-01\dms18776\DROTR007.dgn

REVISIONS				ENGINEER OF RECORD	STATE OF FLORIDA DEPARTMENT OF TRANSPORTATION			DRAINAGE DETAILS (03)	SHEET NO.
DATE	DESCRIPTION	DATE	DESCRIPTION	LISANDRO ZAPATA, P.E. LICENSE NUMBER 58822 H. W. LOCHNER 4300 W. CYPRESS STREET, SUITE 500 TAMPA, FLORIDA 33607	ROAD NO.	COUNTY	FINANCIAL PROJECT ID		201
					SR 400	POLK	430185-3-52-01		

*NOTE:
WHEN LATERAL PIPE IS ENTERING THE STRUCTURE, THE BOTTOM OF STRUCTURE IS 6" BELOW PIPE'S INVERTS.

STRUCTURE	VERT.DIP LEN.
S-32	8'
S-37	11'
S-38	18'
S-44	8'
S-46	7'
S-51	17'
S-55	23'
S-57	24'
S-62	26'
S-63	25'
S-65	22'
S-69	17'
S-71	17'
S-75	5'
S-76	9'

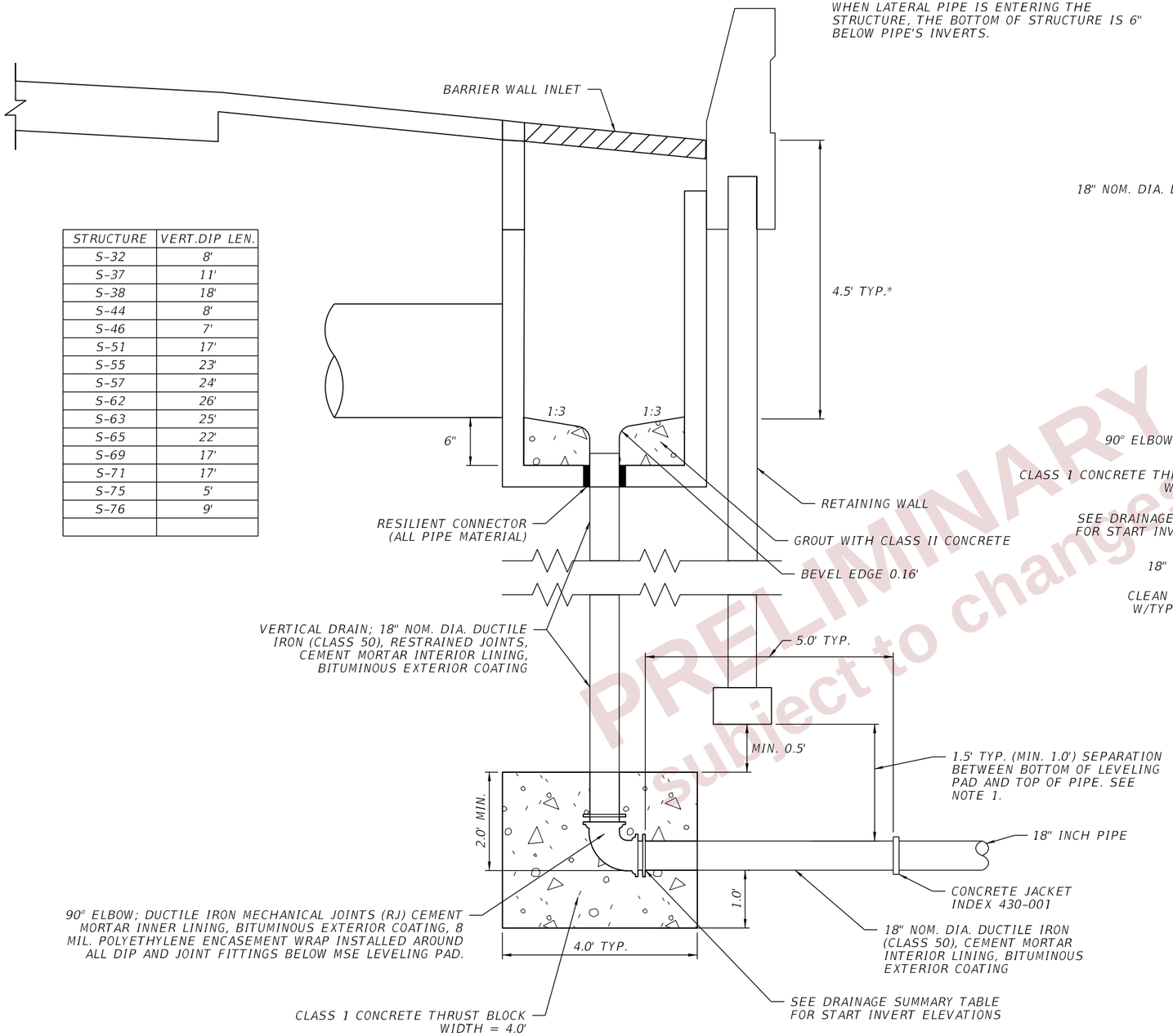

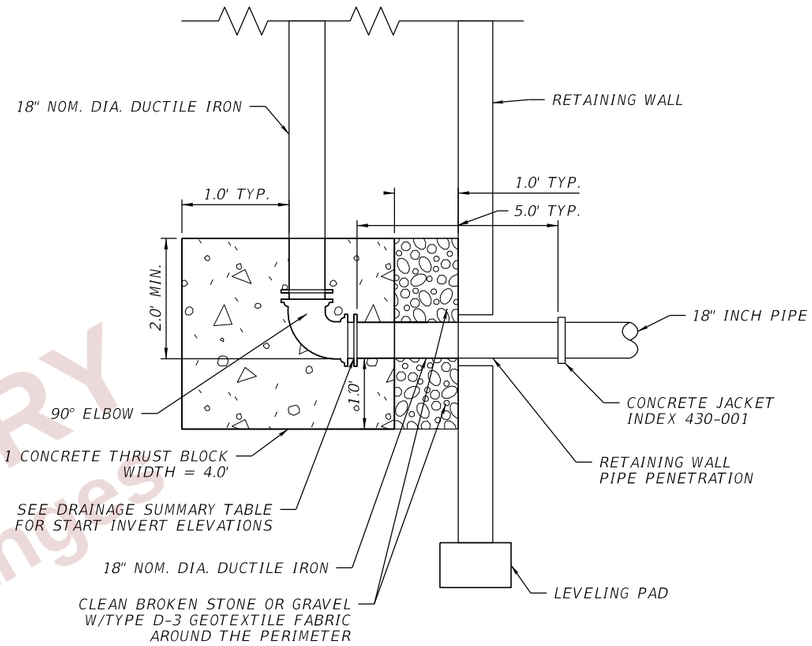

WALL PENETRATION DETAIL

NOTES:
1. MINIMUM SEPARATION BETWEEN BOTTOM OF LEVELING PAD AND TOP OF PIPE WILL NOT OCCUR FOR DRAINAGE STRUCTURES S-32, S-37, S-38, S-44, S-51, S-55, S-57, S-63, S-65, S-69, S-71 AND S-75. SEE WALL PENETRATION DETAIL FOR THESE STRUCTURES.

PRELIMINARY
subject to changes

THE OFFICIAL RECORD OF THIS SHEET IS THE ELECTRONIC FILE DIGITALLY SIGNED AND SEALED UNDER RULE 61G15-23.004, F.A.C.

REVISIONS				ENGINEER OF RECORD	STATE OF FLORIDA DEPARTMENT OF TRANSPORTATION			DRAINAGE DETAILS (04)	SHEET NO.
DATE	DESCRIPTION	DATE	DESCRIPTION	LISANDRO ZAPATA, P.E. LICENSE NUMBER 58822 H. W. LOCHNER 4300 W. CYPRESS STREET, SUITE 500 TAMPA, FLORIDA 33607	ROAD NO.	COUNTY	FINANCIAL PROJECT ID		202
					SR 400	POLK	430185-3-52-01		

2/29/2024 5:13:23 PM BHORTON
c:\pw_working\lochner-pw-01\dms18776\DRDTRD08.dgn

POND FDOT 14

1"=40'

EXIST. L/A R/W LINE

1:4 TYP.

132.0

126+23.33
219.02' (LT)

15.0' R

126+40.00
204.09' (LT)

126+40.00
176.25' (LT)

126+33.13
164.03' (LT)

15.0' R

126+00.00
141.67' (LT)

125+80.00
133.37' (LT)

124+00.00
136.71' (LT)

124+94.96
111.14' (LT)

15.0' R

125+05.00
111.27' (LT)

122+36.13
185.51' (LT)

15.0' R

122+49.20
194.08' (LT)

122+21.37
153.56' (LT)

123+51.72
157.18' (LT)

15.0' R

123+67.76
156.35' (LT)

123+40.00
151.79' (LT)

122+95.15
129.20' (LT)

ELECTRIC POLE

123+04.12
131.49' (LT)

15.0' R

122+41.61
129.72' (LT)

15.0' R

122+80.00
129.48' (LT)

122+60.00
131.00' (LT)

FLOODPLAIN COMPENSATION
AREA 7A (FC-7A)
FLOODPLAIN EL. = 133.0'
SHWT EL. = 132.0

SH-1113R

PRELIMINARY
subject to changes

℄ CONST. RAMP A

S-47

S-45

S-40

S-39

122

123

124

125

126

127

RAMP A

Note: Stations and offsets are based off of Ramp A BL

REVISIONS				ENGINEER OF RECORD	STATE OF FLORIDA DEPARTMENT OF TRANSPORTATION			DRAINAGE DETAILS (05) COMPENSATION AREA 7A	SHEET NO.
DATE	DESCRIPTION	DATE	DESCRIPTION	LISANDRO ZAPATA, P.E. LICENSE NUMBER 58822 H. W. LOCHNER 4350 W. CYPRESS STREET, SUITE 800 TAMPA, FLORIDA 33607	ROAD NO.	COUNTY	FINANCIAL PROJECT ID		203
					SR 400	POLK	430185-3-52-01		

2/29/2024 5:13:41 PM BHORTON
c:\pw_working\lochner-pw-01\dms18776\DR0TR004.dgn

THE OFFICIAL RECORD OF THIS SHEET IS THE ELECTRONIC FILE DIGITALLY SIGNED AND SEALED UNDER RULE 61G15-23.004, F.A.C.

1"=40'

EXIST. L/A R/W LINE

ELECTRIC POLE

SH-1115L

132+00.00
180.35' (LT)

10.0' R

132+70.00
166.47' (LT)

132+60.43
176.46' (LT)

1:4 TYP.

132.0

131+00.00
162.33' (LT)

132+70.00
88.80' (LT)

FLOODPLAIN COMPENSATION
AREA 7B (FC-7B)
FLOODPLAIN EL. = 133.0'
SHWT EL. = 132.0

132+60.24
78.81' (LT)

10.0' R

130+00.00
151.04' (LT)

132+00.00
78.03' (LT)

131+00.00
79.08' (LT)

129+00.00
123.84' (LT)

128+15.82
117.71' (LT)

5.0' R

130+00.00
82.22' (LT)

128+14.50
108.02' (LT)

129+00.00
86.11' (LT)

128+71.58
87.57' (LT)

A

A

℄ CONST. RAMP A

N55°54'11"E

RAMP A

POND 9A

S-48

S-50

S-49

127

128

129

130

131

132

133

Note: Stations and offsets are based off of Ramp A BL

PRELIMINARY
subject to changes

THE OFFICIAL RECORD OF THIS SHEET IS THE ELECTRONIC FILE DIGITALLY SIGNED AND SEALED UNDER RULE 61G15-23.004, F.A.C.

2/29/2024 5:13:56 PM BHORTON
c:\pw_working\lochner-pw-01\dms18776\DRDTR004.dgn

REVISIONS			
DATE	DESCRIPTION	DATE	DESCRIPTION

ENGINEER OF RECORD
LISANDRO ZAPATA, P.E.
LICENSE NUMBER 58822
H. W. LOCHNER
4350 W. CYPRESS STREET, SUITE 800
TAMPA, FLORIDA 33607

STATE OF FLORIDA
DEPARTMENT OF TRANSPORTATION

ROAD NO.	COUNTY	FINANCIAL PROJECT ID
SR 400	POLK	430185-3-52-01

DRAINAGE DETAILS (06)
COMPENSATION AREA 7B

SHEET NO. 204

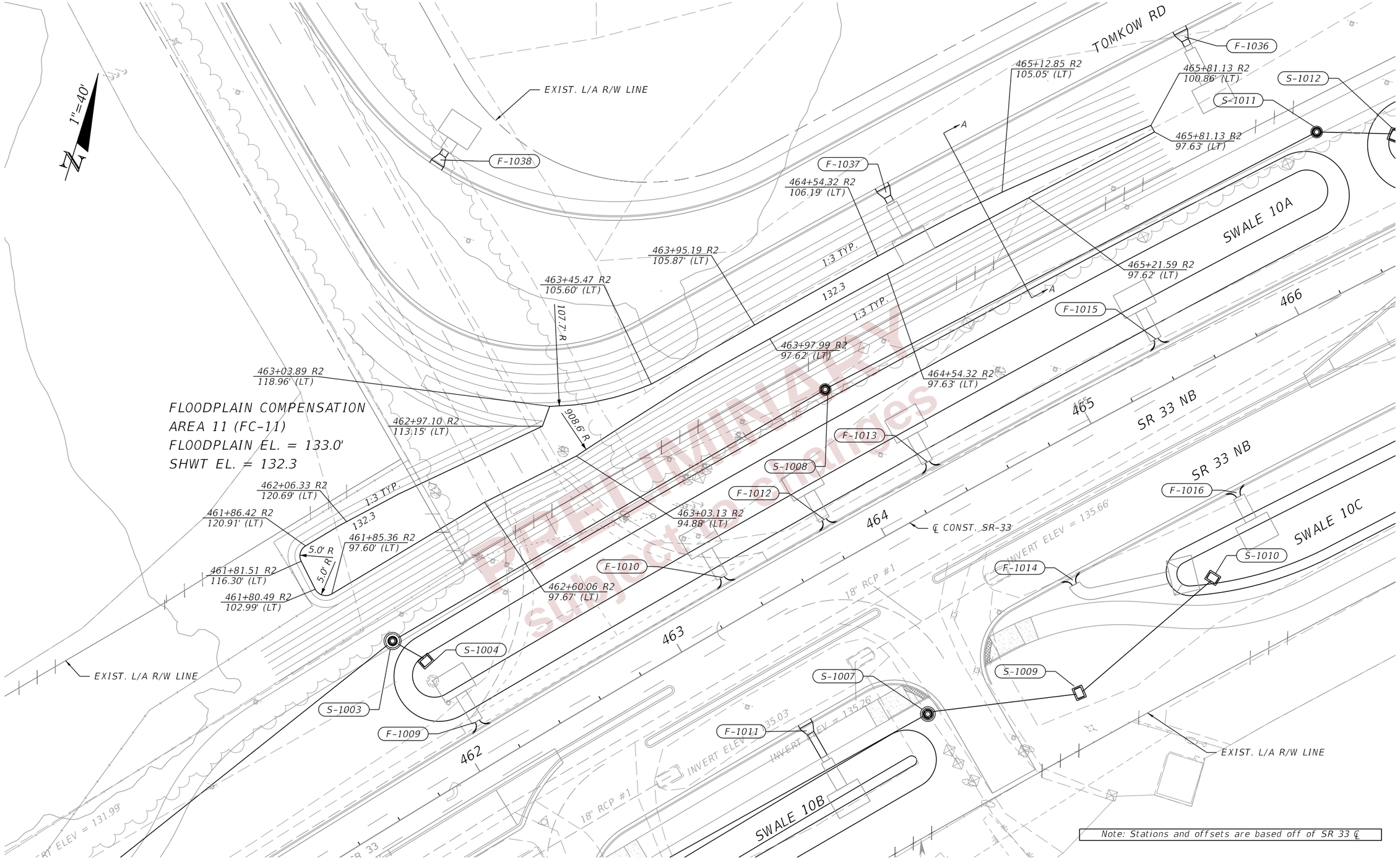

PRELIMINARY
subject to changes

REVISIONS			
DATE	DESCRIPTION	DATE	DESCRIPTION

ENGINEER OF RECORD

LISANDRO ZAPATA, P.E.
LICENSE NUMBER 58822
H. W. LOCHNER
4350 W. CYPRESS STREET, SUITE 800
TAMPA, FLORIDA 33607

STATE OF FLORIDA
DEPARTMENT OF TRANSPORTATION

ROAD NO.	COUNTY	FINANCIAL PROJECT ID
SR 400	POLK	430185-3-52-01

DRAINAGE DETAILS (07)
COMPENSATION AREA 11

SHEET NO. 205

THE OFFICIAL RECORD OF THIS SHEET IS THE ELECTRONIC FILE DIGITALLY SIGNED AND SEALED UNDER RULE 61G15-23.004, F.A.C.

2/29/2024 5:14:12 PM BHORTON
c:\pw_working\lochner-pw-01\dms\8776\DRDTRD04.dgn

NOTES:
1. SEE ROADWAY PLANS (06-08) FOR FC-14 LAYOUT AND CONTROL POINTS.

EXIST. L/A R/W LINE

134.8

1:4

A

1"=60'

FLOODPLAIN COMPENSATION
AREA 14 (FC-14)
FLOODPLAIN EL. = 136.00'
SHWT EL. = 134.8'

SH-117 2L

134.8

1:6

SR 400 (I-4) WB

1168 1169 1170 1171 1172 1173 1174 1175 1176

℄ SURVEY I-4

SR 400 (I-4)
SURVEY I

℄ CONST. I-4 EB-2

5022 5023 5024 5025 5026 5027 5028 5029 5030
3168 3169 3170 3171 3172 3173 3174 3175

SR 400 (I-4) EB

℄ CONST. I-4

S-105
S-104
S-103
S-102

3171+10.27
87.39' (RT)
3172+00.00
89.53' (RT)
3172+99.95
93.97' (RT)
3174+00.00
98.25' (RT)
3174+90.07
98.97' (RT)
10.0' R
3171+00.00
97.42' (RT)
134.6
1:4
3175+00.00
108.97' (RT)
3174+90.57
123.74' (RT)
3171+00.00
123.91' (RT)
3171+10.05
133.91' (RT)
3175+00.00
113.76' (RT)
134.6
10.0' R
1:4
10.0' R
3172+00.00
132.98' (RT)
3173+00.00
129.73' (RT)
3174+00.00
128.88' (RT)

SH-1170R
SH-1172R

EXIST. L/A R/W LINE

FLOODPLAIN COMPENSATION
AREA 15 (FC-15)
FLOODPLAIN EL. = 136.00'
SHWT EL. = 134.6'

PRELIMINARY
subject to changes

THE OFFICIAL RECORD OF THIS SHEET IS THE ELECTRONIC FILE DIGITALLY SIGNED AND SEALED UNDER RULE 61G15-23.004, F.A.C.

2/29/2024 5:14:29 PM BHORTON
c:\pw_working\lochner-pw-01\dms18776\DRDTRD03.dgn

REVISIONS				ENGINEER OF RECORD	STATE OF FLORIDA DEPARTMENT OF TRANSPORTATION			DRAINAGE DETAILS (08) COMPENSATION AREA 14 AND 15	SHEET NO.
DATE	DESCRIPTION	DATE	DESCRIPTION	LISANDRO ZAPATA, P.E. LICENSE NUMBER 58822 H. W. LOCHNER 4350 W. CYPRESS STREET, SUITE 800 TAMPA, FLORIDA 33607	ROAD NO.	COUNTY	FINANCIAL PROJECT ID		206
					SR 400	POLK	430185-3-52-01		

FC-7A

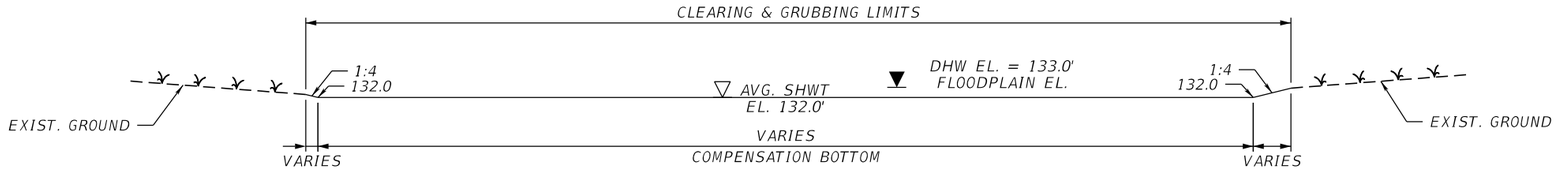

SECTION A-A

FC-7B

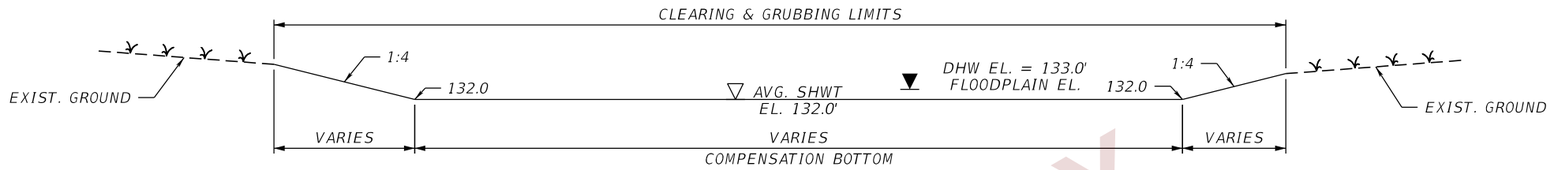

SECTION A-A

FC-11

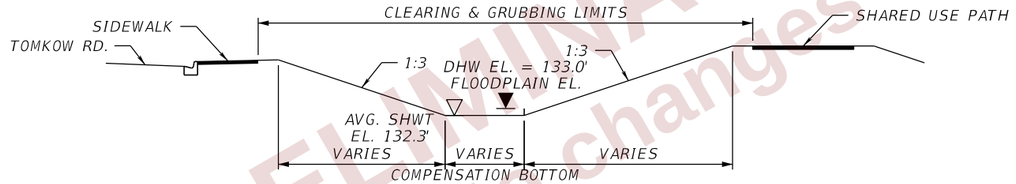

SECTION A-A

FC-14

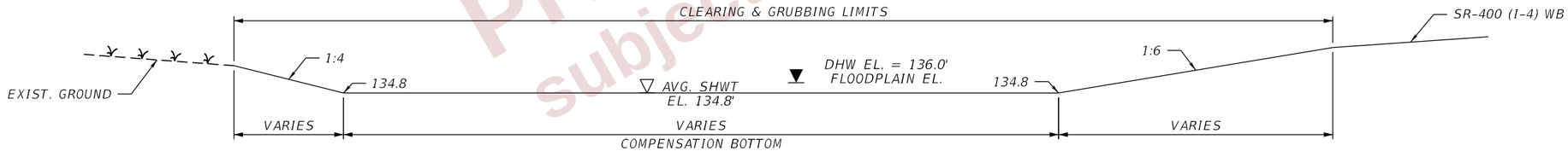

SECTION A-A

FC-15

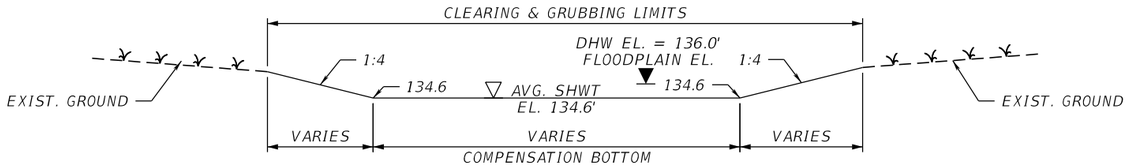

SECTION A-A

PRELIMINARY
subject to changes

THE OFFICIAL RECORD OF THIS SHEET IS THE ELECTRONIC FILE DIGITALLY SIGNED AND SEALED UNDER RULE 61G15-23.004, F.A.C.

2/29/2024 5:14:30 PM BHORTON
c:\pw_working\lochner-pw-01\dms18776\DRDTRD03.dgn

REVISIONS				ENGINEER OF RECORD	STATE OF FLORIDA DEPARTMENT OF TRANSPORTATION			DRAINAGE DETAILS (09) COMPENSATION SECTIONS	SHEET NO.
DATE	DESCRIPTION	DATE	DESCRIPTION	LISANDRO ZAPATA, P.E. LICENSE NUMBER 58822 H. W. LOCHNER 4350 W. CYPRESS STREET, SUITE 800 TAMPA, FLORIDA 33607	ROAD NO.	COUNTY	FINANCIAL PROJECT ID		207
					SR 400	POLK	430185-3-52-01		

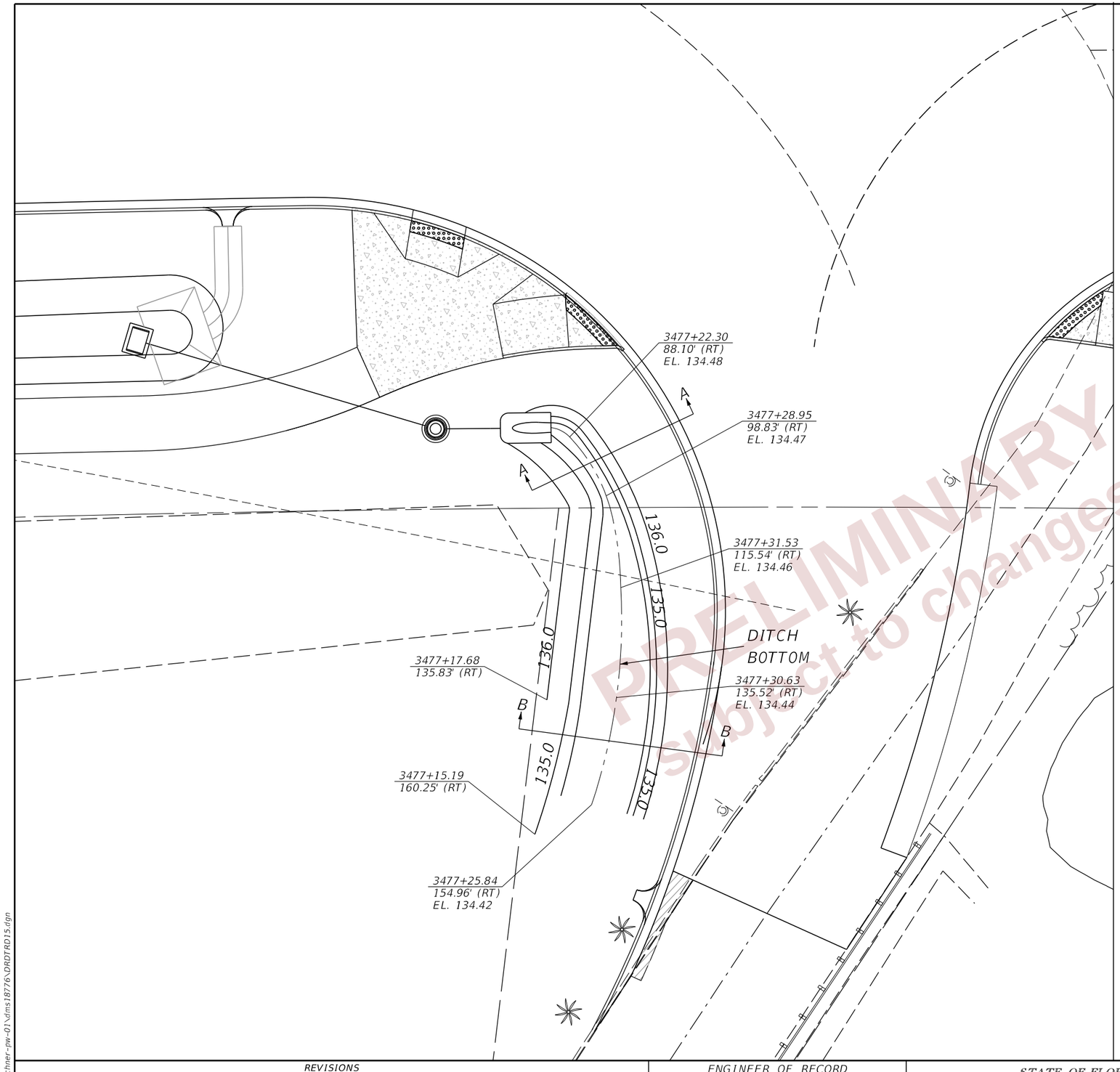

PRELIMINARY
Subject to changes

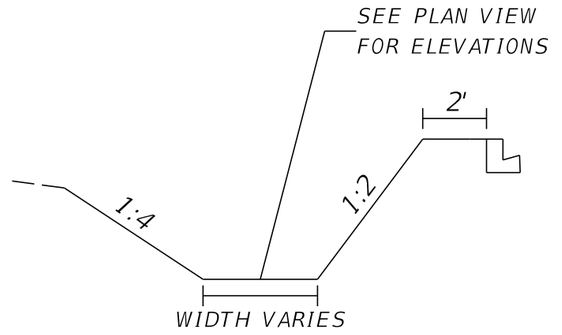

SECTION A-A

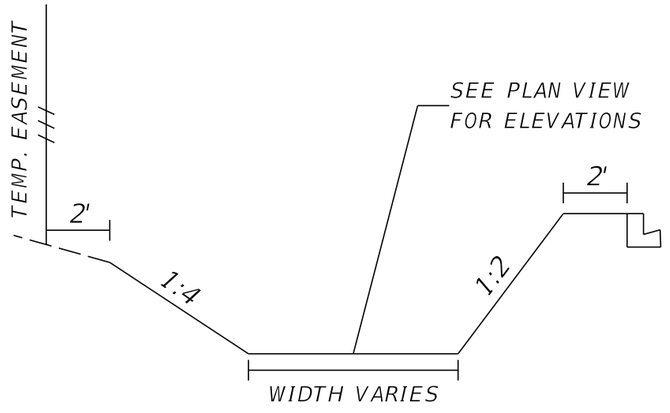

SECTION B-B

THE OFFICIAL RECORD OF THIS SHEET IS THE ELECTRONIC FILE DIGITALLY SIGNED AND SEALED UNDER RULE 61G15-23.004, F.A.C.

REVISIONS				ENGINEER OF RECORD	STATE OF FLORIDA DEPARTMENT OF TRANSPORTATION			DRAINAGE DETAILS (10) DITCH DETAILS	SHEET NO.
DATE	DESCRIPTION	DATE	DESCRIPTION	LISANDRO ZAPATA, P.E. LICENSE NUMBER 58822 H. W. LOCHNER 4300 W. CYPRESS STREET, SUITE 500 TAMPA, FLORIDA 33607	ROAD NO.	COUNTY	FINANCIAL PROJECT ID		208
					SR 400	POLK	430185-3-52-01		

2/29/2024 5:14:44 PM BHORTON
c:\pw_working\lochner-pw-01\dms\1876\DRDTRD15.dgn

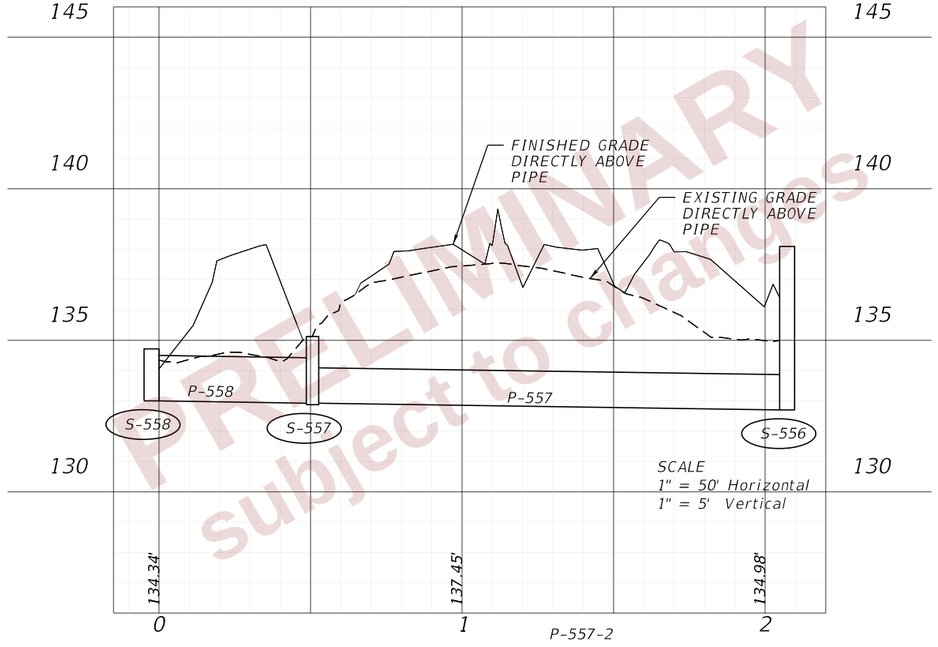

S-558 TO S-556

PRELIMINARY subject to change

REVISIONS				ENGINEER OF RECORD	STATE OF FLORIDA DEPARTMENT OF TRANSPORTATION			DRAINAGE PROFILES (1)	SHEET NO.
DATE	DESCRIPTION	DATE	DESCRIPTION	LISANDRO ZAPATA, P.E. LICENSE NUMBER 58822 H. W. LOCHNER 4300 W. CYPRESS STREET, SUITE 500 TAMPA, FLORIDA 33607	ROAD NO.	COUNTY	FINANCIAL PROJECT ID		209
					SR 400	POLK	430185-3-52-01		

THE OFFICIAL RECORD OF THIS SHEET IS THE ELECTRONIC FILE DIGITALLY SIGNED AND SEALED UNDER RULE 61G15-23.004, F.A.C.

2/26/2024 4:45:26 PM JBLOUNT
c:\pw_working\lochner-pw-01\dms33830\Basin 500-3.dgn

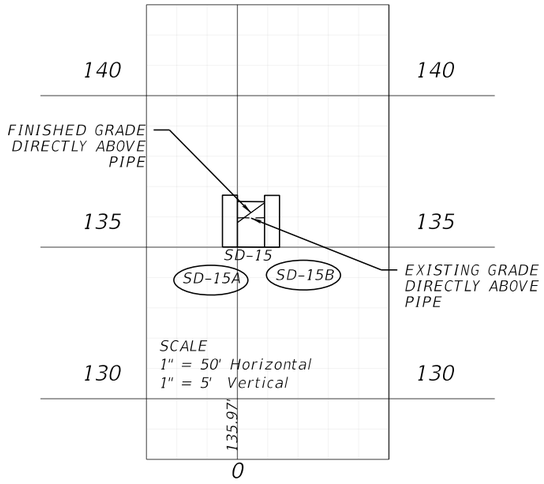

SD-15

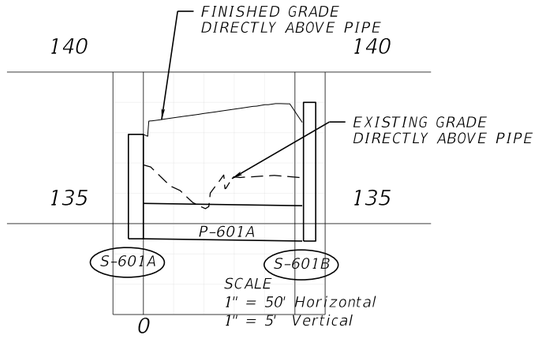

S-601A TO S-610B

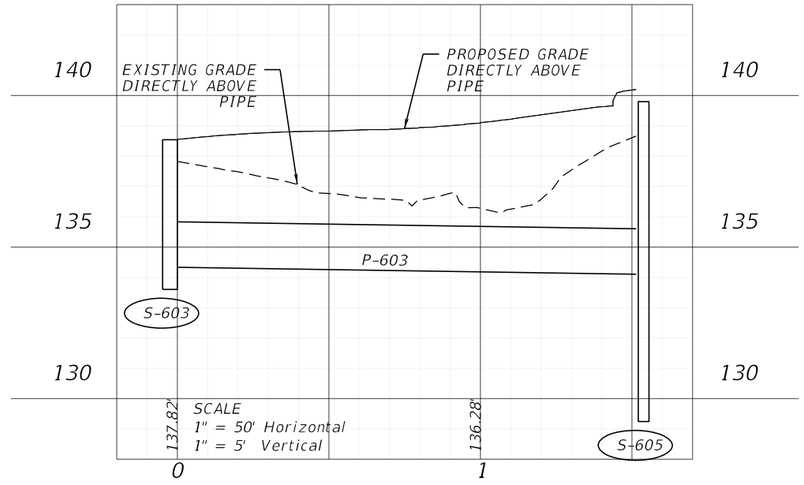

S-603 TO S-605

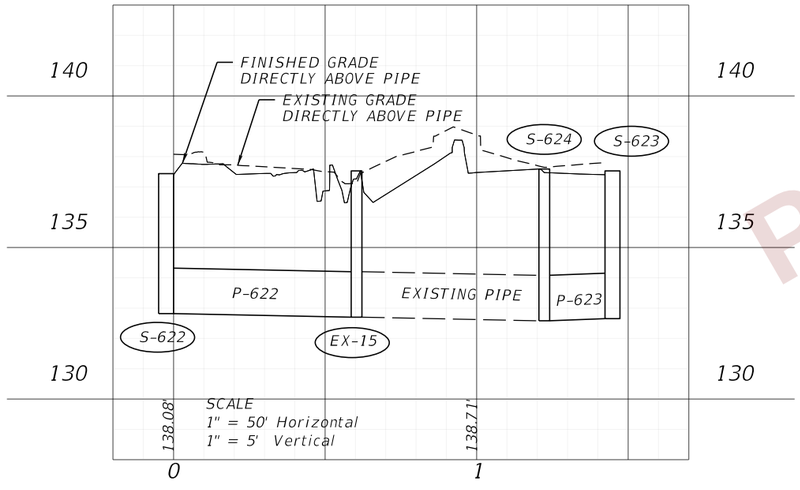

S-622 TO S-623

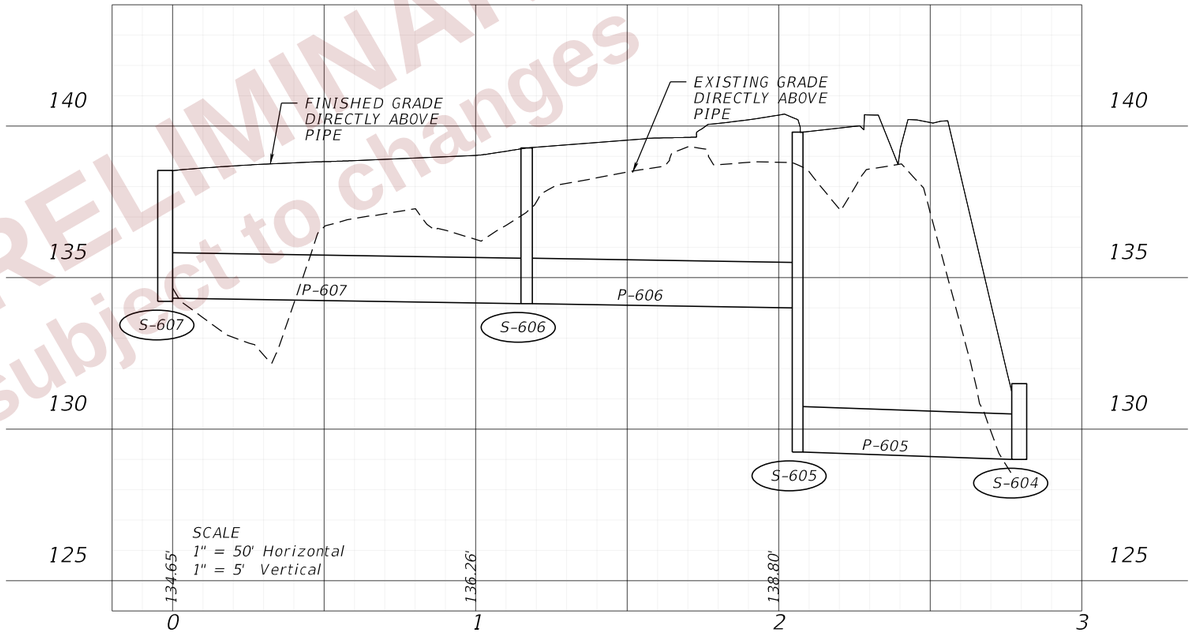

S-607 TO S-604

PRELIMINARY
subject to changes

THE OFFICIAL RECORD OF THIS SHEET IS THE ELECTRONIC FILE DIGITALLY SIGNED AND SEALED UNDER RULE 61G15-23.004, F.A.C.

REVISIONS				ENGINEER OF RECORD	STATE OF FLORIDA DEPARTMENT OF TRANSPORTATION			DRAINAGE PROFILES (2)	SHEET NO.
DATE	DESCRIPTION	DATE	DESCRIPTION	LISANDRO ZAPATA, P.E. LICENSE NUMBER 58822 H. W. LOCHNER 4300 W. CYPRESS STREET, SUITE 500 TAMPA, FLORIDA 33607	ROAD NO.	COUNTY	FINANCIAL PROJECT ID		210
					SR 400	POLK	430185-3-52-01		

2/26/2024 4:50:12 PM JBLOUNT
c:\pw_working\lochner-pw-01\dms33830\Basin 600-1.dgn

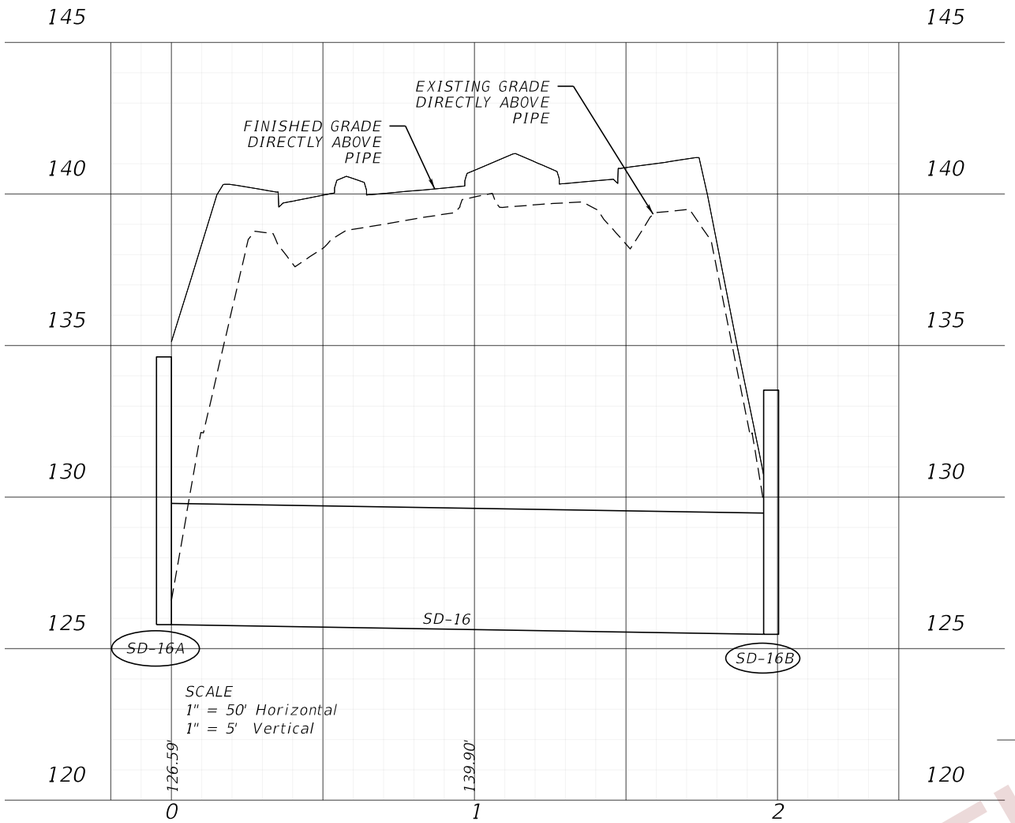

SD-16

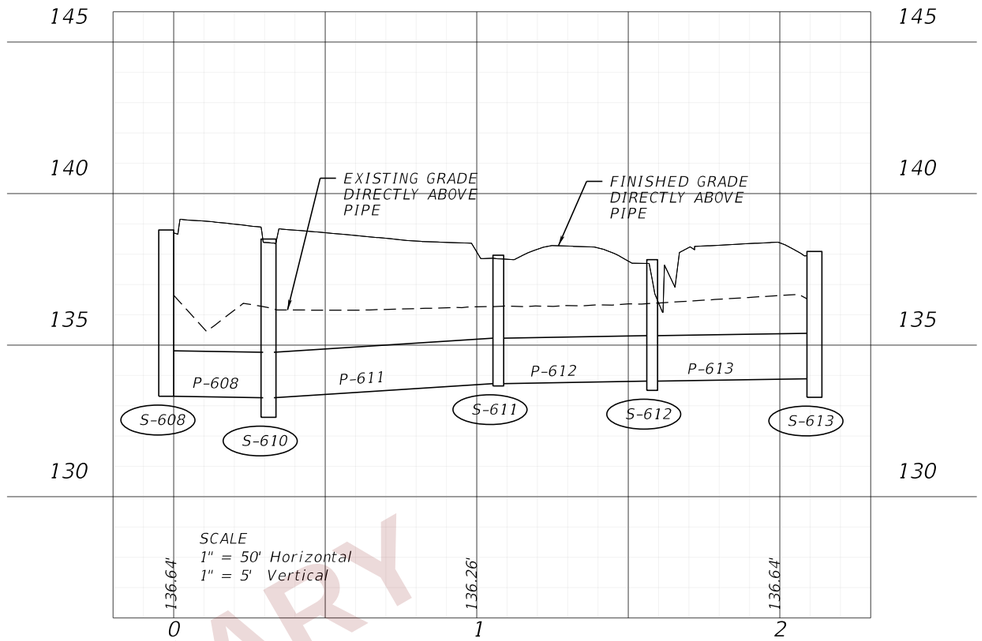

S-608 TO S-613

S-610 TO S-609

S-625 TO S-626

PRELIMINARY
subject to changes

REVISIONS				ENGINEER OF RECORD	STATE OF FLORIDA DEPARTMENT OF TRANSPORTATION			DRAINAGE PROFILES (3)	SHEET NO.
DATE	DESCRIPTION	DATE	DESCRIPTION	LISANDRO ZAPATA, P.E. LICENSE NUMBER 58822 H. W. LOCHNER 4300 W. CYPRESS STREET, SUITE 500 TAMPA, FLORIDA 33607	ROAD NO.	COUNTY	FINANCIAL PROJECT ID		211
					SR 400	POLK	430185-3-52-01		

THE OFFICIAL RECORD OF THIS SHEET IS THE ELECTRONIC FILE DIGITALLY SIGNED AND SEALED UNDER RULE 61G15-23.004, F.A.C.

2/26/2024 4:50:15 PM JBLOUNT
c:\pw_working\lochner-pw-01\dms33830\Basin 600-1.dgn

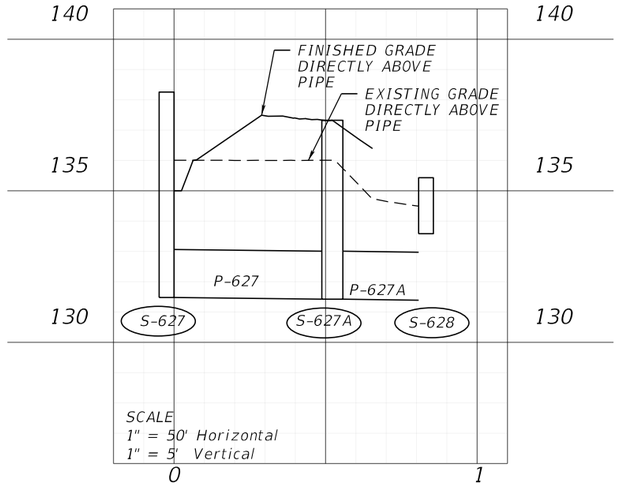

S-627 TO S-628

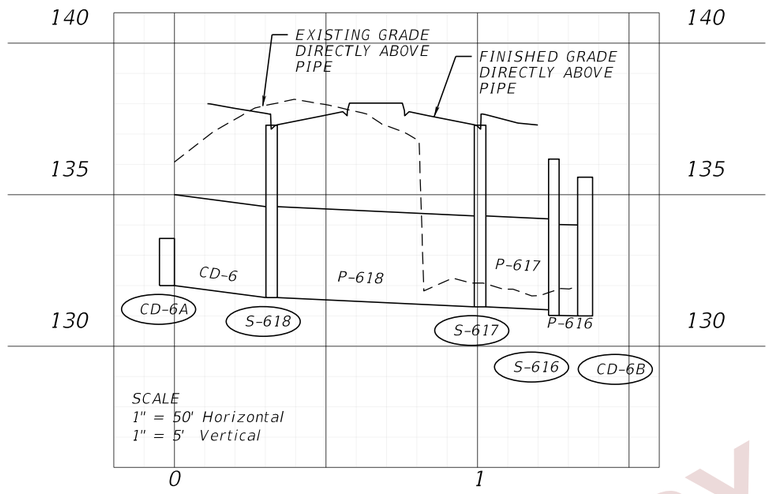

CD-6A TO CD-6B

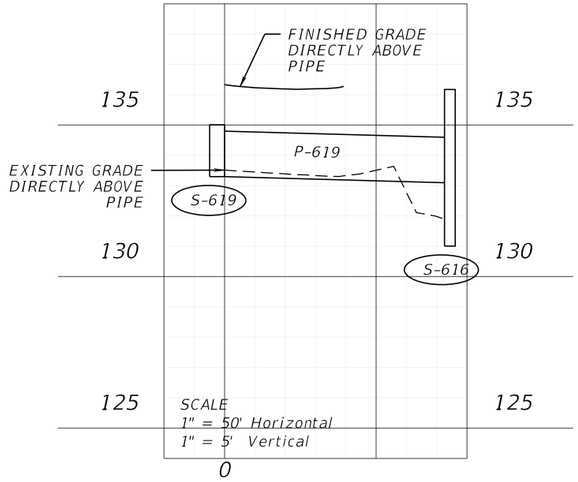

S-619 TO S-616

S-614 TO S-615

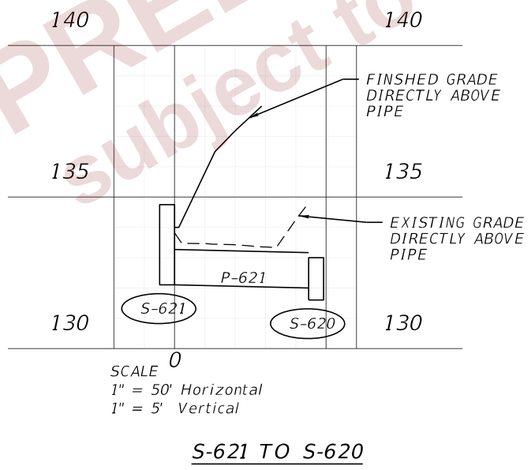

S-621 TO S-620

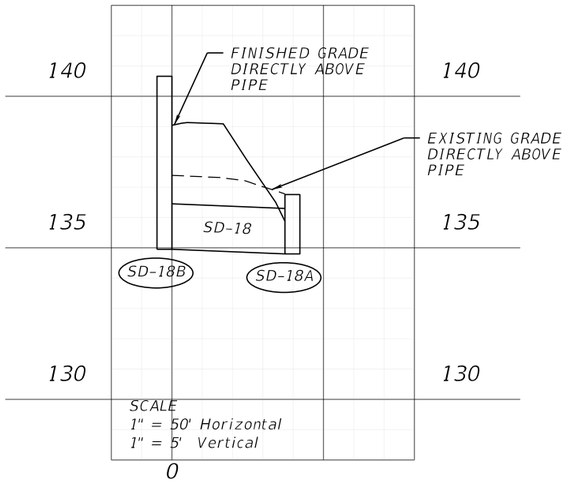

SD-18

PRELIMINARY
subject to changes

THE OFFICIAL RECORD OF THIS SHEET IS THE ELECTRONIC FILE DIGITALLY SIGNED AND SEALED UNDER RULE 61G15-23.004, F.A.C.

2/29/2024 4:15:09 PM JBLOUNT
c:\pw_working\lochner-pw-01\dms33830\Basins 600 800.dgn

REVISIONS				ENGINEER OF RECORD	STATE OF FLORIDA DEPARTMENT OF TRANSPORTATION			DRAINAGE PROFILES (4)	SHEET NO.
DATE	DESCRIPTION	DATE	DESCRIPTION	LISANDRO ZAPATA, P.E. LICENSE NUMBER 58822 H. W. LOCHNER 4350 W. CYPRESS STREET, SUITE 800 TAMPA, FLORIDA 33607	ROAD NO.	COUNTY	FINANCIAL PROJECT ID		212
					SR 400	POLK	430185-3-52-01		

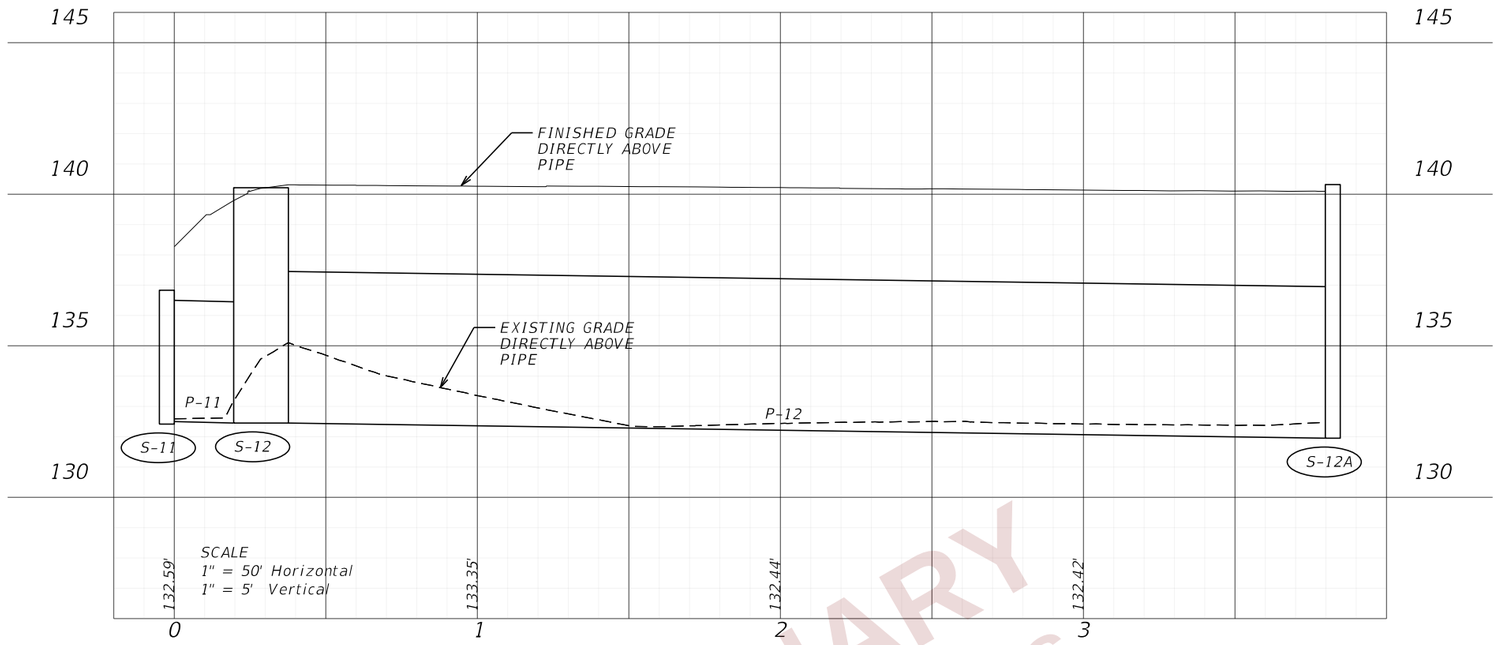

S-11 TO S-12A

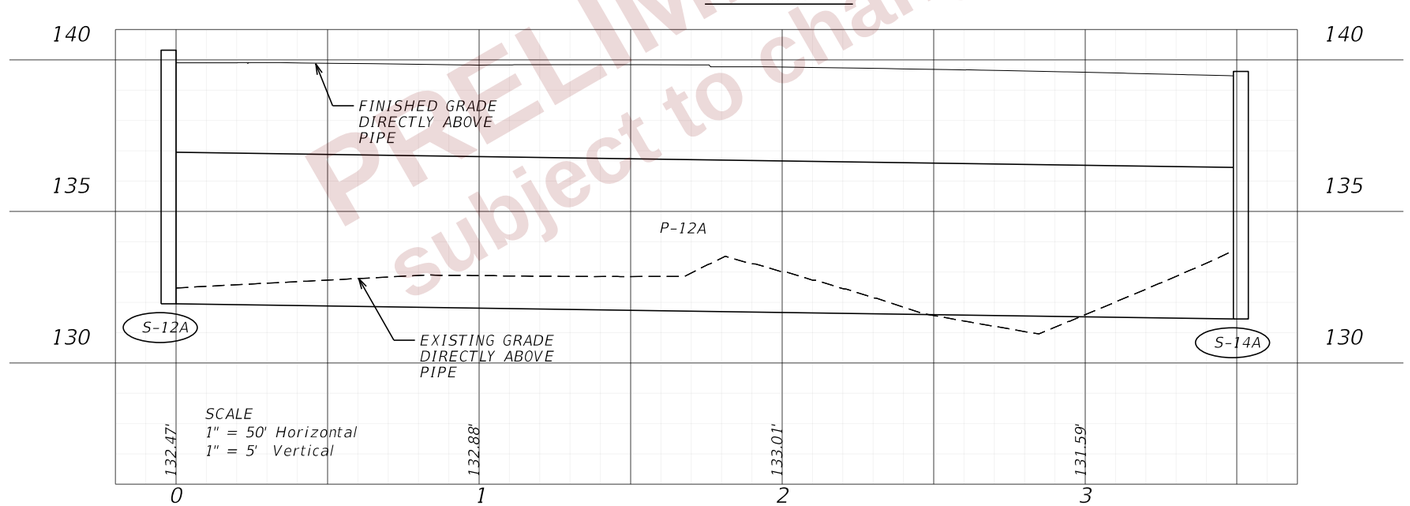

S-12A TO S-14A

PRELIMINARY
subject to changes

REVISIONS				ENGINEER OF RECORD	STATE OF FLORIDA DEPARTMENT OF TRANSPORTATION			DRAINAGE PROFILES (5)	SHEET NO.
DATE	DESCRIPTION	DATE	DESCRIPTION	LISANDRO ZAPATA, P.E. LICENSE NUMBER 58822 H. W. LOCHNER 4300 W. CYPRESS STREET, SUITE 500 TAMPA, FLORIDA 33607	ROAD NO.	COUNTY	FINANCIAL PROJECT ID		213
					SR 400	POLK	430185-3-52-01		

THE OFFICIAL RECORD OF THIS SHEET IS THE ELECTRONIC FILE DIGITALLY SIGNED AND SEALED UNDER RULE 61G15-23.004, F.A.C.

2/29/2024 4:25:23 PM JBLOUNT
c:\pw_working\lochner-pw-01\dms33830\Basins 700 800.dgn

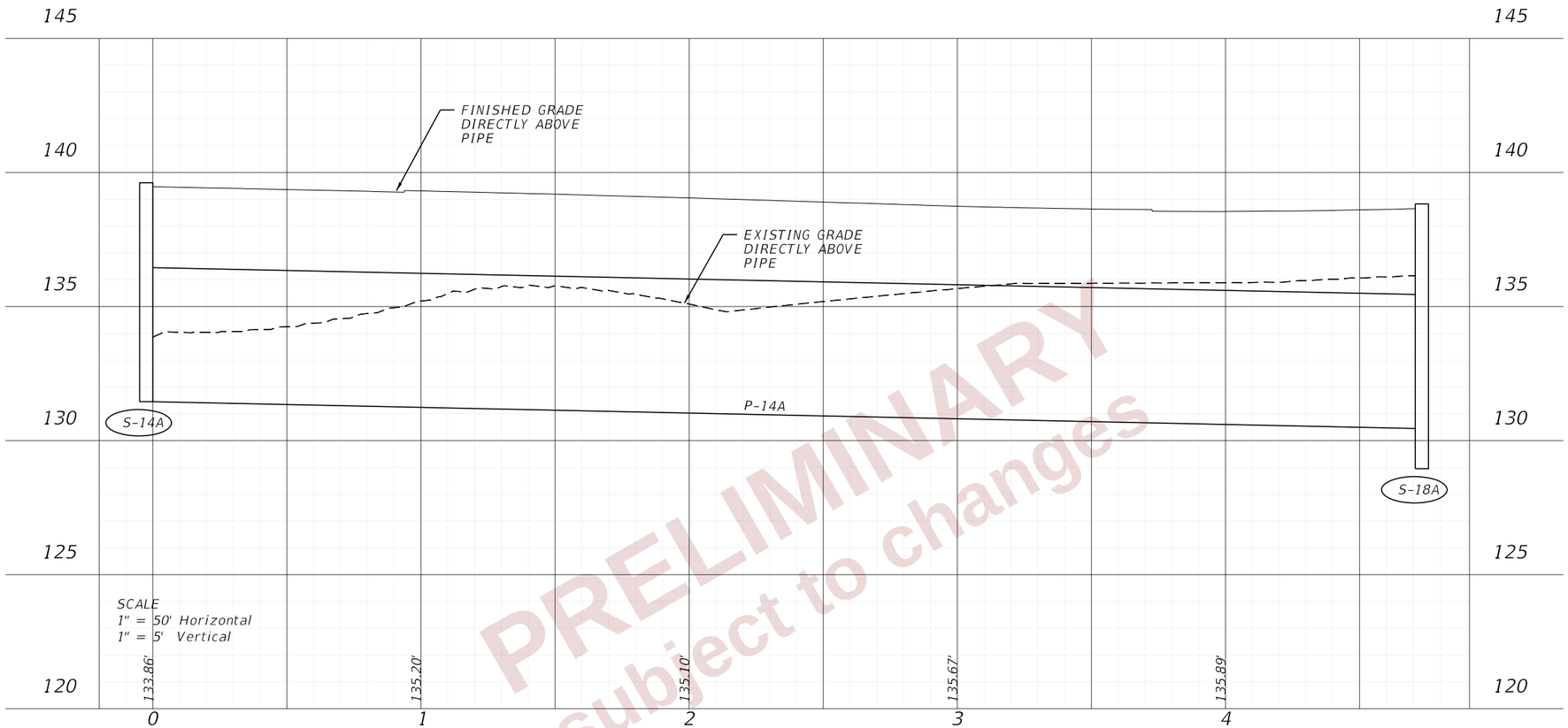

PRELIMINARY
subject to changes

S-14A TO S-18A

REVISIONS				ENGINEER OF RECORD	STATE OF FLORIDA DEPARTMENT OF TRANSPORTATION			DRAINAGE PROFILES (6)	SHEET NO.
DATE	DESCRIPTION	DATE	DESCRIPTION	LISANDRO ZAPATA, P.E. LICENSE NUMBER 58822 H. W. LOCHNER 4300 W. CYPRESS STREET, SUITE 500 TAMPA, FLORIDA 33607	ROAD NO.	COUNTY	FINANCIAL PROJECT ID		214
					SR 400	POLK	430185-3-52-01		

THE OFFICIAL RECORD OF THIS SHEET IS THE ELECTRONIC FILE DIGITALLY SIGNED AND SEALED UNDER RULE 61G15-23.004, F.A.C.

2/29/2024 4:25:27 PM JBLOUNT
c:\pw_working\lochner-pw-01\dms33830\Basins 700 800.dgn

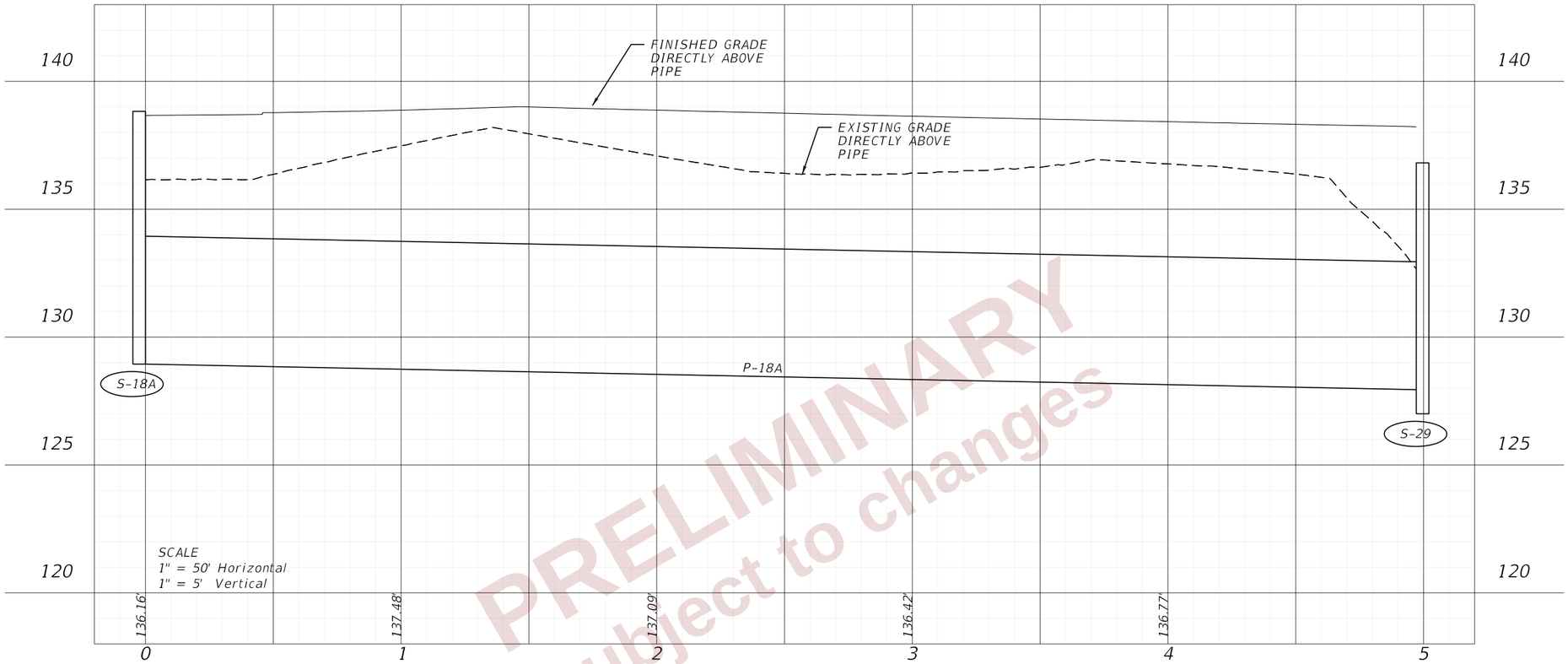

S-18A TO S-29

PRELIMINARY
subject to changes

REVISIONS				ENGINEER OF RECORD	STATE OF FLORIDA DEPARTMENT OF TRANSPORTATION			DRAINAGE PROFILES (7)	SHEET NO.
DATE	DESCRIPTION	DATE	DESCRIPTION	LISANDRO ZAPATA, P.E. LICENSE NUMBER 58822 H. W. LOCHNER 4300 W. CYPRESS STREET, SUITE 500 TAMPA, FLORIDA 33607	ROAD NO.	COUNTY	FINANCIAL PROJECT ID		215
					SR 400	POLK	430185-3-52-01		

THE OFFICIAL RECORD OF THIS SHEET IS THE ELECTRONIC FILE DIGITALLY SIGNED AND SEALED UNDER RULE 61G15-23.004, F.A.C.

2/29/2024 4:25:31 PM JBLOUNT
c:\pw_working\lochner-pw-01\dms33830\Basins 700 800.dgn

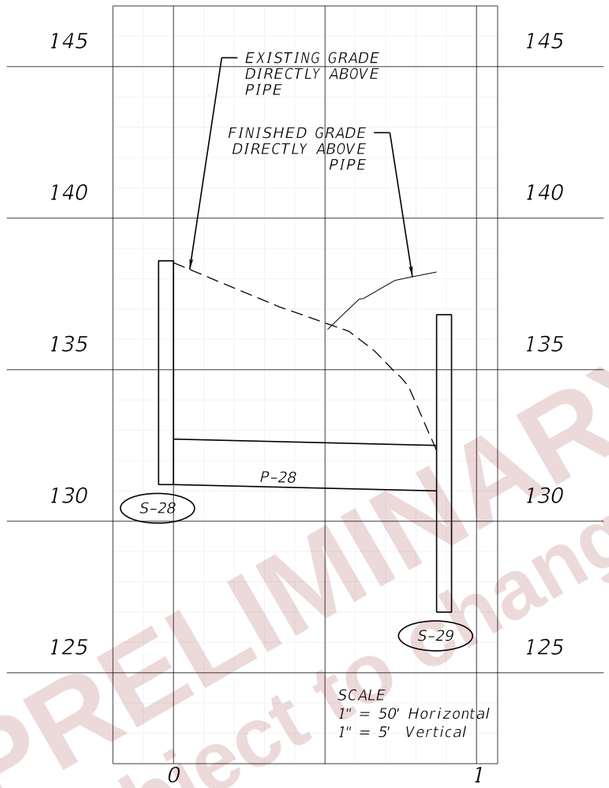

S-28 TO S-29

PRELIMINARY
subject to changes

THE OFFICIAL RECORD OF THIS SHEET IS THE ELECTRONIC FILE DIGITALLY SIGNED AND SEALED UNDER RULE 61G15-23.004, F.A.C.

2/29/2024 4:25:35 PM JBLOUNT
c:\pw_working\lochner-pw-01\dms33830\Basins 700 800.dgn

REVISIONS				ENGINEER OF RECORD	STATE OF FLORIDA DEPARTMENT OF TRANSPORTATION			DRAINAGE PROFILES (8)	SHEET NO.
DATE	DESCRIPTION	DATE	DESCRIPTION	LISANDRO ZAPATA, P.E. LICENSE NUMBER 58822 H. W. LOCHNER 4300 W. CYPRESS STREET, SUITE 500 TAMPA, FLORIDA 33607	ROAD NO.	COUNTY	FINANCIAL PROJECT ID		216
					SR 400	POLK	430185-3-52-01		

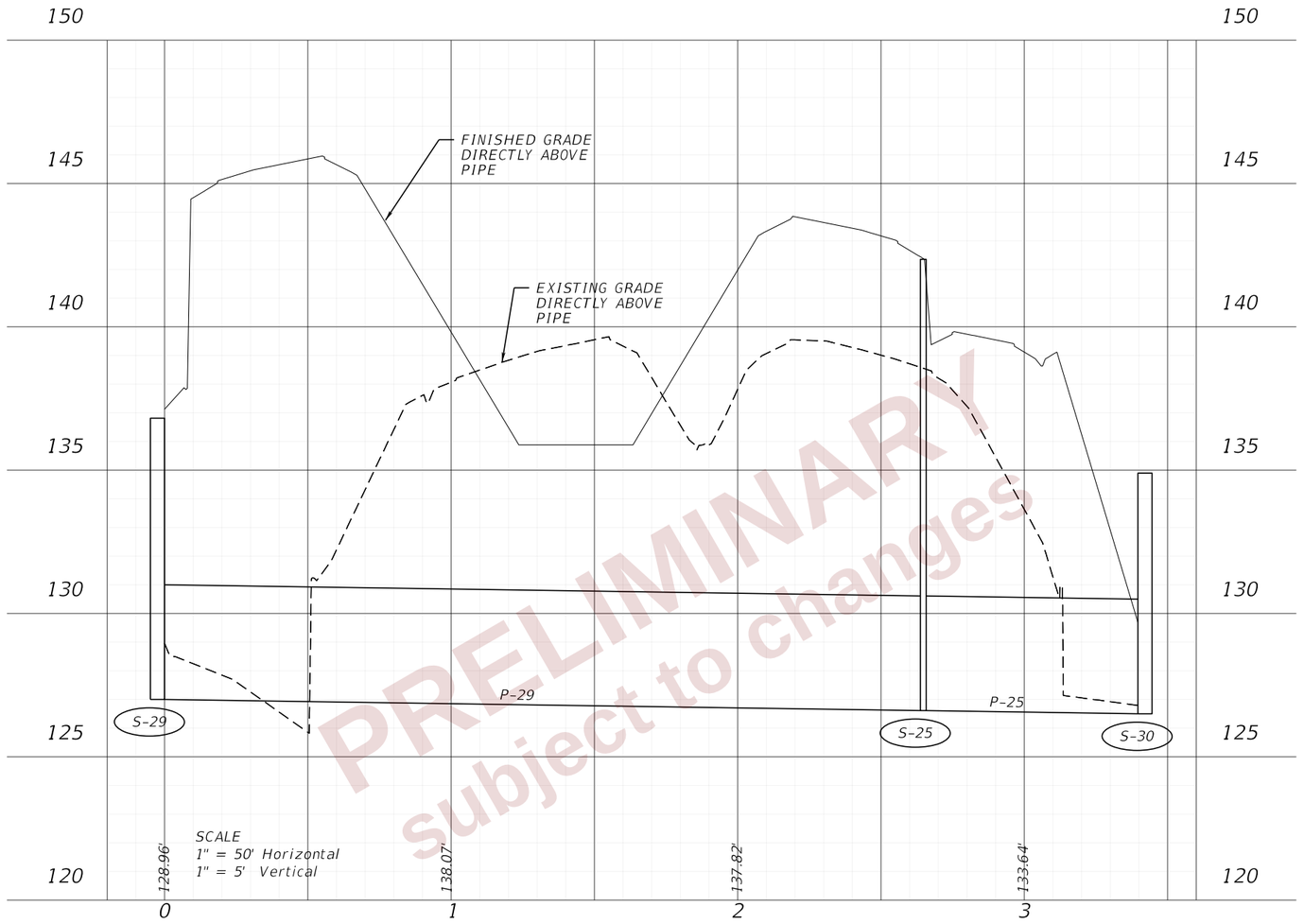

S-29 TO S-30

PRELIMINARY
subject to changes

THE OFFICIAL RECORD OF THIS SHEET IS THE ELECTRONIC FILE DIGITALLY SIGNED AND SEALED UNDER RULE 61G15-23.004, F.A.C.

2/29/2024 4:25:39 PM JBLOUNT
c:\pw_working\lochner-pw-01\dms33830\Basins 700 800.dgn

REVISIONS				ENGINEER OF RECORD	STATE OF FLORIDA DEPARTMENT OF TRANSPORTATION			DRAINAGE PROFILES (9)	SHEET NO.
DATE	DESCRIPTION	DATE	DESCRIPTION	LISANDRO ZAPATA, P.E. LICENSE NUMBER 58822 H. W. LOCHNER 4300 W. CYPRESS STREET, SUITE 500 TAMPA, FLORIDA 33607	ROAD NO.	COUNTY	FINANCIAL PROJECT ID		217
					SR 400	POLK	430185-3-52-01		

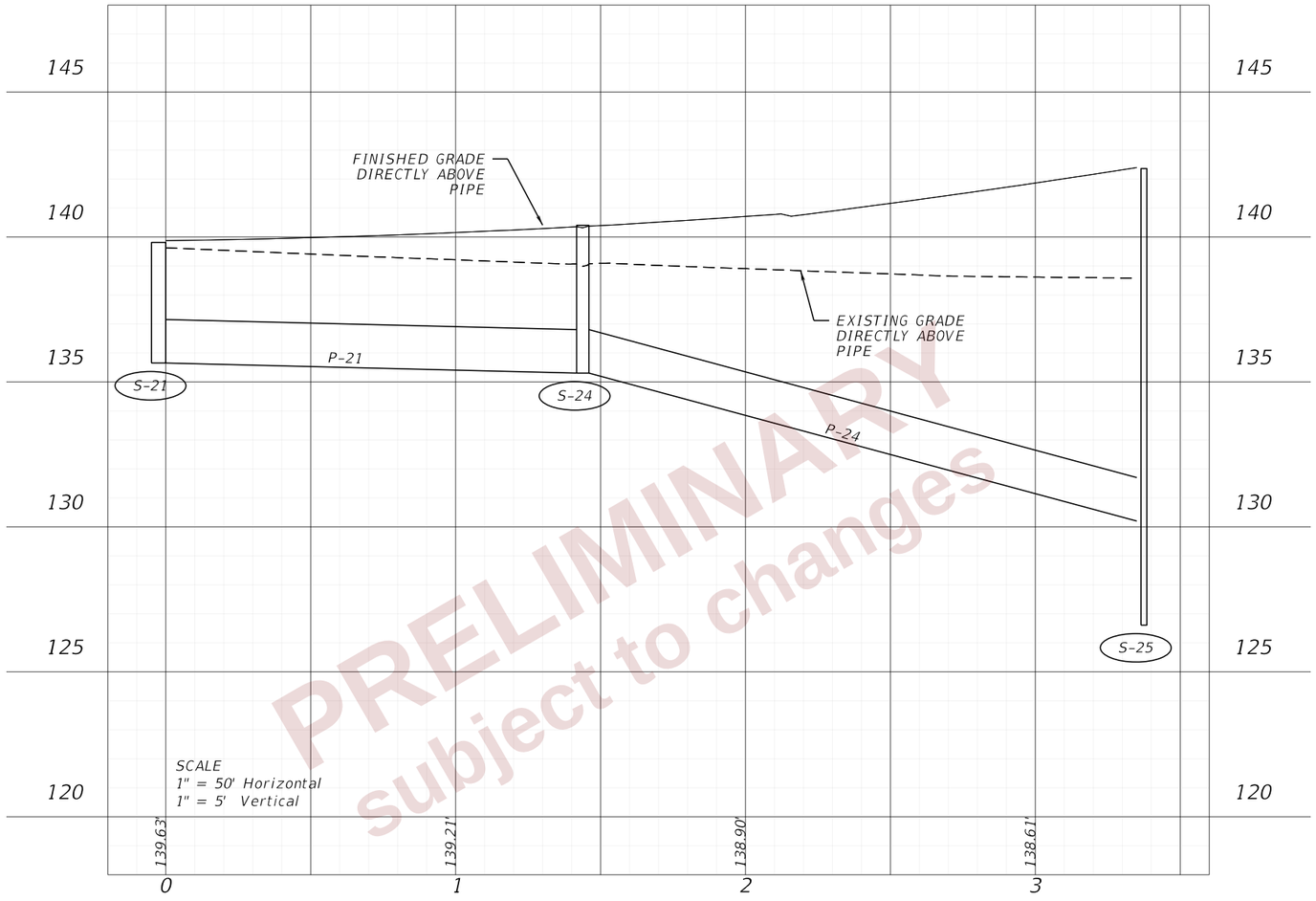

PRELIMINARY
subject to changes

S-21 TO S-25

REVISIONS				ENGINEER OF RECORD	STATE OF FLORIDA DEPARTMENT OF TRANSPORTATION			DRAINAGE PROFILES (10)	SHEET NO.
DATE	DESCRIPTION	DATE	DESCRIPTION	LISANDRO ZAPATA, P.E. LICENSE NUMBER 58822 H. W. LOCHNER 4300 W. CYPRESS STREET, SUITE 500 TAMPA, FLORIDA 33607	ROAD NO.	COUNTY	FINANCIAL PROJECT ID		218
					SR 400	POLK	430185-3-52-01		

THE OFFICIAL RECORD OF THIS SHEET IS THE ELECTRONIC FILE DIGITALLY SIGNED AND SEALED UNDER RULE 61G15-23.004, F.A.C.

2/29/2024 4:25:43 PM JBLOUNT
c:\pw_working\lochner-pw-01\dms33830\Basins 700 800.dgn

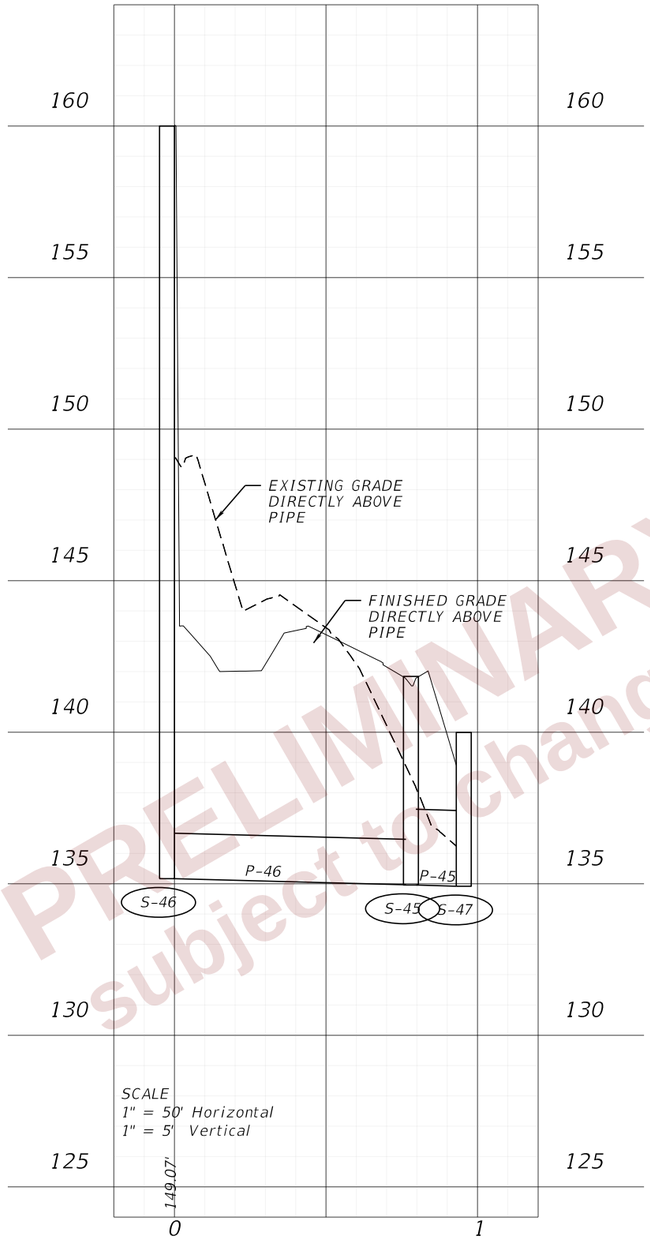

PRELIMINARY
subject to changes

S-46 TO S-47

REVISIONS				ENGINEER OF RECORD	STATE OF FLORIDA DEPARTMENT OF TRANSPORTATION			DRAINAGE PROFILES (11)	SHEET NO.
DATE	DESCRIPTION	DATE	DESCRIPTION	LISANDRO ZAPATA, P.E. LICENSE NUMBER 58822 H. W. LOCHNER 4300 W. CYPRESS STREET, SUITE 500 TAMPA, FLORIDA 33607	ROAD NO.	COUNTY	FINANCIAL PROJECT ID		219
					SR 400	POLK	430185-3-52-01		

THE OFFICIAL RECORD OF THIS SHEET IS THE ELECTRONIC FILE DIGITALLY SIGNED AND SEALED UNDER RULE 61G15-23.004, F.A.C.

2/29/2024 4:25:47 PM JBLOUNT
c:\pw_working\lochner-pw-01\dms3383\Basins 700 800.dgn

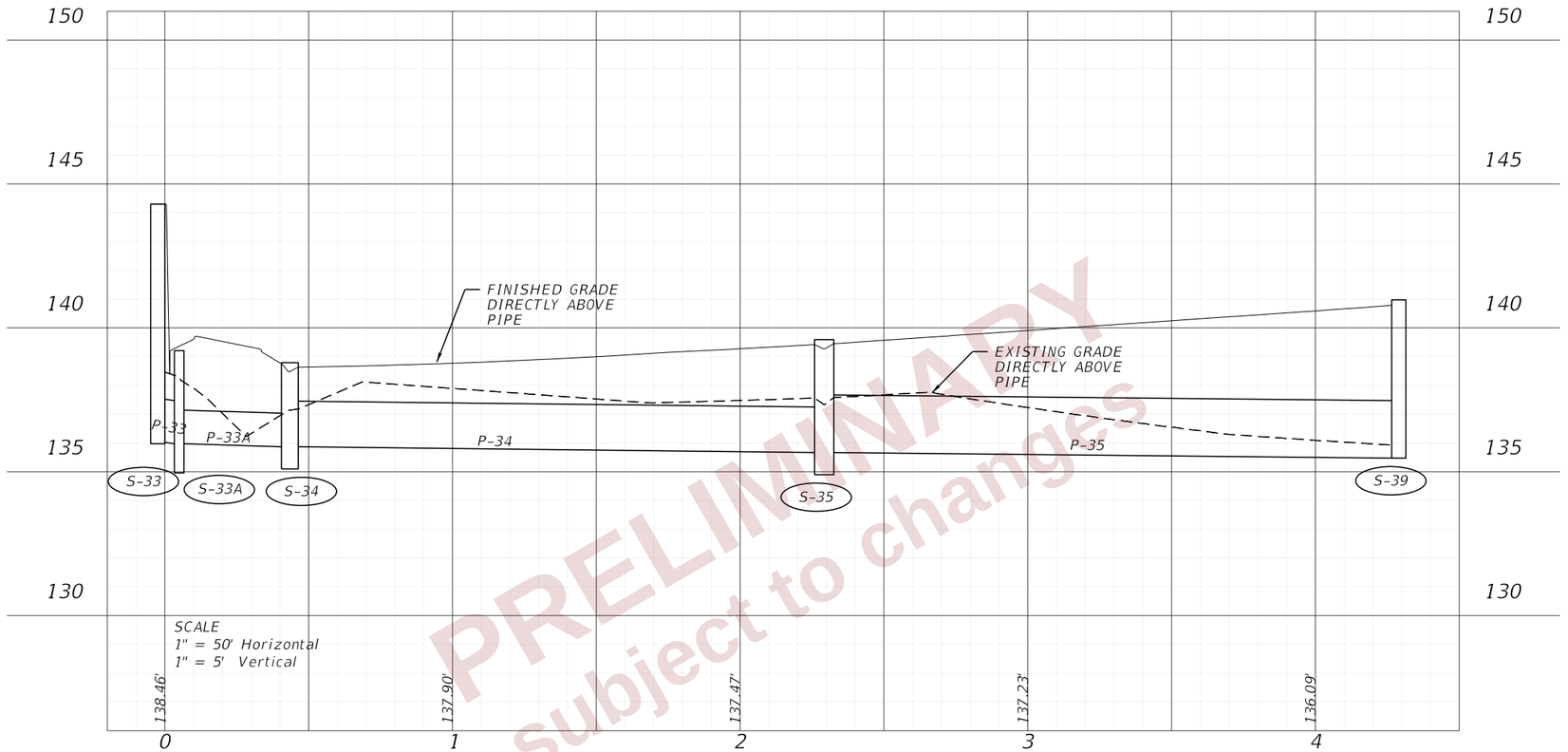

S-33 TO S-39

PRELIMINARY
subject to changes

REVISIONS				ENGINEER OF RECORD	STATE OF FLORIDA DEPARTMENT OF TRANSPORTATION			DRAINAGE PROFILES (12)	SHEET NO.
DATE	DESCRIPTION	DATE	DESCRIPTION	LISANDRO ZAPATA, P.E. LICENSE NUMBER 58822 H. W. LOCHNER 4300 W. CYPRESS STREET, SUITE 500 TAMPA, FLORIDA 33607	ROAD NO.	COUNTY	FINANCIAL PROJECT ID		220
					SR 400	POLK	430185-3-52-01		

THE OFFICIAL RECORD OF THIS SHEET IS THE ELECTRONIC FILE DIGITALLY SIGNED AND SEALED UNDER RULE 61G15-23.004, F.A.C.

2/29/2024 4:25:52 PM JBLOUNT
c:\pw_working\lochner-pw-01\dms33830\Basins 700 800.dgn

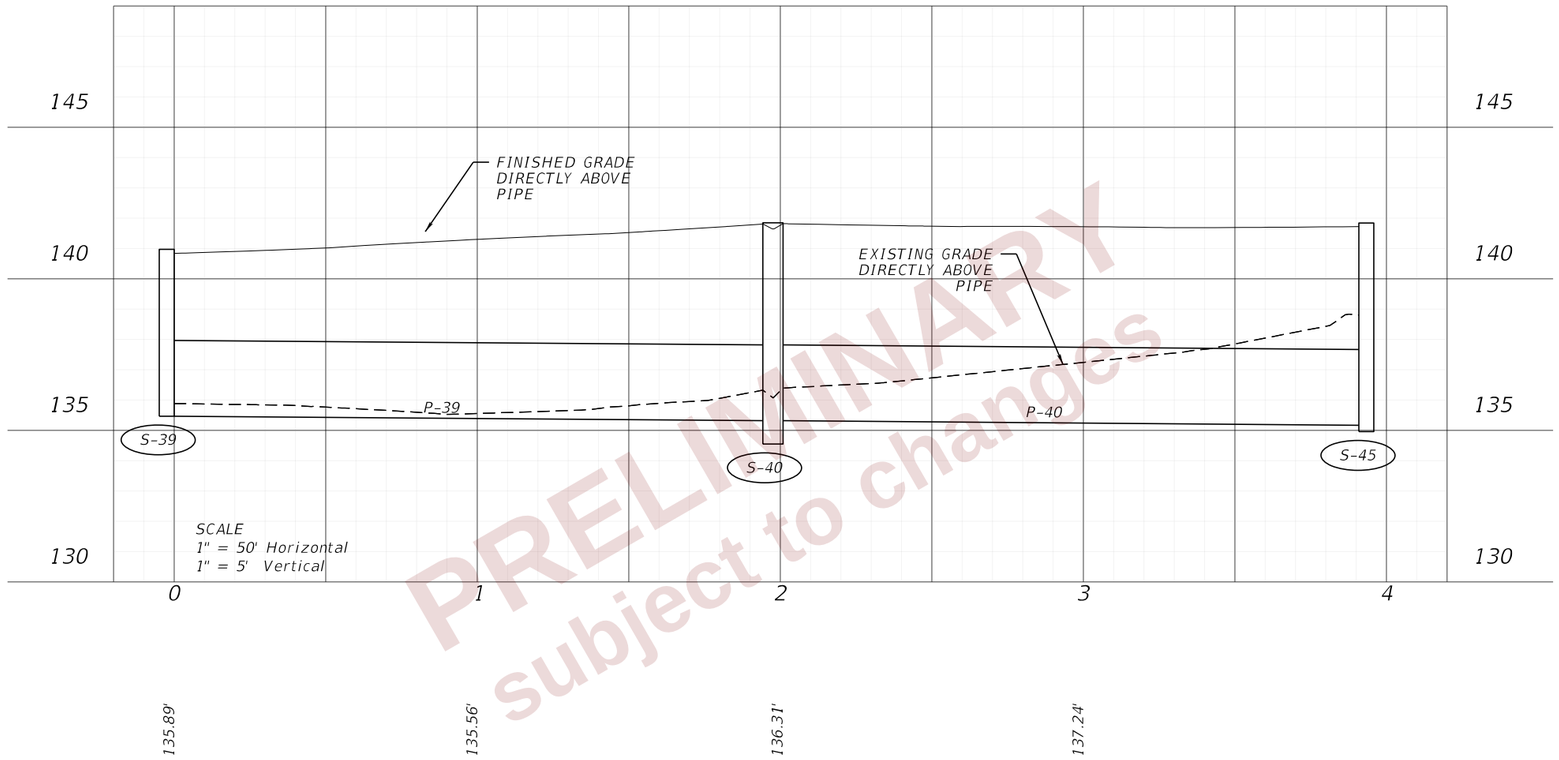

PRELIMINARY
subject to changes

S-39 TO S-45

THE OFFICIAL RECORD OF THIS SHEET IS THE ELECTRONIC FILE DIGITALLY SIGNED AND SEALED UNDER RULE 61G15-23.004, F.A.C.

2/29/2024 4:25:56 PM JBLOUNT
c:\pw_working\lochner-pw-01\dms33830\Basins 700 800.dgn

REVISIONS				ENGINEER OF RECORD	STATE OF FLORIDA DEPARTMENT OF TRANSPORTATION			DRAINAGE PROFILES (13)	SHEET NO.
DATE	DESCRIPTION	DATE	DESCRIPTION	LISANDRO ZAPATA, P.E. LICENSE NUMBER 58822 H. W. LOCHNER 4300 W. CYPRESS STREET, SUITE 500 TAMPA, FLORIDA 33607	ROAD NO.	COUNTY	FINANCIAL PROJECT ID		221
					SR 400	POLK	430185-3-52-01		

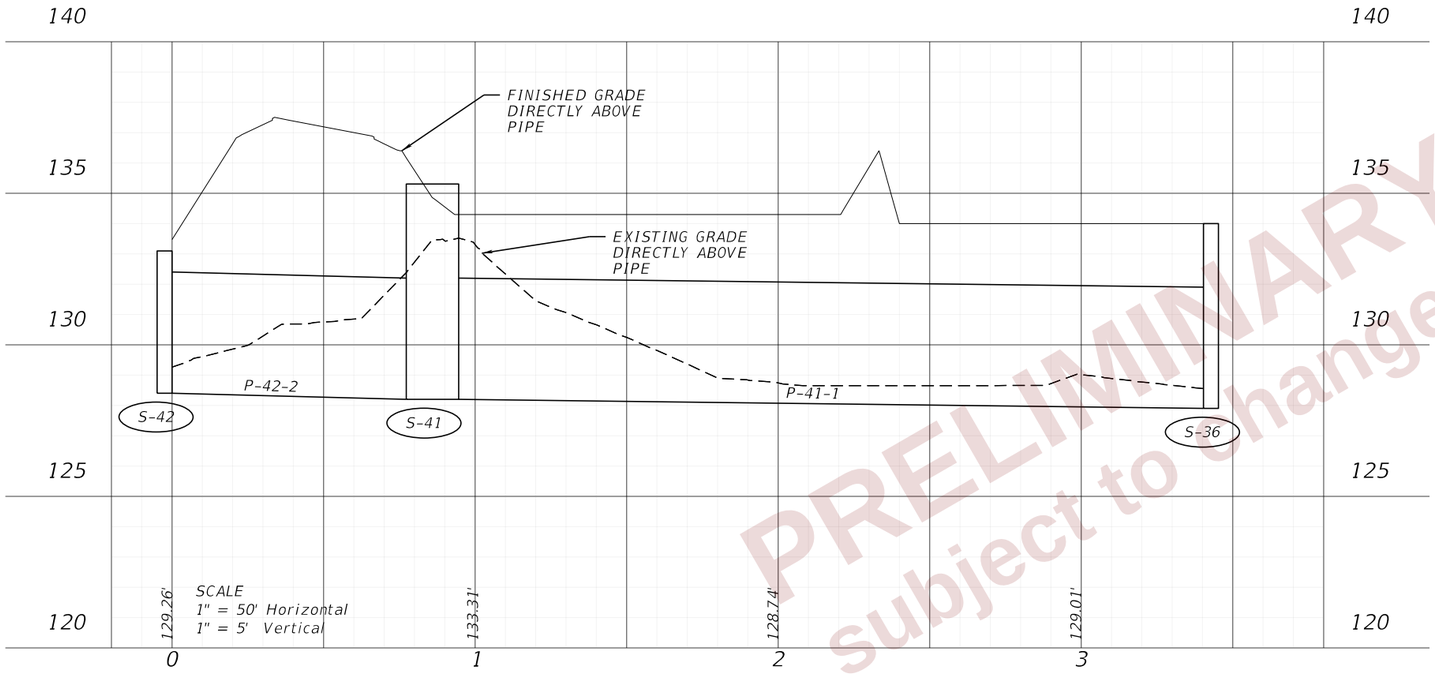

S-42 TO S-36

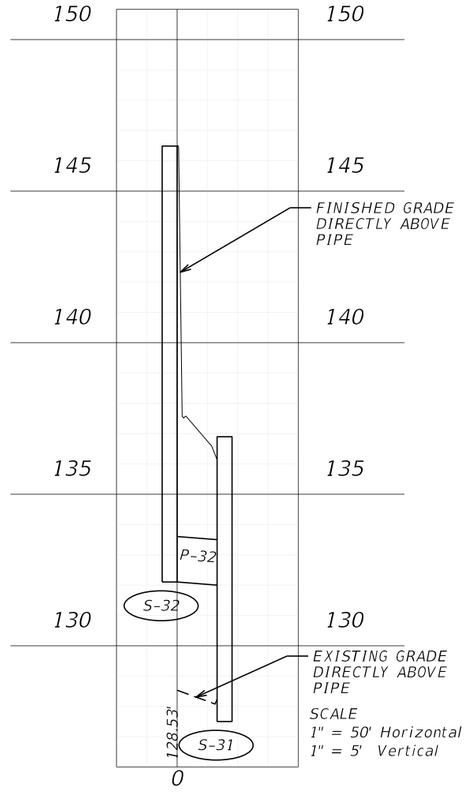

S-32 TO S-31

PRELIMINARY
subject to changes

THE OFFICIAL RECORD OF THIS SHEET IS THE ELECTRONIC FILE DIGITALLY SIGNED AND SEALED UNDER RULE 61G15-23.004, F.A.C.

REVISIONS				ENGINEER OF RECORD	STATE OF FLORIDA DEPARTMENT OF TRANSPORTATION			DRAINAGE PROFILES (14)	SHEET NO.
DATE	DESCRIPTION	DATE	DESCRIPTION	LISANDRO ZAPATA, P.E. LICENSE NUMBER 58822 H. W. LOCHNER 4300 W. CYPRESS STREET, SUITE 500 TAMPA, FLORIDA 33607	ROAD NO.	COUNTY	FINANCIAL PROJECT ID		222
					SR 400	POLK	430185-3-52-01		

2/29/2024 4:26:00 PM JBLOUNT
c:\pw_working\lochner-pw-01\dms33830\Basins 700 800.dgn

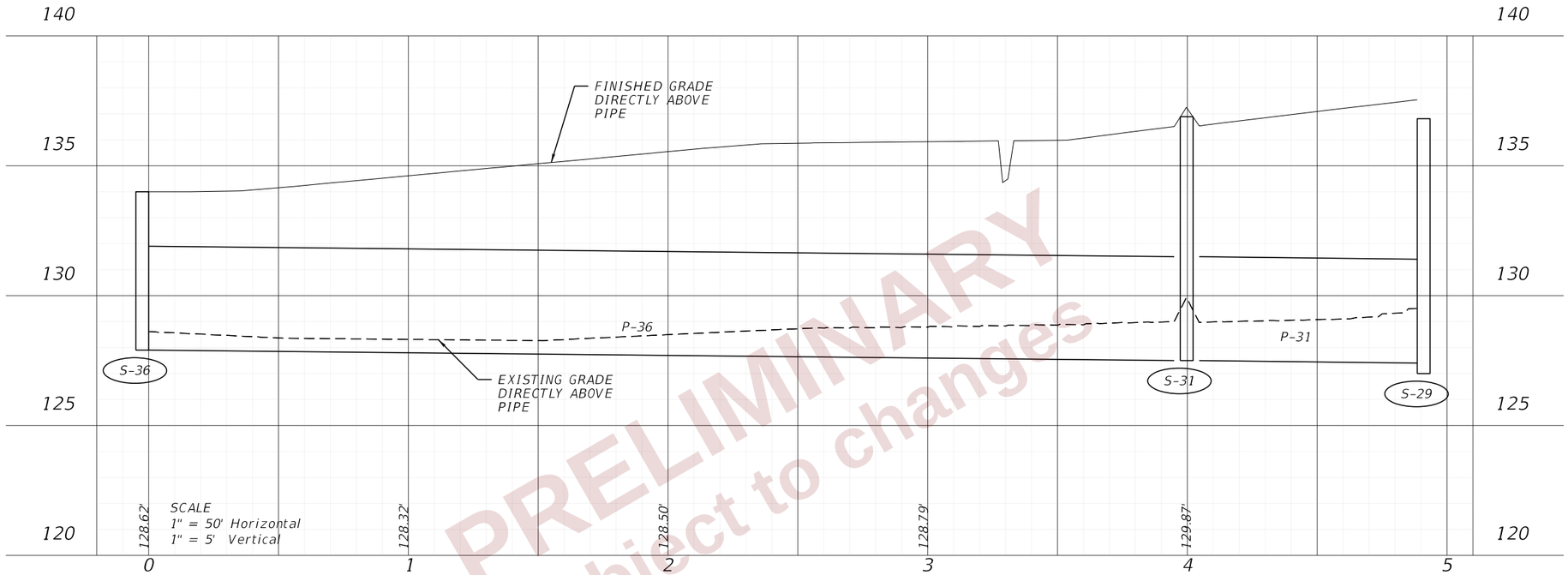

S-36 TO S-29

PRELIMINARY
subject to changes

REVISIONS				ENGINEER OF RECORD	STATE OF FLORIDA DEPARTMENT OF TRANSPORTATION			DRAINAGE PROFILES (15)	SHEET NO.
DATE	DESCRIPTION	DATE	DESCRIPTION	LISANDRO ZAPATA, P.E. LICENSE NUMBER 58822 H. W. LOCHNER 4300 W. CYPRESS STREET, SUITE 500 TAMPA, FLORIDA 33607	ROAD NO.	COUNTY	FINANCIAL PROJECT ID		223
					SR 400	POLK	430185-3-52-01		

THE OFFICIAL RECORD OF THIS SHEET IS THE ELECTRONIC FILE DIGITALLY SIGNED AND SEALED UNDER RULE 61G15-23.004, F.A.C.

2/29/2024 4:26:05 PM JBLOUNT
c:\pw_working\lochner-pw-01\dms33830\Basins 700 800.dgn

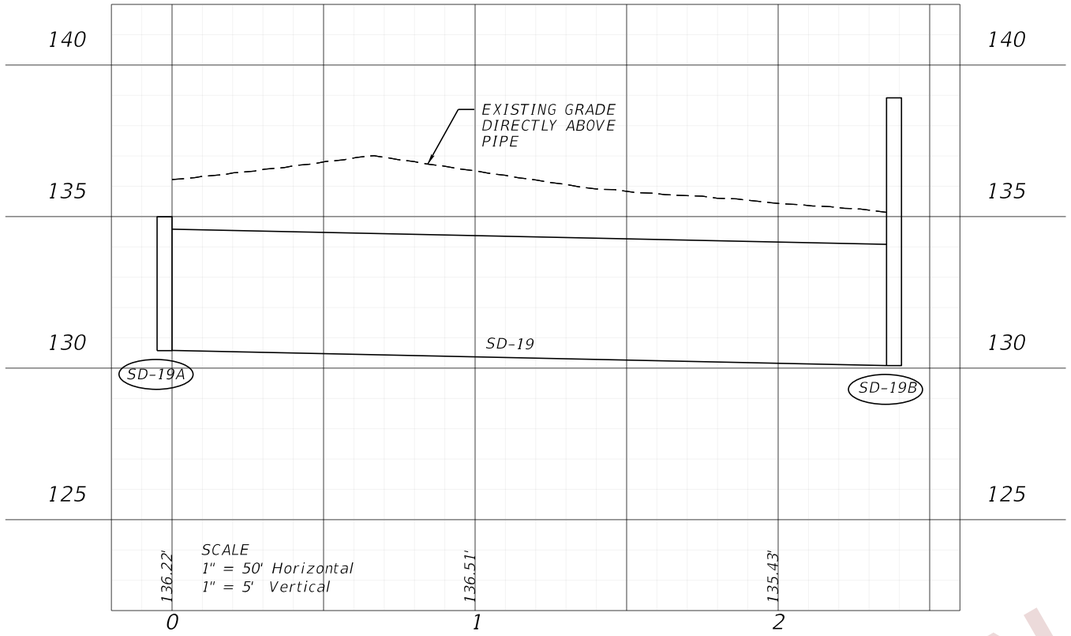

SD-19

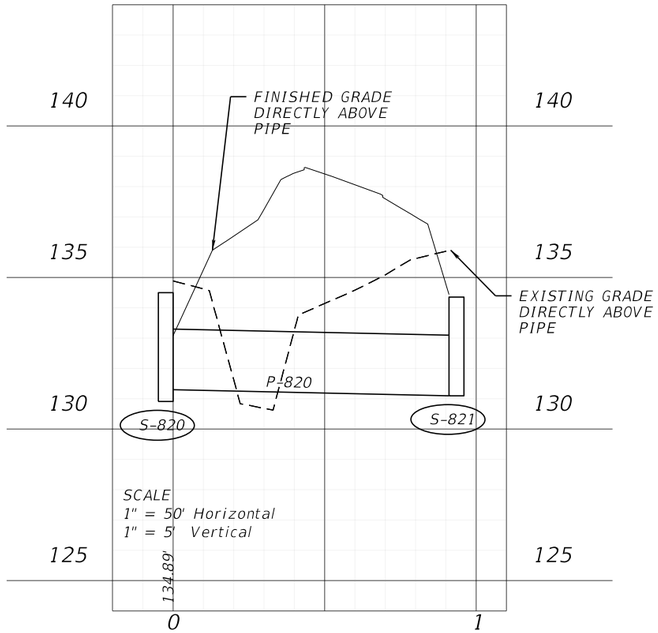

S-820 TO S-821

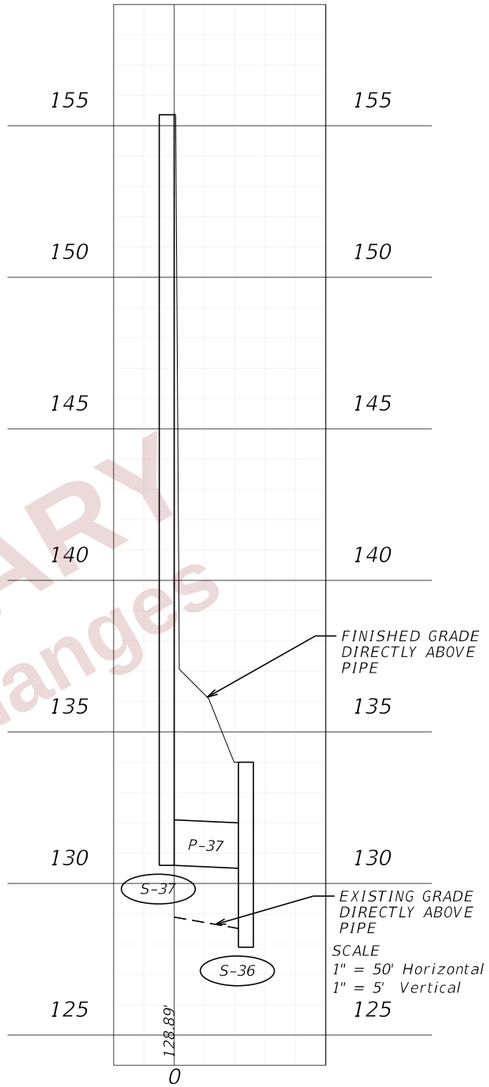

S-37 TO S-36

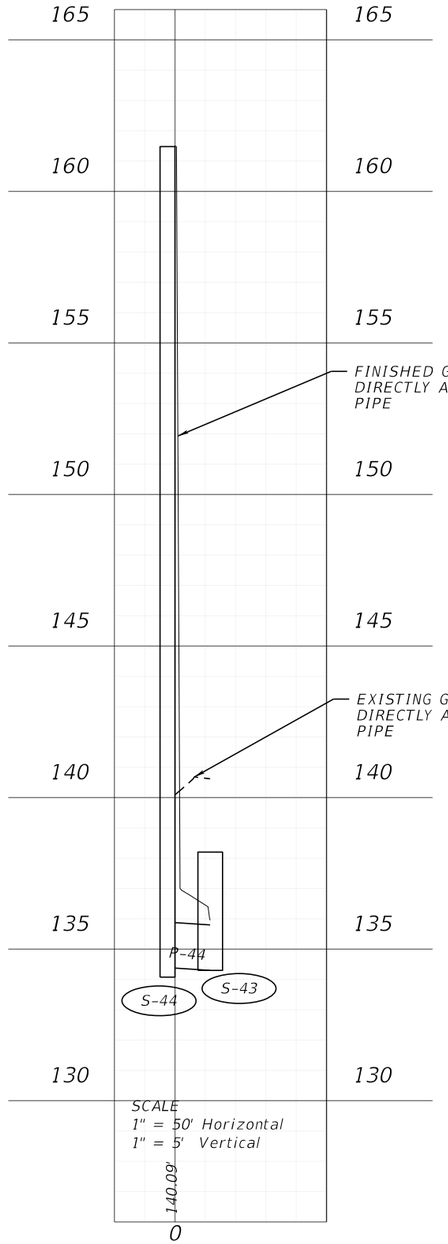

S-44 TO S-43

PRELIMINARY
subject to changes

THE OFFICIAL RECORD OF THIS SHEET IS THE ELECTRONIC FILE DIGITALLY SIGNED AND SEALED UNDER RULE 61G15-23.004, F.A.C.

2/29/2024 4:26:08 PM JBLOUNT
c:\pw_working\lochner-pw-01\dms33830\Basins 700 800.dgn

REVISIONS				ENGINEER OF RECORD	STATE OF FLORIDA DEPARTMENT OF TRANSPORTATION			DRAINAGE PROFILES (16)	SHEET NO.
DATE	DESCRIPTION	DATE	DESCRIPTION	LISANDRO ZAPATA, P.E. LICENSE NUMBER 58822 H. W. LOCHNER 4300 W. CYPRESS STREET, SUITE 500 TAMPA, FLORIDA 33607	ROAD NO.	COUNTY	FINANCIAL PROJECT ID		224
					SR 400	POLK	430185-3-52-01		

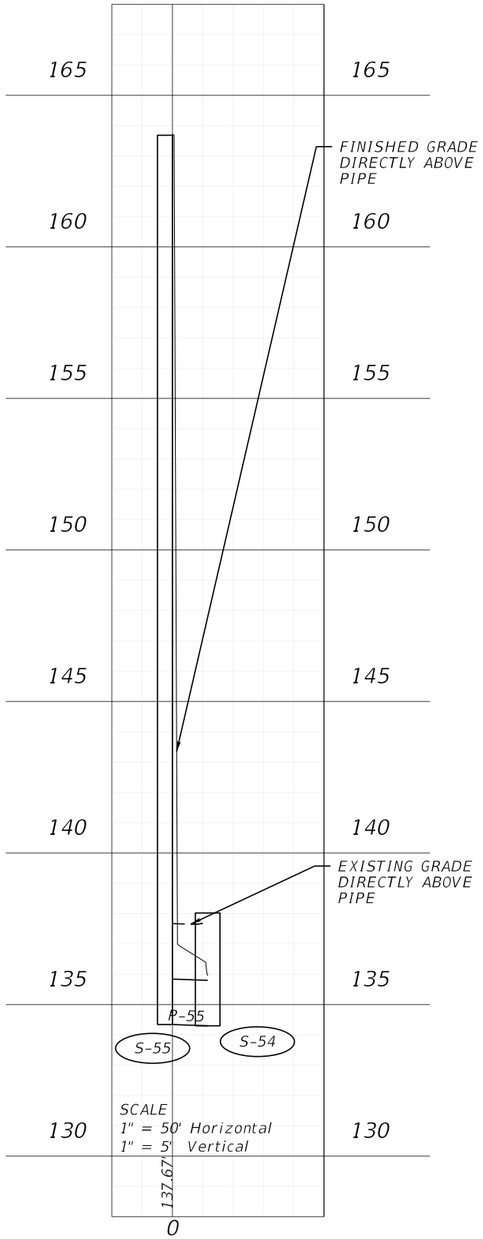

S-55 TO S-54

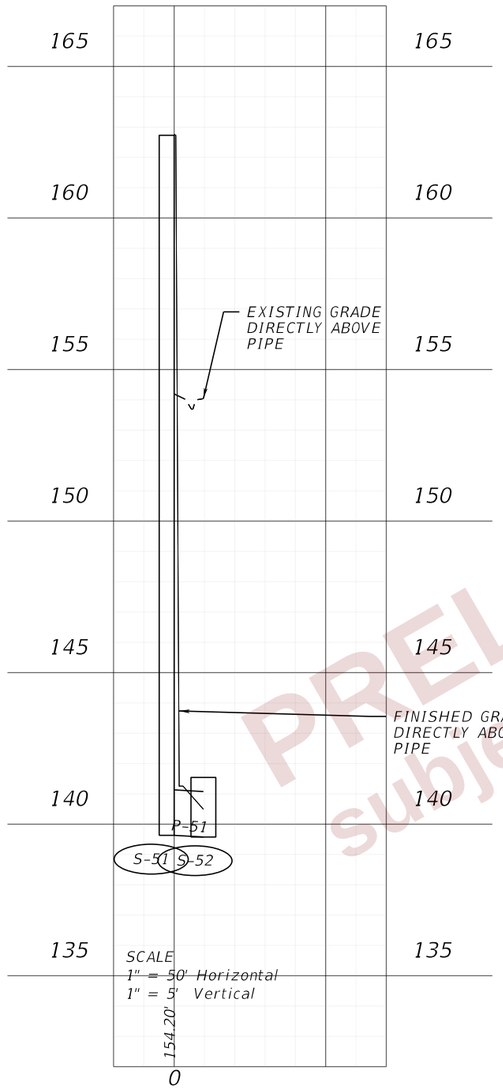

S-51 TO S-52

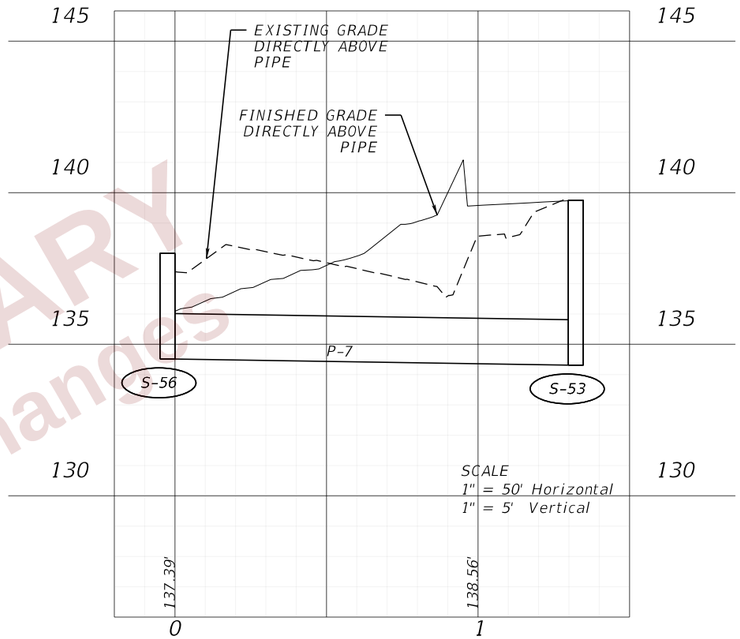

S-56 TO S-48

PRELIMINARY
subject to changes

THE OFFICIAL RECORD OF THIS SHEET IS THE ELECTRONIC FILE DIGITALLY SIGNED AND SEALED UNDER RULE 61G15-23.004, F.A.C.

2/29/2024 4:26:12 PM JBLOUNT
c:\pw_working\lochner-pw-01\dms33830\Basins 700 800.dgn

REVISIONS				ENGINEER OF RECORD	STATE OF FLORIDA DEPARTMENT OF TRANSPORTATION			DRAINAGE PROFILES (17)	SHEET NO.
DATE	DESCRIPTION	DATE	DESCRIPTION	LISANDRO ZAPATA, P.E. LICENSE NUMBER 58822 H. W. LOCHNER 4300 W. CYPRESS STREET, SUITE 500 TAMPA, FLORIDA 33607	ROAD NO.	COUNTY	FINANCIAL PROJECT ID		225
					SR 400	POLK	430185-3-52-01		

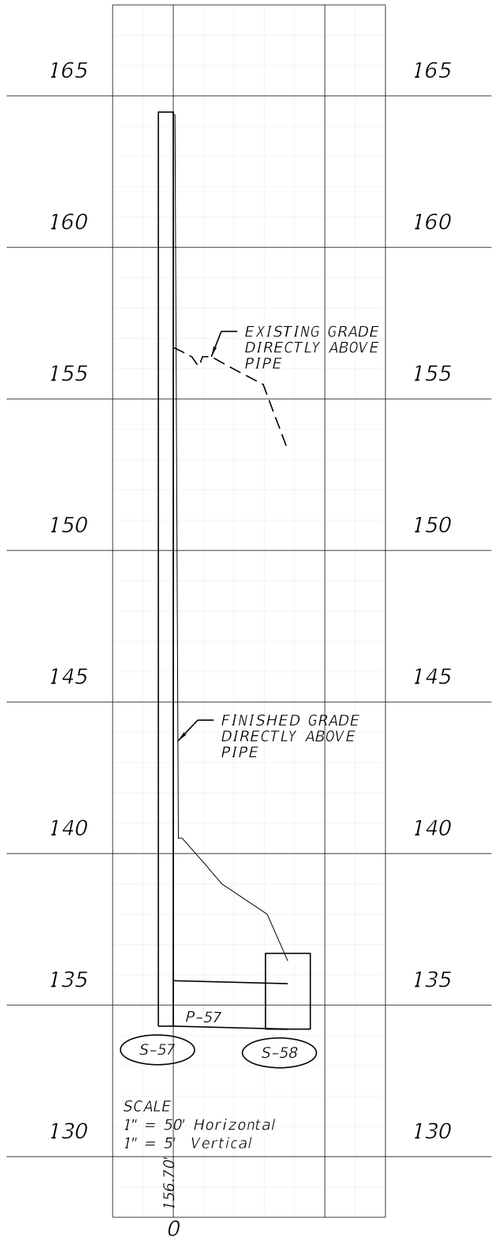

S-57 TO S-58

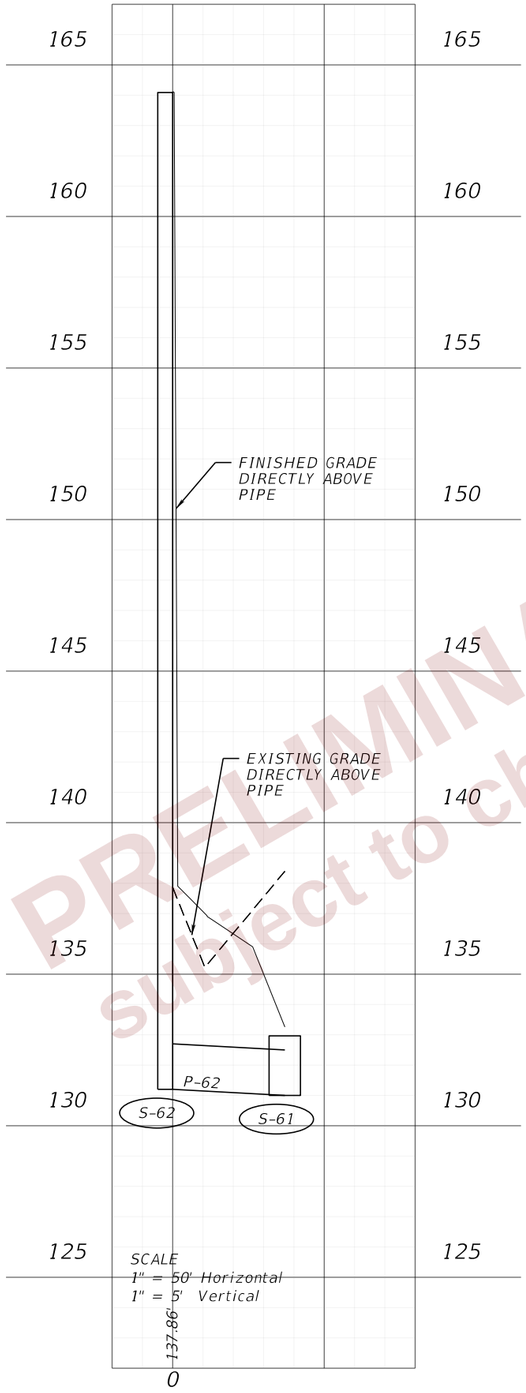

S-62 TO S-61

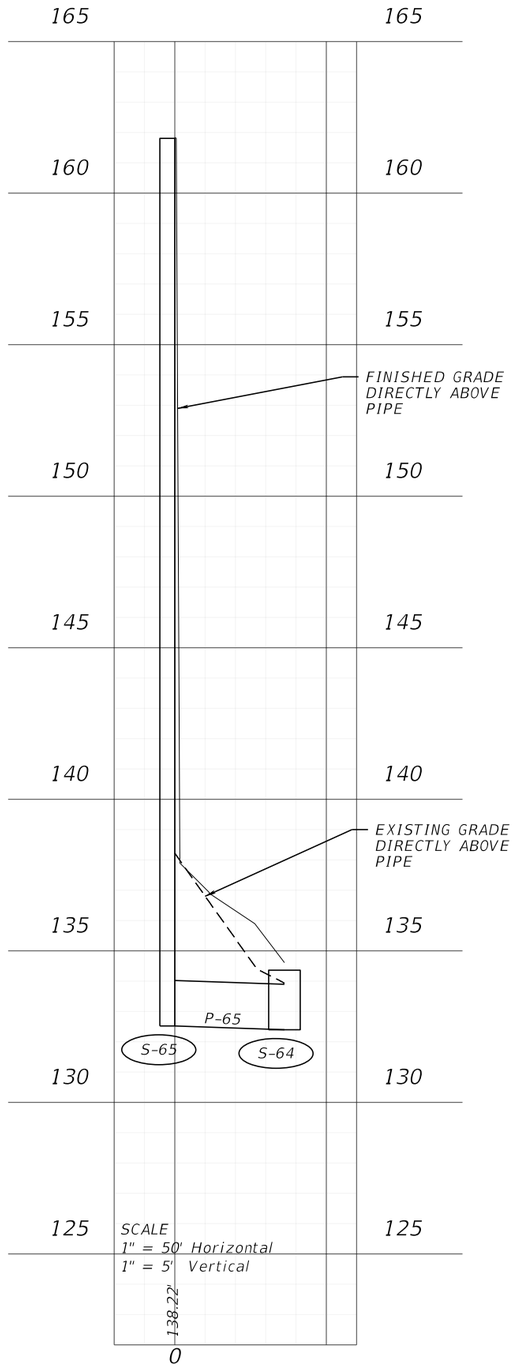

S-65 TO S-64

PRELIMINARY
subject to changes

REVISIONS				ENGINEER OF RECORD	STATE OF FLORIDA DEPARTMENT OF TRANSPORTATION			DRAINAGE PROFILES (18)	SHEET NO.
DATE	DESCRIPTION	DATE	DESCRIPTION	LISANDRO ZAPATA, P.E. LICENSE NUMBER 58822 H. W. LOCHNER 4300 W. CYPRESS STREET, SUITE 500 TAMPA, FLORIDA 33607	ROAD NO.	COUNTY	FINANCIAL PROJECT ID		226
					SR 400	POLK	430185-3-52-01		

THE OFFICIAL RECORD OF THIS SHEET IS THE ELECTRONIC FILE DIGITALLY SIGNED AND SEALED UNDER RULE 61G15-23.004, F.A.C.

2/29/2024 4:26:17 PM JBLOUNT
C:\pw_working\lochner-pw-01\dms3383\Basins 700 800.dgn

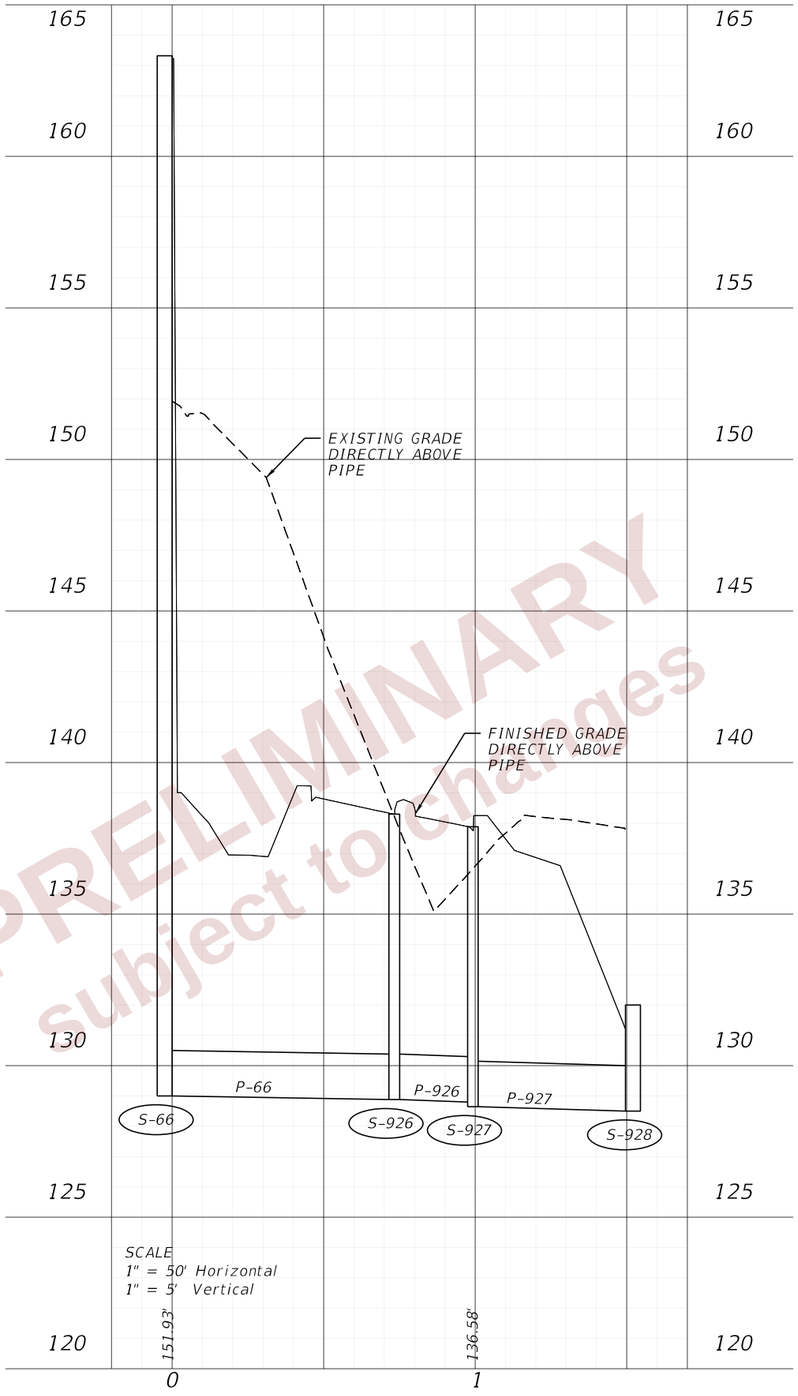

S-66 TO S-928

PRELIMINARY
subject to change

REVISIONS				ENGINEER OF RECORD	STATE OF FLORIDA DEPARTMENT OF TRANSPORTATION			DRAINAGE PROFILES (19)	SHEET NO.
DATE	DESCRIPTION	DATE	DESCRIPTION	LISANDRO ZAPATA, P.E. LICENSE NUMBER 58822 H. W. LOCHNER 4300 W. CYPRESS STREET, SUITE 500 TAMPA, FLORIDA 33607	ROAD NO.	COUNTY	FINANCIAL PROJECT ID		227
					SR 400	POLK	430185-3-52-01		

THE OFFICIAL RECORD OF THIS SHEET IS THE ELECTRONIC FILE DIGITALLY SIGNED AND SEALED UNDER RULE 61G15-23.004, F.A.C.

2/29/2024 4:26:21 PM JBLOUNT
c:\pw_working\lochner-pw-01\dms33830\Basins 700 800.dgn

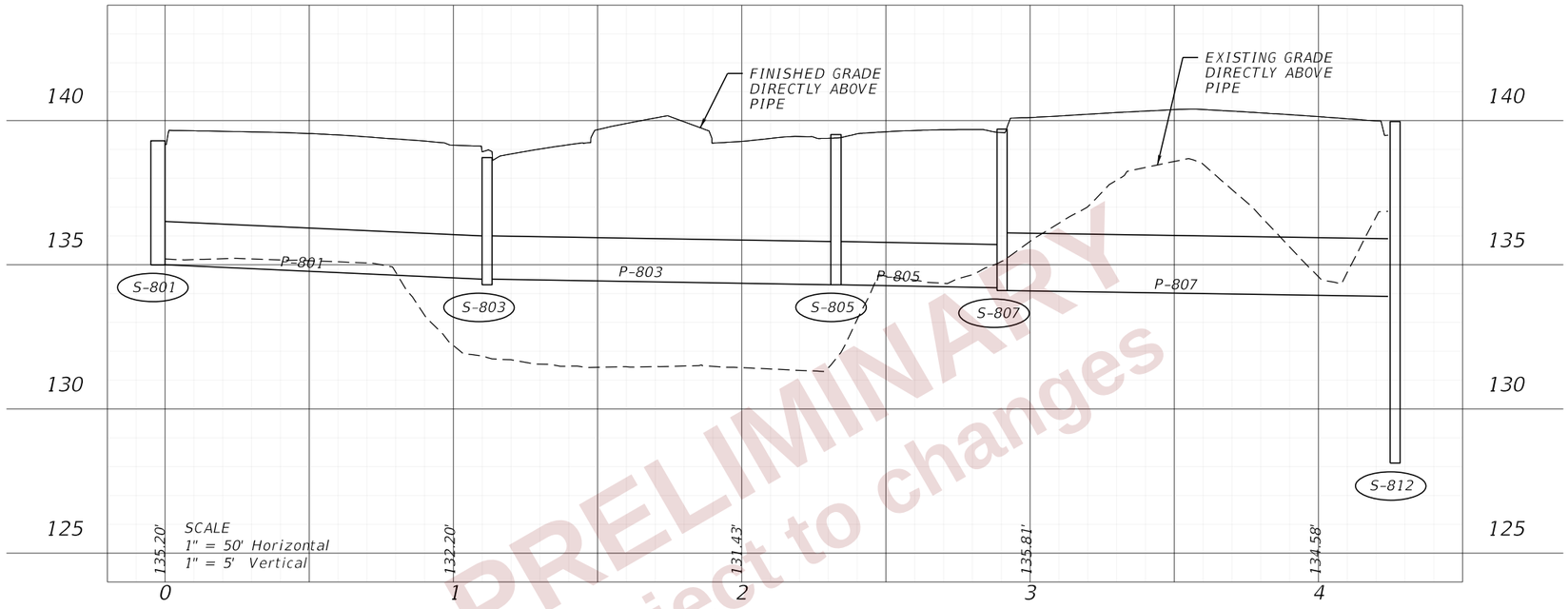

S-801 TO S-812

PRELIMINARY
subject to changes

REVISIONS				ENGINEER OF RECORD	STATE OF FLORIDA DEPARTMENT OF TRANSPORTATION			DRAINAGE PROFILES (20)	SHEET NO.
DATE	DESCRIPTION	DATE	DESCRIPTION	LISANDRO ZAPATA, P.E. LICENSE NUMBER 58822 H. W. LOCHNER 4300 W. CYPRESS STREET, SUITE 500 TAMPA, FLORIDA 33607	ROAD NO.	COUNTY	FINANCIAL PROJECT ID		228
					SR 400	POLK	430185-3-52-01		

THE OFFICIAL RECORD OF THIS SHEET IS THE ELECTRONIC FILE DIGITALLY SIGNED AND SEALED UNDER RULE 61G15-23.004, F.A.C.

2/29/2024 4:34:44 PM JBLOUNT
C:\pw_working\lochner-pw-01\dms33830\Basins 800 900AB 1000.dgn

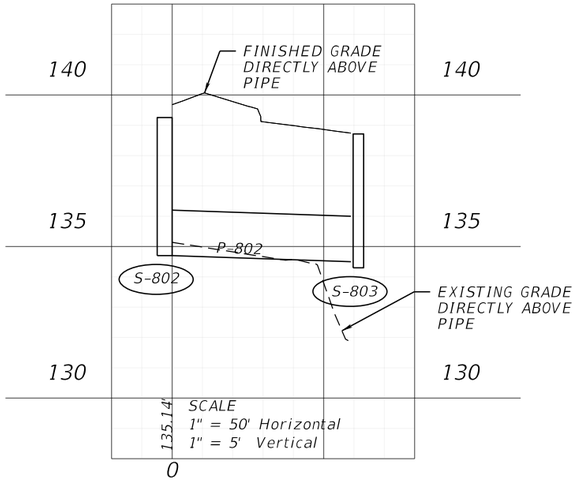

S-802 TO S-803

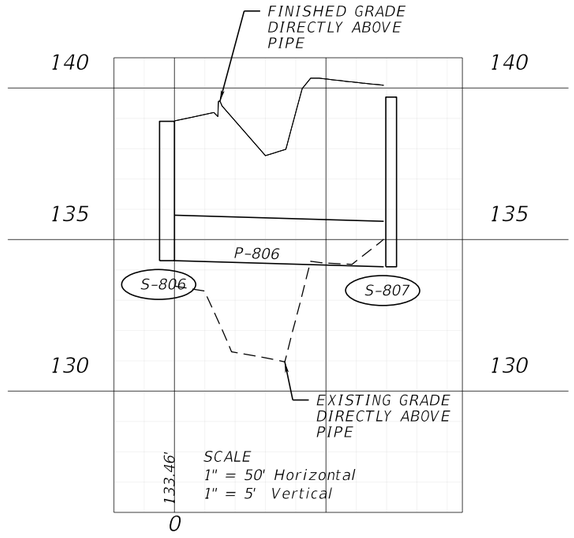

S-806 TO S-807

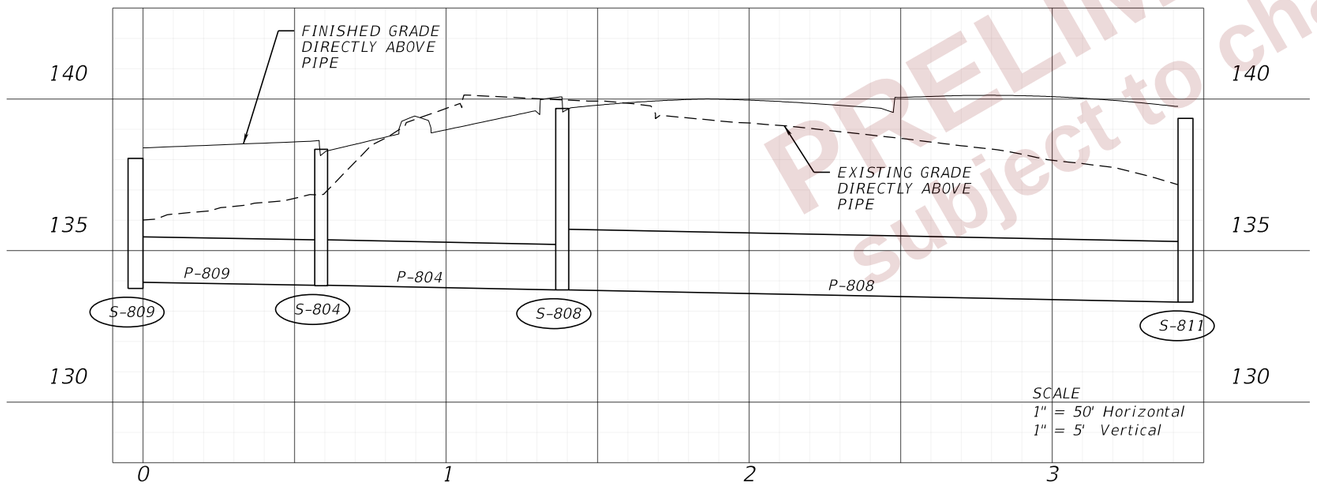

S-809 TO S-811

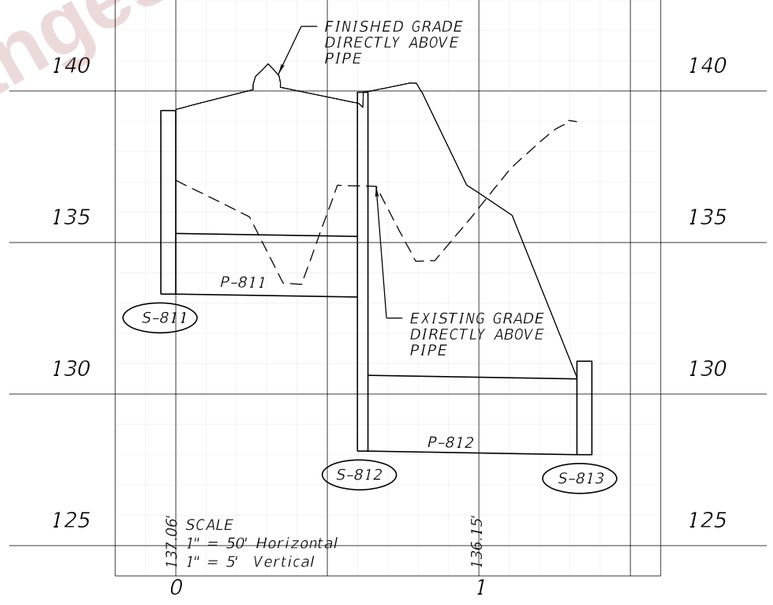

S-811 TO S-813

PRELIMINARY
subject to changes

REVISIONS				ENGINEER OF RECORD	STATE OF FLORIDA DEPARTMENT OF TRANSPORTATION			DRAINAGE PROFILES (21)	SHEET NO.
DATE	DESCRIPTION	DATE	DESCRIPTION	LISANDRO ZAPATA, P.E. LICENSE NUMBER 58822 H. W. LOCHNER 4300 W. CYPRESS STREET, SUITE 500 TAMPA, FLORIDA 33607	ROAD NO.	COUNTY	FINANCIAL PROJECT ID		229
					SR 400	POLK	430185-3-52-01		

THE OFFICIAL RECORD OF THIS SHEET IS THE ELECTRONIC FILE DIGITALLY SIGNED AND SEALED UNDER RULE 61G15-23.004, F.A.C.

2/29/2024 4:34:49 PM JBLOUNT
c:\pw_working\lochner-pw-01\dms33830\Basins 800 900AB 1000.dgn

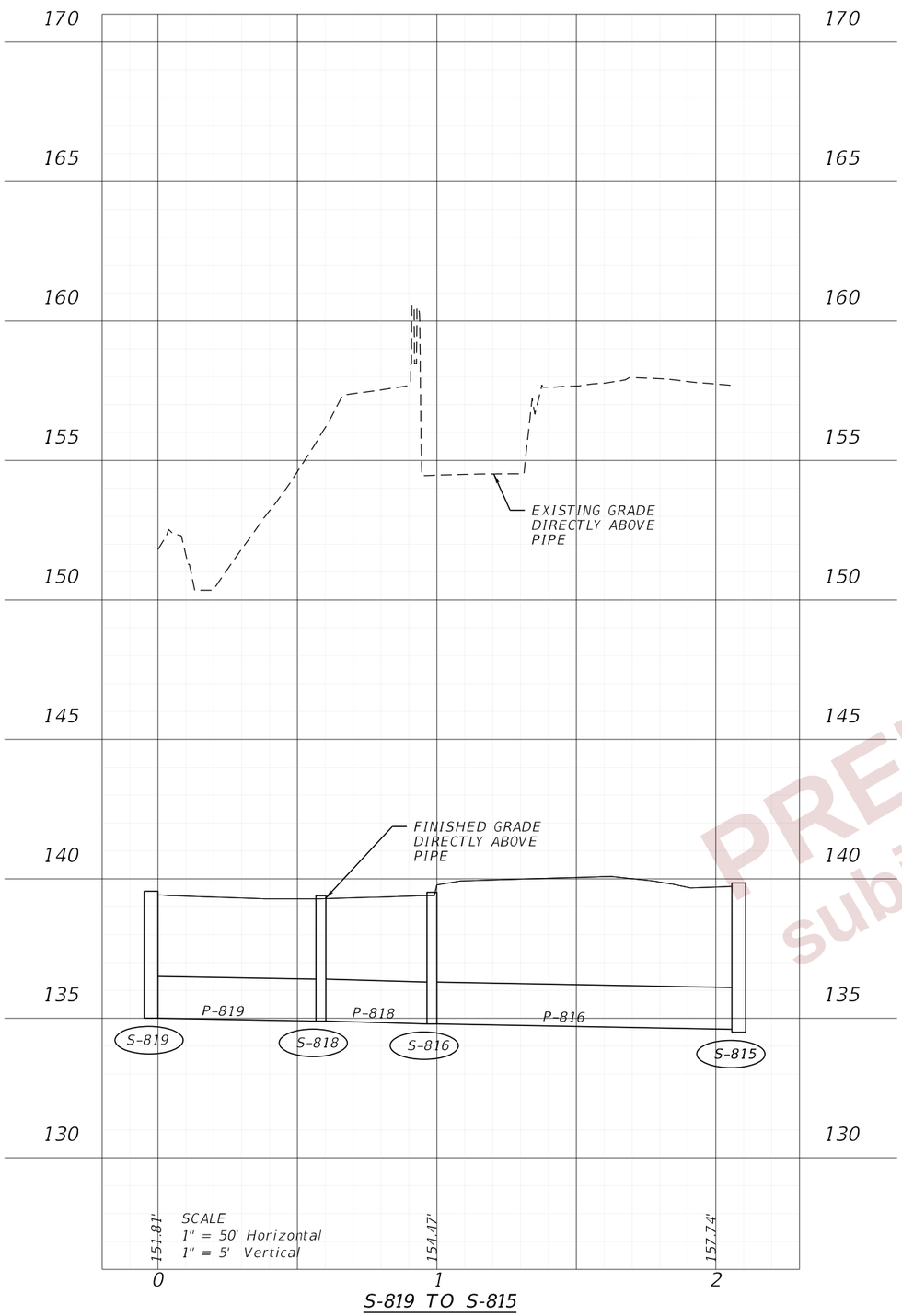

S-819 TO S-815

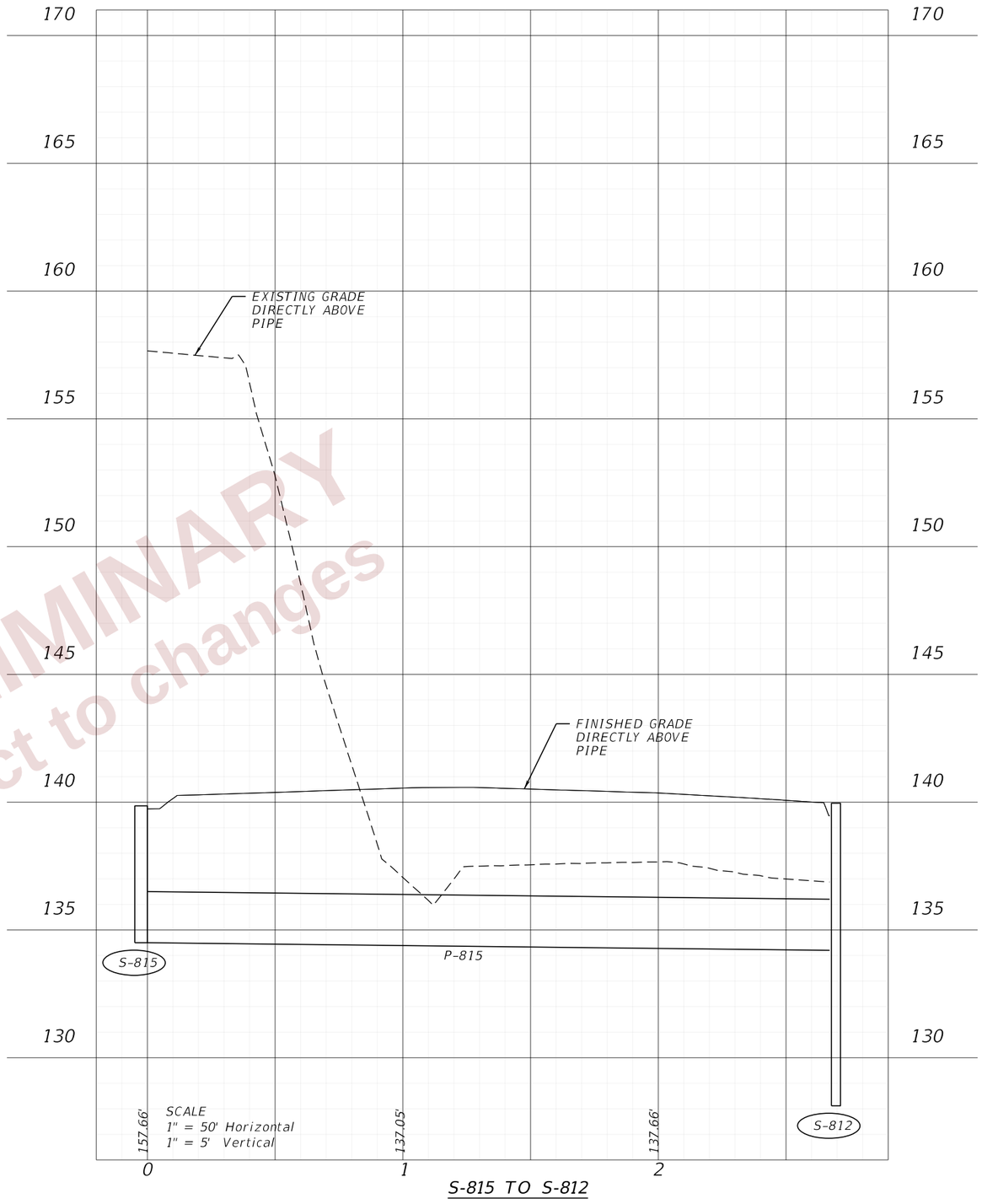

S-815 TO S-812

PRELIMINARY
subject to changes

THE OFFICIAL RECORD OF THIS SHEET IS THE ELECTRONIC FILE DIGITALLY SIGNED AND SEALED UNDER RULE 61G15-23.004, F.A.C.

2/29/2024 4:34:54 PM JBLOUNT
C:\pw_working\lochner-pw-01\dms33830\Basins 800 900AB 1000.dgn

REVISIONS			
DATE	DESCRIPTION	DATE	DESCRIPTION

ENGINEER OF RECORD
LISANDRO ZAPATA, P.E.
LICENSE NUMBER 58822
H. W. LOCHNER
4300 W. CYPRESS STREET, SUITE 500
TAMPA, FLORIDA 33607

STATE OF FLORIDA
DEPARTMENT OF TRANSPORTATION

ROAD NO.	COUNTY	FINANCIAL PROJECT ID
SR 400	POLK	430185-3-52-01

DRAINAGE PROFILES (22)

SHEET NO. 230

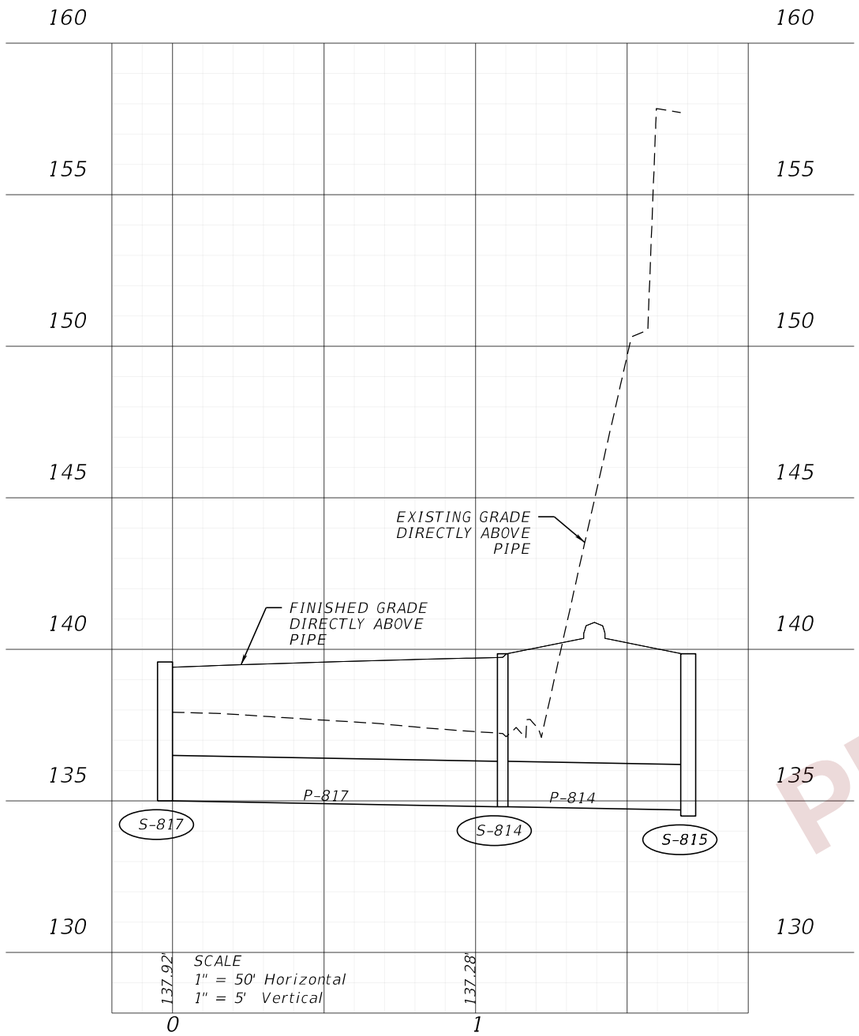

S-817 TO S-815

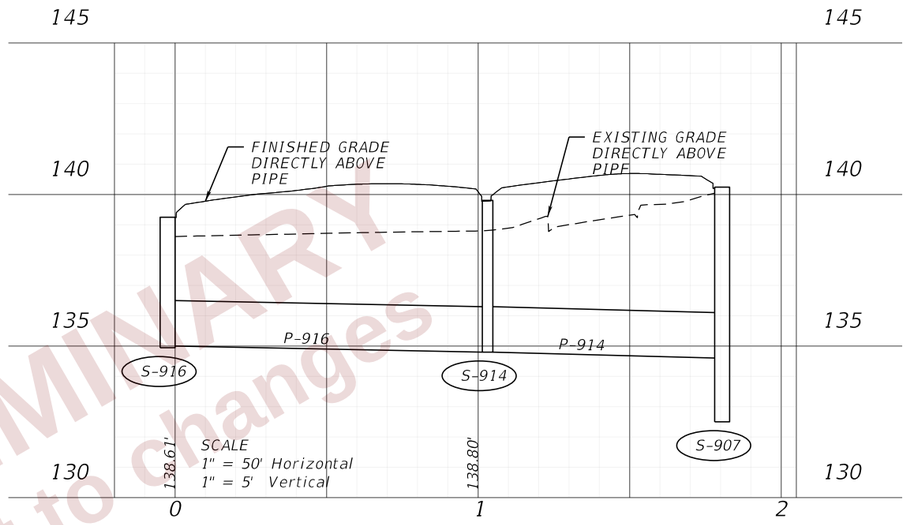

S-916 TO S-907

PRELIMINARY subject to changes

THE OFFICIAL RECORD OF THIS SHEET IS THE ELECTRONIC FILE DIGITALLY SIGNED AND SEALED UNDER RULE 61G15-23.004, F.A.C.

2/29/2024 4:34:59 PM JBLOUNT
c:\pw_working\lochner-pw-01\dms33830\Basins 800 900AB 1000.dgn

REVISIONS			
DATE	DESCRIPTION	DATE	DESCRIPTION

ENGINEER OF RECORD
LISANDRO ZAPATA, P.E.
LICENSE NUMBER 58822
H. W. LOCHNER
4300 W. CYPRESS STREET, SUITE 500
TAMPA, FLORIDA 33607

STATE OF FLORIDA
DEPARTMENT OF TRANSPORTATION

ROAD NO.	COUNTY	FINANCIAL PROJECT ID
SR 400	POLK	430185-3-52-01

DRAINAGE PROFILES (23)

SHEET NO. 231

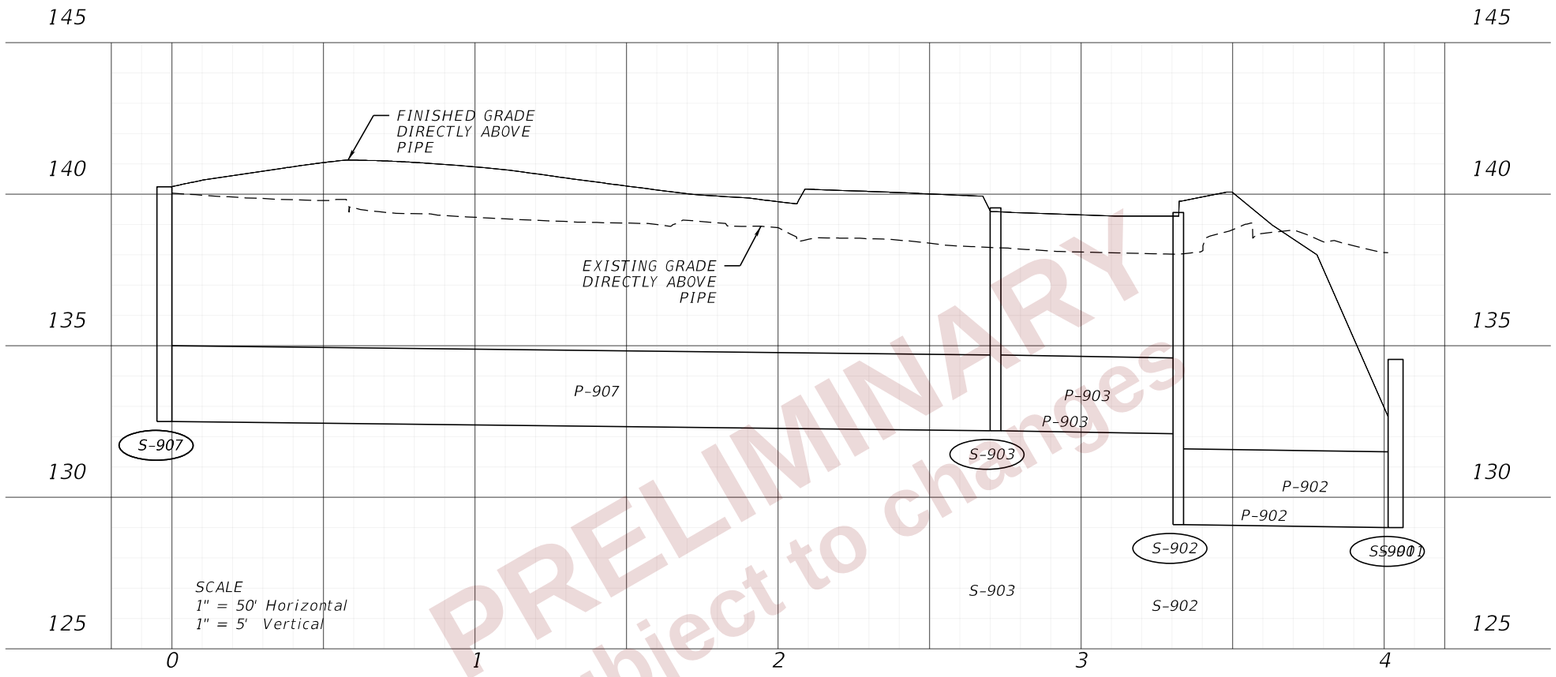

S-907 TO S-901

140.04'

139.24'

138.90'

138.10'

138.08'

PRELIMINARY
subject to changes

REVISIONS				ENGINEER OF RECORD	STATE OF FLORIDA DEPARTMENT OF TRANSPORTATION			DRAINAGE PROFILES (24)	SHEET NO.
DATE	DESCRIPTION	DATE	DESCRIPTION	LISANDRO ZAPATA, P.E. LICENSE NUMBER 58822 H. W. LOCHNER 4300 W. CYPRESS STREET, SUITE 500 TAMPA, FLORIDA 33607	ROAD NO.	COUNTY	FINANCIAL PROJECT ID		232
					SR 400	POLK	430185-3-52-01		

THE OFFICIAL RECORD OF THIS SHEET IS THE ELECTRONIC FILE DIGITALLY SIGNED AND SEALED UNDER RULE 61G15-23.004, F.A.C.

2/29/2024 4:35:04 PM JBLOUNT
c:\pw_working\lochner-pw-01\dms33830\Basins 800 900AB 1000.dgn

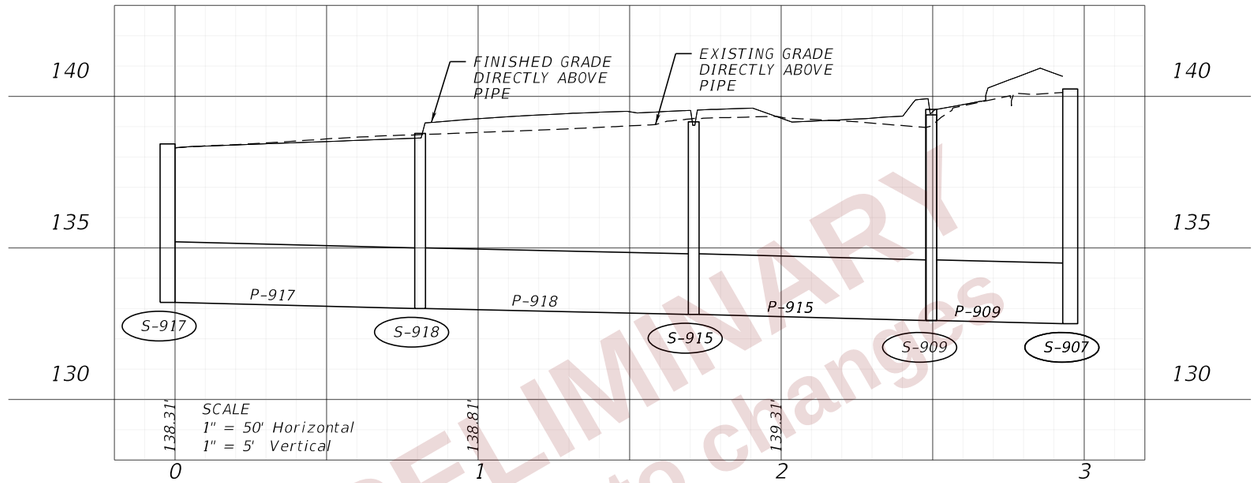

S-917 TO S-907

PRELIMINARY
subject to changes

REVISIONS				ENGINEER OF RECORD	STATE OF FLORIDA DEPARTMENT OF TRANSPORTATION			DRAINAGE PROFILES (25)	SHEET NO.
DATE	DESCRIPTION	DATE	DESCRIPTION	LISANDRO ZAPATA, P.E. LICENSE NUMBER 58822 H. W. LOCHNER 4300 W. CYPRESS STREET, SUITE 500 TAMPA, FLORIDA 33607	ROAD NO.	COUNTY	FINANCIAL PROJECT ID		233
					SR 400	POLK	430185-3-52-01		

THE OFFICIAL RECORD OF THIS SHEET IS THE ELECTRONIC FILE DIGITALLY SIGNED AND SEALED UNDER RULE 61G15-23.004, F.A.C.

2/29/2024 4:35:09 PM JBLOUNT
c:\pw_working\lochner-pw-01\dms33830\Basins 800 900AB 1000.dgn

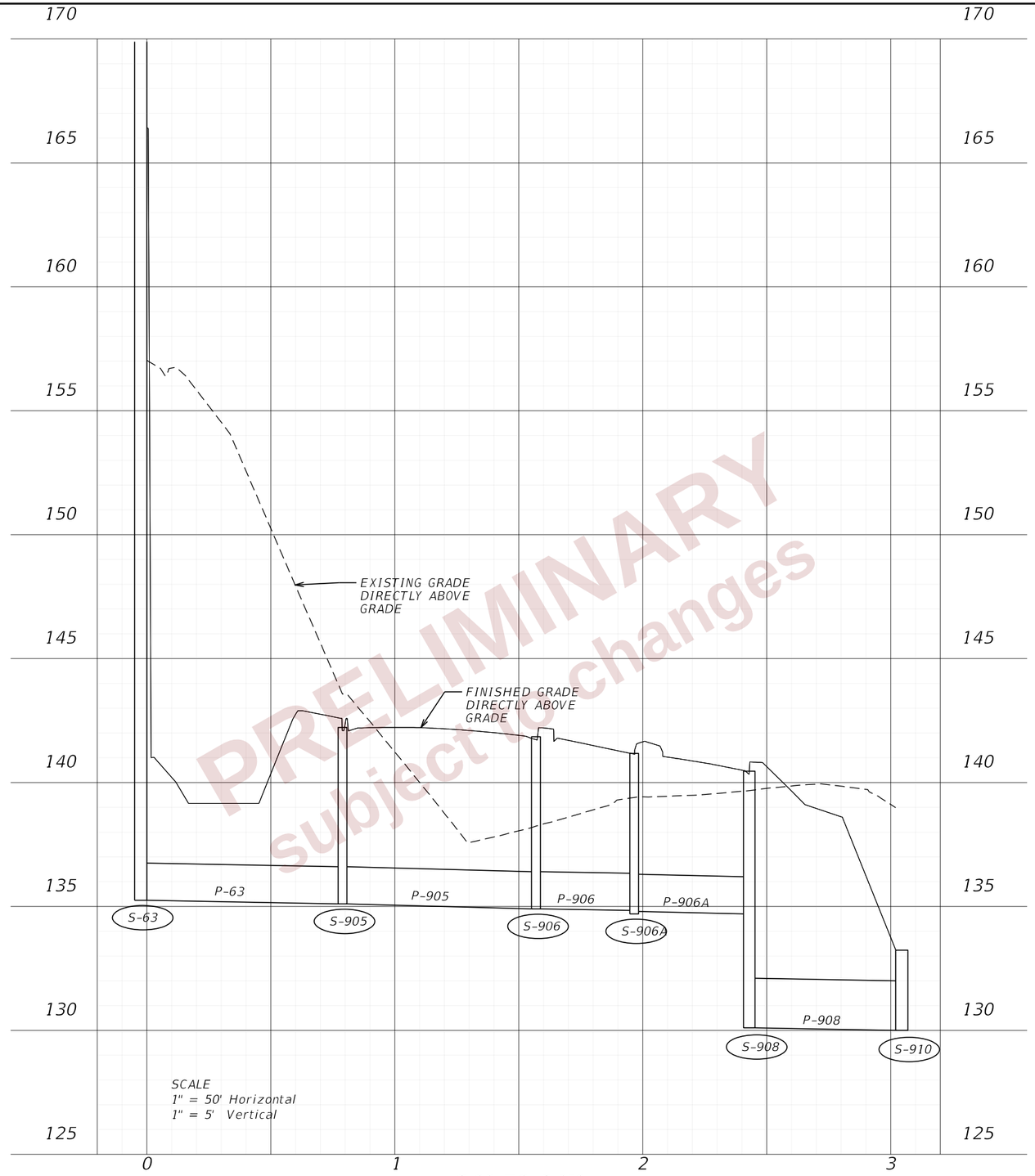

S-63 TO S-910

PRELIMINARY
subject to changes

REVISIONS				ENGINEER OF RECORD	STATE OF FLORIDA DEPARTMENT OF TRANSPORTATION			DRAINAGE PROFILE (26)	SHEET NO.
DATE	DESCRIPTION	DATE	DESCRIPTION	LISANDRO ZAPATA, P.E. LICENSE NUMBER 52822 H. W. LOCHNER 4300 W. CYPRESS STREET, SUITE 500 TAMPA, FLORIDA 33607	ROAD NO.	COUNTY	FINANCIAL PROJECT ID		234
					SR 400	POLK	430185-3-52-01		

THE OFFICIAL RECORD OF THIS SHEET IS THE ELECTRONIC FILE DIGITALLY SIGNED AND SEALED UNDER RULE 61G15-23.004, F.A.C.

2/29/2024 4:35:14 PM JBLOUNT
c:\pw_working\lochner-pw-01\dms33830\Basins 800 9004B 1000.dgn

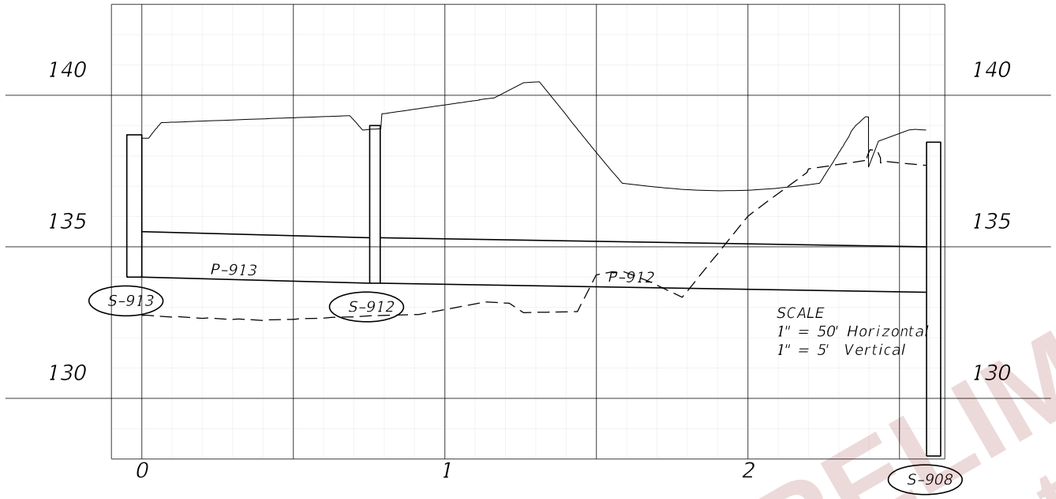

S-913 TO S-908

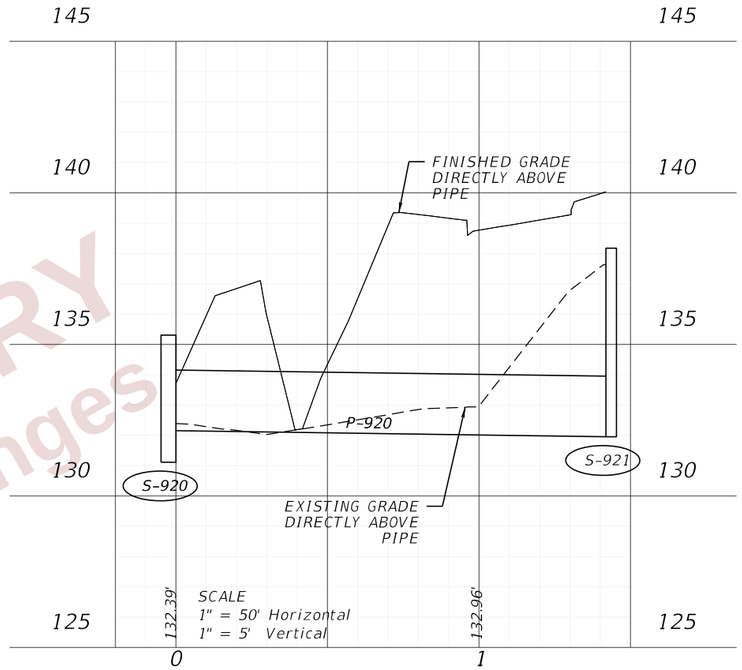

S-920 TO S-921

PRELIMINARY
subject to changes

REVISIONS				ENGINEER OF RECORD	STATE OF FLORIDA DEPARTMENT OF TRANSPORTATION			DRAINAGE PROFILES (27)	SHEET NO.
DATE	DESCRIPTION	DATE	DESCRIPTION	LISANDRO ZAPATA, P.E. LICENSE NUMBER 58822 H. W. LOCHNER 4300 W. CYPRESS STREET, SUITE 500 TAMPA, FLORIDA 33607	ROAD NO.	COUNTY	FINANCIAL PROJECT ID		235
					SR 400	POLK	430185-3-52-01		

THE OFFICIAL RECORD OF THIS SHEET IS THE ELECTRONIC FILE DIGITALLY SIGNED AND SEALED UNDER RULE 61G15-23.004, F.A.C.

2/29/2024 4:35:19 PM JBLOUNT
c:\pw_working\lochner-pw-01\dms33830\Basins 800 900AB 1000.dgn

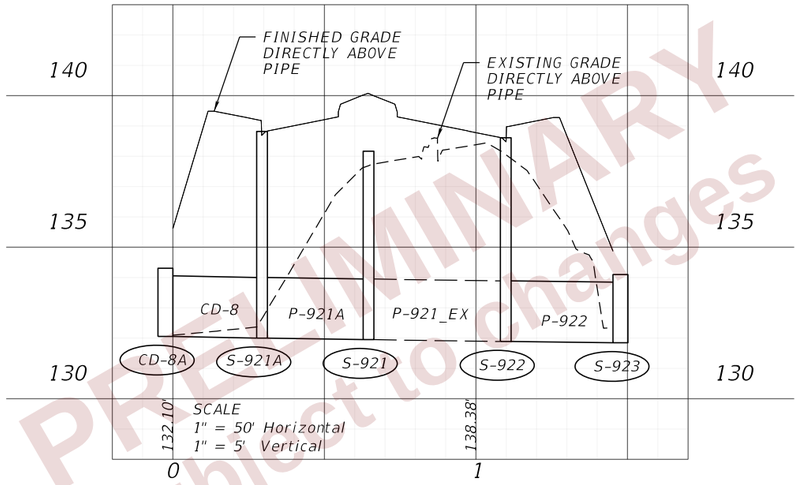

CD-8A TO S-923

PRELIMINARY
subject to changes

REVISIONS				ENGINEER OF RECORD	STATE OF FLORIDA DEPARTMENT OF TRANSPORTATION			DRAINAGE PROFILES (28)	SHEET NO.
DATE	DESCRIPTION	DATE	DESCRIPTION	LISANDRO ZAPATA, P.E. LICENSE NUMBER 58822 H. W. LOCHNER 4300 W. CYPRESS STREET, SUITE 500 TAMPA, FLORIDA 33607	ROAD NO.	COUNTY	FINANCIAL PROJECT ID		236
					SR 400	POLK	430185-3-52-01		

THE OFFICIAL RECORD OF THIS SHEET IS THE ELECTRONIC FILE DIGITALLY SIGNED AND SEALED UNDER RULE 61G15-23.004, F.A.C.

2/29/2024 4:35:24 PM JBLOUNT
c:\pw_working\lochner-pw-01\dms3830\Basins 800 900AB 1000.dgn

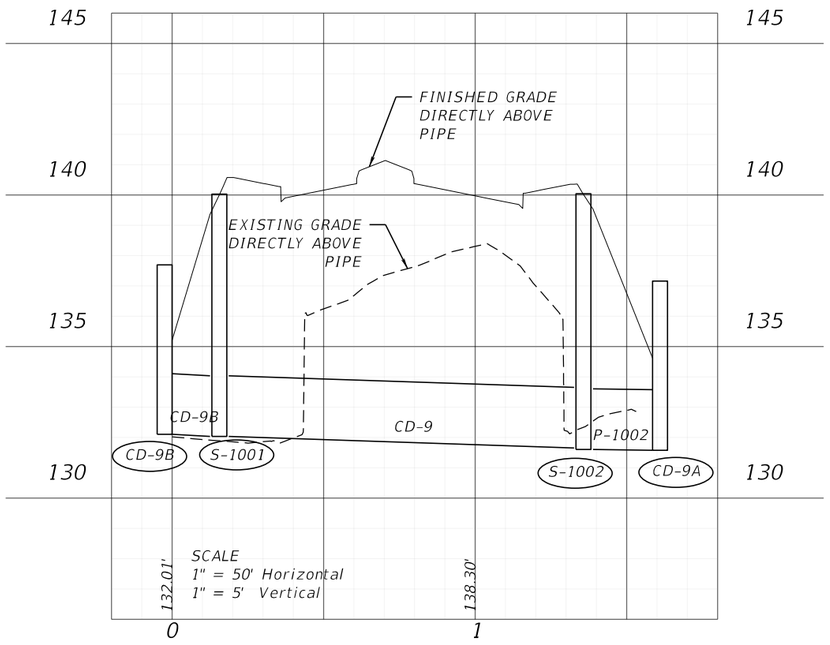

CD-9

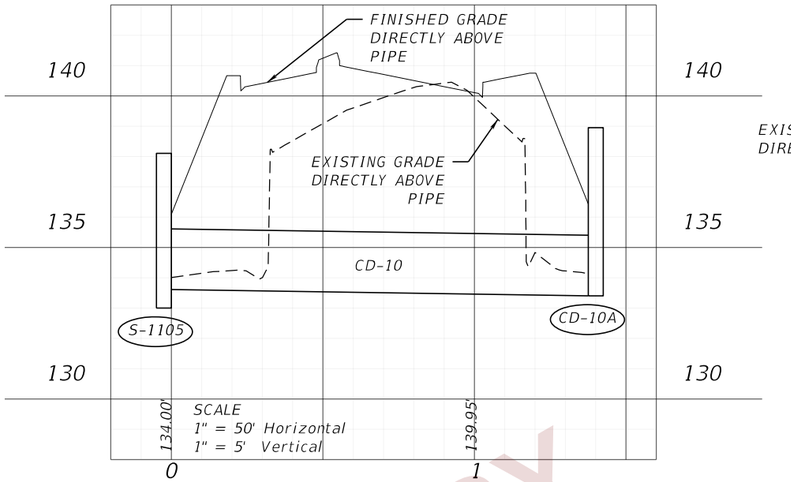

S-1105 TO CD-10A

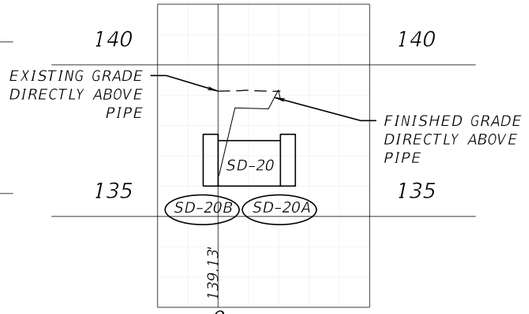

SD-20

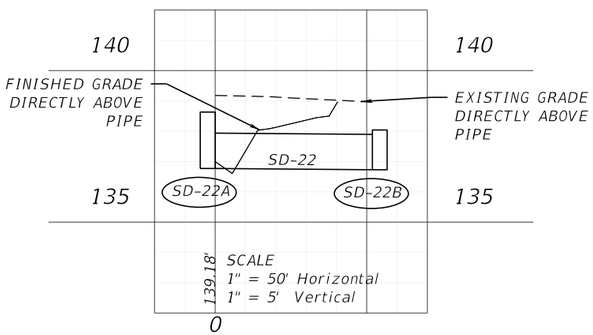

SD-22

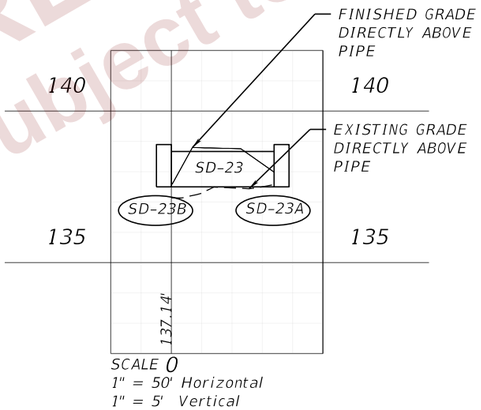

SD-23

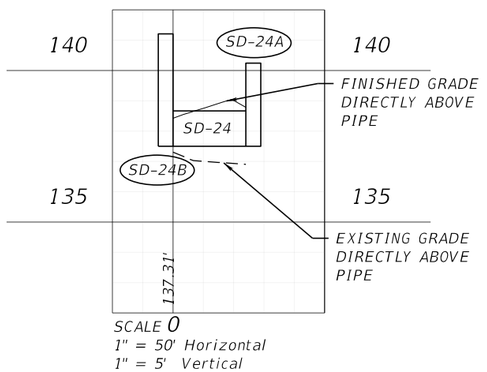

SD-24

PRELIMINARY subject to changes

THE OFFICIAL RECORD OF THIS SHEET IS THE ELECTRONIC FILE DIGITALLY SIGNED AND SEALED UNDER RULE 61G15-23.004, F.A.C.

2/29/2024 4:41:39 PM JBLOUNT
c:\pw_working\lochner-pw-01\dms33830\Basins 1000 1100.dgn

REVISIONS				ENGINEER OF RECORD	STATE OF FLORIDA DEPARTMENT OF TRANSPORTATION			DRAINAGE PROFILES (29)	SHEET NO.
DATE	DESCRIPTION	DATE	DESCRIPTION	LISANDRO ZAPATA, P.E. LICENSE NUMBER 58822 H. W. LOCHNER 4300 W. CYPRESS STREET, SUITE 500 TAMPA, FLORIDA 33607	ROAD NO.	COUNTY	FINANCIAL PROJECT ID		237
					SR 400	POLK	430185-3-52-01		

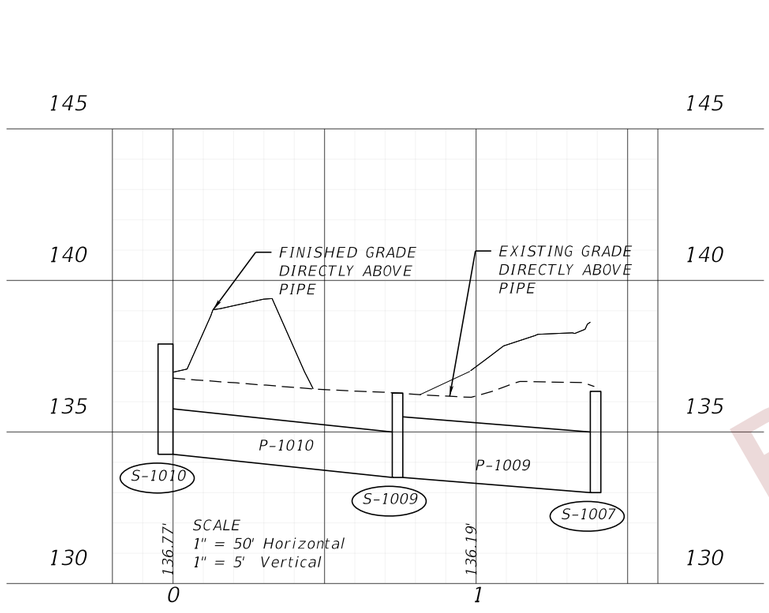

S-1010 TO S-1007

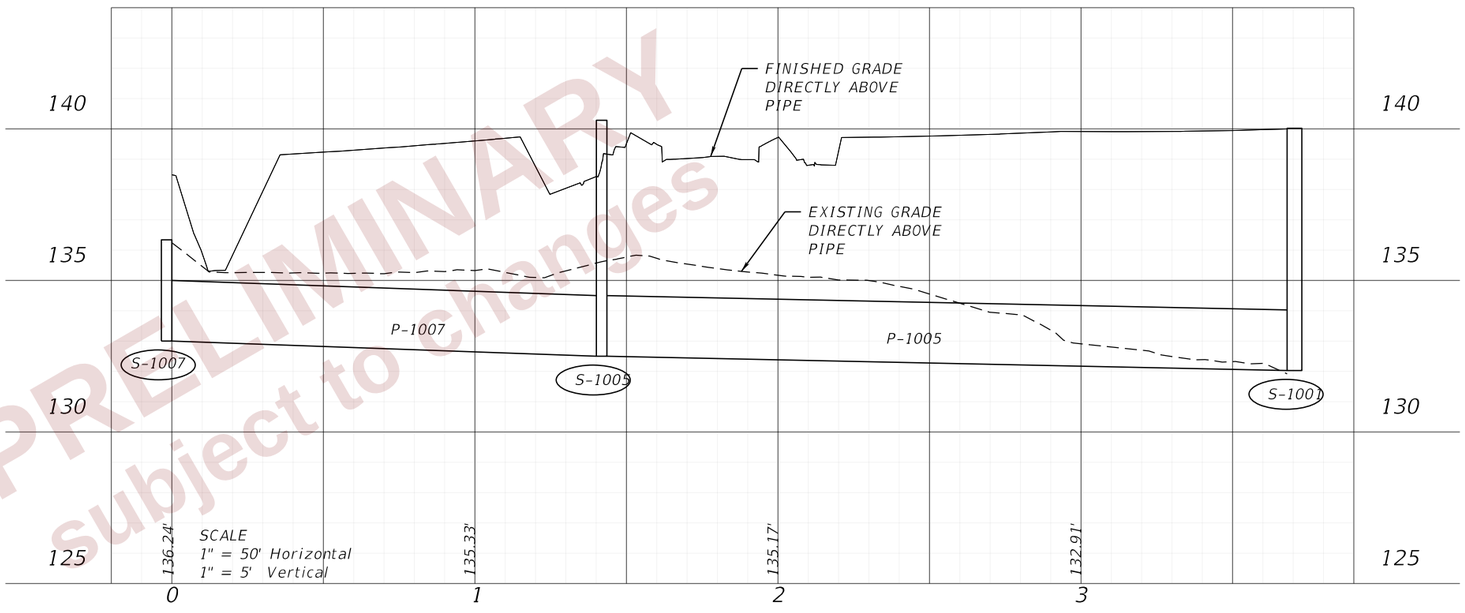

S-1007 TO S-1001

PRELIMINARY subject to changes

REVISIONS				ENGINEER OF RECORD	STATE OF FLORIDA DEPARTMENT OF TRANSPORTATION			DRAINAGE PROFILES (30)	SHEET NO.
DATE	DESCRIPTION	DATE	DESCRIPTION	LISANDRO ZAPATA, P.E. LICENSE NUMBER 58822 H. W. LOCHNER 4300 W. CYPRESS STREET, SUITE 500 TAMPA, FLORIDA 33607	ROAD NO.	COUNTY	FINANCIAL PROJECT ID		238
					SR 400	POLK	430185-3-52-01		

THE OFFICIAL RECORD OF THIS SHEET IS THE ELECTRONIC FILE DIGITALLY SIGNED AND SEALED UNDER RULE 61G15-23.004, F.A.C.

2/29/2024 4:41:45 PM JBLOUNT
c:\pw_working\lochner-pw-01\dms33830\Basins 1000 1100.dgn

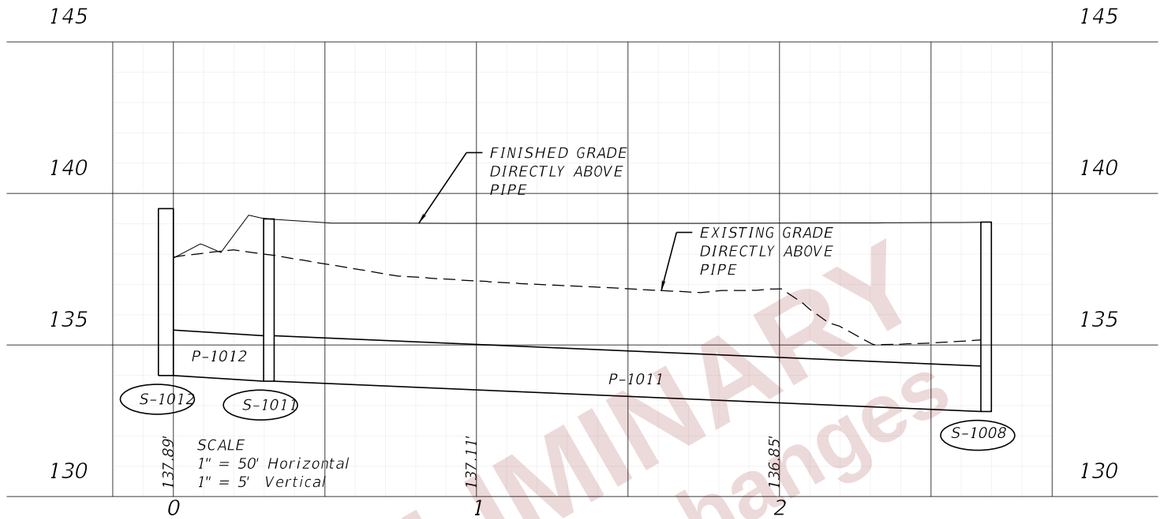

PRELIMINARY
subject to changes

S-1012 TO S-1008

THE OFFICIAL RECORD OF THIS SHEET IS THE ELECTRONIC FILE DIGITALLY SIGNED AND SEALED UNDER RULE 61G15-23.004, F.A.C.

REVISIONS				ENGINEER OF RECORD	STATE OF FLORIDA DEPARTMENT OF TRANSPORTATION			DRAINAGE PROFILES (31)	SHEET NO.
DATE	DESCRIPTION	DATE	DESCRIPTION	LISANDRO ZAPATA, P.E. LICENSE NUMBER 58822 H. W. LOCHNER 4300 W. CYPRESS STREET, SUITE 500 TAMPA, FLORIDA 33607	ROAD NO.	COUNTY	FINANCIAL PROJECT ID		239
					SR 400	POLK	430185-3-52-01		

2/29/2024 4:41:50 PM JBLOUNT
c:\pw_working\lochner-pw-01\dms33830\Basins 1000 1100.dgn

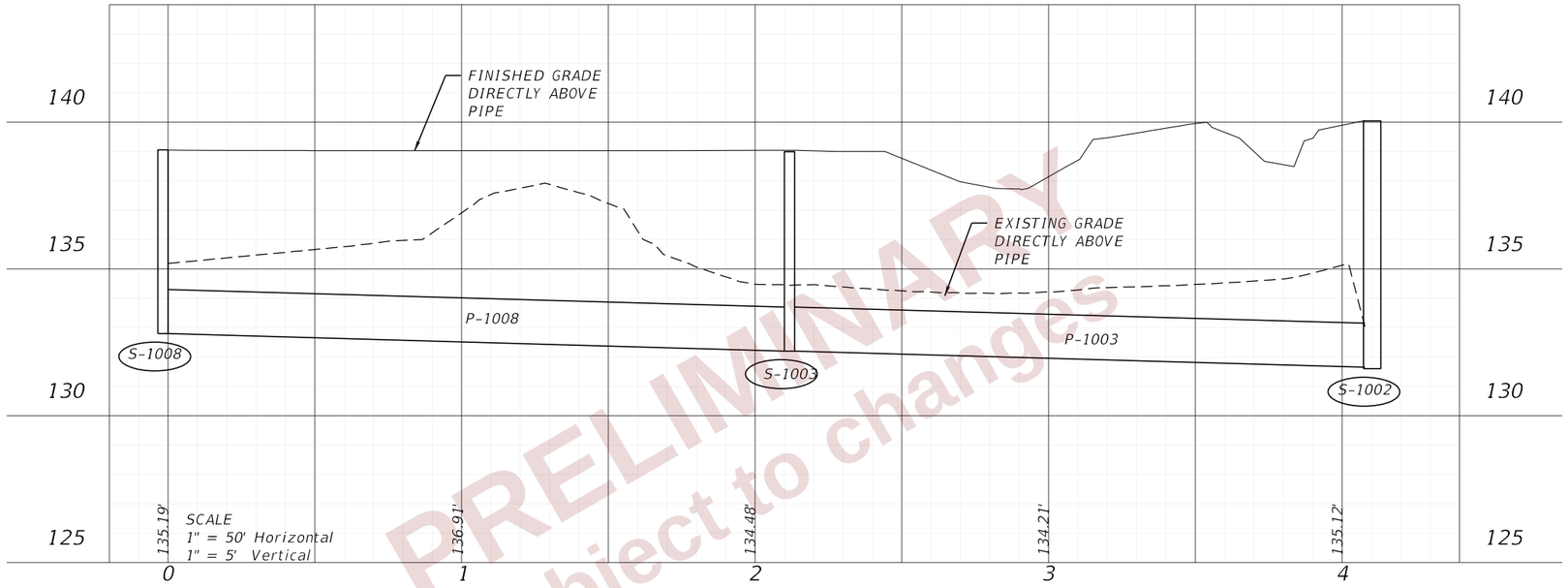

PRELIMINARY
subject to changes

S-1008 TO S-1002

THE OFFICIAL RECORD OF THIS SHEET IS THE ELECTRONIC FILE DIGITALLY SIGNED AND SEALED UNDER RULE 61G15-23.004, F.A.C.

REVISIONS				ENGINEER OF RECORD	STATE OF FLORIDA DEPARTMENT OF TRANSPORTATION				SHEET NO.
DATE	DESCRIPTION	DATE	DESCRIPTION	LISANDRO ZAPATA, P.E. LICENSE NUMBER 58822 H. W. LOCHNER 4300 W. CYPRESS STREET, SUITE 500 TAMPA, FLORIDA 33607	ROAD NO.	COUNTY	FINANCIAL PROJECT ID	DRAINAGE PROFILES (32)	240
					SR 400	POLK	430185-3-52-01		

2/29/2024 4:41:56 PM JBLOUNT
c:\pw_working\lochner-pw-01\dms33830\Basins 1000 1100.dgn

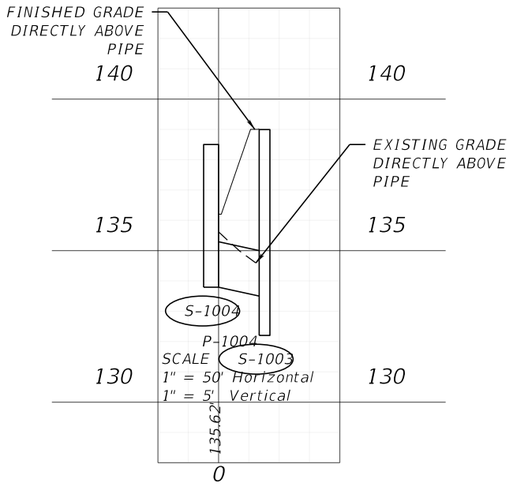

S-1004 TO S-1003

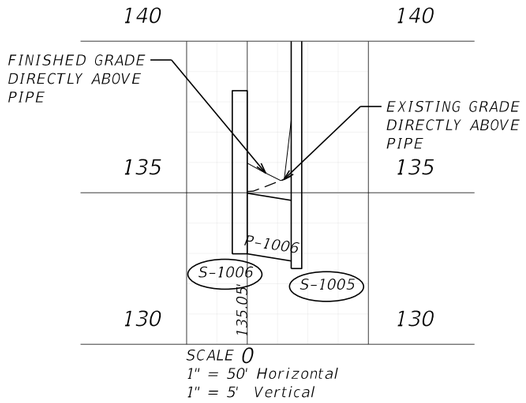

S-1006 TO S-1005

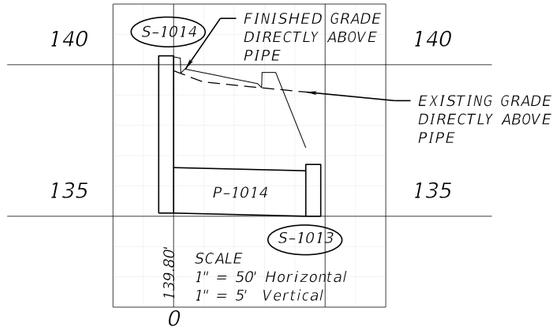

S-1014 TO S-1013

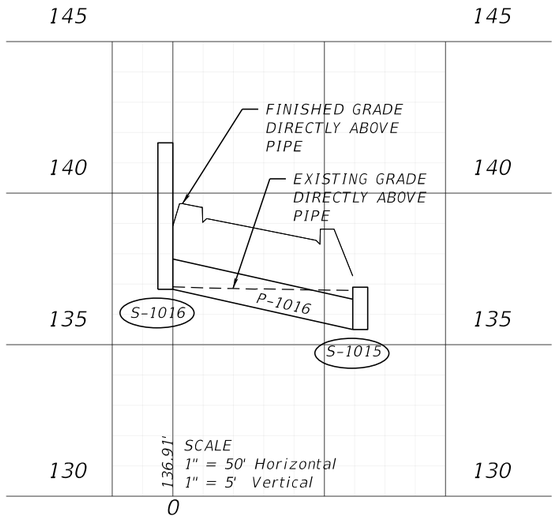

S-1016 TO S-1015

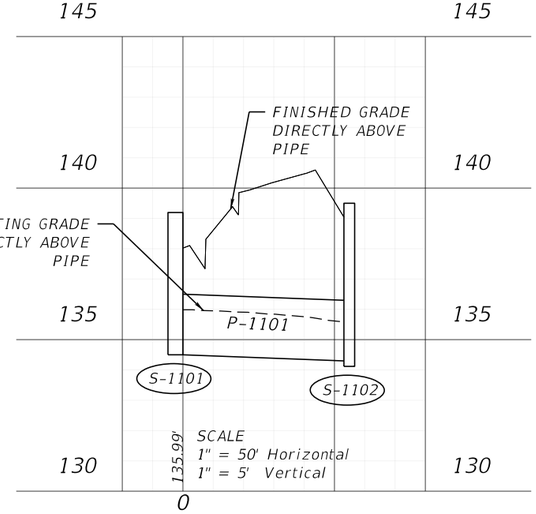

S-1101 TO S-1102

PRELIMINARY
subject to changes

THE OFFICIAL RECORD OF THIS SHEET IS THE ELECTRONIC FILE DIGITALLY SIGNED AND SEALED UNDER RULE 61G15-23.004, F.A.C.

2/29/2024 4:42:01 PM JBLOUNT
c:\pw_working\lochner-pw-01\dms33830\Basins 1000 1100.dgn

REVISIONS				ENGINEER OF RECORD	STATE OF FLORIDA DEPARTMENT OF TRANSPORTATION			DRAINAGE PROFILES (33)	SHEET NO.
DATE	DESCRIPTION	DATE	DESCRIPTION	LISANDRO ZAPATA, P.E. LICENSE NUMBER 58822 H. W. LOCHNER 4300 W. CYPRESS STREET, SUITE 500 TAMPA, FLORIDA 33607	ROAD NO.	COUNTY	FINANCIAL PROJECT ID		241
					SR 400	POLK	430185-3-52-01		

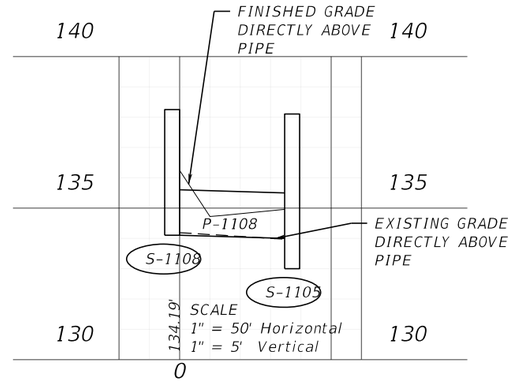

S-1108 TO S-1105

PRELIMINARY
subject to changes

THE OFFICIAL RECORD OF THIS SHEET IS THE ELECTRONIC FILE DIGITALLY SIGNED AND SEALED UNDER RULE 61G15-23.004, F.A.C.

2/29/2024 4:42:06 PM JBLOUNT
c:\pw_working\lochner-pw-01\dms33830\Basins 1000 1100.dgn

REVISIONS			
DATE	DESCRIPTION	DATE	DESCRIPTION

ENGINEER OF RECORD
LISANDRO ZAPATA, P.E.
LICENSE NUMBER 58822
H. W. LOCHNER
4300 W. CYPRESS STREET, SUITE 500
TAMPA, FLORIDA 33607

STATE OF FLORIDA
DEPARTMENT OF TRANSPORTATION

ROAD NO.	COUNTY	FINANCIAL PROJECT ID
SR 400	POLK	430185-3-52-01

DRAINAGE PROFILES (34)

SHEET NO. 242

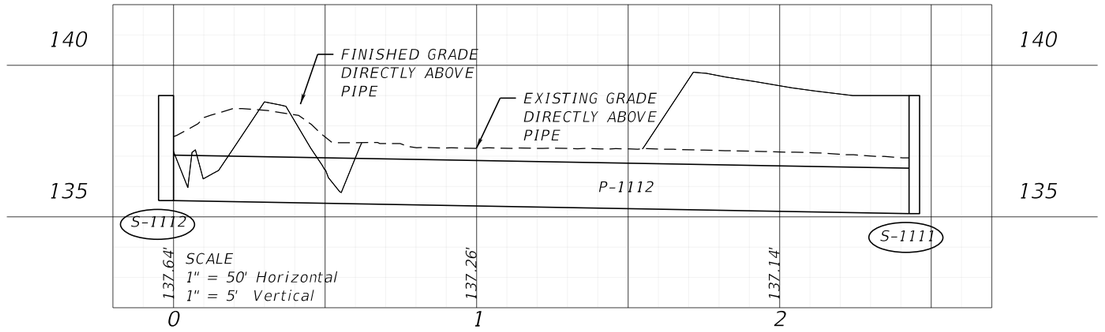

S-1112 TO S-1111

S-1111 TO S-1110

PRELIMINARY
subject to changes

REVISIONS				ENGINEER OF RECORD	STATE OF FLORIDA DEPARTMENT OF TRANSPORTATION			DRAINAGE PROFILES (35)	SHEET NO.
DATE	DESCRIPTION	DATE	DESCRIPTION	LISANDRO ZAPATA, P.E. LICENSE NUMBER 58822 H. W. LOCHNER 4300 W. CYPRESS STREET, SUITE 500 TAMPA, FLORIDA 33607	ROAD NO.	COUNTY	FINANCIAL PROJECT ID		243
					SR 400	POLK	430185-3-52-01		

THE OFFICIAL RECORD OF THIS SHEET IS THE ELECTRONIC FILE DIGITALLY SIGNED AND SEALED UNDER RULE 61G15-23.004, F.A.C.

2/29/2024 4:42:11 PM JBLOUNT
c:\pw_working\lochner-pw-01\dms33830\Basins 1000 1100.dgn

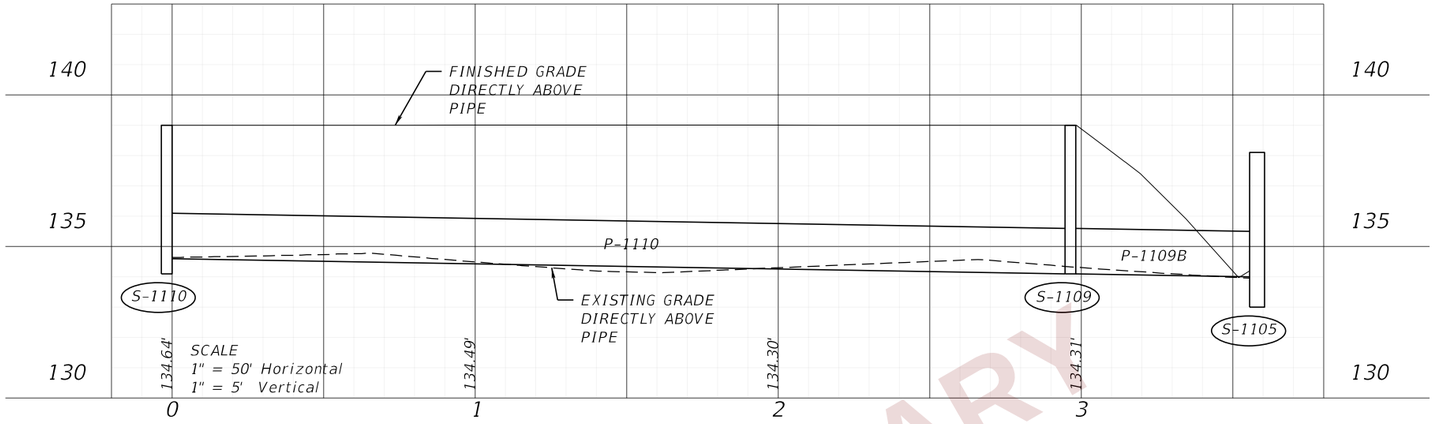

S-1110 TO S-1105

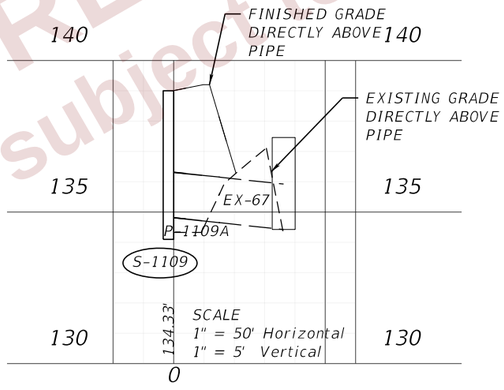

S-1109 TO EX-67

PRELIMINARY
subject to changes

REVISIONS				ENGINEER OF RECORD	STATE OF FLORIDA DEPARTMENT OF TRANSPORTATION			DRAINAGE PROFILES (36)	SHEET NO.
DATE	DESCRIPTION	DATE	DESCRIPTION	LISANDRO ZAPATA, P.E. LICENSE NUMBER 58822 H. W. LOCHNER 4300 W. CYPRESS STREET, SUITE 500 TAMPA, FLORIDA 33607	ROAD NO.	COUNTY	FINANCIAL PROJECT ID		244
					SR 400	POLK	430185-3-52-01		

THE OFFICIAL RECORD OF THIS SHEET IS THE ELECTRONIC FILE DIGITALLY SIGNED AND SEALED UNDER RULE 61G15-23.004, F.A.C.

2/29/2024 4:42:16 PM JBLOUNT
c:\pw_working\lochner-pw-01\dms33830\Basins 1000 1100.dgn

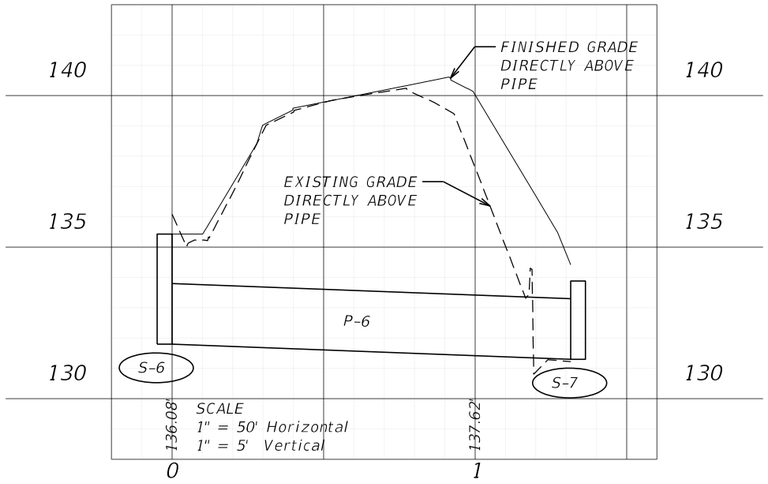

S-6 TO S-7

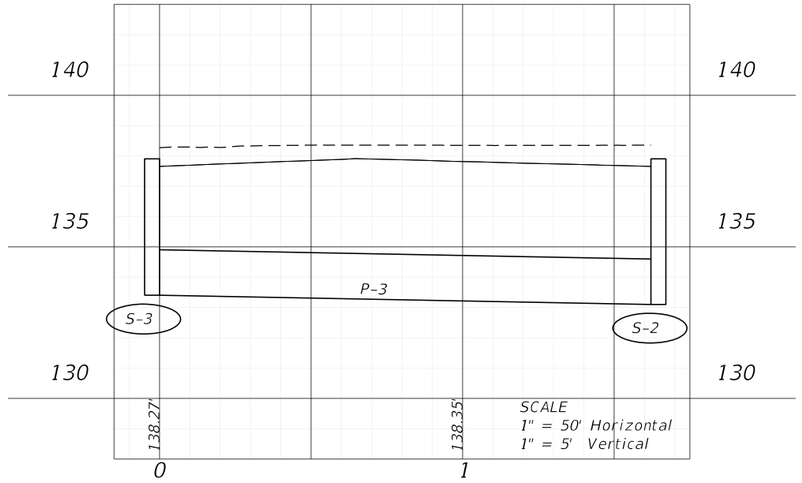

S-3 TO S-2

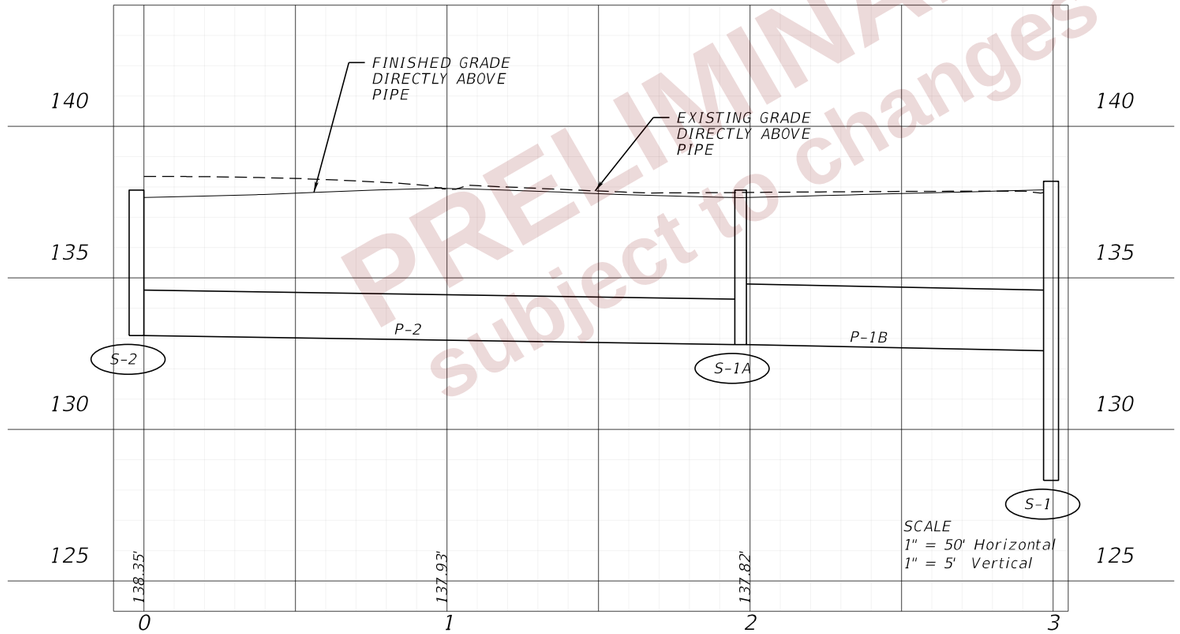

S-2 TO S-1

PRELIMINARY
subject to changes

REVISIONS				ENGINEER OF RECORD	STATE OF FLORIDA DEPARTMENT OF TRANSPORTATION			DRAINAGE PROFILES (37)	SHEET NO.
DATE	DESCRIPTION	DATE	DESCRIPTION	LISANDRO ZAPATA, P.E. LICENSE NUMBER 58822 H. W. LOCHNER 4300 W. CYPRESS STREET, SUITE 500 TAMPA, FLORIDA 33607	ROAD NO.	COUNTY	FINANCIAL PROJECT ID		245
					SR 400	POLK	430185-3-52-01		

THE OFFICIAL RECORD OF THIS SHEET IS THE ELECTRONIC FILE DIGITALLY SIGNED AND SEALED UNDER RULE 61G15-23.004, F.A.C.

2/29/2024 4:50:57 PM JBLOUNT
c:\pw_working\lochner-pw-01\dms3380\Basins 1200 1300.dgn

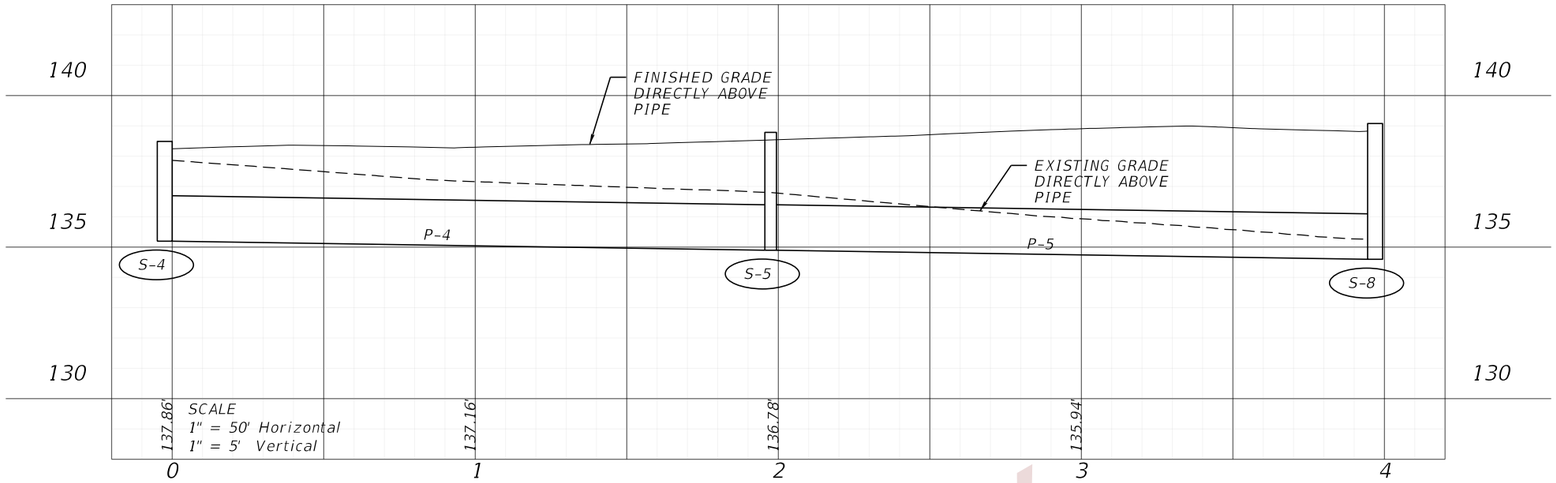

S-4 TO S-8

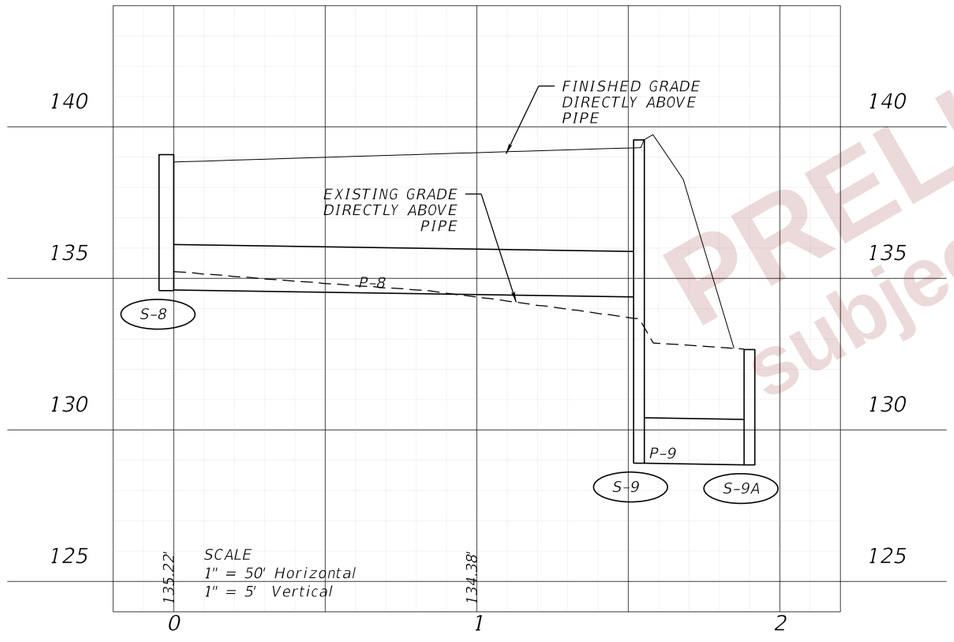

S-8 TO S-9A

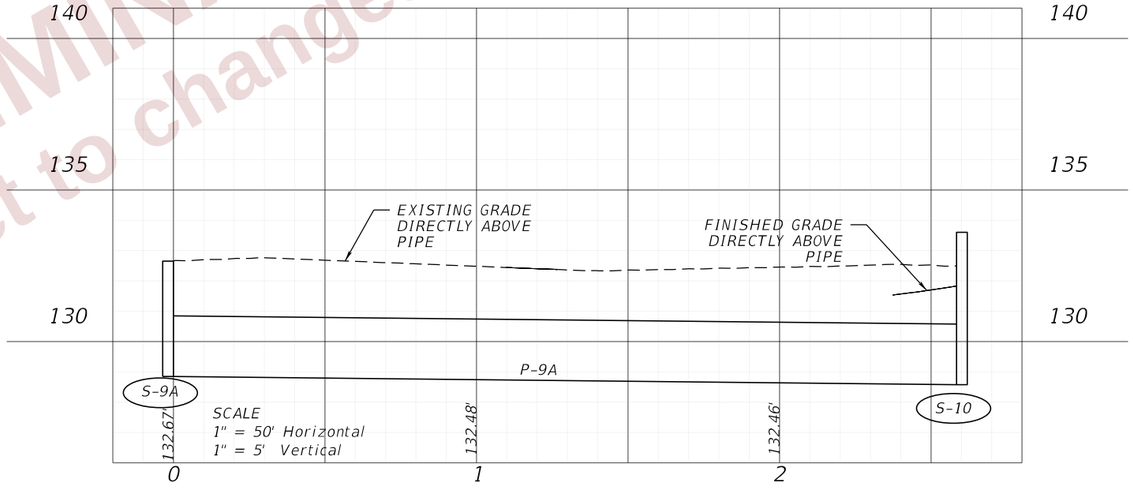

S-9A TO S-10

PRELIMINARY
subject to changes

THE OFFICIAL RECORD OF THIS SHEET IS THE ELECTRONIC FILE DIGITALLY SIGNED AND SEALED UNDER RULE 61G15-23.004, F.A.C.

2/29/2024 4:51:03 PM JBLOUNT
c:\pw_working\lochner-pw-01\dms3383\Basins 1200 1300.dgn

REVISIONS			
DATE	DESCRIPTION	DATE	DESCRIPTION

ENGINEER OF RECORD
LISANDRO ZAPATA, P.E.
LICENSE NUMBER 58822
H. W. LOCHNER
4300 W. CYPRESS STREET, SUITE 500
TAMPA, FLORIDA 33607

STATE OF FLORIDA
DEPARTMENT OF TRANSPORTATION

ROAD NO.	COUNTY	FINANCIAL PROJECT ID
SR 400	POLK	430185-3-52-01

DRAINAGE PROFILES (38)

SHEET NO. 246

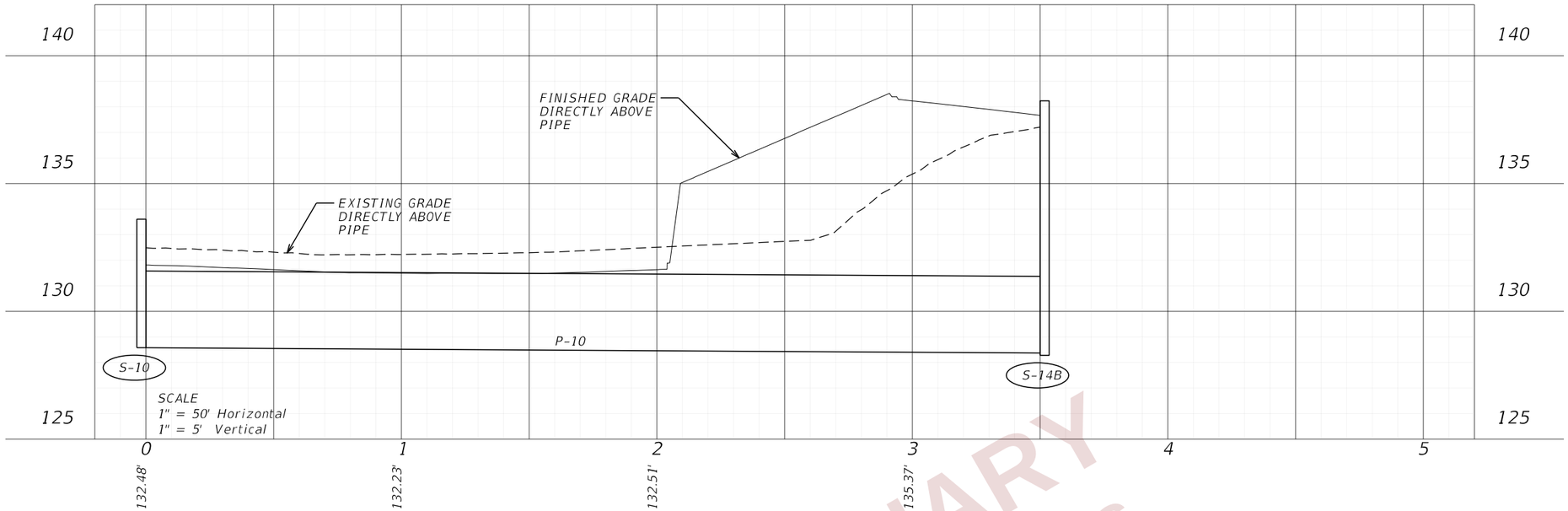

S-10 TO S-14B

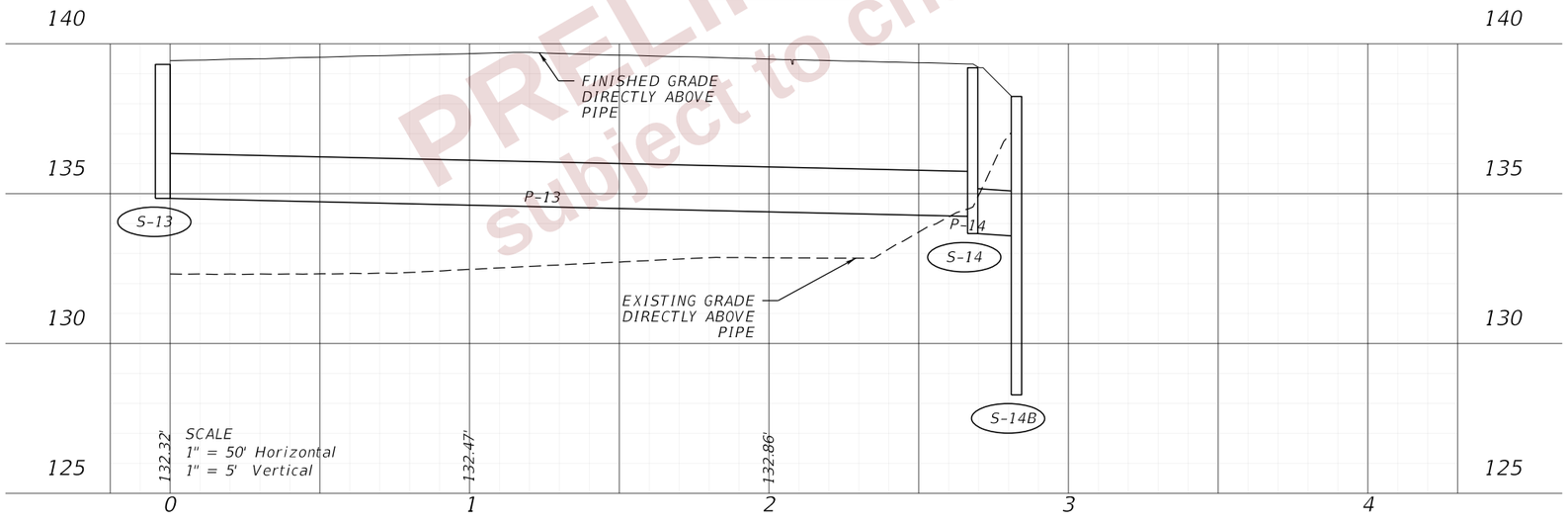

S-13 TO S-14B

PRELIMINARY
subject to changes

REVISIONS				ENGINEER OF RECORD	STATE OF FLORIDA DEPARTMENT OF TRANSPORTATION			DRAINAGE PROFILES (39)	SHEET NO.
DATE	DESCRIPTION	DATE	DESCRIPTION	LISANDRO ZAPATA, P.E. LICENSE NUMBER 58822 H. W. LOCHNER 4300 W. CYPRESS STREET, SUITE 500 TAMPA, FLORIDA 33607	ROAD NO.	COUNTY	FINANCIAL PROJECT ID		247
					SR 400	POLK	430185-3-52-01		

THE OFFICIAL RECORD OF THIS SHEET IS THE ELECTRONIC FILE DIGITALLY SIGNED AND SEALED UNDER RULE 61G15-23.004, F.A.C.

2/29/2024 4:51:09 PM JBLOUNT
c:\pw_working\lochner-pw-01\dms3383\Basins 1200 1300.dgn

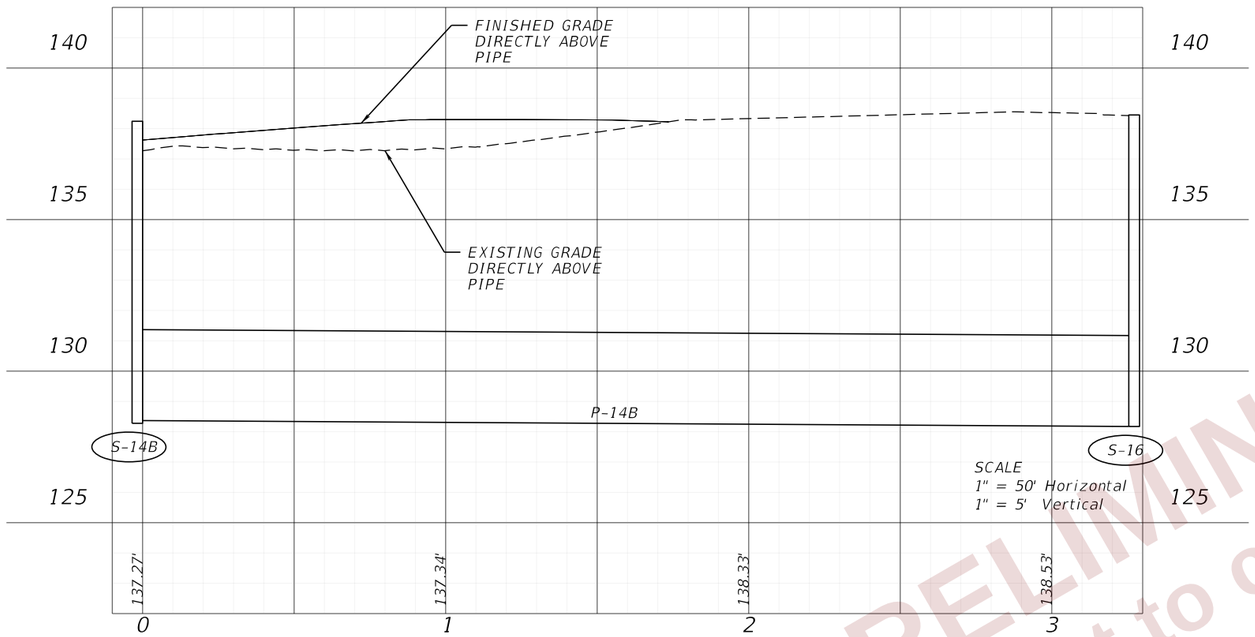

S-14B TO S-16

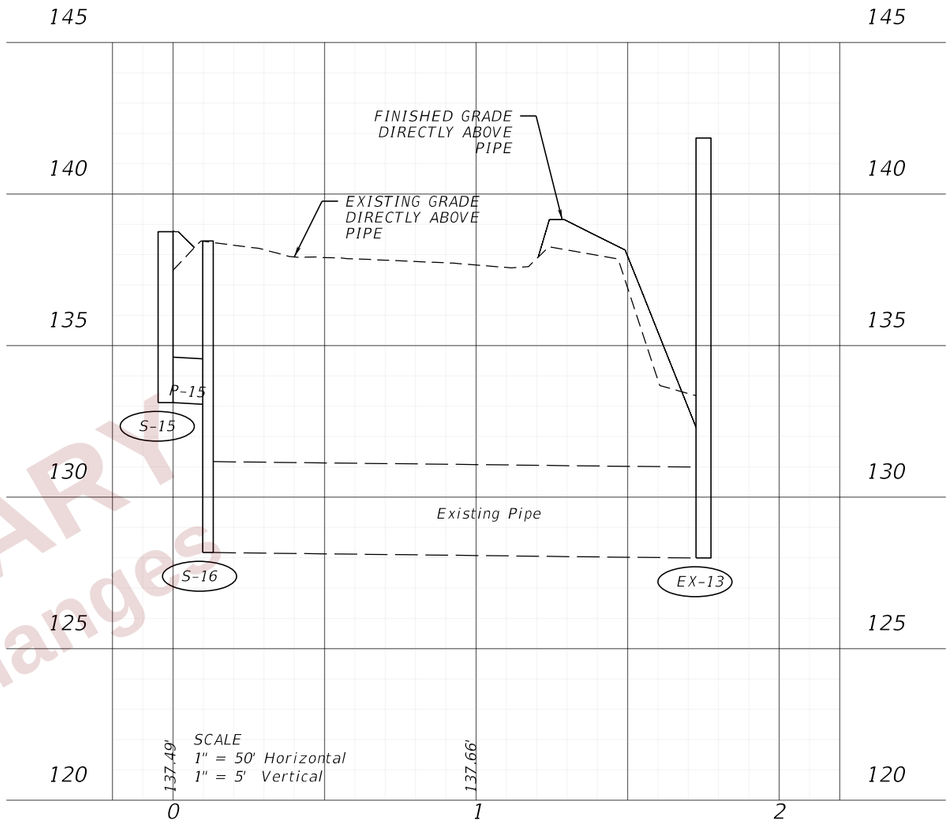

S-15 TO EX-13

PRELIMINARY
subject to changes

REVISIONS				ENGINEER OF RECORD	STATE OF FLORIDA DEPARTMENT OF TRANSPORTATION			DRAINAGE PROFILES (40)	SHEET NO.
DATE	DESCRIPTION	DATE	DESCRIPTION	LISANDRO ZAPATA, P.E. LICENSE NUMBER 58822 H. W. LOCHNER 4300 W. CYPRESS STREET, SUITE 500 TAMPA, FLORIDA 33607	ROAD NO.	COUNTY	FINANCIAL PROJECT ID		248
					SR 400	POLK	430185-3-52-01		

THE OFFICIAL RECORD OF THIS SHEET IS THE ELECTRONIC FILE DIGITALLY SIGNED AND SEALED UNDER RULE 61G15-23.004, F.A.C.

2/29/2024 4:51:15 PM JBLOUNT
c:\pw_working\lochner-pw-01\dms33830\Basins 1200 1300.dgn

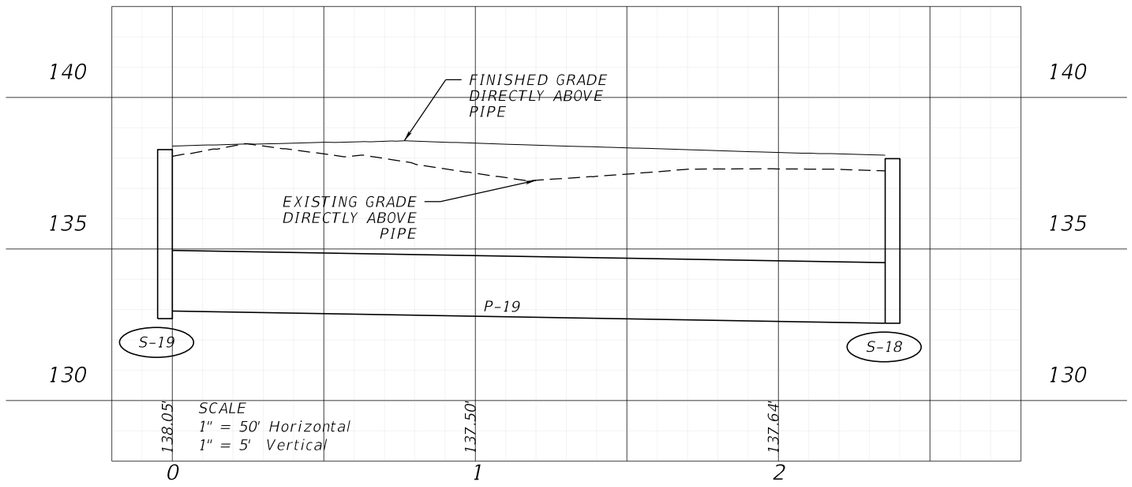

S-19 TO S-18

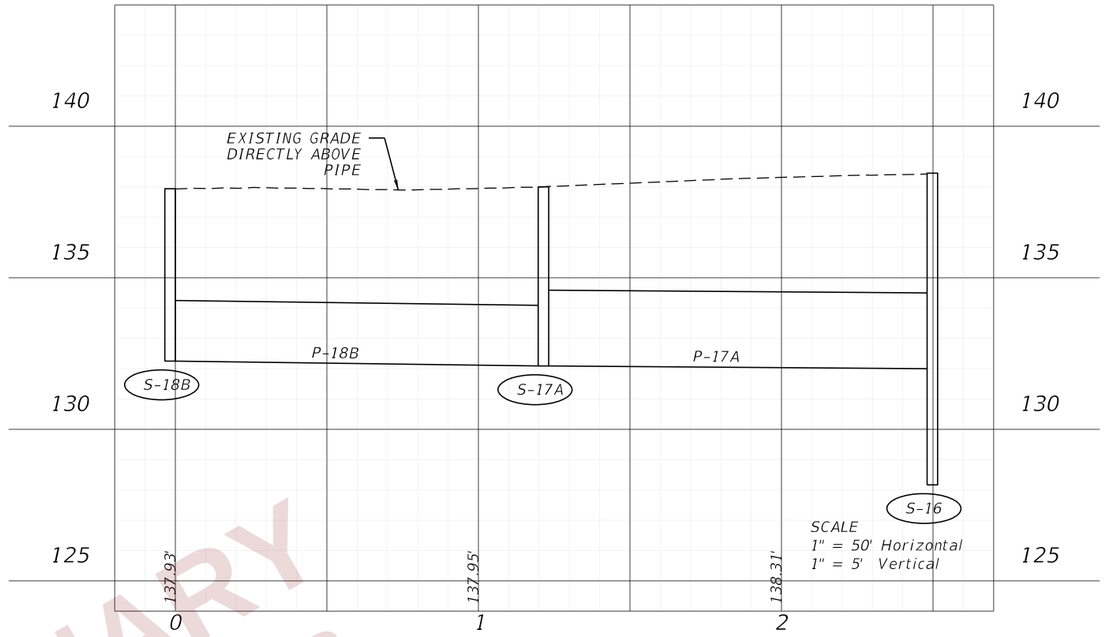

S-18B TO S-16

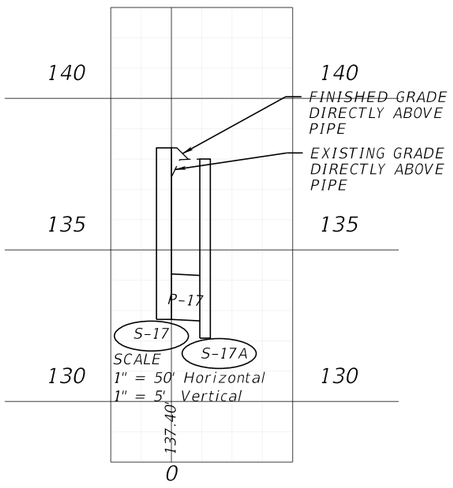

S-17 TO S-17A

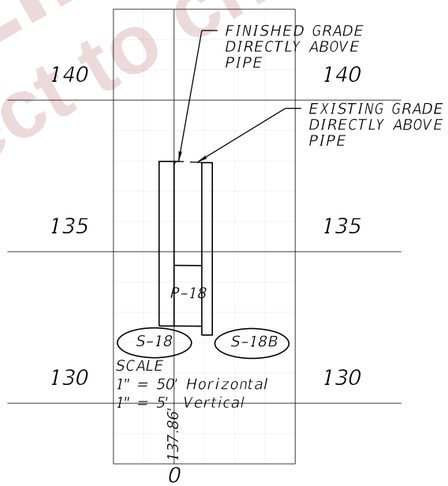

S-18 TO S-18B

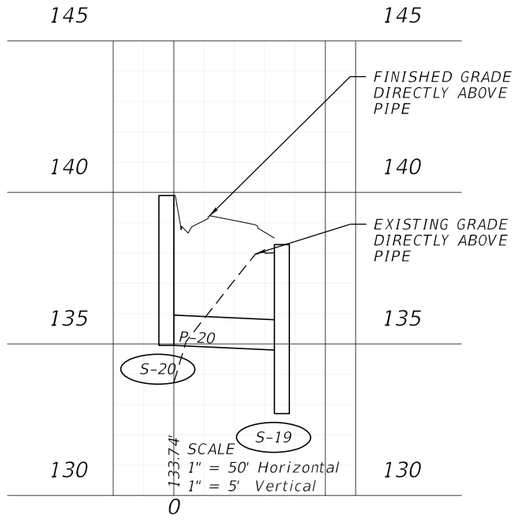

S-20 TO S-19

PRELIMINARY
subject to changes

REVISIONS				ENGINEER OF RECORD	STATE OF FLORIDA DEPARTMENT OF TRANSPORTATION			DRAINAGE PROFILES (41)	SHEET NO.
DATE	DESCRIPTION	DATE	DESCRIPTION	LISANDRO ZAPATA, P.E. LICENSE NUMBER 58822 H. W. LOCHNER 4300 W. CYPRESS STREET, SUITE 500 TAMPA, FLORIDA 33607	ROAD NO.	COUNTY	FINANCIAL PROJECT ID		249
					SR 400	POLK	430185-3-52-01		

THE OFFICIAL RECORD OF THIS SHEET IS THE ELECTRONIC FILE DIGITALLY SIGNED AND SEALED UNDER RULE 61G15-23.004, F.A.C.

2/29/2024 4:51:22 PM JBLOUNT
c:\pw_working\lochner-pw-01\dms33830\Basins 1200 1300.dgn

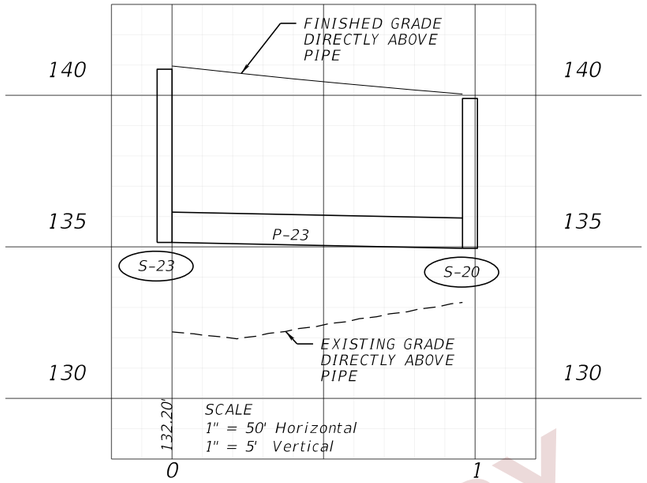

S-23 TO S-20

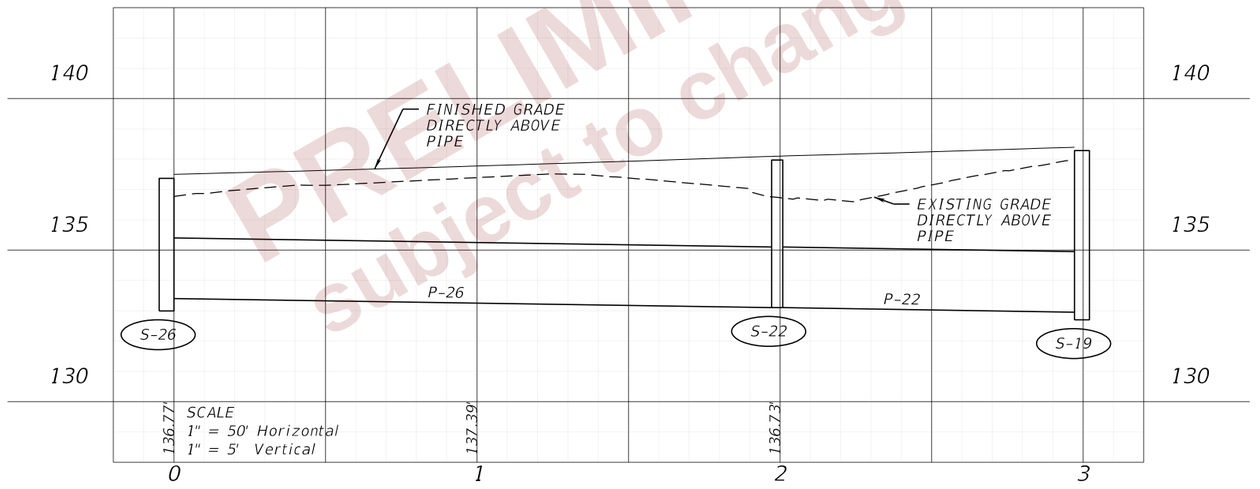

S-26 TO S-19

PRELIMINARY
subject to changes

REVISIONS				ENGINEER OF RECORD	STATE OF FLORIDA DEPARTMENT OF TRANSPORTATION			DRAINAGE PROFILES (42)	SHEET NO.
DATE	DESCRIPTION	DATE	DESCRIPTION	LISANDRO ZAPATA, P.E. LICENSE NUMBER 58822 H. W. LOCHNER 4300 W. CYPRESS STREET, SUITE 500 TAMPA, FLORIDA 33607	ROAD NO.	COUNTY	FINANCIAL PROJECT ID		250
					SR 400	POLK	430185-3-52-01		

THE OFFICIAL RECORD OF THIS SHEET IS THE ELECTRONIC FILE DIGITALLY SIGNED AND SEALED UNDER RULE 61G15-23.004, F.A.C.

2/29/2024 4:51:28 PM JBLOUNT
c:\pw_working\lochner-pw-01\dms33830\Basins 1200 1300.dgn

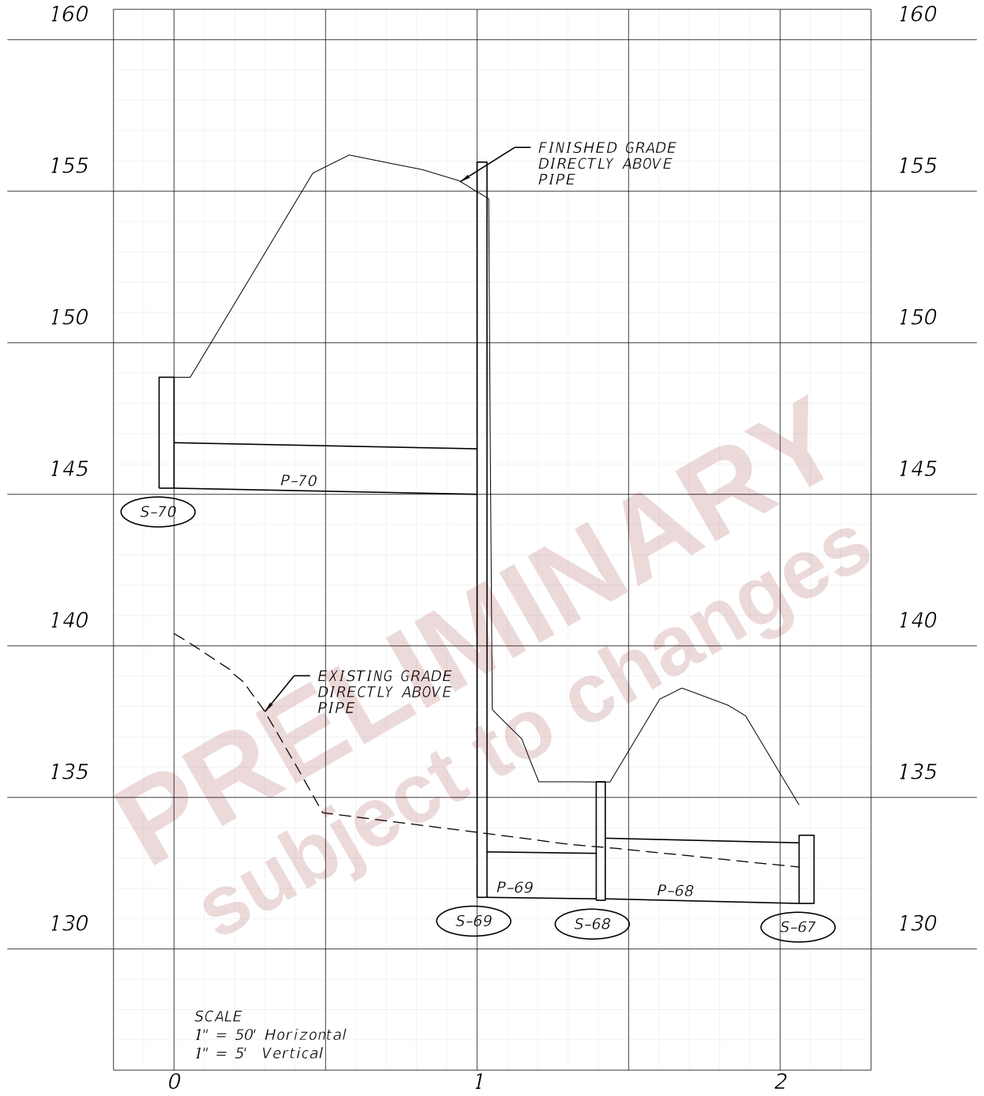

PRELIMINARY
subject to changes

S-70 TO S-67

REVISIONS				ENGINEER OF RECORD	STATE OF FLORIDA DEPARTMENT OF TRANSPORTATION			DRAINAGE PROFILES (43)	SHEET NO.
DATE	DESCRIPTION	DATE	DESCRIPTION	LISANDRO ZAPATA, P.E. LICENSE NUMBER 58822 H. W. LOCHNER 4300 W. CYPRESS STREET, SUITE 500 TAMPA, FLORIDA 33607	ROAD NO.	COUNTY	FINANCIAL PROJECT ID		251
					SR 400	POLK	430185-3-52-01		

THE OFFICIAL RECORD OF THIS SHEET IS THE ELECTRONIC FILE DIGITALLY SIGNED AND SEALED UNDER RULE 61G15-23.004, F.A.C.

2/29/2024 5:00:09 PM JBLOUNT
c:\pw_working\lochner-pw-01\dms33830\Basins 1500 1600.dgn

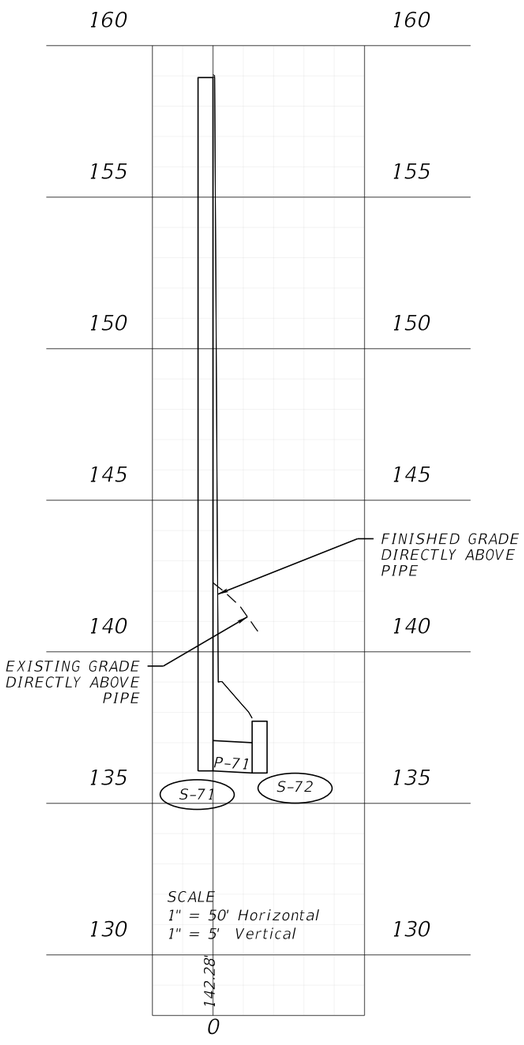

S-71 TO S-72

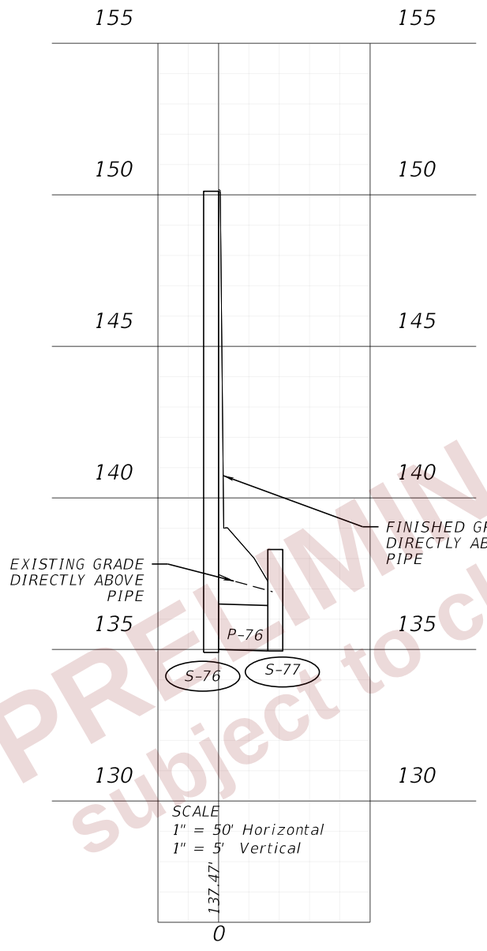

S-76 TO S-77

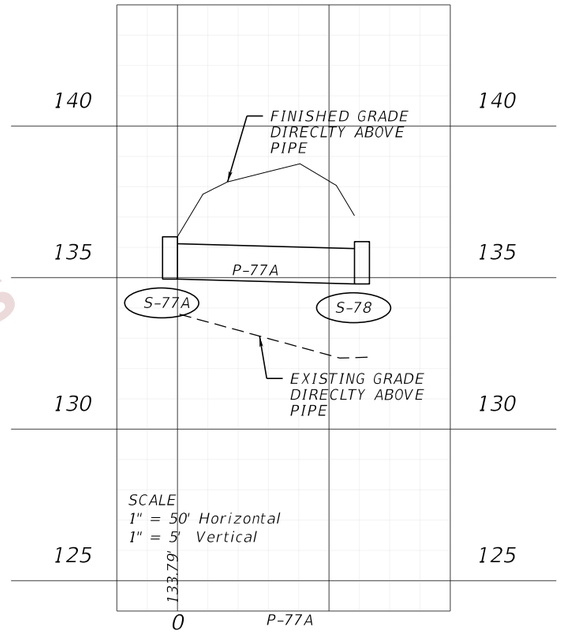

S-77A TO S-78

PRELIMINARY
subject to changes

THE OFFICIAL RECORD OF THIS SHEET IS THE ELECTRONIC FILE DIGITALLY SIGNED AND SEALED UNDER RULE 61G15-23.004, F.A.C.

2/29/2024 5:00:17 PM JBLOUNT
c:\pw_working\lochner-pw-01\dms33830\Basins 1500 1600.dgn

REVISIONS				ENGINEER OF RECORD	STATE OF FLORIDA DEPARTMENT OF TRANSPORTATION			DRAINAGE PROFILES (44)	SHEET NO.
DATE	DESCRIPTION	DATE	DESCRIPTION	LISANDRO ZAPATA, P.E. LICENSE NUMBER 58822 H. W. LOCHNER 4300 W. CYPRESS STREET, SUITE 500 TAMPA, FLORIDA 33607	ROAD NO.	COUNTY	FINANCIAL PROJECT ID		252
					SR 400	POLK	430185-3-52-01		

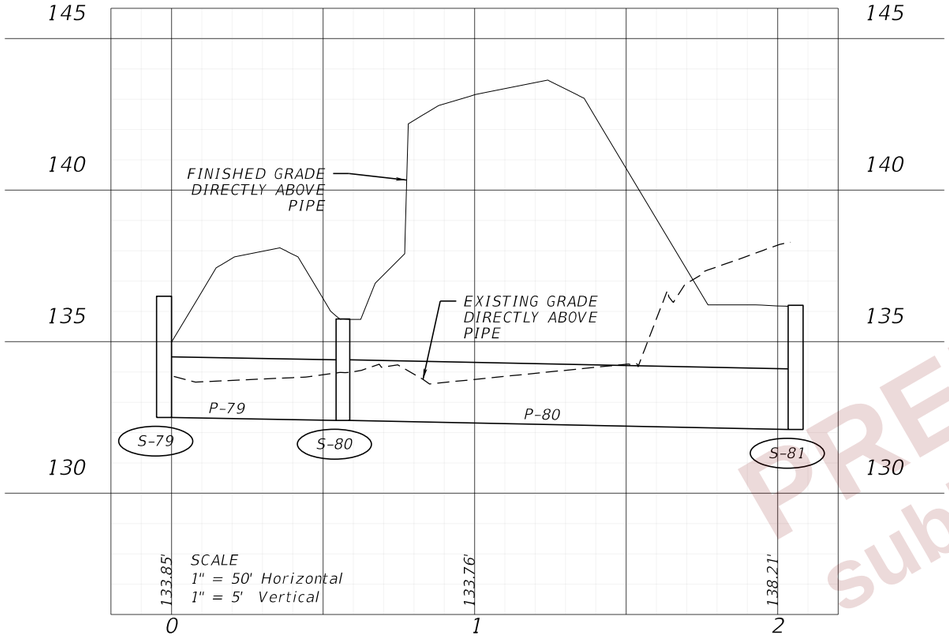

S-79 TO S-81

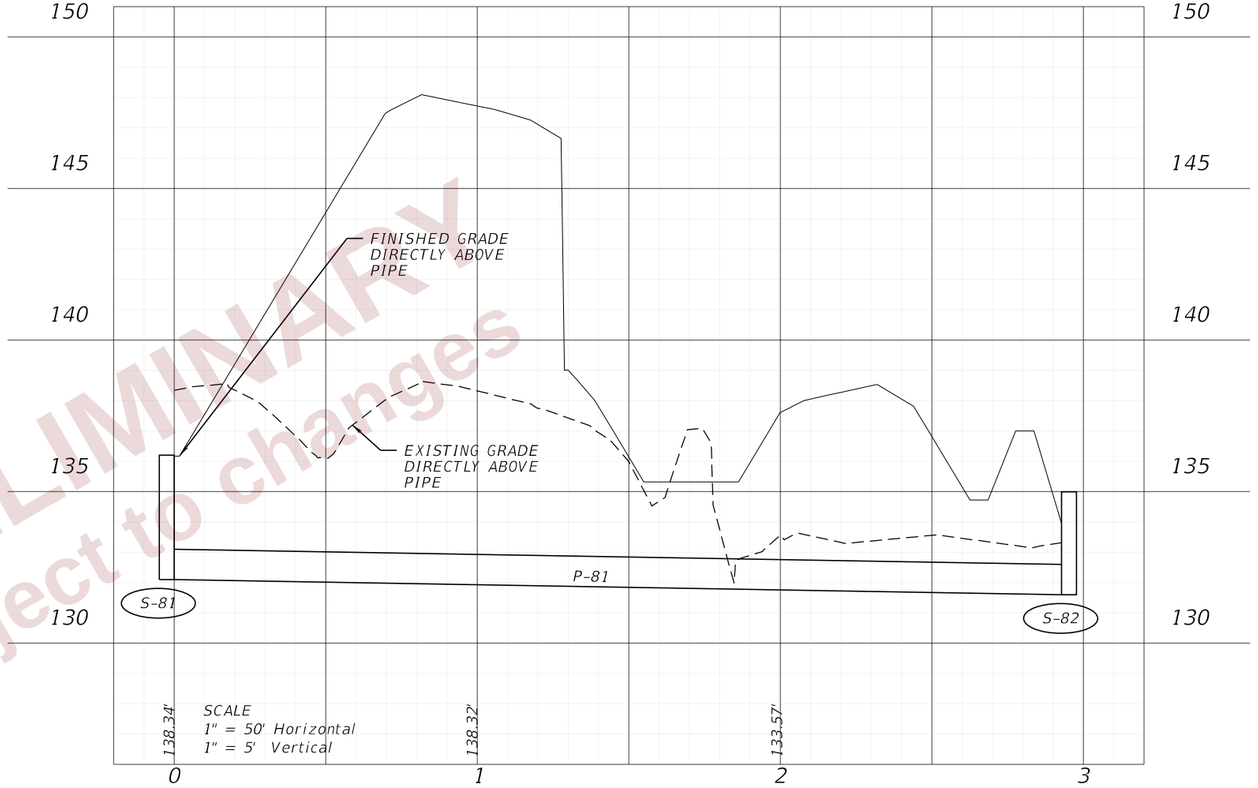

S-81 TO S-82

PRELIMINARY
subject to changes

THE OFFICIAL RECORD OF THIS SHEET IS THE ELECTRONIC FILE DIGITALLY SIGNED AND SEALED UNDER RULE 61G15-23.004, F.A.C.

REVISIONS				ENGINEER OF RECORD	STATE OF FLORIDA DEPARTMENT OF TRANSPORTATION			DRAINAGE PROFILES (45)	SHEET NO.
DATE	DESCRIPTION	DATE	DESCRIPTION	LISANDRO ZAPATA, P.E. LICENSE NUMBER 58822 H. W. LOCHNER 4300 W. CYPRESS STREET, SUITE 500 TAMPA, FLORIDA 33607	ROAD NO.	COUNTY	FINANCIAL PROJECT ID		253
					SR 400	POLK	430185-3-52-01		

2/29/2024 5:00:24 PM JBLOUNT
c:\pw_working\lochner-pw-01\dms33830\Basins 1500 1600.dgn

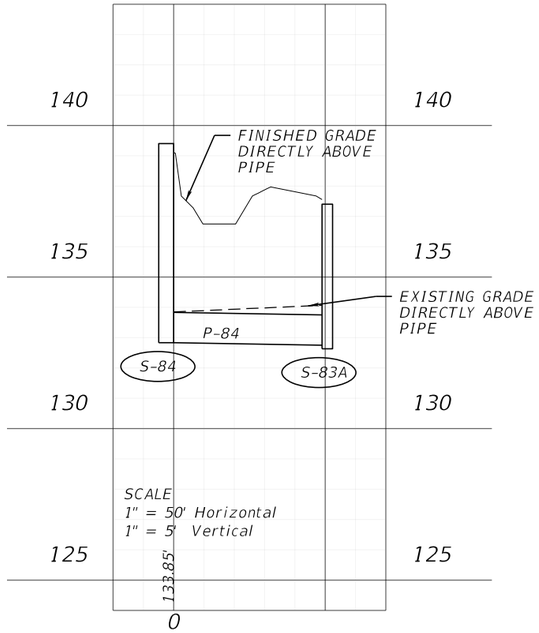

S-84 TO S-83A

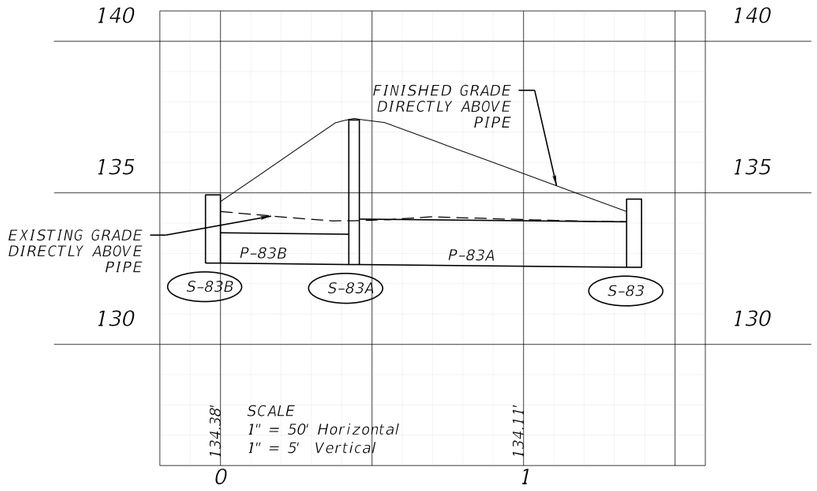

S-83B TO S-83

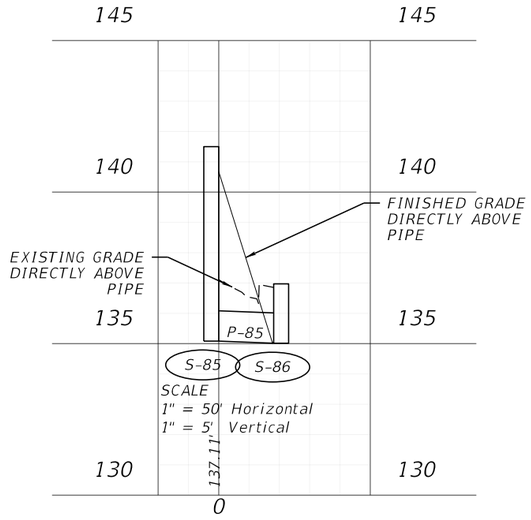

S-85 TO S-86

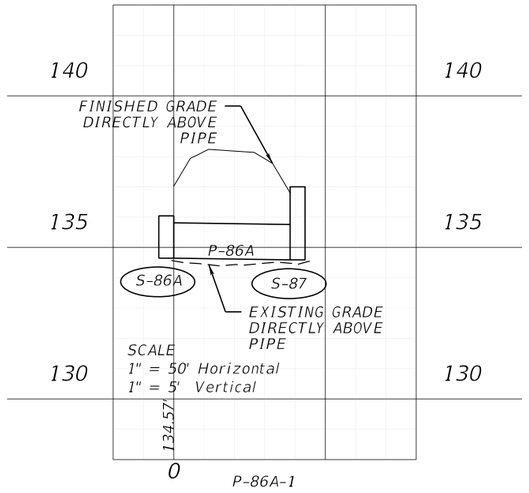

S-86A TO S-87

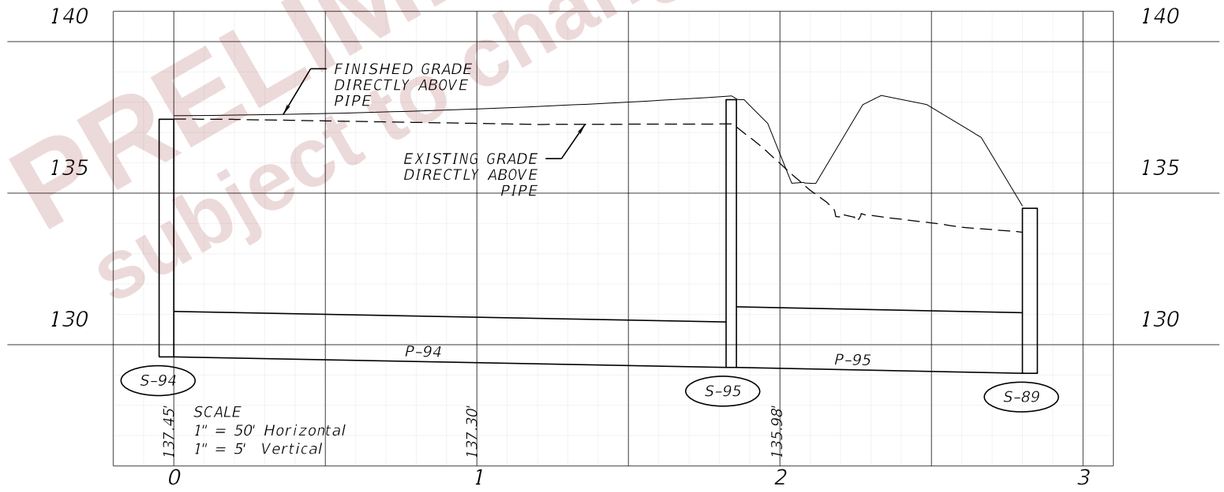

S-94 TO S-89

PRELIMINARY
subject to changes

THE OFFICIAL RECORD OF THIS SHEET IS THE ELECTRONIC FILE DIGITALLY SIGNED AND SEALED UNDER RULE 61G15-23.004, F.A.C.

2/29/2024 5:00:31 PM JBLOUNT
c:\pw_working\lochner-pw-01\dms33830\Basins 1500 1600.dgn

REVISIONS				ENGINEER OF RECORD	STATE OF FLORIDA DEPARTMENT OF TRANSPORTATION			DRAINAGE PROFILES (46)	SHEET NO.
DATE	DESCRIPTION	DATE	DESCRIPTION	LISANDRO ZAPATA, P.E. LICENSE NUMBER 58822 H. W. LOCHNER 4300 W. CYPRESS STREET, SUITE 500 TAMPA, FLORIDA 33607	ROAD NO.	COUNTY	FINANCIAL PROJECT ID		254
					SR 400	POLK	430185-3-52-01		

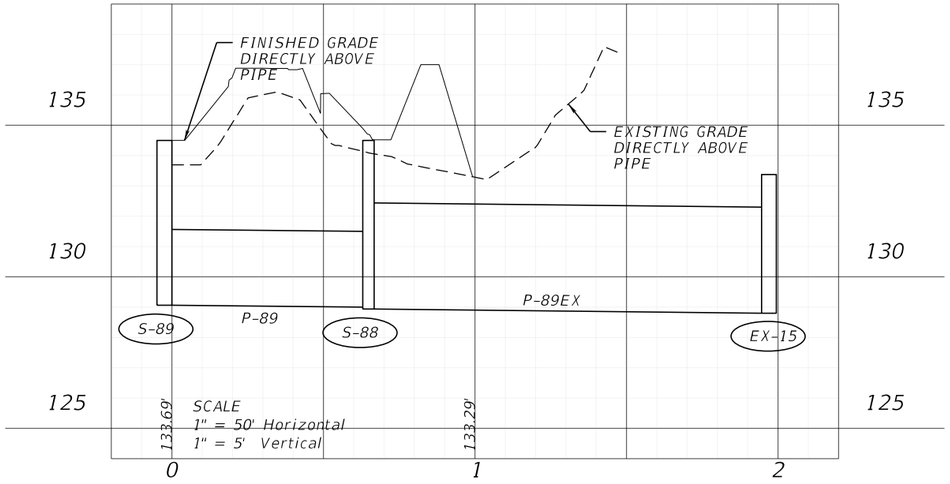

S-89 TO EX-15

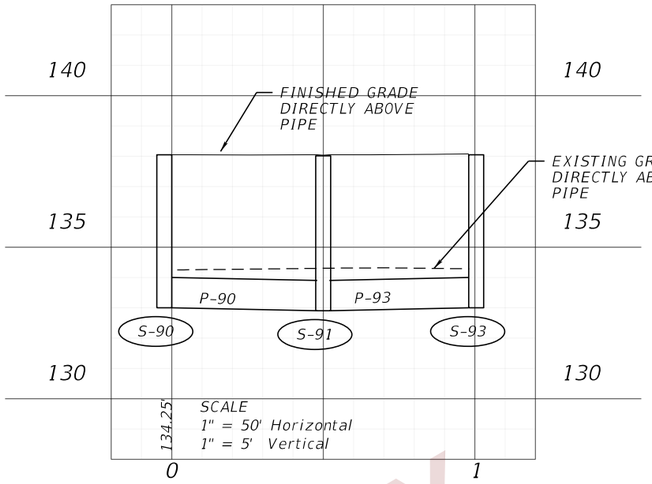

S-90 TO S-93

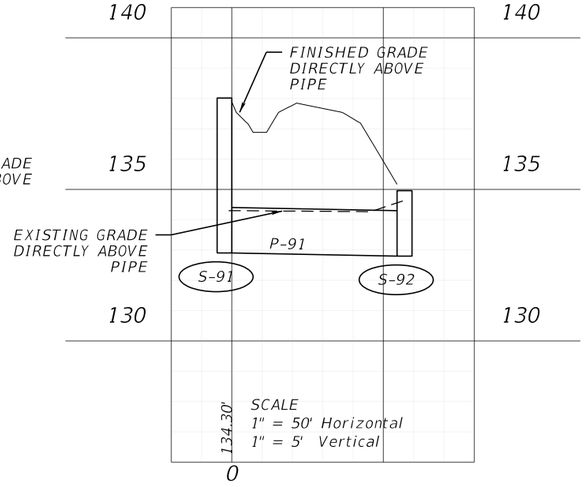

S-91 TO S-92

S-99 TO S-101

PRELIMINARY
subject to changes

THE OFFICIAL RECORD OF THIS SHEET IS THE ELECTRONIC FILE DIGITALLY SIGNED AND SEALED UNDER RULE 61G15-23.004, F.A.C.

2/29/2024 5:00:38 PM JBLOUNT
c:\pw_working\lochner-pw-01\dms33830\Basins 1500 1600.dgn

REVISIONS				ENGINEER OF RECORD	STATE OF FLORIDA DEPARTMENT OF TRANSPORTATION			DRAINAGE PROFILES (47)	SHEET NO.
DATE	DESCRIPTION	DATE	DESCRIPTION	LISANDRO ZAPATA, P.E. LICENSE NUMBER 58822 H. W. LOCHNER 4300 W. CYPRESS STREET, SUITE 500 TAMPA, FLORIDA 33607	ROAD NO.	COUNTY	FINANCIAL PROJECT ID		255
					SR 400	POLK	430185-3-52-01		

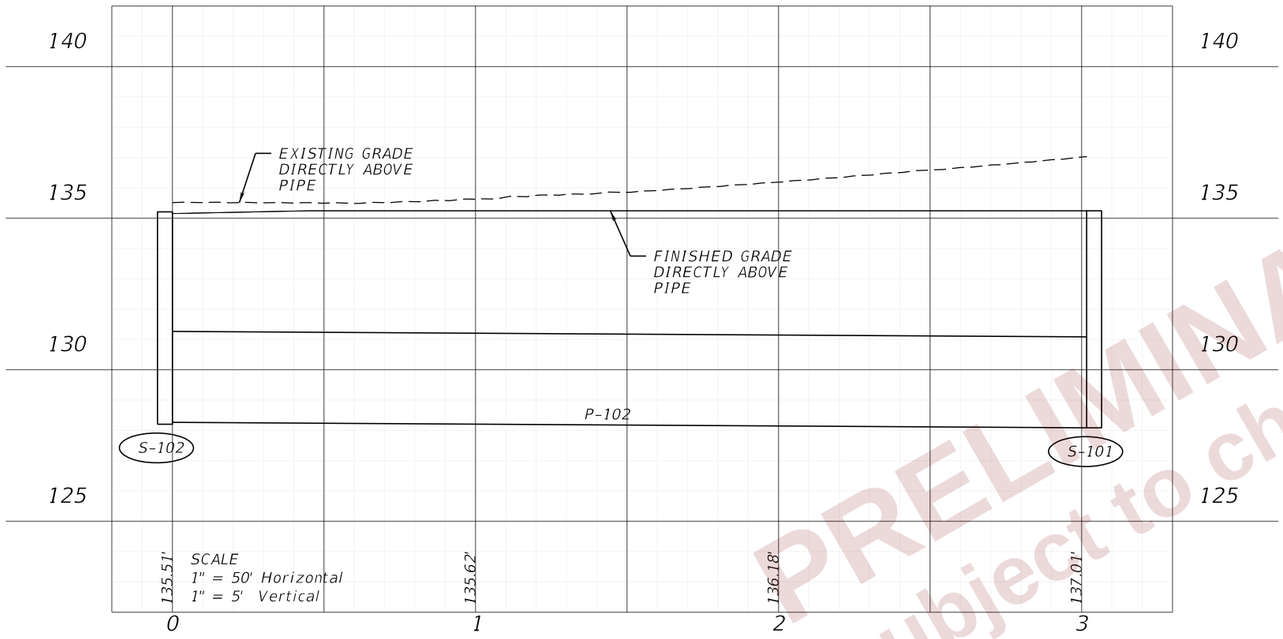

S-102 TO S-101

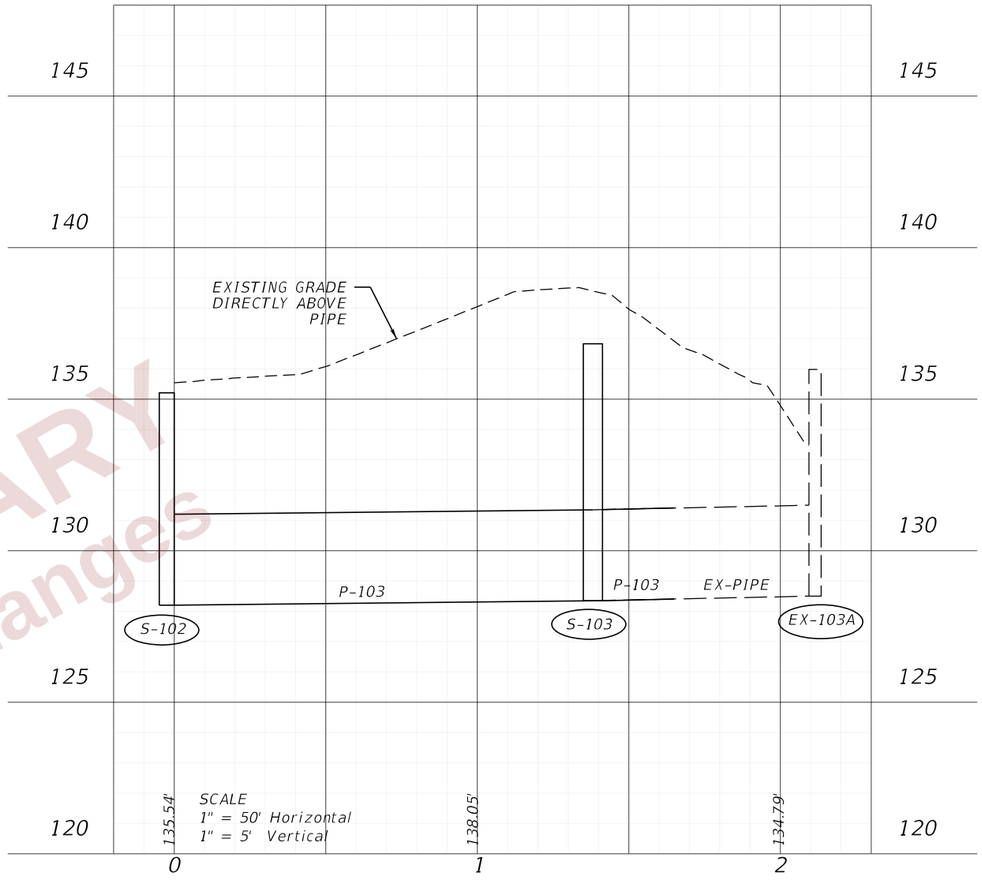

S-102 TO EX-103A

PRELIMINARY
subject to changes

THE OFFICIAL RECORD OF THIS SHEET IS THE ELECTRONIC FILE DIGITALLY SIGNED AND SEALED UNDER RULE 61G15-23.004, F.A.C.

REVISIONS			
DATE	DESCRIPTION	DATE	DESCRIPTION

ENGINEER OF RECORD
LISANDRO ZAPATA, P.E.
LICENSE NUMBER 58822
H. W. LOCHNER
4300 W. CYPRESS STREET, SUITE 500
TAMPA, FLORIDA 33607

STATE OF FLORIDA
DEPARTMENT OF TRANSPORTATION

ROAD NO.	COUNTY	FINANCIAL PROJECT ID
SR 400	POLK	430185-3-52-01

DRAINAGE PROFILES (48)

SHEET NO. 256

2/29/2024 5:00:45 PM JBLOUNT
c:\pw_working\lochner-pw-01\dms33830\Basins 1500 1600.dgn

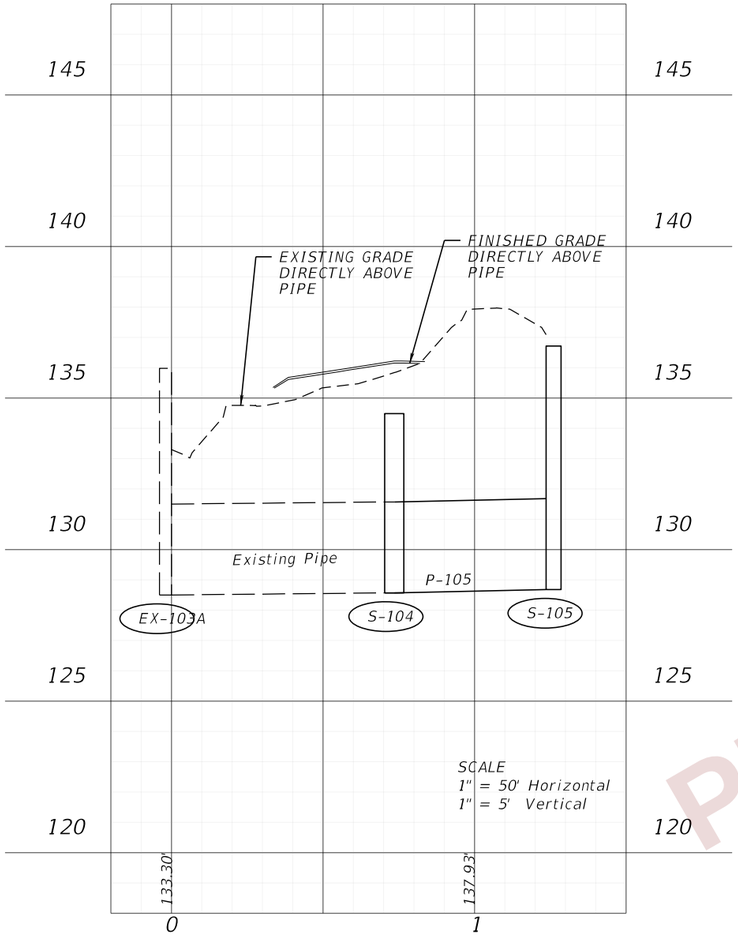

EX-103A TO S-105

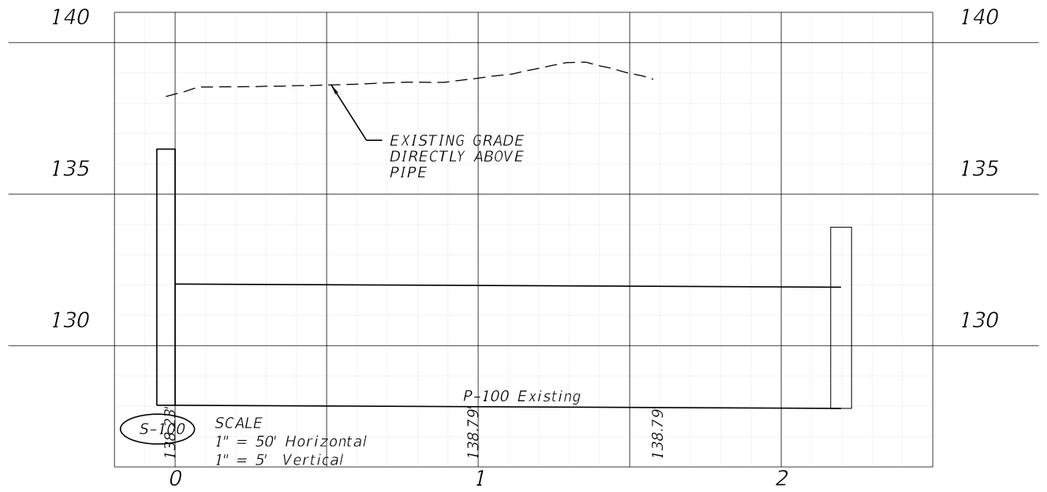

S-100

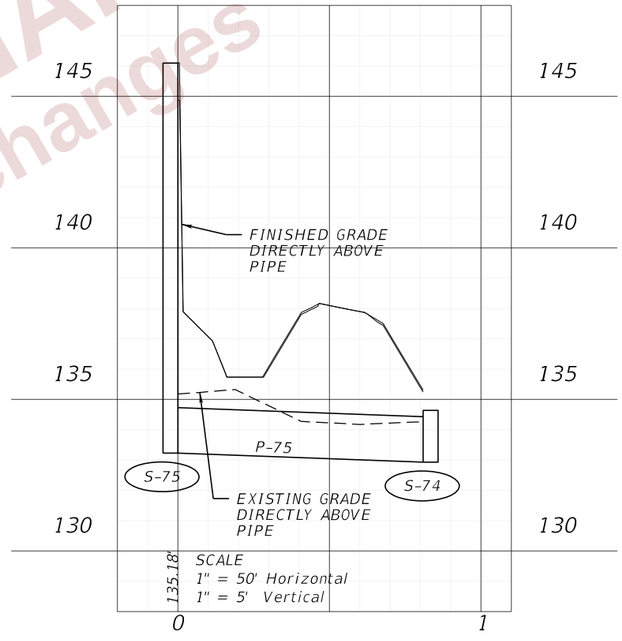

S-75 TO S-74

PRELIMINARY
subject to changes

REVISIONS				ENGINEER OF RECORD	STATE OF FLORIDA DEPARTMENT OF TRANSPORTATION			DRAINAGE PROFILES (49)	SHEET NO.
DATE	DESCRIPTION	DATE	DESCRIPTION	LISANDRO ZAPATA, P.E. LICENSE NUMBER 58822 H. W. LOCHNER 4300 W. CYPRESS STREET, SUITE 500 TAMPA, FLORIDA 33607	ROAD NO.	COUNTY	FINANCIAL PROJECT ID		257
					SR 400	POLK	430185-3-52-01		

THE OFFICIAL RECORD OF THIS SHEET IS THE ELECTRONIC FILE DIGITALLY SIGNED AND SEALED UNDER RULE 61G15-23.004, F.A.C.

2/29/2024 5:00:53 PM JBLOUNT
c:\pw_working\lochner-pw-01\dms33830\Basins 1500 1600.dgn

1. SPECIAL ATTENTION IS DIRECTED TO THE FACT THAT PORTIONS OF SOME DRAINAGE STRUCTRES EXTEND INTO THE STABILIZED PORTION OF THE ROADBED AND EXTREME CAUTION WILL BE NECESSARY IN STABILIZATION OPERATIONS AT THESE LOCATIONS.

2. ALL DRAINAGE PIPES HAVE OPTIONAL MATERIALS. THE OPTIONAL MATERIALS TABULATION SHEET(S) SHOWS ALL MATERIALS ALLOWED AND INDICATES WHICH MATERIAL IS PLOTTED IN THE PLANS AND USED AS THE BASIS FOR PAY QUANTITIES.

PRELIMINARY subject to change

REVISIONS				ENGINEER OF RECORD	STATE OF FLORIDA DEPARTMENT OF TRANSPORTATION			DRAINAGE STRUCTURES (01) I4 (SR400)	SHEET NO.
DATE	DESCRIPTION	DATE	DESCRIPTION	LISANDRO ZAPATA, P.E. LICENSE NUMBER 58822 H. W. LOCHNER 4300 W. CYPRESS STREET, SUITE 500 TAMPA, FLORIDA 33607	ROAD NO.	COUNTY	FINANCIAL PROJECT ID		258
					SR 400	POLK	430185-3-52-01		

THE OFFICIAL RECORD OF THIS SHEET IS THE ELECTRONIC FILE DIGITALLY SIGNED AND SEALED UNDER RULE 61G15-23.004, F.A.C.

2/29/2024 4:24:04 PM BHORTON
c:\pw_working\lochner-pw-01\dms18776\DRXSRD02.dgn

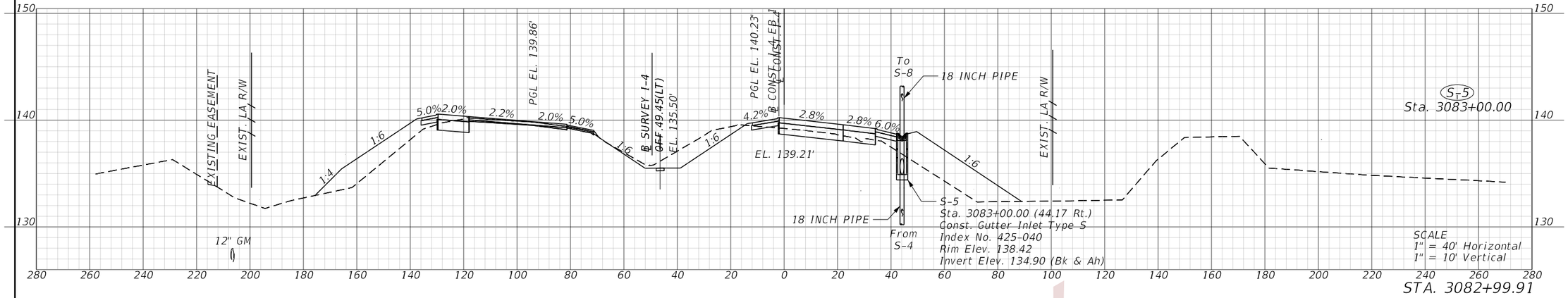

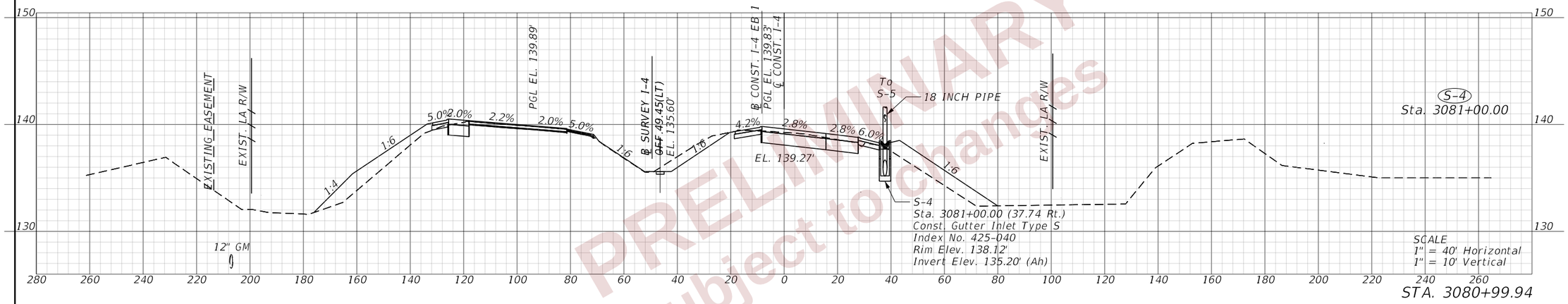

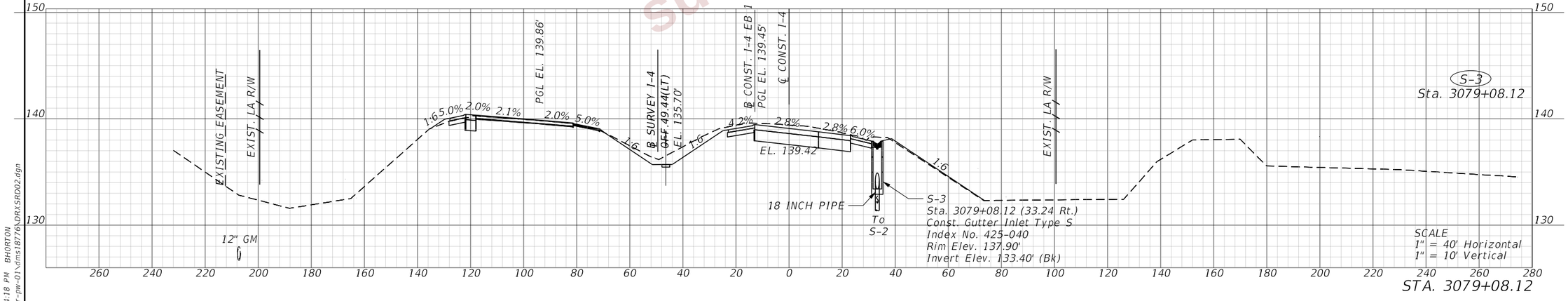

PRELIMINARY
subject to changes

REVISIONS				ENGINEER OF RECORD	STATE OF FLORIDA DEPARTMENT OF TRANSPORTATION			DRAINAGE STRUCTURES (02) I4 (SR 400)	SHEET NO.
DATE	DESCRIPTION	DATE	DESCRIPTION	LISANDRO ZAPATA, P.E. LICENSE NUMBER 58822 H. W. LOCHNER 4300 W. CYPRESS STREET, SUITE 500 TAMPA, FLORIDA 33607	ROAD NO.	COUNTY	FINANCIAL PROJECT ID		259
					SR 400	POLK	430185-3-52-01		

THE OFFICIAL RECORD OF THIS SHEET IS THE ELECTRONIC FILE DIGITALLY SIGNED AND SEALED UNDER RULE 61G15-23.004, F.A.C.

2/29/2024 4:24:18 PM BHORTON
C:\pw_working\lochner-pw-01\dms18776\DRXSRD02.dgn

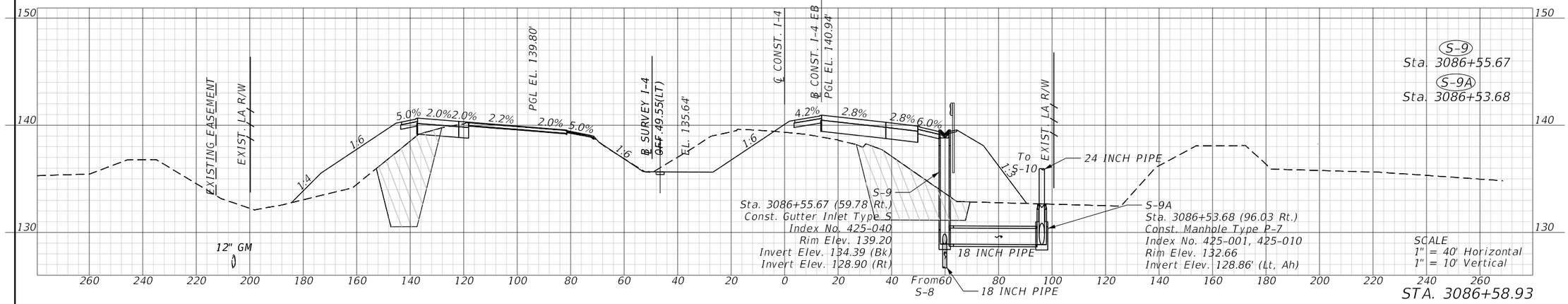

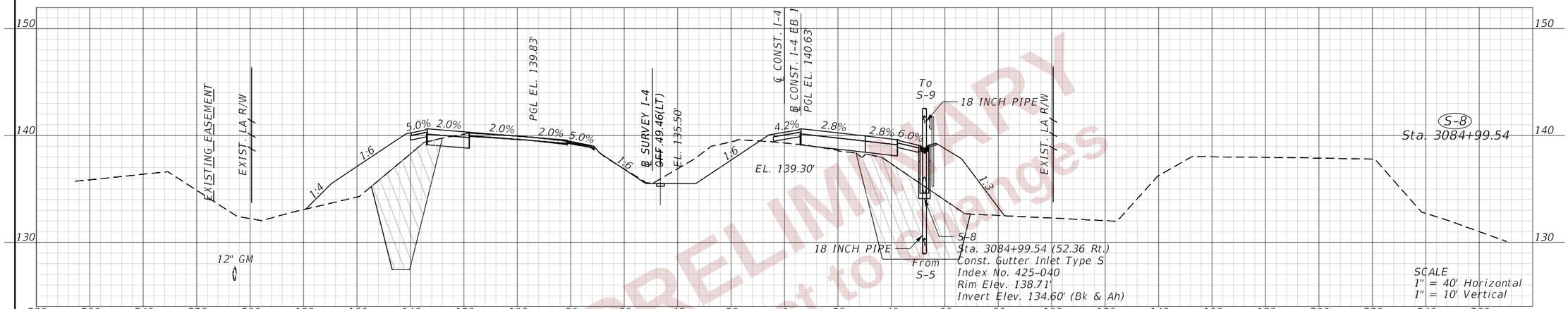

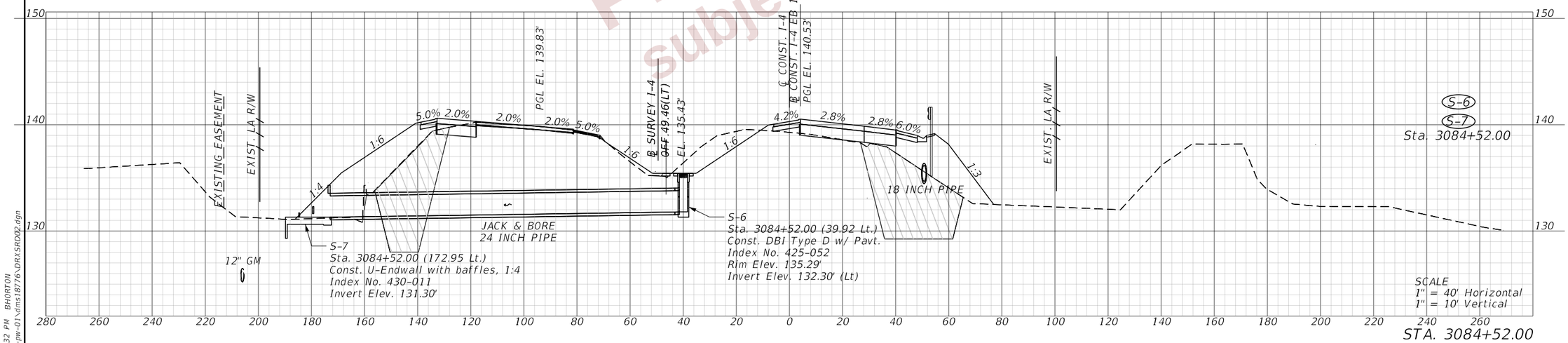

PRELIMINARY
subject to change

REVISIONS				ENGINEER OF RECORD	STATE OF FLORIDA DEPARTMENT OF TRANSPORTATION			DRAINAGE STRUCTURES (03) I4 (SR 400)	SHEET NO.
DATE	DESCRIPTION	DATE	DESCRIPTION	LISANDRO ZAPATA, P.E. LICENSE NUMBER 58822 H. W. LOCHNER 4300 W. CYPRESS STREET, SUITE 500 TAMPA, FLORIDA 33607	ROAD NO.	COUNTY	FINANCIAL PROJECT ID		260
					SR 400	POLK	430185-3-52-01		

THE OFFICIAL RECORD OF THIS SHEET IS THE ELECTRONIC FILE DIGITALLY SIGNED AND SEALED UNDER RULE 61G15-23.004, F.A.C.

2/29/2024 4:24:32 PM BHORTON
c:\pw_working\lochner-pw-01\dms18776\DRYSROD02.dgn

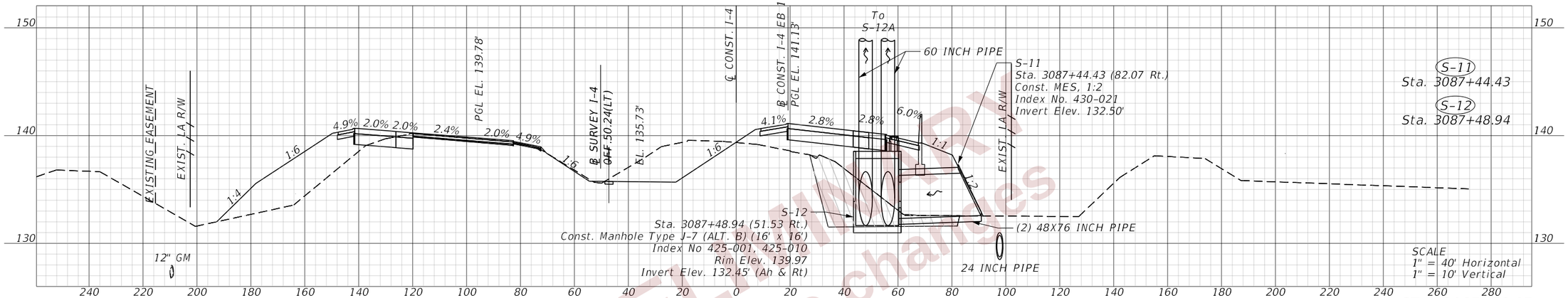

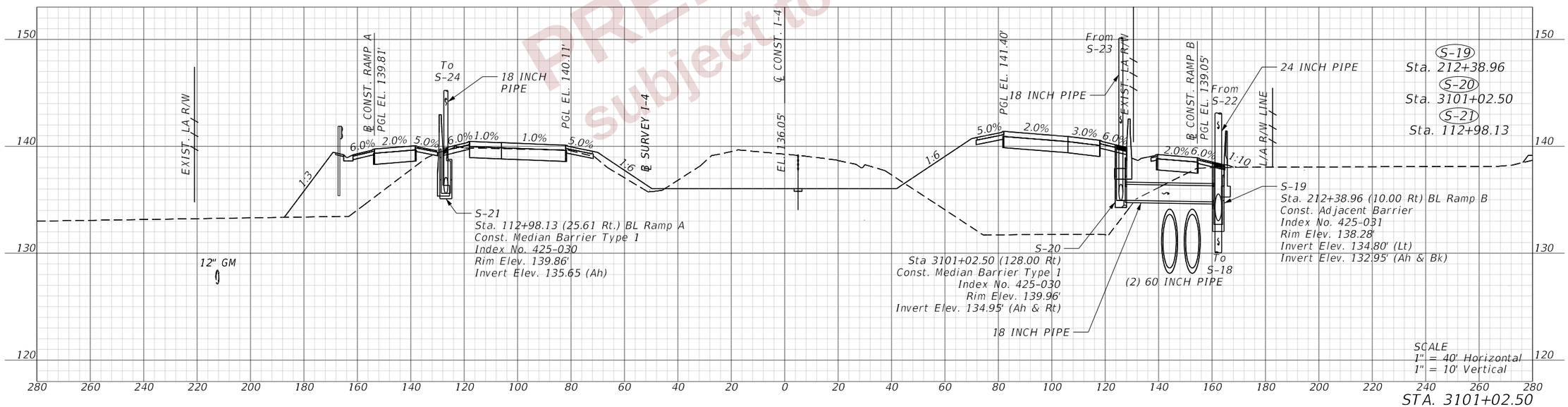

PRELIMINARY subject to changes

REVISIONS				ENGINEER OF RECORD	STATE OF FLORIDA DEPARTMENT OF TRANSPORTATION			DRAINAGE STRUCTURES (04) I4 (SR400)	SHEET NO.
DATE	DESCRIPTION	DATE	DESCRIPTION	LISANDRO ZAPATA, P.E. LICENSE NUMBER 58822 H. W. LOCHNER 4300 W. CYPRESS STREET, SUITE 500 TAMPA, FLORIDA 33607	ROAD NO.	COUNTY	FINANCIAL PROJECT ID		261
					SR 400	POLK	430185-3-52-01		

THE OFFICIAL RECORD OF THIS SHEET IS THE ELECTRONIC FILE DIGITALLY SIGNED AND SEALED UNDER RULE 61G15-23.004, F.A.C.

2/29/2024 4:24:44 PM BHORTON
c:\pw_working\lochner-pw-01\dms18776\DRXSRD02.dgn

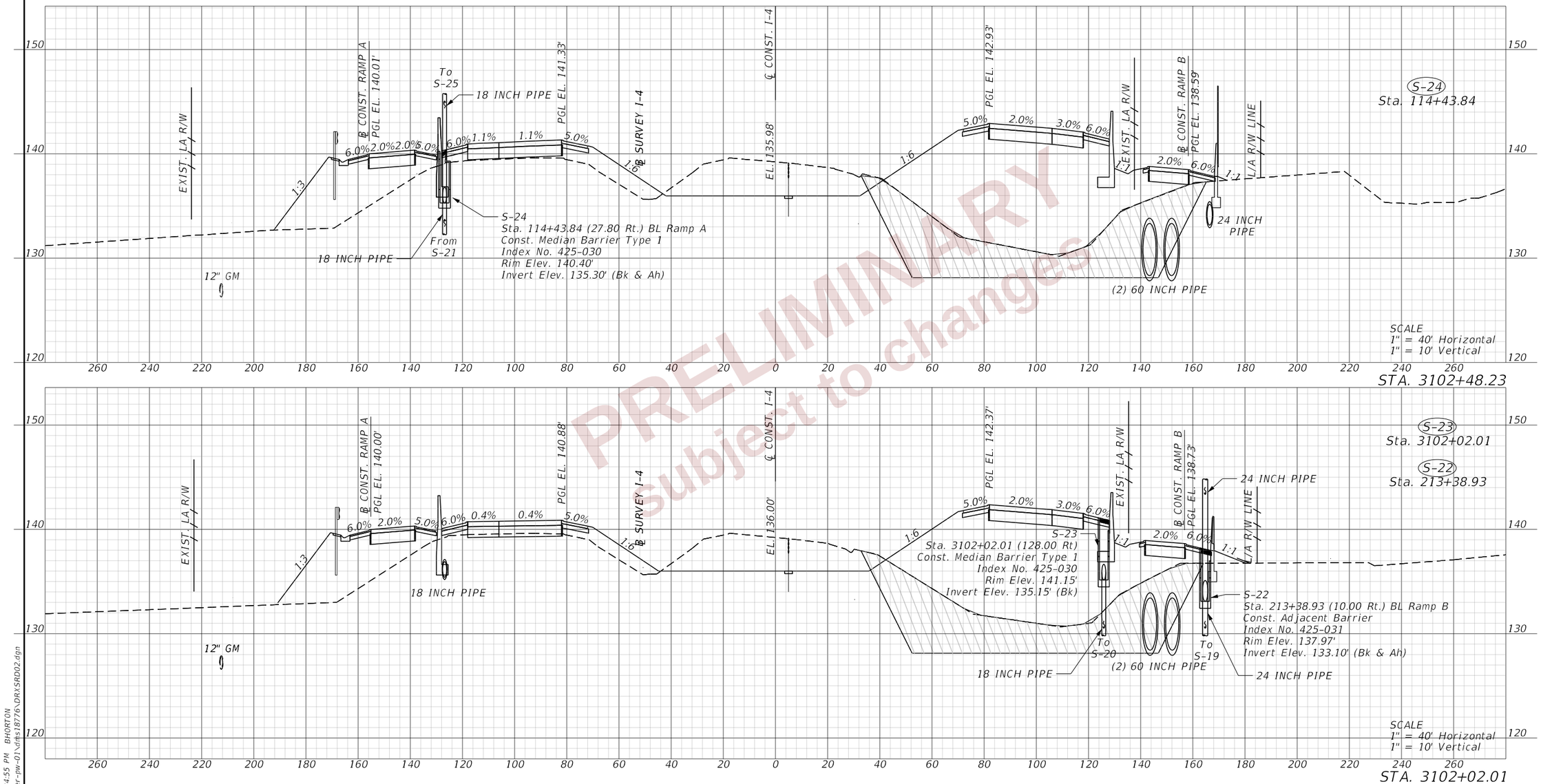

PRELIMINARY subject to changes

REVISIONS			
DATE	DESCRIPTION	DATE	DESCRIPTION

ENGINEER OF RECORD

LISANDRO ZAPATA, P.E.
LICENSE NUMBER 58822
H. W. LOCHNER
4300 W. CYPRESS STREET, SUITE 500
TAMPA, FLORIDA 33607

STATE OF FLORIDA
DEPARTMENT OF TRANSPORTATION

ROAD NO.	COUNTY	FINANCIAL PROJECT ID
SR 400	POLK	430185-3-52-01

DRAINAGE STRUCTURES (05)
I4 (SR 400)

SHEET NO. 262

THE OFFICIAL RECORD OF THIS SHEET IS THE ELECTRONIC FILE DIGITALLY SIGNED AND SEALED UNDER RULE 61G15-23.004, F.A.C.

2/29/2024 4:24:55 PM BHORTON
c:\pw_working\lochner-pw-01\dfs18776\DRXSRD02.dgn

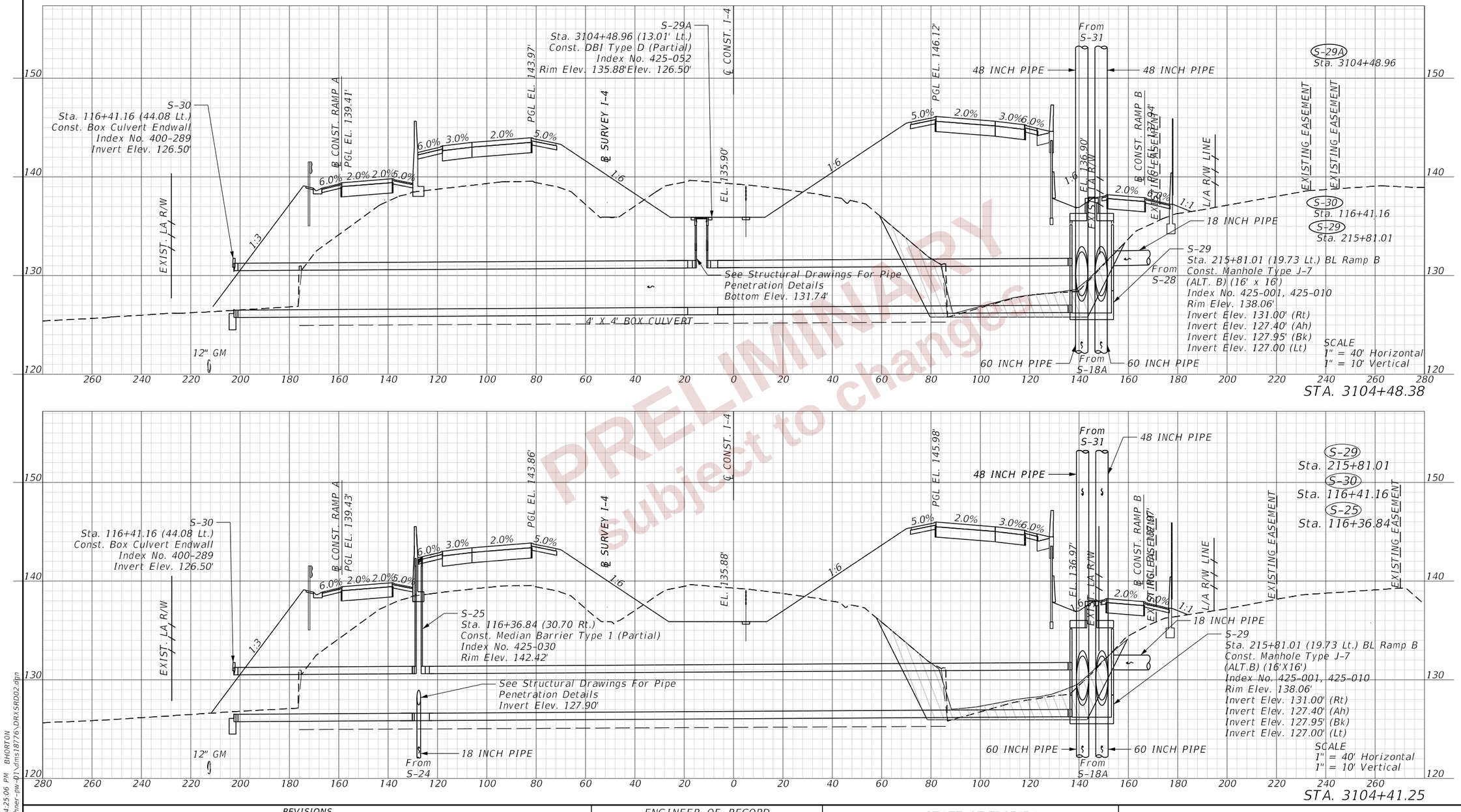

PRELIMINARY
subject to changes

REVISIONS			
DATE	DESCRIPTION	DATE	DESCRIPTION

ENGINEER OF RECORD

LISANDRO ZAPATA, P.E.
LICENSE NUMBER 58822
H. W. LOCHNER
4300 W. CYPRESS STREET, SUITE 500
TAMPA, FLORIDA 33607

STATE OF FLORIDA
DEPARTMENT OF TRANSPORTATION

ROAD NO.	COUNTY	FINANCIAL PROJECT ID
SR 400	POLK	430185-3-52-01

DRAINAGE STRUCTURES (06)
I4 (SR 400)

SHEET NO. 263

2/29/2024 4:25:06 PM BHORTON
c:\pw_working\lochner-pw-01\dms18776\DRXSRD02.dgn

THE OFFICIAL RECORD OF THIS SHEET IS THE ELECTRONIC FILE DIGITALLY SIGNED AND SEALED UNDER RULE 61G15-23.004, F.A.C.

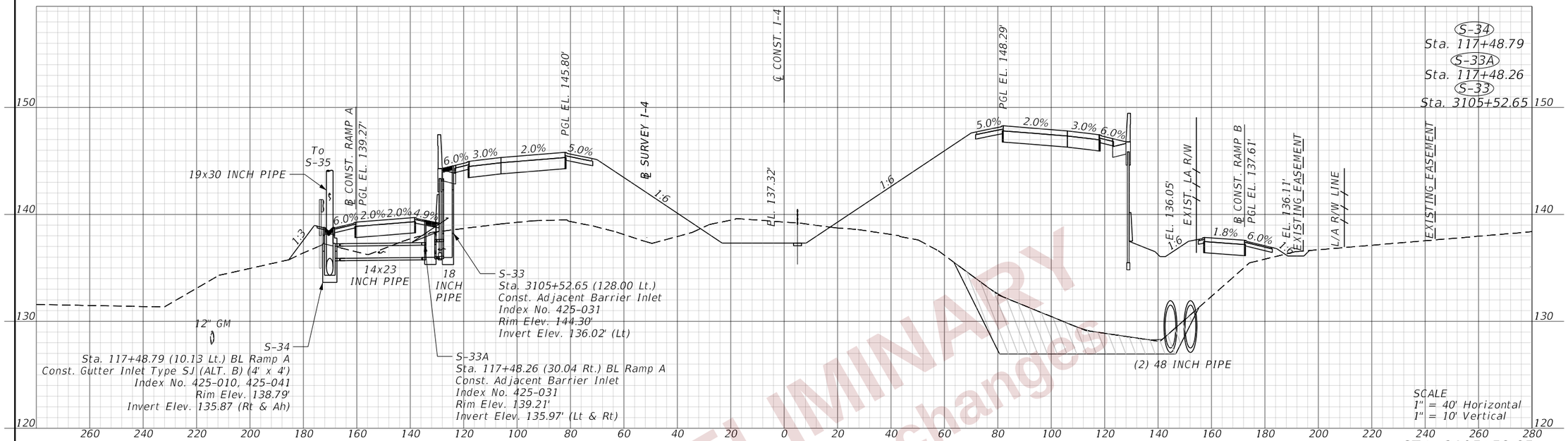

PRELIMINARY
Subject to changes

THE OFFICIAL RECORD OF THIS SHEET IS THE ELECTRONIC FILE DIGITALLY SIGNED AND SEALED UNDER RULE 61G15-23.004, F.A.C.

REVISIONS			
DATE	DESCRIPTION	DATE	DESCRIPTION

ENGINEER OF RECORD
LISANDRO ZAPATA, P.E.
LICENSE NUMBER 58822
H. W. LOCHNER
4300 W. CYPRESS STREET, SUITE 500
TAMPA, FLORIDA 33607

STATE OF FLORIDA
DEPARTMENT OF TRANSPORTATION

ROAD NO.	COUNTY	FINANCIAL PROJECT ID
SR 400	POLK	430185-3-52-01

DRAINAGE STRUCTURES (07)
I4 (SR 400)

SHEET NO. 264

2/29/2024 4:25:20 PM BHORTON
c:\pw_working\lochner-pw-01\dms18776\DRXSRD02.dgn

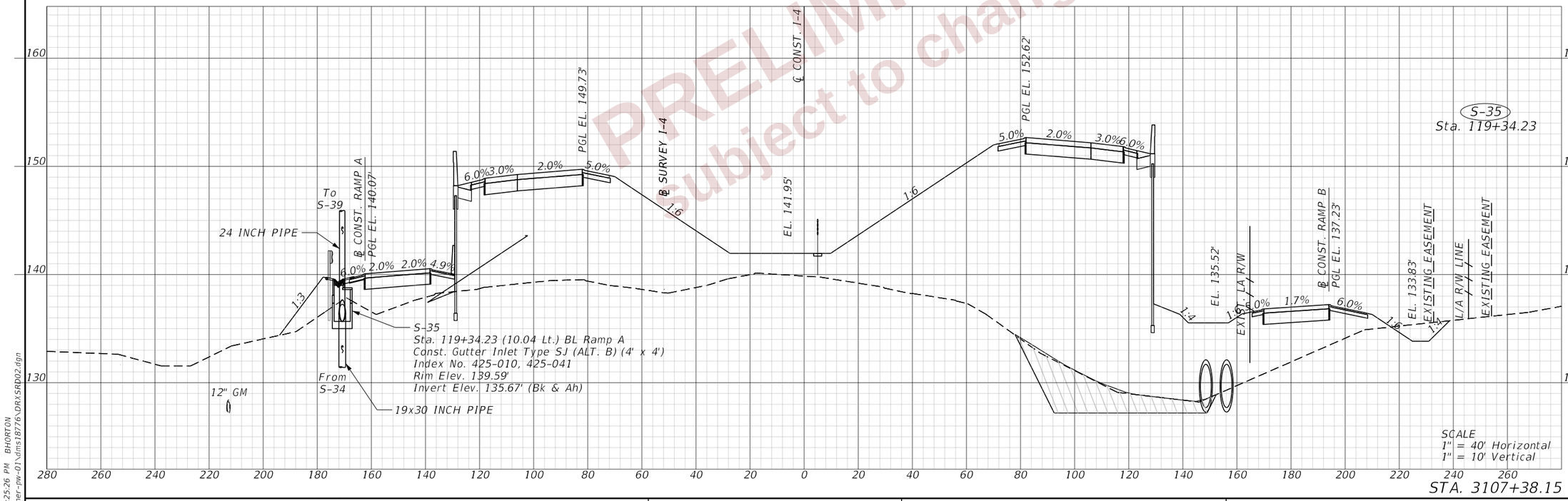

PRELIMINARY
Subject to changes

REVISIONS			
DATE	DESCRIPTION	DATE	DESCRIPTION

ENGINEER OF RECORD

LISANDRO ZAPATA, P.E.
LICENSE NUMBER 58822
H. W. LOCHNER
4300 W. CYPRESS STREET, SUITE 500
TAMPA, FLORIDA 33607

STATE OF FLORIDA
DEPARTMENT OF TRANSPORTATION

ROAD NO.	COUNTY	FINANCIAL PROJECT ID
SR 400	POLK	430185-3-52-01

DRAINAGE STRUCTURES (08)
I4 (SR 400)

SHEET NO. 265

2/29/2024 4:25:26 PM BHORTON
c:\pw_working\lochner-pw-01\dms18776\DRXSRD02.dgn

THE OFFICIAL RECORD OF THIS SHEET IS THE ELECTRONIC FILE DIGITALLY SIGNED AND SEALED UNDER RULE 61G15-23.004, F.A.C.

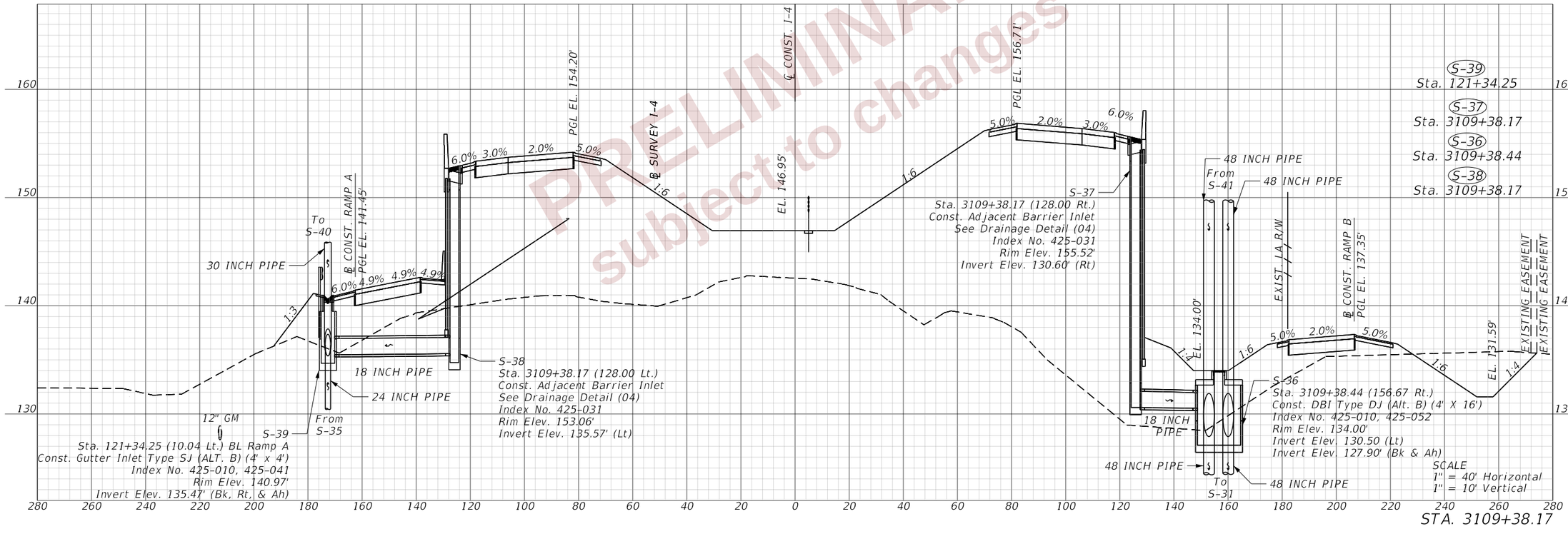

PRELIMINARY
subject to changes

REVISIONS				ENGINEER OF RECORD	STATE OF FLORIDA DEPARTMENT OF TRANSPORTATION			DRAINAGE STRUCTURES (09) I4 (SR 400)	SHEET NO.
DATE	DESCRIPTION	DATE	DESCRIPTION	LISANDRO ZAPATA, P.E. LICENSE NUMBER 58822 H. W. LOCHNER 4300 W. CYPRESS STREET, SUITE 500 TAMPA, FLORIDA 33607	ROAD NO.	COUNTY	FINANCIAL PROJECT ID		266
					SR 400	POLK	430185-3-52-01		

THE OFFICIAL RECORD OF THIS SHEET IS THE ELECTRONIC FILE DIGITALLY SIGNED AND SEALED UNDER RULE 61G15-23.004, F.A.C.

2/29/2024 4:25:32 PM BHORTON
c:\pw_working\lochner-pw-01\dms18776\DRXSRD02.dgn

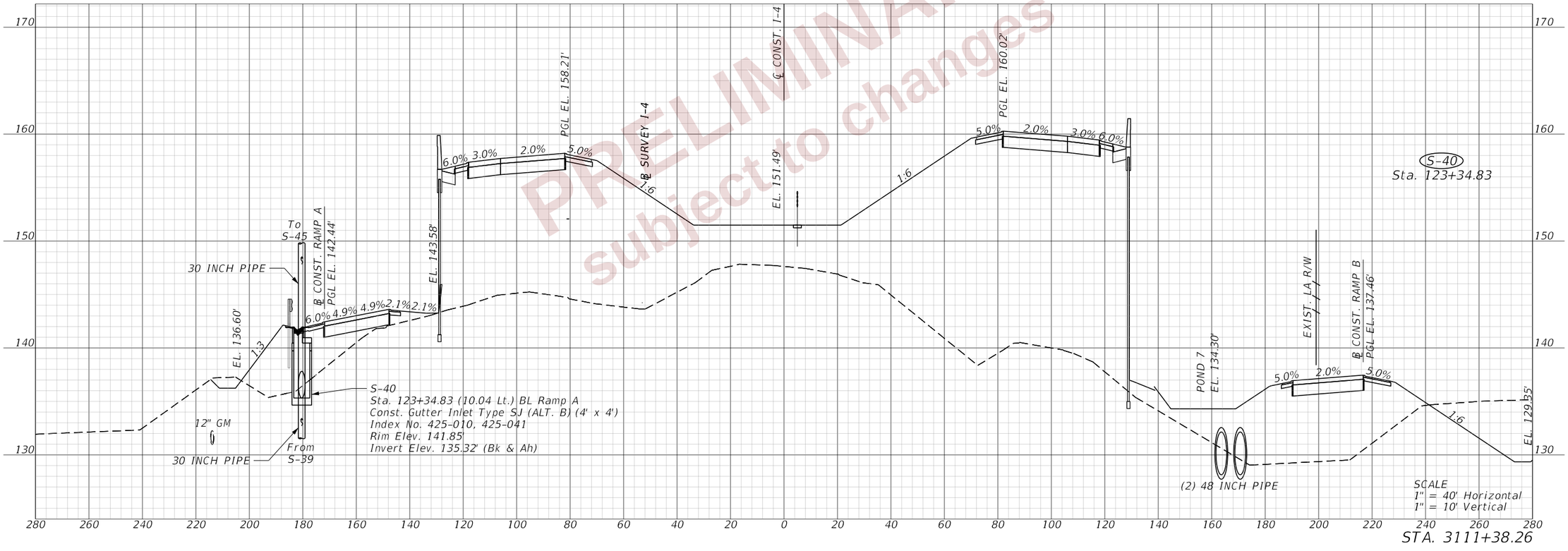

PRELIMINARY
subject to changes

REVISIONS				ENGINEER OF RECORD	STATE OF FLORIDA DEPARTMENT OF TRANSPORTATION			DRAINAGE STRUCTURES (10) I4 (SR 400)	SHEET NO.
DATE	DESCRIPTION	DATE	DESCRIPTION	LISANDRO ZAPATA, P.E. LICENSE NUMBER 58822 H. W. LOCHNER 4300 W. CYPRESS STREET, SUITE 500 TAMPA, FLORIDA 33607	ROAD NO.	COUNTY	FINANCIAL PROJECT ID		267
					SR 400	POLK	430185-3-52-01		

THE OFFICIAL RECORD OF THIS SHEET IS THE ELECTRONIC FILE DIGITALLY SIGNED AND SEALED UNDER RULE 61G15-23.004, F.A.C.

2/29/2024 4:25:37 PM BHORTON
c:\pw_working\lochner-pw-01\dms18776\DRXSRD02.dgn

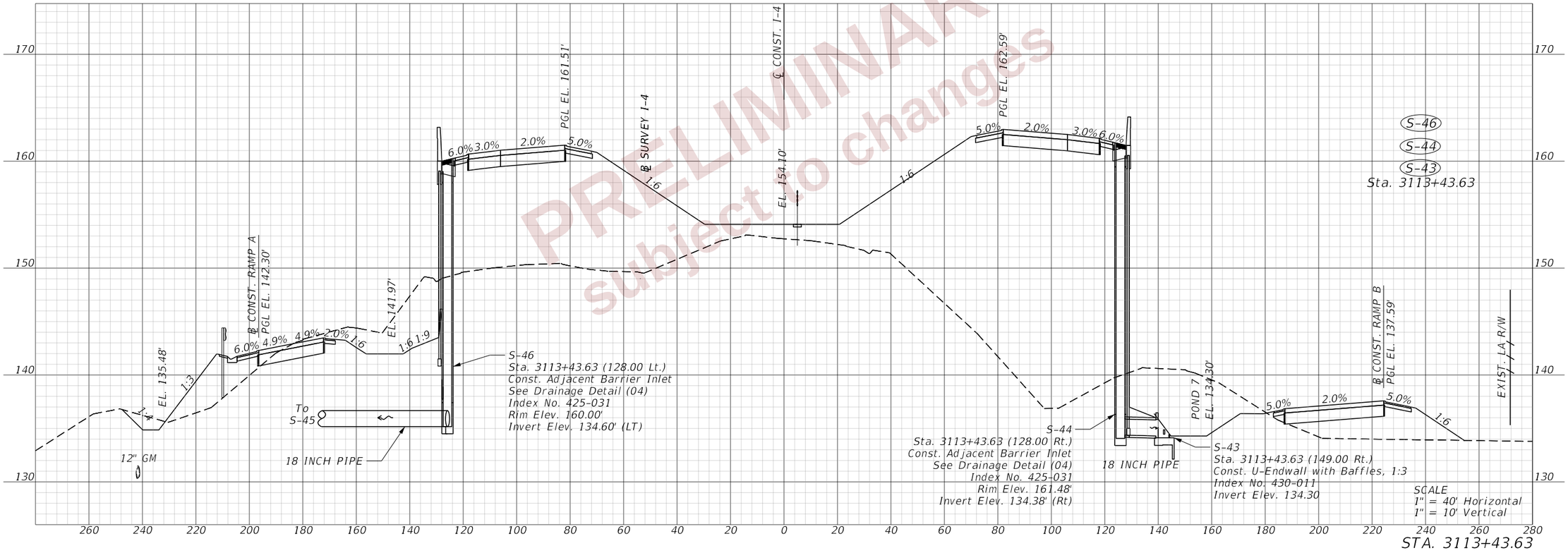

PRELIMINARY
subject to changes

REVISIONS				ENGINEER OF RECORD	STATE OF FLORIDA DEPARTMENT OF TRANSPORTATION			DRAINAGE STRUCTURES (11) I4 (SR 400)	SHEET NO.
DATE	DESCRIPTION	DATE	DESCRIPTION	LISANDRO ZAPATA, P.E. LICENSE NUMBER 58822 H. W. LOCHNER 4300 W. CYPRESS STREET, SUITE 500 TAMPA, FLORIDA 33607	ROAD NO.	COUNTY	FINANCIAL PROJECT ID		268
					SR 400	POLK	430185-3-52-01		

THE OFFICIAL RECORD OF THIS SHEET IS THE ELECTRONIC FILE DIGITALLY SIGNED AND SEALED UNDER RULE 61G15-23.004, F.A.C.

2/29/2024 4:25:42 PM BHORTON
c:\pw_working\lochner-pw-01\dms18776\DRYSRD02.dgn

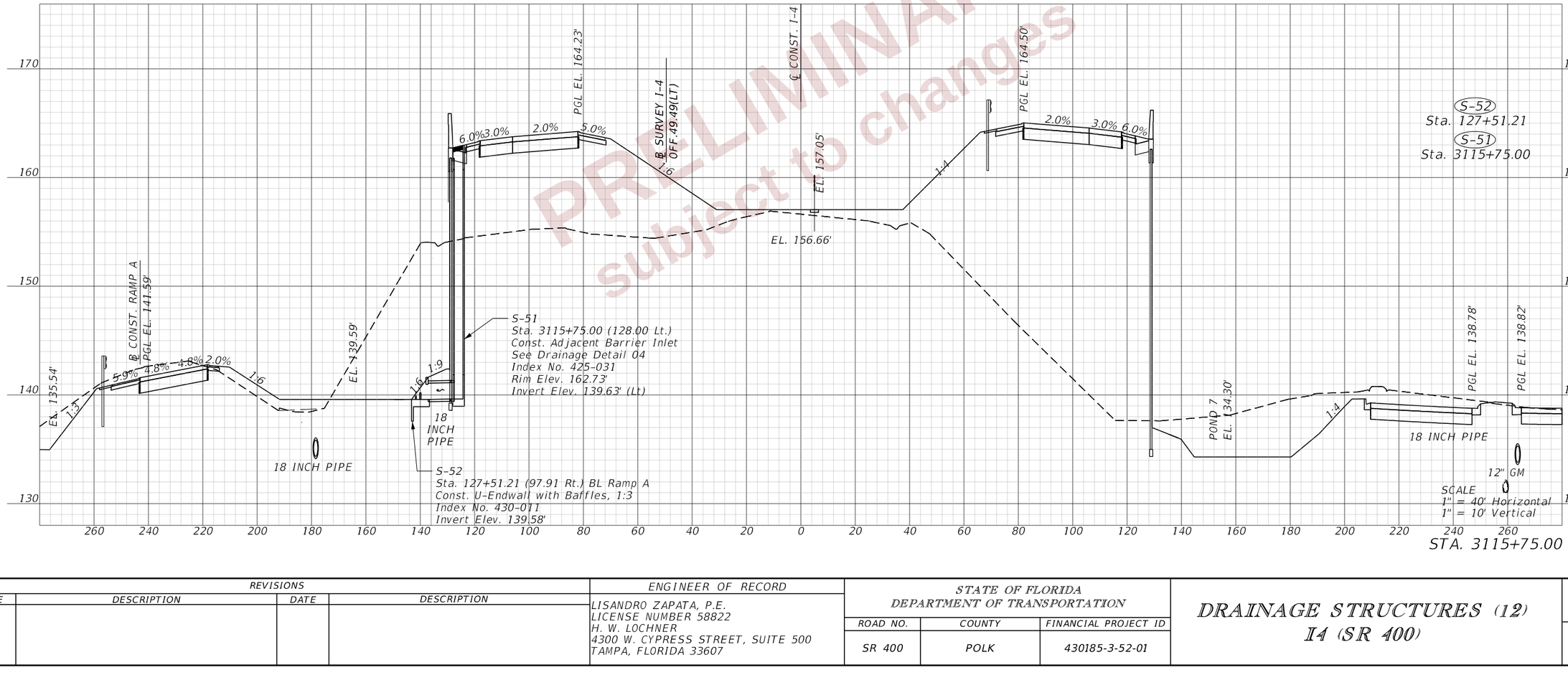

PRELIMINARY
subject to changes

THE OFFICIAL RECORD OF THIS SHEET IS THE ELECTRONIC FILE DIGITALLY SIGNED AND SEALED UNDER RULE 61G15-23.004, F.A.C.

2/29/2024 4:25:48 PM BHORTON
c:\pw_working\lochner-pw-01\dms18776\DRXSRD02.dgn

REVISIONS			
DATE	DESCRIPTION	DATE	DESCRIPTION

ENGINEER OF RECORD
LISANDRO ZAPATA, P.E.
LICENSE NUMBER 58822
H. W. LOCHNER
4300 W. CYPRESS STREET, SUITE 500
TAMPA, FLORIDA 33607

STATE OF FLORIDA
DEPARTMENT OF TRANSPORTATION

ROAD NO.	COUNTY	FINANCIAL PROJECT ID
SR 400	POLK	430185-3-52-01

DRAINAGE STRUCTURES (12)
I4 (SR 400)

SHEET NO. 269

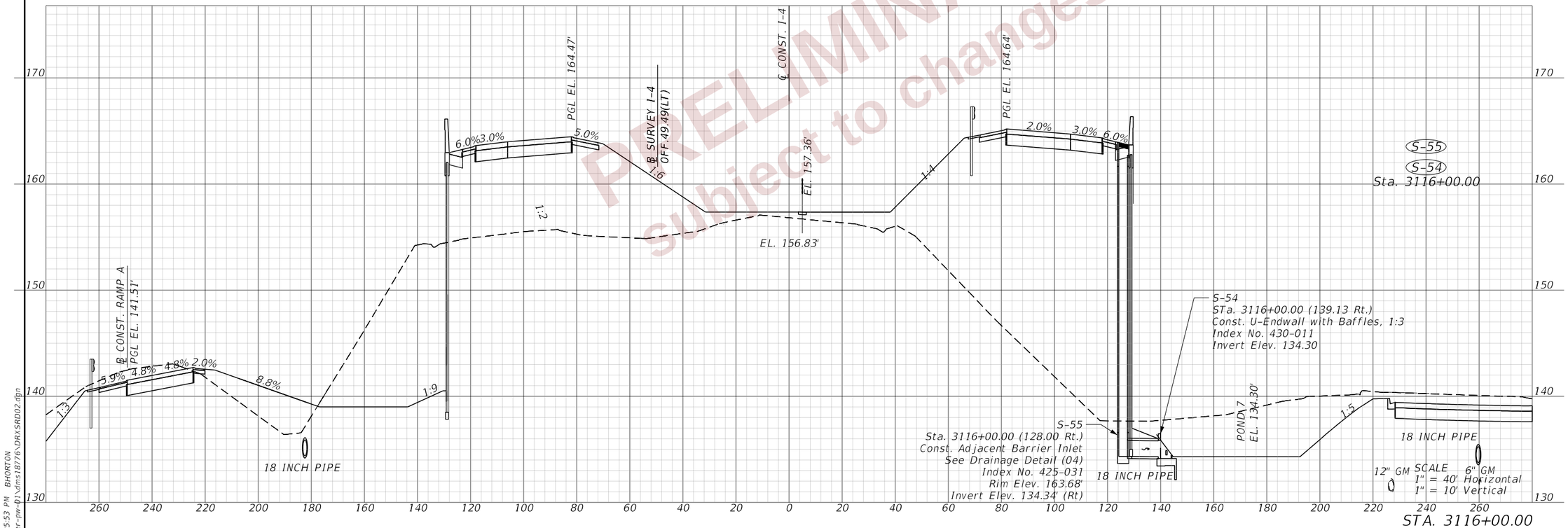

REVISIONS				ENGINEER OF RECORD	STATE OF FLORIDA DEPARTMENT OF TRANSPORTATION			DRAINAGE STRUCTURES (13) I4 (SR 400)	SHEET NO.
DATE	DESCRIPTION	DATE	DESCRIPTION	LISANDRO ZAPATA, P.E. LICENSE NUMBER 58822 H. W. LOCHNER 4300 W. CYPRESS STREET, SUITE 500 TAMPA, FLORIDA 33607	ROAD NO.	COUNTY	FINANCIAL PROJECT ID		270
					SR 400	POLK	430185-3-52-01		

2/29/2024 4:25:53 PM BHORTON
c:\pw_working\lochner-pw-01\dms18776\DRXSRD02.dgn

THE OFFICIAL RECORD OF THIS SHEET IS THE ELECTRONIC FILE DIGITALLY SIGNED AND SEALED UNDER RULE 61G15-23.004, F.A.C.

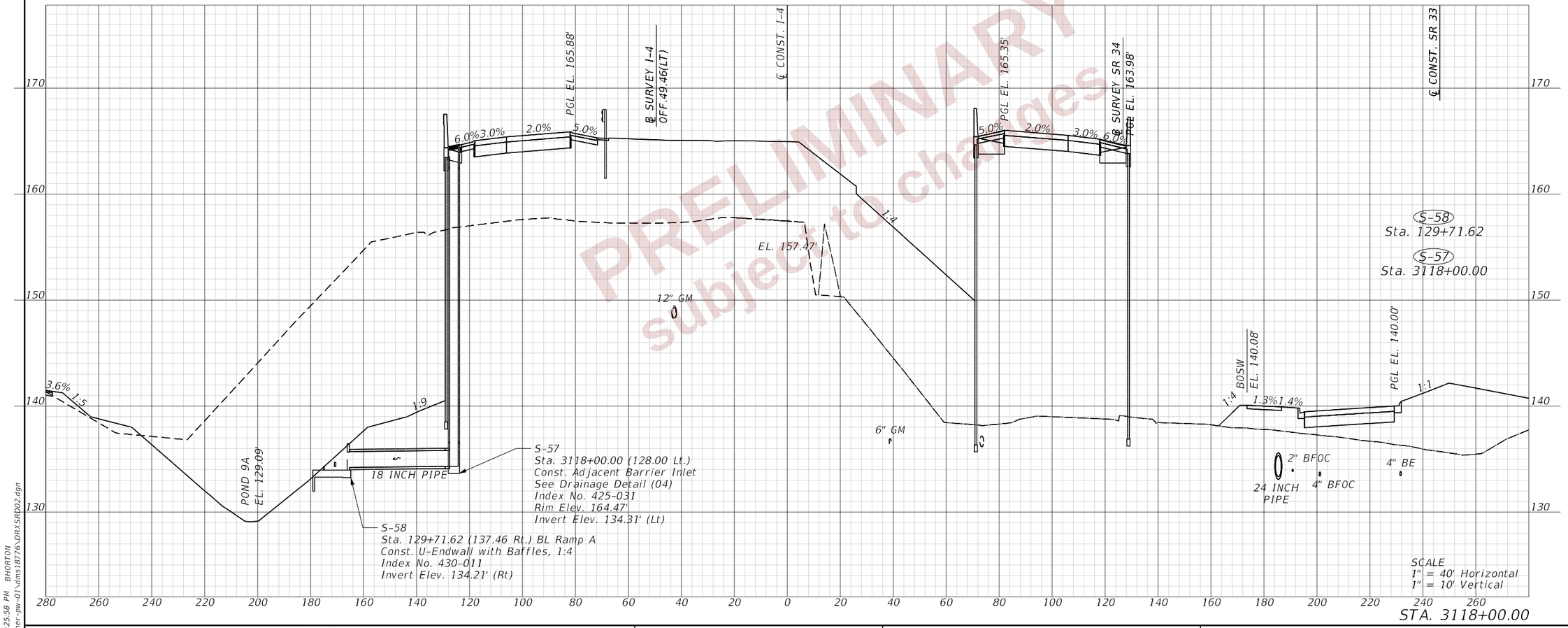

PRELIMINARY
subject to change

REVISIONS			
DATE	DESCRIPTION	DATE	DESCRIPTION

ENGINEER OF RECORD

LISANDRO ZAPATA, P.E.
LICENSE NUMBER 58822
H. W. LOCHNER
4300 W. CYPRESS STREET, SUITE 500
TAMPA, FLORIDA 33607

STATE OF FLORIDA
DEPARTMENT OF TRANSPORTATION

ROAD NO.	COUNTY	FINANCIAL PROJECT ID
SR 400	POLK	430185-3-52-01

DRAINAGE STRUCTURES (14)
I4 (SR 400)

SHEET NO. 271

2/29/2024 4:25:58 PM BHORTON
c:\pw_working\lochner-pw-01\dms18776\DRXSRD02.dgn

THE OFFICIAL RECORD OF THIS SHEET IS THE ELECTRONIC FILE DIGITALLY SIGNED AND SEALED UNDER RULE 61G15-23.004, F.A.C.

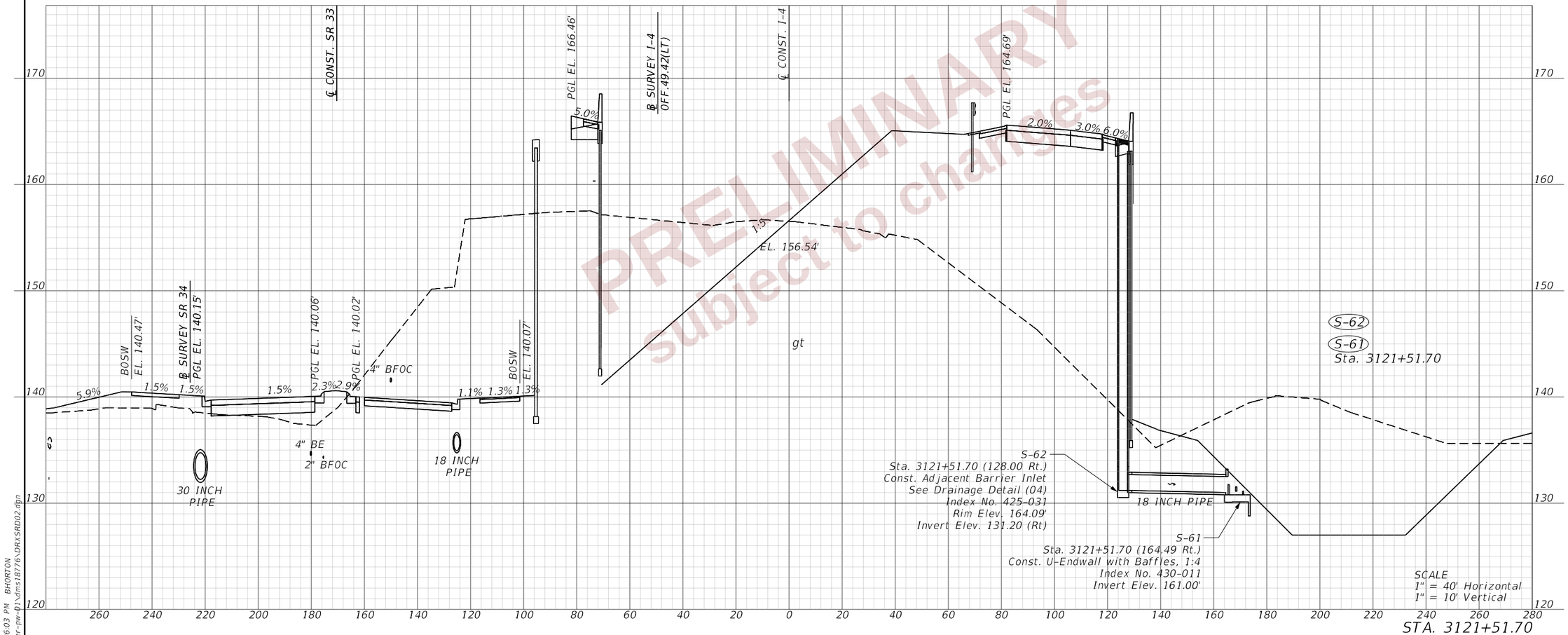

PRELIMINARY
subject to changes

REVISIONS				ENGINEER OF RECORD	STATE OF FLORIDA DEPARTMENT OF TRANSPORTATION			DRAINAGE STRUCTURES (15) I4 (SR 400)	SHEET NO.
DATE	DESCRIPTION	DATE	DESCRIPTION	LISANDRO ZAPATA, P.E. LICENSE NUMBER 58822 H. W. LOCHNER 4300 W. CYPRESS STREET, SUITE 500 TAMPA, FLORIDA 33607	ROAD NO.	COUNTY	FINANCIAL PROJECT ID		272
					SR 400	POLK	430185-3-52-01		

2/29/2024 4:26:03 PM BHORTON
c:\pw_working\lochner-pw-01\dms18776\DRXSRD02.dgn

THE OFFICIAL RECORD OF THIS SHEET IS THE ELECTRONIC FILE DIGITALLY SIGNED AND SEALED UNDER RULE 61G15-23.004, F.A.C.

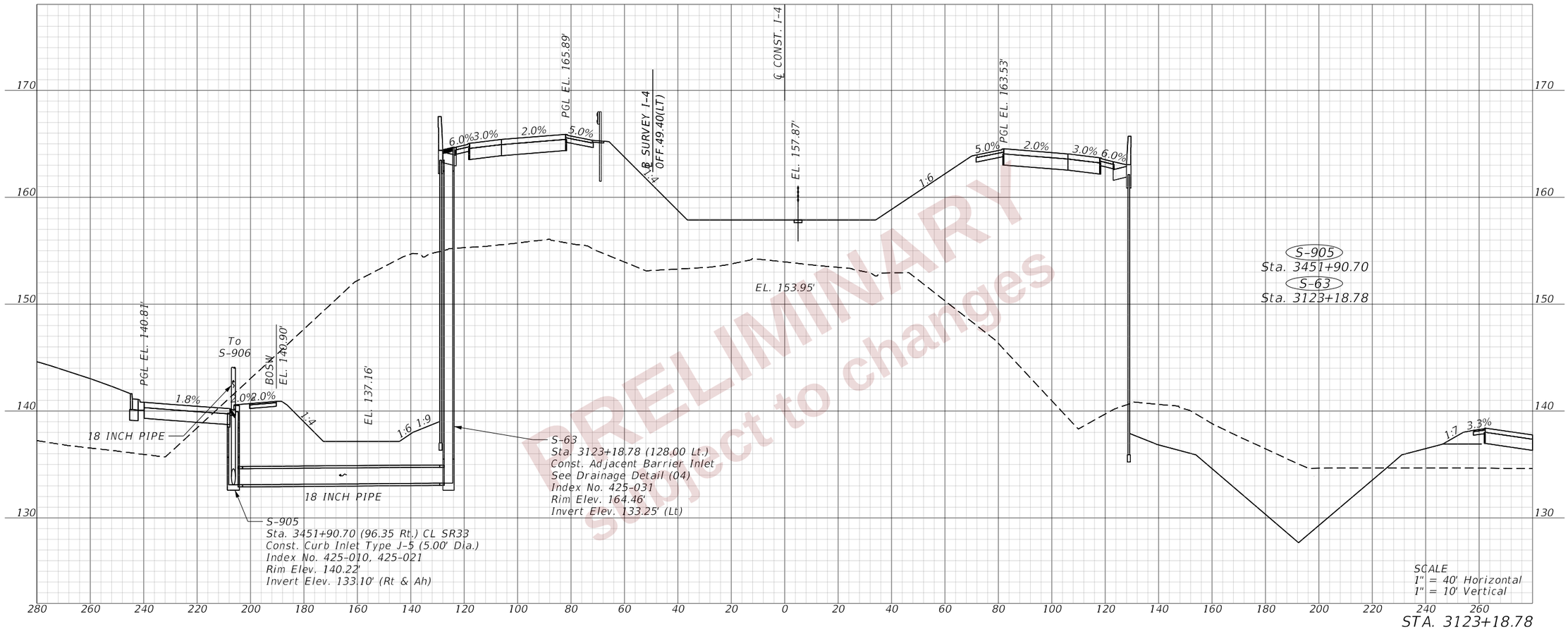

PRELIMINARY
Subject to changes

REVISIONS				ENGINEER OF RECORD	STATE OF FLORIDA DEPARTMENT OF TRANSPORTATION			DRAINAGE STRUCTURES (16) I4 (SR 400)	SHEET NO.
DATE	DESCRIPTION	DATE	DESCRIPTION	LISANDRO ZAPATA, P.E. LICENSE NUMBER 58822 H. W. LOCHNER 4300 W. CYPRESS STREET, SUITE 500 TAMPA, FLORIDA 33607	ROAD NO.	COUNTY	FINANCIAL PROJECT ID		273
					SR 400	POLK	430185-3-52-01		

THE OFFICIAL RECORD OF THIS SHEET IS THE ELECTRONIC FILE DIGITALLY SIGNED AND SEALED UNDER RULE 61G15-23.004, F.A.C.

2/29/2024 4:26:08 PM BHORTON
c:\pw_working\lochner-pw-01\dms18776\DRXSRD02.dgn

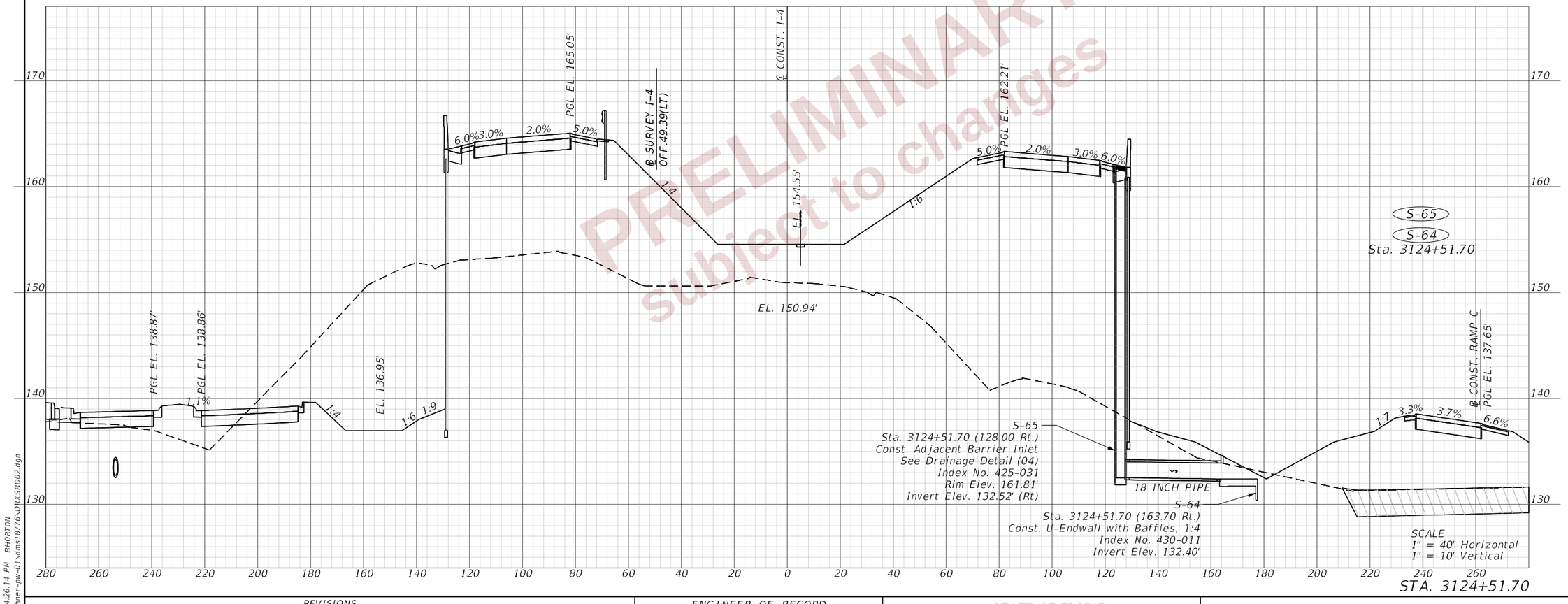

PRELIMINARY
subject to changes

REVISIONS				ENGINEER OF RECORD	STATE OF FLORIDA DEPARTMENT OF TRANSPORTATION			DRAINAGE STRUCTURES (17) I4 (SR 400)	SHEET NO.
DATE	DESCRIPTION	DATE	DESCRIPTION	LISANDRO ZAPATA, P.E. LICENSE NUMBER 58822 H. W. LOCHNER 4300 W. CYPRESS STREET, SUITE 500 TAMPA, FLORIDA 33607	ROAD NO.	COUNTY	FINANCIAL PROJECT ID		274
					SR 400	POLK	430185-3-52-01		

THE OFFICIAL RECORD OF THIS SHEET IS THE ELECTRONIC FILE DIGITALLY SIGNED AND SEALED UNDER RULE 61G15-23.004, F.A.C.

2/29/2024 4:26:14 PM BHORTON
c:\pw_working\lochner-pw-01\dms18776\DRXSRD02.dgn

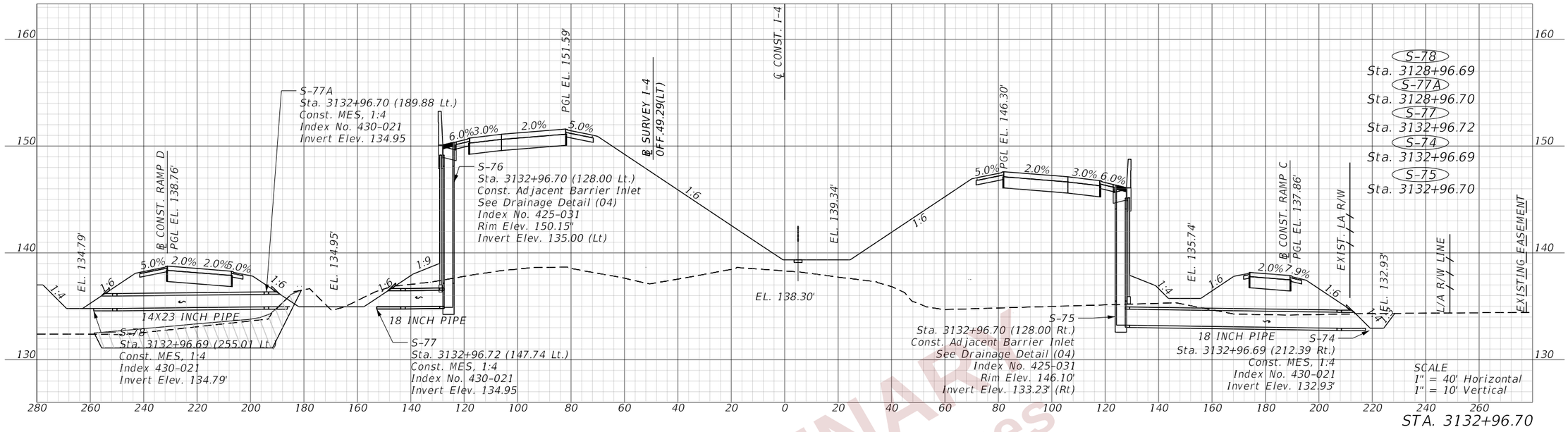

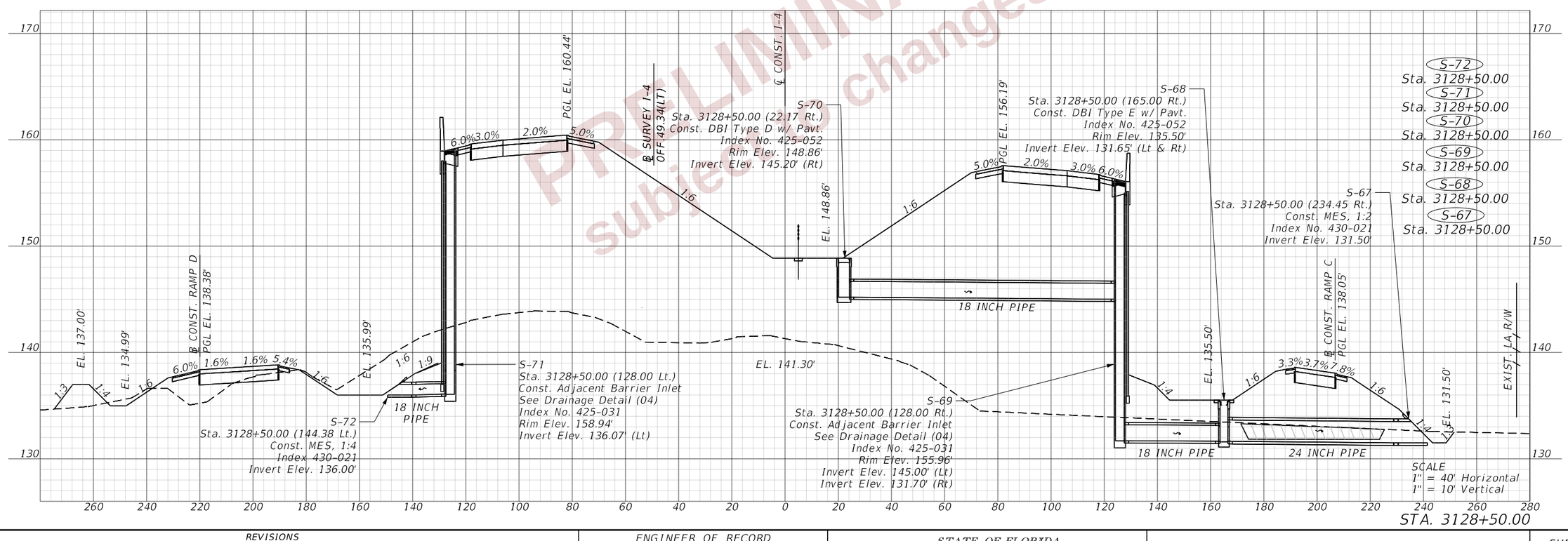

REVISIONS			
DATE	DESCRIPTION	DATE	DESCRIPTION

ENGINEER OF RECORD
LISANDRO ZAPATA, P.E.
LICENSE NUMBER 58822
H. W. LOCHNER
4300 W. CYPRESS STREET, SUITE 500
TAMPA, FLORIDA 33607

STATE OF FLORIDA
DEPARTMENT OF TRANSPORTATION

ROAD NO.	COUNTY	FINANCIAL PROJECT ID
SR 400	POLK	430185-3-52-01

DRAINAGE STRUCTURES (18)
I4 (SR 400)

SHEET NO. 275

THE OFFICIAL RECORD OF THIS SHEET IS THE ELECTRONIC FILE DIGITALLY SIGNED AND SEALED UNDER RULE 61G15-23.004, F.A.C.

PRELIMINARY
subject to changes

2/29/2024 4:26:26 PM BHORTON
c:\pw_working\lochner-pw-01\dms\8776\DRWSRD02.dgn

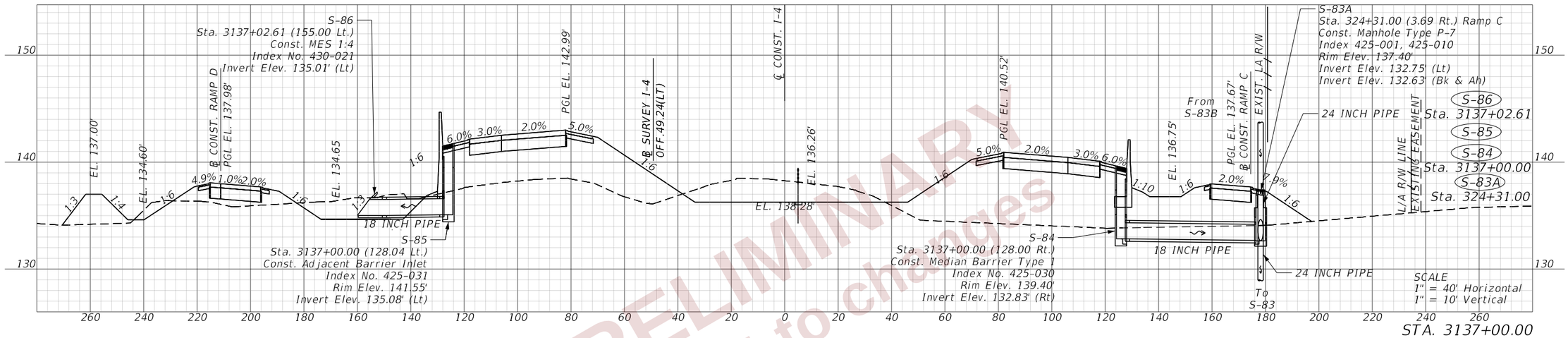

PRELIMINARY
subject to changes

REVISIONS			
DATE	DESCRIPTION	DATE	DESCRIPTION

ENGINEER OF RECORD

LISANDRO ZAPATA, P.E.
LICENSE NUMBER 58822
H. W. LOCHNER
4300 W. CYPRESS STREET, SUITE 500
TAMPA, FLORIDA 33607

STATE OF FLORIDA
DEPARTMENT OF TRANSPORTATION

ROAD NO.	COUNTY	FINANCIAL PROJECT ID
SR 400	POLK	430185-3-52-01

DRAINAGE STRUCTURES (19)
I4 (SR 400)

SHEET NO. 276

THE OFFICIAL RECORD OF THIS SHEET IS THE ELECTRONIC FILE DIGITALLY SIGNED AND SEALED UNDER RULE 61G15-23.004, F.A.C.

2/29/2024 4:26:38 PM BHORTON
c:\pw_working\lochner_pw-01\dms\8776\DRWSRD02.dgn

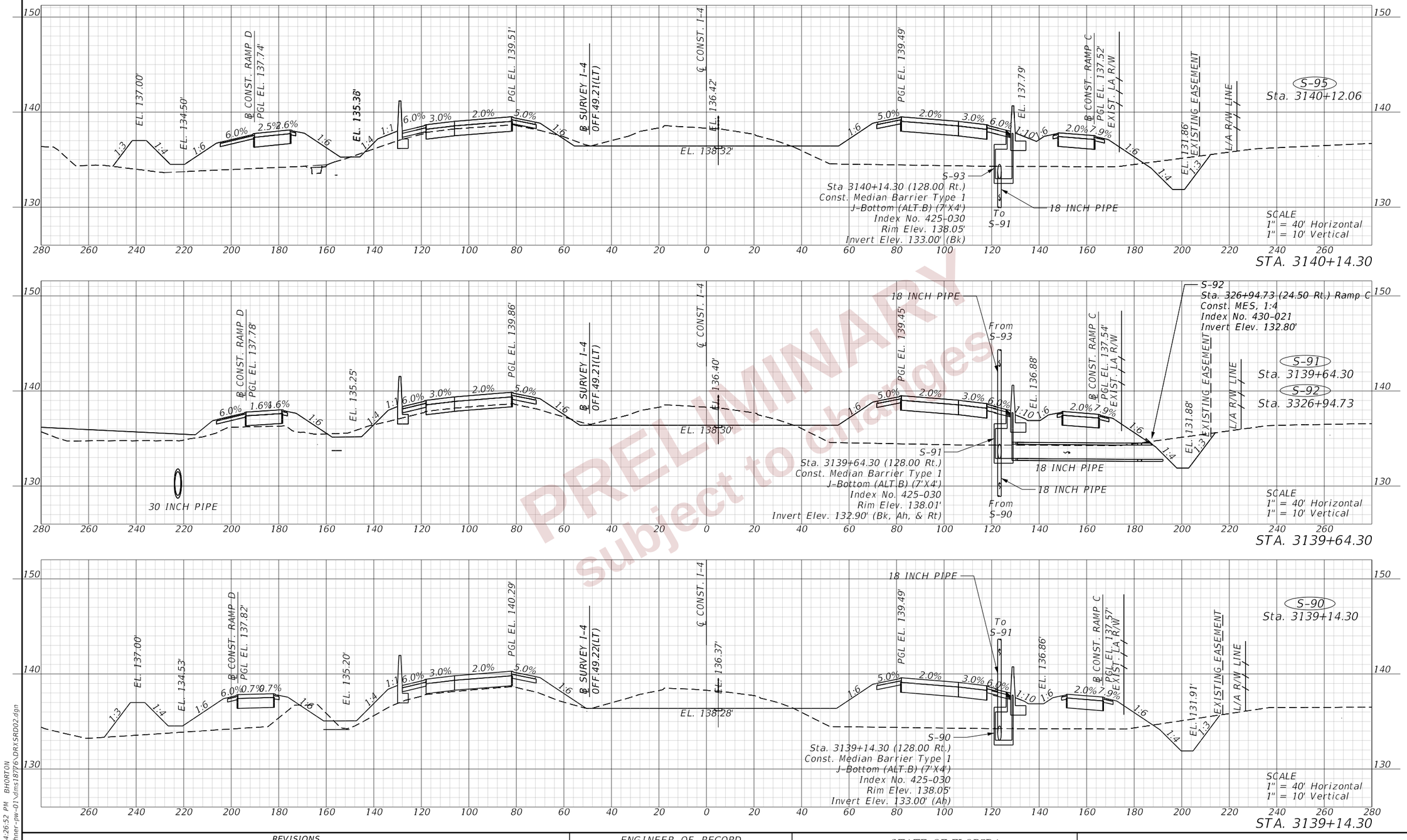

PRELIMINARY
subject to changes

THE OFFICIAL RECORD OF THIS SHEET IS THE ELECTRONIC FILE DIGITALLY SIGNED AND SEALED UNDER RULE 61G15-23.004, F.A.C.

REVISIONS			
DATE	DESCRIPTION	DATE	DESCRIPTION

ENGINEER OF RECORD
LISANDRO ZAPATA, P.E.
LICENSE NUMBER 58822
H. W. LOCHNER
4300 W. CYPRESS STREET, SUITE 500
TAMPA, FLORIDA 33607

STATE OF FLORIDA
DEPARTMENT OF TRANSPORTATION

ROAD NO.	COUNTY	FINANCIAL PROJECT ID
SR 400	POLK	430185-3-52-01

DRAINAGE STRUCTURES (20)
I4 (SR 400)

SHEET NO. 277

2/29/2024 4:26:52 PM BHORTON
c:\pw_working\lochner-pw-01\dms18776\DRXSRD02.dgn

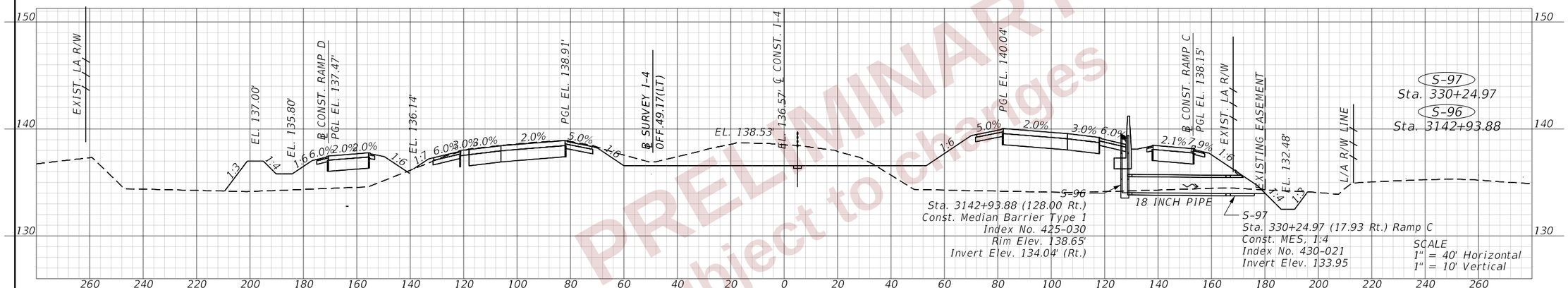

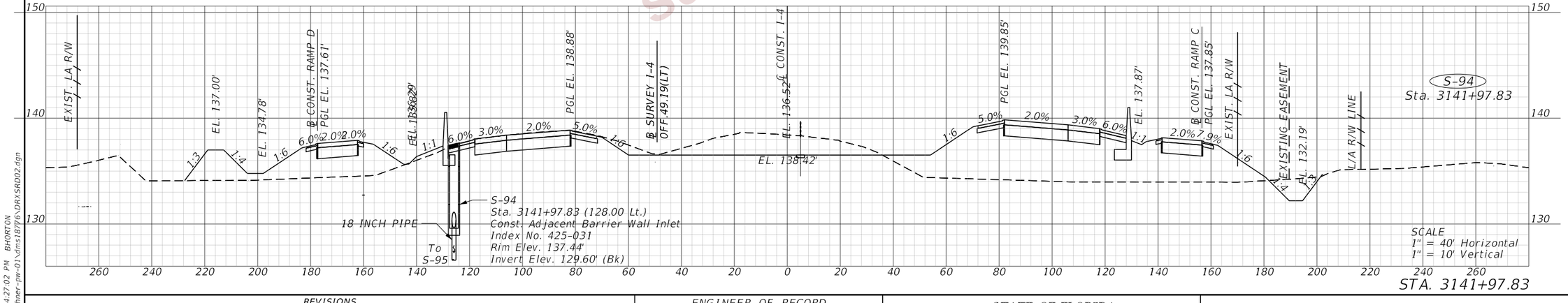

PRELIMINARY
subject to change

REVISIONS				ENGINEER OF RECORD	STATE OF FLORIDA DEPARTMENT OF TRANSPORTATION			DRAINAGE STRUCTURES (21) I4 (SR 400)	SHEET NO.
DATE	DESCRIPTION	DATE	DESCRIPTION	LISANDRO ZAPATA, P.E. LICENSE NUMBER 58822 H. W. LOCHNER 4300 W. CYPRESS STREET, SUITE 500 TAMPA, FLORIDA 33607	ROAD NO.	COUNTY	FINANCIAL PROJECT ID		278
					SR 400	POLK	430185-3-52-01		

THE OFFICIAL RECORD OF THIS SHEET IS THE ELECTRONIC FILE DIGITALLY SIGNED AND SEALED UNDER RULE 61G15-23.004, F.A.C.

2/29/2024 4:27:02 PM BHORTON
c:\pw_working\lochner-pw-01\dms18776\DRXSRD02.dgn

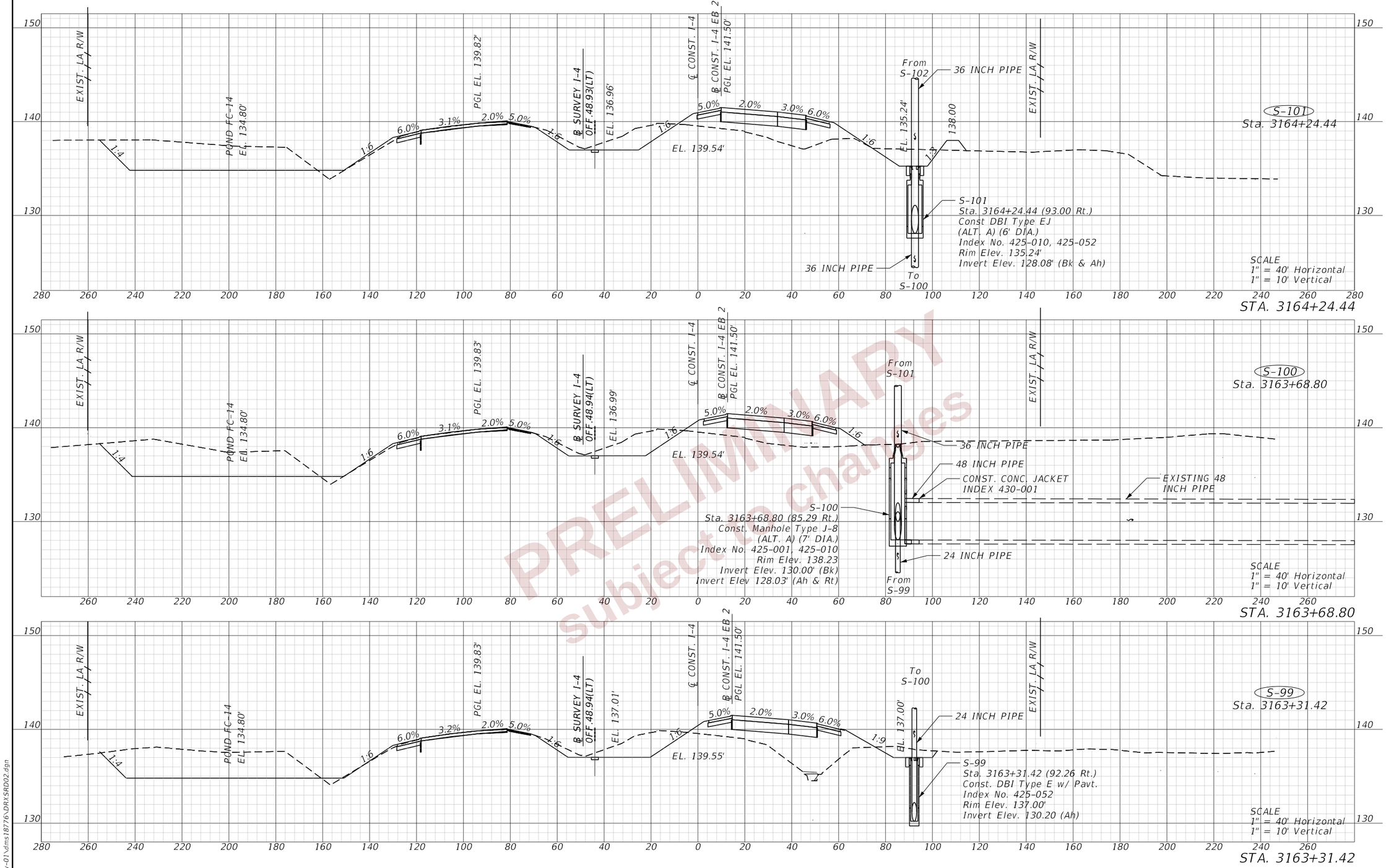

PRELIMINARY subject to change

REVISIONS				ENGINEER OF RECORD	STATE OF FLORIDA DEPARTMENT OF TRANSPORTATION			DRAINAGE STRUCTURES (22) I4 (SR 400)	SHEET NO.
DATE	DESCRIPTION	DATE	DESCRIPTION	LISANDRO ZAPATA, P.E. LICENSE NUMBER 58822 H. W. LOCHNER 4300 W. CYPRESS STREET, SUITE 500 TAMPA, FLORIDA 33607	ROAD NO.	COUNTY	FINANCIAL PROJECT ID		279
					SR 400	POLK	430185-3-52-01		

THE OFFICIAL RECORD OF THIS SHEET IS THE ELECTRONIC FILE DIGITALLY SIGNED AND SEALED UNDER RULE 61G15-23.004, F.A.C.

2/29/2024 9:12:40 PM ANDRES.FERNANDEZ
c:\pw_working\lochner-pw-01\dms18776\DRX\SR002.dgn

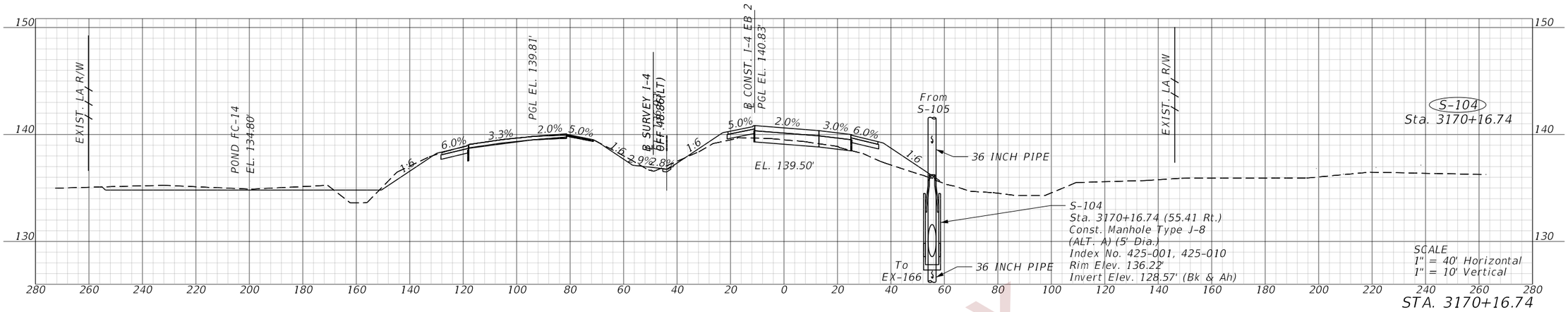

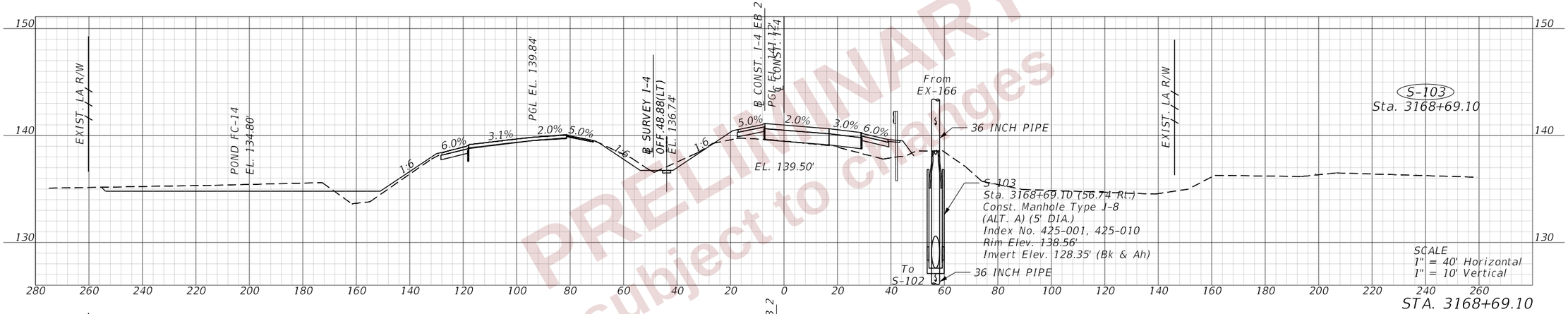

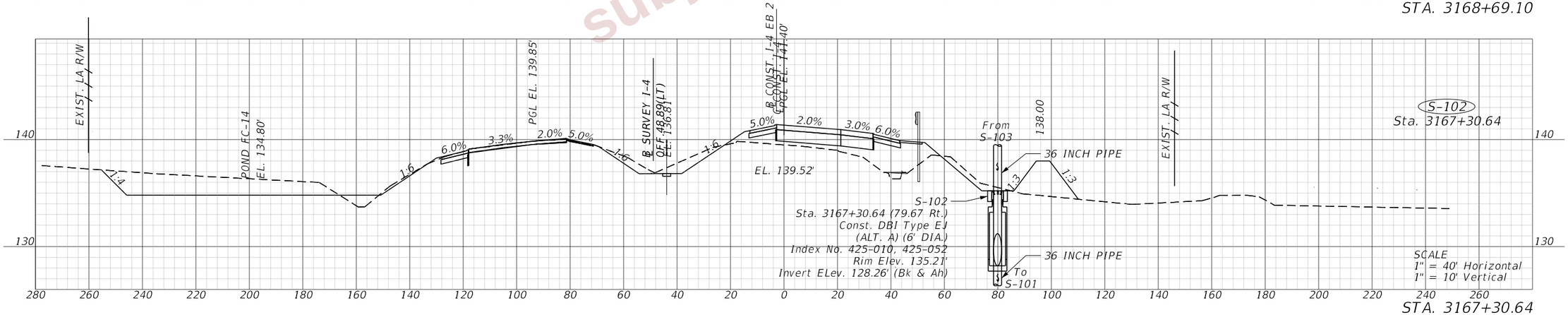

PRELIMINARY
subject to changes

REVISIONS				ENGINEER OF RECORD	STATE OF FLORIDA DEPARTMENT OF TRANSPORTATION			DRAINAGE STRUCTURES (23) I4 (SR 400)	SHEET NO.
DATE	DESCRIPTION	DATE	DESCRIPTION	LISANDRO ZAPATA, P.E. LICENSE NUMBER 58822 H. W. LOCHNER 4300 W. CYPRESS STREET, SUITE 500 TAMPA, FLORIDA 33607	ROAD NO.	COUNTY	FINANCIAL PROJECT ID		280
					SR 400	POLK	430185-3-52-01		

THE OFFICIAL RECORD OF THIS SHEET IS THE ELECTRONIC FILE DIGITALLY SIGNED AND SEALED UNDER RULE 61G15-23.004, F.A.C.

2/29/2024 9:31:13 PM ANDRES.FERNANDEZ
c:\pw_working\lochner-pw-01\dms18776\DRI\SRD02.dgn

PRELIMINARY
subject to changes

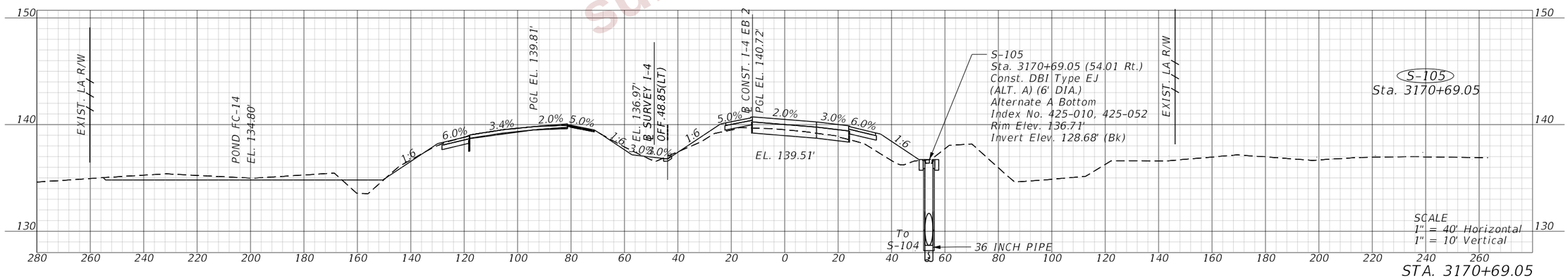

REVISIONS				ENGINEER OF RECORD	STATE OF FLORIDA DEPARTMENT OF TRANSPORTATION			DRAINAGE STRUCTURES (24) I4 (SR 400)	SHEET NO.
DATE	DESCRIPTION	DATE	DESCRIPTION	LISANDRO ZAPATA, P.E. LICENSE NUMBER 58822 H. W. LOCHNER 4300 W. CYPRESS STREET, SUITE 500 TAMPA, FLORIDA 33607	ROAD NO.	COUNTY	FINANCIAL PROJECT ID		281
					SR 400	POLK	430185-3-52-01		

THE OFFICIAL RECORD OF THIS SHEET IS THE ELECTRONIC FILE DIGITALLY SIGNED AND SEALED UNDER RULE 61G15-23.004, F.A.C.

2/29/2024 4:27:34 PM BHORTON
c:\pw_working\lochner-pw-01\dms18776\DRXSRD02.dgn

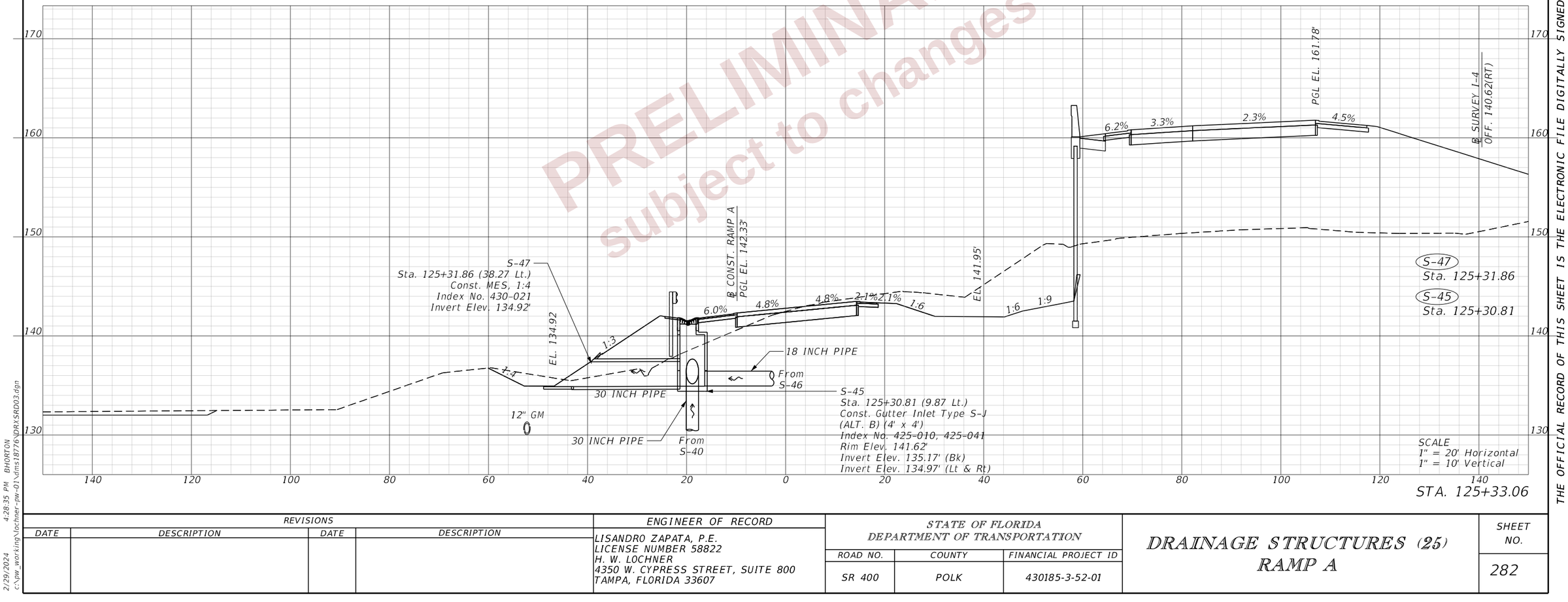

REVISIONS				ENGINEER OF RECORD	STATE OF FLORIDA DEPARTMENT OF TRANSPORTATION			DRAINAGE STRUCTURES (25) RAMP A	SHEET NO.
DATE	DESCRIPTION	DATE	DESCRIPTION	LISANDRO ZAPATA, P.E. LICENSE NUMBER 58822 H. W. LOCHNER 4350 W. CYPRESS STREET, SUITE 800 TAMPA, FLORIDA 33607	ROAD NO.	COUNTY	FINANCIAL PROJECT ID		282
					SR 400	POLK	430185-3-52-01		

2/29/2024 4:28:35 PM BHORTON
C:\pw_working\lochner-pw-01\dms18776\NDRXSRD03.dgn

THE OFFICIAL RECORD OF THIS SHEET IS THE ELECTRONIC FILE DIGITALLY SIGNED AND SEALED UNDER RULE 61G15-23.004, F.A.C.

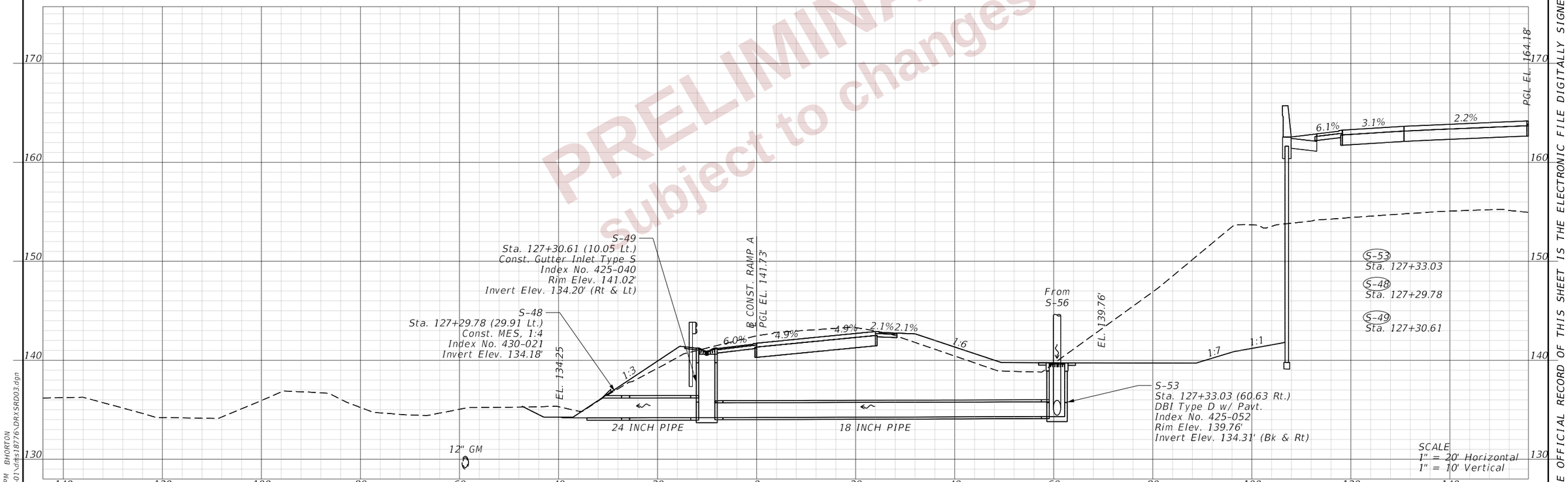

PRELIMINARY
subject to changes

REVISIONS				ENGINEER OF RECORD	STATE OF FLORIDA DEPARTMENT OF TRANSPORTATION			DRAINAGE STRUCTURES (26) RAMP A	SHEET NO.
DATE	DESCRIPTION	DATE	DESCRIPTION	LISANDRO ZAPATA, P.E. LICENSE NUMBER 58822 H. W. LOCHNER 4350 W. CYPRESS STREET, SUITE 800 TAMPA, FLORIDA 33607	ROAD NO.	COUNTY	FINANCIAL PROJECT ID		283
					SR 400	POLK	430185-3-52-01		

THE OFFICIAL RECORD OF THIS SHEET IS THE ELECTRONIC FILE DIGITALLY SIGNED AND SEALED UNDER RULE 61G15-23.004, F.A.C.

2/29/2024 4:28:40 PM BHORTON
c:\pw_working\lochner-pw-01\dfs18776\DRXSRD03.dgn

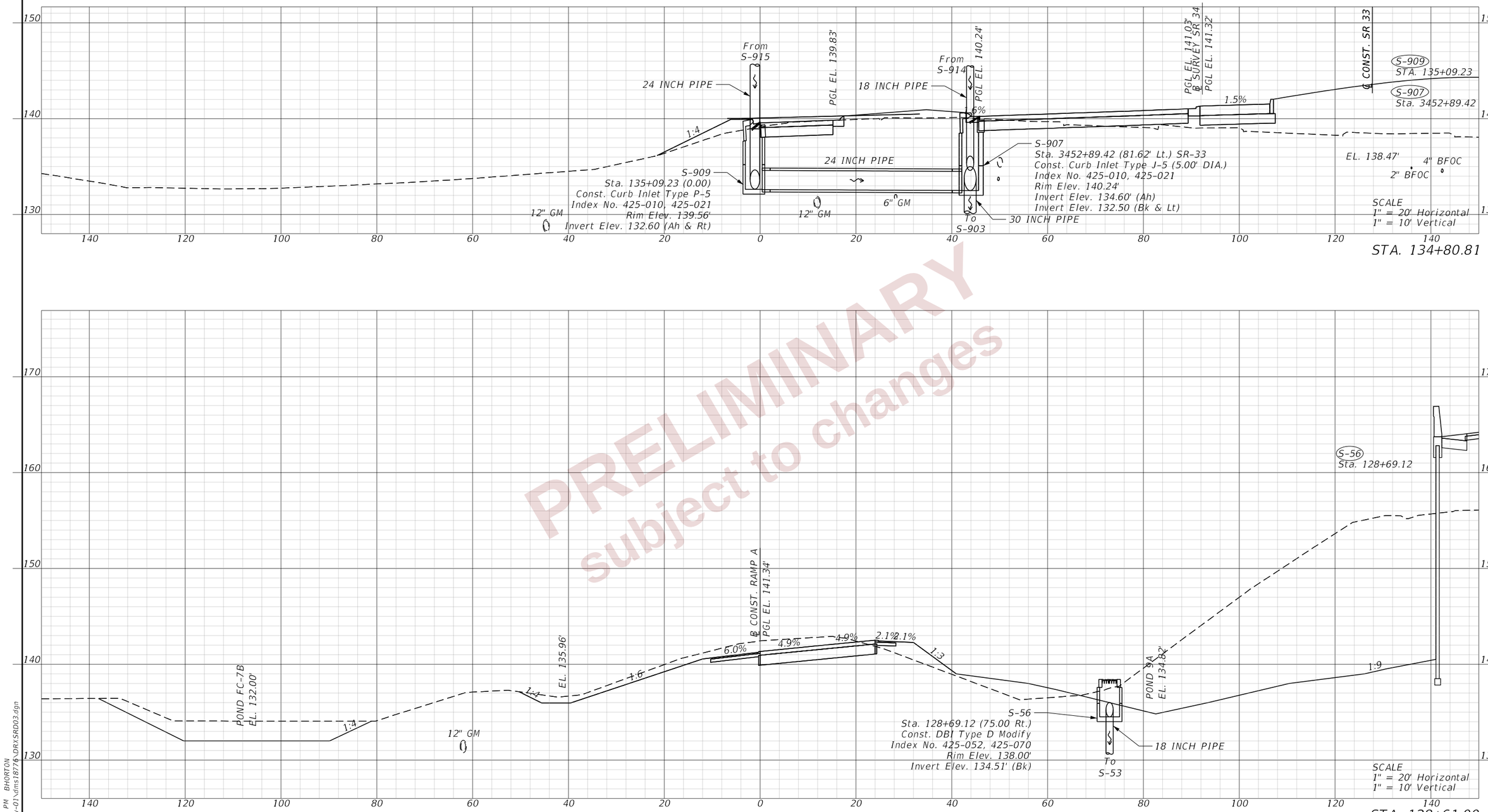

PRELIMINARY
subject to changes

REVISIONS				ENGINEER OF RECORD	STATE OF FLORIDA DEPARTMENT OF TRANSPORTATION			DRAINAGE STRUCTURES (27) RAMP A	SHEET NO.
DATE	DESCRIPTION	DATE	DESCRIPTION	LISANDRO ZAPATA, P.E. LICENSE NUMBER 58822 H. W. LOCHNER 4350 W. CYPRESS STREET, SUITE 800 TAMPA, FLORIDA 33607	ROAD NO.	COUNTY	FINANCIAL PROJECT ID		284
					SR 400	POLK	430185-3-52-01		

THE OFFICIAL RECORD OF THIS SHEET IS THE ELECTRONIC FILE DIGITALLY SIGNED AND SEALED UNDER RULE 61G15-23.004, F.A.C.

2/29/2024 4:28:47 PM BHORTON
c:\pw_working\lochner-pw-01\dms1877\VDR\SR003.dgn

PRELIMINARY
subject to changes

REVISIONS			
DATE	DESCRIPTION	DATE	DESCRIPTION

ENGINEER OF RECORD

LISANDRO ZAPATA, P.E.
LICENSE NUMBER 58822
H. W. LOCHNER
4350 W. CYPRESS STREET, SUITE 800
TAMPA, FLORIDA 33607

STATE OF FLORIDA
DEPARTMENT OF TRANSPORTATION

ROAD NO.	COUNTY	FINANCIAL PROJECT ID
SR 400	POLK	430185-3-52-01

DRAINAGE STRUCTURES (28)
RAMP A

SHEET NO. 285

2/29/2024 4:28:57 PM BHORTON
c:\pw_working\lochner-pw-01\dms187716\DRYSRD03.dgn

THE OFFICIAL RECORD OF THIS SHEET IS THE ELECTRONIC FILE DIGITALLY SIGNED AND SEALED UNDER RULE 61G15-23.004, F.A.C.

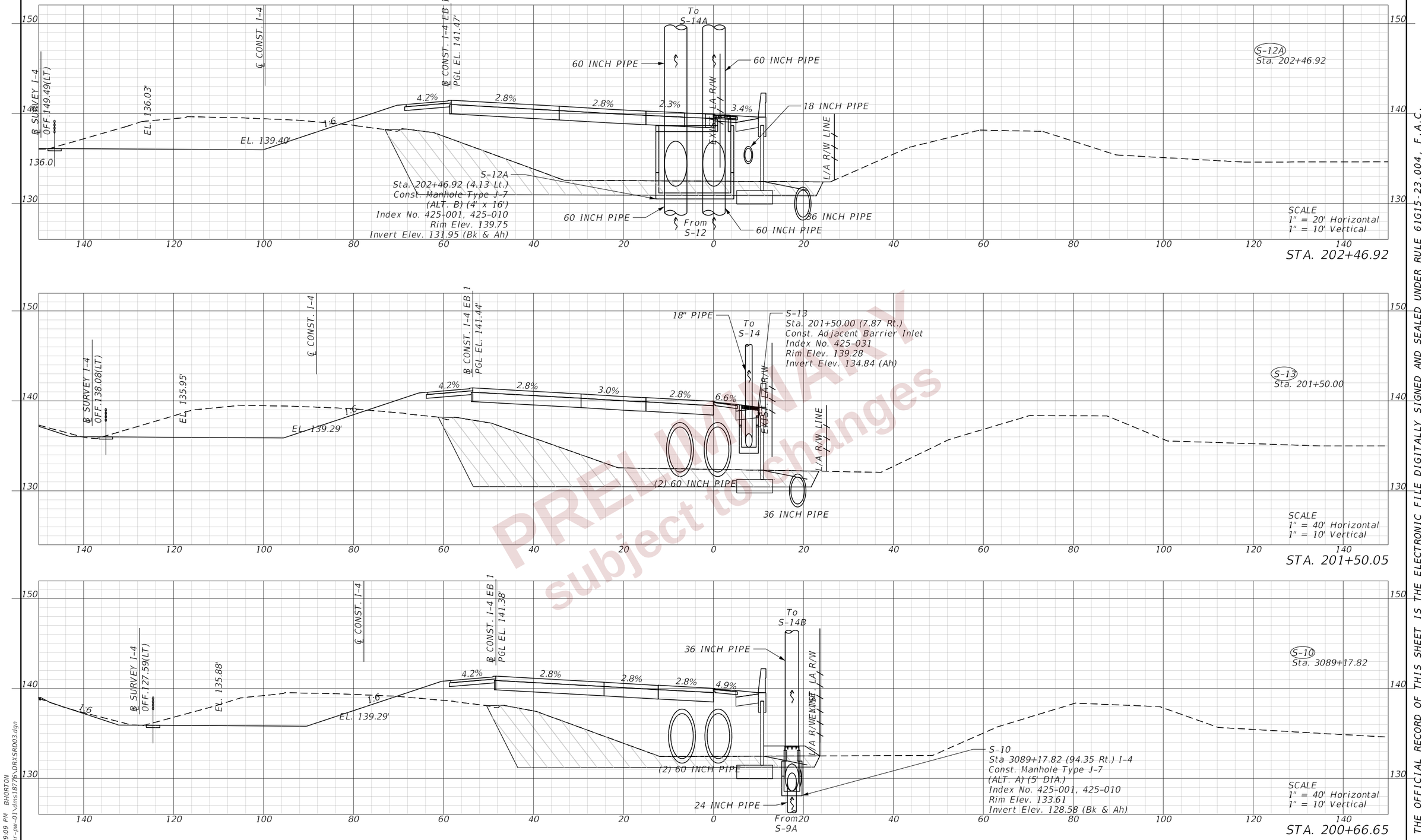

PRELIMINARY
subject to changes

REVISIONS				ENGINEER OF RECORD	STATE OF FLORIDA DEPARTMENT OF TRANSPORTATION			DRAINAGE STRUCTURES (29) RAMP B	SHEET NO.
DATE	DESCRIPTION	DATE	DESCRIPTION	LISANDRO ZAPATA, P.E. LICENSE NUMBER 58822 H. W. LOCHNER 4350 W. CYPRESS STREET, SUITE 800 TAMPA, FLORIDA 33607	ROAD NO.	COUNTY	FINANCIAL PROJECT ID		286
					SR 400	POLK	430185-3-52-01		

THE OFFICIAL RECORD OF THIS SHEET IS THE ELECTRONIC FILE DIGITALLY SIGNED AND SEALED UNDER RULE 61G15-23.004, F.A.C.

2/29/2024 4:29:09 PM BHORTON
c:\pw_working\lochner-pw-01\dms1877\DRXSRD03.dgn

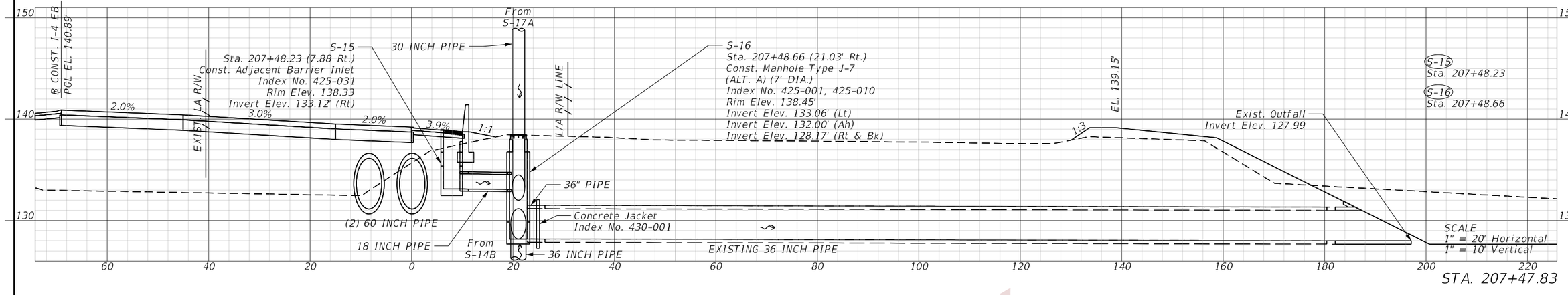

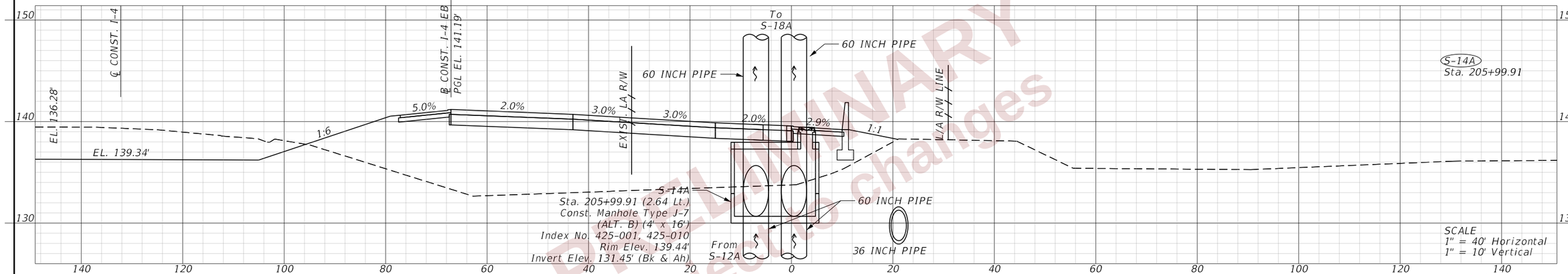

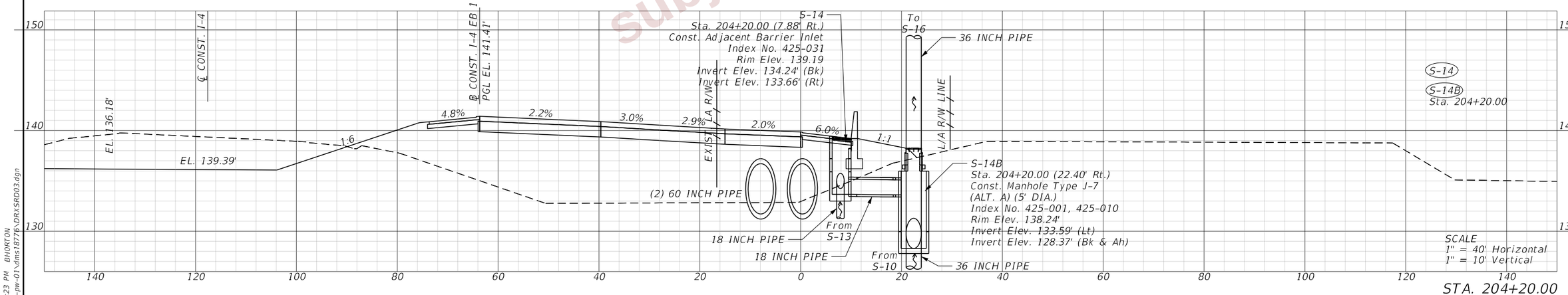

PRELIMINARY
subject to changes

REVISIONS				ENGINEER OF RECORD	STATE OF FLORIDA DEPARTMENT OF TRANSPORTATION			DRAINAGE STRUCTURES (30) RAMP B	SHEET NO.
DATE	DESCRIPTION	DATE	DESCRIPTION	LISANDRO ZAPATA, P.E. LICENSE NUMBER 58822 H. W. LOCHNER 4350 W. CYPRESS STREET, SUITE 800 TAMPA, FLORIDA 33607	ROAD NO.	COUNTY	FINANCIAL PROJECT ID		287
					SR 400	POLK	430185-3-52-01		

THE OFFICIAL RECORD OF THIS SHEET IS THE ELECTRONIC FILE DIGITALLY SIGNED AND SEALED UNDER RULE 61G15-23.004, F.A.C.

2/29/2024 4:29:23 PM BHORTON
c:\pw_working\lochner-pw-01\dms1877\DRXSRD03.dgn

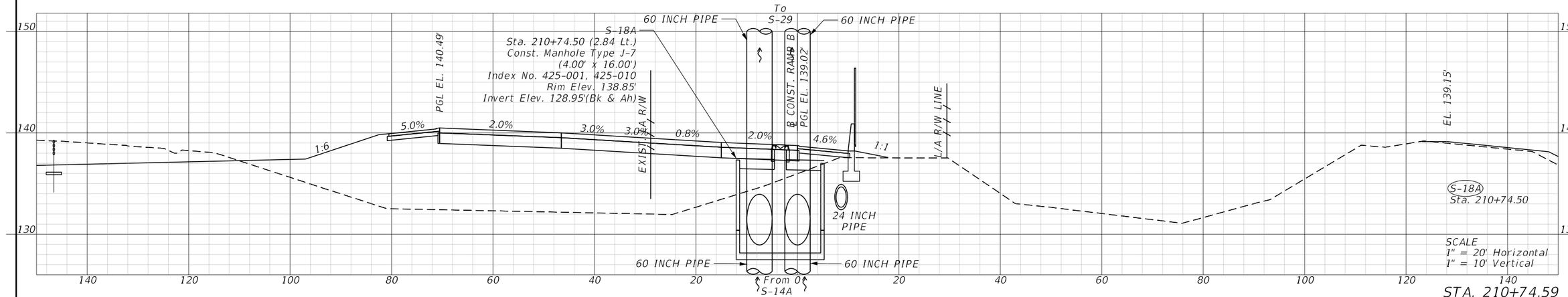

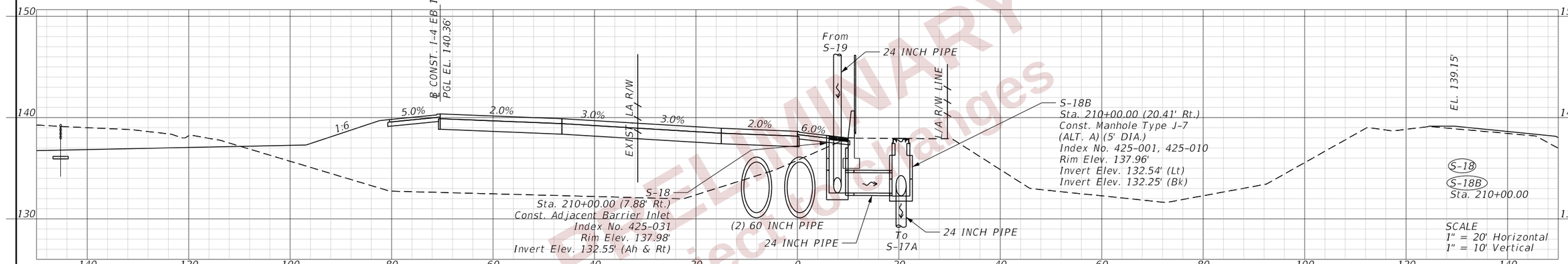

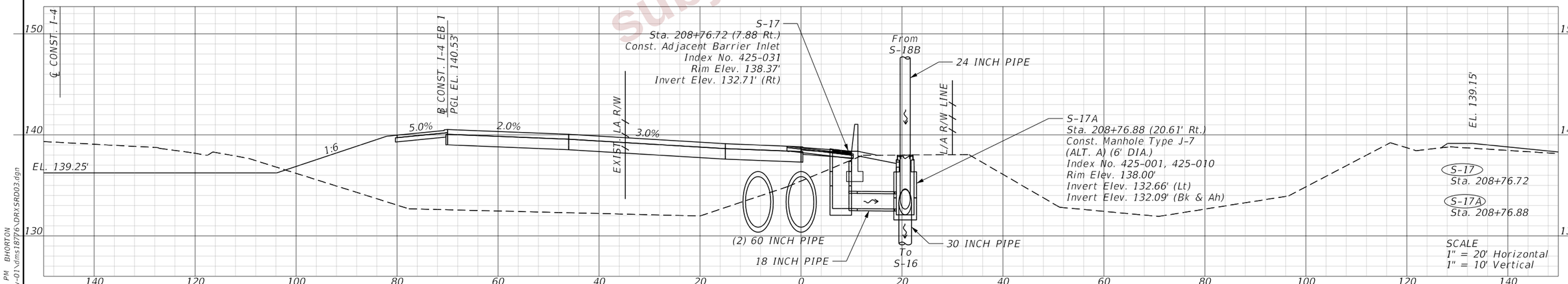

PRELIMINARY
Subject to Changes

REVISIONS				ENGINEER OF RECORD	STATE OF FLORIDA DEPARTMENT OF TRANSPORTATION			DRAINAGE STRUCTURES (31) RAMP B	SHEET NO.
DATE	DESCRIPTION	DATE	DESCRIPTION	LISANDRO ZAPATA, P.E. LICENSE NUMBER 58822 H. W. LOCHNER 4350 W. CYPRESS STREET, SUITE 800 TAMPA, FLORIDA 33607	ROAD NO.	COUNTY	FINANCIAL PROJECT ID		288
					SR 400	POLK	430185-3-52-01		

THE OFFICIAL RECORD OF THIS SHEET IS THE ELECTRONIC FILE DIGITALLY SIGNED AND SEALED UNDER RULE 61G15-23.004, F.A.C.

2/29/2024 4:29:36 PM BHORTON
c:\pw_working\lochner-pw-01\dms18776\DRXSR003.dgn

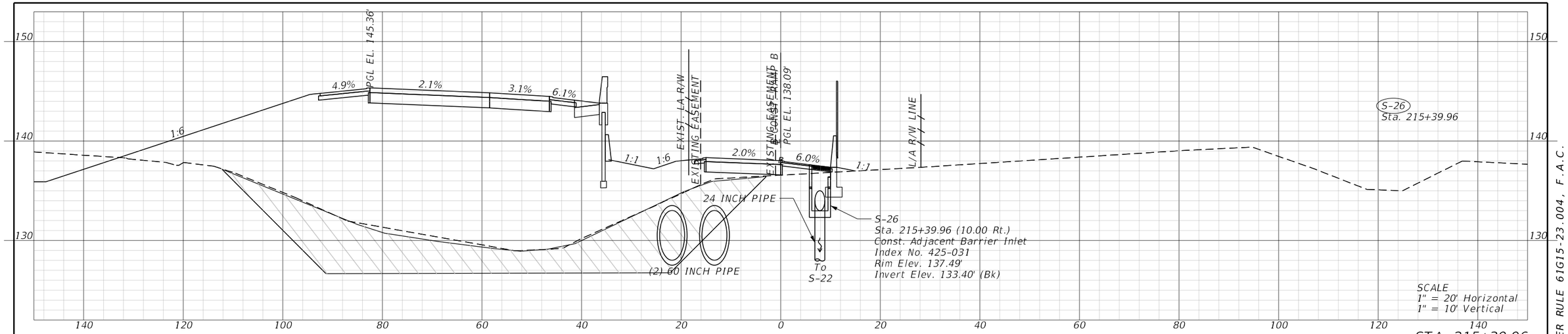

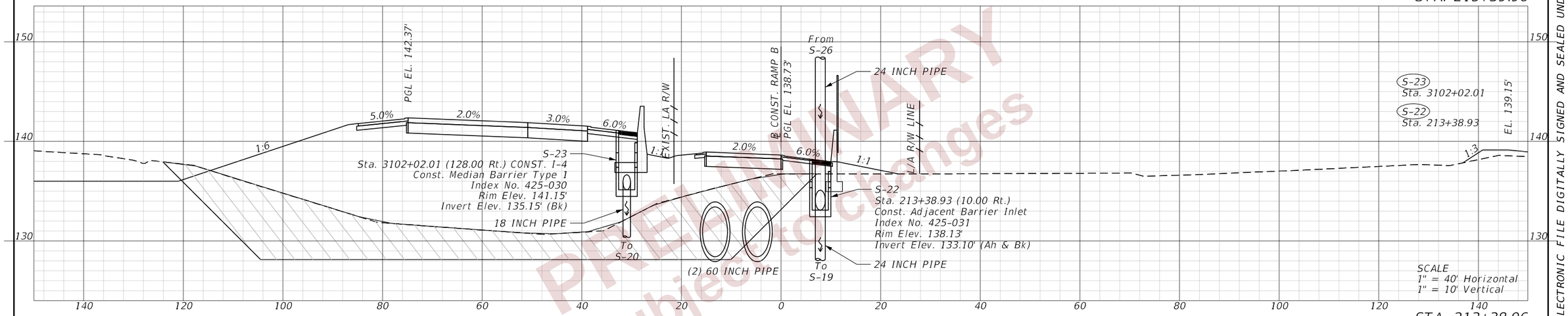

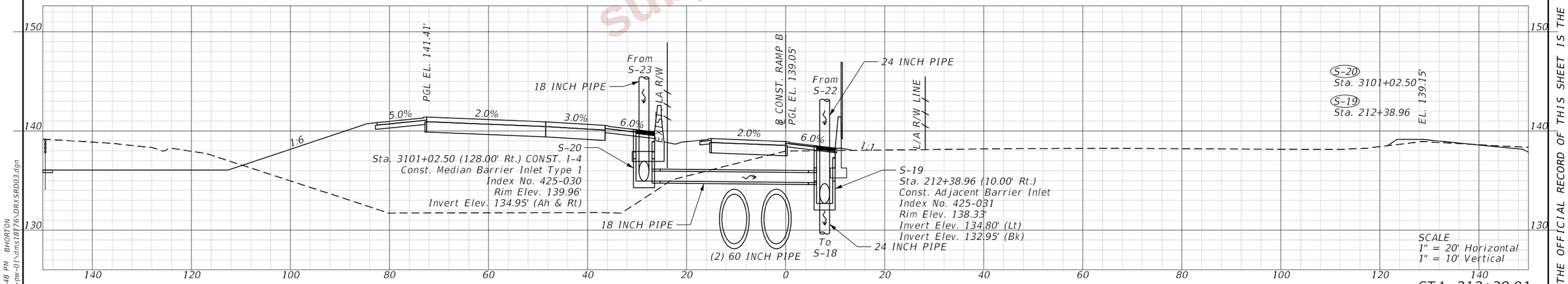

PRELIMINARY
subject to changes

REVISIONS			
DATE	DESCRIPTION	DATE	DESCRIPTION

ENGINEER OF RECORD
LISANDRO ZAPATA, P.E.
LICENSE NUMBER 58822
H. W. LOCHNER
4350 W. CYPRESS STREET, SUITE 800
TAMPA, FLORIDA 33607

STATE OF FLORIDA
DEPARTMENT OF TRANSPORTATION

ROAD NO.	COUNTY	FINANCIAL PROJECT ID
SR 400	POLK	430185-3-52-01

DRAINAGE STRUCTURES (32)
RAMP B

SHEET NO. 289

THE OFFICIAL RECORD OF THIS SHEET IS THE ELECTRONIC FILE DIGITALLY SIGNED AND SEALED UNDER RULE 61G15-23.004, F.A.C.

2/29/2024 4:29:48 PM BHORTON
c:\pw_working\lochner-pw-01\dms18776\DRXSRD03.dgn

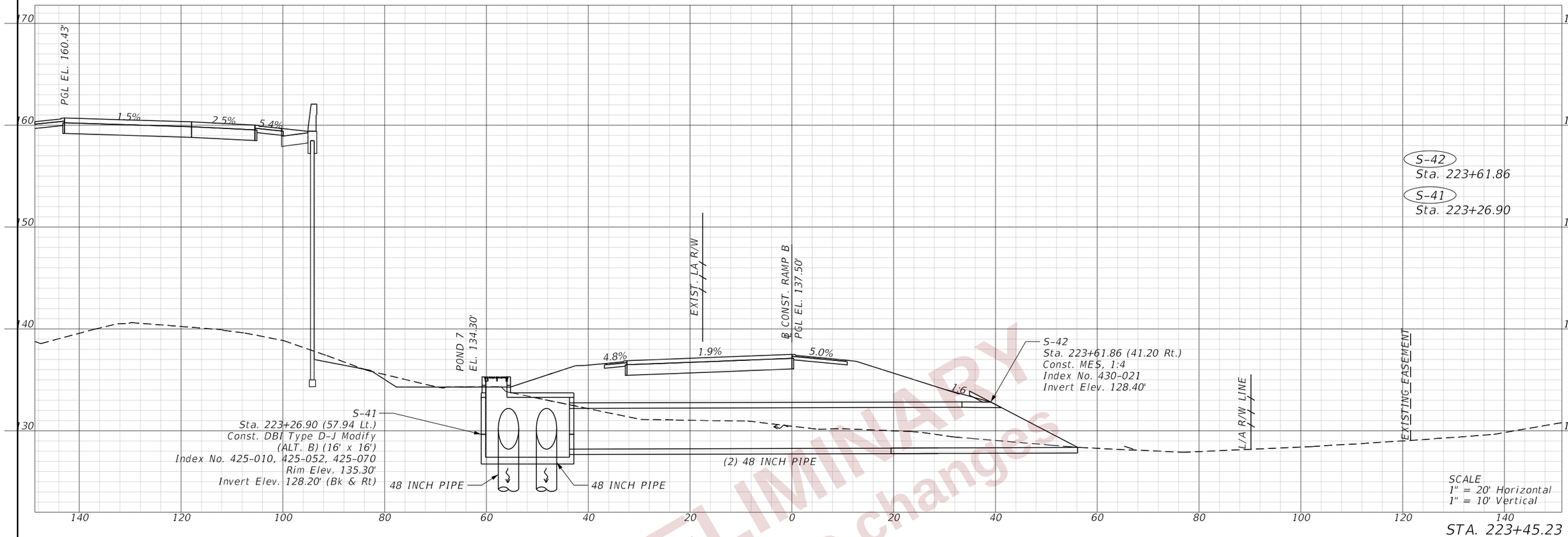

PRELIMINARY
subject to changes

THE OFFICIAL RECORD OF THIS SHEET IS THE ELECTRONIC FILE DIGITALLY SIGNED AND SEALED UNDER RULE 61G15-23.004, F.A.C.

2/29/2024 4:29:56 PM BHORTON
C:\pw_working\lochner-pw-01\dms18776\DRXSRD03.dgn

REVISIONS			
DATE	DESCRIPTION	DATE	DESCRIPTION

ENGINEER OF RECORD
LISANDRO ZAPATA, P.E.
LICENSE NUMBER 58822
H. W. LOCHNER
4350 W. CYPRESS STREET, SUITE 800
TAMPA, FLORIDA 33607

STATE OF FLORIDA
DEPARTMENT OF TRANSPORTATION

ROAD NO.	COUNTY	FINANCIAL PROJECT ID
SR 400	POLK	430185-3-52-01

DRAINAGE STRUCTURES (33)
RAMP B

SHEET NO. 290

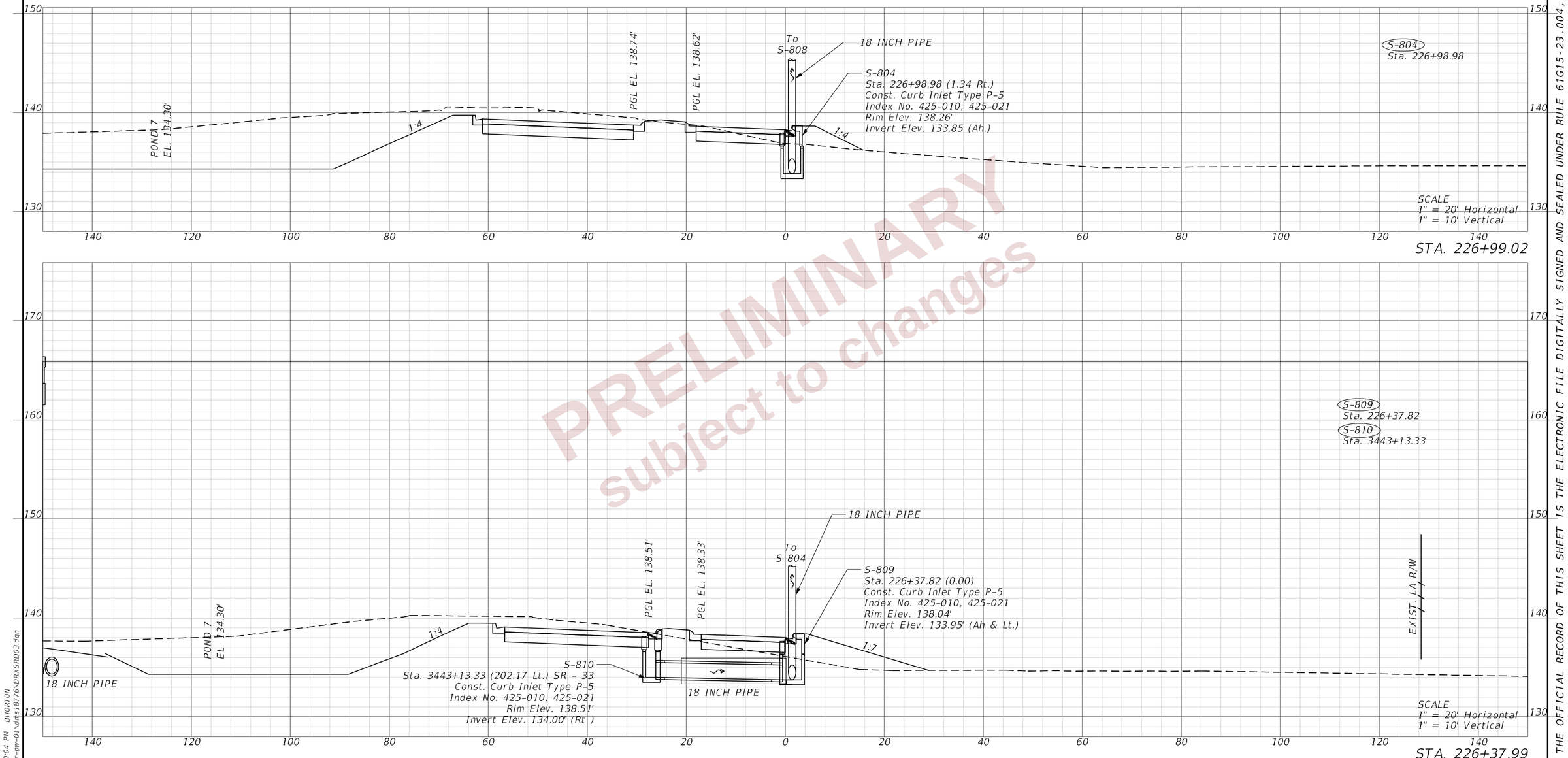

PRELIMINARY
subject to changes

REVISIONS			
DATE	DESCRIPTION	DATE	DESCRIPTION

ENGINEER OF RECORD
LISANDRO ZAPATA, P.E.
LICENSE NUMBER 58822
H. W. LOCHNER
4350 W. CYPRESS STREET, SUITE 800
TAMPA, FLORIDA 33607

STATE OF FLORIDA
DEPARTMENT OF TRANSPORTATION

ROAD NO.	COUNTY	FINANCIAL PROJECT ID
SR 400	POLK	430185-3-52-01

DRAINAGE STRUCTURES (34)
RAMP B

SHEET NO. 291

THE OFFICIAL RECORD OF THIS SHEET IS THE ELECTRONIC FILE DIGITALLY SIGNED AND SEALED UNDER RULE 61G15-23.004, F.A.C.

2/29/2024 4:30:04 PM BHORTON
c:\pw_working\lochner-pw-01\dms18776\DRXSRD03.dgn

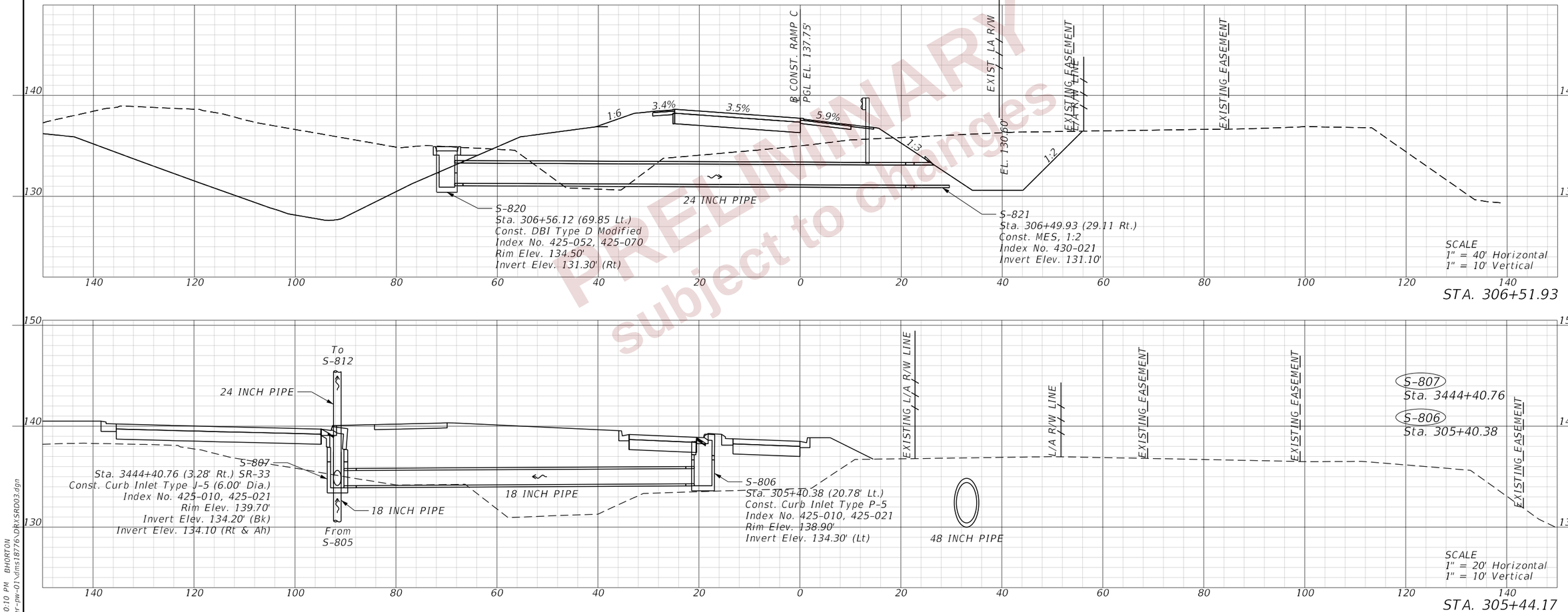

PRELIMINARY
subject to changes

REVISIONS				ENGINEER OF RECORD	STATE OF FLORIDA DEPARTMENT OF TRANSPORTATION			DRAINAGE STRUCTURES (35) RAMP C	SHEET NO.
DATE	DESCRIPTION	DATE	DESCRIPTION	LISANDRO ZAPATA, P.E. LICENSE NUMBER 58822 H. W. LOCHNER 4350 W. CYPRESS STREET, SUITE 800 TAMPA, FLORIDA 33607	ROAD NO.	COUNTY	FINANCIAL PROJECT ID		292
					SR 400	POLK	430185-3-52-01		

THE OFFICIAL RECORD OF THIS SHEET IS THE ELECTRONIC FILE DIGITALLY SIGNED AND SEALED UNDER RULE 61G15-23.004, F.A.C.

2/29/2024 4:30:10 PM BHORTON
c:\pw_working\lochner-pw-01\dms18776\DRXSRD03.dgn

PRELIMINARY
subject to changes

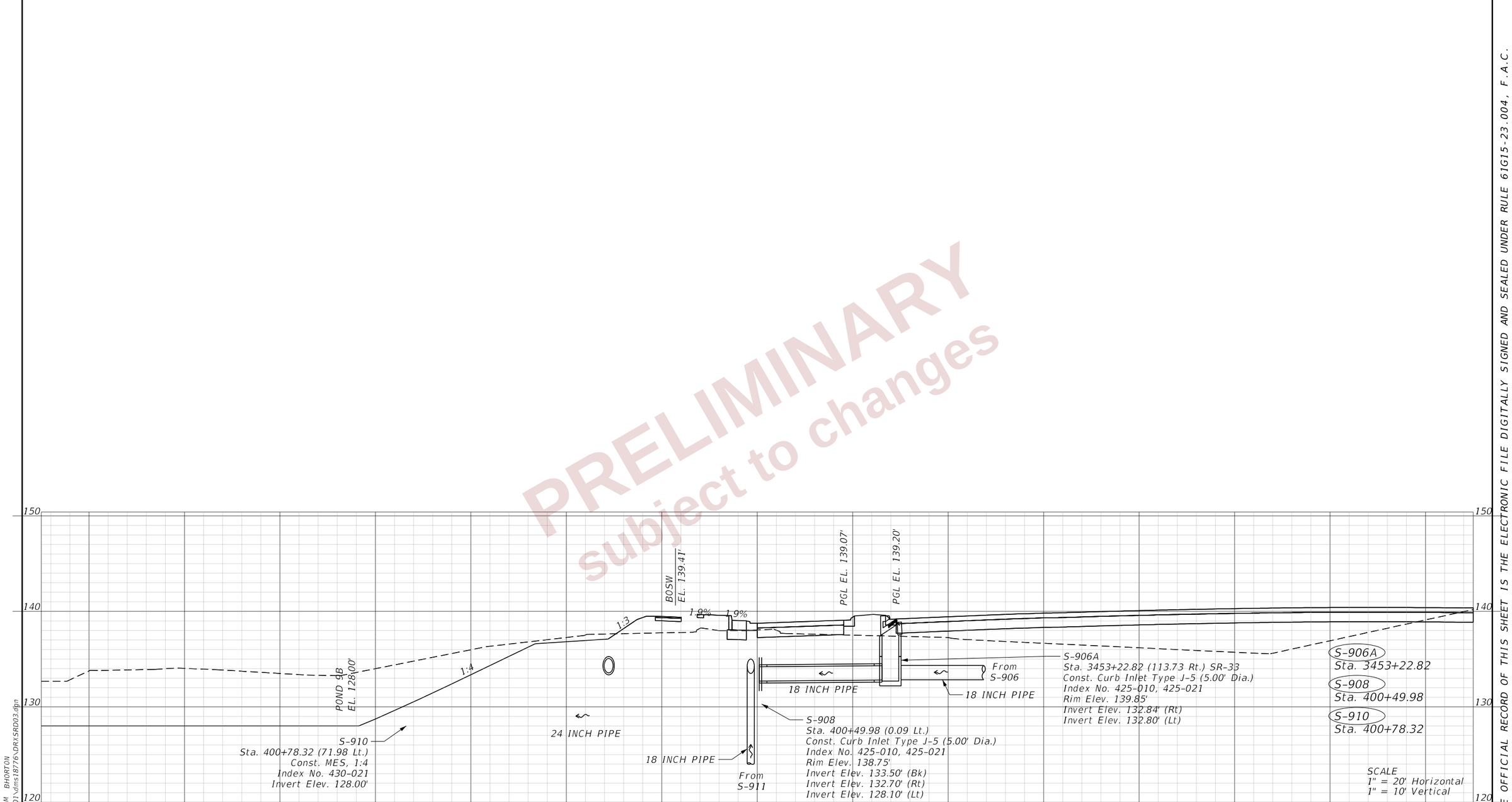

STA. 400+50.17

REVISIONS				ENGINEER OF RECORD	STATE OF FLORIDA DEPARTMENT OF TRANSPORTATION			DRAINAGE STRUCTURES (36) RAMP D	SHEET NO.
DATE	DESCRIPTION	DATE	DESCRIPTION	LISANDRO ZAPATA, P.E. LICENSE NUMBER 58822 H. W. LOCHNER 4350 W. CYPRESS STREET, SUITE 800 TAMPA, FLORIDA 33607	ROAD NO.	COUNTY	FINANCIAL PROJECT ID		293
					SR 400	POLK	430185-3-52-01		

THE OFFICIAL RECORD OF THIS SHEET IS THE ELECTRONIC FILE DIGITALLY SIGNED AND SEALED UNDER RULE 61G15-23.004, F.A.C.

2/29/2024 4:30:15 PM BHORTON
c:\pw_working\lochner-pw-01\dms18776\DRXSRD03.dgn

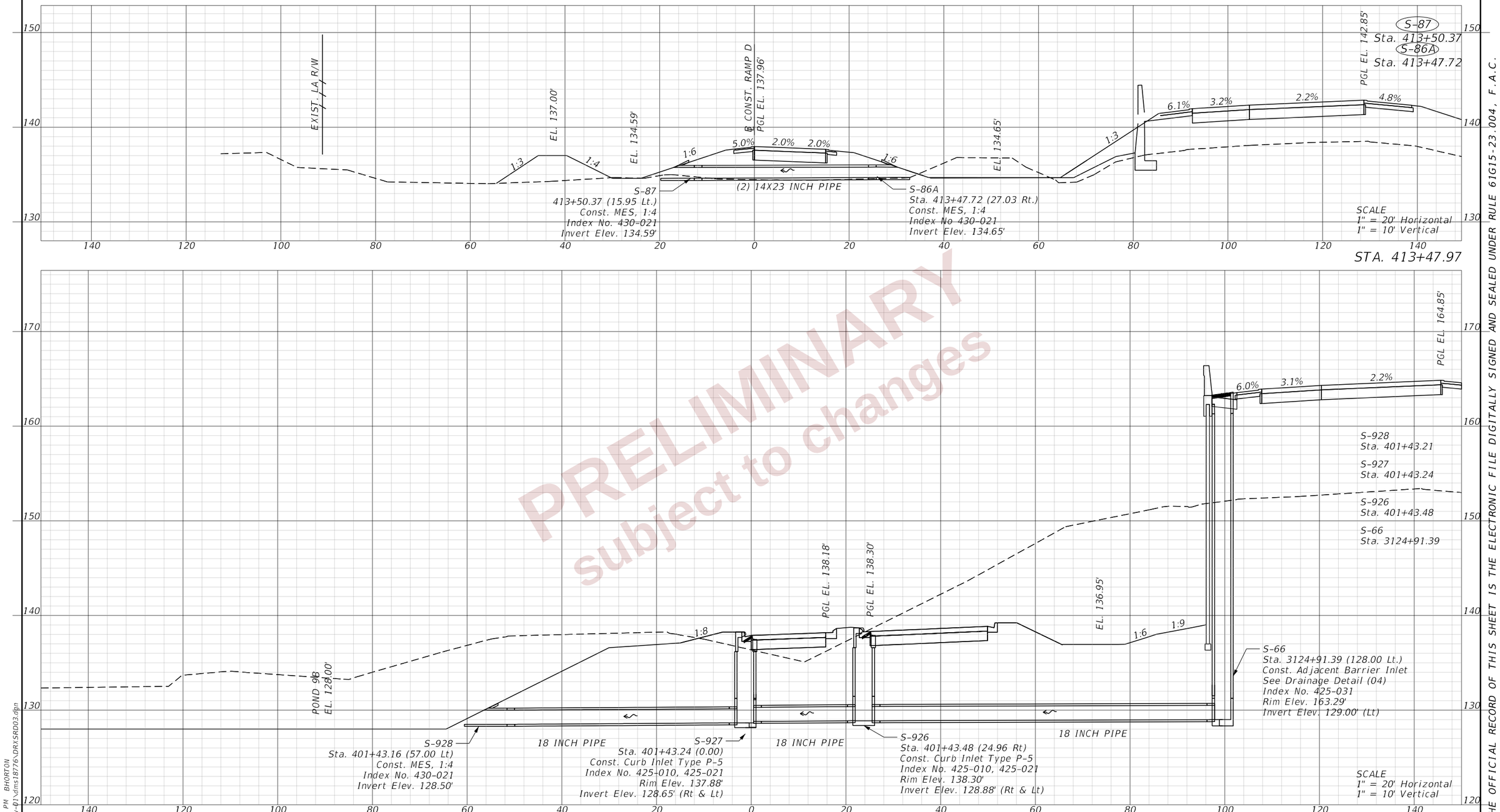

PRELIMINARY
subject to changes

REVISIONS				ENGINEER OF RECORD	STATE OF FLORIDA DEPARTMENT OF TRANSPORTATION			DRAINAGE STRUCTURES (37) RAMP D	SHEET NO.
DATE	DESCRIPTION	DATE	DESCRIPTION	LISANDRO ZAPATA, P.E. LICENSE NUMBER 58822 H. W. LOCHNER 4350 W. CYPRESS STREET, SUITE 800 TAMPA, FLORIDA 33607	ROAD NO.	COUNTY	FINANCIAL PROJECT ID		294
					SR 400	POLK	430185-3-52-01		

THE OFFICIAL RECORD OF THIS SHEET IS THE ELECTRONIC FILE DIGITALLY SIGNED AND SEALED UNDER RULE 61G15-23.004, F.A.C.

2/29/2024 4:30:23 PM BHORTON
c:\pw_working\lochner-pw-01\dms18776\DRXSR003.dgn

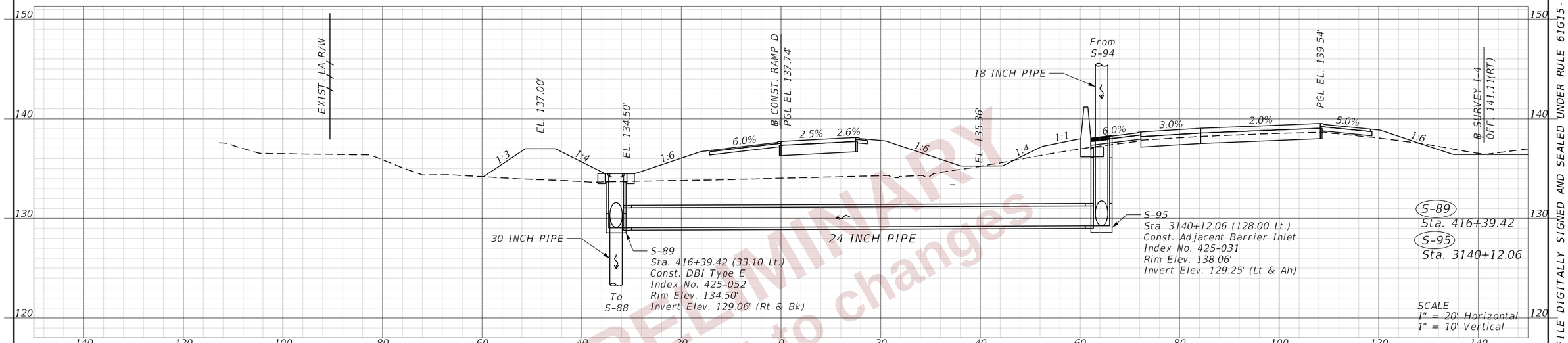

STA. 416+32.97

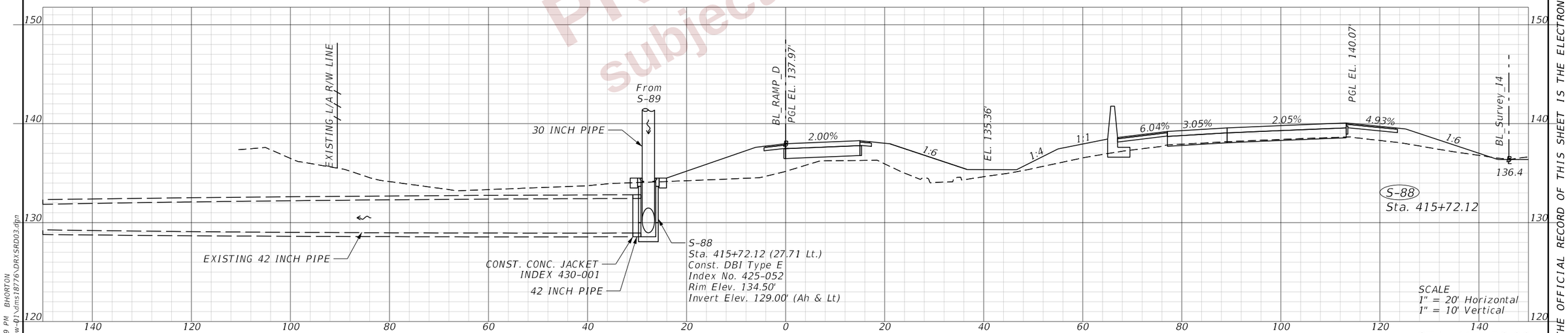

STA. 415+72.06

PRELIMINARY
subject to changes

REVISIONS				ENGINEER OF RECORD	STATE OF FLORIDA DEPARTMENT OF TRANSPORTATION			DRAINAGE STRUCTURES (38) RAMP D	SHEET NO.
DATE	DESCRIPTION	DATE	DESCRIPTION	LISANDRO ZAPATA, P.E. LICENSE NUMBER 58822 H. W. LOCHNER 4350 W. CYPRESS STREET, SUITE 800 TAMPA, FLORIDA 33607	ROAD NO.	COUNTY	FINANCIAL PROJECT ID		295
					SR 400	POLK	430185-3-52-01		

THE OFFICIAL RECORD OF THIS SHEET IS THE ELECTRONIC FILE DIGITALLY SIGNED AND SEALED UNDER RULE 61G15-23.004, F.A.C.

2/29/2024 4:30:29 PM BHORTON
c:\pw_working\lochner-pw-01\dms18776\DRXSRD03.dgn

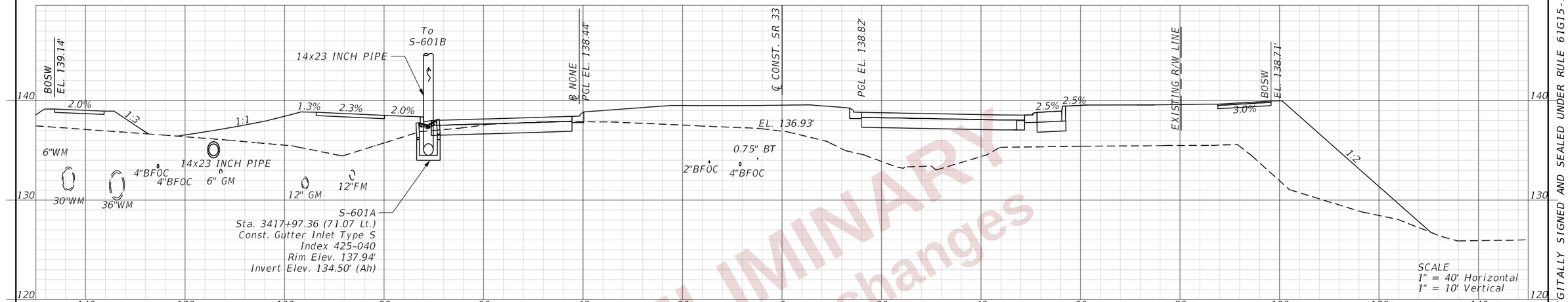

STA. 3417+97.36

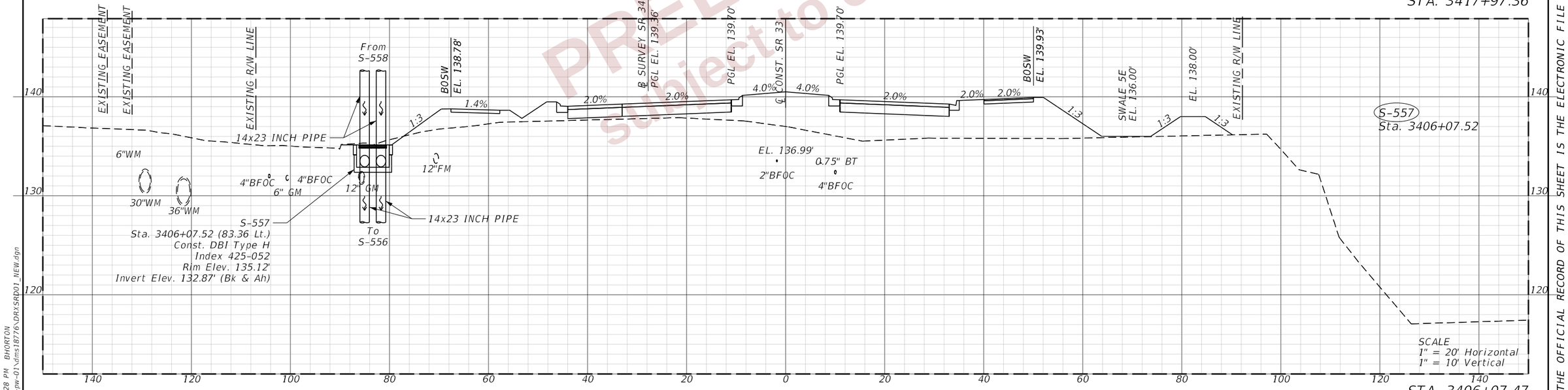

STA. 3406+07.47

PRELIMINARY
subject to changes

REVISIONS			
DATE	DESCRIPTION	DATE	DESCRIPTION

ENGINEER OF RECORD

LISANDRO ZAPATA, P.E.
LICENSE NUMBER 58822
H. W. LOCHNER
4300 W. CYPRESS STREET, SUITE 500
TAMPA, FLORIDA 33607

STATE OF FLORIDA
DEPARTMENT OF TRANSPORTATION

ROAD NO.	COUNTY	FINANCIAL PROJECT ID
SR 400	POLK	430185-3-52-01

DRAINAGE STRUCTURES (39)
SR 33

SHEET NO. 296

THE OFFICIAL RECORD OF THIS SHEET IS THE ELECTRONIC FILE DIGITALLY SIGNED AND SEALED UNDER RULE 61G15-23.004, F.A.C.

2/29/2024 4:31:28 PM BHORTON
c:\pw_working\lochner-pw-01\dms18776\DRXSRD01_NEW.dgn

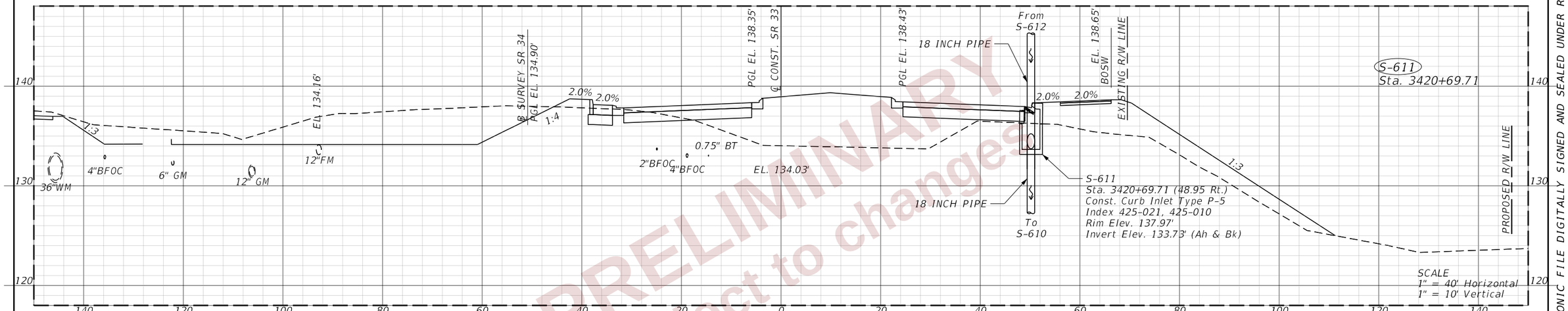

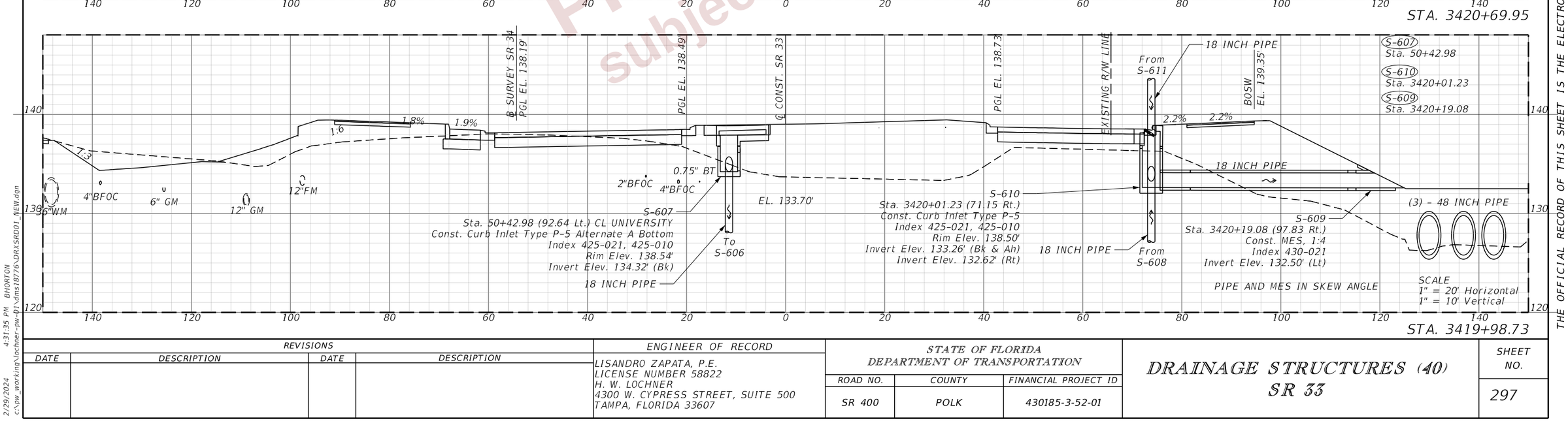

PRELIMINARY
subject to changes

THE OFFICIAL RECORD OF THIS SHEET IS THE ELECTRONIC FILE DIGITALLY SIGNED AND SEALED UNDER RULE 61G15-23.004, F.A.C.

2/29/2024 4:31:35 PM BHORTON
C:\pw_working\lochner-pw-01\dms18776\DRXSRD01_NEW.dgn

REVISIONS			
DATE	DESCRIPTION	DATE	DESCRIPTION

ENGINEER OF RECORD
LISANDRO ZAPATA, P.E.
LICENSE NUMBER 58822
H. W. LOCHNER
4300 W. CYPRESS STREET, SUITE 500
TAMPA, FLORIDA 33607

STATE OF FLORIDA
DEPARTMENT OF TRANSPORTATION

ROAD NO.	COUNTY	FINANCIAL PROJECT ID
SR 400	POLK	430185-3-52-01

DRAINAGE STRUCTURES (40)
SR 33

SHEET NO. 297

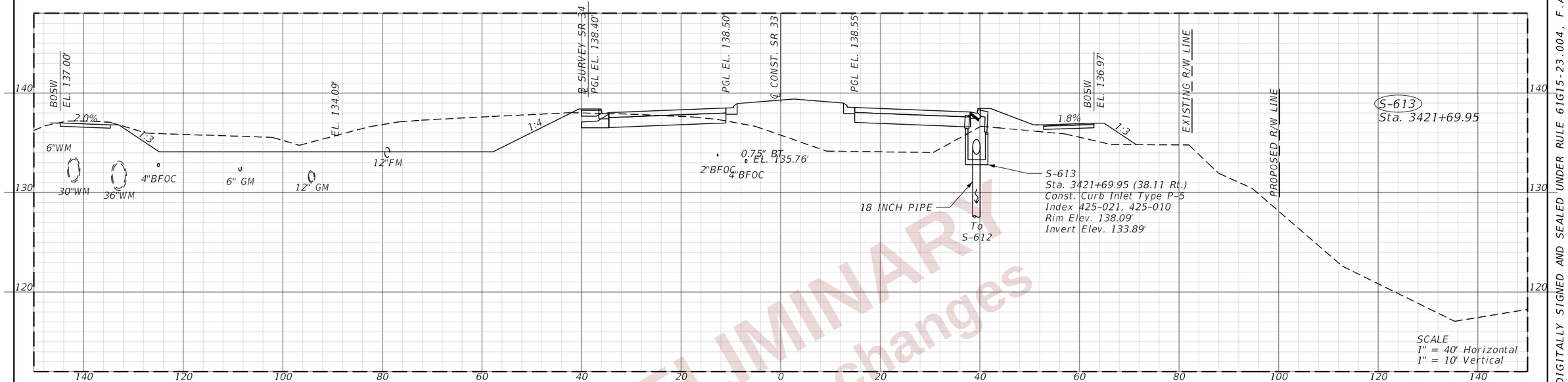

STA. 3421+69.90

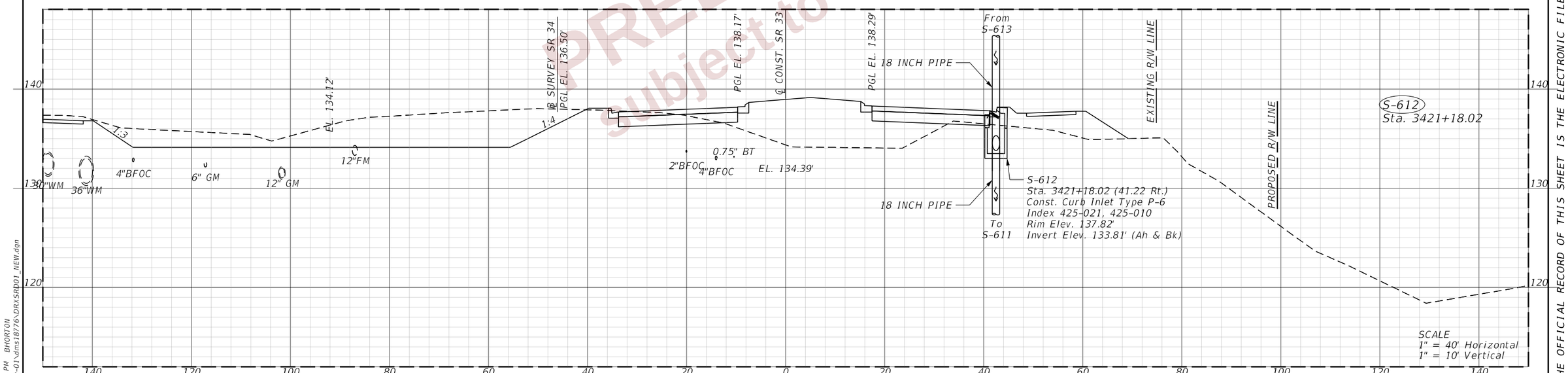

STA. 3421+18.01

PRELIMINARY
subject to changes

THE OFFICIAL RECORD OF THIS SHEET IS THE ELECTRONIC FILE DIGITALLY SIGNED AND SEALED UNDER RULE 61G15-23.004, F.A.C.

2/29/2024 4:31:42 PM BHORTON
C:\pw_working\lochner-pw-01\dms18776\DRXSRD01_NEW.dgn

REVISIONS				ENGINEER OF RECORD	STATE OF FLORIDA DEPARTMENT OF TRANSPORTATION			DRAINAGE STRUCTURES (41) SR 33	SHEET NO.
DATE	DESCRIPTION	DATE	DESCRIPTION	LISANDRO ZAPATA, P.E. LICENSE NUMBER 58822 H. W. LOCHNER 4300 W. CYPRESS STREET, SUITE 500 TAMPA, FLORIDA 33607	ROAD NO.	COUNTY	FINANCIAL PROJECT ID		298
					SR 400	POLK	430185-3-52-01		

PRELIMINARY
subject to changes

REVISIONS				ENGINEER OF RECORD	STATE OF FLORIDA DEPARTMENT OF TRANSPORTATION			DRAINAGE STRUCTURES (42) SR 33	SHEET NO.
DATE	DESCRIPTION	DATE	DESCRIPTION	LISANDRO ZAPATA, P.E. LICENSE NUMBER 58822 H. W. LOCHNER 4300 W. CYPRESS STREET, SUITE 500 TAMPA, FLORIDA 33607	ROAD NO.	COUNTY	FINANCIAL PROJECT ID		299
					SR 400	POLK	430185-3-52-01		

THE OFFICIAL RECORD OF THIS SHEET IS THE ELECTRONIC FILE DIGITALLY SIGNED AND SEALED UNDER RULE 61G15-23.004, F.A.C.

2/29/2024 4:31:51 PM BHORTON
c:\pw_working\lochner-pw-01\dfs18776\DRXSRD01_NEW.dgn

PRELIMINARY
subject to changes

REVISIONS			
DATE	DESCRIPTION	DATE	DESCRIPTION

STATE OF FLORIDA
DEPARTMENT OF TRANSPORTATION

ROAD NO.	COUNTY	FINANCIAL PROJECT ID
SR 400	POLK	430185-3-52-01

DRAINAGE STRUCTURES (43)
SR 33

SHEET NO. 300

2/29/2024 4:32:01 PM BHORTON
c:\pw_working\tochner-pw-01\dms18776\DRX5RD01_NEW.dgn

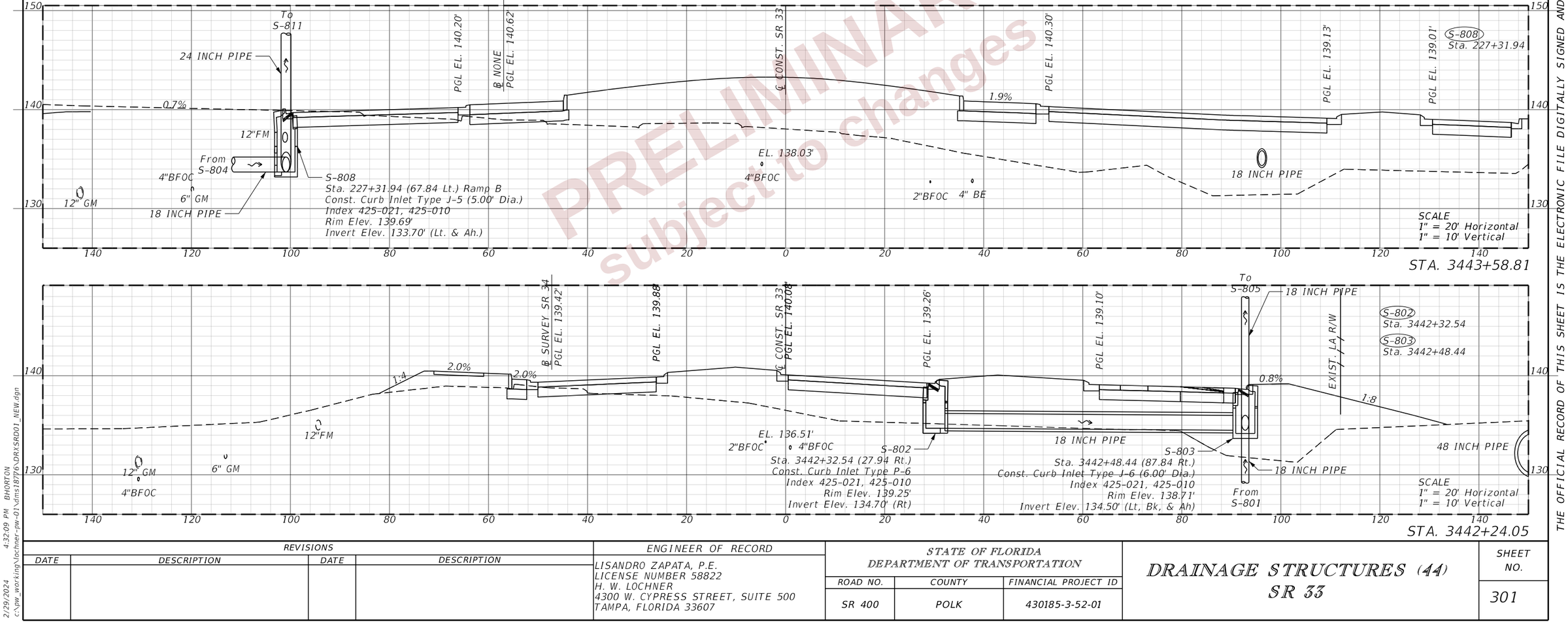

PRELIMINARY
subject to changes

REVISIONS			
DATE	DESCRIPTION	DATE	DESCRIPTION

ENGINEER OF RECORD
LISANDRO ZAPATA, P.E.
LICENSE NUMBER 58822
H. W. LOCHNER
4300 W. CYPRESS STREET, SUITE 500
TAMPA, FLORIDA 33607

STATE OF FLORIDA
DEPARTMENT OF TRANSPORTATION

ROAD NO.	COUNTY	FINANCIAL PROJECT ID
SR 400	POLK	430185-3-52-01

DRAINAGE STRUCTURES (44)
SR 33

SHEET NO. 301

2/29/2024 4:32:09 PM BHORTON
c:\pw_working\lochner-pw-01\dms187716\DRXSRD01_NEW.dgn

THE OFFICIAL RECORD OF THIS SHEET IS THE ELECTRONIC FILE DIGITALLY SIGNED AND SEALED UNDER RULE 61G15-23.004, F.A.C.

PRELIMINARY
subject to changes

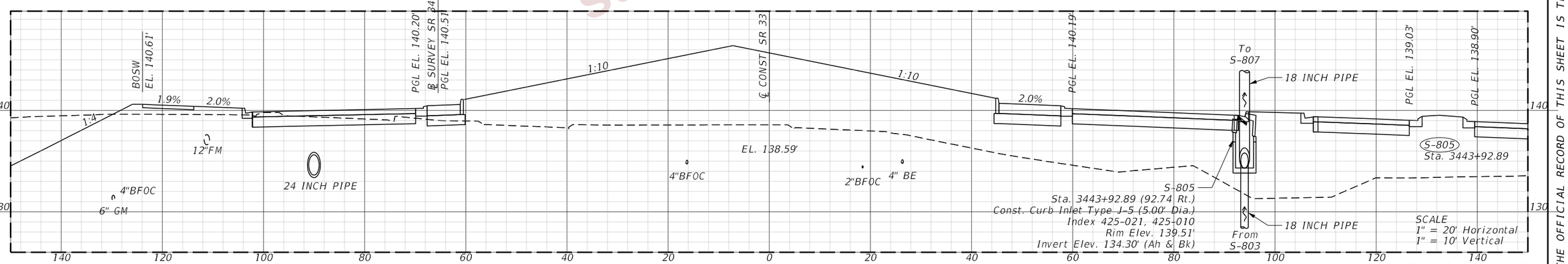

REVISIONS				ENGINEER OF RECORD	STATE OF FLORIDA DEPARTMENT OF TRANSPORTATION			DRAINAGE STRUCTURES (45) SR 33	SHEET NO.
DATE	DESCRIPTION	DATE	DESCRIPTION	LISANDRO ZAPATA, P.E. LICENSE NUMBER 58822 H. W. LOCHNER 4300 W. CYPRESS STREET, SUITE 500 TAMPA, FLORIDA 33607	ROAD NO.	COUNTY	FINANCIAL PROJECT ID		302
					SR 400	POLK	430185-3-52-01		

THE OFFICIAL RECORD OF THIS SHEET IS THE ELECTRONIC FILE DIGITALLY SIGNED AND SEALED UNDER RULE 61G15-23.004, F.A.C.

2/29/2024 4:32:14 PM BHORTON
c:\pw_working\lochner-pw-01\dms18776\DRXSRD01_NEW.dgn

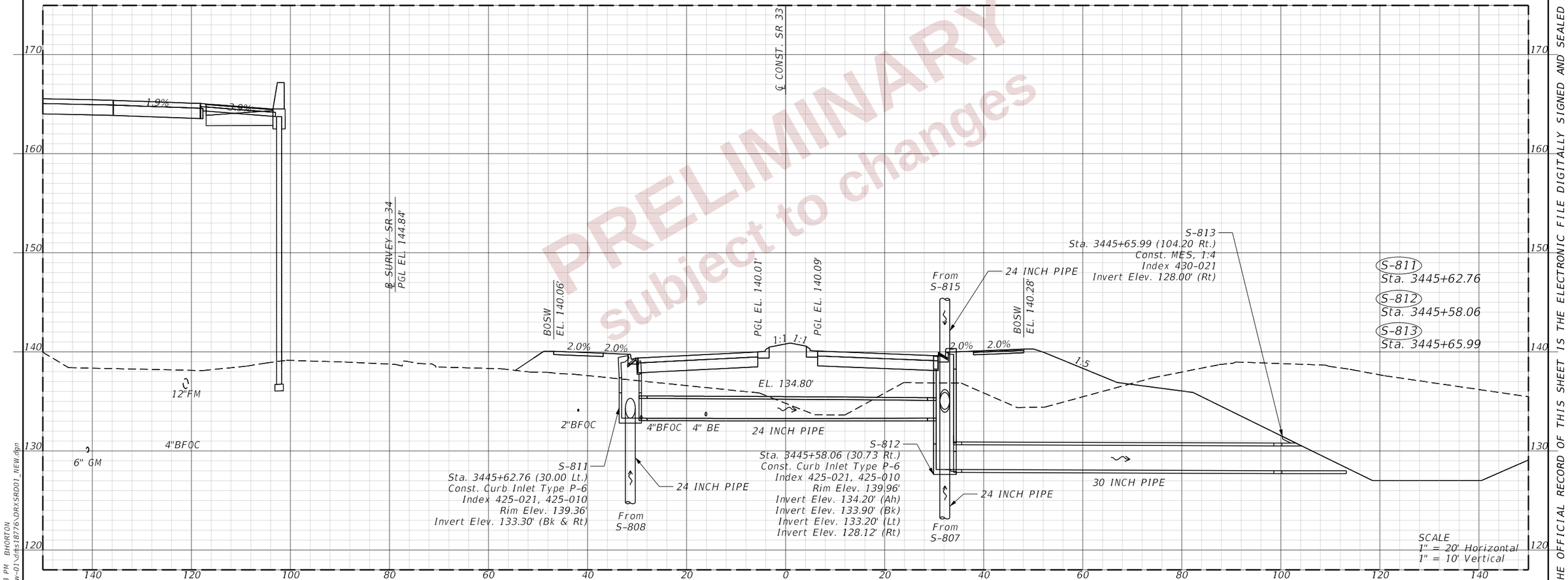

PRELIMINARY
subject to changes

REVISIONS				ENGINEER OF RECORD	STATE OF FLORIDA DEPARTMENT OF TRANSPORTATION			DRAINAGE STRUCTURES (46) SR 33	SHEET NO.
DATE	DESCRIPTION	DATE	DESCRIPTION	LISANDRO ZAPATA, P.E. LICENSE NUMBER 58822 H. W. LOCHNER 4300 W. CYPRESS STREET, SUITE 500 TAMPA, FLORIDA 33607	ROAD NO.	COUNTY	FINANCIAL PROJECT ID		303
					SR 400	POLK	430185-3-52-01		

THE OFFICIAL RECORD OF THIS SHEET IS THE ELECTRONIC FILE DIGITALLY SIGNED AND SEALED UNDER RULE 61G15-23.004, F.A.C.

2/29/2024 4:32:18 PM BHORTON
c:\pw_working\lochner-pw-01\dfs18776\DRXSRD01_NEW.dgn

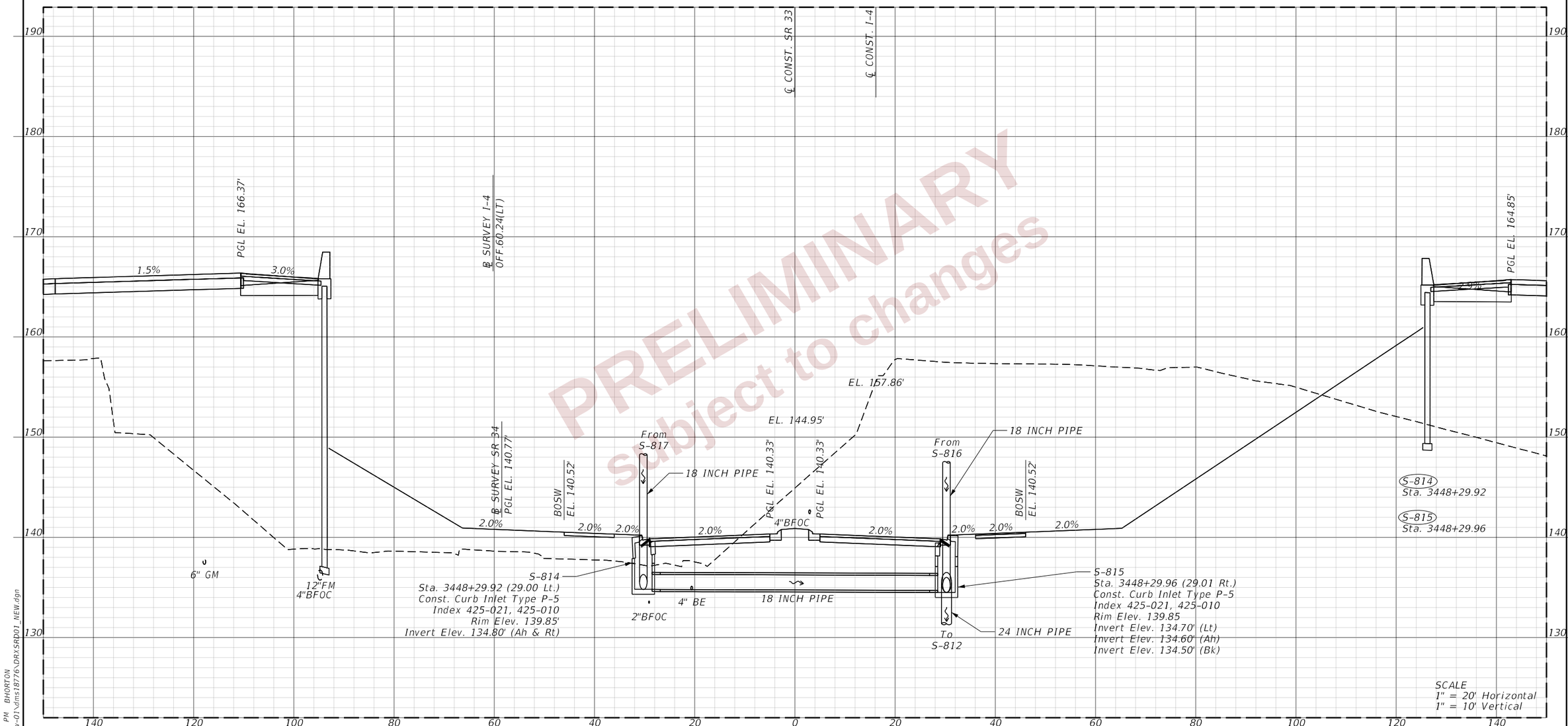

SCALE
1" = 20' Horizontal
1" = 10' Vertical

STA. 3448+29.92

PRELIMINARY
subject to changes

REVISIONS				ENGINEER OF RECORD	STATE OF FLORIDA DEPARTMENT OF TRANSPORTATION			DRAINAGE STRUCTURES (47) SR 33	SHEET NO.
DATE	DESCRIPTION	DATE	DESCRIPTION	LISANDRO ZAPATA, P.E. LICENSE NUMBER 58822 H. W. LOCHNER 4300 W. CYPRESS STREET, SUITE 500 TAMPA, FLORIDA 33607	ROAD NO.	COUNTY	FINANCIAL PROJECT ID		304
					SR 400	POLK	430185-3-52-01		

THE OFFICIAL RECORD OF THIS SHEET IS THE ELECTRONIC FILE DIGITALLY SIGNED AND SEALED UNDER RULE 61G15-23.004, F.A.C.

2/29/2024 4:32:23 PM BHORTON
c:\pw_working\lochner-pw-01\dms18776\DRXSRD01_NEW.dgn

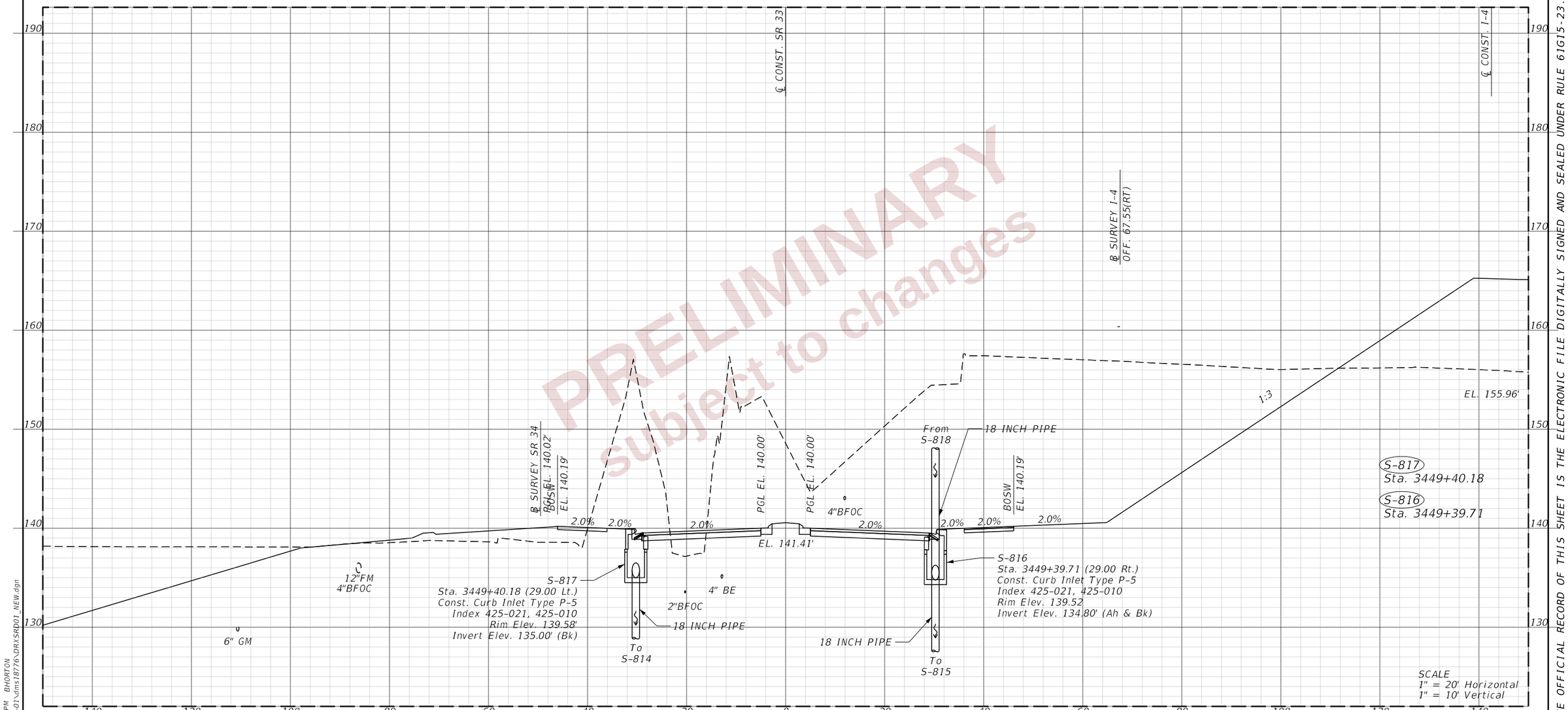

PRELIMINARY
subject to changes

REVISIONS				ENGINEER OF RECORD	STATE OF FLORIDA DEPARTMENT OF TRANSPORTATION			DRAINAGE STRUCTURES (48) SR 33	SHEET NO.
DATE	DESCRIPTION	DATE	DESCRIPTION	LISANDRO ZAPATA, P.E. LICENSE NUMBER 58822 H. W. LOCHNER 4300 W. CYPRESS STREET, SUITE 500 TAMPA, FLORIDA 33607	ROAD NO.	COUNTY	FINANCIAL PROJECT ID		305
					SR 400	POLK	430185-3-52-01		

THE OFFICIAL RECORD OF THIS SHEET IS THE ELECTRONIC FILE DIGITALLY SIGNED AND SEALED UNDER RULE 61G15-23.004, F.A.C.

2/29/2024 4:32:28 PM BHORTON
c:\pw_working\lochner-pw-01\dms18776\DRXSRD01_NEW.dgn

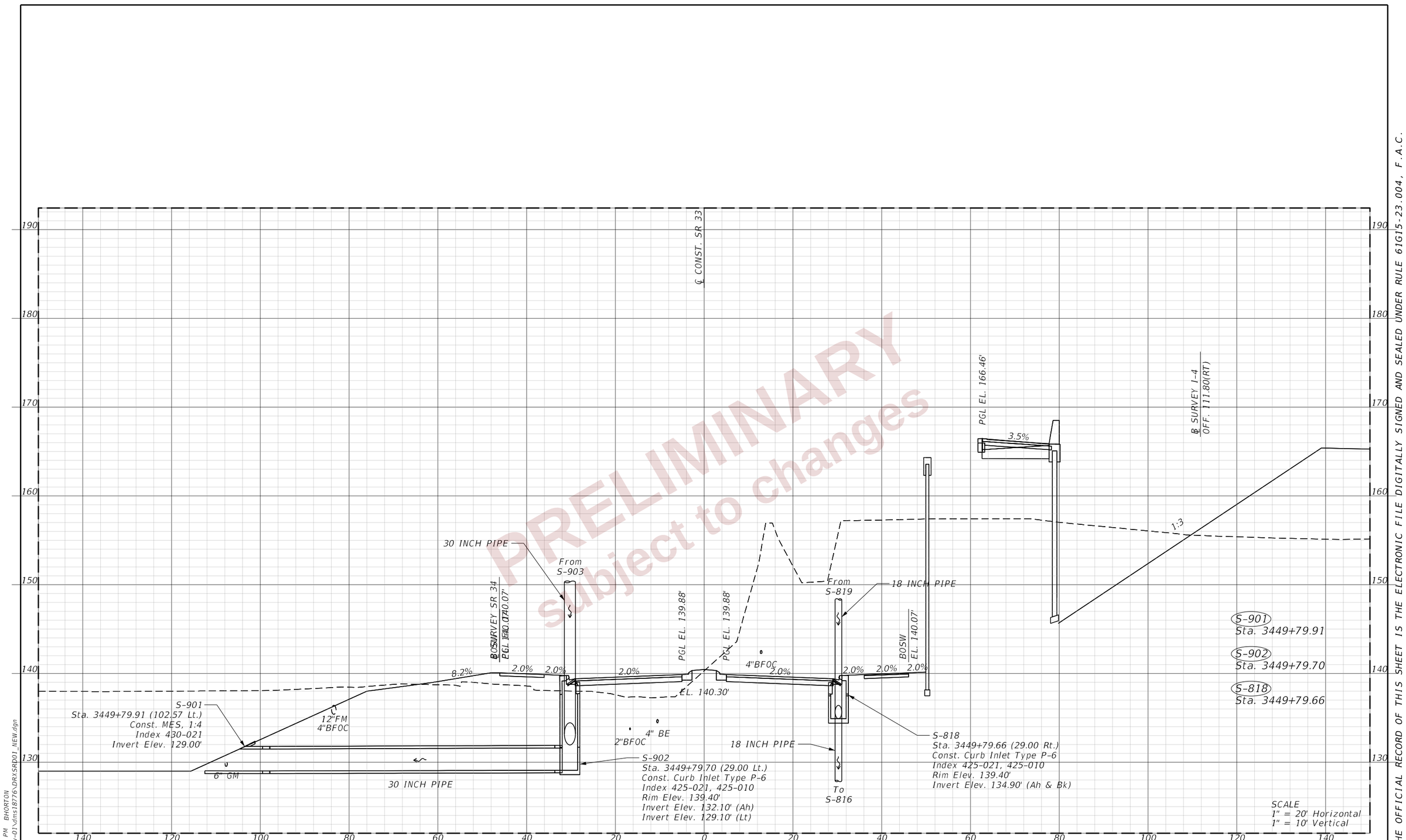

PRELIMINARY
subject to changes

REVISIONS				ENGINEER OF RECORD	STATE OF FLORIDA DEPARTMENT OF TRANSPORTATION			DRAINAGE STRUCTURES (49) SR 33	SHEET NO.
DATE	DESCRIPTION	DATE	DESCRIPTION	LISANDRO ZAPATA, P.E. LICENSE NUMBER 58822 H. W. LOCHNER 4300 W. CYPRESS STREET, SUITE 500 TAMPA, FLORIDA 33607	ROAD NO.	COUNTY	FINANCIAL PROJECT ID		306
					SR 400	POLK	430185-3-52-01		

THE OFFICIAL RECORD OF THIS SHEET IS THE ELECTRONIC FILE DIGITALLY SIGNED AND SEALED UNDER RULE 61G15-23.004, F.A.C.

2/29/2024 4:32:32 PM BHORTON
c:\pw_working\lochner-pw-01\dms18776\DRXSRD01_NEW.dgn

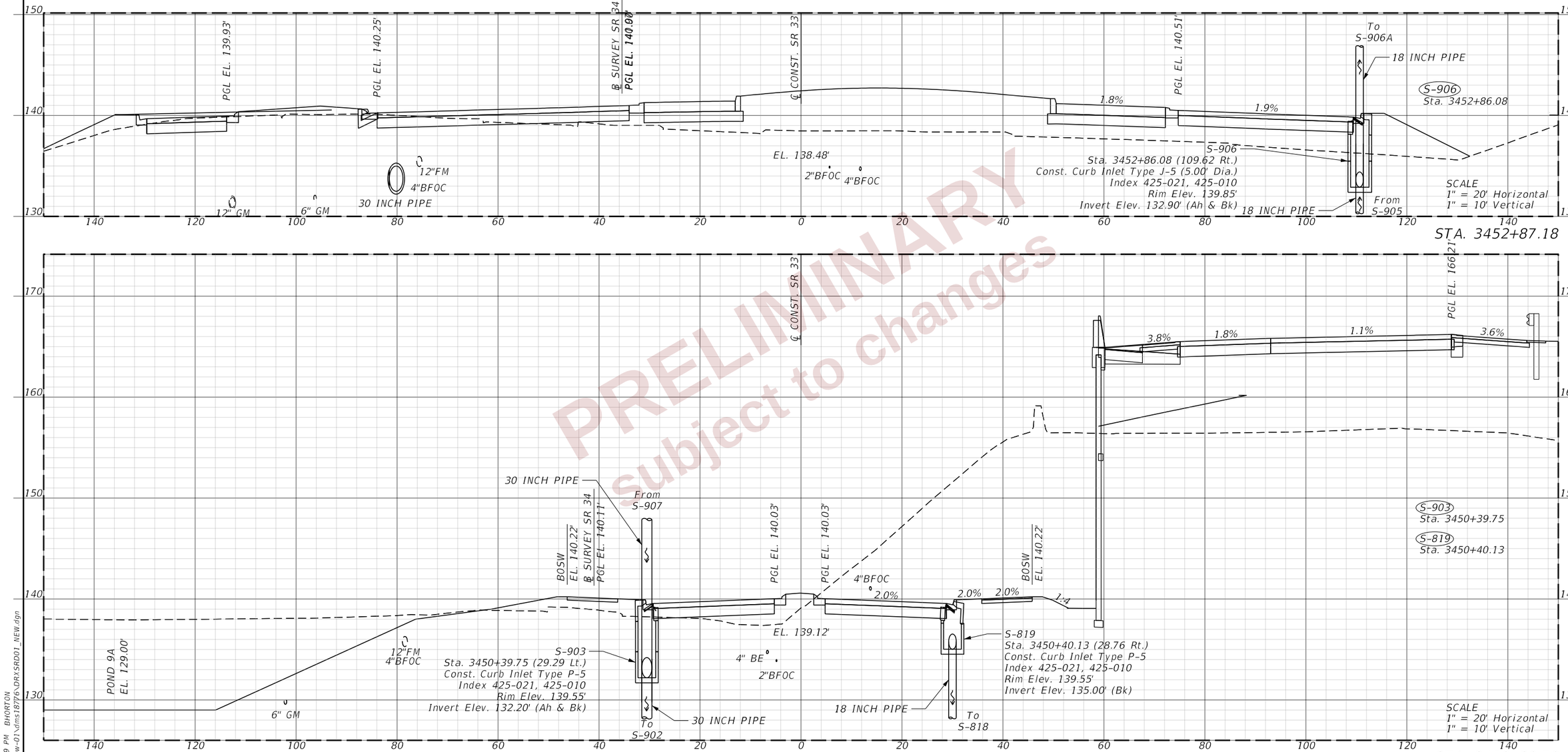

PRELIMINARY
subject to changes

REVISIONS				ENGINEER OF RECORD	STATE OF FLORIDA DEPARTMENT OF TRANSPORTATION			DRAINAGE STRUCTURES (50) SR 33	SHEET NO.
DATE	DESCRIPTION	DATE	DESCRIPTION	LISANDRO ZAPATA, P.E. LICENSE NUMBER 58822 H. W. LOCHNER 4300 W. CYPRESS STREET, SUITE 500 TAMPA, FLORIDA 33607	ROAD NO.	COUNTY	FINANCIAL PROJECT ID		307
					SR 400	POLK	430185-3-52-01		

THE OFFICIAL RECORD OF THIS SHEET IS THE ELECTRONIC FILE DIGITALLY SIGNED AND SEALED UNDER RULE 61G15-23.004, F.A.C.

2/29/2024 4:32:39 PM BHORTON
c:\pw_working\lochner-pw-01\dms18776\DRXSRD01_NEW.dgn

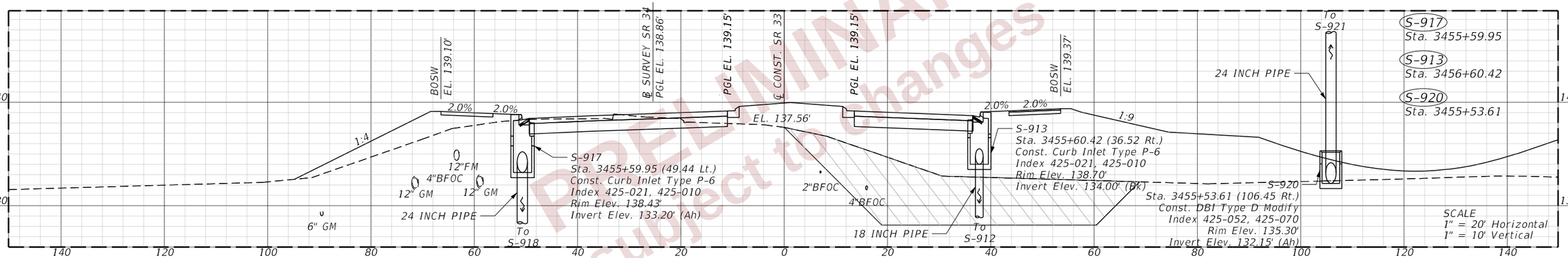

PRELIMINARY
Subject to changes

REVISIONS				ENGINEER OF RECORD	STATE OF FLORIDA DEPARTMENT OF TRANSPORTATION			DRAINAGE STRUCTURES (51) SR 33	SHEET NO.
DATE	DESCRIPTION	DATE	DESCRIPTION	LISANDRO ZAPATA, P.E. LICENSE NUMBER 58822 H. W. LOCHNER 4300 W. CYPRESS STREET, SUITE 500 TAMPA, FLORIDA 33607	ROAD NO.	COUNTY	FINANCIAL PROJECT ID		308
					SR 400	POLK	430185-3-52-01		

THE OFFICIAL RECORD OF THIS SHEET IS THE ELECTRONIC FILE DIGITALLY SIGNED AND SEALED UNDER RULE 61G15-23.004, F.A.C.

2/29/2024 4:32:47 PM BHORTON
c:\pw_working\lochner-pw-01\dms18776\DRXSRD01_NEW.dgn

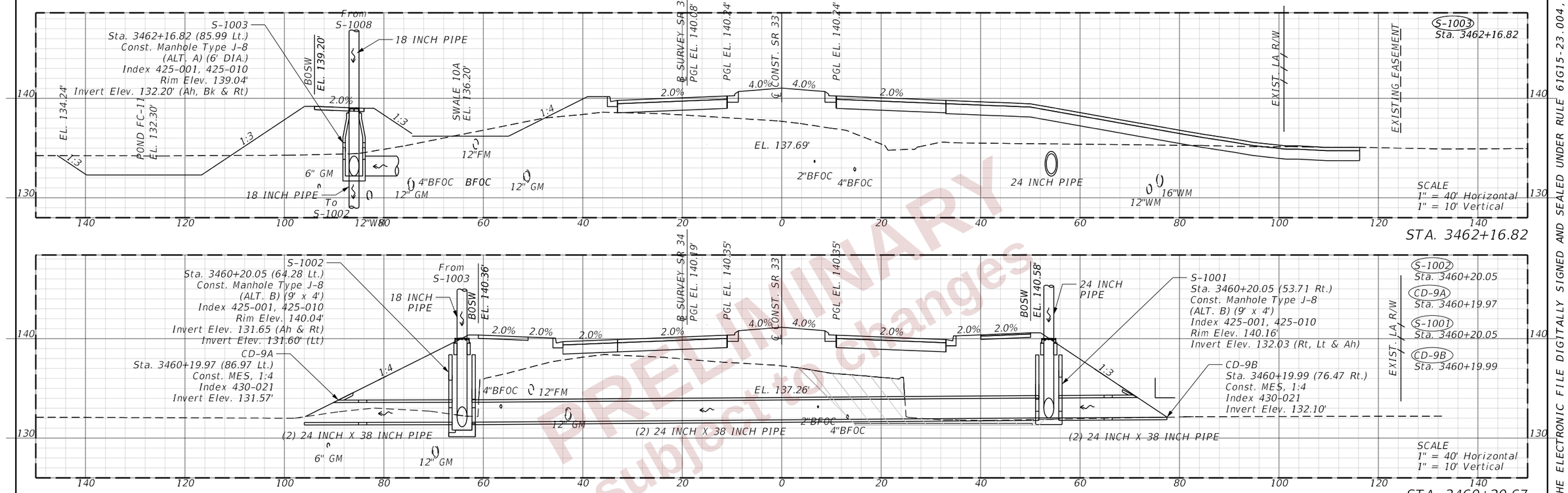

PRELIMINARY
subject to changes

REVISIONS				ENGINEER OF RECORD	STATE OF FLORIDA DEPARTMENT OF TRANSPORTATION			DRAINAGE STRUCTURES (52) SR 33	SHEET NO.
DATE	DESCRIPTION	DATE	DESCRIPTION	LISANDRO ZAPATA, P.E. LICENSE NUMBER 58822 H. W. LOCHNER 4300 W. CYPRESS STREET, SUITE 500 TAMPA, FLORIDA 33607	ROAD NO.	COUNTY	FINANCIAL PROJECT ID		309
					SR 400	POLK	430185-3-52-01		

THE OFFICIAL RECORD OF THIS SHEET IS THE ELECTRONIC FILE DIGITALLY SIGNED AND SEALED UNDER RULE 61G15-23.004, F.A.C.

2/29/2024 4:33:01 PM BHORTON
c:\pw_working\lochner-pw-01\dms18776\DRXSRD01_NEW.dgn

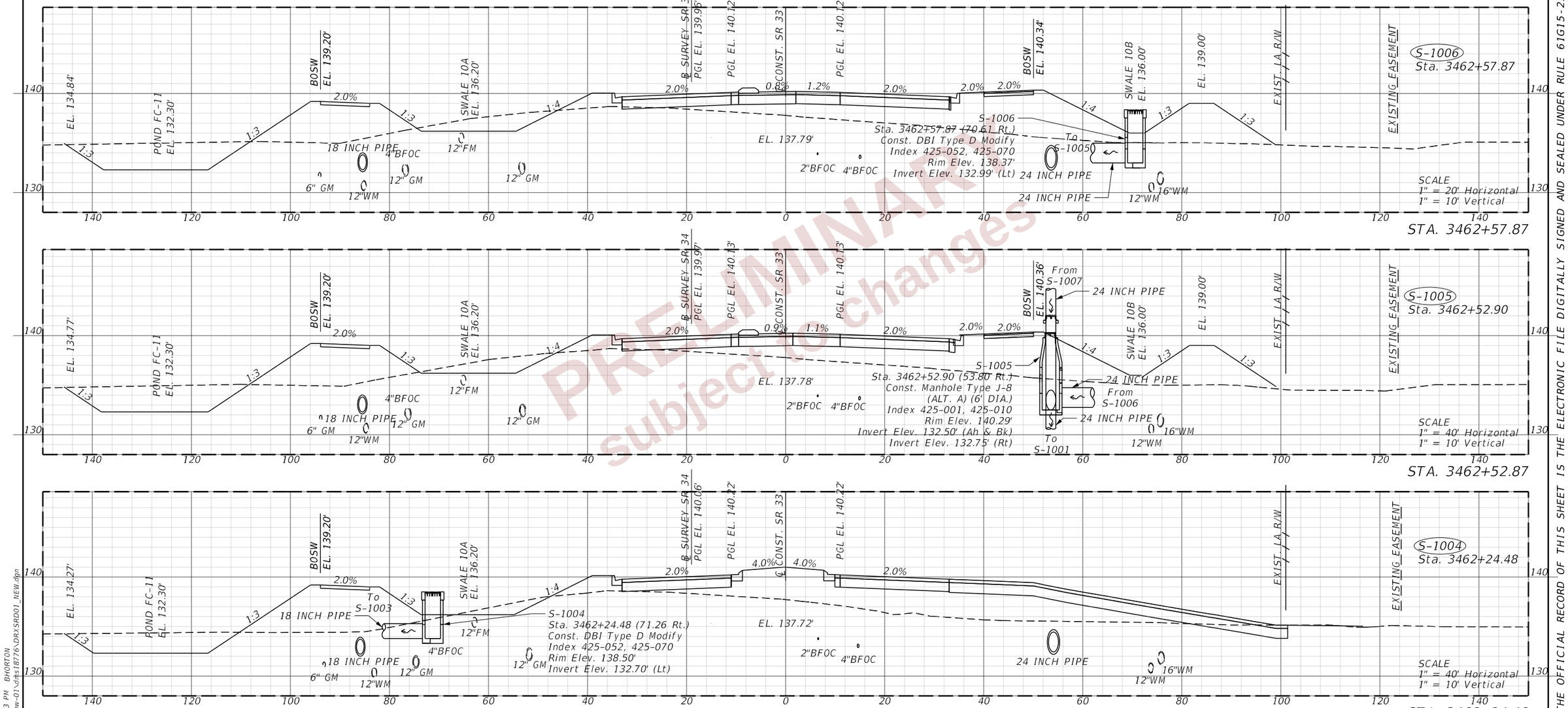

PRELIMINARY
subject to changes

THE OFFICIAL RECORD OF THIS SHEET IS THE ELECTRONIC FILE DIGITALLY SIGNED AND SEALED UNDER RULE 61G15-23.004, F.A.C.

2/29/2024 4:33:13 PM BHORTON
c:\pw_working\lochner-pw-01\dfs18776\DRXSRD01_NEW.dgn

REVISIONS			
DATE	DESCRIPTION	DATE	DESCRIPTION

ENGINEER OF RECORD
LISANDRO ZAPATA, P.E.
LICENSE NUMBER 58822
H. W. LOCHNER
4300 W. CYPRESS STREET, SUITE 500
TAMPA, FLORIDA 33607

STATE OF FLORIDA
DEPARTMENT OF TRANSPORTATION

ROAD NO.	COUNTY	FINANCIAL PROJECT ID
SR 400	POLK	430185-3-52-01

DRAINAGE STRUCTURES (53)
SR 33

SHEET NO.
310

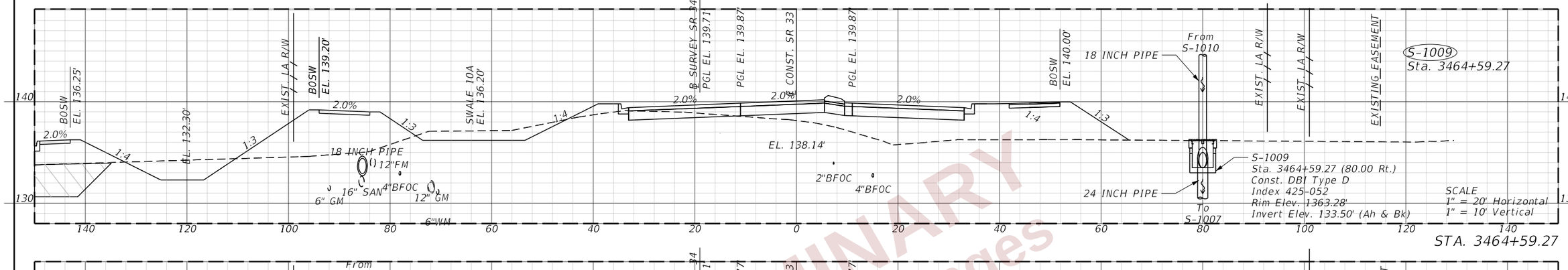

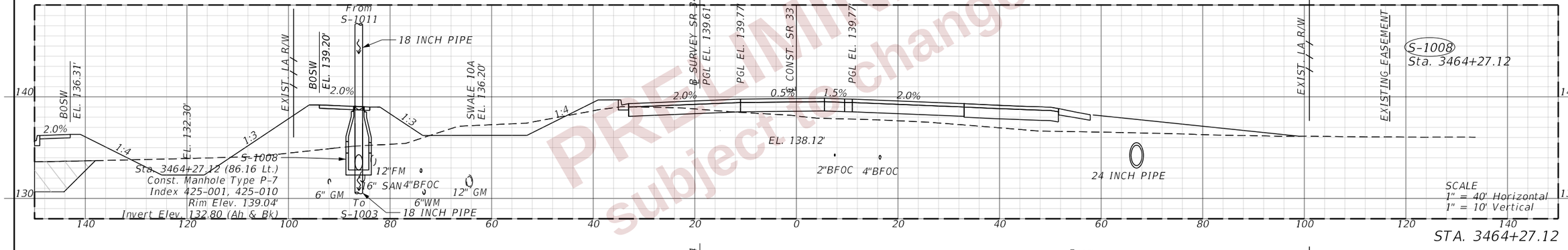

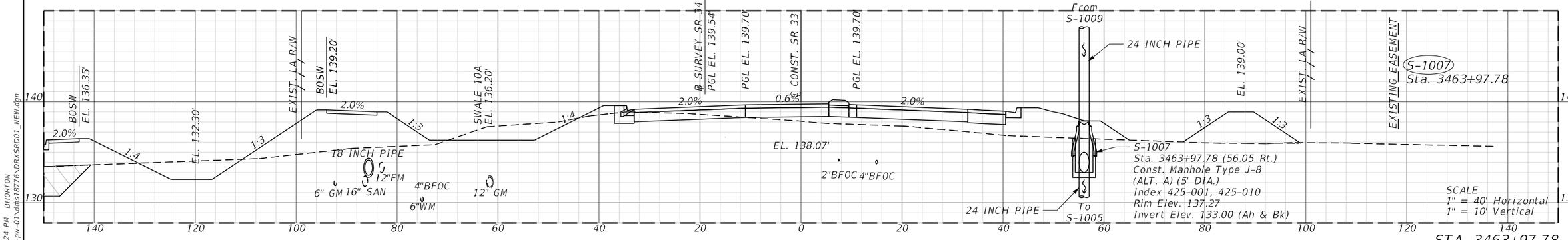

PRELIMINARY
subject to changes

REVISIONS			
DATE	DESCRIPTION	DATE	DESCRIPTION

ENGINEER OF RECORD
LISANDRO ZAPATA, P.E.
LICENSE NUMBER 58822
H. W. LOCHNER
4300 W. CYPRESS STREET, SUITE 500
TAMPA, FLORIDA 33607

STATE OF FLORIDA
DEPARTMENT OF TRANSPORTATION

ROAD NO.	COUNTY	FINANCIAL PROJECT ID
SR 400	POLK	430185-3-52-01

DRAINAGE STRUCTURES (54)
SR 33

SHEET NO. 311

THE OFFICIAL RECORD OF THIS SHEET IS THE ELECTRONIC FILE DIGITALLY SIGNED AND SEALED UNDER RULE 61G15-23.004, F.A.C.

2/29/2024 4:33:24 PM BHORTON
c:\pw_working\lochner-pw-01\dgn\18776\DRVSRD01_NEW.dgn

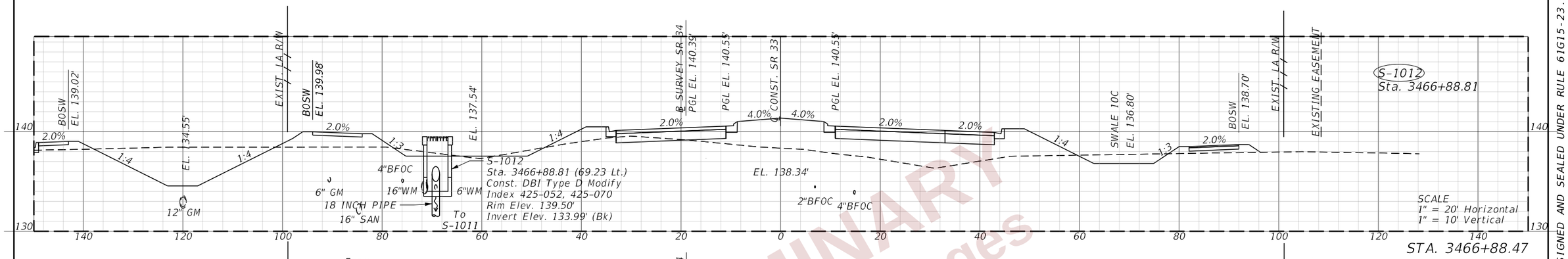

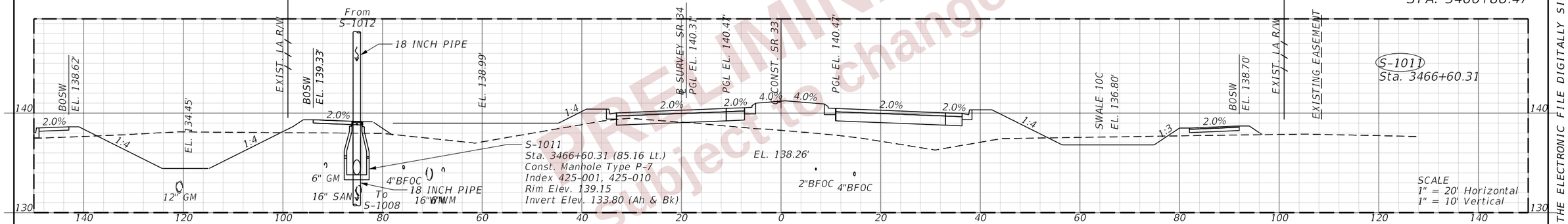

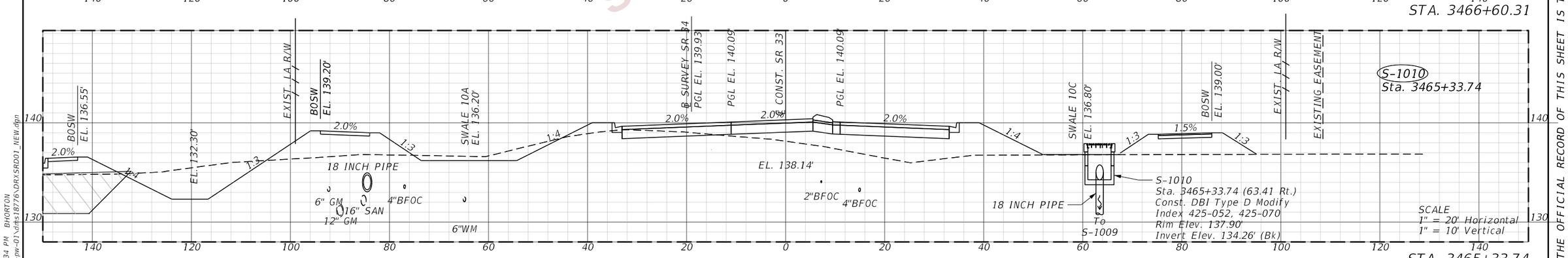

PRELIMINARY
Subject to changes

REVISIONS			
DATE	DESCRIPTION	DATE	DESCRIPTION

ENGINEER OF RECORD
LISANDRO ZAPATA, P.E. LICENSE NUMBER 58822 H. W. LOCHNER 4300 W. CYPRESS STREET, SUITE 500 TAMPA, FLORIDA 33607

STATE OF FLORIDA
DEPARTMENT OF TRANSPORTATION

ROAD NO.	COUNTY	FINANCIAL PROJECT ID
SR 400	POLK	430185-3-52-01

DRAINAGE STRUCTURES (55)
SR 33

SHEET NO. 312

THE OFFICIAL RECORD OF THIS SHEET IS THE ELECTRONIC FILE DIGITALLY SIGNED AND SEALED UNDER RULE 61G15-23.004, F.A.C.

2/29/2024 4:33:34 PM BHORTON
C:\pw_working\lochner-pw-01\dms18776\DRXSR001_NEW.dgn

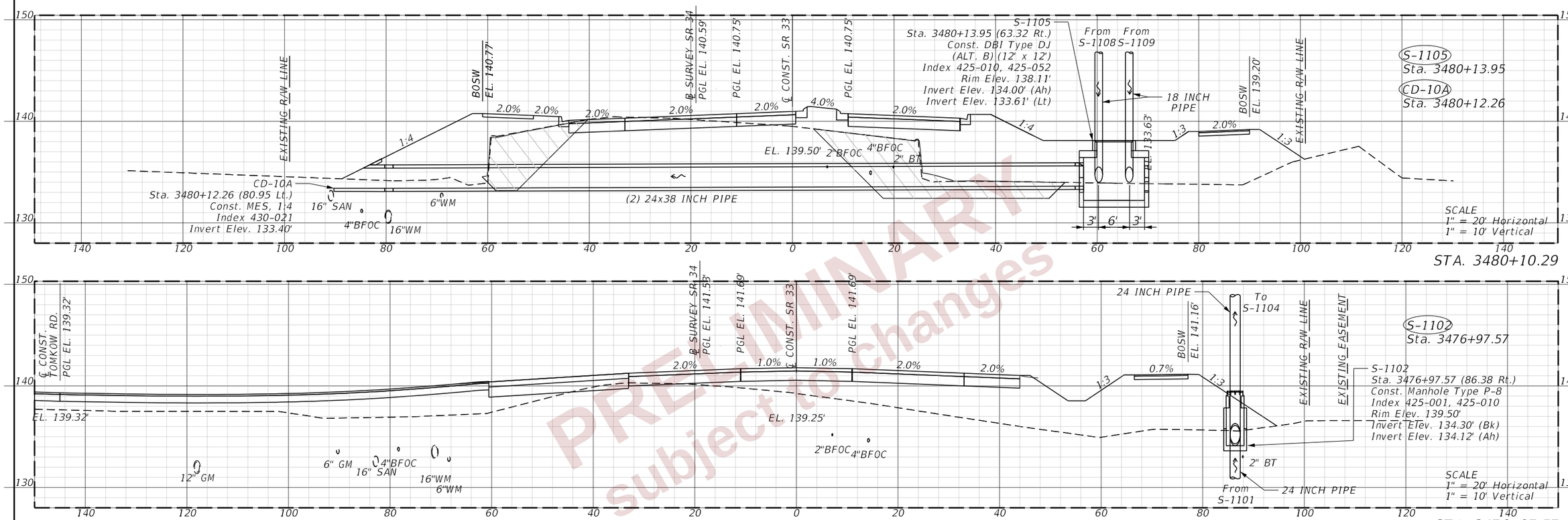

PRELIMINARY subject to changes

REVISIONS				ENGINEER OF RECORD	STATE OF FLORIDA DEPARTMENT OF TRANSPORTATION			DRAINAGE STRUCTURES (56) SR 33	SHEET NO.
DATE	DESCRIPTION	DATE	DESCRIPTION	LISANDRO ZAPATA, P.E. LICENSE NUMBER 58822 H. W. LOCHNER 4300 W. CYPRESS STREET, SUITE 500 TAMPA, FLORIDA 33607	ROAD NO.	COUNTY	FINANCIAL PROJECT ID		313
					SR 400	POLK	430185-3-52-01		

THE OFFICIAL RECORD OF THIS SHEET IS THE ELECTRONIC FILE DIGITALLY SIGNED AND SEALED UNDER RULE 61G15-23.004, F.A.C.

2/29/2024 4:33:47 PM BHORTON
c:\pw_working\lochner-pw-01\dms18776\DRX\SR001_NEW.dgn

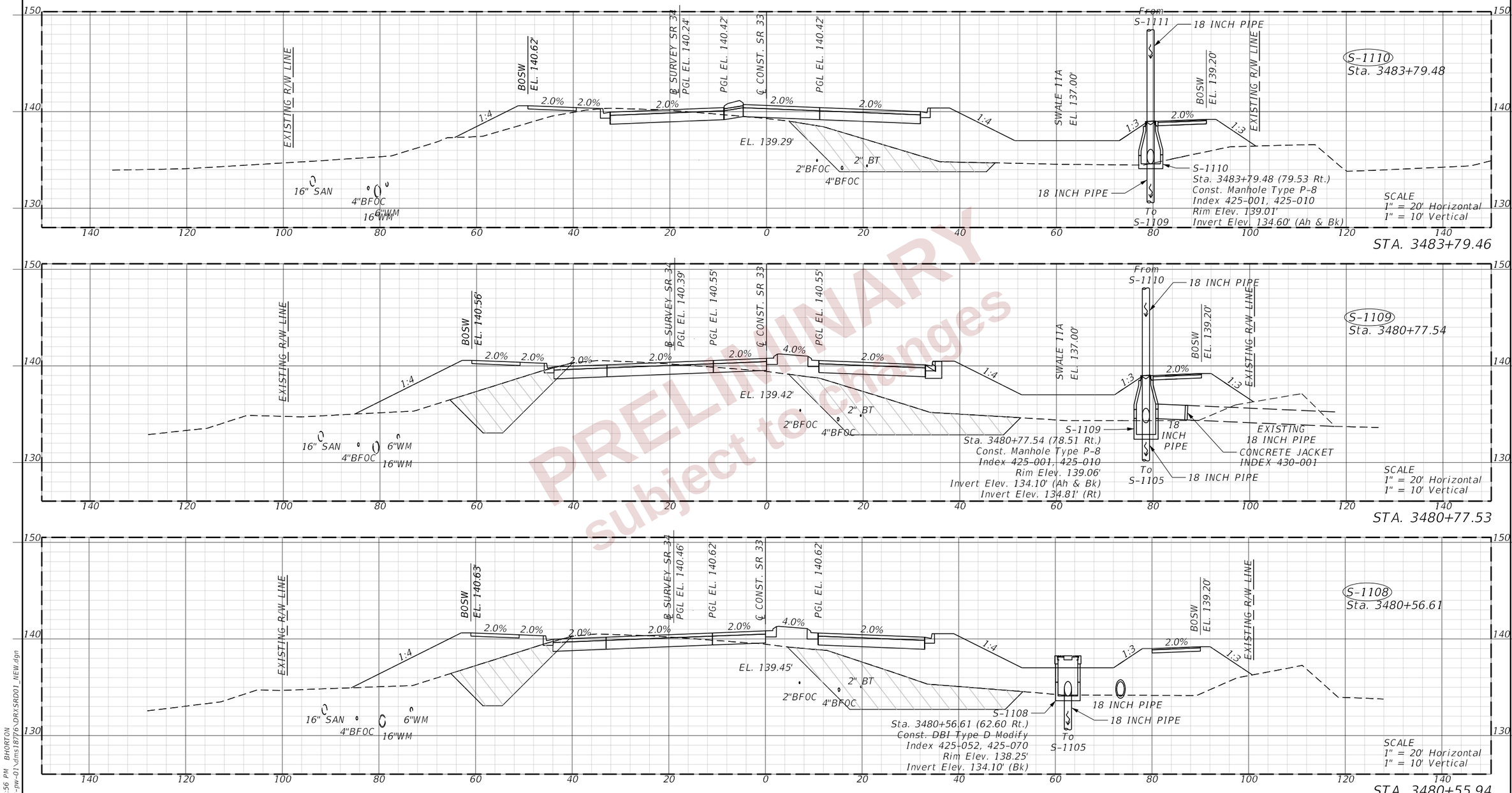

PRELIMINARY subject to changes

REVISIONS				ENGINEER OF RECORD	STATE OF FLORIDA DEPARTMENT OF TRANSPORTATION			DRAINAGE STRUCTURES (57) SR 33	SHEET NO.
DATE	DESCRIPTION	DATE	DESCRIPTION	LISANDRO ZAPATA, P.E. LICENSE NUMBER 58822 H. W. LOCHNER 4300 W. CYPRESS STREET, SUITE 500 TAMPA, FLORIDA 33607	ROAD NO.	COUNTY	FINANCIAL PROJECT ID		314
					SR 400	POLK	430185-3-52-01		

THE OFFICIAL RECORD OF THIS SHEET IS THE ELECTRONIC FILE DIGITALLY SIGNED AND SEALED UNDER RULE 61G15-23.004, F.A.C.

2/29/2024 4:33:56 PM BHORTON
c:\pw_working\lochner-pw-01\dms18776\DRIVSRD01_NEW.dgn

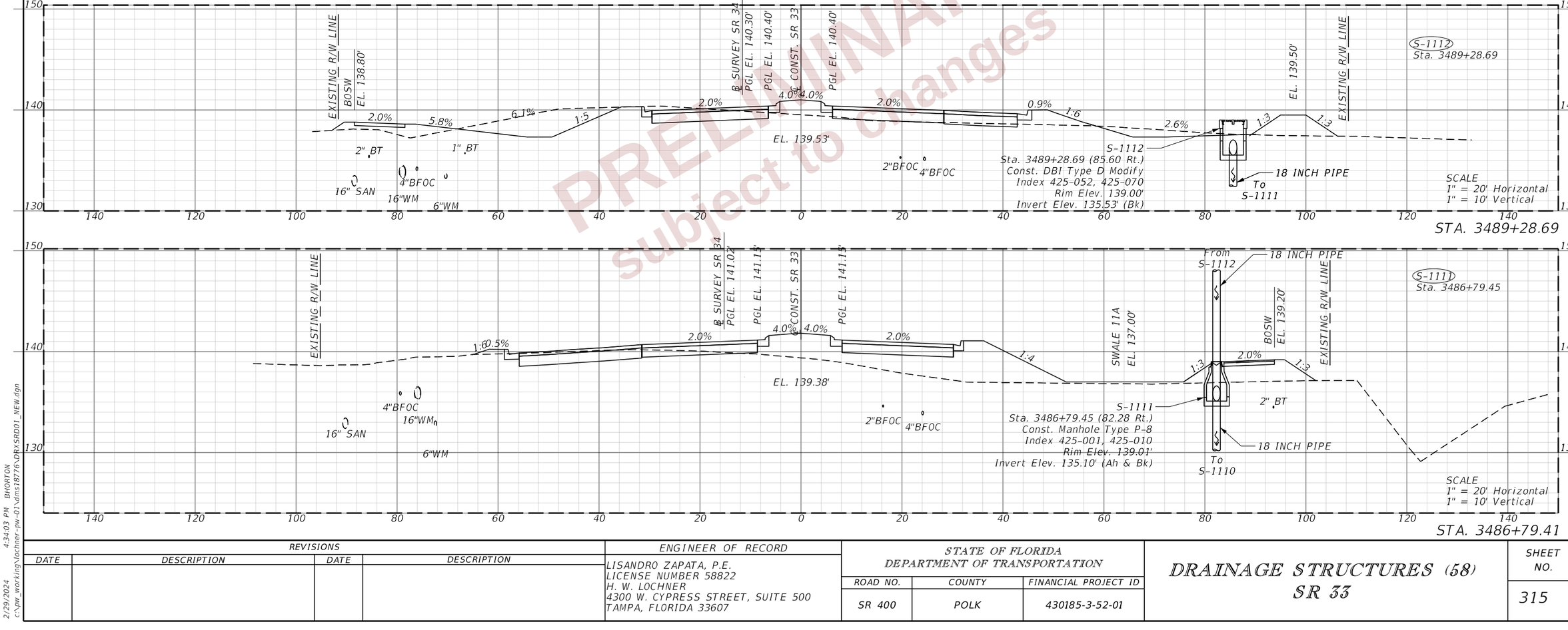

PRELIMINARY
subject to changes

THE OFFICIAL RECORD OF THIS SHEET IS THE ELECTRONIC FILE DIGITALLY SIGNED AND SEALED UNDER RULE 61G15-23.004, F.A.C.

2/29/2024 4:34:03 PM BHORTON
c:\pw_working\lochner-pw-01\dms18776\DR\SRD01_NEW.dgn

REVISIONS			
DATE	DESCRIPTION	DATE	DESCRIPTION

ENGINEER OF RECORD
LISANDRO ZAPATA, P.E.
LICENSE NUMBER 58822
H. W. LOCHNER
4300 W. CYPRESS STREET, SUITE 500
TAMPA, FLORIDA 33607

STATE OF FLORIDA
DEPARTMENT OF TRANSPORTATION

ROAD NO.	COUNTY	FINANCIAL PROJECT ID
SR 400	POLK	430185-3-52-01

DRAINAGE STRUCTURES (58)
SR 33

SHEET NO.
315

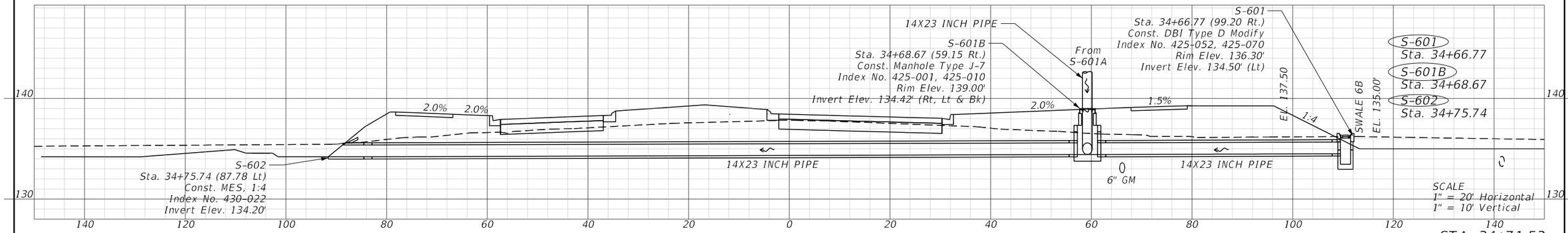

STA. 34+71.53

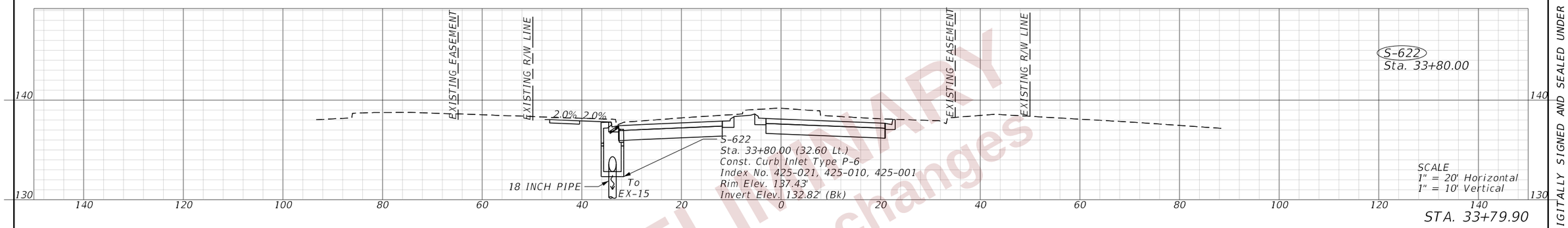

STA. 33+79.90

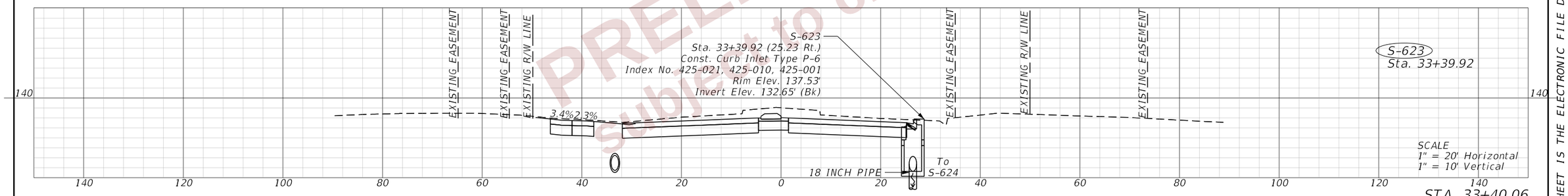

STA. 33+40.06

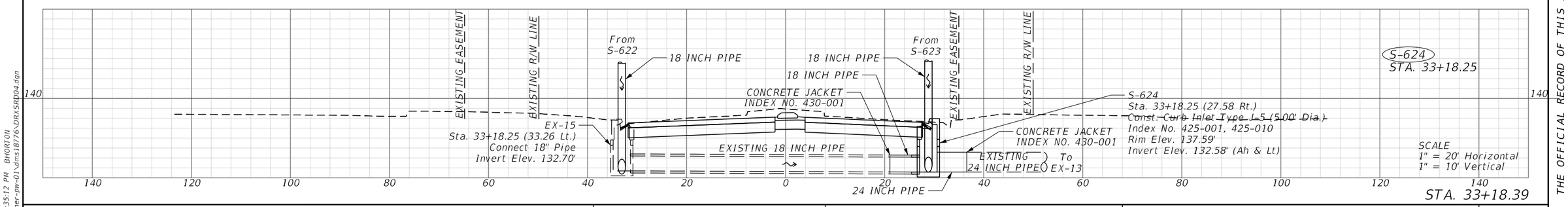

STA. 33+18.39

PRELIMINARY
Subject to changes

REVISIONS				ENGINEER OF RECORD	STATE OF FLORIDA DEPARTMENT OF TRANSPORTATION			DRAINAGE STRUCTURES (59) FIRST PARK BLVD.	SHEET NO.
DATE	DESCRIPTION	DATE	DESCRIPTION	LISANDRO ZAPATA, P.E. LICENSE NUMBER 58822 H. W. LOCHNER 4300 W. CYPRESS STREET, SUITE 500 TAMPA, FLORIDA 33607	ROAD NO.	COUNTY	FINANCIAL PROJECT ID		316
					SR 400	POLK	430185-3-52-01		

THE OFFICIAL RECORD OF THIS SHEET IS THE ELECTRONIC FILE DIGITALLY SIGNED AND SEALED UNDER RULE 61G15-23.004, F.A.C.

2/29/2024 4:35:12 PM BHORTON
c:\pw_working\lochner-pw-01\dms18776\DRXSRD04.dgn

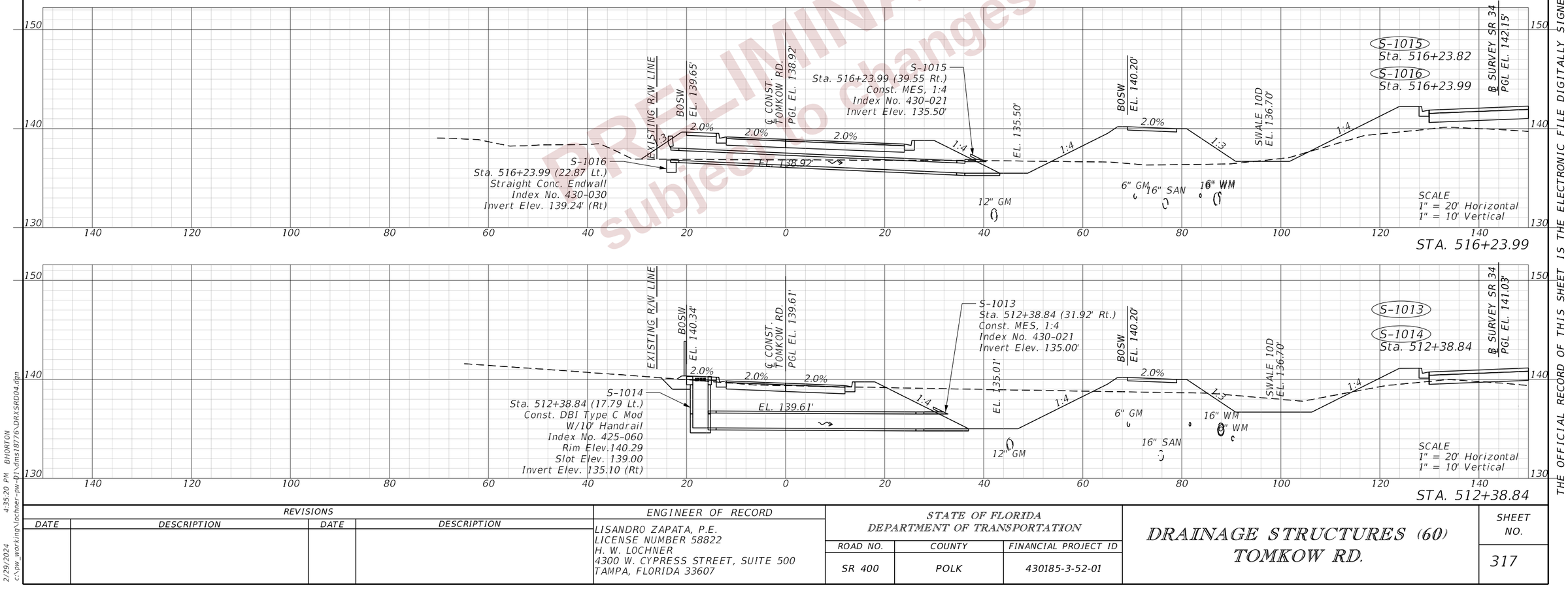

PRELIMINARY
subject to changes

REVISIONS				ENGINEER OF RECORD	STATE OF FLORIDA DEPARTMENT OF TRANSPORTATION			DRAINAGE STRUCTURES (60) TOMKOW RD.	SHEET NO.
DATE	DESCRIPTION	DATE	DESCRIPTION	LISANDRO ZAPATA, P.E. LICENSE NUMBER 58822 H. W. LOCHNER 4300 W. CYPRESS STREET, SUITE 500 TAMPA, FLORIDA 33607	ROAD NO.	COUNTY	FINANCIAL PROJECT ID		317
					SR 400	POLK	430185-3-52-01		

THE OFFICIAL RECORD OF THIS SHEET IS THE ELECTRONIC FILE DIGITALLY SIGNED AND SEALED UNDER RULE 61G15-23.004, F.A.C.

2/29/2024 4:35:20 PM BHORTON
c:\pw_working\lochner-pw-01\dms18776\DRXSR004.dgn

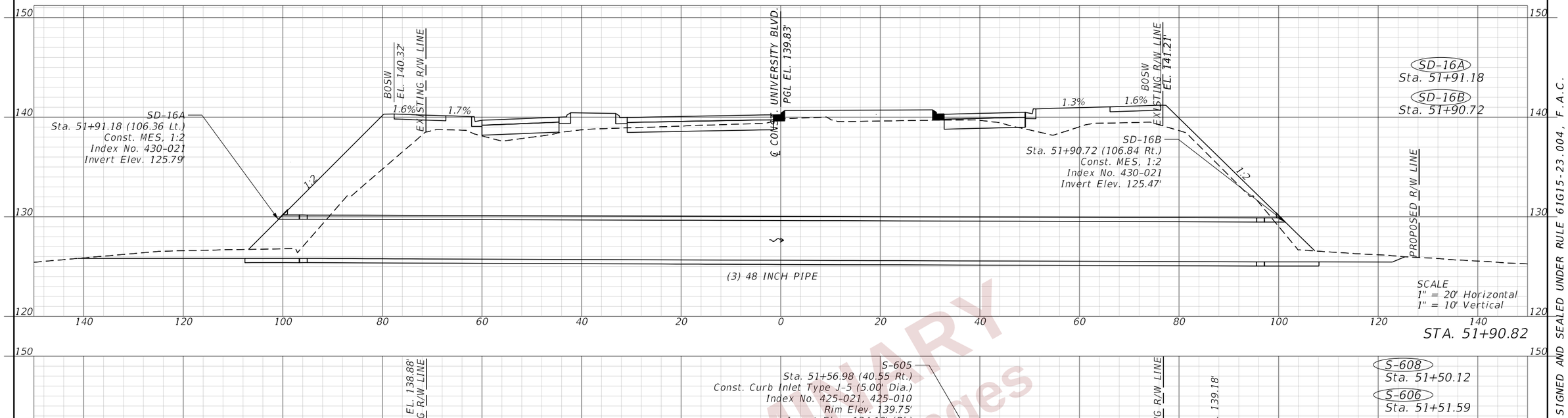

STA. 51+90.82

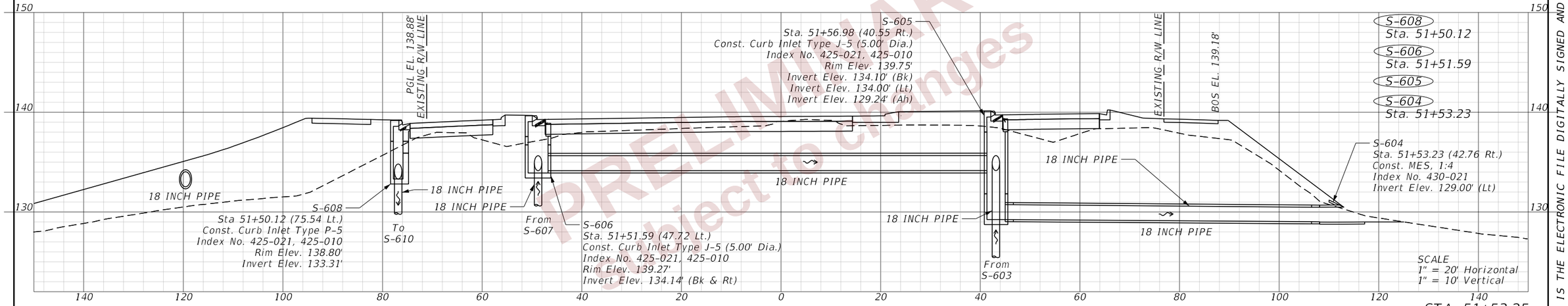

STA. 51+53.25

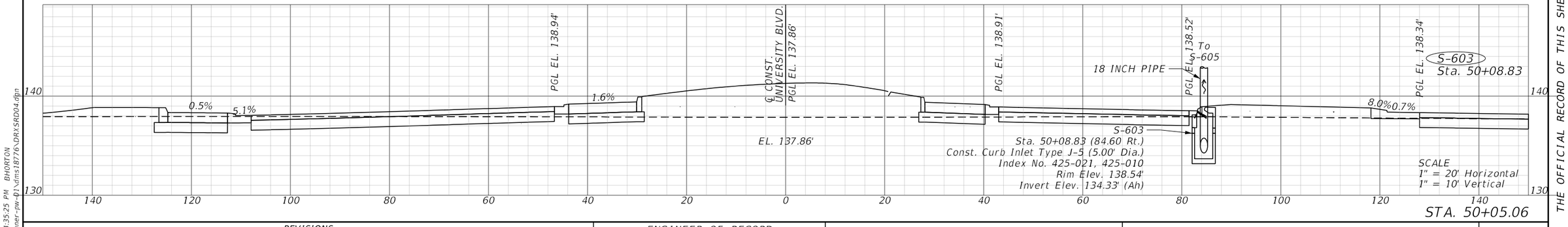

STA. 50+05.06

PRELIMINARY
Subject to changes

REVISIONS				ENGINEER OF RECORD	STATE OF FLORIDA DEPARTMENT OF TRANSPORTATION			DRAINAGE STRUCTURES (61) UNIVERSITY BLVD.	SHEET NO.
DATE	DESCRIPTION	DATE	DESCRIPTION	LISANDRO ZAPATA, P.E. LICENSE NUMBER 58822 H. W. LOCHNER 4300 W. CYPRESS STREET, SUITE 500 TAMPA, FLORIDA 33607	ROAD NO.	COUNTY	FINANCIAL PROJECT ID		318
					SR 400	POLK	430185-3-52-01		

THE OFFICIAL RECORD OF THIS SHEET IS THE ELECTRONIC FILE DIGITALLY SIGNED AND SEALED UNDER RULE 61G15-23.004, F.A.C.

2/29/2024 4:35:25 PM BHORTON
c:\pw_working\lochner-pw-01\dms1877\DRNSRD04.dgn

PRELIMINARY
subject to changes

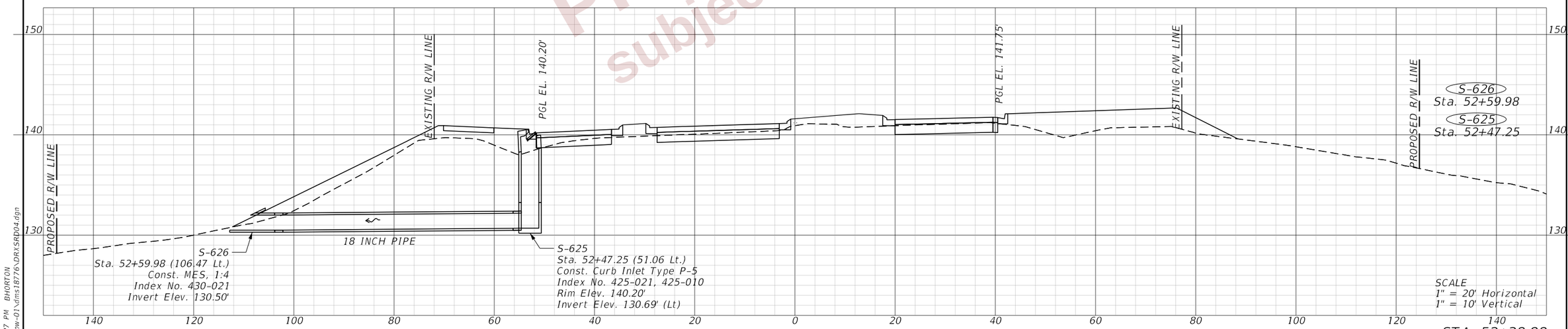

REVISIONS				ENGINEER OF RECORD	STATE OF FLORIDA DEPARTMENT OF TRANSPORTATION			DRAINAGE STRUCTURES (62) UNIVERSITY BLVD.	SHEET NO.
DATE	DESCRIPTION	DATE	DESCRIPTION	LISANDRO ZAPATA, P.E. LICENSE NUMBER 58822 H. W. LOCHNER 4300 W. CYPRESS STREET, SUITE 500 TAMPA, FLORIDA 33607	ROAD NO.	COUNTY	FINANCIAL PROJECT ID		319
					SR 400	POLK	430185-3-52-01		

THE OFFICIAL RECORD OF THIS SHEET IS THE ELECTRONIC FILE DIGITALLY SIGNED AND SEALED UNDER RULE 61G15-23.004, F.A.C.

2/29/2024 4:35:27 PM BHORTON
c:\pw_working\lochner-pw-01\dms18776\DRXSRD04.dgn

SR 33 STRUCTURE DATA										
Label	Baseline Feature	Baseline Station (ft)	Baseline Offset (ft)	Structure Type	Bottom Dimensions	FDOT Standard Plans (400 Index Series) Notes	Remarks	Reference Point Elevation (ft)	Sump Elevation (Structure Invert) (ft)	-Pipe- Label
F-543	CL_CONST_SR33	3400+51.00	-33.00	OPEN FLUME		520-010	X=10.1'	137.89		
F-544	CL_CONST_SR33	3400+51.00	33.00	CLOSED FLUME		425-061	X=6.3', Y=5.0'	137.89		
F-545	CL_CONST_SR33	3401+01.00	-33.00	OPEN FLUME		520-010	X=10.1'	137.74		
F-546	CL_CONST_SR33	3401+01.00	33.00	CLOSED FLUME		425-061	X=5.0', Y=5.0'	137.74	134.42	
F-547	CL_CONST_SR33	3401+51.00	-33.00	OPEN FLUME		520-010	X=11.1'	137.89		
F-548	CL_CONST_SR33	3401+51.00	33.00	CLOSED FLUME		425-061	X=4.6', Y=5.0'	137.89		
F-548A	CL_CONST_SR33	3402+50.00	33.00	CLOSED FLUME		425-061	X=4.9', Y=5.0'	138.19		
F-549	CL_CONST_SR33	3403+10.00	-33.00	OPEN FLUME		520-010	X=11.9'	138.37		
F-550	CL_CONST_SR33	3403+50.00	33.00	CLOSED FLUME		425-061	X=5.7', Y=5.0'	138.49		
F-551	CL_CONST_SR33	3404+30.00	33.00	CLOSED FLUME		425-061	X=6.8', Y=5.0'	138.73		
F-551A	CL_CONST_SR33	3405+20.90	-98.42	OPEN FLUME		520-010		137.66		
F-551B	CL_CONST_SR33	3405+74.91	-98.53	CLOSED FLUME		425-061		137.68		
F-551C	CL_CONST_SR33	3405+40.00	33.00	CLOSED FLUME		425-061	X=8.50, Y=5.0'	139.06		
F-552	CL_CONST_SR33	3406+30.00	-44.00	OPEN FLUME		520-010	X=10.9'	139.11		
F-553	CL_CONST_SR33	3406+30.00	33.00	CLOSED FLUME		425-061	X=9.5', Y=5.0'	139.33		
F-554	CL_CONST_SR33	3407+60.00	-44.00	OPEN FLUME		520-010	X=10.9'	139.50		
F-555	CL_CONST_SR33	3407+60.00	33.00	CLOSED FLUME		425-061	X=10.6', Y=5.0'	139.72		
S-557	CL_CONST_SR33	3406+07.47	-78.82	DBI TYPE H	3'-0" x 6'-7"'	425-052		135.81	132.92	
										(In) P-558
										(Out) P-557
F-556	CL_CONST_SR33	3410+08.76	-44.00	OPEN FLUME		520-010	X=10.9'	139.47		
F-557	CL_CONST_SR33	3410+40.85	33.00	CLOSED FLUME		425-061	X=10.7', Y=5.0'	139.69		
F-558	CL_CONST_SR33	3411+80.73	33.00	CLOSED FLUME		425-061	X=9.0', Y=5.0'	139.27		
F-559	CL_CONST_SR33	3413+20.40	33.00	CLOSED FLUME		425-061	X=10.5', Y=5.0'	138.85		
F-559A	CL_CONST_SR33	3414+24.49	49.86	CLOSED FLUME		425-061	Z=15.0'	136.20		
F-560	CL_CONST_SR33	3414+80.65	33.00	OPEN FLUME		520-010	X=10.6'	138.37		
F-560A	CL_CONST_SR33	3416+10.68	34.28	OPEN FLUME		520-010	X=8.9'	138.09		
F-561	CL_CONST_SR33	3416+60.36	34.82	OPEN FLUME		520-010	X=9.1'	138.06		
F-601	CL_CONST_SR33	3411+21.91	-44.00	OPEN FLUME		520-010	X=11.7'	139.27		
F-602	CL_CONST_SR33	3413+20.90	-33.50	OPEN FLUME		520-010	X=14.6'	138.85		
F-603	CL_CONST_SR33	3414+80.66	-33.00	OPEN FLUME		520-010	X=13.7'	138.37		
F-604	CL_CONST_SR33	3416+50.68	-38.43	OPEN FLUME		520-010	X=13.7'	138.08		
F-604A	CL_CONST_SR33	3417+00.68	-40.98	OPEN FLUME		520-010	X=11.4'	137.95		
F-605	CL_CONST_SR33	3417+47.33	-50.08	OPEN FLUME		520-010	X=18.8'	137.80		
F-608	CL_CONST_UNIVERSITY	52+05.93	59.25	CLOSED FLUME		425-061	Z=5.0'	140.38		
F-612	CL_CONST_FIRST_PARK	34+68.62	-55.14	CLOSED FLUME		425-061	X=0.0', Y=5.0'	137.89		
F-613	CL_CONST_SR33	3421+15.60	-33.56	OPEN FLUME		520-010	X=10.9'	137.68		
F-615	CL_CONST_SR33	3421+70.67	-34.53	OPEN FLUME		520-010	X=10.9'	138.03		
S-601	CL_CONST_FIRST_PARK	34+66.77	99.20	DBI TYPE D	4.08' x 3.08'	425-052	MODIFY	136.30	133.24	
						425-070				(Out) P-601
S-601A	CL_CONST_SR33	3417+97.36	-71.07	GUTTER INLET TYPE S		425-040	3.25' x 3.83'	138.00	134.50	
										(Out) P-601A
S-601B	CL_CONST_FIRST_PARK	34+68.67	59.15	MANHOLE TYPE J-7	7.00' DIA.	425-001	ALTERNATE A	139.00	134.42	
						425-010				(In) P-601
										(In) P-601A
										(Out) P-601A
S-603	CL_CONST_UNIVERSITY	50+08.83	84.60	CURB INLET TYPE J-5	5.00' DIA.	425-021	ALTERNATE A	138.54	134.33	
						425-010				(Out) P-603
S-605	CL_CONST_UNIVERSITY	51+56.98	40.55	CURB INLET TYPE J-5	5.00' DIA.	425-021	ALTERNATE A	139.75	129.24	
						425-010				(In) P-606
										(In) P-603
										(Out) P-605
S-606	CL_CONST_UNIVERSITY	51+51.59	-47.72	CURB INLET TYPE J-5	5.00' DIA.	425-021	ALTERNATE A	139.27	134.14	
						425-010				(In) P-607

PRELIMINARY subject to changes

Notes:

1. See Drainage Details 02, and 03 for "X", "Y", "Z" flume dimension locations.

REVISIONS			
DATE	DESCRIPTION	DATE	DESCRIPTION

ENGINEER OF RECORD

LISANDRO ZAPATA, P.E.
LICENSE NUMBER 58822
H. W. LOCHNER
4300 W. CYPRESS STREET, SUITE 500
TAMPA, FLORIDA 33607

STATE OF FLORIDA
DEPARTMENT OF TRANSPORTATION

ROAD NO.	COUNTY	FINANCIAL PROJECT ID
SR 400	POLK	430185-3-52-01

DRAINAGE SUMMARY TABLES (01)

SHEET NO. 320

THE OFFICIAL RECORD OF THIS SHEET IS THE ELECTRONIC FILE DIGITALLY SIGNED AND SEALED UNDER RULE 61G15-23.004, F.A.C.

2/29/2024 5:15:00 PM BHORTON
c:\pw_working\lochner-pw-01\dms18776\DRDTR009.dgn

SR 33 STRUCTURE DATA										
Label	Baseline Feature	Baseline Station (ft)	Baseline Offset (ft)	Structure Type	Bottom Dimensions	FDOT Standard Plans (400 Index Series) Notes	Remarks	Reference Point Elevation (ft)	Sump Elevation (Structure Invert) (ft)	-Pipe- Label
										(Out) P-606
S-607	CL_CONST_UNIVERSITY	50+42.98	-92.64	CURB INLET TYPE P-5	4.00' DIA.	425-021	ALTERNATE A	138.54	134.22	
						425-010				(Out) P-607
S-608	CL_CONST_UNIVERSITY	51+50.12	-75.54	CURB INLET TYPE P-5	3.50' x 3.50'	425-021		138.80	133.31	
										(Out) P-608
S-610	CL_CONST_SR33	3420+01.23	71.15	CURB INLET TYPE P-5	3.50' x 3.50'	425-021		138.50	130.55	
										(In) P-611
										(In) P-608
										(Out) P-610
S-611	CL_CONST_SR33	3420+69.71	48.95	CURB INLET TYPE P-5	3.50' x 3.50'	425-021		137.97	133.40	
										(In) P-612
										(Out) P-611
S-612	CL_CONST_SR33	3421+18.02	41.22	CURB INLET TYPE P-6	3.50' x 3.50'	425-021		137.82	133.50	
										(In) P-613
										(Out) P-612
S-613	CL_CONST_SR33	3421+69.95	38.11	CURB INLET TYPE P-5	3.50' x 3.50'	425-021		138.09	133.28	
										(Out) P-613
S-614	CL_CONST_SR33	3430+93.05	-91.20	DBI TYPE D	4.08' x 3.08'	425-052	MODIFY	136.00	132.10	
						425-070				(Out) P-614
S-616	CL_CONST_SR33	3432+25.78	58.42	MANHOLE TYPE J-8	7.00' DIA.	425-001	ALTERNATE A	136.17	131.01	
						425-010				(In) P-617
										(In) P-619
										(Out) P-616
S-622	CL_CONST_FIRST_PARK	33+80.00	-32.60	CURB INLET TYPE P-6	3.50' x 3.50'	425-021		137.43	132.82	
										(Out) P-622
S-623	CL_CONST_FIRST_PARK	33+39.92	25.23	CURB INLET TYPE P-6	3.50' x 3.50'	425-021		137.53	132.65	
										(Out) P-623
S-624	CL_CONST_FIRST_PARK	33+18.25	27.58	CURB INLET TYPE J-5	5.00' DIA.	425-021	ALTERNATE A	137.59	132.58	
						425-010				(In) P-623
										(In) P-Existing
										(In) P-622
										(Out) P-Existing
S-625	CL_CONST_UNIVERSITY	52+47.25	-51.06	CURB INLET TYPE P-5	3.50' x 3.50'	425-021		140.20	130.69	
						425-010				(Out) P-625
F-617	CL_CONST_SR33	3424+80.68	-33.00	OPEN FLUME		520-010	X=10.9'	138.18		
F-618	CL_CONST_SR33	3425+20.65	33.00	OPEN FLUME		520-010	X=10.9'	138.06		
F-619	CL_CONST_SR33	3426+20.65	-33.00	OPEN FLUME		520-010	X=10.9'	137.76		
F-620	CL_CONST_SR33	3427+00.65	33.00	OPEN FLUME		520-010	X=10.9'	137.52		
F-621	CL_CONST_SR33	3428+30.65	-44.00	OPEN FLUME		520-010	X=10.9'	136.91		
F-622	CL_CONST_SR33	3428+30.65	33.00	OPEN FLUME		520-010	X=10.9'	137.13		
F-623	CL_CONST_SR33	3429+50.65	-44.00	OPEN FLUME		520-010	X=10.9'	136.55		
F-624	CL_CONST_SR33	3429+50.65	33.00	OPEN FLUME		520-010	X=10.9'	136.77		
F-625	CL_CONST_SR33	3430+00.65	-44.00	OPEN FLUME		520-010	X=10.9'	136.40		
F-626	CL_CONST_SR33	3430+00.65	33.00	OPEN FLUME		520-010	X=10.9'	136.62		
F-627	CL_CONST_SR33	3430+70.51	-38.12	OPEN FLUME		520-010	X=10.9'	136.72		
F-628	CL_CONST_SR33	3430+50.65	33.00	OPEN FLUME		520-010	X=10.9'	136.77		
F-629	CL_CONST_SR33	3433+80.69	-33.00	OPEN FLUME		520-010	X=10.9'	137.76		
F-630	CL_CONST_SR33	3434+20.65	33.00	OPEN FLUME		520-010	X=10.9'	137.88		
F-631	CL_CONST_SR33	3436+00.42	-33.63	OPEN FLUME		520-010	X=10.9'	138.36		
F-632	CL_CONST_SR33	3436+00.89	33.00	OPEN FLUME		520-010	X=10.9'	138.42		
F-633	CL_CONST_SR33	3437+60.87	-33.61	OPEN FLUME		520-010	X=10.9'	138.84		

PRELIMINARY
Subject to changes

Notes:

1. See Drainage Details 02, and 03 for "X", "Y", "Z" flume dimension locations.

REVISIONS				ENGINEER OF RECORD	STATE OF FLORIDA DEPARTMENT OF TRANSPORTATION			DRAINAGE SUMMARY TABLES (02)	SHEET NO.
DATE	DESCRIPTION	DATE	DESCRIPTION	LISANDRO ZAPATA, P.E. LICENSE NUMBER 58822 H. W. LOCHNER 4300 W. CYPRESS STREET, SUITE 500 TAMPA, FLORIDA 33607	ROAD NO.	COUNTY	FINANCIAL PROJECT ID		321
					SR 400	POLK	430185-3-52-01		

THE OFFICIAL RECORD OF THIS SHEET IS THE ELECTRONIC FILE DIGITALLY SIGNED AND SEALED UNDER RULE 61G15-23.004, F.A.C.

2/29/2024 5:15:00 PM BHORTON
c:\pw_working\lochner-pw-01\dms18776\DRDTR009.dgn

SR 33 STRUCTURE DATA										
Label	Baseline Feature	Baseline Station (ft)	Baseline Offset (ft)	Structure Type	Bottom Dimensions	FDOT Standard Plans (400 Index Series) Notes	Remarks	Reference Point Elevation (ft)	Sump Elevation (Structure Invert) (ft)	-Pipe- Label
F-634	CL_CONST_SR33	3437+60.31	44.00	OPEN FLUME		520-010	X=10.9'	138.67		
F-635	CL_CONST_SR33	3439+00.63	-33.00	OPEN FLUME		520-010	X=7.5'	139.32		
F-636	CL_CONST_SR33	3439+20.67	44.00	OPEN FLUME		520-010	X=10.9'	139.16		
F-637	CL_CONST_SR33	3440+29.45	-33.08	OPEN FLUME		520-010	X=10.9'	139.73		
S-617	CL_CONST_SR33	3432+24.97	33.00	CURB INLET TYPE J-5	5.00' DIA.	425-021		137.29	130.30	
						425-010				(In) P-618
										(Out) P-617
S-618	CL_CONST_SR33	3432+25.13	-33.00	CURB INLET TYPE J-5	5.00' DIA.	425-021		137.29	130.55	
						425-010				(In) CD-6
										(Out) P-618
S-621	CL_CONST_SR33	3433+41.85	-68.48	DBI TYPE D	4.08' x 3.08'	425-052	MODIFY	136.00	132.10	
						425-070				(Out) P-621
S-627	CL_CONST_SR33	3422+86.25	60.79	DBI TYPE D	4.08' x 3.08'	425-052	MODIFY	135.40	131.48	
						425-070				(Out) P-628
S-627A	CL_CONST_SR33	3422+29.14	57.76	Manhole Type J-8	6.00' DIA.	425-001	ALTERNATE A	137.32	131.42	(In) P-628
						425-010				(Out) P-627A
F-802	CL_CONST_SR33	3441+38.63	-38.09	OPEN FLUME		520-010	X=25.3'	139.57		
S-801	CL_CONST_SR33	3441+39.95	52.80	CURB INLET TYPE P-5	3.50' x 3.50'	425-021		139.30	135.00	
										(Out) P-801
S-802	CL_CONST_SR33	3442+32.54	27.94	CURB INLET TYPE P-6	4.00' DIA.	425-021	ALTERNATE A	139.25	134.70	
						425-010				(Out) P-802
S-803	CL_CONST_SR33	3442+48.44	87.84	CURB INLET TYPE J-6	6.00' DIA.	425-021		138.71	132.57	
						425-010				(In) P-801
										(In) P-802
										(Out) P-803
S-804	BL_RAMP_B	226+98.98	1.34	CURB INLET TYPE P-5	4.00' DIA	425-021		138.26	133.85	
						425-010				(In) P-809
										(Out) P-804
S-805	CL_CONST_SR33	3443+92.89	92.74	CURB INLET TYPE J-5	5.00' DIA	425-021		139.51	134.30	
										(In) P-803
										(Out) P-805
S-806	BL_RAMP_C	305+40.38	-20.78	CURB INLET TYPE P-5	3.50' x 3.50'	425-021		138.90	134.30	
						425-010				(Out) P-806
S-807	CL_CONST_SR33	3444+40.76	3.28	CURB INLET TYPE J-5	6.00' DIA.	425-021		139.70	134.10	
						425-010				(In) P-805
										(In) P-806
										(Out) P-807
S-808	BL_RAMP_B	227+31.94	-67.84	CURB INLET TYPE P-5	4.00 DIA.	425-021		139.69	133.70	
						425-010				(In) P-804
										(Out) P-808
S-809	BL_RAMP_B	226+37.82	0.00	CURB INLET TYPE P-5	4.00' DIA.	425-021	ALTERNATE A	138.04	133.95	
						425-010				(In) P-810
										(Out) P-809
S-810	CL_CONST_SR33	3443+13.33	-202.17	CURB INLET TYPE P-5	4.00' DIA.	425-021	ALTERNATE A	138.51	134.00	
						425-010				(Out) P-810
S-811	CL_CONST_SR33	3445+62.76	-30.00	CURB INLET TYPE P-6	4.00 DIA.	425-021	ALTERNATE A	139.36	130.10	
						425-010				(In) P-808
										(Out) P-811
S-812	CL_CONST_SR33	3445+58.06	30.73	CURB INLET TYPE P-6	3.50' x 3.50'	425-021		139.59	127.36	
						425-010				(In) P-811
										(In) P-815
										(In) P-807
										(Out) P-812
S-814	CL_CONST_SR33	3448+29.92	-29.00	CURB INLET TYPE P-5	3.50' x 3.50'	425-021		139.85	134.80	

PRELIMINARY subject to changes

Notes:

1. See Drainage Details 02, and 03 for "X", "Y", "Z" flume dimension locations.

THE OFFICIAL RECORD OF THIS SHEET IS THE ELECTRONIC FILE DIGITALLY SIGNED AND SEALED UNDER RULE 61G15-23.004, F.A.C.

REVISIONS			
DATE	DESCRIPTION	DATE	DESCRIPTION

ENGINEER OF RECORD
LISANDRO ZAPATA, P.E.
LICENSE NUMBER 58822
H. W. LOCHNER
4300 W. CYPRESS STREET, SUITE 500
TAMPA, FLORIDA 33607

STATE OF FLORIDA
DEPARTMENT OF TRANSPORTATION

ROAD NO.	COUNTY	FINANCIAL PROJECT ID
SR 400	POLK	430185-3-52-01

DRAINAGE SUMMARY TABLES (03)

SHEET NO. 322

2/29/2024 5:15:01 PM BHORTON
c:\pw_working\lochner-pw-01\dms18776\DRDTR009.dgn

SR 33 STRUCTURE DATA										
Label	Baseline Feature	Baseline Station (ft)	Baseline Offset (ft)	Structure Type	Bottom Dimensions	FDOT Standard Plans (400 Index Series) Notes	Remarks	Reference Point Elevation (ft)	Sump Elevation (Structure Invert) (ft)	-Pipe- Label
						425-010				(In) P-817
										(Out) P-814
S-815	CL_CONST_SR33	3448+29.96	29.01	CURB INLET TYPE P-5	3.50' x 3.50'	425-021		139.85	134.50	
						425-010				(In) P-816
										(In) P-814
										(Out) P-815
S-816	CL_CONST_SR33	3449+39.71	29.00	CURB INLET TYPE P-5	3.50' x 3.50'	425-021		139.52	132.70	
						425-010				(In) P-818
										(Out) P-816
S-817	CL_CONST_SR33	3449+40.18	-29.00	CURB INLET TYPE P-5	3.50' x 3.50'	425-021		139.58	135.00	
						425-010				(Out) P-817
S-818	CL_CONST_SR33	3449+79.66	29.00	CURB INLET TYPE P-6	3.50' x 3.50'	425-021		139.40	133.00	
						425-010				(In) P-819
										(Out) P-818
S-819	CL_CONST_SR33	3450+40.13	28.76	CURB INLET TYPE P-5	3.50' x 3.50'	425-021		139.55	135.00	
						425-010				(Out) P-819
S-820	BL_RAMP_C	306+56.12	-69.85	DBI TYPE D	4.08' x 3.08'	425-052	MODIFY	134.50	131.30	
						425-070				(Out) P-820
S-902	CL_CONST_SR33	3449+79.70	-29.00	CURB INLET TYPE P-6	3.50' x 3.50'	425-021		139.40	127.20	
						425-010				(In) P-903
										(Out) P-902
S-903	CL_CONST_SR33	3450+39.75	-29.29	CURB INLET TYPE P-5	3.50' x 3.50'	425-021		139.55	127.70	
						425-010				(In) P-907
										(Out) P-903
S-905	CL_CONST_SR33	3451+90.70	96.35	CURB INLET TYPE J-5	5.00' DIA	425-021		140.22	133.10	
						425-010				(In) P-63
										(Out) P-905
S-906	CL_CONST_SR33	3452+86.08	109.62	CURB INLET TYPE J-5	5.00' DIA	425-021		139.85	132.90	
						425-010				(In) P-905
										(Out) P-906
S-906A	CL_CONST_SR33	3453+22.82	113.73	CURB INLET TYPE P-5	3.50' x 3.50'	425-021		138.85	132.80	
						425-010				(In) P-906
										(Out) P-906A
S-907	CL_CONST_SR33	3452+89.42	-81.62	CURB INLET TYPE J-5	5.00' DIA	425-021		140.24	132.50	
						425-010				(In) P-909
										(In) P-914
										(Out) P-907
S-908	BL_RAMP_D	400+82.07	-1.34	CURB INLET TYPE J-5	8.00' DIA	425-021		138.75	128.10	
						425-010				(In) P-912
										(In) P-906A
										(Out) P-908
S-909	BL_RAMPA	135+09.23	0.00	CURB INLET TYPE P-5	3.50' x 3.50'	425-021		139.56	132.60	
						425-010				(In) P-915
										(Out) P-909
S-912	CL_CONST_SR33	3454+79.01	36.92	CURB INLET TYPE P-5	4.00' DIA.	425-021		139.00	133.80	
						425-010				(In) P-913
										(Out) P-912
S-913	CL_CONST_SR33	3455+60.42	36.52	CURB INLET TYPE P-6	3.50' x 3.50'	425-021		138.70	133.00	

PRELIMINARY
subject to changes

Notes:

1. See Drainage Details 02, and 03 for "X", "Y", "Z" flume dimension locations.

REVISIONS			
DATE	DESCRIPTION	DATE	DESCRIPTION

ENGINEER OF RECORD
LISANDRO ZAPATA, P.E.
LICENSE NUMBER 58822
H. W. LOCHNER
4300 W. CYPRESS STREET, SUITE 500
TAMPA, FLORIDA 33607

STATE OF FLORIDA
DEPARTMENT OF TRANSPORTATION

ROAD NO.	COUNTY	FINANCIAL PROJECT ID
SR 400	POLK	430185-3-52-01

DRAINAGE SUMMARY TABLES
(04)

SHEET NO. 323

THE OFFICIAL RECORD OF THIS SHEET IS THE ELECTRONIC FILE DIGITALLY SIGNED AND SEALED UNDER RULE 61G15-23.004, F.A.C.

2/29/2024 5:15:01 PM BHORTON
c:\pw_working\lochner-pw-01\dms18776\DRDTRD09.dgn

SR 33 STRUCTURE DATA										
Label	Baseline Feature	Baseline Station (ft)	Baseline Offset (ft)	Structure Type	Bottom Dimensions	FDOT Standard Plans (400 Index Series) Notes	Remarks	Reference Point Elevation (ft)	Sump Elevation (Structure Invert) (ft)	-Pipe- Label
						425-010				(Out) P-913
S-914	CL_CONST_SR33	3453+57.22	-40.12	CURB INLET TYPE P-5	4.00' DIA	425-021		139.80	134.80	
						425-010				(In) P-916
										(Out) P-914
S-915	BL_RAMPA	135+87.35	-0.07	CURB INLET TYPE P-5	3.50' x 3.50'	425-021		139.16	132.80	
						425-010				(In) P-918
										(Out) P-915
S-916	CL_CONST_SR33	3454+71.54	-34.89	CURB INLET TYPE P-5	3.50' x 3.50'	425-021		139.25	135.00	
						425-010				(Out) P-916
S-917	CL_CONST_SR33	3455+59.95	-49.44	CURB INLET TYPE P-6	3.50' x 3.50'	425-021		138.43	132.70	
						425-010				(Out) P-917
S-918	BL_RAMPA	136+79.35	-0.06	CURB INLET TYPE P-5	3.50' x 3.50'	425-021		138.77	133.00	
						425-010				(In) P-917
										(Out) P-918
S-920	CL_CONST_SR33	3455+53.61	106.45	DBI TYPE D	4.08' x 3.08'	425-052	MODIFY	135.30	132.15	
						425-070				(Out) P-920
S-921	CL_CONST_SR33	3456+61.02	0.00	Manhole Type J-8	10.00' DIA.	425-001	ALTERNATE A	139.92	130.95	
						425-010				(In) P-920
										(In) CD-8
										(Out) P-921_EX
S-921A	CL_CONST_SR33	3456+60.71	33.86	CURB INLET TYPE P-5	3.50' x 3.50'	425-021		138.82	132.00	
						425-010				(In) CD-8
										(Out) P-921A
S-922	CL_CONST_SR33	3456+60.17	-44.00	CURB INLET TYPE P-5	3.50' x 3.50'	425-021		138.61	130.89	
						425-010				(In) P-921_EX
										(Out) P-922
S-926	BL_RAMP_D	401+43.48	24.96	CURB INLET TYPE P-5	3.50' x 3.50'	425-021		138.30	128.88	
						425-010				(In) P-66
										(Out) P-926
S-927	BL_RAMP_D	401+43.24	0.00	CURB INLET TYPE P-5	3.50' x 3.50'	425-021		137.88	128.65	
						425-010				(In) P-926
										(Out) P-927
F-1002	CL_CONST_SR33	3457+69.92	-44.00	CLOSED FLUME		425-061	X=10.7', Y=5.0'	138.94		
F-1003	CL_CONST_SR33	3457+20.00	33.05	CLOSED FLUME		425-061	X=28.0', Y=5.0'	139.01		
F-1004	CL_CONST_SR33	3458+80.00	-44.00	CLOSED FLUME		425-061	X=10.7', Y=5.0'	139.27		
F-1005	CL_CONST_SR33	3458+39.95	33.00	CLOSED FLUME		425-061	X=28.0', Y=5.0'	139.37		
F-1006	CL_CONST_SR33	3459+80.01	-44.00	CLOSED FLUME		425-061	X=10.7', Y=5.0'	139.57		
F-1007	CL_CONST_SR33	3459+59.95	33.00	CLOSED FLUME		425-061	X=28.0', Y=5.0'	139.73		
S-1001	CL_CONST_SR33	3460+20.05	53.71	Manhole Type J-8	9.00' x 4.00'	425-001	ALTERNATE B	140.16	132.03	
						425-010				(In) P-1005
										(In) CD-9
										(Out) P-1001
S-1002	CL_CONST_SR33	3460+20.05	-64.28	Manhole Type J-8	9.00' x 4.00'	425-001	ALTERNATE B	140.04	131.60	
						425-010				(In) P-1001
										(In) P-1003
										(Out) P-1002
S-1003	CL_CONST_SR33	3462+16.82	-85.99	Manhole Type J-8	6.00' DIA.	425-001	ALTERNATE A	139.04	132.20	
						425-010				(In) P-1008
										(In) P-1004
										(Out) P-1003
S-1004	CL_CONST_SR33	3462+24.48	-71.26	DBI TYPE D	4.08' x 3.08'	425-052	MODIFY	138.50	132.70	
						425-070				(Out) P-1004
S-1005	CL_CONST_SR33	3462+52.90	53.80	Manhole Type J-8	6.00' DIA.	425-001	ALTERNATE A	139.14	132.50	
						425-010				(In) P-1007
										(In) P-1006

PRELIMINARY subject to changes

Notes:

1. See Drainage Details 02, and 03 for "X", "Y", "Z" flume dimension locations.

REVISIONS			
DATE	DESCRIPTION	DATE	DESCRIPTION

ENGINEER OF RECORD
LISANDRO ZAPATA, P.E.
LICENSE NUMBER 58822
H. W. LOCHNER
4300 W. CYPRESS STREET, SUITE 500
TAMPA, FLORIDA 33607

STATE OF FLORIDA
DEPARTMENT OF TRANSPORTATION

ROAD NO.	COUNTY	FINANCIAL PROJECT ID
SR 400	POLK	430185-3-52-01

DRAINAGE SUMMARY TABLES (05)

SHEET NO. 324

THE OFFICIAL RECORD OF THIS SHEET IS THE ELECTRONIC FILE DIGITALLY SIGNED AND SEALED UNDER RULE 61G15-23.004, F.A.C.

2/29/2024 5:15:02 PM BHORTON
c:\pw_working\lochner-pw-01\dms18776\DRDTR009.dgn

SR 33 STRUCTURE DATA										
Label	Baseline Feature	Baseline Station (ft)	Baseline Offset (ft)	Structure Type	Bottom Dimensions	FDOT Standard Plans (400 Index Series) Notes	Remarks	Reference Point Elevation (ft)	Sump Elevation (Structure Invert) (ft)	-Pipe- Label
										(Out) P-1005
S-1006	CL_CONST_SR33	3462+57.87	70.61	DBI TYPE D	4.08' x 3.08'	425-052	MODIFY	138.37	132.99	
						425-070				(Out) P-1006
S-1007	CL_CONST_SR33	3463+97.78	56.05	Manhole Type J-8	5.00' DIA.	425-001	ALTERNATE A	136.34	133.00	
						425-010				(In) P-1009
										(Out) P-1007
S-1008	CL_CONST_SR33	3464+27.12	-86.16	Manhole Type P-7	4.00' DIA.	425-001	ALTERNATE A	139.04	132.80	
						425-010				(In) P-1011
										(Out) P-1008
S-1009	CL_CONST_SR33	3464+59.27	80.00	DBI TYPE D	4.08' x 3.08'	425-052		136.28	133.50	
										(In) P-1010
										(Out) P-1009
S-1010	CL_CONST_SR33	3465+33.74	63.41	DBI TYPE D	4.08' x 3.08'	425-052	MODIFY	137.90	134.26	
						425-070				(Out) P-1010
S-1011	CL_CONST_SR33	3466+60.31	-85.16	Manhole Type P-7	4.00' DIA.	425-001	ALTERNATE A	139.15	133.80	
						425-010				(In) P-1012
										(Out) P-1011
S-1012	CL_CONST_SR33	3466+88.81	-69.23	DBI TYPE D	4.08' x 3.08'	425-052	MODIFY	139.50	133.99	
						425-070				(Out) P-1012
S-1014	CL_CONST_TOMKOW	512+38.84	-17.21	DBI TYPE C MOD	3.08' x 2.00'	425-060	0.5' x 2.0' SLOT	140.29	135.10	
										(Out) P-1014
S-1101	CL_CONST_SR33	3476+42.95	69.45	DBI TYPE D	4.08' x 3.08'	425-052	MODIFY	139.20	134.50	
						425-070				(Out) P-1101
S-1102	CL_CONST_SR33	3476+97.57	86.38	Manhole Type P-8	4.00' DIA.	425-001	ALTERNATE A	139.50	134.12	
						425-010				(In) P-1101
										(Out) P-1102
S-1105	CL_CONST_SR33	3480+13.95	63.32	DBI TYPE D	12.00' x 12.00'	425-052	ALTERNATE B; J-BOTTOM	138.11	133.61	(In) P-1109B
						425-010				(In) P-1108
										(Out) P-1105
										(Out) CD-10
S-1108	CL_CONST_SR33	3480+56.61	62.60	DBI TYPE D	4.08' x 3.08'	425-052	MODIFY	138.25	134.10	
						425-070				(Out) P-1108
S-1109	CL_CONST_SR33	3480+77.54	78.51	Manhole Type P-8	4.00' DIA.	425-001	ALTERNATE A	139.06	134.10	
						425-010				(In) P-1110
										(Out) P-1109
S-1110	CL_CONST_SR33	3483+79.48	79.53	Manhole Type P-8	4.00' DIA.	425-001	ALTERNATE A	139.01	134.60	
						425-010				(In) P-1111
										(Out) P-1110
S-1111	CL_CONST_SR33	3486+79.45	82.28	Manhole Type P-8	4.00' DIA.	425-001	ALTERNATE A	139.01	135.10	
						425-010				(In) P-1112
										(Out) P-1111
S-1112	CL_CONST_SR33	3489+28.69	85.60	DBI TYPE D	4.08' x 3.08'	425-052	MODIFY	139.00	135.53	
						425-070				(Out) P-1112
F-1008	CL_CONST_SR33	3461+65.64	33.00	CLOSED FLUME		425-061		139.95		
F-1009	CL_CONST_SR33	3462+30.64	-33.00	OPEN FLUME		520-010	X=10.9', Y=5.0'	139.76		
F-1010	CL_CONST_SR33	3463+50.92	-33.00	OPEN FLUME		520-010	X=10.9'	139.40		
F-1011	CL_CONST_SR33	3463+50.64	33.00	CLOSED FLUME		425-061	X=10.9', Y=5.0'	139.40		
F-1012	CL_CONST_SR33	3464+00.64	-33.00	OPEN FLUME		520-010	X=10.9'	139.25		
F-1013	CL_CONST_SR33	3464+50.67	-33.00	OPEN FLUME		520-010	X=10.9'	139.40		
F-1014	CL_CONST_SR33	3464+80.64	33.00	OPEN FLUME		520-010		139.49		

PRELIMINARY subject to changes

Notes:

1. See Drainage Details 02, and 03 for "X", "Y", "Z" flume dimension locations.

REVISIONS			
DATE	DESCRIPTION	DATE	DESCRIPTION

ENGINEER OF RECORD
LISANDRO ZAPATA, P.E.
LICENSE NUMBER 58822
H. W. LOCHNER
4300 W. CYPRESS STREET, SUITE 500
TAMPA, FLORIDA 33607

STATE OF FLORIDA
DEPARTMENT OF TRANSPORTATION

ROAD NO.	COUNTY	FINANCIAL PROJECT ID
SR 400	POLK	430185-3-52-01

DRAINAGE SUMMARY TABLES (06)

SHEET NO. 325

THE OFFICIAL RECORD OF THIS SHEET IS THE ELECTRONIC FILE DIGITALLY SIGNED AND SEALED UNDER RULE 61G15-23.004, F.A.C.

2/29/2024 5:15:02 PM BHORTON
c:\pw_working\lochner-pw-01\dms18776\DRDTRD09.dgn

SR 33 STRUCTURE DATA										
Label	Baseline Feature	Baseline Station (ft)	Baseline Offset (ft)	Structure Type	Bottom Dimensions	FDOT Standard Plans (400 Index Series) Notes	Remarks	Reference Point Elevation (ft)	Sump Elevation (Structure Invert) (ft)	-Pipe- Label
F-1015	CL_CONST_SR33	3465+60.64	-33.00	OPEN FLUME		520-010	X=10.9'	139.73		
F-1016	CL_CONST_SR33	3465+60.64	33.00	OPEN FLUME		520-010	X=10.9'	139.73		
F-1017	CL_CONST_SR33	3467+00.64	44.08	OPEN FLUME		520-010	X=10.9'	139.92		
F-1018	CL_CONST_SR33	3467+20.64	-33.00	OPEN FLUME		520-010	X=15.0'	140.21		
F-1019	CL_CONST_SR33	3468+20.64	44.02	OPEN FLUME		520-010	X=12.7'	140.29		
F-1020	CL_CONST_SR33	3468+80.64	-33.00	OPEN FLUME		520-010	X=17.7'	140.69		
F-1021	CL_CONST_SR33	3469+60.66	44.04	OPEN FLUME		520-010	X=13.8'	140.70		
F-1022	CL_CONST_SR33	3470+40.64	-33.00	OPEN FLUME		520-010	X=19.7'	141.17		
F-1023	CL_CONST_SR33	3472+20.64	-33.00	OPEN FLUME		520-010	X=10.9'	141.71		
F-1024	CL_CONST_SR33	3475+30.93	-33.00	OPEN FLUME		520-010	X=20.7'	141.75		
F-1025	CL_CONST_SR33	3475+80.73	-34.28	OPEN FLUME		520-010	X=10.9'	141.55		
F-1026	CL_CONST_SR33	3476+72.60	-64.65	OPEN FLUME		520-010	X=4.6'	140.05		
F-1027	CL_CONST_TOMKOW	520+78.39	51.47	OPEN FLUME		520-010	X=10.9	137.86		
F-1028	CL_CONST_TOMKOW	520+24.69	37.18	OPEN FLUME		520-010	X=5.5'	137.70		
F-1029	CL_CONST_TOMKOW	519+79.96	27.41	OPEN FLUME		520-010	X=10.9'	137.78		
F-1030	CL_CONST_TOMKOW	517+13.81	24.00	OPEN FLUME		520-010	X=10.9'	138.97		
F-1031	CL_CONST_TOMKOW	515+98.17	24.00	OPEN FLUME		520-010	X=10.9'	138.29		
F-1032	CL_CONST_TOMKOW	515+50.96	24.00	OPEN FLUME		520-010	X=10.9'	138.09		
F-1032A	CL_CONST_TOMKOW	514+94.67	12.00	OPEN FLUME		520-010	X=10.9'	138.24		
F-1033	CL_CONST_TOMKOW	513+96.63	12.00	OPEN FLUME		520-010	X=10.9'	138.52		
F-1034	CL_CONST_TOMKOW	512+98.37	12.00	OPEN FLUME		520-010	X=10.9'	139.27		
F-1035	CL_CONST_TOMKOW	511+14.20	12.00	CLOSED FLUME		425-061	X=9.0'	139.34		
F-1036	CL_CONST_TOMKOW	509+59.77	12.00	CLOSED FLUME		425-061	X=9.0'	136.44		
F-1037	CL_CONST_TOMKOW	508+15.94	12.00	CLOSED FLUME		425-061	X=8.0'	135.77		
F-1038	CL_CONST_TOMKOW	506+05.37	-19.75	CLOSED FLUME		425-061	X=0.0'	134.76		
F-1040	CL_CONST_TOMKOW	504+58.66	-12.06	CLOSED FLUME		425-061	X=0.0'	133.95		
F-1101	CL_CONST_SR33	3472+20.64	33.00	OPEN FLUME		520-010	X=10.9'	141.71		
F-1102	CL_CONST_SR33	3473+00.64	33.00	OPEN FLUME		520-010	X=14.9'	141.95		
F-1103	CL_CONST_SR33	3474+80.88	44.00	OPEN FLUME		520-010	X=14.3'	141.68		
F-1104	CL_CONST_SR33	3475+70.71	44.00	OPEN FLUME		520-010	X=14.1'	141.41		
F-1105	CL_CONST_SR33	3476+60.63	44.00	OPEN FLUME		520-010	X=10.9'	141.15		
F-1105A	CL_CONST_SR33	3477+39.40	173.22	OPEN FLUME		520-010		136.61		
F-1107	CL_CONST_SR33	3478+60.63	-44.00	CLOSED FLUME		425-061	X=28.0', Y=5.0'	140.54		
F-1108	CL_CONST_SR33	3478+40.70	-44.01	CLOSED FLUME		425-061	X=28.0, Y=5.0'	140.30		
F-1109	CL_CONST_SR33	3479+80.64	33.64	OPEN FLUME		520-010	X=10.9'	140.39		
F-1110	CL_CONST_SR33	3480+05.99	-43.99	CLOSED FLUME		425-061	X=28.0', Y=5.0'	140.06		
F-1111	CL_CONST_SR33	3480+80.64	32.86	OPEN FLUME		520-010	X=10.9'	140.10		
F-1112	CL_CONST_SR33	3481+00.73	-43.97	CLOSED FLUME		425-061	X=28.0', Y=5.0'	139.82		
F-1113	CL_CONST_SR33	3482+00.94	-38.76	CLOSED FLUME		425-061	X=20.0', Y=5.0'	139.62		
F-1114	CL_CONST_SR33	3482+00.64	32.53	OPEN FLUME		520-010	X=10.9'	139.74		
F-1115	CL_CONST_SR33	3482+50.64	-32.74	CLOSED FLUME		425-061	X=20.0', Y=5.0'	139.59		
F-1116	CL_CONST_SR33	3482+50.64	32.36	OPEN FLUME		520-010	X=10.9'	139.61		
F-1117	CL_CONST_SR33	3483+00.39	-32.60	CLOSED FLUME		425-061	X=20.0', Y=5.0'	139.71		
F-1118	CL_CONST_SR33	3483+00.64	32.22	OPEN FLUME		520-010	X=10.9'	139.76		
F-1119	CL_CONST_SR33	3484+30.76	31.59	OPEN FLUME		520-010	X=10.9'	140.16		
F-1120	CL_CONST_SR33	3484+40.68	-32.07	CLOSED FLUME		425-061	X=14.0', Y=5.0'	140.13		
F-1121	CL_CONST_SR33	3485+40.72	31.01	OPEN FLUME		520-010	X=10.9'	140.50		
F-1122	CL_CONST_SR33	3487+80.64	29.45	OPEN FLUME		520-010		140.40		
F-1123	CL_CONST_SR33	3498+00.64	-29.79	OPEN FLUME		520-010	X=10.9'	140.02		
F-1124	CL_CONST_SR33	3490+00.64	27.66	CLOSED FLUME		425-061	X=7.8', Y=6.0'	139.74		
F-1125	CL_CONST_SR33	3490+75.67	-29.50	OPEN FLUME		520-010	X=10.9', Y=6.0'	139.40		
F-1126	CL_CONST_SR33	3490+80.64	26.92	CLOSED FLUME		425-061	X=7.4', Y=6.0'	139.41		
F-1127	CL_CONST_SR33	3491+29.55	-19.12	OPEN FLUME		520-010		139.45		
F-1128	CL_CONST_SR33	3491+29.37	26.50	CLOSED FLUME		425-061	X=7.2', Y=6.0'	139.27		

PRELIMINARY
Subject to Changes

Notes:

1. See Drainage Details 02, and 03 for "X", "Y", "Z" flume dimension locations.

REVISIONS			
DATE	DESCRIPTION	DATE	DESCRIPTION

ENGINEER OF RECORD
LISANDRO ZAPATA, P.E.
LICENSE NUMBER 58822
H. W. LOCHNER
4300 W. CYPRESS STREET, SUITE 500
TAMPA, FLORIDA 33607

STATE OF FLORIDA
DEPARTMENT OF TRANSPORTATION

ROAD NO.	COUNTY	FINANCIAL PROJECT ID
SR 400	POLK	430185-3-52-01

DRAINAGE SUMMARY TABLES
(07)

SHEET NO. 326

THE OFFICIAL RECORD OF THIS SHEET IS THE ELECTRONIC FILE DIGITALLY SIGNED AND SEALED UNDER RULE 61G15-23.004, F.A.C.

2/29/2024 5:15:03 PM BHORTON
c:\pw_working\lochner-pw-01\dms18776\DRDTR009.dgn

SR 33 STRUCTURE DATA										
Label	Baseline Feature	Baseline Station (ft)	Baseline Offset (ft)	Structure Type	Bottom Dimensions	FDOT Standard Plans (400 Index Series) Notes	Remarks	Reference Point Elevation (ft)	Sump Elevation (Structure Invert) (ft)	-Pipe- Label
F-1129	CL_CONST_SR33	3491+80.63	25.99	CLOSED FLUME		425-061	X=7.2', Y=6.0'	139.43		
F-1130	CL_CONST_SR33	3493+00.63	24.71	CLOSED FLUME		425-061	X=9.3', Y=6.0'	139.82		

PRELIMINARY
subject to changes

Notes:

1. See Drainage Details 02, and 03 for "X", "Y", "Z" flume dimension locations.

REVISIONS				ENGINEER OF RECORD	STATE OF FLORIDA DEPARTMENT OF TRANSPORTATION			DRAINAGE SUMMARY TABLES (08)	SHEET NO.
DATE	DESCRIPTION	DATE	DESCRIPTION	LISANDRO ZAPATA, P.E. LICENSE NUMBER 58822 H. W. LOCHNER 4300 W. CYPRESS STREET, SUITE 500 TAMPA, FLORIDA 33607	ROAD NO.	COUNTY	FINANCIAL PROJECT ID		327
					SR 400	POLK	430185-3-52-01		

THE OFFICIAL RECORD OF THIS SHEET IS THE ELECTRONIC FILE DIGITALLY SIGNED AND SEALED UNDER RULE 61G15-23.004, F.A.C.

2/29/2024 5:15:03 PM BHORTON
c:\pw_working\lochner-pw-01\dms18776\DRDTRD09.dgn

SR 33 PIPE DATA								
Label	Group Number	Number of Barrels	Length (ft)	Size (in)	Start Node (Upper)	Start Invert (ft)	Stop Node (Lower)	Stop Invert (ft)
P-557	5	2	151.0	14x23 inch	S-557	132.92	S-556	132.70
P-558	5	2	47.6	14x23 inch	S-558	133.00	S-557	132.92
P-601	5	1	46.2	14x23 inch	S-601	134.50	S-601B	134.42
P-601A	5	1	50.4	14x23 inch	S-601A	134.50	S-601B	134.42
P-601B	5	1	140.2	14x23 inch	S-601B	134.42	S-602	134.20
P-603	1	1	150.4	18 inch	S-603	134.33	S-605	134.10
P-605	1	1	68.2	18 inch	S-605	129.24	S-604	127.50
P-606	1	1	84.6	18 inch	S-606	134.14	S-605	134.00
P-607	1	1	116.4	18 inch	S-607	134.32	S-606	134.14
P-608	1	1	30.0	18 inch	S-608	133.31	S-610	133.26
P-610	1	1	26.3	18 inch	S-610	132.62	S-609	132.50
P-611	1	1	71.8	18 inch	S-611	133.73	S-610	133.26
P-612	1	1	47.3	18 inch	S-612	133.81	S-611	133.73
P-613	1	1	49.3	18 inch	S-613	133.89	S-612	133.81
P-614	1	1	45.7	18 inch	S-614	132.10	S-615	132.00
P-622	1	1	58.7	18 inch	S-622	132.82	EX-15	132.70
P-623	1	1	17.5	18 inch	S-623	132.65	S-624	132.58
P-624A	1	1	6.0	18 inch	EX PIPE	MATCH EX	S-624	132.58
P-624B	2	1	6.0	24 inch	S-624	132.58	EX PIPE	MATCH EX
P-625	1	1	49.7	18 inch	S-625	130.69	S-626	130.50
SD-15	1	1	11.2	18 inch	SD-15A	135.01	SD-15B	135.00
SD-16	4	3	14.2	48 inch	SD-16A	125.79	SD-16B	125.47
P-616	2	1	5.5	36 inch	S-616	131.01	CD-6B	131.00
P-617	2	1	19.9	36 inch	S-617	131.30	S-616	131.20
P-618	2	1	65.0	36 inch	S-618	131.60	S-617	131.30
P-619	1	1	72.5	18 inch	S-619	133.30	S-616	133.10
P-621	5	1	44.7	14x23 inch	S-621	132.08	S-620	132.00
P-627	6	1	54.2	19x30 inch	S-627	131.48	S-627A	131.42
P-627A	6	1	24.7	19x30 inch	S-627A	131.42	S-628	131.39
CD-6	2	1	30.3	36 inch	CD-6A	132.00	S-618	131.60
SD-18	1	1	35.3	18 inch	SD-18B	134.95	SD-18A	134.80
SD-19	4	1	235.8	48 inch	SD-19A	130.58	SD-19B	130.08
P-801	1	1	108.6	18 inch	S-801	135.00	S-803	134.50
P-802	1	1	56.7	18 inch	S-802	134.70	S-803	134.50
P-803	1	1	114.5	18 inch	S-803	134.50	S-805	134.30
P-804	1	1	75.9	18 inch	S-804	133.85	S-808	133.70
P-805	1	1	57.0	18 inch	S-805	134.30	S-807	134.20
P-806	1	1	67.7	18 inch	S-806	134.30	S-807	134.10
P-807	2	1	132.1	24 inch	S-807	134.10	S-812	133.90
P-808	2	1	200.2	24 inch	S-808	133.70	S-811	133.30
P-809	1	1	56.1	18 inch	S-809	133.95	S-804	133.85
P-810	1	1	24.0	18 inch	S-810	134.00	S-809	133.95
P-811	2	1	60.1	24 inch	S-811	133.30	S-812	133.20
P-812	2	1	66.0	30 inch	S-812	128.12	S-813	128.00
P-814	1	1	57.0	18 inch	S-814	134.80	S-815	134.70
P-815	2	1	267.1	24 inch	S-815	134.50	S-812	134.20
P-816	1	1	105.8	18 inch	S-816	134.80	S-815	134.60
P-817	1	1	107.2	18 inch	S-817	135.00	S-814	134.80
P-818	1	1	36.3	18 inch	S-818	134.90	S-816	134.80
P-819	1	1	56.7	18 inch	S-819	135.00	S-818	134.90
P-820	2	1	88.8	24 inch	S-820	131.30	S-821	131.10
P-902	2	1	70.6	30 inch	S-902	129.10	S-901	129.00
P-903	2	1	56.8	30 inch	S-903	132.20	S-902	132.10
P-905	1	1	73.2	18 inch	S-905	133.10	S-906	132.90
P-906	1	1	35.6	18 inch	S-906	132.90	S-906A	132.84
P-906A	1	1	39.7	18 inch	S-906A	132.80	S-908	132.70
P-907	2	1	269.2	30 inch	S-907	132.50	S-903	132.20
P-908	2	1	56.9	24 inch	S-908	128.10	S-910	128.00
P-909	2	1	41.7	24 inch	S-909	132.60	S-907	132.50

SR 33 PIPE DATA								
Label	Group Number	Number of Barrels	Length (ft)	Size (in)	Start Node (Upper)	Start Invert (ft)	Stop Node (Lower)	Stop Invert (ft)
P-912	1	1	178.0	18 inch	S-912	133.80	S-908	133.50
P-913	1	1	75.2	18 inch	S-913	134.00	S-912	133.80
P-914	1	1	73.2	18 inch	S-914	134.80	S-907	134.60
P-915	2	1	74.2	24 inch	S-915	132.80	S-909	132.60
P-916	1	1	104.2	18 inch	S-916	135.00	S-914	134.80
P-917	2	1	78.6	24 inch	S-917	133.20	S-918	133.00
P-918	2	1	86.8	24 inch	S-918	133.00	S-915	132.80
P-920	2	1	138.6	24 inch	S-920	132.15	S-921	131.95
P-921	2	1	39.0	24 inch	S-921	131.95	S-922	131.89
P-921A	2	1	28.8	24 inch	S-921A	132.00	S-921	131.95
P-922	2	1	35.5	24 inch	S-922	131.89	S-923	131.85
P-926	1	1	21.5	18 inch	S-926	128.88	S-927	128.65
P-927	1	1	52.4	18 inch	S-927	128.65	S-928	128.50
CD-8A	2	1	28.7	24 inch	CD-8A	132.06	S-921A	132.00
CD-9A	5	2	10.4	24x38 inch	CD-9B	132.10	S-1001	132.03
P-1001	5	2	114.0	24x38 inch	S-1001	132.03	S-1002	131.65
P-1002	5	2	16.7	24x38 inch	S-1002	131.60	CD-9A	131.57
P-1003	1	1	193.0	18 inch	S-1003	132.20	S-1002	131.65
P-1004	1	1	12.2	18 inch	S-1004	133.79	S-1003	133.50
P-1005	2	1	222.5	24 inch	S-1005	132.50	S-1001	132.03
P-1006	2	1	14.5	24 inch	S-1006	132.99	S-1005	132.75
P-1007	2	1	138.0	24 inch	S-1007	133.00	S-1005	132.50
P-1008	1	1	208.5	18 inch	S-1008	132.80	S-1003	132.20
P-1009	2	1	59.8	24 inch	S-1009	133.50	S-1007	133.00
P-1010	1	1	70.8	18 inch	S-1010	134.26	S-1009	133.50
P-1011	1	1	232.7	18 inch	S-1011	133.80	S-1008	132.80
P-1012	1	1	29.5	18 inch	S-1012	133.99	S-1011	133.80
P-1014	1	1	43.0	18 inch	S-1014	135.10	S-1013	135.00
P-1016	5	1	59.4	14x23 inch	S-1016	136.83	S-1015	135.50
P-1101	2	1	52.9	24 inch	S-1101	134.50	S-1102	134.30
P-1102	2	1	13.1	24 inch	S-1102	134.12	S-1104	134.10
P-1105	5	2	134.3	24x38 inch	S-1105	133.61	CD-10A	133.40
P-1108	1	1	34.7	18 inch	S-1108	134.10	S-1105	134.00
P-1109A	1	1	9.5	18 inch	S-1109	134.81	EX-67A	134.71
P-1109B	1	1	57.1	18 inch	S-1109	134.10	S-1105	134.00
P-1110	1	1	294.2	18 inch	S-1110	134.60	S-1109	134.10
P-1111	1	1	292.2	18 inch	S-1111	135.10	S-1110	134.60
P-1112	1	1	242.5	18 inch	S-1112	135.53	S-1111	135.10
SD-20	1	1	20.5	18 inch	SD-20B	136.00	SD-20A	136.00
SD-22	5	1	47.8	14x23 inch	SD-22A	136.77	SD-22B	136.73
SD-23	5	1	33.9	14x23 inch	SD-23B	137.50	SD-23A	137.50
SD-24	5	1	24.0	14x23 inch	SD-24B	137.50	SD-24A	137.50

PRELIMINARY
Subject to change

THE OFFICIAL RECORD OF THIS SHEET IS THE ELECTRONIC FILE DIGITALLY SIGNED AND SEALED UNDER RULE 61G15-23.004, F.A.C.

2/29/2024 5:15:03 PM BHORTON
c:\pw_working\lochner-pw-01\dms18776\DRDTRD09.dgn

REVISIONS			
DATE	DESCRIPTION	DATE	DESCRIPTION

ENGINEER OF RECORD
LISANDRO ZAPATA, P.E.
LICENSE NUMBER 58822
H. W. LOCHNER
4300 W. CYPRESS STREET, SUITE 500
TAMPA, FLORIDA 33607

STATE OF FLORIDA
DEPARTMENT OF TRANSPORTATION

ROAD NO.	COUNTY	FINANCIAL PROJECT ID
SR 400	POLK	430185-3-52-01

DRAINAGE SUMMARY TABLES
(09)

SHEET NO. 328

SR 33 ENDWALL & MES DATA							
Label	Baseline Feature	Baseline Station (ft)	Baseline Offset (ft)	Structure Type	Elevation	FDOT Standard Plans (400 Index Series) Notes	Remarks
S-556	CL_CONST_SR33	3404+51.02	-70.79	CD MES, 1:4	132.70	430-022	
S-558	CL_CONST_SR33	3406+60.76	-78.74	SD MES, 1:4	133.00	430-022	
S-602	CL_CONST_FIRST_PARK	34+75.74	-87.78	CD MES, 1:4	134.20	430-022	
S-604	CL_CONST_UNIVERSITY	51+69.65	109.64	CD MES, 1:2	127.50	430-021	
S-609	CL_CONST_SR33	3420+19.76	97.83	CD MES, 1:2	132.50	430-021	
S-626	CL_CONST_UNIVERSITY	52+59.98	-106.47	CD MES, 1:4	130.50	430-021	
SD-15A	CL_CONST_SR33	3415+46.03	-94.92	SD MES, 1:4	135.01	430-022	
SD-15B	CL_CONST_SR33	3415+67.22	-95.08	SD MES, 1:4	135.00	430-022	
SD-16A	CL_CONST_UNIVERSITY	51+91.18	-100.05	CD MES, 1:2	125.79	430-021	
SD-16B	CL_CONST_UNIVERSITY	51+90.72	102.03	CD MES, 1:2	125.47	430-021	
S-615	CL_CONST_SR33	3431+42.94	-102.70	CD MES, 1:4	132.00	430-022	
S-619	CL_CONST_SR33	3433+04.08	57.34	SD MES, 1:4	133.30	430-022	
S-620	CL_CONST_SR33	3433+04.36	-99.38	CD MES, 1:4	132.00	430-022	
S-628	CL_CONST_SR33	3422+20.75	88.67	CD MES, 1:4	131.39	430-021	
CD-6A	CL_CONST_SR33	3432+25.78	-66.24	CD MES, 1:4	132.00	430-021	
CD-6B	CL_CONST_SR33	3432+25.82	72.30	CD MES, 1:4	131.00	430-021	
SD-18A	CL_CONST_SR33	3438+91.95	-72.32	SD MES, 1:4	134.80	430-022	
SD-18B	CL_CONST_SR33	3439+35.18	-72.43	SD MES, 1:4	134.95	430-022	
S-813	CL_CONST_SR33	3445+65.99	106.27	CD MES, 1:4	128.00	430-021	
S-821	BL_RAMP_C	306+49.93	29.11	CD MES, 1:2	131.10	430-021	
S-901	CL_CONST_SR33	3449+79.91	-102.57	CD MES, 1:4	129.00	430-021	
S-910	BL_RAMP_D	401+17.00	-61.05	CD MES, 1:4	128.00	430-021	
S-923	CL_CONST_SR33	3456+59.70	-84.61	CD MES, 1:4	131.85	430-021	
S-928	BL_RAMP_D	401+43.16	-57.00	CD MES, 1:4	128.50	430-021	
SD-19A	BL_RAMP_C	306+25.05	37.43	SD MES, 1:4	130.58	430-022	
SD-19B	BL_RAMP_C	303+88.32	38.98	SD MES, 1:4	130.08	430-022	
CD-8A	CL_CONST_SR33	3456+60.46	68.48	SD MES, 1:4	132.06	430-021	
CD-9A	CL_CONST_SR33	3460+19.97	-86.97	CD MES, 1:4	131.57	430-021	
CD-9B	CL_CONST_SR33	3460+19.99	76.47	SD MES, 1:4	132.10	430-021	
SD-20A	CL_CONST_SR33	3467+99.34	-122.42	SD MES, 1:4	134.05	430-022	
SD-20B	CL_CONST_SR33	3468+27.22	-122.43	SD MES, 1:4	134.39	430-022	
S-1013	CL_CONST_TOMKOW	512+38.84	31.92	CD MES, 1:4	135.00	430-021	
S-1015	CL_CONST_TOMKOW	516+23.99	39.55	CD MES, 1:4	135.50	430-021	
S-1016	CL_CONST_TOMKOW	516+23.99	-22.87	STRAIGHT CONC. ENDWALL	136.83	430-030	
S-1104	CL_CONST_SR33	3477+15.10	3.51	CD MES, 1:4	134.10	430-022	
CD-10A	CL_CONST_SR33	3480+12.26	-80.95	CD MES, 1:4	133.40	430-021	
SD-23A	CL_CONST_SR33	3490+20.12	74.20	SD MES, 1:4	137.50	430-022	
SD-23B	CL_CONST_SR33	3490+61.19	74.11	SD MES, 1:4	137.50	430-022	
SD-22A	CL_CONST_SR33	3490+38.51	-68.03	SD MES, 1:4	137.05	430-022	
SD-22B	CL_CONST_SR33	3490+93.70	-68.16	SD MES, 1:4	137.25	430-022	
SD-24A	CL_CONST_SR33	3491+99.43	74.95	SD MES, 1:4	137.50	430-022	
SD-24B	CL_CONST_SR33	3492+31.75	75.57	SD MES, 1:4	137.50	430-022	

PRELIMINARY
Subject to Changes

THE OFFICIAL RECORD OF THIS SHEET IS THE ELECTRONIC FILE DIGITALLY SIGNED AND SEALED UNDER RULE 61G15-23.004, F.A.C.

2/29/2024 5:15:04 PM BHORTON
c:\pw_working\lochner-pw-01\dms18776\DRDTRD09.dgn

REVISIONS			
DATE	DESCRIPTION	DATE	DESCRIPTION

ENGINEER OF RECORD
LISANDRO ZAPATA, P.E.
LICENSE NUMBER 58822
H. W. LOCHNER
4300 W. CYPRESS STREET, SUITE 500
TAMPA, FLORIDA 33607

STATE OF FLORIDA
DEPARTMENT OF TRANSPORTATION

ROAD NO.	COUNTY	FINANCIAL PROJECT ID
SR 400	POLK	430185-3-52-01

DRAINAGE SUMMARY TABLES (10)

SHEET NO.
329

I-4 STRUCTURE DATA										
Label	Baseline Feature	Baseline Station	Baseline Offset	Structure Type	Bottom Dimensions	FDOT Standard Plans (400 Index	Remarks	Reference Point Elevation	Sump Elevation (Structure Invert)	-Pipe- Label
S-1	CL_CONST_I4	3074+40.21	28.66	GUTTER INLET TYPE S	3.25' x 3.83'	425-040		138.19	128.60	
										(In) P-1A
										(Out) ExP-1
S-1A	CL_CONST_I4	3075+44.38	28.86	GUTTER INLET TYPE S	3.25' x 3.83'	425-040		137.90	132.80	
										(In) P-2
										(Out) P-1A
S-2	CL_CONST_I4	3077+41.68	30.52	GUTTER INLET TYPE S	3.25' x 3.83'	425-040		137.90	133.10	
										(In) P-3
										(Out) P-2
S-3	CL_CONST_I4	3079+08.12	33.24	GUTTER INLET TYPE S	3.25' x 3.83'	425-040		137.90	133.40	
										(Out) P-3
S-4	CL_CONST_I4	3081+00.00	37.74	GUTTER INLET TYPE S	3.25' x 3.83'	425-040		138.12	134.93	
										(Out) P-4
S-5	CL_CONST_I4	3083+00.00	44.17	GUTTER INLET TYPE S	3.25' x 3.83'	425-040		138.42	134.91	
										(In) P-4
										(Out) P-5
S-6	CL_CONST_I4	3084+52.00	-39.92	DBI TYPE D	4.08' x 3.08'	425-052		135.29	132.30	
										(Out) P-6
S-8	CL_CONST_I4	3084+99.54	52.36	GUTTER INLET TYPE S	3.25' x 3.83'	425-040		138.71	134.62	
										(In) P-5
										(Out) P-8
S-9	CL_CONST_I4	3086+55.67	59.78	GUTTER INLET TYPE S	3.25' x 3.83'	425-040		139.20	128.90	
										(In) P-8
										(Out) P-9
S-9A	CL_CONST_I4	3086+53.68	96.03	Manhole Type P-7	4.00' Dia.	425-001	ALTERNATE A	132.66	128.86	
						425-010				(In) P-9
										(Out) P-9A
S-10	CL_CONST_I4	3089+17.82	94.35	Manhole Type J-7	5.00' Dia.	425-001	ALTERNATE A	133.61	128.58	
						425-010				(In) P-9A
										(Out) P-10
S-12	CL_CONST_I4	3087+48.94	51.53	Manhole Type J-7	16.00' X 16.00'	425-001	ALTERNATE B	139.97	132.45	
						425-010				(In) P-11
										(Out) P-12
S-12A	BL_RAMP_B	202+46.92	-4.13	Manhole Type J-7	4.00' X 16.00'	425-001	ALTERNATE B	140.00	131.95	
						425-010				(In) P-12
										(Out) P-12A
S-13	BL_RAMP_B	201+50.00	7.87	ADJACENT BARRIER	3.25' x 3.67'	425-031		139.28	134.84	
										(Out) P-13
S-14	BL_RAMP_B	204+20.00	7.88	ADJACENT BARRIER	3.25' x 3.67'	425-031		139.19	133.66	(In) P-13
										(Out) P-14
S-14A	BL_RAMP_B	205+99.91	-2.64	Manhole Type J-7	4.00' x 16.00'	425-001	ALTERNATE B	139.62	131.45	
						425-010				(In) P-12A
										(Out) P-14A
S-14B	BL_RAMP_B	204+20.00	22.40	Manhole Type J-7	5.00' Dia.	425-001	ALTERNATE A	138.24	128.37	
						425-010				(In) P-14
										(In) P-10
										(Out) P-14B
S-15	BL_RAMP_B	207+48.23	7.88	ADJACENT BARRIER	3.25' x 3.67'	425-031		138.33	133.12	
										(Out) P-15
S-16	BL_RAMP_B	207+48.66	21.03	Manhole Type J-7	7.00' Dia.	425-001	ALTERNATE A	137.52	128.17	
						425-010				(In) P-17A
										(In) P-15
										(In) P-14B
										(Out) P-16
S-17	BL_RAMP_B	208+76.72	7.88	ADJACENT BARRIER	3.25' x 3.67'	425-031		138.37	132.71	
										(Out) P-17
S-17A	BL_RAMP_B	208+76.88	20.61	Manhole Type J-7	6.00' Dia.	425-001	ALTERNATE A	138.00	132.09	

PRELIMINARY
subject to changes

THE OFFICIAL RECORD OF THIS SHEET IS THE ELECTRONIC FILE DIGITALLY SIGNED AND SEALED UNDER RULE 61G15-23.004, F.A.C.

2/29/2024 5:15:04 PM BHORTON
C:\pw_working\lochner-pw-01\dms18776\DRDTRD09.dgn

REVISIONS			
DATE	DESCRIPTION	DATE	DESCRIPTION

ENGINEER OF RECORD
LISANDRO ZAPATA, P.E.
LICENSE NUMBER 58822
H. W. LOCHNER
4300 W. CYPRESS STREET, SUITE 500
TAMPA, FLORIDA 33607

STATE OF FLORIDA
DEPARTMENT OF TRANSPORTATION

ROAD NO.	COUNTY	FINANCIAL PROJECT ID
SR 400	POLK	430185-3-52-01

DRAINAGE SUMMARY TABLES (11)

SHEET NO. 330

I-4 STRUCTURE DATA										
Label	Baseline Feature	Baseline Station	Baseline Offset	Structure Type	Bottom Dimensions	FDOT Standard Plans (400 Index	Remarks	Reference Point Elevation	Sump Elevation (Structure Invert)	-Pipe- Label
						425-010				(In) P-18B
										(In) P-17
										(Out) P-17A
S-18	BL_RAMP_B	210+00.00	7.88	ADJACENT BARRIER	3.25' x 3.67'	425-031		138.30	132.55	(In) P-19
										(Out) P-18
S-18A	BL_RAMP_B	210+74.50	-2.84	Manhole Type J-7	4.00' x 16.00'	425-001	ALTERNATE B	138.85	128.95	
						425-010				(In) P-14A
										(Out) P-18A
S-18B	BL_RAMP_B	210+00.00	20.41	Manhole Type J-7	5.00' Dia.	425-001	ALTERNATE A	137.96	132.25	
						425-010				(In) P-18
										(Out) P-18B
S-19	BL_RAMP_B	212+38.96	7.88	ADJACENT BARRIER	3.25' x 3.67'	425-031		138.28	132.95	
										(In) P-20
										(In) P-22
										(Out) P-19
S-20	CL_CONST_I4	3101+02.50	127.58	MEDIAN BARRIER	4.00' X 2.00'	425-030		139.96	134.10	
				TYPE 1						(In) P-23
										(Out) P-20
S-21	BL_RAMPA	112+98.13	25.61	MEDIAN BARRIER	4.00' X 2.00'	425-030		139.86	135.65	
				TYPE 1						(Out) P-21
S-22	BL_RAMP_B	213+38.93	7.88	ADJACENT BARRIER	3.25' x 3.67'	425-031		138.13	133.10	
										(In) P-26
										(Out) P-22
S-23	CL_CONST_I4	3102+02.01	127.58	MEDIAN BARRIER	4.00' X 2.00'	425-030		141.15	135.15	
				TYPE 1						(Out) P-23
S-24	BL_RAMPA	114+43.84	27.80	MEDIAN BARRIER	4.00' X 2.00'	425-030		140.35	135.30	
				TYPE 1						(In) P-21
										(Out) P-24
S-25	BL_RAMPA	116+36.84	30.70	MEDIAN BARRIER	4.00' X 2.00'	425-030	PARTIAL	142.42		
				TYPE 1						
S-26	BL_RAMP_B	215+39.96	7.88	ADJACENT BARRIER	3.25' x 3.67'	425-031		137.49	132.99	
										(Out) P-26
S-28	BL_RAMP_B	216+07.12	73.68	DBI TYPE D	6.00' DIA	425-052	ALTERNATE A; J-BOTTOM	138.59	131.40	
										(In) P-27
										(Out) P-28
S-29	BL_RAMP_B	215+81.12	-21.22	Manhole Type J-7	16.00' x 16.00'	425-001	ALTERNATE B	138.06	127.00	
						425-010				(In) P-28
										(In) P-18A
										(In) P-31
										(Out) P-29
S-29A	CL_CONST_I4	3104+48.96	-13.01	DBI TYPE D	4.08' x 3.08'	425-052	PARTIAL	135.88		
S-31	CL_CONST_I4	3105+39.64	148.70	MANHOLE TYPE J-7	4.00' x 16.00'	425-001	ALTERNATE B	136.11	127.50	
						425-010				(In) P-36
										(In) P-32
										(Out) P-31
S-32	CL_CONST_I4	3105+38.72	125.88	ADJACENT BARRIER	3.25' x 3.67'	425-031	SEE DRAINAGE DETAIL 04	146.48	132.10	

PRELIMINARY subject to changes

THE OFFICIAL RECORD OF THIS SHEET IS THE ELECTRONIC FILE DIGITALLY SIGNED AND SEALED UNDER RULE 61G15-23.004, F.A.C.

2/29/2024 5:15:05 PM BHORTON
C:\pw_working\lochner-pw-01\dms18776\DRDTRD09.dgn

REVISIONS			
DATE	DESCRIPTION	DATE	DESCRIPTION

ENGINEER OF RECORD
LISANDRO ZAPATA, P.E.
LICENSE NUMBER 58822
H. W. LOCHNER
4300 W. CYPRESS STREET, SUITE 500
TAMPA, FLORIDA 33607

STATE OF FLORIDA
DEPARTMENT OF TRANSPORTATION

ROAD NO.	COUNTY	FINANCIAL PROJECT ID
SR 400	POLK	430185-3-52-01

DRAINAGE SUMMARY TABLES (12)

SHEET NO. 331

I-4 STRUCTURE DATA

Label	Baseline Feature	Baseline Station	Baseline Offset	Structure Type	Bottom Dimensions	FDOT Standard Plans (400 Index	Remarks	Reference Point Elevation	Sump Elevation (Structure Invert)	-Pipe- Label
										(Out) P-32
S-33	CL_CONST_I4	3105+52.65	-128.00	ADJACENT BARRIER	3.25' x 3.67'	425-031		144.36	135.25	
										(Out) P-33
S-33A	BL_RAMPA	117+48.26	30.04	ADJACENT BARRIER	3.25' x 3.67'	425-031		139.31	135.50	
										(In) P-33
										(Out) P-33A
S-34	BL_RAMPA	117+48.79	-10.13	GUTTER INLET TYPE S	4.00' x 4.00'	425-040	ALTERNATE B; J-BOTTOM	138.79	135.10	
										(In) P-33A
										(Out) P-34
S-35	BL_RAMPA	119+34.23	-10.04	GUTTER INLET TYPE S	4.00' x 4.00'	425-040	ALTERNATE B; J-BOTTOM	139.59	134.90	
										(In) P-34
										(Out) P-35
S-36	CL_CONST_I4	3109+38.44	156.67	DBI TYPE D	4.00' x 16.00'	425-052	ALTERNATE B; J-BOTTOM	134.00	127.90	
						425-010				(In) P-37
										(In) P-41
										(Out) P-36
S-37	CL_CONST_I4	3109+38.17	125.88	ADJACENT BARRIER	3.25' x 3.67'	425-031	SEE DRAINAGE DETAIL 04	155.52	130.60	
										(Out) P-37
S-38	CL_CONST_I4	3109+38.17	-128.00	ADJACENT BARRIER	3.25' x 3.67'	425-031	SEE DRAINAGE DETAIL 04	152.76	134.75	
										(Out) P-38
S-39	BL_RAMPA	121+34.25	-10.04	GUTTER INLET TYPE S	4.00' x 4.00'	425-040	ALTERNATE B; J-BOTTOM	140.97	134.70	
										(In) P-35
										(In) P-38
										(Out) P-39
S-40	BL_RAMPA	123+34.83	-10.04	GUTTER INLET TYPE S	4.00' x 4.00'	425-040	ALTERNATE B; J-BOTTOM	141.85	134.55	
										(In) P-39
										(Out) P-40
S-41	BL_RAMP_B	223+31.02	-57.94	DBI TYPE D	16.00' x 16.00'	425-052	J-BOTTOM; MODIFY, ALT. B	135.30	128.20	
						425-010				(In) P-42
						425-070				(Out) P-41
S-44	CL_CONST_I4	3113+43.63	125.88	ADJACENT BARRIER	3.25' x 3.67'	425-031	SEE DRAINAGE DETAIL 04	161.48	134.38	
										(Out) P-44
S-45	BL_RAMPA	125+31.86	-10.04	GUTTER INLET TYPE S	4.00' x 4.00'	425-040	ALTERNATE B; J-BOTTOM	141.62	134.92	
										(In) P-46
										(In) P-40
										(Out) P-45
S-46	CL_CONST_I4	3113+43.63	-128.00	ADJACENT BARRIER	3.25' x 3.67'	425-031	SEE DRAINAGE DETAIL 04	160.00	134.60	
										(Out) P-46
S-49	BL_RAMPA	127+32.75	-10.04	GUTTER INLET TYPE S	3.25' x 3.83'	425-040		141.02	134.20	
										(In) P-53
										(Out) P-49
S-51	CL_CONST_I4	3115+75.00	-128.00	ADJACENT BARRIER	3.25' x 3.67'	425-031	SEE DRAINAGE DETAIL 04	162.79	138.00	
										(Out) P-51
S-53	BL_RAMPA	127+69.01	55.12	DBI TYPE D	4.08' x 3.08'	425-052		139.43	134.31	
										(In) P-56
										(Out) P-53
S-55	CL_CONST_I4	3116+00.00	125.88	ADJACENT BARRIER	3.25' x 3.67'	425-031	SEE DRAINAGE DETAIL 04	163.68	134.34	
										(Out) P-55
S-56	BL_RAMPA	128+62.76	72.92	DBI TYPE D	4.08' x 3.08'	425-052	MODIFY	138.00	134.51	
						425-070				(Out) P-56
S-57	CL_CONST_I4	3118+00.00	-128.00	ADJACENT BARRIER	3.25' x 3.67'	425-031	SEE DRAINAGE DETAIL 04	164.44	134.31	
										(Out) P-57

PRELIMINARY subject to change

THE OFFICIAL RECORD OF THIS SHEET IS THE ELECTRONIC FILE DIGITALLY SIGNED AND SEALED UNDER RULE 61G15-23.004, F.A.C.

2/29/2024 5:15:05 PM BHORTON
c:\pw_working\lochner-pw-01\dms18776\DRDTRD09.dgn

REVISIONS			
DATE	DESCRIPTION	DATE	DESCRIPTION

ENGINEER OF RECORD
LISANDRO ZAPATA, P.E.
LICENSE NUMBER 58822
H. W. LOCHNER
4300 W. CYPRESS STREET, SUITE 500
TAMPA, FLORIDA 33607

STATE OF FLORIDA
DEPARTMENT OF TRANSPORTATION

ROAD NO.	COUNTY	FINANCIAL PROJECT ID
SR 400	POLK	430185-3-52-01

DRAINAGE SUMMARY TABLES (13)

SHEET NO. 332

I-4 STRUCTURE DATA										
Label	Baseline Feature	Baseline Station	Baseline Offset	Structure Type	Bottom Dimensions	FDOT Standard Plans (400 Index	Remarks	Reference Point Elevation	Sump Elevation (Structure Invert)	-Pipe- Label
S-62	CL_CONST_I4	3121+51.70	128.00	ADJACENT BARRIER	3.25' x 3.67'	425-031	SEE DRAINAGE DETAIL 04	164.09	131.20	
										(Out) P-62
S-63	CL_CONST_I4	3123+18.78	-128.00	ADJACENT BARRIER	3.25' x 3.67'	425-031	SEE DRAINAGE DETAIL 04	164.46	133.25	
										(Out) P-63
S-65	CL_CONST_I4	3124+51.70	128.00	ADJACENT BARRIER	3.25' x 3.67'	425-031	SEE DRAINAGE DETAIL 04	161.81	132.11	
										(Out) P-65
S-66	CL_CONST_I4	3124+91.39	-128.00	ADJACENT BARRIER	3.25' x 3.67'	425-031	SEE DRAINAGE DETAIL 04	163.29	129.00	
										(Out) P-66
S-68	CL_CONST_I4	3128+50.00	165.00	DBI TYPE E	3.00' x 4.50'	425-052		135.50	131.60	
										(In) P-69
										(Out) P-68
S-69	CL_CONST_I4	3128+50.00	128.00	ADJACENT BARRIER	3.25' x 3.67'	425-031	SEE DRAINAGE DETAIL 04	155.96	131.70	
										(In) P-70
										(Out) P-69
S-70	CL_CONST_I4	3128+50.00	22.17	DBI TYPE D	4.08' x 3.08'	425-052		148.86	145.20	
										(Out) P-70
S-71	CL_CONST_I4	3128+50.00	-128.00	ADJACENT BARRIER	3.25' x 3.67'	425-031	SEE DRAINAGE DETAIL 04	158.94	136.07	
										(Out) P-71
S-75	CL_CONST_I4	3132+96.70	128.00	ADJACENT BARRIER	3.25' x 3.67'	425-031	SEE DRAINAGE DETAIL 04	146.10	133.23	
										(Out) P-75
S-76	CL_CONST_I4	3132+96.70	-128.00	ADJACENT BARRIER	3.25' x 3.67'	425-031	SEE DRAINAGE DETAIL 04	150.15	134.90	
										(Out) P-76
S-80	CL_CONST_I4	3134+44.54	148.82	DBI TYPE E	4.00' x 7.00'	425-010	ALTERNATE B, J-BOTTOM	135.72	132.40	
						425-052				(In) P-79
										(Out) P-80
S-81	CL_CONST_I4	3134+44.59	1.12	DBI TYPE D	5.00' x 7.00'	425-010	ALTERNATE B, J-BOTTOM	136.20	132.10	
						425-052				(In) P-80
										(Out) P-81
S-83A	BL_RAMP_C	324+31.00	3.69	Manhole Type P-7	4.00' DIA.	425-001	ALTERNATE B	137.40	132.63	
										(In) P-84
										(In) P-83B
										(Out) P-83A
S-84	CL_CONST_I4	3137+00.00	128.00	MEDIAN BARRIER	4.00' X 2.00'	425-030		139.40	132.83	
				TYPE 1						(Out) P-84
S-85	CL_CONST_I4	3137+00.00	-128.04	ADJACENT BARRIER	3.25' x 3.67'	425-031		141.55	135.08	
										(Out) P-85
S-88	BL_RAMP_D	415+72.12	-27.71	DBI TYPE E	3.00' x 4.50'	425-052		134.50	128.94	
										(In) P-89
										(Out) Existing
S-89	BL_RAMP_D	416+39.42	-33.10	DBI TYPE E	3.00' x 4.50'	425-052		134.50	129.06	
										(In) P-95
										(Out) P-89
S-90	CL_CONST_I4	3139+14.30	128.00	MEDIAN BARRIER	4.00' X 2.00'	425-030		138.05	133.00	
				TYPE 1						(Out) P-90
S-91	CL_CONST_I4	3139+64.30	128.00	MEDIAN BARRIER	4.00' X 2.00'	425-030		138.01	132.90	
				TYPE 1						(In) P-90
										(In) P-93
										(Out) P-91
S-93	CL_CONST_I4	3140+14.30	128.00	MEDIAN BARRIER	4.00' X 2.00'	425-030		138.05	133.00	
				TYPE 1						(Out) P-93
S-94	CL_CONST_I4	3141+97.83	-128.00	MEDIAN BARRIER	4.00' X 2.00'	425-030		137.44	129.60	
				TYPE 1						(Out) P-94
S-95	CL_CONST_I4	3140+12.06	-128.00	ADJACENT BARRIER	3.25' X 3.67'	425-031		138.06	129.25	
										(In) P-94
										(Out) P-95

PRELIMINARY
subject to change

THE OFFICIAL RECORD OF THIS SHEET IS THE ELECTRONIC FILE DIGITALLY SIGNED AND SEALED UNDER RULE 61G15-23.004, F.A.C.

2/29/2024 5:15:06 PM BHORTON
c:\pw_working\lochner-pw-01\dms\18776\DROTR009.dgn

REVISIONS			
DATE	DESCRIPTION	DATE	DESCRIPTION

ENGINEER OF RECORD
LISANDRO ZAPATA, P.E.
LICENSE NUMBER 58822
H. W. LOCHNER
4300 W. CYPRESS STREET, SUITE 500
TAMPA, FLORIDA 33607

STATE OF FLORIDA
DEPARTMENT OF TRANSPORTATION

ROAD NO.	COUNTY	FINANCIAL PROJECT ID
SR 400	POLK	430185-3-52-01

DRAINAGE SUMMARY TABLES
(14)

SHEET NO.
333

I-4 STRUCTURE DATA										
Label	Baseline Feature	Baseline Station	Baseline Offset	Structure Type	Bottom Dimensions	FDOT Standard Plans (400 Index	Remarks	Reference Point Elevation	Sump Elevation (Structure Invert)	-Pipe- Label
S-96	CL_CONST_I4	3142+93.88	128.00	MEDIAN BARRIER	4.00' X 2.00'	425-030		138.65	133.91	
				TYPE 1						(Out) P-96
S-99	CL_CONST_I4	3163+31.42	92.26	DBI TYPE E	3.00' X 4.50'	425-052		137.00	130.20	
										(Out) P-99
S-100	CL_CONST_I4	3163+68.80	85.29	Manhole Type J-8	7.00' DIA.	425-001	ALTERNATE A	138.23	128.03	
						425-010				(In) P-99
										(In) P-100
										(Out) Existing
S-101	CL_CONST_I4	3164+24.44	86.58	DBI TYPE E	6.00' DIA.	425-052	ALTERNATE A; J-BOTTOM	135.24	127.41	
						425-010				(In) P-102
										(Out) P-100
S-102	CL_CONST_I4	3167+30.64	79.87	DBI TYPE E	6.00 DIA.	425-052	ALTERNATE A; J-BOTTOM	135.21	128.20	
						425-010				(In) P-103
										(Out) P-102
S-103	CL_CONST_I4	3168+69.10	56.74	Manhole Type J-8	5.00' DIA.	425-001	ALTERNATE A	136.82	128.35	
						425-010				(In) ExP-2
										(Out) P-103
S-104	CL_CONST_I4	3170+16.74	55.41	Manhole Type J-8	5.00' DIA.	425-001	ALTERNATE A	134.48	128.57	
						425-010				(In) P-105
										(Out) ExP-3
S-105	CL_CONST_I4	3170+69.05	54.01	DBI TYPE E	6.00' DIA.	425-052	ALTERNATE A; J-BOTTOM	136.71	128.68	
						425-010				(Out) P-105

PRELIMINARY
subject to changes

THE OFFICIAL RECORD OF THIS SHEET IS THE ELECTRONIC FILE DIGITALLY SIGNED AND SEALED UNDER RULE 61G15-23.004, F.A.C.

2/29/2024 5:15:06 PM BHORTON
c:\pw_working\lochner-pw-01\dms18776\DRDTR009.dgn

REVISIONS				ENGINEER OF RECORD	STATE OF FLORIDA DEPARTMENT OF TRANSPORTATION			DRAINAGE SUMMARY TABLES (15)	SHEET NO.
DATE	DESCRIPTION	DATE	DESCRIPTION	LISANDRO ZAPATA, P.E. LICENSE NUMBER 58822 H. W. LOCHNER 4300 W. CYPRESS STREET, SUITE 500 TAMPA, FLORIDA 33607	ROAD NO.	COUNTY	FINANCIAL PROJECT ID		334
					SR 400	POLK	430185-3-52-01		

I-4 PIPE DATA								
Label	Group Number	Number of Barrels	Length (ft)	Size (in)	Start Node (Upper)	Start Invert (ft)	Stop Node (Lower)	Stop Invert (ft)
P-1	2	1	5.0	30 inch	S-1	128.60	EX PIPE	MATCH EX
P-1A	2	1	97.9	24 inch	S-1A	132.80	S-1	132.60
P-2	1	1	194.8	18 inch	S-2	133.10	S-1A	132.80
P-3	1	1	162.0	18 inch	S-3	133.40	S-2	133.10
P-4	1	1	195.3	18 inch	S-4	135.20	S-5	134.91
P-5	1	1	195.0	18 inch	S-5	134.91	S-8	134.62
P-6	2	1	133.9	24 inch	S-6	132.30	S-7	131.30
P-8	1	1	151.5	18 inch	S-8	134.62	S-9	134.39
P-9	1	1	32.3	18 inch	S-9	128.90	S-9A	128.86
P-9A	2	1	257.4	24 inch	S-9A	128.86	S-10	128.61
P-10	2	1	349.0	36 inch	S-10	128.58	S-14B	128.37
P-11	8	2	21.4	48x76 inch	S-11	132.50	S-12	132.45
P-12	8	2	342.7	60 inch	S-12	132.45	S-12A	131.95
P-12A	8	2	348.9	60 inch	S-12A	131.95	S-14A	131.45
P-13	7	1	260.4	18 inch	S-13	134.84	S-14	134.24
P-14	7	1	10.4	18 inch	S-14	133.66	S-14B	133.59
P-14A	8	2	470.8	60 inch	S-14A	131.45	S-18A	128.95
P-14B	7	1	322.9	36 inch	S-14B	128.37	S-16	128.17
P-15	7	1	9.8	18 inch	S-15	133.12	S-16	133.06
P-16	2	1	6.0'	36 inch	S-16	128.17	EX-13	MATCH EX
P-17	7	1	9.4	18 inch	S-17	132.71	S-17A	132.66
P-17A	7	1	122.3	30 inch	S-17A	132.09	S-16	132.00
P-18	7	1	8.4	24 inch	S-18	132.55	S-18B	132.54
P-18A	4	2	497.7	60 inch	S-18A	128.95	S-29	127.95
P-18B	2	1	118.2	24 inch	S-18B	132.25	S-17A	132.09
P-19	7	1	235.1	24 inch	S-19	132.95	S-18	132.55
P-20	7	1	33.2	18 inch	S-20	134.95	S-19	134.80
P-21	7	1	141.2	18 inch	S-21	135.65	S-24	135.30
P-22	7	1	96.3	24 inch	S-22	133.10	S-19	132.95
P-23	7	1	95.8	18 inch	S-23	135.15	S-20	134.95
P-24	7	1	187.1	18 inch	S-24	135.30	S-25	127.90
P-26	7	1	197.2	24 inch	S-26	133.40	S-22	133.10
P-28	7	1	85.2	18 inch	S-28	131.40	S-29	131.00
P-29	9	2	342.0	48x48 inch	S-29	127.00	S-30	126.50
P-31	4	2	84.2	48 inch	S-31	127.50	S-29	127.40
P-32	7	1	13.2	18 inch	S-32	132.10	S-31	132.00
P-33	7	1	3.3	18 inch	S-33	136.02	S-33A	135.97
P-33A	5	1	32.0	14x23 inch	S-33A	135.97	S-34	135.87
P-34	6	1	180.6	19x30 inch	S-34	135.87	S-35	135.67
P-35	2	1	195.0	24 inch	S-35	135.67	S-39	135.47
P-36	4	2	395.5	48 inch	S-36	127.90	S-31	127.50
P-37	7	1	21.2	18 inch	S-37	130.60	S-36	130.50
P-38	7	1	42.4	18 inch	S-38	135.57	S-39	135.47
P-39	2	1	195.1	30 inch	S-39	135.47	S-40	135.32
P-40	2	1	190.0	30 inch	S-40	135.32	S-45	135.17
P-41	4	2	247.2	48 inch	S-41	128.20	S-36	127.90
P-42	4	2	77.1	48 inch	S-42	128.40	S-41	128.20
P-44	7	1	21.5	18 inch	S-44	134.38	S-43	134.30
P-45	2	1	16.9	30 inch	S-45	134.97	S-47	134.92
P-46	1	1	66.0	18 inch	S-46	135.17	S-45	134.97
P-49	2	1	17.0	24 inch	S-49	134.20	S-48	134.18
P-51	7	1	9.6	18 inch	S-51	139.63	S-52	139.58
P-53	1	1	67.8	18 inch	S-53	134.31	S-49	134.20
P-55	7	1	21.5	18 inch	S-55	134.34	S-54	134.30
P-56	1	1	129.8	18 inch	S-56	134.51	S-53	134.31
P-57	7	1	35.9	18 inch	S-57	134.31	S-58	134.21
P-62	7	1	36.9	18 inch	S-62	131.20	S-61	131.00
P-63	7	1	77.2	18 inch	S-63	133.25	S-905	133.10
P-65	7	1	39.5	18 inch	S-65	132.11	S-64	131.99

I-4 PIPE DATA								
Label	Group Number	Number of Barrels	Length (ft)	Size (in)	Start Node (Upper)	Start Invert (ft)	Stop Node (Lower)	Stop Invert (ft)
P-66	7	1	72.2	18 inch	S-66	129.00	S-926	128.88
SD-19	4	1	235.5	48 inch	SD-19A	130.58	SD-19B	130.08
P-68	2	1	67.8	24 inch	S-68	131.65	S-67	131.50
P-69	7	1	36.0	18 inch	S-69	131.70	S-68	131.65
P-70	7	1	100.0	18 inch	S-70	145.20	S-69	145.00
P-71	7	1	14.8	18 inch	S-71	136.07	S-72	136.00
P-75	7	1	83.0	18 inch	S-75	133.23	S-74	132.93
P-76	7	1	17.9	18 inch	S-76	135.55	S-77	134.95
P-77A	5	1	62.4	14x23 inch	S-77A	134.95	S-78	134.79
P-79	2	2	55.5	24 inch	S-79	132.50	S-80	132.40
P-80	7	2	144.2	24 inch	S-80	132.40	S-81	132.10
P-81	7	2	294.4	24 inch	S-81	132.10	S-82	131.60
P-83A	2	1	88.5	24 inch	S-83A	132.63	S-83	132.54
P-83B	2	1	42.6	24 inch	S-83B	132.68	S-83A	132.63
P-84	7	1	48.9	18 inch	S-84	132.83	S-83A	132.75
P-85	7	1	23.7	18 inch	S-85	135.08	S-86	135.01
P-86A	5	2	47.0	14x23 inch	S-86A	134.65	S-87	134.59
P-88	3	1	6.0	42 inch	S-88	129.00	EX PIPE	MATCH EX
P-89	2	1	60.8	30 inch	S-89	129.06	S-88	129.00
P-90	7	1	45.7	18 inch	S-90	133.00	S-91	132.90
P-91	7	1	58.0	18 inch	S-91	132.90	S-92	132.80
P-93	7	1	45.7	18 inch	S-93	133.00	S-91	132.90
P-94	7	1	181.9	18 inch	S-94	129.60	S-95	129.25
P-95	7	1	94.4	24 inch	S-95	129.25	S-89	129.06
P-96	7	1	39.0	18 inch	S-96	134.04	S-97	133.95
P-99	2	1	32.3	24 inch	S-99	130.20	S-100	130.00
P-100	4	1	6.0	48 inch	S-100	128.03	EX PIPE	MATCH EX
P-101	2	1	49.9	36 inch	S-101	128.08	S-100	128.03
P-102	2	1	301.8	36 inch	S-102	128.26	S-101	128.08
P-103	2	1	135.6	36 inch	S-103	128.35	S-102	128.26
P-103A	2	1	6.0	36 inch	EX PIPE	MATCH EX	S-103	128.35
P-104	2	1	6.0	36 inch	S-104	128.57	EX PIPE	MATCH EX
P-105	2	1	46.8	36 inch	S-105	128.68	S-104	128.57
PX-113	1	1	6.0	18 inch	EX PIPE	MATCH EX	S-28	131.40

PRELIMINARY
Subject to Changes

THE OFFICIAL RECORD OF THIS SHEET IS THE ELECTRONIC FILE DIGITALLY SIGNED AND SEALED UNDER RULE 61G15-23.004, F.A.C.

REVISIONS			
DATE	DESCRIPTION	DATE	DESCRIPTION

ENGINEER OF RECORD
LISANDRO ZAPATA, P.E.
LICENSE NUMBER 58822
H. W. LOCHNER
4300 W. CYPRESS STREET, SUITE 500
TAMPA, FLORIDA 33607

STATE OF FLORIDA
DEPARTMENT OF TRANSPORTATION

ROAD NO.	COUNTY	FINANCIAL PROJECT ID
SR 400	POLK	430185-3-52-01

DRAINAGE SUMMARY TABLES
(16)

SHEET NO. 335

2/29/2024 5:15:07 PM BHORTON
c:\pw_working\lochner-pw-01\dms18776\DRDTRD09.dgn

I-4 ENDWALL & MES DATA							
Label	Baseline Feature	Baseline Station (ft)	Baseline Offset (ft)	Structure Type	Elevation (Invert)	FDOT Standard Plans (400 Index Series) Notes	Remarks
S-7	CL_CONST_I4	3084+52.00	-172.95	U-ENDWALL WITH BAFFLES, 1:4	131.30	430-011	
S-11	CL_CONST_I4	3087+43.49	82.07	SD MES, 1:2	132.50	430-021	
S-30	BL_RAMPA	116+41.16	-44.08	BOX CULVERT ENDWALL	126.50	400-289	
S-42	BL_RAMP_B	223+61.86	51.20	CD MES, 1:4	128.40	430-021	
S-43	CL_CONST_I4	3113+43.63	149.00	U-ENDWALL WITH BAFFLES, 1:2	134.30	430-011	
S-47	BL_RAMPA	125+31.86	-28.27	CD MES, 1:4	134.92	430-021	
S-48	BL_RAMPA	127+32.79	-36.21	CD MES, 1:4	134.18	430-021	
S-52	BL_RAMPA	127+51.21	97.91	U-ENDWALL WITH BAFFLES, 1:3	139.58	430-011	
S-54	CL_CONST_I4	3116+00.00	139.13	U-ENDWALL WITH BAFFLES, 1:2	134.30	430-011	
S-58	BL_RAMPA	129+72.62	135.67	U-ENDWALL WITH BAFFLES, 1:4	134.21	430-011	
S-61	CL_CONST_I4	3121+51.70	159.70	U-ENDWALL WITH BAFFLES, 1:4	131.00	430-011	
S-64	CL_CONST_I4	3124+51.70	166.95	U-ENDWALL WITH BAFFLES, 1:4	131.99	430-011	
S-67	CL_CONST_I4	3128+50.00	234.45	CD MES, 1:2	131.50	430-021	
S-72	CL_CONST_I4	3128+50.00	-144.38	CD MES, 1:4	136.00	430-021	
S-74	CL_CONST_I4	3132+96.70	214.51	CD MES, 1:4	132.93	430-021	
S-77	CL_CONST_I4	3132+96.73	-149.33	CD MES, 1:4	134.95	430-021	
S-77A	CL_CONST_I4	3132+96.70	-189.88	SD MES, 1:4	134.95	430-021	
S-78	CL_CONST_I4	3132+96.70	-255.01	CD MES, 1:4	134.79	430-021	
S-79	BL_RAMP_C	321+74.79	24.73	SD MES, 1:4	132.50	430-021	
S-82	BL_RAMP_D	410+66.93	-64.30	CD MES, 1:2	131.60	430-021	
S-83	BL_RAMP_C	323+39.46	24.73	CD MES, 1:4	132.54	430-022	
S-83B	BL_RAMP_C	324+74.96	23.06	SD MES, 1:4	132.68	430-022	
S-86	CL_CONST_I4	3137+02.61	-149.50	SD MES, 1:4	135.01	430-021	
S-86A	BL_RAMP_D	413+47.73	34.65	CD MES, 1:4	135.00	430-021	
S-87	BL_RAMP_D	413+50.39	-20.16	CD MES, 1:4	134.80	430-021	
S-92	BL_RAMP_C	326+94.73	24.50	CD MES, 1:4	132.80	430-021	
S-97	BL_RAMP_C	330+24.97	11.93	CD MES, 1:4	134.95	430-021	

PRELIMINARY
subject to changes

THE OFFICIAL RECORD OF THIS SHEET IS THE ELECTRONIC FILE DIGITALLY SIGNED AND SEALED UNDER RULE 61G15-23.004, F.A.C.

2/29/2024 5:15:07 PM BHORTON
c:\pw_working\lochner-pw-01\dms18776\DRDTRD09.dgn

REVISIONS				ENGINEER OF RECORD	STATE OF FLORIDA DEPARTMENT OF TRANSPORTATION			DRAINAGE SUMMARY TABLES (17)	SHEET NO.
DATE	DESCRIPTION	DATE	DESCRIPTION	LISANDRO ZAPATA, P.E. LICENSE NUMBER 58822 H. W. LOCHNER 4300 W. CYPRESS STREET, SUITE 500 TAMPA, FLORIDA 33607	ROAD NO.	COUNTY	FINANCIAL PROJECT ID		336
					SR 400	POLK	430185-3-52-01		

I-4

BEGIN PROJECT
BEGIN RECONSTRUCTION SR 400 (I-4)
BEGIN OVERBUILD SR 400 (I-4) WB
END MILLING AND RESURFACING EB

STA. 3073+00.00 ℄ CONST. I-4 =
STA. 3998+57.07 ℘ CONST. I-4 EB 1 =
STA. 1073+09.57 ℄ SURVEY I-4

END MILLING,RESURFACING, OVERBUILD, AND WIDENING SR 400 (I-4) WB
BEGIN RECONSTRUCTION SR 400 (I-4) WB

STA. 3098+00.00 ℄ CONST. I-4 =
STA. 1098+20.43 ℄ SURVEY I-4

RAMP A

RAMP B

RAMP C

MATCHLINE A-A

MATCHLINE B-B

END MILLING AND RESURFACING
BEGIN RECONSTRUCTION

STA. 31+43.27 ℄ CONST. FIRSTPARK BLVD.

BEGIN MILLING AND RESURFACING

STA. 31+43.27 ℄ CONST. FIRSTPARK BLVD.

SR33

MATCHLINE C-C

BEGIN RECONSTRUCTION SR 33
MATCH FPID 430185-4-52-01

STA. 399+74.08 ℄ SURVEY SR 33
STA. 399+46.72 (27.75' LT) ℘ SURVEY SR 33

END RECONSTRUCTION WB
BEGIN MILLING, RESURFACINGING, AND OVERBUILD WB

STA. 52+80.00 ℄ CONST. UNIVERSITY BLVD.

END MILLING AND RESURFACING

STA. 58+64.00 ℄ CONST. UNIVERSITY BLVD.

UNIVERSITY

END OVERBUILD AND WIDENING WB

STA. 58+64.00 ℄ CONST. UNIVERSITY BLVD.

END OVERBUILD EB

STA. 53+68.23 ℄ CONST. UNIVERSITY BLVD.

END RECONSTRUCTION EB
BEGIN MILLING, RESURFACINGING, AND OVERBUILD EB

STA. 52+90.99 ℄ CONST. UNIVERSITY BLVD.

PRELIMINARY
subject to change

REVISIONS				ENGINEER OF RECORD	STATE OF FLORIDA DEPARTMENT OF TRANSPORTATION			CROSS SECTION PATTERN LINES (01)	SHEET NO.
DATE	DESCRIPTION	DATE	DESCRIPTION	DEBANANDA PANIGRAHI, P.E. LICENSE NUMBER 68318 H. W. LOCHNER 4300 W. CYPRESS STREET, SUITE 500 TAMPA, FLORIDA 33607	ROAD NO.	COUNTY	FINANCIAL PROJECT ID		337
					SR 400	POLK	430185-3-52-01		

JBLOUNT 2/22/2024 11:33:11 AM c:\pw_working\lochner-pw-01\dms18802\PATTRD01.dgn

THE OFFICIAL RECORD OF THIS SHEET IS THE ELECTRONIC FILE DIGITALLY SIGNED AND SEALED UNDER RULE 61G15-23.004, F.A.C.

END RECONSTRUCTION SR 33
STA. 3495+51.92 ℄ CONST. SR.33 =
STA. 495+41.09 ℄ SURVEY SR. 33

END CONSTRUCTION SR 33
STA. 501+36.74 ℄ SURVEY SR. 33

END PROJECT
END OVERBUILD AND WIDENING SR 400 (I-4) WB
BEGIN MILLING AND RESURFACING EB
END RECONSTRUCTION EB
STA. 3175+39.51 ℄ CONST. I-4

END RECONSTRUCTION SR 400 (I-4) WB
BEGIN MILLING, RESURFACING, OVERBUILD AND WIDENING
SR 400 (I-4) WB=
STA. 3145+00.00 ℄ CONST. I-4
STA. 1145+21.00 ℄ SURVEY I-4

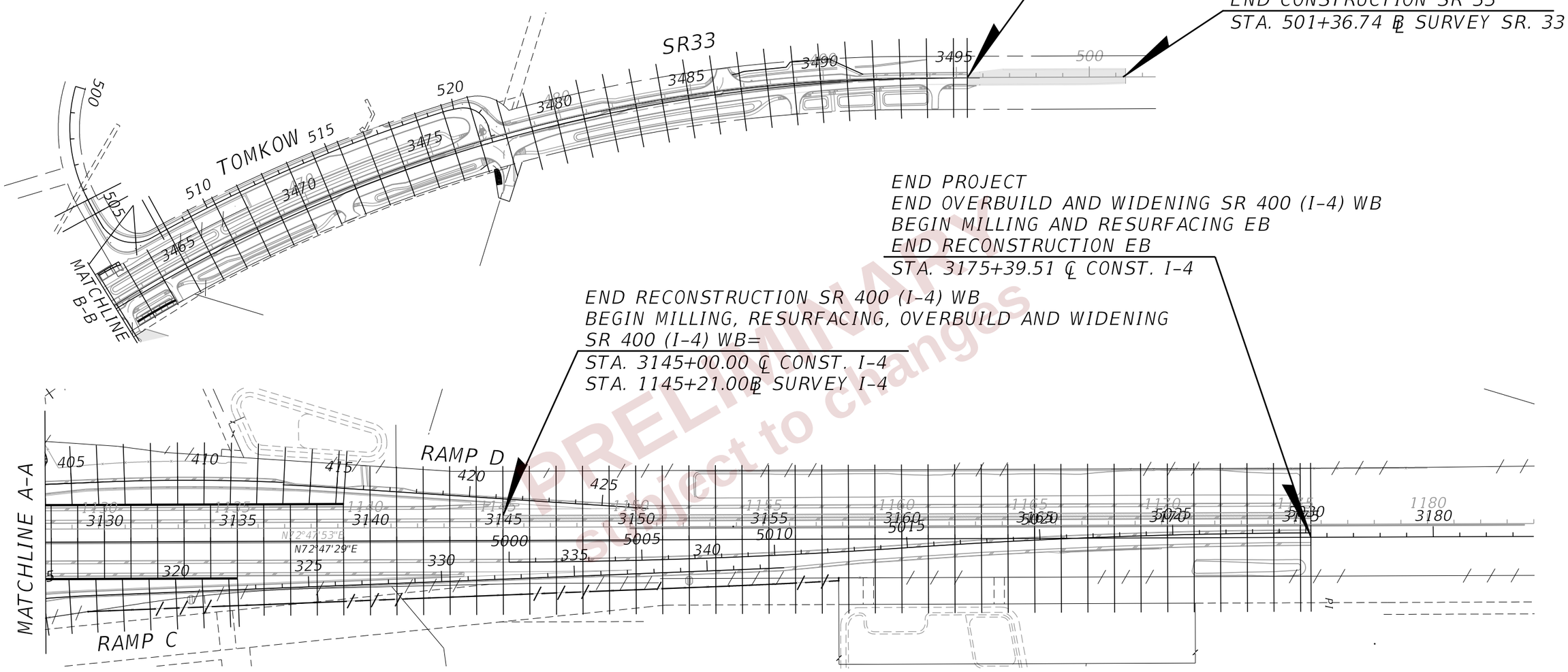

PRELIMINARY
Subject to changes

REVISIONS			
DATE	DESCRIPTION	DATE	DESCRIPTION

ENGINEER OF RECORD

DEBANANDA PANIGRAHI, P.E.
LICENSE NUMBER 68318
H. W. LOCHNER
4300 W. CYPRESS STREET, SUITE 500
TAMPA, FLORIDA 33607

STATE OF FLORIDA
DEPARTMENT OF TRANSPORTATION

ROAD NO.	COUNTY	FINANCIAL PROJECT ID
SR 400	POLK	430185-3-52-01

CROSS SECTION PATTERN LINES (02)

SHEET NO. 338

JBLOUNT 2/22/2024 11:33:33 AM c:\pw_working\lochner-pw-01\dms18802\PATTRD02.dgn

THE OFFICIAL RECORD OF THIS SHEET IS THE ELECTRONIC FILE DIGITALLY SIGNED AND SEALED UNDER RULE 61G15-23.004, F.A.C.

DATE OF SURVEY: SEPTEMBER 2015 - MARCH 2023
SURVEY MADE BY: TIERRA, INC.
SUBMITTED BY: LAWRENCE P. MOORE, P.E.

STATE OF FLORIDA
DEPARTMENT OF TRANSPORTATION
MATERIALS AND RESEARCH

DISTRICT: ONE
ROAD NO.: SR 400
COUNTY: POLK

FINANCIAL PROJECT ID : 430185-3-52-01
PROJECT NAME: I-4 AT SR 33 INTERCHANGE MODIFICATION

CROSS SECTION SOIL SURVEY FOR THE DESIGN OF ROADS

SURVEY BEGINS STA. : 3073+00.00 SURVEY ENDS STA. : 3175+39.51 REFERENCE: CENTERLINE OF CONSTRUCTION OF I-4
SURVEY BEGINS STA. : 3999+74.08 SURVEY ENDS STA. : 3495+98.89 REFERENCE: CENTERLINE OF CONSTRUCTION OF SR 33

	ORGANIC CONTENT		MOISTURE CONTENT		SIEVE ANALYSIS RESULTS PERCENT PASS (%)						ATTERBERG LIMITS (%)					CORROSION TEST RESULTS				
STRATUM NO.	NO. OF TESTS	% ORGANIC	NO. OF TESTS	MOISTURE CONTENT	NO. OF TESTS	10 MESH	40 MESH	60 MESH	100 MESH	200 MESH	NO. OF TESTS	LIQUID LIMIT	PLASTIC INDEX	AASHTO GROUP	DESCRIPTION	NO. OF TESTS	RESISTIVITY ohm-cm	CHLORIDE ppm	SULFATES ppm	pH
1	1	1	1	21	34	100	91-97	57-77	23-47	6-14	--	--	--	A-3/A-2-4	LIGHT GRAY TO DARK BROWN FINE SAND TO SAND WITH SILT	10	6,400-27,000	15-30	<5-6	5.4-7.9
2	2	2	3	14-28	26	100	93-97	64-80	33-57	15-35	--	--	--	A-2-4	LIGHT GRAY TO DARK BROWN SILTY SAND	9	3,300-28,000	15	<5-34	4.2-7.9
3	9	3-4	38	11-34	41	100	95-97	45-82	31-61	14-35	30	15-38	3-24	A-2-4/A-2-6	LIGHT GRAY TO BROWN TO RED SILTY SAND TO CLAYEY SAND	--	--	--	--	--
4	--	--	55	14-55	55	100	95-97	75-86	53-72	36-90	55	24-48	9-32	A-4/A-6/ A-7-6	LIGHT GRAY TO BROWN TO RED CLAYEY SAND TO SANDY CLAY	--	--	--	--	--
5	--	--	12	15-66	12	100	97	83	68	41-93	12	50-156	30-118	A-7-5/A-7-6	LIGHT GRAY TO PALE BROWN TO PALE BLUE-GREEN TO DARK GREEN CLAYEY SAND TO CLAY	--	--	--	--	--
6	77	5-76	77	27-457	77	100	59-96	41-78	23-57	7-70	--	--	--	A-8	DARK BROWN TO BLACK SAND TO SILT WITH ORGANICS TO HIGHLY ORGANIC MATERIAL	--	--	--	--	--
7	--	--	--	--	1	--	--	--	--	15	--	--	--	A-2-4	LIGHT GRAY TO DARK BROWN FINE SAND TO SILTY SAND WITH CLAY NODULES, OCCASIONALLY WITH LIMEROCK (FILL)	--	--	--	--	--
8	--	--	--	--	--	--	--	--	--	--	--	--	--	--	WEATHERED LIMESTONE	--	--	--	--	--

EMBANKMENT AND SUBGRADE MATERIAL

STRATA BOUNDARIES ARE APPROXIMATE. MAKE FINAL CHECK AFTER GRADING.

▼ - WATER TABLE ENCOUNTERED

▼+ - GROUNDWATER LEVEL ENCOUNTERED AT OR ABOVE EXISTING GROUND SURFACE DURING FIELD EXPLORATIONS

▽ - ESTIMATED SEASONAL HIGH GROUNDWATER TABLE

▽+ - ESTIMATED SEASONAL HIGH GROUNDWATER TABLE AT OR ABOVE EXISTING GROUND SURFACE

▽P - ESTIMATED SEASONAL HIGH GROUNDWATER TABLE EXPECTED TO BE A PERCHED CONDITION

GNE GROUNDWATER NOT ENCOUNTERED

GNA GROUNDWATER NOT APPARENT DUE TO THE INTRODUCTION OF DRILLING FLUID

R BORING TERMINATED DUE TO AUGER REFUSAL

T BOREHOLE DATA TRUNCATED. REFER TO REPORT OF CORE BORINGS SHEETS.

NOTES:

1. THE MATERIAL FROM STRATUM 1 (A-3/A-2-4) APPEARS SATISFACTORY FOR USE IN THE EMBANKMENT WHEN UTILIZED IN ACCORDANCE WITH STANDARD PLANS, INDEX 120-001.
2. THE MATERIAL FROM STRATA 2 AND 7 (A-2-4) APPEARS SATISFACTORY FOR USE IN THE EMBANKMENT WHEN UTILIZED IN ACCORDANCE WITH STANDARD PLANS, INDEX 120-001. HOWEVER, THIS MATERIAL IS LIKELY TO RETAIN EXCESS MOISTURE AND MAY BE DIFFICULT TO DRY AND COMPACT. IT SHOULD BE USED IN THE EMBANKMENT ABOVE THE WATER LEVEL EXISTING AT THE TIME OF CONSTRUCTION.
3. THE MATERIAL FROM STRATA 3 AND 4 (A-2-4/A-2-6/A-4/A-6/A-7-6) IS PLASTIC MATERIAL AND SHALL BE REMOVED IN ACCORDANCE WITH STANDARD PLANS, INDEX 120-002 AND UTILIZED IN ACCORDANCE WITH STANDARD PLANS, INDEX 120-001.
4. THE MATERIAL FROM STRATUM 5 (A-7-5/A-7-6) IS HIGH PLASTIC MATERIAL AND SHALL BE REMOVED IN ACCORDANCE WITH STANDARD PLANS, INDEX 120-002 AND UTILIZED IN ACCORDANCE WITH STANDARD PLANS, INDEX 120-001.
5. THE MATERIAL FROM STRATUM 6 (A-8) IS SAND TO SILT WITH ORGANICS TO HIGHLY ORGANIC MATERIAL AND SHALL BE REMOVED IN ACCORDANCE WITH STANDARD PLANS, INDEX 120-002 AND UTILIZED IN ACCORDANCE WITH STANDARD PLANS, INDEX 120-001. THE REMOVAL LIMITS ARE SHOWN ON THE ORGANIC MATERIAL DELINEATION SHEETS AND ON THE ROADWAY CROSS SECTIONS.
6. THE MATERIAL FROM STRATUM NUMBER 8 IS A NATURAL LIMESTONE FORMATION. SPECIAL TOOLS AND EQUIPMENT WILL BE REQUIRED TO EXCAVATE AND/OR DEWATER THIS MATERIAL.
7. THE PARAMETERS PRESENTED ON THIS ROADWAY SOIL SURVEY INCLUDE DATA FROM FINANCIAL PROJECT ID'S 430185-3-52-01 AND 201214-8-52-01.
8. THE "--" INDICATES AN UNMEASURED PARAMETER

PRELIMINARY subject to change

REVISIONS				ENGINEER OF RECORD	STATE OF FLORIDA DEPARTMENT OF TRANSPORTATION			ROADWAY SOIL SURVEY	SHEET NO.
DATE	DESCRIPTION	DATE	DESCRIPTION	LAWRENCE P. MOORE, P.E. LICENSE NUMBER: 47673 TIERRA, INC. 7351 TEMPLE TERRACE HIGHWAY TAMPA, FLORIDA 33637	ROAD NO.	COUNTY	FINANCIAL PROJECT ID		339
					SR 400	POLK	430185-3-52-01		

THE OFFICIAL RECORD OF THIS SHEET IS THE ELECTRONIC FILE DIGITALLY SIGNED AND SEALED UNDER RULE 61G15-23.004, F.A.C.
THE OFFICIAL RECORD OF THIS SHEET IS THE ELECTRONIC FILE DIGITALLY SIGNED AND SEALED UNDER RULE 61G15-23.004, F.A.C.

3/8/2023 6:46:12 PM bsawaska
J:\6511\2014 Files\6511-14-074 SR 33 at I-4\4301853520 1\ORD\430185-3-52-01\Geotechnical\SSUVRD01.dgn

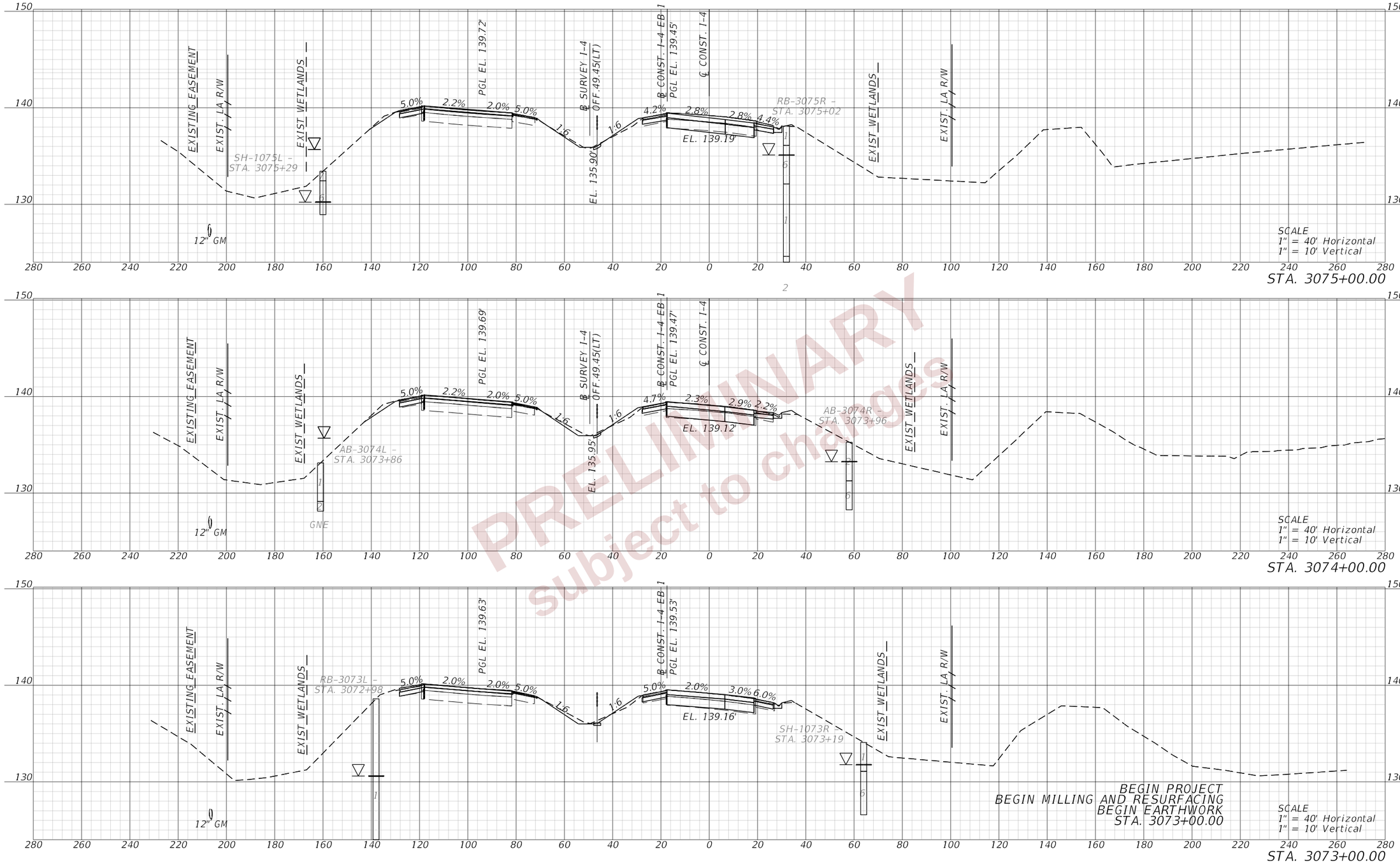

REVISIONS				ENGINEER OF RECORD	STATE OF FLORIDA DEPARTMENT OF TRANSPORTATION			CROSS SECTIONS (01) I-4 (SR400)	SHEET NO.
DATE	DESCRIPTION	DATE	DESCRIPTION	DEBANANDA PANIGRAHI, P.E. LICENSE NUMBER 68318 H. W. LOCHNER 4300 W. CYPRESS STREET, SUITE 500 TAMPA, FLORIDA 33607	ROAD NO.	COUNTY	FINANCIAL PROJECT ID		340
					SR 400	POLK	430185-3-52-01		

2/28/2024 11:31:41 AM JTAGLIAFERRO
c:\pw_working\lochner-pw-01\dms19508\RDXSRD02_NEW_Restored_2023-12-19_test.dgn

THE OFFICIAL RECORD OF THIS SHEET IS THE ELECTRONIC FILE DIGITALLY SIGNED AND SEALED UNDER RULE 61G15-23.004, F.A.C.

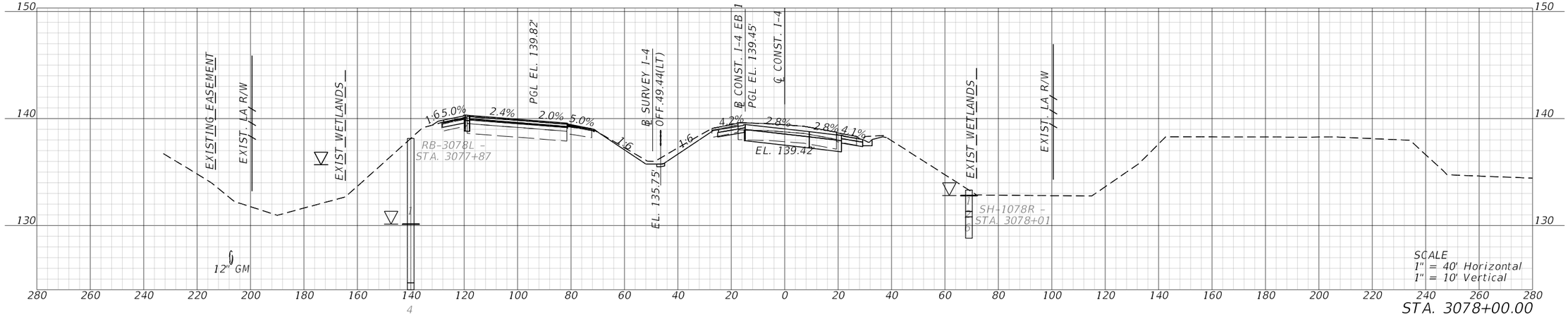

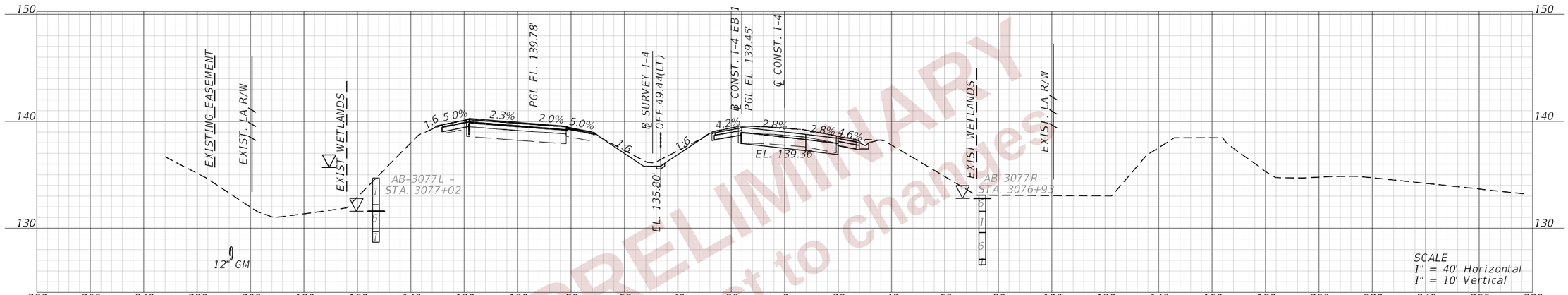

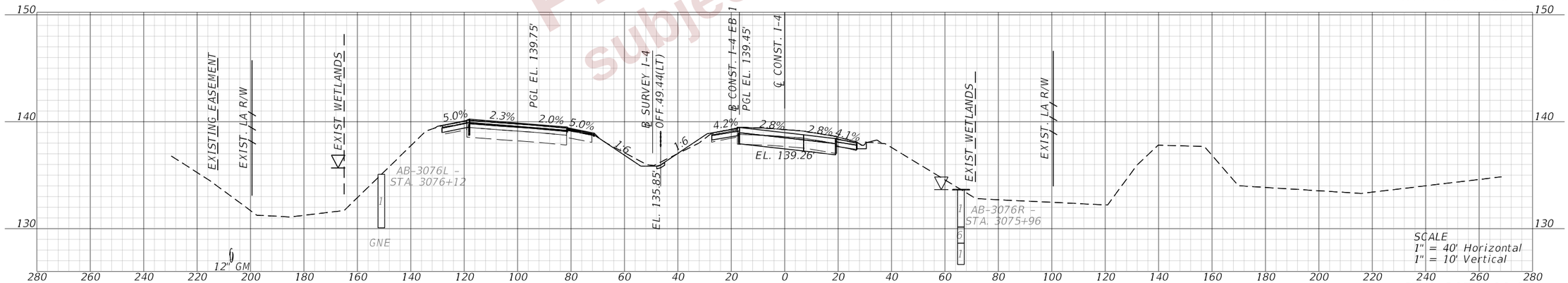

PRELIMINARY
subject to changes

REVISIONS				ENGINEER OF RECORD	STATE OF FLORIDA DEPARTMENT OF TRANSPORTATION			CROSS SECTIONS (02) I-4 (SR400)	SHEET NO.
DATE	DESCRIPTION	DATE	DESCRIPTION	DEBANANDA PANIGRAHI, P.E. LICENSE NUMBER 68318 H. W. LOCHNER 4300 W. CYPRESS STREET, SUITE 500 TAMPA, FLORIDA 33607	ROAD NO.	COUNTY	FINANCIAL PROJECT ID		341
					SR 400	POLK	430185-3-52-01		

THE OFFICIAL RECORD OF THIS SHEET IS THE ELECTRONIC FILE DIGITALLY SIGNED AND SEALED UNDER RULE 61G15-23.004, F.A.C.

2/28/2024 11:31:45 AM JTAGLIAFERRO
c:\pw_working\lochner-pw-01\dms19508\RDXSRD02_NEW_Restored_2023-12-19_test.dgn

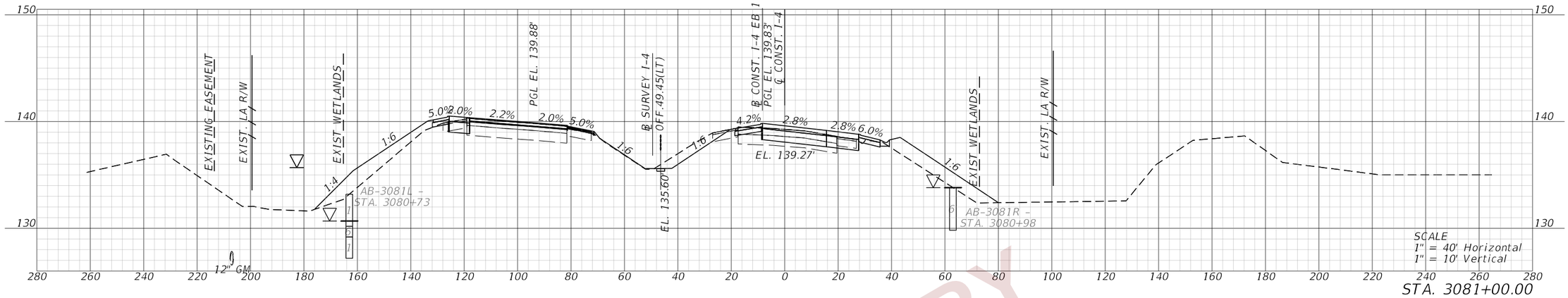

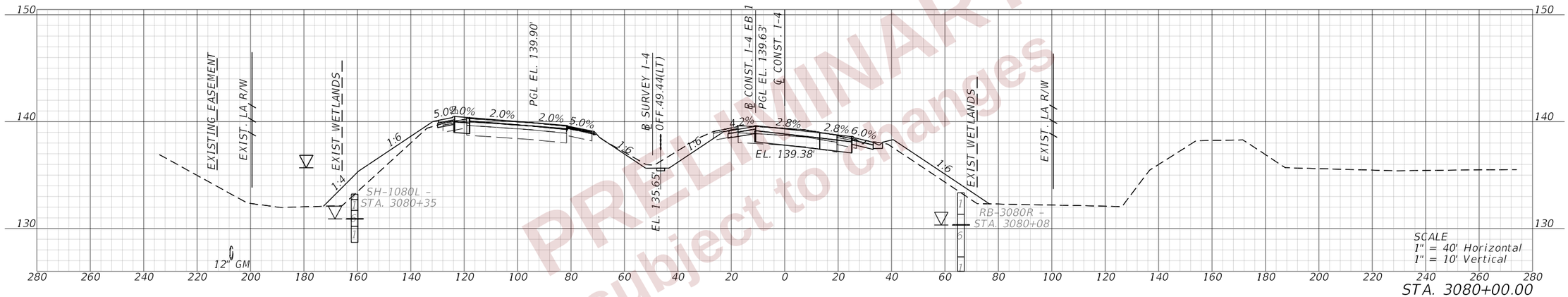

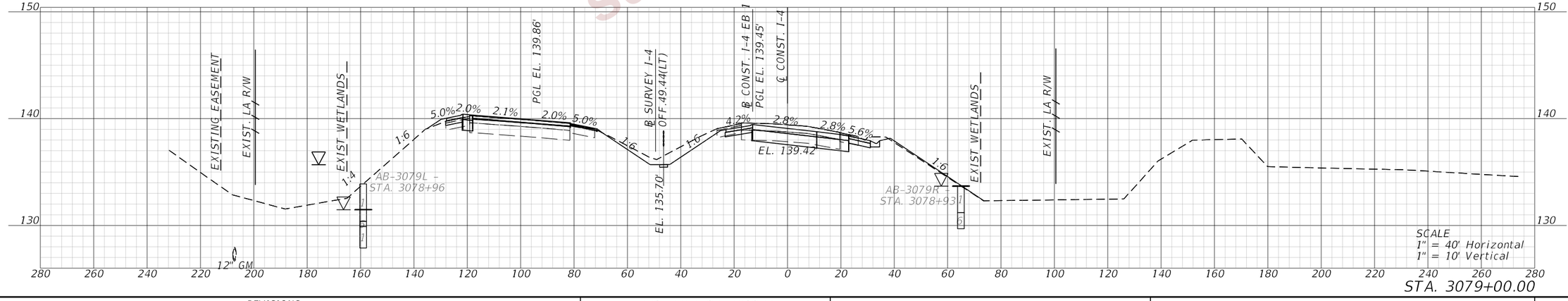

PRELIMINARY
subject to changes

REVISIONS			
DATE	DESCRIPTION	DATE	DESCRIPTION

ENGINEER OF RECORD

DEBANANDA PANIGRAHI, P.E.
LICENSE NUMBER 68318
H. W. LOCHNER
4300 W. CYPRESS STREET, SUITE 500
TAMPA, FLORIDA 33607

STATE OF FLORIDA
DEPARTMENT OF TRANSPORTATION

ROAD NO.	COUNTY	FINANCIAL PROJECT ID
SR 400	POLK	430185-3-52-01

CROSS SECTIONS (03)
I-4 (SR400)

SHEET NO. 342

THE OFFICIAL RECORD OF THIS SHEET IS THE ELECTRONIC FILE DIGITALLY SIGNED AND SEALED UNDER RULE 61G15-23.004, F.A.C.

2/28/2024 11:31:48 AM JTAGLIAFERRO
c:\pw_working\lochner-pw-01\dms19506\RDXSRD02_NEW_Restored_2023-12-19_test.dgn

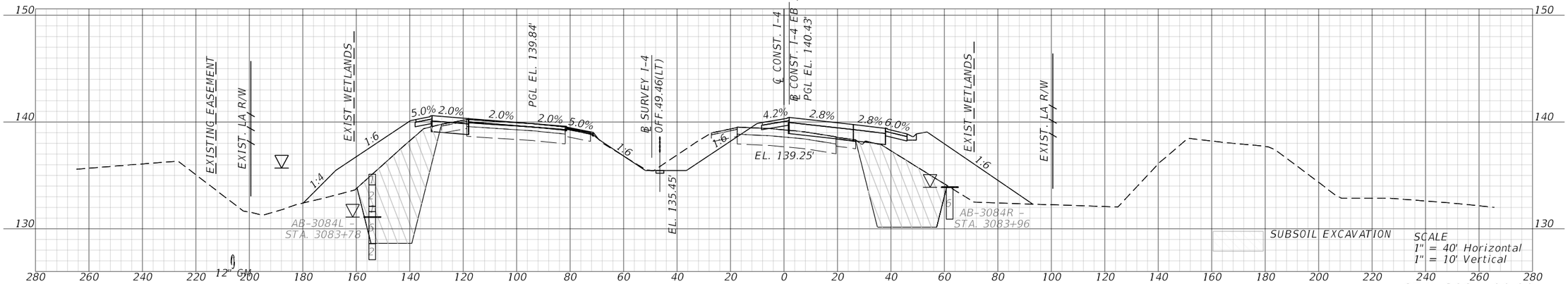

BEGIN SUBSOIL EXCAVATION
STA. 3083+50.00

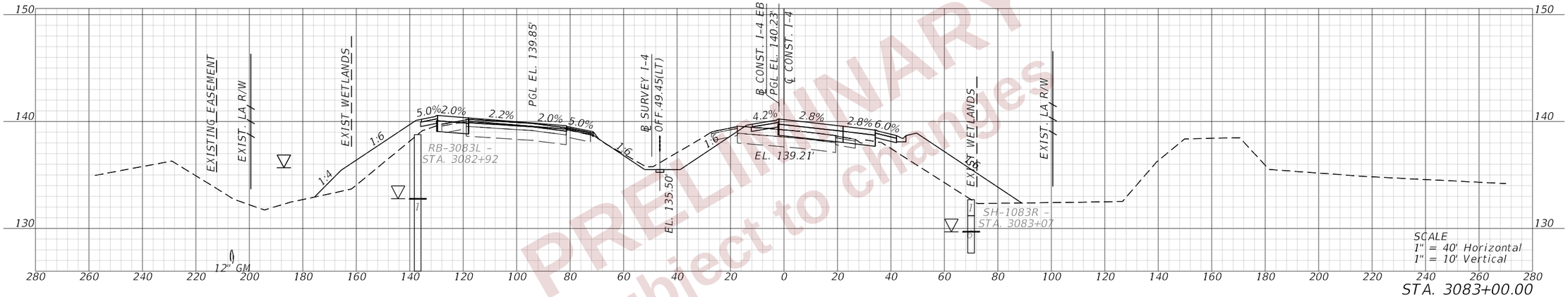

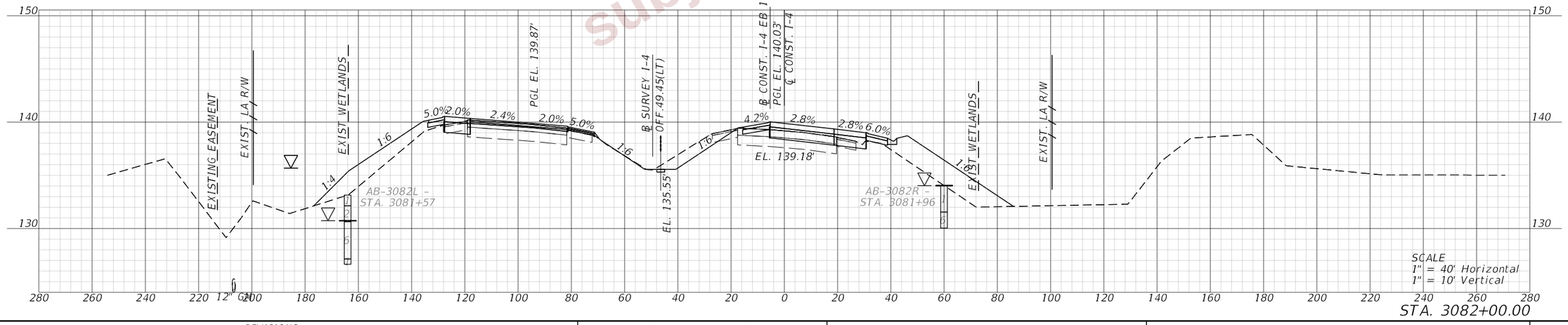

PRELIMINARY
subject to changes

REVISIONS				ENGINEER OF RECORD	STATE OF FLORIDA DEPARTMENT OF TRANSPORTATION			CROSS SECTIONS (04) I-4 (SR400)	SHEET NO.
DATE	DESCRIPTION	DATE	DESCRIPTION	DEBANANDA PANIGRAHI, P.E. LICENSE NUMBER 68318 H. W. LOCHNER 4300 W. CYPRESS STREET, SUITE 500 TAMPA, FLORIDA 33607	ROAD NO.	COUNTY	FINANCIAL PROJECT ID		343
					SR 400	POLK	430185-3-52-01		

THE OFFICIAL RECORD OF THIS SHEET IS THE ELECTRONIC FILE DIGITALLY SIGNED AND SEALED UNDER RULE 61G15-23.004, F.A.C.

2/28/2024 11:31:52 AM JTAGLIAFERRO
c:\pw_working\lochner-pw-01\dms19508\RDXSRD02_NEW_Restored_2023-12-19_test.dgn

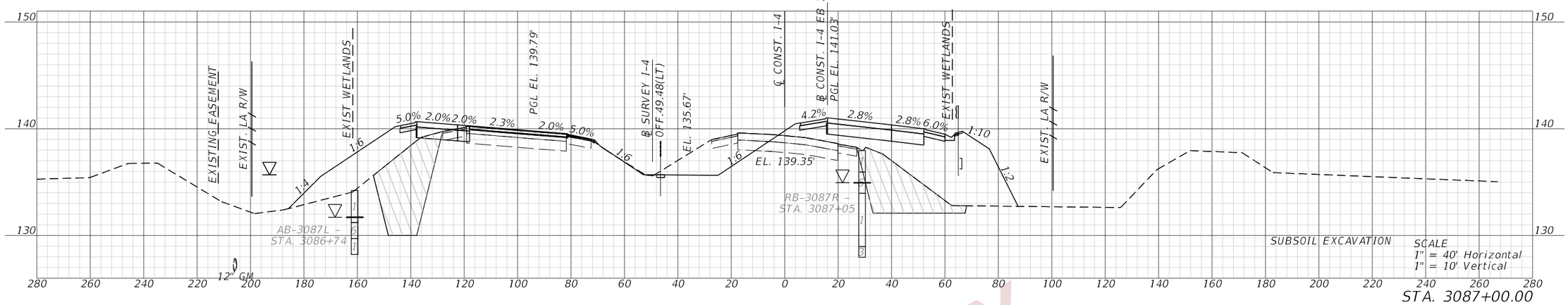

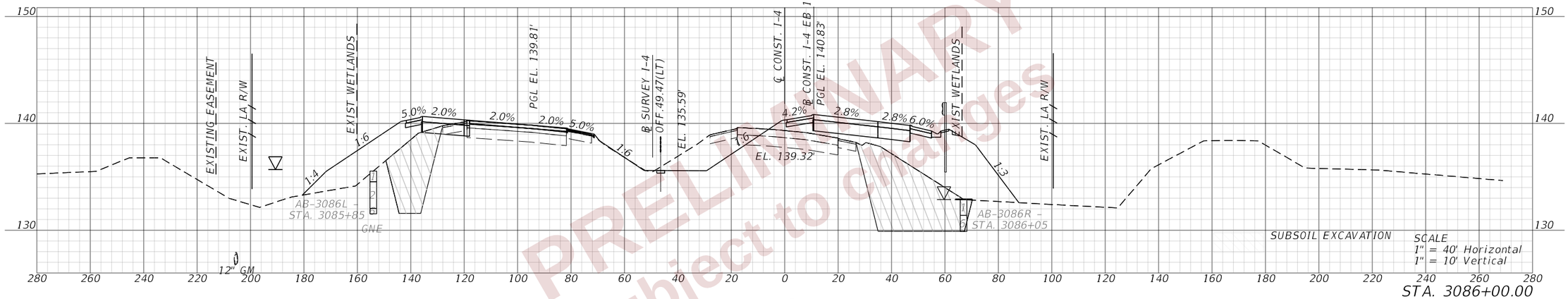

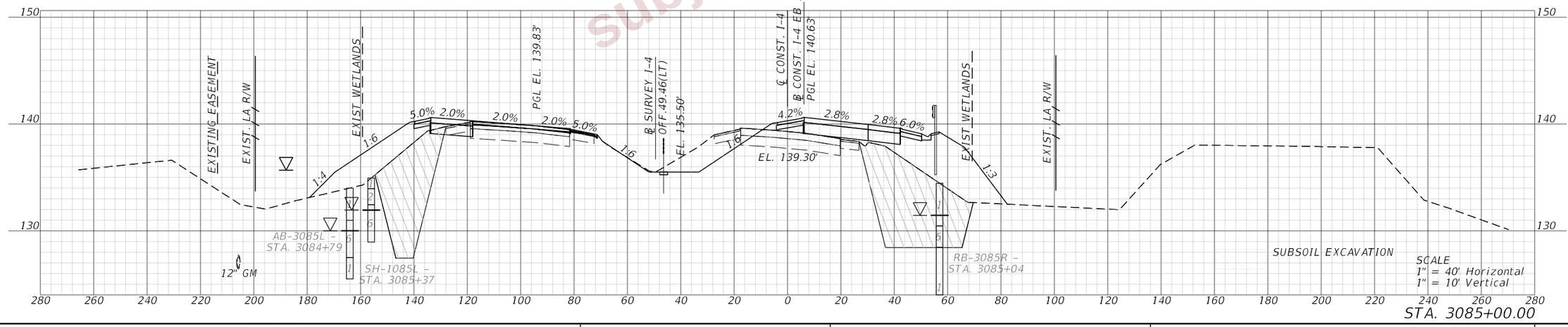

PRELIMINARY
subject to changes

REVISIONS				ENGINEER OF RECORD	STATE OF FLORIDA DEPARTMENT OF TRANSPORTATION			CROSS SECTIONS (05) I-4 (SR400)	SHEET NO.
DATE	DESCRIPTION	DATE	DESCRIPTION	DEBANANDA PANIGRAHI, P.E. LICENSE NUMBER 68318 H. W. LOCHNER 4300 W. CYPRESS STREET, SUITE 500 TAMPA, FLORIDA 33607	ROAD NO.	COUNTY	FINANCIAL PROJECT ID		344
					SR 400	POLK	430185-3-52-01		

THE OFFICIAL RECORD OF THIS SHEET IS THE ELECTRONIC FILE DIGITALLY SIGNED AND SEALED UNDER RULE 61G15-23.004, F.A.C.

2/28/2024 11:31:55 AM JTAGLIAFERRO
c:\pw_working\lochner-pw-01\dms19508\RDVSRD02_NEW_Restored_2023-12-19_test.dgn

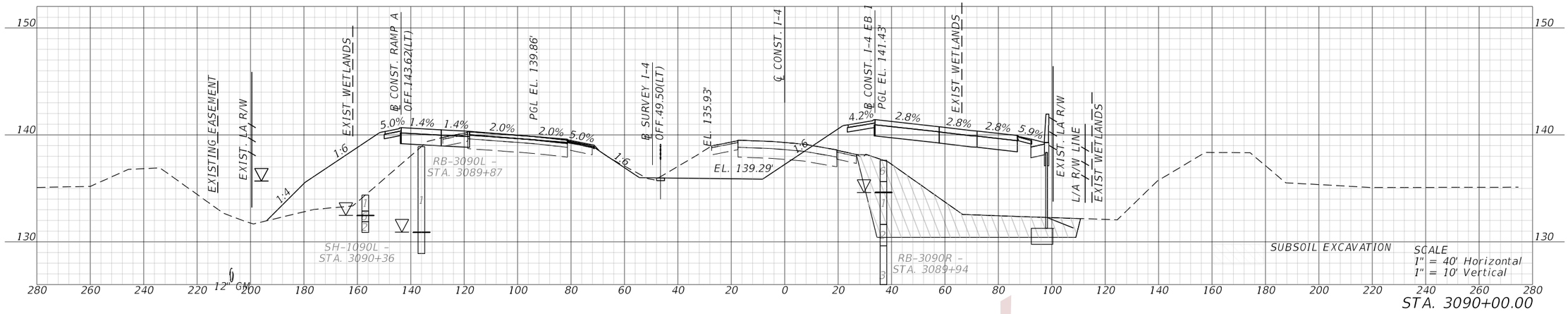

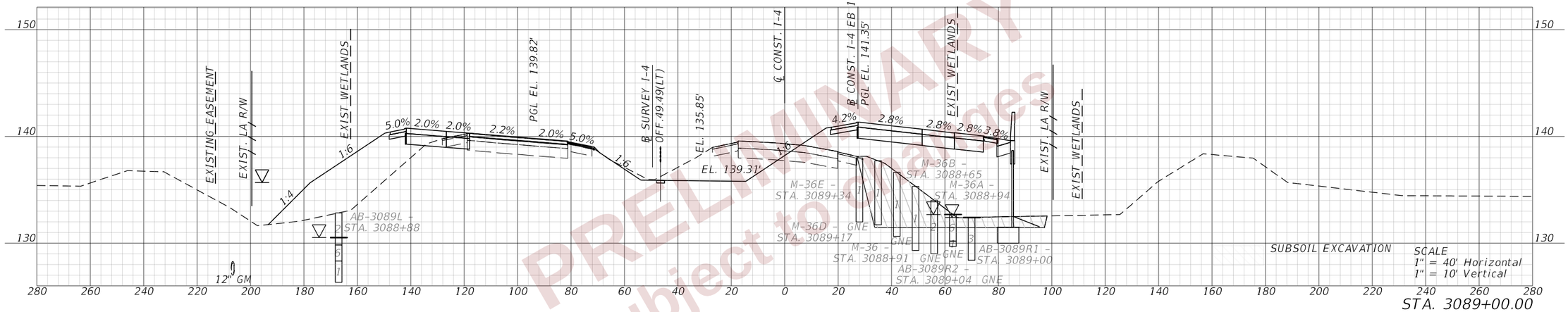

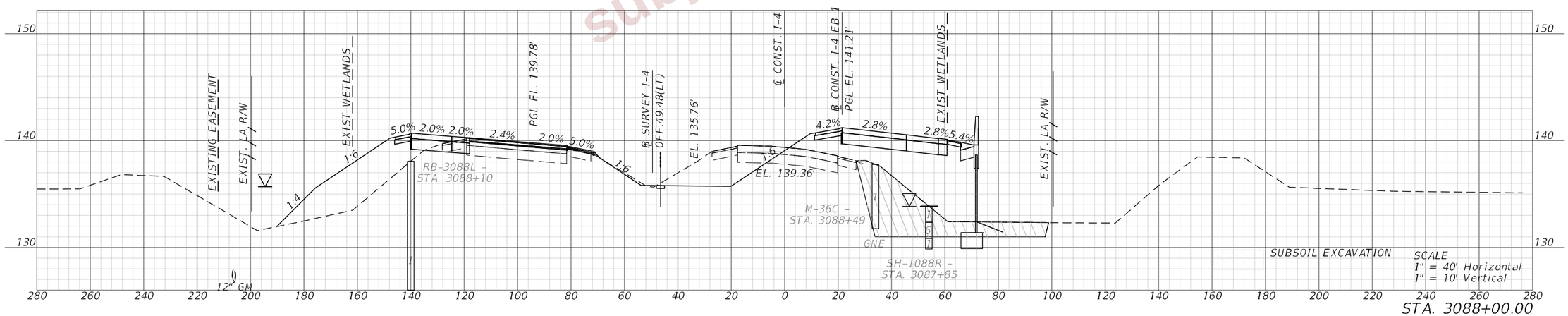

PRELIMINARY
subject to change

REVISIONS				ENGINEER OF RECORD	STATE OF FLORIDA DEPARTMENT OF TRANSPORTATION			CROSS SECTIONS (06) I-4 (SR400)	SHEET NO.
DATE	DESCRIPTION	DATE	DESCRIPTION	DEBANANDA PANIGRAHI, P.E. LICENSE NUMBER 68318 H. W. LOCHNER 4300 W. CYPRESS STREET, SUITE 500 TAMPA, FLORIDA 33607	ROAD NO.	COUNTY	FINANCIAL PROJECT ID		345
			GNE		SR 400	POLK	430185-3-52-01		

THE OFFICIAL RECORD OF THIS SHEET IS THE ELECTRONIC FILE DIGITALLY SIGNED AND SEALED UNDER RULE 61G15-23.004, F.A.C.

2/28/2024 11:31:59 AM JTAGLIAFERRO
c:\pw_working\lochner-pw-01\dms19508\RDXSRD02_NEW_Restored_2023-12-19_test.dgn

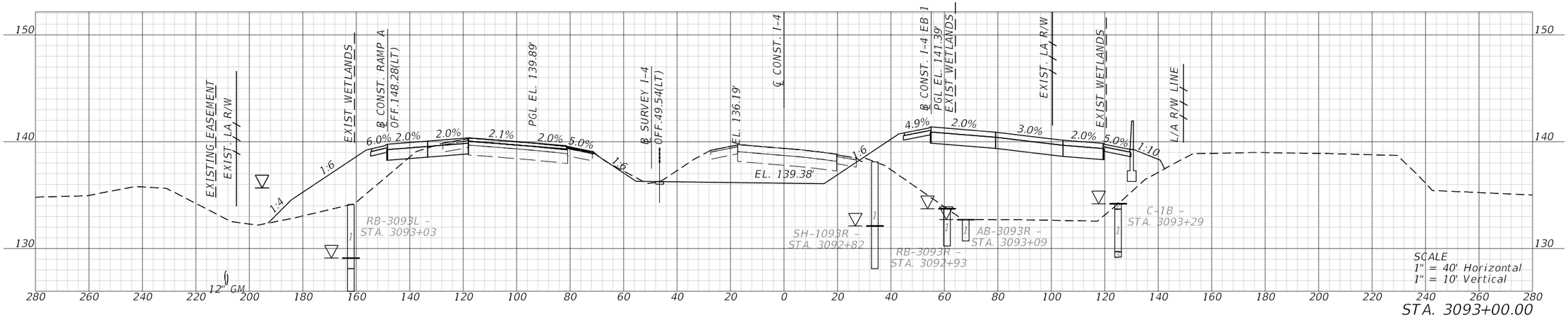

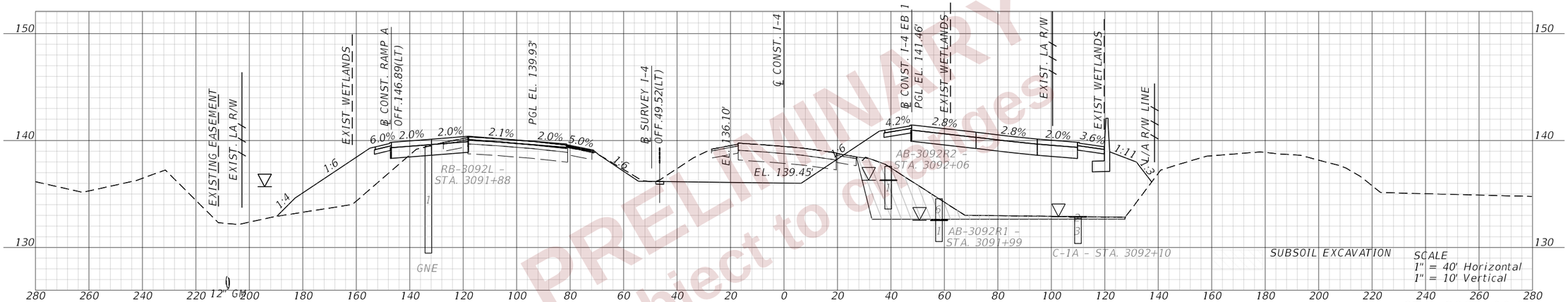

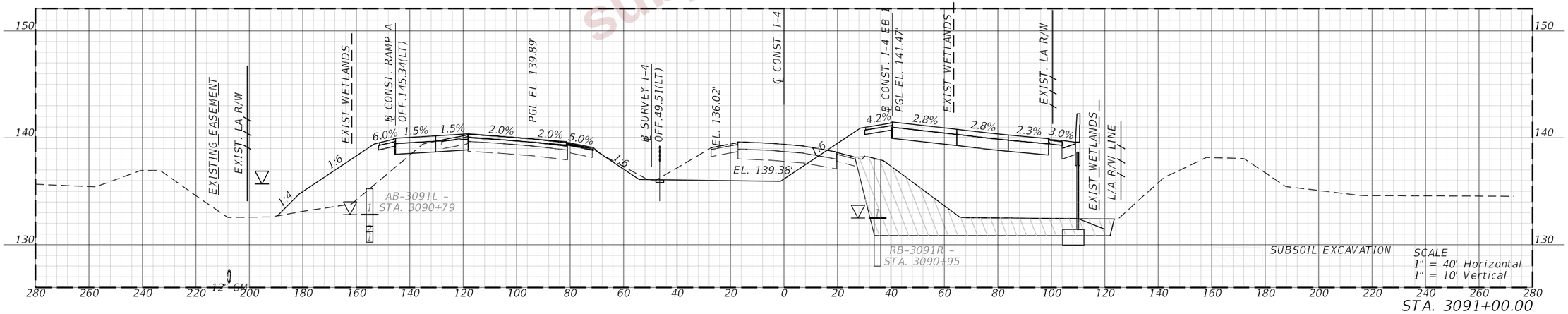

PRELIMINARY
subject to change

REVISIONS				ENGINEER OF RECORD	STATE OF FLORIDA DEPARTMENT OF TRANSPORTATION			CROSS SECTIONS (07) I-4 (SR400)	SHEET NO.
DATE	DESCRIPTION	DATE	DESCRIPTION	DEBANANDA PANIGRAHI, P.E. LICENSE NUMBER 68318 H. W. LOCHNER 4300 W. CYPRESS STREET, SUITE 500 TAMPA, FLORIDA 33607	ROAD NO.	COUNTY	FINANCIAL PROJECT ID		346
					SR 400	POLK	430185-3-52-01		

THE OFFICIAL RECORD OF THIS SHEET IS THE ELECTRONIC FILE DIGITALLY SIGNED AND SEALED UNDER RULE 61G15-23.004, F.A.C.

2/28/2024 11:32:03 AM JTAGLIAFERRO
c:\pw_working\lochner-pw-01\dms19508\RDXSRD02_NEW_Restored_2023-12-19_test.dgn

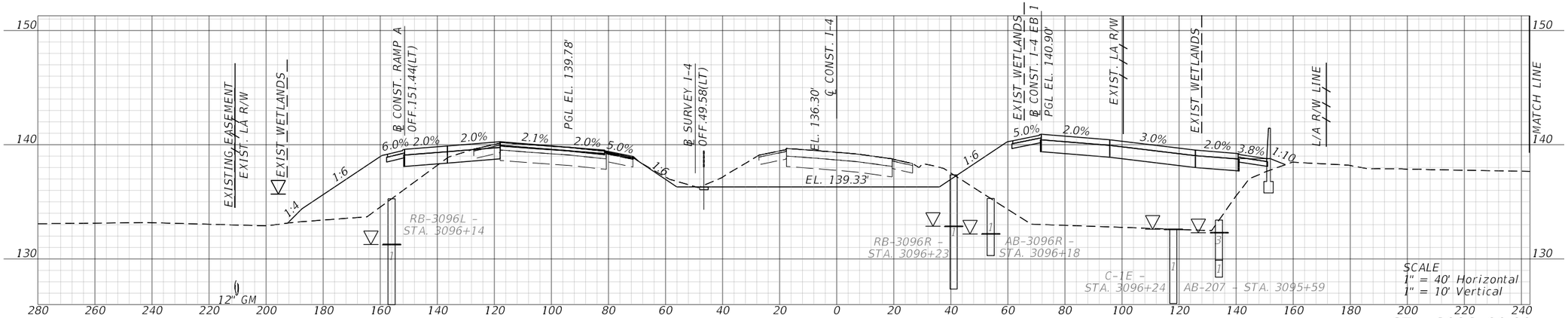

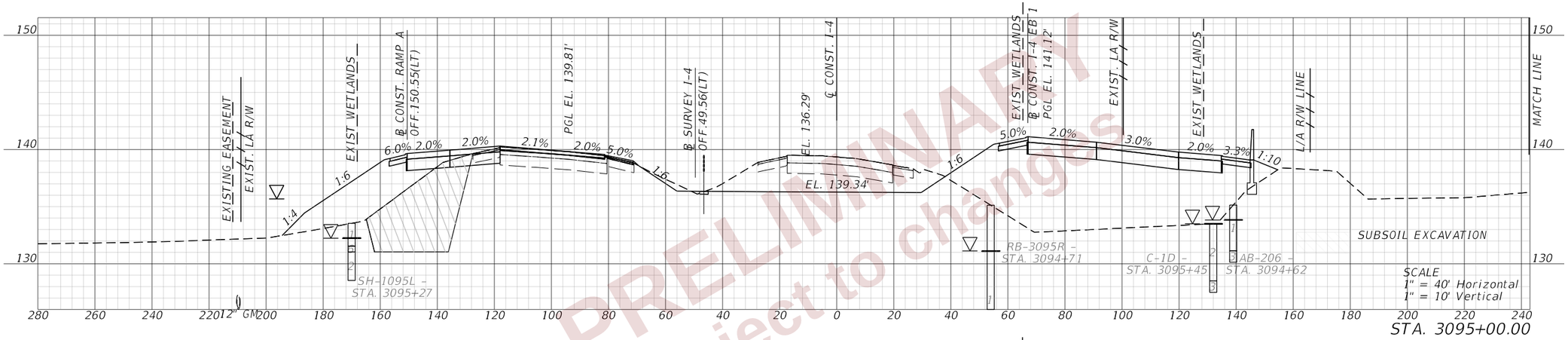

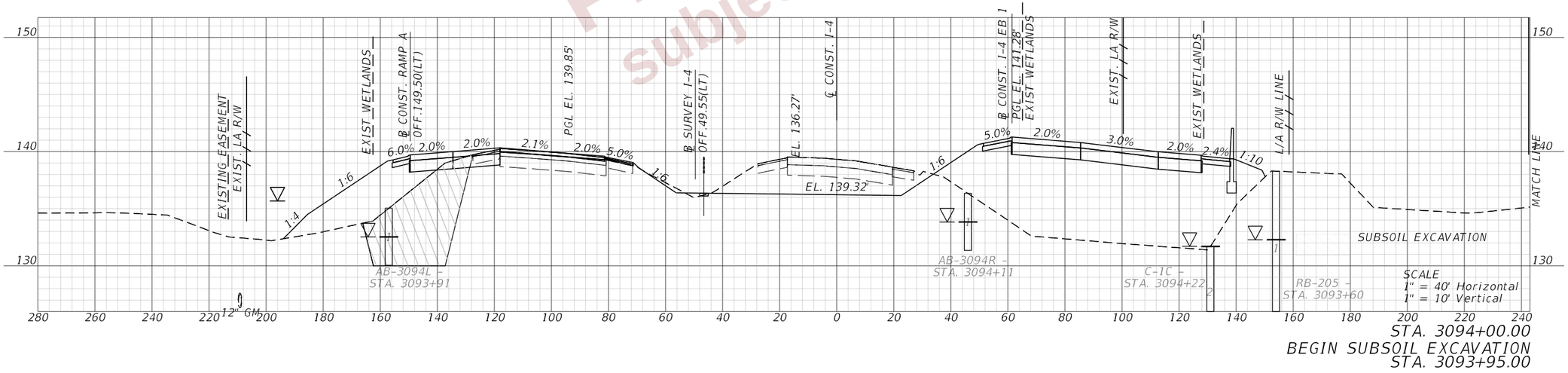

PRELIMINARY
subject to change

REVISIONS				ENGINEER OF RECORD	STATE OF FLORIDA DEPARTMENT OF TRANSPORTATION			CROSS SECTIONS (08) I-4 (SR400)	SHEET NO.
DATE	DESCRIPTION	DATE	DESCRIPTION	DEBANANDA PANIGRAHI, P.E. LICENSE NUMBER 68318 H. W. LOCHNER 4300 W. CYPRESS STREET, SUITE 500 TAMPA, FLORIDA 33607	ROAD NO.	COUNTY	FINANCIAL PROJECT ID		347
					SR 400	POLK	430185-3-52-01		

THE OFFICIAL RECORD OF THIS SHEET IS THE ELECTRONIC FILE DIGITALLY SIGNED AND SEALED UNDER RULE 61G15-23.004, F.A.C.

2/28/2024 11:32:07 AM JTAGLIAFERRO
c:\pw_working\lochner-pw-01\dms19508\RDYSRD02_NEW_Restored_2023-12-19_test.dgn

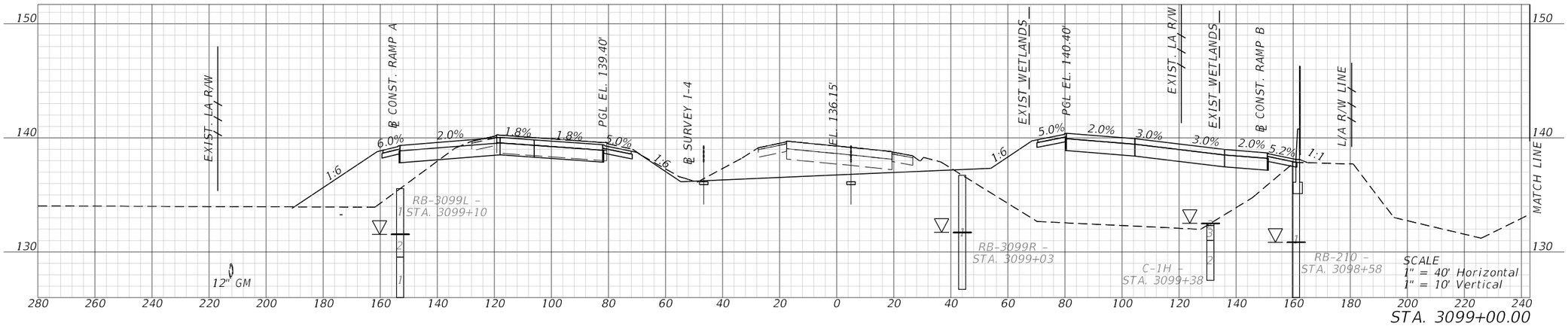

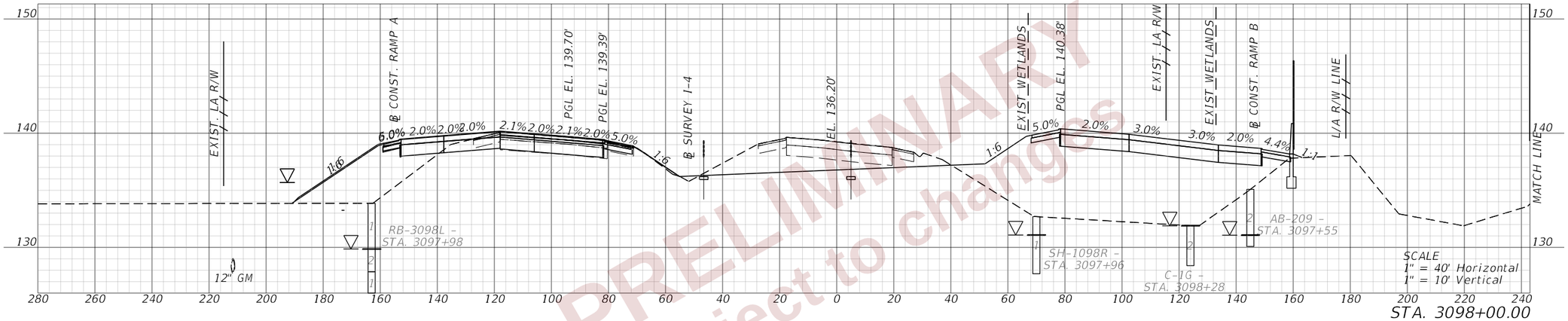

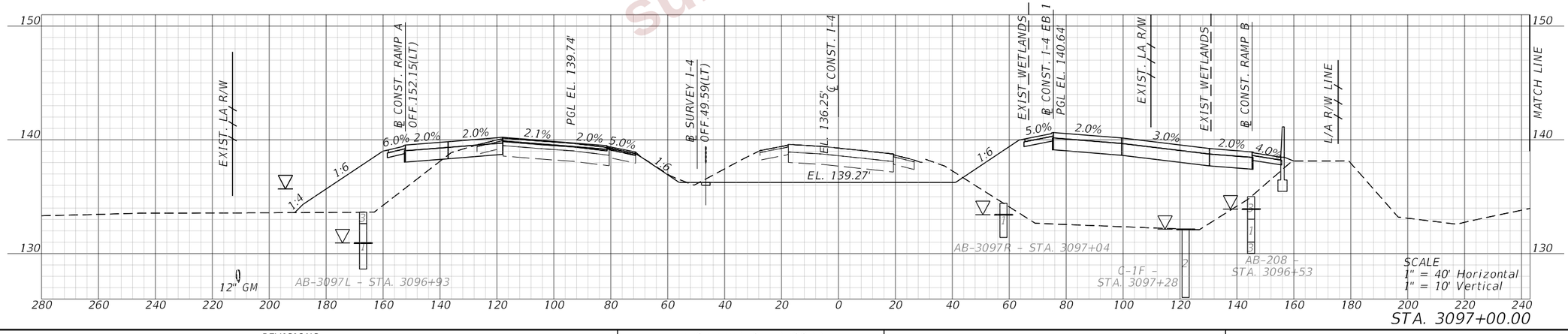

PRELIMINARY subject to changes

REVISIONS			
DATE	DESCRIPTION	DATE	DESCRIPTION

ENGINEER OF RECORD
DEBANANDA PANIGRAHI, P.E.
LICENSE NUMBER 68318
H. W. LOCHNER
4300 W. CYPRESS STREET, SUITE 500
TAMPA, FLORIDA 33607

STATE OF FLORIDA
DEPARTMENT OF TRANSPORTATION

ROAD NO.	COUNTY	FINANCIAL PROJECT ID
SR 400	POLK	430185-3-52-01

CROSS SECTIONS (09)
I-4 (SR400)

SHEET NO. 348

THE OFFICIAL RECORD OF THIS SHEET IS THE ELECTRONIC FILE DIGITALLY SIGNED AND SEALED UNDER RULE 61G15-23.004, F.A.C.

2/28/2024 11:32:10 AM JTAGLIAFERRO
c:\pw_working\lochner-pw-01\dms19508\RDJSR002_NEW_Restored_2023-12-19_test.dgn

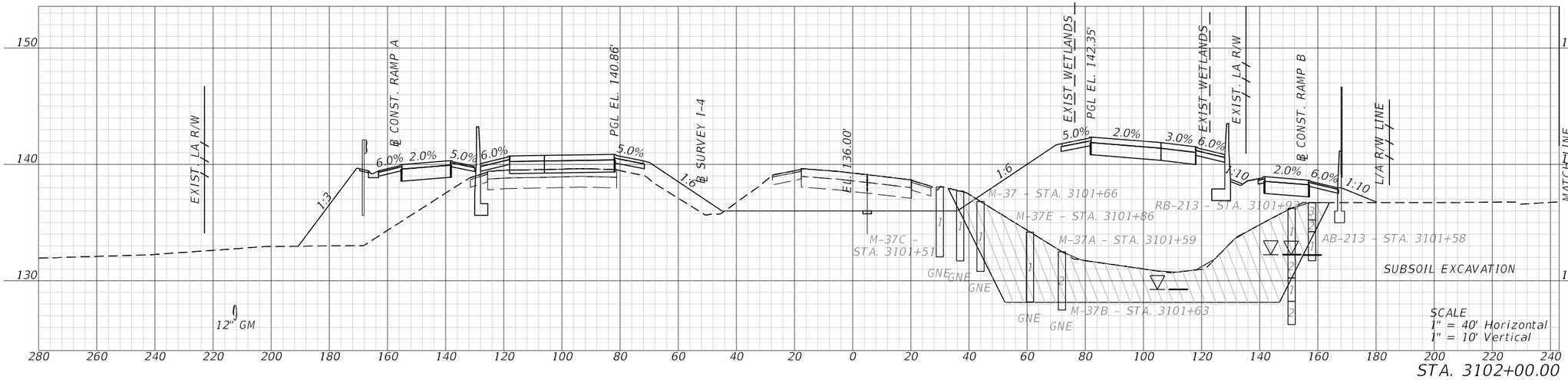

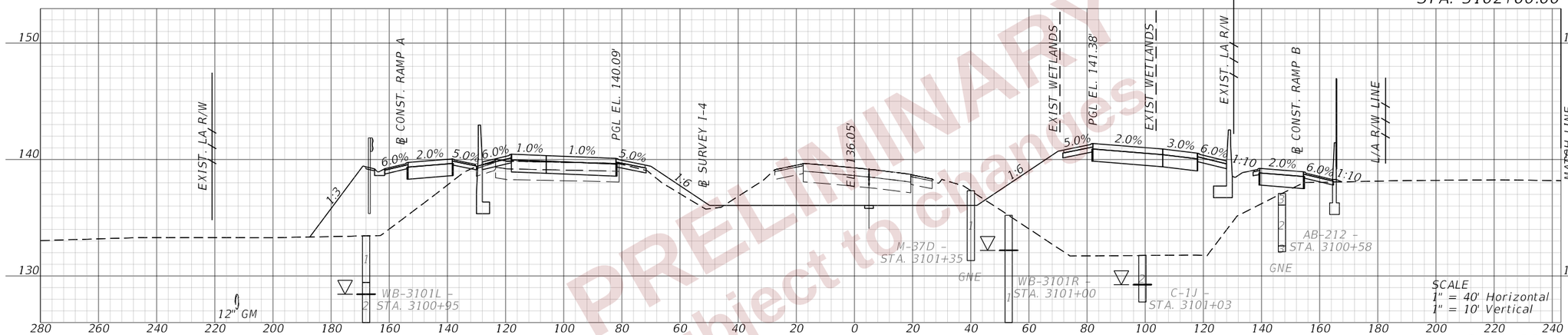

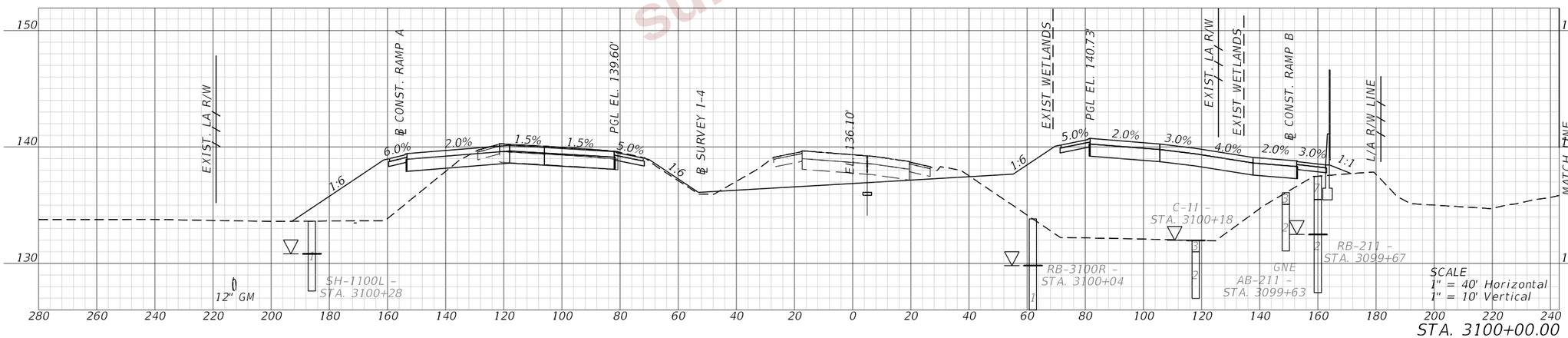

PRELIMINARY
subject to change

REVISIONS				ENGINEER OF RECORD	STATE OF FLORIDA DEPARTMENT OF TRANSPORTATION			CROSS SECTIONS (10) I-4 (SR400)	SHEET NO.
DATE	DESCRIPTION	DATE	DESCRIPTION	DEBANANDA PANIGRAHI, P.E. LICENSE NUMBER 68318 H. W. LOCHNER 4300 W. CYPRESS STREET, SUITE 500 TAMPA, FLORIDA 33607	ROAD NO.	COUNTY	FINANCIAL PROJECT ID		349
					SR 400	POLK	430185-3-52-01		

THE OFFICIAL RECORD OF THIS SHEET IS THE ELECTRONIC FILE DIGITALLY SIGNED AND SEALED UNDER RULE 61G15-23.004, F.A.C.

2/28/2024 11:32:14 AM JTAGLIAFERRO
c:\pw_working\lochner-pw-01\dms19508\RDXSRD02_NEW_Restored_2023-12-19_test.dgn

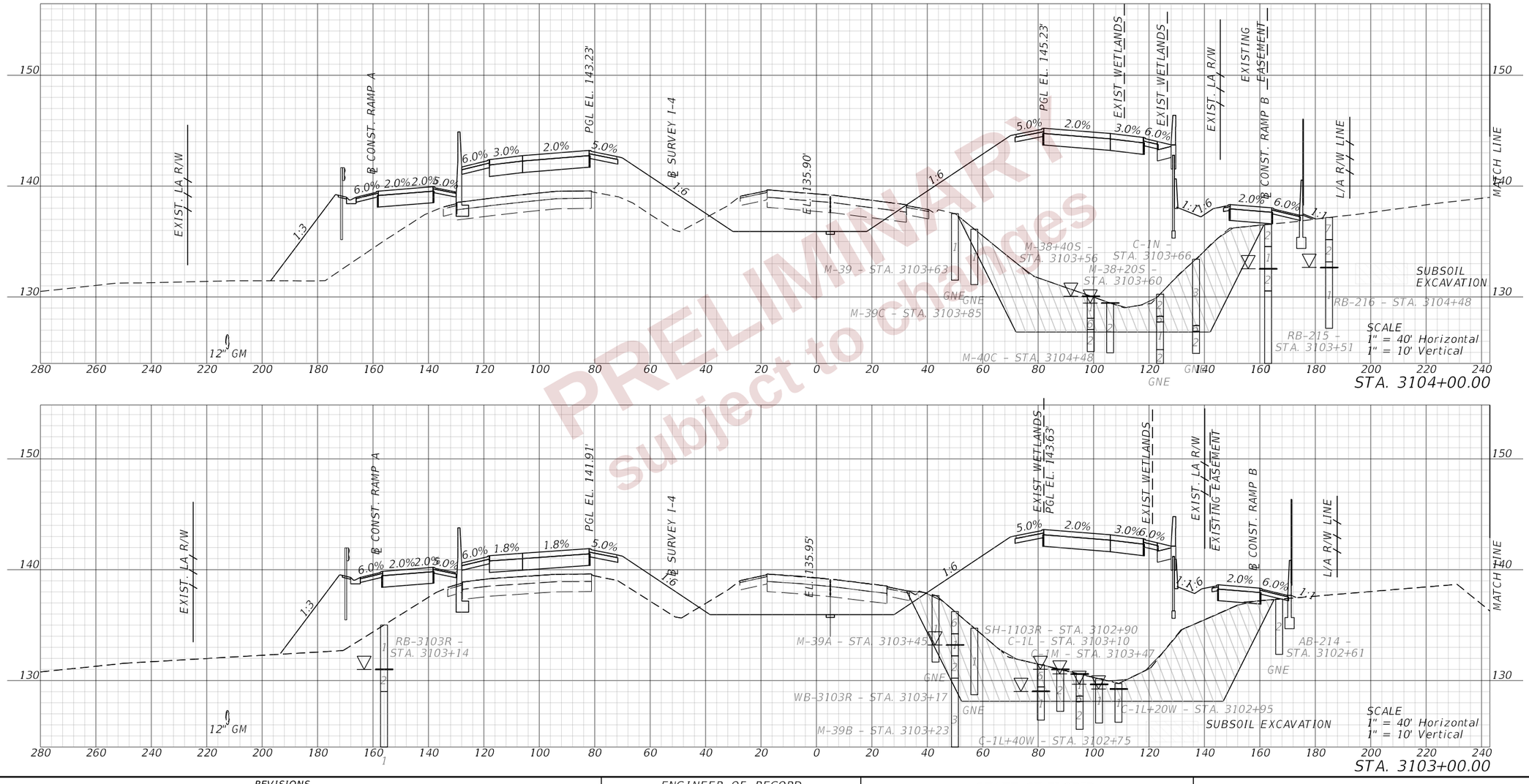

PRELIMINARY
subject to change

REVISIONS			
DATE	DESCRIPTION	DATE	DESCRIPTION

ENGINEER OF RECORD

DEBANANDA PANIGRAHI, P.E.
LICENSE NUMBER 68318
H. W. LOCHNER
4300 W. CYPRESS STREET, SUITE 500
TAMPA, FLORIDA 33607

STATE OF FLORIDA
DEPARTMENT OF TRANSPORTATION

ROAD NO.	COUNTY	FINANCIAL PROJECT ID
SR 400	POLK	430185-3-52-01

CROSS SECTIONS (11)
I-4 (SR400)

SHEET NO. 350

THE OFFICIAL RECORD OF THIS SHEET IS THE ELECTRONIC FILE DIGITALLY SIGNED AND SEALED UNDER RULE 61G15-23.004, F.A.C.

2/28/2024 11:32:18 AM JTAGLIAFERRO
c:\pw_working\lochner-pw-01\dms19508\RDYSRD02_NEW_Restored_2023-12-19_test.dgn

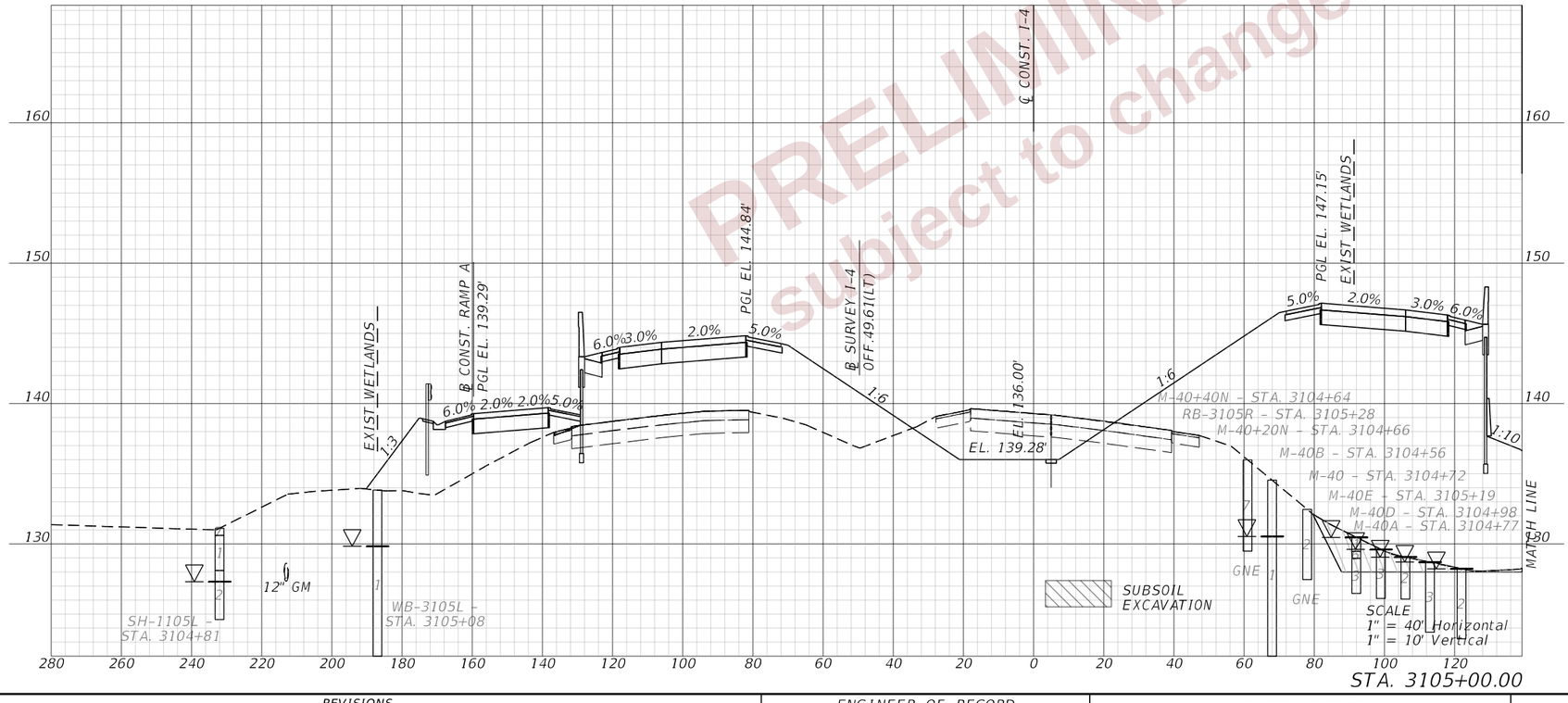

PRELIMINARY
Subject to changes

REVISIONS			
DATE	DESCRIPTION	DATE	DESCRIPTION

ENGINEER OF RECORD

DEBANANDA PANIGRAHI, P.E.
LICENSE NUMBER 68318
H. W. LOCHNER
4300 W. CYPRESS STREET, SUITE 500
TAMPA, FLORIDA 33607

STATE OF FLORIDA
DEPARTMENT OF TRANSPORTATION

ROAD NO.	COUNTY	FINANCIAL PROJECT ID
SR 400	POLK	430185-3-52-01

CROSS SECTIONS (12)
I-4 (SR400)

SHEET NO. 351

THE OFFICIAL RECORD OF THIS SHEET IS THE ELECTRONIC FILE DIGITALLY SIGNED AND SEALED UNDER RULE 61G15-23.004, F.A.C.

2/28/2024 11:32:20 AM JTAGLIAFERRO
c:\pw_working\lochner-pw-01\dms19508\RDYSRD02_NEW_Restored_2023-12-19_test.dgn

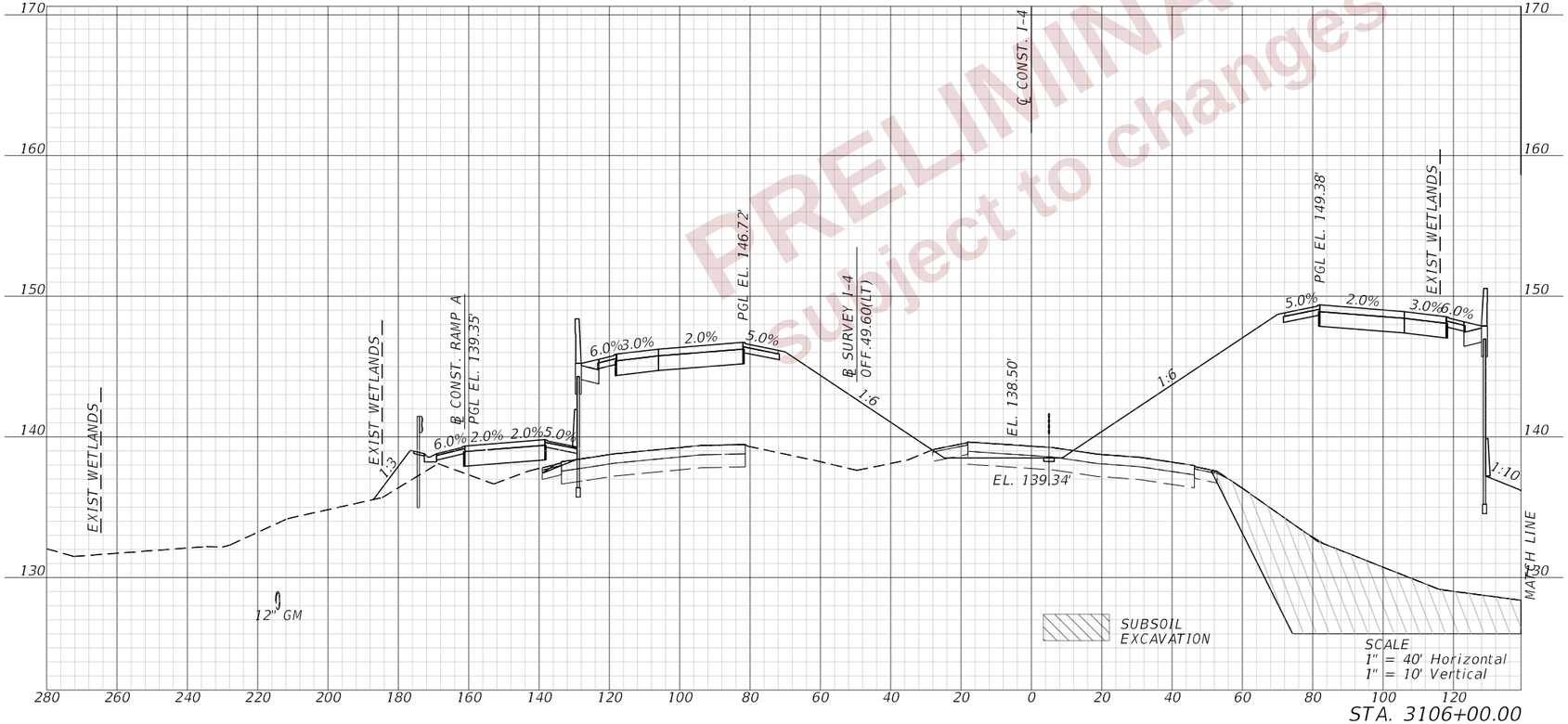

PRELIMINARY
Subject to changes

REVISIONS			
DATE	DESCRIPTION	DATE	DESCRIPTION

ENGINEER OF RECORD
DEBANANDA PANIGRAHI, P.E.
LICENSE NUMBER 68318
H. W. LOCHNER
4300 W. CYPRESS STREET, SUITE 500
TAMPA, FLORIDA 33607

STATE OF FLORIDA
DEPARTMENT OF TRANSPORTATION

ROAD NO.	COUNTY	FINANCIAL PROJECT ID
SR 400	POLK	430185-3-52-01

CROSS SECTIONS (13)
I-4 (SR400)

SHEET NO.
352

THE OFFICIAL RECORD OF THIS SHEET IS THE ELECTRONIC FILE DIGITALLY SIGNED AND SEALED UNDER RULE 61G15-23.004, F.A.C.

2/28/2024 11:32:22 AM JTAGLIAFERRO
C:\pw_working\lochner-pw-01\dms19508\RDXSRD02_NEW_Restored_2023-12-19_test.dgn

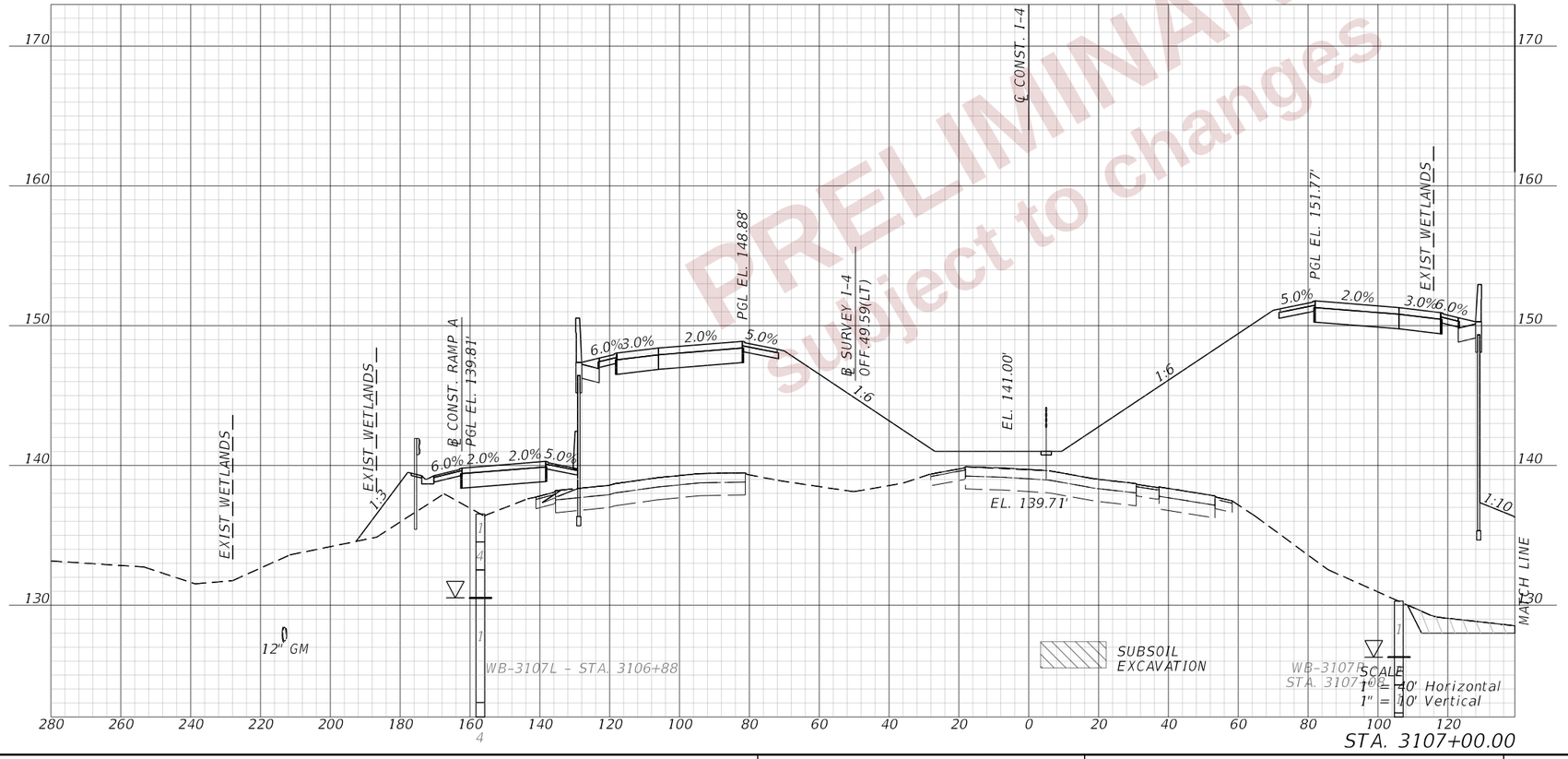

PRELIMINARY
Subject to changes

REVISIONS			
DATE	DESCRIPTION	DATE	DESCRIPTION

ENGINEER OF RECORD
DEBANANDA PANIGRAHI, P.E.
LICENSE NUMBER 68318
H. W. LOCHNER
4300 W. CYPRESS STREET, SUITE 500
TAMPA, FLORIDA 33607

STATE OF FLORIDA
DEPARTMENT OF TRANSPORTATION

ROAD NO.	COUNTY	FINANCIAL PROJECT ID
SR 400	POLK	430185-3-52-01

CROSS SECTIONS (14)
I-4 (SR400)

SHEET NO. 353

THE OFFICIAL RECORD OF THIS SHEET IS THE ELECTRONIC FILE DIGITALLY SIGNED AND SEALED UNDER RULE 61G15-23.004, F.A.C.

2/28/2024 11:32:24 AM JTAGLIAFERRO
c:\pw_working\lochner-pw-01\dms1950\SRD002_NEW_Restored_2023-12-19_test.dgn

END SUBSOIL EXCAVATION
STA. 3109+00.00

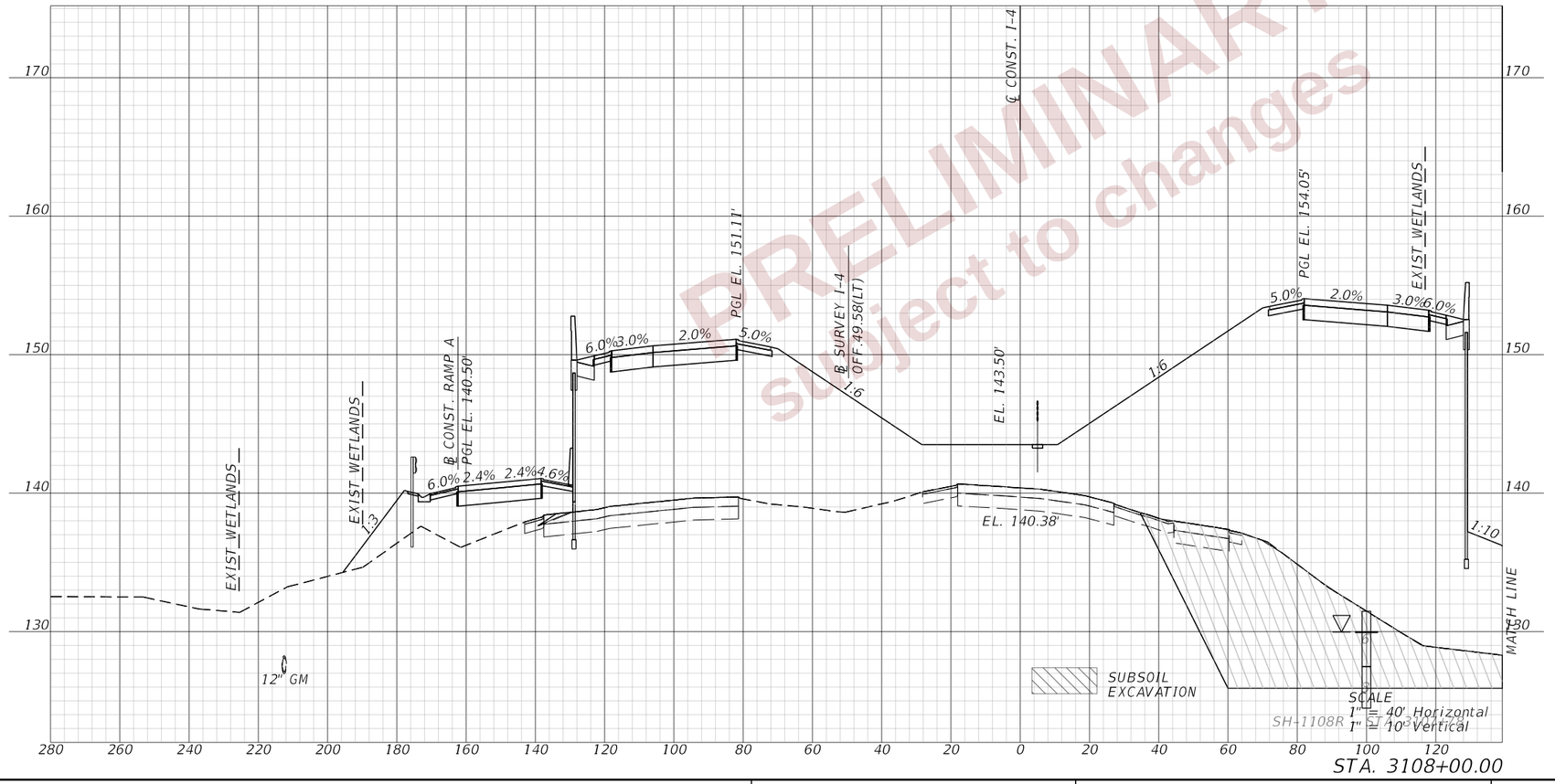

PRELIMINARY
subject to changes

REVISIONS			
DATE	DESCRIPTION	DATE	DESCRIPTION

ENGINEER OF RECORD

DEBANANDA PANIGRAHI, P.E.
LICENSE NUMBER 68318
H. W. LOCHNER
4300 W. CYPRESS STREET, SUITE 500
TAMPA, FLORIDA 33607

STATE OF FLORIDA
DEPARTMENT OF TRANSPORTATION

ROAD NO.	COUNTY	FINANCIAL PROJECT ID
SR 400	POLK	430185-3-52-01

CROSS SECTIONS (15)
I-4 (SR400)

SHEET NO. 354

THE OFFICIAL RECORD OF THIS SHEET IS THE ELECTRONIC FILE DIGITALLY SIGNED AND SEALED UNDER RULE 61G15-23.004, F.A.C.

2/28/2024 11:32:26 AM JTAGLIAFERRO
c:\pw_working\lochner-pw-01\dms19508\RDXSRD02_NEW_Restored_2023-12-19_test.dgn

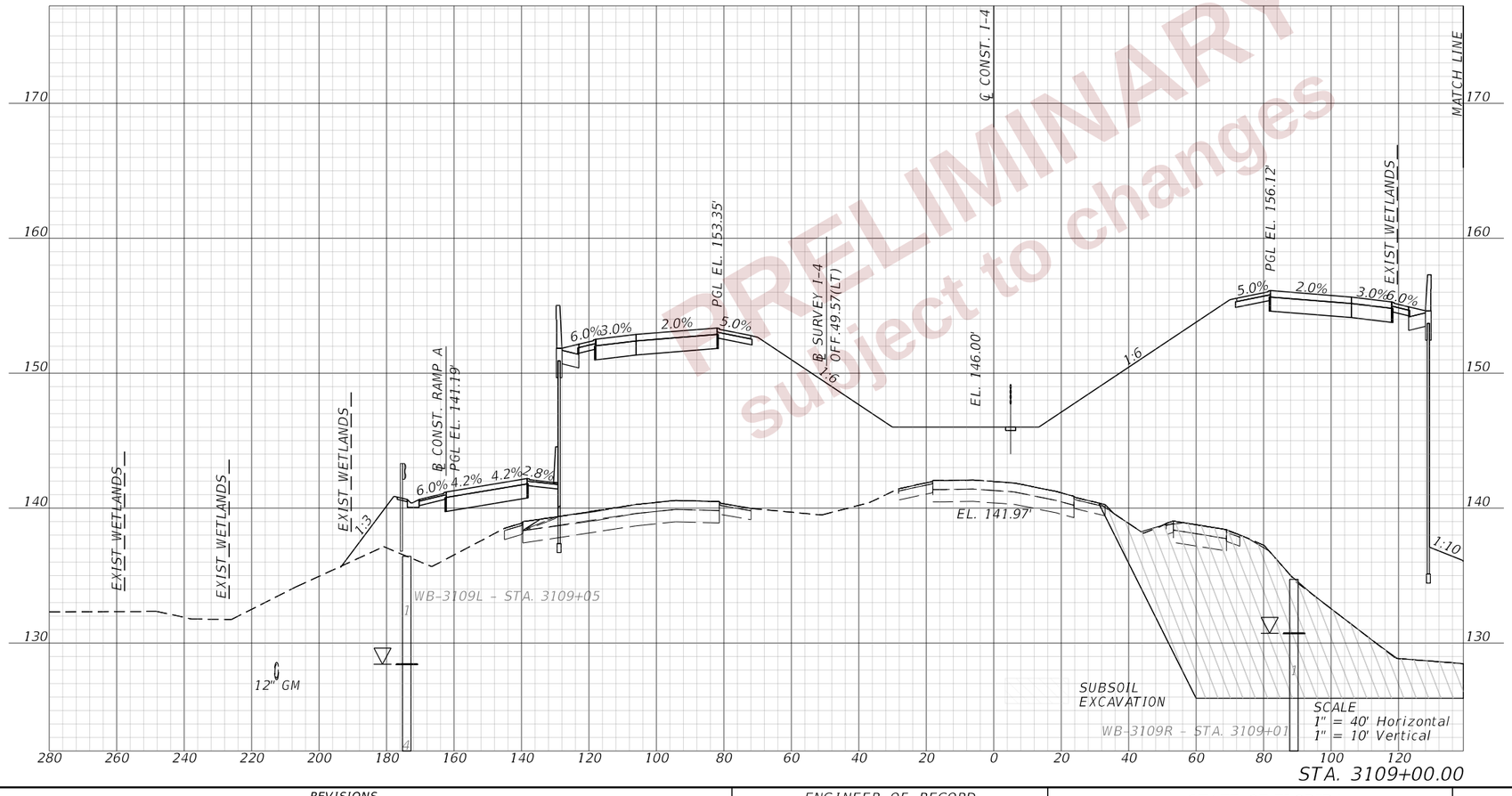

PRELIMINARY
subject to changes

REVISIONS				ENGINEER OF RECORD	STATE OF FLORIDA DEPARTMENT OF TRANSPORTATION			CROSS SECTIONS (16) I-4 (SR400)	SHEET NO.
DATE	DESCRIPTION	DATE	DESCRIPTION	DEBANANDA PANIGRAHI, P.E. LICENSE NUMBER 68318 H. W. LOCHNER 4300 W. CYPRESS STREET, SUITE 500 TAMPA, FLORIDA 33607	ROAD NO.	COUNTY	FINANCIAL PROJECT ID		355
					SR 400	POLK	430185-3-52-01		

THE OFFICIAL RECORD OF THIS SHEET IS THE ELECTRONIC FILE DIGITALLY SIGNED AND SEALED UNDER RULE 61G15-23.004, F.A.C.

2/28/2024 11:32:28 AM JTAGLIAFERRO
c:\pw_working\lochner-pw-01\dms19508\RDYSRD02_NEW_Restored_2023-12-19_test.dgn

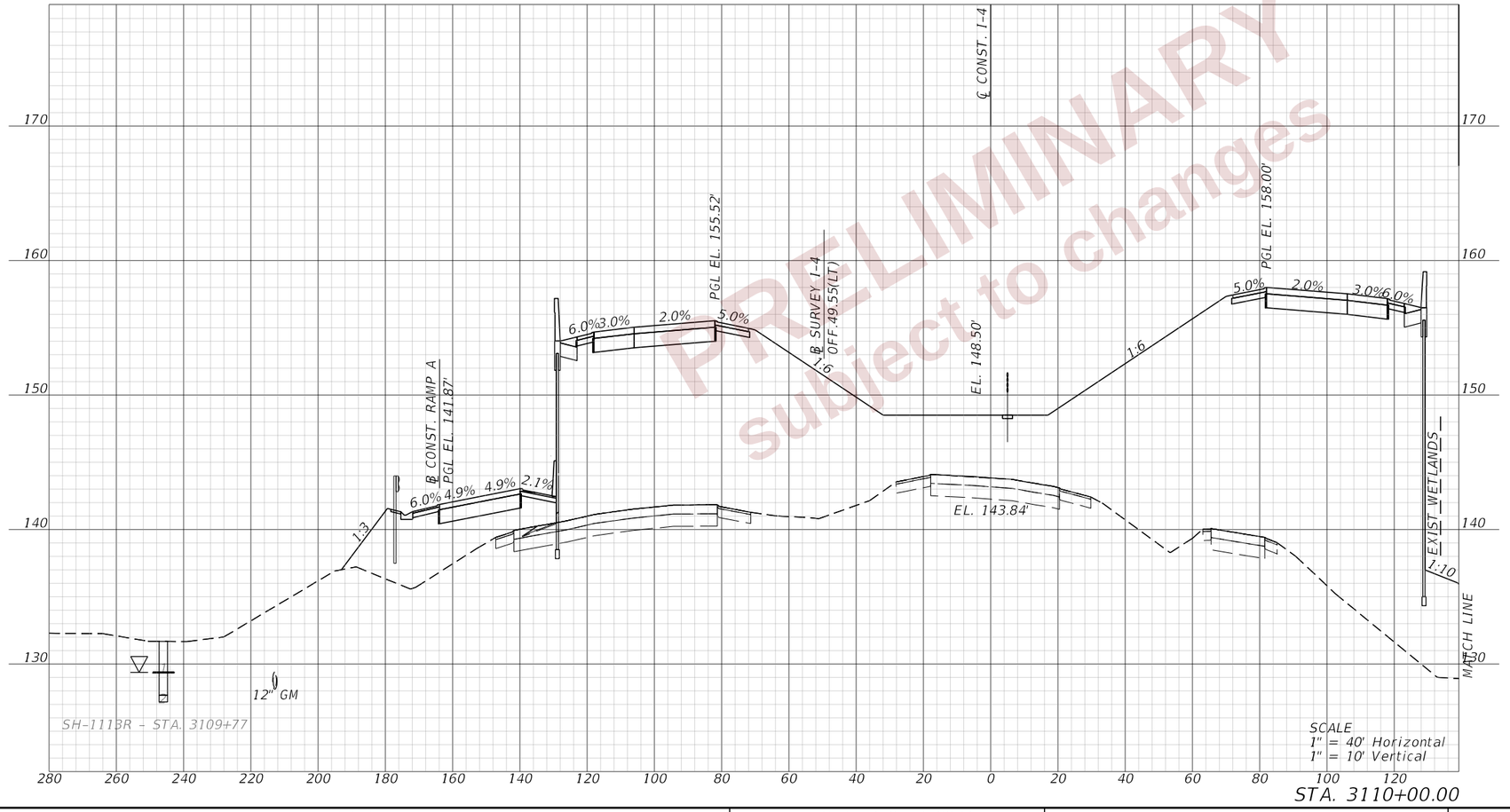

PRELIMINARY
Subject to changes

REVISIONS				ENGINEER OF RECORD	STATE OF FLORIDA DEPARTMENT OF TRANSPORTATION			CROSS SECTIONS (17) I-4 (SR400)	SHEET NO.
DATE	DESCRIPTION	DATE	DESCRIPTION	DEBANANDA PANIGRAHI, P.E. LICENSE NUMBER 68318 H. W. LOCHNER 4300 W. CYPRESS STREET, SUITE 500 TAMPA, FLORIDA 33607	ROAD NO.	COUNTY	FINANCIAL PROJECT ID		356
					SR 400	POLK	430185-3-52-01		

THE OFFICIAL RECORD OF THIS SHEET IS THE ELECTRONIC FILE DIGITALLY SIGNED AND SEALED UNDER RULE 61G15-23.004, F.A.C.

2/28/2024 11:32:30 AM JTAGLIAFERRO
c:\pw_working\lochner-pw-01\dms19508\RDVSR002_NEW_Restored_2023-12-19_test.dgn

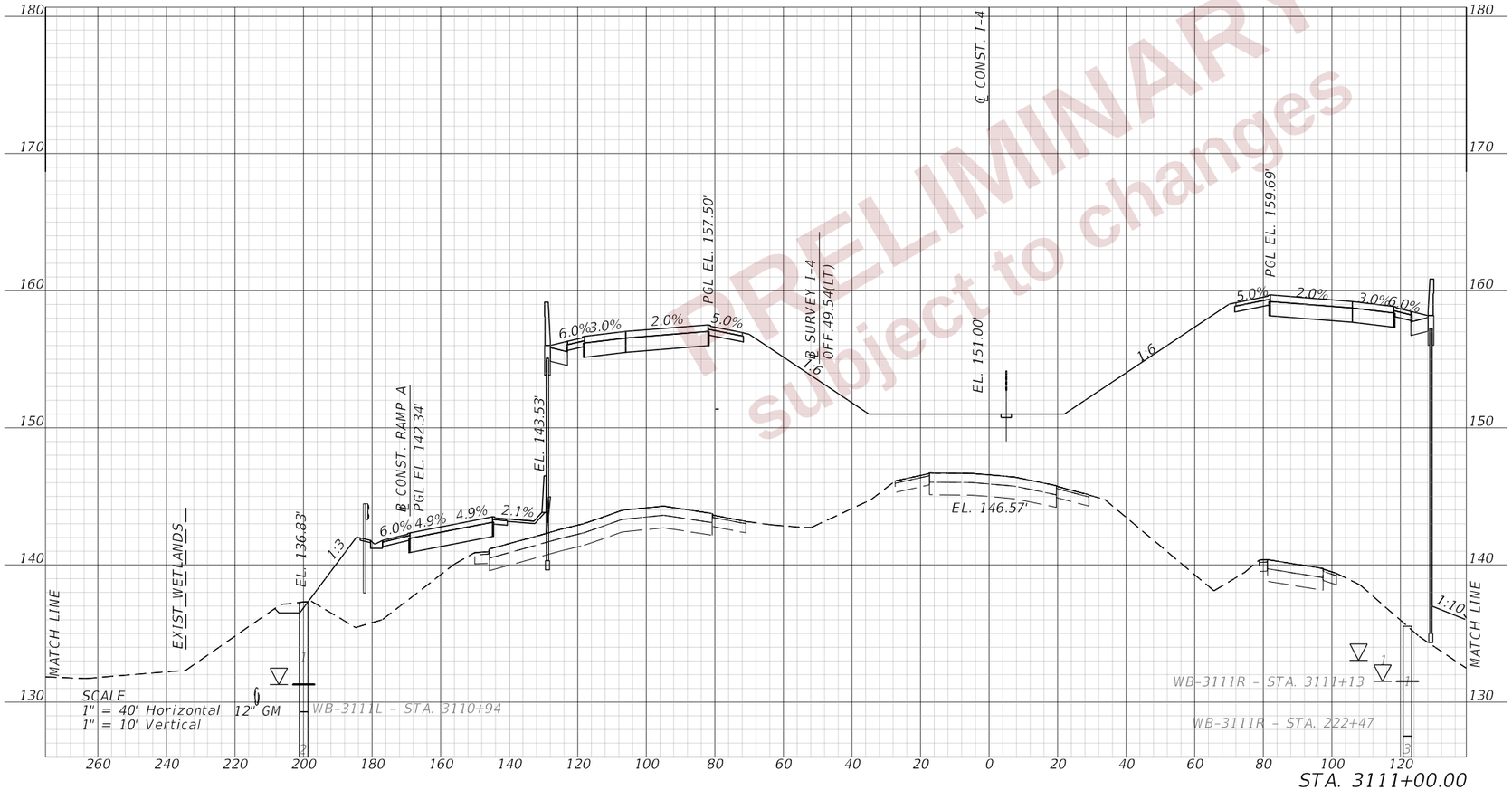

PRELIMINARY
subject to changes

REVISIONS				ENGINEER OF RECORD	STATE OF FLORIDA DEPARTMENT OF TRANSPORTATION			CROSS SECTIONS (18) I-4 (SR400)	SHEET NO.
DATE	DESCRIPTION	DATE	DESCRIPTION	DEBANANDA PANIGRAHI, P.E. LICENSE NUMBER 68318 H. W. LOCHNER 4300 W. CYPRESS STREET, SUITE 500 TAMPA, FLORIDA 33607	ROAD NO.	COUNTY	FINANCIAL PROJECT ID		357
					SR 400	POLK	430185-3-52-01		

THE OFFICIAL RECORD OF THIS SHEET IS THE ELECTRONIC FILE DIGITALLY SIGNED AND SEALED UNDER RULE 61G15-23.004, F.A.C.

2/28/2024 11:32:32 AM JTAGLIAFERRO
c:\pw_working\lochner-pw-01\dms19508\RDXSRD02_NEW_Restored_2023-12-19_test.dgn

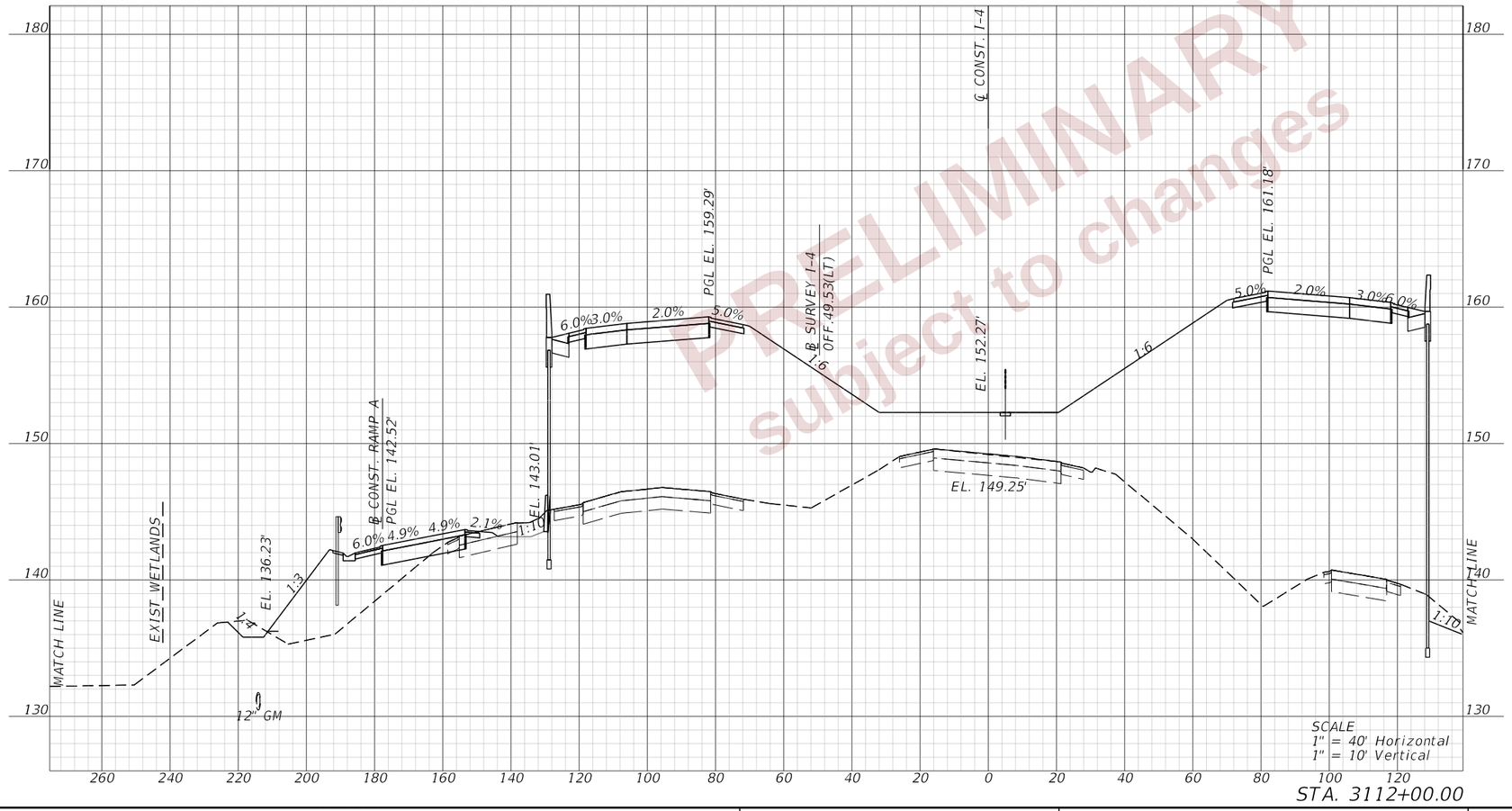

PRELIMINARY
subject to change

REVISIONS				ENGINEER OF RECORD	STATE OF FLORIDA DEPARTMENT OF TRANSPORTATION			CROSS SECTIONS (19) I-4 (SR400)	SHEET NO.
DATE	DESCRIPTION	DATE	DESCRIPTION	DEBANANDA PANIGRAHI, P.E. LICENSE NUMBER 68318 H. W. LOCHNER 4300 W. CYPRESS STREET, SUITE 500 TAMPA, FLORIDA 33607	ROAD NO.	COUNTY	FINANCIAL PROJECT ID		358
					SR 400	POLK	430185-3-52-01		

THE OFFICIAL RECORD OF THIS SHEET IS THE ELECTRONIC FILE DIGITALLY SIGNED AND SEALED UNDER RULE 61G15-23.004, F.A.C.

2/28/2024 11:32:34 AM JTAGLIAFERRO
c:\pw_working\lochner-pw-01\dms1950\6\RDXSRD02_NEW_Restored_2023-12-19_test.dgn

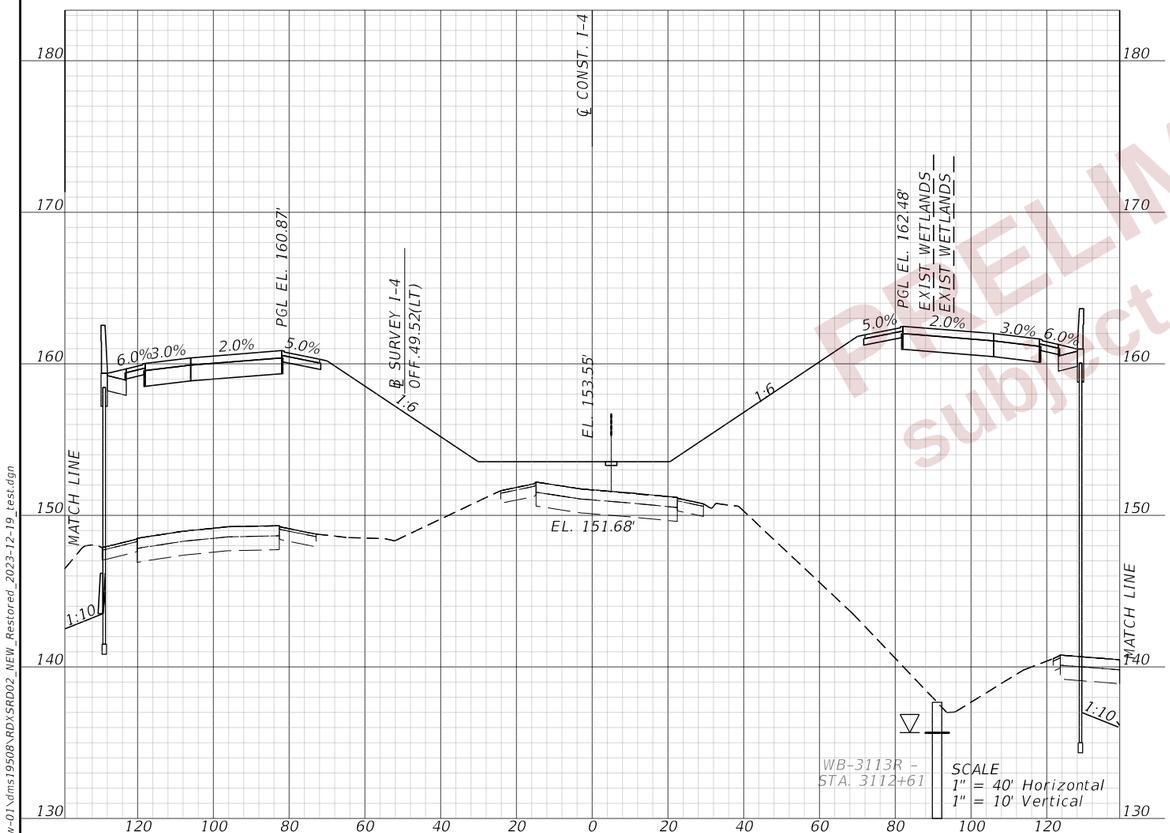

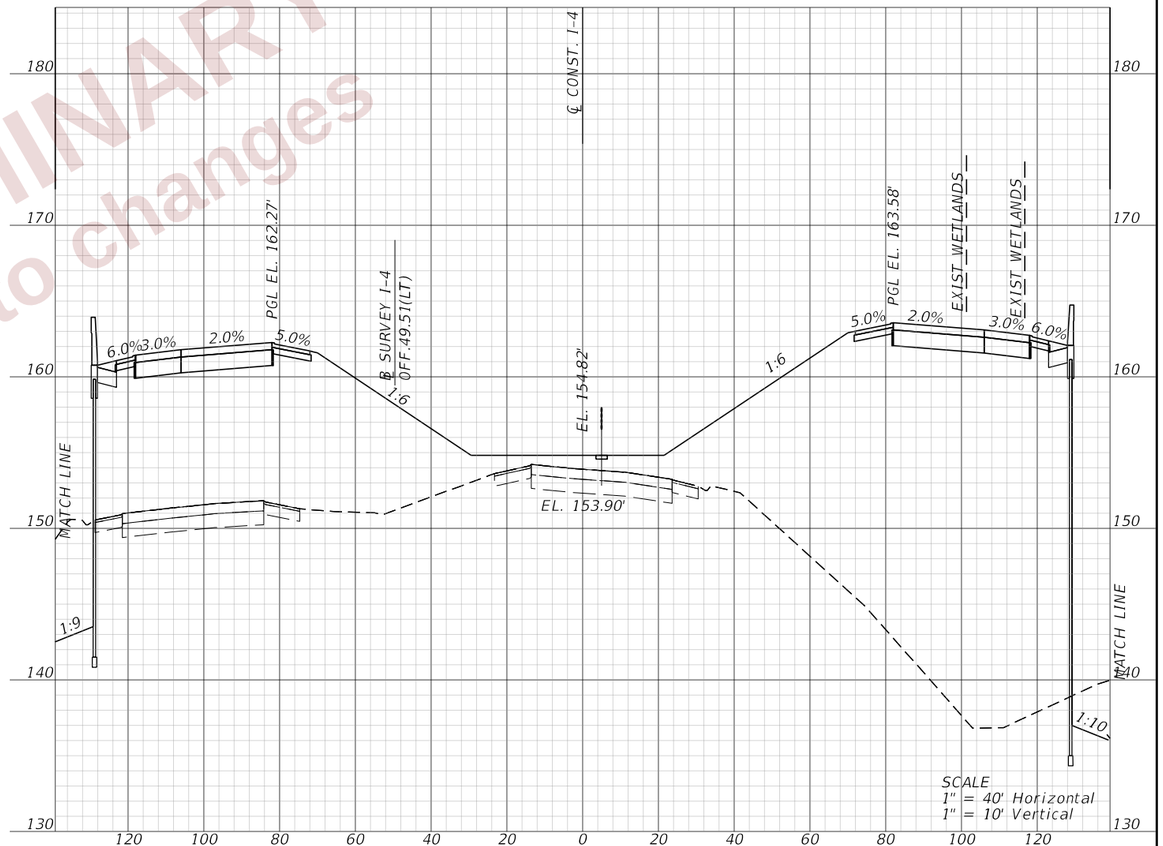

PRELIMINARY
subject to changes

REVISIONS				ENGINEER OF RECORD	STATE OF FLORIDA DEPARTMENT OF TRANSPORTATION			CROSS SECTIONS (20) I-4 (SR400)	SHEET NO.
DATE	DESCRIPTION	DATE	DESCRIPTION	DEBANANDA PANIGRAHI, P.E. LICENSE NUMBER 68318 H. W. LOCHNER 4300 W. CYPRESS STREET, SUITE 500 TAMPA, FLORIDA 33607	ROAD NO.	COUNTY	FINANCIAL PROJECT ID		359
					SR 400	POLK	430185-3-52-01		

THE OFFICIAL RECORD OF THIS SHEET IS THE ELECTRONIC FILE DIGITALLY SIGNED AND SEALED UNDER RULE 61G15-23.004, F.A.C.

2/28/2024 11:32:37 AM JTAGLIAFERRO
c:\pw_working\lochner-pw-01\dms19508\RDYSRD02_NEW_Restored_2023-12-19_test.dgn

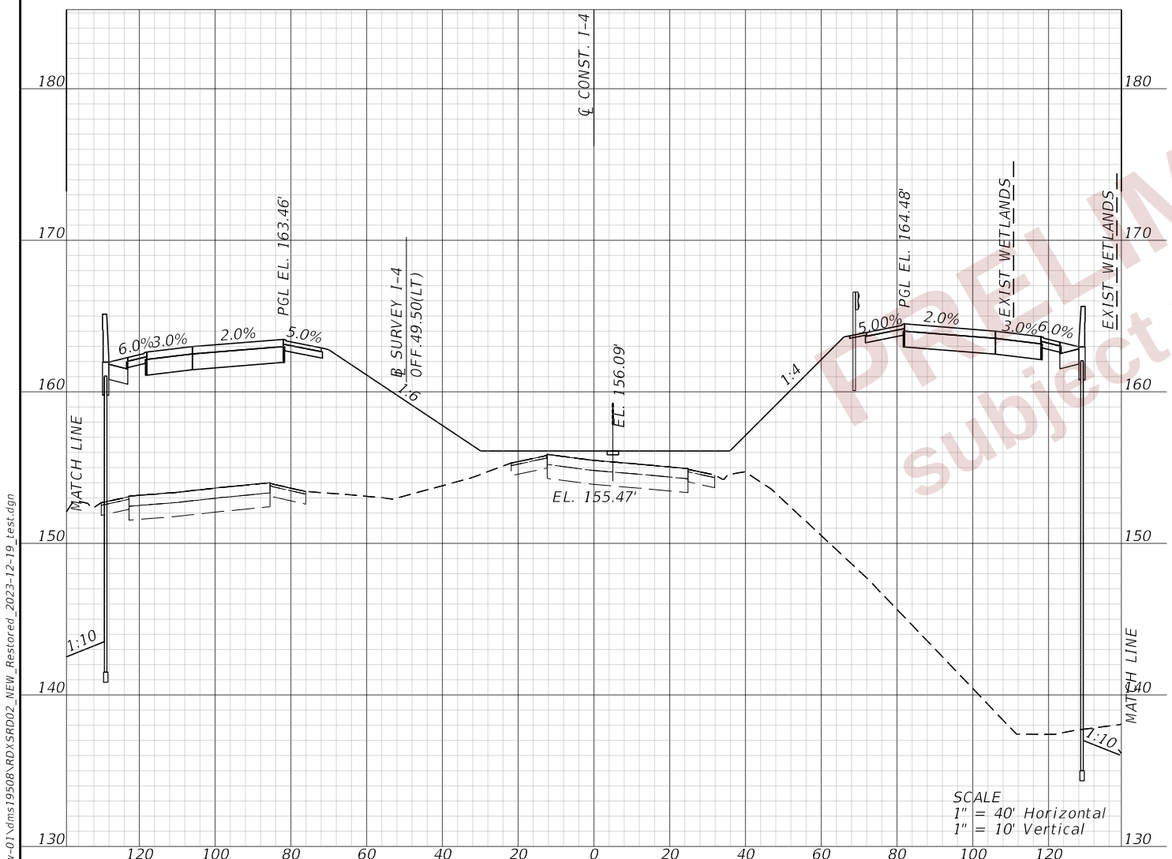

PRELIMINARY
subject to changes

REVISIONS				ENGINEER OF RECORD	STATE OF FLORIDA DEPARTMENT OF TRANSPORTATION			CROSS SECTIONS (21) I-4 (SR400)	SHEET NO.
DATE	DESCRIPTION	DATE	DESCRIPTION	DEBANANDA PANIGRAHI, P.E. LICENSE NUMBER 68318 H. W. LOCHNER 4300 W. CYPRESS STREET, SUITE 500 TAMPA, FLORIDA 33607	ROAD NO.	COUNTY	FINANCIAL PROJECT ID		360
					SR 400	POLK	430185-3-52-01		

THE OFFICIAL RECORD OF THIS SHEET IS THE ELECTRONIC FILE DIGITALLY SIGNED AND SEALED UNDER RULE 61G15-23.004, F.A.C.

2/28/2024 11:32:40 AM JTAGLIAFERRO
c:\pw_working\lochner-pw-01\dms\19508\RDYSRD02_NEW_Restored_2023-12-19_test.dgn

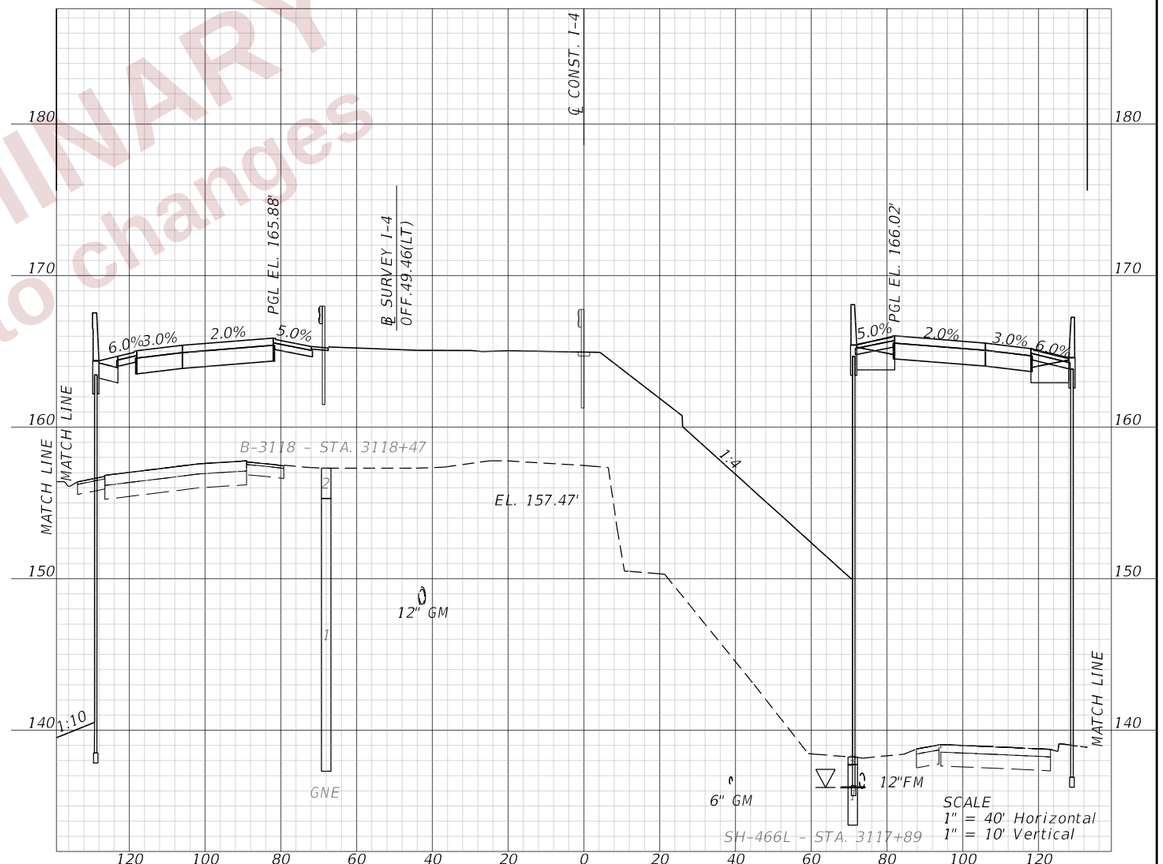

PRELIMINARY
subject to changes

REVISIONS			
DATE	DESCRIPTION	DATE	DESCRIPTION

ENGINEER OF RECORD
DEBANANDA PANIGRAHI, P.E. LICENSE NUMBER 68318 H. W. LOCHNER 4300 W. CYPRESS STREET, SUITE 500 TAMPA, FLORIDA 33607

STATE OF FLORIDA
DEPARTMENT OF TRANSPORTATION

ROAD NO.	COUNTY	FINANCIAL PROJECT ID
SR 400	POLK	430185-3-52-01

CROSS SECTIONS (22)
I-4 (SR400)

SHEET NO. 361

THE OFFICIAL RECORD OF THIS SHEET IS THE ELECTRONIC FILE DIGITALLY SIGNED AND SEALED UNDER RULE 61G15-23.004, F.A.C.

2/28/2024 11:32:44 AM JTAGLIAFERRO
c:\pw_working\lochner-pw-01\dms19508\RDYSRD02_NEW_Restored_2023-12-19_test.dgn

BEGIN BRIDGE
END EARTHWORK
STA. 3118+32.38 EB I-4 (SR 400)
STA. 3119+75.82 WB I-4 (SR 400)

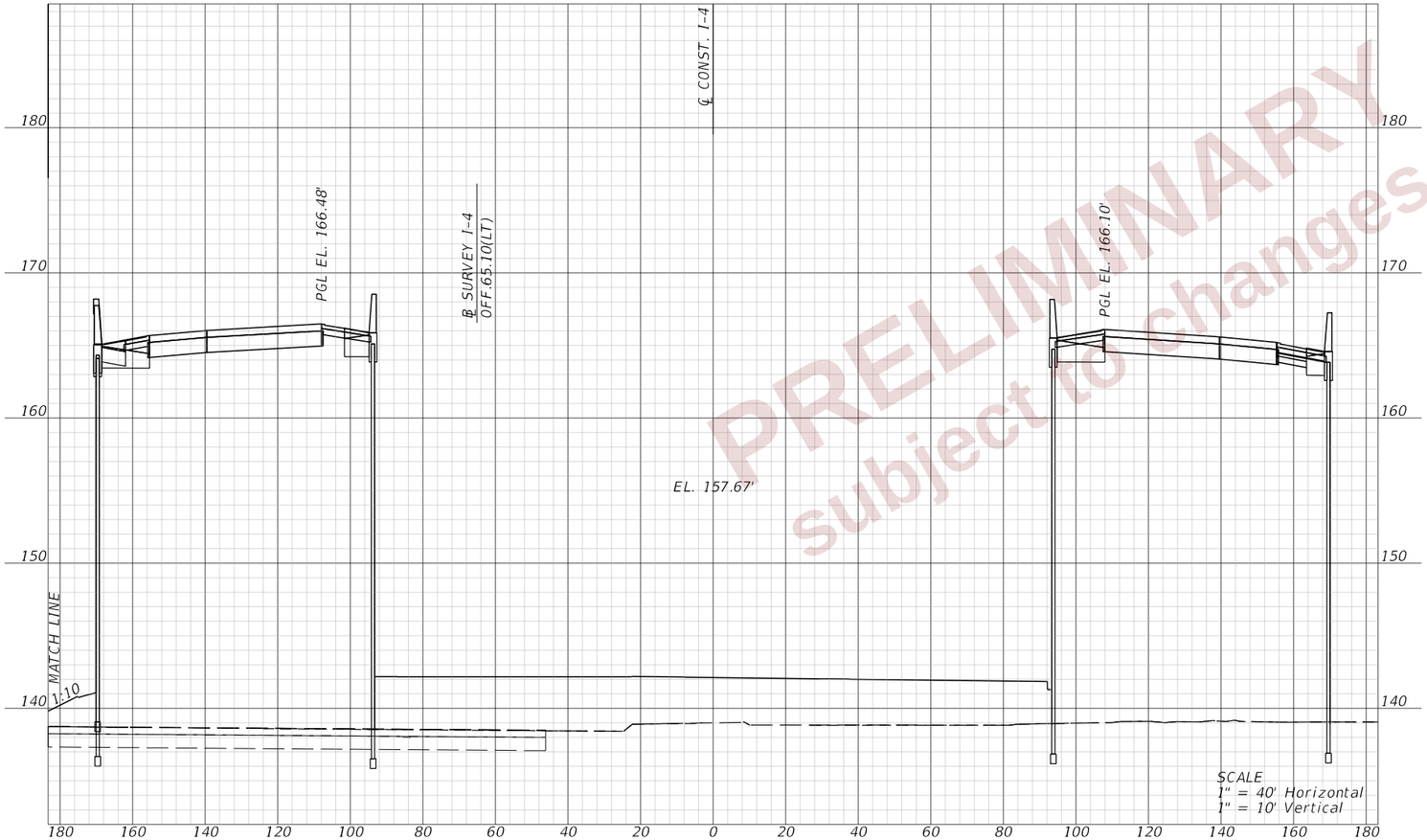

STA. 3119+09.89
SKEW ANGLE 49°25'31"

PRELIMINARY
subject to changes

REVISIONS				ENGINEER OF RECORD	STATE OF FLORIDA DEPARTMENT OF TRANSPORTATION			CROSS SECTIONS (23) I-4 (SR400)	SHEET NO.
DATE	DESCRIPTION	DATE	DESCRIPTION	DEBANANDA PANIGRAHI, P.E. LICENSE NUMBER 68318 H. W. LOCHNER 4300 W. CYPRESS STREET, SUITE 500 TAMPA, FLORIDA 33607	ROAD NO.	COUNTY	FINANCIAL PROJECT ID		362
					SR 400	POLK	430185-3-52-01		

THE OFFICIAL RECORD OF THIS SHEET IS THE ELECTRONIC FILE DIGITALLY SIGNED AND SEALED UNDER RULE 61G15-23.004, F.A.C.

2/28/2024 11:32:46 AM JTAGLIAFERRO
c:\pw_working\lochner-pw-01\dms18802\RDXSRD02.dgn

END BRIDGE
BEGIN EARTHWORK
STA. 3120+22.39 EB I-4 (SR 400)
STA. 3121+65.82 WB I-4 (SR 400)

SCALE
1" = 40' Horizontal
1" = 10' Vertical

STA. 3120+86.76
SKEW ANGLE 49°25'31"

PRELIMINARY
Subject to changes

REVISIONS				ENGINEER OF RECORD	STATE OF FLORIDA DEPARTMENT OF TRANSPORTATION			CROSS SECTIONS (24) I-4 (SR400)	SHEET NO.
DATE	DESCRIPTION	DATE	DESCRIPTION	DEBANANDA PANIGRAHI, P.E. LICENSE NUMBER 68318 H. W. LOCHNER 4300 W. CYPRESS STREET, SUITE 500 TAMPA, FLORIDA 33607	ROAD NO.	COUNTY	FINANCIAL PROJECT ID		363
					SR 400	POLK	430185-3-52-01		

THE OFFICIAL RECORD OF THIS SHEET IS THE ELECTRONIC FILE DIGITALLY SIGNED AND SEALED UNDER RULE 61G15-23.004, F.A.C.

2/28/2024 11:32:49 AM JTAGLIAFERRO
c:\pw_working\lochner-pw-01\dms18802\RDXSRD02.dgn

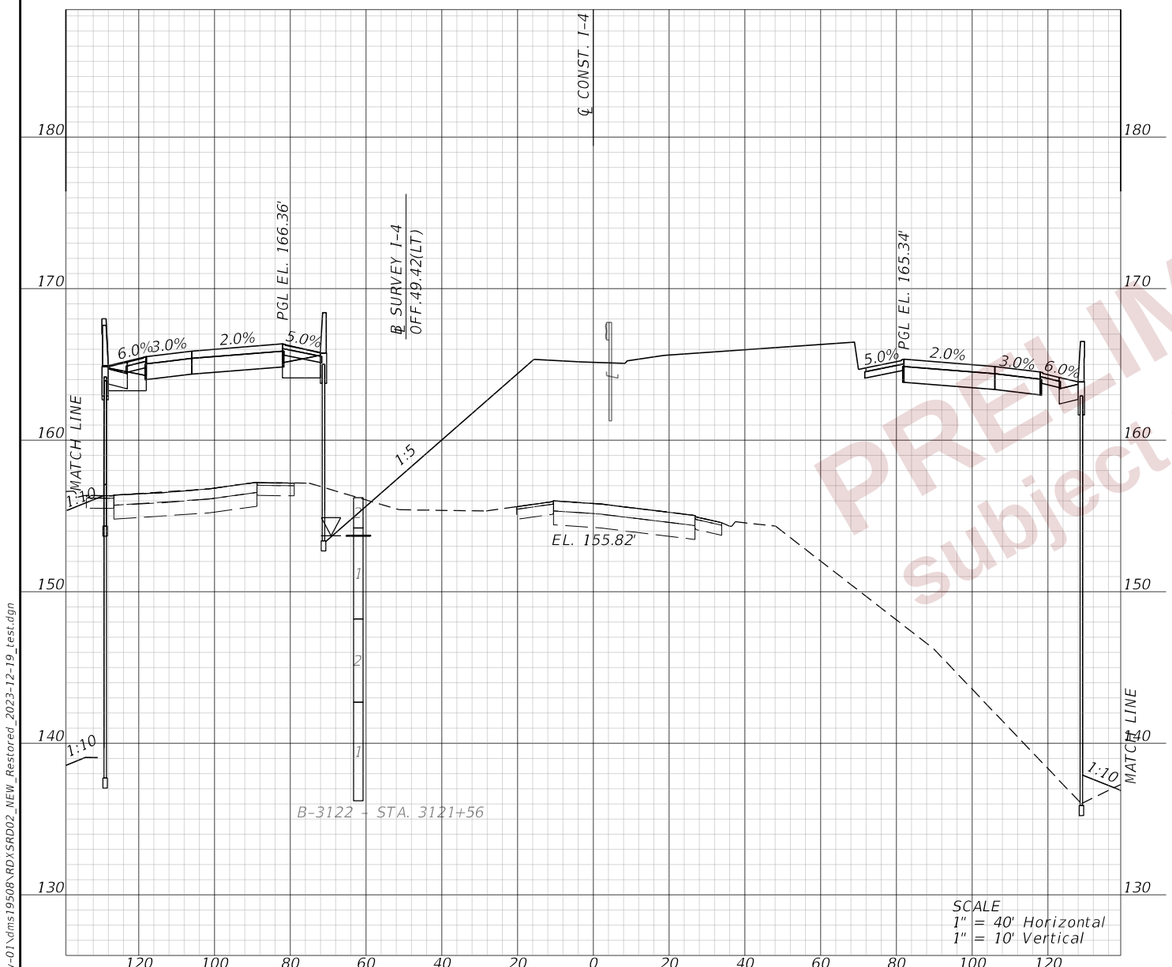

STA. 3122+00.00

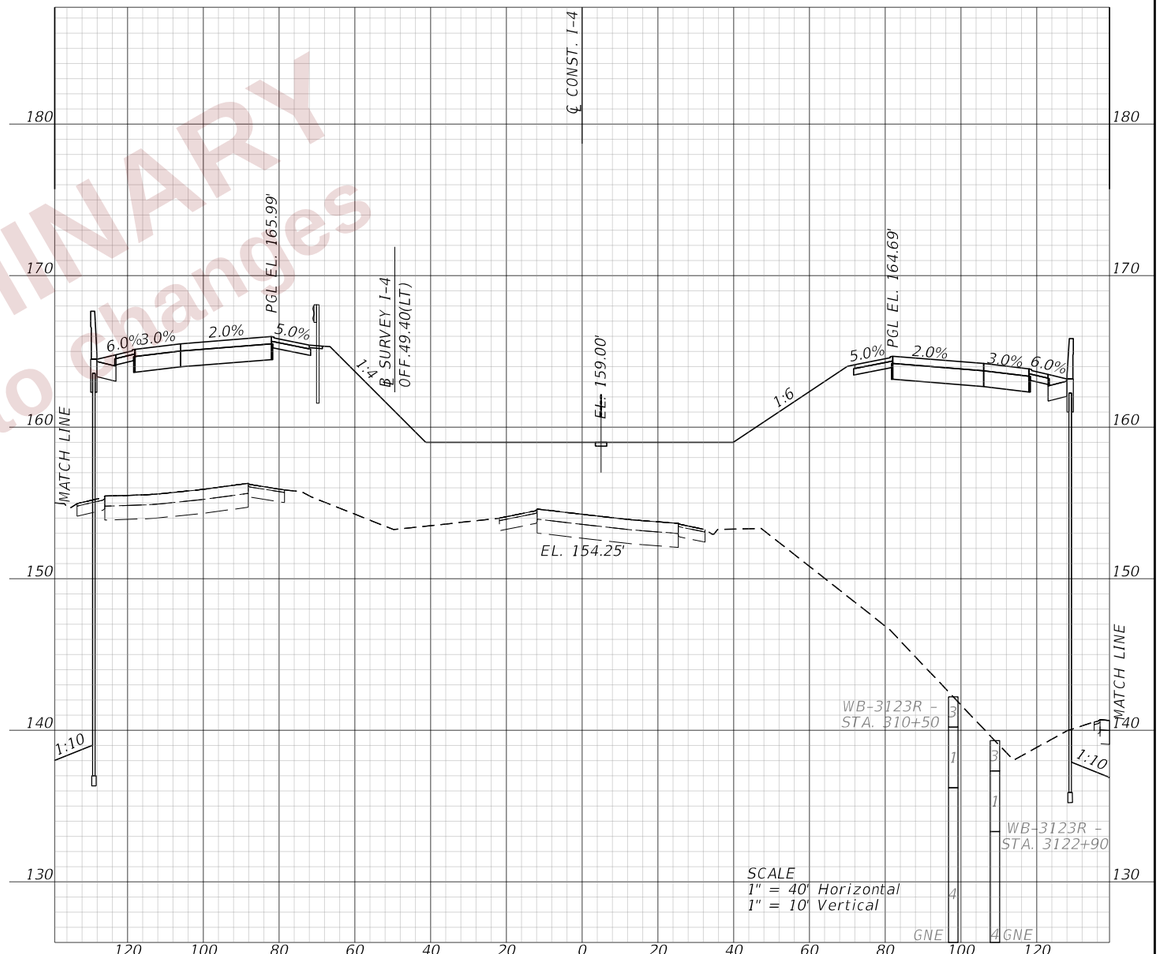

STA. 3123+00.00

PRELIMINARY
subject to changes

REVISIONS			
DATE	DESCRIPTION	DATE	DESCRIPTION

ENGINEER OF RECORD
DEBANANDA PANIGRAHI, P.E.
LICENSE NUMBER 68318
H. W. LOCHNER
4300 W. CYPRESS STREET, SUITE 500
TAMPA, FLORIDA 33607

STATE OF FLORIDA
DEPARTMENT OF TRANSPORTATION

ROAD NO.	COUNTY	FINANCIAL PROJECT ID
SR 400	POLK	430185-3-52-01

CROSS SECTIONS (25)
I-4 (SR400)

SHEET NO. 364

THE OFFICIAL RECORD OF THIS SHEET IS THE ELECTRONIC FILE DIGITALLY SIGNED AND SEALED UNDER RULE 61G15-23.004, F.A.C.

2/28/2024 11:32:52 AM JTAGLIAFERRO
c:\pw_working\lochner-pw-01\dms19508\RDXSRD02_NEW_Restored_2023-12-19_test.dgn

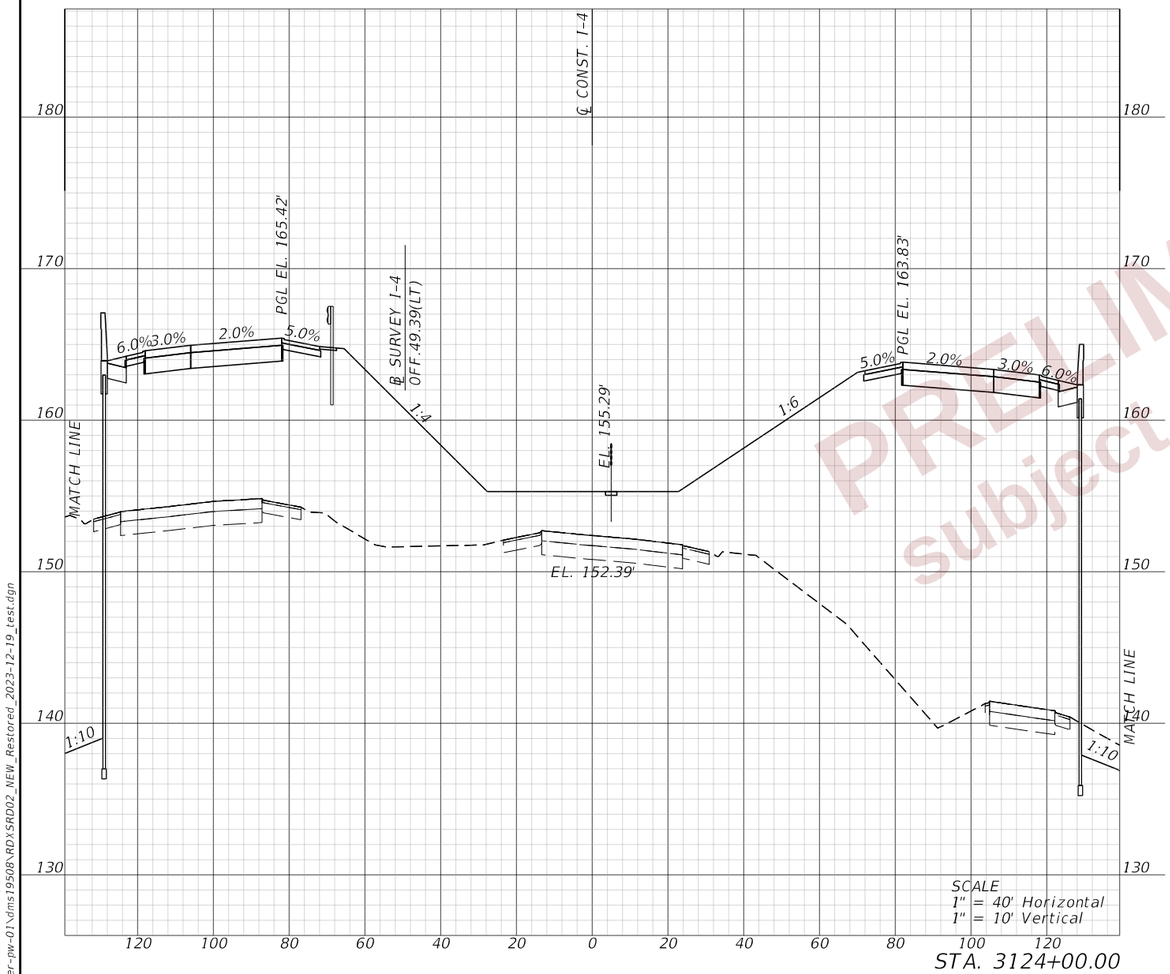

STA. 3124+00.00

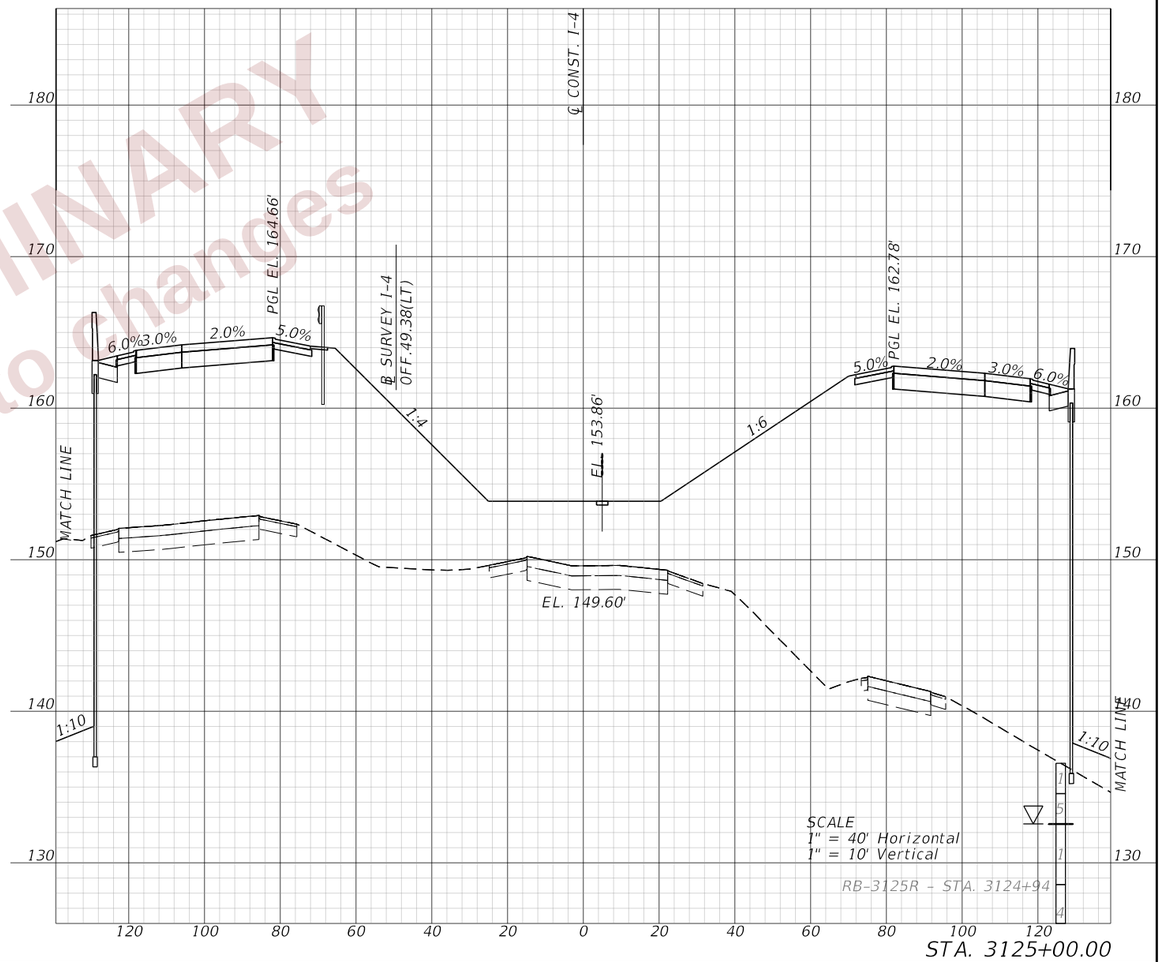

STA. 3125+00.00

PRELIMINARY
subject to changes

REVISIONS				ENGINEER OF RECORD	STATE OF FLORIDA DEPARTMENT OF TRANSPORTATION			CROSS SECTIONS (26) I-4 (SR400)	SHEET NO.
DATE	DESCRIPTION	DATE	DESCRIPTION	DEBANANDA PANIGRAHI, P.E. LICENSE NUMBER 68318 H. W. LOCHNER 4300 W. CYPRESS STREET, SUITE 500 TAMPA, FLORIDA 33607	ROAD NO.	COUNTY	FINANCIAL PROJECT ID		365
					SR 400	POLK	430185-3-52-01		

THE OFFICIAL RECORD OF THIS SHEET IS THE ELECTRONIC FILE DIGITALLY SIGNED AND SEALED UNDER RULE 61G15-23.004, F.A.C.

2/28/2024 11:32:55 AM JTAGLIAFERRO
c:\pw_working\lochner-pw-01\dms1950\RDXSRD02_NEW_Restored_2023-12-19_test.dgn

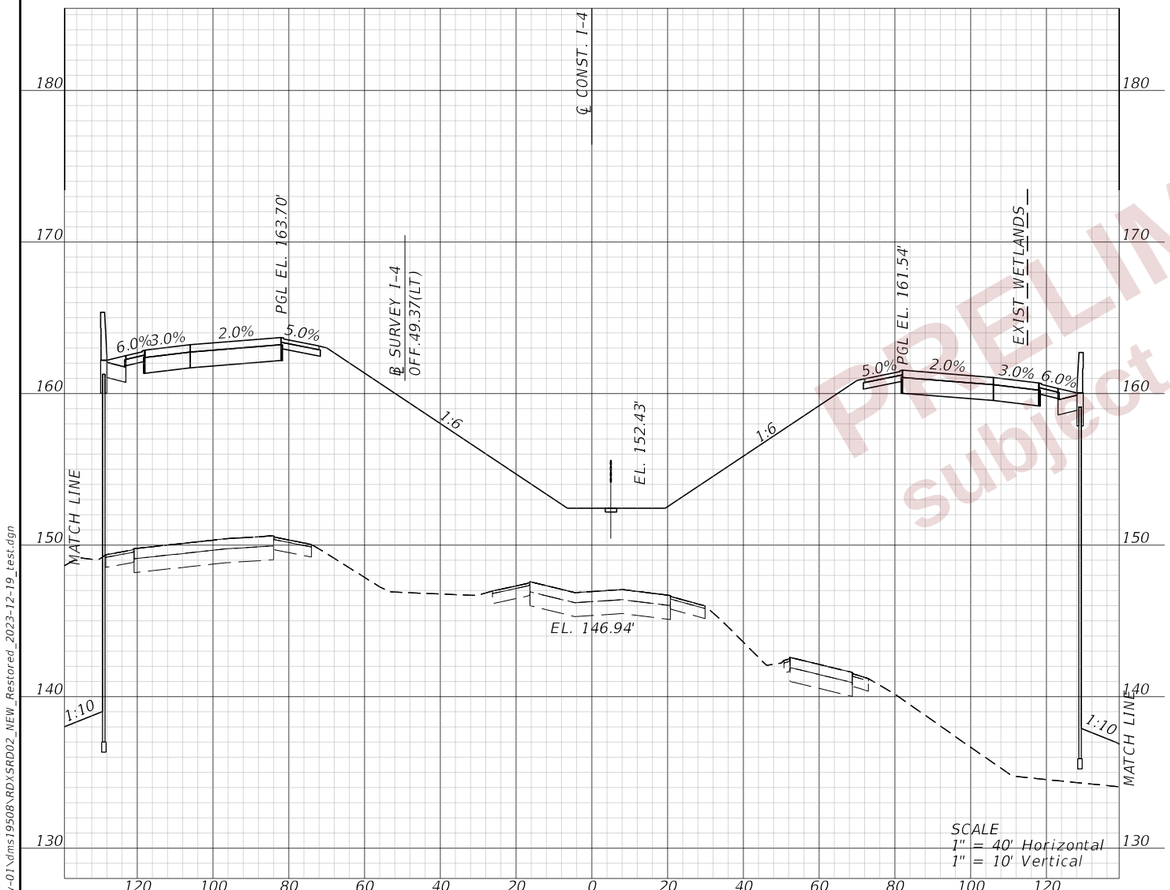

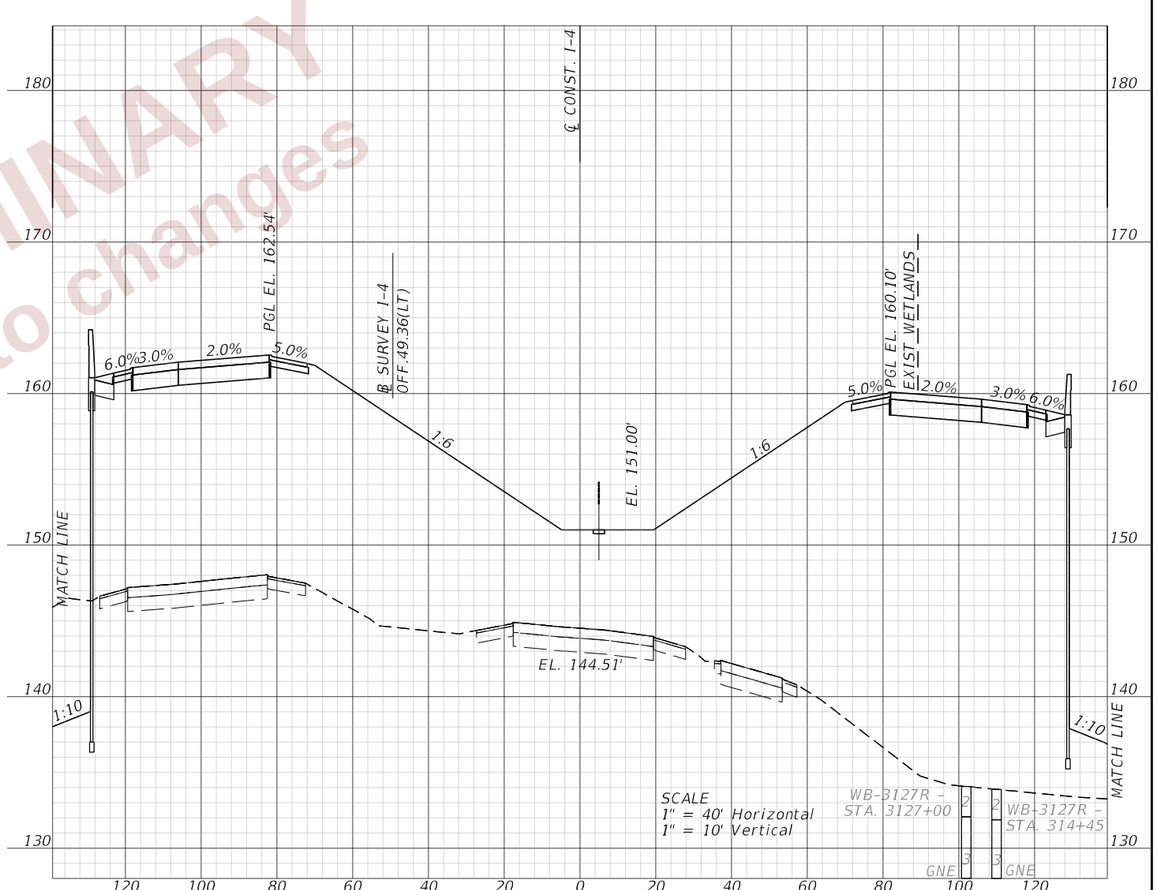

PRELIMINARY
Subject to changes

REVISIONS			
DATE	DESCRIPTION	DATE	DESCRIPTION

ENGINEER OF RECORD
DEBANANDA PANIGRAHI, P.E.
LICENSE NUMBER 68318
H. W. LOCHNER
4300 W. CYPRESS STREET, SUITE 500
TAMPA, FLORIDA 33607

STATE OF FLORIDA
DEPARTMENT OF TRANSPORTATION

ROAD NO.	COUNTY	FINANCIAL PROJECT ID
SR 400	POLK	430185-3-52-01

CROSS SECTIONS (27)
I-4 (SR400)

SHEET NO. 366

THE OFFICIAL RECORD OF THIS SHEET IS THE ELECTRONIC FILE DIGITALLY SIGNED AND SEALED UNDER RULE 61G15-23.004, F.A.C.

2/28/2024 11:32:58 AM JTAGLIAFERRO
c:\pw_working\lochner-pw-01\dms19508\RDYSRD02_NEW_Restored_2023-12-19_test.dgn

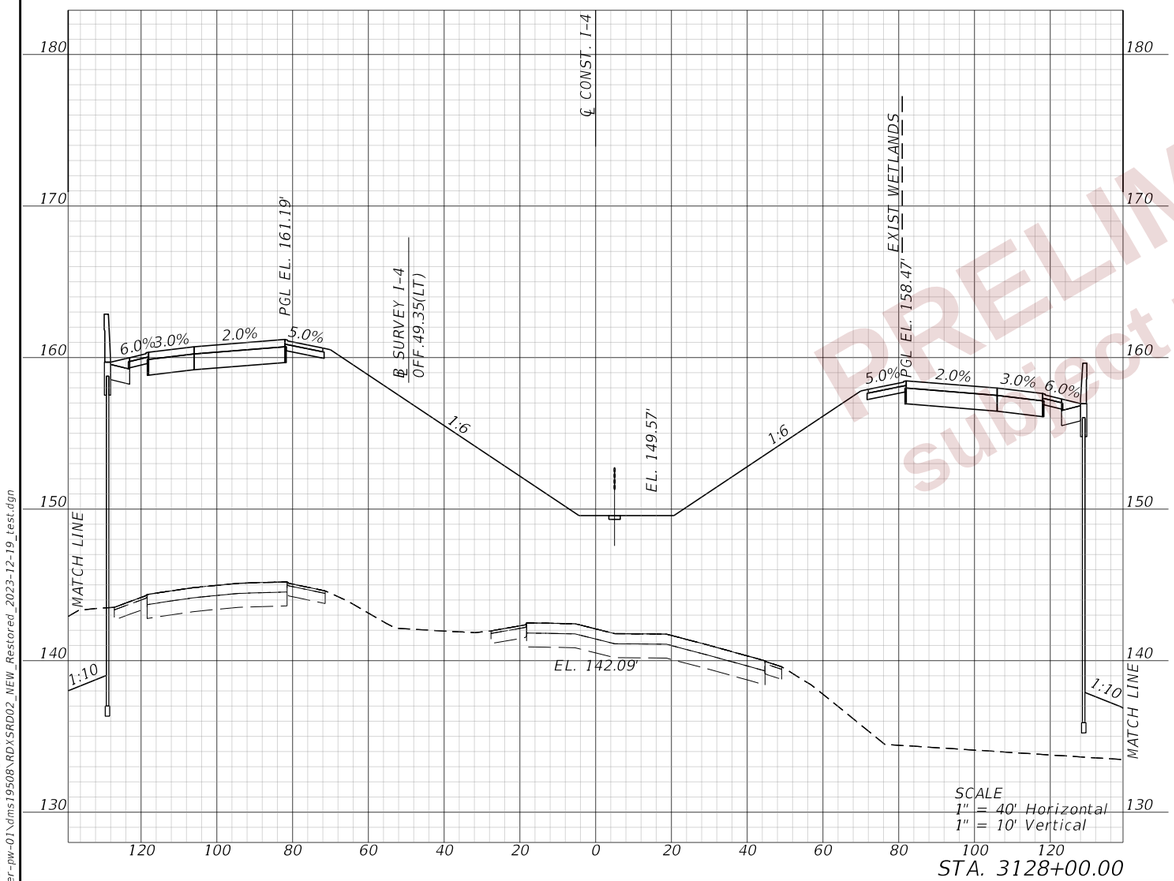

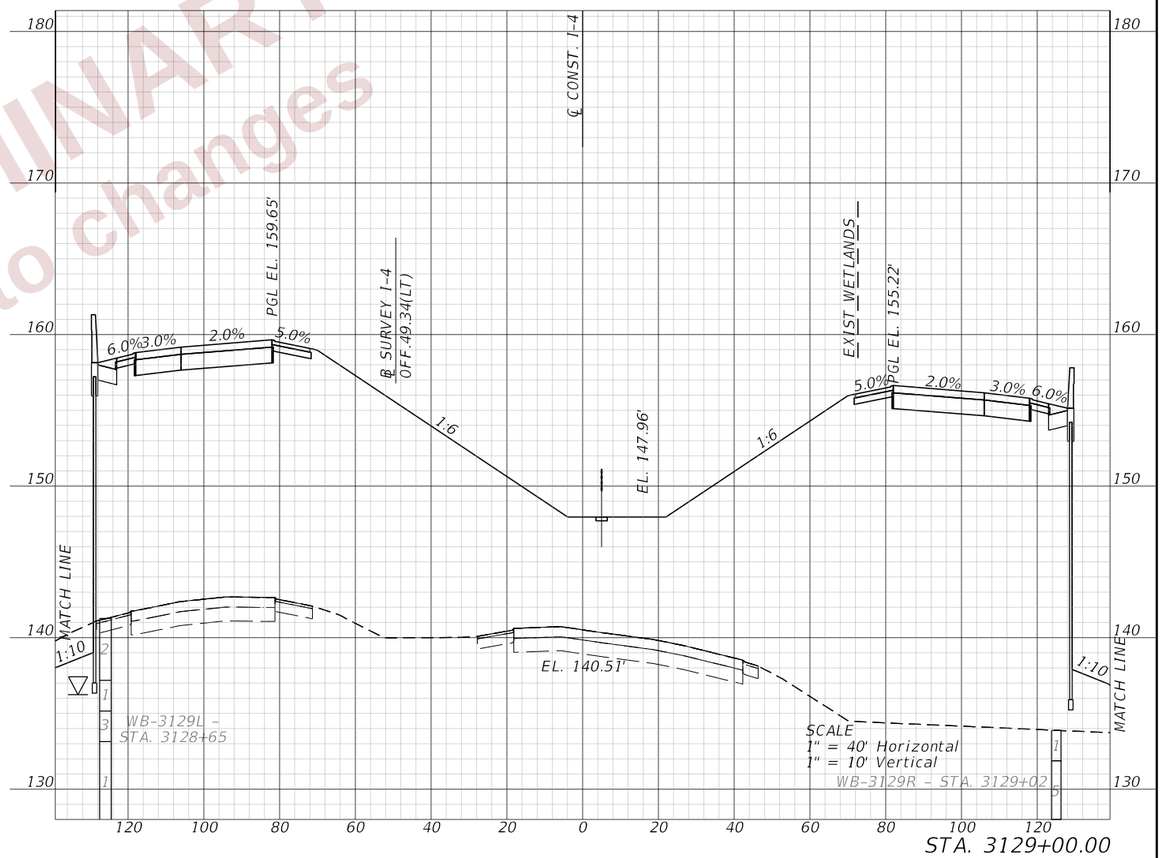

PRELIMINARY
subject to changes

REVISIONS				ENGINEER OF RECORD	STATE OF FLORIDA DEPARTMENT OF TRANSPORTATION			CROSS SECTIONS (28) I-4 (SR400)	SHEET NO.
DATE	DESCRIPTION	DATE	DESCRIPTION	DEBANANDA PANIGRAHI, P.E. LICENSE NUMBER 68318 H. W. LOCHNER 4300 W. CYPRESS STREET, SUITE 500 TAMPA, FLORIDA 33607	ROAD NO.	COUNTY	FINANCIAL PROJECT ID		367
					SR 400	POLK	430185-3-52-01		

THE OFFICIAL RECORD OF THIS SHEET IS THE ELECTRONIC FILE DIGITALLY SIGNED AND SEALED UNDER RULE 61G15-23.004, F.A.C.

2/28/2024 11:33:01 AM JTAGLIAFERRO
c:\pw_working\lochner-pw-01\dms19508\RDXSRD02_NEW_Restored_2023-12-19_test.dgn

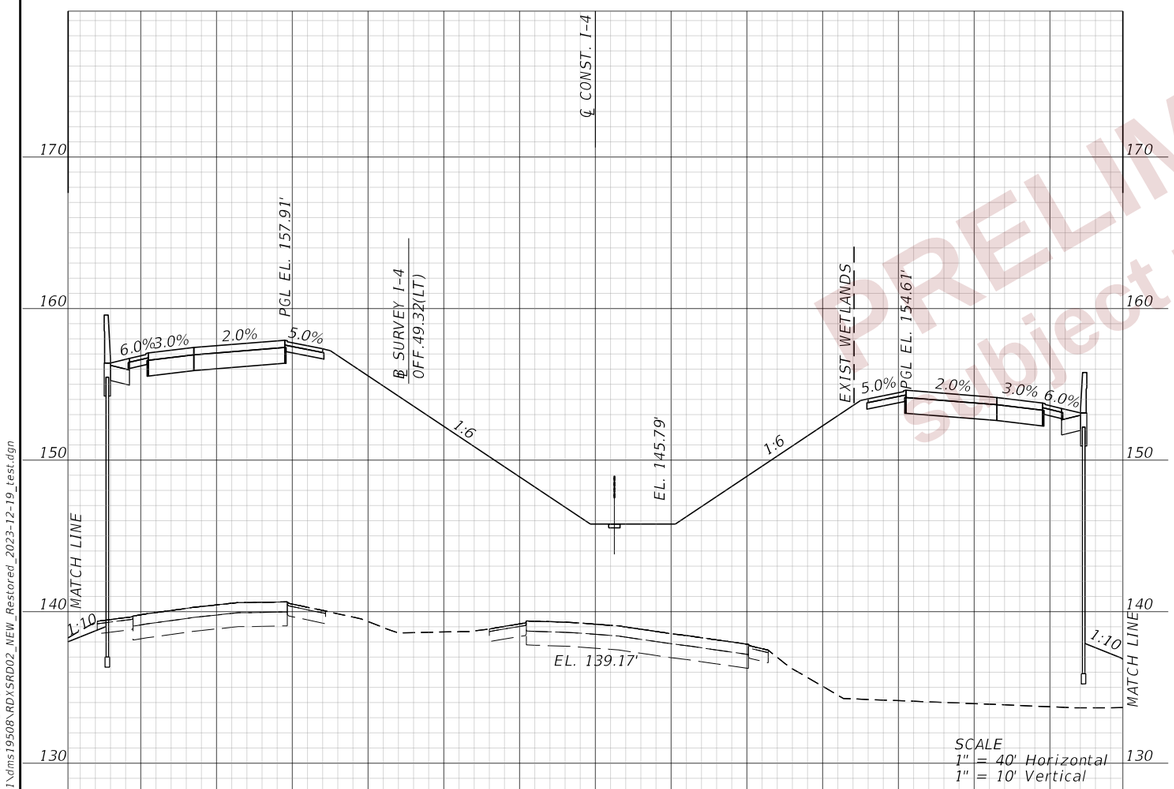

STA. 3130+00.00

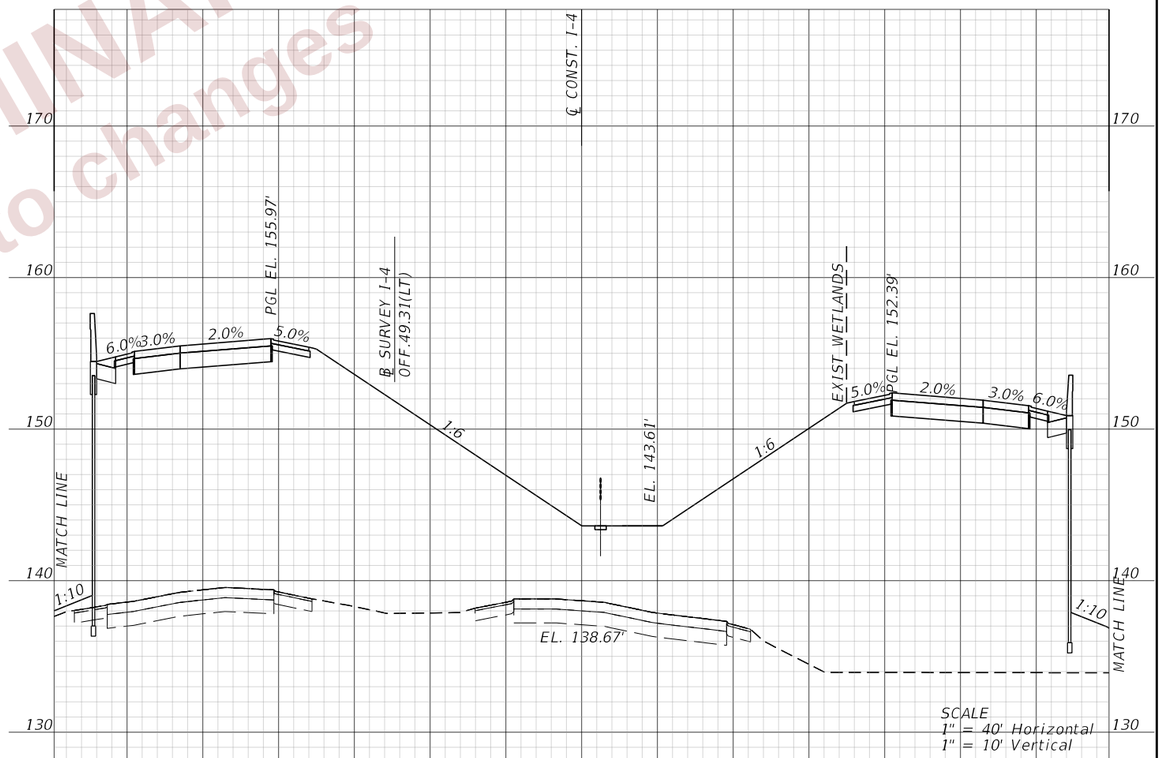

STA. 3131+00.00

PRELIMINARY
Subject to changes

REVISIONS				ENGINEER OF RECORD	STATE OF FLORIDA DEPARTMENT OF TRANSPORTATION			CROSS SECTIONS (29) I-4 (SR400)	SHEET NO.
DATE	DESCRIPTION	DATE	DESCRIPTION	DEBANANDA PANIGRAHI, P.E. LICENSE NUMBER 68318 H. W. LOCHNER 4300 W. CYPRESS STREET, SUITE 500 TAMPA, FLORIDA 33607	ROAD NO.	COUNTY	FINANCIAL PROJECT ID		368
					SR 400	POLK	430185-3-52-01		

THE OFFICIAL RECORD OF THIS SHEET IS THE ELECTRONIC FILE DIGITALLY SIGNED AND SEALED UNDER RULE 61G15-23.004, F.A.C.

2/28/2024 11:33:04 AM JTAGLIAFERRO
c:\pw_working\lochner-pw-01\dms19508\RDXSRD02_NEW_Restored_2023-12-19_test.dgn

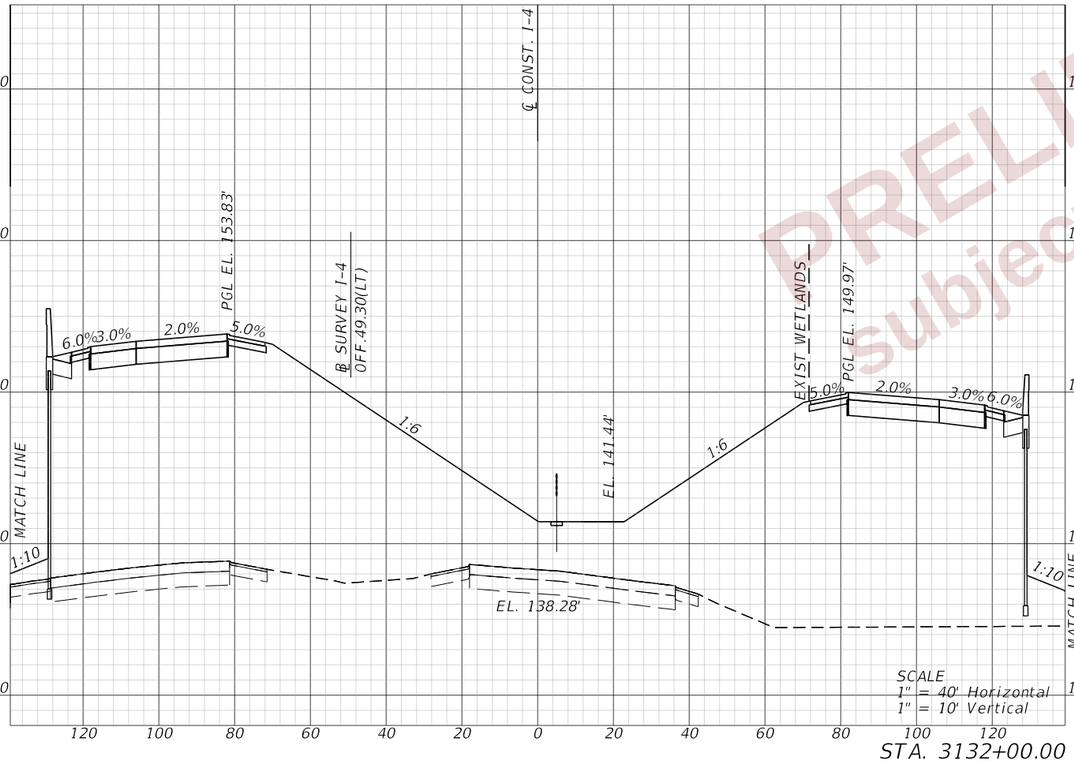

STA. 3132+00.00

STA. 3133+00.00

PRELIMINARY
Subject to changes

REVISIONS			
DATE	DESCRIPTION	DATE	DESCRIPTION

ENGINEER OF RECORD
DEBANANDA PANIGRAHI, P.E.
LICENSE NUMBER 68318
H. W. LOCHNER
4300 W. CYPRESS STREET, SUITE 500
TAMPA, FLORIDA 33607

STATE OF FLORIDA
DEPARTMENT OF TRANSPORTATION

ROAD NO.	COUNTY	FINANCIAL PROJECT ID
SR 400	POLK	430185-3-52-01

CROSS SECTIONS (30)
I-4 (SR400)

SHEET NO. 369

THE OFFICIAL RECORD OF THIS SHEET IS THE ELECTRONIC FILE DIGITALLY SIGNED AND SEALED UNDER RULE 61G15-23.004, F.A.C.

2/28/2024 11:33:07 AM JTAGLIAFERRO
c:\pw_working\lochner-pw-01\dms19508\RDSSR002_NEW_Restored_2023-12-19_test.dgn

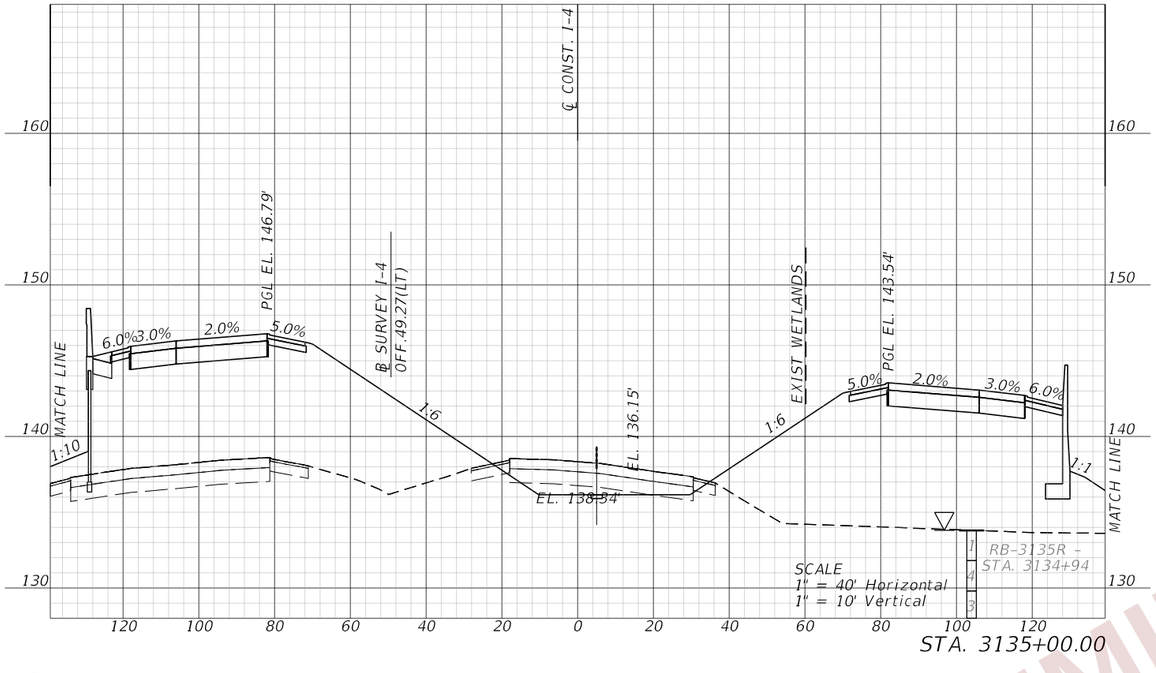

STA. 3135+00.00

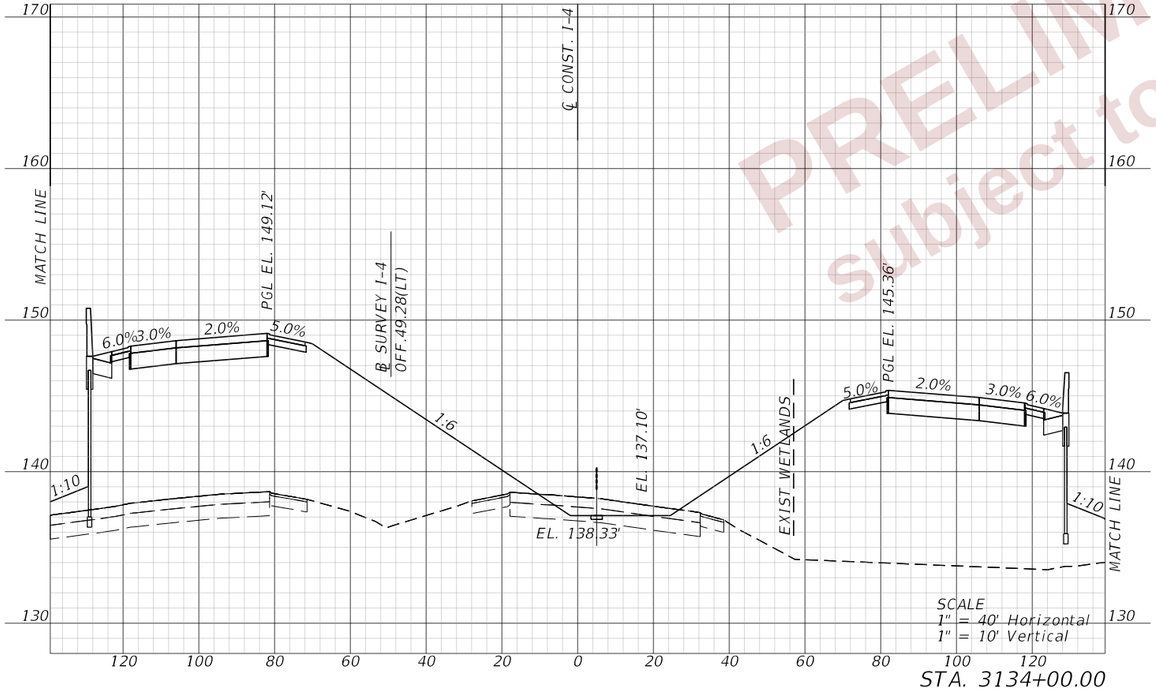

STA. 3134+00.00

PRELIMINARY
Subject to changes

REVISIONS				ENGINEER OF RECORD	STATE OF FLORIDA DEPARTMENT OF TRANSPORTATION			CROSS SECTIONS (31) I-4 (SR400)	SHEET NO.
DATE	DESCRIPTION	DATE	DESCRIPTION	DEBANANDA PANIGRAHI, P.E. LICENSE NUMBER 68318 H. W. LOCHNER 4300 W. CYPRESS STREET, SUITE 500 TAMPA, FLORIDA 33607	ROAD NO.	COUNTY	FINANCIAL PROJECT ID		370
					SR 400	POLK	430185-3-52-01		

THE OFFICIAL RECORD OF THIS SHEET IS THE ELECTRONIC FILE DIGITALLY SIGNED AND SEALED UNDER RULE 61G15-23.004, F.A.C.

2/28/2024 11:33:10 AM JTAGLIAFERRO
c:\pw_working\lochner-pw-01.dms19508\RDYSRD02_NEW_Restored_2023-12-19_test.dgn

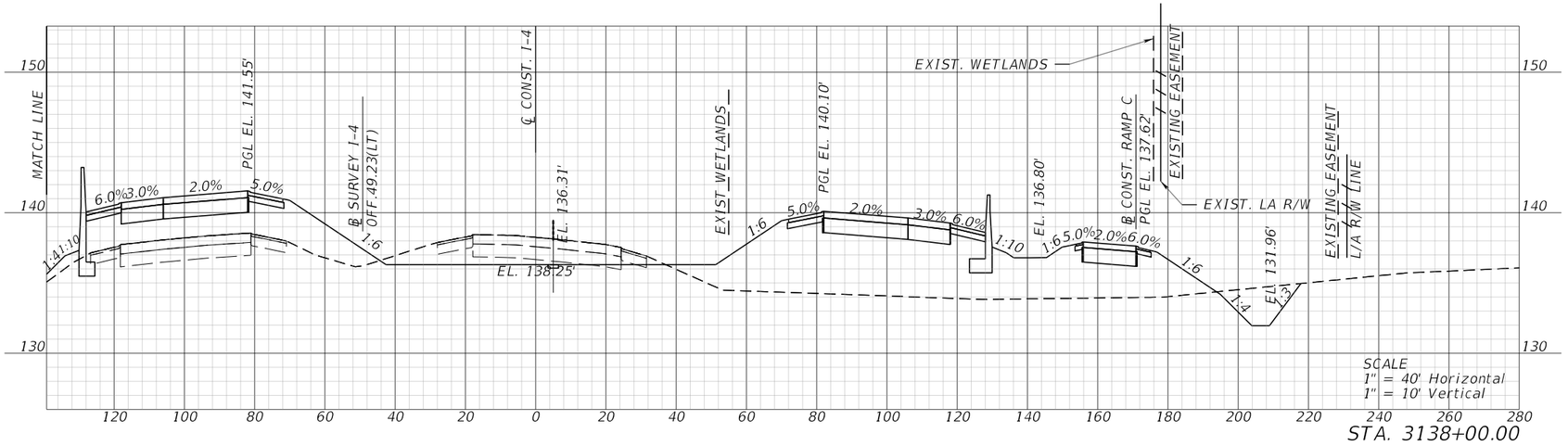

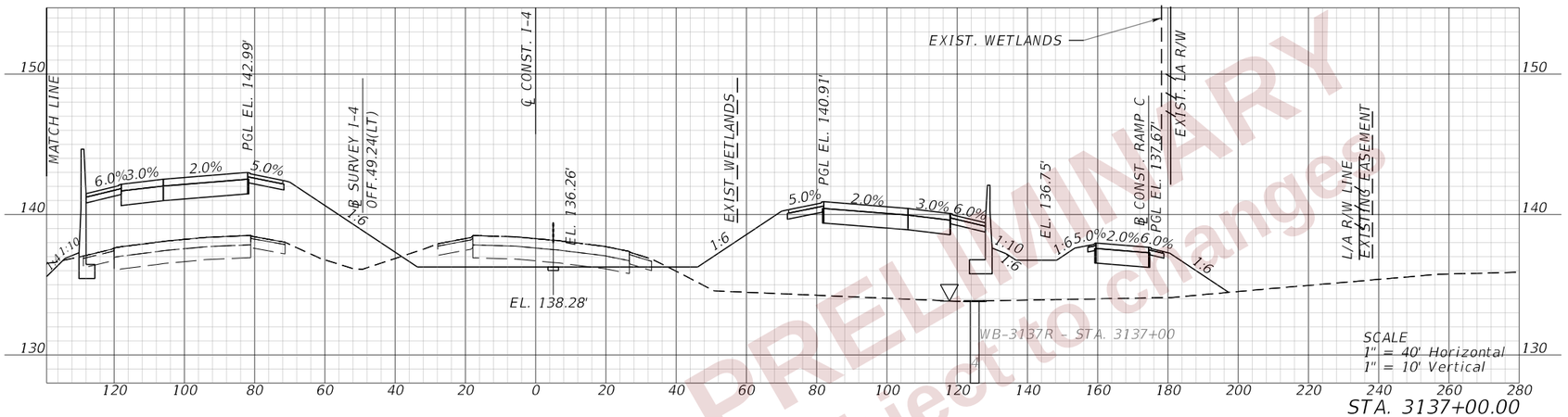

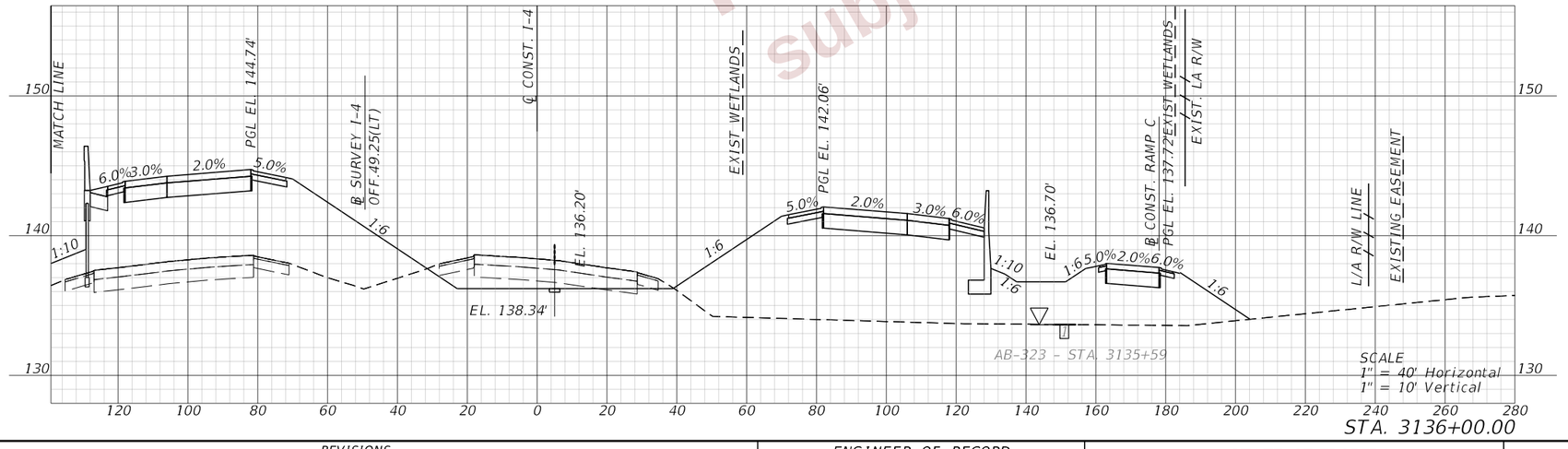

PRELIMINARY
subject to changes

REVISIONS				ENGINEER OF RECORD	STATE OF FLORIDA DEPARTMENT OF TRANSPORTATION				SHEET NO.
DATE	DESCRIPTION	DATE	DESCRIPTION	DEBANANDA PANIGRAHI, P.E. LICENSE NUMBER 68318 H. W. LOCHNER 4300 W. CYPRESS STREET, SUITE 500 TAMPA, FLORIDA 33607	ROAD NO.	COUNTY	FINANCIAL PROJECT ID	CROSS SECTIONS (32) I-4 (SR400)	371
					SR 400	POLK	430185-3-52-01		

THE OFFICIAL RECORD OF THIS SHEET IS THE ELECTRONIC FILE DIGITALLY SIGNED AND SEALED UNDER RULE 61G15-23.004, F.A.C.

2/28/2024 11:33:14 AM JTAGLIAFERRO
c:\pw_working\lochner-pw-01\dms19508\RDXSRD02_NEW_Restored_2023-12-19_test.dgn

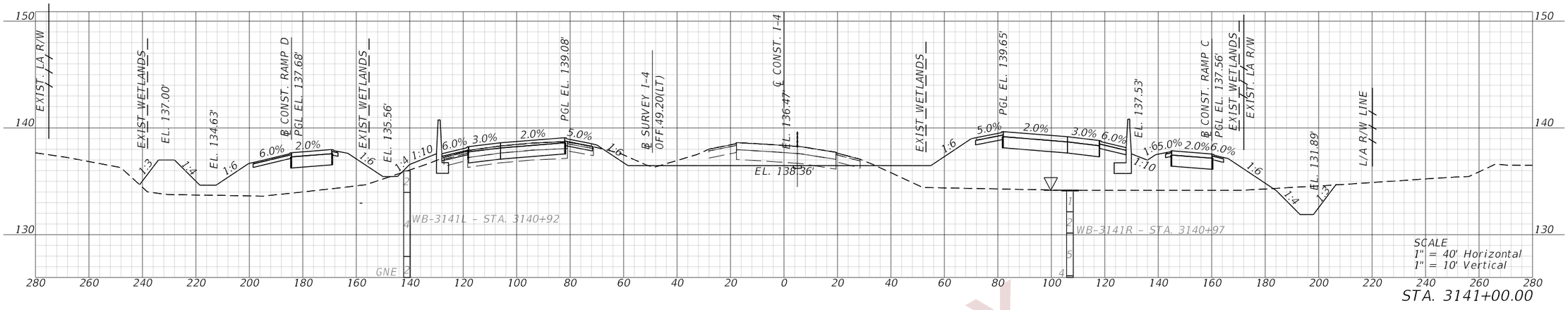

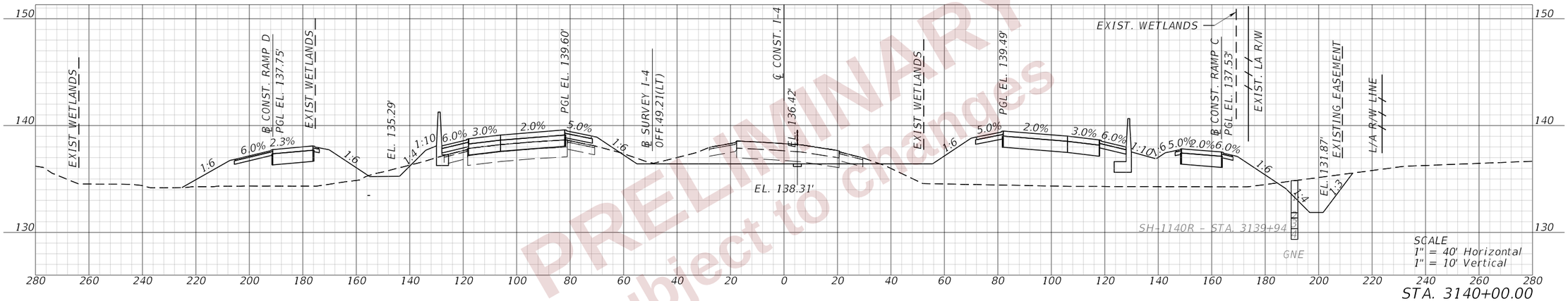

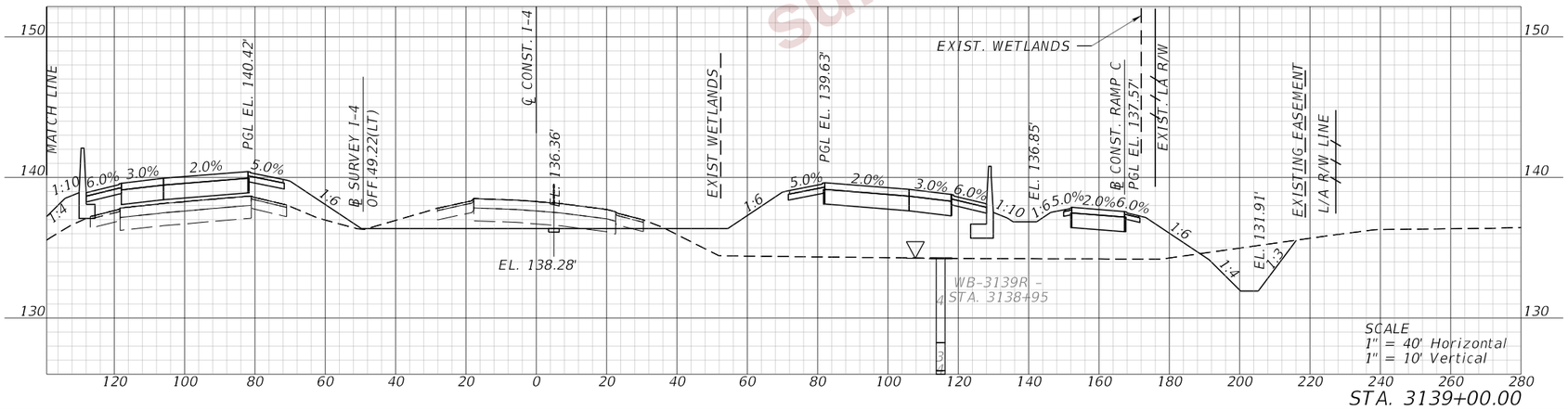

PRELIMINARY
subject to changes

REVISIONS				ENGINEER OF RECORD	STATE OF FLORIDA DEPARTMENT OF TRANSPORTATION			CROSS SECTIONS (33) I-4 (SR400)	SHEET NO.
DATE	DESCRIPTION	DATE	DESCRIPTION	DEBANANDA PANIGRAHI, P.E. LICENSE NUMBER 68318 H. W. LOCHNER 4300 W. CYPRESS STREET, SUITE 500 TAMPA, FLORIDA 33607	ROAD NO.	COUNTY	FINANCIAL PROJECT ID		372
					SR 400	POLK	430185-3-52-01		

THE OFFICIAL RECORD OF THIS SHEET IS THE ELECTRONIC FILE DIGITALLY SIGNED AND SEALED UNDER RULE 61G15-23.004, F.A.C.

2/28/2024 11:33:19 AM JTAGLIAFERRO
C:\pw_working\lochner-pw-01\dms19508\RDYSRD02_NEW_Restored_2023-12-19_test.dgn

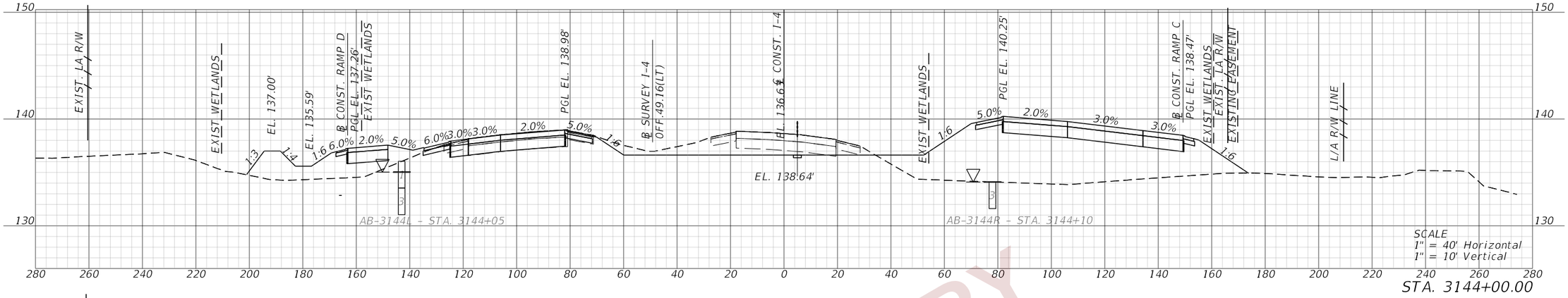

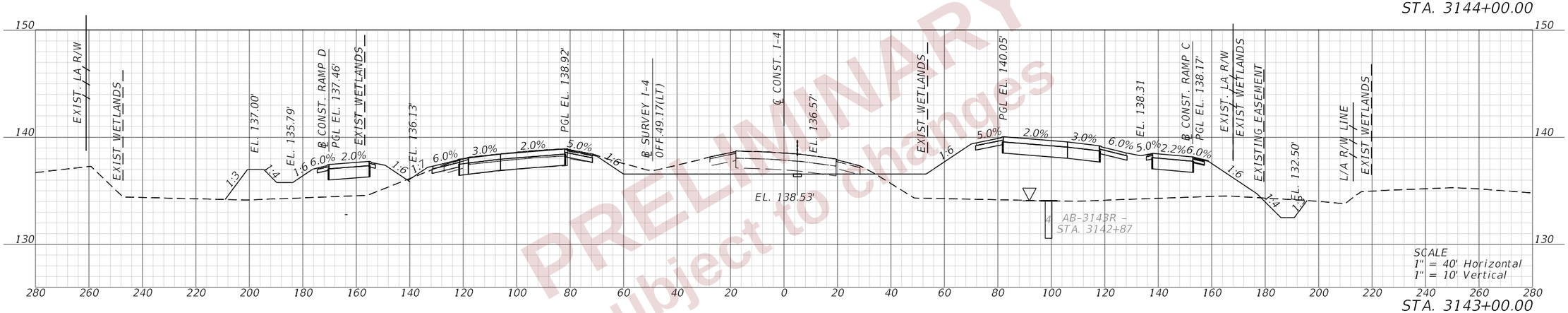

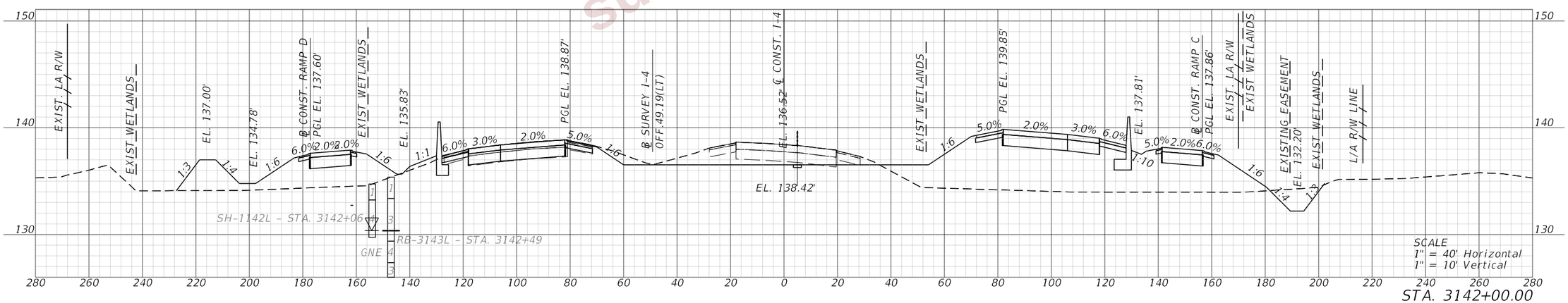

PRELIMINARY
subject to change

REVISIONS				ENGINEER OF RECORD	STATE OF FLORIDA DEPARTMENT OF TRANSPORTATION			CROSS SECTIONS (34) I-4 (SR400)	SHEET NO.
DATE	DESCRIPTION	DATE	DESCRIPTION	DEBANANDA PANIGRAHI, P.E. LICENSE NUMBER 68318 H. W. LOCHNER 4300 W. CYPRESS STREET, SUITE 500 TAMPA, FLORIDA 33607	ROAD NO.	COUNTY	FINANCIAL PROJECT ID		373
					SR 400	POLK	430185-3-52-01		

THE OFFICIAL RECORD OF THIS SHEET IS THE ELECTRONIC FILE DIGITALLY SIGNED AND SEALED UNDER RULE 61G15-23.004, F.A.C.

2/28/2024 11:33:23 AM JTAGLIAFERRO
C:\pw_working\lochner-pw-01\dms19508\RDJSR002_NEW_Restored_2023-12-19_test.dgn

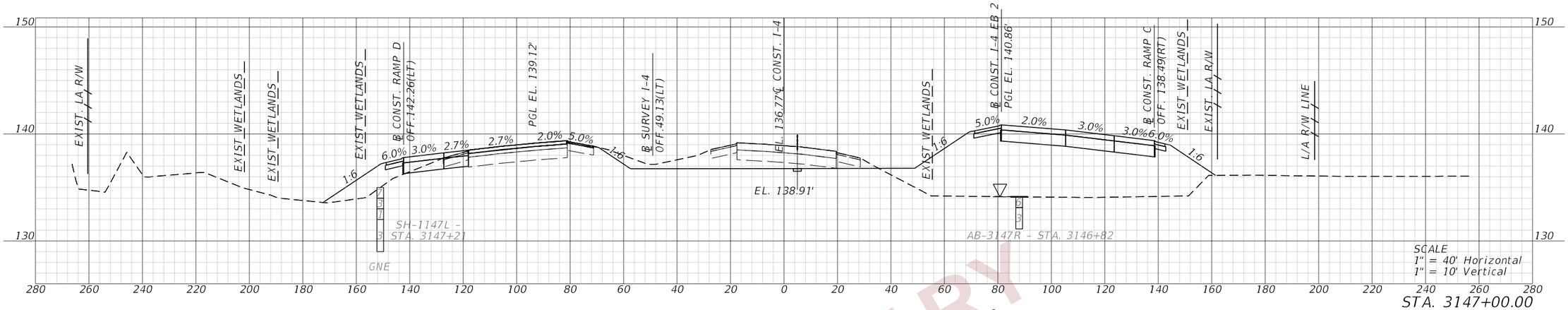

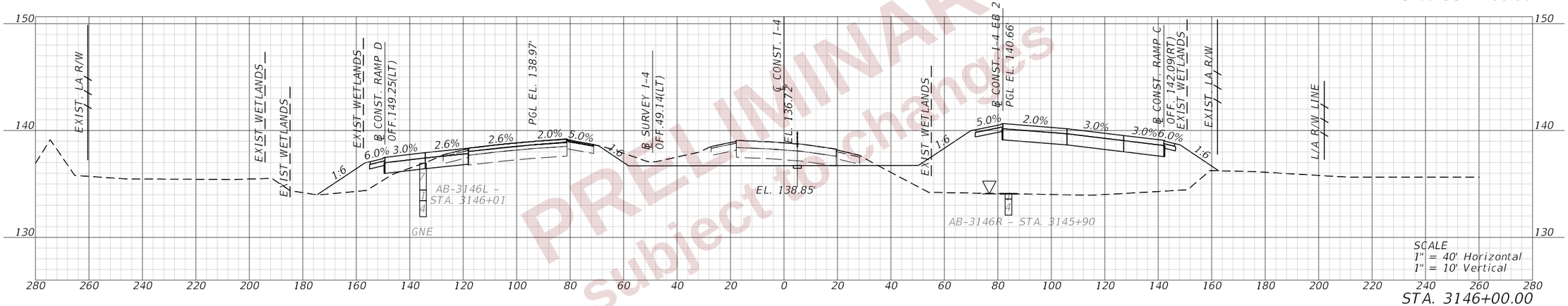

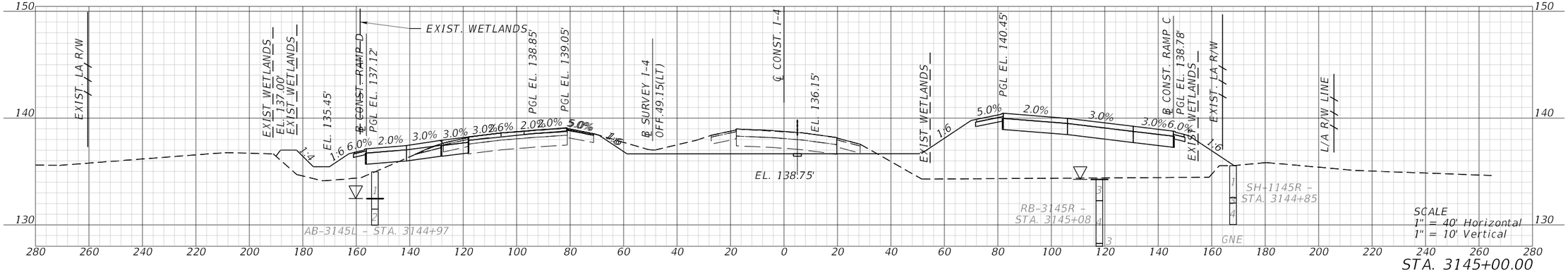

PRELIMINARY
Subject to change

REVISIONS			
DATE	DESCRIPTION	DATE	DESCRIPTION

ENGINEER OF RECORD
DEBANANDA PANIGRAHI, P.E.
LICENSE NUMBER 68318
H. W. LOCHNER
4300 W. CYPRESS STREET, SUITE 500
TAMPA, FLORIDA 33607

STATE OF FLORIDA
DEPARTMENT OF TRANSPORTATION

ROAD NO.	COUNTY	FINANCIAL PROJECT ID
SR 400	POLK	430185-3-52-01

CROSS SECTIONS (35)
I-4 (SR400)

SHEET NO. 374

THE OFFICIAL RECORD OF THIS SHEET IS THE ELECTRONIC FILE DIGITALLY SIGNED AND SEALED UNDER RULE 61G15-23.004, F.A.C.

2/28/2024 11:33:26 AM JTAGLIAFERRO
c:\pw_working\lochner-pw-01\dms19508\RDVSRD02_NEW_Restored_2023-12-19_test.dgn

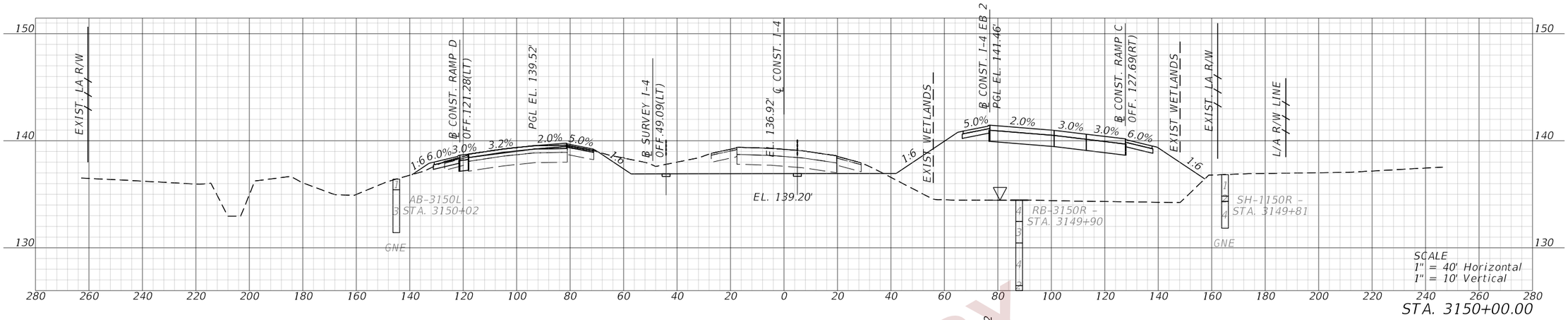

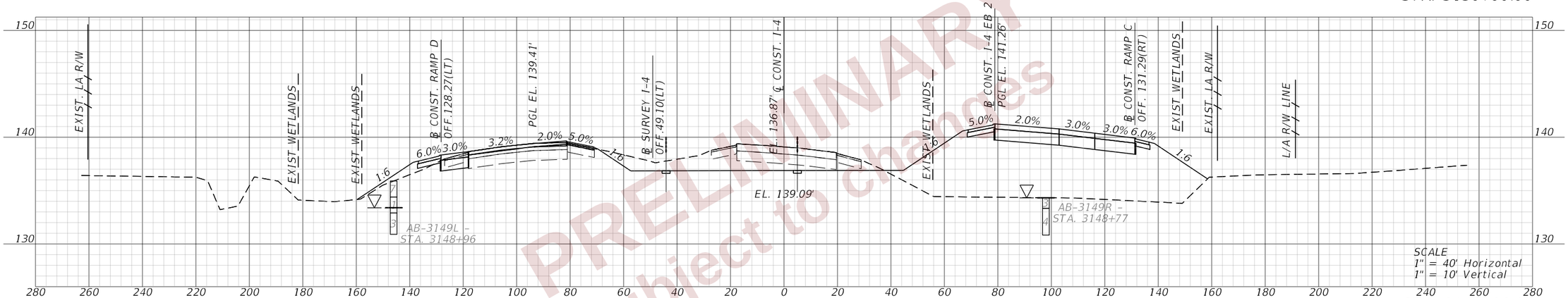

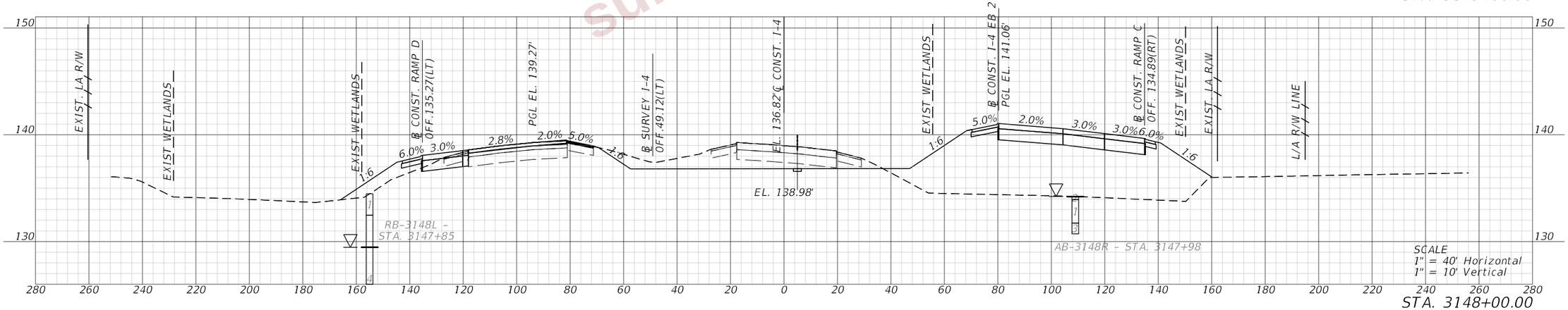

PRELIMINARY
subject to changes

REVISIONS				ENGINEER OF RECORD	STATE OF FLORIDA DEPARTMENT OF TRANSPORTATION			CROSS SECTIONS (36) I-4 (SR400)	SHEET NO.
DATE	DESCRIPTION	DATE	DESCRIPTION	DEBANANDA PANIGRAHI, P.E. LICENSE NUMBER 68318 H. W. LOCHNER 4300 W. CYPRESS STREET, SUITE 500 TAMPA, FLORIDA 33607	ROAD NO.	COUNTY	FINANCIAL PROJECT ID		375
					SR 400	POLK	430185-3-52-01		

THE OFFICIAL RECORD OF THIS SHEET IS THE ELECTRONIC FILE DIGITALLY SIGNED AND SEALED UNDER RULE 61G15-23.004, F.A.C.

2/28/2024 11:33:30 AM JTAGLIAFERRO
c:\pw_working\lochner-pw-01\dms19508\RDXSRD02_NEW_Restored_2023-12-19_test.dgn

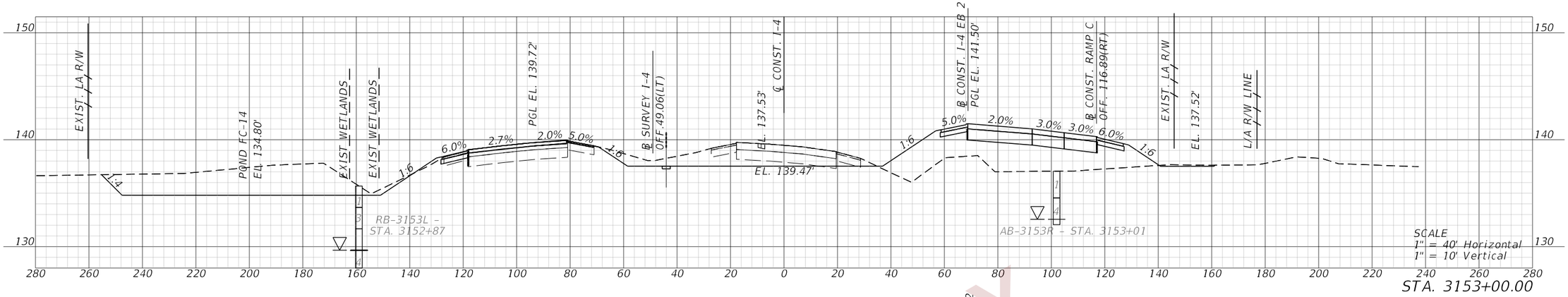

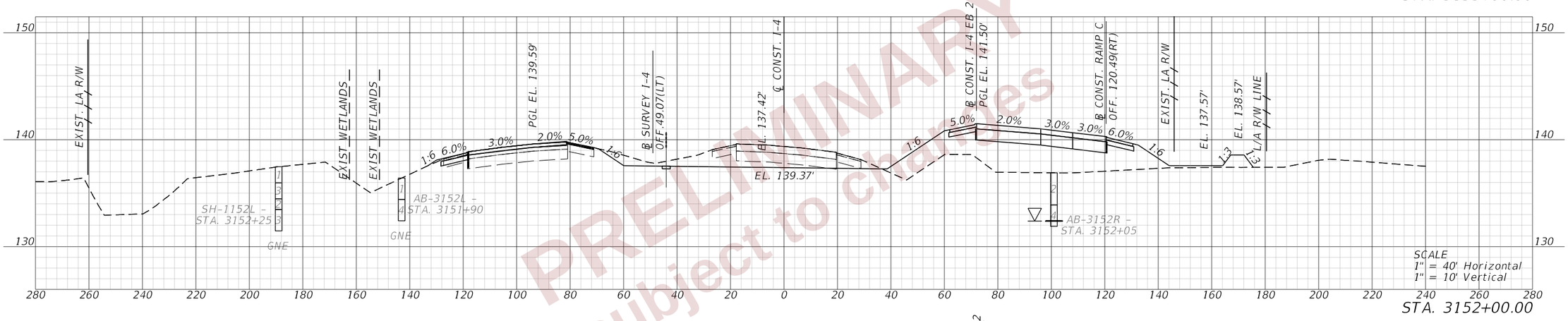

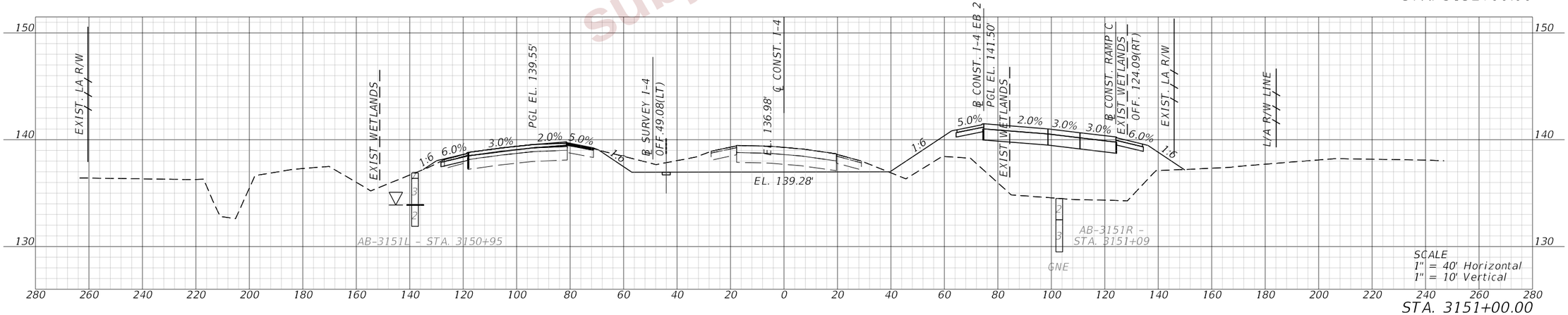

PRELIMINARY
subject to changes

REVISIONS				ENGINEER OF RECORD	STATE OF FLORIDA DEPARTMENT OF TRANSPORTATION			CROSS SECTIONS (37) I-4 (SR400)	SHEET NO.
DATE	DESCRIPTION	DATE	DESCRIPTION	DEBANANDA PANIGRAHI, P.E. LICENSE NUMBER 68318 H. W. LOCHNER 4300 W. CYPRESS STREET, SUITE 500 TAMPA, FLORIDA 33607	ROAD NO.	COUNTY	FINANCIAL PROJECT ID		376
					SR 400	POLK	430185-3-52-01		

THE OFFICIAL RECORD OF THIS SHEET IS THE ELECTRONIC FILE DIGITALLY SIGNED AND SEALED UNDER RULE 61G15-23.004, F.A.C.

2/28/2024 11:33:33 AM JTAGLIAFERRO
C:\pw_working\lochner-pw-01\dms19508\RDJSRD02_NEW_Restored_2023-12-19_test.dgn

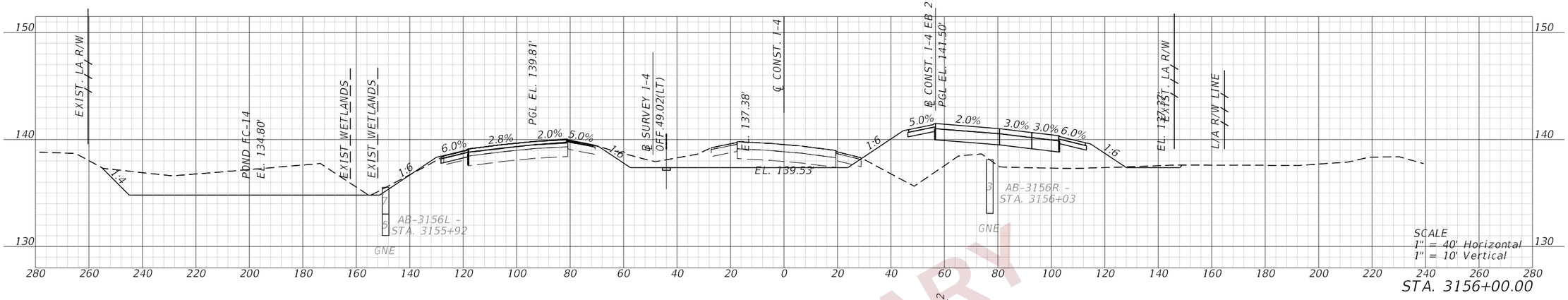

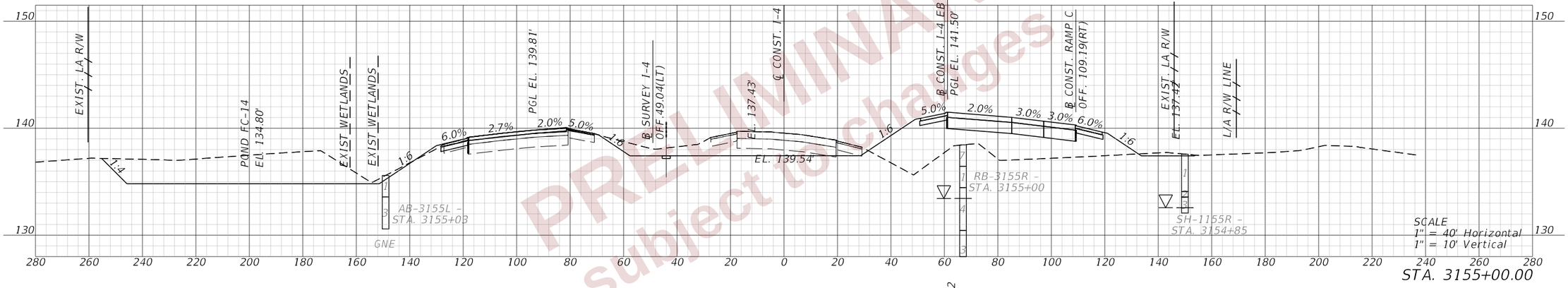

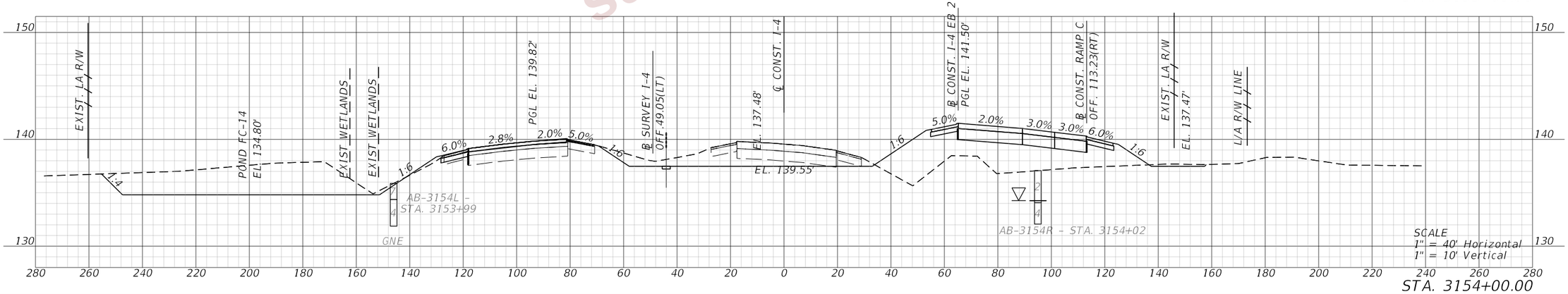

PRELIMINARY
subject to change

REVISIONS				ENGINEER OF RECORD	STATE OF FLORIDA DEPARTMENT OF TRANSPORTATION			CROSS SECTIONS (38) I-4 (SR400)	SHEET NO.
DATE	DESCRIPTION	DATE	DESCRIPTION	DEBANANDA PANIGRAHI, P.E. LICENSE NUMBER 68318 H. W. LOCHNER 4300 W. CYPRESS STREET, SUITE 500 TAMPA, FLORIDA 33607	ROAD NO.	COUNTY	FINANCIAL PROJECT ID		377
					SR 400	POLK	430185-3-52-01		

THE OFFICIAL RECORD OF THIS SHEET IS THE ELECTRONIC FILE DIGITALLY SIGNED AND SEALED UNDER RULE 61G15-23.004, F.A.C.

2/28/2024 11:33:36 AM JTAGLIAFERRO
C:\pw_working\lochner-pw-01\dms19508\RDYSRD02_NEW_Restored_2023-12-19_test.dgn

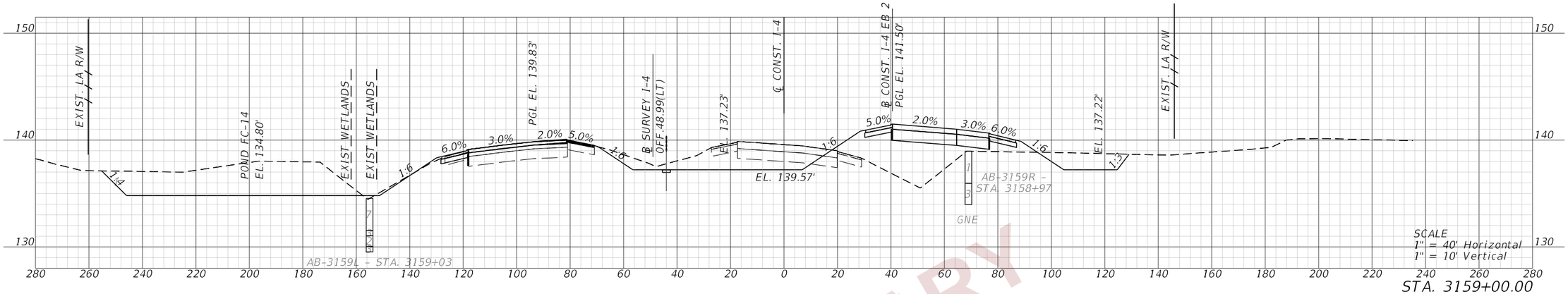

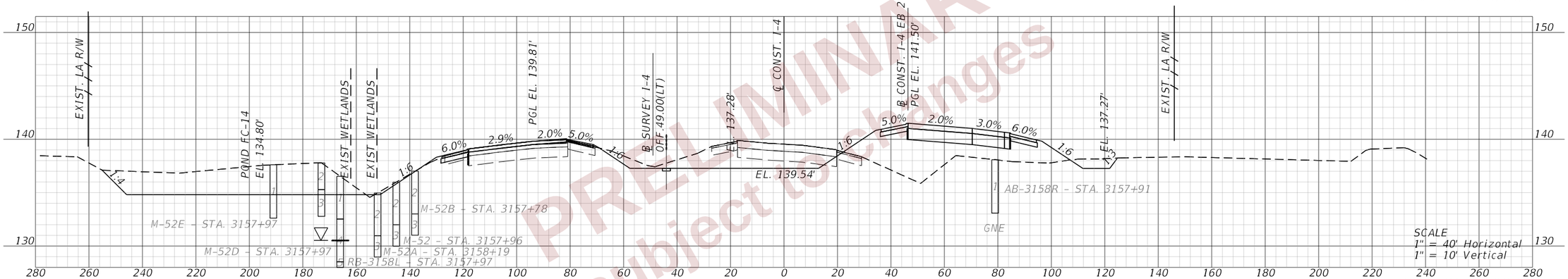

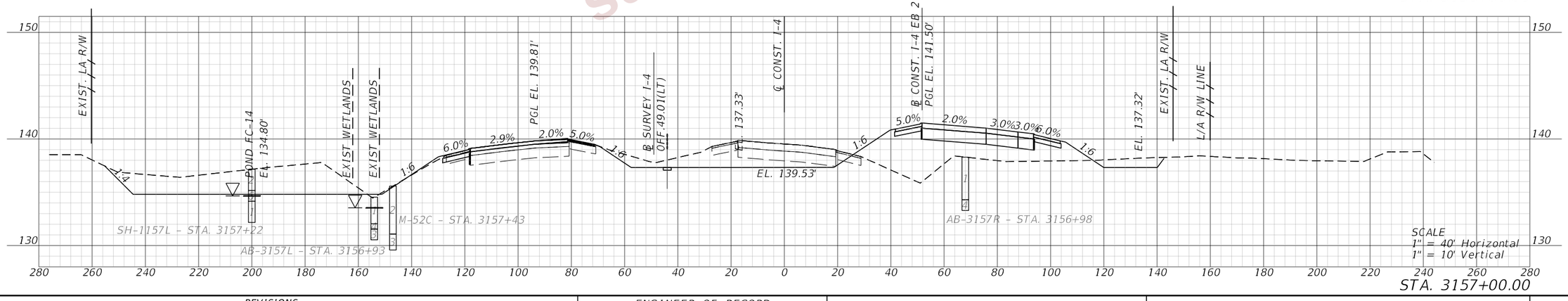

PRELIMINARY
subject to changes

REVISIONS			
DATE	DESCRIPTION	DATE	DESCRIPTION

ENGINEER OF RECORD

DEBANANDA PANIGRAHI, P.E.
LICENSE NUMBER 68318
H. W. LOCHNER
4300 W. CYPRESS STREET, SUITE 500
TAMPA, FLORIDA 33607

STATE OF FLORIDA
DEPARTMENT OF TRANSPORTATION

ROAD NO.	COUNTY	FINANCIAL PROJECT ID
SR 400	POLK	430185-3-52-01

CROSS SECTIONS (39)
I-4 (SR400)

SHEET NO. 378

THE OFFICIAL RECORD OF THIS SHEET IS THE ELECTRONIC FILE DIGITALLY SIGNED AND SEALED UNDER RULE 61G15-23.004, F.A.C.

2/28/2024 11:33:40 AM JTAGLIAFERRO
c:\pw_working\lochner-pw-01\dms19508\RD\SR002_NEW_Restored_2023-12-19_test.dgn

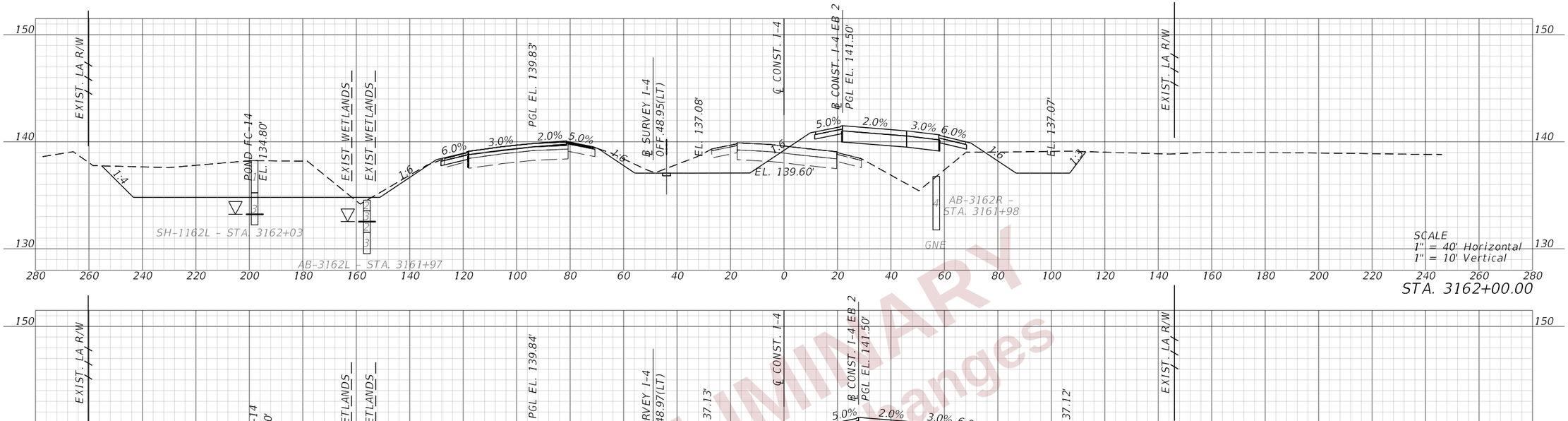

PRELIMINARY
subject to changes

REVISIONS			
DATE	DESCRIPTION	DATE	DESCRIPTION

ENGINEER OF RECORD

DEBANANDA PANIGRAHI, P.E.
LICENSE NUMBER 68318
H. W. LOCHNER
4300 W. CYPRESS STREET, SUITE 500
TAMPA, FLORIDA 33607

STATE OF FLORIDA
DEPARTMENT OF TRANSPORTATION

ROAD NO.	COUNTY	FINANCIAL PROJECT ID
SR 400	POLK	430185-3-52-01

CROSS SECTIONS (40)
I-4 (SR400)

SHEET NO. 379

THE OFFICIAL RECORD OF THIS SHEET IS THE ELECTRONIC FILE DIGITALLY SIGNED AND SEALED UNDER RULE 61G15-23.004, F.A.C.

2/28/2024 11:33:43 AM JTAGLIAFERRO
c:\pw_working\lochner-pw-01\dms1950B\RDVSRD02_NEW_Restored_2023-12-19_test.dgn

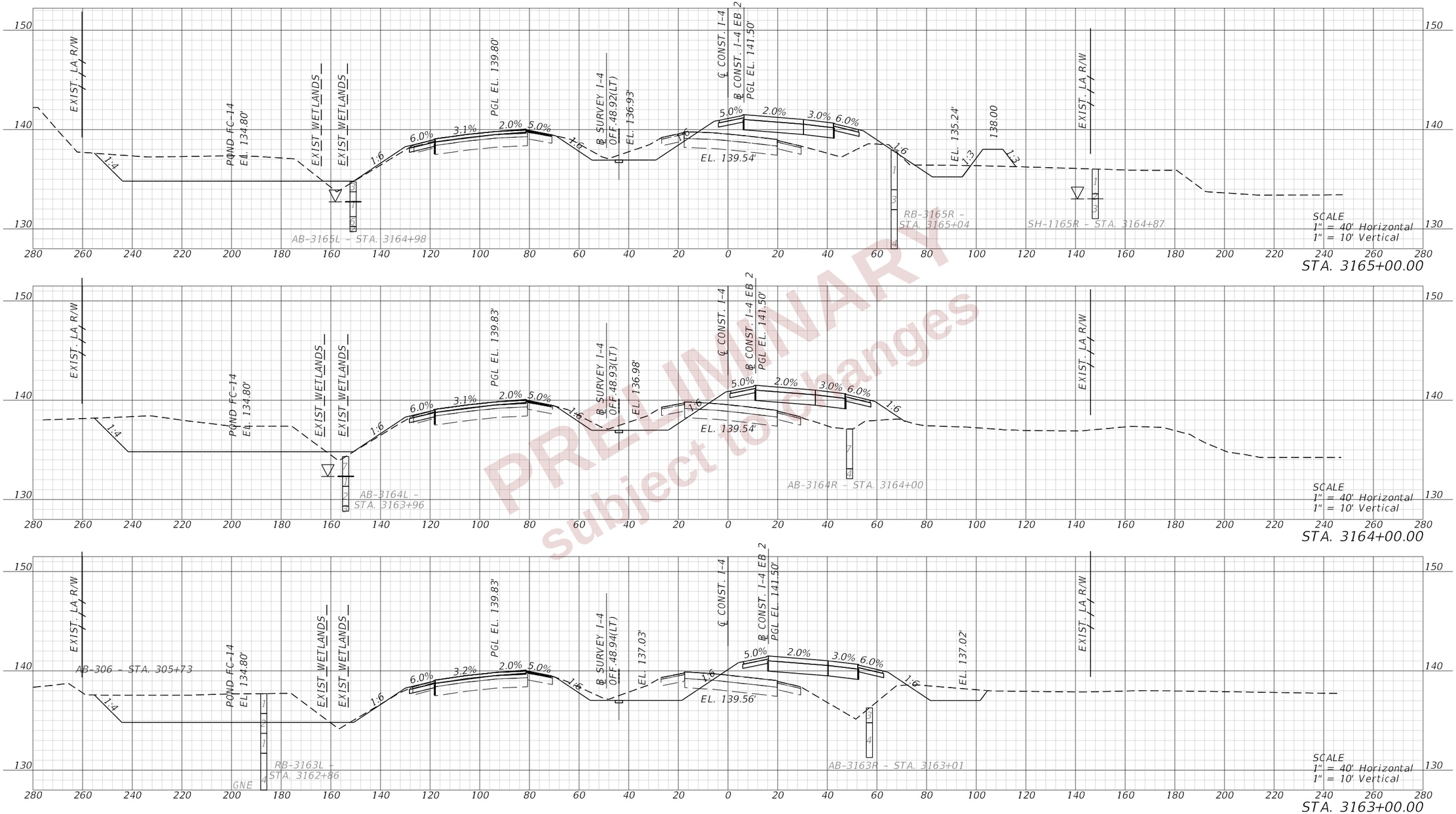

PRELIMINARY
subject to changes

REVISIONS			
DATE	DESCRIPTION	DATE	DESCRIPTION

STATE OF FLORIDA
DEPARTMENT OF TRANSPORTATION

ROAD NO.	COUNTY	FINANCIAL PROJECT ID
SR 400	POLK	430185-3-52-01

CROSS SECTIONS (41)
I-4 (SR400)

SHEET NO. 380

2/29/2024 9:39:50 PM ANDRES.FERNANDEZ
c:\pw_working\dchner-pw-01\dms19508\RD\SRD02_NEW_Restored_2023-12-19_test.dgn

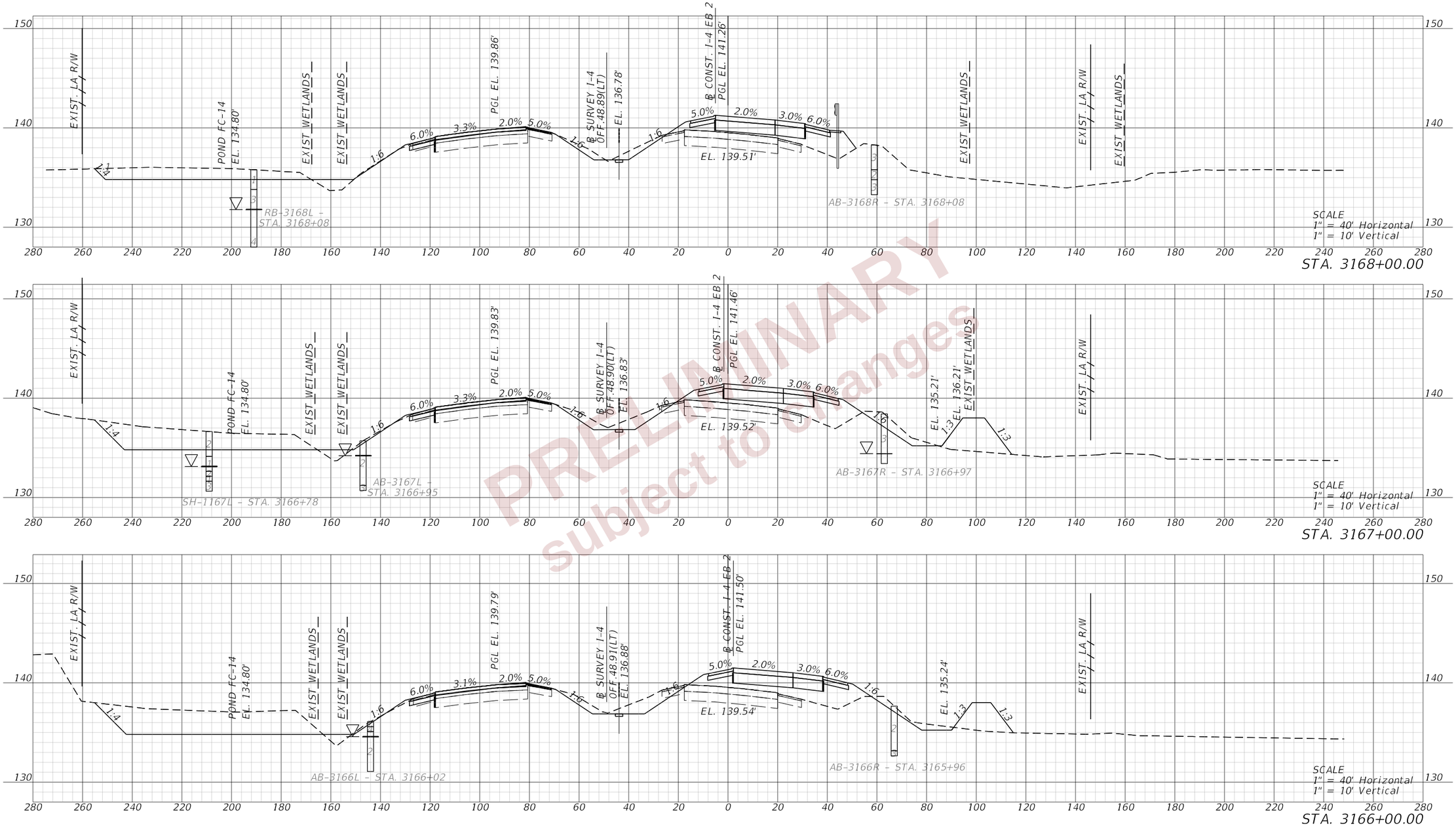

PRELIMINARY subject to change

REVISIONS				ENGINEER OF RECORD	STATE OF FLORIDA DEPARTMENT OF TRANSPORTATION			CROSS SECTIONS (42) I-4 (SR400)	SHEET NO.
DATE	DESCRIPTION	DATE	DESCRIPTION	DEBANANDA PANIGRAHI, P.E. LICENSE NUMBER 68318 H. W. LOCHNER 4300 W. CYPRESS STREET, SUITE 500 TAMPA, FLORIDA 33607	ROAD NO.	COUNTY	FINANCIAL PROJECT ID		381
					SR 400	POLK	430185-3-52-01		

THE OFFICIAL RECORD OF THIS SHEET IS THE ELECTRONIC FILE DIGITALLY SIGNED AND SEALED UNDER RULE 61G15-23.004, F.A.C.

2/29/2024 4:52:45 PM BHORTON
c:\pw_working\lochner-pw-01\dms18802\RDXSR002.dgn

BEGIN SUBSOIL EXCAVATION
STA. 3171+40.00

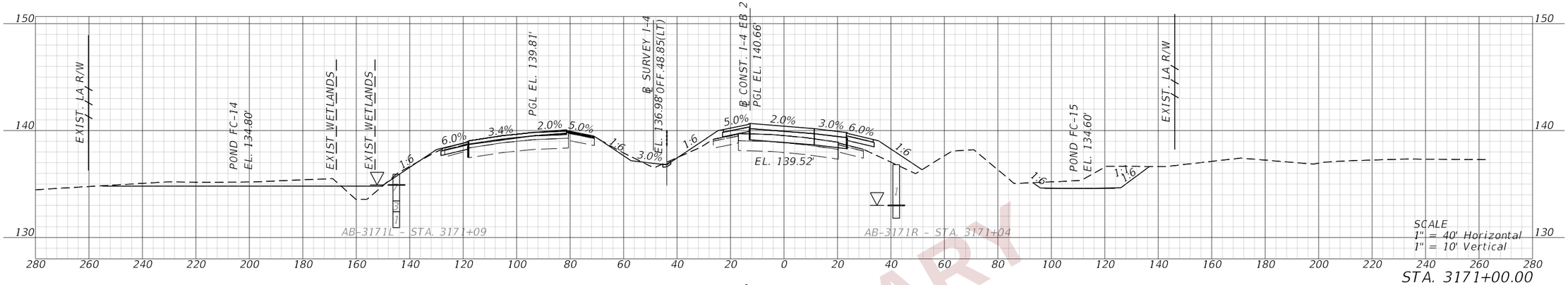

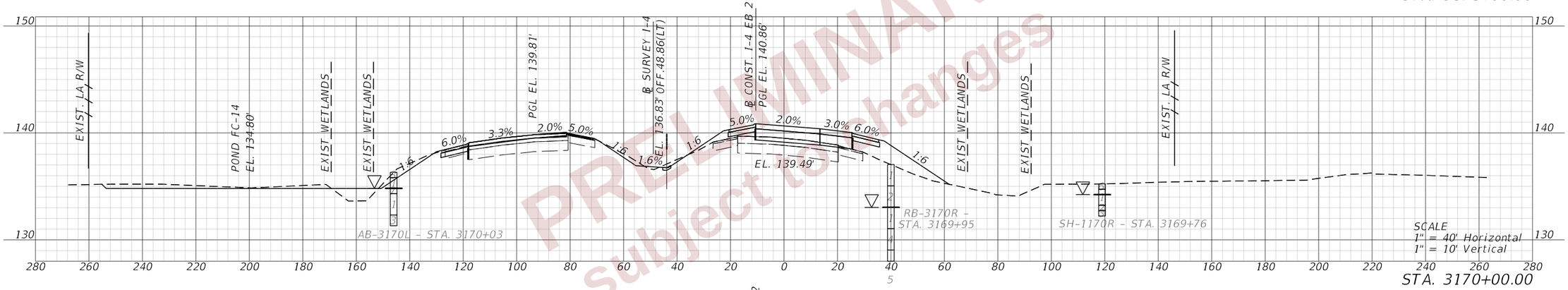

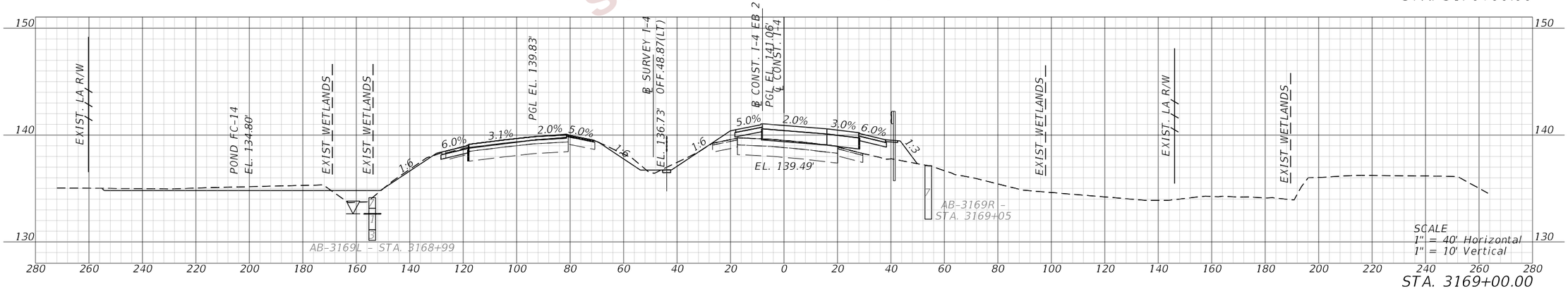

PRELIMINARY
Subject to changes

REVISIONS				ENGINEER OF RECORD	STATE OF FLORIDA DEPARTMENT OF TRANSPORTATION			CROSS SECTIONS (43) I-4 (SR400)	SHEET NO.
DATE	DESCRIPTION	DATE	DESCRIPTION	DEBANANDA PANIGRAHI, P.E. LICENSE NUMBER 68318 H. W. LOCHNER 4300 W. CYPRESS STREET, SUITE 500 TAMPA, FLORIDA 33607	ROAD NO.	COUNTY	FINANCIAL PROJECT ID		382
					SR 400	POLK	430185-3-52-01		

THE OFFICIAL RECORD OF THIS SHEET IS THE ELECTRONIC FILE DIGITALLY SIGNED AND SEALED UNDER RULE 61G15-23.004, F.A.C.

2/28/2024 11:33:52 AM JTAGLIAFERRO
c:\pw_working\lochner-nw-01\dms19508\RDXSRD02_NEW_Restored_2023-12-19_test.dgn

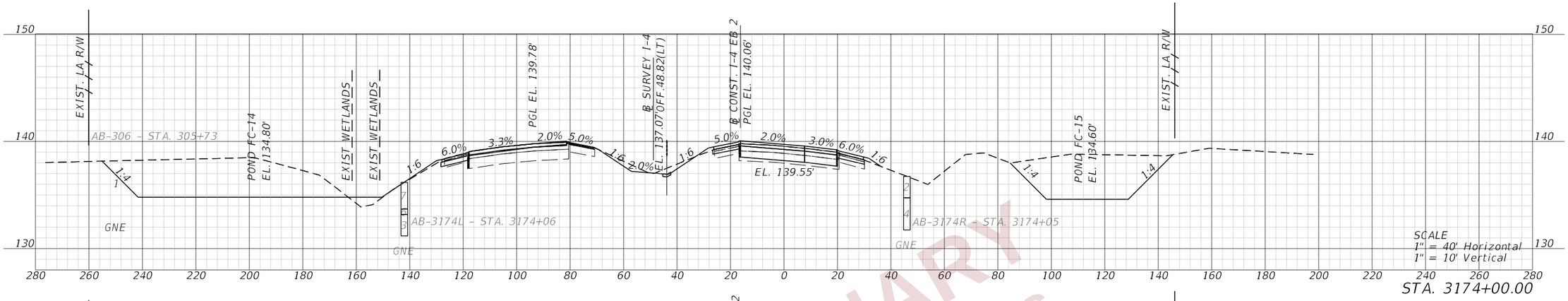

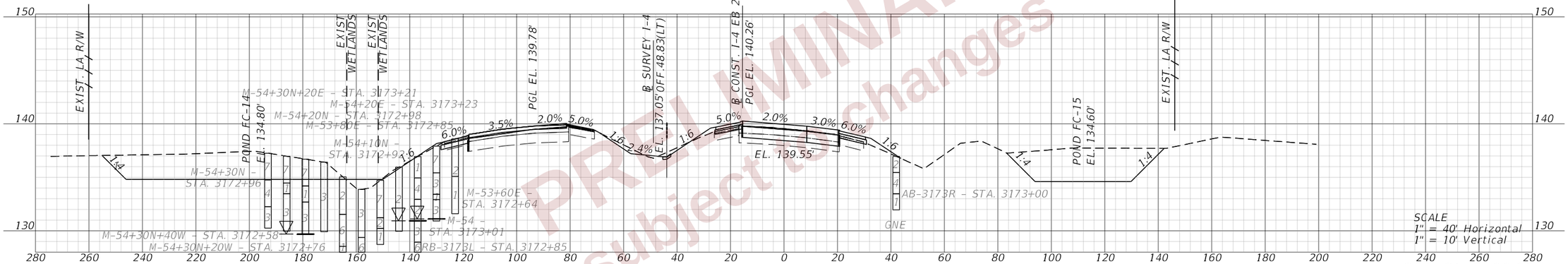

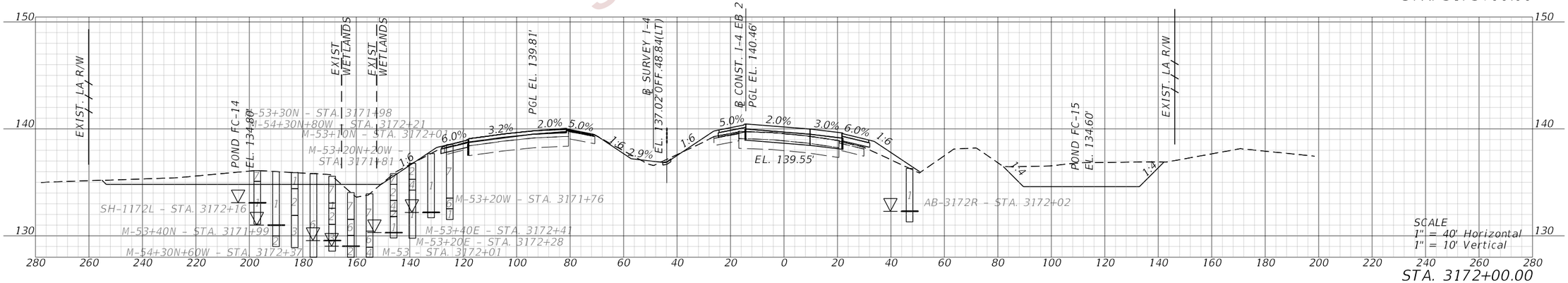

PRELIMINARY
Subject to changes

REVISIONS			
DATE	DESCRIPTION	DATE	DESCRIPTION

ENGINEER OF RECORD

DEBANANDA PANIGRAHI, P.E.
LICENSE NUMBER 68318
H. W. LOCHNER
4300 W. CYPRESS STREET, SUITE 500
TAMPA, FLORIDA 33607

STATE OF FLORIDA
DEPARTMENT OF TRANSPORTATION

ROAD NO.	COUNTY	FINANCIAL PROJECT ID
SR 400	POLK	430185-3-52-01

CROSS SECTIONS (44)
I-4 (SR400)

SHEET NO. 383

THE OFFICIAL RECORD OF THIS SHEET IS THE ELECTRONIC FILE DIGITALLY SIGNED AND SEALED UNDER RULE 61G15-23.004, F.A.C.

2/28/2024 11:33:55 AM JTAGLIAFERRO
c:\pw_working\lochner-pw-01\dms19508\RDXSRD02_NEW_Restored_2023-12-19_test.dgn

END PROJECT
END EARTHWORK
END MILLING AND RESURFACING
STA. 3175+39.51

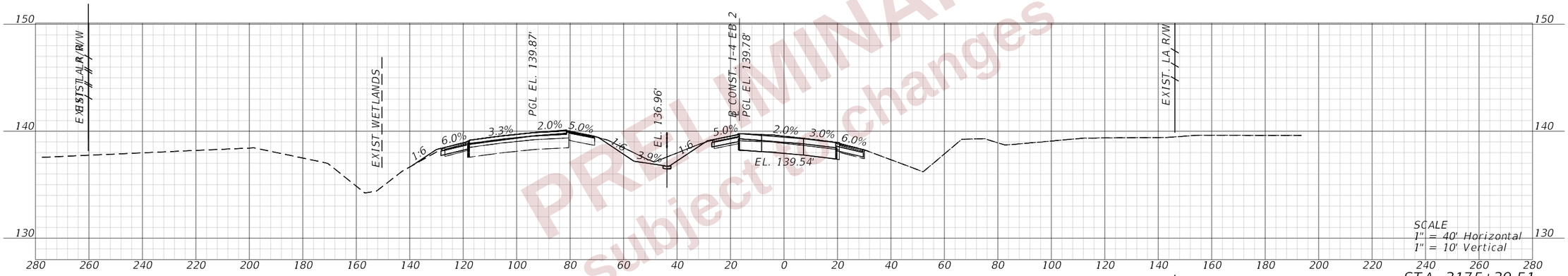

PRELIMINARY
Subject to change

REVISIONS			
DATE	DESCRIPTION	DATE	DESCRIPTION

ENGINEER OF RECORD
DEBANANDA PANIGRAHI, P.E.
LICENSE NUMBER 68318
H. W. LOCHNER
4300 W. CYPRESS STREET, SUITE 500
TAMPA, FLORIDA 33607

STATE OF FLORIDA
DEPARTMENT OF TRANSPORTATION

ROAD NO.	COUNTY	FINANCIAL PROJECT ID
SR 400	POLK	430185-3-52-01

CROSS SECTIONS (45)
I-4 (SR400)

SHEET NO. 384

THE OFFICIAL RECORD OF THIS SHEET IS THE ELECTRONIC FILE DIGITALLY SIGNED AND SEALED UNDER RULE 61G15-23.004, F.A.C.

2/28/2024 11:33:58 AM JTAGLIAFERRO
c:\pw_working\lochner-pw-01\dms19508\RDXSRD02_NEW_Restored_2023-12-19_test.dgn

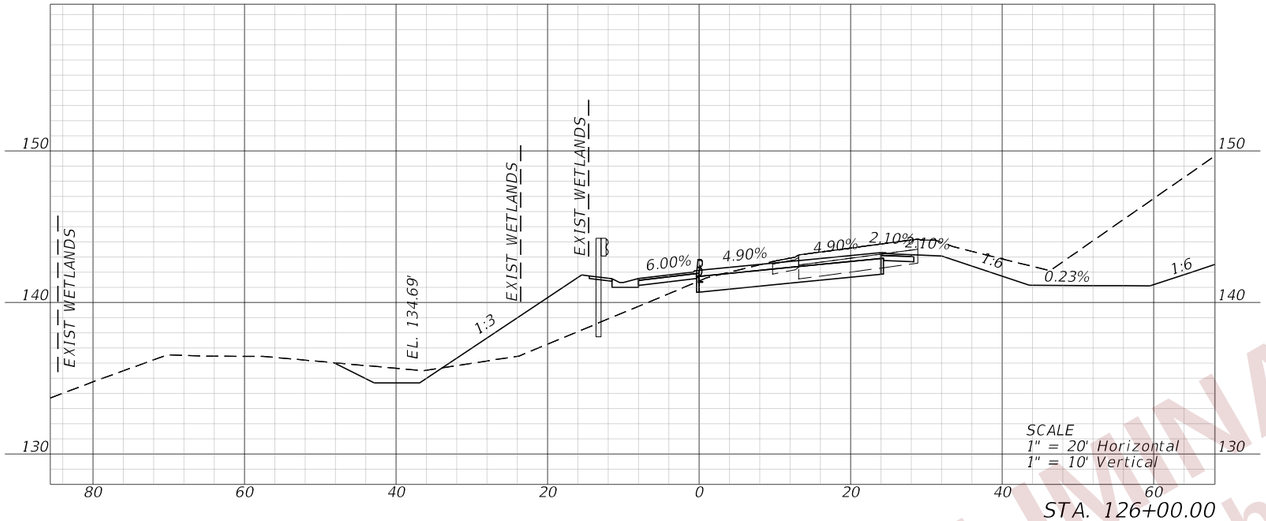

STA. 126+00.00

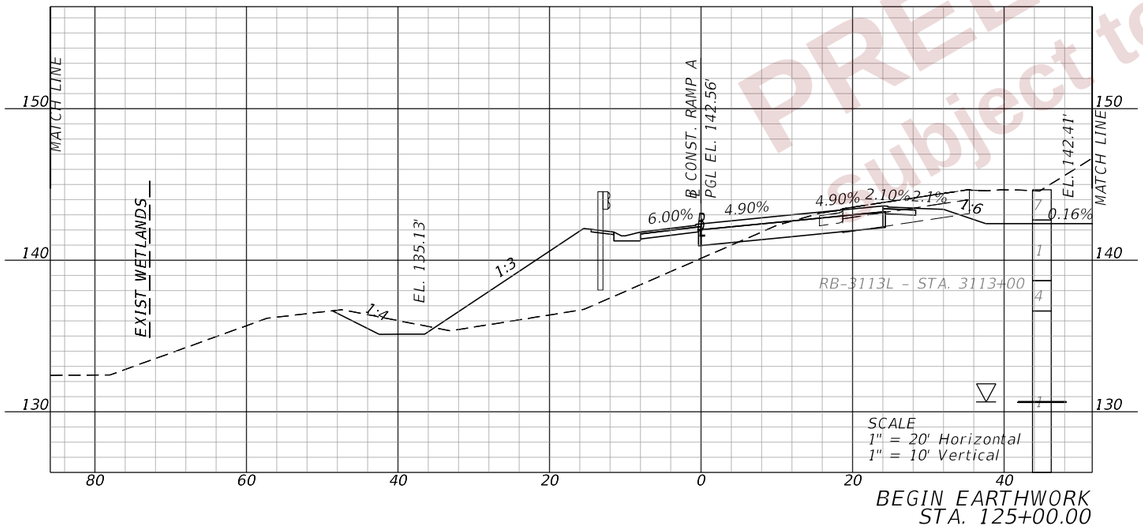

BEGIN EARTHWORK
STA. 125+00.00

PRELIMINARY
Subject to changes

THE OFFICIAL RECORD OF THIS SHEET IS THE ELECTRONIC FILE DIGITALLY SIGNED AND SEALED UNDER RULE 61G15-23.004, F.A.C.

2/28/2024 11:34:28 AM JTAGLIAFERRO
c:\pw_working\lochner-pw-01\dms18802\RDXSRD03.dgn

REVISIONS				ENGINEER OF RECORD	STATE OF FLORIDA DEPARTMENT OF TRANSPORTATION			CROSS SECTIONS (46) RAMP A	SHEET NO.
DATE	DESCRIPTION	DATE	DESCRIPTION	DEBANANDA PANIGRAHI, P.E. LICENSE NUMBER 68318 H. W. LOCHNER 4300 W. CYPRESS STREET, SUITE 500 TAMPA, FLORIDA 33607	ROAD NO.	COUNTY	FINANCIAL PROJECT ID		385
					SR 400	POLK	430185-3-52-01		

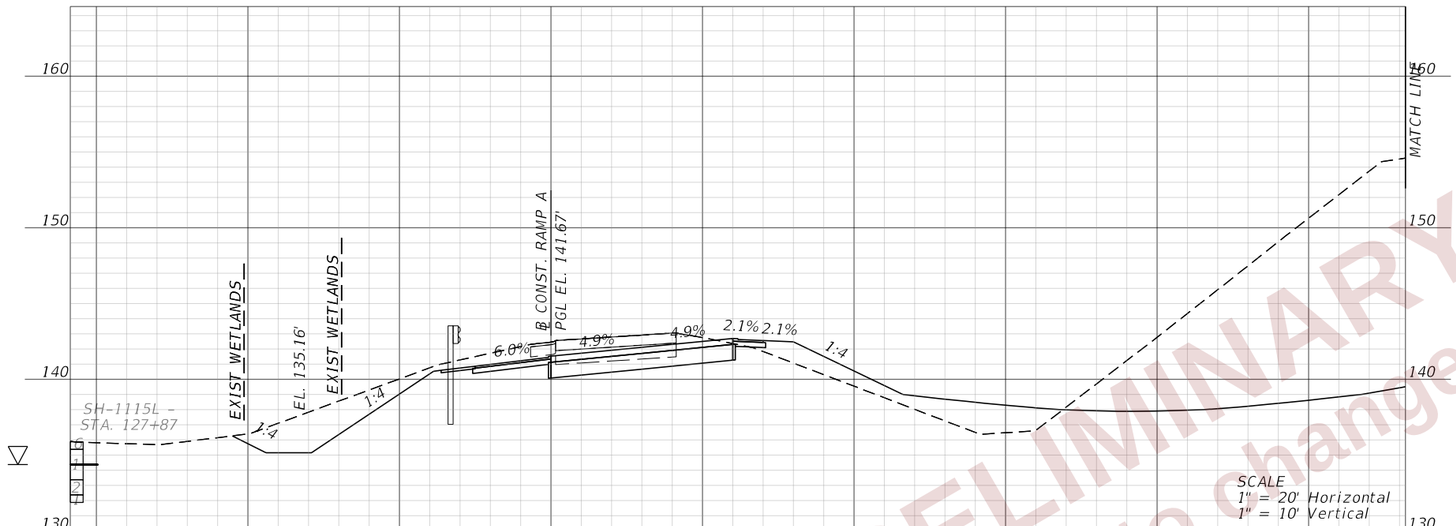

STA. 128+00.00

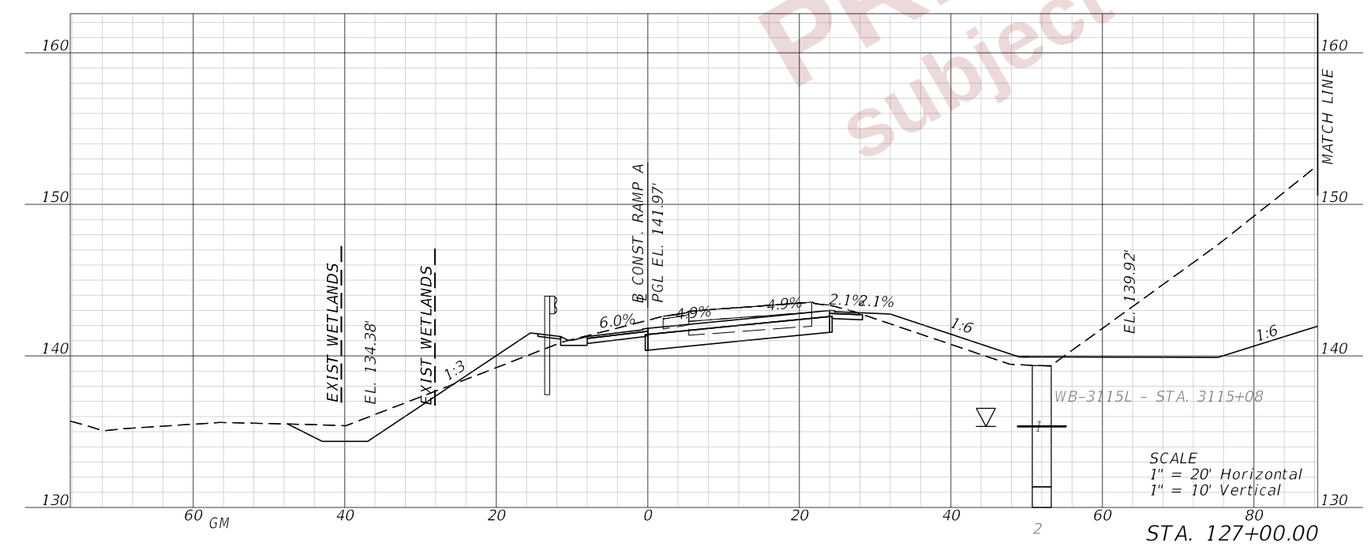

STA. 127+00.00

PRELIMINARY
subject to changes

REVISIONS				ENGINEER OF RECORD	STATE OF FLORIDA DEPARTMENT OF TRANSPORTATION			CROSS SECTIONS (47) RAMP A	SHEET NO.
DATE	DESCRIPTION	DATE	DESCRIPTION	DEBANANDA PANIGRAHI, P.E. LICENSE NUMBER 68318 H. W. LOCHNER 4300 W. CYPRESS STREET, SUITE 500 TAMPA, FLORIDA 33607	ROAD NO.	COUNTY	FINANCIAL PROJECT ID		386
					SR 400	POLK	430185-3-52-01		

THE OFFICIAL RECORD OF THIS SHEET IS THE ELECTRONIC FILE DIGITALLY SIGNED AND SEALED UNDER RULE 61G15-23.004, F.A.C.

2/28/2024 11:34:31 AM JTAGLIAFERRO
c:\pw_working\lochner-pw-01\dms18802\RDXSRD03.dgn

PRELIMINARY
subject to changes

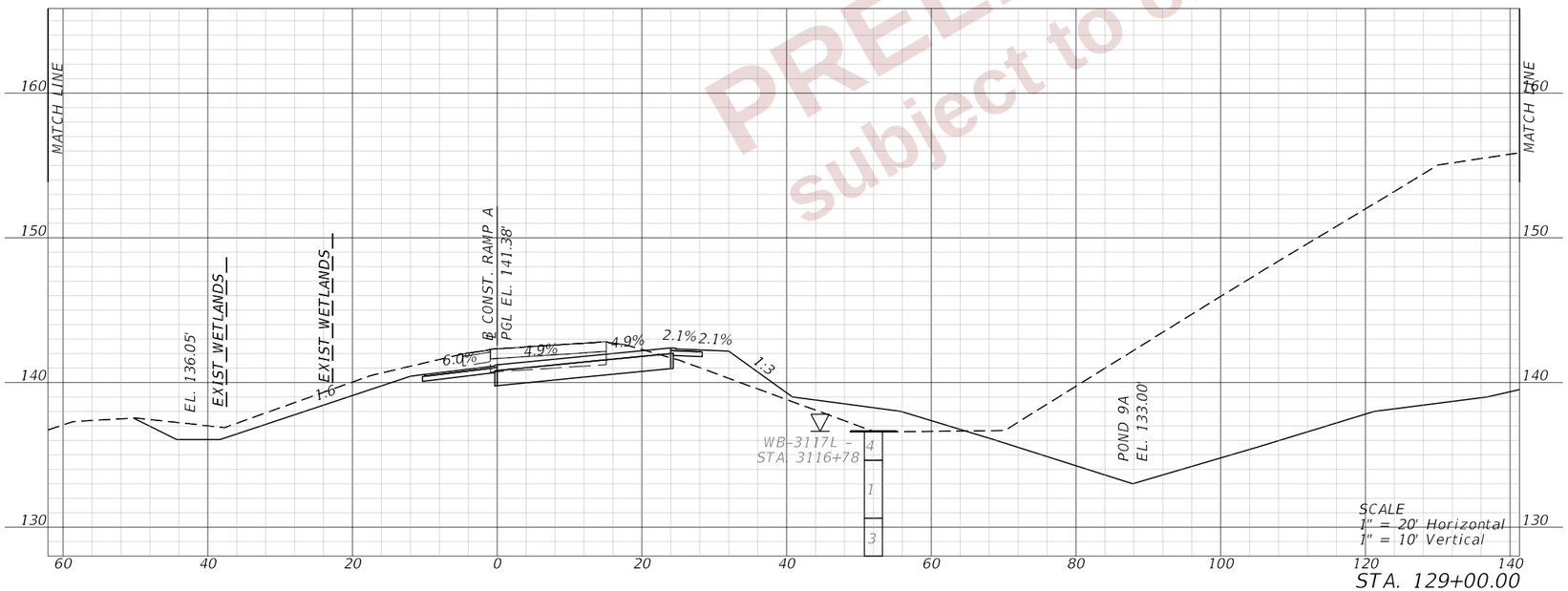

REVISIONS				ENGINEER OF RECORD	STATE OF FLORIDA DEPARTMENT OF TRANSPORTATION			CROSS SECTIONS (48) RAMP A	SHEET NO.
DATE	DESCRIPTION	DATE	DESCRIPTION	DEBANANDA PANIGRAHI, P.E. LICENSE NUMBER 68318 H. W. LOCHNER 4300 W. CYPRESS STREET, SUITE 500 TAMPA, FLORIDA 33607	ROAD NO.	COUNTY	FINANCIAL PROJECT ID		387
					SR 400	POLK	430185-3-52-01		

THE OFFICIAL RECORD OF THIS SHEET IS THE ELECTRONIC FILE DIGITALLY SIGNED AND SEALED UNDER RULE 61G15-23.004, F.A.C.

2/28/2024 11:34:32 AM JTAGLIAFERRO
c:\pw_working\lochner-pw-01\dms18802\RDXSRD03.dgn

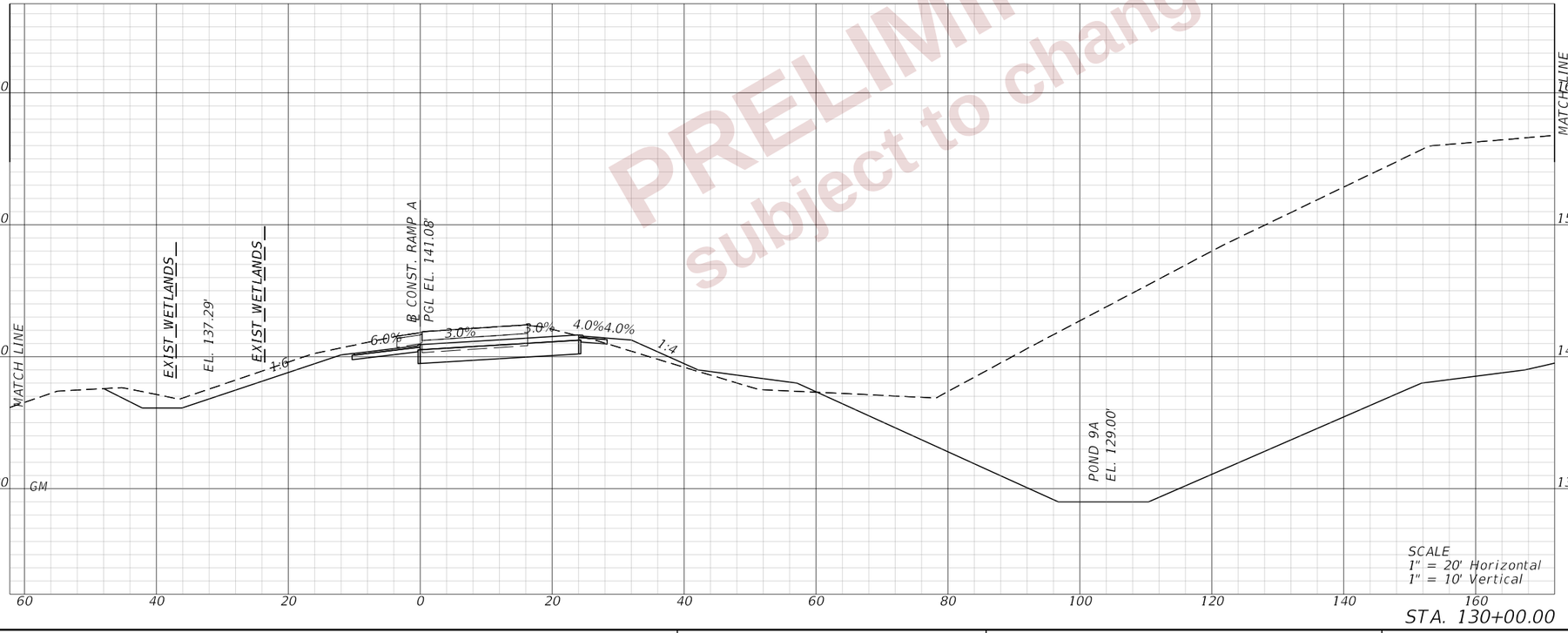

PRELIMINARY
subject to changes

REVISIONS				ENGINEER OF RECORD	STATE OF FLORIDA DEPARTMENT OF TRANSPORTATION			CROSS SECTIONS (49) RAMP A	SHEET NO.
DATE	DESCRIPTION	DATE	DESCRIPTION	DEBANANDA PANIGRAHI, P.E. LICENSE NUMBER 68318 H. W. LOCHNER 4300 W. CYPRESS STREET, SUITE 500 TAMPA, FLORIDA 33607	ROAD NO.	COUNTY	FINANCIAL PROJECT ID		388
					SR 400	POLK	430185-3-52-01		

THE OFFICIAL RECORD OF THIS SHEET IS THE ELECTRONIC FILE DIGITALLY SIGNED AND SEALED UNDER RULE 61G15-23.004, F.A.C.

2/28/2024 11:34:34 AM JTAGLIAFERRO
c:\pw_working\lochner-pw-01\dms18802\RDXSR003.dgn

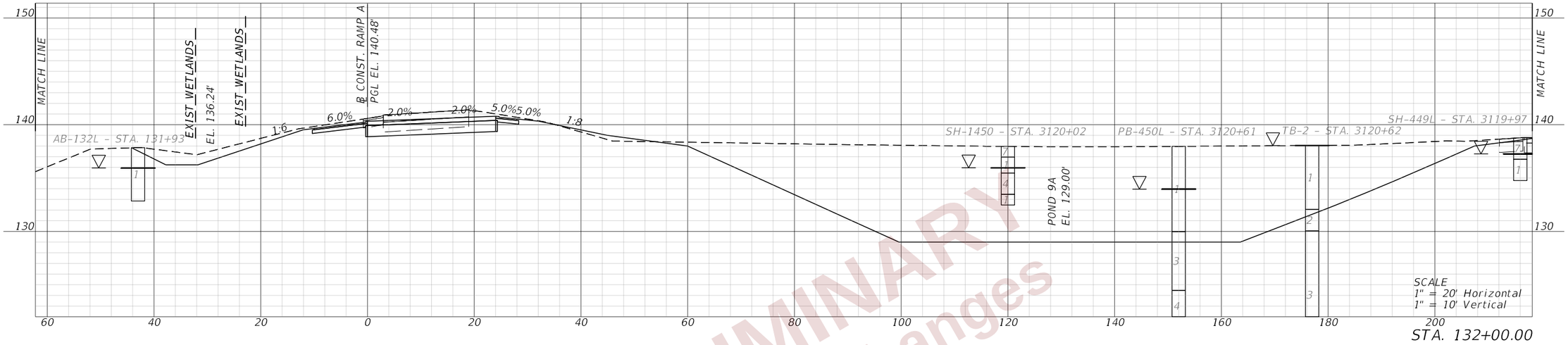

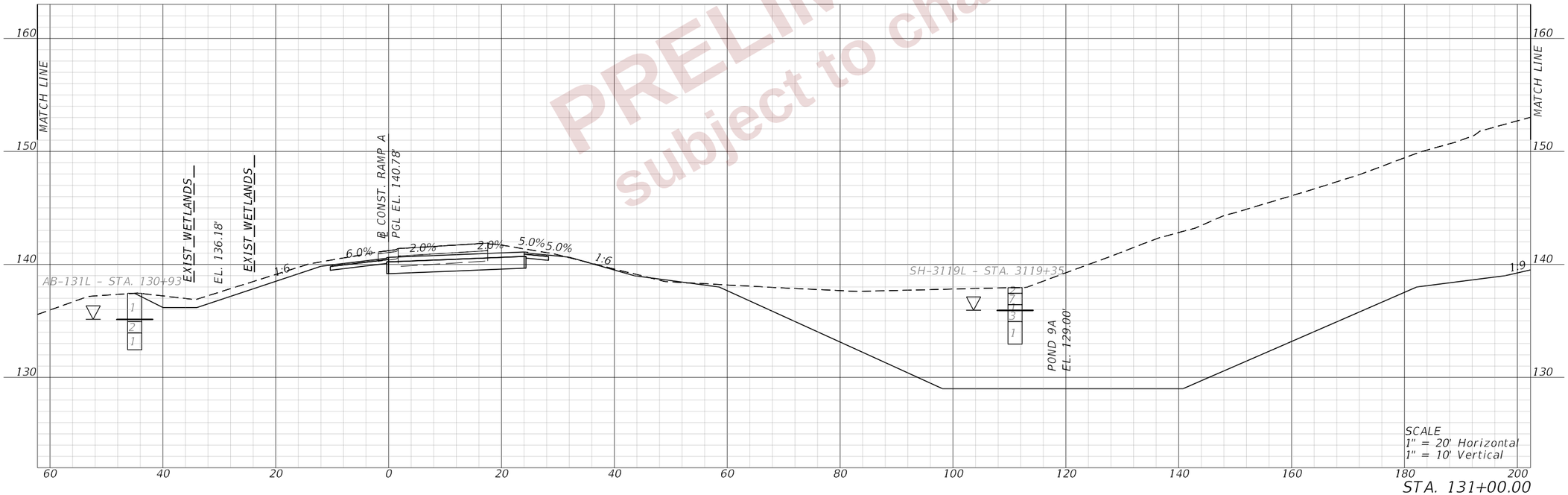

PRELIMINARY
subject to changes

REVISIONS			
DATE	DESCRIPTION	DATE	DESCRIPTION

ENGINEER OF RECORD

DEBANANDA PANIGRAHI, P.E.
LICENSE NUMBER 68318
H. W. LOCHNER
4300 W. CYPRESS STREET, SUITE 500
TAMPA, FLORIDA 33607

STATE OF FLORIDA
DEPARTMENT OF TRANSPORTATION

ROAD NO.	COUNTY	FINANCIAL PROJECT ID
SR 400	POLK	430185-3-52-01

CROSS SECTIONS (50)
RAMP A

SHEET NO. 389

THE OFFICIAL RECORD OF THIS SHEET IS THE ELECTRONIC FILE DIGITALLY SIGNED AND SEALED UNDER RULE 61G15-23.004, F.A.C.

2/28/2024 11:34:36 AM JTAGLIAFERRO
c:\pw_working\lochner-pw-01\dms18802\RDXSRD03.dgn

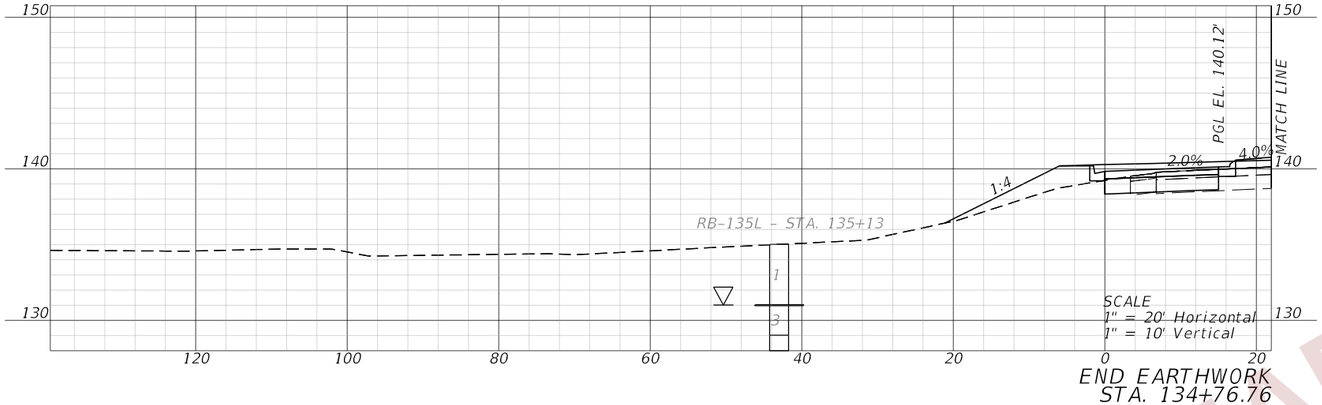

END EARTHWORK
STA. 134+76.76

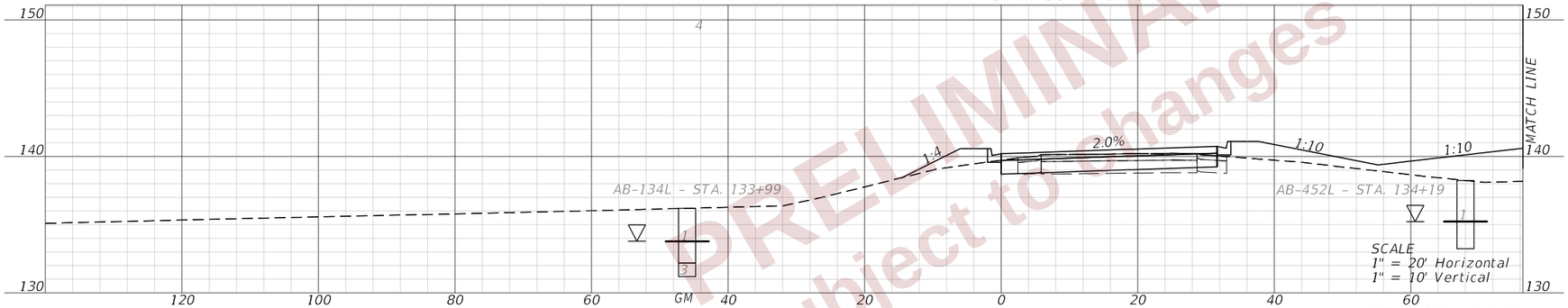

STA. 134+00.00

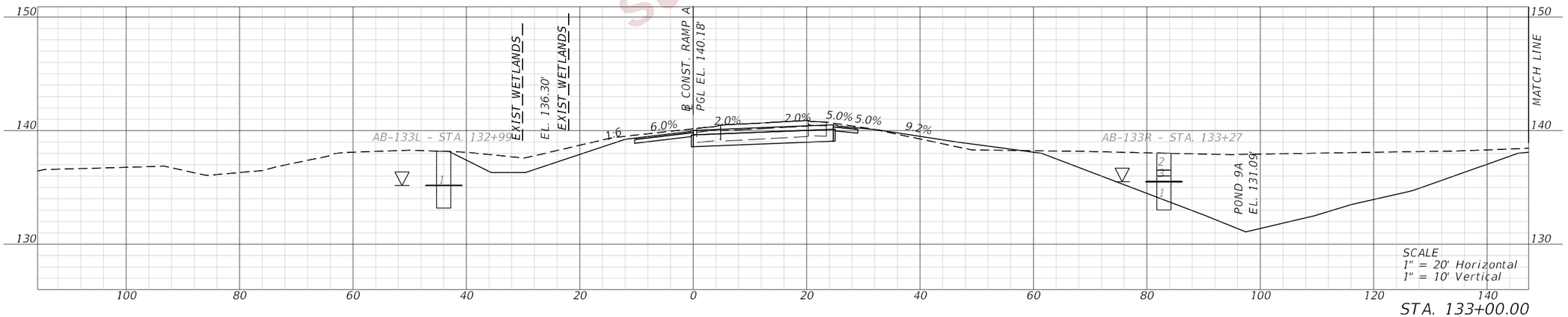

STA. 133+00.00

PRELIMINARY
subject to changes

REVISIONS				ENGINEER OF RECORD	STATE OF FLORIDA DEPARTMENT OF TRANSPORTATION			CROSS SECTIONS (51) RAMP A	SHEET NO.
DATE	DESCRIPTION	DATE	DESCRIPTION	DEBANANDA PANIGRAHI, P.E. LICENSE NUMBER 68318 H. W. LOCHNER 4300 W. CYPRESS STREET, SUITE 500 TAMPA, FLORIDA 33607	ROAD NO.	COUNTY	FINANCIAL PROJECT ID		390
					SR 400	POLK	430185-3-52-01		

THE OFFICIAL RECORD OF THIS SHEET IS THE ELECTRONIC FILE DIGITALLY SIGNED AND SEALED UNDER RULE 61G15-23.004, F.A.C.

2/28/2024 11:34:41 AM JTAGLIAFERRO
C:\pw_working\lochner-pw-01\dms18802\RDXSRD03.dgn

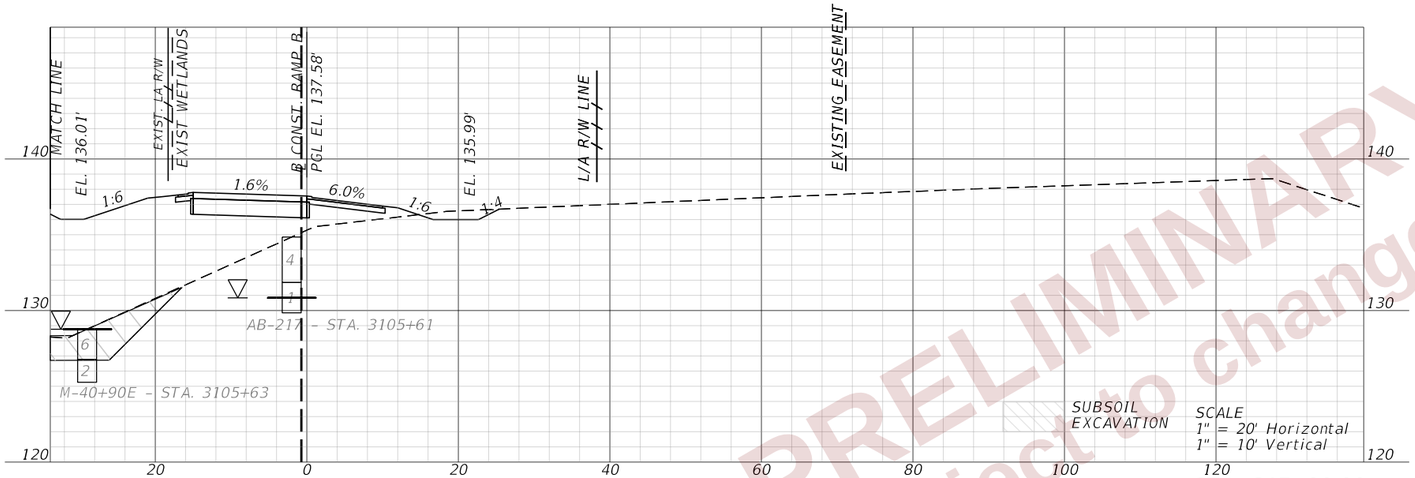

STA. 217+00.00

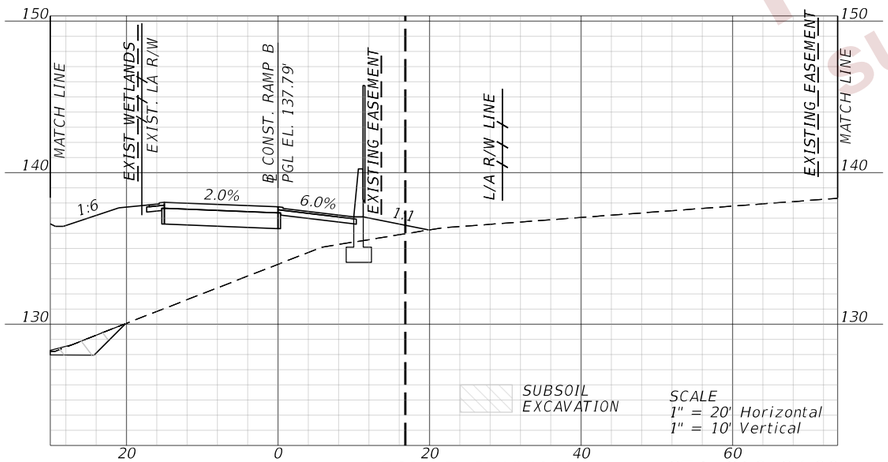

BEGIN EARTHWORK STA. 216+34.99

PRELIMINARY
subject to changes

REVISIONS				ENGINEER OF RECORD	STATE OF FLORIDA DEPARTMENT OF TRANSPORTATION			CROSS SECTIONS (52) RAMP B	SHEET NO.
DATE	DESCRIPTION	DATE	DESCRIPTION	DEBANANDA PANIGRAHI, P.E. LICENSE NUMBER 68318 H. W. LOCHNER 4300 W. CYPRESS STREET, SUITE 500 TAMPA, FLORIDA 33607	ROAD NO.	COUNTY	FINANCIAL PROJECT ID		391
					SR 400	POLK	430185-3-52-01		

THE OFFICIAL RECORD OF THIS SHEET IS THE ELECTRONIC FILE DIGITALLY SIGNED AND SEALED UNDER RULE 61G15-23.004, F.A.C.

2/28/2024 11:34:44 AM JTAGLIAFERRO
c:\pw_working\lochner-pw-01\dms18802\RDXSRD03.dgn

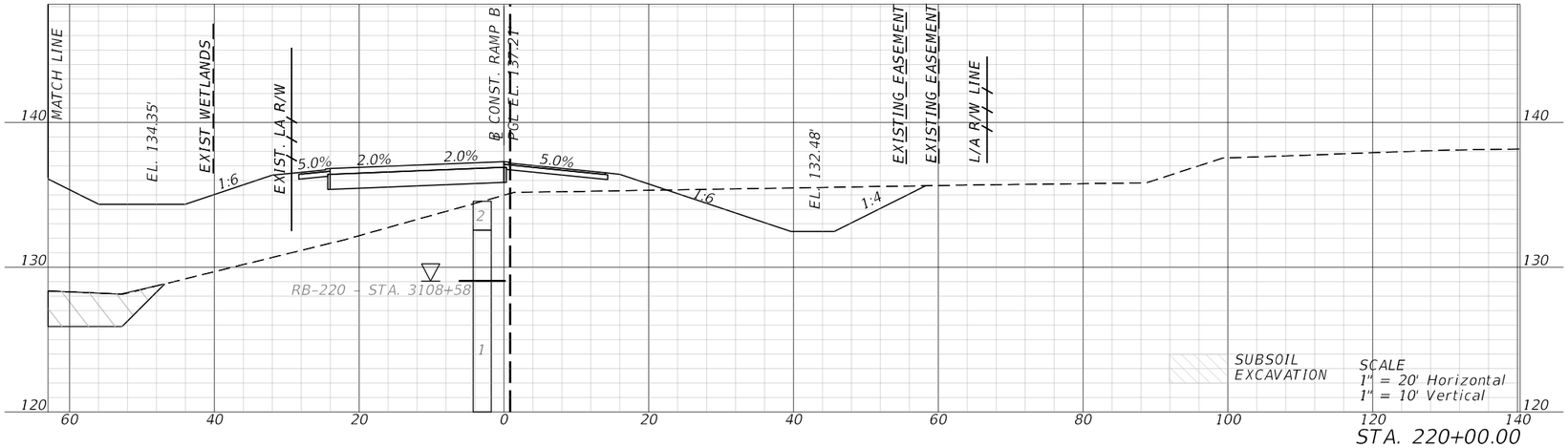

STA. 220+00.00

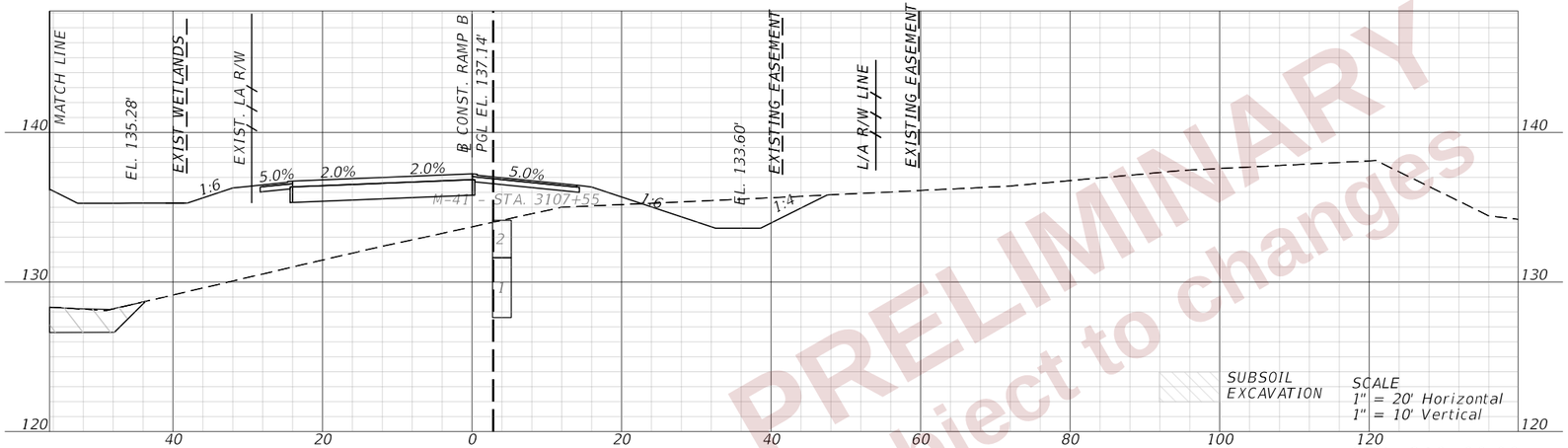

STA. 219+00.00

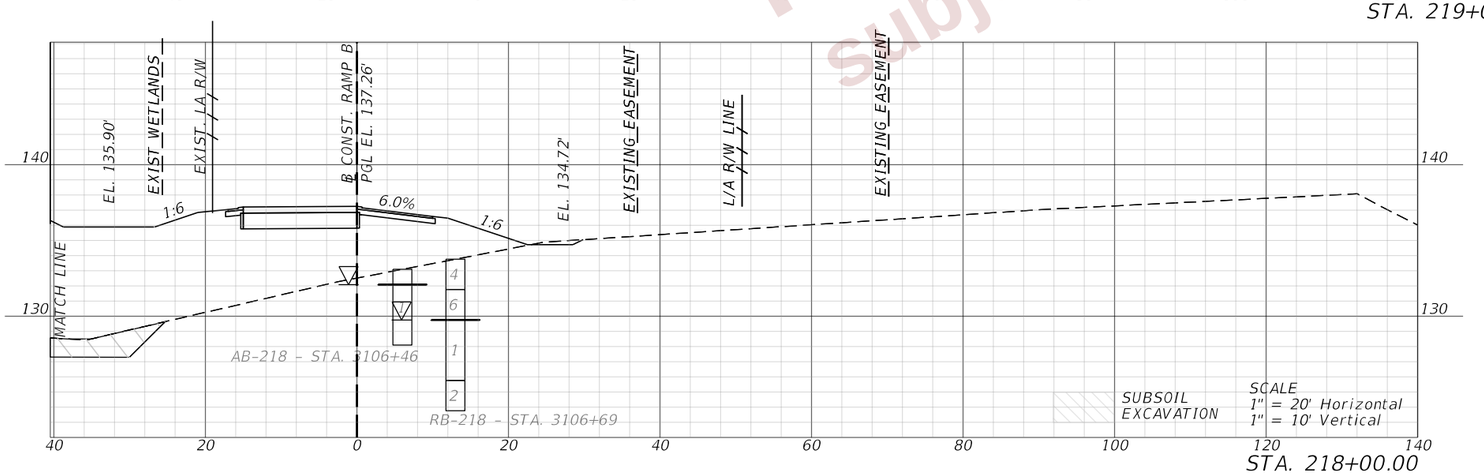

STA. 218+00.00

PRELIMINARY
Subject to changes

REVISIONS				ENGINEER OF RECORD	STATE OF FLORIDA DEPARTMENT OF TRANSPORTATION			CROSS SECTIONS (53) RAMP B	SHEET NO.
DATE	DESCRIPTION	DATE	DESCRIPTION	DEBANANDA PANIGRAHI, P.E. LICENSE NUMBER 68318 H. W. LOCHNER 4300 W. CYPRESS STREET, SUITE 500 TAMPA, FLORIDA 33607	ROAD NO.	COUNTY	FINANCIAL PROJECT ID		392
					SR 400	POLK	430185-3-52-01		

THE OFFICIAL RECORD OF THIS SHEET IS THE ELECTRONIC FILE DIGITALLY SIGNED AND SEALED UNDER RULE 61G15-23.004, F.A.C.

2/28/2024 11:34:48 AM JTAGLIAFERRO
c:\pw_working\lochner-pw-01\dms18802\RDXSRD03.dgn

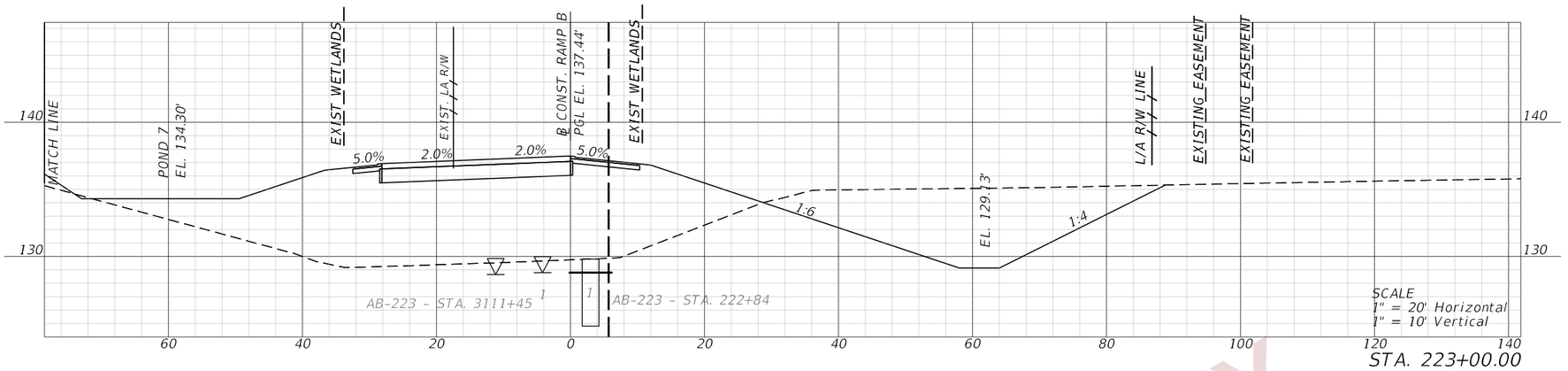

STA. 223+00.00

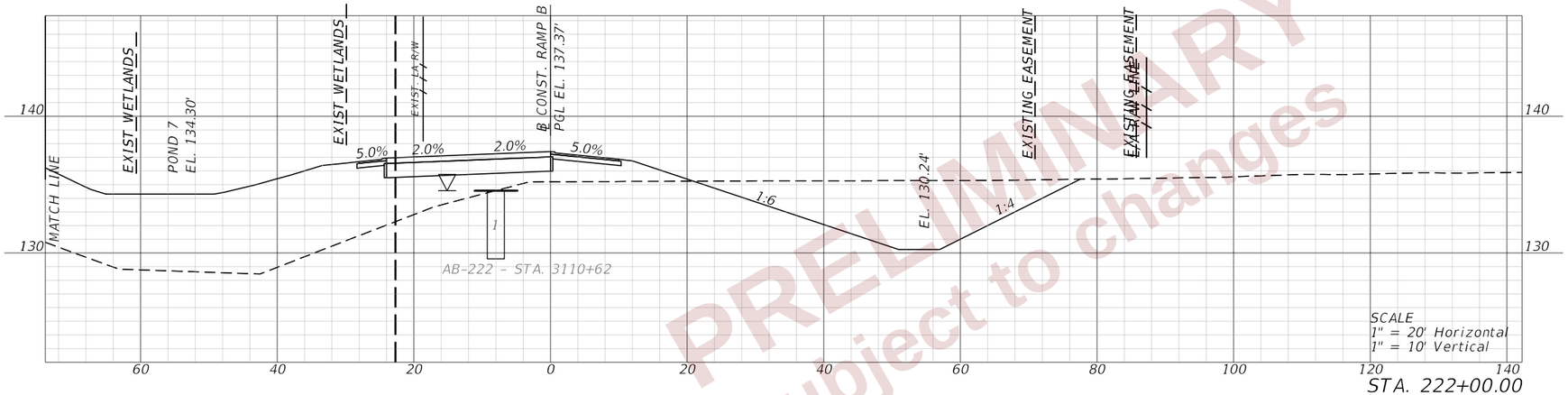

STA. 222+00.00

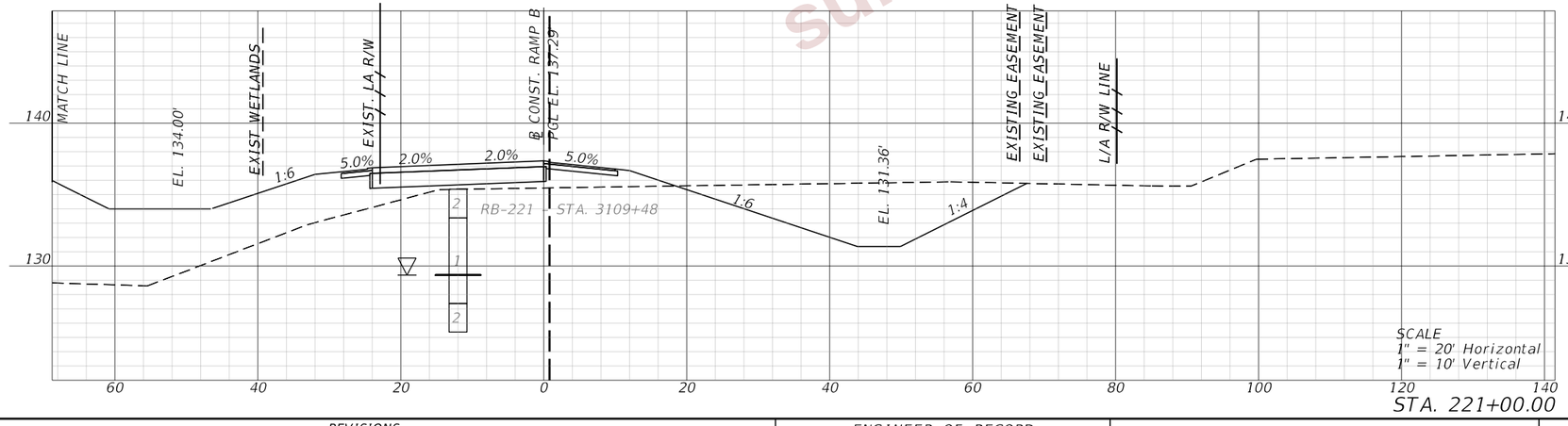

STA. 221+00.00

PRELIMINARY
subject to changes

REVISIONS				ENGINEER OF RECORD	STATE OF FLORIDA DEPARTMENT OF TRANSPORTATION			CROSS SECTIONS (54) RAMP B	SHEET NO.
DATE	DESCRIPTION	DATE	DESCRIPTION	DEBANANDA PANIGRAHI, P.E. LICENSE NUMBER 68318 H. W. LOCHNER 4300 W. CYPRESS STREET, SUITE 500 TAMPA, FLORIDA 33607	ROAD NO.	COUNTY	FINANCIAL PROJECT ID		393
					SR 400	POLK	430185-3-52-01		

THE OFFICIAL RECORD OF THIS SHEET IS THE ELECTRONIC FILE DIGITALLY SIGNED AND SEALED UNDER RULE 61G15-23.004, F.A.C.

2/28/2024 11:34:52 AM JTAGLIAFERRO
c:\pw_working\lochner-pw-01\dms18802\RDXSRD03.dgn

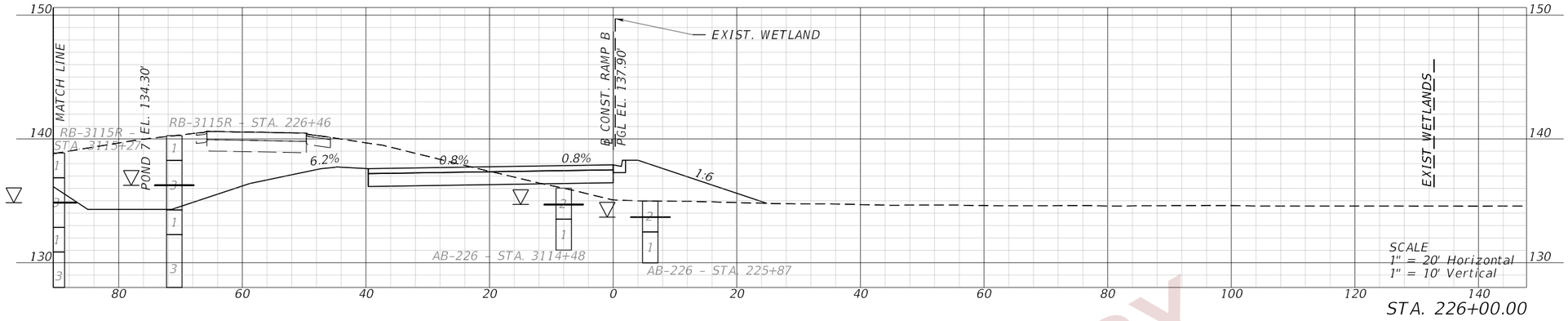

STA. 226+00.00

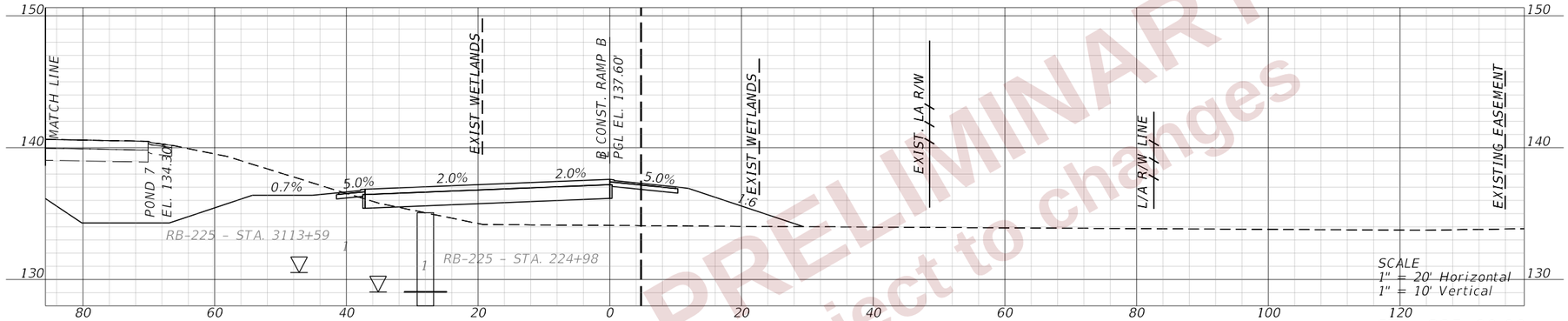

STA. 225+00.00

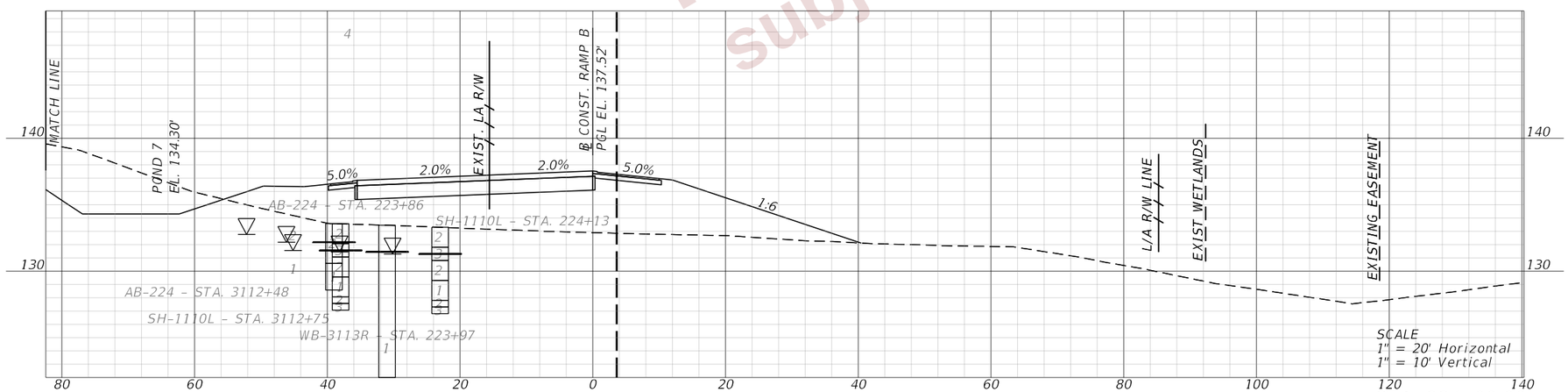

STA. 224+00.00

PRELIMINARY
subject to changes

REVISIONS			
DATE	DESCRIPTION	DATE	DESCRIPTION

ENGINEER OF RECORD

DEBANANDA PANIGRAHI, P.E.
LICENSE NUMBER 68318
H. W. LOCHNER
4300 W. CYPRESS STREET, SUITE 500
TAMPA, FLORIDA 33607

STATE OF FLORIDA
DEPARTMENT OF TRANSPORTATION

ROAD NO.	COUNTY	FINANCIAL PROJECT ID
SR 400	POLK	430185-3-52-01

CROSS SECTIONS (55)
RAMP B

SHEET NO. 394

THE OFFICIAL RECORD OF THIS SHEET IS THE ELECTRONIC FILE DIGITALLY SIGNED AND SEALED UNDER RULE 61G15-23.004, F.A.C.

2/28/2024 11:34:57 AM JTAGLIAFERRO
C:\pw_working\lochner-pw-01\dms18802\RDX\SRD03.dgn

END EARTHWORK
STA. 227+18.31

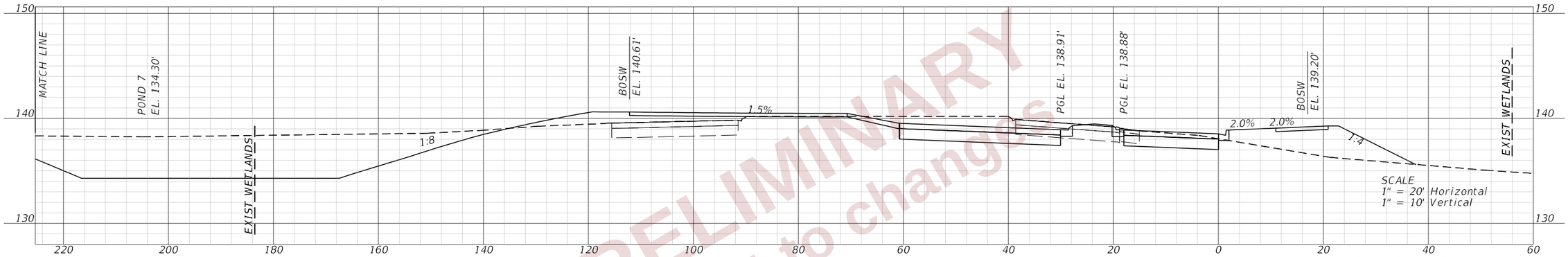

STA. 227+18.31

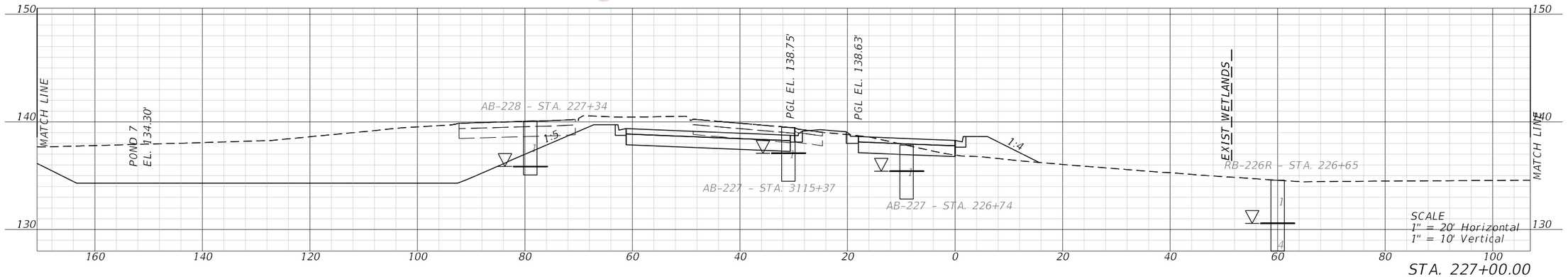

STA. 227+00.00

PRELIMINARY
subject to changes

REVISIONS			
DATE	DESCRIPTION	DATE	DESCRIPTION

ENGINEER OF RECORD

DEBANANDA PANIGRAHI, P.E.
LICENSE NUMBER 68318
H. W. LOCHNER
4300 W. CYPRESS STREET, SUITE 500
TAMPA, FLORIDA 33607

STATE OF FLORIDA
DEPARTMENT OF TRANSPORTATION

ROAD NO.	COUNTY	FINANCIAL PROJECT ID
SR 400	POLK	430185-3-52-01

CROSS SECTIONS (56)
RAMP B

SHEET NO. 395

THE OFFICIAL RECORD OF THIS SHEET IS THE ELECTRONIC FILE DIGITALLY SIGNED AND SEALED UNDER RULE 61G15-23.004, F.A.C.

2/28/2024 11:35:00 AM JTAGLIAFERRO
c:\pw_working\lochner-pw-01\dms18802\RDXSRD03.dgn

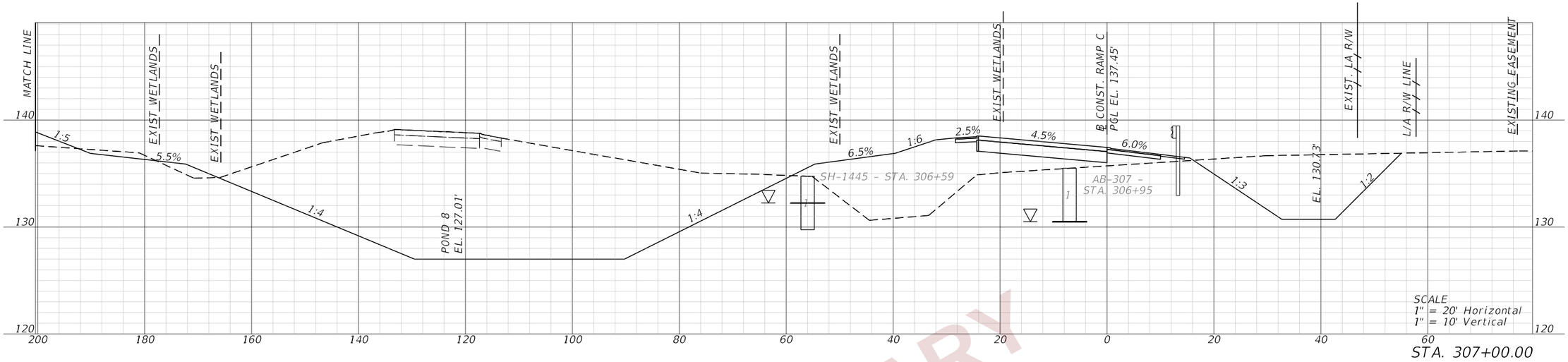

STA. 307+00.00

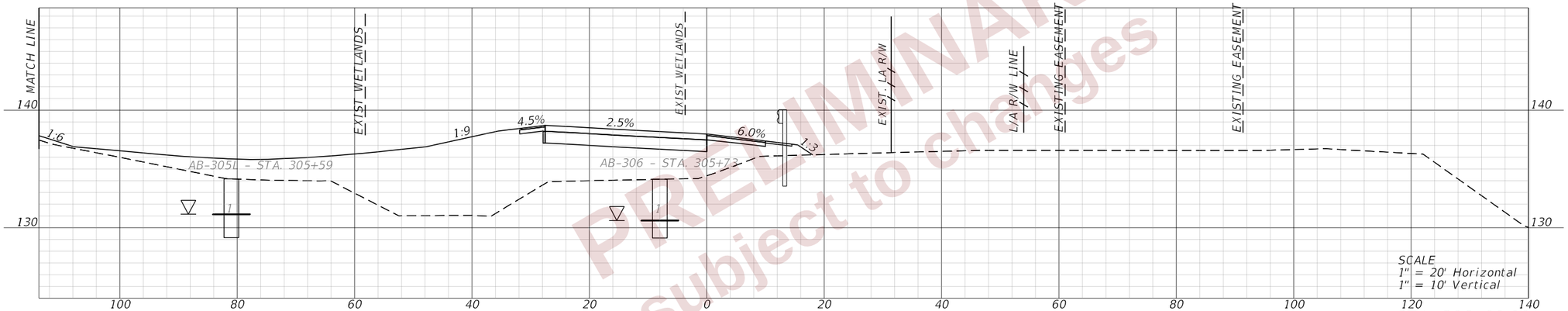

STA. 306+00.00

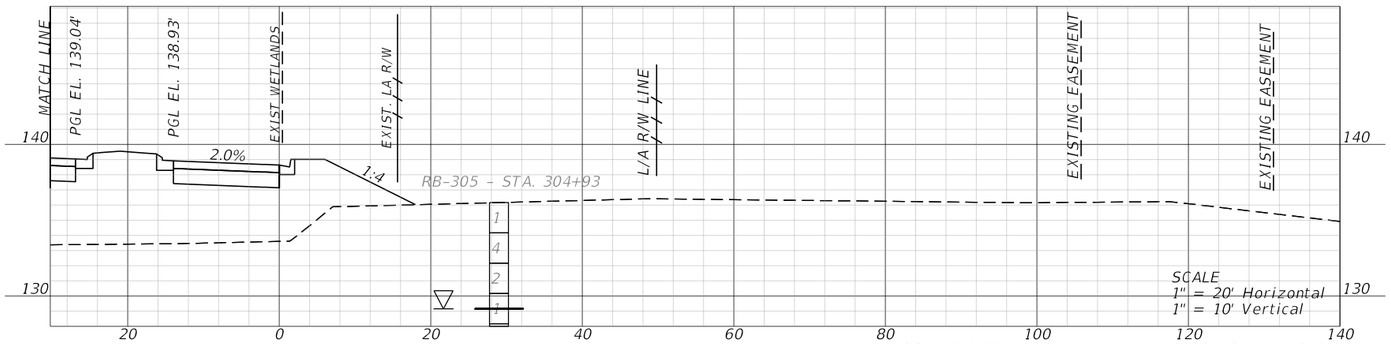

BEGIN EARTHWORK STA. 305+00.00

PRELIMINARY
subject to changes

REVISIONS				ENGINEER OF RECORD	STATE OF FLORIDA DEPARTMENT OF TRANSPORTATION			CROSS SECTIONS (57) RAMP C	SHEET NO.
DATE	DESCRIPTION	DATE	DESCRIPTION	DEBANANDA PANIGRAHI, P.E. LICENSE NUMBER 68318 H. W. LOCHNER 4300 W. CYPRESS STREET, SUITE 500 TAMPA, FLORIDA 33607	ROAD NO.	COUNTY	FINANCIAL PROJECT ID		396
			4		SR 400	POLK	430185-3-52-01		

THE OFFICIAL RECORD OF THIS SHEET IS THE ELECTRONIC FILE DIGITALLY SIGNED AND SEALED UNDER RULE 61G15-23.004, F.A.C.

2/28/2024 11:35:04 AM JTAGLIAFERRO
c:\pw_working\lochner-pw-01\dms18802\RDXSRD03.dgn

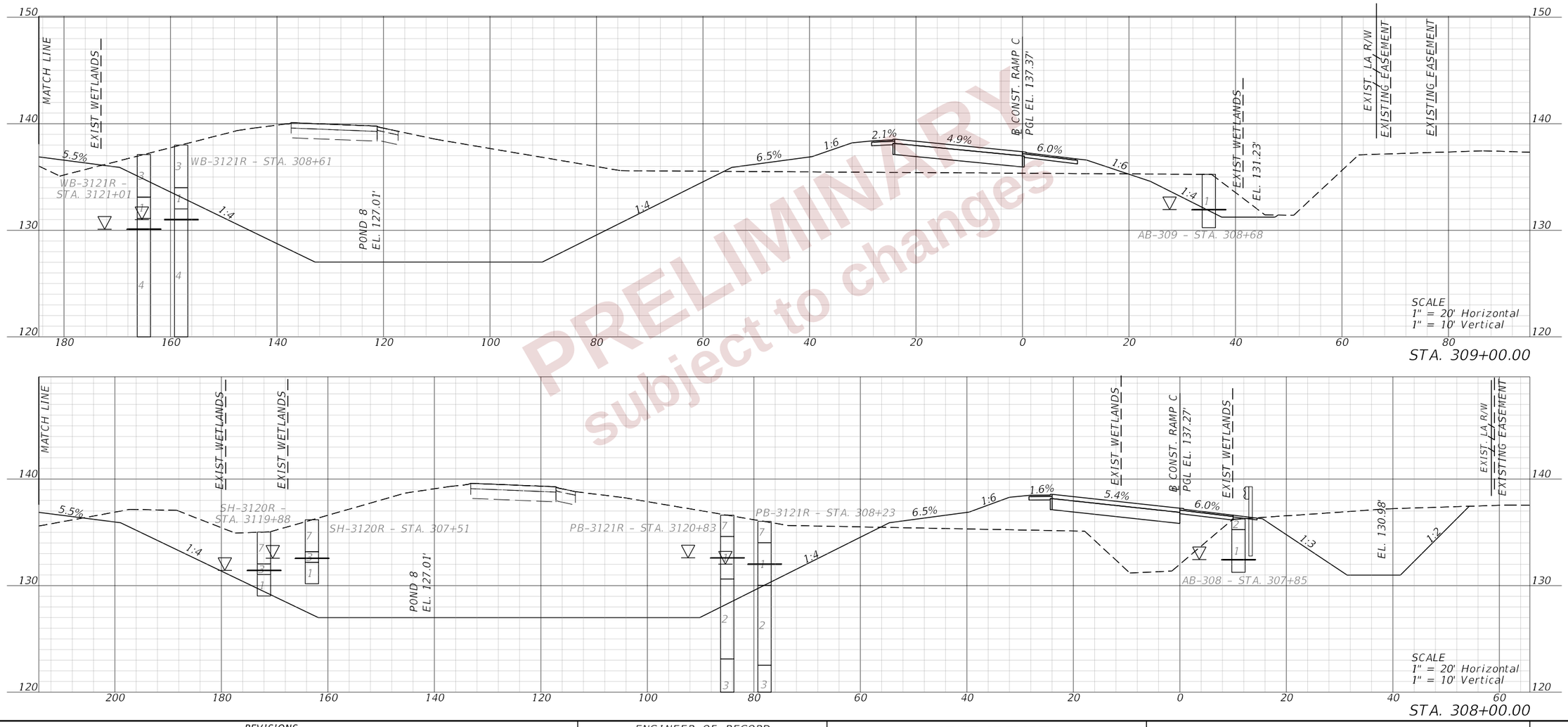

PRELIMINARY
subject to changes

REVISIONS			
DATE	DESCRIPTION	DATE	DESCRIPTION

ENGINEER OF RECORD

DEBANANDA PANIGRAHI, P.E.
LICENSE NUMBER 68318
H. W. LOCHNER
4300 W. CYPRESS STREET, SUITE 500
TAMPA, FLORIDA 33607

STATE OF FLORIDA
DEPARTMENT OF TRANSPORTATION

ROAD NO.	COUNTY	FINANCIAL PROJECT ID
SR 400	POLK	430185-3-52-01

CROSS SECTIONS (58)
RAMP C

SHEET NO. 397

2/28/2024 11:35:07 AM JTAGLIAFERRO
c:\pw_working\lochner-pw-01\dms18802\RD\SR003.dgn

THE OFFICIAL RECORD OF THIS SHEET IS THE ELECTRONIC FILE DIGITALLY SIGNED AND SEALED UNDER RULE 61G15-23.004, F.A.C.

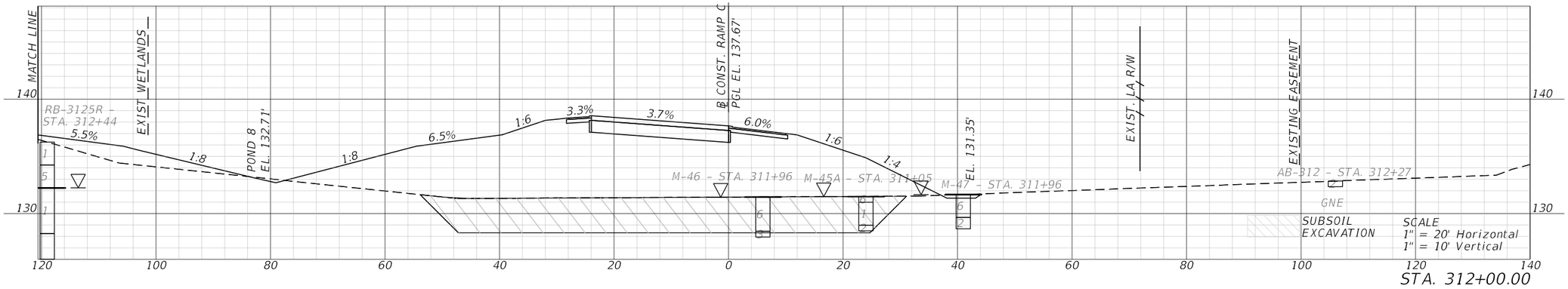

STA. 312+00.00

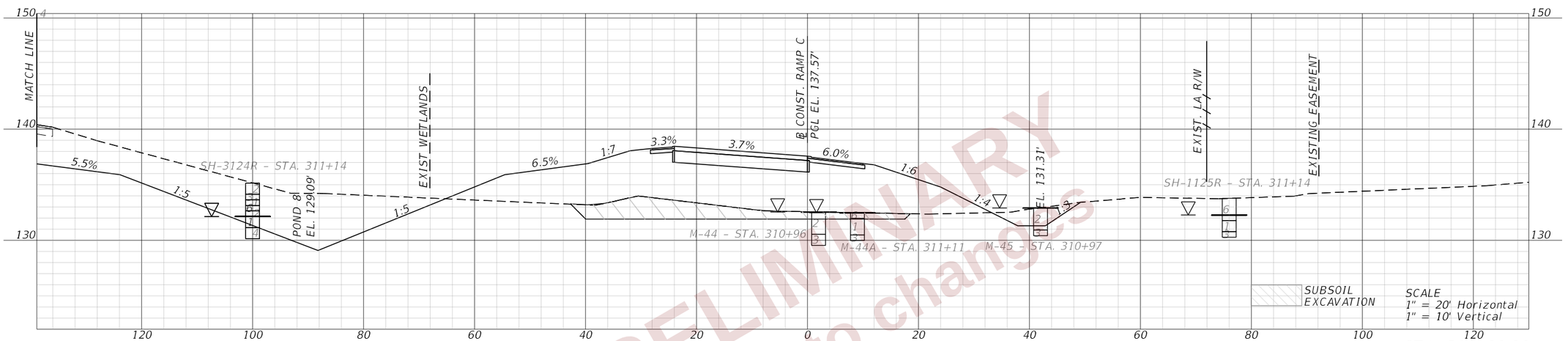

STA. 311+00.00

BEGIN SUBSOIL EXCAVATION

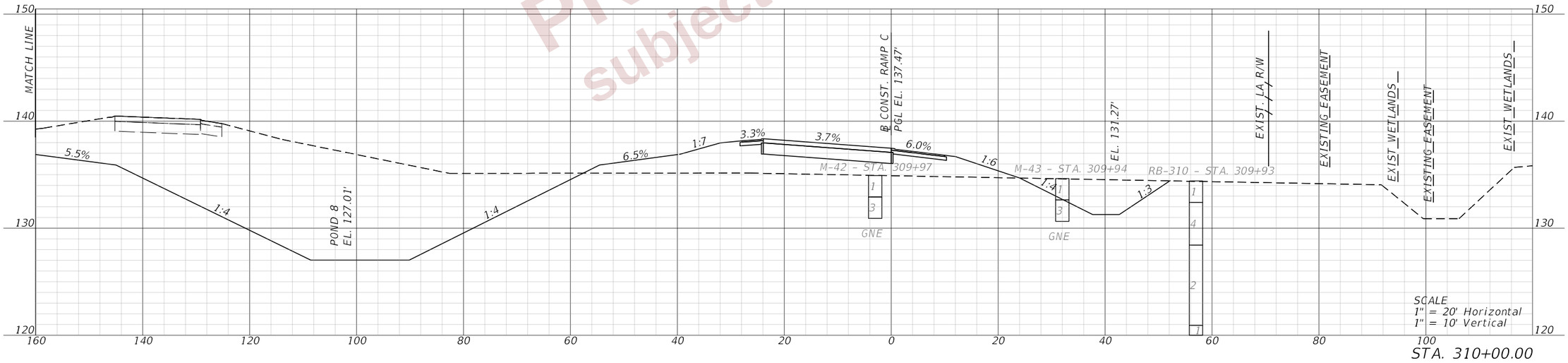

STA. 310+00.00

PRELIMINARY
subject to changes

REVISIONS				ENGINEER OF RECORD	STATE OF FLORIDA DEPARTMENT OF TRANSPORTATION			CROSS SECTIONS (59) RAMP C	SHEET NO.
DATE	DESCRIPTION	DATE	DESCRIPTION	DEBANANDA PANIGRAHI, P.E. LICENSE NUMBER 68318 H. W. LOCHNER 4300 W. CYPRESS STREET, SUITE 500 TAMPA, FLORIDA 33607	ROAD NO.	COUNTY	FINANCIAL PROJECT ID		398
					SR 400	POLK	430185-3-52-01		

THE OFFICIAL RECORD OF THIS SHEET IS THE ELECTRONIC FILE DIGITALLY SIGNED AND SEALED UNDER RULE 61G15-23.004, F.A.C.

2/28/2024 11:35:12 AM JTAGLIAFERRO
c:\pw_working\lochner-pw-01\dms18802\RDXSRD03.dgn

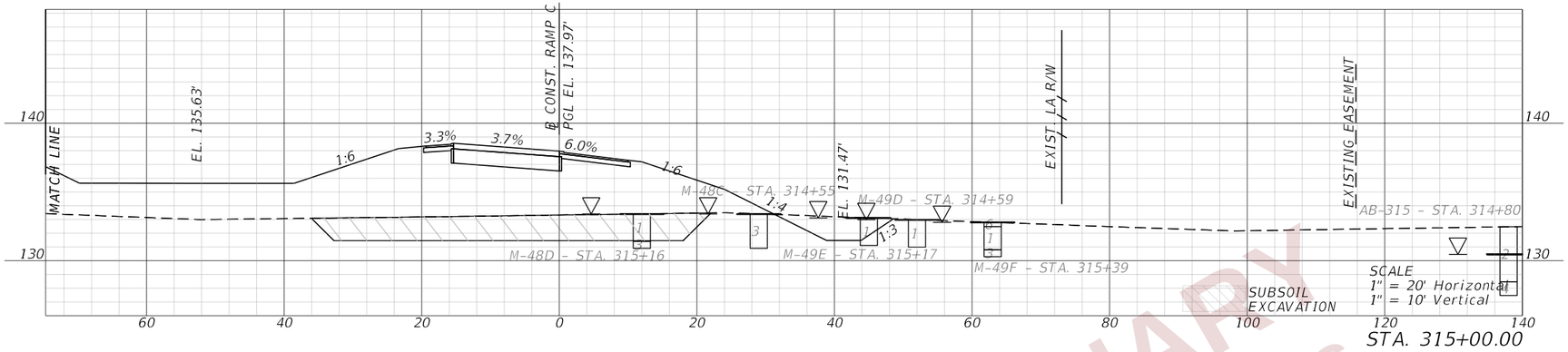

STA. 315+00.00

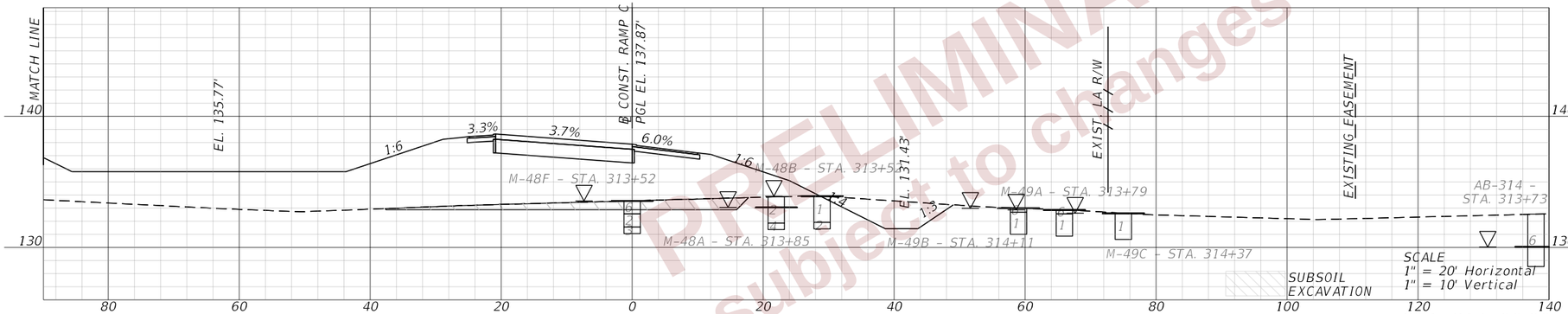

STA. 314+00.00

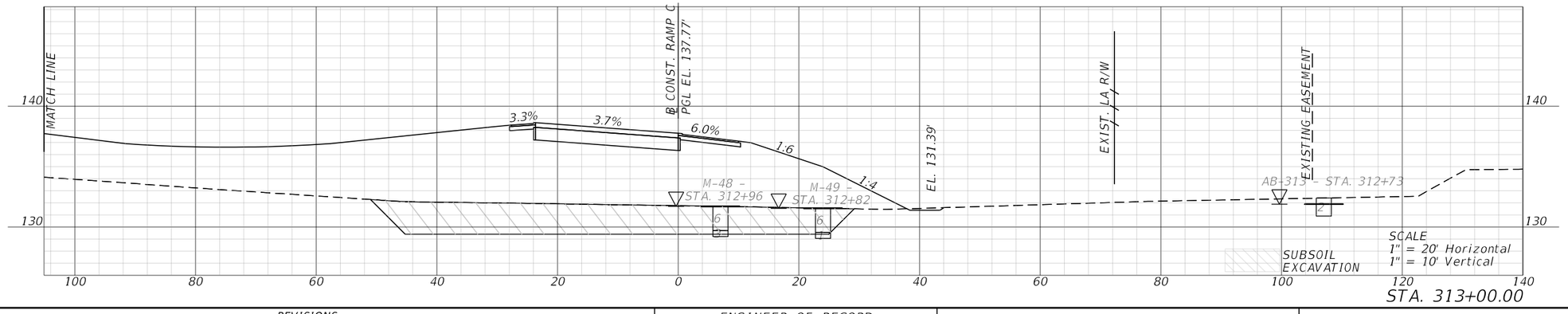

STA. 313+00.00

PRELIMINARY
Subject to changes

REVISIONS			
DATE	DESCRIPTION	DATE	DESCRIPTION

ENGINEER OF RECORD

DEBANANDA PANIGRAHI, P.E.
LICENSE NUMBER 68318
H. W. LOCHNER
4300 W. CYPRESS STREET, SUITE 500
TAMPA, FLORIDA 33607

STATE OF FLORIDA
DEPARTMENT OF TRANSPORTATION

ROAD NO.	COUNTY	FINANCIAL PROJECT ID
SR 400	POLK	430185-3-52-01

CROSS SECTIONS (60)
RAMP C

SHEET NO. 399

THE OFFICIAL RECORD OF THIS SHEET IS THE ELECTRONIC FILE DIGITALLY SIGNED AND SEALED UNDER RULE 61G15-23.004, F.A.C.

2/28/2024 11:35:16 AM JTAGLIAFERRO
c:\pw_working\lochner-pw-01\dms18802\RDYSRD03.dgn

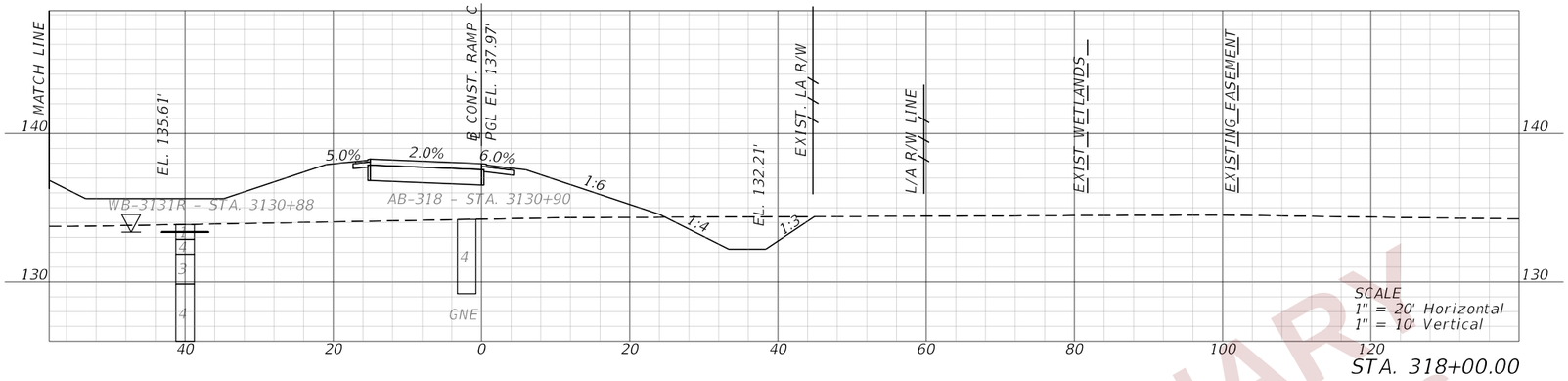

STA. 318+00.00

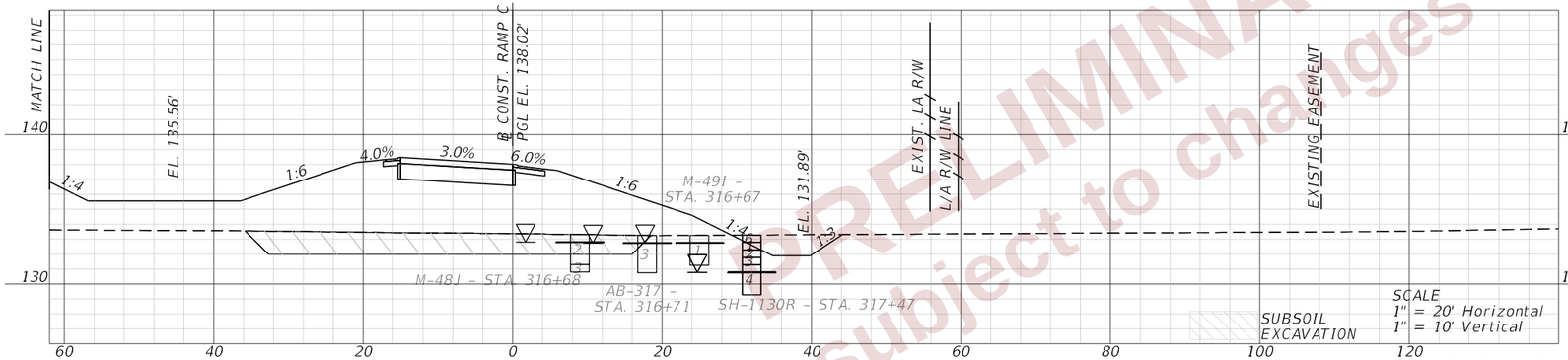

STA. 317+00.00

END SUBSOIL EXCAVATION
STA. 317+10.00

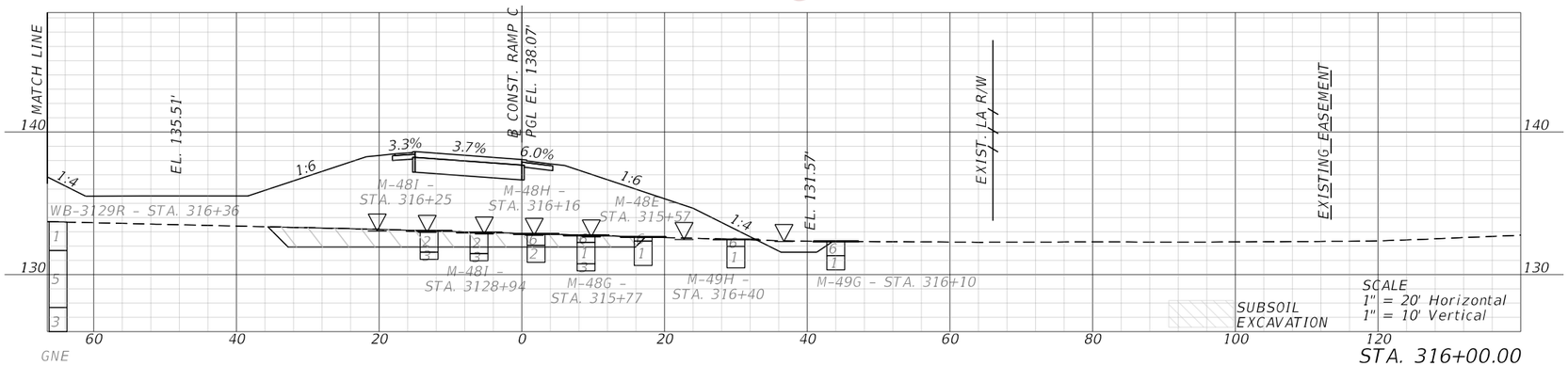

STA. 316+00.00

PRELIMINARY
Subject to changes

REVISIONS				ENGINEER OF RECORD	STATE OF FLORIDA DEPARTMENT OF TRANSPORTATION			CROSS SECTIONS (61) RAMP C	SHEET NO.
DATE	DESCRIPTION	DATE	DESCRIPTION	DEBANANDA PANIGRAHI, P.E. LICENSE NUMBER 68318 H. W. LOCHNER 4300 W. CYPRESS STREET, SUITE 500 TAMPA, FLORIDA 33607	ROAD NO.	COUNTY	FINANCIAL PROJECT ID		400
					SR 400	POLK	430185-3-52-01		

THE OFFICIAL RECORD OF THIS SHEET IS THE ELECTRONIC FILE DIGITALLY SIGNED AND SEALED UNDER RULE 61G15-23.004, F.A.C.

2/28/2024 11:35:21 AM JTAGLIAFERRO
c:\pw_working\lochner-pw-01\dms18802\RDYSRD03.dgn

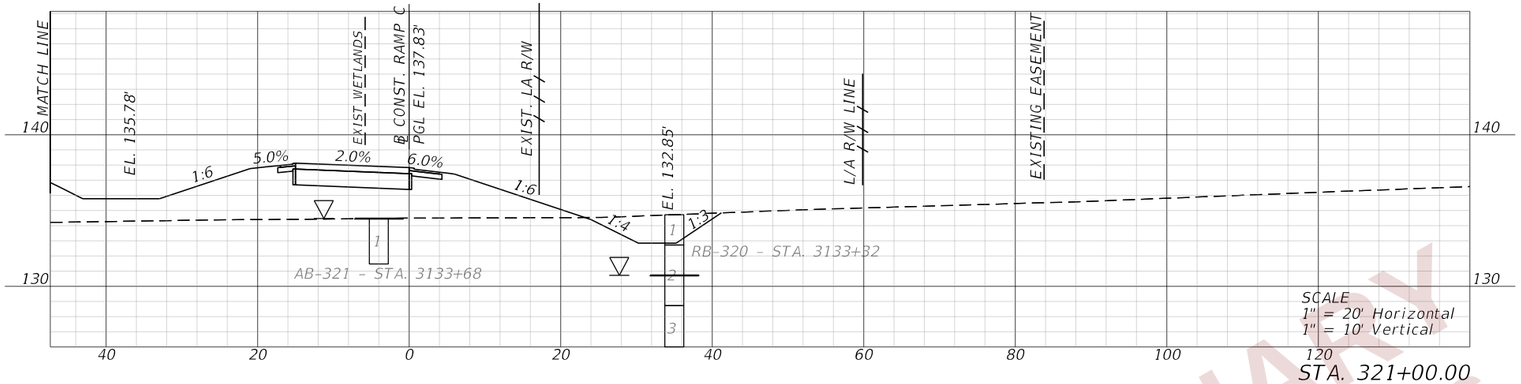

STA. 321+00.00

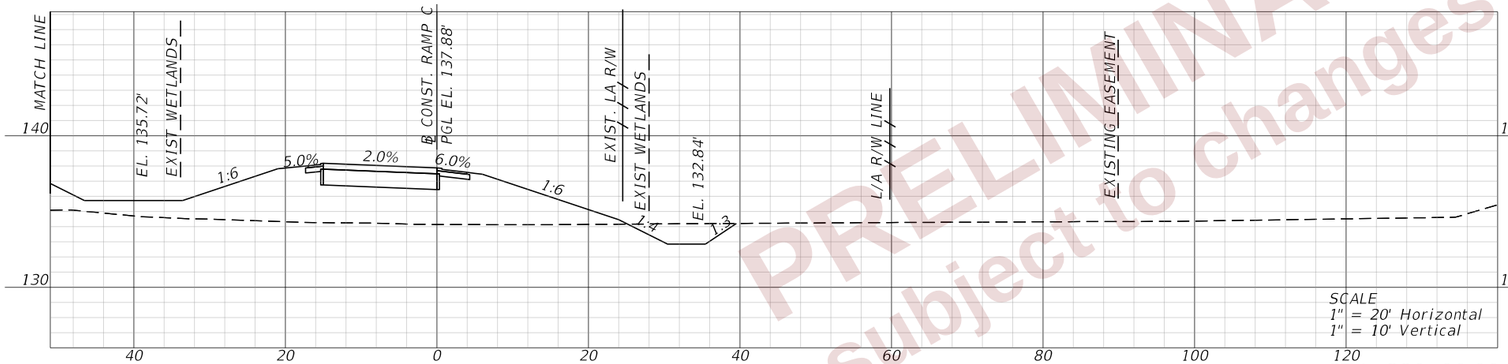

STA. 320+00.00

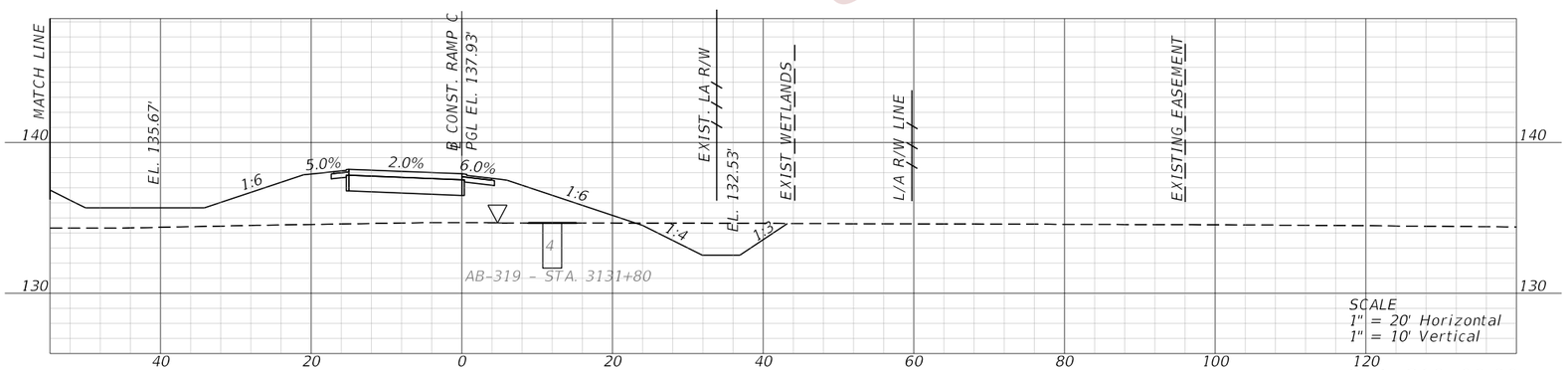

STA. 319+00.00

PRELIMINARY
Subject to changes

REVISIONS				ENGINEER OF RECORD	STATE OF FLORIDA DEPARTMENT OF TRANSPORTATION			CROSS SECTIONS (62) RAMP C	SHEET NO.
DATE	DESCRIPTION	DATE	DESCRIPTION	DEBANANDA PANIGRAHI, P.E. LICENSE NUMBER 68318 H. W. LOCHNER 4300 W. CYPRESS STREET, SUITE 500 TAMPA, FLORIDA 33607	ROAD NO.	COUNTY	FINANCIAL PROJECT ID		401
					SR 400	POLK	430185-3-52-01		

THE OFFICIAL RECORD OF THIS SHEET IS THE ELECTRONIC FILE DIGITALLY SIGNED AND SEALED UNDER RULE 61G15-23.004, F.A.C.

2/28/2024 11:35:25 AM JTAGLIAFERRO
c:\pw_working\lochner-pw-01\dms18802\RDXSRD03.dgn

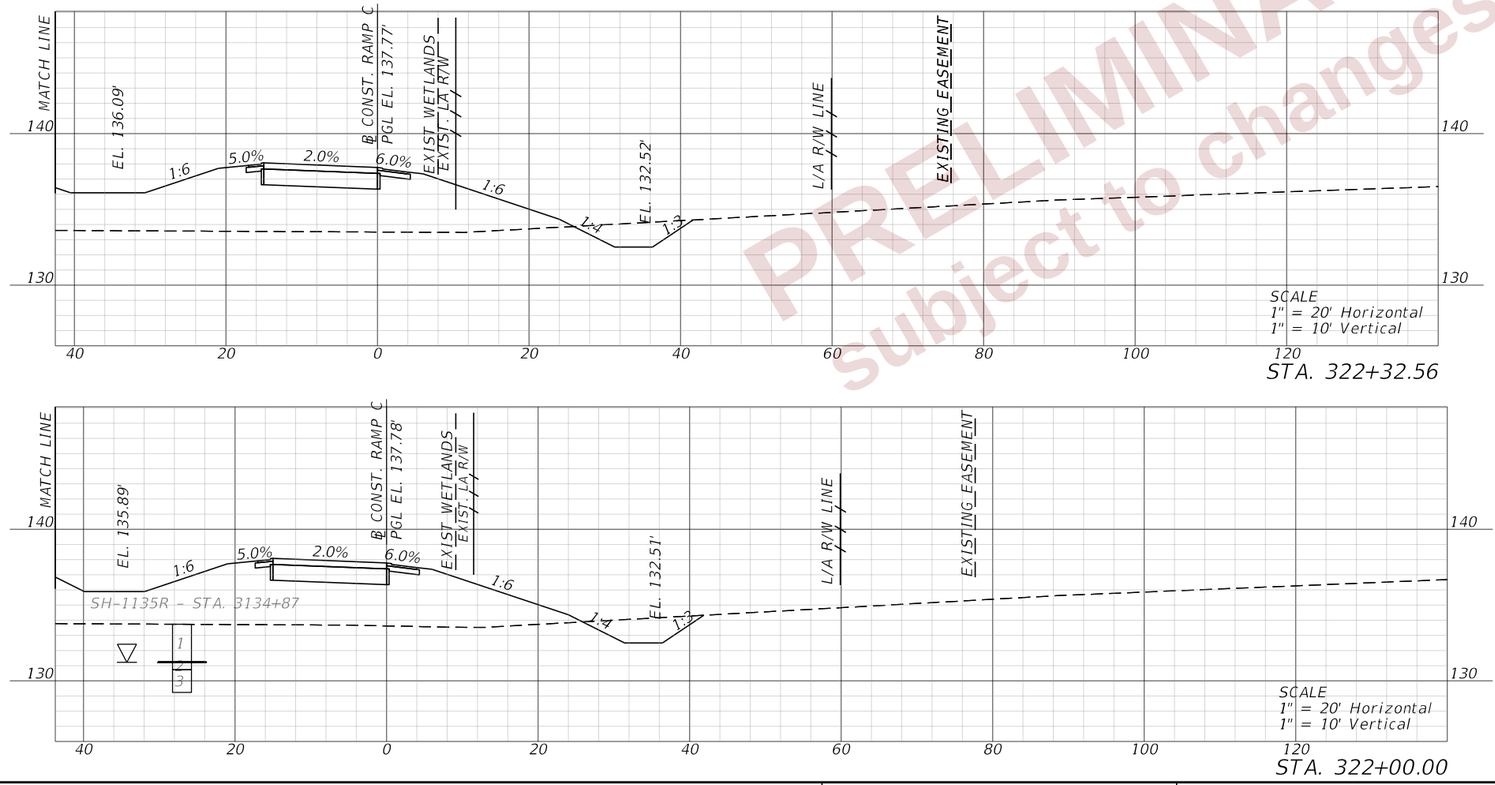

STA. 322+32.56

STA. 322+00.00

PRELIMINARY
Subject to changes

REVISIONS			
DATE	DESCRIPTION	DATE	DESCRIPTION

ENGINEER OF RECORD

DEBANANDA PANIGRAHI, P.E.
LICENSE NUMBER 68318
H. W. LOCHNER
4300 W. CYPRESS STREET, SUITE 500
TAMPA, FLORIDA 33607

STATE OF FLORIDA
DEPARTMENT OF TRANSPORTATION

ROAD NO.	COUNTY	FINANCIAL PROJECT ID
SR 400	POLK	430185-3-52-01

CROSS SECTIONS (63)
RAMP C

SHEET NO. 402

THE OFFICIAL RECORD OF THIS SHEET IS THE ELECTRONIC FILE DIGITALLY SIGNED AND SEALED UNDER RULE 61G15-23.004, F.A.C.

2/28/2024 11:35:28 AM JTAGLIAFERRO
c:\pw_working\lochner-pw-01\dms18802\RDXSRD03.dgn

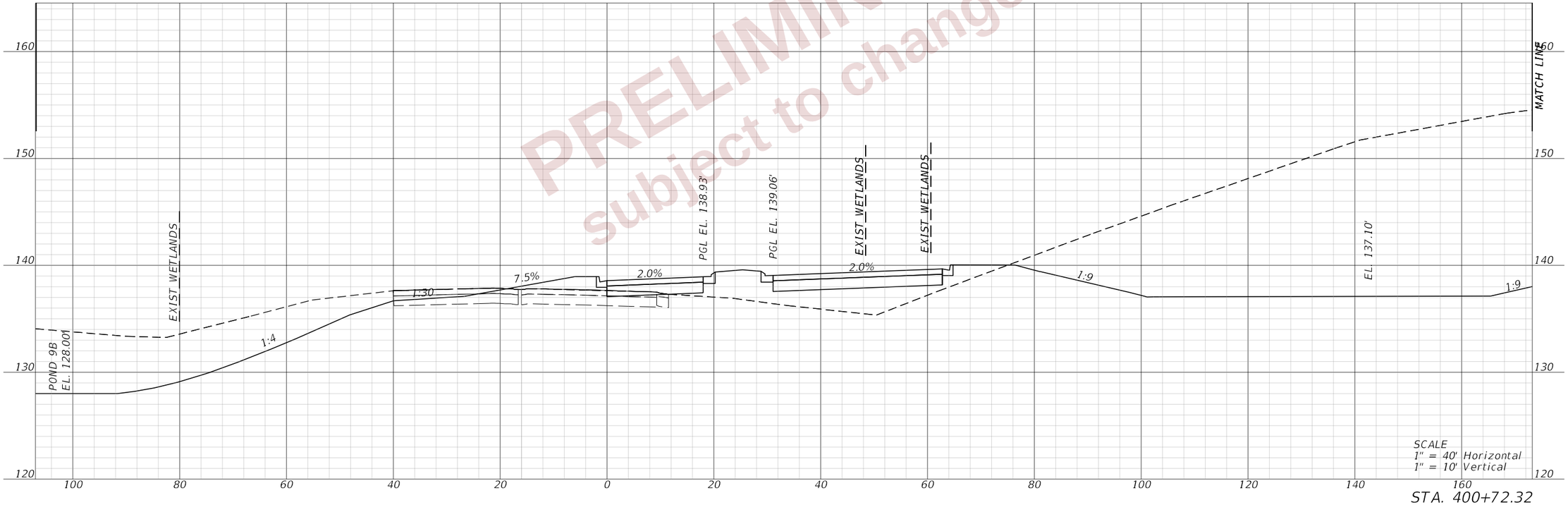

STA. 400+72.32

PRELIMINARY
subject to changes

REVISIONS			
DATE	DESCRIPTION	DATE	DESCRIPTION

ENGINEER OF RECORD
DEBANANDA PANIGRAHI, P.E.
LICENSE NUMBER 68318
H. W. LOCHNER
4300 W. CYPRESS STREET, SUITE 500
TAMPA, FLORIDA 33607

STATE OF FLORIDA
DEPARTMENT OF TRANSPORTATION

ROAD NO.	COUNTY	FINANCIAL PROJECT ID
SR 400	POLK	430185-3-52-01

CROSS SECTIONS (64)
RAMP D

SHEET NO. 403

THE OFFICIAL RECORD OF THIS SHEET IS THE ELECTRONIC FILE DIGITALLY SIGNED AND SEALED UNDER RULE 61G15-23.004, F.A.C.

2/28/2024 11:35:30 AM JTAGLIAFERRO
c:\pw_working\lochner-pw-01\dms18802\RDYSRD03.dgn

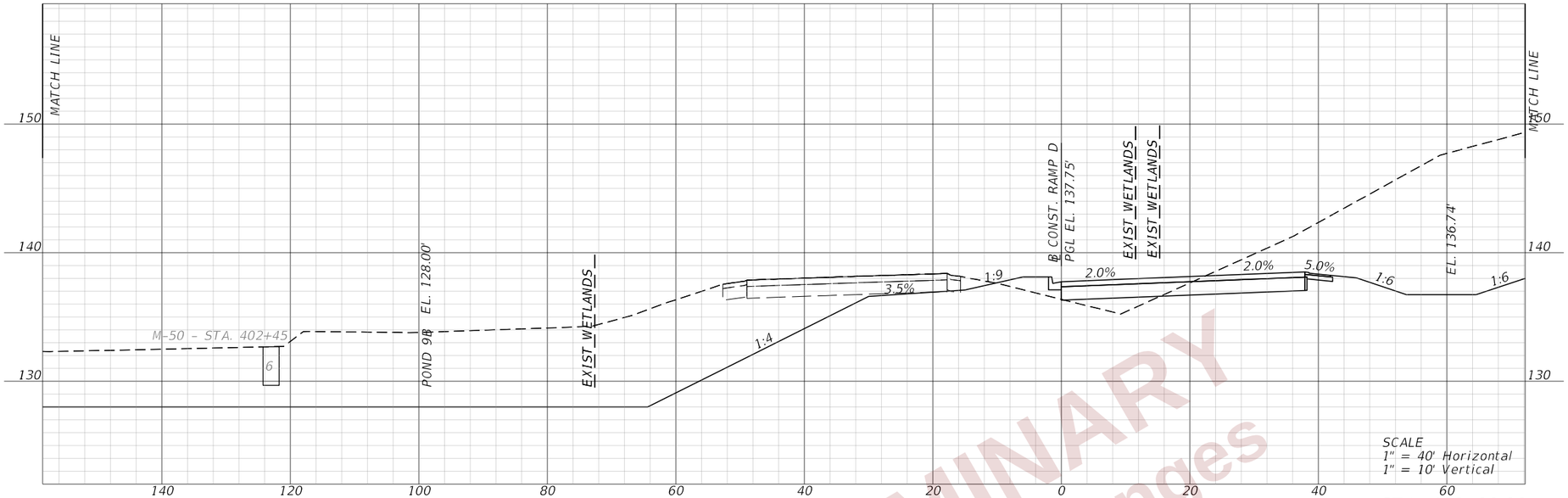

STA. 402+00.00

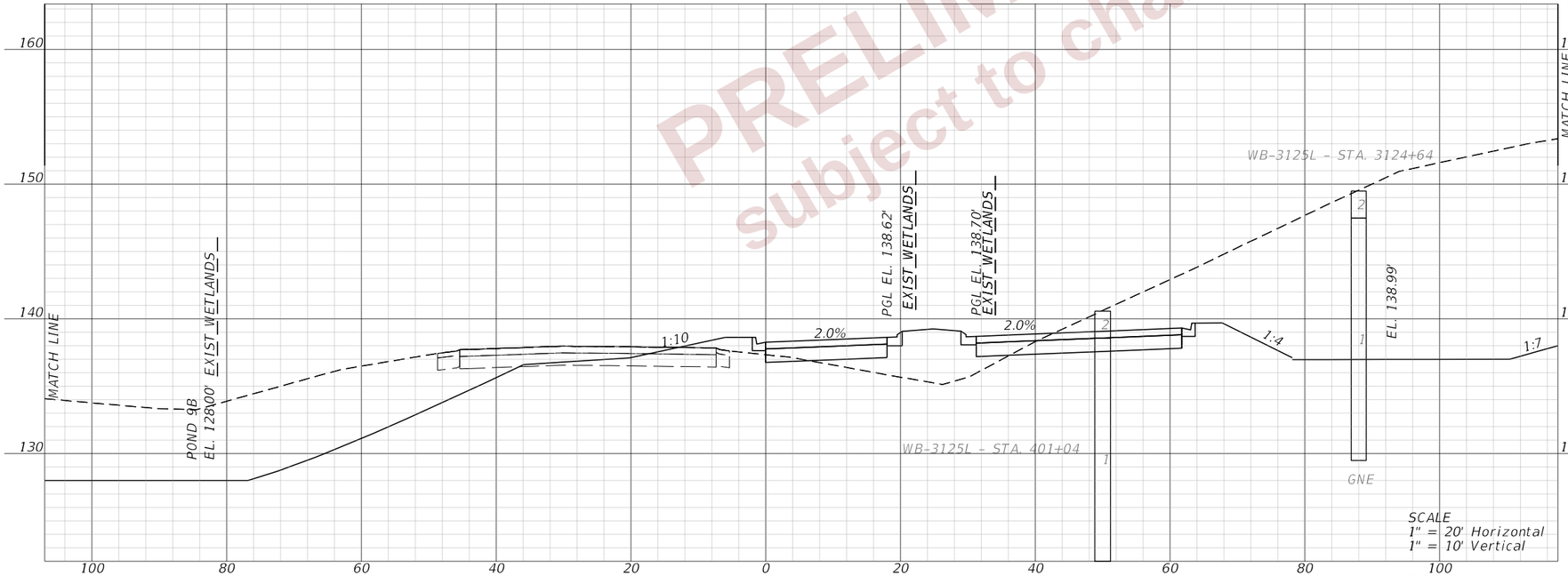

STA. 401+00.00

PRELIMINARY
subject to changes

REVISIONS			
DATE	DESCRIPTION	DATE	DESCRIPTION

ENGINEER OF RECORD
DEBANANDA PANIGRAHI, P.E.
LICENSE NUMBER 68318
H. W. LOCHNER
4300 W. CYPRESS STREET, SUITE 500
TAMPA, FLORIDA 33607

STATE OF FLORIDA
DEPARTMENT OF TRANSPORTATION

ROAD NO.	COUNTY	FINANCIAL PROJECT ID
SR 400	POLK	430185-3-52-01

CROSS SECTIONS (65)
RAMP D

SHEET NO. 404

THE OFFICIAL RECORD OF THIS SHEET IS THE ELECTRONIC FILE DIGITALLY SIGNED AND SEALED UNDER RULE 61G15-23.004, F.A.C.

2/28/2024 11:35:33 AM JTAGLIAFERRO
c:\pw_working\lochner-pw-01\dms18802\RDXSRD03.dgn

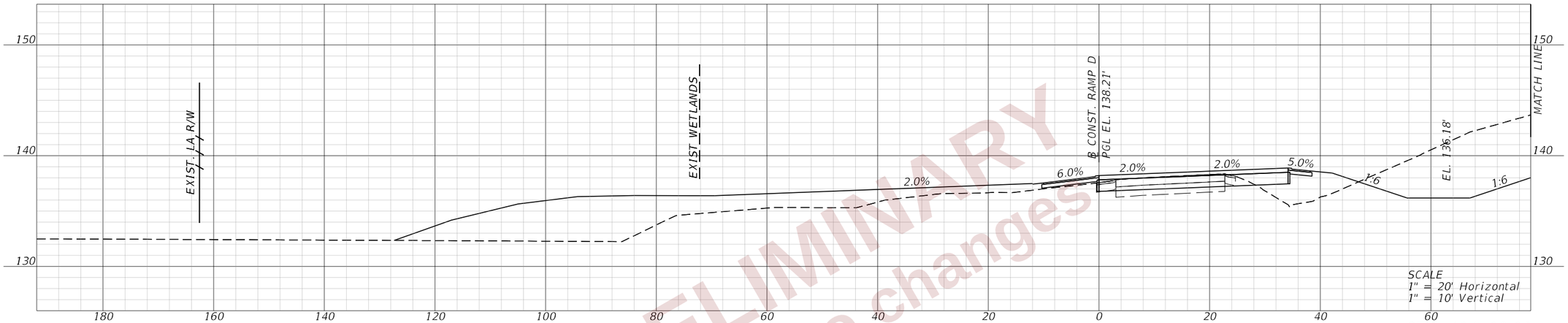

STA. 404+00.00

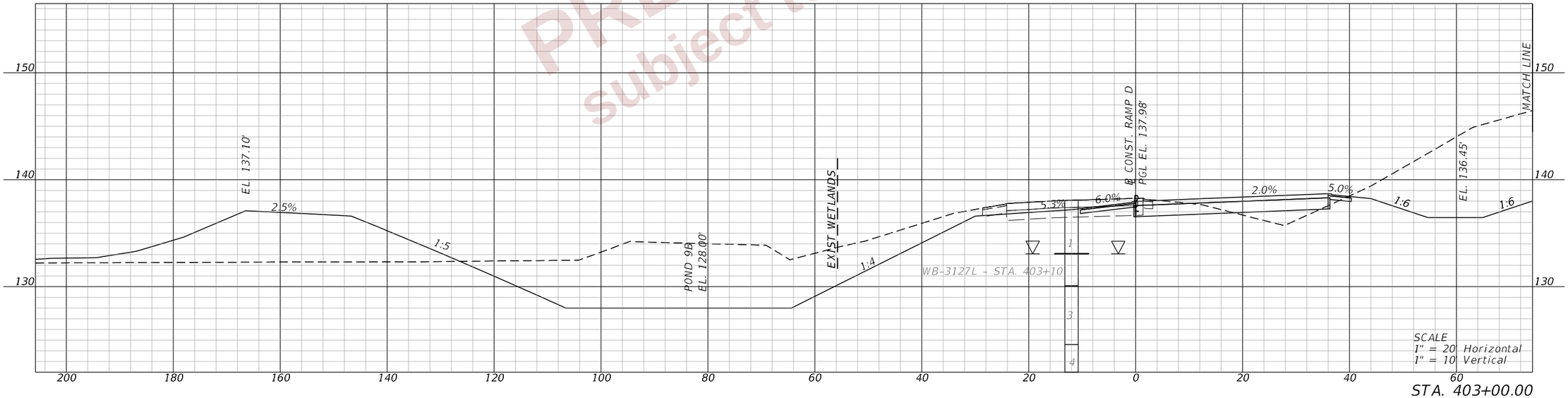

STA. 403+00.00

PRELIMINARY
subject to changes

REVISIONS			
DATE	DESCRIPTION	DATE	DESCRIPTION

ENGINEER OF RECORD

DEBANANDA PANIGRAHI, P.E.
LICENSE NUMBER 68318
H. W. LOCHNER
4300 W. CYPRESS STREET, SUITE 500
TAMPA, FLORIDA 33607

STATE OF FLORIDA
DEPARTMENT OF TRANSPORTATION

ROAD NO.	COUNTY	FINANCIAL PROJECT ID
SR 400	POLK	430185-3-52-01

CROSS SECTIONS (66)
RAMP D

SHEET NO. 405

THE OFFICIAL RECORD OF THIS SHEET IS THE ELECTRONIC FILE DIGITALLY SIGNED AND SEALED UNDER RULE 61G15-23.004, F.A.C.

2/28/2024 11:35:36 AM JTAGLIAFERRO
c:\pw_working\lochner-pw-01\dms18802\RDXSRD03.dgn

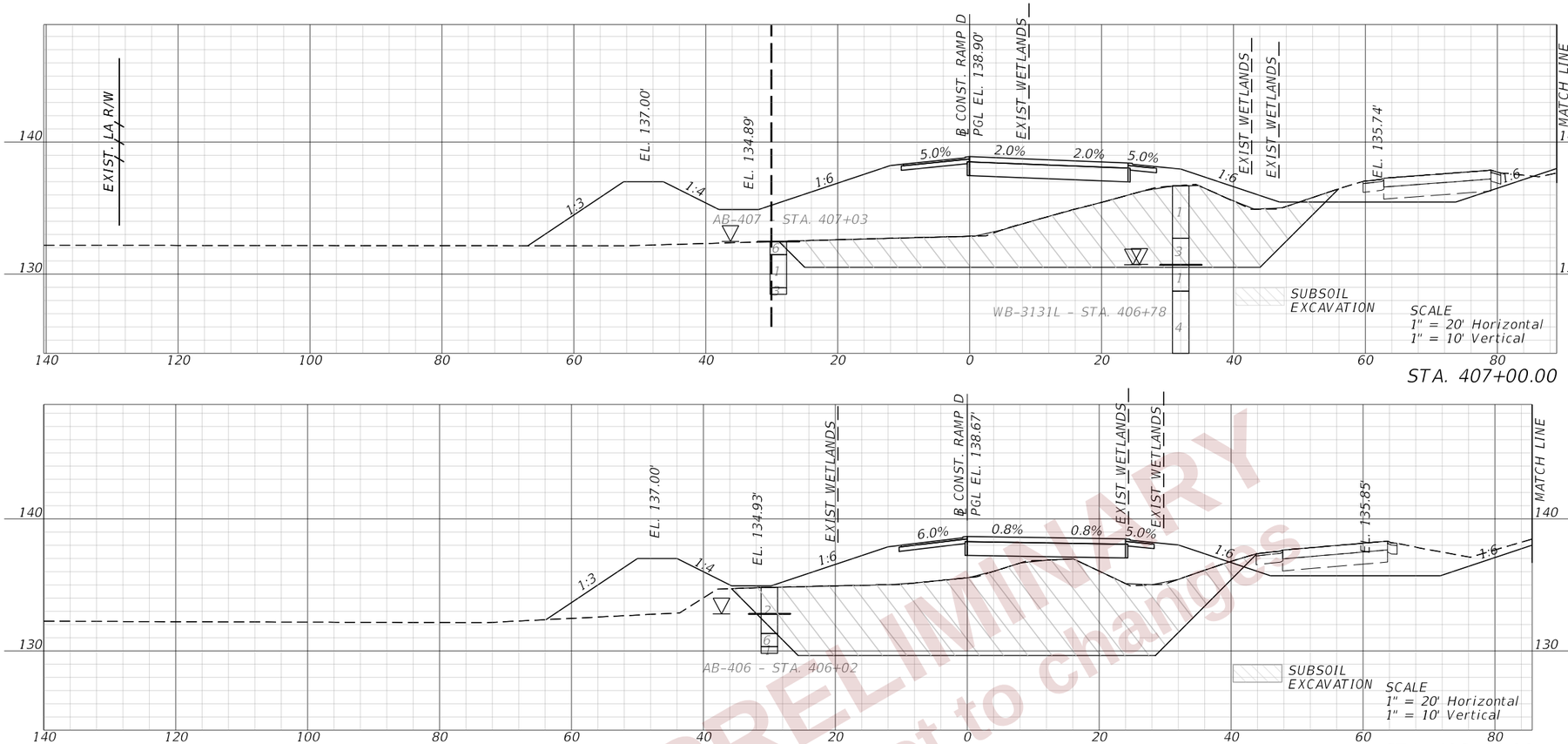

PRELIMINARY
subject to changes

THE OFFICIAL RECORD OF THIS SHEET IS THE ELECTRONIC FILE DIGITALLY SIGNED AND SEALED UNDER RULE 61G15-23.004, F.A.C.

2/28/2024 11:35:41 AM JTAGLIAFERRO
c:\pw_working\lochner-pw-01\dms18802\RDXSRD03.dgn

REVISIONS				ENGINEER OF RECORD	STATE OF FLORIDA DEPARTMENT OF TRANSPORTATION			CROSS SECTIONS (67) RAMP D	SHEET NO.
DATE	DESCRIPTION	DATE	DESCRIPTION	DEBANANDA PANIGRAHI, P.E. LICENSE NUMBER 68318 H. W. LOCHNER 4300 W. CYPRESS STREET, SUITE 500 TAMPA, FLORIDA 33607	ROAD NO.	COUNTY	FINANCIAL PROJECT ID		406
					SR 400	POLK	430185-3-52-01		

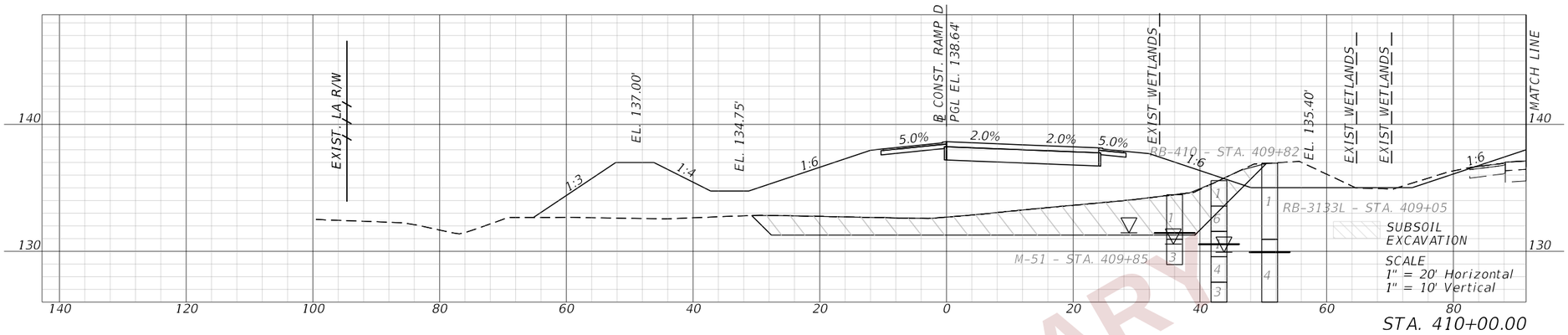

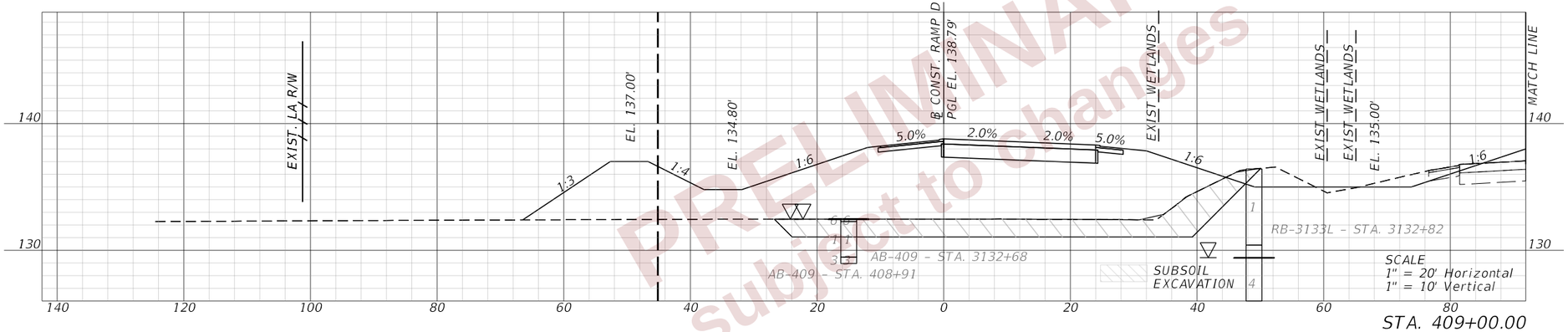

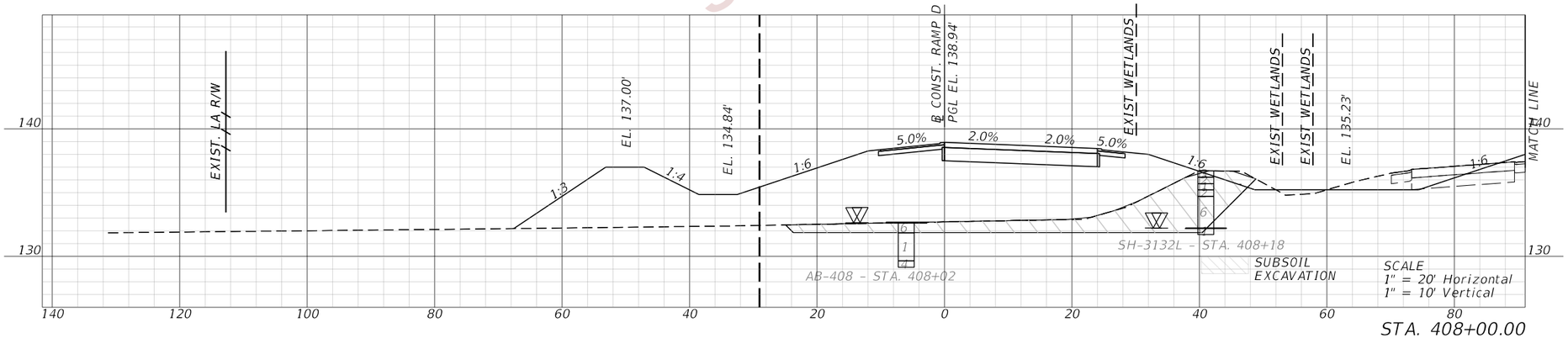

PRELIMINARY
Subject to Changes

REVISIONS				ENGINEER OF RECORD	STATE OF FLORIDA DEPARTMENT OF TRANSPORTATION			CROSS SECTIONS (68) RAMP D	SHEET NO.
DATE	DESCRIPTION	DATE	DESCRIPTION	DEBANANDA PANIGRAHI, P.E. LICENSE NUMBER 68318 H. W. LOCHNER 4300 W. CYPRESS STREET, SUITE 500 TAMPA, FLORIDA 33607	ROAD NO.	COUNTY	FINANCIAL PROJECT ID		407
					SR 400	POLK	430185-3-52-01		

THE OFFICIAL RECORD OF THIS SHEET IS THE ELECTRONIC FILE DIGITALLY SIGNED AND SEALED UNDER RULE 61G15-23.004, F.A.C.

2/28/2024 11:35:45 AM JTAGLIAFERRO
c:\pw_working\lochner-pw-01\dms18802\RDXSRD03.dgn

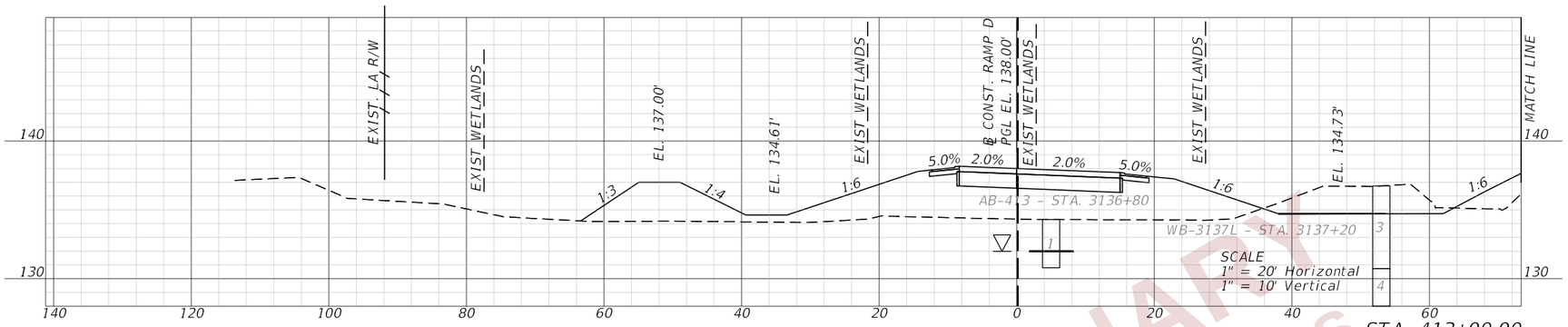

STA. 413+00.00

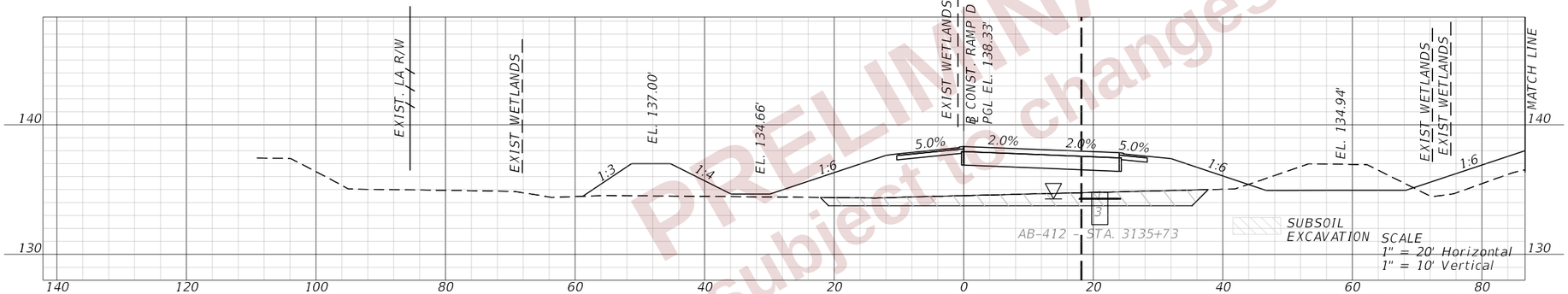

STA. 412+00.00
END SUBSOIL EXCAVATION

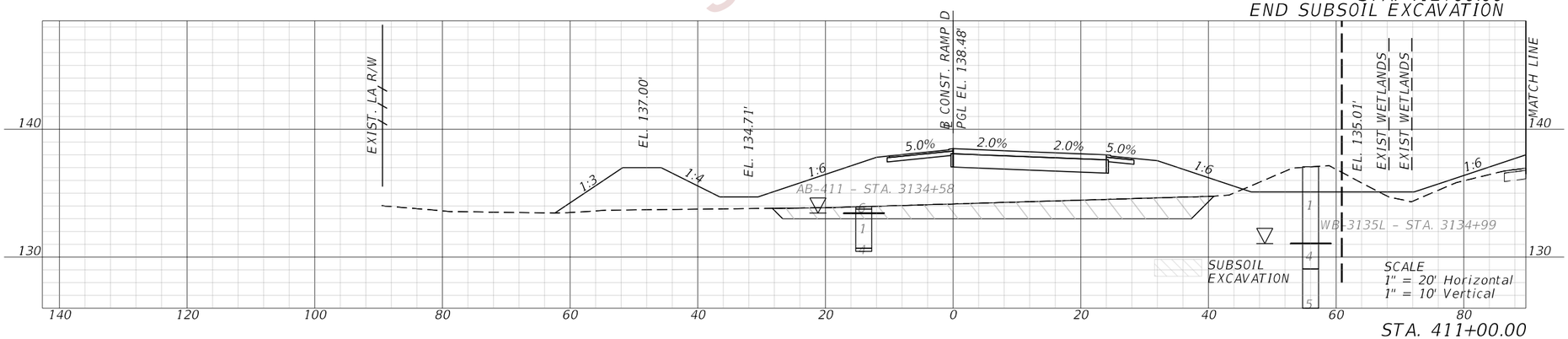

STA. 411+00.00

PRELIMINARY
Subject to changes

REVISIONS			
DATE	DESCRIPTION	DATE	DESCRIPTION

ENGINEER OF RECORD
DEBANANDA PANIGRAHI, P.E.
LICENSE NUMBER 68318
H. W. LOCHNER
4300 W. CYPRESS STREET, SUITE 500
TAMPA, FLORIDA 33607

STATE OF FLORIDA
DEPARTMENT OF TRANSPORTATION

ROAD NO.	COUNTY	FINANCIAL PROJECT ID
SR 400	POLK	430185-3-52-01

CROSS SECTIONS (69)
RAMP D

SHEET NO. 408

THE OFFICIAL RECORD OF THIS SHEET IS THE ELECTRONIC FILE DIGITALLY SIGNED AND SEALED UNDER RULE 61G15-23.004, F.A.C.

2/28/2024 11:35:49 AM JTAGLIAFERRO
c:\pw_working\lochner-pw-01\dms18802\RDXSRD03.dgn

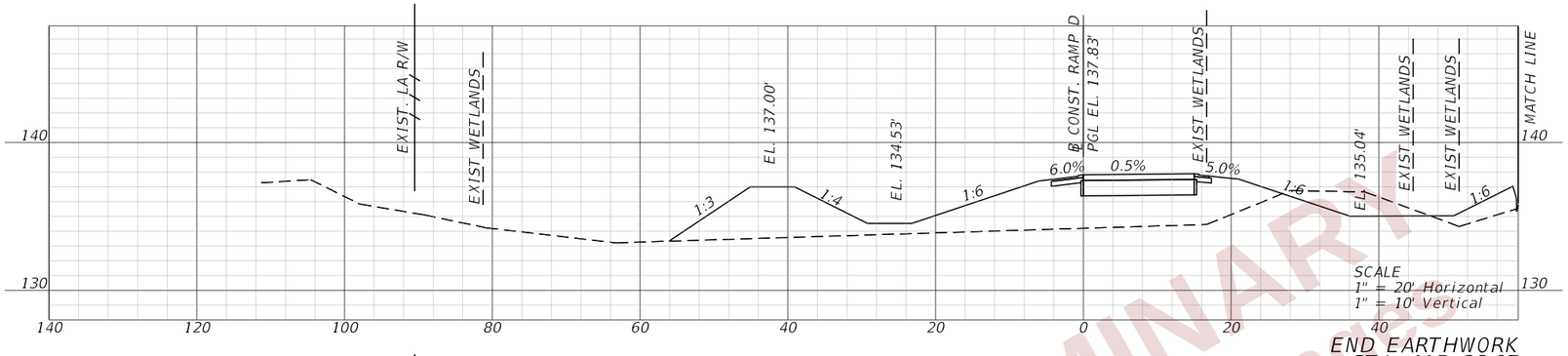

END EARTHWORK
STA. 415+28.97

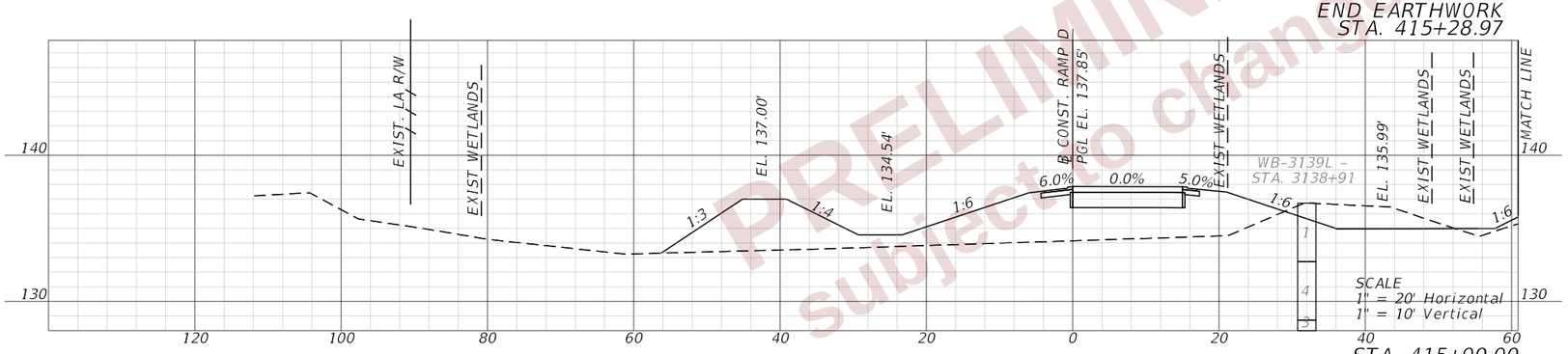

STA. 415+00.00

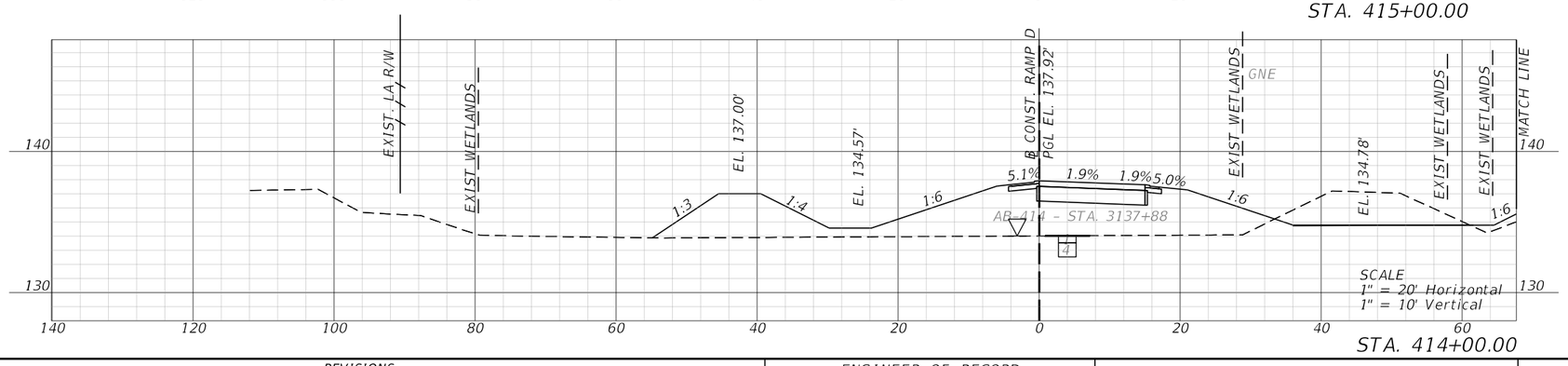

STA. 414+00.00

PRELIMINARY
subject to changes

REVISIONS			
DATE	DESCRIPTION	DATE	DESCRIPTION

ENGINEER OF RECORD

DEBANANDA PANIGRAHI, P.E.
LICENSE NUMBER 68318
H. W. LOCHNER
4300 W. CYPRESS STREET, SUITE 500
TAMPA, FLORIDA 33607

STATE OF FLORIDA
DEPARTMENT OF TRANSPORTATION

ROAD NO.	COUNTY	FINANCIAL PROJECT ID
SR 400	POLK	430185-3-52-01

CROSS SECTIONS (70)
RAMP D

SHEET NO. 409

THE OFFICIAL RECORD OF THIS SHEET IS THE ELECTRONIC FILE DIGITALLY SIGNED AND SEALED UNDER RULE 61G15-23.004, F.A.C.

2/28/2024 11:35:53 AM JTAGLIAFERRO
c:\pw_working\lochner-pw-01\dms18802\RDYSRD03.dgn

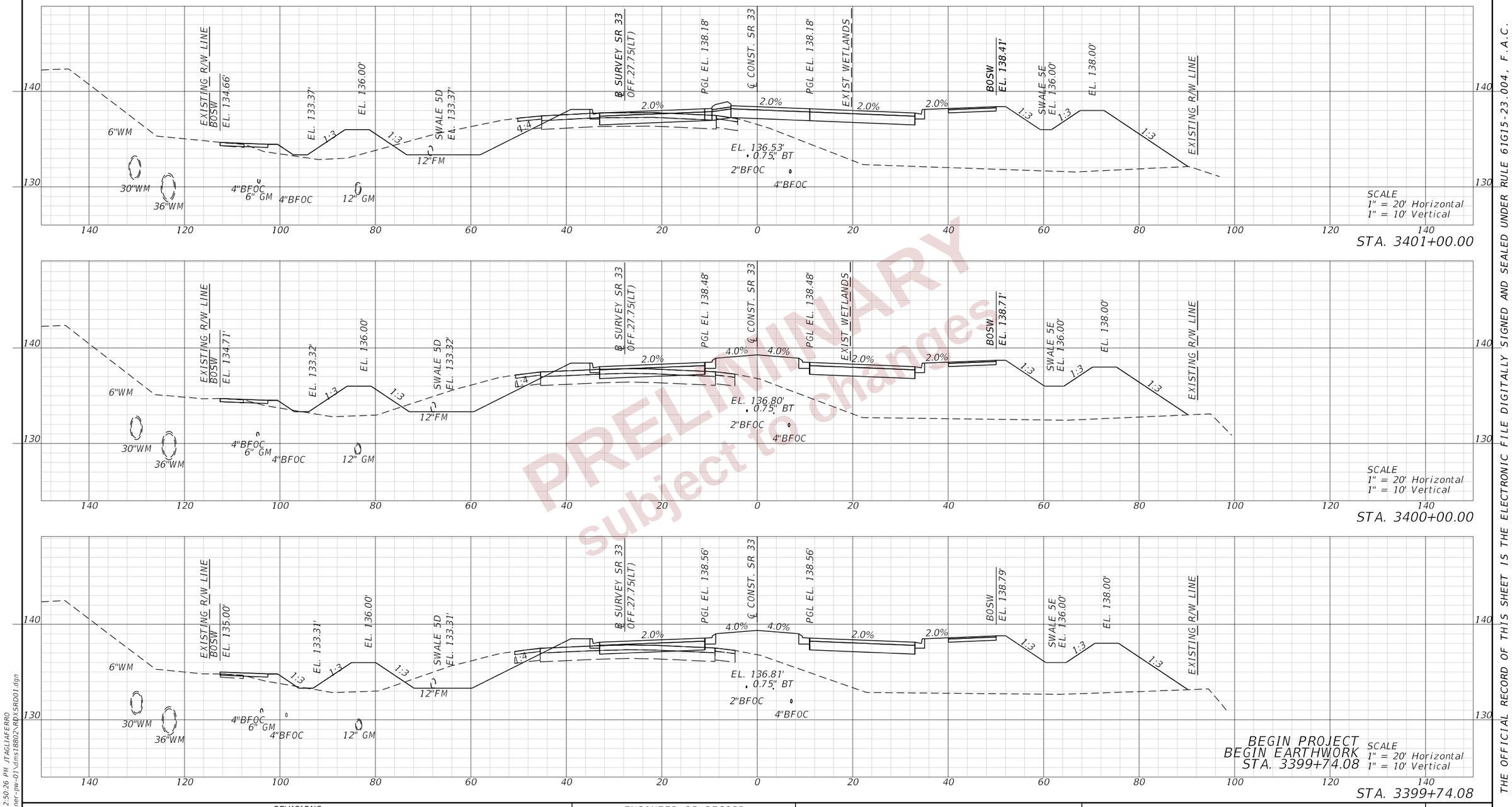

PRELIMINARY
subject to changes

THE OFFICIAL RECORD OF THIS SHEET IS THE ELECTRONIC FILE DIGITALLY SIGNED AND SEALED UNDER RULE 61G15-23.004, F.A.C.

2/28/2024 12:50:26 PM JTAGLIAFERRO
c:\pw_working\lochner-pw-01\dms18802\RDXSRD01.dgn

REVISIONS				ENGINEER OF RECORD	STATE OF FLORIDA DEPARTMENT OF TRANSPORTATION			CROSS SECTIONS (71) SR 33	SHEET NO.
DATE	DESCRIPTION	DATE	DESCRIPTION	DEBANANDA PANIGRAHI, P.E. LICENSE NUMBER 68318 H. W. LOCHNER 4300 W. CYPRESS STREET, SUITE 500 TAMPA, FLORIDA 33607	ROAD NO.	COUNTY	FINANCIAL PROJECT ID		410
					SR 400	POLK	430185-3-52-01		

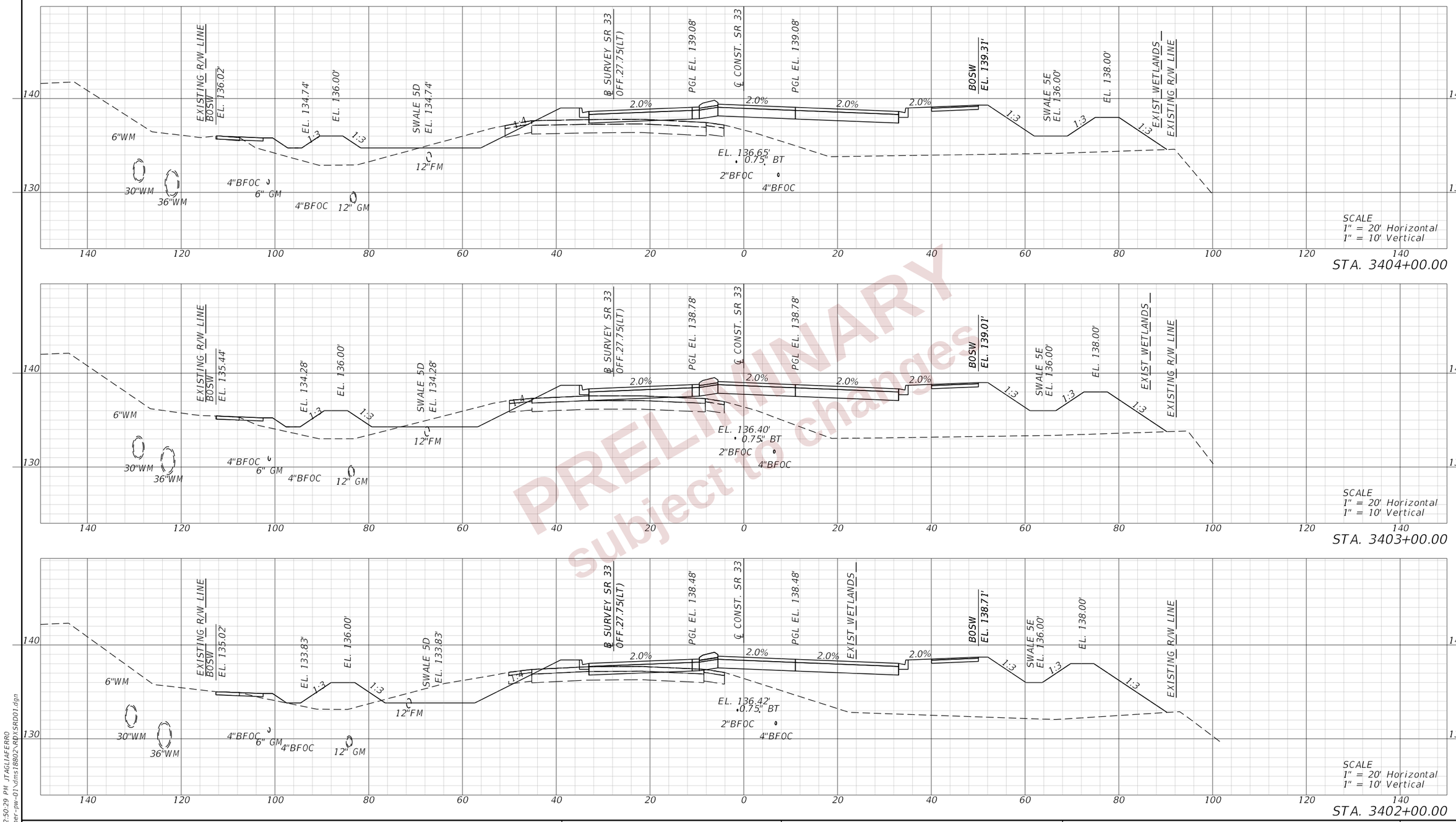

PRELIMINARY
subject to changes

REVISIONS				ENGINEER OF RECORD	STATE OF FLORIDA DEPARTMENT OF TRANSPORTATION			CROSS SECTIONS (72) SR 33	SHEET NO.
DATE	DESCRIPTION	DATE	DESCRIPTION	DEBANANDA PANIGRAHI, P.E. LICENSE NUMBER 68318 H. W. LOCHNER 4300 W. CYPRESS STREET, SUITE 500 TAMPA, FLORIDA 33607	ROAD NO.	COUNTY	FINANCIAL PROJECT ID		411
					SR 400	POLK	430185-3-52-01		

THE OFFICIAL RECORD OF THIS SHEET IS THE ELECTRONIC FILE DIGITALLY SIGNED AND SEALED UNDER RULE 61G15-23.004, F.A.C.

2/28/2024 12:50:29 PM JTAGLIAFERRO
c:\pw_working\lochner-pw-01\dms18802\RDXSRD01.dgn

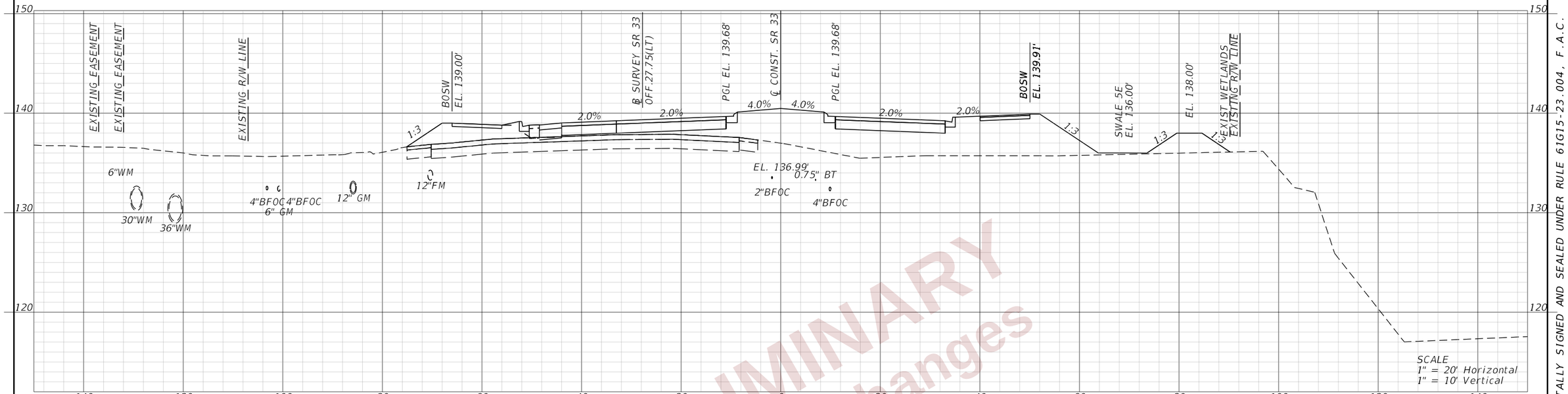

SCALE
1" = 20' Horizontal
1" = 10' Vertical

STA. 3406+00.00

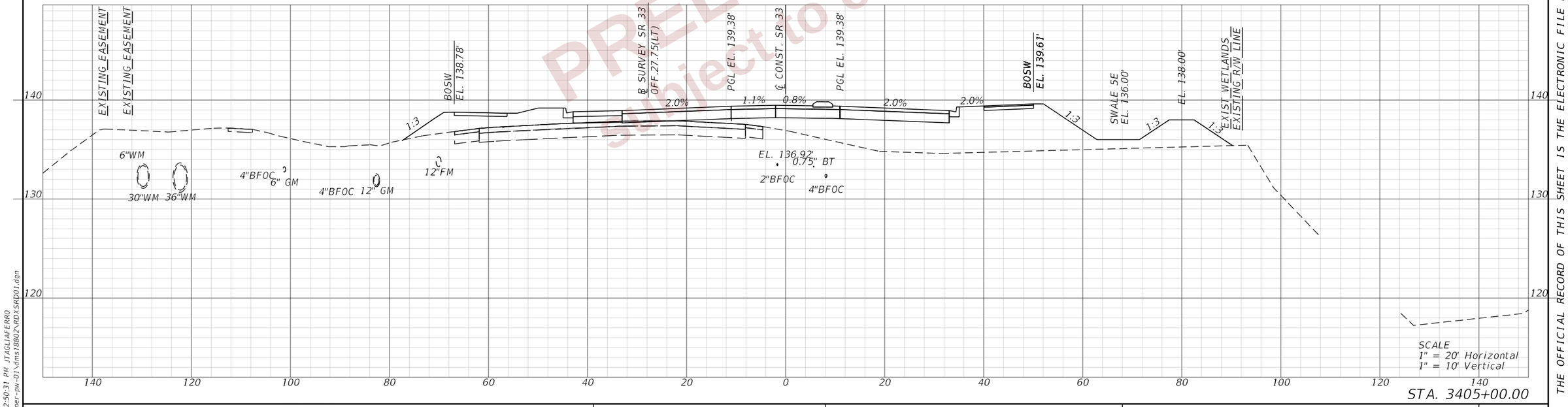

SCALE
1" = 20' Horizontal
1" = 10' Vertical

STA. 3405+00.00

PRELIMINARY
Subject to changes

REVISIONS				ENGINEER OF RECORD	STATE OF FLORIDA DEPARTMENT OF TRANSPORTATION			CROSS SECTIONS (73) SR 33	SHEET NO.
DATE	DESCRIPTION	DATE	DESCRIPTION	DEBANANDA PANIGRAHI, P.E. LICENSE NUMBER 68318 H. W. LOCHNER 4300 W. CYPRESS STREET, SUITE 500 TAMPA, FLORIDA 33607	ROAD NO.	COUNTY	FINANCIAL PROJECT ID		412
					SR 400	POLK	430185-3-52-01		

THE OFFICIAL RECORD OF THIS SHEET IS THE ELECTRONIC FILE DIGITALLY SIGNED AND SEALED UNDER RULE 61G15-23.004, F.A.C.

2/28/2024 12:50:31 PM JTAGLIAFERRO
c:\pw_working\lochner-pw-01\dms18802\RDYSRD01.dgn

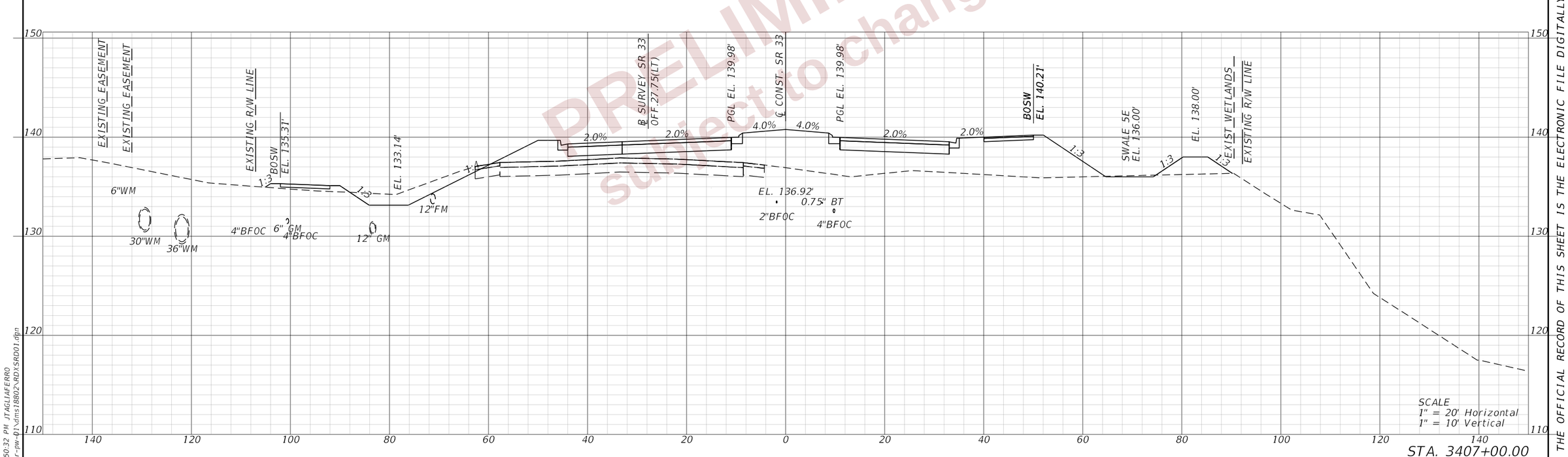

PRELIMINARY
subject to changes

REVISIONS				ENGINEER OF RECORD	STATE OF FLORIDA DEPARTMENT OF TRANSPORTATION			CROSS SECTIONS (74) SR 33	SHEET NO.
DATE	DESCRIPTION	DATE	DESCRIPTION	DEBANANDA PANIGRAHI, P.E. LICENSE NUMBER 68318 H. W. LOCHNER 4300 W. CYPRESS STREET, SUITE 500 TAMPA, FLORIDA 33607	ROAD NO.	COUNTY	FINANCIAL PROJECT ID		413
					SR 400	POLK	430185-3-52-01		

THE OFFICIAL RECORD OF THIS SHEET IS THE ELECTRONIC FILE DIGITALLY SIGNED AND SEALED UNDER RULE 61G15-23.004, F.A.C.

2/28/2024 12:50:32 PM JTAGLIAFERRO
c:\pw_working\lochner-pw-01\dms18802\RDXSRD01.dgn

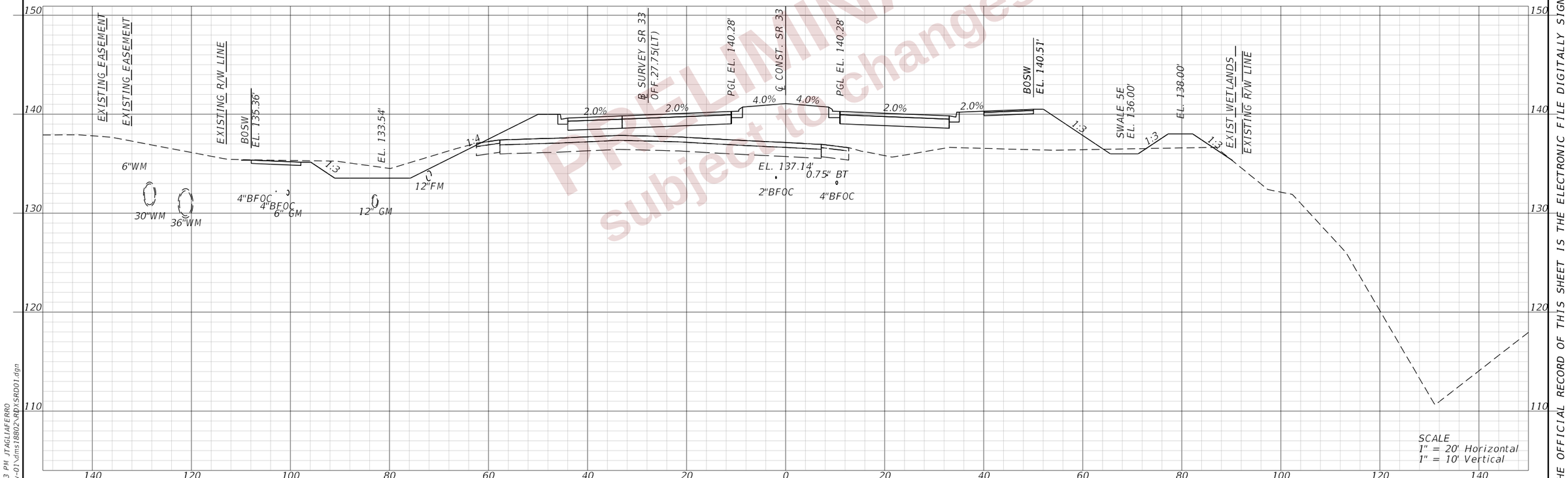

PRELIMINARY
Subject to changes

REVISIONS				ENGINEER OF RECORD	STATE OF FLORIDA DEPARTMENT OF TRANSPORTATION			CROSS SECTIONS (75) SR 33	SHEET NO.
DATE	DESCRIPTION	DATE	DESCRIPTION	DEBANANDA PANIGRAHI, P.E. LICENSE NUMBER 68318 H. W. LOCHNER 4300 W. CYPRESS STREET, SUITE 500 TAMPA, FLORIDA 33607	ROAD NO.	COUNTY	FINANCIAL PROJECT ID		414
					SR 400	POLK	430185-3-52-01		

THE OFFICIAL RECORD OF THIS SHEET IS THE ELECTRONIC FILE DIGITALLY SIGNED AND SEALED UNDER RULE 61G15-23.004, F.A.C.

2/28/2024 12:50:33 PM JTAGLIAFERRO
c:\pw_working\lochner-pw-01\dms18802\RDXSRD01.dgn

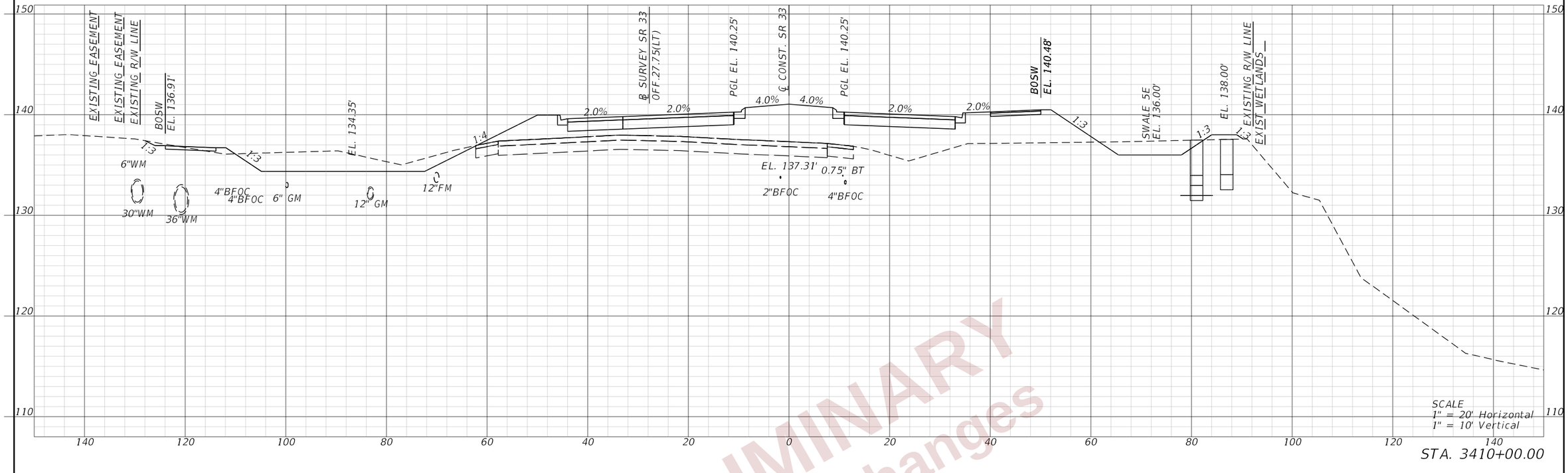

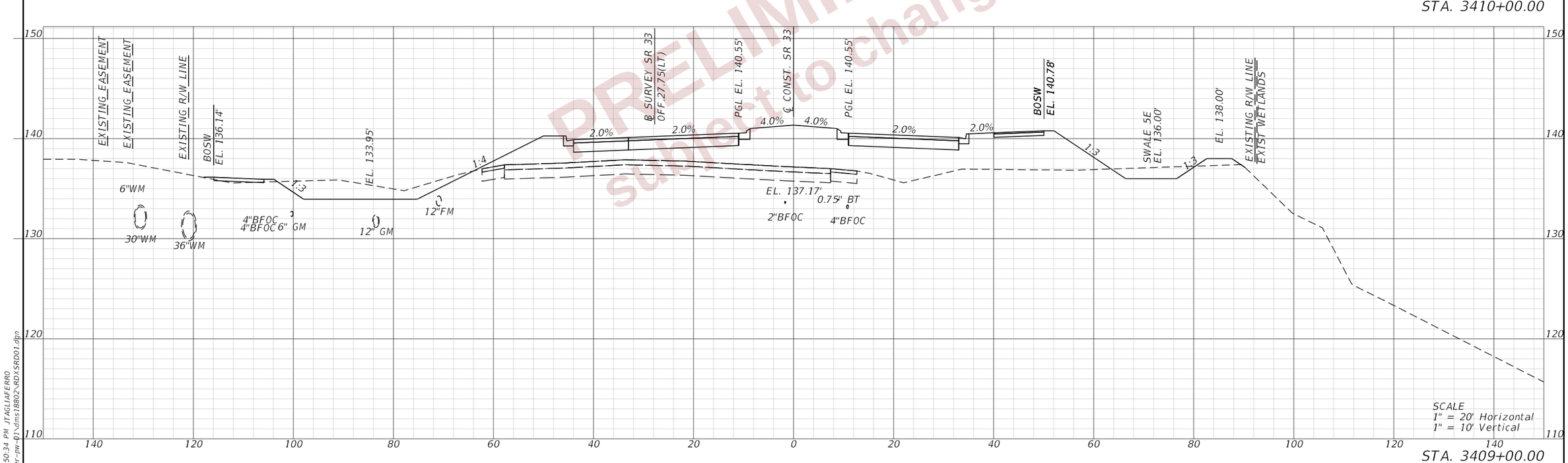

PRELIMINARY
subject to changes

REVISIONS				ENGINEER OF RECORD	STATE OF FLORIDA DEPARTMENT OF TRANSPORTATION			CROSS SECTIONS (76) SR 33	SHEET NO.
DATE	DESCRIPTION	DATE	DESCRIPTION	DEBANANDA PANIGRAHI, P.E. LICENSE NUMBER 68318 H. W. LOCHNER 4300 W. CYPRESS STREET, SUITE 500 TAMPA, FLORIDA 33607	ROAD NO.	COUNTY	FINANCIAL PROJECT ID		415
					SR 400	POLK	430185-3-52-01		

THE OFFICIAL RECORD OF THIS SHEET IS THE ELECTRONIC FILE DIGITALLY SIGNED AND SEALED UNDER RULE 61G15-23.004, F.A.C.

2/28/2024 12:50:34 PM JTAGLIAFERRO
c:\pw_working\lochner-pw-01\dms18802\RDXSRD01.dgn

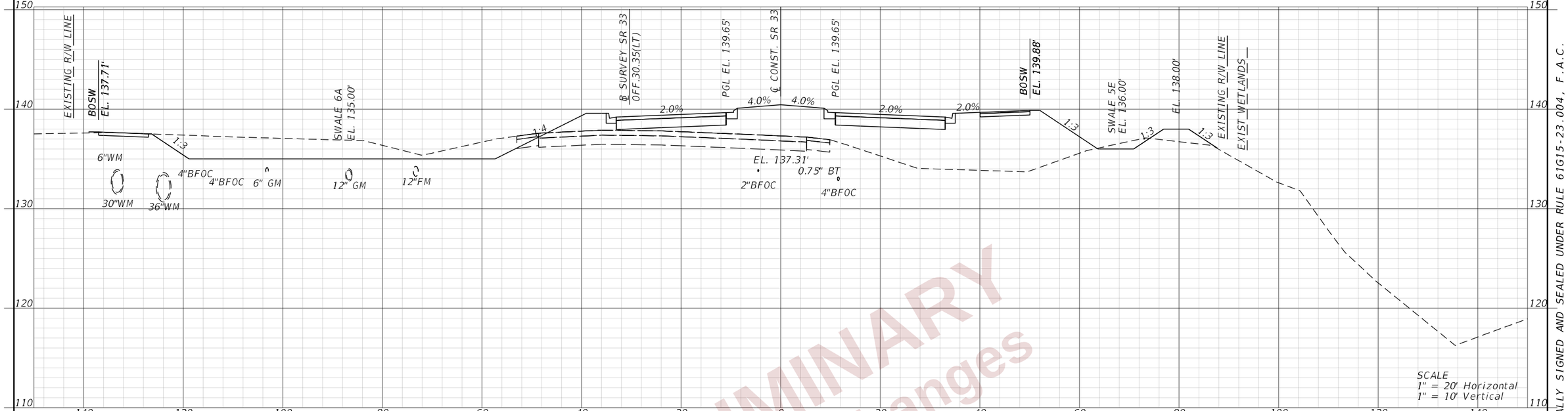

STA. 3412+00.00

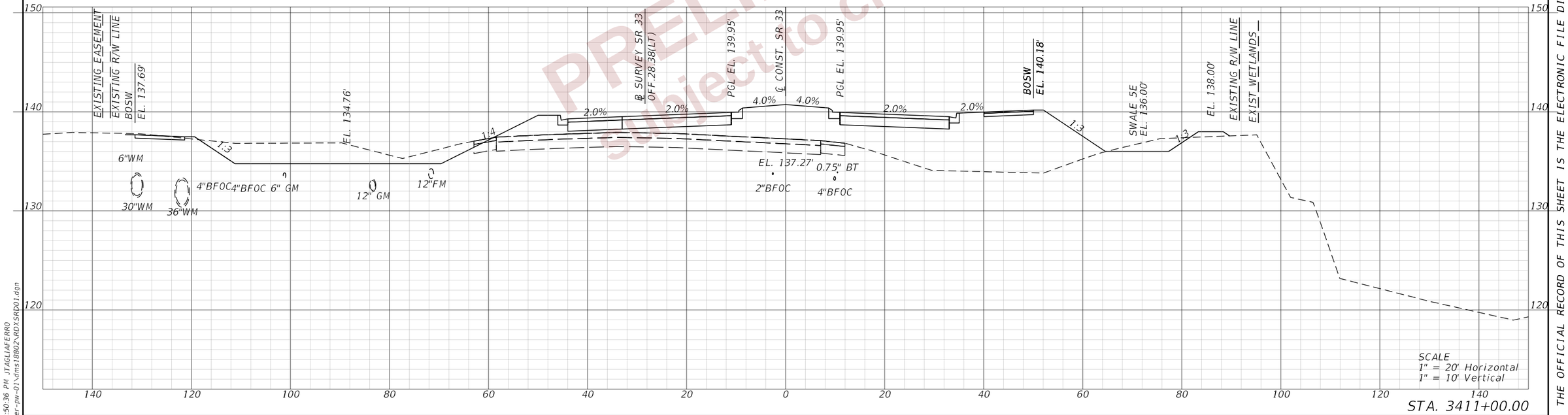

STA. 3411+00.00

PRELIMINARY
Subject to changes

REVISIONS				ENGINEER OF RECORD	STATE OF FLORIDA DEPARTMENT OF TRANSPORTATION			CROSS SECTIONS (77) SR 33	SHEET NO.
DATE	DESCRIPTION	DATE	DESCRIPTION	DEBANANDA PANIGRAHI, P.E. LICENSE NUMBER 68318 H. W. LOCHNER 4300 W. CYPRESS STREET, SUITE 500 TAMPA, FLORIDA 33607	ROAD NO.	COUNTY	FINANCIAL PROJECT ID		416
					SR 400	POLK	430185-3-52-01		

THE OFFICIAL RECORD OF THIS SHEET IS THE ELECTRONIC FILE DIGITALLY SIGNED AND SEALED UNDER RULE 61G15-23.004, F.A.C.

2/28/2024 12:50:36 PM JTAGLIAFERRO
c:\pw_working\lochner-pw-01\dms18802\RDYSRD01.dgn

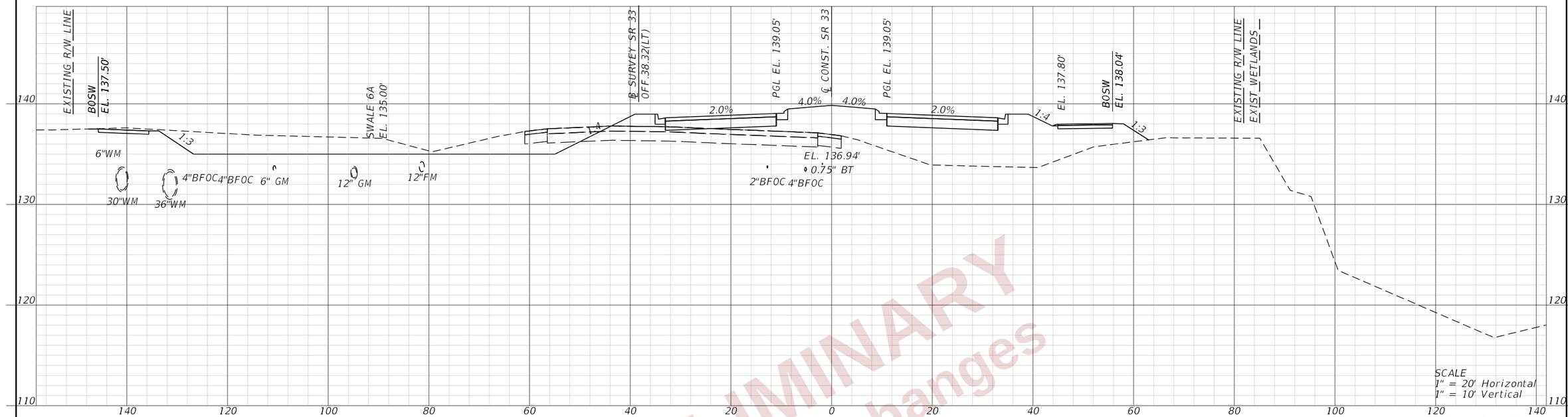

STA. 3414+00.00

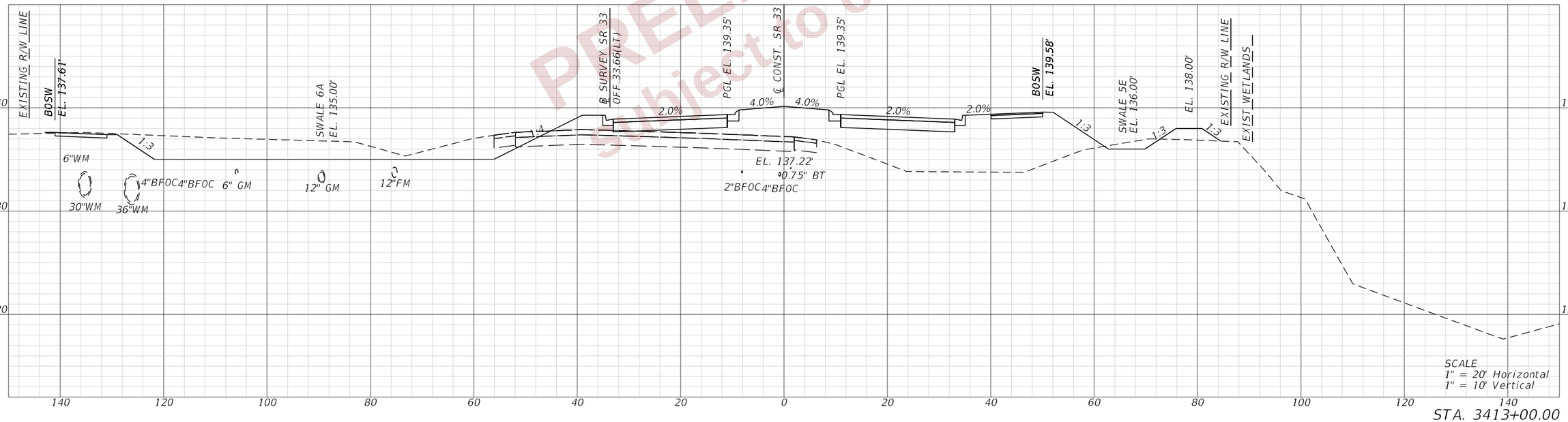

STA. 3413+00.00

PRELIMINARY
subject to changes

REVISIONS				ENGINEER OF RECORD	STATE OF FLORIDA DEPARTMENT OF TRANSPORTATION			CROSS SECTIONS (78) SR 33	SHEET NO.
DATE	DESCRIPTION	DATE	DESCRIPTION	DEBANANDA PANIGRAHI, P.E. LICENSE NUMBER 68318 H. W. LOCHNER 4300 W. CYPRESS STREET, SUITE 500 TAMPA, FLORIDA 33607	ROAD NO.	COUNTY	FINANCIAL PROJECT ID		417
					SR 400	POLK	430185-3-52-01		

2/28/2024 12:50:38 PM JTAGLIAFERRO
c:\pw_working\lochner-pw-01\dms18802\ROXSRD01.dgn

THE OFFICIAL RECORD OF THIS SHEET IS THE ELECTRONIC FILE DIGITALLY SIGNED AND SEALED UNDER RULE 61G15-23.004, F.A.C.

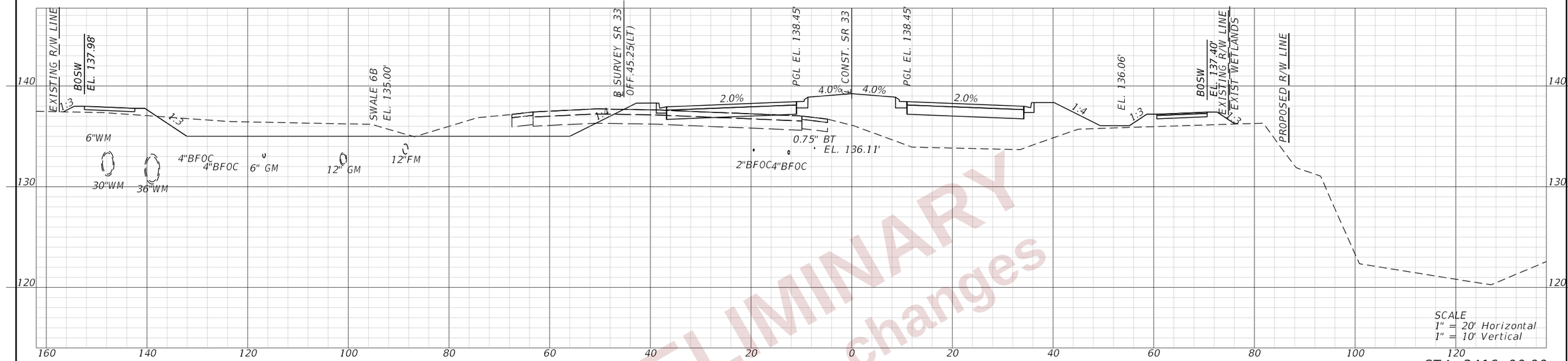

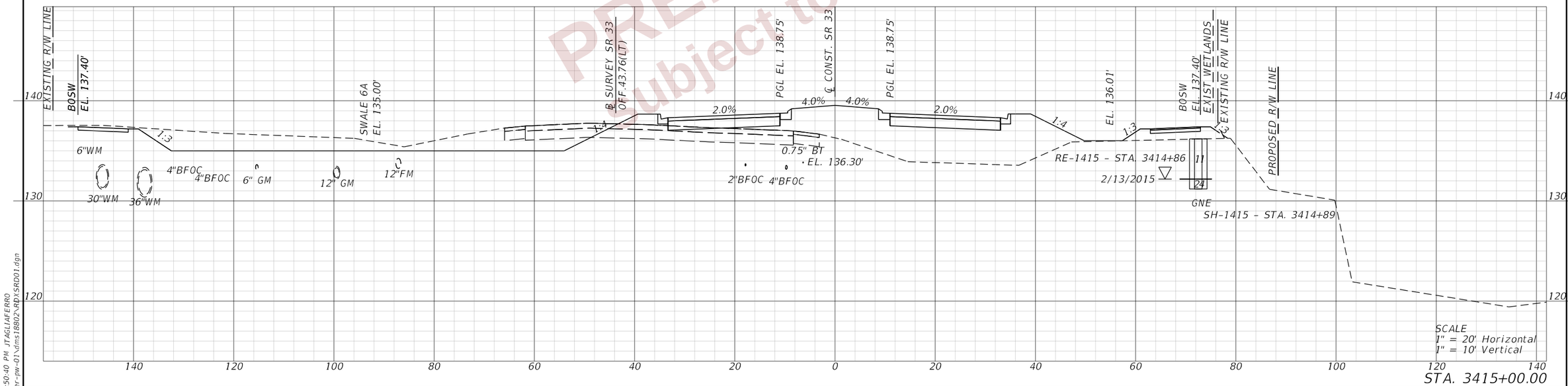

PRELIMINARY
subject to changes

REVISIONS				ENGINEER OF RECORD	STATE OF FLORIDA DEPARTMENT OF TRANSPORTATION			CROSS SECTIONS (79) SR 33	SHEET NO.
DATE	DESCRIPTION	DATE	DESCRIPTION	DEBANANDA PANIGRAHI, P.E. LICENSE NUMBER 68318 H. W. LOCHNER 4300 W. CYPRESS STREET, SUITE 500 TAMPA, FLORIDA 33607	ROAD NO.	COUNTY	FINANCIAL PROJECT ID		418
					SR 400	POLK	430185-3-52-01		

THE OFFICIAL RECORD OF THIS SHEET IS THE ELECTRONIC FILE DIGITALLY SIGNED AND SEALED UNDER RULE 61G15-23.004, F.A.C.

2/28/2024 12:50:40 PM JTAGLIAFERRO
c:\pw_working\lochner-pw-01\dms18802\RDYSRD01.dgn

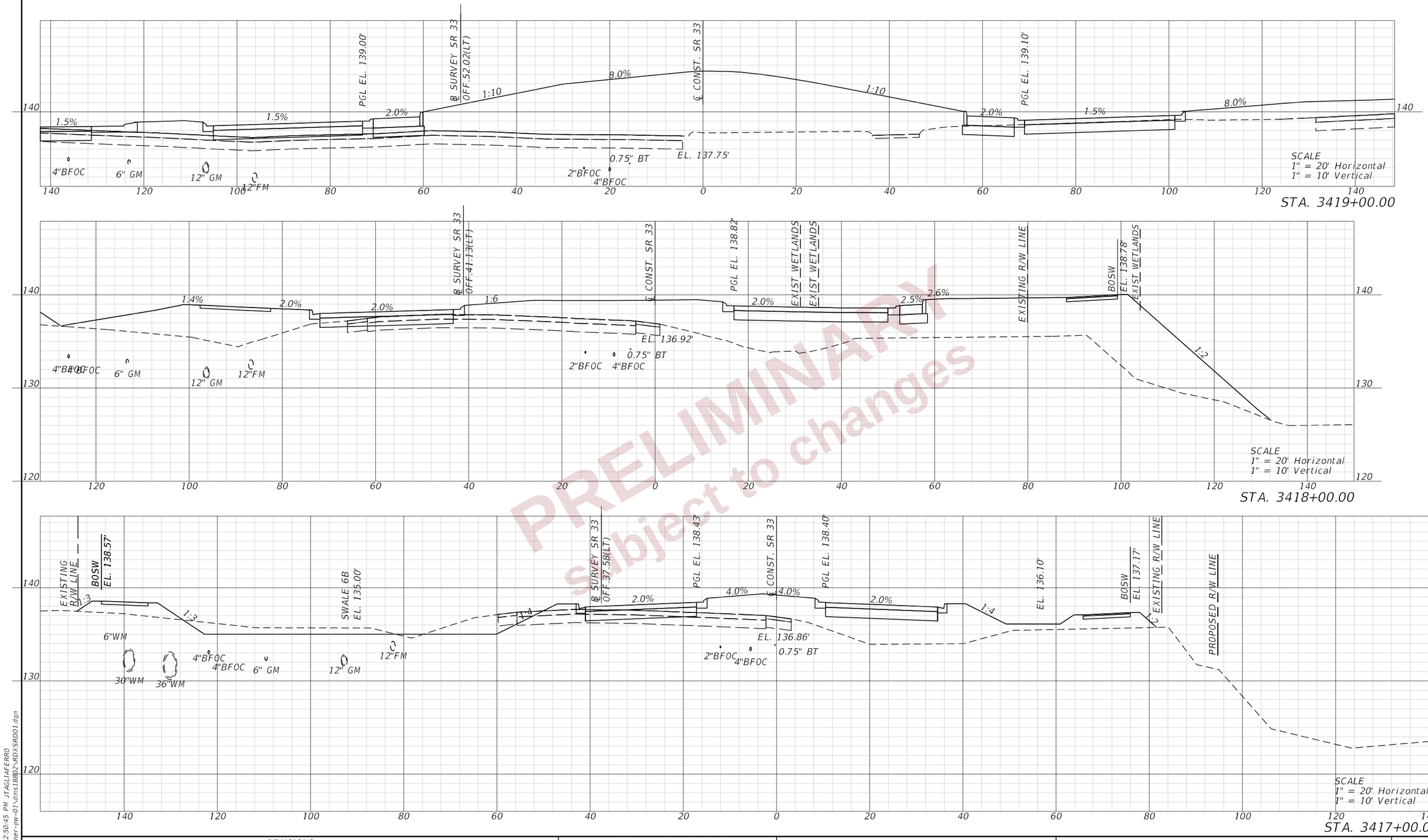

PRELIMINARY
Subject to changes

REVISIONS				ENGINEER OF RECORD	STATE OF FLORIDA DEPARTMENT OF TRANSPORTATION			CROSS SECTIONS (80) SR 33	SHEET NO.
DATE	DESCRIPTION	DATE	DESCRIPTION	DEBANANDA PANIGRAHI, P.E. LICENSE NUMBER 68318 H. W. LOCHNER 4300 W. CYPRESS STREET, SUITE 500 TAMPA, FLORIDA 33607	ROAD NO.	COUNTY	FINANCIAL PROJECT ID		419
					SR 400	POLK	430185-3-52-01		

THE OFFICIAL RECORD OF THIS SHEET IS THE ELECTRONIC FILE DIGITALLY SIGNED AND SEALED UNDER RULE 61G15-23.004, F.A.C.

2/28/2024 12:50:45 PM JTAGLIAFERRO
c:\pw_working\lochner-pw-01\dms18802\ROXSRD01.dgn

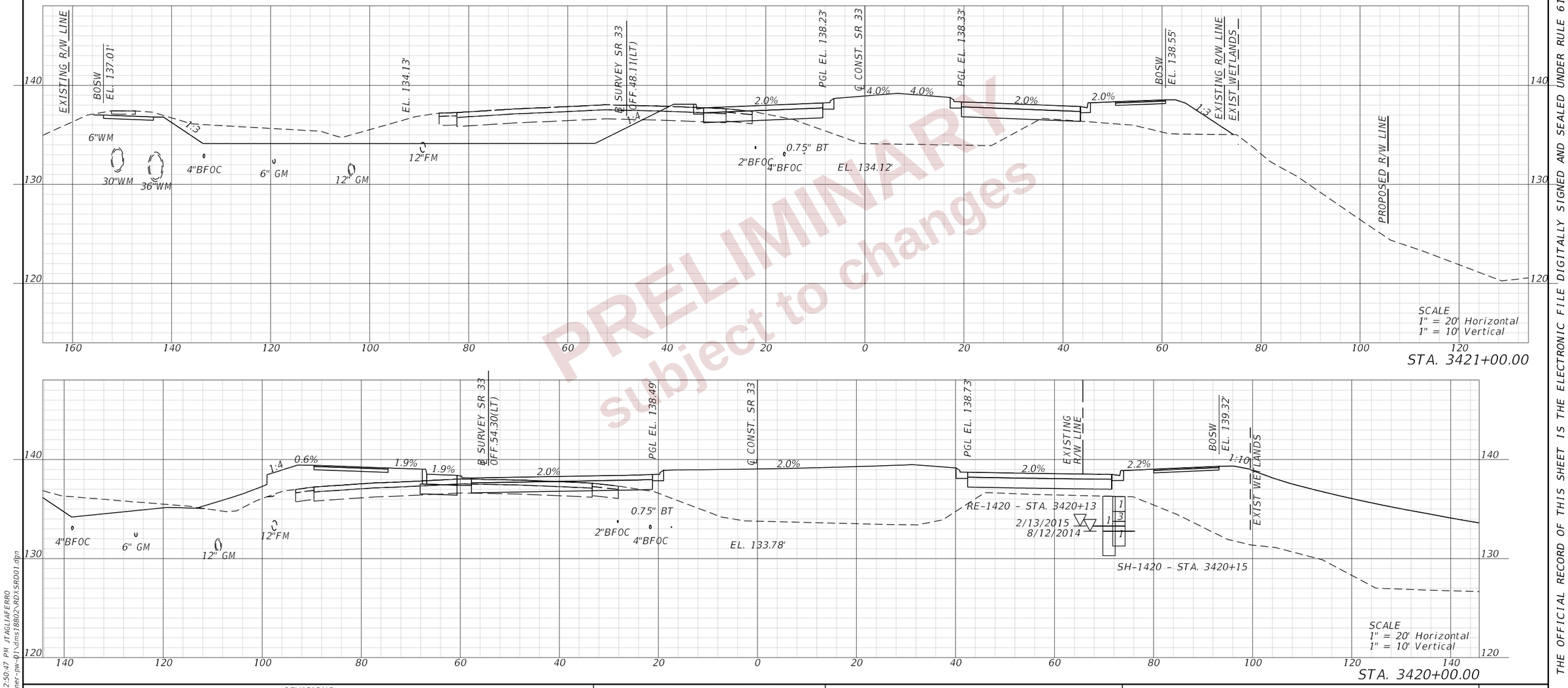

PRELIMINARY
subject to changes

REVISIONS				ENGINEER OF RECORD	STATE OF FLORIDA DEPARTMENT OF TRANSPORTATION			CROSS SECTIONS (81) SR 33	SHEET NO.
DATE	DESCRIPTION	DATE	DESCRIPTION	DEBANANDA PANIGRAHI, P.E. LICENSE NUMBER 68318 H. W. LOCHNER 4300 W. CYPRESS STREET, SUITE 500 TAMPA, FLORIDA 33607	ROAD NO.	COUNTY	FINANCIAL PROJECT ID		420
					SR 400	POLK	430185-3-52-01		

2/28/2024 12:50:47 PM JTAGLIAFERRO
c:\pw_working\lochner-pw-01\dms18802\ROXSRD01.dgn

THE OFFICIAL RECORD OF THIS SHEET IS THE ELECTRONIC FILE DIGITALLY SIGNED AND SEALED UNDER RULE 61G15-23.004, F.A.C.

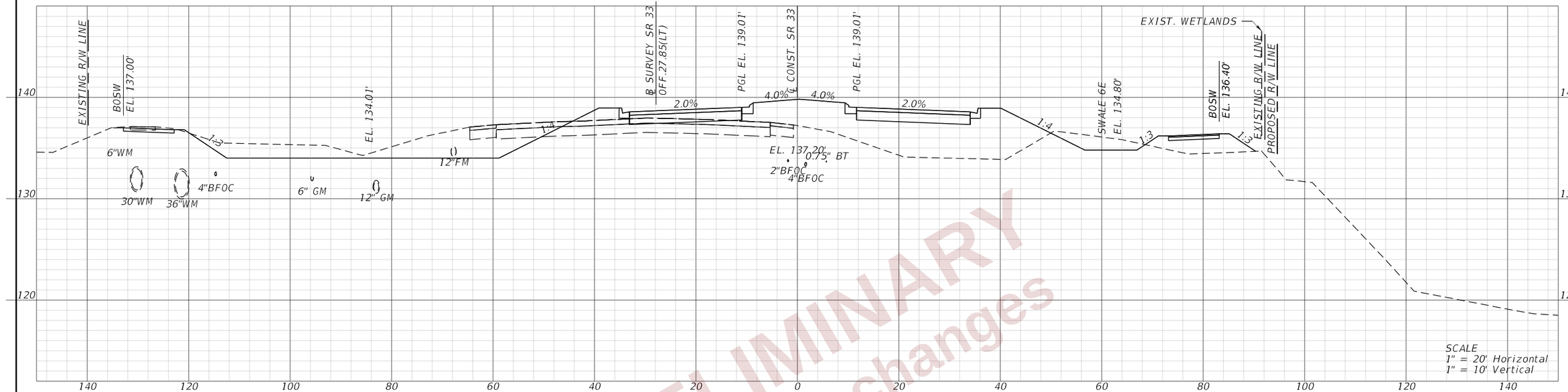

STA. 3423+00.00

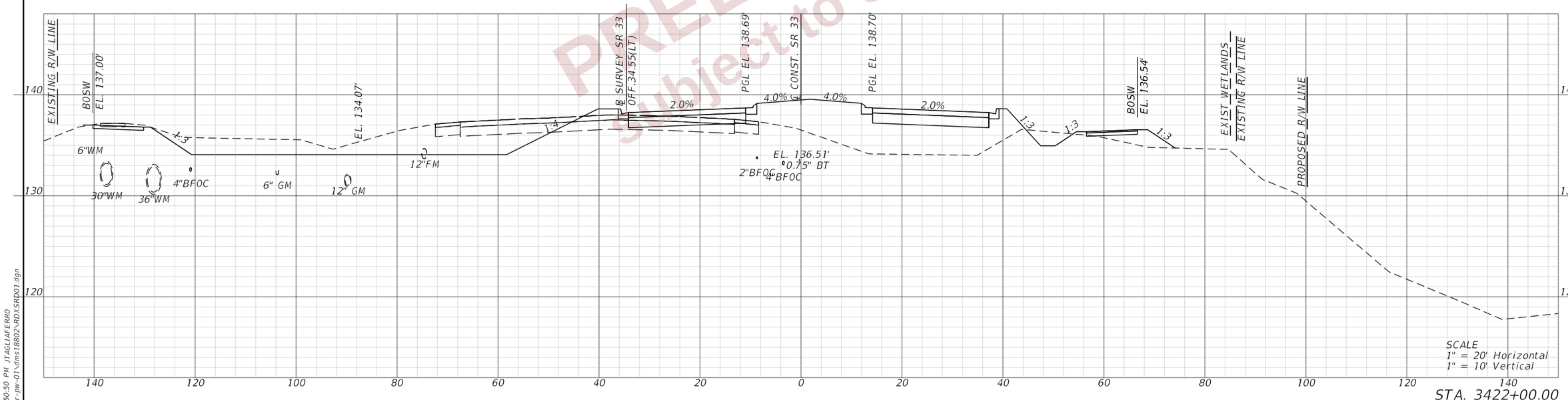

STA. 3422+00.00

PRELIMINARY
subject to changes

REVISIONS				ENGINEER OF RECORD	STATE OF FLORIDA DEPARTMENT OF TRANSPORTATION			CROSS SECTIONS (82) SR 33	SHEET NO.
DATE	DESCRIPTION	DATE	DESCRIPTION	DEBANANDA PANIGRAHI, P.E. LICENSE NUMBER 68318 H. W. LOCHNER 4300 W. CYPRESS STREET, SUITE 500 TAMPA, FLORIDA 33607	ROAD NO.	COUNTY	FINANCIAL PROJECT ID		421
					SR 400	POLK	430185-3-52-01		

THE OFFICIAL RECORD OF THIS SHEET IS THE ELECTRONIC FILE DIGITALLY SIGNED AND SEALED UNDER RULE 61G15-23.004, F.A.C.

2/28/2024 12:50:50 PM JTAGLIAFERRO
c:\pw_working\lochner-pw-01\dms18802\RDXSRD01.dgn

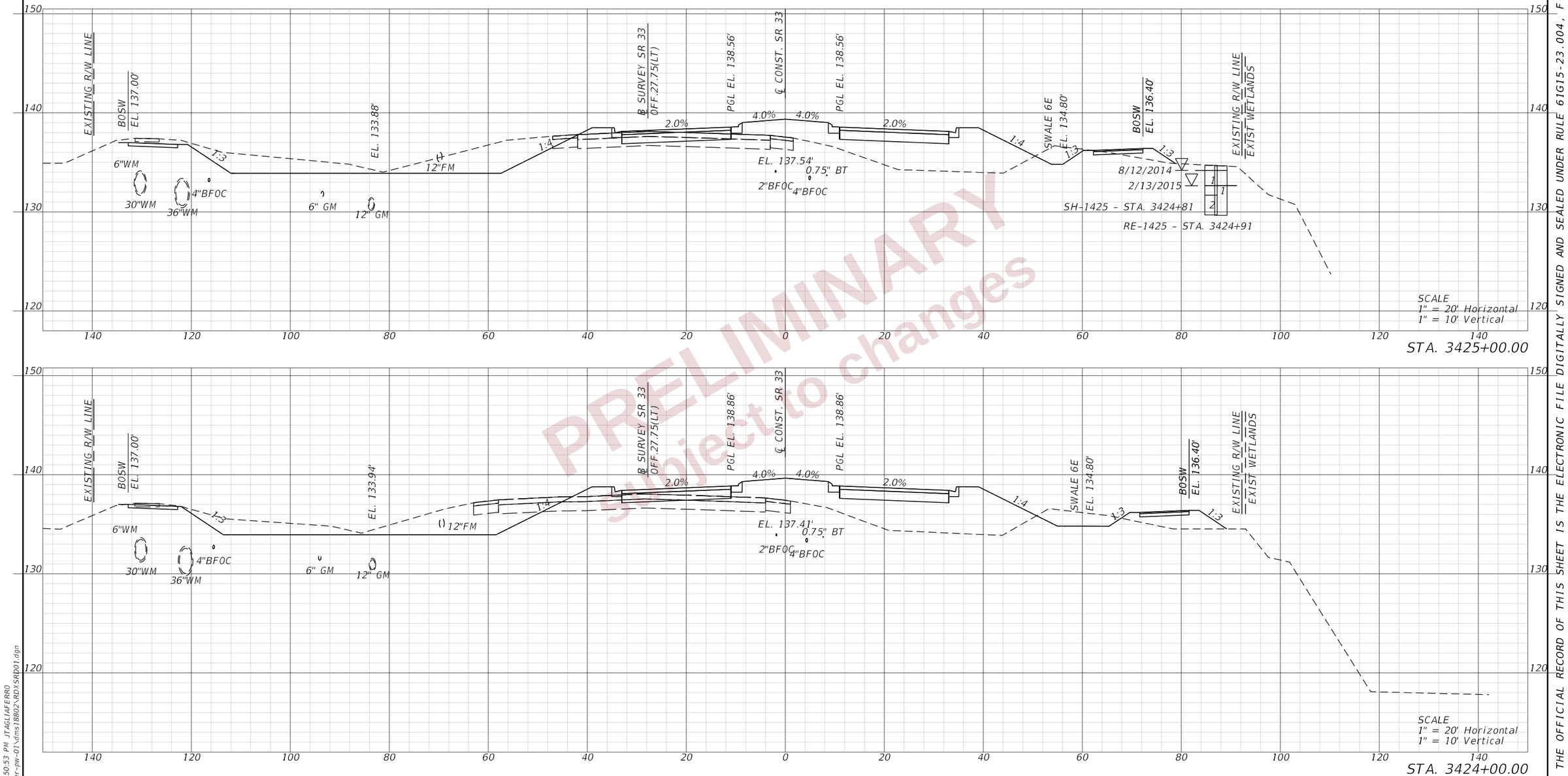

PRELIMINARY
subject to changes

REVISIONS			
DATE	DESCRIPTION	DATE	DESCRIPTION

ENGINEER OF RECORD

DEBANANDA PANIGRAHI, P.E.
LICENSE NUMBER 68318
H. W. LOCHNER
4300 W. CYPRESS STREET, SUITE 500
TAMPA, FLORIDA 33607

STATE OF FLORIDA
DEPARTMENT OF TRANSPORTATION

ROAD NO.	COUNTY	FINANCIAL PROJECT ID
SR 400	POLK	430185-3-52-01

CROSS SECTIONS (83)
SR 33

SHEET NO. 422

THE OFFICIAL RECORD OF THIS SHEET IS THE ELECTRONIC FILE DIGITALLY SIGNED AND SEALED UNDER RULE 61G15-23.004, F.A.C.

2/28/2024 12:50:53 PM JTAGLIAFERRO
c:\pw_working\lochner-pw-01\dms18802\RDXSRD01.dgn

PRELIMINARY
subject to changes

THE OFFICIAL RECORD OF THIS SHEET IS THE ELECTRONIC FILE DIGITALLY SIGNED AND SEALED UNDER RULE 61G15-23.004, F.A.C.

REVISIONS				ENGINEER OF RECORD	STATE OF FLORIDA DEPARTMENT OF TRANSPORTATION			CROSS SECTIONS (84) SR 33	SHEET NO.
DATE	DESCRIPTION	DATE	DESCRIPTION	DEBANANDA PANIGRAHI, P.E. LICENSE NUMBER 68318 H. W. LOCHNER 4300 W. CYPRESS STREET, SUITE 500 TAMPA, FLORIDA 33607	ROAD NO.	COUNTY	FINANCIAL PROJECT ID		423
					SR 400	POLK	430185-3-52-01		

2/28/2024 12:50:57 PM JTAGLIAFERRO
C:\pw_working\lochner-pw-01\dms18802\RDYSRD01.dgn

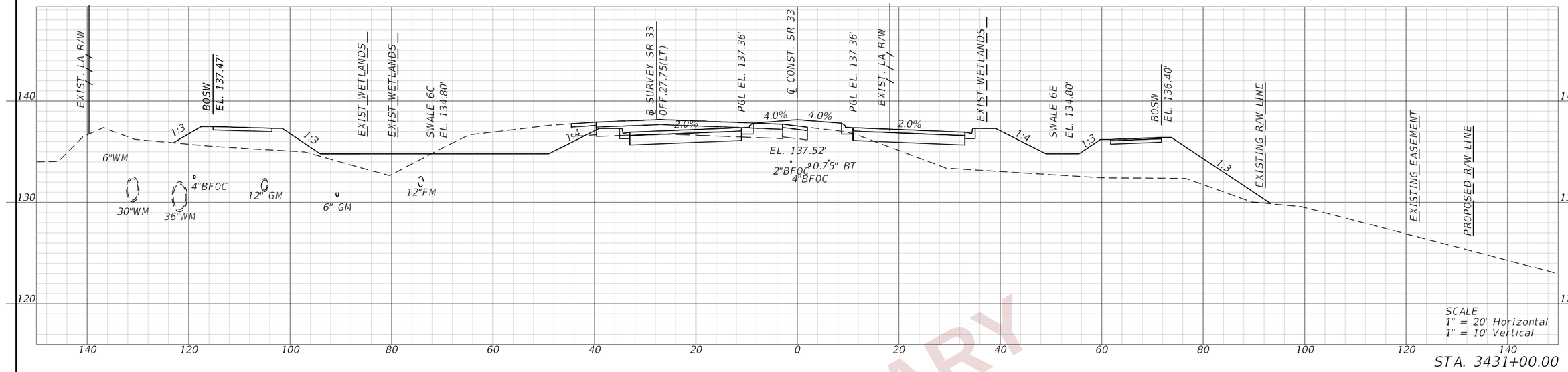

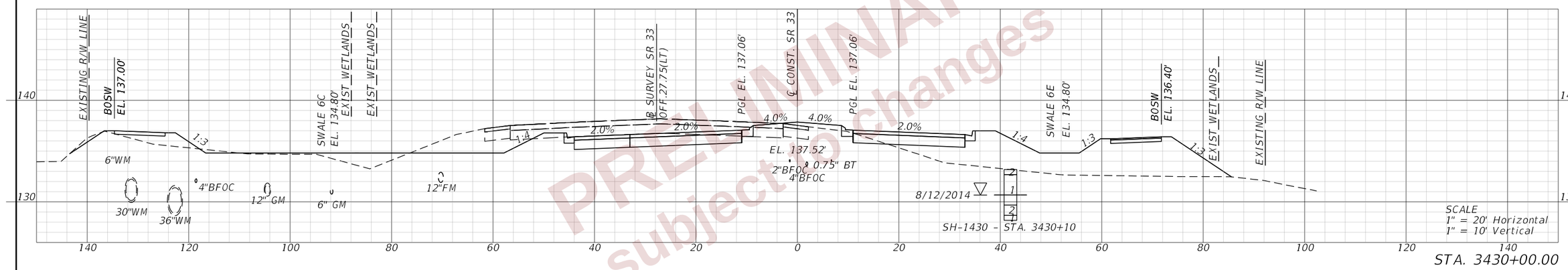

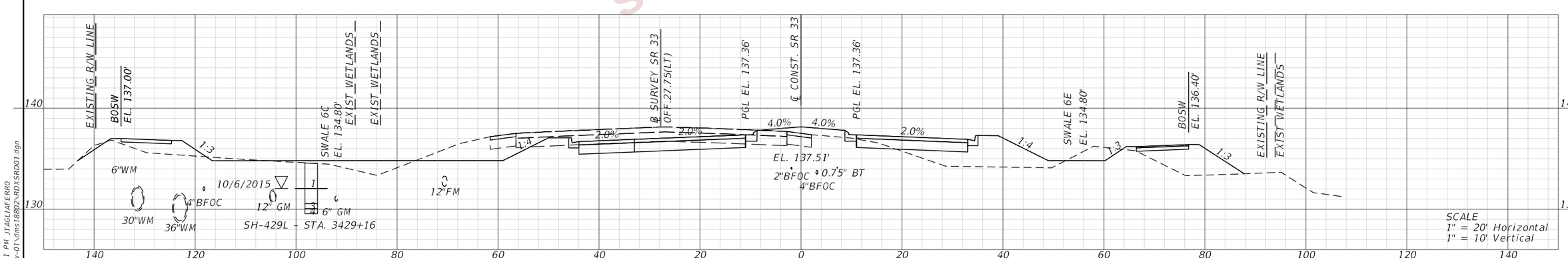

PRELIMINARY
subject to changes

REVISIONS			
DATE	DESCRIPTION	DATE	DESCRIPTION

ENGINEER OF RECORD
DEBANANDA PANIGRAHI, P.E.
LICENSE NUMBER 68318
H. W. LOCHNER
4300 W. CYPRESS STREET, SUITE 500
TAMPA, FLORIDA 33607

STATE OF FLORIDA
DEPARTMENT OF TRANSPORTATION

ROAD NO.	COUNTY	FINANCIAL PROJECT ID
SR 400	POLK	430185-3-52-01

CROSS SECTIONS (85)
SR 33

SHEET NO. 424

THE OFFICIAL RECORD OF THIS SHEET IS THE ELECTRONIC FILE DIGITALLY SIGNED AND SEALED UNDER RULE 61G15-23.004, F.A.C.

2/28/2024 12:51:01 PM JTAGLIAFERRO
c:\pw_working\lochner-pw-01\dms18802\RDYSR001.dgn

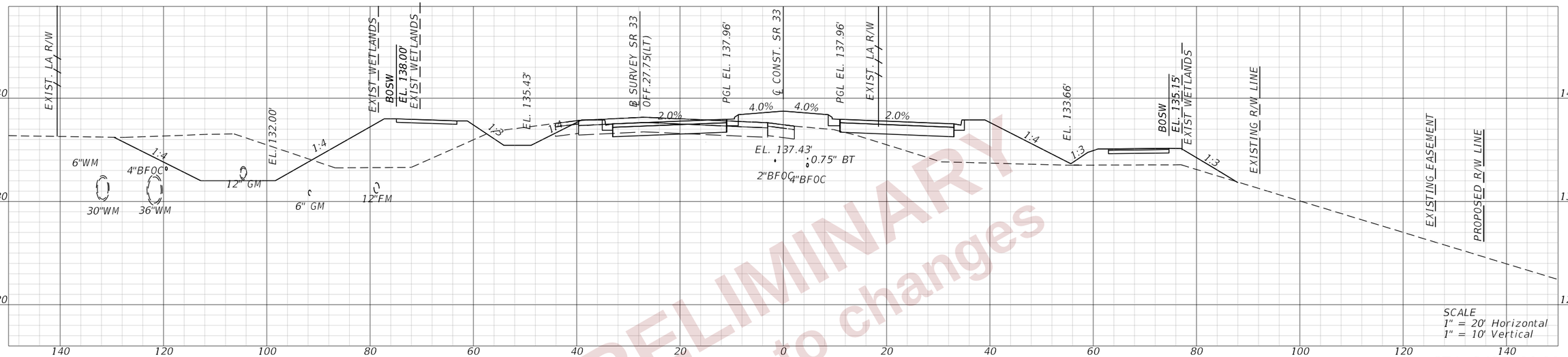

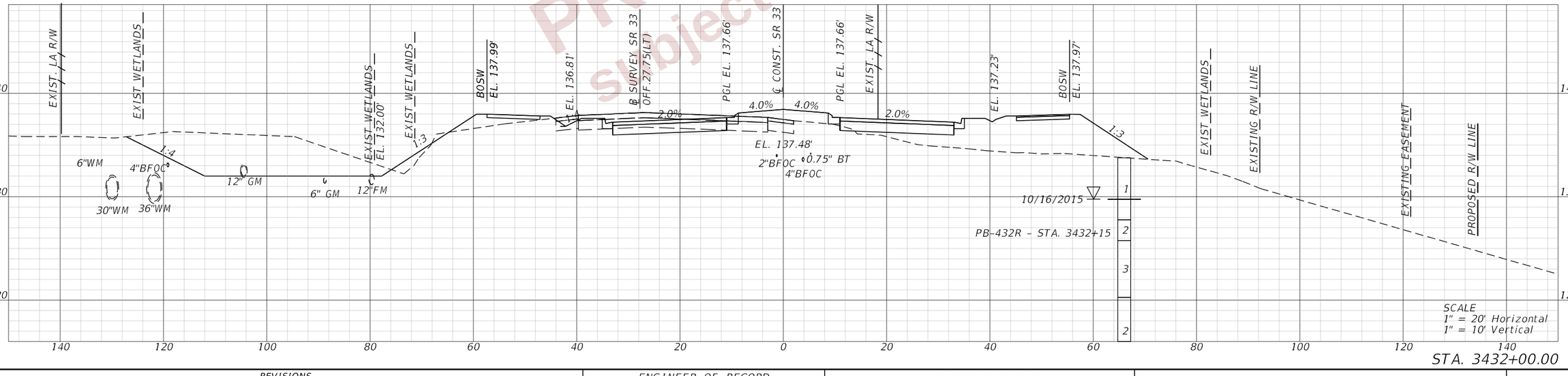

PRELIMINARY
Subject to changes

REVISIONS			
DATE	DESCRIPTION	DATE	DESCRIPTION

ENGINEER OF RECORD

DEBANANDA PANIGRAHI, P.E.
LICENSE NUMBER 68318
H. W. LOCHNER
4300 W. CYPRESS STREET, SUITE 500
TAMPA, FLORIDA 33607

STATE OF FLORIDA
DEPARTMENT OF TRANSPORTATION

ROAD NO.	COUNTY	FINANCIAL PROJECT ID
SR 400	POLK	430185-3-52-01

CROSS SECTIONS (86)
SR 33

SHEET NO. 425

THE OFFICIAL RECORD OF THIS SHEET IS THE ELECTRONIC FILE DIGITALLY SIGNED AND SEALED UNDER RULE 61G15-23.004, F.A.C.

2/28/2024 12:51:03 PM JTAGLIAFERRO
c:\pw_working\lochner-pw-01\dms18802\RDYSRD01.dgn

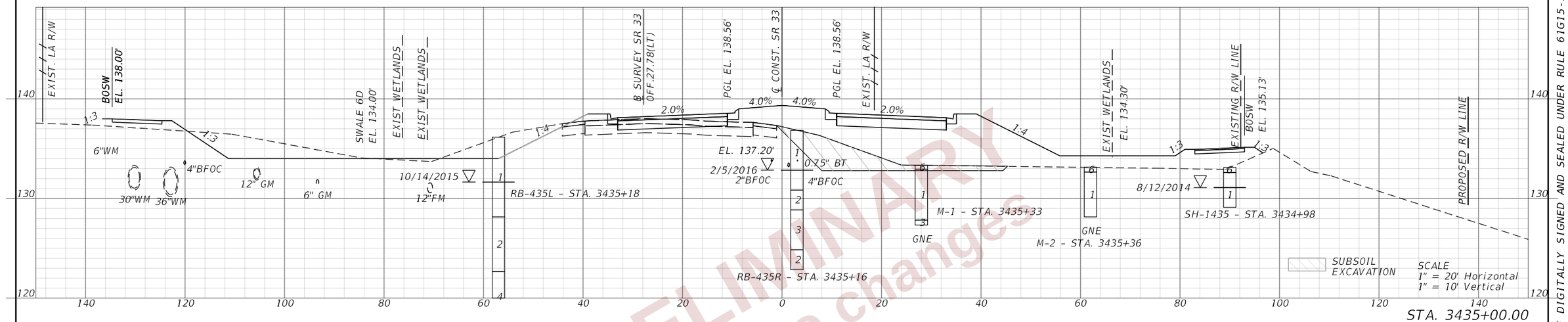

BEGIN SUBSOIL EXCAVATION
STA. 3435+00.00

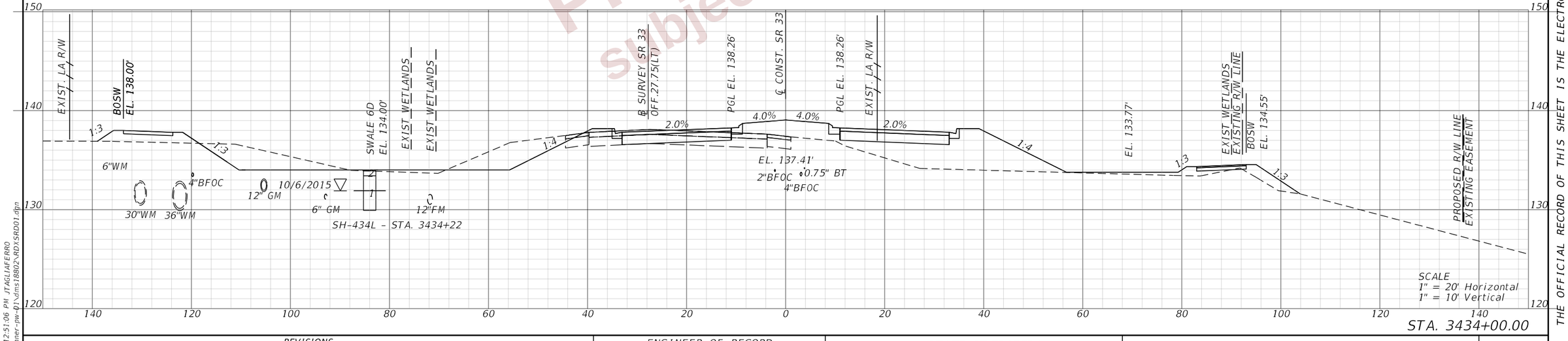

PRELIMINARY
Subject to changes

REVISIONS			
DATE	DESCRIPTION	DATE	DESCRIPTION

ENGINEER OF RECORD

DEBANANDA PANIGRAHI, P.E.
LICENSE NUMBER 68318
H. W. LOCHNER
4300 W. CYPRESS STREET, SUITE 500
TAMPA, FLORIDA 33607

STATE OF FLORIDA
DEPARTMENT OF TRANSPORTATION

ROAD NO.	COUNTY	FINANCIAL PROJECT ID
SR 400	POLK	430185-3-52-01

CROSS SECTIONS (87)
SR 33

SHEET NO. 426

THE OFFICIAL RECORD OF THIS SHEET IS THE ELECTRONIC FILE DIGITALLY SIGNED AND SEALED UNDER RULE 61G15-23.004, F.A.C.

2/28/2024 12:51:06 PM JTAGLIAFERRO
c:\pw_working\lochner-pw-01\dms18802\RD\SR001.dgn

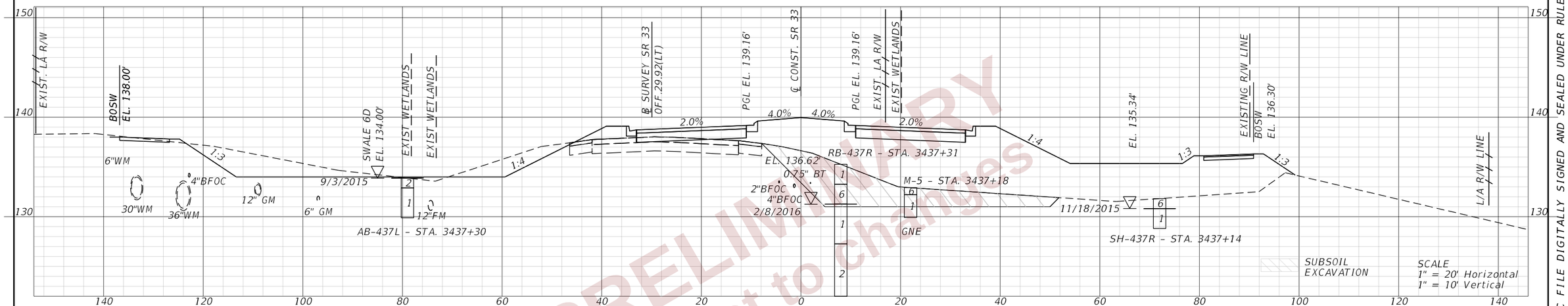

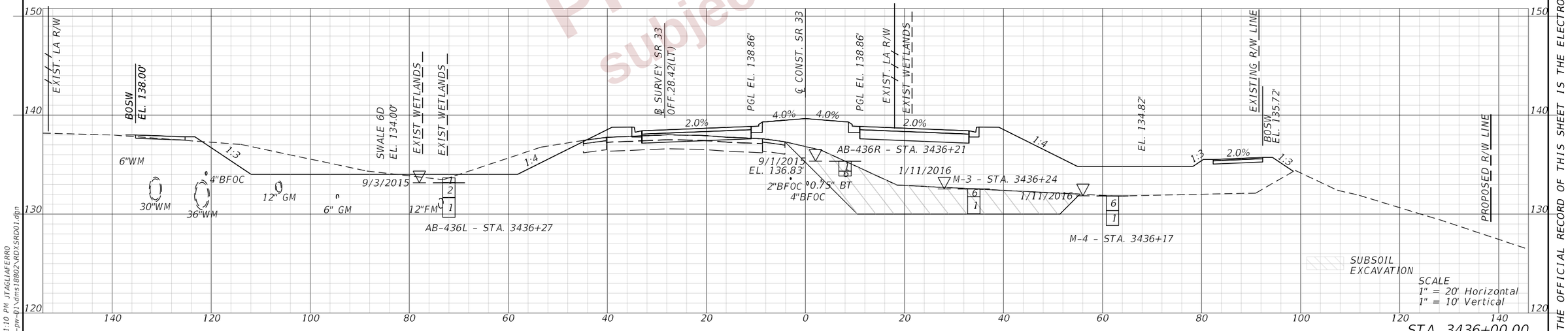

PRELIMINARY
subject to changes

REVISIONS				ENGINEER OF RECORD	STATE OF FLORIDA DEPARTMENT OF TRANSPORTATION			CROSS SECTIONS (88) SR 33	SHEET NO.
DATE	DESCRIPTION	DATE	DESCRIPTION	DEBANANDA PANIGRAHI, P.E. LICENSE NUMBER 68318 H. W. LOCHNER 4300 W. CYPRESS STREET, SUITE 500 TAMPA, FLORIDA 33607	ROAD NO.	COUNTY	FINANCIAL PROJECT ID		427
					SR 400	POLK	430185-3-52-01		

THE OFFICIAL RECORD OF THIS SHEET IS THE ELECTRONIC FILE DIGITALLY SIGNED AND SEALED UNDER RULE 61G15-23.004, F.A.C.

2/28/2024 12:51:10 PM JTAGLIAFERRO
c:\pw_working\lochner-pw-01\dms18802\RDYSRD01.dgn

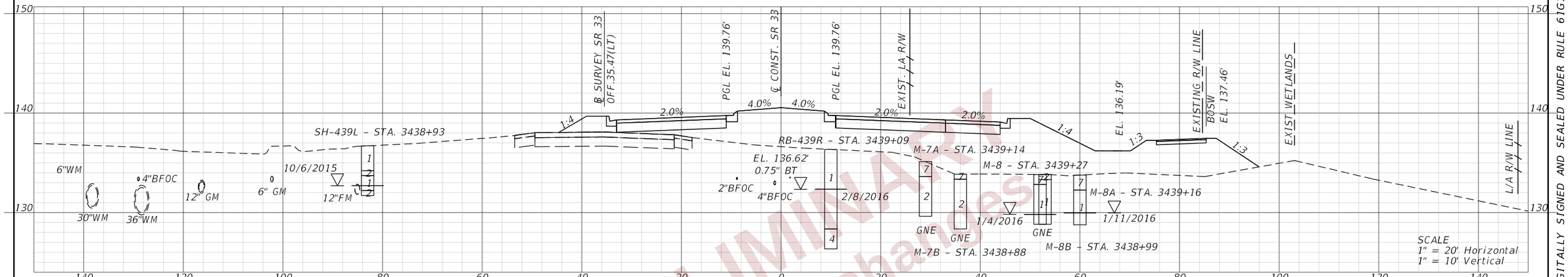

END SUBSOIL EXCAVATION
STA. 3438+80.00

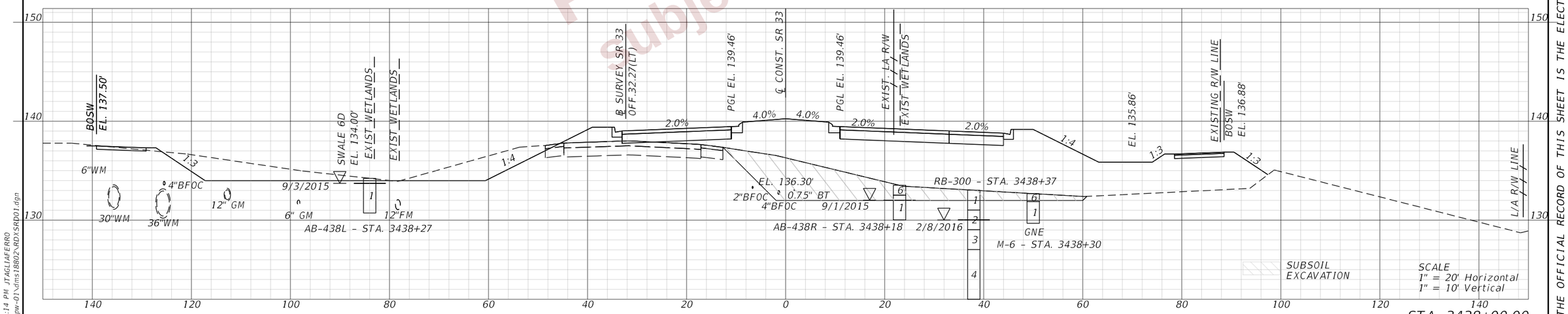

PRELIMINARY
subject to changes

REVISIONS				ENGINEER OF RECORD	STATE OF FLORIDA DEPARTMENT OF TRANSPORTATION			CROSS SECTIONS (89) SR 33	SHEET NO.
DATE	DESCRIPTION	DATE	DESCRIPTION	DEBANANDA PANIGRAHI, P.E. LICENSE NUMBER 68318 H. W. LOCHNER 4300 W. CYPRESS STREET, SUITE 500 TAMPA, FLORIDA 33607	ROAD NO.	COUNTY	FINANCIAL PROJECT ID		428
					SR 400	POLK	430185-3-52-01		

THE OFFICIAL RECORD OF THIS SHEET IS THE ELECTRONIC FILE DIGITALLY SIGNED AND SEALED UNDER RULE 61G15-23.004, F.A.C.

2/28/2024 12:51:14 PM JTAGLIAFERRO
c:\pw_working\lochner-pw-01\dms18802\RDJSRD01.dgn

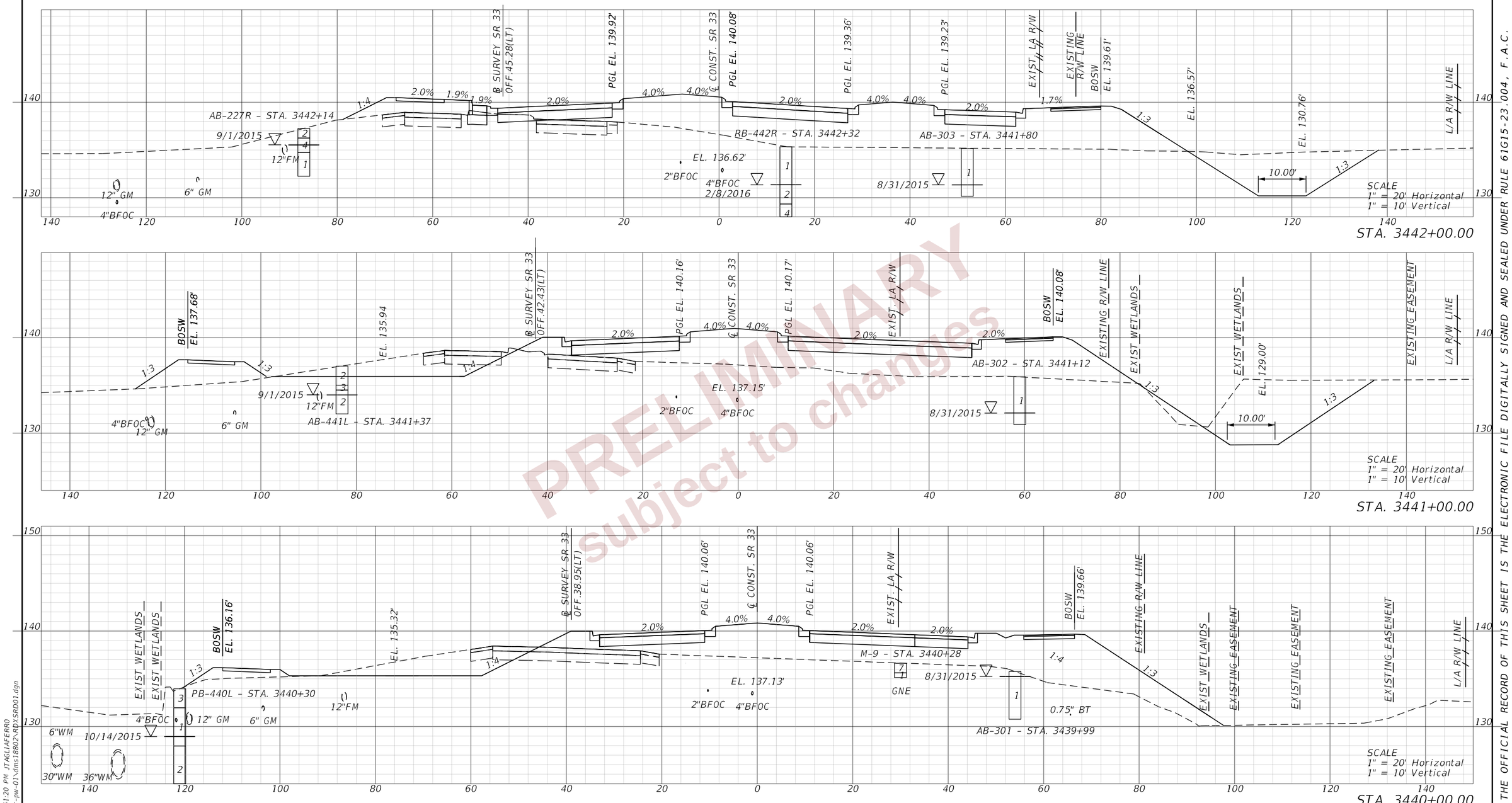

PRELIMINARY
subject to changes

REVISIONS				ENGINEER OF RECORD	STATE OF FLORIDA DEPARTMENT OF TRANSPORTATION			CROSS SECTIONS (90) SR 33	SHEET NO.
DATE	DESCRIPTION	DATE	DESCRIPTION	DEBANANDA PANIGRAHI, P.E. LICENSE NUMBER 68318 H. W. LOCHNER 4300 W. CYPRESS STREET, SUITE 500 TAMPA, FLORIDA 33607	ROAD NO.	COUNTY	FINANCIAL PROJECT ID		429
					SR 400	POLK	430185-3-52-01		

THE OFFICIAL RECORD OF THIS SHEET IS THE ELECTRONIC FILE DIGITALLY SIGNED AND SEALED UNDER RULE 61G15-23.004, F.A.C.

2/28/2024 12:51:20 PM JTAGLIAFERRO
c:\pw_working\lochner-pw-01\dms18802\RDYSR001.dgn

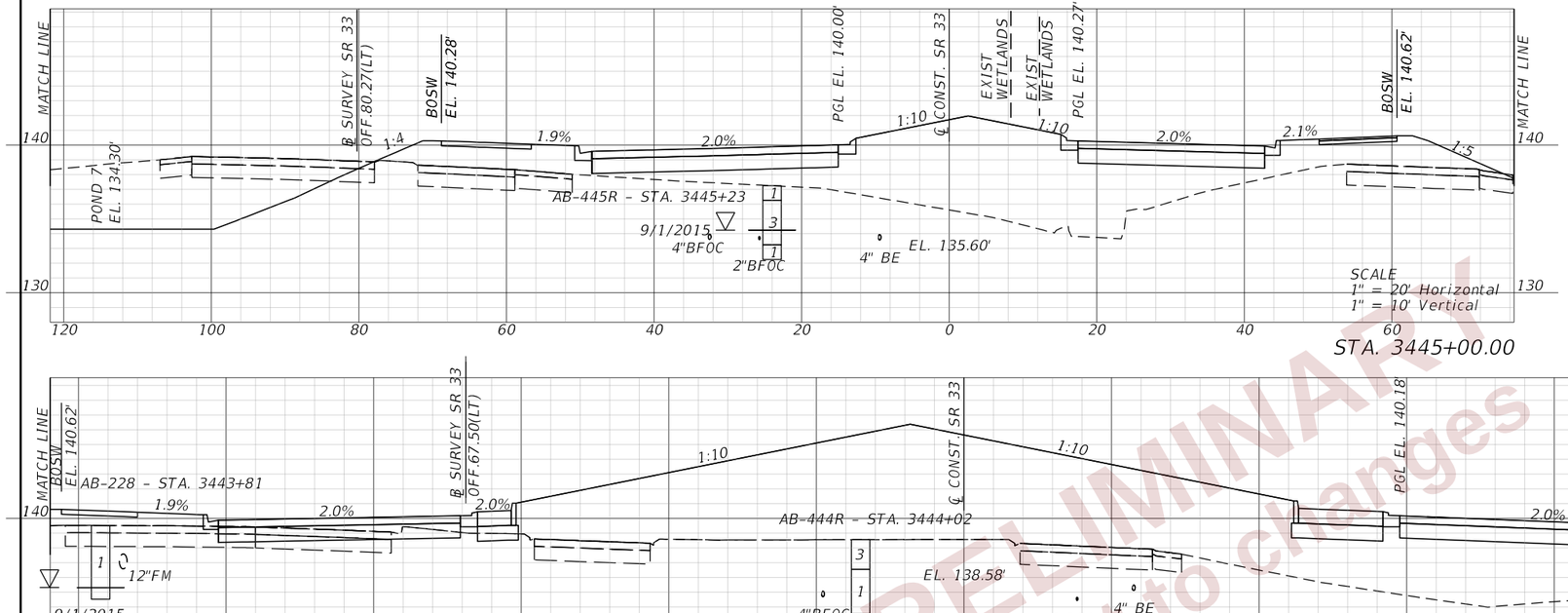

STA. 3445+00.00

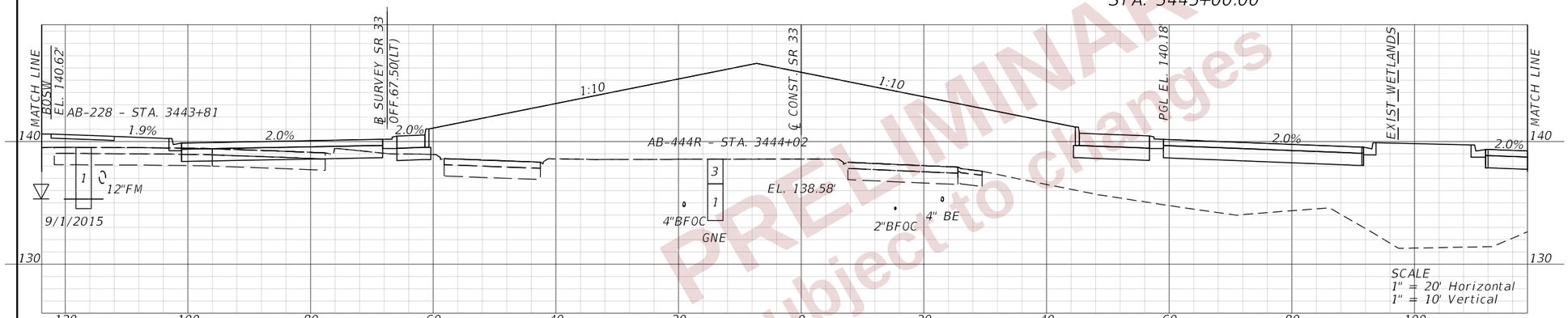

STA. 3444+00.00

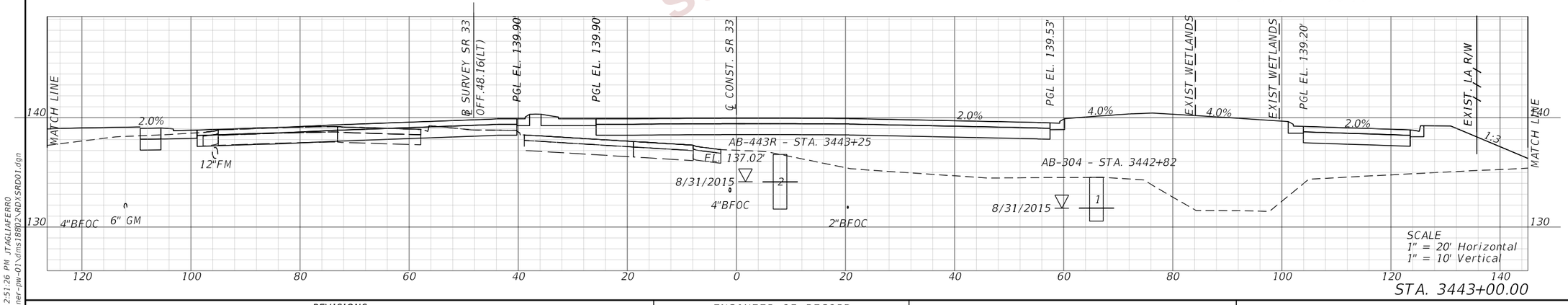

STA. 3443+00.00

PRELIMINARY
subject to changes

REVISIONS				ENGINEER OF RECORD	STATE OF FLORIDA DEPARTMENT OF TRANSPORTATION			CROSS SECTIONS (91) SR 33	SHEET NO.
DATE	DESCRIPTION	DATE	DESCRIPTION	DEBANANDA PANIGRAHI, P.E. LICENSE NUMBER 68318 H. W. LOCHNER 4300 W. CYPRESS STREET, SUITE 500 TAMPA, FLORIDA 33607	ROAD NO.	COUNTY	FINANCIAL PROJECT ID		430
					SR 400	POLK	430185-3-52-01		

THE OFFICIAL RECORD OF THIS SHEET IS THE ELECTRONIC FILE DIGITALLY SIGNED AND SEALED UNDER RULE 61G15-23.004, F.A.C.

2/28/2024 12:51:26 PM JTAGLIAFERRO
c:\pw_working\lochner-pw-01\dms18802\RDXSRD01.dgn

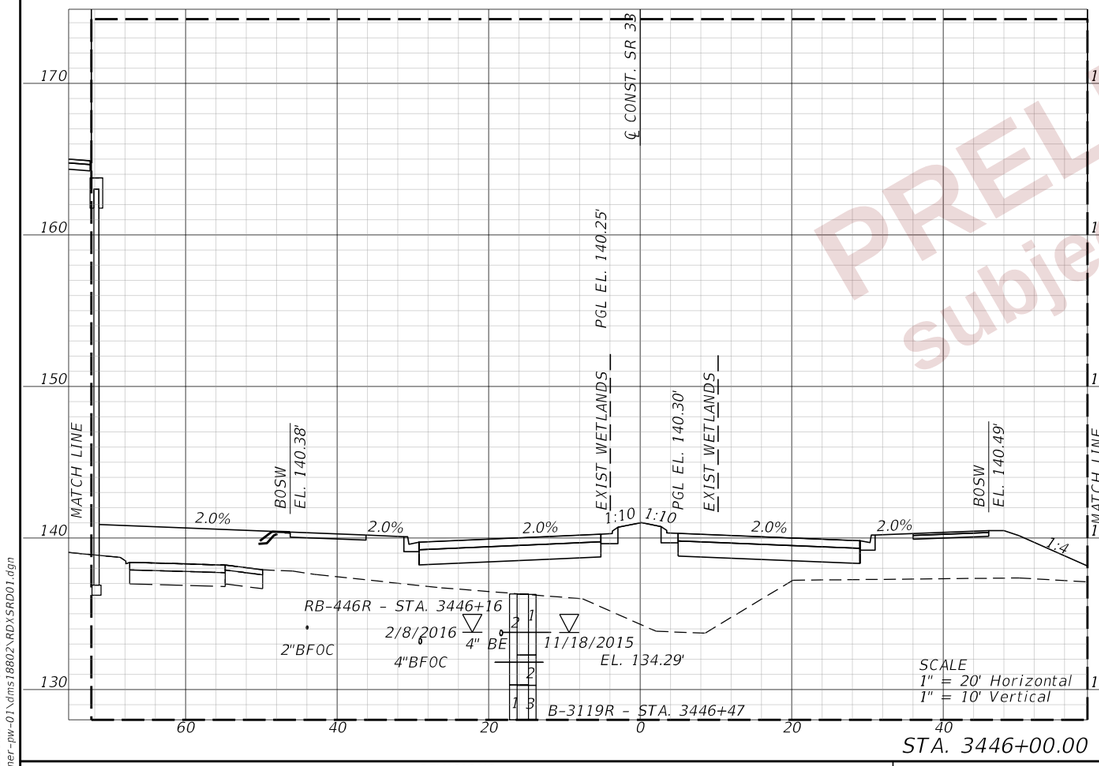

STA. 3446+00.00

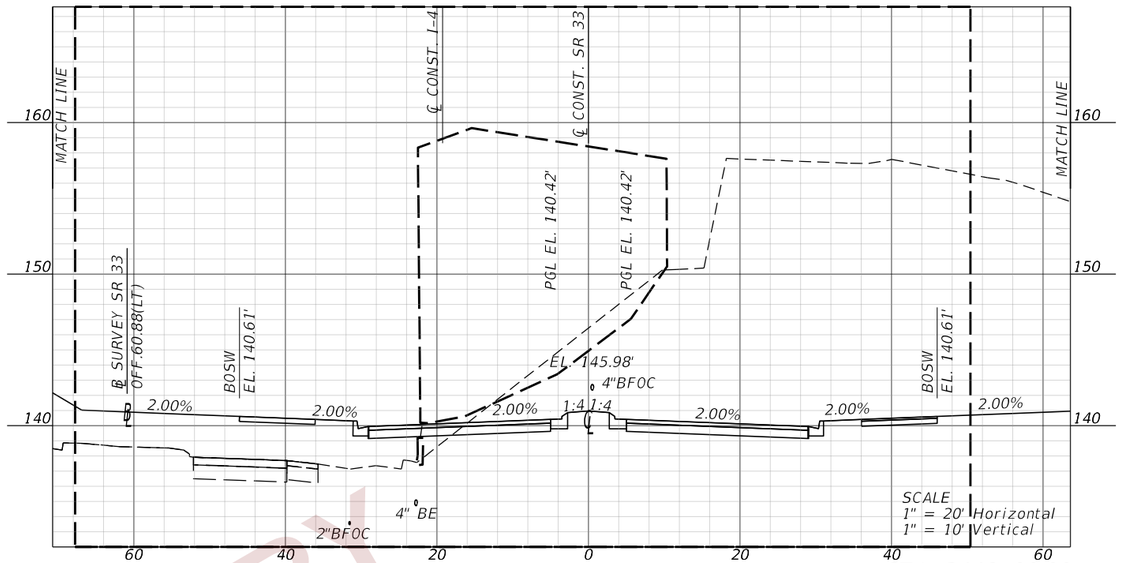

STA. 3448+00.00

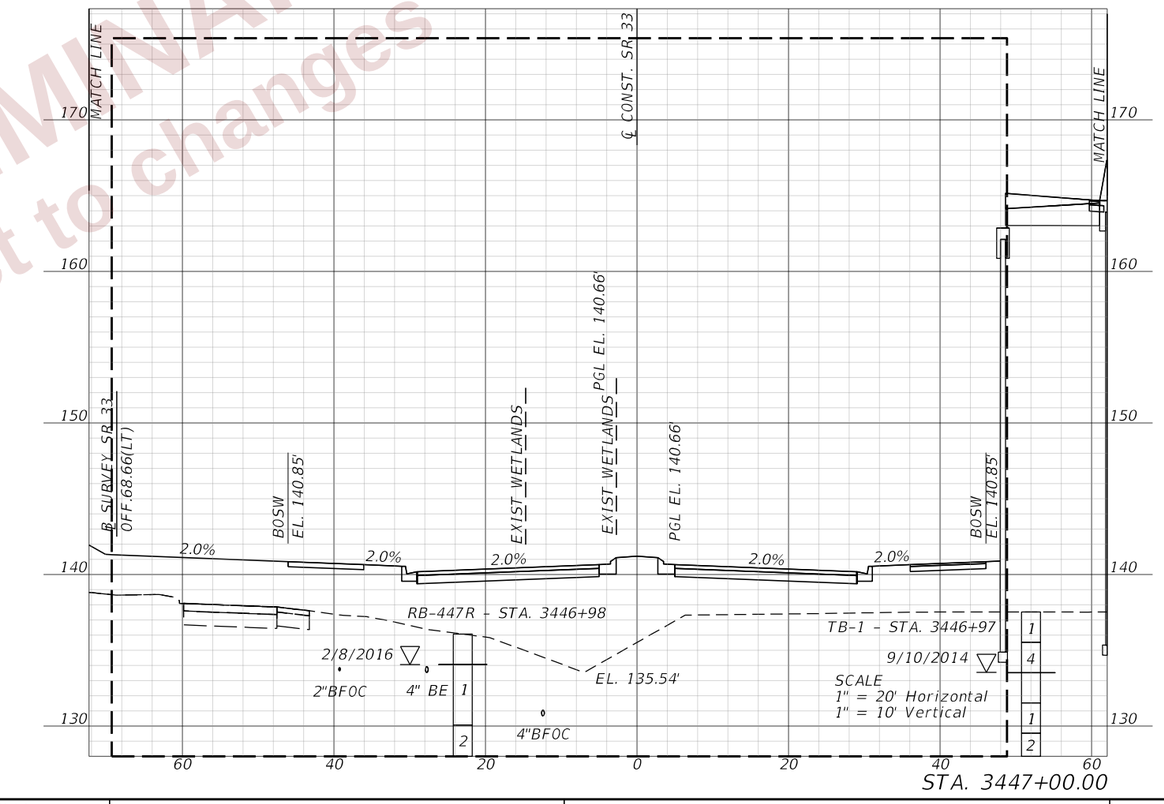

STA. 3447+00.00

PRELIMINARY
subject to changes

REVISIONS			
DATE	DESCRIPTION	DATE	DESCRIPTION

ENGINEER OF RECORD

DEBANANDA PANIGRAHI, P.E.
LICENSE NUMBER 68318
H. W. LOCHNER
4300 W. CYPRESS STREET, SUITE 500
TAMPA, FLORIDA 33607

STATE OF FLORIDA
DEPARTMENT OF TRANSPORTATION

ROAD NO.	COUNTY	FINANCIAL PROJECT ID
SR 400	POLK	430185-3-52-01

CROSS SECTIONS (92)
SR 33

SHEET NO. 431

THE OFFICIAL RECORD OF THIS SHEET IS THE ELECTRONIC FILE DIGITALLY SIGNED AND SEALED UNDER RULE 61G15-23.004, F.A.C.

2/28/2024 12:51:33 PM JTAGLIAFERRO
c:\pw_working\lochner-pw-01\dms1880216\RDVSR001.dgn

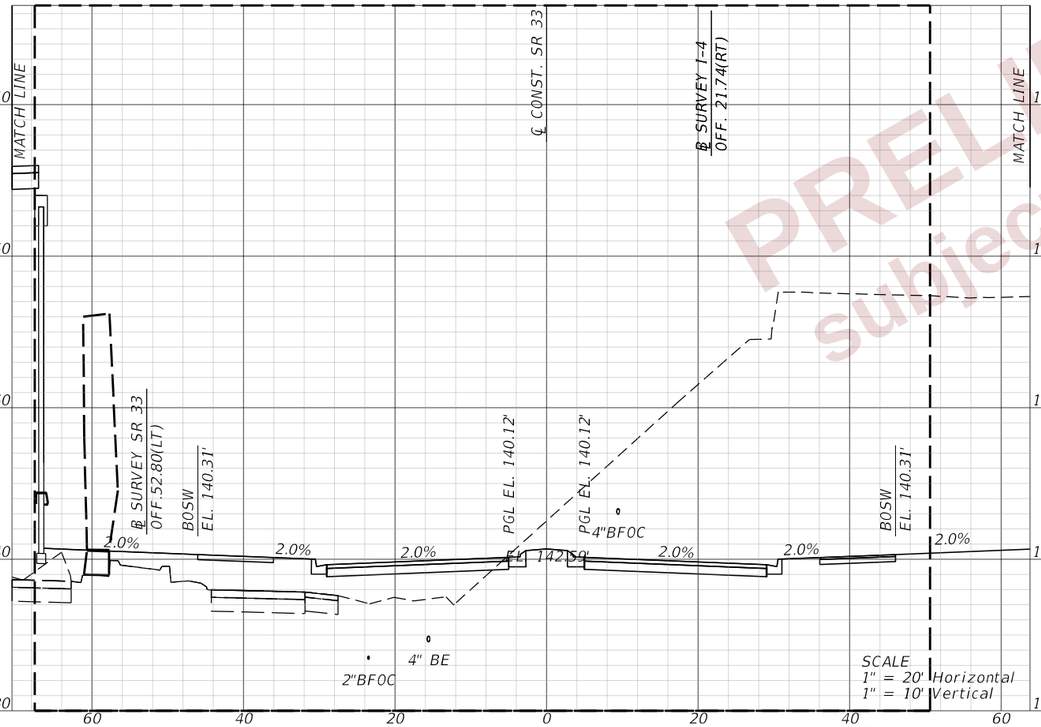

PRELIMINARY
subject to changes

REVISIONS				ENGINEER OF RECORD	STATE OF FLORIDA DEPARTMENT OF TRANSPORTATION			CROSS SECTIONS (93) SR 33	SHEET NO.
DATE	DESCRIPTION	DATE	DESCRIPTION	DEBANANDA PANIGRAHI, P.E. LICENSE NUMBER 68318 H. W. LOCHNER 4300 W. CYPRESS STREET, SUITE 500 TAMPA, FLORIDA 33607	ROAD NO.	COUNTY	FINANCIAL PROJECT ID		432
					SR 400	POLK	430185-3-52-01		

THE OFFICIAL RECORD OF THIS SHEET IS THE ELECTRONIC FILE DIGITALLY SIGNED AND SEALED UNDER RULE 61G15-23.004, F.A.C.

2/28/2024 12:51:37 PM JTAGLIAFERRO
c:\pw_working\lochner-pw-01\dms18802\RD\SR001.dgn

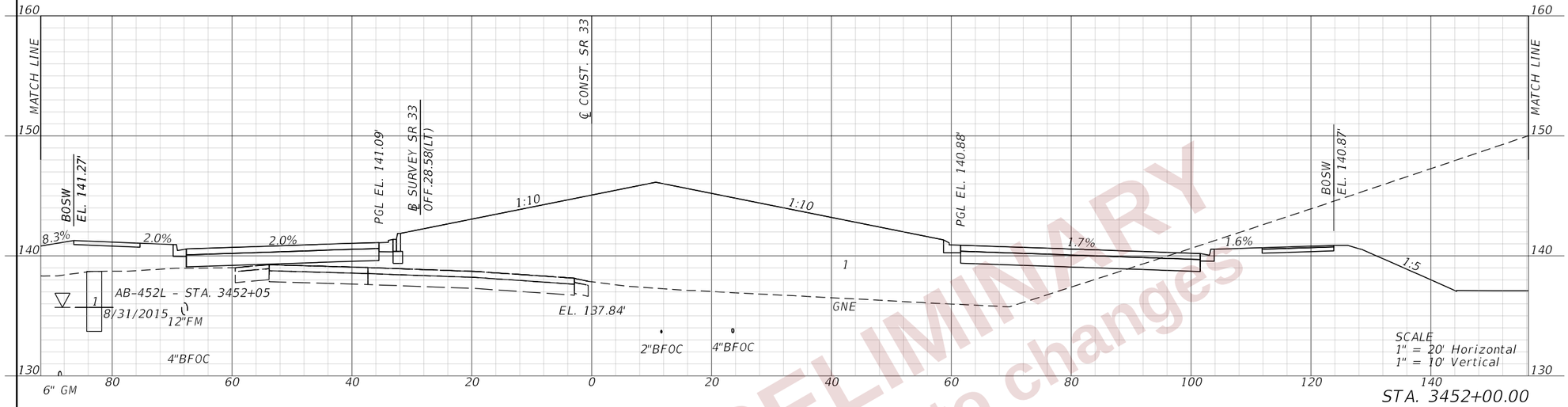

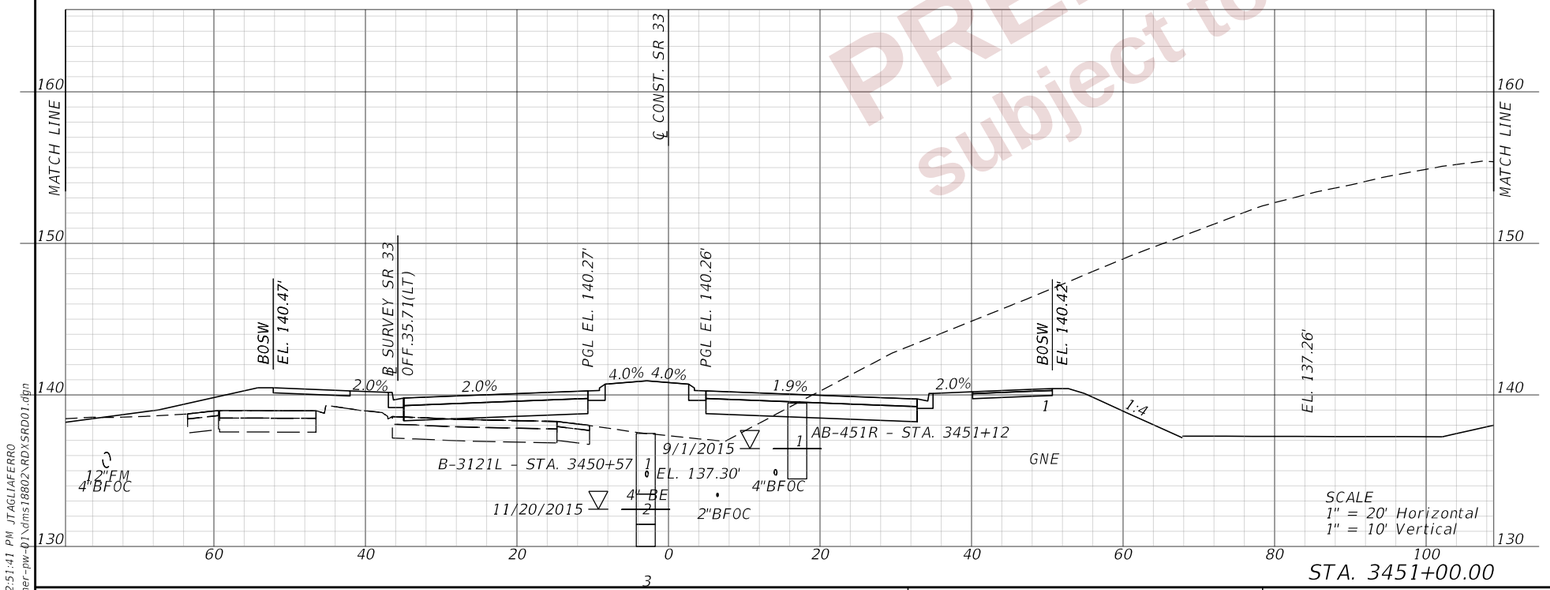

PRELIMINARY
subject to changes

REVISIONS				ENGINEER OF RECORD	STATE OF FLORIDA DEPARTMENT OF TRANSPORTATION			CROSS SECTIONS (94) SR 33	SHEET NO.
DATE	DESCRIPTION	DATE	DESCRIPTION	DEBANANDA PANIGRAHI, P.E. LICENSE NUMBER 68318 H. W. LOCHNER 4300 W. CYPRESS STREET, SUITE 500 TAMPA, FLORIDA 33607	ROAD NO.	COUNTY	FINANCIAL PROJECT ID		433
					SR 400	POLK	430185-3-52-01		

THE OFFICIAL RECORD OF THIS SHEET IS THE ELECTRONIC FILE DIGITALLY SIGNED AND SEALED UNDER RULE 61G15-23.004, F.A.C.

2/28/2024 12:51:41 PM JTAGLIAFERRO
c:\pw_working\lochner-pw-01\dms18802\RDYSR001.dgn

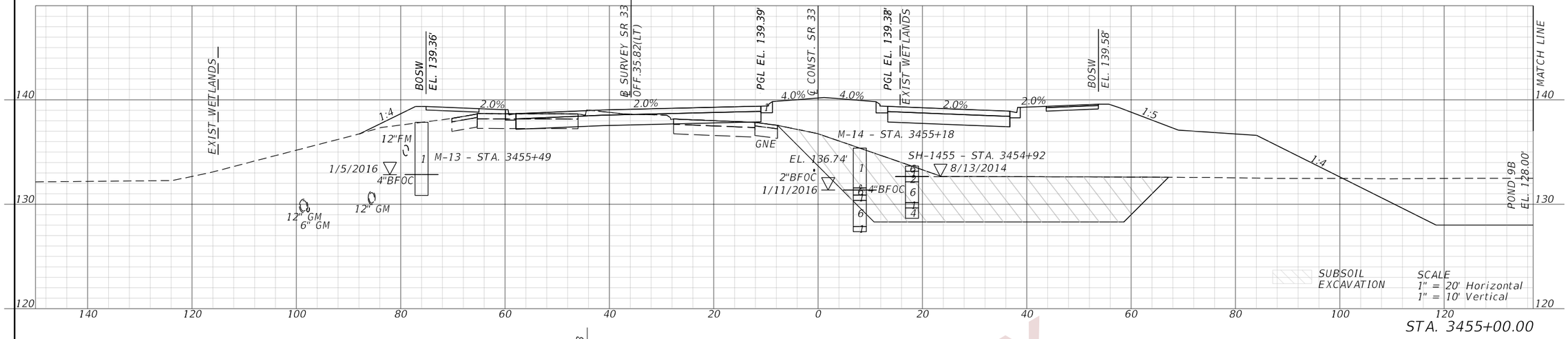

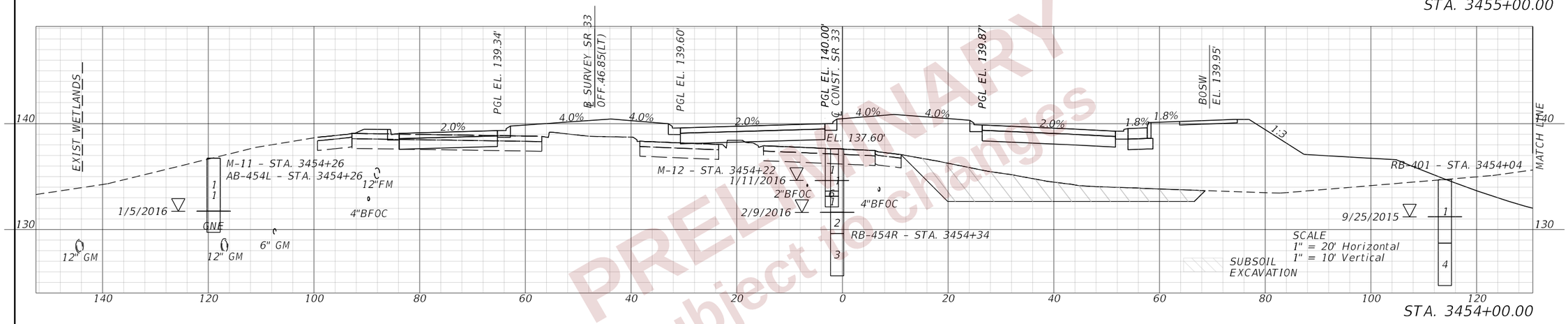

BEGIN SUBSOIL EXCAVATION
STA. 3453+73.00

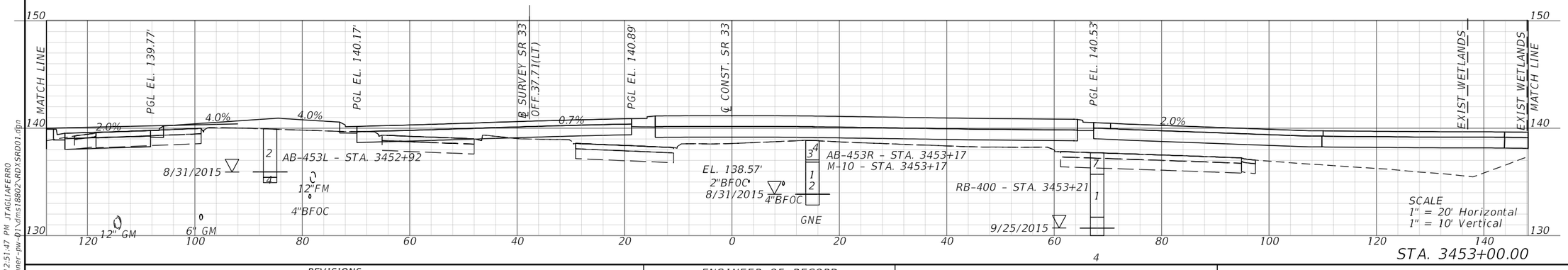

PRELIMINARY
subject to change

REVISIONS			
DATE	DESCRIPTION	DATE	DESCRIPTION

ENGINEER OF RECORD
DEBANANDA PANIGRAHI, P.E.
LICENSE NUMBER 68318
H. W. LOCHNER
4300 W. CYPRESS STREET, SUITE 500
TAMPA, FLORIDA 33607

STATE OF FLORIDA
DEPARTMENT OF TRANSPORTATION

ROAD NO.	COUNTY	FINANCIAL PROJECT ID
SR 400	POLK	430185-3-52-01

CROSS SECTIONS (95)
SR 33

SHEET NO. 434

2/28/2024 12:51:47 PM JTAGLIAFERRO
c:\pw_working\lochner-pw-01\dms18802\RDYSRD01.dgn

THE OFFICIAL RECORD OF THIS SHEET IS THE ELECTRONIC FILE DIGITALLY SIGNED AND SEALED UNDER RULE 61G15-23.004, F.A.C.

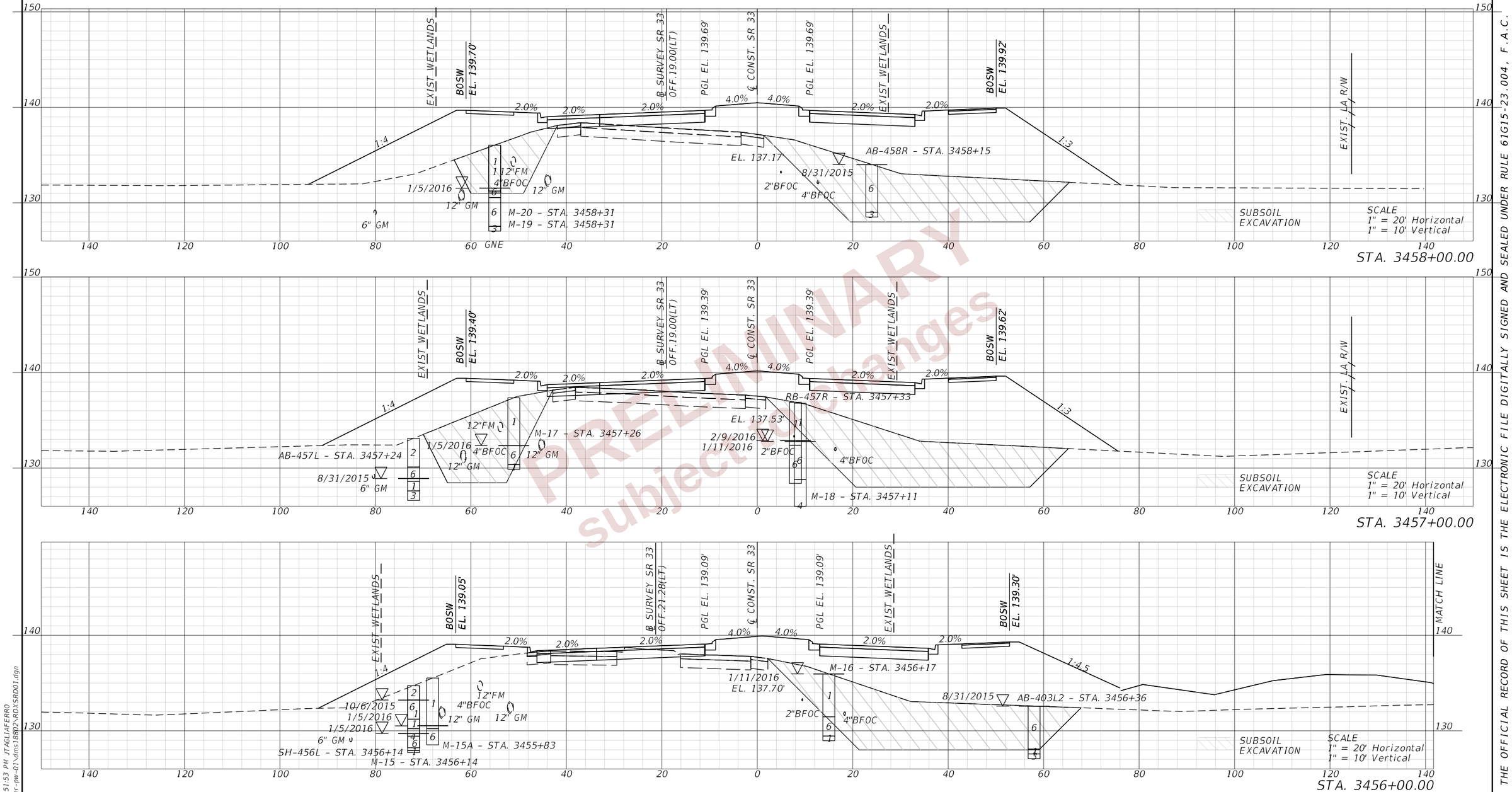

PRELIMINARY
subject to changes

REVISIONS				ENGINEER OF RECORD	STATE OF FLORIDA DEPARTMENT OF TRANSPORTATION			CROSS SECTIONS (96) SR 33	SHEET NO.
DATE	DESCRIPTION	DATE	DESCRIPTION	DEBANANDA PANIGRAHI, P.E. LICENSE NUMBER 68318 H. W. LOCHNER 4300 W. CYPRESS STREET, SUITE 500 TAMPA, FLORIDA 33607	ROAD NO.	COUNTY	FINANCIAL PROJECT ID		435
					SR 400	POLK	430185-3-52-01		

THE OFFICIAL RECORD OF THIS SHEET IS THE ELECTRONIC FILE DIGITALLY SIGNED AND SEALED UNDER RULE 61G15-23.004, F.A.C.

2/28/2024 12:51:53 PM JTAGLIAFERRO
c:\pw_working\lochner-pw-01\dms18802\RDXSRD01.dgn

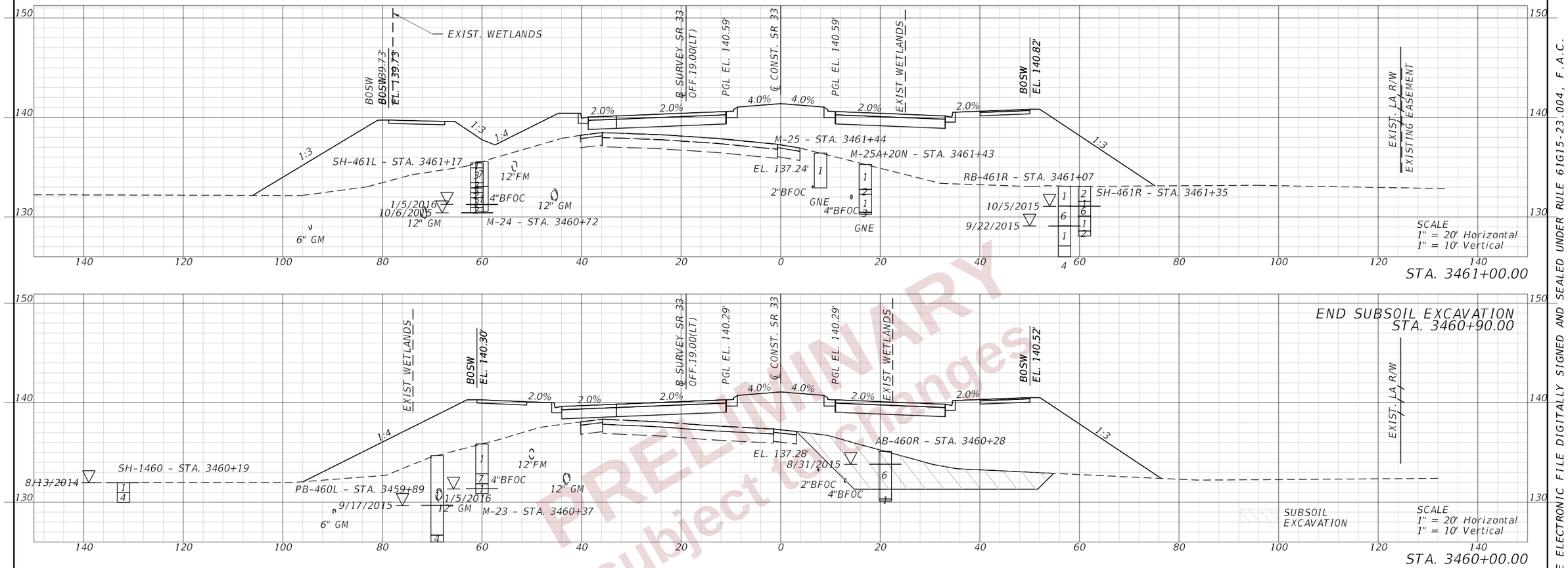

PRELIMINARY
subject to change

REVISIONS				ENGINEER OF RECORD	STATE OF FLORIDA DEPARTMENT OF TRANSPORTATION			CROSS SECTIONS (97) SR 33	SHEET NO.
DATE	DESCRIPTION	DATE	DESCRIPTION	DEBANANDA PANIGRAHI, P.E. LICENSE NUMBER 68318 H. W. LOCHNER 4300 W. CYPRESS STREET, SUITE 500 TAMPA, FLORIDA 33607	ROAD NO.	COUNTY	FINANCIAL PROJECT ID		436
					SR 400	POLK	430185-3-52-01		

THE OFFICIAL RECORD OF THIS SHEET IS THE ELECTRONIC FILE DIGITALLY SIGNED AND SEALED UNDER RULE 61G15-23.004, F.A.C.

2/28/2024 12:51:59 PM JTAGLIAFERRO
c:\pw_working\lochner-pw-01\dms18802\RDXSRD01.dgn

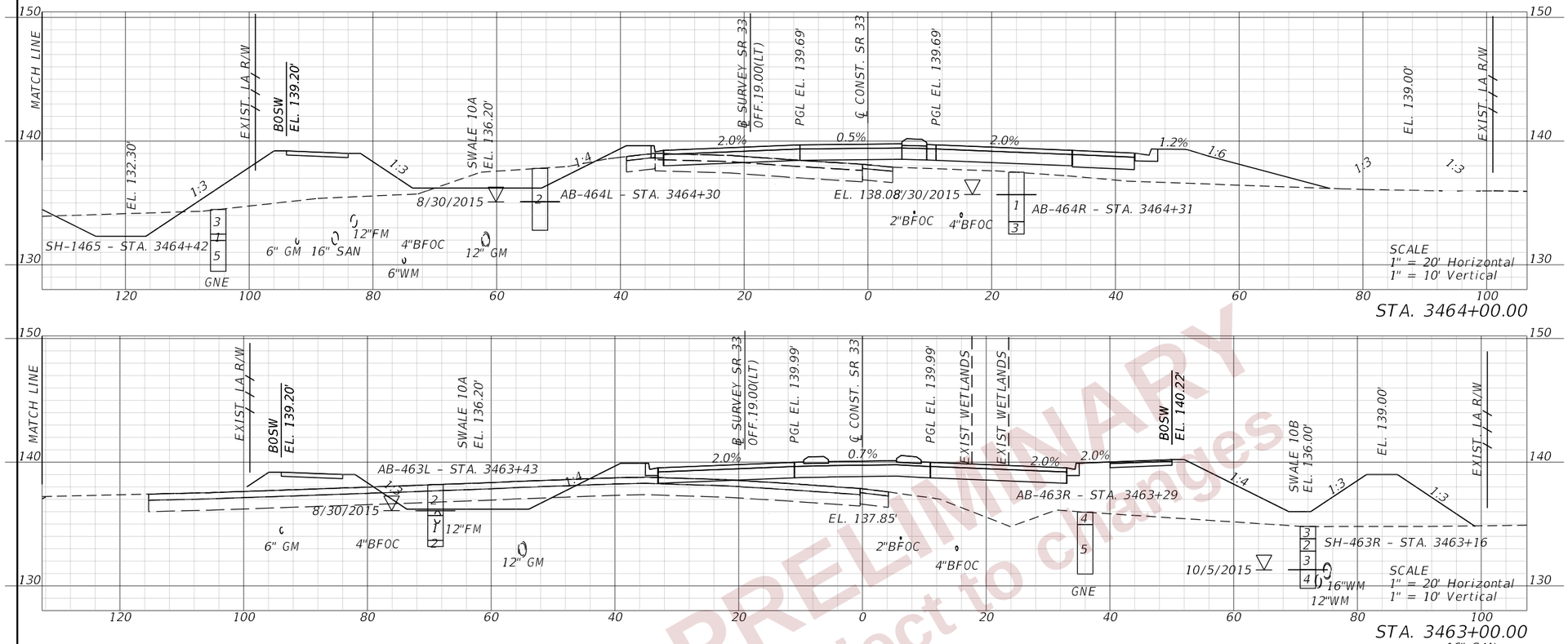

PRELIMINARY
subject to changes

REVISIONS				ENGINEER OF RECORD	STATE OF FLORIDA DEPARTMENT OF TRANSPORTATION 4			16" SAN	SHEET NO.
DATE	DESCRIPTION	DATE	DESCRIPTION	DEBANANDA PANIGRAHI, P.E. LICENSE NUMBER 68318 H. W. LOCHNER 4300 W. CYPRESS STREET, SUITE 500 TAMPA, FLORIDA 33607	ROAD NO.	COUNTY	FINANCIAL PROJECT ID	CROSS SECTIONS (98) SR 33	437
					SR 400	POLK	430185-3-52-01		

THE OFFICIAL RECORD OF THIS SHEET IS THE ELECTRONIC FILE DIGITALLY SIGNED AND SEALED UNDER RULE 61G15-23.004, F.A.C.

2/28/2024 12:52:05 PM JTAGLIAFERRO
c:\pw_working\lochner-pw-01\d0s18802\RDXSRD01.dgn

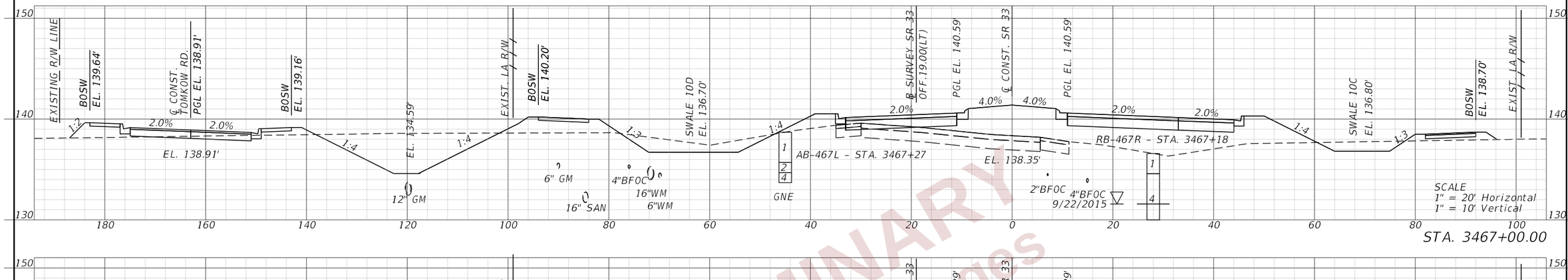

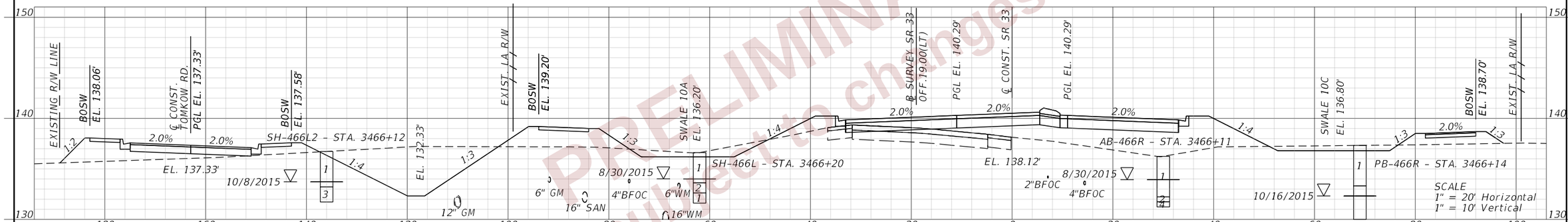

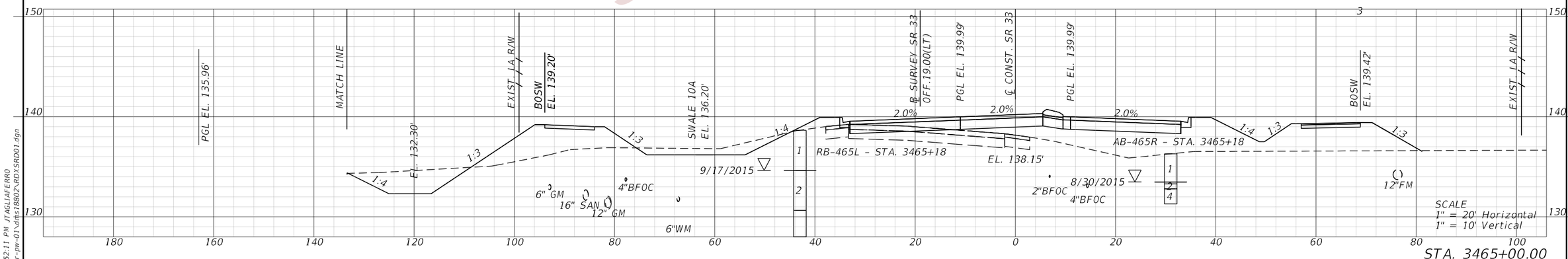

PRELIMINARY
subject to changes

REVISIONS			
DATE	DESCRIPTION	DATE	DESCRIPTION

ENGINEER OF RECORD

DEBANANDA PANIGRAHI, P.E.
LICENSE NUMBER 68318
H. W. LOCHNER
4300 W. CYPRESS STREET, SUITE 500
TAMPA, FLORIDA 33607

STATE OF FLORIDA
DEPARTMENT OF TRANSPORTATION

ROAD NO.	COUNTY	FINANCIAL PROJECT ID
SR 400	POLK	430185-3-52-01

CROSS SECTIONS (99)
SR 33 & TOMKOW RD

SHEET NO. 438

THE OFFICIAL RECORD OF THIS SHEET IS THE ELECTRONIC FILE DIGITALLY SIGNED AND SEALED UNDER RULE 61G15-23.004, F.A.C.

2/28/2024 12:52:11 PM JTAGLIAFERRO
c:\pw_working\lochner-pw-01\dms13802\RDXSRD01.dgn

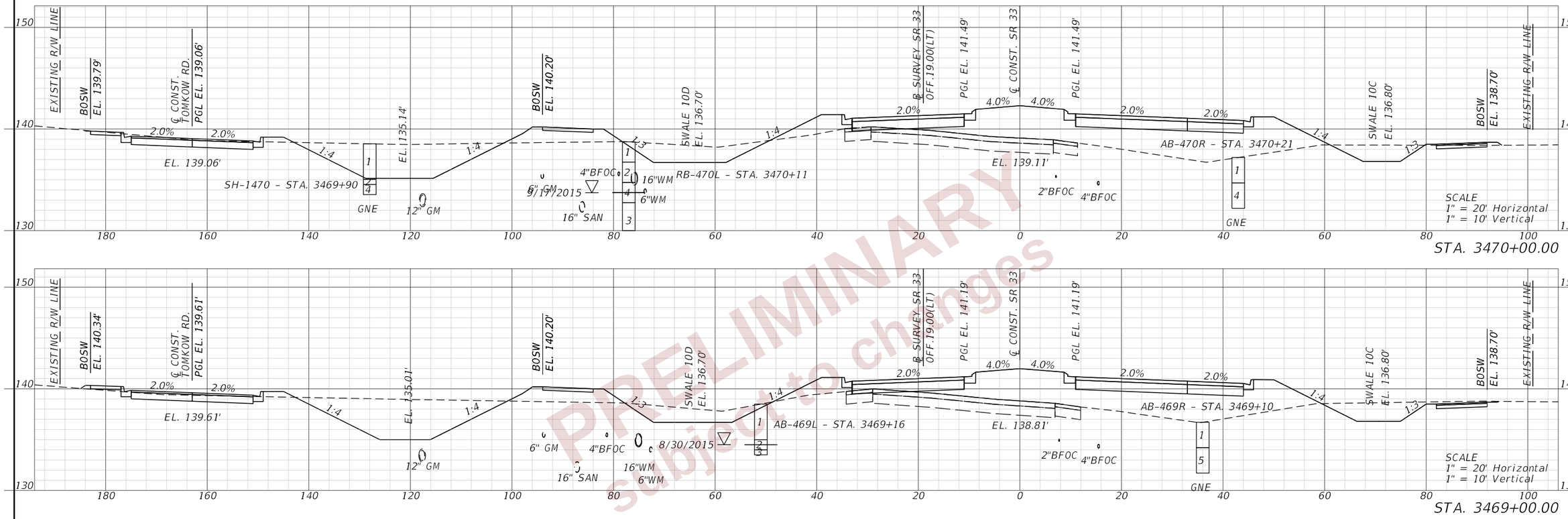

PRELIMINARY
subject to changes

THE OFFICIAL RECORD OF THIS SHEET IS THE ELECTRONIC FILE DIGITALLY SIGNED AND SEALED UNDER RULE 61G15-23.004, F.A.C.

2/28/2024 12:52:16 PM JTAGLIAFERRO
c:\pw_working\lochner-pw-01\dms18802\RDXSRD01.dgn

REVISIONS			
DATE	DESCRIPTION	DATE	DESCRIPTION

ENGINEER OF RECORD
DEBANANDA PANIGRAHI, P.E.
LICENSE NUMBER 68318
H. W. LOCHNER
4300 W. CYPRESS STREET, SUITE 500
TAMPA, FLORIDA 33607

STATE OF FLORIDA
DEPARTMENT OF TRANSPORTATION

ROAD NO.	COUNTY	FINANCIAL PROJECT ID
SR 400	POLK	430185-3-52-01

CROSS SECTIONS (100)
SR 33 & TOMKOW RD

SHEET NO.
439

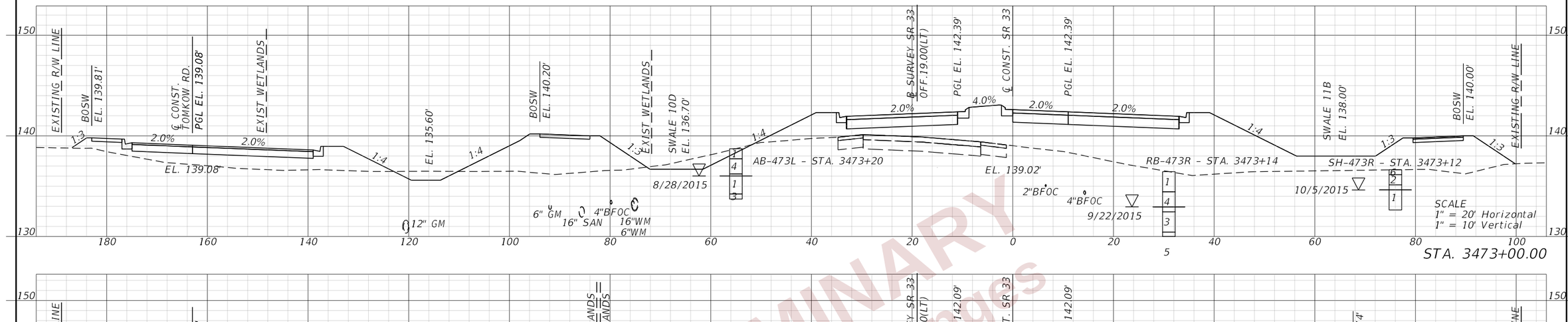

STA. 3473+00.00

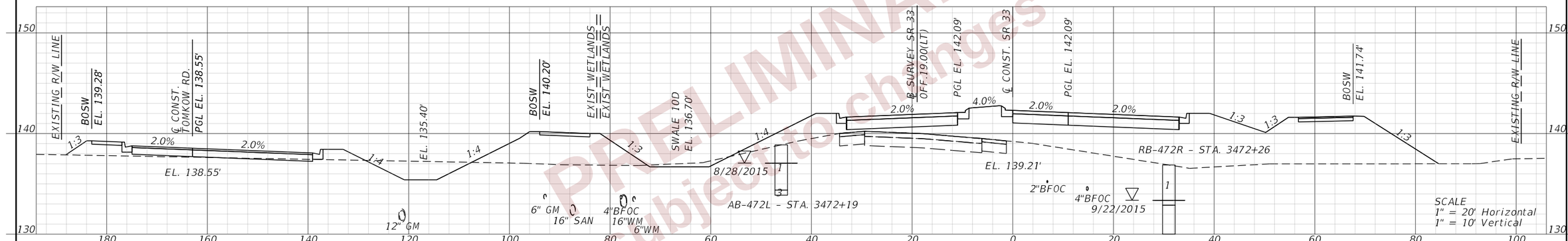

STA. 3472+00.00

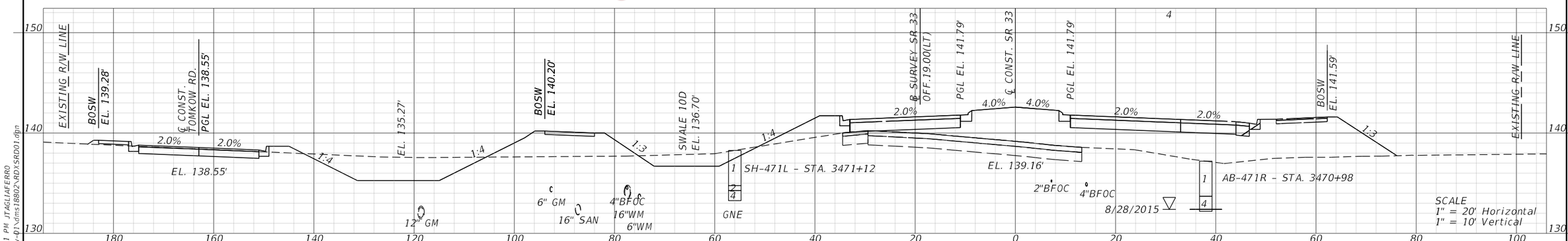

STA. 3471+00.00

PRELIMINARY
Subject to changes

REVISIONS				ENGINEER OF RECORD	STATE OF FLORIDA DEPARTMENT OF TRANSPORTATION			CROSS SECTIONS (101) SR 33 & TOMKOW RD	SHEET NO.
DATE	DESCRIPTION	DATE	DESCRIPTION	DEBANANDA PANIGRAHI, P.E. LICENSE NUMBER 68318 H. W. LOCHNER 4300 W. CYPRESS STREET, SUITE 500 TAMPA, FLORIDA 33607	ROAD NO.	COUNTY	FINANCIAL PROJECT ID		440
					SR 400	POLK	430185-3-52-01		

2/28/2024 12:52:21 PM JTAGLIAFERRO
c:\pw_working\lochner-pw-01\dms18802\RDYSRD01.dgn

THE OFFICIAL RECORD OF THIS SHEET IS THE ELECTRONIC FILE DIGITALLY SIGNED AND SEALED UNDER RULE 61G15-23.004, F.A.C.

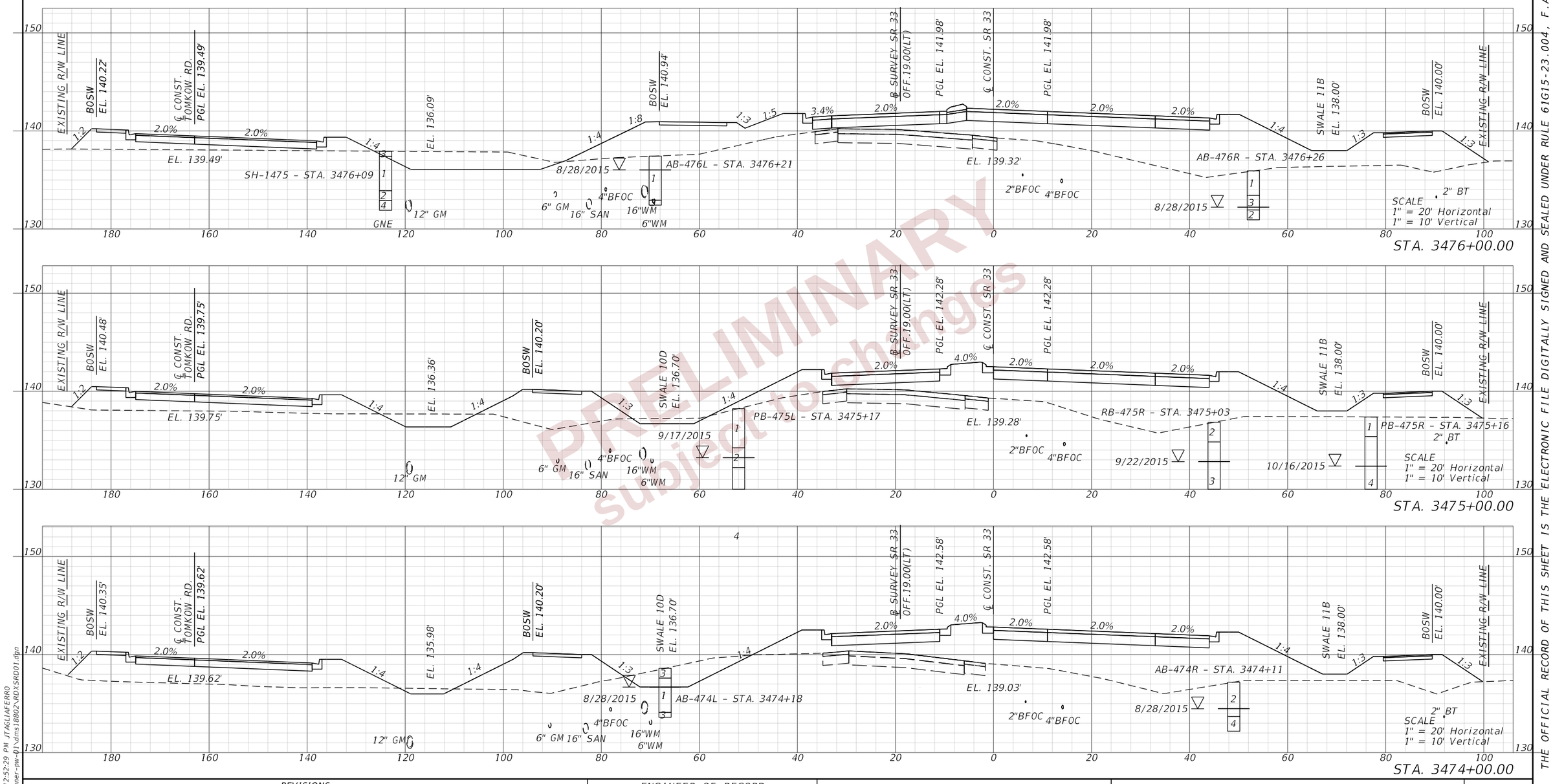

PRELIMINARY
subject to change

REVISIONS			
DATE	DESCRIPTION	DATE	DESCRIPTION

ENGINEER OF RECORD

DEBANANDA PANIGRAHI, P.E.
LICENSE NUMBER 68318
H. W. LOCHNER
4300 W. CYPRESS STREET, SUITE 500
TAMPA, FLORIDA 33607

STATE OF FLORIDA
DEPARTMENT OF TRANSPORTATION

ROAD NO.	COUNTY	FINANCIAL PROJECT ID
SR 400	POLK	430185-3-52-01

CROSS SECTIONS (102)
SR 33 & TOMKOW RD

SHEET NO. 441

THE OFFICIAL RECORD OF THIS SHEET IS THE ELECTRONIC FILE DIGITALLY SIGNED AND SEALED UNDER RULE 61G15-23.004, F.A.C.

2/28/2024 12:52:29 PM JTAGLIAFERRO
c:\pw_working\lochner-pw-01\dms18802\RDX\SRD01.dgn

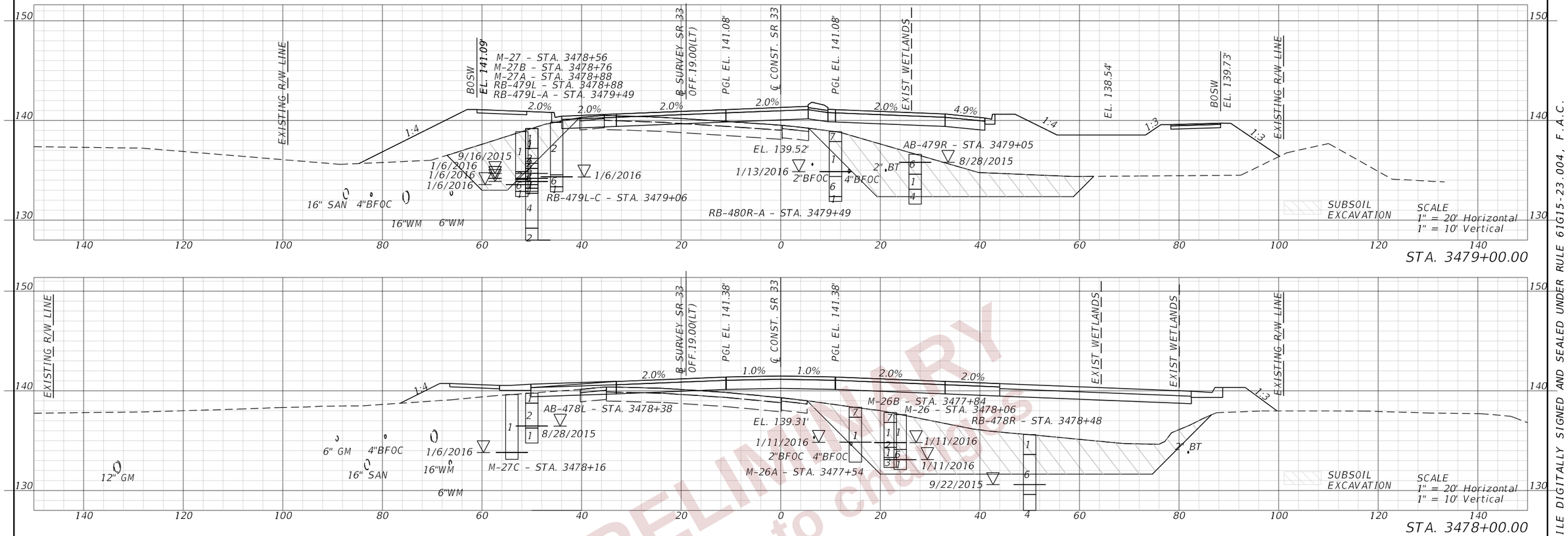

PRELIMINARY
subject to changes

THE OFFICIAL RECORD OF THIS SHEET IS THE ELECTRONIC FILE DIGITALLY SIGNED AND SEALED UNDER RULE 61G15-23.004, F.A.C.

2/28/2024 12:52:38 PM JTAGLIAFERRO
c:\pw_working\lochner-pw-01\dms18802\RDYSRD01.dgn

REVISIONS			
DATE	DESCRIPTION	DATE	DESCRIPTION

ENGINEER OF RECORD
DEBANANDA PANIGRAHI, P.E.
LICENSE NUMBER 68318
H. W. LOCHNER
4300 W. CYPRESS STREET, SUITE 500
TAMPA, FLORIDA 33607

STATE OF FLORIDA
DEPARTMENT OF TRANSPORTATION

ROAD NO.	COUNTY	FINANCIAL PROJECT ID
SR 400	POLK	430185-3-52-01

CROSS SECTIONS (103)
SR 33 & TOMKOW RD

SHEET NO. 442

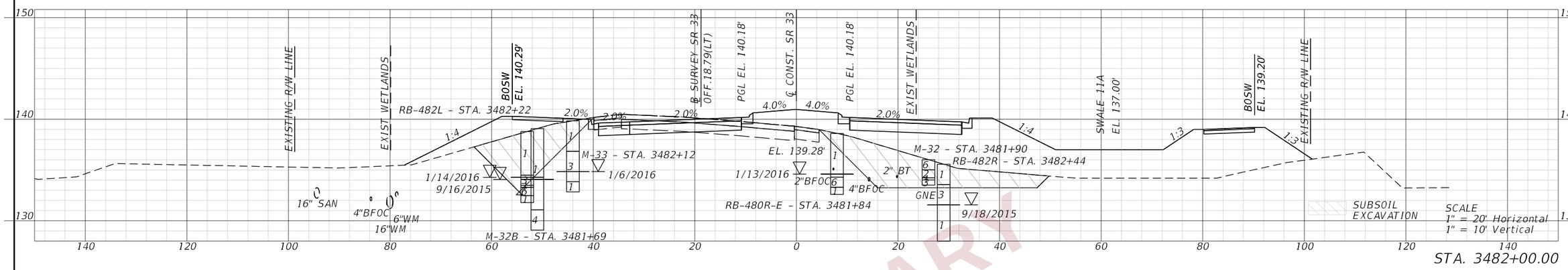

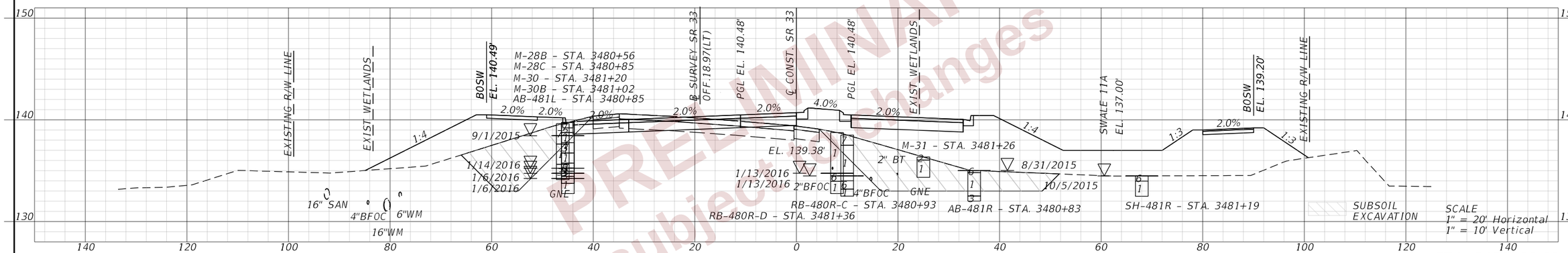

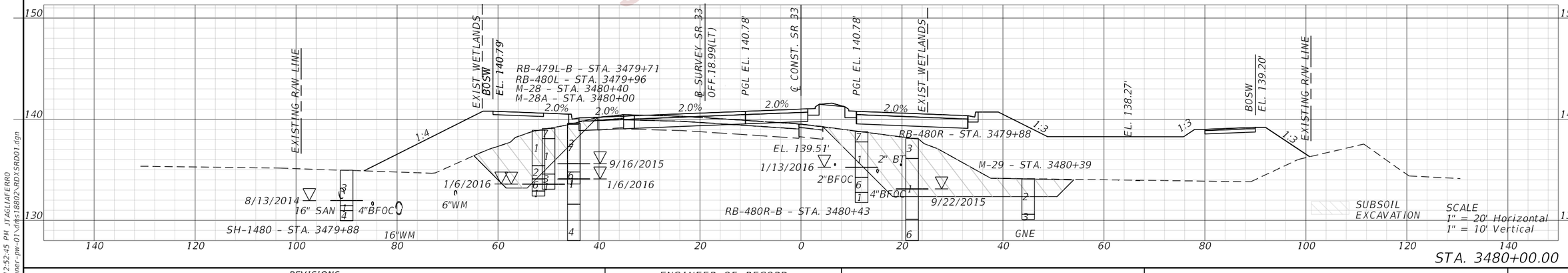

PRELIMINARY
subject to Changes

REVISIONS			
DATE	DESCRIPTION	DATE	DESCRIPTION

ENGINEER OF RECORD

DEBANANDA PANIGRAHI, P.E.
LICENSE NUMBER 68318
H. W. LOCHNER
4300 W. CYPRESS STREET, SUITE 500
TAMPA, FLORIDA 33607

STATE OF FLORIDA
DEPARTMENT OF TRANSPORTATION

ROAD NO.	COUNTY	FINANCIAL PROJECT ID
SR 400	POLK	430185-3-52-01

CROSS SECTIONS (104)
SR 33

SHEET NO. 443

THE OFFICIAL RECORD OF THIS SHEET IS THE ELECTRONIC FILE DIGITALLY SIGNED AND SEALED UNDER RULE 61G15-23.004, F.A.C.

2/28/2024 12:52:45 PM JTAGLIAFERRO
c:\pw_working\lochner-pw-01\dfs18802\RDXSRD01.dgn

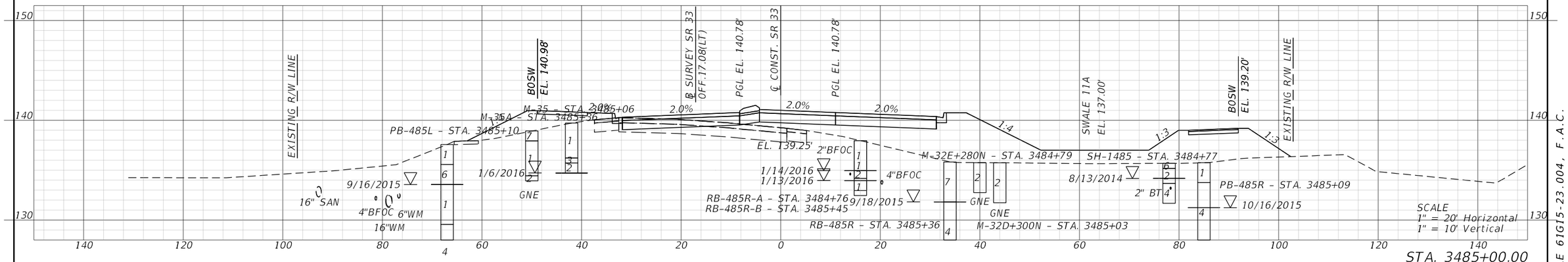

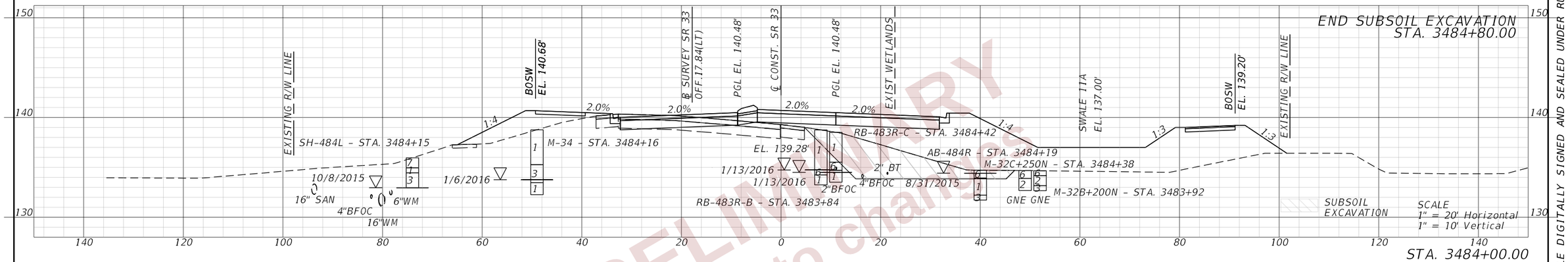

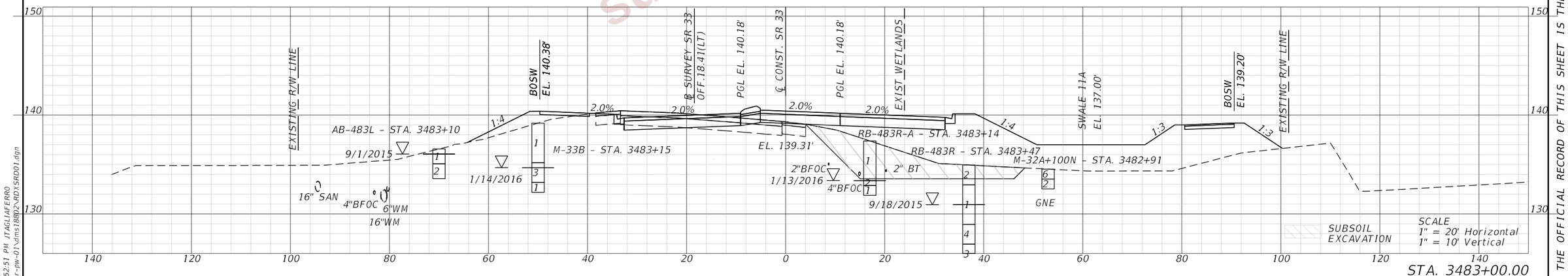

PRELIMINARY
subject to change

REVISIONS				ENGINEER OF RECORD	STATE OF FLORIDA DEPARTMENT OF TRANSPORTATION			CROSS SECTIONS (105) SR 33	SHEET NO.
DATE	DESCRIPTION	DATE	DESCRIPTION	DEBANANDA PANIGRAHI, P.E. LICENSE NUMBER 68318 H. W. LOCHNER 4300 W. CYPRESS STREET, SUITE 500 TAMPA, FLORIDA 33607	ROAD NO.	COUNTY	FINANCIAL PROJECT ID		444
					SR 400	POLK	430185-3-52-01		

THE OFFICIAL RECORD OF THIS SHEET IS THE ELECTRONIC FILE DIGITALLY SIGNED AND SEALED UNDER RULE 61G15-23.004, F.A.C.

2/28/2024 12:52:51 PM JTAGLIAFERRO
C:\pw_working\lochner-pw-01\dms18802\RDXSRD01.dgn

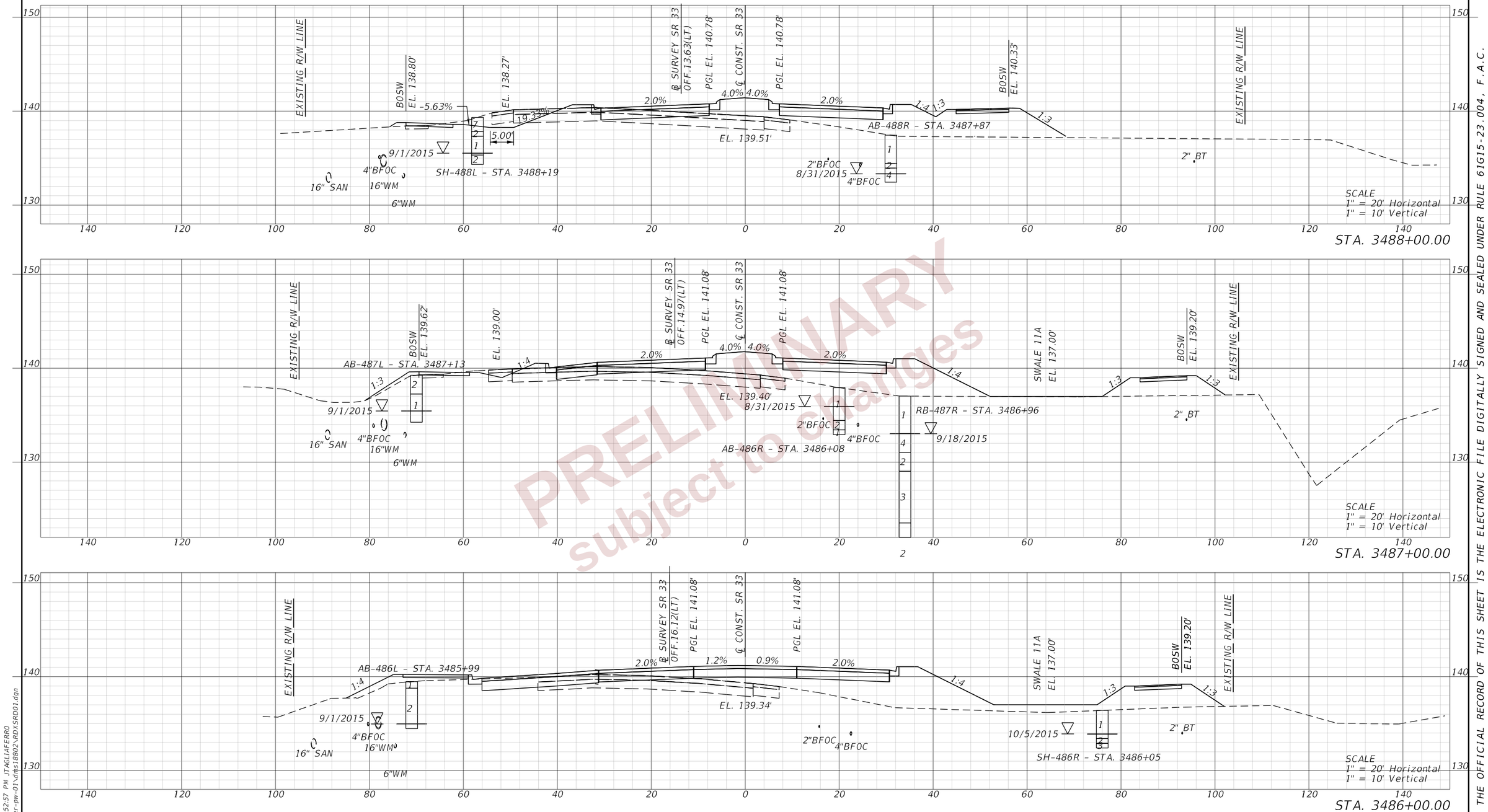

PRELIMINARY
subject to change

REVISIONS				ENGINEER OF RECORD	STATE OF FLORIDA DEPARTMENT OF TRANSPORTATION			CROSS SECTIONS (106) SR 33	SHEET NO.
DATE	DESCRIPTION	DATE	DESCRIPTION	DEBANANDA PANIGRAHI, P.E. LICENSE NUMBER 68318 H. W. LOCHNER 4300 W. CYPRESS STREET, SUITE 500 TAMPA, FLORIDA 33607	ROAD NO.	COUNTY	FINANCIAL PROJECT ID		445
					SR 400	POLK	430185-3-52-01		

THE OFFICIAL RECORD OF THIS SHEET IS THE ELECTRONIC FILE DIGITALLY SIGNED AND SEALED UNDER RULE 61G15-23.004, F.A.C.

2/28/2024 12:52:57 PM JTAGLIAFERRO
c:\pw_working\lochner-pw-01\dms31880\RDX\SRD01.dgn

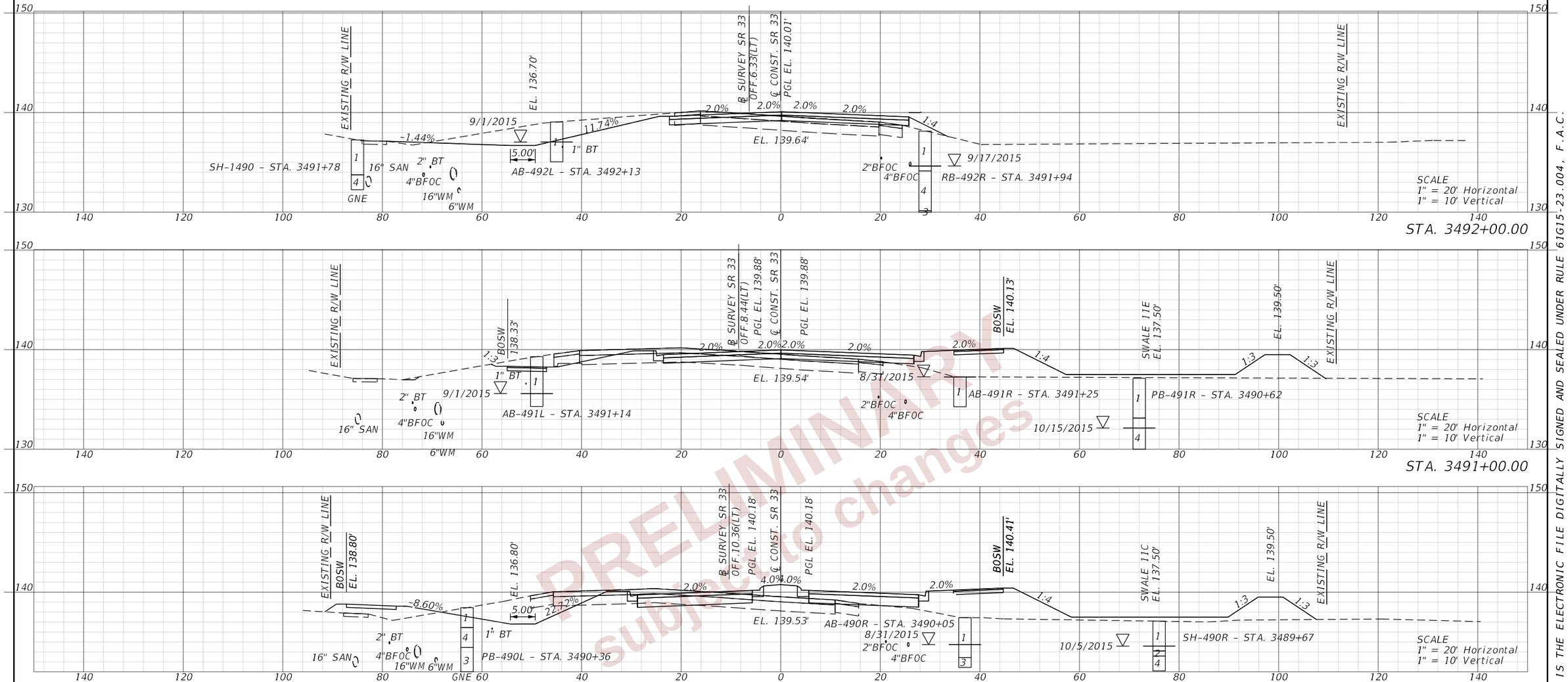

PRELIMINARY
subject to changes

REVISIONS			
DATE	DESCRIPTION	DATE	DESCRIPTION

ENGINEER OF RECORD

DEBANANDA PANIGRAHI, P.E.
LICENSE NUMBER 68318
H. W. LOCHNER
4300 W. CYPRESS STREET, SUITE 500
TAMPA, FLORIDA 33607

STATE OF FLORIDA
DEPARTMENT OF TRANSPORTATION

ROAD NO.	COUNTY	FINANCIAL PROJECT ID
SR 400	POLK	430185-3-52-01

CROSS SECTIONS (107)
SR 33

SHEET NO. 446

THE OFFICIAL RECORD OF THIS SHEET IS THE ELECTRONIC FILE DIGITALLY SIGNED AND SEALED UNDER RULE 61G15-23.004, F.A.C.

2/28/2024 12:53:05 PM JTAGLIAFERRO
c:\pw_working\lochner-pw-01\dms18802\RDYSRD01.dgn

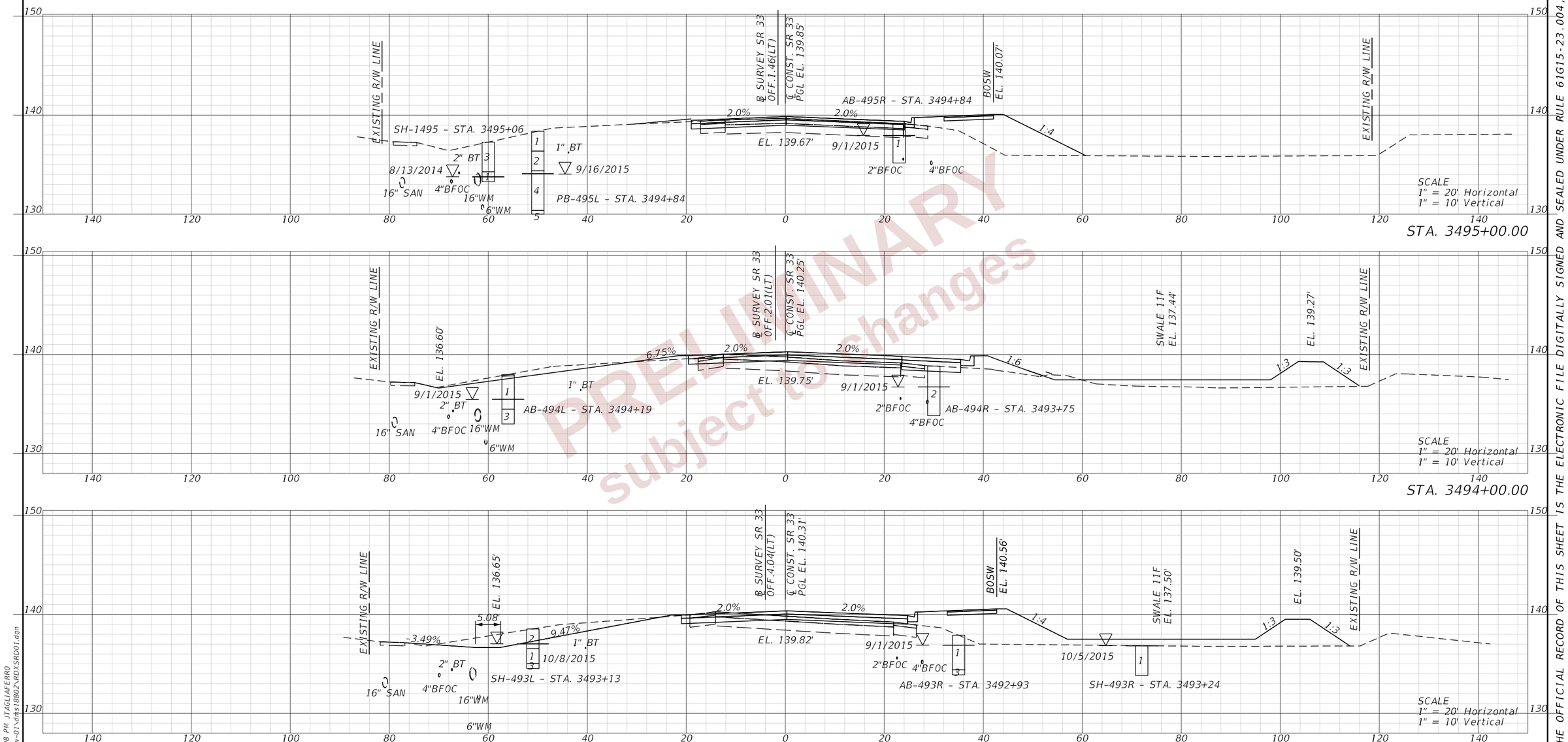

PRELIMINARY
subject to changes

REVISIONS				ENGINEER OF RECORD	STATE OF FLORIDA DEPARTMENT OF TRANSPORTATION			CROSS SECTIONS (108) SR 33	SHEET NO.
DATE	DESCRIPTION	DATE	DESCRIPTION	DEBANANDA PANIGRAHI, P.E. LICENSE NUMBER 68318 H. W. LOCHNER 4300 W. CYPRESS STREET, SUITE 500 TAMPA, FLORIDA 33607	ROAD NO.	COUNTY	FINANCIAL PROJECT ID		447
					SR 400	POLK	430185-3-52-01		

THE OFFICIAL RECORD OF THIS SHEET IS THE ELECTRONIC FILE DIGITALLY SIGNED AND SEALED UNDER RULE 61G15-23.004, F.A.C.

2/28/2024 12:53:08 PM JTAGLIAFERRO
c:\pw_working\lochner-pw-01\dms18802\RDXSRD01.dgn

PRELIMINARY
subject to changes

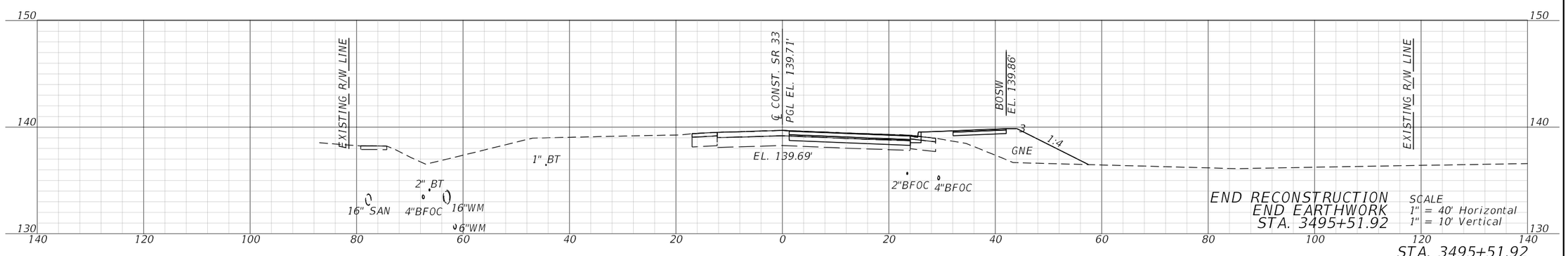

REVISIONS				ENGINEER OF RECORD	STATE OF FLORIDA DEPARTMENT OF TRANSPORTATION			CROSS SECTIONS (109) SR 33	SHEET NO.
DATE	DESCRIPTION	DATE	DESCRIPTION	DEBANANDA PANIGRAHI, P.E. LICENSE NUMBER 68318 H. W. LOCHNER 4300 W. CYPRESS STREET, SUITE 500 TAMPA, FLORIDA 33607	ROAD NO.	COUNTY	FINANCIAL PROJECT ID		448
					SR 400	POLK	430185-3-52-01		

THE OFFICIAL RECORD OF THIS SHEET IS THE ELECTRONIC FILE DIGITALLY SIGNED AND SEALED UNDER RULE 61G15-23.004, F.A.C.

2/28/2024 12:53:10 PM JTAGLIAFERRO
c:\pw_working\lochner-pw-01\dms18802\RDXSRD01.dgn

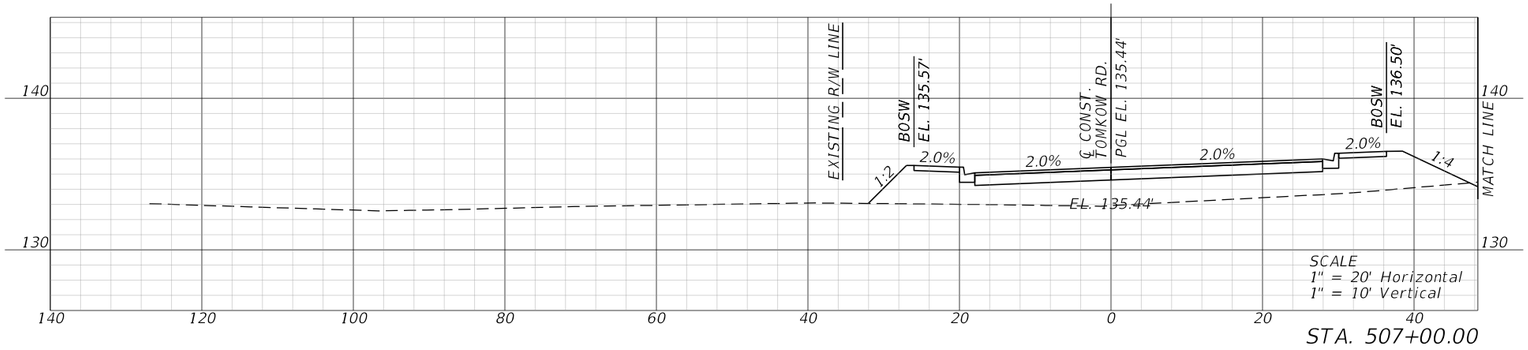

STA. 507+00.00

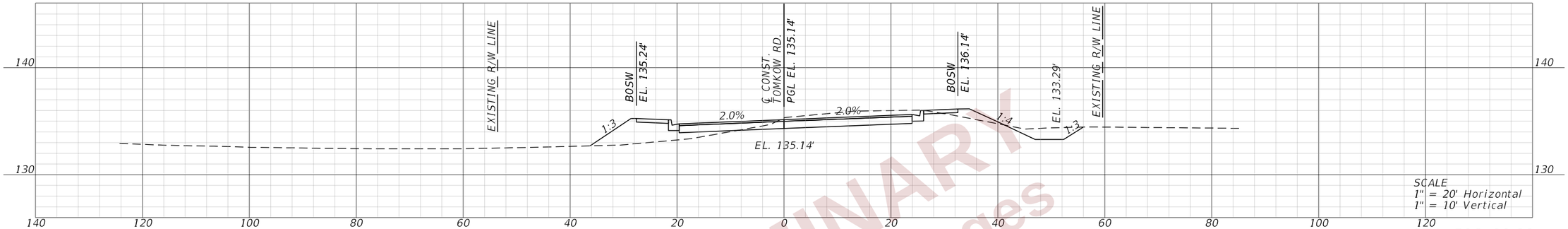

STA. 506+00.00

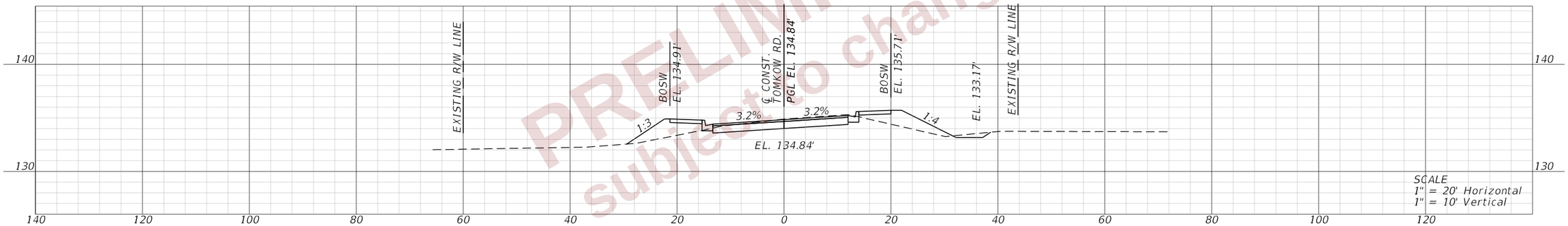

STA. 505+00.00

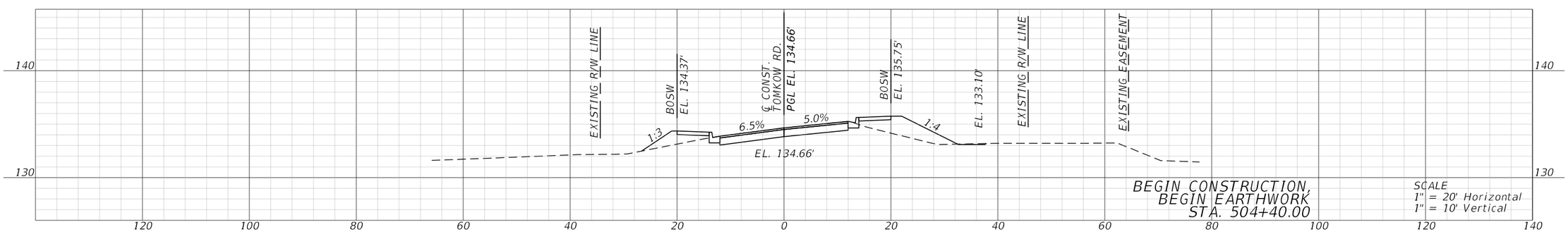

STA. 504+40.00

PRELIMINARY
subject to changes

REVISIONS				ENGINEER OF RECORD	STATE OF FLORIDA DEPARTMENT OF TRANSPORTATION			CROSS SECTIONS (110) TOMKOW RD	SHEET NO.
DATE	DESCRIPTION	DATE	DESCRIPTION	DEBANANDA PANIGRAHI, P.E. LICENSE NUMBER 68318 H. W. LOCHNER 4300 W. CYPRESS STREET, SUITE 500 TAMPA, FLORIDA 33607	ROAD NO.	COUNTY	FINANCIAL PROJECT ID		449
					SR 400	POLK	430185-3-52-01		

THE OFFICIAL RECORD OF THIS SHEET IS THE ELECTRONIC FILE DIGITALLY SIGNED AND SEALED UNDER RULE 61G15-23.004, F.A.C.

2/28/2024 12:53:17 PM JTAGLIAFERRO
c:\pw_working\lochner-pw-01\dms18802\RDXSRD01.dgn

END SUBSOIL EXCAVATION
STA. 509+00.00
END EARTHWORK TOMKOW RD
STA. 508+30.00

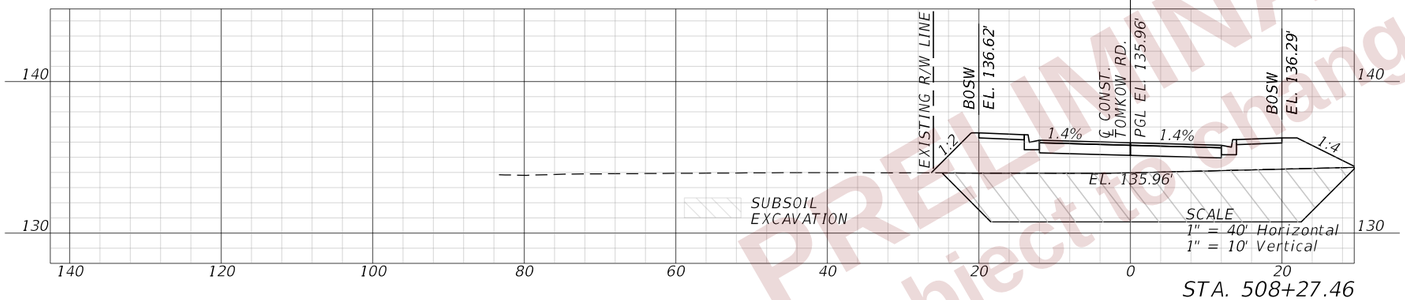

STA. 508+27.46

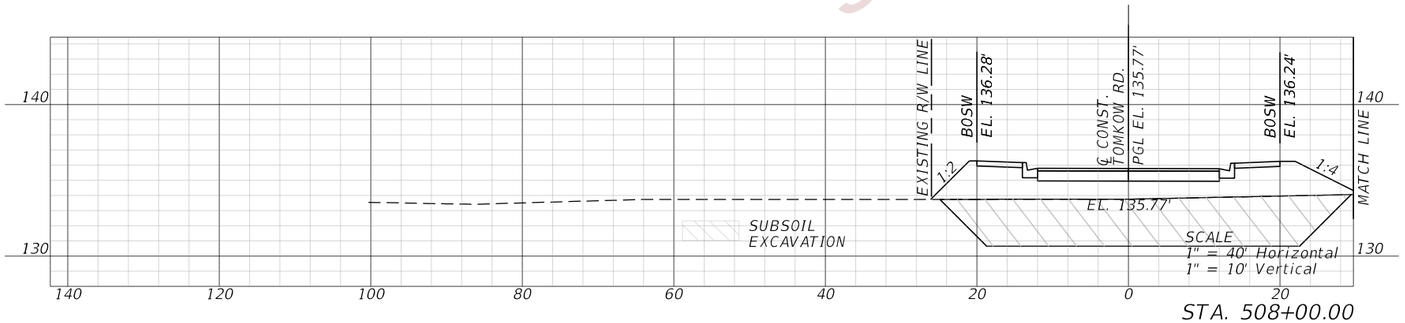

STA. 508+00.00
BEGIN SUBSOIL EXCAVATION
STA. 507+20.00

PRELIMINARY
subject to changes

REVISIONS				ENGINEER OF RECORD	STATE OF FLORIDA DEPARTMENT OF TRANSPORTATION			CROSS SECTIONS (111) TOMKOW RD	SHEET NO.
DATE	DESCRIPTION	DATE	DESCRIPTION	DEBANANDA PANIGRAHI, P.E. LICENSE NUMBER 68318 H. W. LOCHNER 4300 W. CYPRESS STREET, SUITE 500 TAMPA, FLORIDA 33607	ROAD NO.	COUNTY	FINANCIAL PROJECT ID		450
					SR 400	POLK	430185-3-52-01		

THE OFFICIAL RECORD OF THIS SHEET IS THE ELECTRONIC FILE DIGITALLY SIGNED AND SEALED UNDER RULE 61G15-23.004, F.A.C.

2/28/2024 12:53:23 PM JTAGLIAFERRO
c:\pw_working\lochner-pw-01\dms18802\RDXSRD01.dgn

END EARTHWORK
STA. 34+50.00

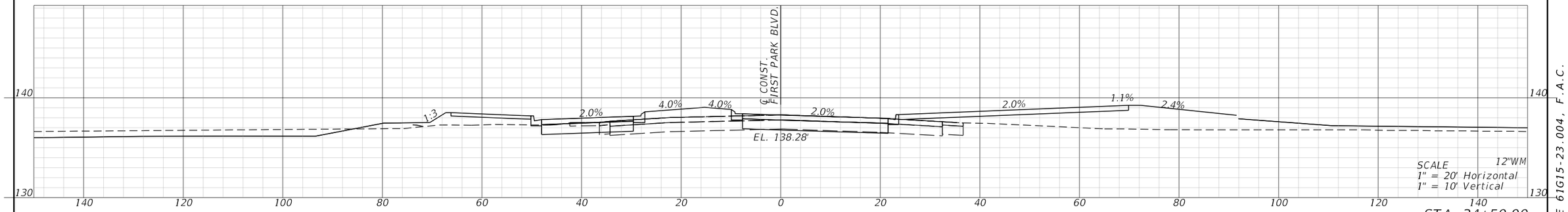

STA. 34+50.00

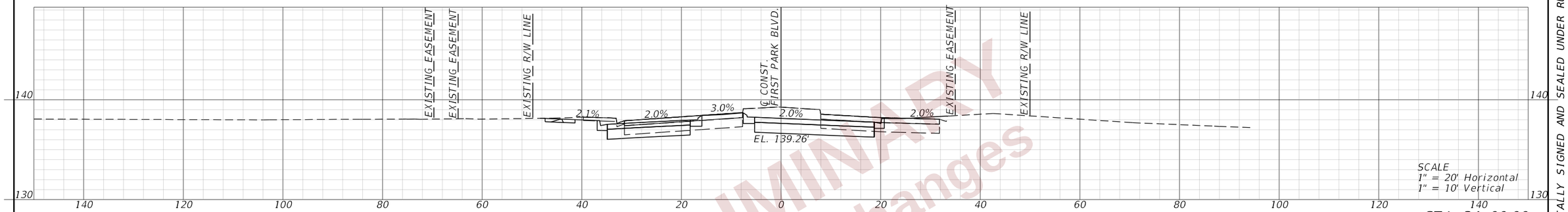

STA. 34+00.00

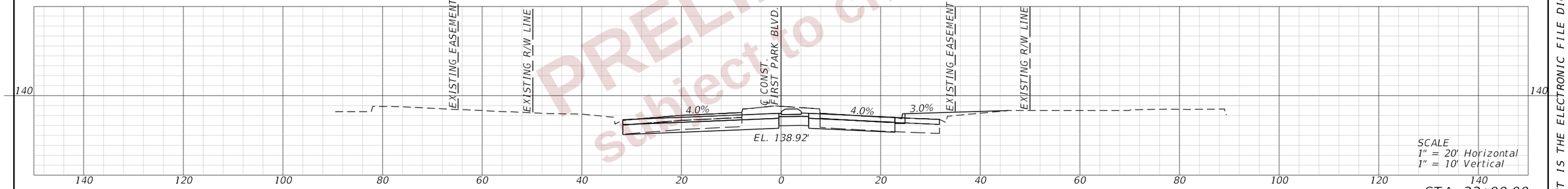

STA. 33+00.00

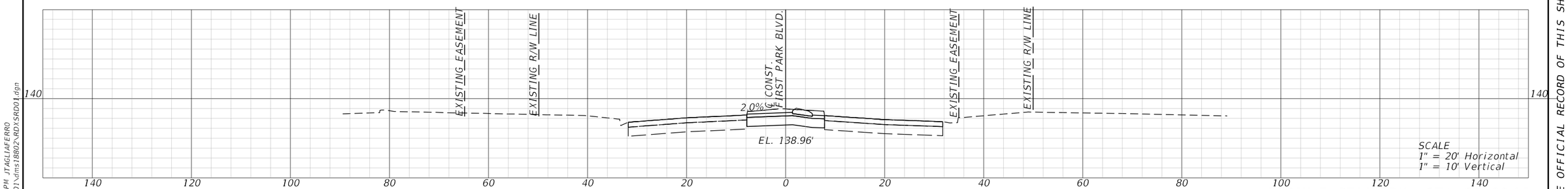

BEGIN EARTHWORK STA. 32+80.15
STA. 32+80.15

PRELIMINARY
subject to changes

REVISIONS				ENGINEER OF RECORD	STATE OF FLORIDA DEPARTMENT OF TRANSPORTATION			CROSS SECTIONS (112) FIRST PARK BLVD.	SHEET NO.
DATE	DESCRIPTION	DATE	DESCRIPTION	DEBANANDA PANIGRAHI, P.E. LICENSE NUMBER 68318 H. W. LOCHNER 4300 W. CYPRESS STREET, SUITE 500 TAMPA, FLORIDA 33607	ROAD NO.	COUNTY	FINANCIAL PROJECT ID		451
					SR 400	POLK	430185-3-52-01		

THE OFFICIAL RECORD OF THIS SHEET IS THE ELECTRONIC FILE DIGITALLY SIGNED AND SEALED UNDER RULE 61G15-23.004, F.A.C.

2/28/2024 12:53:28 PM JTAGLIAFERRO
c:\pw_working\lochner-pw-01\dms18802\RDXSRD01.dgn

END EARTHWORK
STA. 53+92.10

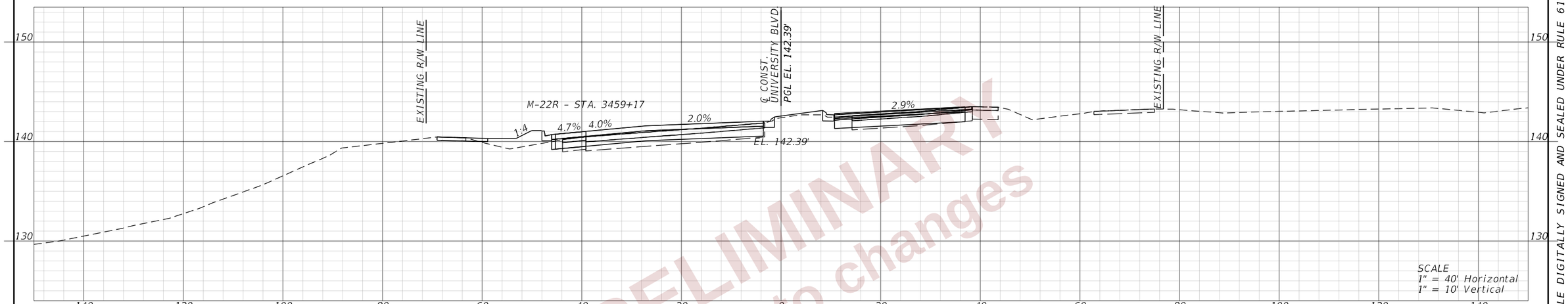

STA. 53+00.00

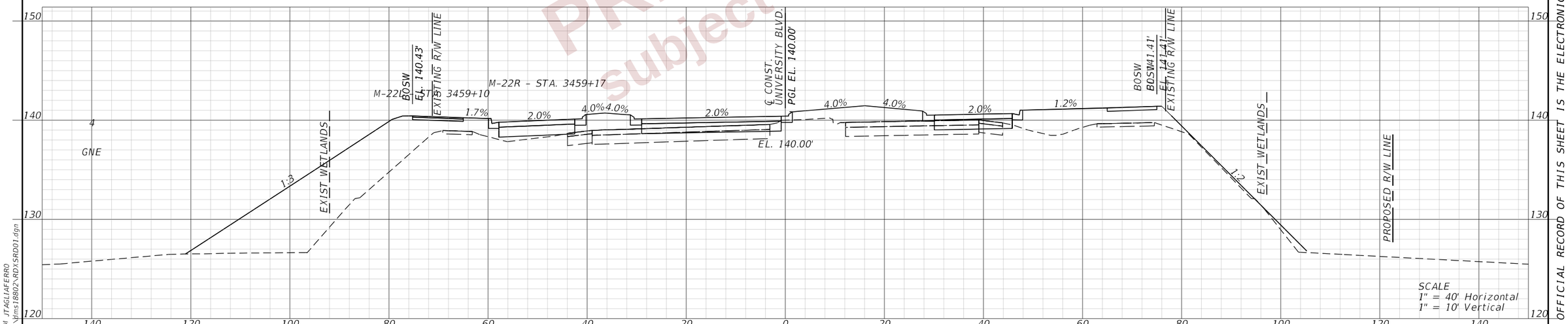

BEGIN EARTHWORK
STA. 52+00.00

STA. 52+00.00

PRELIMINARY
subject to changes

REVISIONS				ENGINEER OF RECORD	STATE OF FLORIDA DEPARTMENT OF TRANSPORTATION			CROSS SECTIONS (113) UNIVERSITY BLVD.	SHEET NO.
DATE	DESCRIPTION	DATE	DESCRIPTION	DEBANANDA PANIGRAHI, P.E. LICENSE NUMBER 68318 H. W. LOCHNER 4300 W. CYPRESS STREET, SUITE 500 TAMPA, FLORIDA 33607	ROAD NO.	COUNTY	FINANCIAL PROJECT ID		452
					SR 400	POLK	430185-3-52-01		

THE OFFICIAL RECORD OF THIS SHEET IS THE ELECTRONIC FILE DIGITALLY SIGNED AND SEALED UNDER RULE 61G15-23.004, F.A.C.

2/28/2024 12:53:30 PM JTAGLIAFERRO
c:\pw_working\lochner-pw-01\dms18802\RDYSRD01.dgn

PRELIMINARY
subject to changes

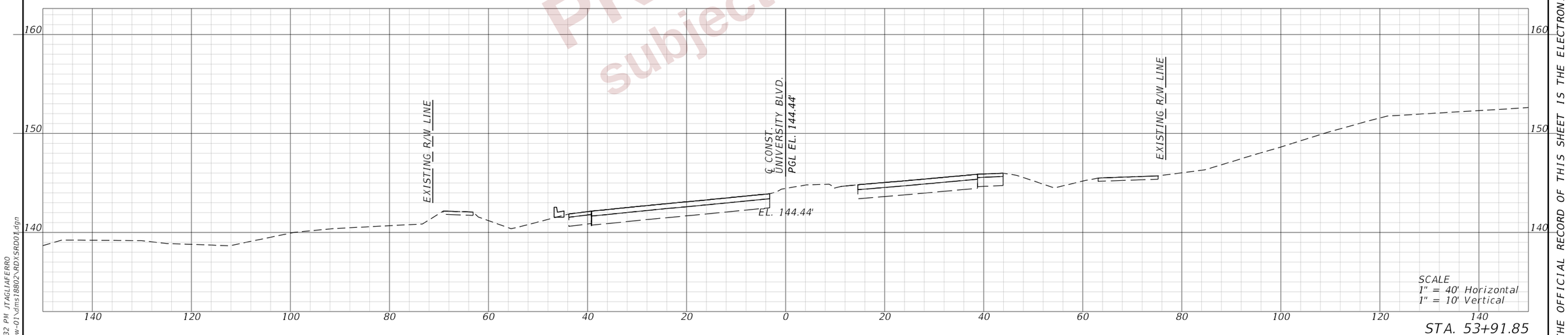

STA. 53+91.85

REVISIONS				ENGINEER OF RECORD	STATE OF FLORIDA DEPARTMENT OF TRANSPORTATION			CROSS SECTIONS (114) UNIVERSITY BLVD.	SHEET NO.
DATE	DESCRIPTION	DATE	DESCRIPTION	DEBANANDA PANIGRAHI, P.E. LICENSE NUMBER 68318 H. W. LOCHNER 4300 W. CYPRESS STREET, SUITE 500 TAMPA, FLORIDA 33607	ROAD NO.	COUNTY	FINANCIAL PROJECT ID		453
					SR 400	POLK	430185-3-52-01		

THE OFFICIAL RECORD OF THIS SHEET IS THE ELECTRONIC FILE DIGITALLY SIGNED AND SEALED UNDER RULE 61G15-23.004, F.A.C.

2/28/2024 12:53:32 PM JTAGLIAFERRO
c:\pw_working\lochner-pw-01\dms18802\RDXSRD01.dgn

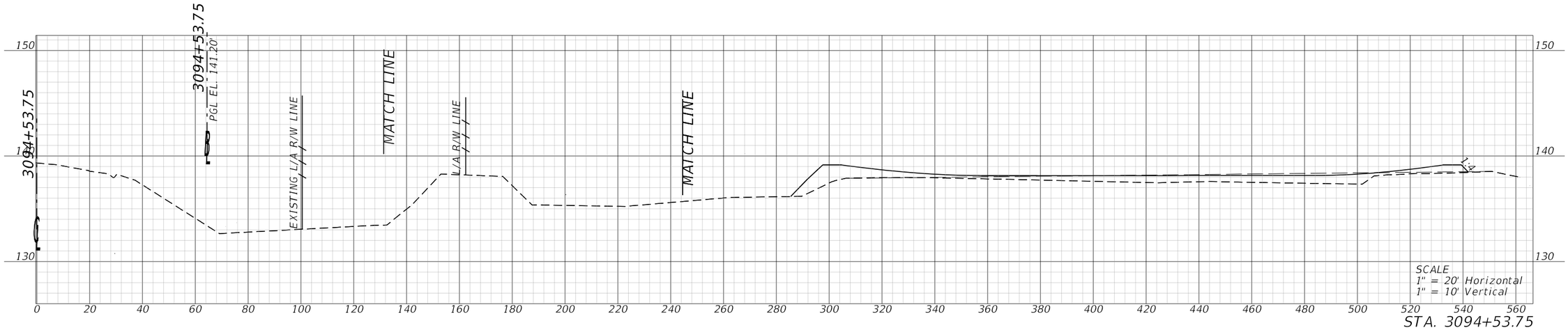

STA. 3094+53.75

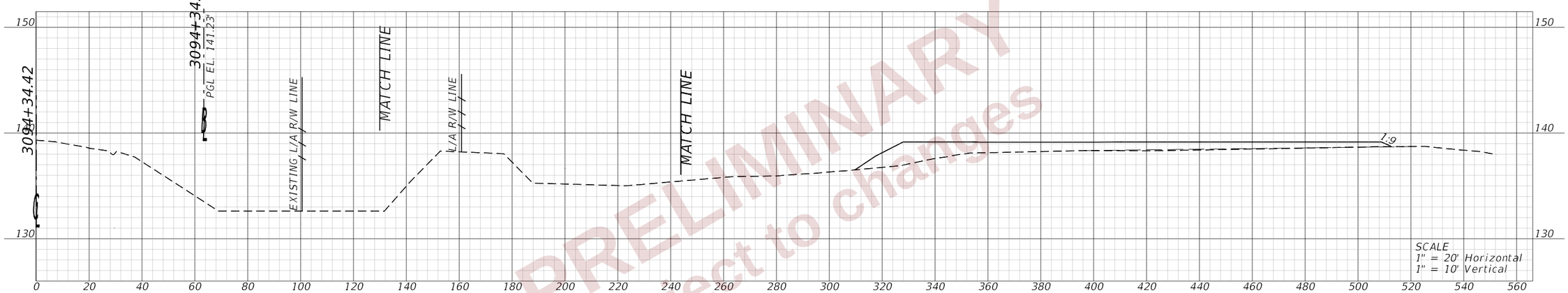

STA. 3094+34.42

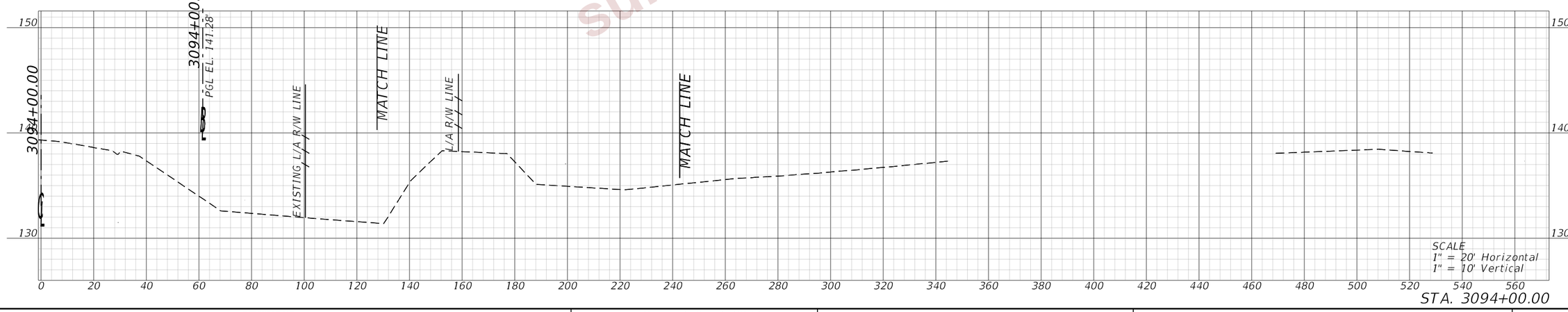

STA. 3094+00.00

PRELIMINARY
subject to changes

REVISIONS			
DATE	DESCRIPTION	DATE	DESCRIPTION

ENGINEER OF RECORD

DEBANANDA PANIGRAHI, P.E.
LICENSE NUMBER 68318
H. W. LOCHNER
4300 W. CYPRESS STREET, SUITE 500
TAMPA, FLORIDA 33607

STATE OF FLORIDA
DEPARTMENT OF TRANSPORTATION

ROAD NO.	COUNTY	FINANCIAL PROJECT ID
SR 400	POLK	430185-3-52-01

CROSS SECTION (115)
POND 13

SHEET NO. 454

THE OFFICIAL RECORD OF THIS SHEET IS THE ELECTRONIC FILE DIGITALLY SIGNED AND SEALED UNDER RULE 61G15-23.004, F.A.C.

2/26/2024 7:24:41 PM JBLOUNT
C:\pw_working\lochner-pw-01\dms1877\DRXSRD05.dgn

PRELIMINARY
subject to changes

REVISIONS			
DATE	DESCRIPTION	DATE	DESCRIPTION

ENGINEER OF RECORD
DEBANANDA PANIGRAHI, P.E.
LICENSE NUMBER 68318
H. W. LOCHNER
4300 W. CYPRESS STREET, SUITE 500
TAMPA, FLORIDA 33607

STATE OF FLORIDA
DEPARTMENT OF TRANSPORTATION

ROAD NO.	COUNTY	FINANCIAL PROJECT ID
SR 400	POLK	430185-3-52-01

CROSS SECTIONS (116)
POND 13

SHEET NO. 455

THE OFFICIAL RECORD OF THIS SHEET IS THE ELECTRONIC FILE DIGITALLY SIGNED AND SEALED UNDER RULE 61G15-23.004, F.A.C.

2/26/2024 7:24:43 PM JBLOUNT
c:\pw_working\lochner-pw-01\dms18776\DRXSRD05.dgn

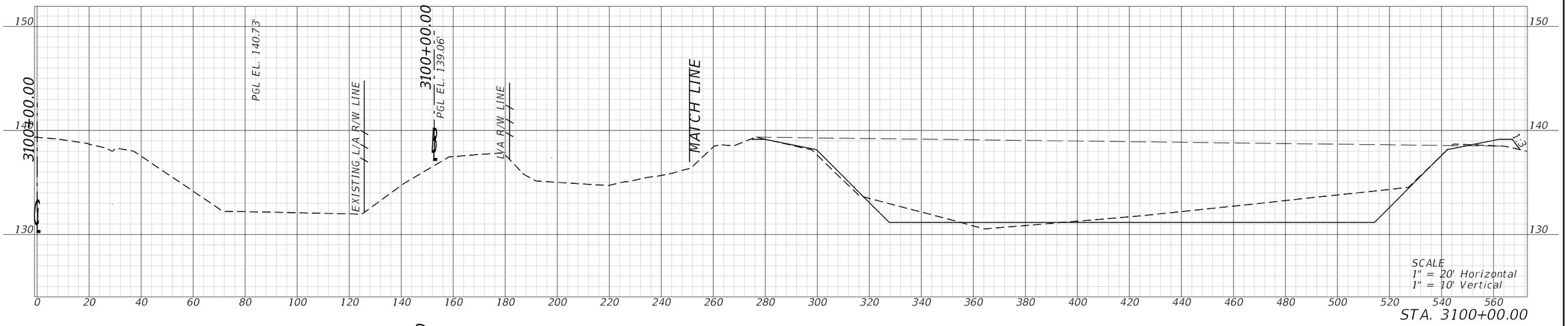

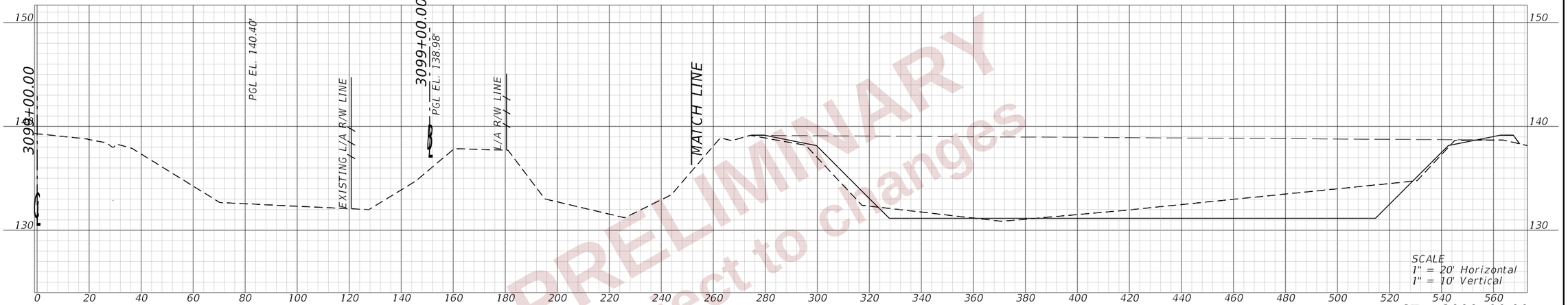

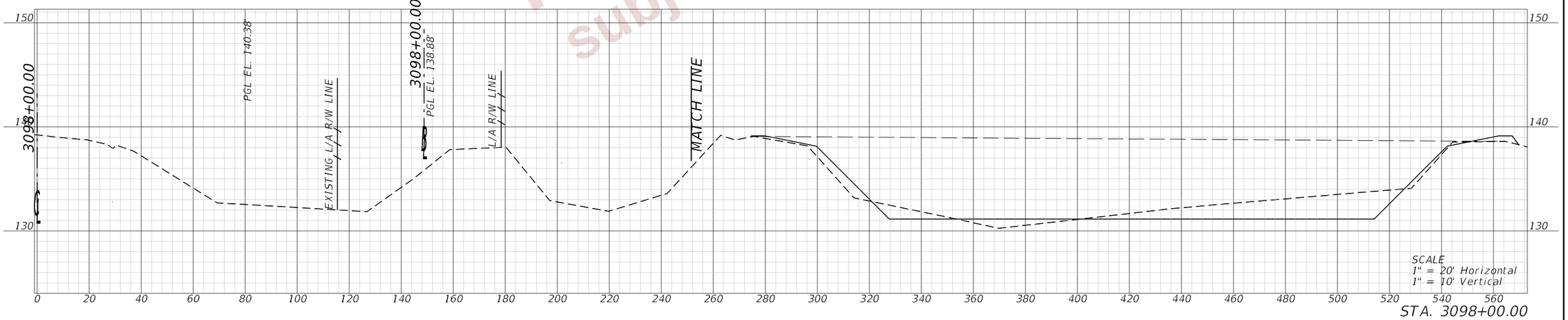

PRELIMINARY
subject to changes

REVISIONS				ENGINEER OF RECORD	STATE OF FLORIDA DEPARTMENT OF TRANSPORTATION			CROSS SECTIONS (117) POND 13	SHEET NO.
DATE	DESCRIPTION	DATE	DESCRIPTION	DEBANANDA PANIGRAHI, P.E. LICENSE NUMBER 68318 H. W. LOCHNER 4300 W. CYPRESS STREET, SUITE 500 TAMPA, FLORIDA 33607	ROAD NO.	COUNTY	FINANCIAL PROJECT ID		456
					SR 400	POLK	430185-3-52-01		

THE OFFICIAL RECORD OF THIS SHEET IS THE ELECTRONIC FILE DIGITALLY SIGNED AND SEALED UNDER RULE 61G15-23.004, F.A.C.

2/26/2024 7:24:45 PM JBLOUNT
c:\pw_working\lochner-pw-01\dms18776\DRXSRD05.dgn

PRELIMINARY
subject to changes

REVISIONS			
DATE	DESCRIPTION	DATE	DESCRIPTION

ENGINEER OF RECORD
DEBANANDA PANIGRAHI, P.E.
LICENSE NUMBER 68318
H. W. LOCHNER
4300 W. CYPRESS STREET, SUITE 500
TAMPA, FLORIDA 33607

STATE OF FLORIDA
DEPARTMENT OF TRANSPORTATION

ROAD NO.	COUNTY	FINANCIAL PROJECT ID
SR 400	POLK	430185-3-52-01

CROSS SECTIONS (118)
POND 13

SHEET NO. 457

THE OFFICIAL RECORD OF THIS SHEET IS THE ELECTRONIC FILE DIGITALLY SIGNED AND SEALED UNDER RULE 61G15-23.004, F.A.C.

2/26/2024 7:24:47 PM JBLOUNT
C:\pw_working\lochner-pw-01\dms18776\DRXSRD05.dgn

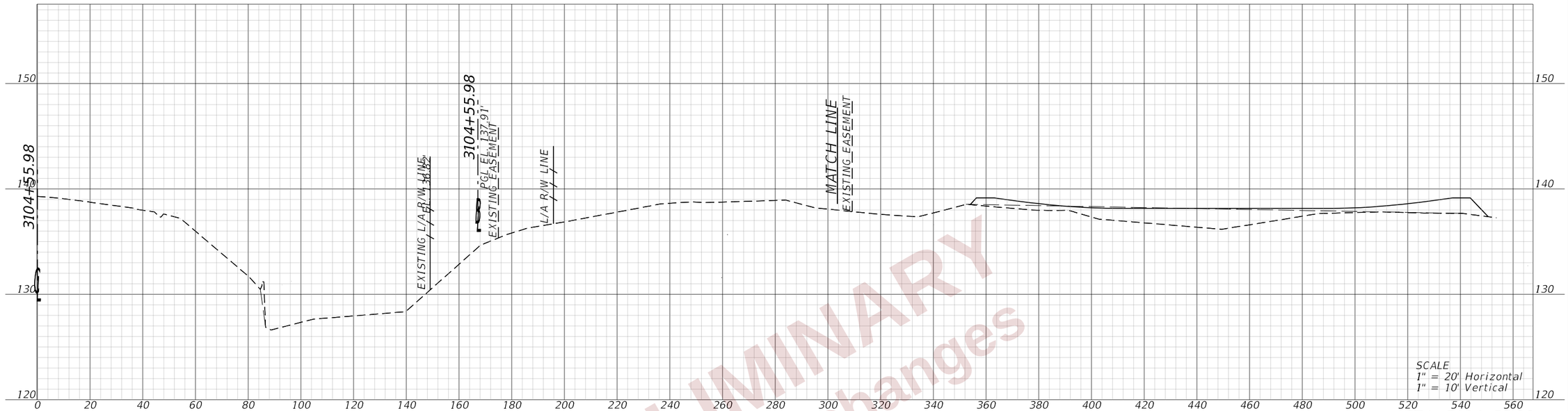

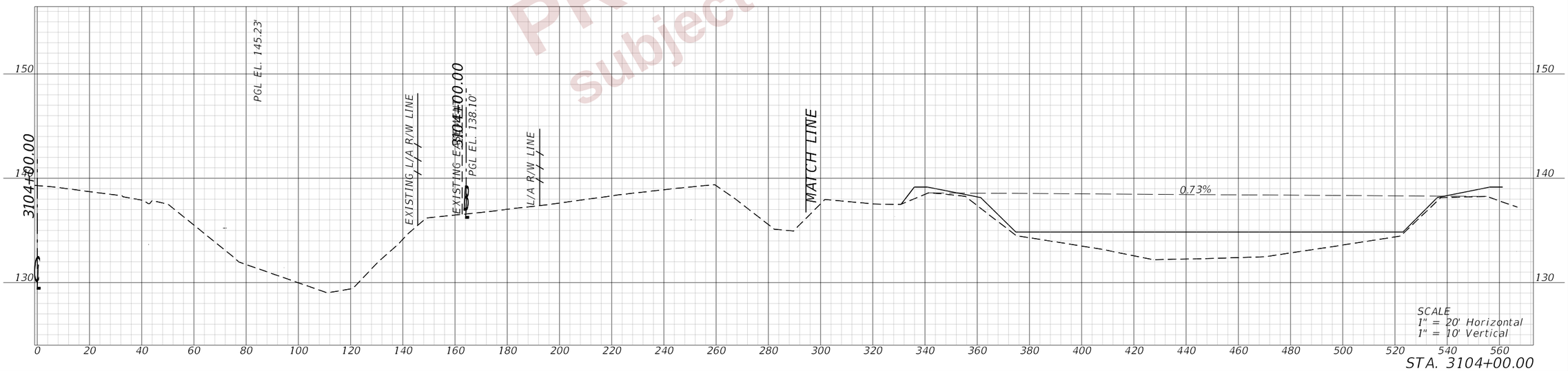

PRELIMINARY
Subject to changes

REVISIONS				ENGINEER OF RECORD	STATE OF FLORIDA DEPARTMENT OF TRANSPORTATION			CROSS SECTIONS (119) POND 13	SHEET NO.
DATE	DESCRIPTION	DATE	DESCRIPTION	DEBANANDA PANIGRAHI, P.E. LICENSE NUMBER 68318 H. W. LOCHNER 4300 W. CYPRESS STREET, SUITE 500 TAMPA, FLORIDA 33607	ROAD NO.	COUNTY	FINANCIAL PROJECT ID		458
					SR 400	POLK	430185-3-52-01		

THE OFFICIAL RECORD OF THIS SHEET IS THE ELECTRONIC FILE DIGITALLY SIGNED AND SEALED UNDER RULE 61G15-23.004, F.A.C.

2/26/2024 7:24:48 PM JBLOUNT
c:\pw_working\lochner-pw-01\dms18776\DRX\SRD05.dgn

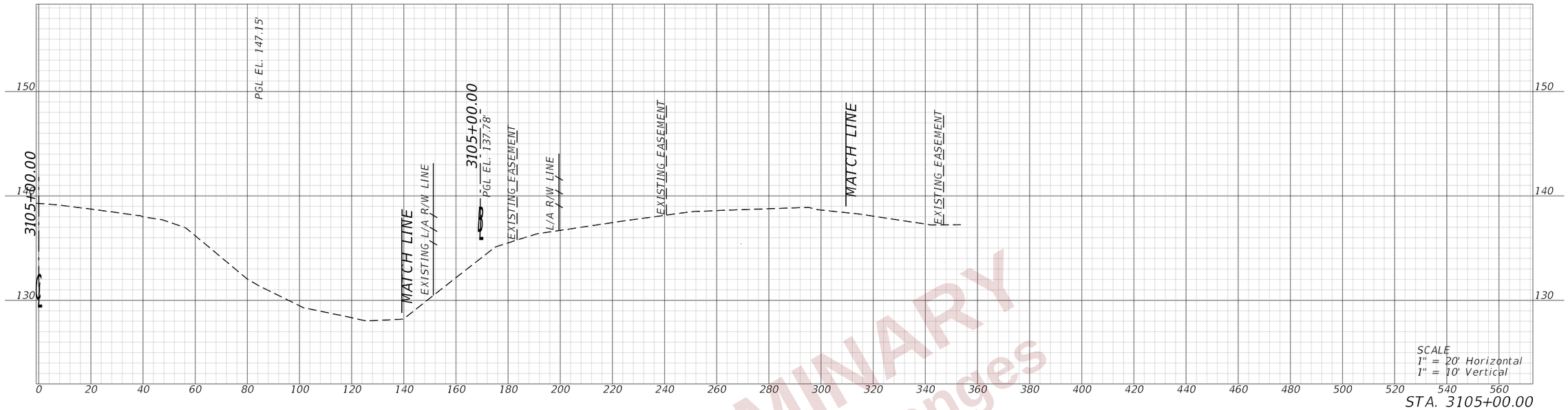

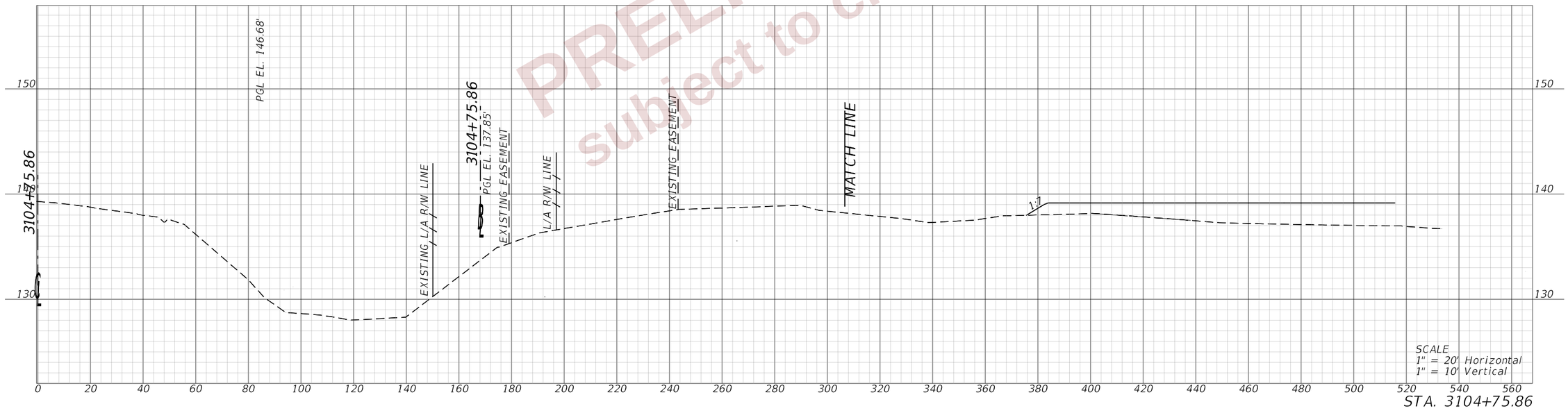

PRELIMINARY
subject to changes

REVISIONS			
DATE	DESCRIPTION	DATE	DESCRIPTION

ENGINEER OF RECORD
DEBANANDA PANIGRAHI, P.E.
LICENSE NUMBER 68318
H. W. LOCHNER
4300 W. CYPRESS STREET, SUITE 500
TAMPA, FLORIDA 33607

STATE OF FLORIDA
DEPARTMENT OF TRANSPORTATION

ROAD NO.	COUNTY	FINANCIAL PROJECT ID
SR 400	POLK	430185-3-52-01

CROSS SECTIONS (120)
POND 13

SHEET NO. 459

THE OFFICIAL RECORD OF THIS SHEET IS THE ELECTRONIC FILE DIGITALLY SIGNED AND SEALED UNDER RULE 61G15-23.004, F.A.C.

2/26/2024 7:24:49 PM JBLOUNT
c:\pw_working\lochner-pw-01\dms18776\DRX\SRD05.dgn

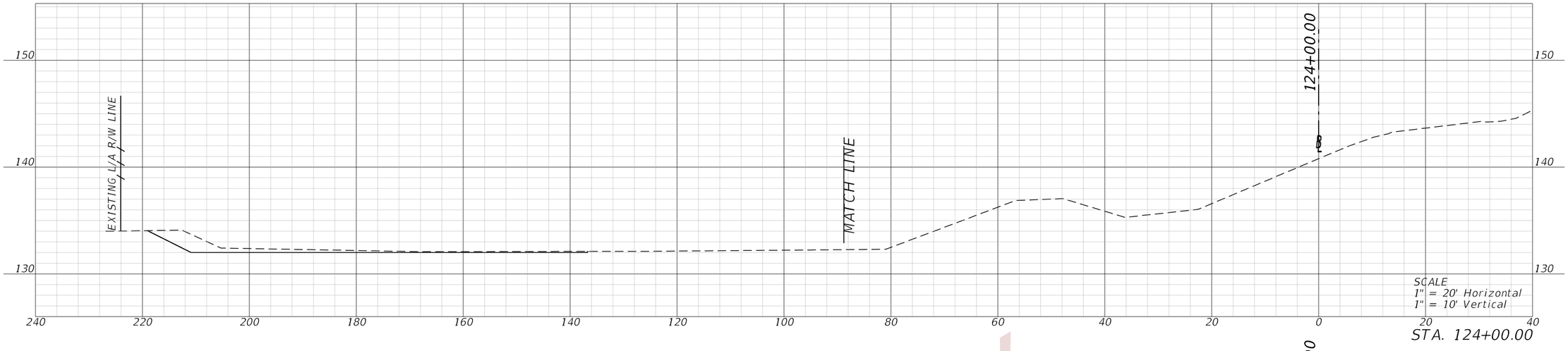

STA. 124+00.00

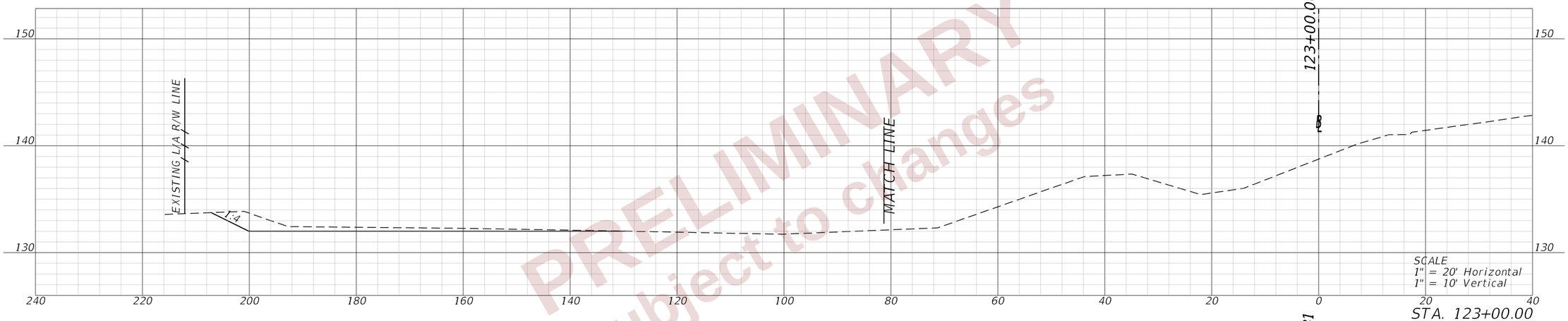

STA. 123+00.00

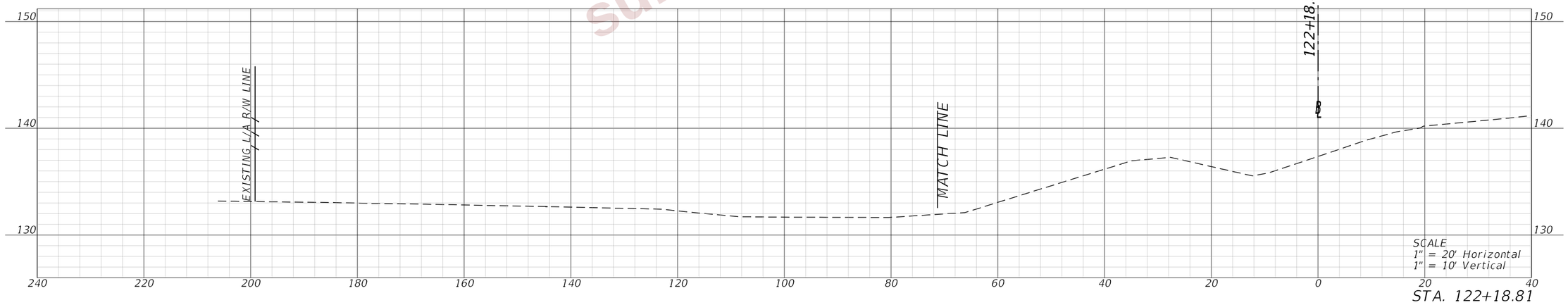

STA. 122+18.81

PRELIMINARY
subject to changes

REVISIONS				ENGINEER OF RECORD	STATE OF FLORIDA DEPARTMENT OF TRANSPORTATION			CROSS SECTIONS (121) FPC SITE	SHEET NO.
DATE	DESCRIPTION	DATE	DESCRIPTION	DEBANANDA PANIGRAHI, P.E. LICENSE NUMBER 68318 H. W. LOCHNER 4300 W. CYPRESS STREET, SUITE 500 TAMPA, FLORIDA 33607	ROAD NO.	COUNTY	FINANCIAL PROJECT ID		460
					SR 400	POLK	430185-3-52-01		

THE OFFICIAL RECORD OF THIS SHEET IS THE ELECTRONIC FILE DIGITALLY SIGNED AND SEALED UNDER RULE 61G15-23.004, F.A.C.

2/26/2024 7:25:07 PM JBLOUNT
c:\pw_working\lochner-pw-01\dms18776\DRXSRD06.dgn

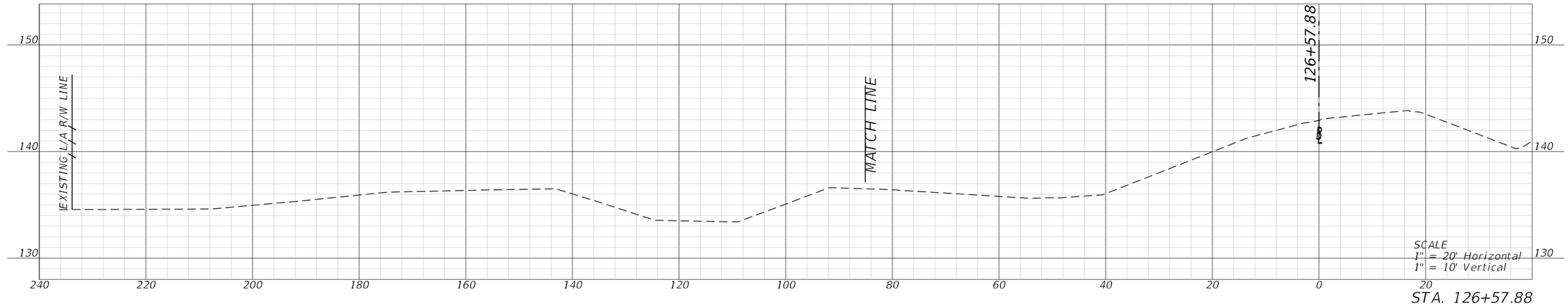

STA. 126+57.88

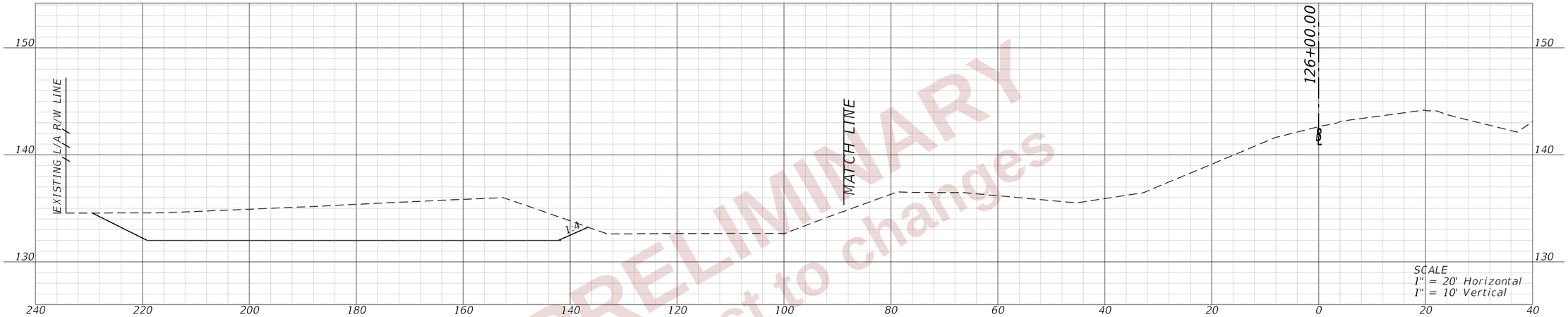

STA. 126+00.00

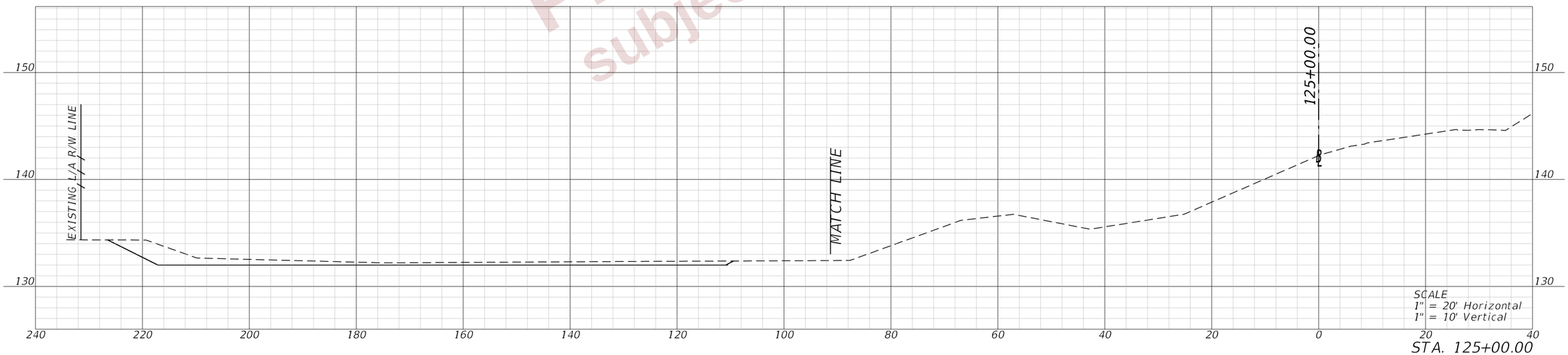

STA. 125+00.00

PRELIMINARY
subject to changes

REVISIONS			
DATE	DESCRIPTION	DATE	DESCRIPTION

ENGINEER OF RECORD
ENGINEER OF RECORD
DEBANANDA PANIGRAHI, P.E.
LICENSE NUMBER 68318
4300 W. CYPRESS STREET, SUITE 500
TAMPA, FLORIDA 33607

STATE OF FLORIDA
DEPARTMENT OF TRANSPORTATION

ROAD NO.	COUNTY	FINANCIAL PROJECT ID
SR 400	POLK	430185-3-52-01

CROSS SECTIONS (122)
FPC SITE

SHEET NO.
461

2/26/2024 7:25:08 PM JBLOUNT
c:\pw_working\lochner-pw-01\dms18776\DRXSRD06.dgn

THE DEPARTMENT OF TRANSPORTATION IS NOT RESPONSIBLE FOR ANY ELECTRONIC CONVERSION OF PLANS NOT PRODUCED BY THE DEPARTMENT. THE ELECTRONIC FILES ARE NOT CONTRACTUAL. THE OFFICIAL RECORD OF THIS SHEET IS THE SIGNED AND SEALED HARD COPY ON FILE IN THE DEPARTMENT OF TRANSPORTATION. ALL ELECTRONIC FILES ARE SUBJECT TO THE DISCLAIMER FOUND IN THE ELECTRONIC FILE TRANSMITTAL LETTER. FA.A.C.

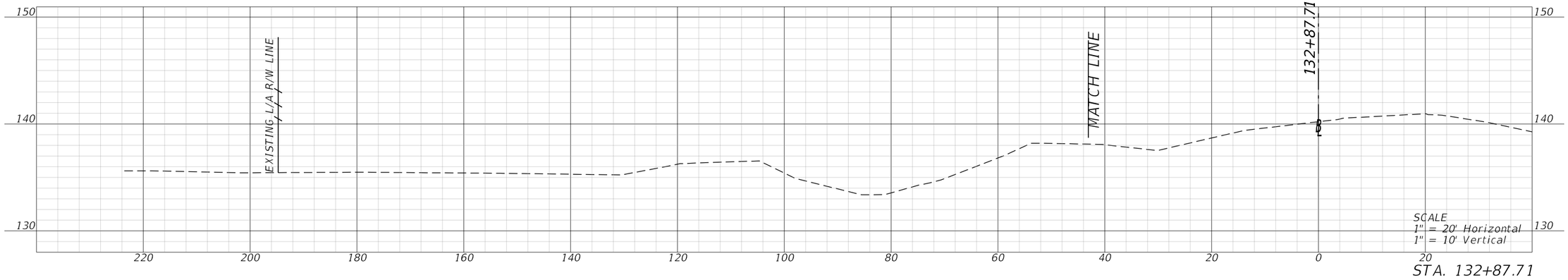

STA. 132+87.71

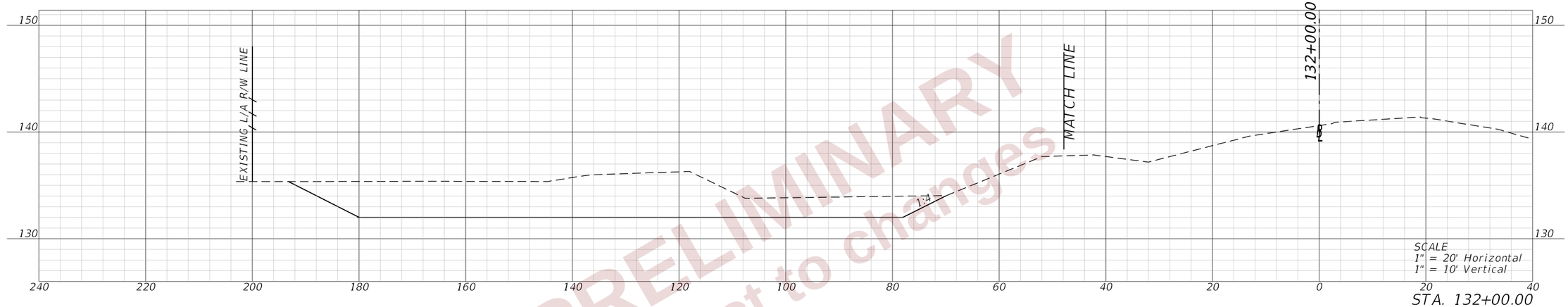

STA. 132+00.00

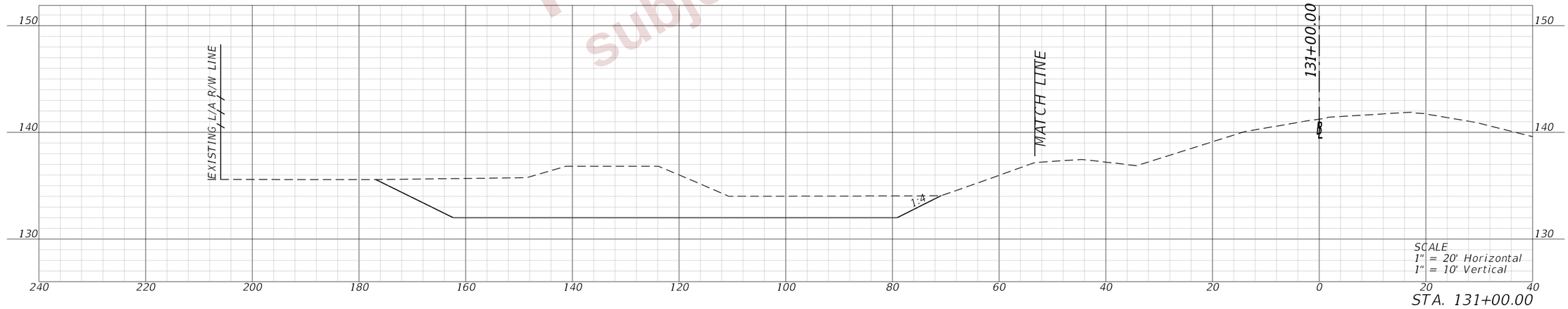

STA. 131+00.00

PRELIMINARY
subject to changes

THE OFFICIAL RECORD OF THIS SHEET IS THE ELECTRONIC FILE DIGITALLY SIGNED AND SEALED UNDER RULE 61G15-23.004, F.A.C.

REVISIONS				ENGINEER OF RECORD	STATE OF FLORIDA DEPARTMENT OF TRANSPORTATION			CROSS SECTIONS (123) FPC SITE	SHEET NO.
DATE	DESCRIPTION	DATE	DESCRIPTION	DEBANANDA PANIGRAHI, P.E. LICENSE NUMBER 68318 H. W. LOCHNER 4300 W. CYPRESS STREET, SUITE 500 TAMPA, FLORIDA 33607	ROAD NO.	COUNTY	FINANCIAL PROJECT ID		462
					SR 400	POLK	430185-3-52-01		

2/26/2024 7:25:10 PM JBLOUNT
c:\pw_working\lochner-pw-01\dms18776\DRXSRD06.dgn

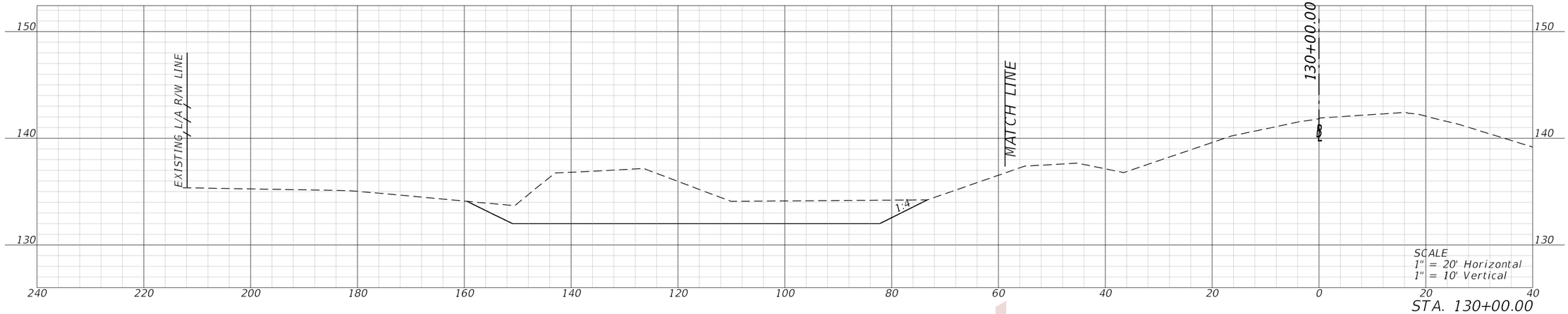

STA. 130+00.00

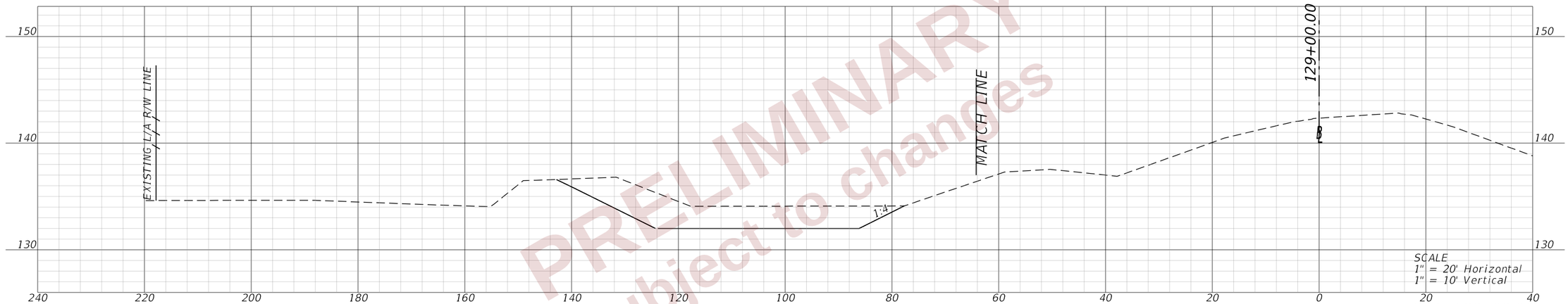

STA. 129+00.00

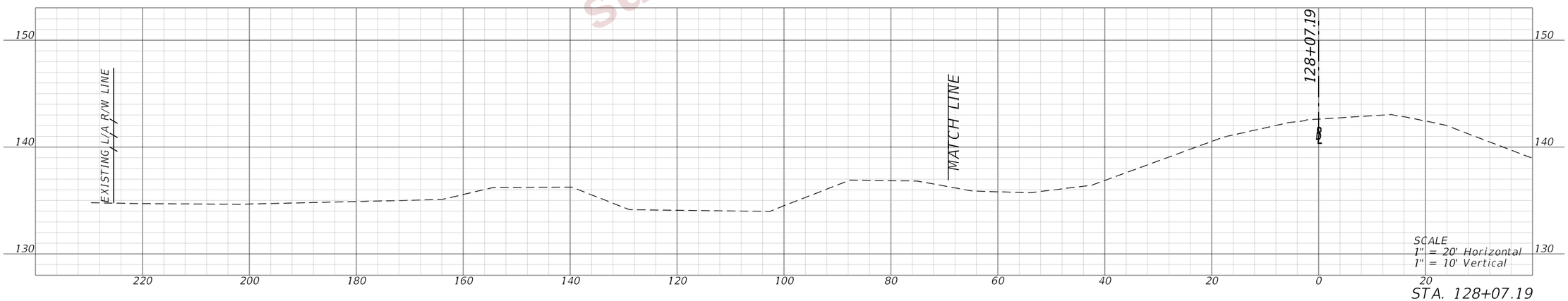

STA. 128+07.19

PRELIMINARY
subject to changes

REVISIONS				ENGINEER OF RECORD	STATE OF FLORIDA DEPARTMENT OF TRANSPORTATION			CROSS SECTIONS (124) FPC SITE	SHEET NO.
DATE	DESCRIPTION	DATE	DESCRIPTION	DEBANANDA PANIGRAHI, P.E. LICENSE NUMBER 68318 H. W. LOCHNER 4300 W. CYPRESS STREET, SUITE 500 TAMPA, FLORIDA 33607	ROAD NO.	COUNTY	FINANCIAL PROJECT ID		463
					SR 400	POLK	430185-3-52-01		

THE OFFICIAL RECORD OF THIS SHEET IS THE ELECTRONIC FILE DIGITALLY SIGNED AND SEALED UNDER RULE 61G15-23.004, F.A.C.

2/26/2024 7:25:09 PM JBLOUNT
c:\pw_working\lochner-pw-01\dms18776\DRXSRD06.dgn

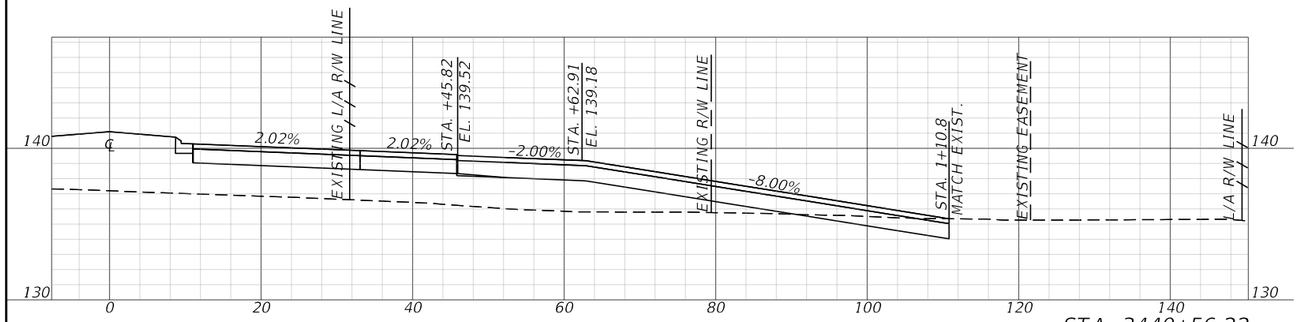

STA. 3440+56.22

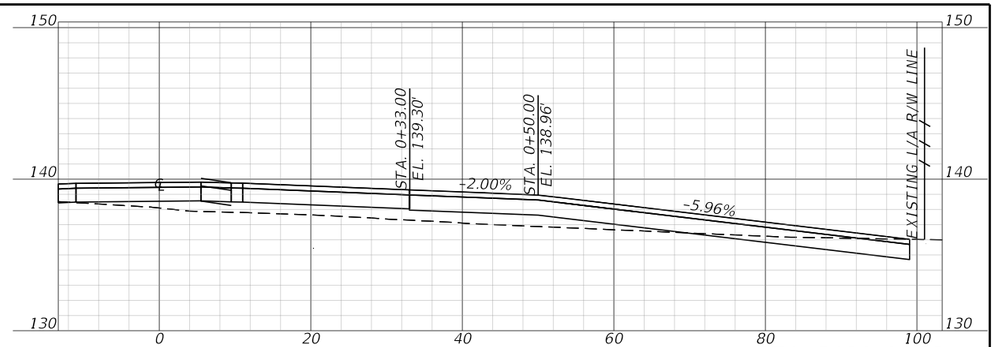

STA. 3464+14.99

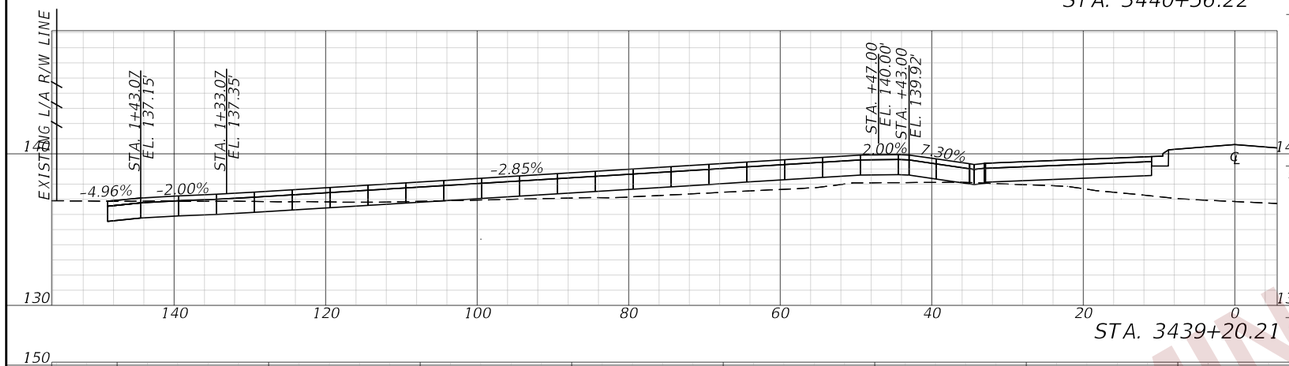

STA. 3439+20.21

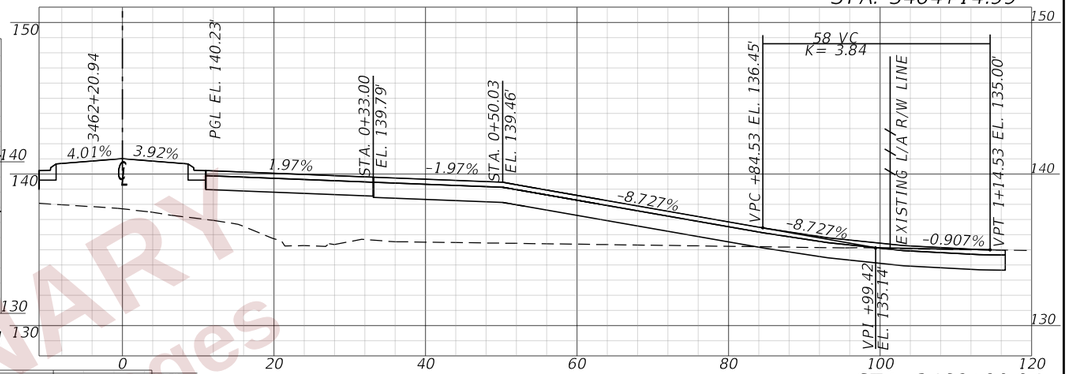

STA. 3462+20.94

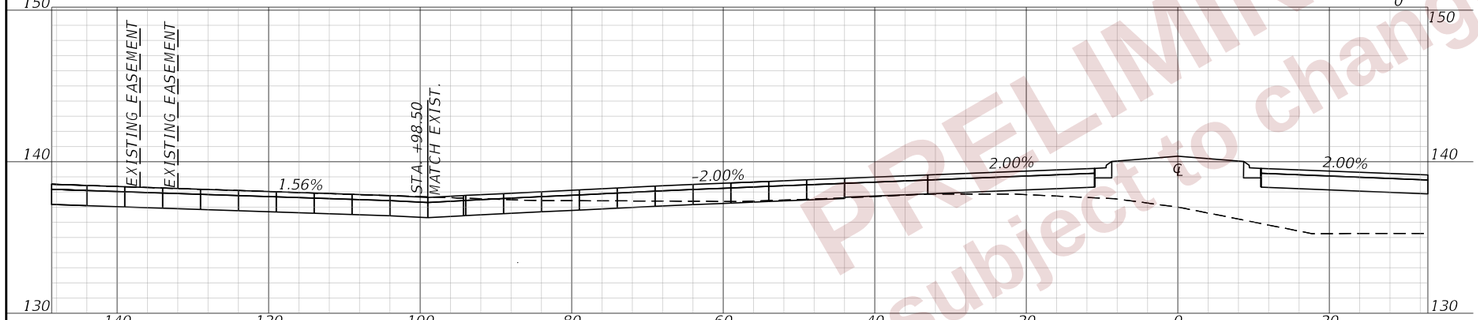

STA. 3405+61.47

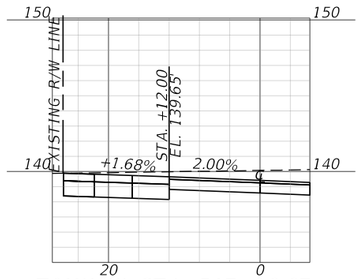

TOMKOW STA. 517+06.67

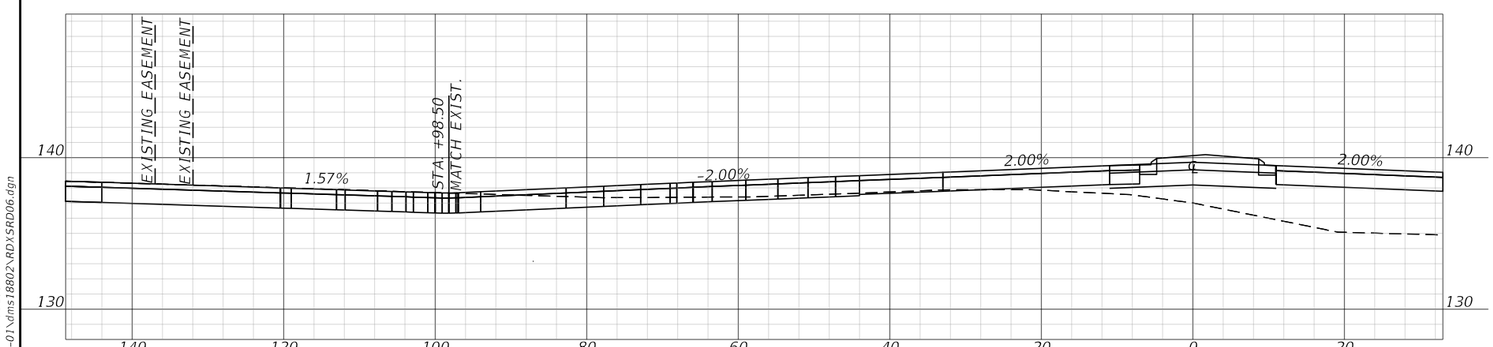

STA. 3405+31.57

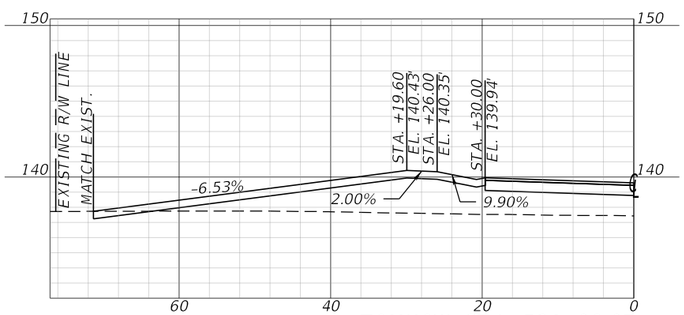

TOMKOW STA. 521+09.07

PRELIMINARY
subject to changes

REVISIONS				ENGINEER OF RECORD	STATE OF FLORIDA DEPARTMENT OF TRANSPORTATION			DRIVEWAY HALF SECTIONS (01)	SHEET NO.
DATE	DESCRIPTION	DATE	DESCRIPTION	DEBANANDA PANIGRAHI, P.E. LICENSE NUMBER 68318 H. W. LOCHNER 4300 W. CYPRESS STREET, SUITE 500 TAMPA, FLORIDA 33607	ROAD NO.	COUNTY	FINANCIAL PROJECT ID		464
					SR 400	POLK	430185-3-52-01		

THE OFFICIAL RECORD OF THIS SHEET IS THE ELECTRONIC FILE DIGITALLY SIGNED AND SEALED UNDER RULE 61G15-23.004, F.A.C.

2/22/2024 10:07:50 AM JBLOUNT
c:\pw_working\lochner-pw-01\dms18802\RDXSRD06.dgn

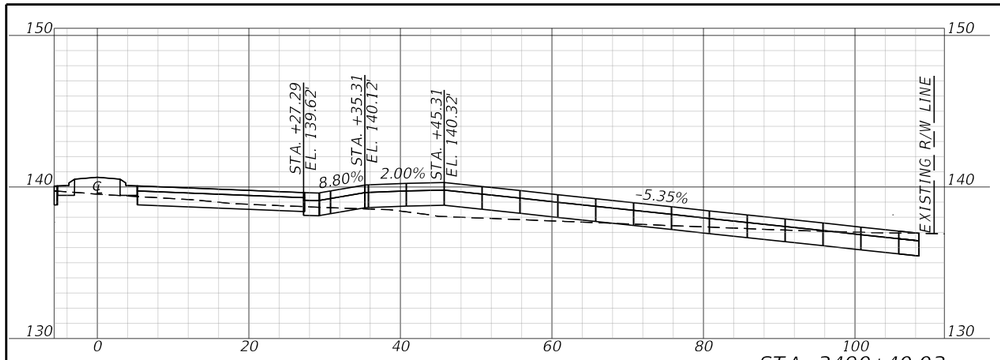

STA. 3490+40.03

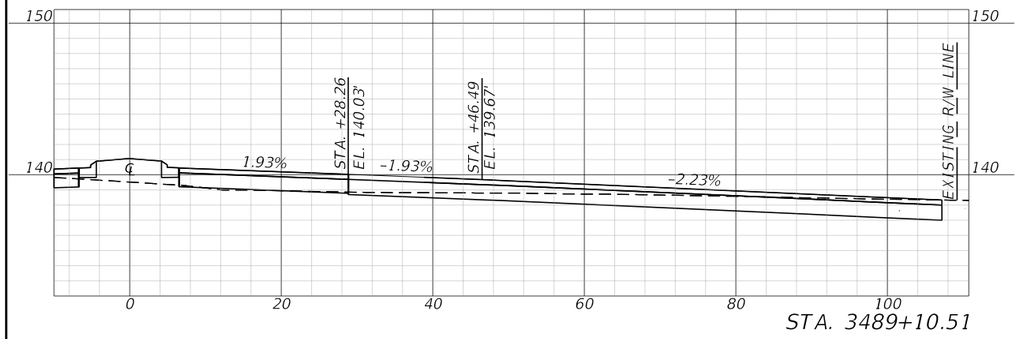

STA. 3489+10.51

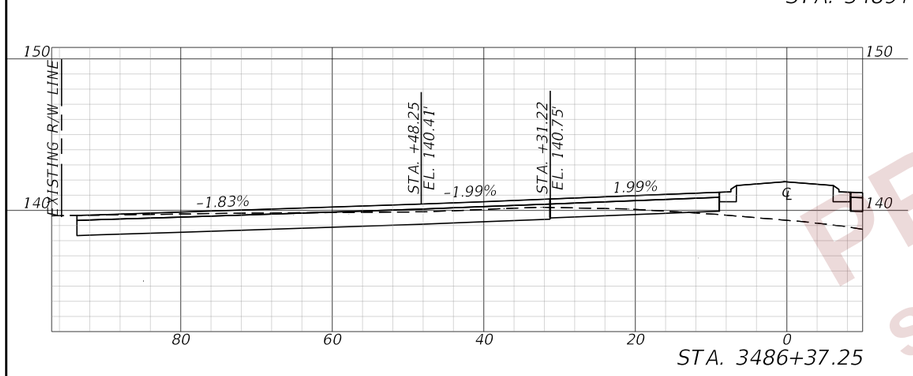

STA. 3486+37.25

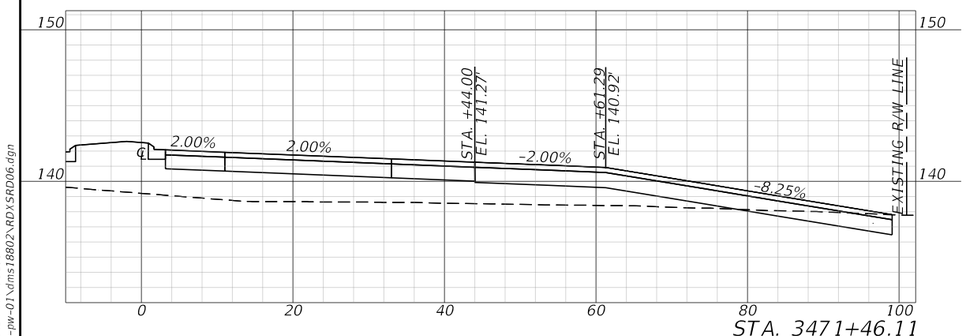

STA. 3471+46.11

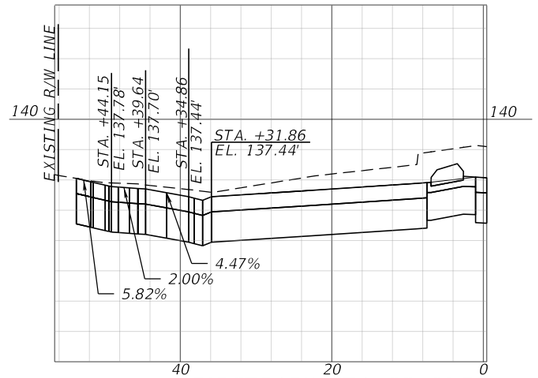

FIRSTPARK STA. 33+61.72

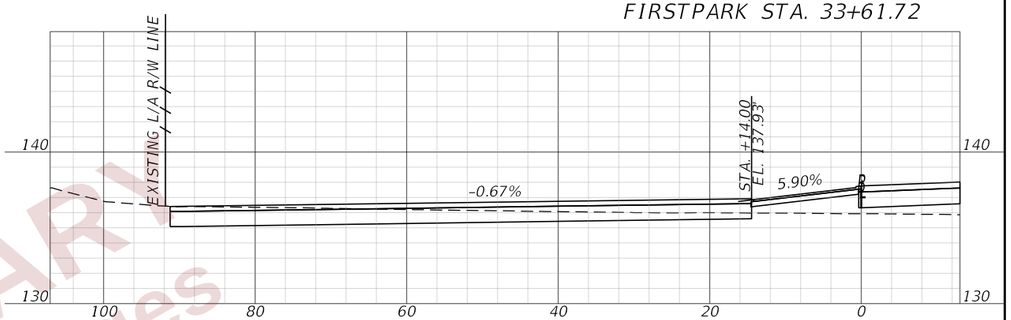

RAMP D STA. 416+11.81

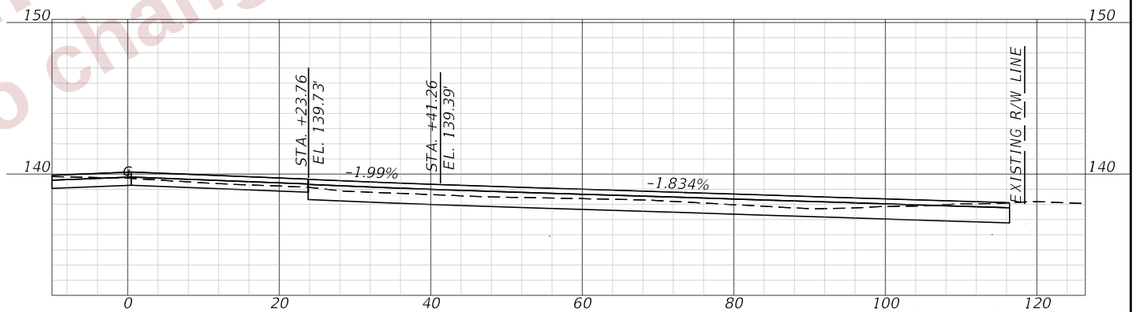

STA. 3494+33.21

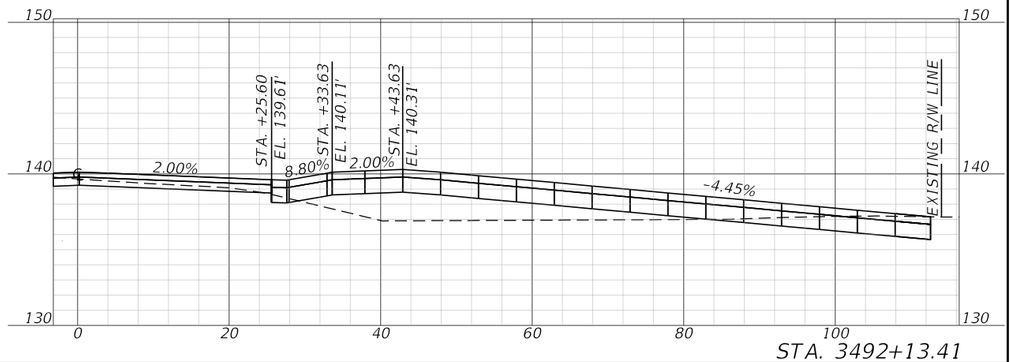

STA. 3492+13.41

PRELIMINARY
subject to changes

THE OFFICIAL RECORD OF THIS SHEET IS THE ELECTRONIC FILE DIGITALLY SIGNED AND SEALED UNDER RULE 61G15-23.004, F.A.C.

REVISIONS				ENGINEER OF RECORD	STATE OF FLORIDA DEPARTMENT OF TRANSPORTATION			DRIVEWAY HALF SECTIONS (02)	SHEET NO.
DATE	DESCRIPTION	DATE	DESCRIPTION	DEBANANDA PANIGRAHI, P.E. LICENSE NUMBER 68318 H. W. LOCHNER 4300 W. CYPRESS STREET, SUITE 500 TAMPA, FLORIDA 33607	ROAD NO.	COUNTY	FINANCIAL PROJECT ID		465
					SR 400	POLK	430185-3-52-01		

2/22/2024 10:07:54 AM JBLOUNT
c:\pw_working\lochner-pw-01\dms18802\RDXSRD06.dgn

THE STORMWATER POLLUTION PREVENTION PLAN (SWPPP) IS PROVIDED TO ASSIST THE CONTRACTOR IN DEVELOPING THE REQUIRED SITE SPECIFIC EROSION CONTROL PLAN AND OTHER ITEMS NECESSARY TO OBTAIN COVERAGE UNDER THE NATIONAL POLLUTANT DISCHARGE ELIMINATION SYSTEM (NPDES) CONSTRUCTION GENERIC PERMIT (CGP). REFER TO THE STATE OF FLORIDA EROSION AND SEDIMENT CONTROL DESIGNER AND REVIEWER MANUAL FOR ADDITIONAL REQUIREMENTS.

1.0 SITE DESCRIPTION:

(1.A.) NATURE OF CONSTRUCTION ACTIVITY:

THE PROJECT IS THE RECONSTRUCTION OF THE I-4/SR 33 INTERSECTION IN POLK COUNTY. THIS INVOLVES RECONSTRUCTING THE EXISTING SR 33 INTERSECTIONS WITH THE I-4 RAMP TO TWO-LANE ROUNDABOUTS WITH PEDESTRIAN CROSSINGS AND PROVIDING ENHANCEMENTS BETWEEN THE TWO INTERSECTIONS, INCLUDING CONCRETE SIDEWALKS AND CURB AND GUTTER. THE PROJECT EXTENDS A DISTANCE OF 3.75 MILES.

(1.B.) INTENDED SEQUENCE OF MAJOR SOIL DISTURBING ACTIVITIES:

IN THE CONTRACTOR'S SITE SPECIFIC EROSION AND SEDIMENT CONTROL PLAN, PREPARE A DETAILED CONSTRUCTION SCHEDULE TO INDICATE DATES OF MAJOR GRADING ACTIVITIES AND SEQUENCES OF TEMPORARY AND PERMANENT SOIL DISTURBING ACTIVITIES ON ALL PORTIONS OF THE PROJECT. FOR ADDITIONAL INFORMATION, REFER TO SECTION 4.7 OF THE NPDES CGP.

LIST OF INTENDED ACTIVITIES:

(I.B.1.) FOR EACH CONSTRUCTION PHASE, INSTALL PERIMETER CONTROLS PRIOR TO CLEARING AND GRUBBING OR ANY OTHER CONSTRUCTION ACTIVITIES. REMOVE PERIMITER CONTROLS ONLY AFTER ALL UPSTREAM AREAS AREAS ARE STABILIZED AND PERMANENT VEGETATION IS ESTABLISHED.

(I.B.2.) TIME CONSTRUCTION ACTIVITIES TO LIMIT IMPACT FROM SEASONAL CHANGES OR WEATHER EVENTS.

(I.B.3.) THE CONTRACTOR WILL PROVIDE POLLUTION CONTROL BY IMPLEMENTING DUST CONTROL DURING ALL PHASES OF CONSTRUCTION.

(I.B.4.) OFFSITE RUNOFF SHOULD BE DIVERTED AWAY OR THROUGH THE CONSTRUCTION AREA, IF POSSIBLE. THIS ADDITIONAL FLOW, IF NOT DIVERTED, CAN ADD VOLUME AND SIZE TO STRUCTURAL PRACTICES, REQUIRING MORE FREQUENT MAINTENANCE AND LIMITING EFFECTIVENESS OF EROSION AND SEDIMENT CONTROLS.

(1.C.) PROJECT AREA ESTIMATES:

TOTAL SITE AREA: 172 ACRES.
TOTAL AREA TO BE DISTURBED: 155 ACRES.

(1.D.) RUNOFF DATA:

RUNOFF COEFFICIENTS BEFORE Cw (B), DURING Cw (D) AND AFTER Cw (A) CONSTRUCTION.

RUNOFF COEFFICIENTS FOR:
GRASSED SHOULDERS ADJACENT TO ROADWAY: C=0.35
IMPERVIOUS ROADWAYS AND PAVED SHOULDER: C=0.95
DISTURBED AREAS, EXPOSED SOIL, ETC., DURING CONSTRUCTION: C=0.40

WEIGHTED RUN-OFF COEFFICIENT:
BEFORE: Cw (B) = 0.64 DURING: Cw (D) = 0.66 AFTER: Cw (A) = 0.62

THE RUN-OFF COEFFICIENT Cw (D), IS CALCULATED ASSUMING THAT THE MAXIMUM ALLOWABLE AREA OF SOIL IS DISTURBED DURING CONSTRUCTION AND THE REMAINING AMOUNT IS THE EXISTING IMPERVIOUS AND GRASSED SHOULDER AREAS.

SOIL DATA:

THE RESULTS OF THE SOIL BORINGS ALONG THE ROADWAY ARE SHOWN IN THE ROADWAY SOIL SURVEY SHEET(S). THE SHEET NUMBERS FOR THESE ARE IDENTIFIED ON THE KEY SHEET OF THESE CONSTRUCTION PLANS. IN GENERAL, THE SOILS ARE:

SOIL TYPE	HYDROLOGIC GROUP	DEPTH TO SHWE
ARENTS	A	3.5'-6'
POMONA FINE SAND	A/D	0'-1'
EATON FINE SAND	C/D	2'-6'
TAVARES FINE SAND	A	3.5'-6'
LYNNE FINE SAND	C/D	0'-1'
LOCHLOOSA SAND	C	0'-5'
NEILHURST SAND	A	0'-5'

REFERENCE: USDA SOIL SURVEY OF POLK COUNTY FLORIDA

OUTFALL INFORMATION:

THERE ARE 8 OUTFALLS.

THE OUTFALLS DISCHARGE INTO THE FOLLOWING BASINS:

BASIN	WBID	PARAMETER(S) OF CONCERN FOR 303(d) LISTING
ORANGE HAMMOCK DRAIN	1449B	DISSOLVED OXYGEN
TENOROC DRAIN	1449C	
SADDLE CREEK	1497	NUTRIENTS AND DISSOLVED OXYGEN

OUTFALL LOCATIONS: (TEMPORARY AND PERMANENT)

	DESCRIPTION	DRAINAGE AREA	LATITUDE	LONGITUDE	RECEIVING WATERBODY
(a)	1 - 18" RCP	15.00 AC	N 28° 08' 14.14"	W 81° 54' 32.67"	GREEN SWAMP
(b)	2 - 4'x4' CBC	455.00 AC	N 28° 08' 21.25"	W 81° 54' 11.64"	GREEN SWAMP
(c)	1 - 4'x2' CBC	67.00 AC	N 28° 08' 34.60"	W 81° 53' 47.92"	GREEN SWAMP
(d)	1 - 4'x2' CBC	42.00 AC	N 28° 08' 47.44"	W 81° 53' 30.83"	GREEN SWAMP
(e)	1 - 8'x3' CBC	82.00 AC	N 28° 08' 40.20"	W 81° 53' 02.15"	GREEN SWAMP
(f)	1 - 36" RCP	12.01 AC	N 28° 08' 09.94"	W 81° 54' 01.61"	PIT CREEK
(g)	2 - 48" RCP	14.84 AC	N 28° 08' 17.08"	W 81° 53' 58.67"	GREEN SWAMP
(h)	1 - 24" RCP	7.78 AC	N 28° 08' 29.10"	W 81° 53' 38.37"	GREEN SWAMP

THIS FACILITY DOES NOT DISCHARGE TO WATERS LISTED ON THE ADOPTED FDEP VERIFIED LIST OR ADOPTED TMDL FOR IMPAIRMENT DUE TO TOTAL SUSPENDED SOLID, TURBIDITY, NUTRIENTS, DISSOLVED OXYGEN, OR FECAL COLIFORM.

WETLAND AND/OR SURFACE WATER IMPACTS SHALL BE LIMITED TO THE AREAS DESCRIBED IN THE APPROVED PERMITS FOR THE PROJECT.

(1.E.) SITE MAP:

THE SITE MAP SHALL BE COMPRISED OF THE CONSTRUCTION PLANS AND THE CONTRACTOR'S SITE-SPECIFIC EROSION AND SEDIMENT CONTROL PLAN.

(I.F.) STORMWATER MANAGEMENT (EXISTING/PROPOSED)

(I.F.1.) EXISTING DRAINAGE FLOWS ARE TYPICALLY EAST TO WEST TOWARDS GREEN SWAMP. THE CROSS SECTION SHEETS AND PLAN-PROFILE SHEETS PROVIDE THE APPROXIMATE SLOPE, AREAS OF SOIL DISTURBANCE AND AREAS TO BE STABILIZED. UNLESS OTHERWISE APPROVED BY THE PERMITS, THE CONSTRUCTION ACTIVITIES SHALL NOT MODIFY OR AFFECT THE EXISTING OFFSITE FLOW PATTERNS.

(I.F.2.) THE PROPOSED SEDIMENT BASINS, CONTAINMENT SYSTEMS AND/OR STORMWATER MANAGEMENT FACILITIES SHALL BE CONSTRUCTED DURING THE INITIAL PHASE OF CONSTRUCTION AND USED DURING CONSTRUCTION OF THE ROADWAY. THE OUTFALL STRUCTURES ARE TO BE PROTECTED WHEN TEMPORARY SEDIMENT BASINS, CONTAINMENT SYSTEMS OR PERMANENT STORMWATER MANAGEMENT FACILITIES ARE USED FOR EROSION AND SEDIMENT CONTROL TO PREVENT DOWNSTREAM SEDIMENTATION.

PRELIMINARY subject to change

THE OFFICIAL RECORD OF THIS SHEET IS THE ELECTRONIC FILE DIGITALLY SIGNED AND SEALED UNDER RULE 61G15-23.004, F.A.C.

REVISIONS			
DATE	DESCRIPTION	DATE	DESCRIPTION

ENGINEER OF RECORD
LISANDRO ZAPATA, P.E.
LICENSE NUMBER 58822
H. W. LOCHNER
4300 W. CYPRESS STREET, SUITE 500
TAMPA, FLORIDA 33607

STATE OF FLORIDA
DEPARTMENT OF TRANSPORTATION

ROAD NO.	COUNTY	FINANCIAL PROJECT ID
SR 400	POLK	430185-3-52-01

STORMWATER POLLUTION PREVENTION PLAN (1)

SHEET NO. 466

2. CONTROLS:

(2.A.) SEDIMENT AND EROSION CONTROLS

(2.A.1.) PER SECTION 5.4 OF THE NPDES CGP, STABILIZATION SHALL TAKE PLACE AS SOON AS PRACTICAL IN PORTIONS OF THE PROJECT WHERE CONSTRUCTION ACTIVITIES HAVE CEASED, BUT NO LATER THAN 7 DAYS AFTER ANY CONSTRUCTION ACTIVITY CEASES EITHER TEMPORARILY OR PERMANENTLY.

(2.A.2) SEDIMENT BARRIERS SHALL BE USED AROUND THE PERIMETER OF STOCKPILE AREAS.

(2.A.3.) STRUCTURAL PRACTICES

IN THE CONTRACTOR'S SITE SPECIFIC EROSION AND SEDIMENT CONTROL PLAN, DESCRIBE THE PROPOSED STRUCTURAL PRACTICES TO CONTROL OR TRAP SEDIMENT AND OTHERWISE PREVENT THE DISCHARGE OF POLLUTANTS FROM EXPOSED AREAS OF THE SITE. SEDIMENT CONTROLS SHALL BE IN PLACE BEFORE DISTURBING SOIL UPSTREAM OF THE CONTROL. THE STRUCTURAL PRACTICES MAY INCLUDE THE FOLLOWING, AS APPROVED BY THE ENGINEER:

TEMPORARY DEVICES:

* SILT FENCE
* STAKED TURBIDITY BARRIERS
* SOIL TRACKING PREVENTION DEVICES AT CONSTRUCTION ENTRANCES/EXITS
* FLOATING TURBIDITY BARRIERS
* INLET PROTECTION SYSTEMS INCLUDING SYNTHETIC BALES AND SANDBAGS
* SEDIMENT BASIN/CONTAINMENT SYSTEMS
* CHEMICAL TREATMENTS SUCH AS POLYACRYLAMIDES AND ALUM

PERMANENT:

* STORMWATER PONDS
* SOD (MAY ALSO BE USED FOR TEMPORARY CONTROLS)
* VELOCITY DISSIPATION DEVICES SUCH AS RIPRAP OR OTHERS

(2.B.) WATER QUALITY MONITORING

(2.B.1.) WATER QUALITY MONITORING SHALL BE CONDUCTED IN ACCORDANCE WITH THE SPECIAL CONDITIONS OF ANY ENVIRONMENTAL PERMIT, OR BY THE CONTRACTOR UPON THE OBSERVATION THAT WATER QUALITY STANDARDS MAY BE VIOLATED BY THE CONTRACTOR'S ACTIVITIES. MONITORING LOCATIONS MAY BE SPECIFIED IN THE ENVIRONMENTAL PERMIT OR MAY BE DESIGNATED BY THE CONTRACTOR

(2.B.2.) THE ENGINEER WILL BE RESPONSIBLE FOR MONITORING ANY ACTIVITIES FOR VIOLATION OF WATER QUALITY STANDARDS AS THEY RELATE TO TURBIDITY (NO GREATER THAN 29 NEPHELOMETRIC TURBIDITY UNITS (NTUs) ABOVE BACKGROUND OR GREATER THAN 0 NTUs ABOVE BACKGROUND FOR DIRECT DISCHARGES TO OUTSTANDING FLORIDA WATERS (OFWs)).

(2.B.3.) IF WATER QUALITY STANDARDS ARE VIOLATED, CONSTRUCTION SHALL BE STOPPED IMMEDIATELY. THE ENVIROMENTAL PERMIT CONDITIONS FOLLOWED AND EROSION AND SEDIMENT CONTROL DEVICES REEVALUATED AND APPROVED BY THE ENGINEER PRIOR TO ANY CONTINUATION OF ACTIVITY. MONITORING ACTIVITIES AND TURBIDITY READINGS SHALL BE RECORDED ON THE CONSTRUCTION INSPECTION REPORT AND CONTINUED UNTIL TURBIDITY READINGS FALL BELOW AN ACCEPTABLE LEVEL (LESS THAN 29 NTUs ABOVE BACKGROUND OR LESS THAN 0 NTUs ABOVE BACKGROUND FOR DIRECT DISCHARGES TO OFWs).

(2.B.4.) WATER QUALITY MONITORING MAY BE CONDUCTED DURING ANY PHASE OF CONSTRUCTION AS DIRECTED BY THE ENGINEER.

(2.C.) DEWATERING CONTROLS

THE SITE SPECIFIC EROSION AND SEDIMENT CONTROL PLAN SHALL INCLUDE A DESCRIPTION OF THE BMPs THAT WILL BE USED TO ENSURE THAT DISCHARGES OF NONCONTAMINATED GROUND WATER FROM DEWATERING OPERATIONS DO NOT CAUSE OR CONTRIBUTE TO VIOLATIONS OF STATE WATER QUALITY STANDARDS.

(2.D.) OTHER CONTROLS

(2.D.1.) THE SITE SPECIFIC EROSION AND SEDIMENT CONTROL PLAN SHALL IDENTIFY CHEMICAL AND FUEL STORAGE AREAS, MEANS OF MINIMIZING EXPOSURE TO STORMWATER, AND SPILL PREVENTION.

(2.D.2.) OFFSITE VEHICLE TRACKING & GENERATION OF DUST

IN THE SITE SPECIFIC EROSION AND SEDIMENT CONTROL PLAN, DESCRIBE THE PROPOSED METHODS FOR MINIMIZING OFFSITE VEHICLE TRACKING OF SEDIMENTS AND GENERATING DUST. THE PROPOSED METHODS SHALL INCLUDE AT LEAST THE FOLLOWING, UNLESS OTHERWISE APPROVED BY THE ENGINEER.

(2.D.2.a.) LOADED HAUL TRUCKS ARE TO BE COVERED BY A TARPAULIN.

(2.D.2.b.) REMOVING EXCESS DIRT FROM ROADS DAILY.

(2.D.2.c.) USING WATER TRUCKS DURING DUST-GENERATING ACTIVITIES.

(2.D.2.d.) SEDIMENT CONTROL MAY BE ACCOMPLISHED BY USING STREET OR VACUUM SWEEPERS.

PRELIMINARY
subject to change

THE OFFICIAL RECORD OF THIS SHEET IS THE ELECTRONIC FILE DIGITALLY SIGNED AND SEALED UNDER RULE 61G15-23.004, F.A.C.

REVISIONS				ENGINEER OF RECORD	STATE OF FLORIDA DEPARTMENT OF TRANSPORTATION			STORMWATER POLLUTION PREVENTION PLAN (2)	SHEET NO.
DATE	DESCRIPTION	DATE	DESCRIPTION	LISANDRO ZAPATA, P.E. LICENSE NUMBER 58822 H. W. LOCHNER 4300 W. CYPRESS STREET, SUITE 500 TAMPA, FLORIDA 33607	ROAD NO.	COUNTY	FINANCIAL PROJECT ID		467
					SR 400	POLK	430185-3-52-01		

3. MAINTENANCE

MAINTAIN AND REPAIR ALL EROSION AND SEDIMENT CONTROL DEVICES AND REMOVE EROSION AND SEDIMENT CONTROL DEVICES WHEN NOTICE OF TERMINATION IS MAILED. REMOVE AND PROPERLY DISPOSE OF SEDIMENT BUILDUP THROUGH THE LIFE OF THE INSTALLED EROSION AND SEDIMENT CONTROL DEVICES.

(3.A.) IF A REPAIR IS NECESSARY, IT WILL BE INITIATED WITHIN 24 HOURS OF NOTICE.

(3.B.) SEDIMENT BARRIERS SHALL BE REPLACED WHEN IT IS NO LONGER EFFECTIVE OR AS DIRECTED BY THE ENGINEER.

(3.C.) STABILIZED CONSTRUCTION ENTRANCES SHALL BE MAINTAINED TO PREVENT CLOGGING OF ROCK BEDDING WHICH MAY IMPEDE THE USEFULNESS OF THE STRUCTURE.

(3.D.) REMOVE SEDIMENT FROM SEDIMENT BASINS WHEN IT BECOMES MORE THAN HALF THE AVAILABLE VOLUME.

4. INSPECTION, TRACKING, AND REPORTING

INSTALL AND MAINTAIN RAIN GAUGES ON THE PROJECT SITE AND RECORD RAINFALL.

(4.A.) SUBMIT A WEEKLY REPORT TO THE DEPARTMENT DOCUMENTING THE DAILY INSPECTIONS AND MAINTENANCE OR REPAIRS TO THE EROSION AND SEDIMENT CONTROL DEVICES. MAINTAIN ALL REQUIRED REPORTS AND COMPLETE ALL SWPPP INSPECTION FORMS.

(4.B.) PREPARATION OF ALL THE CONTRACTOR'S REPORTS OF INSPECTION, MAINTENANCE AND REPAIRS REQUIRED FOR THE CONTROL AND ABATEMENT OF EROSION AND WATER POLLUTION, SHALL BE INCLUDED IN THE INDIVIDUAL COSTS OF THE EROSION AND SEDIMENT CONTROL DEVICES.

(4.C.) USE THE SWPPP CONSTRUCTION INSPECTION REPORT FORM # 650-040-03, FOR DAILY INSPECTIONS.

5. NON-STORMWATER DISCHARGES

THE SITE SPECIFIC EROSION AND SEDIMENT CONTROL PLAN SHALL IDENTIFY ALL ANTICIPATED NON-STORMWATER DISCHARGES AND DESCRIBE THE PROPOSED MEASURES TO PREVENT POLLUTION. THE PLAN SHALL INCLUDE PROCEDURES FOR SPILL CONTAINMENT, REPORTING AND RESPONSES. THE PLAN SHALL SPECIFY WHAT MANAGEMENT PRACTICES AND CONTAINMENT METHODS WILL BE USED TO PREVENT POTENTIAL POLLUTANTS (FUEL, LUBRICANTS, HERBICIDES, ETC.) FROM SPILLING ONTO THE SOIL OR INTO THE SURFACE WATERS. IF A SPILL DOES OCCUR OR IF CONTAMINATED SOIL OR GROUNDWATER IS ENCOUNTERED, CONTACT THE DISTRICT CONTAMINATION IMPACT COORDINATOR AT 863-519-2300 AND THE ENGINEER. IF A RELEASE CONTAINING HAZARDOUS SUBSTANCES OCCURS, CONTACT THE FLORIDA STATE WATCH OFFICE AT 800-320-0519 OR 850-413-9911 PER SECTION 9.2 OF THE CGP.

PRELIMINARY
subject to changes

REVISIONS			
DATE	DESCRIPTION	DATE	DESCRIPTION

ENGINEER OF RECORD
LISANDRO ZAPATA, P.E.
LICENSE NUMBER 58822
H. W. LOCHNER
4300 W. CYPRESS STREET, SUITE 500
TAMPA, FLORIDA 33607

STATE OF FLORIDA
DEPARTMENT OF TRANSPORTATION

ROAD NO.	COUNTY	FINANCIAL PROJECT ID
SR 400	POLK	430185-3-52-01

STORMWATER POLLUTION PREVENTION PLAN (3)

SHEET NO. 468

JBLOUNT 2/13/2024 11:04:13 AM c:\pw_working\lochner-pw-01\dms18776\SWPPRD01.dgn

THE OFFICIAL RECORD OF THIS SHEET IS THE ELECTRONIC FILE DIGITALLY SIGNED AND SEALED UNDER RULE 61G15-23.004, F.A.C.

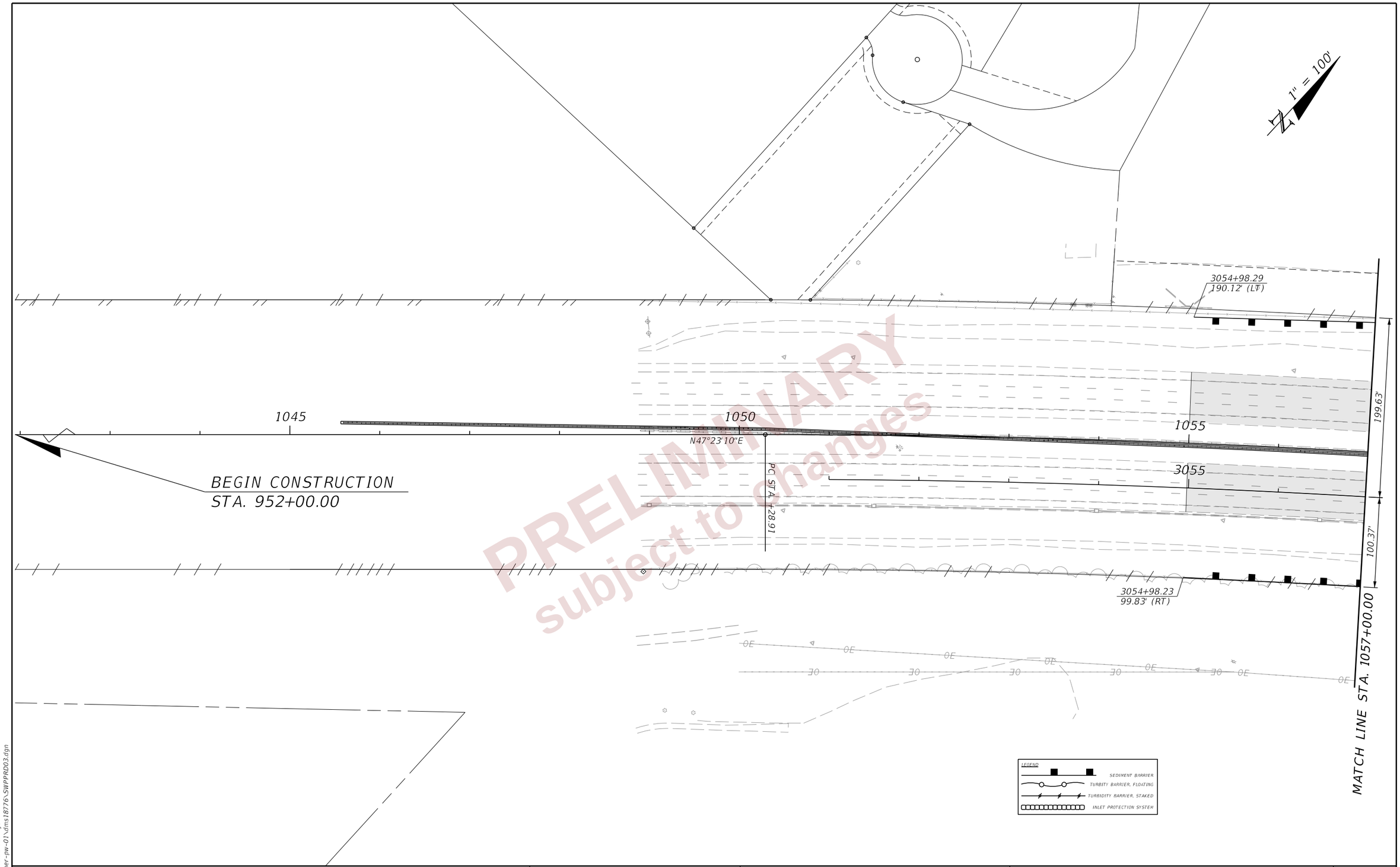

PRELIMINARY
subject to changes

THE OFFICIAL RECORD OF THIS SHEET IS THE ELECTRONIC FILE DIGITALLY SIGNED AND SEALED UNDER RULE 61G15-23.004, F.A.C.

2/29/2024 5:40:32 PM john.lin
c:\pw_working\lochner-pw-01\dms18776\SWPPRD03.dgn

REVISIONS			
DATE	DESCRIPTION	DATE	DESCRIPTION

ENGINEER OF RECORD

LISANDRO ZAPATA, P.E.
LICENSE NUMBER 58822
H. W. LOCHNER
4300 W. CYPRESS STREET, SUITE 500
TAMPA, FLORIDA 33607

STATE OF FLORIDA
DEPARTMENT OF TRANSPORTATION

ROAD NO.	COUNTY	FINANCIAL PROJECT ID
SR 400	POLK	430185-3-52-01

EROSION CONTROL PLANS (01)

SHEET NO.
469

1" = 100'

3058+48.02
194.33' (LT)

3059+03.91
162.58' (LT)

3060+92.43
150.00' (LT)

3062+27.78
148.44' (LT)

3065+46.82
162.70' (LT)

3069+90.38
160.25' (LT)

199.63'

1060

1065

1070

3060

3065

3070

100.37'

3058+05.08
98.24' (RT)

3059+94.29
67.18' (RT)

199.46'

100.54'

MATCH LINE STA. 1057+00.00

MATCH LINE STA. 1072+00.00

OE

LEGEND

SEDIMENT BARRIER

TURBITY BARRIER, FLOATING

TURBIDITY BARRIER, STAKED

INLET PROTECTION SYSTEM

PRELIMINARY
subject to changes

REVISIONS			
DATE	DESCRIPTION	DATE	DESCRIPTION

ENGINEER OF RECORD

LISANDRO ZAPATA, P.E.
LICENSE NUMBER 58822
H. W. LOCHNER
4300 W. CYPRESS STREET, SUITE 500
TAMPA, FLORIDA 33607

STATE OF FLORIDA
DEPARTMENT OF TRANSPORTATION

ROAD NO.	COUNTY	FINANCIAL PROJECT ID
SR 400	POLK	430185-3-52-01

EROSION CONTROL PLANS (02)

SHEET NO. 470

2/29/2024 5:40:33 PM john.lin
c:\pw_working\lochner-pw-01\dms18776\SWPPRD03.dgn

THE OFFICIAL RECORD OF THIS SHEET IS THE ELECTRONIC FILE DIGITALLY SIGNED AND SEALED UNDER RULE 61G15-23.004, F.A.C.

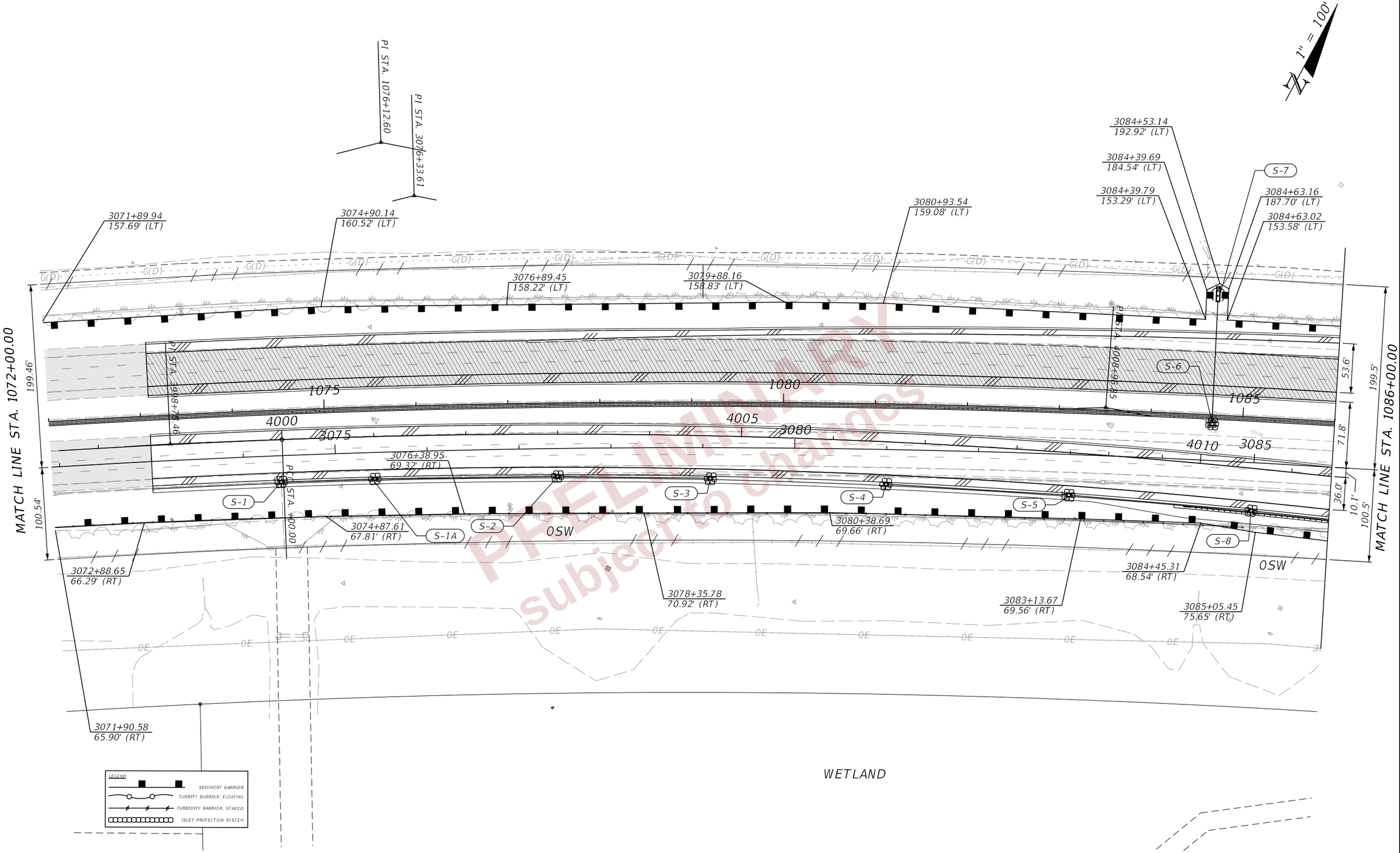

PRELIMINARY
subject to change

REVISIONS			
DATE	DESCRIPTION	DATE	DESCRIPTION

ENGINEER OF RECORD

LISANDRO ZAPATA, P.E.
LICENSE NUMBER 58822
H. W. LOCHNER
4300 W. CYPRESS STREET, SUITE 500
TAMPA, FLORIDA 33607

STATE OF FLORIDA
DEPARTMENT OF TRANSPORTATION

ROAD NO.	COUNTY	FINANCIAL PROJECT ID
SR 400	POLK	430185-3-52-01

EROSION CONTROL PLANS (03)

SHEET NO. 471

THE OFFICIAL RECORD OF THIS SHEET IS THE ELECTRONIC FILE DIGITALLY SIGNED AND SEALED UNDER RULE 61G15-23.004, F.A.C.

2/29/2024 5:40:34 PM john.lin
c:\pw_working\lochner-pw-01\dms18802\PLANRD02.dgn

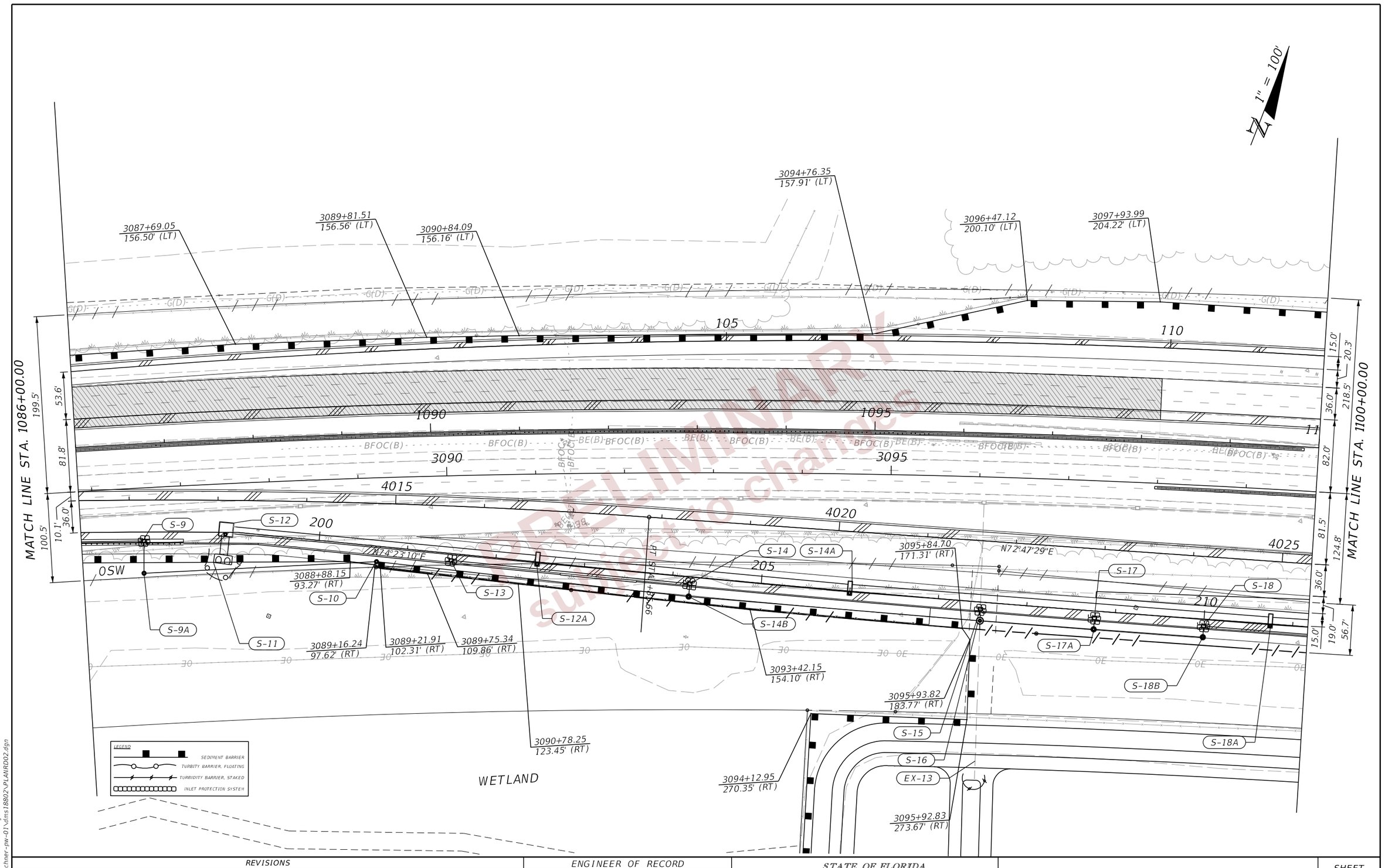

PRELIMINARY
subject to change

REVISIONS			
DATE	DESCRIPTION	DATE	DESCRIPTION

ENGINEER OF RECORD

LISANDRO ZAPATA, P.E.
LICENSE NUMBER 58822
H. W. LOCHNER
4300 W. CYPRESS STREET, SUITE 500
TAMPA, FLORIDA 33607

STATE OF FLORIDA
DEPARTMENT OF TRANSPORTATION

ROAD NO.	COUNTY	FINANCIAL PROJECT ID
SR 400	POLK	430185-3-52-01

EROSION CONTROL PLANS (04)

SHEET NO. 472

THE OFFICIAL RECORD OF THIS SHEET IS THE ELECTRONIC FILE DIGITALLY SIGNED AND SEALED UNDER RULE 61G15-23.004, F.A.C.

2/29/2024 5:40:34 PM john.lin
c:\pw_working\lochner-pw-01\dms18802\PLANRD02.dgn

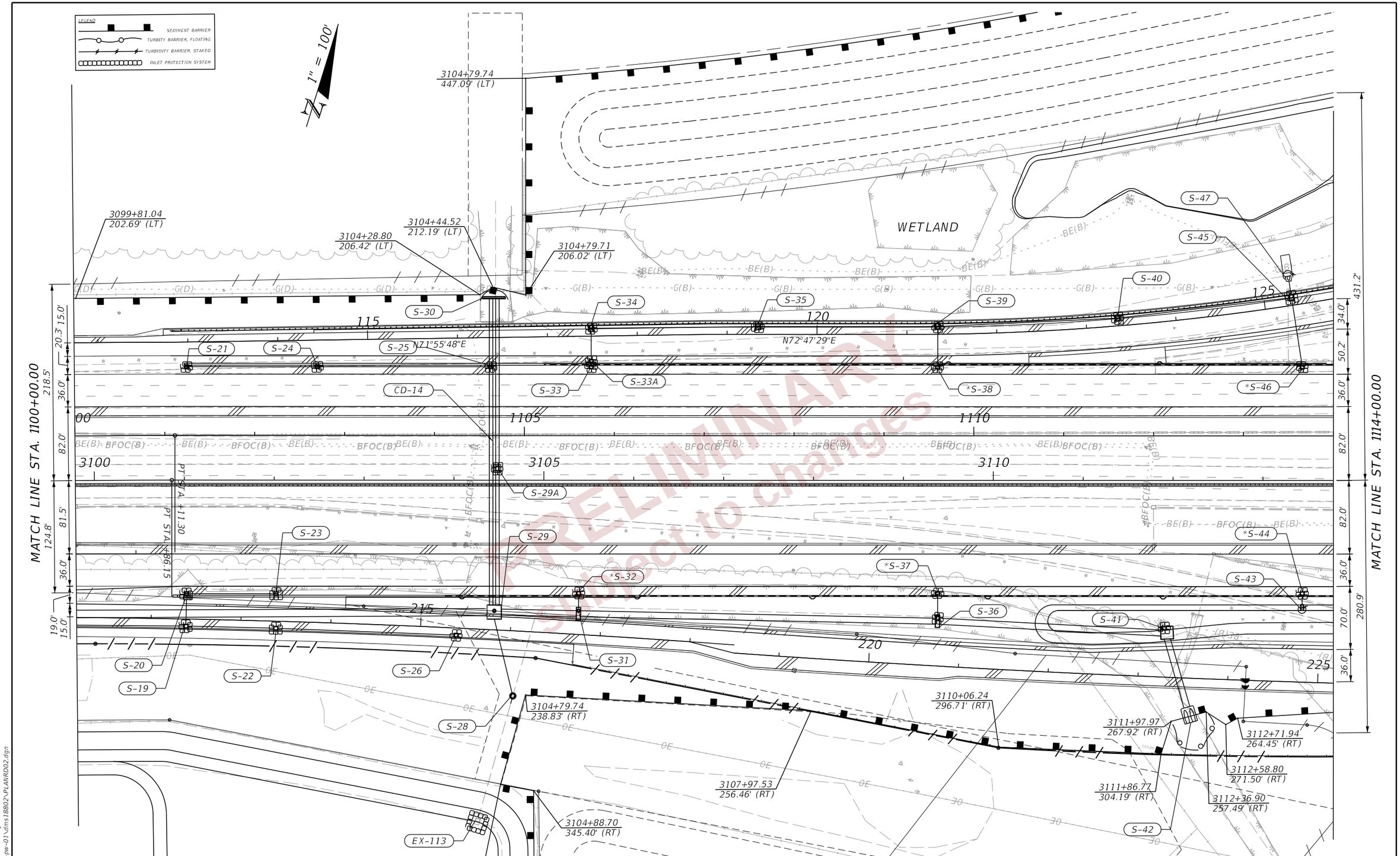

THE OFFICIAL RECORD OF THIS SHEET IS THE ELECTRONIC FILE DIGITALLY SIGNED AND SEALED UNDER RULE 61G15-23.004, F.A.C.

REVISIONS			
DATE	DESCRIPTION	DATE	DESCRIPTION

ENGINEER OF RECORD
LISANDRO ZAPATA, P.E.
LICENSE NUMBER 58822
H. W. LOCHNER
4300 W. CYPRESS STREET, SUITE 500
TAMPA, FLORIDA 33607

STATE OF FLORIDA
DEPARTMENT OF TRANSPORTATION

ROAD NO.	COUNTY	FINANCIAL PROJECT ID
SR 400	POLK	430185-3-52-01

EROSION CONTROL PLANS (05)

SHEET NO.
473

2/29/2024 5:40:35 PM john.lin
c:\pw_working\lochner-pw-01\dms18802\PLANRD02.dgn

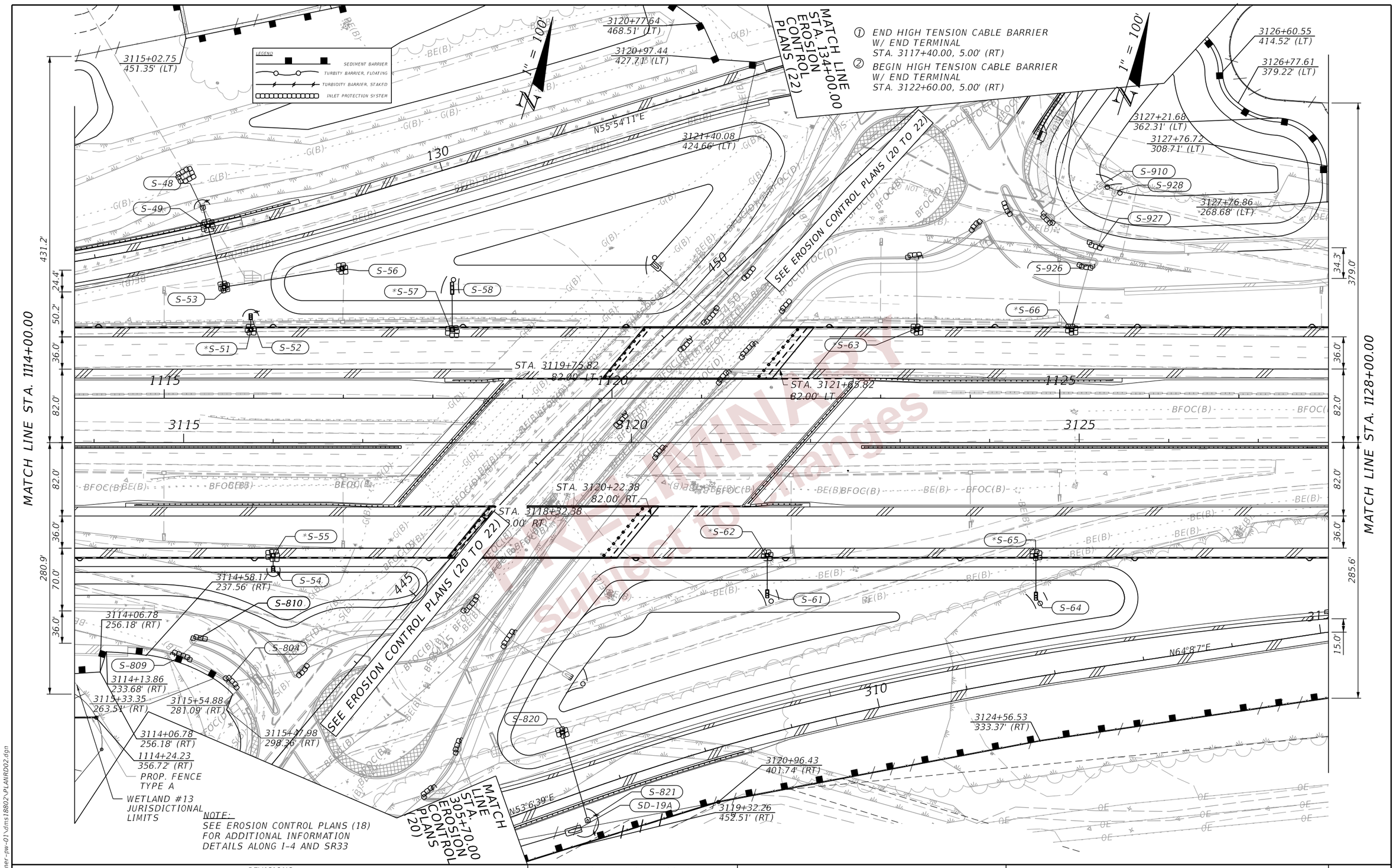

THE OFFICIAL RECORD OF THIS SHEET IS THE ELECTRONIC FILE DIGITALLY SIGNED AND SEALED UNDER RULE 61G15-23.004, F.A.C.

2/29/2024 9:58:17 PM ANDRES.FERNANDEZ
c:\pw_working\lochner-pw-01\dms18802\PLANRD02.dgn

REVISIONS			
DATE	DESCRIPTION	DATE	DESCRIPTION

ENGINEER OF RECORD
LISANDRO ZAPATA, P.E.
LICENSE NUMBER 58822
H. W. LOCHNER
4300 W. CYPRESS STREET, SUITE 500
TAMPA, FLORIDA 33607

STATE OF FLORIDA
DEPARTMENT OF TRANSPORTATION

ROAD NO.	COUNTY	FINANCIAL PROJECT ID
SR 400	POLK	430185-3-52-01

EROSION CONTROL PLANS (06)

SHEET NO.
474

LEGEND
SEDIMENT BARRIER
TURBITY BARRIER, FLOATING
TURBIDITY BARRIER, STAKED
INLET PROTECTION SYSTEM

WETLAND

1" = 100'
N

MATCH LINE STA. 1128+00.00

379.0'
34.0'
285.6'
36.0'
82.0'
36.0'
82.0'
15.0'

3128+93.74
280.44' (LT)
3129+13.50
287.05' (LT)
3131+51.74
301.57' (LT)
3133+59.41
323.00' (LT)
3133+44.87
301.01' (LT)
3135+37.29
310.56' (LT)
3140+06.83
277.89' (LT)
3140+15.08
276.24' (LT)
3140+89.43
245.30' (LT)
3140+63.07
248.29' (LT)
3133+25.44
247.88' (RT)
3129+37.00
262.28' (RT)

S-82
S-78
S-77A
S-72
S-77
*S-71
*S-76
S-87
S-88
S-89
S-86A
S-86
S-85
S-95
S-70
CD-15
S-81
*S-69
*S-75
S-80
S-68
S-74
S-79
S-67
S-83A
S-84
S-90
S-91
S-93
S-83
S-83B
S-92

405
410
415
1130
1135
1140
3130
3135
3140
320
325

N70°36'50"E
N72°47'53"E
N72°47'29"E
N70°42'3"E
N70°43'46"E

BE(B)
BFOC(B)
OE

269.5'
36.0'
82.0'
36.0'
24.3'
15.0'
170.4'

MATCH LINE STA. 1142+00.00

THE OFFICIAL RECORD OF THIS SHEET IS THE ELECTRONIC FILE DIGITALLY SIGNED AND SEALED UNDER RULE 61G15-23.004, F.A.C.

PRELIMINARY
Subject to changes

REVISIONS			
DATE	DESCRIPTION	DATE	DESCRIPTION

ENGINEER OF RECORD
LISANDRO ZAPATA, P.E.
LICENSE NUMBER 58822
H. W. LOCHNER
4300 W. CYPRESS STREET, SUITE 500
TAMPA, FLORIDA 33607

STATE OF FLORIDA
DEPARTMENT OF TRANSPORTATION

ROAD NO.	COUNTY	FINANCIAL PROJECT ID
SR 400	POLK	430185-3-52-01

EROSION CONTROL PLANS (07)

SHEET NO. 475

2/29/2024 5:40:36 PM john.lin
c:\pw_working\lochner-pw-01\dms18776\SWPPRD03.dgn

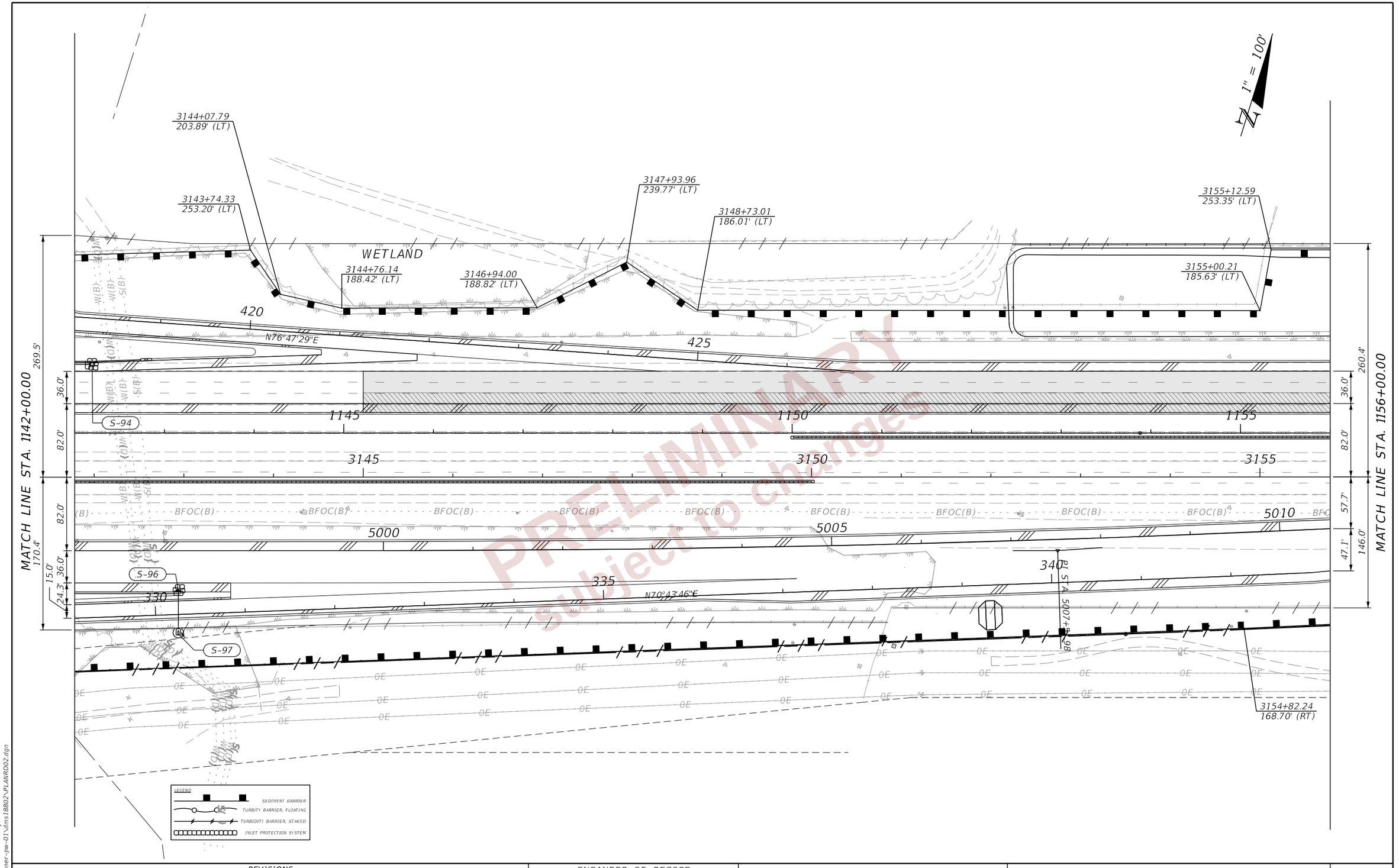

PRELIMINARY
subject to changes

THE OFFICIAL RECORD OF THIS SHEET IS THE ELECTRONIC FILE DIGITALLY SIGNED AND SEALED UNDER RULE 61G15-23.004, F.A.C.

REVISIONS				ENGINEER OF RECORD	STATE OF FLORIDA DEPARTMENT OF TRANSPORTATION			EROSION CONTROL PLANS (08)	SHEET NO.
DATE	DESCRIPTION	DATE	DESCRIPTION	LISANDRO ZAPATA, P.E. LICENSE NUMBER 58822 H. W. LOCHNER 4300 W. CYPRESS STREET, SUITE 500 TAMPA, FLORIDA 33607	ROAD NO.	COUNTY	FINANCIAL PROJECT ID		476
					SR 400	POLK	430185-3-52-01		

2/29/2024 5:40:37 PM john.lin
c:\pw_working\lochner-pw-01\dms18802\PLANRD02.dgn

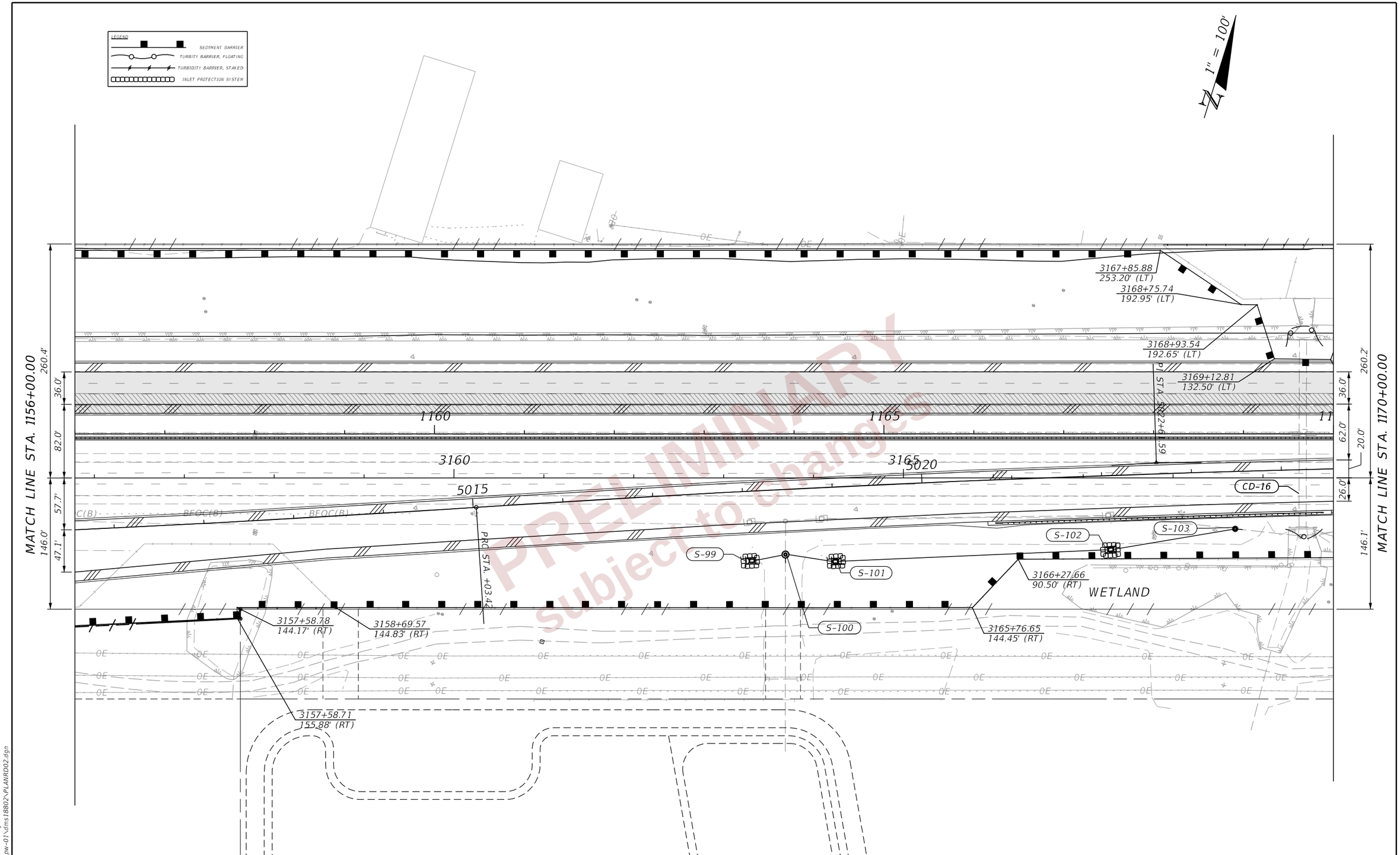

THE OFFICIAL RECORD OF THIS SHEET IS THE ELECTRONIC FILE DIGITALLY SIGNED AND SEALED UNDER RULE 61G15-23.004, F.A.C.

REVISIONS			
DATE	DESCRIPTION	DATE	DESCRIPTION

ENGINEER OF RECORD
LISANDRO ZAPATA, P.E.
LICENSE NUMBER 58822
H. W. LOCHNER
4300 W. CYPRESS STREET, SUITE 500
TAMPA, FLORIDA 33607

STATE OF FLORIDA
DEPARTMENT OF TRANSPORTATION

ROAD NO.	COUNTY	FINANCIAL PROJECT ID
SR 400	POLK	430185-3-52-01

EROSION CONTROL PLANS (09)

SHEET NO.
477

2/29/2024 5:40:37 PM john.lin
c:\pw_working\lochner-pw-01\dms18802\PLANRD02.dgn

LEGEND

SEDIMENT BARRIER

TURBITY BARRIER, FLOATING

TURBIDITY BARRIER, STAKED

INLET PROTECTION SYSTEM

1" = 100'

N

MATCH LINE STA. 1170+00.00

MATCH LINE STA. 1184+00.00

260.2'

265.19'

146.1'

146.07'

36.0'

20.0'

62.0'

26.0'

3169+97.88
192.76' (LT)

3169+75.32
131.63' (LT)

3170+41.24
142.51' (RT)

3169+80.62
88.74' (RT)

3175+81.19
191.82' (LT)

3176+23.75
192.13' (LT)

3179+59.87
191.97' (LT)

S-105

S-104

1170

1175

1180

5025

3170

5030

3175

3180

OE

PRELIMINARY
subject to changes

THE OFFICIAL RECORD OF THIS SHEET IS THE ELECTRONIC FILE DIGITALLY SIGNED AND SEALED UNDER RULE 61G15-23.004, F.A.C.

REVISIONS				ENGINEER OF RECORD	STATE OF FLORIDA DEPARTMENT OF TRANSPORTATION			EROSION CONTROL PLANS (10)	SHEET NO.
DATE	DESCRIPTION	DATE	DESCRIPTION	LISANDRO ZAPATA, P.E. LICENSE NUMBER 58822 H. W. LOCHNER 4300 W. CYPRESS STREET, SUITE 500 TAMPA, FLORIDA 33607	ROAD NO.	COUNTY	FINANCIAL PROJECT ID		478
					SR 400	POLK	430185-3-52-01		

2/29/2024 5:40:38 PM john.lin
c:\pw_working\lochner-pw-01\dms18802\PLANRD02.dgn

1" = 100'

MATCH LINE STA. 1184+00.00
265.19'
146.30'

1185 1190 1195

N72°47'53"E

3185 3190 3195

N72°47'29"E

3196+78.35
191.12' (LT)

END CONSTRUCTION
STA. 1205+80.00 ℄ SURVEY I-4

3196+78.03
146.08' (RT)

OE OE OE OE

OE OE OE OE

OE OE OE OE

LEGEND
- SEDIMENT BARRIER
- TURBITY BARRIER, FLOATING
- TURBIDITY BARRIER, STAKED
- INLET PROTECTION SYSTEM

PRELIMINARY
subject to changes

THE OFFICIAL RECORD OF THIS SHEET IS THE ELECTRONIC FILE DIGITALLY SIGNED AND SEALED UNDER RULE 61G15-23.004, F.A.C.

2/29/2024 5:40:38 PM john.lin
c:\pw_working\lochner-pw-01\dms18776\SWPPR003.dgn

REVISIONS			
DATE	DESCRIPTION	DATE	DESCRIPTION

ENGINEER OF RECORD
LISANDRO ZAPATA, P.E.
LICENSE NUMBER 58822
H. W. LOCHNER
4300 W. CYPRESS STREET, SUITE 500
TAMPA, FLORIDA 33607

STATE OF FLORIDA
DEPARTMENT OF TRANSPORTATION

ROAD NO.	COUNTY	FINANCIAL PROJECT ID
SR 400	POLK	430185-3-52-01

EROSION CONTROL PLANS (11)

SHEET NO. 479

1" = 40'

3399+72.63
111.30' (LT)

3399+72.63
91.48' (RT)

399 400 401 402 403

3399 3400 3401 3402 3403 3404

F-543 F-545 F-547 F-549

F-544 F-546 F-548 F-548A F-550

POT STA. 17400

114.7'
23.5'
4.0'
5.5'
33.0'
92.3'

MATCH LINE STA. 3404+00.00

CANAL

LEGEND

- SEDIMENT BARRIER
- TURBITY BARRIER, FLOATING
- TURBIDITY BARRIER, STAKED
- INLET PROTECTION SYSTEM

PRELIMINARY subject to change

REVISIONS			
DATE	DESCRIPTION	DATE	DESCRIPTION

ENGINEER OF RECORD

LISANDRO ZAPATA, P.E.
LICENSE NUMBER 58822
H. W. LOCHNER
4300 W. CYPRESS STREET, SUITE 500
TAMPA, FLORIDA 33607

STATE OF FLORIDA
DEPARTMENT OF TRANSPORTATION

ROAD NO.	COUNTY	FINANCIAL PROJECT ID
SR 400	POLK	430185-3-52-01

EROSION CONTROL PLANS (12)

SHEET NO. 480

THE OFFICIAL RECORD OF THIS SHEET IS THE ELECTRONIC FILE DIGITALLY SIGNED AND SEALED UNDER RULE 61G15-23.004, F.A.C.

2/29/2024 5:41:00 PM john.lin
C:\pw_working\lochner-pw-01\dms18802\PLANRD01.dgn

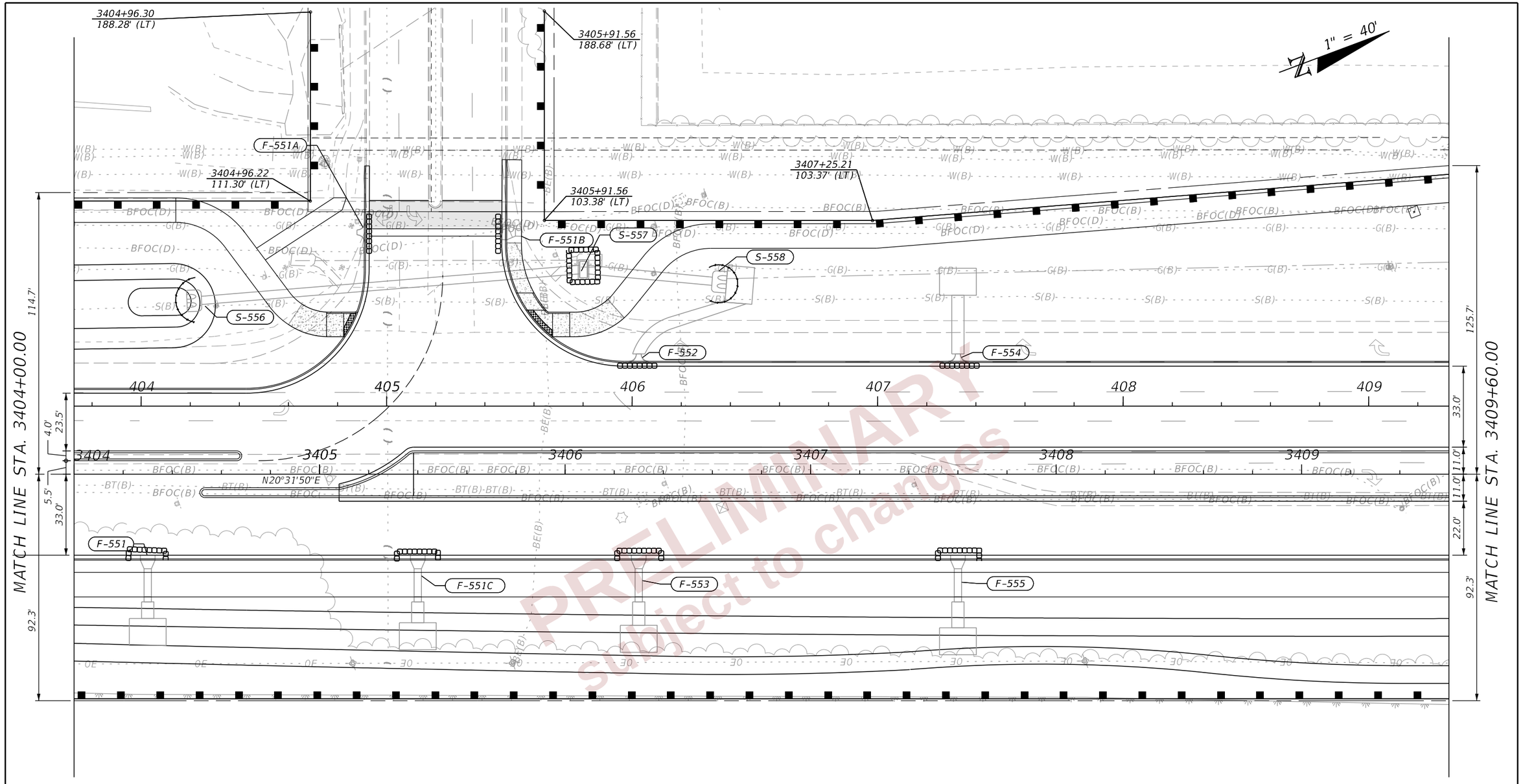

LEGEND

- SEDIMENT BARRIER
- TURBITY BARRIER, FLOATING
- TURBIDITY BARRIER, STAKED
- INLET PROTECTION SYSTEM

PRELIMINARY
subject to changes

REVISIONS			
DATE	DESCRIPTION	DATE	DESCRIPTION

ENGINEER OF RECORD

LISANDRO ZAPATA, P.E.
LICENSE NUMBER 58822
H. W. LOCHNER
4300 W. CYPRESS STREET, SUITE 500
TAMPA, FLORIDA 33607

STATE OF FLORIDA
DEPARTMENT OF TRANSPORTATION

ROAD NO.	COUNTY	FINANCIAL PROJECT ID
SR 400	POLK	430185-3-52-01

EROSION CONTROL PLANS (13)

SHEET NO. 481

THE OFFICIAL RECORD OF THIS SHEET IS THE ELECTRONIC FILE DIGITALLY SIGNED AND SEALED UNDER RULE 61G15-23.004, F.A.C.

2/29/2024 5:41:00 PM john.lin
c:\pw_working\lochner-pw-01\dms18802\PLANR001.dgn

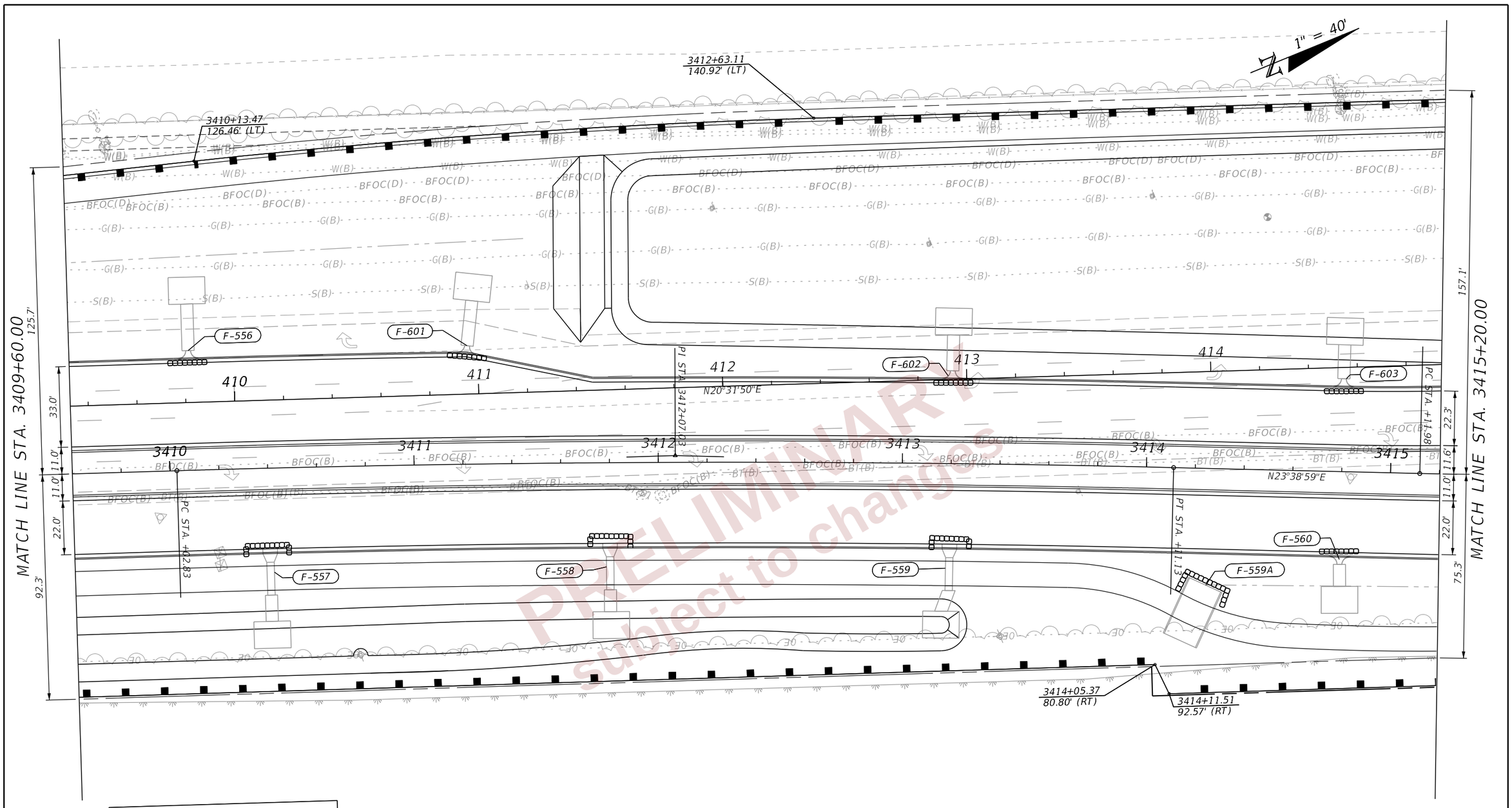

PRELIMINARY
subject to changes

REVISIONS			
DATE	DESCRIPTION	DATE	DESCRIPTION

ENGINEER OF RECORD

LISANDRO ZAPATA, P.E.
LICENSE NUMBER 58822
H. W. LOCHNER
4300 W. CYPRESS STREET, SUITE 500
TAMPA, FLORIDA 33607

STATE OF FLORIDA
DEPARTMENT OF TRANSPORTATION

ROAD NO.	COUNTY	FINANCIAL PROJECT ID
SR 400	POLK	430185-3-52-01

EROSION CONTROL PLANS (14)

SHEET NO. 482

THE OFFICIAL RECORD OF THIS SHEET IS THE ELECTRONIC FILE DIGITALLY SIGNED AND SEALED UNDER RULE 61G15-23.004, F.A.C.

2/29/2024 5:41:01 PM john.lin
c:\pw_working\lochner-pw-01\dms18802\PLANRD01.dgn

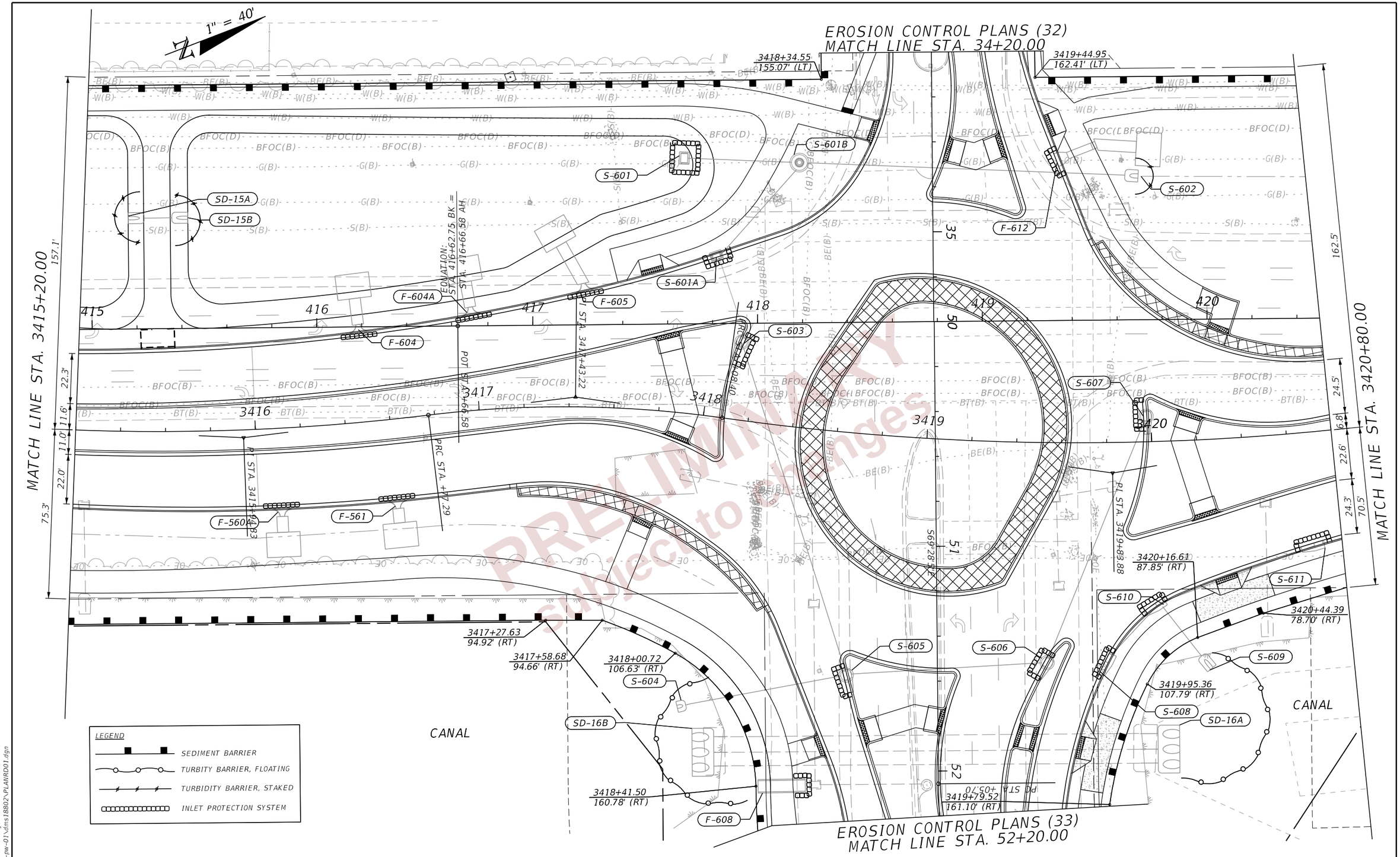

EROSION CONTROL PLANS (33)
MATCH LINE STA. 52+20.00

THE OFFICIAL RECORD OF THIS SHEET IS THE ELECTRONIC FILE DIGITALLY SIGNED AND SEALED UNDER RULE 61G15-23.004, F.A.C.

REVISIONS			
DATE	DESCRIPTION	DATE	DESCRIPTION

ENGINEER OF RECORD
LISANDRO ZAPATA, P.E.
LICENSE NUMBER 58822
H. W. LOCHNER
4300 W. CYPRESS STREET, SUITE 500
TAMPA, FLORIDA 33607

STATE OF FLORIDA
DEPARTMENT OF TRANSPORTATION

ROAD NO.	COUNTY	FINANCIAL PROJECT ID
SR 400	POLK	430185-3-52-01

EROSION CONTROL PLANS (15)

SHEET NO.
483

2/29/2024 5:41:01 PM john.lin
c:\pw_working\lochner-pw-01\dms18802\PLANRD01.dgn

1" = 40'

MATCH LINE STA. 3420+80.00

MATCH LINE STA. 3426+40.00

162.5'

70.5'

24.5'

6.8'

22.6'

24.3'

139.7'

22.0'

11.0'

11.0'

22.0'

92.3'

421 422 423 424 425 426

3421 3422 3423 3424 3425 3426

F-613 F-615 F-617 F-619 F-618

S-613 S-612 S-627A S-627 S-628

PI STA. 3422+35.46

PRC STA. +56.56

PT STA. +14.04

N20°31'50"E

3425+64.89
135.98' (LT)

3426+19.77
135.82' (LT)

3420+82.86
69.75' (RT)

3423+18.84
91.26' (RT)

3424+82.88
91.26' (RT)

3424+91.90
91.26' (RT)

3424+85.20
93.41' (RT)

3424+89.54
93.41' (RT)

CANAL

LEGEND

- SEDIMENT BARRIER
- TURBITY BARRIER, FLOATING
- TURBIDITY BARRIER, STAKED
- INLET PROTECTION SYSTEM

PRELIMINARY
Subject to changes

THE OFFICIAL RECORD OF THIS SHEET IS THE ELECTRONIC FILE DIGITALLY SIGNED AND SEALED UNDER RULE 61G15-23.004, F.A.C.

2/29/2024 5:41:02 PM john.lin
c:\pw_working\lochner-pw-01\dms18802\PLANRD01.dgn

REVISIONS			
DATE	DESCRIPTION	DATE	DESCRIPTION

ENGINEER OF RECORD
LISANDRO ZAPATA, P.E.
LICENSE NUMBER 58822
H. W. LOCHNER
4300 W. CYPRESS STREET, SUITE 500
TAMPA, FLORIDA 33607

STATE OF FLORIDA
DEPARTMENT OF TRANSPORTATION

ROAD NO.	COUNTY	FINANCIAL PROJECT ID
SR 400	POLK	430185-3-52-01

EROSION CONTROL PLANS (16)

SHEET NO. 484

1" = 40'

MATCH LINE STA. 3426+40.00

MATCH LINE STA. 3432+00.00

3430+02.01
135.79' (LT)

3431+82.14
135.78' (LT)

S-614

S-615

F-621

F-623

F-625

F-627

F-620

F-622

F-624

F-626

F-628

427 428 429 430 431

3427 3428 3429 3430 3431 34

N20°31'50"E

N20°31'50"E

139.7'

33.0'

11.0'

11.0'

22.0'

92.3'

22.0'

11.0'

11.0'

22.0'

92.3'

139.8'

3426+95.29
91.24' (RT)

3426+97.64
94.41' (RT)

3427+04.33
91.24' (RT)

3427+01.97
94.41' (RT)

3430+04.38
91.24' (RT)

3430+04.38
131.60' (RT)

CANAL

LEGEND

SEDIMENT BARRIER

TURBITY BARRIER, FLOATING

TURBIDITY BARRIER, STAKED

INLET PROTECTION SYSTEM

PRELIMINARY
Subject to changes

THE OFFICIAL RECORD OF THIS SHEET IS THE ELECTRONIC FILE DIGITALLY SIGNED AND SEALED UNDER RULE 61G15-23.004, F.A.C.

2/29/2024 5:41:03 PM john.lin
c:\pw_working\lochner-pw-01\dms18802\PLANRD01.dgn

REVISIONS			
DATE	DESCRIPTION	DATE	DESCRIPTION

ENGINEER OF RECORD

LISANDRO ZAPATA, P.E.
LICENSE NUMBER 58822
H. W. LOCHNER
4300 W. CYPRESS STREET, SUITE 500
TAMPA, FLORIDA 33607

STATE OF FLORIDA
DEPARTMENT OF TRANSPORTATION

ROAD NO.	COUNTY	FINANCIAL PROJECT ID
SR 400	POLK	430185-3-52-01

EROSION CONTROL PLANS (17)

SHEET NO.

485

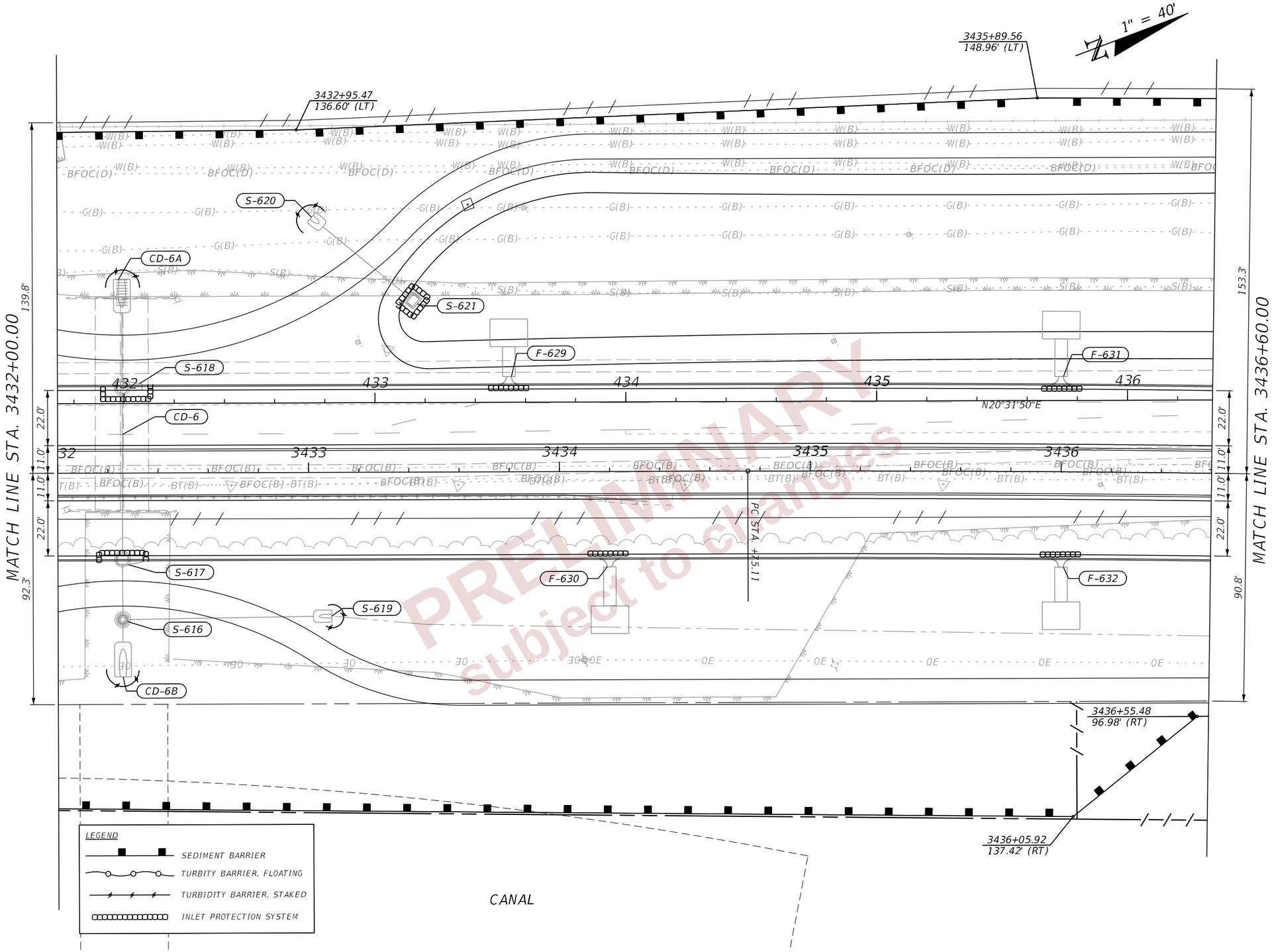

REVISIONS				ENGINEER OF RECORD	STATE OF FLORIDA DEPARTMENT OF TRANSPORTATION			EROSION CONTROL PLANS (18)	SHEET NO.
DATE	DESCRIPTION	DATE	DESCRIPTION	LISANDRO ZAPATA, P.E. LICENSE NUMBER 58822 H. W. LOCHNER 4300 W. CYPRESS STREET, SUITE 500 TAMPA, FLORIDA 33607	ROAD NO.	COUNTY	FINANCIAL PROJECT ID		486
					SR 400	POLK	430185-3-52-01		

THE OFFICIAL RECORD OF THIS SHEET IS THE ELECTRONIC FILE DIGITALLY SIGNED AND SEALED UNDER RULE 61G15-23.004, F.A.C.

2/29/2024 5:41:03 PM johnl.in
c:\pw_working\lochner-pw-01\dms18802\PLANRD01.dgn

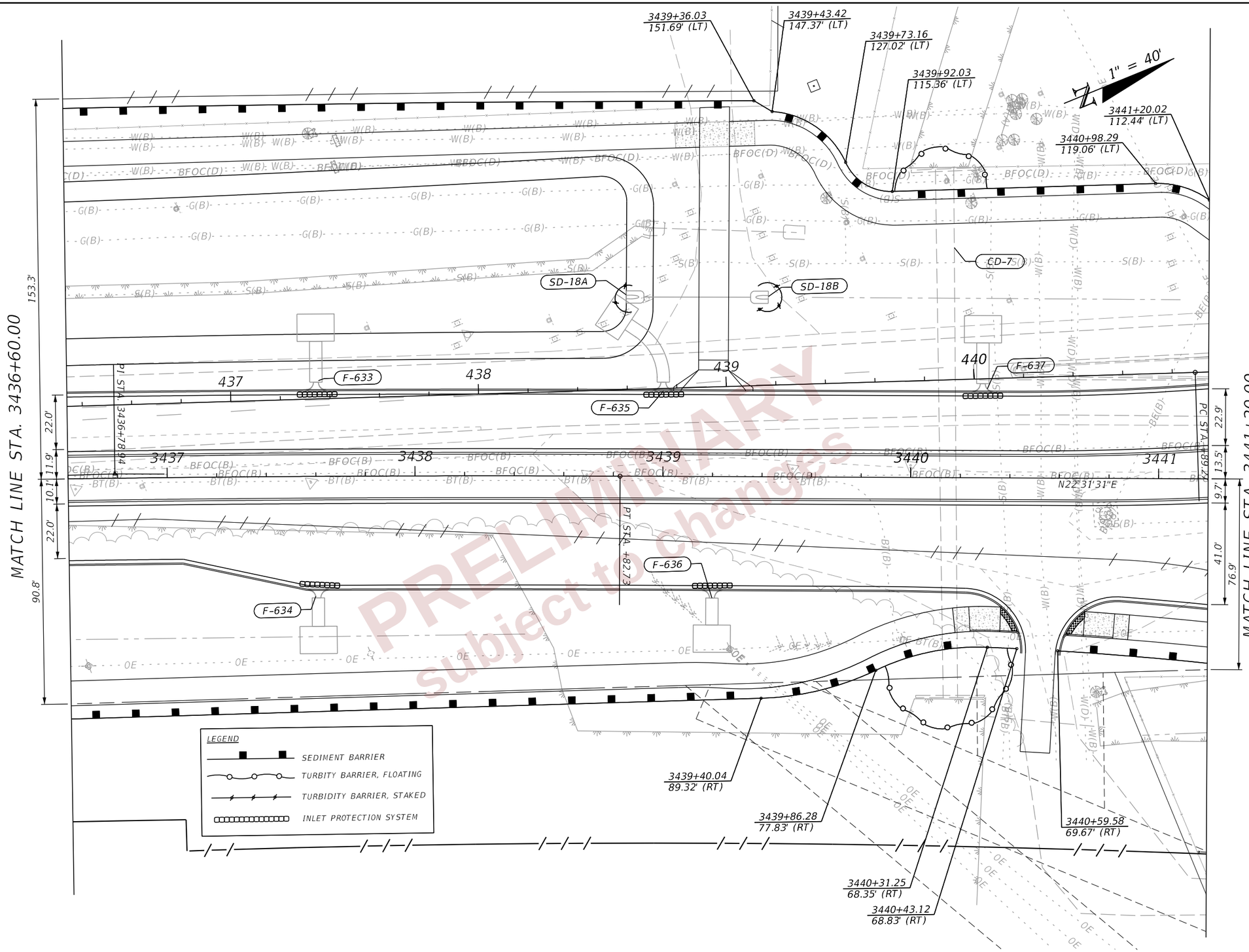

PRELIMINARY
subject to changes

THE OFFICIAL RECORD OF THIS SHEET IS THE ELECTRONIC FILE DIGITALLY SIGNED AND SEALED UNDER RULE 61G15-23.004, F.A.C.

REVISIONS				ENGINEER OF RECORD	STATE OF FLORIDA DEPARTMENT OF TRANSPORTATION			EROSION CONTROL PLANS (19)	SHEET NO.
DATE	DESCRIPTION	DATE	DESCRIPTION	LISANDRO ZAPATA, P.E. LICENSE NUMBER 58822 H. W. LOCHNER 4300 W. CYPRESS STREET, SUITE 500 TAMPA, FLORIDA 33607	ROAD NO.	COUNTY	FINANCIAL PROJECT ID		487
					SR 400	POLK	430185-3-52-01		

2/29/2024 5:41:04 PM john.lin
c:\pw_working\lochner-pw-01\dms18802\PLANRD01.dgn

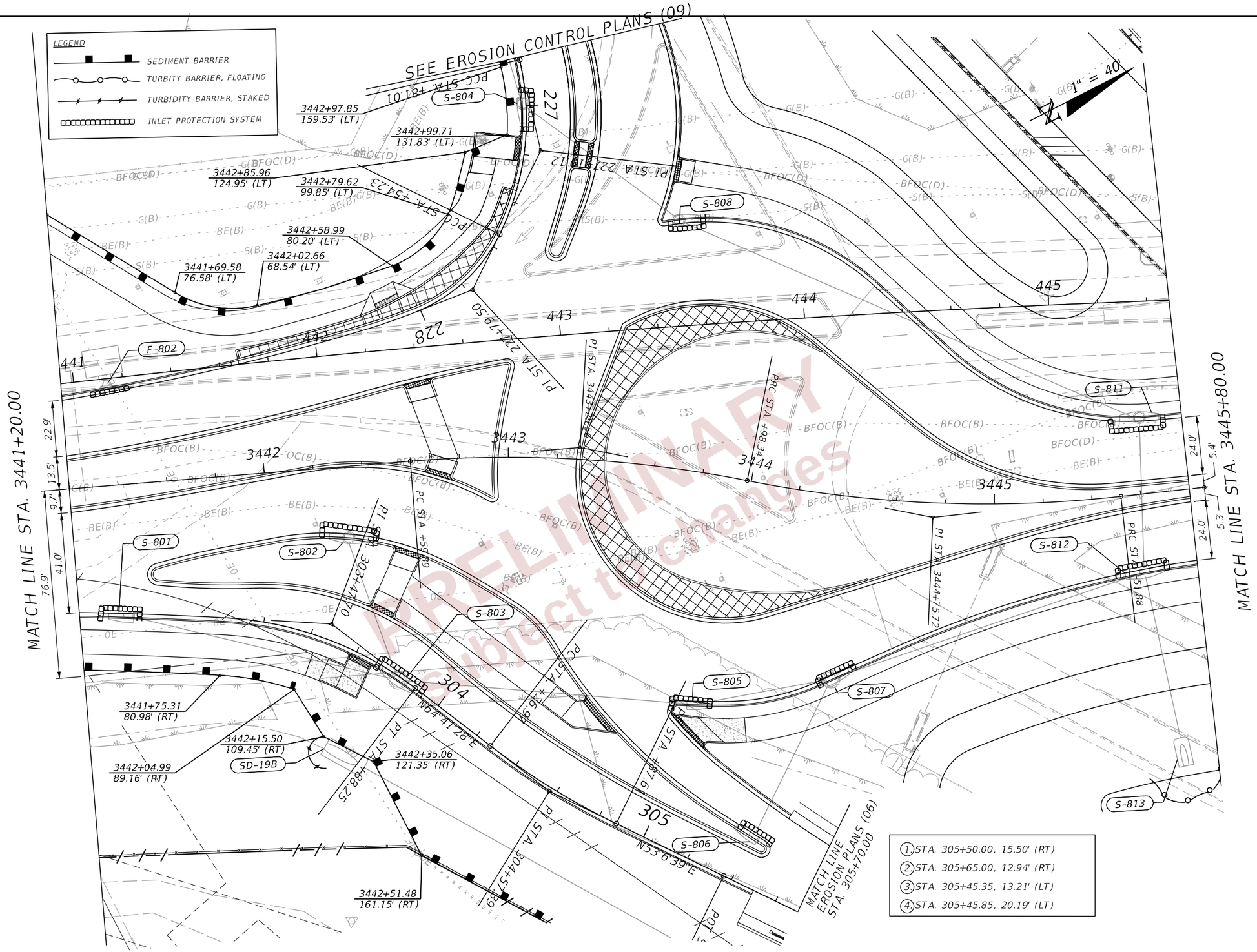

THE OFFICIAL RECORD OF THIS SHEET IS THE ELECTRONIC FILE DIGITALLY SIGNED AND SEALED UNDER RULE 61G15-23.004, F.A.C.

REVISIONS			
DATE	DESCRIPTION	DATE	DESCRIPTION

ENGINEER OF RECORD
LISANDRO ZAPATA, P.E.
LICENSE NUMBER 58822
H. W. LOCHNER
4300 W. CYPRESS STREET, SUITE 500
TAMPA, FLORIDA 33607

STATE OF FLORIDA
DEPARTMENT OF TRANSPORTATION

ROAD NO.	COUNTY	FINANCIAL PROJECT ID
SR 400	POLK	430185-3-52-01

EROSION CONTROL PLANS (20)

SHEET NO.
488

2/29/2024 5:41:04 PM john.lin
c:\pw_working\lochner-pw-01\dms18802\PLANRD01.dgn

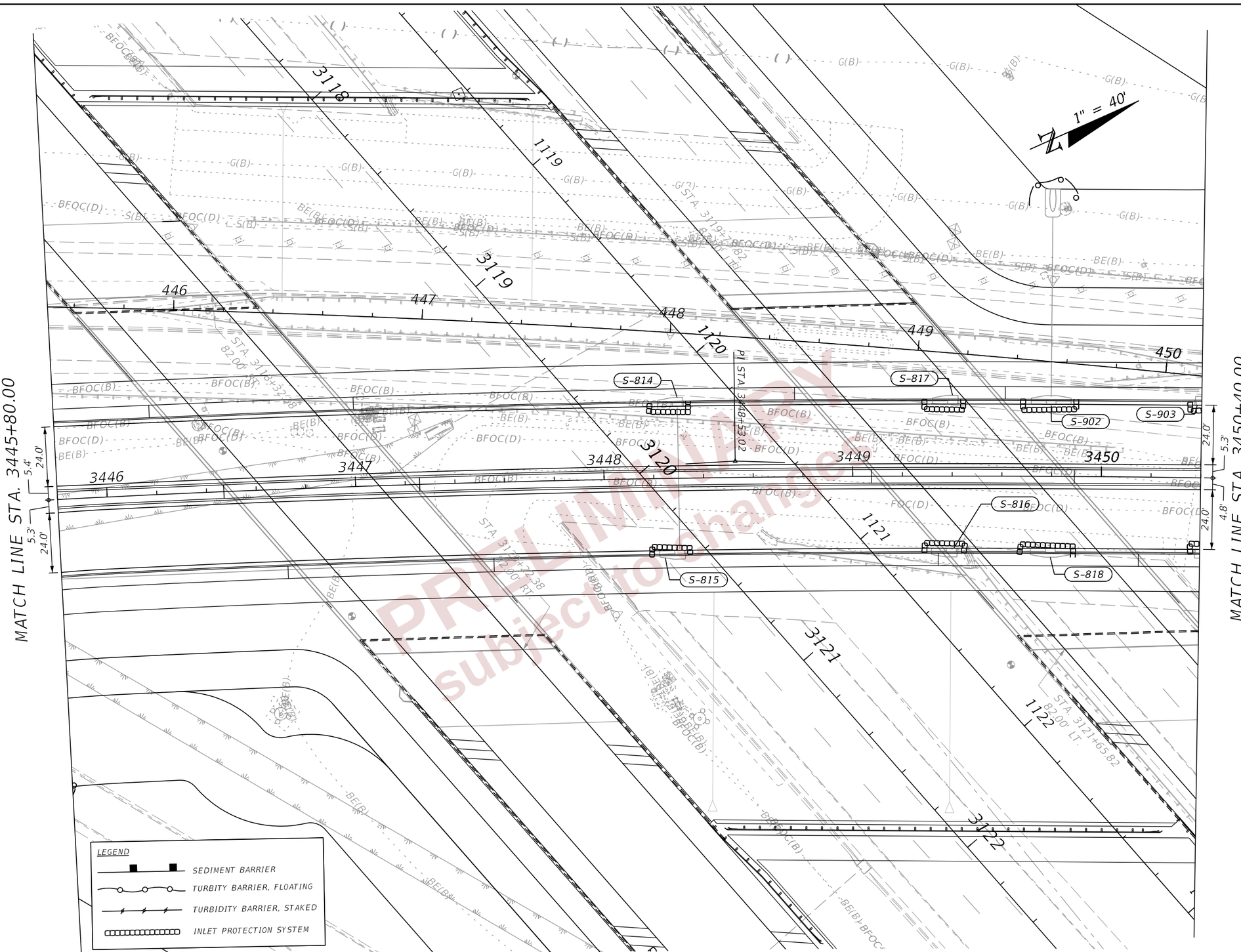

PRELIMINARY
subject to change

REVISIONS				ENGINEER OF RECORD	STATE OF FLORIDA DEPARTMENT OF TRANSPORTATION			EROSION CONTROL PLANS (21)	SHEET NO.
DATE	DESCRIPTION	DATE	DESCRIPTION	LISANDRO ZAPATA, P.E. LICENSE NUMBER 58822 H. W. LOCHNER 4300 W. CYPRESS STREET, SUITE 500 TAMPA, FLORIDA 33607	ROAD NO.	COUNTY	FINANCIAL PROJECT ID		489
					SR 400	POLK	430185-3-52-01		

THE OFFICIAL RECORD OF THIS SHEET IS THE ELECTRONIC FILE DIGITALLY SIGNED AND SEALED UNDER RULE 61G15-23.004, F.A.C.

2/29/2024 5:41:05 PM john.lin
c:\pw_working\lochner-pw-01\dms18802\PLANR001.dgn

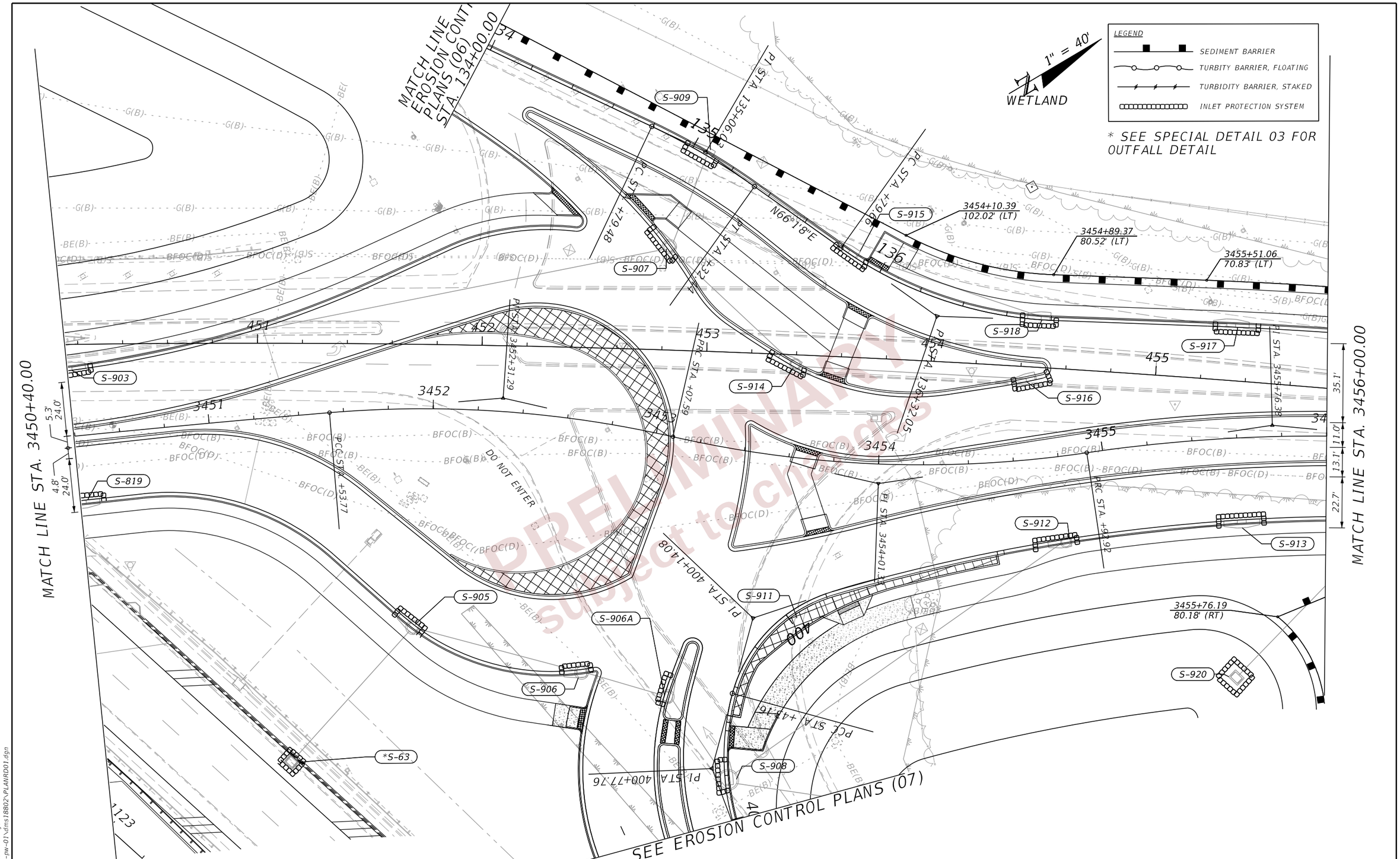

PRELIMINARY subject to changes

THE OFFICIAL RECORD OF THIS SHEET IS THE ELECTRONIC FILE DIGITALLY SIGNED AND SEALED UNDER RULE 61G15-23.004, F.A.C.

REVISIONS			
DATE	DESCRIPTION	DATE	DESCRIPTION

ENGINEER OF RECORD
LISANDRO ZAPATA, P.E.
LICENSE NUMBER 58822
H. W. LOCHNER
4300 W. CYPRESS STREET, SUITE 500
TAMPA, FLORIDA 33607

STATE OF FLORIDA
DEPARTMENT OF TRANSPORTATION

ROAD NO.	COUNTY	FINANCIAL PROJECT ID
SR 400	POLK	430185-3-52-01

EROSION CONTROL PLANS (22)

SHEET NO.
490

2/29/2024 5:41:06 PM john.lin
c:\pw_working\lochner-pw-01\dms18802\PLANRD01.dgn

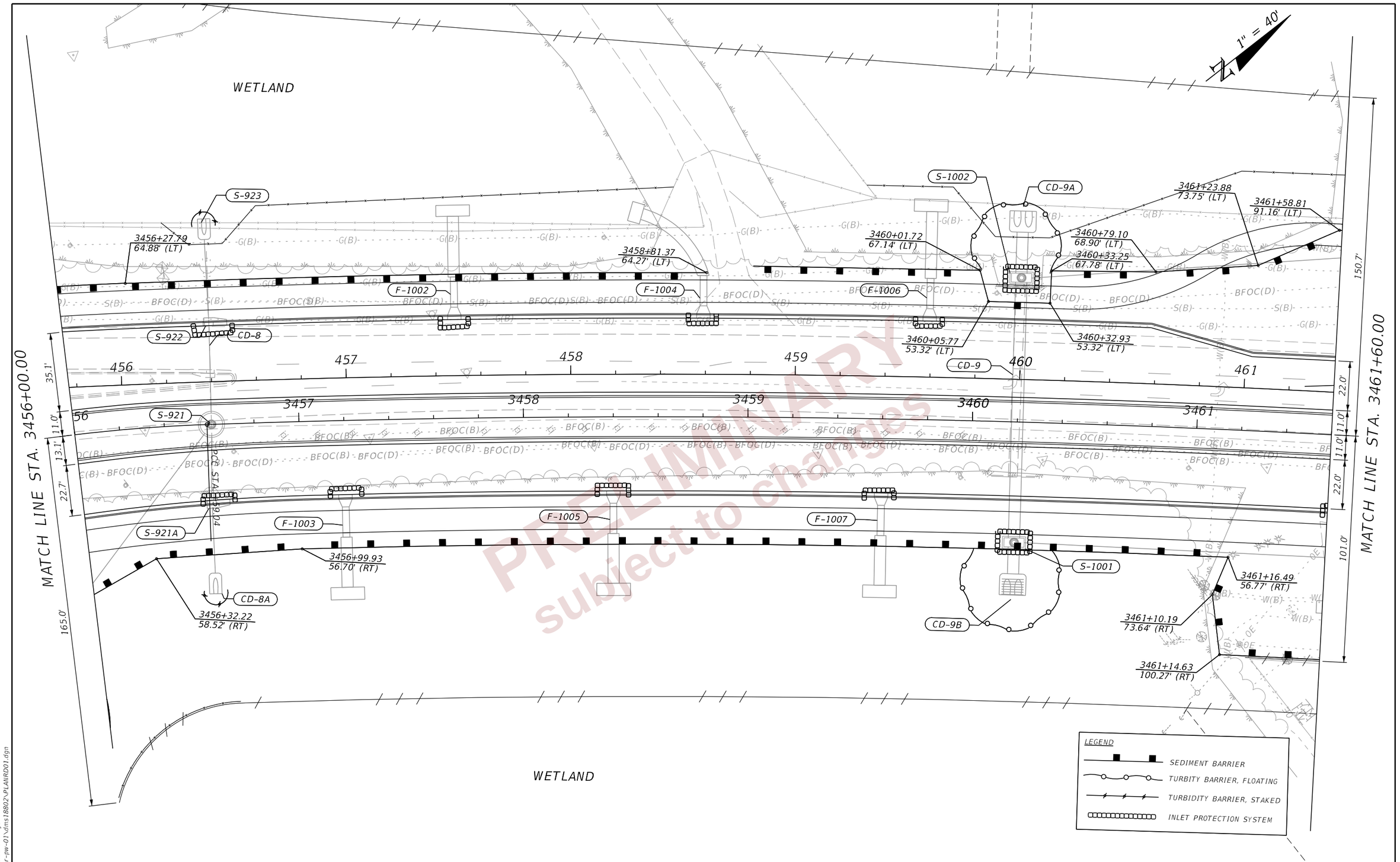

PRELIMINARY
subject to changes

THE OFFICIAL RECORD OF THIS SHEET IS THE ELECTRONIC FILE DIGITALLY SIGNED AND SEALED UNDER RULE 61G15-23.004, F.A.C.

REVISIONS				ENGINEER OF RECORD	STATE OF FLORIDA DEPARTMENT OF TRANSPORTATION			EROSION CONTROL PLANS (23)	SHEET NO.
DATE	DESCRIPTION	DATE	DESCRIPTION	LISANDRO ZAPATA, P.E. LICENSE NUMBER 58822 H. W. LOCHNER 4300 W. CYPRESS STREET, SUITE 500 TAMPA, FLORIDA 33607	ROAD NO.	COUNTY	FINANCIAL PROJECT ID		491
					SR 400	POLK	430185-3-52-01		

2/29/2024 5:41:06 PM john.lin
c:\pw_working\lochner-pw-01\dms18802\PLANRD01.dgn

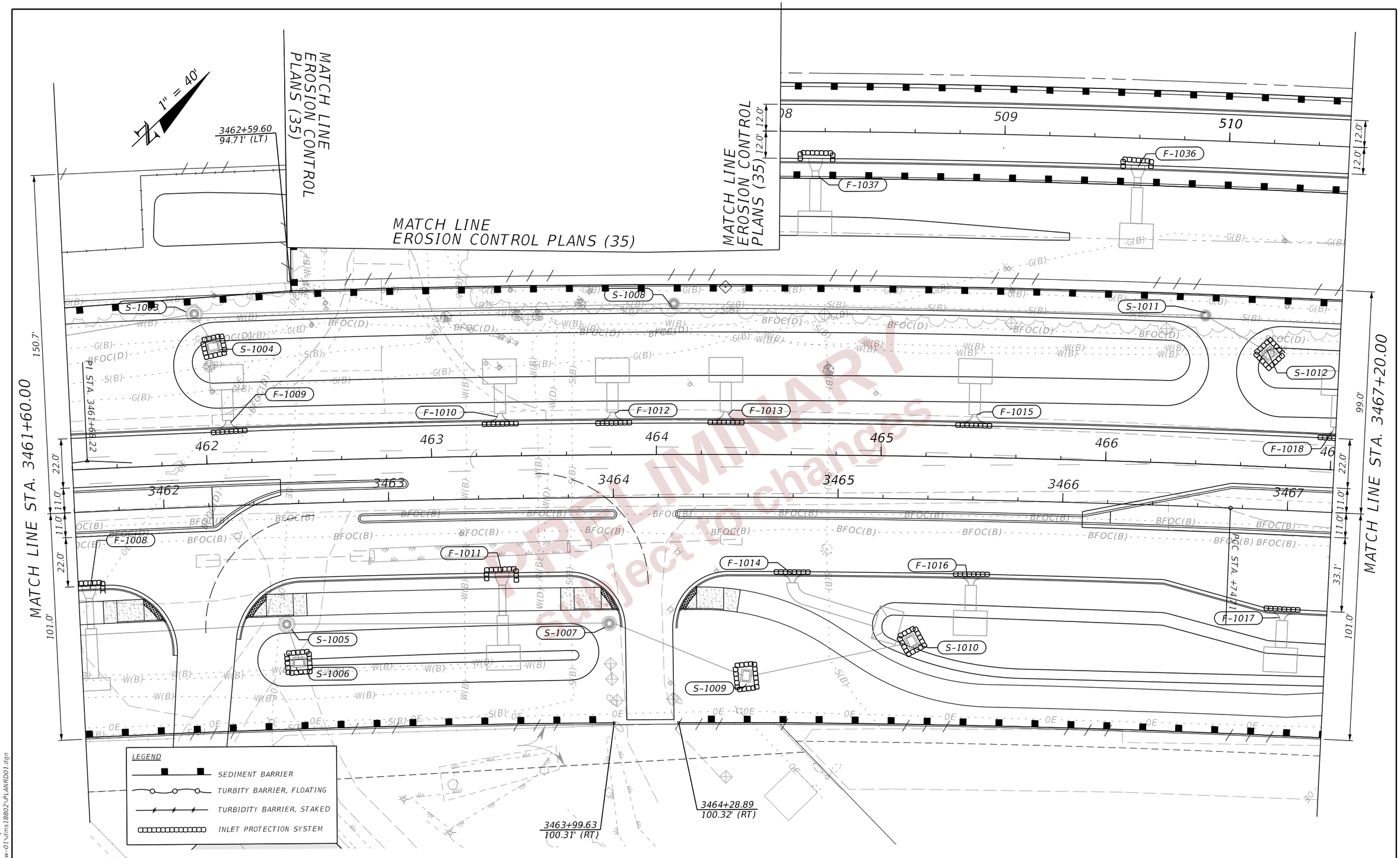

PRELIMINARY
Subject to changes

THE OFFICIAL RECORD OF THIS SHEET IS THE ELECTRONIC FILE DIGITALLY SIGNED AND SEALED UNDER RULE 61G15-23.004, F.A.C.

REVISIONS			
DATE	DESCRIPTION	DATE	DESCRIPTION

ENGINEER OF RECORD
LISANDRO ZAPATA, P.E.
LICENSE NUMBER 58822
H. W. LOCHNER
4300 W. CYPRESS STREET, SUITE 500
TAMPA, FLORIDA 33607

STATE OF FLORIDA
DEPARTMENT OF TRANSPORTATION

ROAD NO.	COUNTY	FINANCIAL PROJECT ID
SR 400	POLK	430185-3-52-01

EROSION CONTROL PLANS (24)

SHEET NO.
492

2/29/2024 5:41:07 PM john.lin
c:\pw_working\lochner-pw-01\dms18802\PLANRD01.dgn

1" = 40'

PI STA. 513+60.06

S-1014 S-1016

511 512 513 514 515 516

12.0' 12.0' 12.0' 24.0'

F-1035 F-1034 F-1033 F-1032A F-1032 F-1031

S-1013 S-1015

SD-20B SD-20A

3468+04.88
94.64' (LT)

514+95.60
20.70' (RT)

515+45.68
32.91' (RT)

99.0' 189.0'

F-1018 F-1020 F-1022 F-1023

7 468 469 470 471 472

22.0' 22.0'

11.0' 11.0'

3468 3469 3470 3471 3472

33.1' 33.0'

MATCH LINE STA. 3467+20.00

101.0' 101.0'

MATCH LINE STA. 3472+80.00

F-1019 F-1021 F-1101

3471+08.46
100.40' (RT)

3471+87.87
100.40' (RT)

LEGEND

- SEDIMENT BARRIER
- TURBITY BARRIER, FLOATING
- TURBIDITY BARRIER, STAKED
- INLET PROTECTION SYSTEM

PRELIMINARY subject to changes

THE OFFICIAL RECORD OF THIS SHEET IS THE ELECTRONIC FILE DIGITALLY SIGNED AND SEALED UNDER RULE 61G15-23.004, F.A.C.

REVISIONS			
DATE	DESCRIPTION	DATE	DESCRIPTION

ENGINEER OF RECORD

LISANDRO ZAPATA, P.E.
LICENSE NUMBER 58822
H. W. LOCHNER
4300 W. CYPRESS STREET, SUITE 500
TAMPA, FLORIDA 33607

STATE OF FLORIDA
DEPARTMENT OF TRANSPORTATION

ROAD NO.	COUNTY	FINANCIAL PROJECT ID
SR 400	POLK	430185-3-52-01

EROSION CONTROL PLANS (25)

SHEET NO. 493

2/29/2024 5:41:07 PM john.lin
c:\pw_working\lochner-pw-01\dms18802\PLANR001.dgn

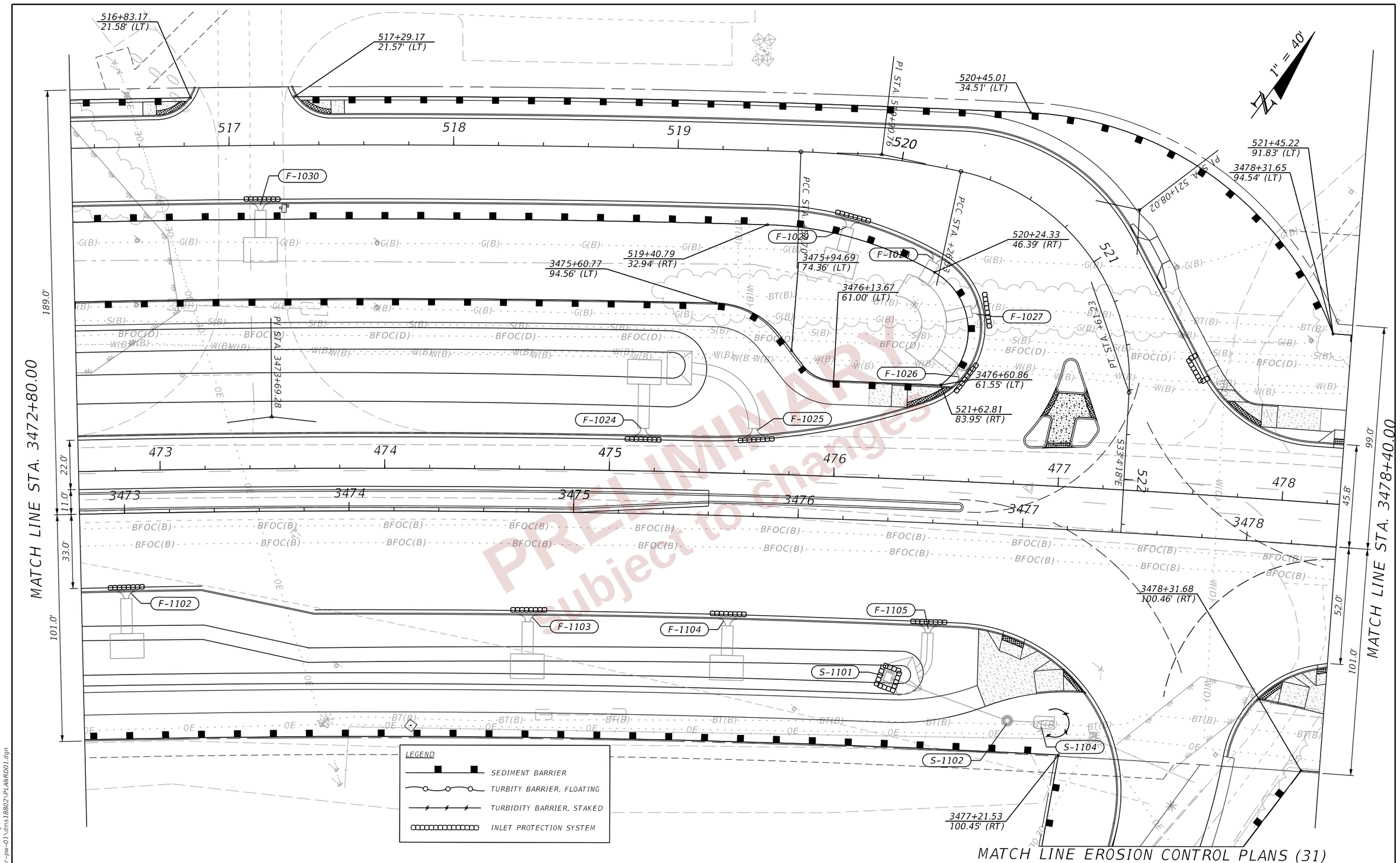

PRELIMINARY
subject to changes

REVISIONS			
DATE	DESCRIPTION	DATE	DESCRIPTION

ENGINEER OF RECORD

LISANDRO ZAPATA, P.E.
LICENSE NUMBER 58822
H. W. LOCHNER
4300 W. CYPRESS STREET, SUITE 500
TAMPA, FLORIDA 33607

STATE OF FLORIDA
DEPARTMENT OF TRANSPORTATION

ROAD NO.	COUNTY	FINANCIAL PROJECT ID
SR 400	POLK	430185-3-52-01

EROSION CONTROL PLANS (26)

SHEET NO. 494

THE OFFICIAL RECORD OF THIS SHEET IS THE ELECTRONIC FILE DIGITALLY SIGNED AND SEALED UNDER RULE 61G15-23.004, F.A.C.

2/29/2024 5:41:08 PM john.lin
c:\pw_working\lochner-pw-01\dms18802\PLANRD01.dgn

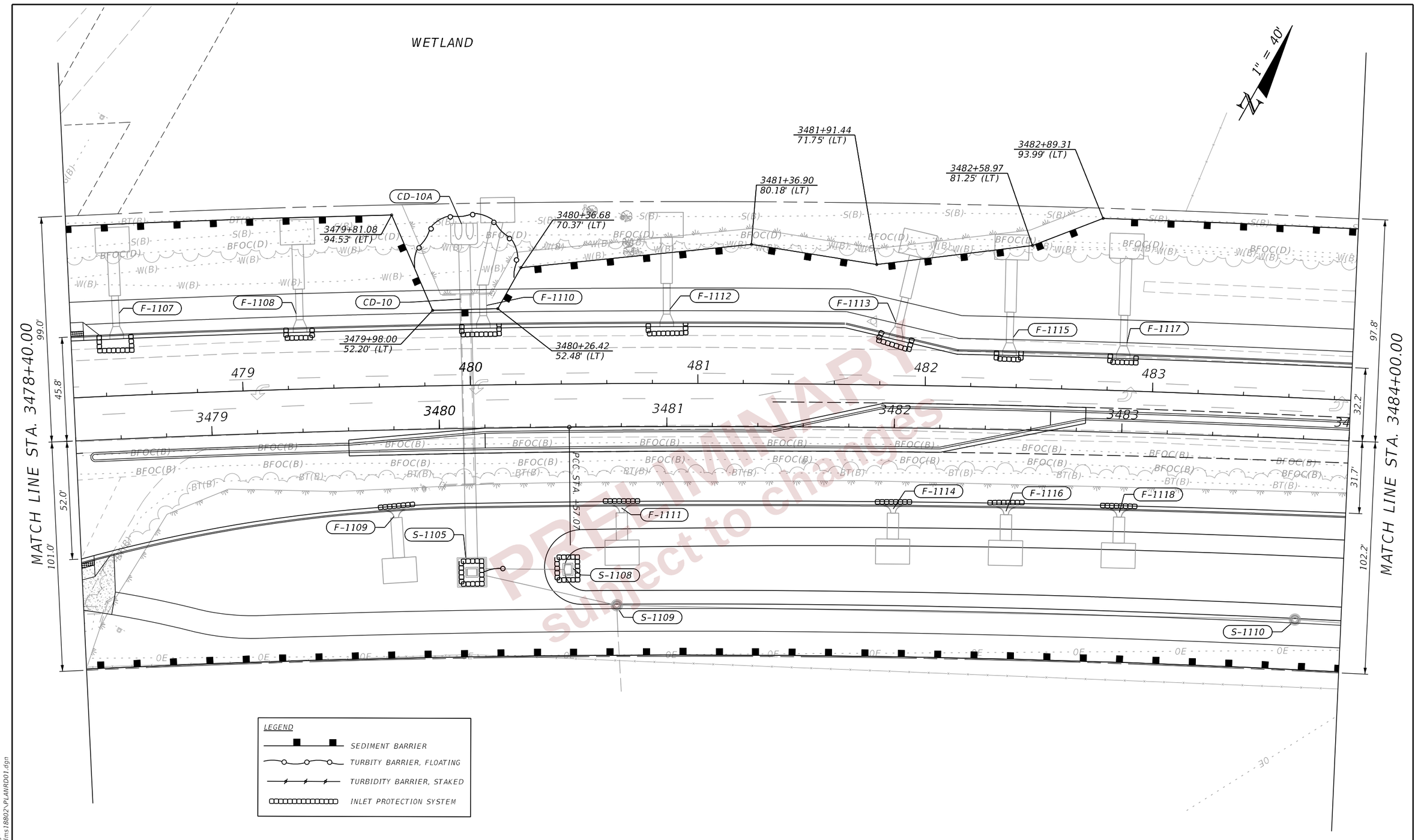

PRELIMINARY
subject to changes

REVISIONS			
DATE	DESCRIPTION	DATE	DESCRIPTION

ENGINEER OF RECORD

LISANDRO ZAPATA, P.E.
LICENSE NUMBER 58822
H. W. LOCHNER
4300 W. CYPRESS STREET, SUITE 500
TAMPA, FLORIDA 33607

STATE OF FLORIDA
DEPARTMENT OF TRANSPORTATION

ROAD NO.	COUNTY	FINANCIAL PROJECT ID
SR 400	POLK	430185-3-52-01

EROSION CONTROL PLANS (27)

SHEET NO. 495

THE OFFICIAL RECORD OF THIS SHEET IS THE ELECTRONIC FILE DIGITALLY SIGNED AND SEALED UNDER RULE 61G15-23.004, F.A.C.

2/29/2024 5:41:09 PM john.lin
c:\pw_working\lochner-pw-01\dms18802\PLANRD01.dgn

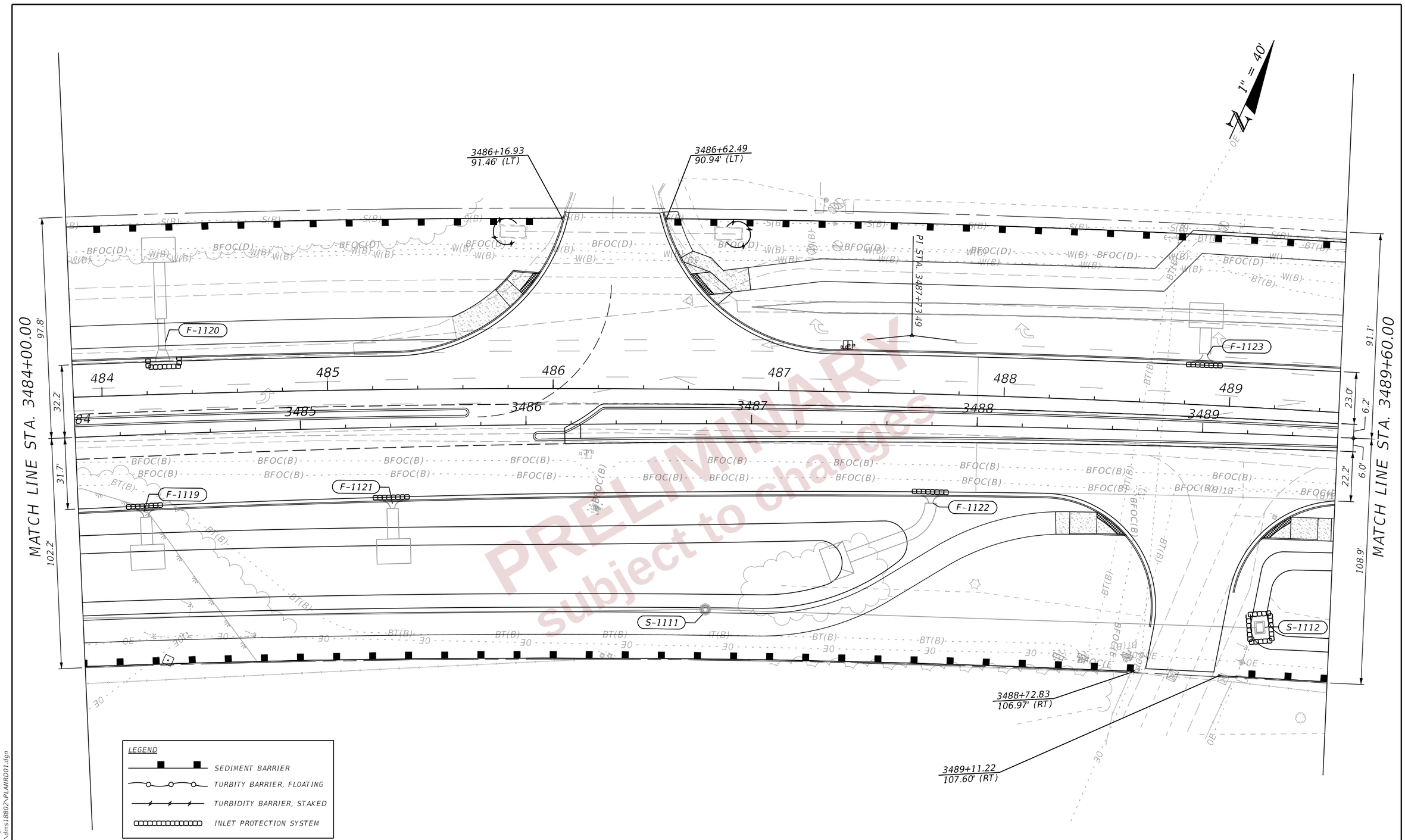

PRELIMINARY
subject to changes

REVISIONS			
DATE	DESCRIPTION	DATE	DESCRIPTION

ENGINEER OF RECORD

LISANDRO ZAPATA, P.E.
LICENSE NUMBER 58822
H. W. LOCHNER
4300 W. CYPRESS STREET, SUITE 500
TAMPA, FLORIDA 33607

STATE OF FLORIDA
DEPARTMENT OF TRANSPORTATION

ROAD NO.	COUNTY	FINANCIAL PROJECT ID
SR 400	POLK	430185-3-52-01

EROSION CONTROL PLANS (28)

SHEET NO. 496

2/29/2024 5:41:09 PM john.lin
c:\pw_working\lochner-pw-01\dms18802\PLANROO1.dgn

THE OFFICIAL RECORD OF THIS SHEET IS THE ELECTRONIC FILE DIGITALLY SIGNED AND SEALED UNDER RULE 61G15-23.004, F.A.C.

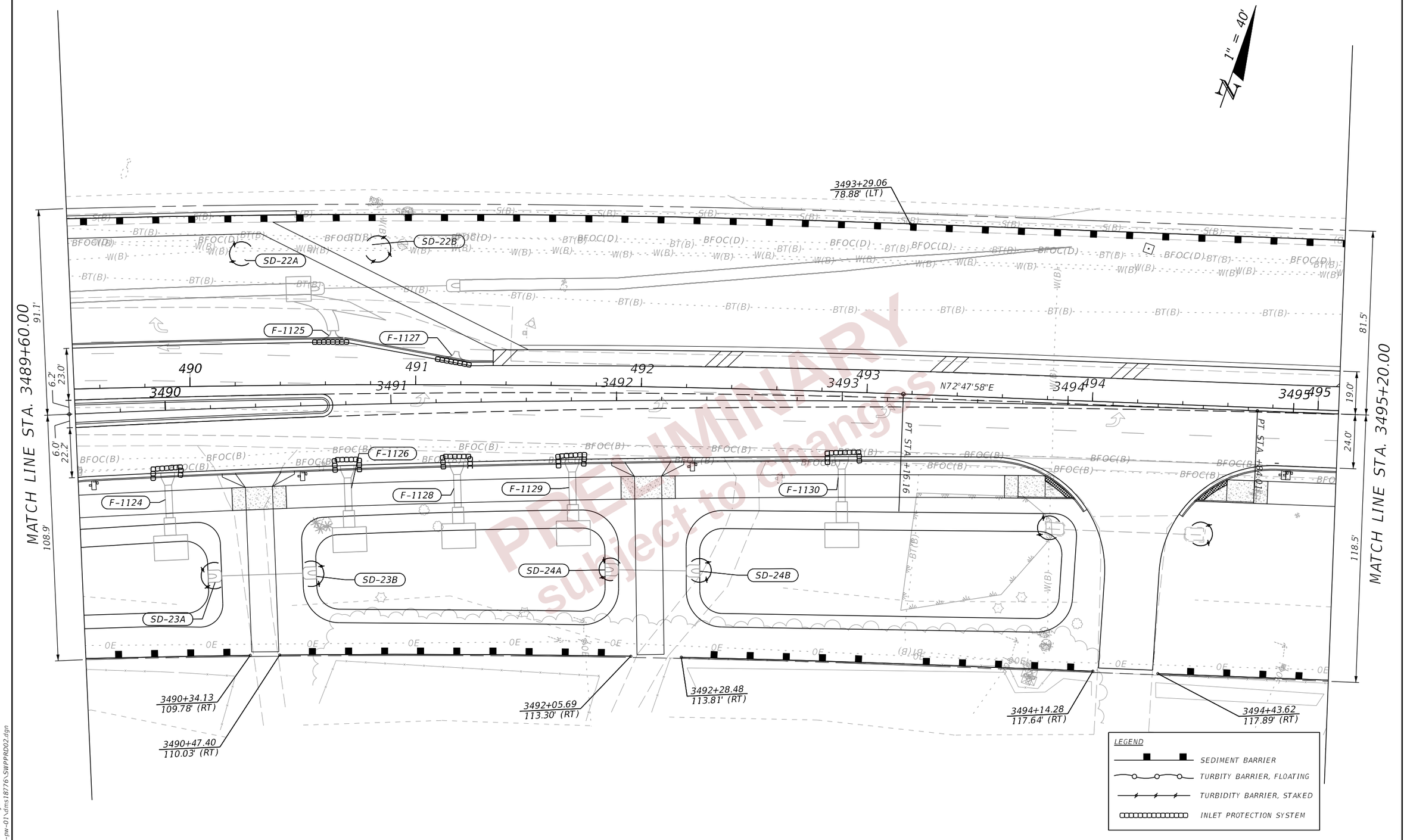

PRELIMINARY
subject to changes

REVISIONS			
DATE	DESCRIPTION	DATE	DESCRIPTION

ENGINEER OF RECORD

LISANDRO ZAPATA, P.E.
LICENSE NUMBER 58822
H. W. LOCHNER
4300 W. CYPRESS STREET, SUITE 500
TAMPA, FLORIDA 33607

STATE OF FLORIDA
DEPARTMENT OF TRANSPORTATION

ROAD NO.	COUNTY	FINANCIAL PROJECT ID
SR 400	POLK	430185-3-52-01

EROSION CONTROL PLANS (29)

SHEET NO. 497

THE OFFICIAL RECORD OF THIS SHEET IS THE ELECTRONIC FILE DIGITALLY SIGNED AND SEALED UNDER RULE 61G15-23.004, F.A.C.

2/29/2024 5:41:10 PM john.lin
c:\pw_working\lochner-pw-01\dms18776\SWPPRD02.dgn

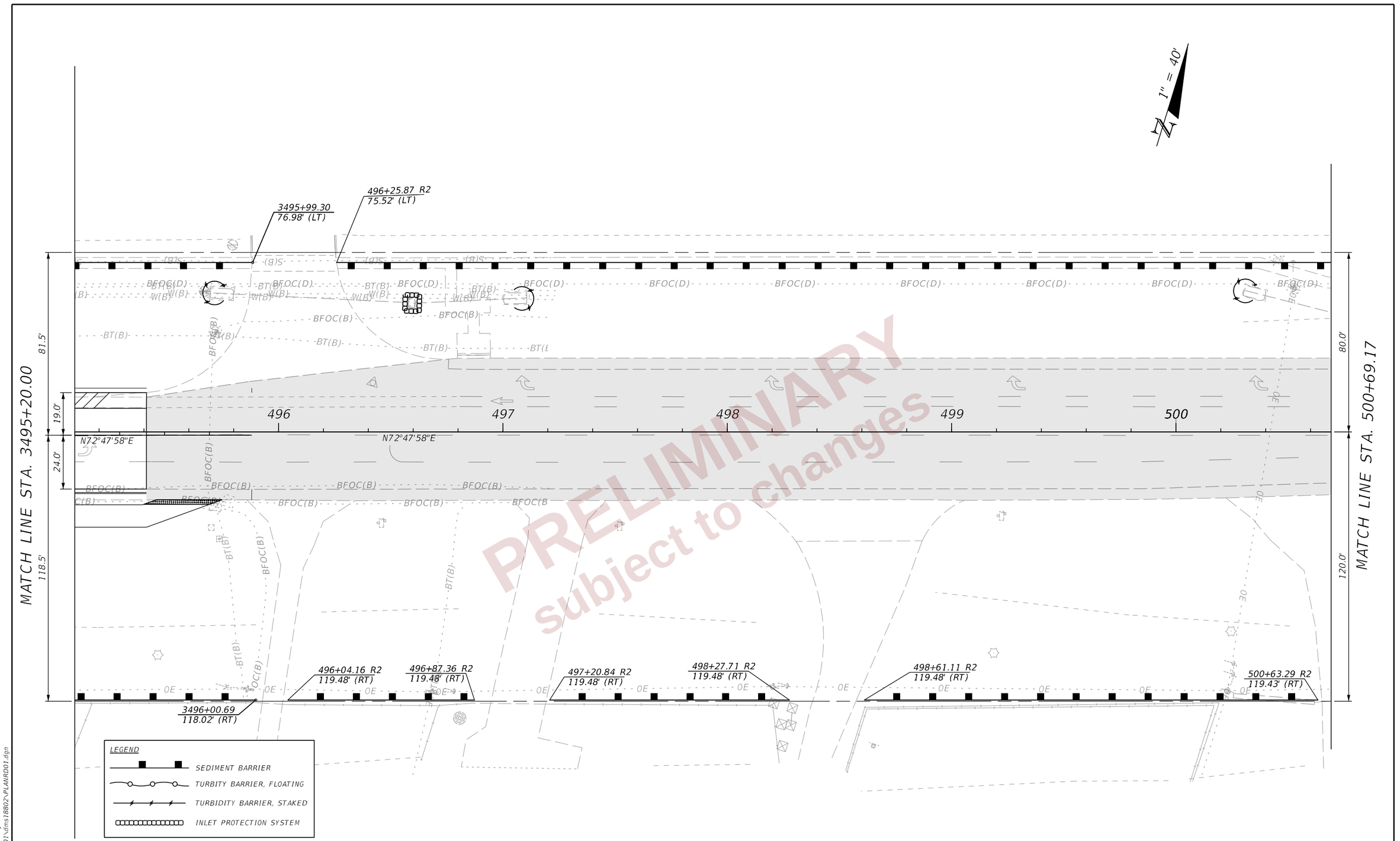

PRELIMINARY
subject to changes

REVISIONS			
DATE	DESCRIPTION	DATE	DESCRIPTION

ENGINEER OF RECORD

LISANDRO ZAPATA, P.E.
LICENSE NUMBER 58822
H. W. LOCHNER
4300 W. CYPRESS STREET, SUITE 500
TAMPA, FLORIDA 33607

STATE OF FLORIDA
DEPARTMENT OF TRANSPORTATION

ROAD NO.	COUNTY	FINANCIAL PROJECT ID
SR 400	POLK	430185-3-52-01

EROSION CONTROL PLANS (30)

SHEET NO. 498

THE OFFICIAL RECORD OF THIS SHEET IS THE ELECTRONIC FILE DIGITALLY SIGNED AND SEALED UNDER RULE 61G15-23.004, F.A.C.

2/29/2024 5:41:10 PM john.lin
c:\pw_working\lochner-pw-01\dms18802\PLANRD01.dgn

1" = 40'

501+26.94 R2
75.52' (LT)

BFOC(D)

501 502 503 504 505 506

N72°47'58"E

120.0' MATCH LINE STA. 500+69.17
80.0'

500+78.69 R2
119.48' (RT)

501+26.39 R2
119.48' (RT)

OE

PRELIMINARY
subject to changes

THE OFFICIAL RECORD OF THIS SHEET IS THE ELECTRONIC FILE DIGITALLY SIGNED AND SEALED UNDER RULE 61G15-23.004, F.A.C.

REVISIONS				ENGINEER OF RECORD	STATE OF FLORIDA DEPARTMENT OF TRANSPORTATION				SHEET NO.
DATE	DESCRIPTION	DATE	DESCRIPTION	LISANDRO ZAPATA, P.E. LICENSE NUMBER 58822 H. W. LOCHNER 4300 W. CYPRESS STREET, SUITE 500 TAMPA, FLORIDA 33607	ROAD NO.	COUNTY	FINANCIAL PROJECT ID	EROSION CONTROL PLANS (31)	499
					SR 400	POLK	430185-3-52-01		

2/29/2024 5:41:11 PM john.lin
c:\pw_working\lochner-pw-01\dms18776\SWPPRD02.dgn

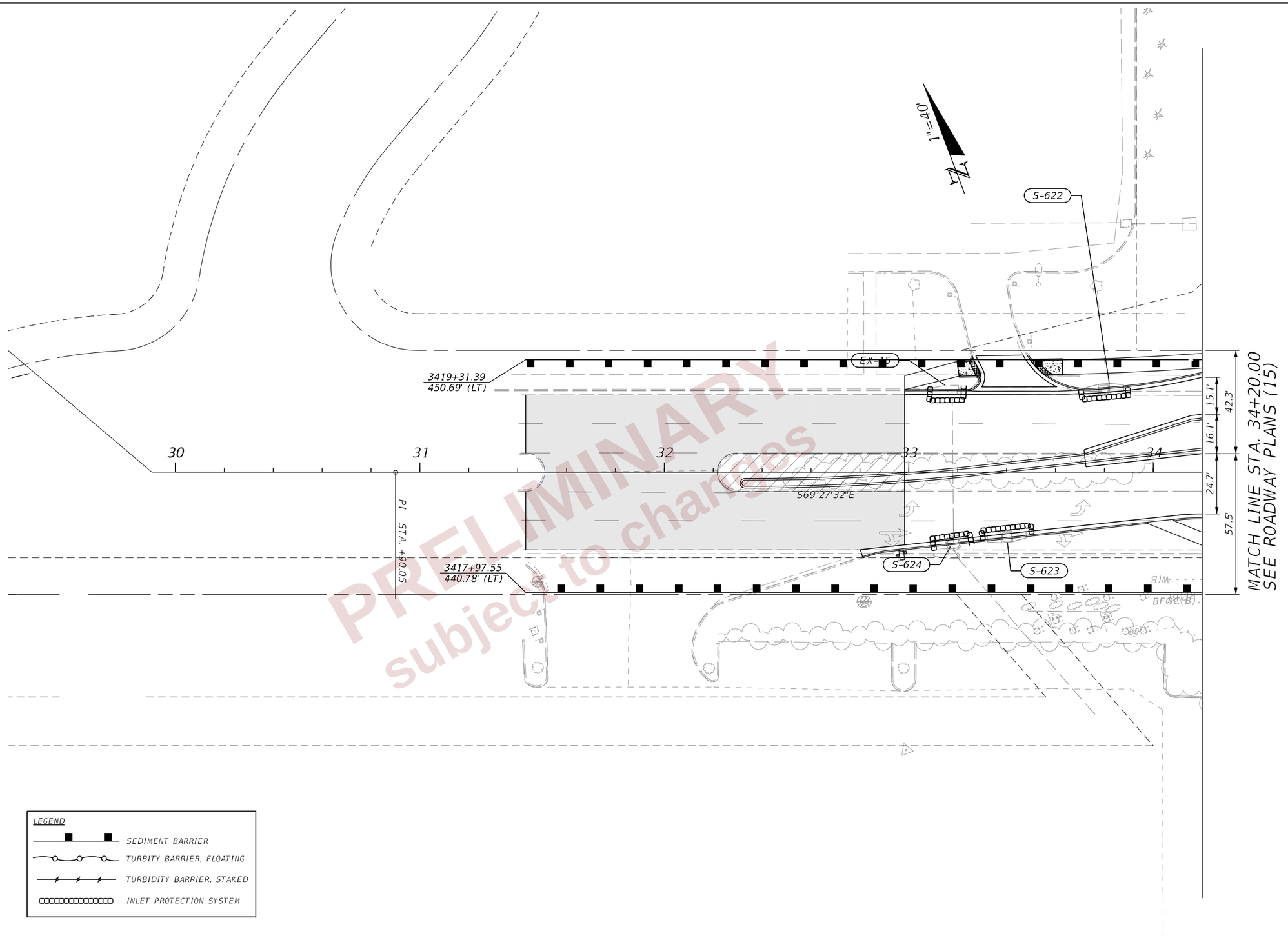

PRELIMINARY
subject to changes

REVISIONS			
DATE	DESCRIPTION	DATE	DESCRIPTION

ENGINEER OF RECORD

LISANDRO ZAPATA, P.E.
LICENSE NUMBER 58822
H. W. LOCHNER
4300 W. CYPRESS STREET, SUITE 500
TAMPA, FLORIDA 33607

STATE OF FLORIDA
DEPARTMENT OF TRANSPORTATION

ROAD NO.	COUNTY	FINANCIAL PROJECT ID
SR 400	POLK	430185-3-52-01

EROSION CONTROL PLANS (32)

SHEET NO. 500

THE OFFICIAL RECORD OF THIS SHEET IS THE ELECTRONIC FILE DIGITALLY SIGNED AND SEALED UNDER RULE 61G15-23.004, F.A.C.

2/29/2024 5:41:11 PM johnlin
c:\pw_working\lochner-pw-01\dms18802\PLANRD01.dgn

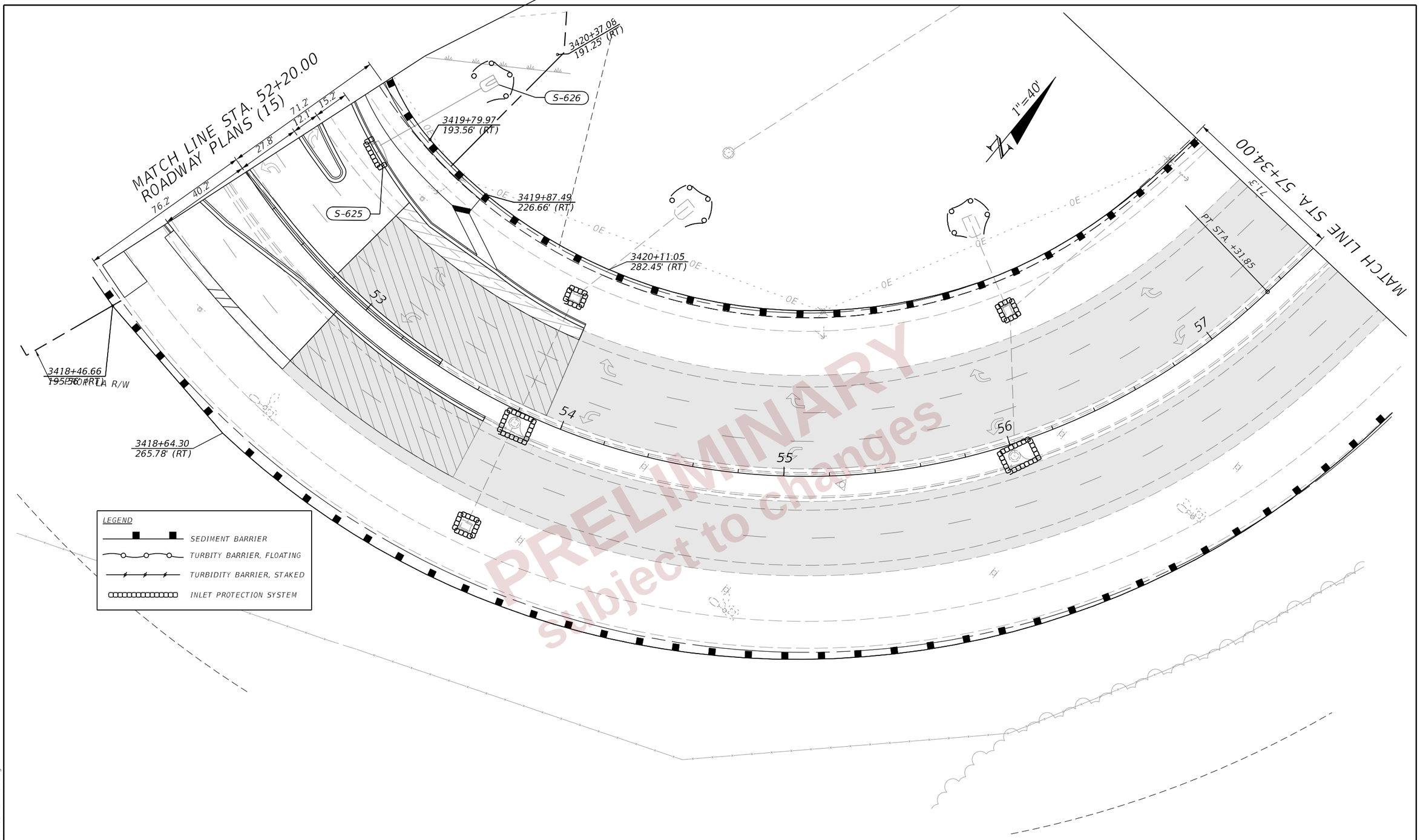

PRELIMINARY
subject to changes

REVISIONS				ENGINEER OF RECORD	STATE OF FLORIDA DEPARTMENT OF TRANSPORTATION			EROSION CONTROL PLANS (33)	SHEET NO.
DATE	DESCRIPTION	DATE	DESCRIPTION	LISANDRO ZAPATA, P.E. LICENSE NUMBER 58822 H. W. LOCHNER 4300 W. CYPRESS STREET, SUITE 500 TAMPA, FLORIDA 33607	ROAD NO.	COUNTY	FINANCIAL PROJECT ID		501
					SR 400	POLK	430185-3-52-01		

THE OFFICIAL RECORD OF THIS SHEET IS THE ELECTRONIC FILE DIGITALLY SIGNED AND SEALED UNDER RULE 61G15-23.004, F.A.C.

2/29/2024 5:41:12 PM john.lin
c:\pw_working\lochner-pw-01\dms18802\PLANROO1.dgn

1" = 40'

3423+76.55
362.01' (RT)

EXIST. R/W LINE

EXIST. SW
(TO REMAIN)

UNIVERSITY
BLVD.

71.2'

℄ CONST. UNIVERSITY BLVD.

BEGIN ℄ CONST. FIRSTPARK BLVD.
STA. 30+00.00
STA. 427+70.86, 360.89' (RT)
℄ SURVEY SR 33

58 59 60 61 62

N7°1'32"E

MATCH LINE STA. 57+34.00

76.8'

END MILLING AND RESURFACING
STA. 58+64.00 ℄ CONST. UNIVERSITY BLVD.

EXIST. SHARED USE PATH
(TO REMAIN)

3424+10.56
503.60' (RT)

EXIST. R/W LINE

LEGEND
MILLING & RESURFACING

PRELIMINARY
subject to changes

THE OFFICIAL RECORD OF THIS SHEET IS THE ELECTRONIC FILE DIGITALLY SIGNED AND SEALED UNDER RULE 61G15-23.004, F.A.C.

REVISIONS				ENGINEER OF RECORD	STATE OF FLORIDA DEPARTMENT OF TRANSPORTATION			EROSION CONTROL PLANS (34)	SHEET NO.
DATE	DESCRIPTION	DATE	DESCRIPTION	LISANDRO ZAPATA, P.E. LICENSE NUMBER 58822 H. W. LOCHNER 4300 W. CYPRESS STREET, SUITE 500 TAMPA, FLORIDA 33607	ROAD NO.	COUNTY	FINANCIAL PROJECT ID		502
					SR 400	POLK	430185-3-52-01		

2/29/2024 5:41:12 PM john.lin
c:\pw_working\lochner-pw-01\dms18776\SWPPRD02.dgn

MATCH LINE STA. 508+00.00

26.0'
64.0'
12.0'
12.0'

507+76.95
12.00' (LT)

507+72.22
21.68' (LT)

464+27.99
169.97' (LT)

5861.55' R
PRC STA. +61.30

+61.30
12.00' (RT)

CL_CONST_TOMKOW_C4

CL_CONST_TOMKOW_C3

S-1008

BEGIN RECONSTRUCTION
STA. 504+40.00
℄ CONST. TOMKOW RD.

463+60.57
202.52' (LT)

MATCH LINE
ROADWAY PLANS (24)

507+08.04
33.57' (RT)

EXIST. R/W LINE

463+40.14
261.97' (LT)

463+41.05
366.59' (LT)

504+59.44
55.79' (LT)

505+81.25
53.30' (LT)

504+40.00
12.00' (LT)

CURB & GUTTER TYPE F

507+05.84
25.14' (RT)

140' R

463+18.39
366.85' (LT)

F-1040

F-1038

6' SIDEWALK

506+58.56
47.17' (RT)

CL_CONST_TOMKOW_C2

600' R

PCC STA. +18.55

PCC STA. +41.67

F-1040

F-1038

505+48.08
17.06' (LT)

462+38.29
80.00' (LT)

TOMKOW RD

85' R

PROP. TYPE A FENCE

506+04.20
25.94' (RT)

PI STA. 506+81.40

CL_CONST_TOMKOW_C1

502

503

504

505

506

507

504+40.00
12.00' (RT)

504+50.99
12.00' (LT)

1800' R

PI STA. 504+81.13

CURB & GUTTER TYPE F

END TYPE A FENCE
CONNECT TO EXIST.
STA. 506+42.21, 97.97' (RT)

6' SIDEWALK

462+39.21
131.73' (LT)

PI STA. 504+92.21

EXIST. R/W LINE

1824.39' R

504+41.81
43.88' (RT)

504+63.41
43.24' (RT)

MATCH LINE
ROADWAY PLANS (24)

EXIST. FENCE
(TO REMAIN)

1" = 40'

LEGEND

- SEDIMENT BARRIER
- TURBITY BARRIER, FLOATING
- TURBIDITY BARRIER, STAKED
- INLET PROTECTION SYSTEM

PRELIMINARY
Subject to Change

THE OFFICIAL RECORD OF THIS SHEET IS THE ELECTRONIC FILE DIGITALLY SIGNED AND SEALED UNDER RULE 61G15-23.004, F.A.C.

REVISIONS				ENGINEER OF RECORD	STATE OF FLORIDA DEPARTMENT OF TRANSPORTATION				SHEET NO.
DATE	DESCRIPTION	DATE	DESCRIPTION	LISANDRO ZAPATA, P.E. LICENSE NUMBER 58822 H. W. LOCHNER 4300 W. CYPRESS STREET, SUITE 500 TAMPA, FLORIDA 33607	ROAD NO.	COUNTY	FINANCIAL PROJECT ID	EROSION CONTROL PLANS (35)	503
					SR 400	POLK	430185-3-52-01		

2/29/2024 5:41:13 PM john.lin
c:\pw_working\lochner-pw-01\dms18802\PLANRD01.dgn

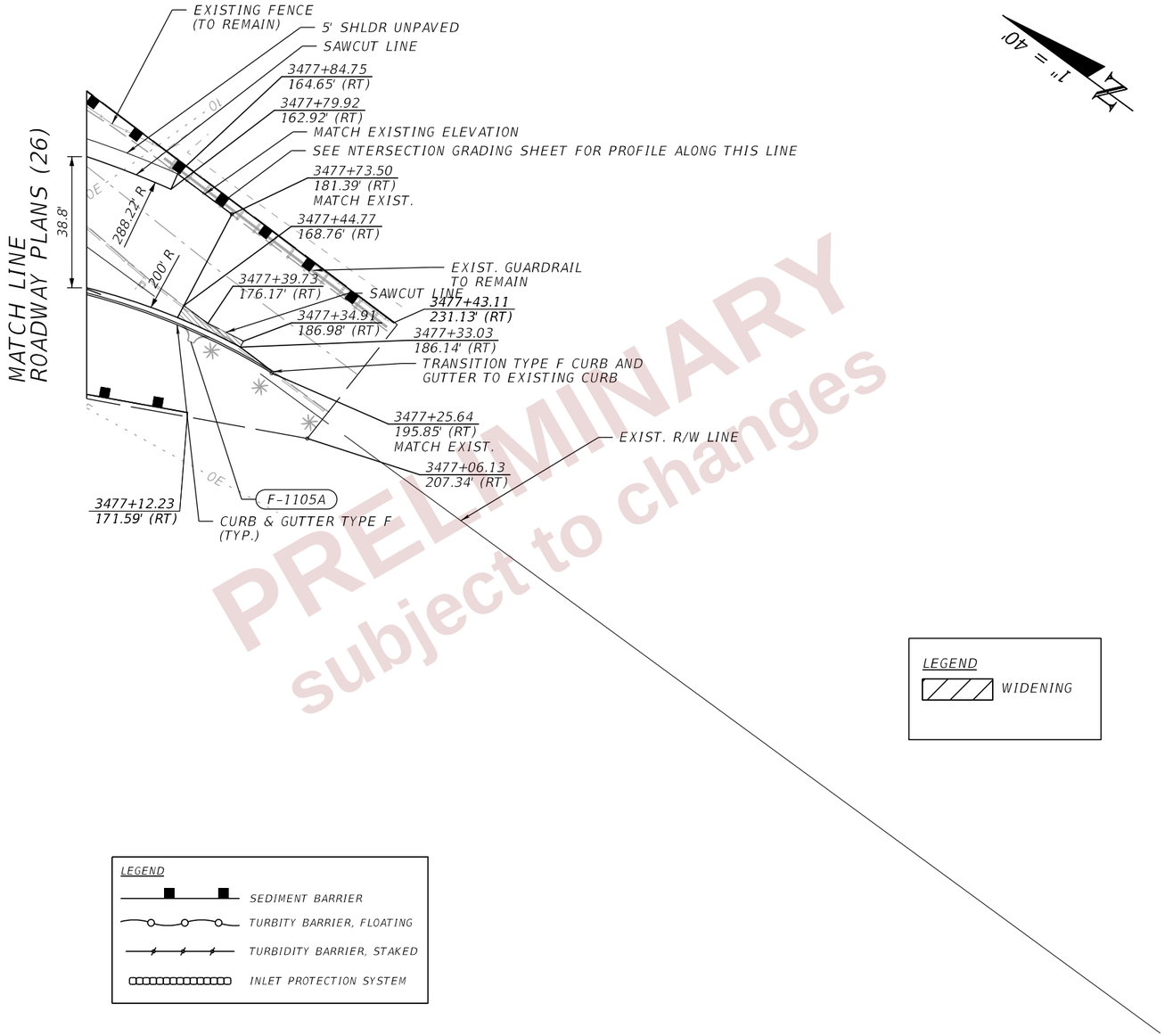

PRELIMINARY
subject to changes

REVISIONS				ENGINEER OF RECORD	STATE OF FLORIDA DEPARTMENT OF TRANSPORTATION			EROSION CONTROL PLANS (36)	SHEET NO.
DATE	DESCRIPTION	DATE	DESCRIPTION	LISANDRO ZAPATA, P.E. LICENSE NUMBER 58822 H. W. LOCHNER 4300 W. CYPRESS STREET, SUITE 500 TAMPA, FLORIDA 33607	ROAD NO.	COUNTY	FINANCIAL PROJECT ID		504
					SR 400	POLK	430185-3-52-01		

THE OFFICIAL RECORD OF THIS SHEET IS THE ELECTRONIC FILE DIGITALLY SIGNED AND SEALED UNDER RULE 61G15-23.004, F.A.C.

2/29/2024 5:41:13 PM john.lin
C:\pw_working\lochner-pw-01\dms18802\PLANRD01.dgn

GENERAL NOTES

1. THE REGULATORY SPEED LIMIT THROUGH THE WORK ZONES ON THIS PROJECT TO REMAIN THE SAME AS THE EXISTING POSTED SPEED ON SR 400 AND SR 33 UNLESS OTHERWISE SHOWN IN PLANS OR BY DESIGN STANDARDS. THE PROPOSED POSTED SPEED ON THE PROJECT IS AS FOLLOWS:
   STA. 1054+00.00 TO 1196+00.00 – 70 MPH FOR SR 400
   STA. 397+00.00 TO 502+00.00 – 35 MPH FOR SR 33
   STA. 500+23.66 TO 517+93.74 – 35 MPH FOR TOMKOW RD

2. RESTORE MAINLINE TRAFFIC TO NORMAL OPERATING CONDITIONS DURING NON-WORK PERIODS.

3. ALL LANE CLOSURES MUST BE COORDINATED WITH EMERGENCY AND RESCUE AGENCIES AND WITH LOCAL SPECIAL EVENTS. INFORM THE FDOT TRAFFIC OPERATIONS SECTION AND SUBMIT REQUEST TWO (2) WEEKS IN ADVANCE OF ANY LANE CLOSURES. NOTIFY THE FDOT PUBLIC INFORMATION OFFICER ONE (1) WEEK IN ADVANCE OF LANE CLOSURES.

4. ELEVATION DIFFERENCES BETWEEN ADJACENT LANES TO BE ADDRESSED IN ACCORDANCE WITH STANDARD PLANS 102-SERIES, DROPOFFS IN WORK ZONES.

5. LANE CLOSURE / WORK RESTRICTIONS.
   SR 400 STA. 1054+00.00 TO 1196+00.00
   NO SINGLE LANE CLOSURES WILL BE PERMITTED BETWEEN 6:30 AM TO 8:30 PM.
   NO DUAL LANE CLOSURES WILL BE PERMITTED BETWEEN 6:00 AM TO 10:30 PM.

   SR 33 STA 397+00.00 TO 502+00.00
   NO SINGLE LANE CLOSURES ALLOWED BETWEEN 7:00 AM TO 7:00 PM WITHIN 600 FT OF A SIGNALIZED INTERSECTION.

   TOMKOW ROAD – NO RESTRICTIONS

   LANE CLOSURES MAY ONLY BE UTILIZED DURING ACTIVE WORK PERIODS. THE WORK ZONE LENGTH FOR CONSTRUCTION ACTIVITIES REQUIRING LANE CLOSURE SHALL BE LIMITED TO THAT WHICH CAN BE CONSTRUCTED AND OPENED TO TRAFFIC IN A SINGLE WORK PERIOD. THE EXISTING LANES OF TRAFFIC IN EACH DIRECTION SHALL BE MAINTAINED AT ALL OTHER TIMES.

   AT THE DISCRETION OF THE ENGINEER, OPEN ANY TEMPORARY LANE CLOSURE CAUSING EXTENDED TRAFFIC CONGESTION UNTIL TRAFFIC HAS RETURNED TO AN ACCEPTABLE FLOW.

   NOTIFY LOCAL LAW ENFORCEMENT AGENCIES, FIRE STATIONS, AND THE PUBLIC THROUGH MEDIA OUTLETS TWO WORKING DAYS IN ADVANCE OF LANE AND RAMP CLOSURES.

   CONTACT TRAFFIC MANAGEMENT CENTERS 14 DAYS IN ADVANCE FOR FOR THE NOTIFICATION OF LANE CLOSURE. DURING CONSTRUCTION.

NAME:	PHONE:	DISTRICT:
RONALD CHIN	813-975-4216	SEVEN (TAMPA)
MARK MATHES	863-519-2490	ONE (BARTOW)

6. LANE CLOSURE ON MAINLINE SR 400 WILL UTILIZE THE MOTORIST AWARENESS SYSTEM PER STANDARD PLANS 102-613.

7. THE TRAFFIC AND TRAVEL WAYS SHALL NOT BE ALTERED TO CREATE A WORK ZONE UNTIL ALL LABOR, MATERIALS, AND EQUIPMENT ARE AVAILABLE FOR THE CONSTRUCTION IN THAT AREA.

8. PORTABLE CHANGEABLE MESSAGE SIGNS SHALL BE USED TO PROVIDE INFORMATION TO THE MOTORIST DURING THE MAINTENANCE OF TRAFFIC PHASES AND SHALL RELATE INFORMATION CONCERNING CONSTRUCTION SCHEDULES, LENGTH OF DELAYS, ETC.; CONTENT AND LENGTH OF MESSAGE SHALL BE APPROVED BY THE ENGINEER. INFORMATIONAL SIGNS SHALL BE PLACED TWO WEEKS PRIOR TO MAJOR WORK ACTIVITIES, WHICH WILL BE DEFINED BY THE ENGINEER.

9. UTILIZE STANDARD PLANS 102-SERIES FOR THE INSTALLATION OF THE SINGLE POST, MULTIPOST SIGNS AND ROADSIDE IMPROVEMENTS ALONG THE MAINLINE. WORK DURING DAYTIME HOURS TO REPLACE SINGLE POST, MULTIPOST SIGNS ARE ALLOWED.

10. UTILIZE STANDARD PLANS INDEX 102-660 FOR SIDEWALK CLOSURES WITH TTC PLAN PEDESTRIAN DETOUR DETAILS.

11. UTILIZE STANDARD PLANS INDEX 706-001 AND 711-001 FOR TEMPORARY RPM'S AND PAVEMENT MARKINGS.

PRIOR TO CONSTRUCTION (14 DAYS MIN.)		TYPICAL DURING CONSTRUCTION		DURING LANE CLOSURES	
PCMS DISPLAY		PCMS DISPLAY		PCMS DISPLAY	
MESSAGE 1	MESSAGE 2	MESSAGE 1	MESSAGE 2	MESSAGE 1	MESSAGE 2
ROAD WORK BEGINS	MONTH DAY	DRIVE WITH CAUTION	ROAD WORK NEXT 5MI	LANE CLOSURE AHEAD	DRIVE WITH CAUTION

ADVANCE WARNING SIGNING DETAIL
SR 400 (I-4)

PRIOR TO CONSTRUCTION (14 DAYS MIN.)		TYPICAL DURING CONSTRUCTION		DURING LANE CLOSURES	
PCMS DISPLAY		PCMS DISPLAY		PCMS DISPLAY	
MESSAGE 1	MESSAGE 2	MESSAGE 1	MESSAGE 2	MESSAGE 1	MESSAGE 2
ROAD WORK BEGINS	MONTH DAY	TRAFFIC PATTERN CHANGE	DRIVE WITH CAUTION	LANE CLOSURE AHEAD	DRIVE WITH CAUTION

ADVANCE WARNING SIGNING DETAIL
SR 33 (LAKELAND HILLS BLVD / COMMONWEALTH AVE)

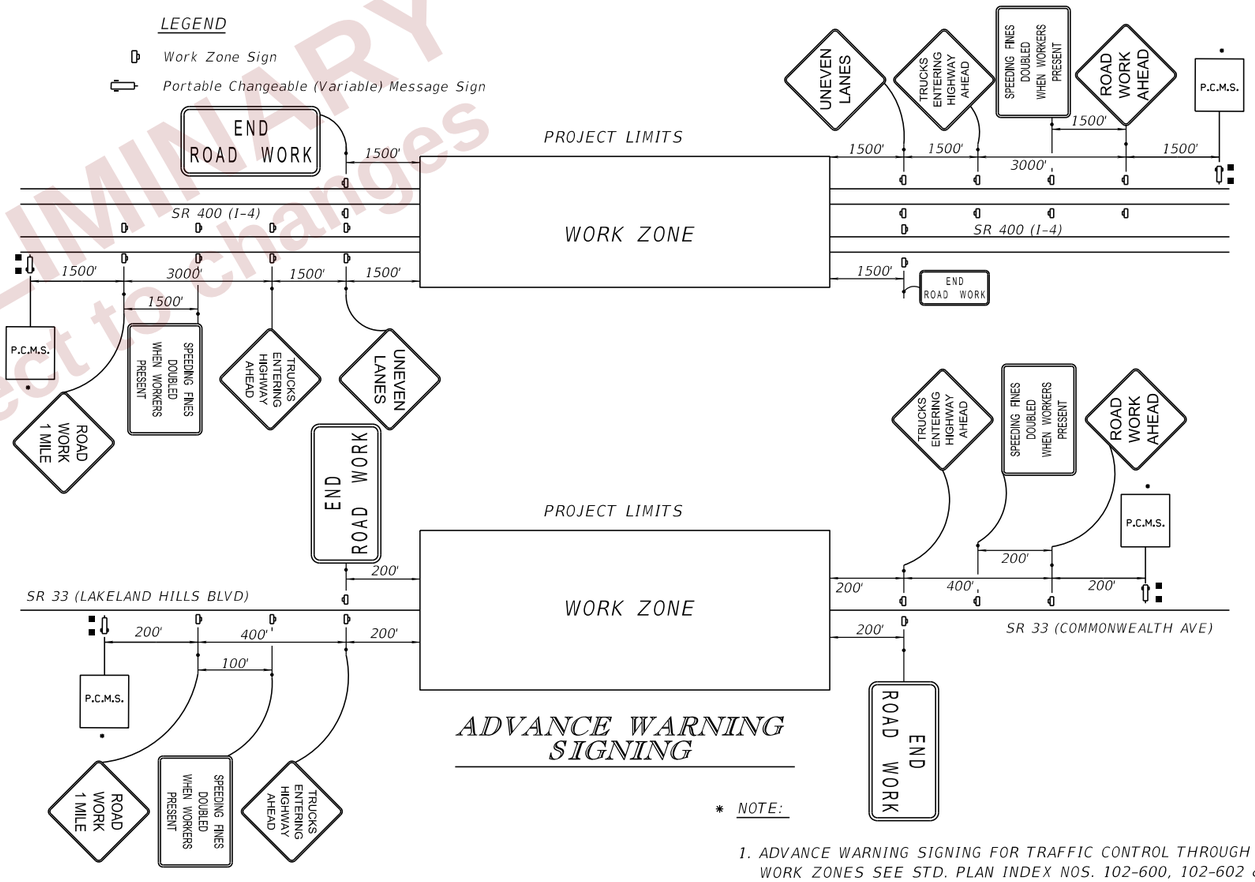

ADVANCE WARNING SIGNING

* NOTE:

1. ADVANCE WARNING SIGNING FOR TRAFFIC CONTROL THROUGH WORK ZONES SEE STD. PLAN INDEX NOS. 102-600, 102-602 & 102-613 AND RELATED INDEXES.

PRELIMINARY subject to changes

REVISIONS				ENGINEER OF RECORD	STATE OF FLORIDA DEPARTMENT OF TRANSPORTATION			TTC PLAN (1) GENERAL NOTES	SHEET NO.
DATE	DESCRIPTION	DATE	DESCRIPTION	RYAN J. WILLIAMSON, P.E. LICENSE NUMBER 81421 BURGESS & NIPLE, INC. 1800 PEMBROOK DRIVE, SUITE 265 ORLANDO, FL 32810	ROAD NO.	COUNTY	FINANCIAL PROJECT ID		505
					SR 400	POLK	430185-3-52-01		

THE OFFICIAL RECORD OF THIS SHEET IS THE ELECTRONIC FILE DIGITALLY SIGNED AND SEALED UNDER RULE 61G15-23.004, F.A.C.

2/28/2024 7:05:39 PM dgw
P:\ORD_FDOT\Work Sets\FDOT\430185352O1-I-4\Roadway\TCP\TCGNRD01.dgn

TEMPORARY TRAFFIC CONTROL PHASING NOTES

SR 400 / I-4 STA. 1054+00.00 TO STA. 1196+00.00
SR 33 STA. 397+00.00 TO STA. 502+00.00

PHASE 1 (CONSTRUCT PROPOSED I-4 MAINLINE EB LANES, I-4 EB ON/OFF RAMPS, I-4 WB OFF RAMP, AND SR 33 PROPOSED NB LANES)
STAGE 1
1. INSTALL ALL SIGNS, BARRICADES, EROSION CONTROL, AND OTHER DEVICES.
2. UTILIZING STANDARD PLANS 102-SERIES MAINTAIN TRAFFIC IN BOTH EXISTING TRAVEL LANES ALONG I-4 AND SR 33.
3. PLACE TEMPORARY PAVEMENT AND TEMPORARY DRAINAGE THROUGHOUT THE PROJECT FOR USE AS I-4 MAINLINE MEDIAN DIVERSIONS, SR 33 MEDIAN DIVERSIONS, TEMPORARY RAMP D AND TEMPORARY SR 33 ROADWAY UTILIZING STANDARD PLANS 102-SERIES.
4. COMMENCE POND CONSTRUCTION AND POND ACCESS ROAD CONNECTION TO PROPOSED SR 33 WITH TEMPORARY CONNECTION.
5. CONSTRUCT PROPOSED TEMPORARY SIGNALIZATION ACCORDING TO TEMPORARY SIGNALIZATION PLAN.

STAGE 2
1. ADJUST ALL SIGNS, BARRICADES, AND OTHER DEVICES.
2. MAINTAIN TRAFFIC PATTERNS ON SR 33 EXISTING TRAVEL LANES.
3. CONSTRUCT PROPOSED SR 33 NORTHBOUND ROADWAY, DRAINAGE FEATURES, AND CONCRETE FLAT WORK (SIDEWALK, GRAVITY WALL, CURB RAMPS, ETC.) EXEMPTING THE SECTION BETWEEN I-4 EASTBOUND ENTRANCE AND WESTBOUND EXIT RAMP CONNECTIONS.
4. CONSTRUCT SR 33 PROPOSED EAST SIDE ROADWAY SIDE STREET CONNECTIONS, AS IDENTIFIED IN THE PLANS.
5. SHIFT I-4 EASTBOUND TRAFFIC ONTO THE I-4 EASTBOUND DIVERSION #1 & #2 AND COMMENCE CONSTRUCTION ON I-4 PROPOSED EASTBOUND AND TEMPORARY DRAINAGE CONNECTION, AS IDENTIFIED IN THE PLANS.
6. CONSTRUCT I-4 PROPOSED EASTBOUND ENTRANCE RAMP, EASTBOUND EXIT RAMP, AND WESTBOUND EXIT RAMP, AS IDENTIFIED IN THE PLANS.
7. PLACE ALL TEMPORARY PAVEMENT TO BE USED TO CONNECT THE PROPOSED I-4 EASTBOUND ENTRANCE/EXIT AND WESTBOUND EXIT RAMP RETURNS TO THE EXISTING SR 33 ROADWAY.

PHASE 2 (CONSTRUCT PROPOSED I-4 EB BRIDGE AND I-4 MAINLINE EB LANES)
STAGE 1 (NO PLANS)
1. ADJUST ALL SIGNS, BARRICADES, AND OTHER DEVICES.
2. MAINTAIN TRAFFIC PATTERNS ON EXISTING I-4 EASTBOUND/WESTBOUND MAINLINE AND NEWLY CONSTRUCTED RAMPS.
3. INSTALL TEMPORARY SHEET PILE WALLS AND BARRICADES TO CONSTRUCT THE PROPOSED I-4 EASTBOUND ROADWAY EAST AND WEST OF EXISTING SR 33 INTERCHANGE WHILE MAINTAINING SR 33 TRAFFIC PATTERNS.

STAGE 2
1. DETOUR SR 33, AS IDENTIFIED IN THE PLANS, BETWEEN THE I-4 ENTRANCE/EXIT RAMPS BLVD TO PLACE I-4 EB BRIDGE SPAN BEAMS.
2. UPON PLACEMENT OF INTERMEDIATE BRIDGE BEAMS IN THE PROPOSED MEDIAN OF SR 33, RETURN TRAFFIC TO ORIGINAL PATTERNS.
3. CONSTRUCT PROPOSED I-4 MAINLINE EB LANES, END BENTS AND EASTBOUND BRIDGE OVER SR 33.
4. REMOVE OLD I-4 EASTBOUND ON/OFF RAMPS.
5. CONSTRUCT I-4 PROPOSED EASTBOUND, AS IDENTIFIED IN THE PLANS.
6. INSTALL TEMPORARY PAVEMENT MARKINGS ON PROPOSED I-4 EASTBOUND ROADWAY.

PHASE 3 (CONSTRUCT PROPOSED I-4 WB BRIDGE, I-4 MAINLINE WB LANES, AND I-4 WB ON RAMP)
STAGE 1 (NO PLANS)
1. ADJUST ALL SIGNS, BARRICADES, AND OTHER DEVICES.
2. SHIFT I-4 EASTBOUND MAINLINE TRAFFIC TO THE NEWLY CONSTRUCTED I-4 EASTBOUND TRAVEL LANES AND RAMPS.
3. SHIFT I-4 WESTBOUND TRAFFIC ONTO THE I-4 WESTBOUND DIVERSION #1 & #2 AND EXISTING I-4 EASTBOUND TRAVEL LANES.
4. INSTALL TEMPORARY PAVEMENT MARKINGS FOR I-4 WESTBOUND TRAFFIC.

STAGE 2
1. DETOUR SR 33, AS IDENTIFIED IN THE PLANS, BETWEEN THE I-4 ENTRANCE/EXIT RAMPS BLVD TO PLACE I-4 WB BRIDGE SPAN BEAMS.
2. UPON PLACEMENT OF INTERMEDIATE BRIDGE BEAMS IN THE PROPOSED MEDIAN OF SR 33, RETURN TRAFFIC TO ORIGINAL PATTERNS.
3. CONSTRUCT PROPOSED I-4 MAINLINE WB LANES, END BENTS AND WESTBOUND BRIDGE OVER SR 33.
4. DETOUR SR 33, AS INDENTIFIED IN THE PLANS, TO REMOVE EXISTING I-4 WESTBOUND ENTRANCE RAMP AND CONSTRUCT PROPOSED I-4 WESTBOUND ENTRANCE RAMP.
5. CONSTRUCT TEMPORARY PAVEMENT FOR SR 33 CONNECTION.

PHASE 3, (CONT.)
STAGE 3
1. ADJUST ALL SIGNS, BARRICADES, AND OTHER DEVICES.
2. SHIFT I-4 WESTBOUND EXIT RAMP TRAFFIC TO THE NEWLY CONSTRUCTED RAMP AND TEMPORARY CONNECTION.
3. CONSTRUCT PROPOSED I-4 MAINLINE WESTBOUND LANES, AS IDENTIFIED IN THE PLANS.
4. CONSTRUCT PROPOSED I-4 WESTBOUND EXIT RAMP CONNECTION TO SR 33.
5. CONSTRUCT TEMPORARY PAVEMENT FOR SR 33 CONNECTION.
6. INSTALL FINAL PAVEMENT MARKINGS FOR I-4 MAINLINE ROADWAY.

PHASE 4 (CONSTRUCT PROPOSED I-4 MEDIAN CONSTRUCTION)
STAGE 1
1. ADJUST ALL SIGNS, BARRICADES, AND OTHER DEVICES.
2. SHIFT I-4 WESTBOUND TRAFFIC ON NEWLY CONSTRUCTED I-4 WESTBOUND TRAVEL LANES.
3. CONSTRUCT PERMANENT I-4 MEDIAN EAST AND WEST OF SR 33 INTERCHANGE.
4. CONSTRUCT SR 33 NORTHBOUND ROADWAY CONNECTION, AS IDENTIFIED IN THE PLANS.
5. CONSTRUCT TEMPORARY PAVEMENT FOR SR 33 CONNECTION.
6. INSTALL PERMANENT SIGNING ALONG I-4 MAINLINE LANES.

PHASE 5 (CONSTRUCT PROPOSED SR 33 NB ROADWAY BETWEEN I-4 RAMP RETURNS, SR 33 SB ROADWAY, AND TOMKOW RD)
STAGE 1
1. ADJUST ALL SIGNS, BARRICADES, AND OTHER DEVICES.
2. CONSTRUCT PROPOSED SR 33 NORTHBOUND ROADWAY BETWEEN THE PROPOSED I-4 EASTBOUND ENTRANCE AND WESTBOUND EXIT RAMP CONNECTIONS.
3. CONSTRUCT RAMP RETURNS TO NEWLY CONSTRUCTED SR 33 NORTHBOUND TRAVEL LANES.
4. PARTIALLY CONSTRUCT PROPOSED SR 33 SOUTHBOUND ROADWAY BETWEEN THE PROPOSED I-4 EASTBOUND ENTRANCE AND WESTBOUND EXIT RAMP CONNECTIONS.
5. CONSTRUCT PERMANENT SIGNAL AND PEDESTRIAN FEATURES IN SR 33 NORTHBOUND DIRECTION.
6. INSTALL TEMPORARY PAVEMENT MARKINGS.

STAGE 2
1. ADJUST ALL SIGNS, BARRICADES, AND OTHER DEVICES.
2. SHIFT NORTHBOUND AND SOUTHBOUND TRAFFIC ON THE NEWLY CONSTRUCTED SR 33 NORTHBOUND TRAVEL LANES.
3. CONSTRUCT PROPOSED SOUTHBOUND ROADWAY, DRAINAGE FEATURES, AND CONCRETE FLAT WORK (SIDEWALK, CURB RAMPS, ETC.) AS IDENTIFIED IN THE PLANS.
4. CONSTRUCT RAMP RETURNS TO NEWLY CONSTRUCTED SR 33 SOUTHBOUND TRAVEL LANES.
5. CONSTRUCT PROPOSED WESTSIDE ROADWAY SIDE STREET CONNECTIONS.
6. DETOUR TOMKOW RD, AS IDENTIFIED IN THE PLANS, TO COMPLETE CONSTRUCTION OF THE ROADWAY.
7. INSTALL PROPOSED SIGNAL & PEDESTRIAN FEATURES ON THE SOUTHBOUND TRAVEL WAY.
8. INSTALL TEMPORARY PAVEMENT MARKINGS.

STAGE 3
1. ADJUST ALL SIGNS, BARRICADES, AND OTHER DEVICES.
2. INSTALL PERMANENT SIGNING ALONG SR 33.
3. SHIFT SOUTHBOUND TRAFFIC ONTO THE PROPOSED SOUTHBOUND OUTSIDE TRAVEL LANE.
4. MAINTAIN NORTHBOUND TRAFFIC ONTO THE OUTSIDE TRAVEL LANE.
5. CONSTRUCT REMAINING PROPOSED RAISED MEDIAN, LEFT TURN LANES, AND ROUNDABOUTS, AS IDENTIFIED IN PLANS.
6. MILL & RESURFACE TRANSITIONS ON BOTH ENDS OF THE SR 33 PROJECT LIMITS.
7. INSTALL TEMPORARY PAVEMENT MARKINGS.

PHASE 6
1.
2. MAINTAIN TRAFFIC PATTERN ON SR 33 AND I-4 MAINLINES.
3. INSTALL PROPOSED SIGNS AND FINAL SIGNAL/PEDESTRIAN FEATURE IMPROVEMENTS.
4. APPLY FRICTION COURSE FROM INSIDE TO OUTSIDE TRAVEL LANES THROUGHOUT THE CORRIDOR.
APPLY FINAL PAVEMENT MARKINGS.

43018535201 - Summary of Temporary Pipe

Phase	Alignment	Station	Side	Length (ft)	Pipe Size (in)
Phase I - Stage 1	CL_Const. I-4	3074+40.20	LT	6.00	18"
Phase I - Stage 1	CL_Const. I-4	3076+49.06	LT	6.00	18"
Phase I - Stage 2	CL_Const. I-4	3074+40.20	RT	86.00	18"
Phase I - Stage 2	CL_Const. I-4	3076+49.06	RT	51.00	18"
Phase I - Stage 2	CL_Const. I-4	3078+99.99	RT	51.00	18"
Phase I - Stage 2	CL_Const. I-4	3080+99.98	RT	51.00	18"
Phase I - Stage 2	CL_Const. I-4	3083+00.00	RT	51.00	18"
Phase I - Stage 2	CL_Const. I-4	3084+99.55	RT	51.00	18"
Phase I - Stage 2	CL_Const. I-4	3086+99.97	RT	53.00	18"
Phase I - Stage 2	CL_Const. I-4	3090+44.92	RT	81.00	18"
Phase I - Stage 2	CL_Const. I-4	3092+29.85	RT	67.00	18"
Phase I - Stage 2	CL_Const. I-4	3104+99.90	RT	105.00	18"
Phase II - Stage 2	CL_Const. I-4	3109+00.00	RT	113.00	18"

PRELIMINARY subject to change

THE OFFICIAL RECORD OF THIS SHEET IS THE ELECTRONIC FILE DIGITALLY SIGNED AND SEALED UNDER RULE 61G15-23.004, F.A.C.

2/28/2024 7:05:40 PM day
P:\ORD_FDOT\WorkSets\FDOT\430185352O1-I-4\Roadway\TCP\TCGNRD01.dgn

REVISIONS			
DATE	DESCRIPTION	DATE	DESCRIPTION

ENGINEER OF RECORD
RYAN J. WILLIAMSON, P.E.
LICENSE NUMBER 81421
BURGESS & NIPLE, INC.
1800 PEMBROOK DRIVE, SUITE 265
ORLANDO, FL 32810

STATE OF FLORIDA
DEPARTMENT OF TRANSPORTATION

ROAD NO.	COUNTY	FINANCIAL PROJECT ID
SR 400	POLK	430185-3-52-01

TTC PLAN (2) GENERAL NOTES

SHEET NO. 506

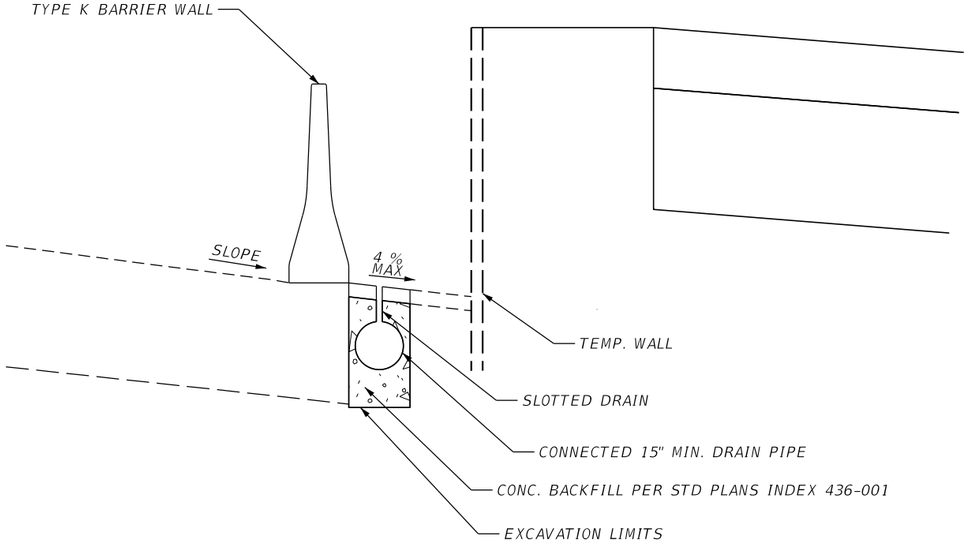

TEMPORARY SLOTTED DRAIN DETAIL - PHASE 1, STAGE 2

NTS

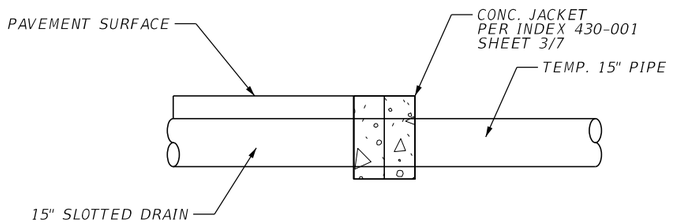

TEMPORARY SLOTTED DRAIN JUNCTION DETAIL

NTS

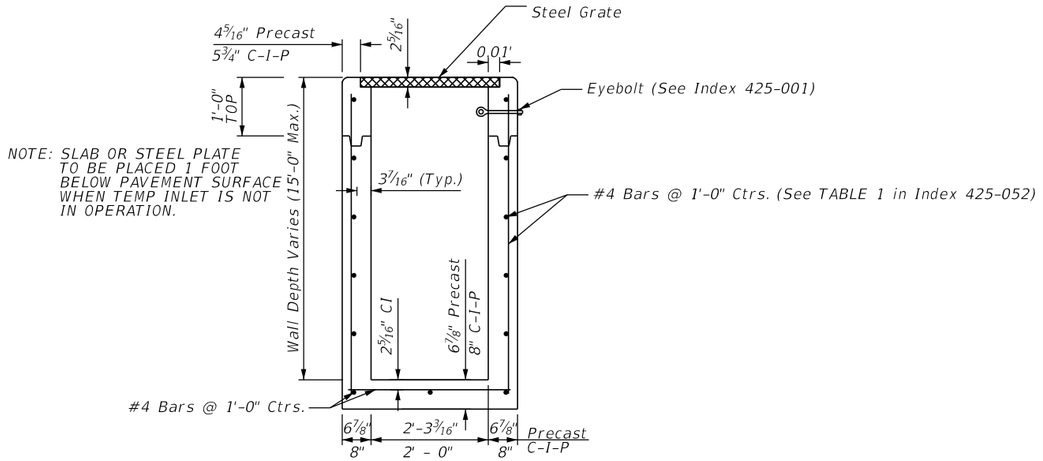

INDEX 425-052 WITH STEEL GRATE TYPE C (TEMP) INLET

NTS

PHASE 1 TEMP INLET INFORMATION

STR NAME	STATION	OFFSET	BASELINE	GRATE/TOP EL.	N. INV. EL.	S. INV. EL.	E. INV. EL.	W. INV. EL.
T10-1	3162+00.00	13.92' RT	CL 1-4	139.22		137.00		
T10-2	3164+00.00	5.15' RT	CL 1-4	139.40		136.00		
T10-3	3165+80.00	4.90' LT	CL 1-4	139.67		137.00		
T10-4	3166+20.00	6.54' LT	CL 1-4	139.67		137.20		
T11-1	3168+00.00	19.77' LT	CL 1-4	139.66			137.34	
EXIST. BOX CULVERT	3169+44.00	27.00' LT	CL 1-4				134.90	134.90
T11-2	3171+00.00	27.35' LT	CL 1-4	39.44			137.30	137.30
T11-3	3173+00.00	30.20' LT	CL 1-4				137.50	137.50
T11-4	3175+00.00	31.35' LT	CL 1-4	140.10			137.70	137.70
T11-5	1177+00.00	20.00' RT	BL SURVEY 1-4	140.10			137.90	137.90
T11-6	1178+00.00	14.71' RT	BL SURVEY 1-4	140.24			138.00	138.00
T11-7	1179+00.00	12.47' RT	BL SURVEY 1-4	140.11			138.10	138.10
T11-8	1180+00.00	9.56' RT	BL SURVEY 1-4	140.35				138.30

PHASE 1 SLOTTED DRAIN INFORMATION

BEGIN JUNCTION NO.	END JUNCTION NO.	STATION	OFFSET	BASELINE	TOP OF PAVEMENT ELEVATION	INVERT ELEVATION	SLOTTED DRAIN LENGTH	TEMP PIPE LENGTH
1	2	3068+00.00	83.40 LT	CL 1-4	139.51	137.50	20	---
2	3	3068+20.00	83.40 LT	CL 1-4	139.46	137.40		160
3	4	3069+80.00	83.40 LT	CL 1-4	139.47	137.10	40	
4	5	3070+20.00	83.40 LT	CL 1-4	139.45	137.00		260
5	6	3072+80.00	83.40 LT	CL 1-4	139.55	136.70	40	
6	7	3073+20.00	83.40 LT	CL 1-4	139.49	136.60		260
7	8	3075+80.00	83.40 LT	CL 1-4	139.44	136.30	40	
8	9	3076+20.00	83.40 LT	CL 1-4	139.44	136.20		260
9	10	3078+80.00	83.40 LT	CL 1-4	139.59	135.90	40	
10	11	3079+20.00	83.40 LT	CL 1-4	139.56	135.80		260
11	12	3081+80.00	83.40 LT	CL 1-4	139.49	135.70	20	
12	EXIST. INLET	3082+00.00	83.40 LT	CL 1-4	139.49	133.00		255

PHASE 3 SLOTTED DRAIN INFORMATION

BEGIN JUNCTION NO.	END JUNCTION NO.	STATION	OFFSET	BASELINE	TOP OF PAVEMENT ELEVATION	INVERT ELEVATION	SLOTTED DRAIN LENGTH	TEMP PIPE LENGTH
1	2	3162+00.00	13.92' RT	CL 1-4	139.22	137	20	
2	T30-1	3164+00.00	5.15' RT	CL 1-4	139.4	136		178
3	T30-1	3165+80.00	4.90' LT	CL 1-4	139.67	137		178
4	3	3166+20.00	6.54' LT	CL 1-4	139.67	137.2	40	
5	4	3167+60.00	11.96' LT	CL 1-4	139.66	137.34		140
6	5	3168+00.00	13.50' LT	CL 1-4	39.44	137.44	40	

PRELIMINARY subject to change

REVISIONS				ENGINEER OF RECORD	STATE OF FLORIDA DEPARTMENT OF TRANSPORTATION			TTC PLAN (3) TEMP. DRAINAGE DETAIL	SHEET NO.
DATE	DESCRIPTION	DATE	DESCRIPTION	RYAN J. WILLIAMSON, P.E. LICENSE NUMBER 81421 BURGESS & NIPLE, INC. 1800 PEMBROOK DRIVE, SUITE 265 ORLANDO, FL 32810	ROAD NO.	COUNTY	FINANCIAL PROJECT ID		507
					SR 400	POLK	430185-3-52-01		

THE OFFICIAL RECORD OF THIS SHEET IS THE ELECTRONIC FILE DIGITALLY SIGNED AND SEALED UNDER RULE 61G15-23.004, F.A.C.

2/28/2024 7:06:25 PM dayl
P:\ORD_FDOT\WorkSets\FDOT\430185352O1-I-4\Roadway\TCP\TCTYRD01.dgn

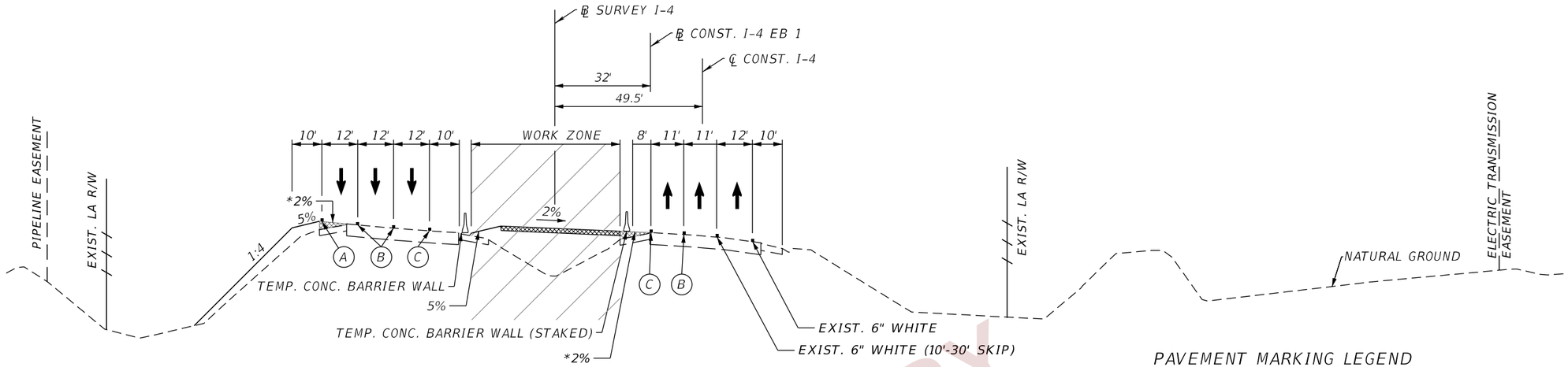

CRITICAL SECTION - PHASE 1, STAGE 1

℄ CONST. I-4
STA. 3075+00

PAVEMENT MARKING LEGEND

- (A) 6" SOLID WHITE TEMPORARY PAVEMENT MARKING
- (B) 6" SKIP WHITE TEMPORARY PAVEMENT MARKING (10'-30')
- (C) 6" SOLID YELLOW TEMPORARY PAVEMENT MARKING
- (D) 6" SKIP YELLOW TEMPORARY PAVEMENT MARKING (10'-30')
- (E) TEMPORARY PAVEMENT MARKINGS PREVIOUSLY APPLIED
- (F) 6" SOLID DOUBLE YELLOW TEMPORARY MARKING
- TEMPORARY PAVEMENT CURRENT PHASE
- TEMPORARY PAVEMENT CONSTRUCTED PREVIOUS STAGE
- * CONSTRUCT TEMPORARY OVERBUILD EXIST. OUTSIDE SHLDR. & TEMP. PAVT. PRIOR TO PHASE 1 STAGE 1 UTILIZING NIGHTTIME LANE CLOSURE AND STANDARD PLANS INDEX 102-613

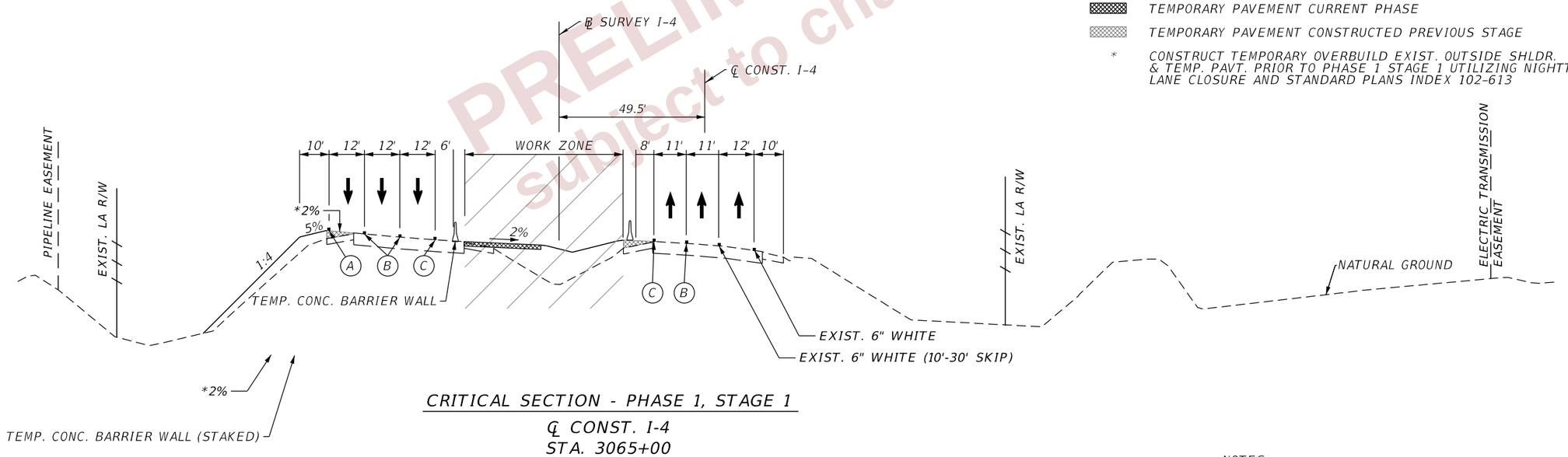

CRITICAL SECTION - PHASE 1, STAGE 1

℄ CONST. I-4
STA. 3065+00

NOTES:
1. SEE TTC PLAN SHEETS FOR TEMP. DRAINAGE LOCATION.

PRELIMINARY subject to changes

REVISIONS				ENGINEER OF RECORD	STATE OF FLORIDA DEPARTMENT OF TRANSPORTATION			TTC PLAN (4) CRITICAL SECTIONS	SHEET NO.
DATE	DESCRIPTION	DATE	DESCRIPTION	RYAN J. WILLIAMSON, P.E. LICENSE NUMBER 81421 BURGESS & NIPLE, INC. 1800 PEMBROOK DRIVE, SUITE 265 ORLANDO, FL 32810	ROAD NO.	COUNTY	FINANCIAL PROJECT ID		508
					SR 400	POLK	430185-3-52-01		

THE OFFICIAL RECORD OF THIS SHEET IS THE ELECTRONIC FILE DIGITALLY SIGNED AND SEALED UNDER RULE 61G15-23.004, F.A.C.

2/28/2024 7:06:28 PM dav
P:\ORD_FDOT\WorkSets\FDOT\430185352O1-I-4\Roadway\TCP\TCTYRD01.dgn

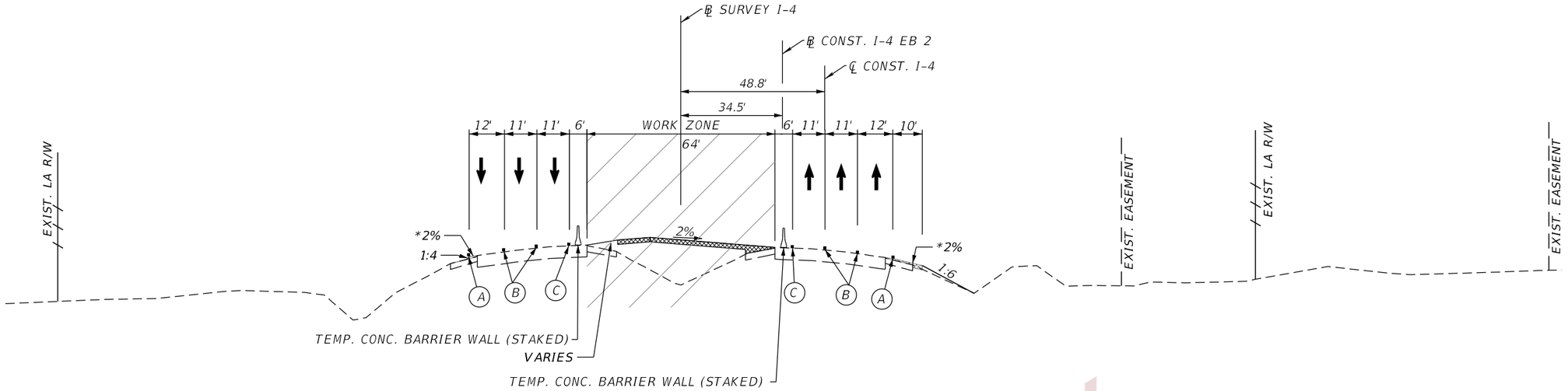

CRITICAL SECTION - PHASE 1, STAGE 1

℄ CONST. I-4
STA. 3172+00

PAVEMENT MARKING LEGEND

- (A) 6" SOLID WHITE TEMPORARY PAVEMENT MARKING
- (B) 6" SKIP WHITE TEMPORARY PAVEMENT MARKING (10'-30')
- (C) 6" SOLID YELLOW TEMPORARY PAVEMENT MARKING
- (D) 6" SKIP YELLOW TEMPORARY PAVEMENT MARKING (10'-30')
- (E) TEMPORARY PAVEMENT MARKINGS PREVIOUSLY APPLIED
- (F) 6" SOLID DOUBLE YELLOW TEMPORARY MARKING
- TEMPORARY PAVEMENT CURRENT PHASE
- TEMPORARY PAVEMENT CONSTRUCTED PREVIOUS STAGE
- * CONSTRUCT TEMPORARY OVERBUILD & TEMP. PAVT. PRIOR TO PHASE 1 STAGE 1 UTILIZING NIGHTTIME LANE CLOSURE AND STANDARD PLANS INDEX 102-613

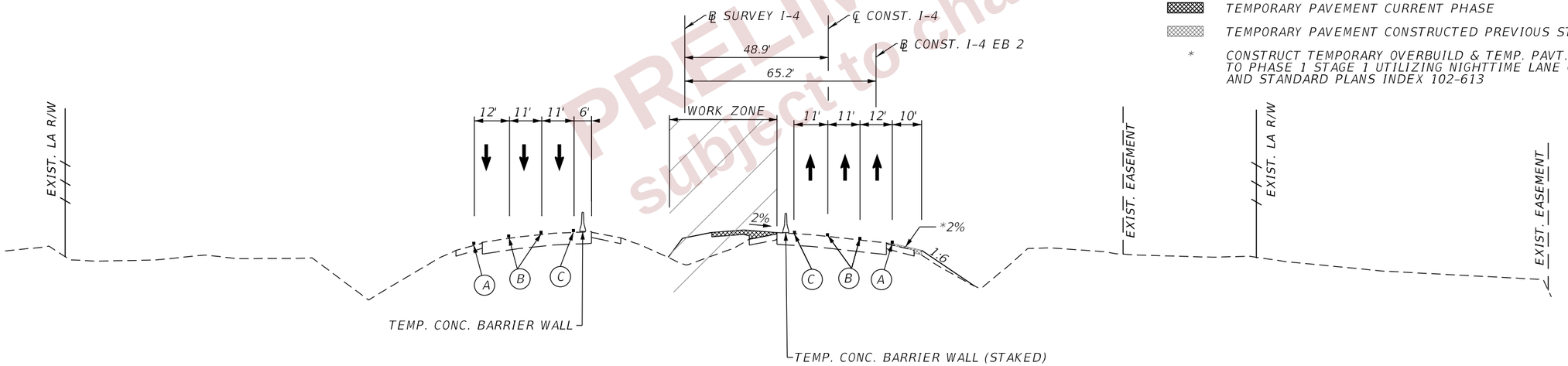

CRITICAL SECTION - PHASE 1, STAGE 1

℄ CONST. I-4
STA. 3163+00

NOTES:
1. SEE STRUCTURE PLANS FOR TEMP. WALL DETAILS.
2. SEE TTC PLAN SHEETS FOR TEMP. DRAINAGE LOCATION.

PRELIMINARY subject to changes

REVISIONS				ENGINEER OF RECORD	STATE OF FLORIDA DEPARTMENT OF TRANSPORTATION			TTC PLAN (5) CRITICAL SECTIONS	SHEET NO.
DATE	DESCRIPTION	DATE	DESCRIPTION	RYAN J. WILLIAMSON, P.E. LICENSE NUMBER 81421 BURGESS & NIPLE, INC. 1800 PEMBROOK DRIVE, SUITE 265 ORLANDO, FL 32810	ROAD NO.	COUNTY	FINANCIAL PROJECT ID		
					SR 400	POLK	430185-3-52-01		509

THE OFFICIAL RECORD OF THIS SHEET IS THE ELECTRONIC FILE DIGITALLY SIGNED AND SEALED UNDER RULE 61G15-23.004, F.A.C.

2/28/2024 7:06:29 PM day
P:\ORD_FDOT\WorkSets\FDOT\430185352O1-I-4\Roadway\TCP\TCTYRD01.dgn

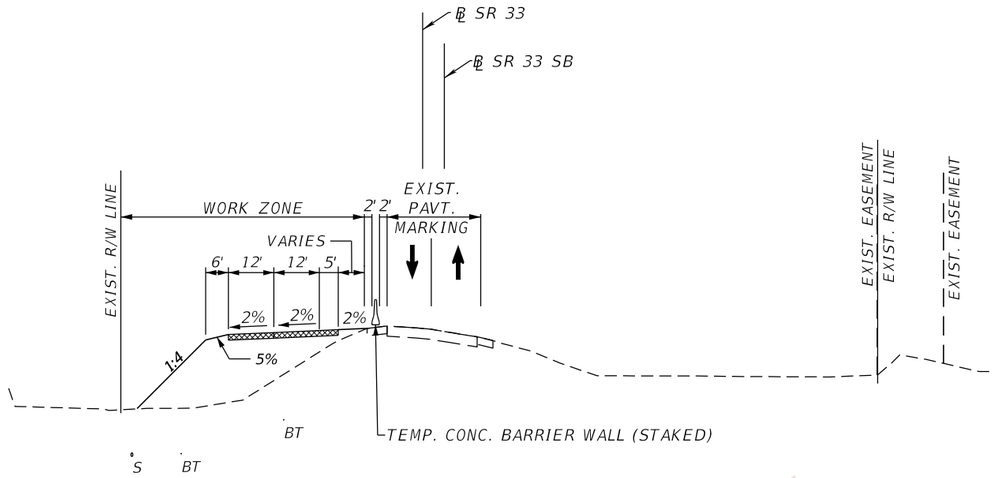

CRITICAL SECTION - PHASE 1, STAGE 1

℄ SR 33
STA. 493+00

PRELIMINARY
subject to changes

PAVEMENT MARKING LEGEND

- (A) 6" SOLID WHITE TEMPORARY PAVEMENT MARKING
- (B) 6" SKIP WHITE TEMPORARY PAVEMENT MARKING (10'-30')
- (C) 6" SOLID YELLOW TEMPORARY PAVEMENT MARKING
- (D) 6" SKIP YELLOW TEMPORARY PAVEMENT MARKING (10'-30')
- (E) TEMPORARY PAVEMENT MARKINGS PREVIOUSLY APPLIED
- (F) 6" SOLID DOUBLE YELLOW TEMPORARY MARKING
- TEMPORARY PAVEMENT CURRENT PHASE
- TEMPORARY PAVEMENT CONSTRUCTED PREVIOUS PHASE

THE OFFICIAL RECORD OF THIS SHEET IS THE ELECTRONIC FILE DIGITALLY SIGNED AND SEALED UNDER RULE 61G15-23.004, F.A.C.

REVISIONS				ENGINEER OF RECORD	STATE OF FLORIDA DEPARTMENT OF TRANSPORTATION			TTC PLAN (6) CRITICAL SECTIONS	SHEET NO.
DATE	DESCRIPTION	DATE	DESCRIPTION	RYAN J. WILLIAMSON, P.E. LICENSE NUMBER 81421 BURGESS & NIPLE, INC. 1800 PEMBROOK DRIVE, SUITE 265 ORLANDO, FL 32810	ROAD NO.	COUNTY	FINANCIAL PROJECT ID		510
					SR 400	POLK	430185-3-52-01		

2/28/2024 7:06:30 PM day
P:\ORD_FDOT\Work Sets\FDOT\430185352O1-I-4\Roadway\TCP\TCTYRD01.dgn

LEGEND

- TEMP PAVEMENT CURRENT PHASE
- TEMP PAVEMENT CONST. PREVIOUS PHASE
- PROP. PAVEMENT CONSTRUCTED CURRENT PHASE
- PROP. PAVEMENT CONSTRUCTED PREVIOUS PHASE
- DIRECTION OF TRAFFIC
- WORK ZONE
- CRASH CUSHION
- WORK ZONE SIGN
- (1) 6" WHITE
- (2) 6" YELLOW
- (4) 6" WHITE, 10'-30' SKIP
- * PLACE SIGN 1500' BEFORE LANES SHIFT

TEMP. DRAINAGE

(1) CONST. 6 LF OF 15" TEMP. PIPE FROM TEMP. TYPE C INLET T10-1 TO STRUCTURE S-1200 IN THE NEXT PHASE
(2) CONST. 6 LF OF 15" PIPE FROM TEMP. INLET TYPE C T10-1 TO STRUCTURE S-1201 IN THE NEXT PHASE
(3) CONST. TEMP. INLET TYPE C T10-3 CONNECT TO STRUCTURE S-1202 IN THE NEXT PHASE
(4) CONST. TEMP. INLET TYPE C T10-4, CONNECT TO STRUCTURE S-1300 IN THE NEXT PHASE

NOTE: SEE TEMPORARY DRAINAGE DETAILS FOR JUNCTION # DATA

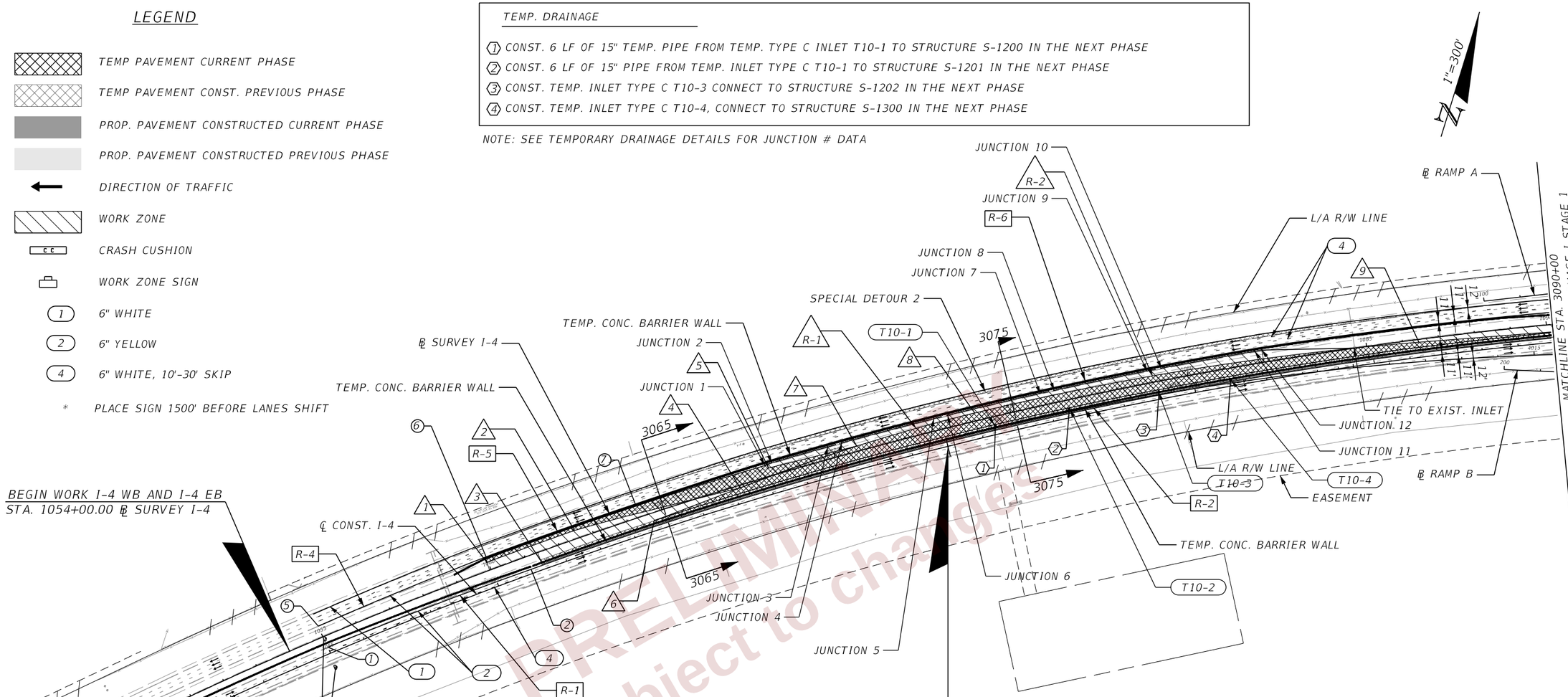

BEGIN WORK I-4 WB AND I-4 EB
STA. 1054+00.00 ℄ SURVEY I-4

BEGIN CONSTRUCTION I-4 WB AND I-4 EB
STA. 1073+09.57 ℄ SURVEY I-4
STA. 3073+00.00 ℄ CONST. I-4
STA. 3998+57.07 ℄ CONST. I-4 EB

MEDIAN TEMP. PAVT. GEOMETRY

1	1059+96.31, 23.00' LT.
2	1062+53.30, 23.00' LT.
3	1061+37.20, 21.80' RT.
4	1067+24.62, 7.08' RT.
5	1068+15.11, 23.00' RT.
6	1064+70.45, 21.80' RT.
7	PC 1070+65.68, 14.62' LT.
8	PCC 1074+03.85, 22.03' LT.
9	PT 1086+44.98, 7.74' LT.
R-1	RADIUS = 4,628.00'
R-2	RADIUS = 7,754.00'

EB LANES SHIFT #1 GEOMETRY

(1)	MATCH EXIST. 1055+00, 32.00' RT.
(2)	PC 1060+00.00, 38.00' RT.
R-1	RADIUS = 11,421.16'
R-2	RADIUS = 11,424.84'

WB LANES SHIFT #1 GEOMETRY

(5)	MATCH EXIST. 1055+00, 32.00' LT.
R-4	RADIUS = 11493.26'
(6)	1060+00, 38.00' LT.
R-5	RADIUS = 11497.16'
(7)	PC 1068+15.11, 42.00' RT.
R-6	RADIUS = 11501.16'

PRELIMINARY
subject to changes

REVISIONS			
DATE	DESCRIPTION	DATE	DESCRIPTION

ENGINEER OF RECORD
RYAN J. WILLIAMSON, P.E.
LICENSE NUMBER 81421
BURGESS & NIPLE, INC.
1800 PEMBROOK DRIVE, SUITE 265
ORLANDO, FL 32810

STATE OF FLORIDA
DEPARTMENT OF TRANSPORTATION

ROAD NO.	COUNTY	FINANCIAL PROJECT ID
SR 400	POLK	430185-3-52-01

TTC PLAN (7)
PHASE I STAGE 1
I-4

SHEET NO. 511

THE OFFICIAL RECORD OF THIS SHEET IS THE ELECTRONIC FILE DIGITALLY SIGNED AND SEALED UNDER RULE 61G15-23.004, F.A.C.

2/28/2024 7:06:44 PM dgv
P:\ORD_FDOT\WorkSets\FDOT\430185352O1-I-4\Roadway\TCP\TCPLRD0P151_14.dgn

LEGEND

- TEMP PAVEMENT CURRENT PHASE
- TEMP PAVEMENT CONST. PREVIOUS PHASE
- PROP. PAVEMENT CONSTRUCTED CURRENT PHASE
- PROP. PAVEMENT CONSTRUCTED PREVIOUS PHASE
- DIRECTION OF TRAFFIC
- WORK ZONE
- CRASH CUSHION
- WORK ZONE SIGN

- (1) 6" WHITE
- (2) 6" YELLOW
- (4) 6" WHITE, 10'-30' SKIP
- (HR) EXIST. HIGH MAST LIGHTING TO REMAIN ACTIVE IN THIS PHASE (SEE TTC PLAN TEMPORARY LIGHTING)
- * PLACE SIGN 1500' BEFORE LANES SHIFT

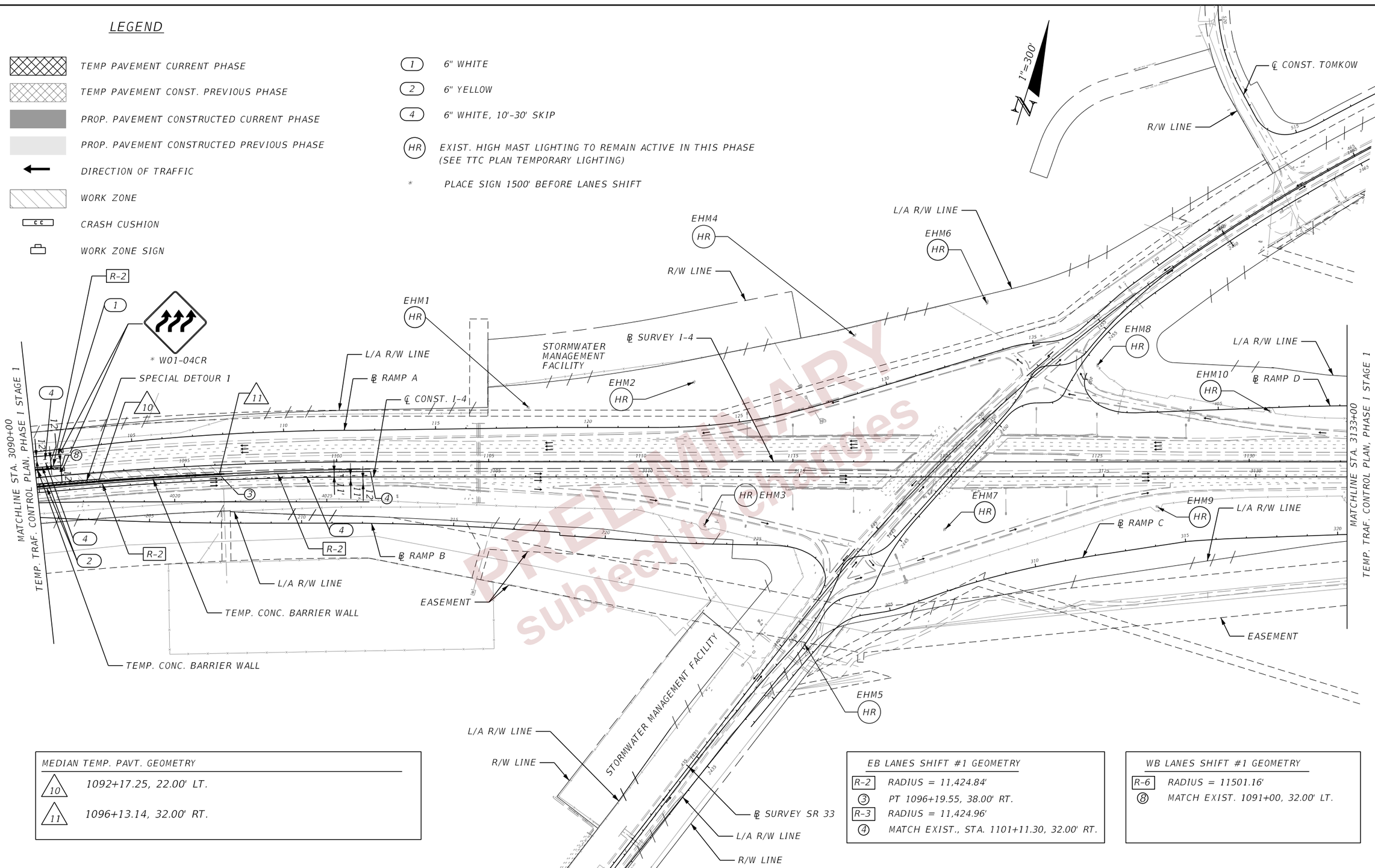

MEDIAN TEMP. PAVT. GEOMETRY

- (10) 1092+17.25, 22.00' LT.
- (11) 1096+13.14, 32.00' RT.

EB LANES SHIFT #1 GEOMETRY

- R-2 RADIUS = 11,424.84'
- (3) PT 1096+19.55, 38.00' RT.
- R-3 RADIUS = 11,424.96'
- (4) MATCH EXIST., STA. 1101+11.30, 32.00' RT.

WB LANES SHIFT #1 GEOMETRY

- R-6 RADIUS = 11501.16'
- (8) MATCH EXIST. 1091+00, 32.00' LT.

PRELIMINARY subject to change

REVISIONS			
DATE	DESCRIPTION	DATE	DESCRIPTION

ENGINEER OF RECORD
RYAN J. WILLIAMSON, P.E.
LICENSE NUMBER 81421
BURGESS & NIPLE, INC.
1800 PEMBROOK DRIVE, SUITE 265
ORLANDO, FL 32810

STATE OF FLORIDA
DEPARTMENT OF TRANSPORTATION

ROAD NO.	COUNTY	FINANCIAL PROJECT ID
SR 400	POLK	430185-3-52-01

TTC PLAN (8)
PHASE I STAGE 1
I-4

SHEET NO. 512

THE OFFICIAL RECORD OF THIS SHEET IS THE ELECTRONIC FILE DIGITALLY SIGNED AND SEALED UNDER RULE 61G15-23.004, F.A.C.

2/28/2024 7:06:49 PM dajy
P:\ORD_FDOT\WorkSets\FDOT\430185352O1-I-4\Roadway\TCP\TCPLRD00P1S1_I4.dgn

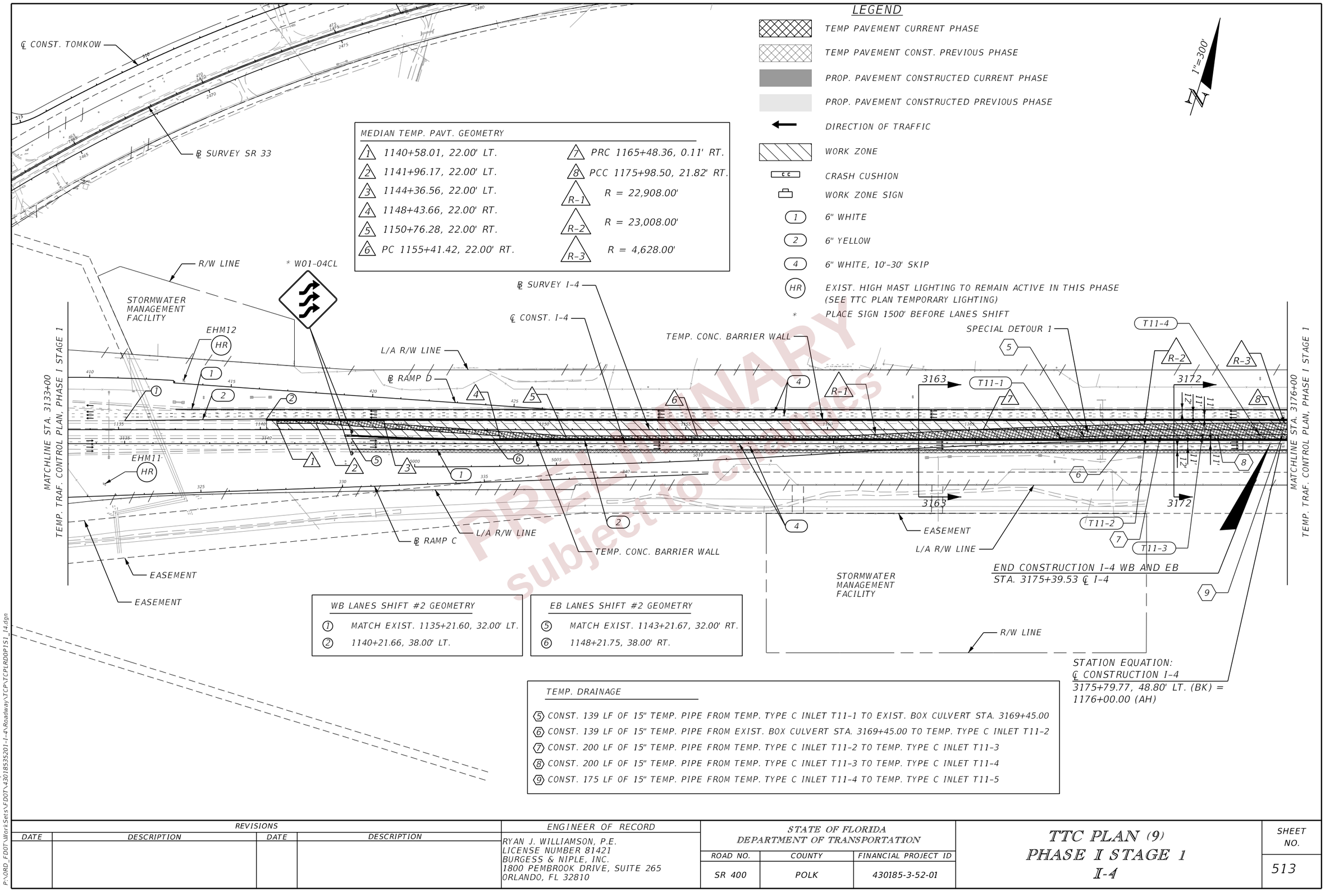

LEGEND

- TEMP PAVEMENT CURRENT PHASE
- TEMP PAVEMENT CONST. PREVIOUS PHASE
- PROP. PAVEMENT CONSTRUCTED CURRENT PHASE
- PROP. PAVEMENT CONSTRUCTED PREVIOUS PHASE
- DIRECTION OF TRAFFIC
- WORK ZONE
- CRASH CUSHION
- WORK ZONE SIGN
- (1) 6" WHITE
- (2) 6" YELLOW
- (4) 6" WHITE, 10'-30' SKIP
- (HR) EXIST. HIGH MAST LIGHTING TO REMAIN ACTIVE IN THIS PHASE (SEE TTC PLAN TEMPORARY LIGHTING)
- * PLACE SIGN 1500' BEFORE LANES SHIFT

1"=300'

MEDIAN TEMP. PAVT. GEOMETRY

1. 1140+58.01, 22.00' LT.
2. 1141+96.17, 22.00' LT.
3. 1144+36.56, 22.00' LT.
4. 1148+43.66, 22.00' RT.
5. 1150+76.28, 22.00' RT.
6. PC 1155+41.42, 22.00' RT.
7. PRC 1165+48.36, 0.11' RT.
8. PCC 1175+98.50, 21.82' RT.
- R-1: R = 22,908.00'
- R-2: R = 23,008.00'
- R-3: R = 4,628.00'

WB LANES SHIFT #2 GEOMETRY

1. MATCH EXIST. 1135+21.60, 32.00' LT.
2. 1140+21.66, 38.00' LT.

EB LANES SHIFT #2 GEOMETRY

5. MATCH EXIST. 1143+21.67, 32.00' RT.
6. 1148+21.75, 38.00' RT.

TEMP. DRAINAGE

5. CONST. 139 LF OF 15" TEMP. PIPE FROM TEMP. TYPE C INLET T11-1 TO EXIST. BOX CULVERT STA. 3169+45.00
6. CONST. 139 LF OF 15" TEMP. PIPE FROM EXIST. BOX CULVERT STA. 3169+45.00 TO TEMP. TYPE C INLET T11-2
7. CONST. 200 LF OF 15" TEMP. PIPE FROM TEMP. TYPE C INLET T11-2 TO TEMP. TYPE C INLET T11-3
8. CONST. 200 LF OF 15" TEMP. PIPE FROM TEMP. TYPE C INLET T11-3 TO TEMP. TYPE C INLET T11-4
9. CONST. 175 LF OF 15" TEMP. PIPE FROM TEMP. TYPE C INLET T11-4 TO TEMP. TYPE C INLET T11-5

STATION EQUATION:
℄ CONSTRUCTION I-4
3175+79.77, 48.80' LT. (BK) =
1176+00.00 (AH)

PRELIMINARY
Subject to Changes

REVISIONS				ENGINEER OF RECORD	STATE OF FLORIDA DEPARTMENT OF TRANSPORTATION			TTC PLAN (9) PHASE I STAGE 1 I-4	SHEET NO.
DATE	DESCRIPTION	DATE	DESCRIPTION	RYAN J. WILLIAMSON, P.E. LICENSE NUMBER 81421 BURGESS & NIPLE, INC. 1800 PEMBROOK DRIVE, SUITE 265 ORLANDO, FL 32810	ROAD NO.	COUNTY	FINANCIAL PROJECT ID		513
					SR 400	POLK	430185-3-52-01		

THE OFFICIAL RECORD OF THIS SHEET IS THE ELECTRONIC FILE DIGITALLY SIGNED AND SEALED UNDER RULE 61G15-23.004, F.A.C.

2/28/2024 7:06:51 PM day
P:\ORD_FDOT\WorkSets\FDOT\430185352O1-I-4\Roadway\TCP\TCPLRDOP1S1_14.dgn

LEGEND

- TEMP PAVEMENT CURRENT PHASE
- TEMP PAVEMENT CONST. PREVIOUS PHASE
- PROP. PAVEMENT CONSTRUCTED CURRENT PHASE
- PROP. PAVEMENT CONSTRUCTED PREVIOUS PHASE
- DIRECTION OF TRAFFIC
- WORK ZONE
- CRASH CUSHION
- WORK ZONE SIGN

- (1) 6" WHITE
- (2) 6" YELLOW
- (3) 6" DOUBLE YELLOW
- (4) 6" WHITE, 10'-30' SKIP

1"=300'

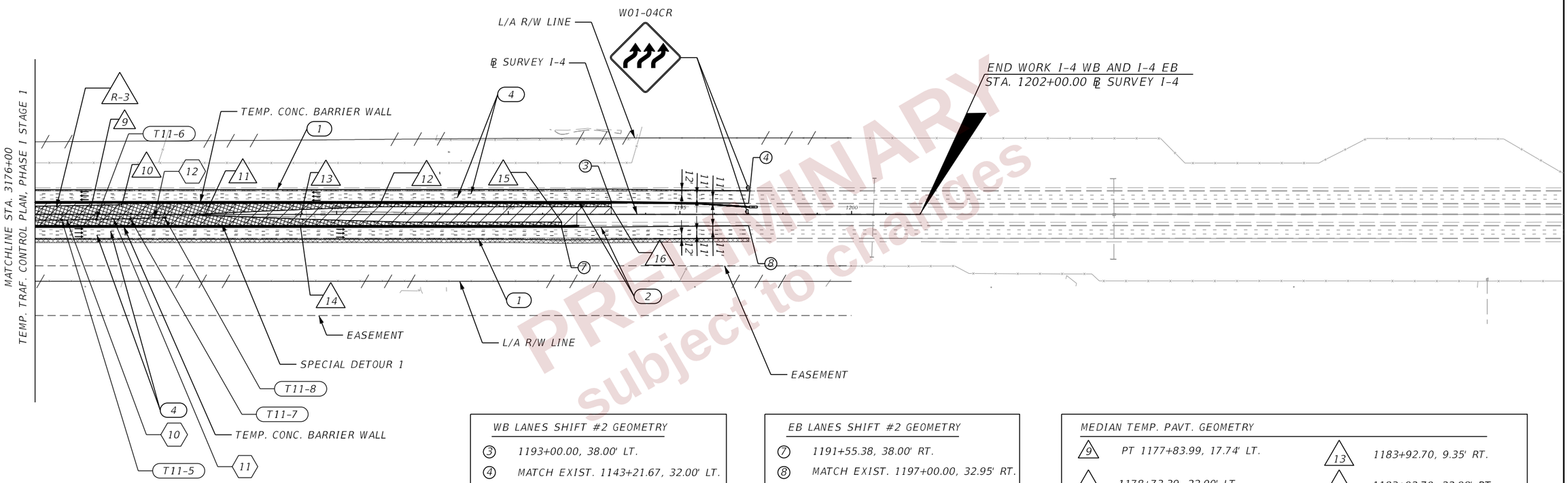

PRELIMINARY subject to changes

WB LANES SHIFT #2 GEOMETRY

- (3) 1193+00.00, 38.00' LT.
- (4) MATCH EXIST. 1143+21.67, 32.00' LT.

EB LANES SHIFT #2 GEOMETRY

- (7) 1191+55.38, 38.00' RT.
- (8) MATCH EXIST. 1197+00.00, 32.95' RT.

MEDIAN TEMP. PAVT. GEOMETRY

- (9) PT 1177+83.99, 17.74' LT.
- (10) 1178+73.39, 22.00' LT.
- (11) 1181+18.06, 1.50' LT.
- (12) 1186+23.08, 22.00' LT.
- (13) 1183+92.70, 9.35' RT.
- (14) 1183+92.70, 22.98' RT.
- (15) 1191+55.38, 22.00' RT.
- (16) 1193+00.00, 22.00' LT.

TEMP. DRAINAGE

- (10) CONST. 100 LF OF 15" TEMP. PIPE FROM TEMP. TYPE C INLET T11-5 TO TEMP. TYPE C INLET T11-6
- (11) CONST. 100 LF OF 15" TEMP. PIPE FROM TEMP. TYPE C INLET T11-6 TO TEMP. TYPE C INLET T11-7
- (12) CONST. 200 LF OF 15" TEMP. PIPE FROM TEMP. TYPE C INLET T11-7 TO TEMP. TYPE C INLET T11-8

REVISIONS			
DATE	DESCRIPTION	DATE	DESCRIPTION

ENGINEER OF RECORD

RYAN J. WILLIAMSON, P.E.
LICENSE NUMBER 81421
BURGESS & NIPLE, INC.
1800 PEMBROOK DRIVE, SUITE 265
ORLANDO, FL 32810

STATE OF FLORIDA
DEPARTMENT OF TRANSPORTATION

ROAD NO.	COUNTY	FINANCIAL PROJECT ID
SR 400	POLK	430185-3-52-01

TTC PLAN (10)
PHASE I STAGE 1
I-4

SHEET NO. 514

2/28/2024 7:06:55 PM day
P:\ORD_FDOT\WorkSets\FDOT\430185352O1-I-4\Roadway\TCP\TCPLRDDP1S1_I4.dgn

THE OFFICIAL RECORD OF THIS SHEET IS THE ELECTRONIC FILE DIGITALLY SIGNED AND SEALED UNDER RULE 61G15-23.004, F.A.C.

LEGEND

- TEMP PAVEMENT CURRENT PHASE
- TEMP PAVEMENT CONST. PREVIOUS PHASE
- PROP. PAVEMENT CONSTRUCTED CURRENT PHASE
- PROP. PAVEMENT CONSTRUCTED PREVIOUS PHASE
- DIRECTION OF TRAFFIC
- WORK ZONE
- CRASH CUSHION
- WORK ZONE SIGN

1"=100'

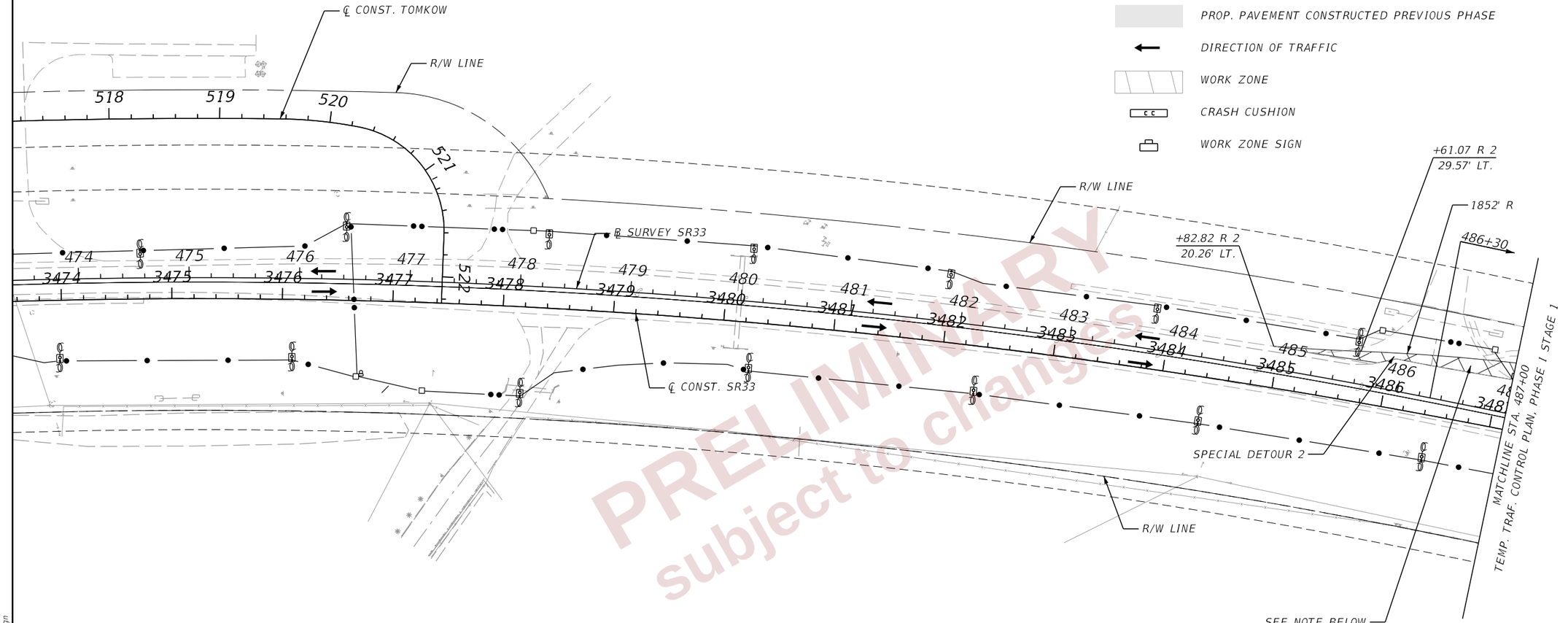

SPECIAL DETOUR 2 CONSTRUCTION NOTE:

CONSTRUCT TEMPORARY PAVEMENT OVER DRIVEWAY DURING OFF BUSINESS HOURS ONLY. UTILIZING STANDARD PLANS INDEX 102-602.

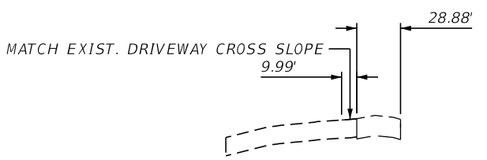

DRIVEWAY HALF SECTION
STA. 486+30

PRELIMINARY
subject to changes

REVISIONS				ENGINEER OF RECORD	STATE OF FLORIDA DEPARTMENT OF TRANSPORTATION			TTC PLAN (11) PHASE I STAGE 1 SR 33	SHEET NO.
DATE	DESCRIPTION	DATE	DESCRIPTION	RYAN J. WILLIAMSON, P.E. LICENSE NUMBER 81421 BURGESS & NIPLE, INC. 1800 PEMBROOK DRIVE, SUITE 265 ORLANDO, FL 32810	ROAD NO.	COUNTY	FINANCIAL PROJECT ID		515
					SR 400	POLK	430185-3-52-01		

THE OFFICIAL RECORD OF THIS SHEET IS THE ELECTRONIC FILE DIGITALLY SIGNED AND SEALED UNDER RULE 61G15-23.004, F.A.C.

2/28/2024 7:07:15 PM dav
P:\ORD_FDOT\Work Sets\FDOT\430185352O1-I-4\Roadway\TCP\TCPLRD0P1S1_33.dgn

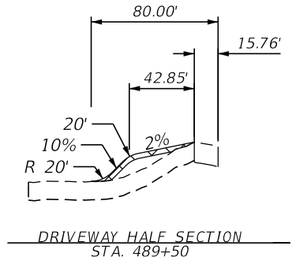

DRIVEWAY HALF SECTION
STA. 489+50

LEGEND

1"=100'

- TEMP PAVEMENT CURRENT PHASE
- TEMP PAVEMENT CONST. PREVIOUS PHASE
- PROP. PAVEMENT CONSTRUCTED CURRENT PHASE
- PROP. PAVEMENT CONSTRUCTED PREVIOUS PHASE
- DIRECTION OF TRAFFIC
- WORK ZONE
- CRASH CUSHION
- WORK ZONE SIGN

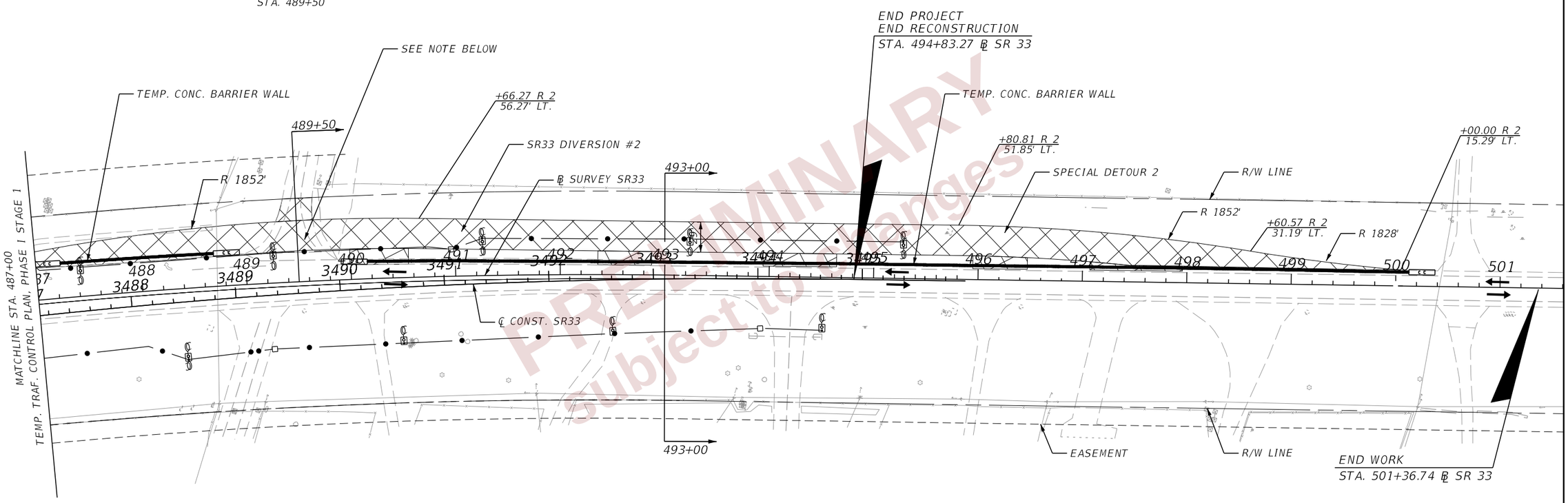

PRELIMINARY
subject to changes

SPECIAL DETOUR 2 CONSTRUCTION NOTE:

CONSTRUCT TEMPORARY PAVEMENT OVER DRIVEWAY DURING OFF BUSINESS HOURS ONLY. UTILIZING STANDARD PLANS INDEX 102-602.

REVISIONS			
DATE	DESCRIPTION	DATE	DESCRIPTION

ENGINEER OF RECORD

RYAN J. WILLIAMSON, P.E.
LICENSE NUMBER 81421
BURGESS & NIPLE, INC.
1800 PEMBROOK DRIVE, SUITE 265
ORLANDO, FL 32810

STATE OF FLORIDA
DEPARTMENT OF TRANSPORTATION

ROAD NO.	COUNTY	FINANCIAL PROJECT ID
SR 400	POLK	430185-3-52-01

TTC PLAN (12)
PHASE I STAGE 1
SR 33

SHEET NO. 516

THE OFFICIAL RECORD OF THIS SHEET IS THE ELECTRONIC FILE DIGITALLY SIGNED AND SEALED UNDER RULE 61G15-23.004, F.A.C.

2/28/2024 7:07:16 PM day
P:\ORD_FDOT\WorkSets\FDOT_430185352O1-I-4\Roadway\TCP\TCPLRDDP1S1_33.dgn

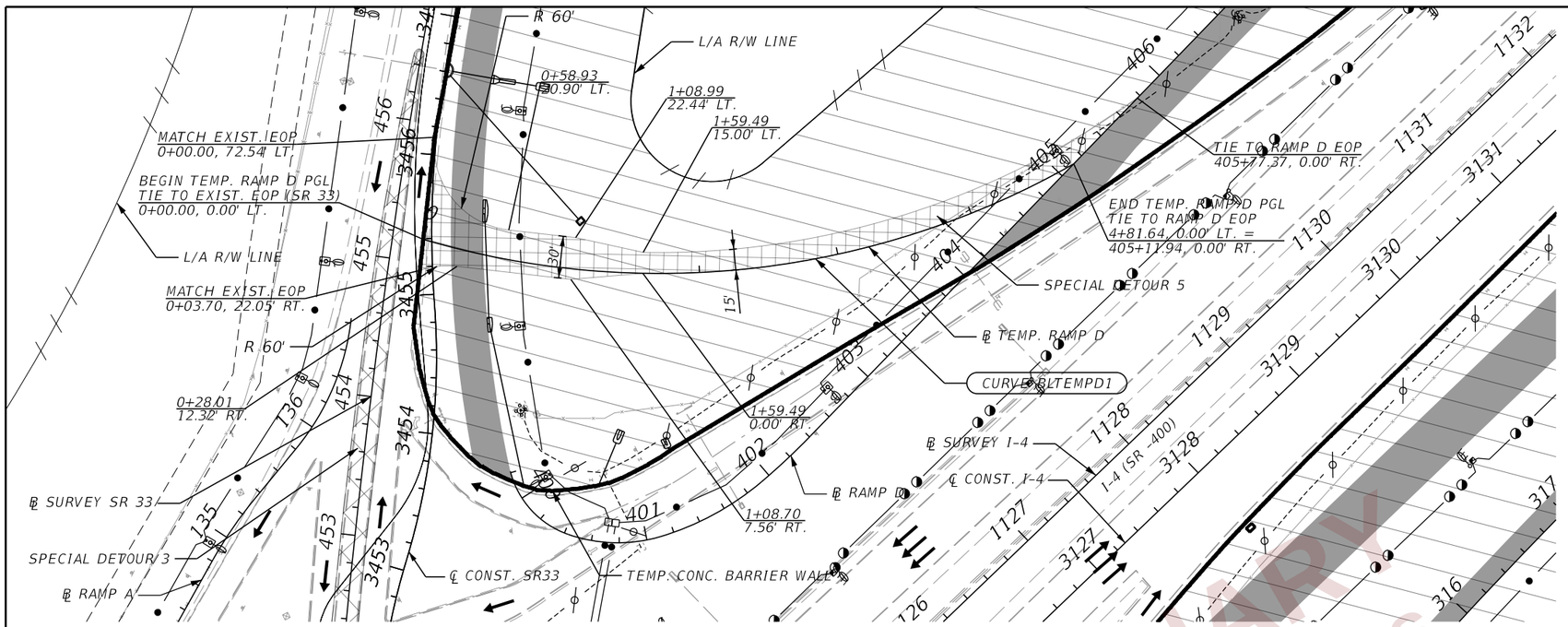

CURVE DATA BLTEMPD1
PI STA. = 2+62.34
Δ = 47° 13' 57" (LT)
D = 9° 32' 57"
T = 262.34
L = 494.62
R = 600.00
PC STA. = 0+00.00
PT STA. = 4+94.62

1"=100'

LEGEND

- TEMP PAVEMENT CURRENT PHASE
- TEMP PAVEMENT CONST. PREVIOUS PHASE
- PROP. PAVEMENT CONSTRUCTED CURRENT PHASE
- PROP. PAVEMENT CONSTRUCTED PREVIOUS PHASE
- DIRECTION OF TRAFFIC
- WORK ZONE
- CRASH CUSHION
- WORK ZONE SIGN

PRELIMINARY
subject to changes

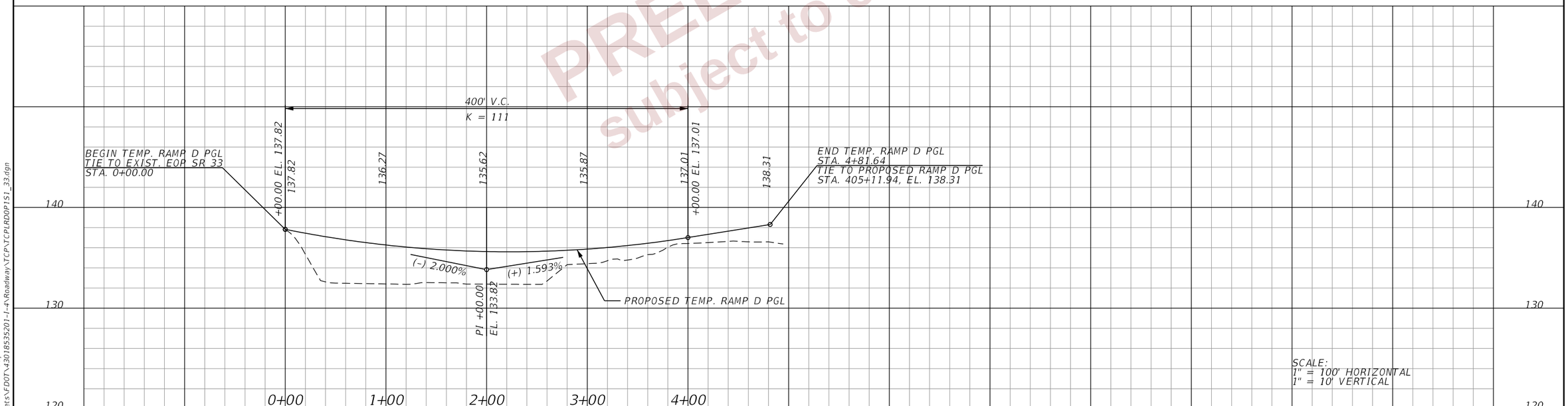

SCALE:
1" = 100' HORIZONTAL
1" = 10' VERTICAL

REVISIONS			
DATE	DESCRIPTION	DATE	DESCRIPTION

ENGINEER OF RECORD
RYAN J. WILLIAMSON, P.E.
LICENSE NUMBER 81421
BURGESS & NIPLE, INC.
1800 PEMBROOK DRIVE, SUITE 265
ORLANDO, FL 32810

STATE OF FLORIDA
DEPARTMENT OF TRANSPORTATION

ROAD NO.	COUNTY	FINANCIAL PROJECT ID
SR 400	POLK	430185-3-52-01

TTC PLAN (13)
PHASE I STAGE 1
SR 33

SHEET NO. 517

THE OFFICIAL RECORD OF THIS SHEET IS THE ELECTRONIC FILE DIGITALLY SIGNED AND SEALED UNDER RULE 61G15-23.004, F.A.C.

2/28/2024 7:07:21 PM day
P:\ORD_FDOT\WorkSets\FDOT\430185352O1-I-4\Roadway\TCP\TCPLRDOP1S1_33.dgn

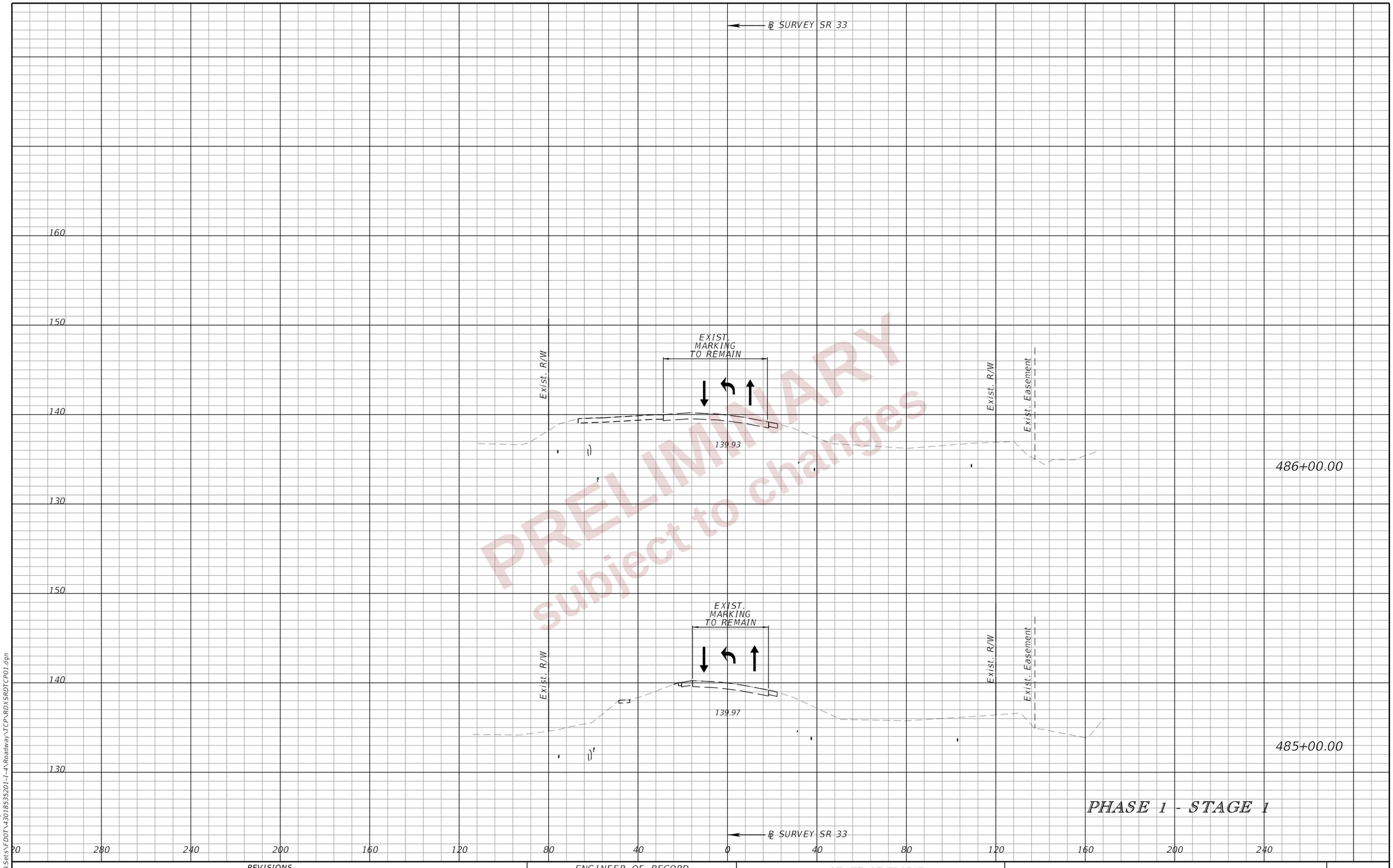

PRELIMINARY
subject to changes

PHASE 1 - STAGE 1

REVISIONS				ENGINEER OF RECORD	STATE OF FLORIDA DEPARTMENT OF TRANSPORTATION			TTC PLAN (14) CROSS SECTIONS SR 33	SHEET NO.
DATE	DESCRIPTION	DATE	DESCRIPTION	RYAN J. WILLIAMSON, P.E. LICENSE NUMBER 81421 BURGESS & NIPLE, INC. 1800 PEMBROOK DRIVE, SUITE 265 ORLANDO, FL 32810	ROAD NO.	COUNTY	FINANCIAL PROJECT ID		518
					SR 400	POLK	430185-3-52-01		

THE OFFICIAL RECORD OF THIS SHEET IS THE ELECTRONIC FILE DIGITALLY SIGNED AND SEALED UNDER RULE 61G15-23.004, F.A.C.

2/28/2024 7:07:35 PM day
P:\ORD_FDOT\WorkSets\FDOT\430185352\01-I-4\Roadway\TCP\RDXSRDTCP01.dgn

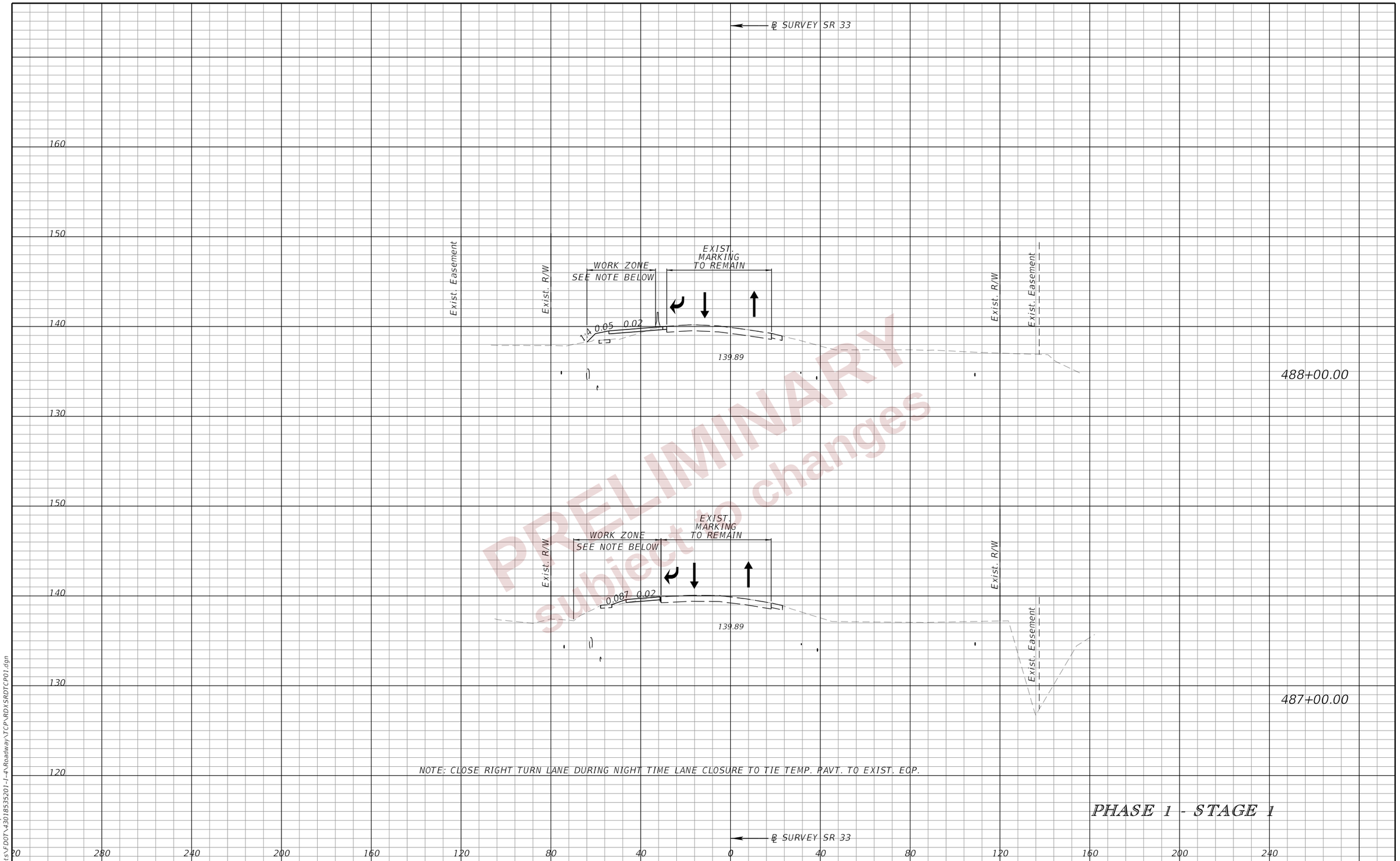

PRELIMINARY
subject to changes

REVISIONS			
DATE	DESCRIPTION	DATE	DESCRIPTION

ENGINEER OF RECORD
RYAN J. WILLIAMSON, P.E.
LICENSE NUMBER 81421
BURGESS & NIPLE, INC.
1800 PEMBROOK DRIVE, SUITE 265
ORLANDO, FL 32810

STATE OF FLORIDA
DEPARTMENT OF TRANSPORTATION

ROAD NO.	COUNTY	FINANCIAL PROJECT ID
SR 400	POLK	430185-3-52-01

TTC PLAN (15)
CROSS SECTIONS
SR 33

SHEET NO. 519

THE OFFICIAL RECORD OF THIS SHEET IS THE ELECTRONIC FILE DIGITALLY SIGNED AND SEALED UNDER RULE 61G15-23.004, F.A.C.

2/28/2024 7:07:36 PM dav
P:\ORD_FDOT\WorkSets\FDOT\430185352\01-I-4\Roadway\TCP\RDXSRDTCP01.dgn

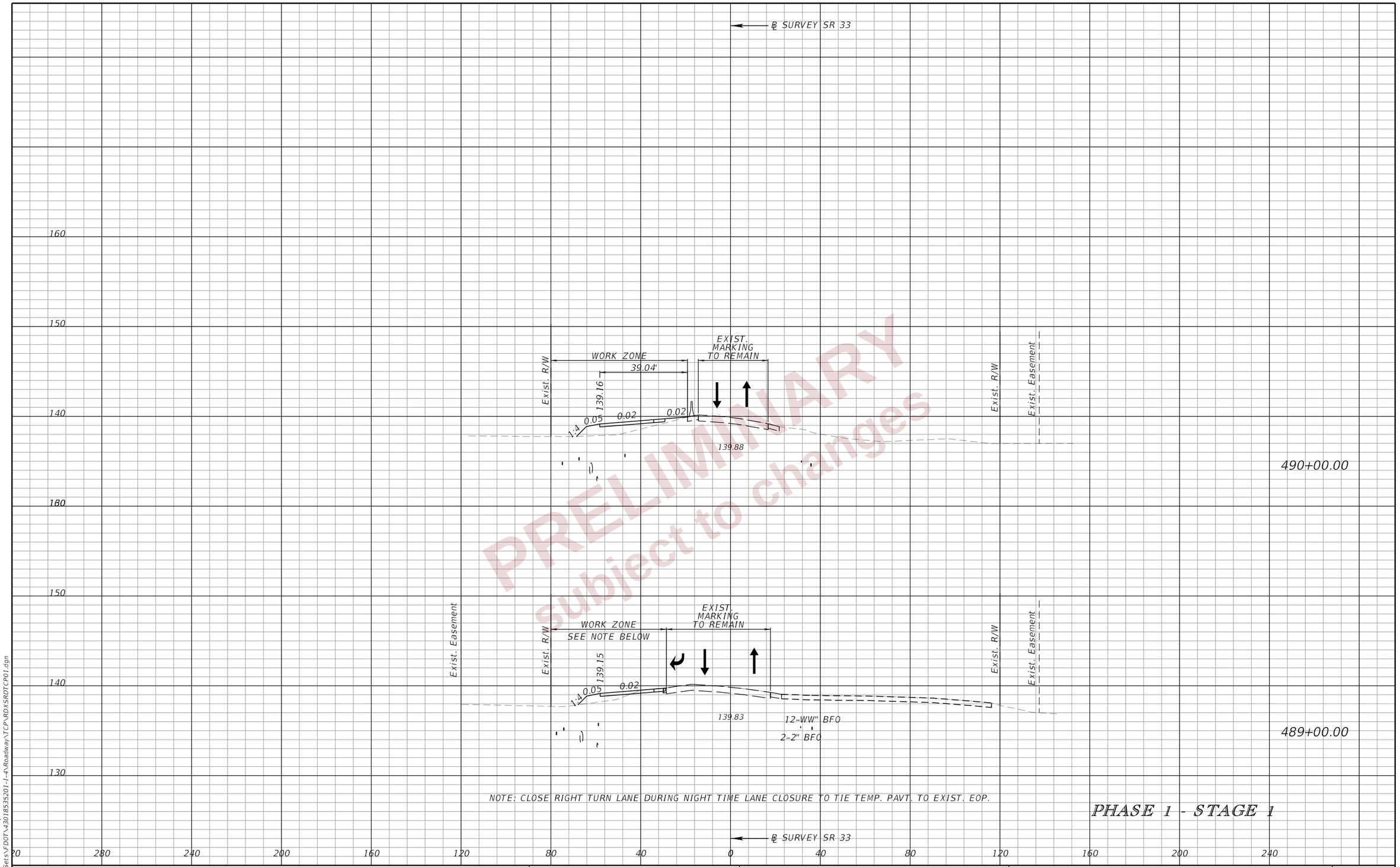

PRELIMINARY
subject to changes

REVISIONS			
DATE	DESCRIPTION	DATE	DESCRIPTION

ENGINEER OF RECORD
RYAN J. WILLIAMSON, P.E.
LICENSE NUMBER 81421
BURGESS & NIPLE, INC.
1800 PEMBROOK DRIVE, SUITE 265
ORLANDO, FL 32810

STATE OF FLORIDA
DEPARTMENT OF TRANSPORTATION

ROAD NO.	COUNTY	FINANCIAL PROJECT ID
SR 400	POLK	430185-3-52-01

TTC PLAN (16)
CROSS SECTIONS
SR 33

SHEET NO. 520

THE OFFICIAL RECORD OF THIS SHEET IS THE ELECTRONIC FILE DIGITALLY SIGNED AND SEALED UNDER RULE 61G15-23.004, F.A.C.

2/28/2024 7:07:37 PM day
P:\ORD_FDOT\WorkSets\FDOT\430185352O1-I-4\Roadway\TCP\RDXSRDTCP01.dgn

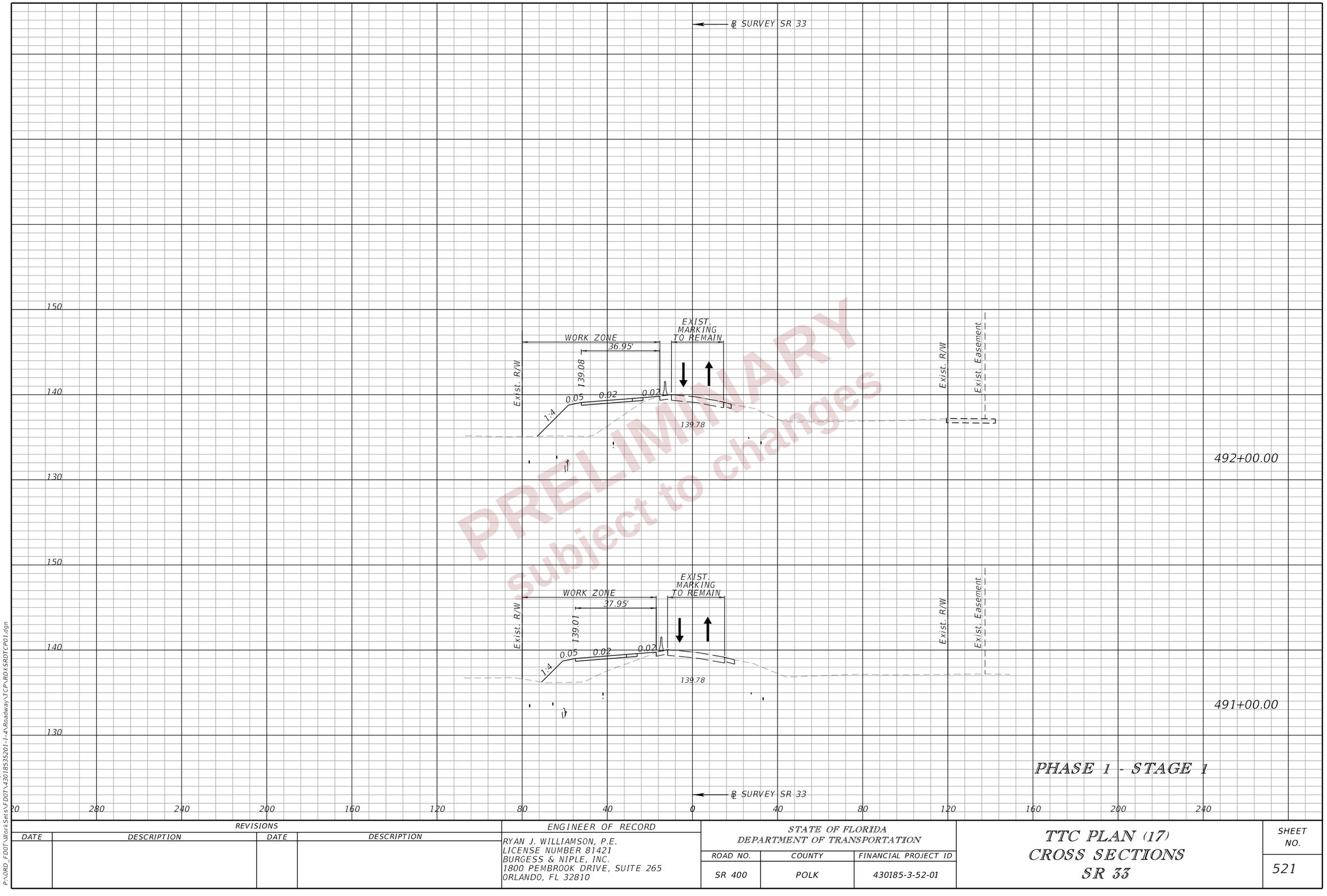

PRELIMINARY
subject to changes

PHASE 1 - STAGE 1

REVISIONS				ENGINEER OF RECORD	STATE OF FLORIDA DEPARTMENT OF TRANSPORTATION			TTC PLAN (17) CROSS SECTIONS SR 33	SHEET NO.
DATE	DESCRIPTION	DATE	DESCRIPTION	RYAN J. WILLIAMSON, P.E. LICENSE NUMBER 81421 BURGESS & NIPLE, INC. 1800 PEMBROOK DRIVE, SUITE 265 ORLANDO, FL 32810	ROAD NO.	COUNTY	FINANCIAL PROJECT ID		521
					SR 400	POLK	430185-3-52-01		

2/28/2024 7:07:37 PM day
P:\ORD_FDOT\WorkSets\FDOT\430185352\01-I-4\Roadway\TCP\RDXSRDTCP01.dgn

THE OFFICIAL RECORD OF THIS SHEET IS THE ELECTRONIC FILE DIGITALLY SIGNED AND SEALED UNDER RULE 61G15-23.004, F.A.C.

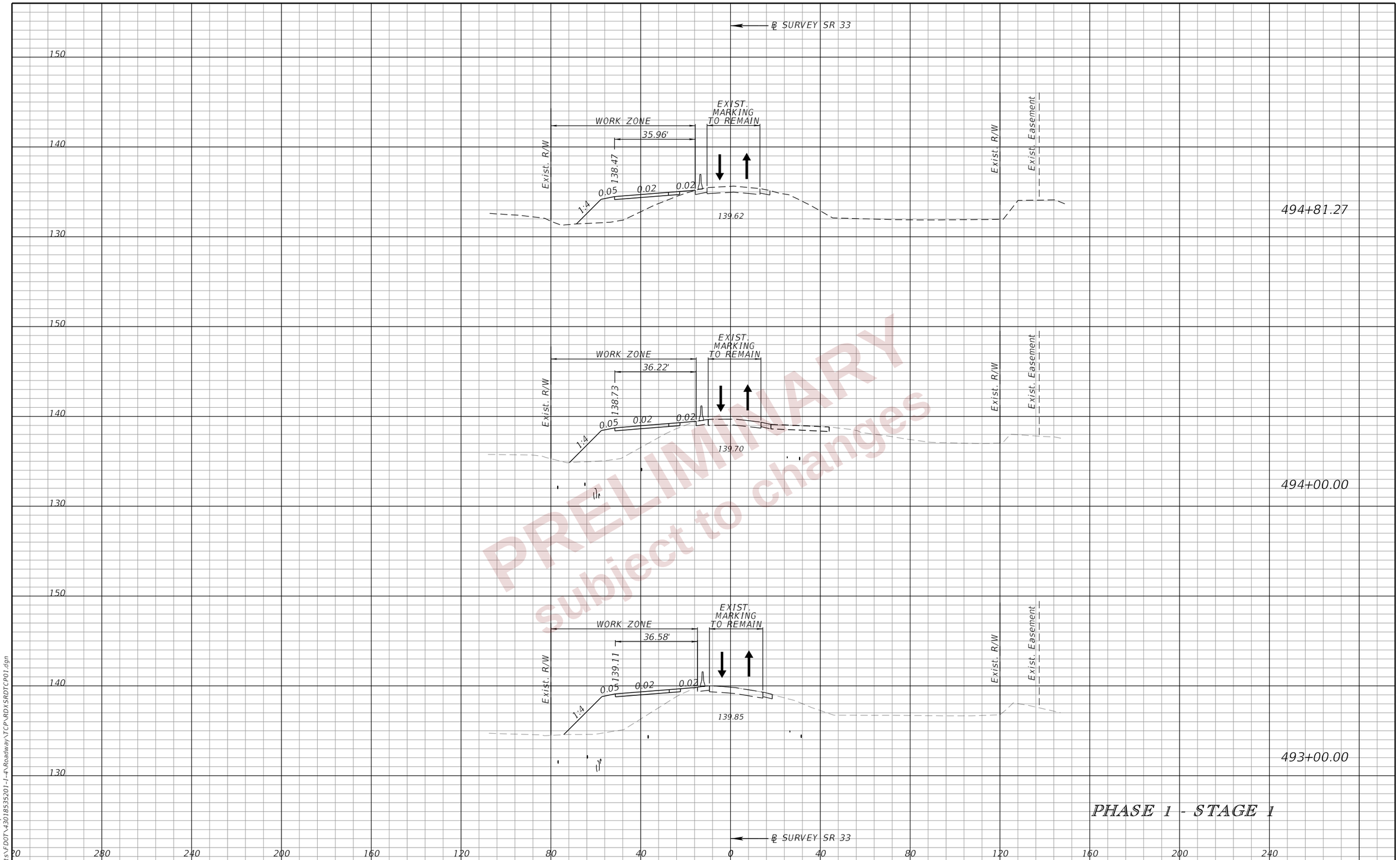

PRELIMINARY
subject to changes

PHASE 1 - STAGE 1

REVISIONS			
DATE	DESCRIPTION	DATE	DESCRIPTION

ENGINEER OF RECORD
RYAN J. WILLIAMSON, P.E.
LICENSE NUMBER 81421
BURGESS & NIPLE, INC.
1800 PEMBROOK DRIVE, SUITE 265
ORLANDO, FL 32810

STATE OF FLORIDA
DEPARTMENT OF TRANSPORTATION

ROAD NO.	COUNTY	FINANCIAL PROJECT ID
SR 400	POLK	430185-3-52-01

TTC PLAN (18)
CROSS SECTIONS
SR 33

SHEET NO. 522

THE OFFICIAL RECORD OF THIS SHEET IS THE ELECTRONIC FILE DIGITALLY SIGNED AND SEALED UNDER RULE 61G15-23.004, F.A.C.

2/28/2024 7:07:38 PM day
P:\ORD_FDOT\WorkSets\FDOT\430185352O1-I-4\Roadway\TCP\RDX\SRDTCP01.dgn

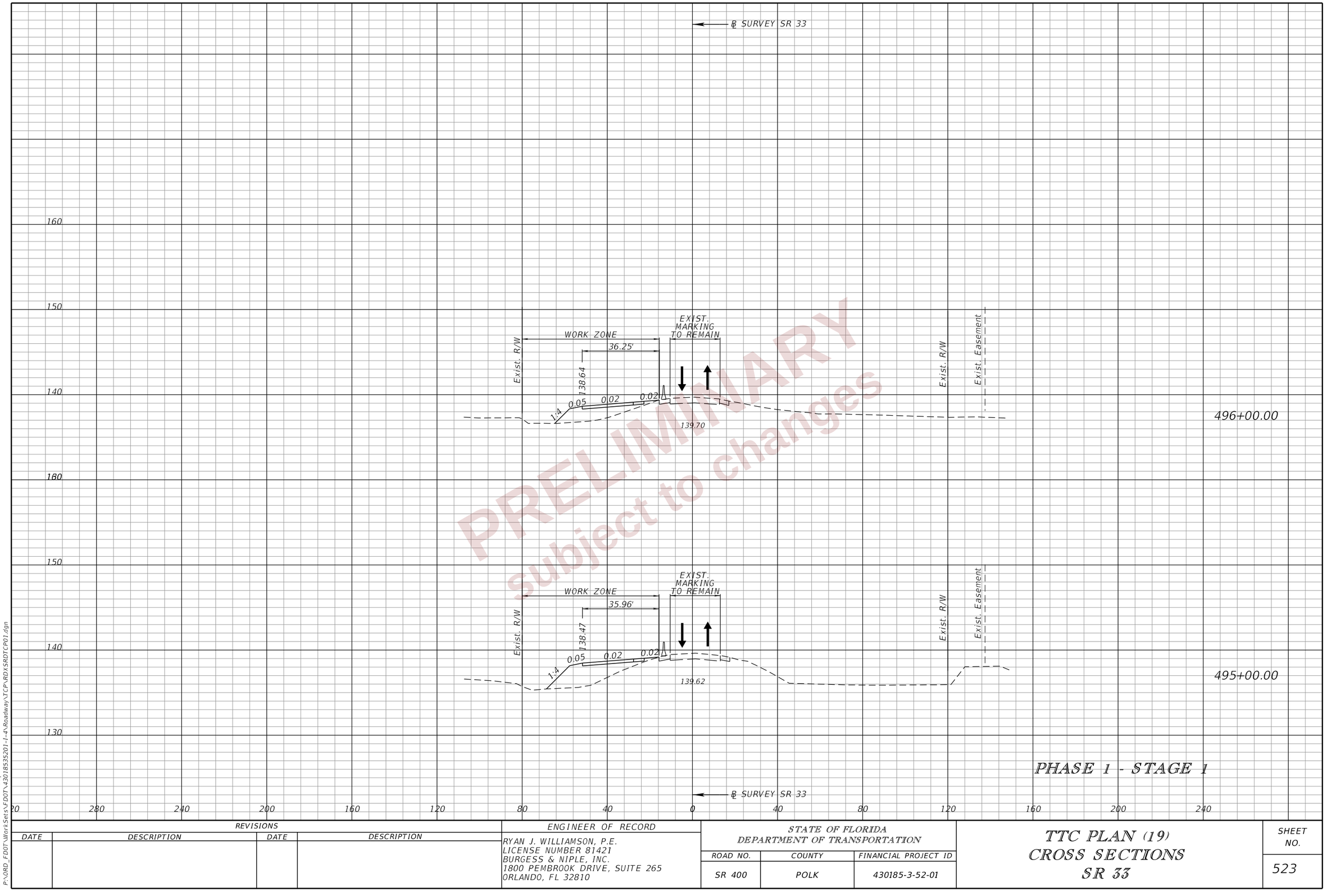

PRELIMINARY
subject to changes

REVISIONS			
DATE	DESCRIPTION	DATE	DESCRIPTION

ENGINEER OF RECORD
RYAN J. WILLIAMSON, P.E.
LICENSE NUMBER 81421
BURGESS & NIPLE, INC.
1800 PEMBROOK DRIVE, SUITE 265
ORLANDO, FL 32810

STATE OF FLORIDA
DEPARTMENT OF TRANSPORTATION

ROAD NO.	COUNTY	FINANCIAL PROJECT ID
SR 400	POLK	430185-3-52-01

TTC PLAN (19)
CROSS SECTIONS
SR 33

SHEET NO. 523

THE OFFICIAL RECORD OF THIS SHEET IS THE ELECTRONIC FILE DIGITALLY SIGNED AND SEALED UNDER RULE 61G15-23.004, F.A.C.

2/28/2024 7:07:39 PM day
P:\ORD_FDOT\WorkSets\FDOT\430185352\01-I-4\Roadway\TCP\RDXSRDTCP01.dgn

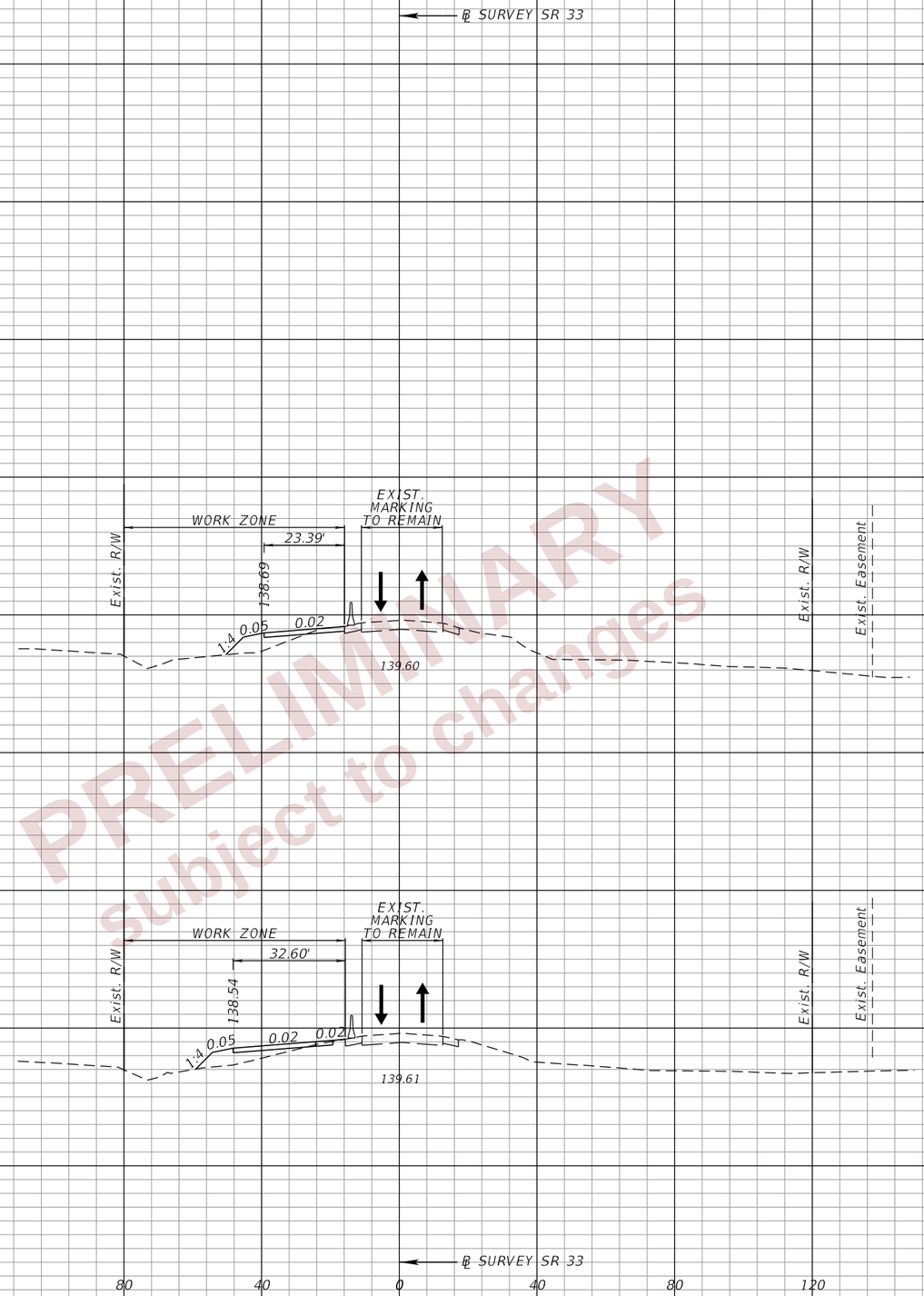

PRELIMINARY
subject to changes

PHASE 1 - STAGE 1

REVISIONS				ENGINEER OF RECORD	STATE OF FLORIDA DEPARTMENT OF TRANSPORTATION			TTC PLAN (20) CROSS SECTIONS SR 33	SHEET NO.
DATE	DESCRIPTION	DATE	DESCRIPTION	RYAN J. WILLIAMSON, P.E. LICENSE NUMBER 81421 BURGESS & NIPLE, INC. 1800 PEMBROOK DRIVE, SUITE 265 ORLANDO, FL 32810	ROAD NO.	COUNTY	FINANCIAL PROJECT ID		524
					SR 400	POLK	430185-3-52-01		

2/28/2024 7:07:39 PM day
P:\ORD_FDOT\WorkSets\FDOT\430185352O1-I-4\Roadway\TCP\RDXSRDTCP01.dgn

THE OFFICIAL RECORD OF THIS SHEET IS THE ELECTRONIC FILE DIGITALLY SIGNED AND SEALED UNDER RULE 61G15-23.004, F.A.C.

PRELIMINARY
subject to changes

REVISIONS			
DATE	DESCRIPTION	DATE	DESCRIPTION

ENGINEER OF RECORD
RYAN J. WILLIAMSON, P.E.
LICENSE NUMBER 81421
BURGESS & NIPLE, INC.
1800 PEMBROOK DRIVE, SUITE 265
ORLANDO, FL 32810

STATE OF FLORIDA
DEPARTMENT OF TRANSPORTATION

ROAD NO.	COUNTY	FINANCIAL PROJECT ID
SR 400	POLK	430185-3-52-01

TTC PLAN (21)
CROSS SECTIONS
SR 33

SHEET NO. 525

THE OFFICIAL RECORD OF THIS SHEET IS THE ELECTRONIC FILE DIGITALLY SIGNED AND SEALED UNDER RULE 61G15-23.004, F.A.C.

2/28/2024 7:07:40 PM day
P:\ORD_FDOT\WorkSets\FDOT\430185352\01-I-4\Roadway\TCP\RDXSRDTCP01.dgn

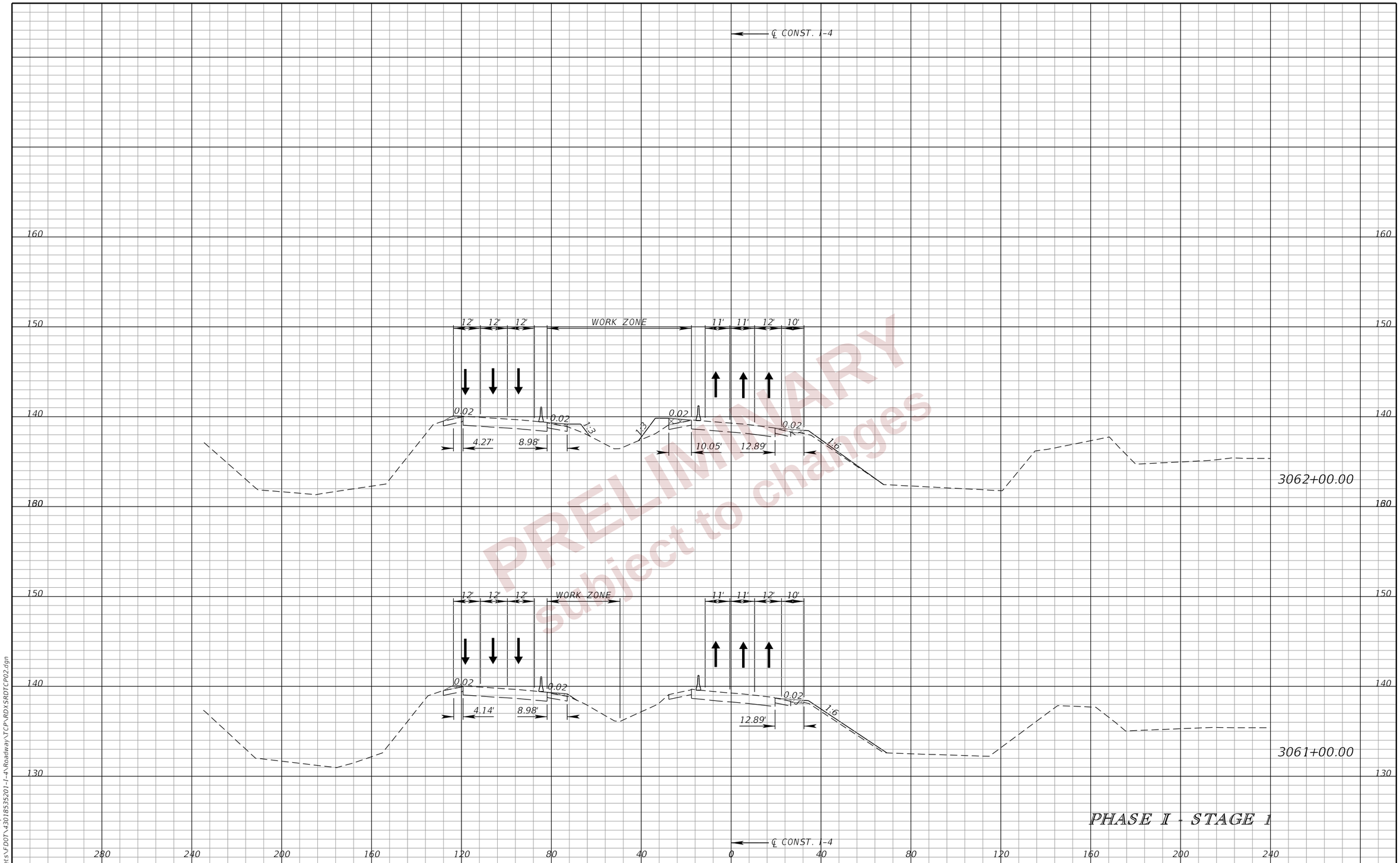

PRELIMINARY
subject to changes

PHASE I - STAGE 1

REVISIONS			
DATE	DESCRIPTION	DATE	DESCRIPTION

ENGINEER OF RECORD

RYAN J. WILLIAMSON, P.E.
LICENSE NUMBER 81421
BURGESS & NIPLE, INC.
1800 PEMBROOK DRIVE, SUITE 265
ORLANDO, FL 32810

STATE OF FLORIDA
DEPARTMENT OF TRANSPORTATION

ROAD NO.	COUNTY	FINANCIAL PROJECT ID
SR 400	POLK	430185-3-52-01

TTC PLAN (22)
CROSS SECTIONS
I-4

SHEET NO. 526

THE OFFICIAL RECORD OF THIS SHEET IS THE ELECTRONIC FILE DIGITALLY SIGNED AND SEALED UNDER RULE 61G15-23.004, F.A.C.

2/28/2024 7:07:58 PM dgw
P:\ORD_FDOT\WorkSets\FDOT\430185352O1-I-4\Roadway\TCP\RDXSRDTCP02.dgn

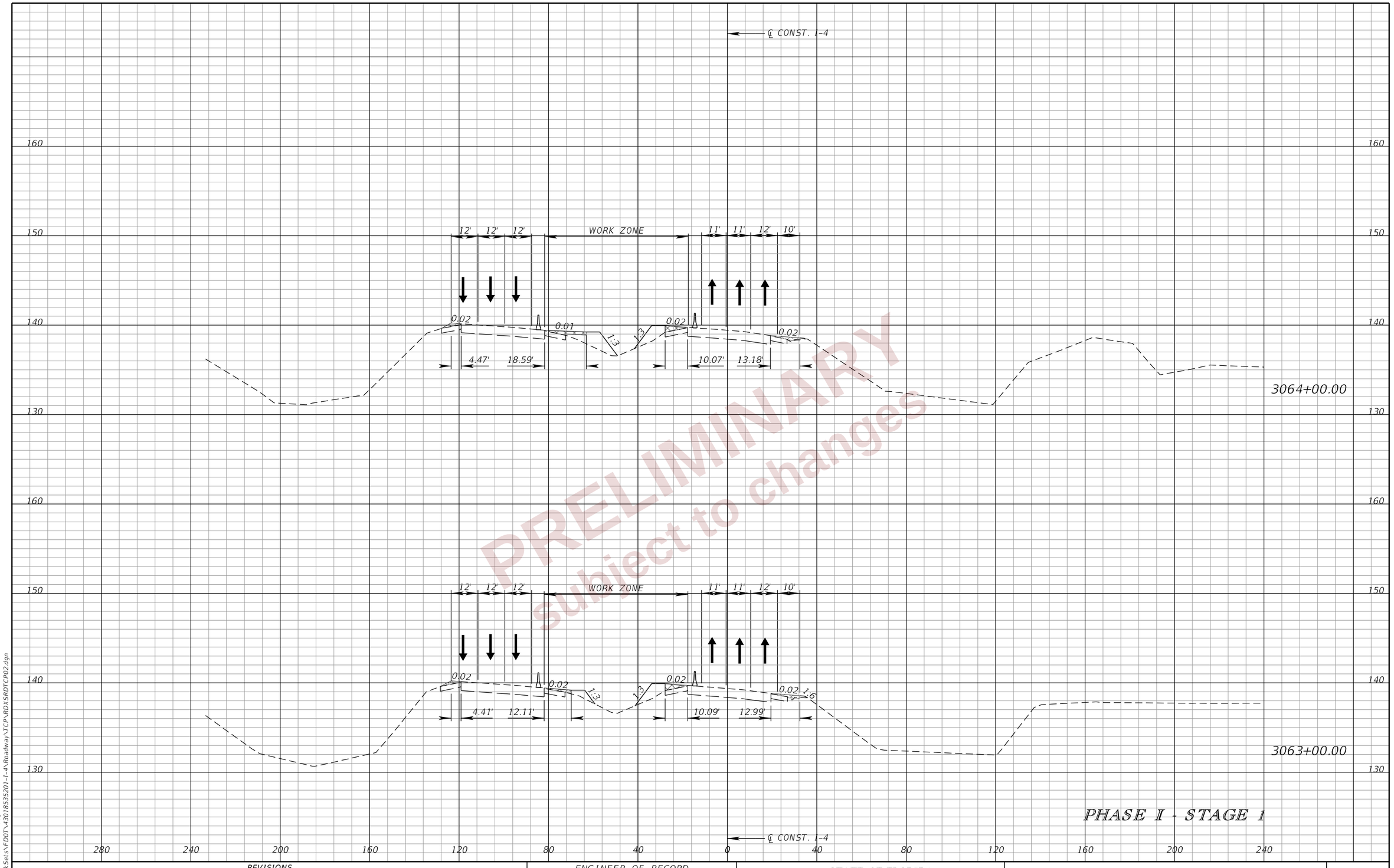

PRELIMINARY
subject to changes

REVISIONS			
DATE	DESCRIPTION	DATE	DESCRIPTION

ENGINEER OF RECORD
RYAN J. WILLIAMSON, P.E.
LICENSE NUMBER 81421
BURGESS & NIPLE, INC.
1800 PEMBROOK DRIVE, SUITE 265
ORLANDO, FL 32810

STATE OF FLORIDA
DEPARTMENT OF TRANSPORTATION

ROAD NO.	COUNTY	FINANCIAL PROJECT ID
SR 400	POLK	430185-3-52-01

TTC PLAN (23)
CROSS SECTIONS
I-4

SHEET NO. 527

THE OFFICIAL RECORD OF THIS SHEET IS THE ELECTRONIC FILE DIGITALLY SIGNED AND SEALED UNDER RULE 61G15-23.004, F.A.C.

2/28/2024 7:08:01 PM day
P:\ORD_FDOT\WorkSets\FDOT\430185352O1-I-4\Roadway\TCP\RDXSRDTCP02.dgn

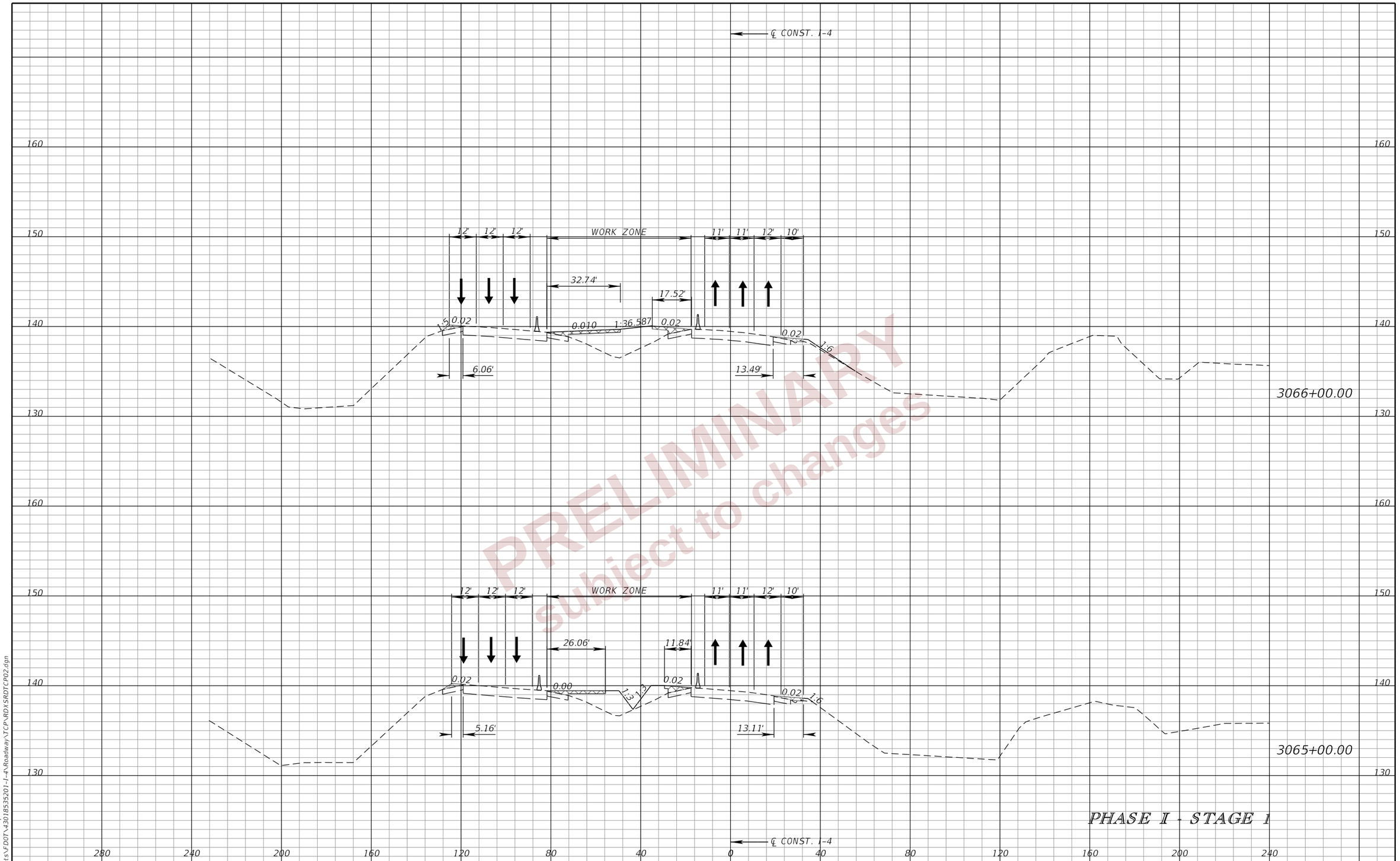

PRELIMINARY
subject to changes

PHASE I - STAGE 1

REVISIONS				ENGINEER OF RECORD	STATE OF FLORIDA DEPARTMENT OF TRANSPORTATION			TTC PLAN (24) CROSS SECTIONS I-4	SHEET NO.
DATE	DESCRIPTION	DATE	DESCRIPTION	RYAN J. WILLIAMSON, P.E. LICENSE NUMBER 81421 BURGESS & NIPLE, INC. 1800 PEMBROOK DRIVE, SUITE 265 ORLANDO, FL 32810	ROAD NO.	COUNTY	FINANCIAL PROJECT ID		528
					SR 400	POLK	430185-3-52-01		

THE OFFICIAL RECORD OF THIS SHEET IS THE ELECTRONIC FILE DIGITALLY SIGNED AND SEALED UNDER RULE 61G15-23.004, F.A.C.

2/28/2024 7:08:05 PM day.
P:\ORD_FDOT\WorkSets\FDOT\430185352O1-I-4\Roadway\TCP\RDXSRDTCP02.dgn

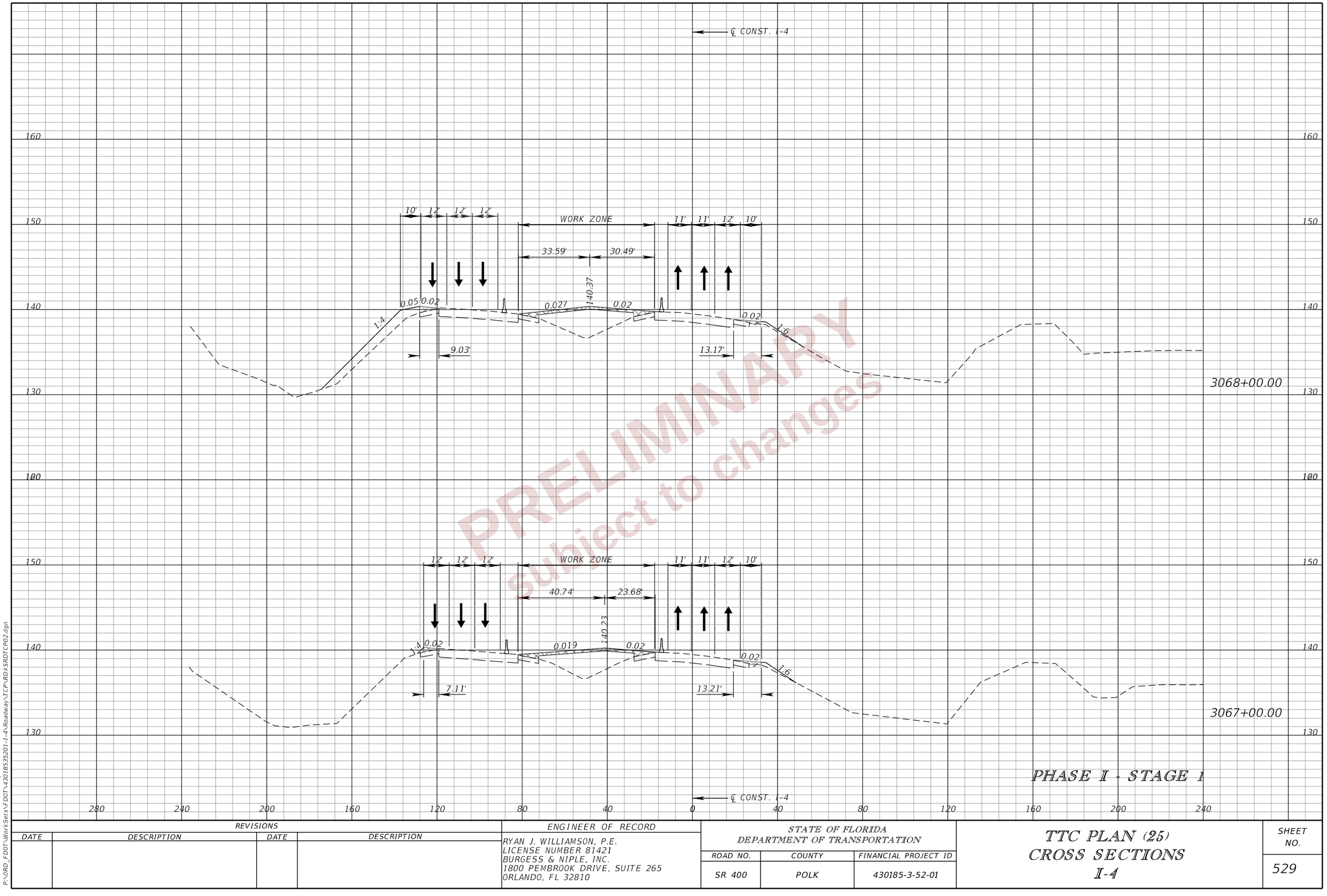

PRELIMINARY
subject to changes

PHASE I - STAGE 1

REVISIONS			
DATE	DESCRIPTION	DATE	DESCRIPTION

ENGINEER OF RECORD
RYAN J. WILLIAMSON, P.E.
LICENSE NUMBER 81421
BURGESS & NIPLE, INC.
1800 PEMBROOK DRIVE, SUITE 265
ORLANDO, FL 32810

STATE OF FLORIDA
DEPARTMENT OF TRANSPORTATION

ROAD NO.	COUNTY	FINANCIAL PROJECT ID
SR 400	POLK	430185-3-52-01

TTC PLAN (25)
CROSS SECTIONS
I-4

SHEET NO. 529

THE OFFICIAL RECORD OF THIS SHEET IS THE ELECTRONIC FILE DIGITALLY SIGNED AND SEALED UNDER RULE 61G15-23.004, F.A.C.

2/28/2024 7:08:08 PM day.
P:\ORD_FDOT\WorkSets\FDOT\430185352O1-I-4\Roadway\TCP\RDXSRDTCP02.dgn

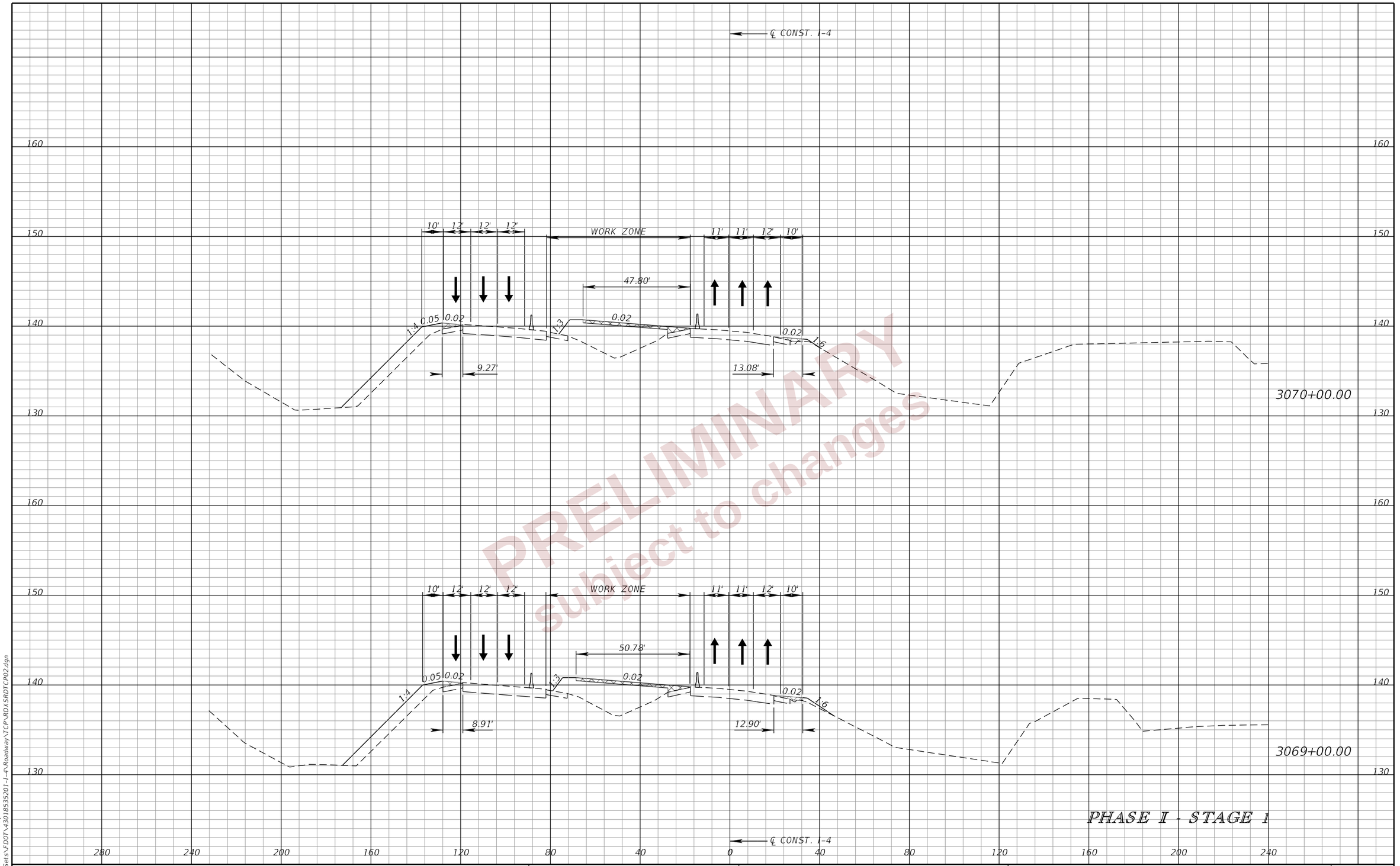

PRELIMINARY
subject to changes

REVISIONS			
DATE	DESCRIPTION	DATE	DESCRIPTION

ENGINEER OF RECORD
RYAN J. WILLIAMSON, P.E.
LICENSE NUMBER 81421
BURGESS & NIPLE, INC.
1800 PEMBROOK DRIVE, SUITE 265
ORLANDO, FL 32810

STATE OF FLORIDA
DEPARTMENT OF TRANSPORTATION

ROAD NO.	COUNTY	FINANCIAL PROJECT ID
SR 400	POLK	430185-3-52-01

TTC PLAN (26)
CROSS SECTIONS
I-4

SHEET NO. 530

THE OFFICIAL RECORD OF THIS SHEET IS THE ELECTRONIC FILE DIGITALLY SIGNED AND SEALED UNDER RULE 61G15-23.004, F.A.C.

2/28/2024 7:08:11 PM day
P:\ORD_FDOT\WorkSets\FDOT\430185352O1-I-4\Roadway\TCP\RDXSRDTCP02.dgn

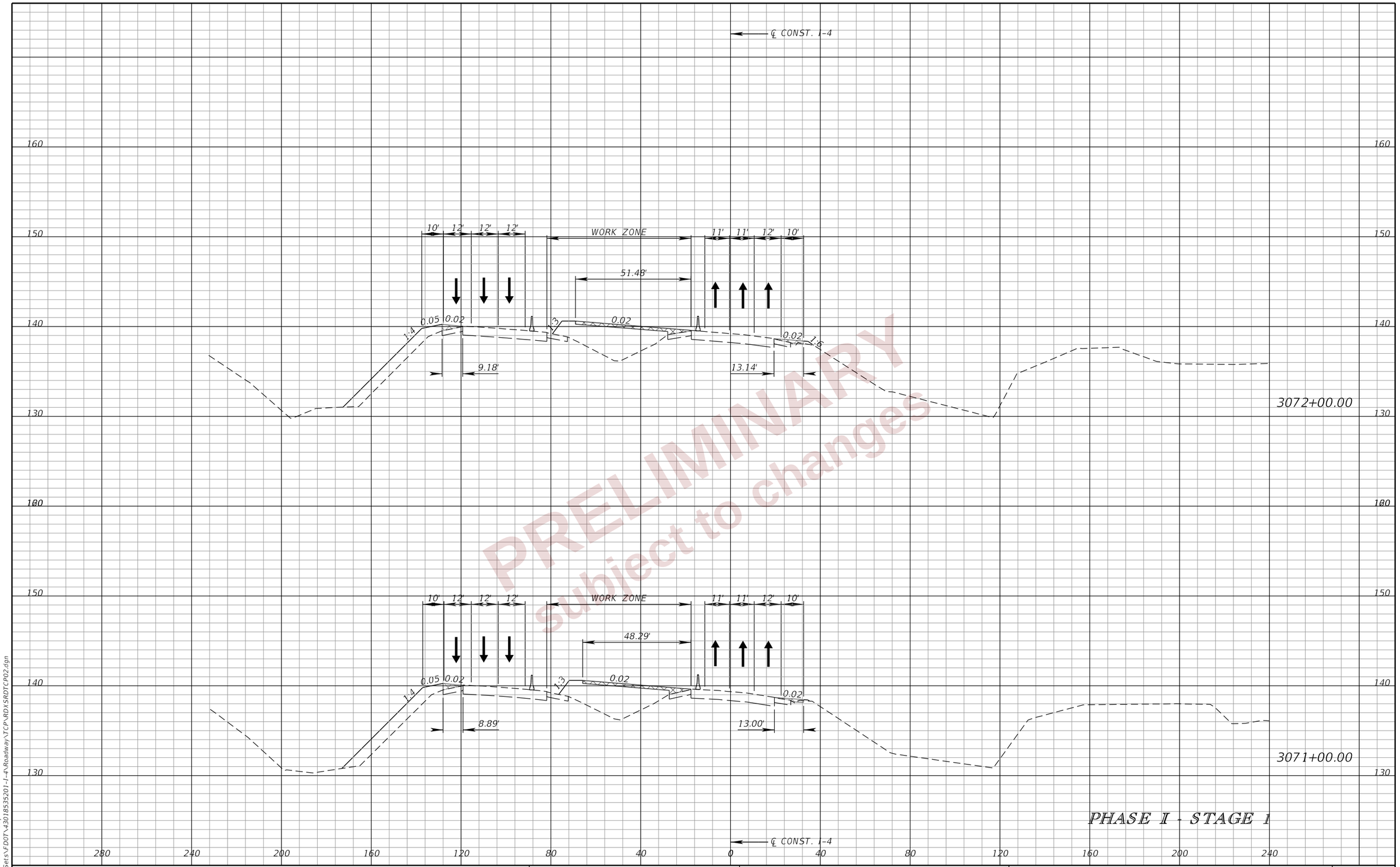

PRELIMINARY
subject to changes

REVISIONS			
DATE	DESCRIPTION	DATE	DESCRIPTION

ENGINEER OF RECORD
RYAN J. WILLIAMSON, P.E.
LICENSE NUMBER 81421
BURGESS & NIPLE, INC.
1800 PEMBROOK DRIVE, SUITE 265
ORLANDO, FL 32810

STATE OF FLORIDA
DEPARTMENT OF TRANSPORTATION

ROAD NO.	COUNTY	FINANCIAL PROJECT ID
SR 400	POLK	430185-3-52-01

TTC PLAN (27)
CROSS SECTIONS
I-4

SHEET NO. 531

THE OFFICIAL RECORD OF THIS SHEET IS THE ELECTRONIC FILE DIGITALLY SIGNED AND SEALED UNDER RULE 61G15-23.004, F.A.C.

2/28/2024 7:08:14 PM day
P:\ORD_FDOT\WorkSets\FDOT\430185352O1-I-4\Roadway\TCP\RDXSRDTCP02.dgn

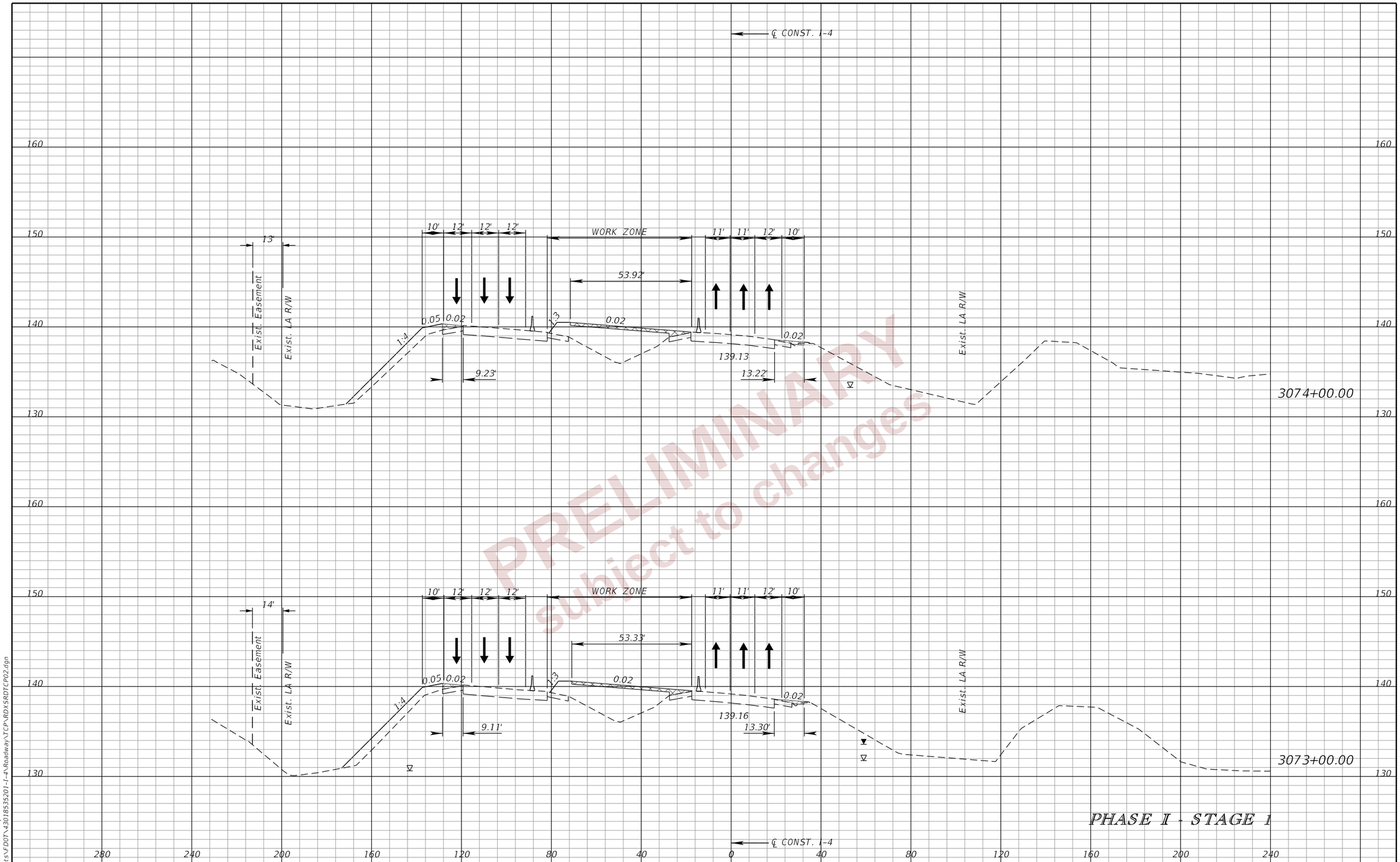

PRELIMINARY
subject to changes

REVISIONS			
DATE	DESCRIPTION	DATE	DESCRIPTION

ENGINEER OF RECORD
RYAN J. WILLIAMSON, P.E.
LICENSE NUMBER 81421
BURGESS & NIPLE, INC.
1800 PEMBROOK DRIVE, SUITE 265
ORLANDO, FL 32810

STATE OF FLORIDA
DEPARTMENT OF TRANSPORTATION

ROAD NO.	COUNTY	FINANCIAL PROJECT ID
SR 400	POLK	430185-3-52-01

TTC PLAN (28)
CROSS SECTIONS
I-4

SHEET NO. 532

THE OFFICIAL RECORD OF THIS SHEET IS THE ELECTRONIC FILE DIGITALLY SIGNED AND SEALED UNDER RULE 61G15-23.004, F.A.C.

2/28/2024 7:08:17 PM day
P:\ORD_FDOT\WorkSets\FDOT\430185352O1-I-4\Roadway\TCP\RDXSRDTCP02.dgn

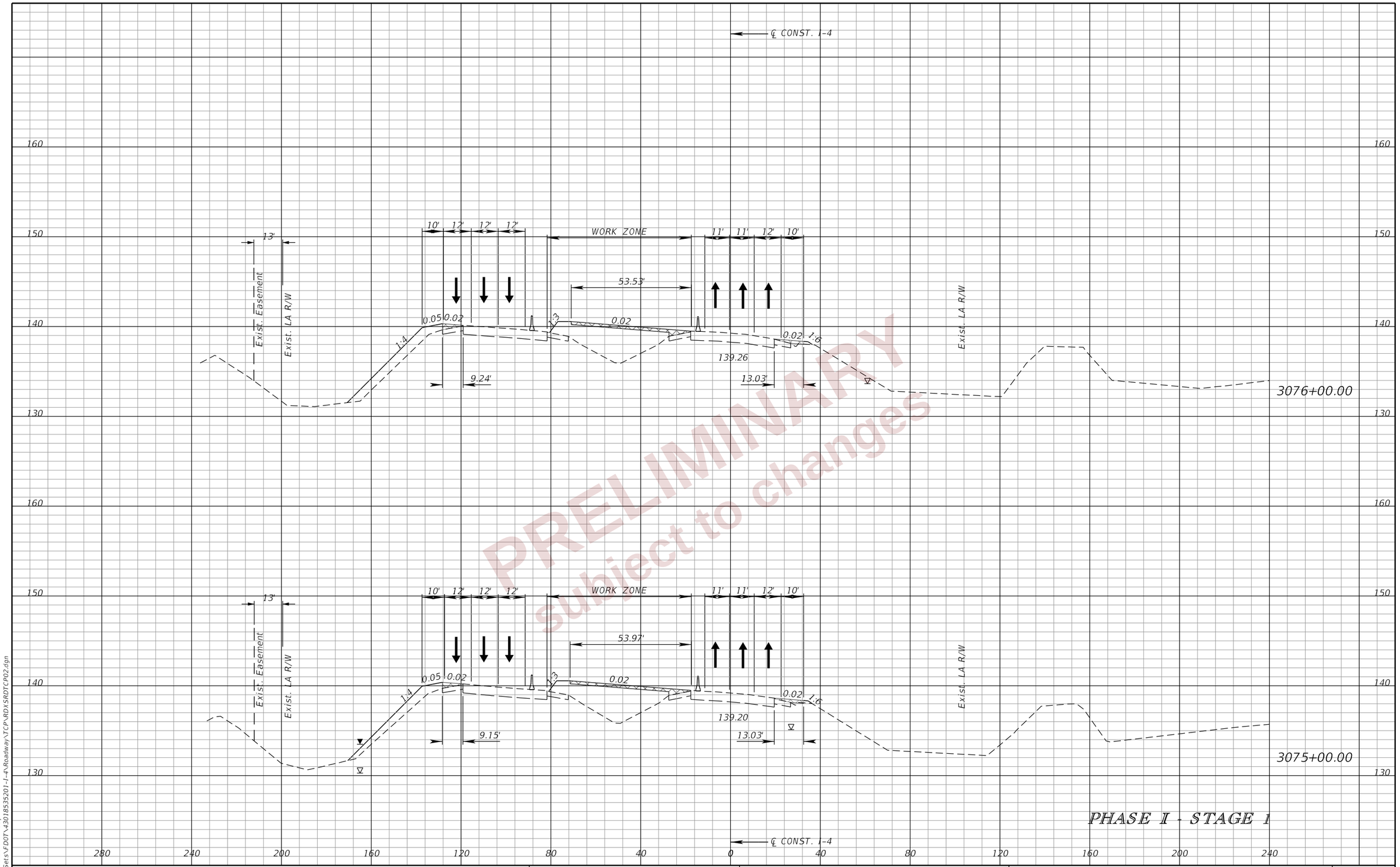

PRELIMINARY
subject to changes

REVISIONS			
DATE	DESCRIPTION	DATE	DESCRIPTION

ENGINEER OF RECORD
RYAN J. WILLIAMSON, P.E.
LICENSE NUMBER 81421
BURGESS & NIPLE, INC.
1800 PEMBROOK DRIVE, SUITE 265
ORLANDO, FL 32810

STATE OF FLORIDA
DEPARTMENT OF TRANSPORTATION

ROAD NO.	COUNTY	FINANCIAL PROJECT ID
SR 400	POLK	430185-3-52-01

TTC PLAN (29)
CROSS SECTIONS
I-4

SHEET NO. 533

THE OFFICIAL RECORD OF THIS SHEET IS THE ELECTRONIC FILE DIGITALLY SIGNED AND SEALED UNDER RULE 61G15-23.004, F.A.C.

2/28/2024 7:08:20 PM dayl
P:\ORD_FDOT\WorkSets\FDOT\430185352\01-I-4\Roadway\TCP\RDXSRDTCP02.dgn

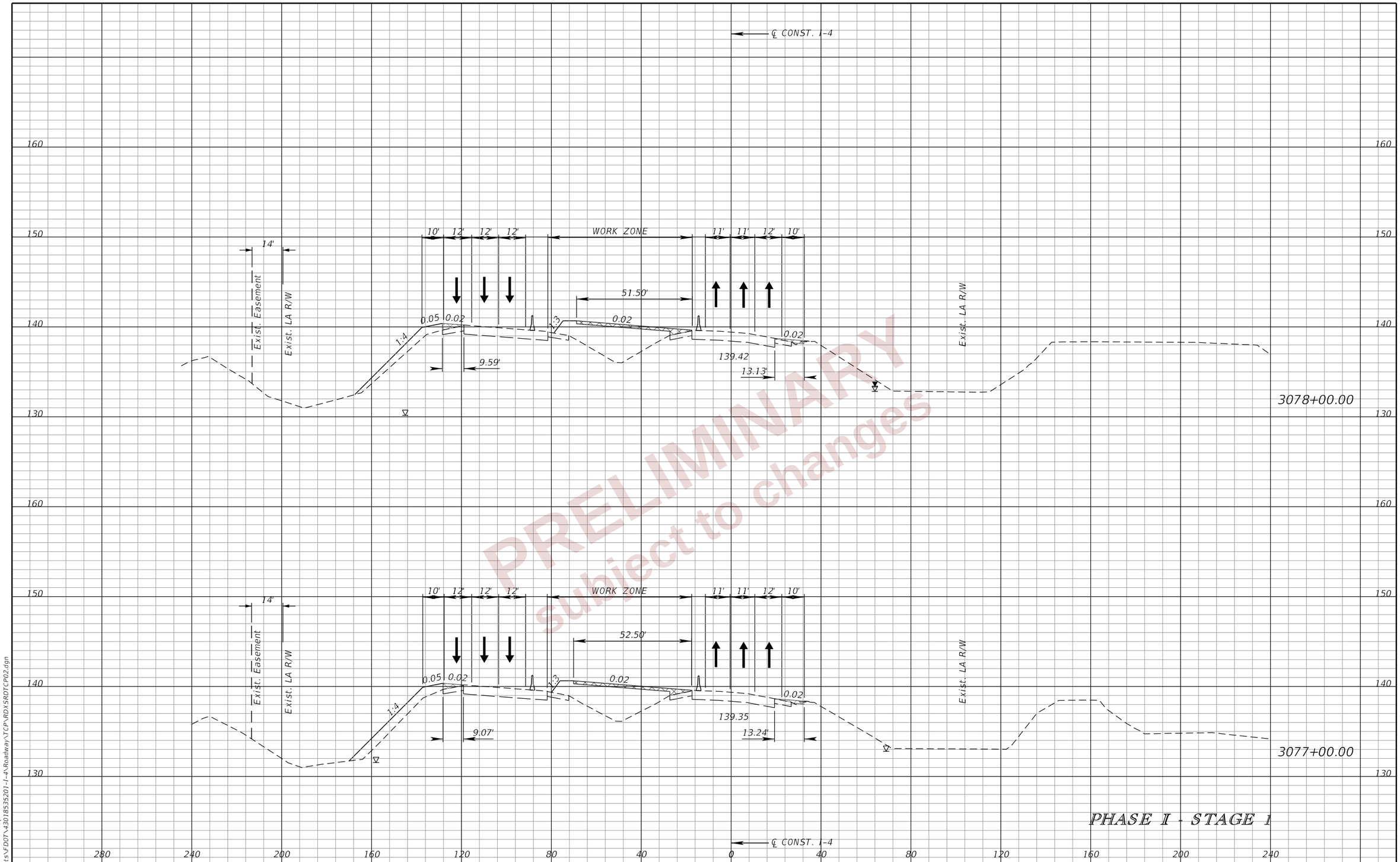

PRELIMINARY
subject to changes

REVISIONS			
DATE	DESCRIPTION	DATE	DESCRIPTION

ENGINEER OF RECORD
RYAN J. WILLIAMSON, P.E.
LICENSE NUMBER 81421
BURGESS & NIPLE, INC.
1800 PEMBROOK DRIVE, SUITE 265
ORLANDO, FL 32810

STATE OF FLORIDA
DEPARTMENT OF TRANSPORTATION

ROAD NO.	COUNTY	FINANCIAL PROJECT ID
SR 400	POLK	430185-3-52-01

TTC PLAN (30)
CROSS SECTIONS
I-4

SHEET NO. 534

THE OFFICIAL RECORD OF THIS SHEET IS THE ELECTRONIC FILE DIGITALLY SIGNED AND SEALED UNDER RULE 61G15-23.004, F.A.C.

2/28/2024 7:08:23 PM day
P:\ORD_FDOT\WorkSets\FDOT\430185352O1-I-4\Roadway\TCP\RDXSRDTCP02.dgn

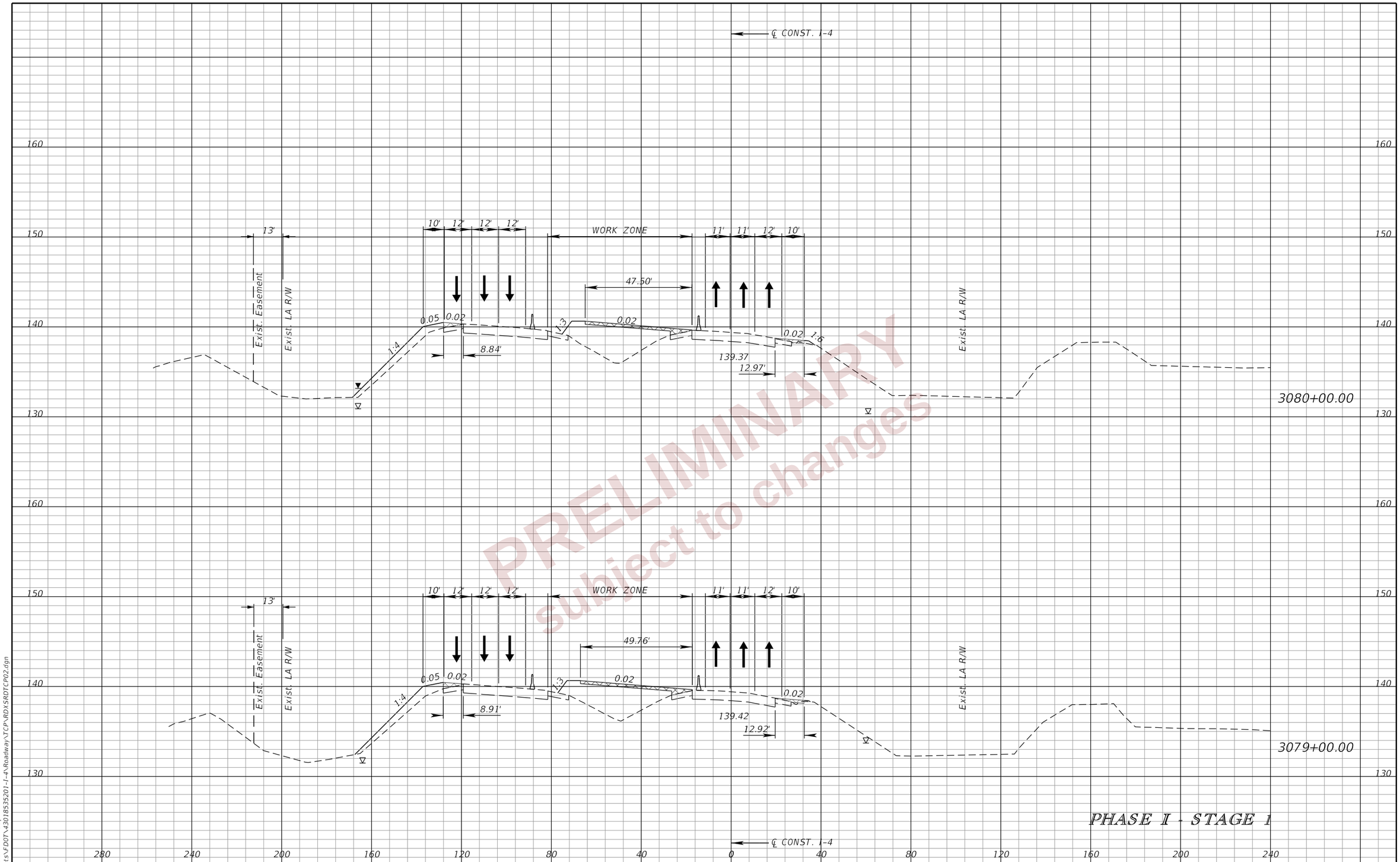

PRELIMINARY
subject to changes

REVISIONS			
DATE	DESCRIPTION	DATE	DESCRIPTION

ENGINEER OF RECORD
RYAN J. WILLIAMSON, P.E.
LICENSE NUMBER 81421
BURGESS & NIPLE, INC.
1800 PEMBROOK DRIVE, SUITE 265
ORLANDO, FL 32810

STATE OF FLORIDA
DEPARTMENT OF TRANSPORTATION

ROAD NO.	COUNTY	FINANCIAL PROJECT ID
SR 400	POLK	430185-3-52-01

TTC PLAN (31)
CROSS SECTIONS
I-4

SHEET NO. 535

THE OFFICIAL RECORD OF THIS SHEET IS THE ELECTRONIC FILE DIGITALLY SIGNED AND SEALED UNDER RULE 61G15-23.004, F.A.C.

2/28/2024 7:08:27 PM day
P:\ORD_FDOT\WorkSets\FDOT\430185352\01-I-4\Roadway\TCP\RDXSRDTCP02.dgn

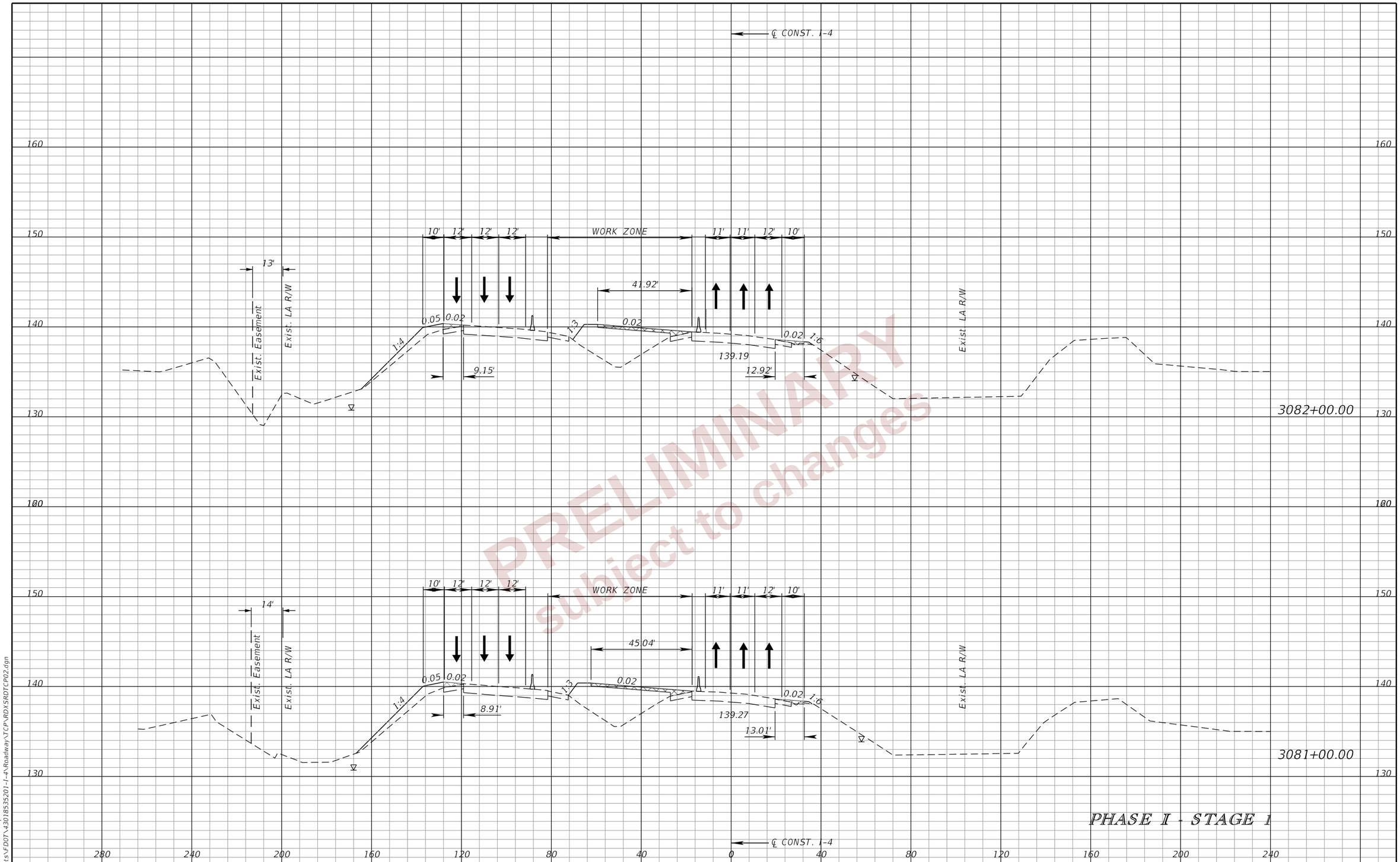

PRELIMINARY
subject to changes

REVISIONS			
DATE	DESCRIPTION	DATE	DESCRIPTION

ENGINEER OF RECORD
RYAN J. WILLIAMSON, P.E.
LICENSE NUMBER 81421
BURGESS & NIPLE, INC.
1800 PEMBROOK DRIVE, SUITE 265
ORLANDO, FL 32810

STATE OF FLORIDA
DEPARTMENT OF TRANSPORTATION

ROAD NO.	COUNTY	FINANCIAL PROJECT ID
SR 400	POLK	430185-3-52-01

TTC PLAN (32)
CROSS SECTIONS
I-4

SHEET NO. 536

THE OFFICIAL RECORD OF THIS SHEET IS THE ELECTRONIC FILE DIGITALLY SIGNED AND SEALED UNDER RULE 61G15-23.004, F.A.C.

2/28/2024 7:08:30 PM dayl
P:\ORD_FDOT\WorkSets\FDOT\430185352\01-I-4\Roadway\TCP\RDXSRDTCP02.dgn

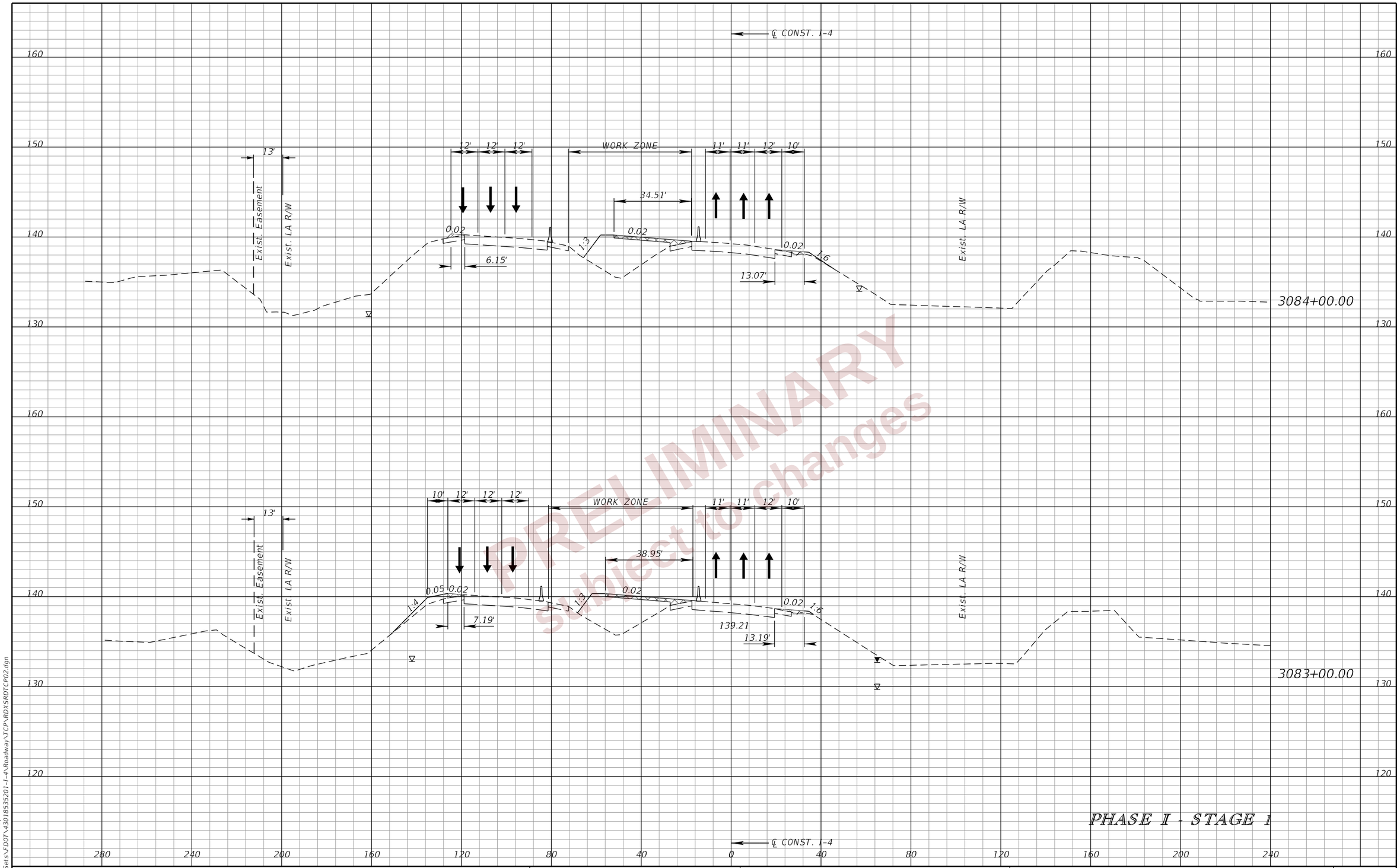

PRELIMINARY
Subject to changes

PHASE I - STAGE 1

REVISIONS				ENGINEER OF RECORD	STATE OF FLORIDA DEPARTMENT OF TRANSPORTATION			TTC PLAN (33) CROSS SECTIONS I-4	SHEET NO.
DATE	DESCRIPTION	DATE	DESCRIPTION	RYAN J. WILLIAMSON, P.E. LICENSE NUMBER 81421 BURGESS & NIPLE, INC. 1800 PEMBROOK DRIVE, SUITE 265 ORLANDO, FL 32810	ROAD NO.	COUNTY	FINANCIAL PROJECT ID		537
					SR 400	POLK	430185-3-52-01		

THE OFFICIAL RECORD OF THIS SHEET IS THE ELECTRONIC FILE DIGITALLY SIGNED AND SEALED UNDER RULE 61G15-23.004, F.A.C.

2/28/2024 7:08:33 PM day.
P:\ORD_FDOT\WorkSets\FDOT\430185352O1-I-4\Roadway\TCP\RDXSRDTCP02.dgn

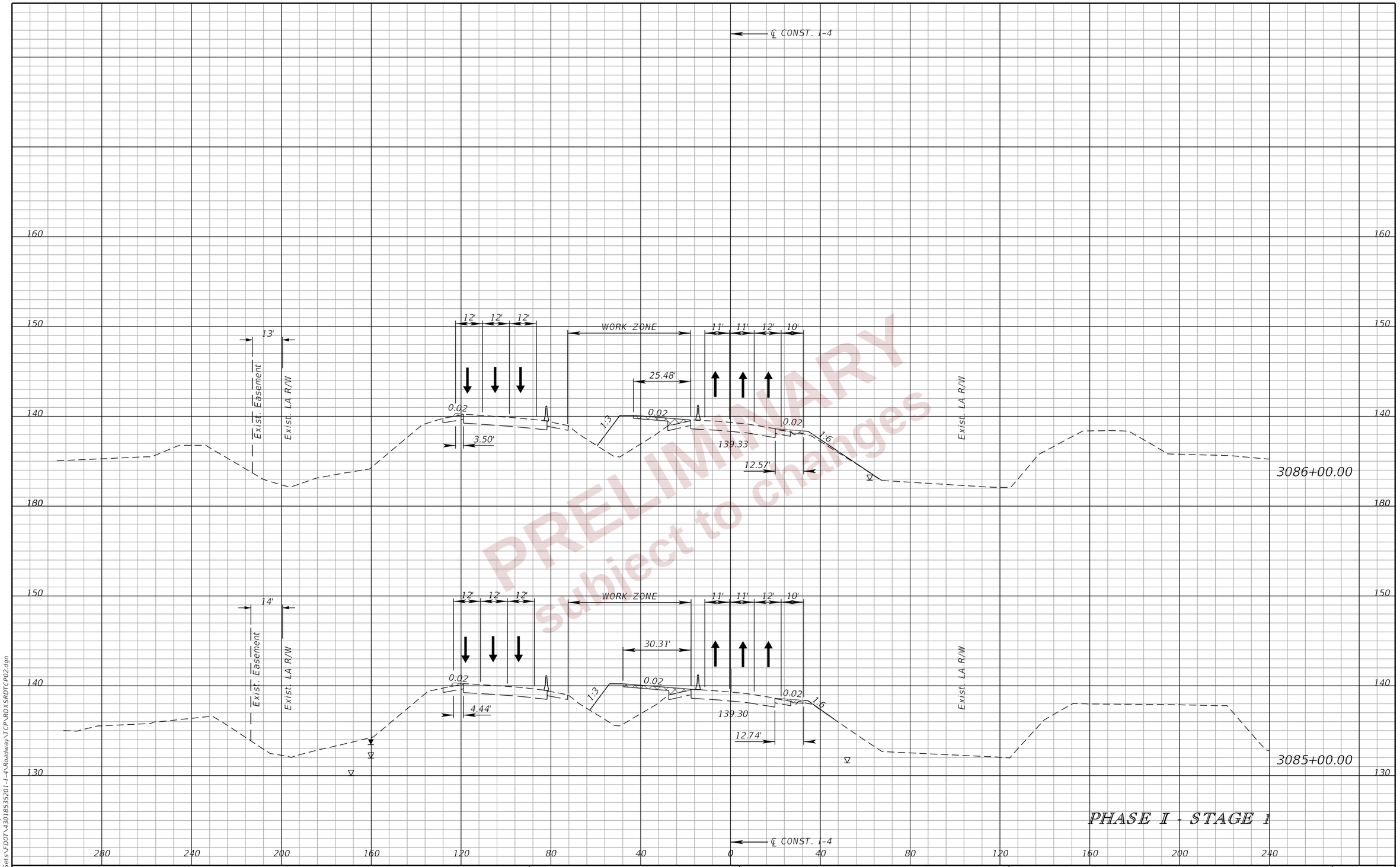

REVISIONS				ENGINEER OF RECORD	STATE OF FLORIDA DEPARTMENT OF TRANSPORTATION			TTC PLAN (34) CROSS SECTIONS I-4	SHEET NO.
DATE	DESCRIPTION	DATE	DESCRIPTION	RYAN J. WILLIAMSON, P.E. LICENSE NUMBER 81421 BURGESS & NIPLE, INC. 1800 PEMBROOK DRIVE, SUITE 265 ORLANDO, FL 32810	ROAD NO.	COUNTY	FINANCIAL PROJECT ID		538
					SR 400	POLK	430185-3-52-01		

2/28/2024 7:08:36 PM day.
P:\ORD_FDOT\WorkSets\FDOT\430185352O1-I-4\Roadway\TCP\RDXSRDTCP02.dgn

THE OFFICIAL RECORD OF THIS SHEET IS THE ELECTRONIC FILE DIGITALLY SIGNED AND SEALED UNDER RULE 61G15-23.004, F.A.C.

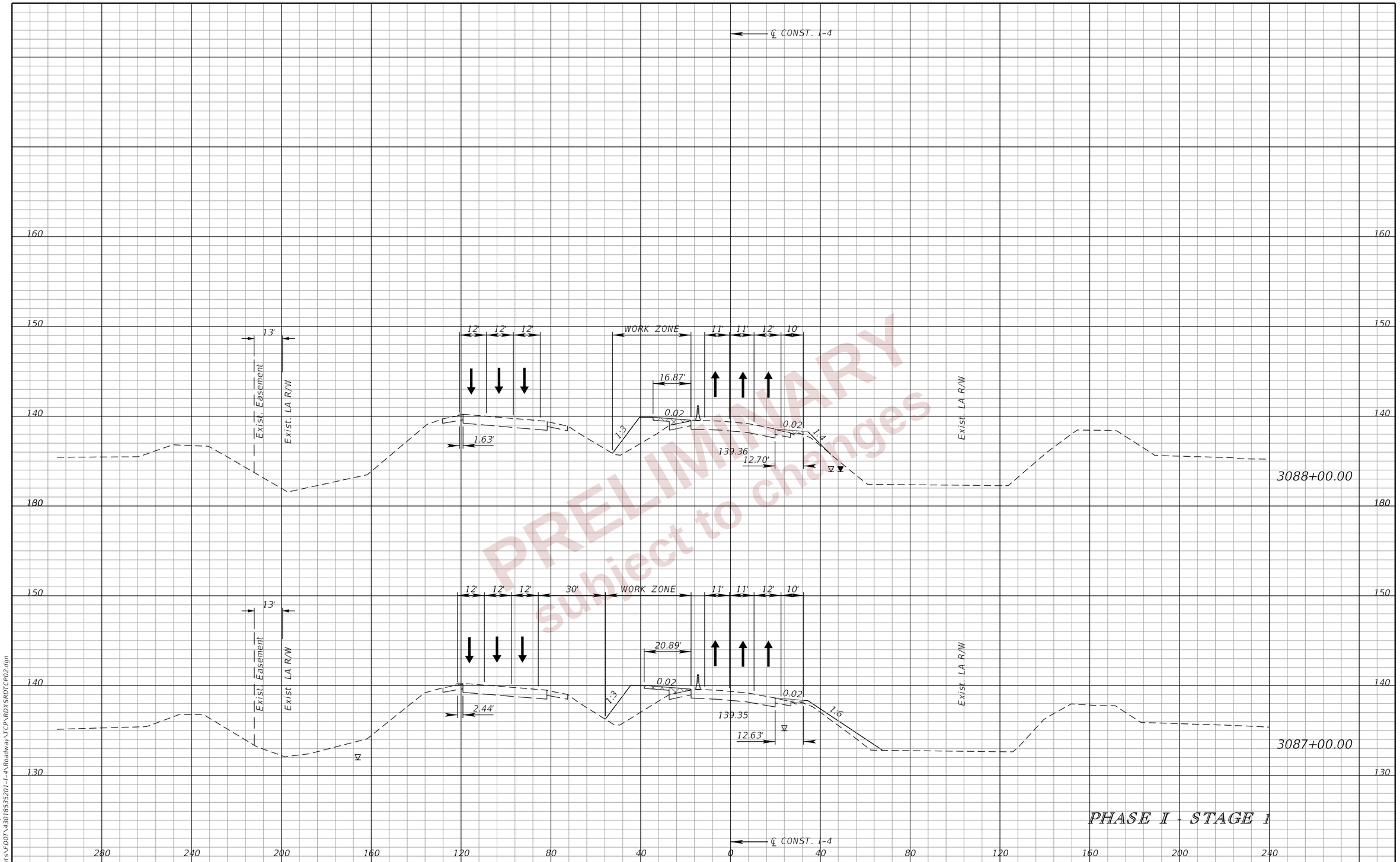

PRELIMINARY
subject to changes

THE OFFICIAL RECORD OF THIS SHEET IS THE ELECTRONIC FILE DIGITALLY SIGNED AND SEALED UNDER RULE 61G15-23.004, F.A.C.

2/28/2024 7:08:40 PM dgw
P:\ORD_FDOT\WorkSets\FDOT\430185352O1-I-4\Roadway\TCP\RDXSRDTCP02.dgn

REVISIONS			
DATE	DESCRIPTION	DATE	DESCRIPTION

ENGINEER OF RECORD
RYAN J. WILLIAMSON, P.E.
LICENSE NUMBER 81421
BURGESS & NIPLE, INC.
1800 PEMBROOK DRIVE, SUITE 265
ORLANDO, FL 32810

STATE OF FLORIDA
DEPARTMENT OF TRANSPORTATION

ROAD NO.	COUNTY	FINANCIAL PROJECT ID
SR 400	POLK	430185-3-52-01

TTC PLAN (35)
CROSS SECTIONS
I-4

SHEET NO.
539

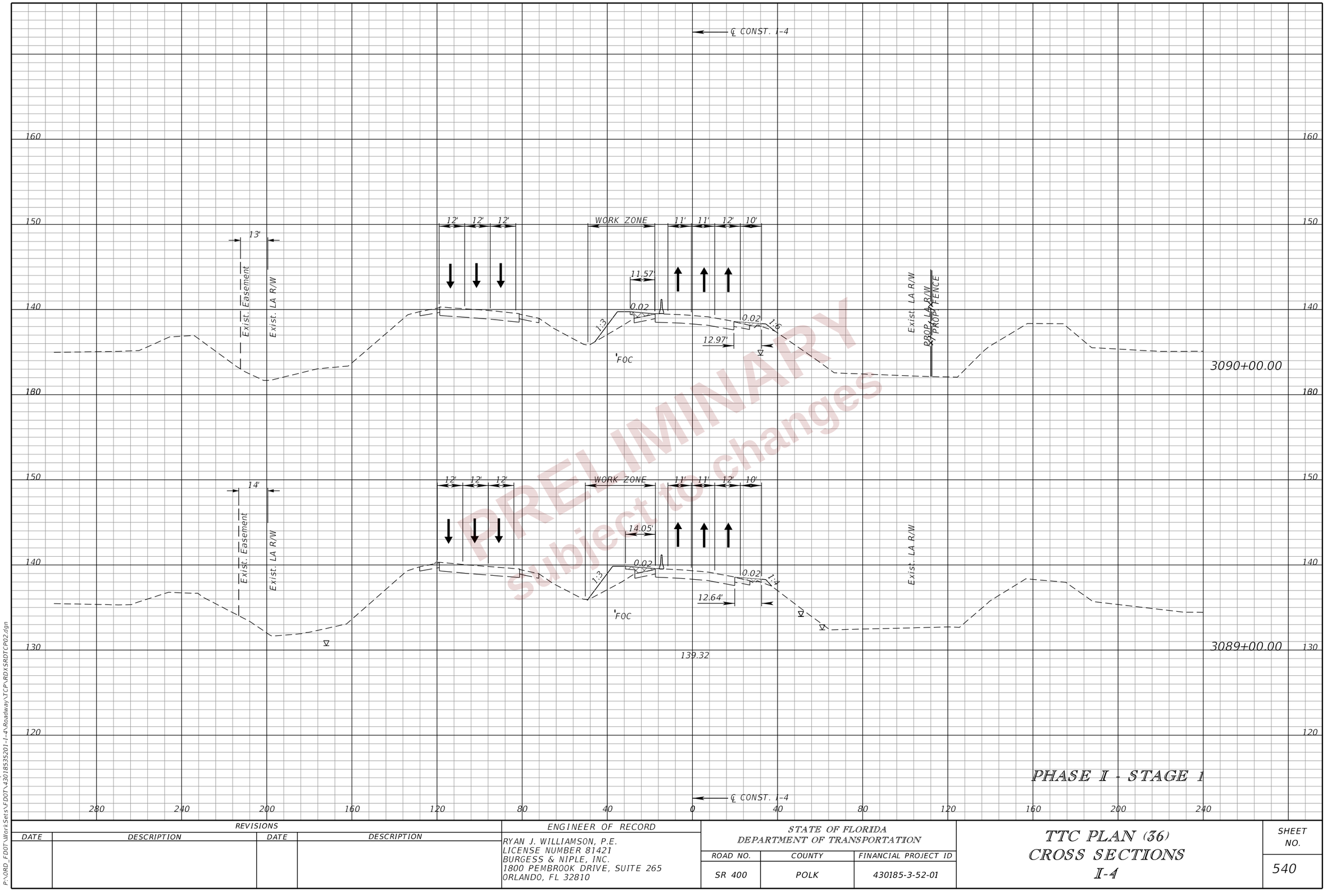

PRELIMINARY
Subject to changes

PHASE I - STAGE 1

REVISIONS				ENGINEER OF RECORD	STATE OF FLORIDA DEPARTMENT OF TRANSPORTATION			TTC PLAN (36) CROSS SECTIONS I-4	SHEET NO.
DATE	DESCRIPTION	DATE	DESCRIPTION	RYAN J. WILLIAMSON, P.E. LICENSE NUMBER 81421 BURGESS & NIPLE, INC. 1800 PEMBROOK DRIVE, SUITE 265 ORLANDO, FL 32810	ROAD NO.	COUNTY	FINANCIAL PROJECT ID		540
					SR 400	POLK	430185-3-52-01		

THE OFFICIAL RECORD OF THIS SHEET IS THE ELECTRONIC FILE DIGITALLY SIGNED AND SEALED UNDER RULE 61G15-23.004, F.A.C.

2/28/2024 7:08:44 PM day
P:\ORD_FDOT\WorkSets\FDOT\430185352O1-I-4\Roadway\TCP\RDXSRDTCP02.dgn

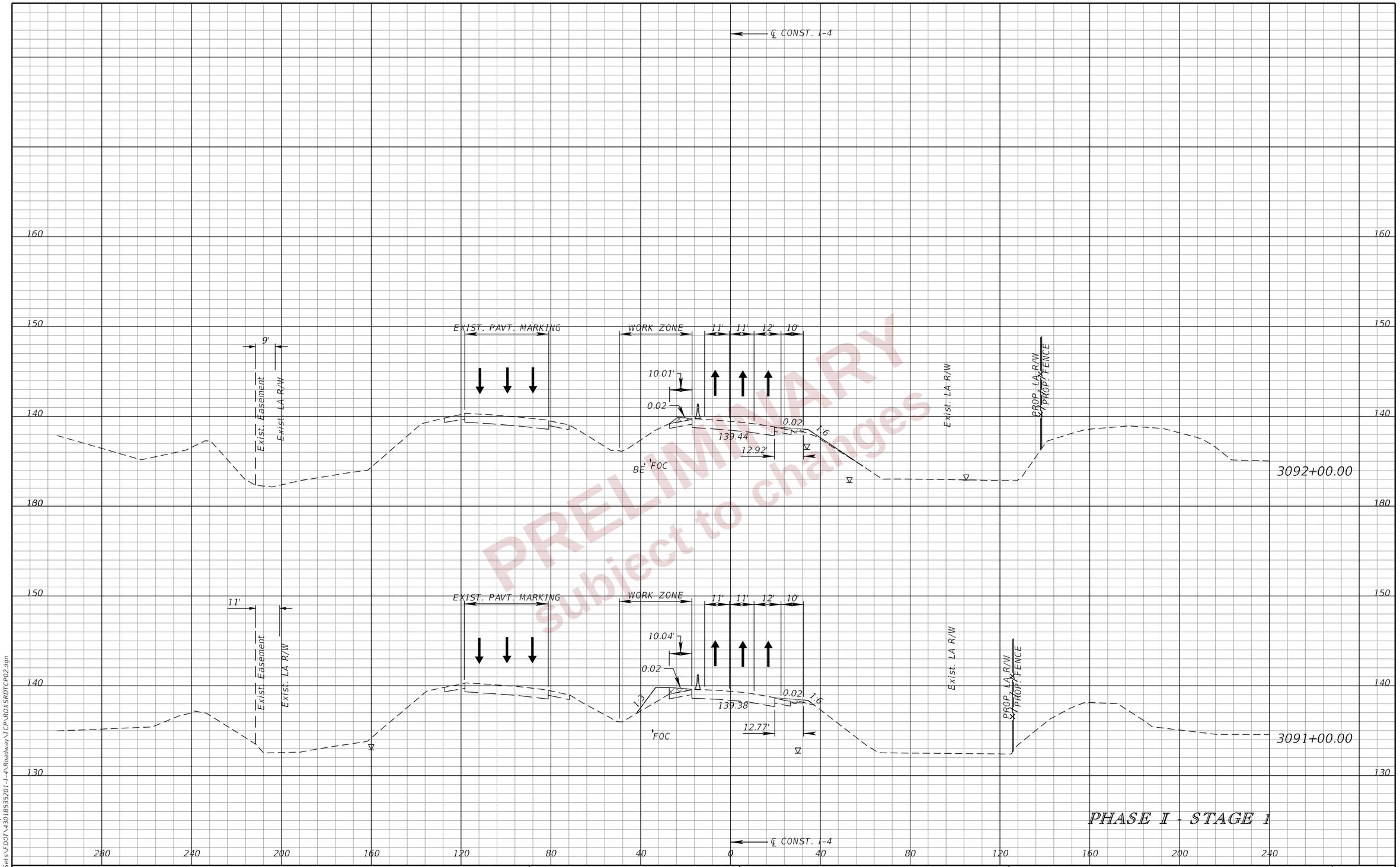

PRELIMINARY
subject to changes

PHASE I - STAGE 1

REVISIONS				ENGINEER OF RECORD	STATE OF FLORIDA DEPARTMENT OF TRANSPORTATION			TTC PLAN (37) CROSS SECTIONS I-4	SHEET NO.
DATE	DESCRIPTION	DATE	DESCRIPTION	RYAN J. WILLIAMSON, P.E. LICENSE NUMBER 81421 BURGESS & NIPLE, INC. 1800 PEMBROOK DRIVE, SUITE 265 ORLANDO, FL 32810	ROAD NO.	COUNTY	FINANCIAL PROJECT ID		541
					SR 400	POLK	430185-3-52-01		

THE OFFICIAL RECORD OF THIS SHEET IS THE ELECTRONIC FILE DIGITALLY SIGNED AND SEALED UNDER RULE 61G15-23.004, F.A.C.

2/28/2024 7:08:47 PM day
P:\ORD_FDOT\WorkSets\FDOT\430185352O1-I-4\Roadway\TCP\RDXSRDTCP02.dgn

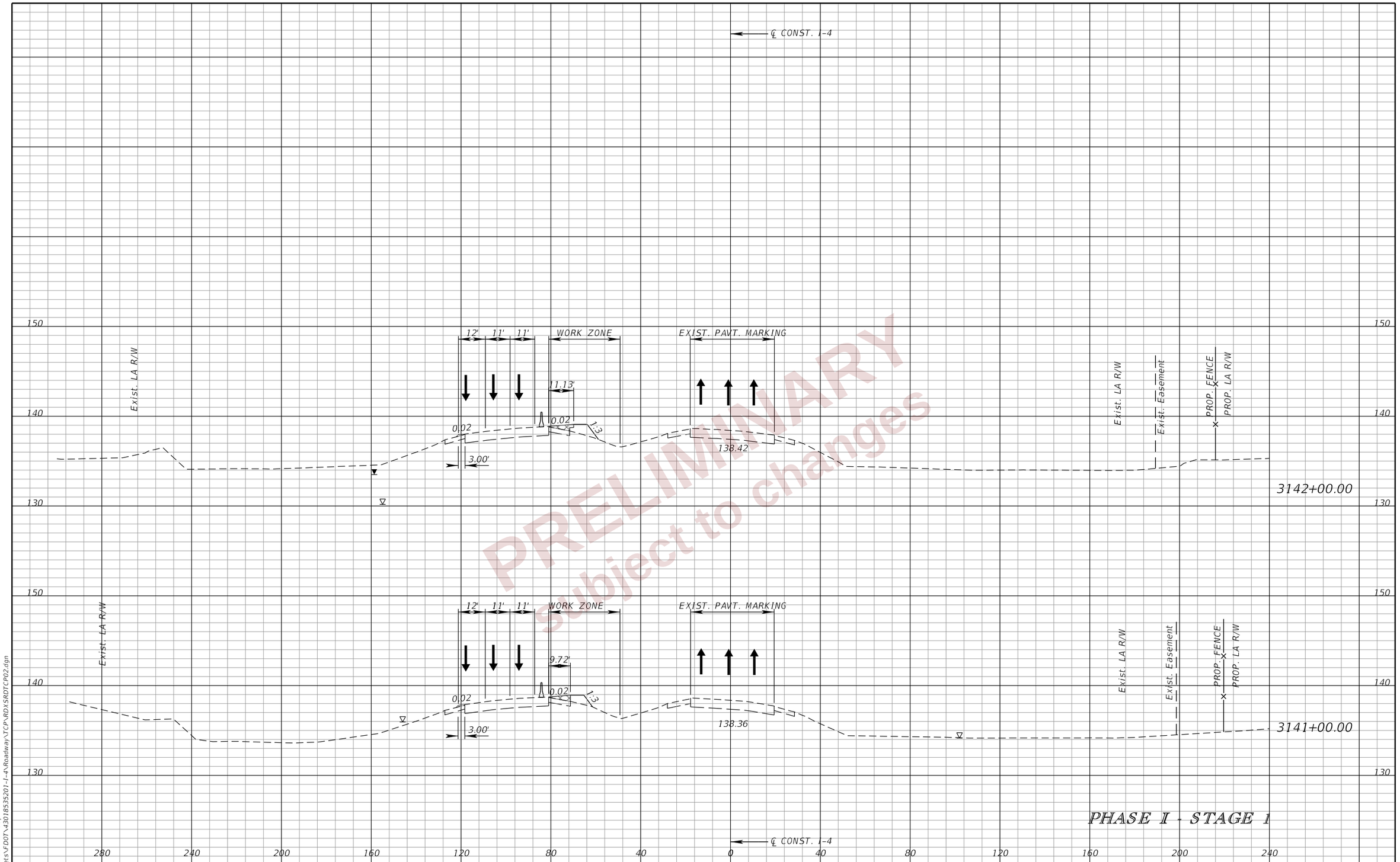

PRELIMINARY
subject to changes

REVISIONS			
DATE	DESCRIPTION	DATE	DESCRIPTION

ENGINEER OF RECORD

RYAN J. WILLIAMSON, P.E.
LICENSE NUMBER 81421
BURGESS & NIPLE, INC.
1800 PEMBROOK DRIVE, SUITE 265
ORLANDO, FL 32810

STATE OF FLORIDA
DEPARTMENT OF TRANSPORTATION

ROAD NO.	COUNTY	FINANCIAL PROJECT ID
SR 400	POLK	430185-3-52-01

TTC PLAN (38)
CROSS SECTIONS
I-4

SHEET NO. 542

THE OFFICIAL RECORD OF THIS SHEET IS THE ELECTRONIC FILE DIGITALLY SIGNED AND SEALED UNDER RULE 61G15-23.004, F.A.C.

2/28/2024 7:08:50 PM dgw
P:\ORD_FDOT\WorkSets\FDOT\430185352O1-I-4\Roadway\TCP\RDXSRDTCP02.dgn

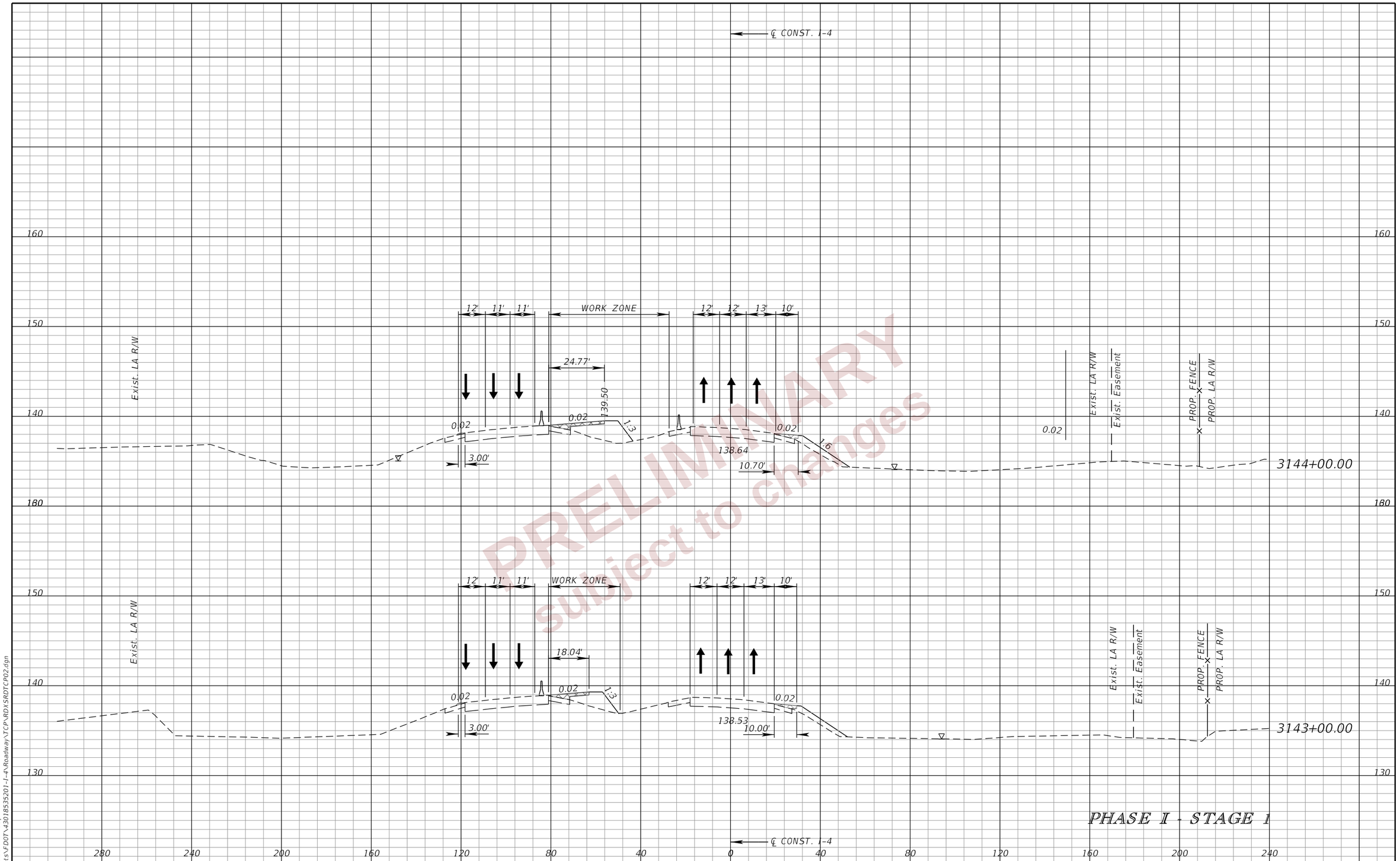

PRELIMINARY
subject to changes

PHASE I - STAGE 1

REVISIONS			
DATE	DESCRIPTION	DATE	DESCRIPTION

ENGINEER OF RECORD

RYAN J. WILLIAMSON, P.E.
LICENSE NUMBER 81421
BURGESS & NIPLE, INC.
1800 PEMBROOK DRIVE, SUITE 265
ORLANDO, FL 32810

STATE OF FLORIDA
DEPARTMENT OF TRANSPORTATION

ROAD NO.	COUNTY	FINANCIAL PROJECT ID
SR 400	POLK	430185-3-52-01

TTC PLAN (39)
CROSS SECTIONS
I-4

SHEET NO. 543

2/28/2024 7:08:53 PM day.
P:\ORD_FDOT\WorkSets\FDOT\430185352O1-I-4\Roadway\TCP\RDXSRDTCP02.dgn

THE OFFICIAL RECORD OF THIS SHEET IS THE ELECTRONIC FILE DIGITALLY SIGNED AND SEALED UNDER RULE 61G15-23.004, F.A.C.

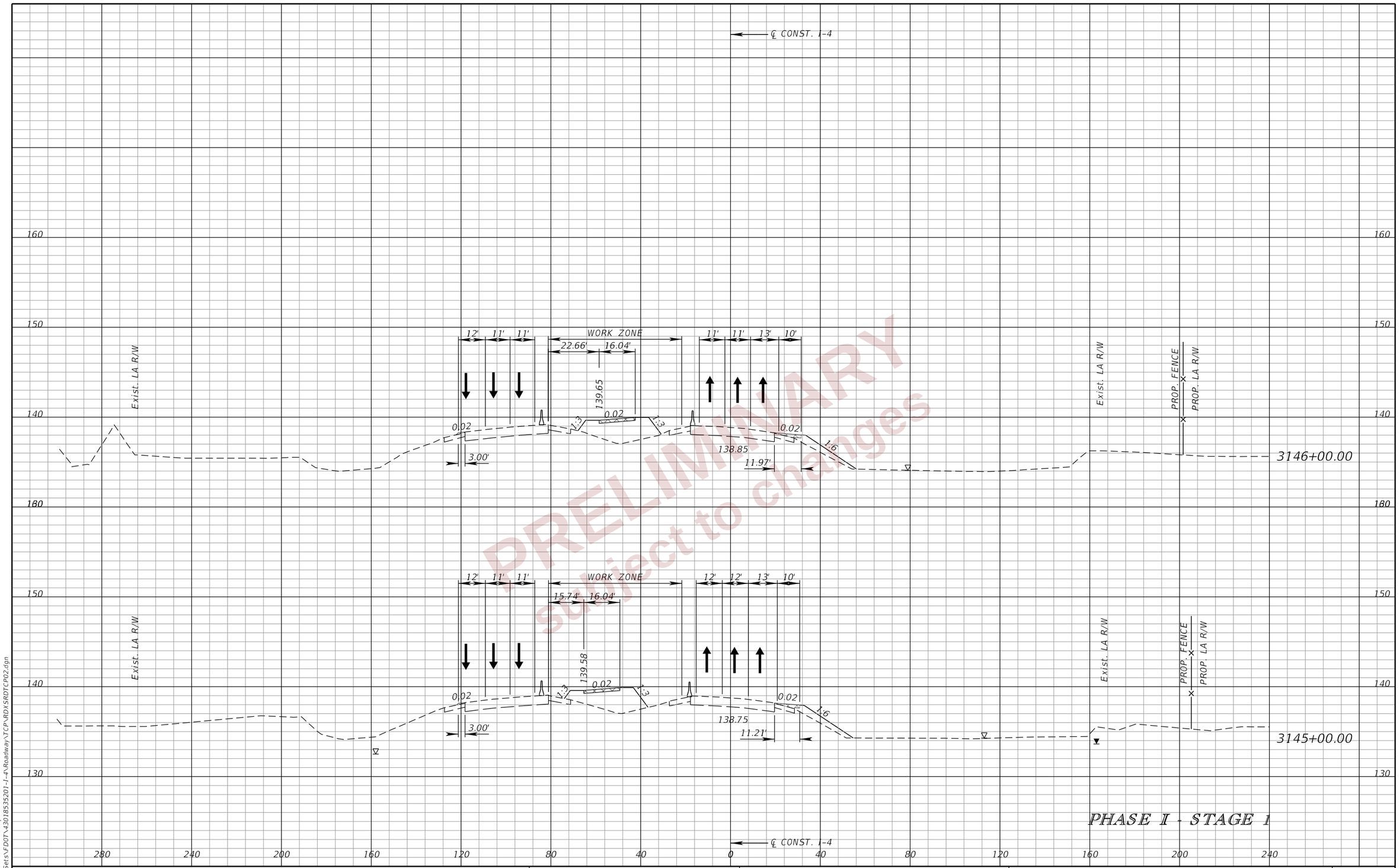

PRELIMINARY
subject to changes

PHASE I - STAGE 1

REVISIONS			
DATE	DESCRIPTION	DATE	DESCRIPTION

ENGINEER OF RECORD

RYAN J. WILLIAMSON, P.E.
LICENSE NUMBER 81421
BURGESS & NIPLE, INC.
1800 PEMBROOK DRIVE, SUITE 265
ORLANDO, FL 32810

STATE OF FLORIDA
DEPARTMENT OF TRANSPORTATION

ROAD NO.	COUNTY	FINANCIAL PROJECT ID
SR 400	POLK	430185-3-52-01

TTC PLAN (40)
CROSS SECTIONS
I-4

SHEET NO. 544

2/28/2024 7:08:56 PM day.
P:\ORD_FDOT\WorkSets\FDOT\430185352O1-I-4\Roadway\TCP\RDXSRDTCP02.dgn

THE OFFICIAL RECORD OF THIS SHEET IS THE ELECTRONIC FILE DIGITALLY SIGNED AND SEALED UNDER RULE 61G15-23.004, F.A.C.

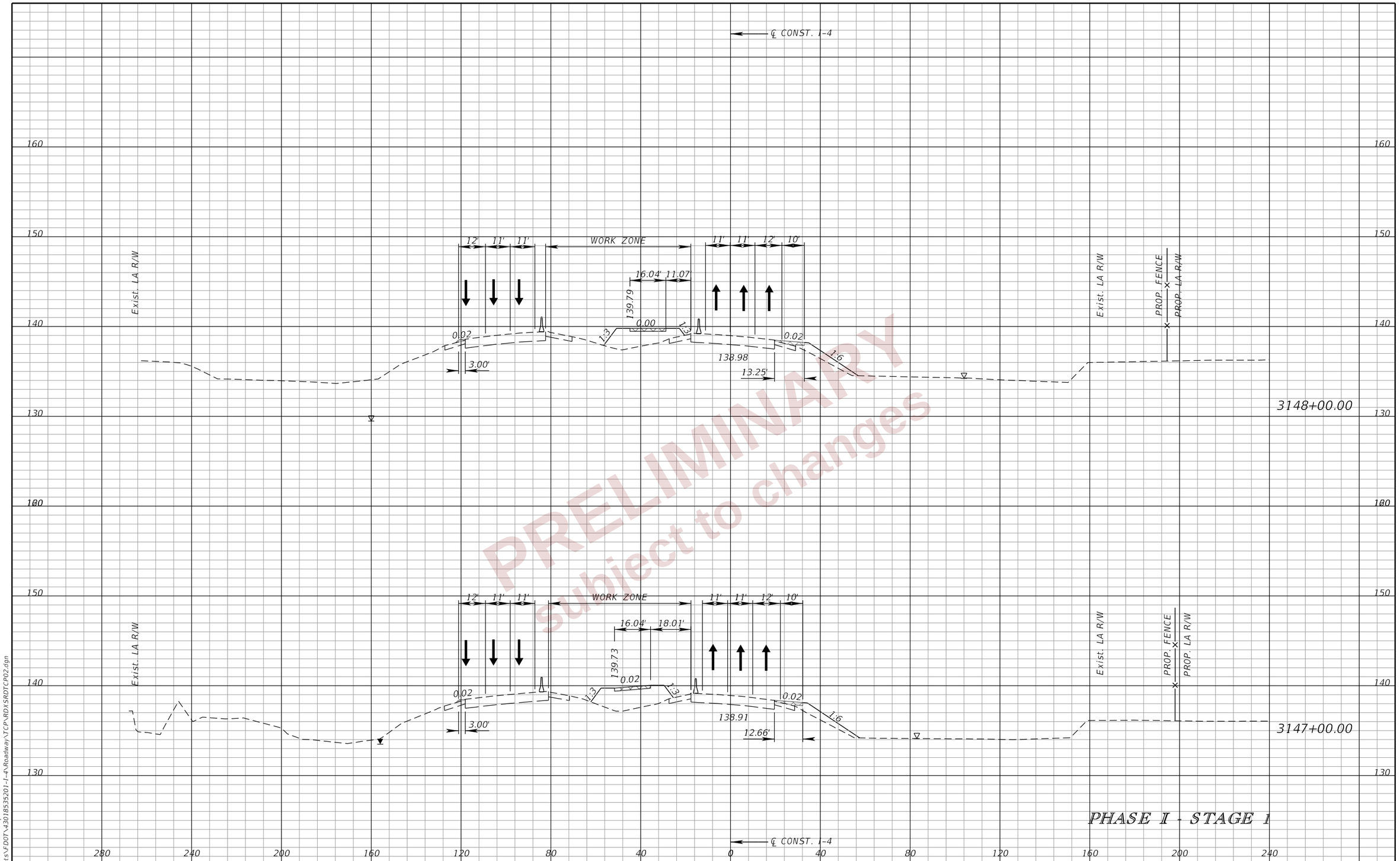

PRELIMINARY
subject to changes

REVISIONS			
DATE	DESCRIPTION	DATE	DESCRIPTION

ENGINEER OF RECORD
RYAN J. WILLIAMSON, P.E.
LICENSE NUMBER 81421
BURGESS & NIPLE, INC.
1800 PEMBROOK DRIVE, SUITE 265
ORLANDO, FL 32810

STATE OF FLORIDA
DEPARTMENT OF TRANSPORTATION

ROAD NO.	COUNTY	FINANCIAL PROJECT ID
SR 400	POLK	430185-3-52-01

TTC PLAN (41)
CROSS SECTIONS
I-4

SHEET NO. 545

THE OFFICIAL RECORD OF THIS SHEET IS THE ELECTRONIC FILE DIGITALLY SIGNED AND SEALED UNDER RULE 61G15-23.004, F.A.C.

2/28/2024 7:08:59 PM day.
P:\ORD_FDOT\WorkSets\FDOT\430185352O1-I-4\Roadway\TCP\RDXSRDTCP02.dgn

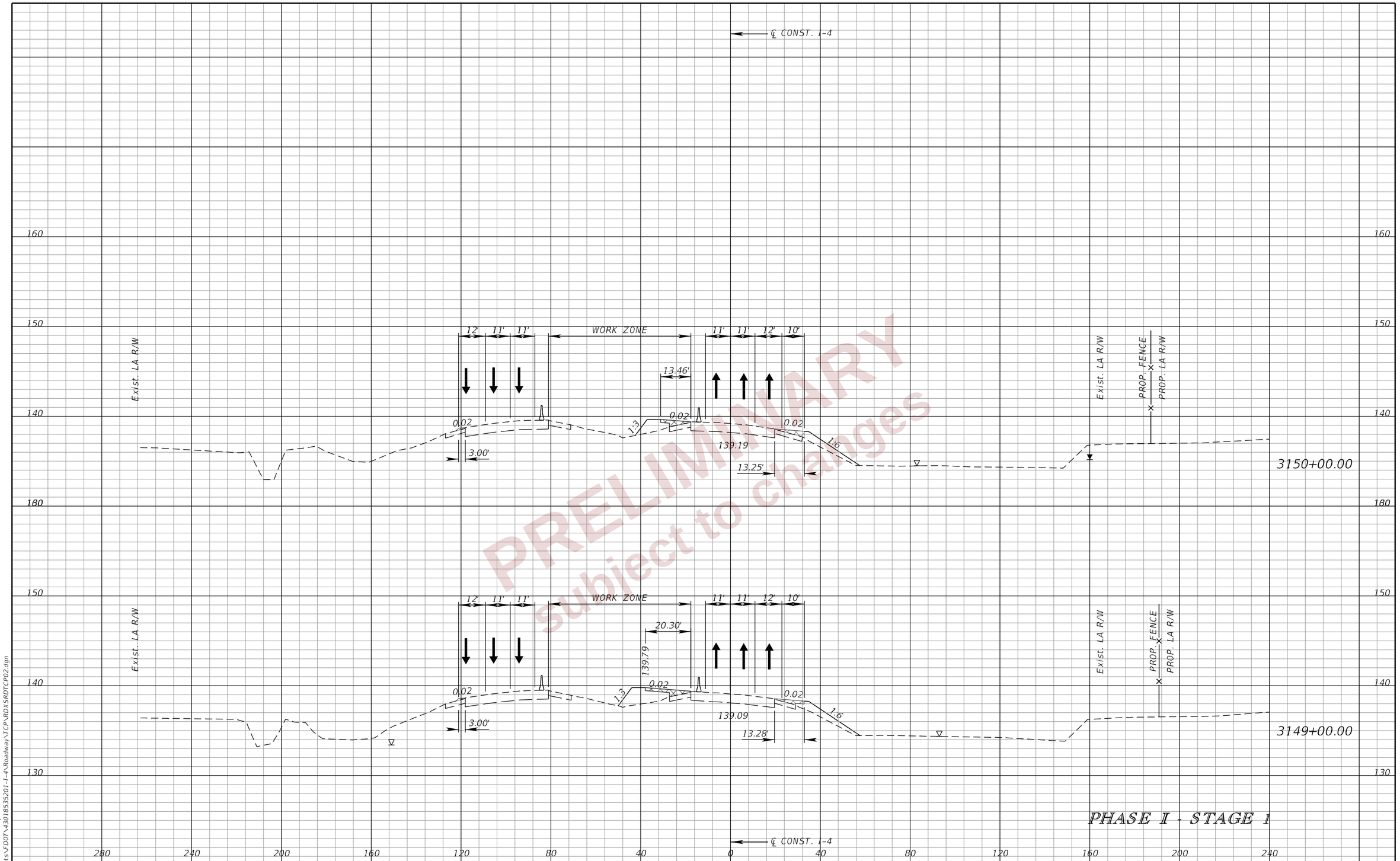

PRELIMINARY
subject to changes

PHASE I - STAGE 1

REVISIONS				ENGINEER OF RECORD	STATE OF FLORIDA DEPARTMENT OF TRANSPORTATION			TTC PLAN (42) CROSS SECTIONS I-4	SHEET NO.
DATE	DESCRIPTION	DATE	DESCRIPTION	RYAN J. WILLIAMSON, P.E. LICENSE NUMBER 81421 BURGESS & NIPLE, INC. 1800 PEMBROOK DRIVE, SUITE 265 ORLANDO, FL 32810	ROAD NO.	COUNTY	FINANCIAL PROJECT ID		546
					SR 400	POLK	430185-3-52-01		

2/28/2024 7:09:02 PM day
P:\ORD_FDOT\WorkSets\FDOT\430185352O1-I-4\Roadway\TCP\RDXSRDTCP02.dgn

THE OFFICIAL RECORD OF THIS SHEET IS THE ELECTRONIC FILE DIGITALLY SIGNED AND SEALED UNDER RULE 61G15-23.004, F.A.C.

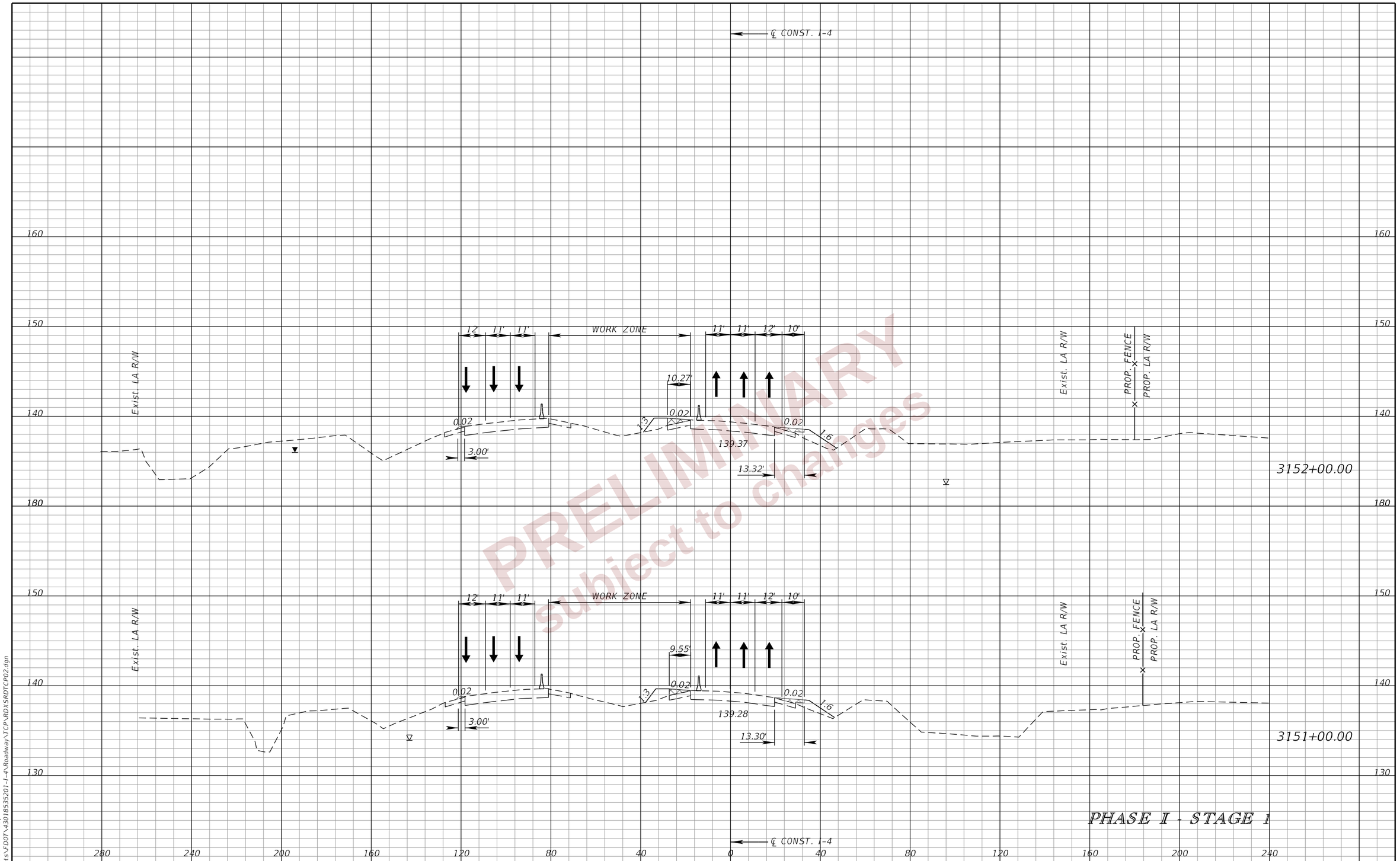

PRELIMINARY
subject to changes

PHASE I - STAGE 1

REVISIONS			
DATE	DESCRIPTION	DATE	DESCRIPTION

ENGINEER OF RECORD
RYAN J. WILLIAMSON, P.E.
LICENSE NUMBER 81421
BURGESS & NIPLE, INC.
1800 PEMBROOK DRIVE, SUITE 265
ORLANDO, FL 32810

STATE OF FLORIDA
DEPARTMENT OF TRANSPORTATION

ROAD NO.	COUNTY	FINANCIAL PROJECT ID
SR 400	POLK	430185-3-52-01

TTC PLAN (43)
CROSS SECTIONS
I-4

SHEET NO. 547

THE OFFICIAL RECORD OF THIS SHEET IS THE ELECTRONIC FILE DIGITALLY SIGNED AND SEALED UNDER RULE 61G15-23.004, F.A.C.

2/28/2024 7:09:03 PM day
P:\ORD_FDOT\WorkSets\FDOT\430185352O1-I-4\Roadway\TCP\RDXSRDTCP02.dgn

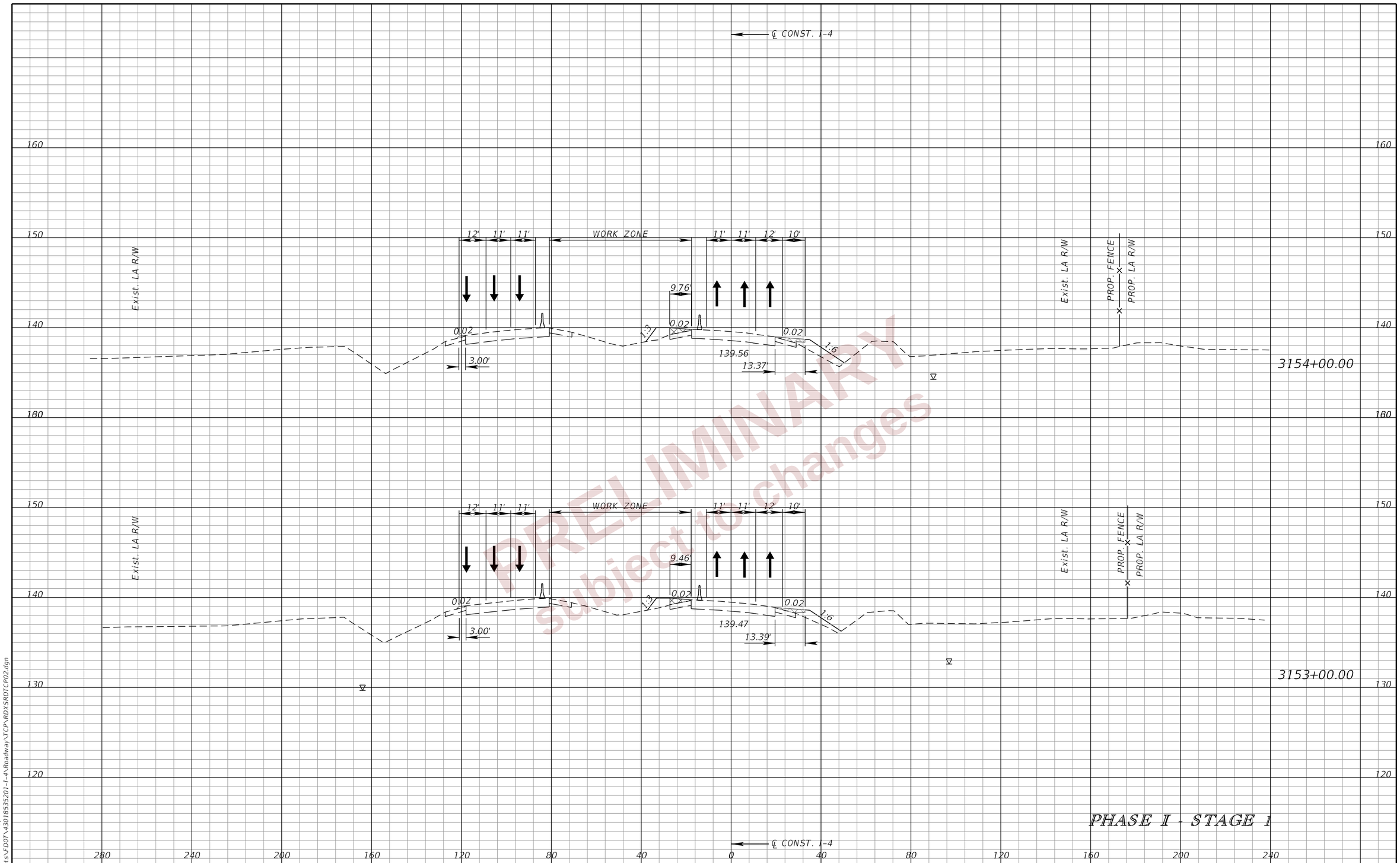

PRELIMINARY
subject to changes

PHASE I - STAGE 1

REVISIONS				ENGINEER OF RECORD	STATE OF FLORIDA DEPARTMENT OF TRANSPORTATION			TTC PLAN (44) CROSS SECTIONS I-4	SHEET NO.
DATE	DESCRIPTION	DATE	DESCRIPTION	RYAN J. WILLIAMSON, P.E. LICENSE NUMBER 81421 BURGESS & NIPLE, INC. 1800 PEMBROOK DRIVE, SUITE 265 ORLANDO, FL 32810	ROAD NO.	COUNTY	FINANCIAL PROJECT ID		548
					SR 400	POLK	430185-3-52-01		

THE OFFICIAL RECORD OF THIS SHEET IS THE ELECTRONIC FILE DIGITALLY SIGNED AND SEALED UNDER RULE 61G15-23.004, F.A.C.

2/28/2024 7:09:06 PM day
P:\ORD_FDOT\WorkSets\FDOT\430185352O1-I-4\Roadway\TCP\RDXSRDTCP02.dgn

PHASE I - STAGE 1

PRELIMINARY
subject to changes

REVISIONS			
DATE	DESCRIPTION	DATE	DESCRIPTION

ENGINEER OF RECORD
RYAN J. WILLIAMSON, P.E.
LICENSE NUMBER 81421
BURGESS & NIPLE, INC.
1800 PEMBROOK DRIVE, SUITE 265
ORLANDO, FL 32810

STATE OF FLORIDA
DEPARTMENT OF TRANSPORTATION

ROAD NO.	COUNTY	FINANCIAL PROJECT ID
SR 400	POLK	430185-3-52-01

TTC PLAN (45)
CROSS SECTIONS
I-4

SHEET NO. 549

THE OFFICIAL RECORD OF THIS SHEET IS THE ELECTRONIC FILE DIGITALLY SIGNED AND SEALED UNDER RULE 61G15-23.004, F.A.C.

2/28/2024 7:09:09 PM day
P:\ORD_FDOT\WorkSets\FDOT\430185352O1-I-4\Roadway\TCP\RDXSRDTCP02.dgn

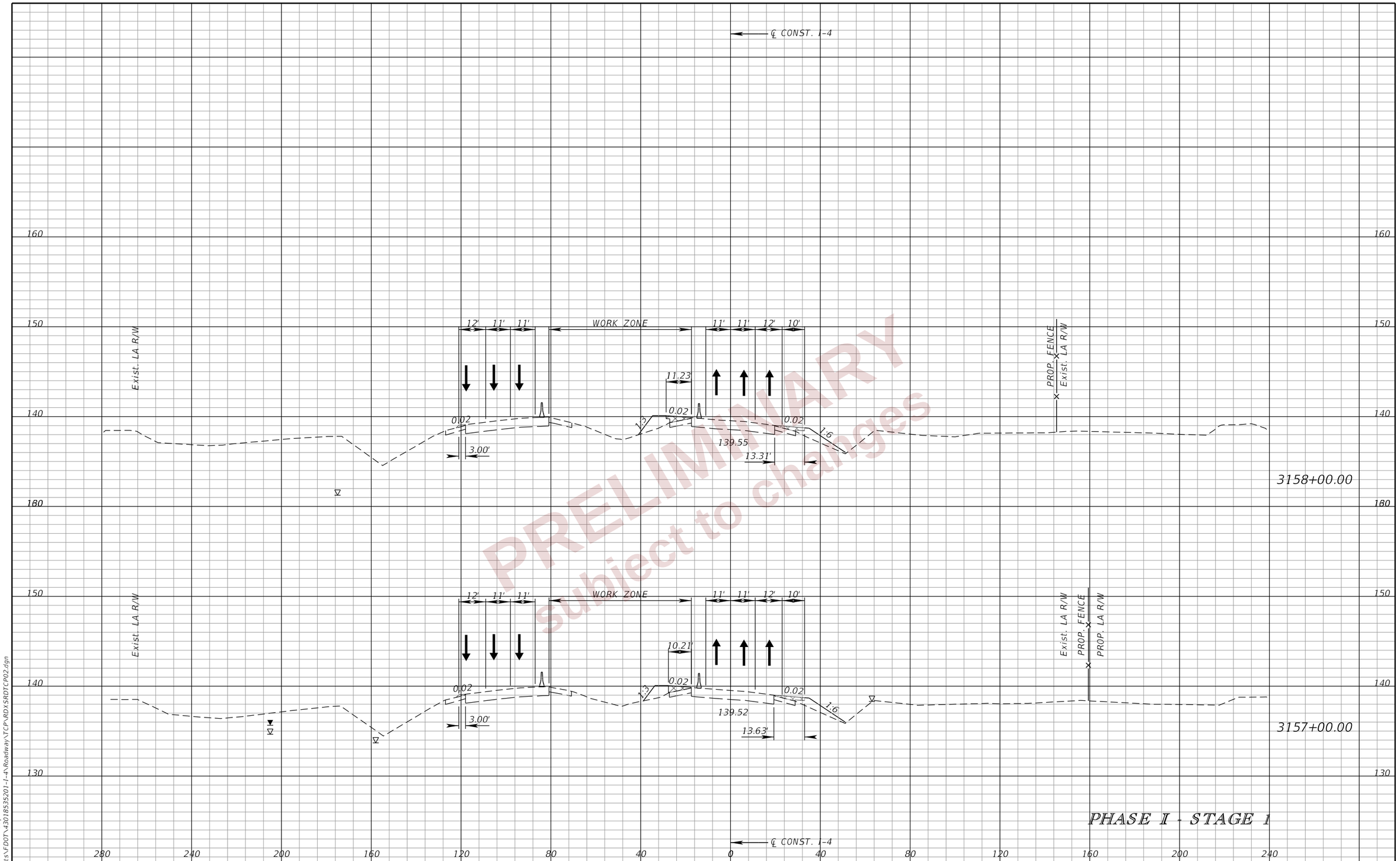

PRELIMINARY
subject to changes

PHASE I - STAGE 1

REVISIONS				ENGINEER OF RECORD	STATE OF FLORIDA DEPARTMENT OF TRANSPORTATION			TTC PLAN (46) CROSS SECTIONS I-4	SHEET NO.
DATE	DESCRIPTION	DATE	DESCRIPTION	RYAN J. WILLIAMSON, P.E. LICENSE NUMBER 81421 BURGESS & NIPLE, INC. 1800 PEMBROOK DRIVE, SUITE 265 ORLANDO, FL 32810	ROAD NO.	COUNTY	FINANCIAL PROJECT ID		550
					SR 400	POLK	430185-3-52-01		

THE OFFICIAL RECORD OF THIS SHEET IS THE ELECTRONIC FILE DIGITALLY SIGNED AND SEALED UNDER RULE 61G15-23.004, F.A.C.

2/28/2024 7:09:12 PM day
P:\ORD_FDOT\WorkSets\FDOT\430185352O1-I-4\Roadway\TCP\RDXSRDTCP02.dgn

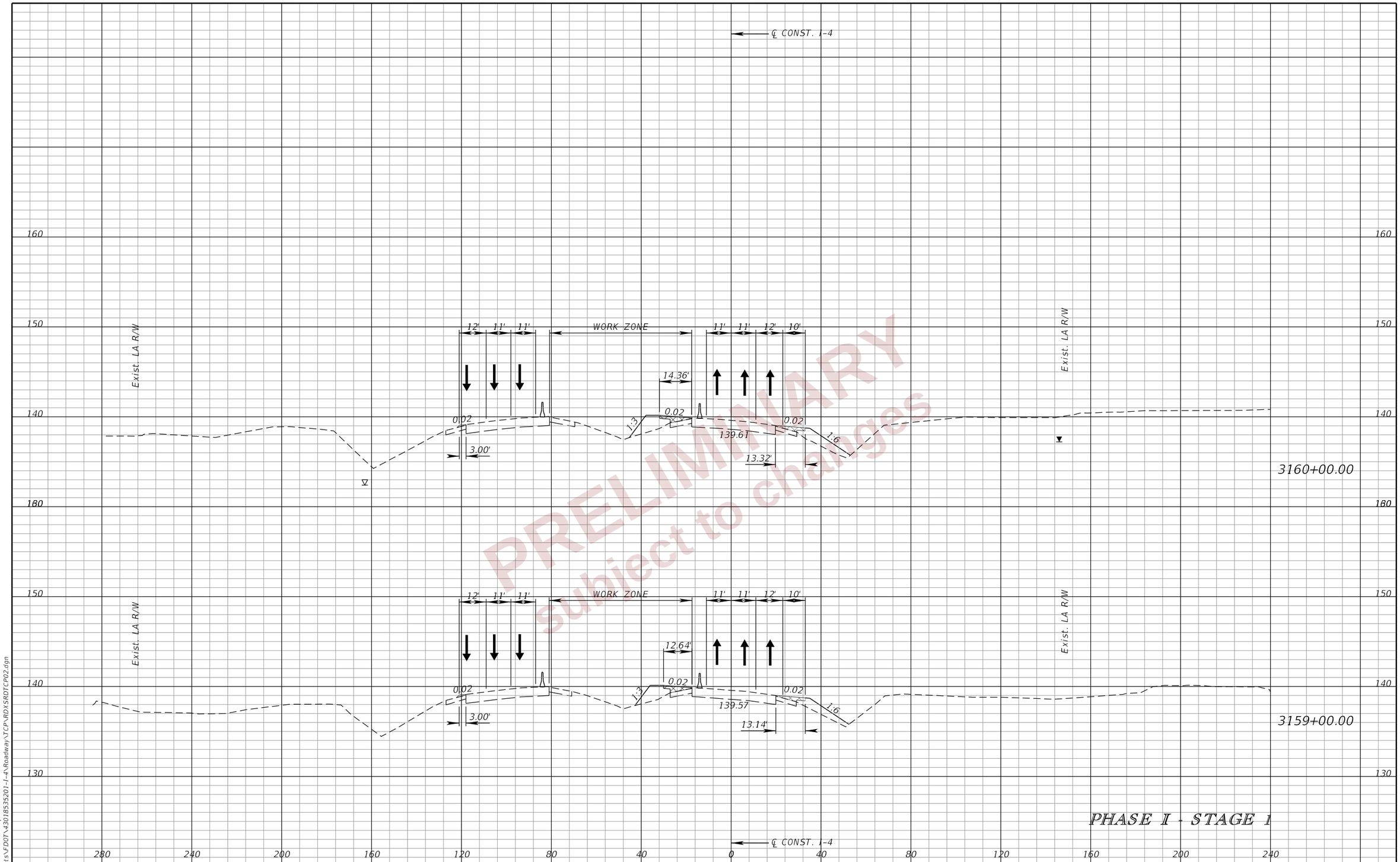

PRELIMINARY
subject to changes

PHASE I - STAGE 1

REVISIONS				ENGINEER OF RECORD	STATE OF FLORIDA DEPARTMENT OF TRANSPORTATION			TTC PLAN (47) CROSS SECTIONS I-4	SHEET NO.
DATE	DESCRIPTION	DATE	DESCRIPTION	RYAN J. WILLIAMSON, P.E. LICENSE NUMBER 81421 BURGESS & NIPLE, INC. 1800 PEMBROOK DRIVE, SUITE 265 ORLANDO, FL 32810	ROAD NO.	COUNTY	FINANCIAL PROJECT ID		551
					SR 400	POLK	430185-3-52-01		

THE OFFICIAL RECORD OF THIS SHEET IS THE ELECTRONIC FILE DIGITALLY SIGNED AND SEALED UNDER RULE 61G15-23.004, F.A.C.

2/28/2024 7:09:16 PM day
P:\ORD_FDOT\WorkSets\FDOT\430185352O1-I-4\Roadway\TCP\RDXSRDTCP02.dgn

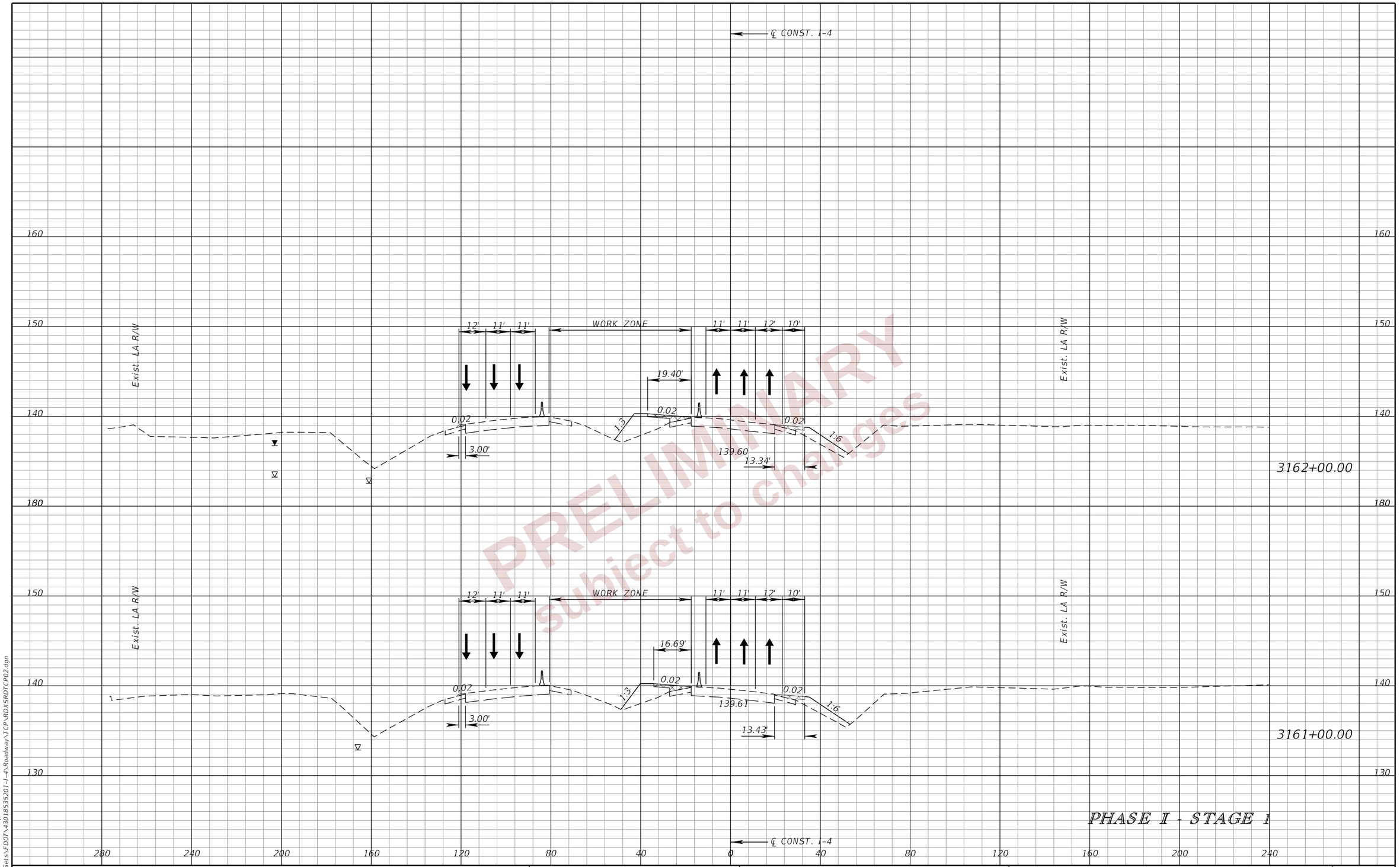

PHASE I - STAGE 1

PRELIMINARY
subject to changes

REVISIONS			
DATE	DESCRIPTION	DATE	DESCRIPTION

ENGINEER OF RECORD
RYAN J. WILLIAMSON, P.E.
LICENSE NUMBER 81421
BURGESS & NIPLE, INC.
1800 PEMBROOK DRIVE, SUITE 265
ORLANDO, FL 32810

STATE OF FLORIDA
DEPARTMENT OF TRANSPORTATION

ROAD NO.	COUNTY	FINANCIAL PROJECT ID
SR 400	POLK	430185-3-52-01

TTC PLAN (48)
CROSS SECTIONS
I-4

SHEET NO. 552

THE OFFICIAL RECORD OF THIS SHEET IS THE ELECTRONIC FILE DIGITALLY SIGNED AND SEALED UNDER RULE 61G15-23.004, F.A.C.

2/28/2024 7:09:19 PM day
P:\ORD_FDOT\WorkSets\FDOT\430185352O1-I-4\Roadway\TCP\RDXSRDTCP02.dgn

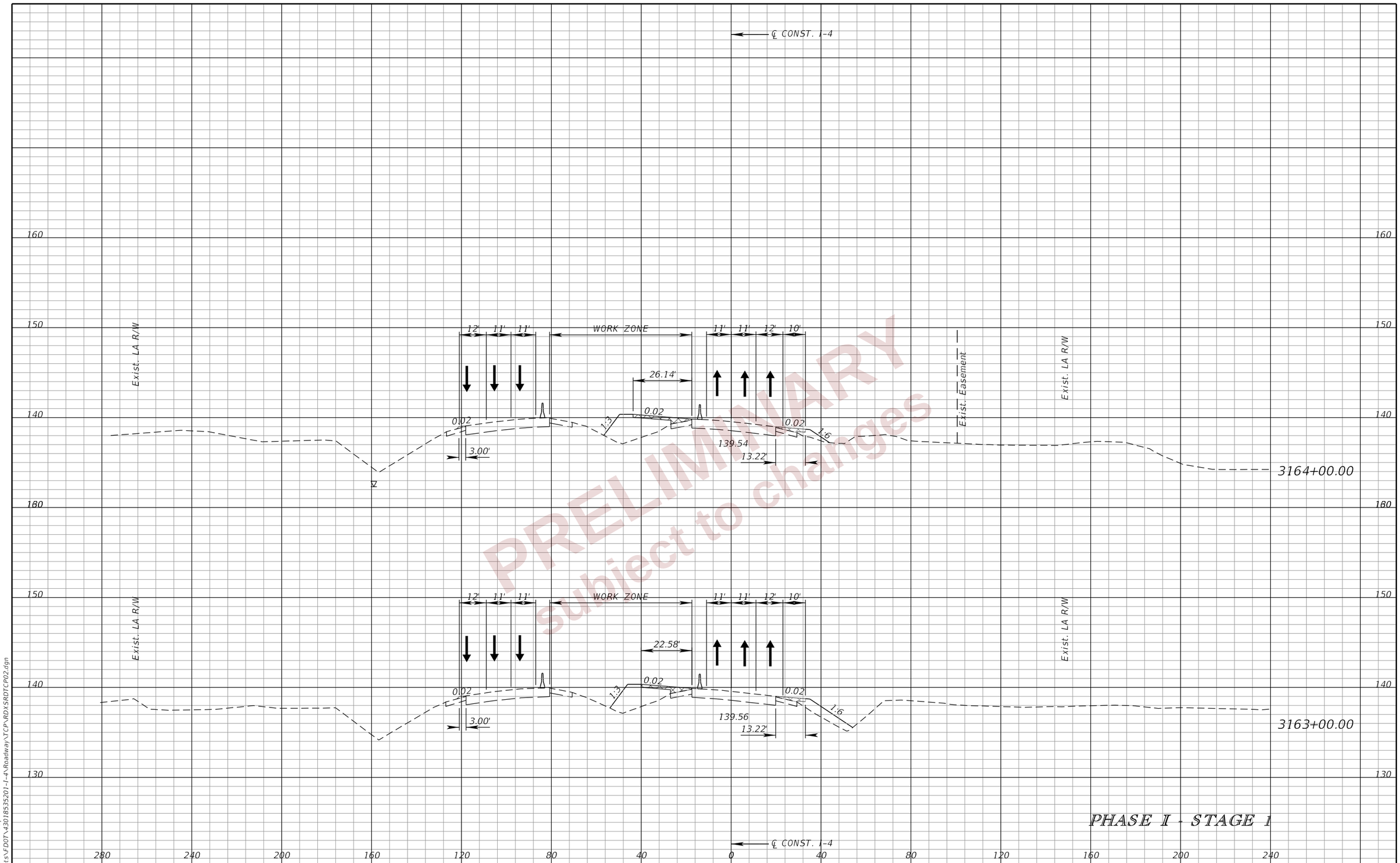

PRELIMINARY
Subject to changes

PHASE I - STAGE 1

REVISIONS				ENGINEER OF RECORD	STATE OF FLORIDA DEPARTMENT OF TRANSPORTATION			TTC PLAN (49) CROSS SECTIONS I-4	SHEET NO.
DATE	DESCRIPTION	DATE	DESCRIPTION	RYAN J. WILLIAMSON, P.E. LICENSE NUMBER 81421 BURGESS & NIPLE, INC. 1800 PEMBROOK DRIVE, SUITE 265 ORLANDO, FL 32810	ROAD NO.	COUNTY	FINANCIAL PROJECT ID		553
					SR 400	POLK	430185-3-52-01		

THE OFFICIAL RECORD OF THIS SHEET IS THE ELECTRONIC FILE DIGITALLY SIGNED AND SEALED UNDER RULE 61G15-23.004, F.A.C.

2/28/2024 7:09:22 PM day.
P:\ORD_FDOT\WorkSets\FDOT\430185352O1-I-4\Roadway\TCP\RDXSRDTCP02.dgn

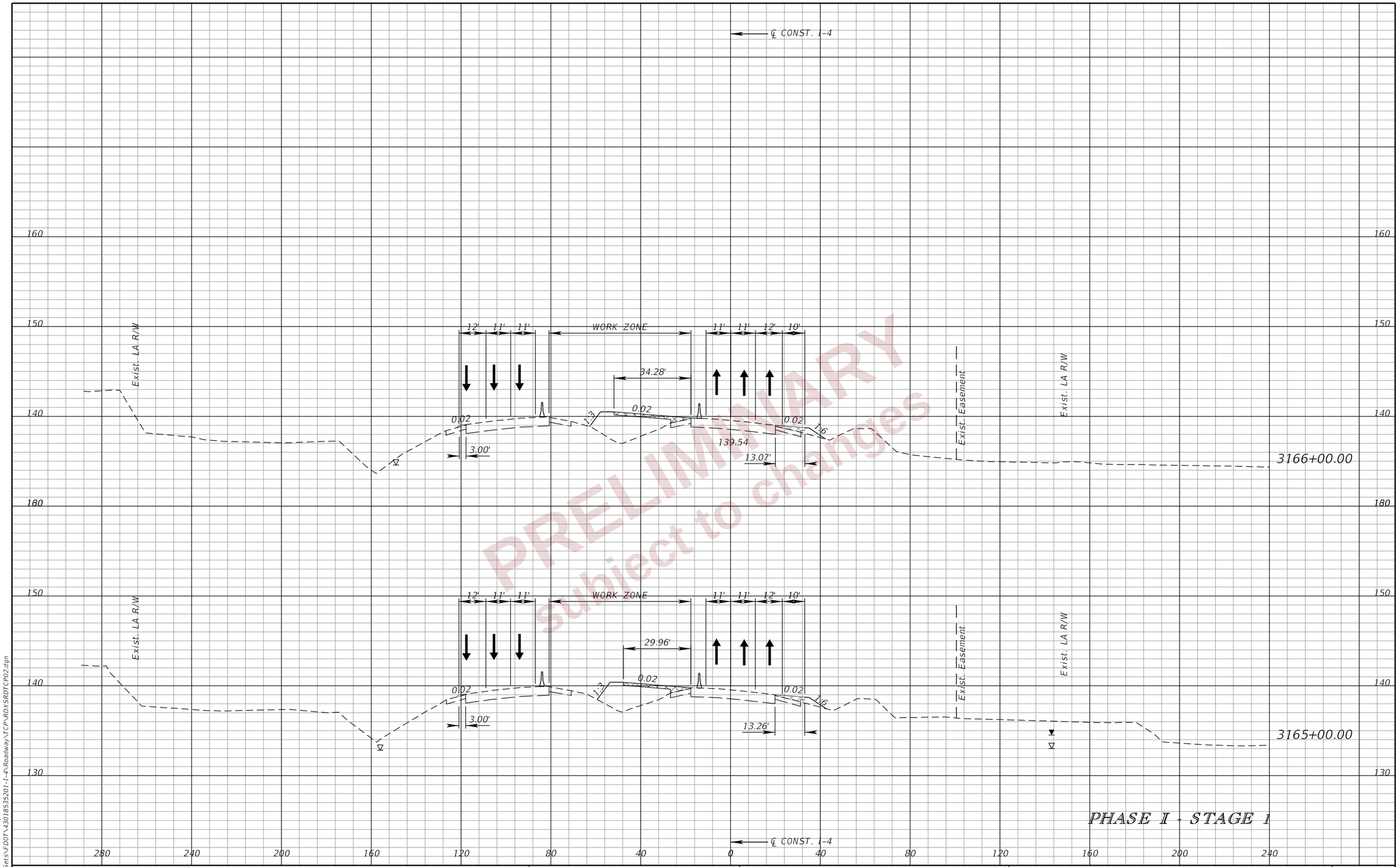

PRELIMINARY
Subject to changes

PHASE I - STAGE 1

REVISIONS				ENGINEER OF RECORD	STATE OF FLORIDA DEPARTMENT OF TRANSPORTATION			TTC PLAN (50) CROSS SECTIONS I-4	SHEET NO.
DATE	DESCRIPTION	DATE	DESCRIPTION	RYAN J. WILLIAMSON, P.E. LICENSE NUMBER 81421 BURGESS & NIPLE, INC. 1800 PEMBROOK DRIVE, SUITE 265 ORLANDO, FL 32810	ROAD NO.	COUNTY	FINANCIAL PROJECT ID		554
					SR 400	POLK	430185-3-52-01		

2/28/2024 7:09:25 PM day.
P:\ORD_FDOT\WorkSets\FDOT\430185352O1-I-4\Roadway\TCP\RDXSRDTCP02.dgn

THE OFFICIAL RECORD OF THIS SHEET IS THE ELECTRONIC FILE DIGITALLY SIGNED AND SEALED UNDER RULE 61G15-23.004, F.A.C.

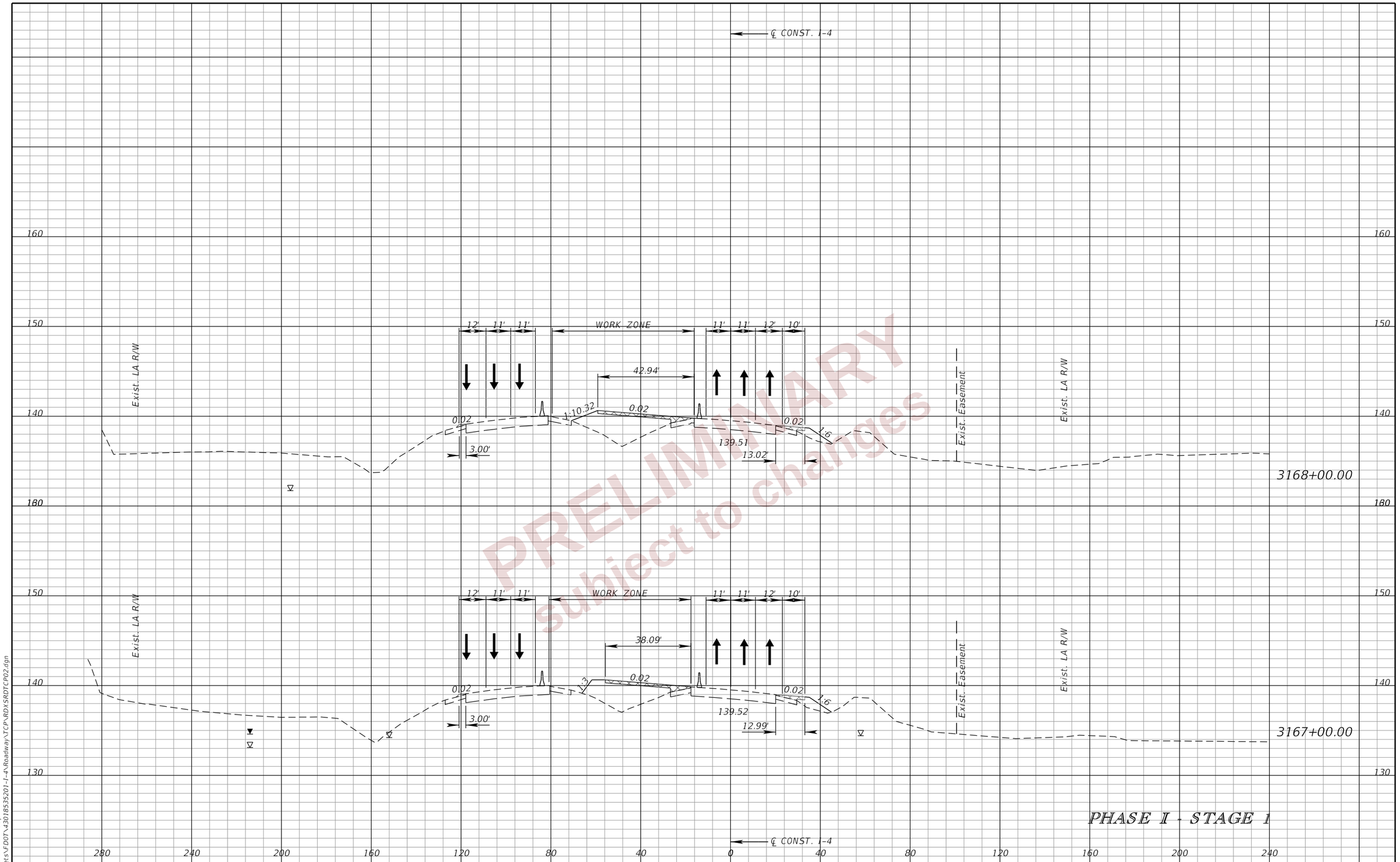

PRELIMINARY
subject to changes

REVISIONS				ENGINEER OF RECORD	STATE OF FLORIDA DEPARTMENT OF TRANSPORTATION			TTC PLAN (51) CROSS SECTIONS I-4	SHEET NO.
DATE	DESCRIPTION	DATE	DESCRIPTION	RYAN J. WILLIAMSON, P.E. LICENSE NUMBER 81421 BURGESS & NIPLE, INC. 1800 PEMBROOK DRIVE, SUITE 265 ORLANDO, FL 32810	ROAD NO.	COUNTY	FINANCIAL PROJECT ID		555
					SR 400	POLK	430185-3-52-01		

THE OFFICIAL RECORD OF THIS SHEET IS THE ELECTRONIC FILE DIGITALLY SIGNED AND SEALED UNDER RULE 61G15-23.004, F.A.C.

2/28/2024 7:09:28 PM dgw
P:\ORD_FDOT\WorkSets\FDOT\430185352O1-I-4\Roadway\TCP\RDXSRDTCP02.dgn

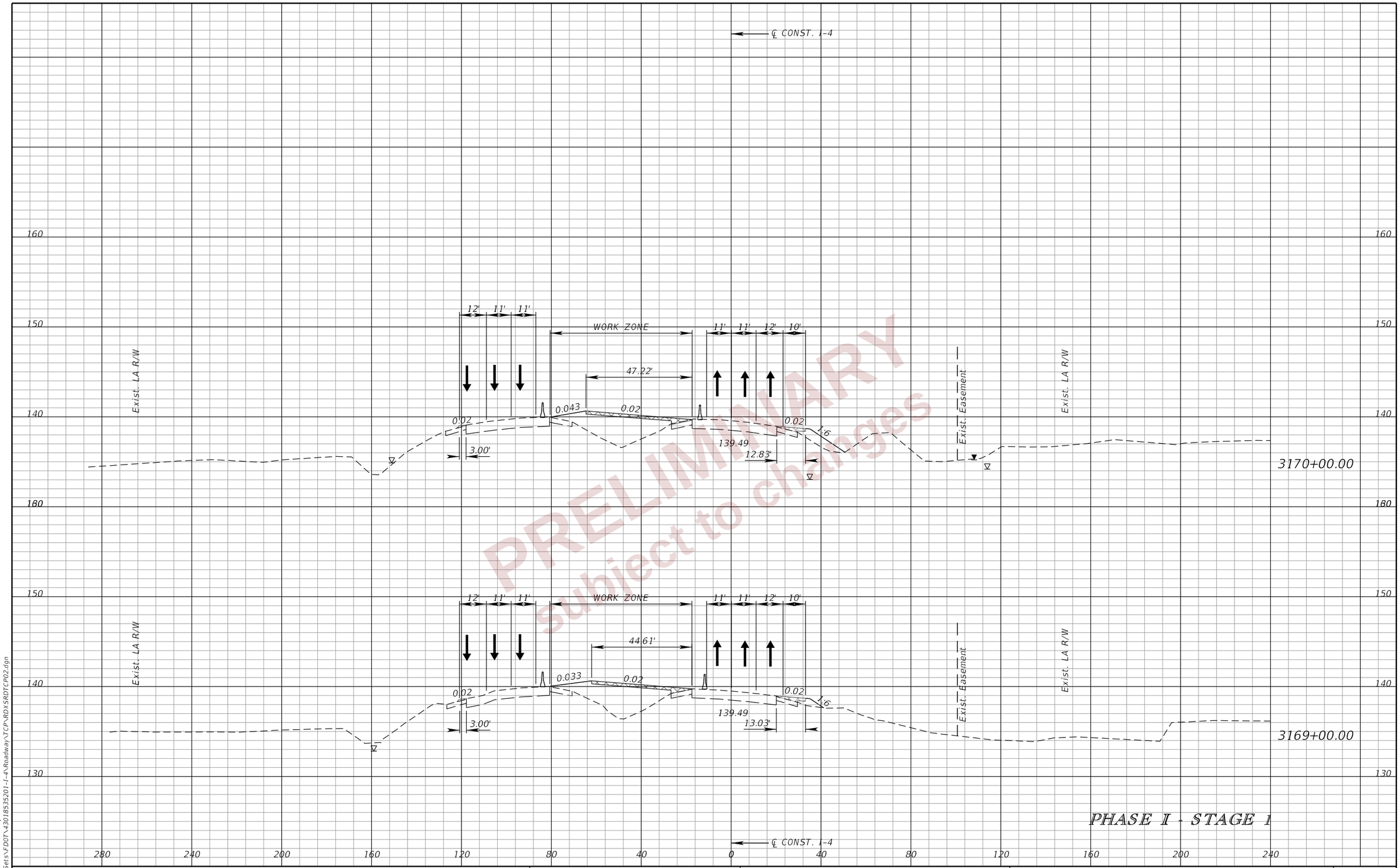

PRELIMINARY
subject to changes

PHASE I - STAGE 1

REVISIONS			
DATE	DESCRIPTION	DATE	DESCRIPTION

ENGINEER OF RECORD
RYAN J. WILLIAMSON, P.E.
LICENSE NUMBER 81421
BURGESS & NIPLE, INC.
1800 PEMBROOK DRIVE, SUITE 265
ORLANDO, FL 32810

STATE OF FLORIDA
DEPARTMENT OF TRANSPORTATION

ROAD NO.	COUNTY	FINANCIAL PROJECT ID
SR 400	POLK	430185-3-52-01

TTC PLAN (52)
CROSS SECTIONS
I-4

SHEET NO. 556

THE OFFICIAL RECORD OF THIS SHEET IS THE ELECTRONIC FILE DIGITALLY SIGNED AND SEALED UNDER RULE 61G15-23.004, F.A.C.

2/28/2024 7:09:31 PM day.
P:\ORD_FDOT\WorkSets\FDOT\430185352O1-I-4\Roadway\TCP\RDXSRDTCP02.dgn

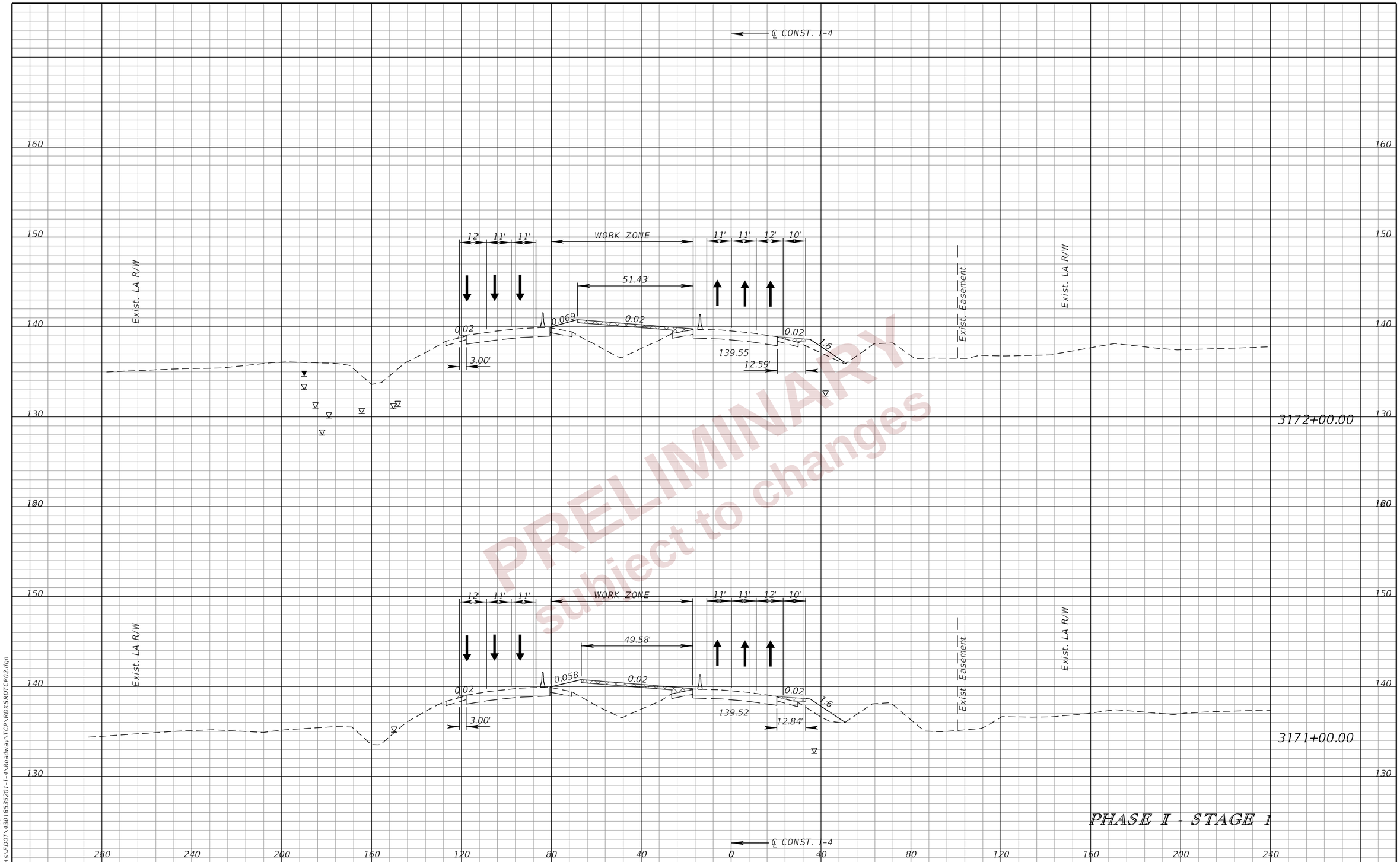

PRELIMINARY
subject to changes

PHASE I - STAGE 1

REVISIONS				ENGINEER OF RECORD	STATE OF FLORIDA DEPARTMENT OF TRANSPORTATION			TTC PLAN (53) CROSS SECTIONS I-4	SHEET NO.
DATE	DESCRIPTION	DATE	DESCRIPTION	RYAN J. WILLIAMSON, P.E. LICENSE NUMBER 81421 BURGESS & NIPLE, INC. 1800 PEMBROOK DRIVE, SUITE 265 ORLANDO, FL 32810	ROAD NO.	COUNTY	FINANCIAL PROJECT ID		557
					SR 400	POLK	430185-3-52-01		

2/28/2024 7:09:34 PM day.
P:\ORD_FDOT\WorkSets\FDOT\430185352\01-I-4\Roadway\TCP\RDXSRDTCP02.dgn

THE OFFICIAL RECORD OF THIS SHEET IS THE ELECTRONIC FILE DIGITALLY SIGNED AND SEALED UNDER RULE 61G15-23.004, F.A.C.

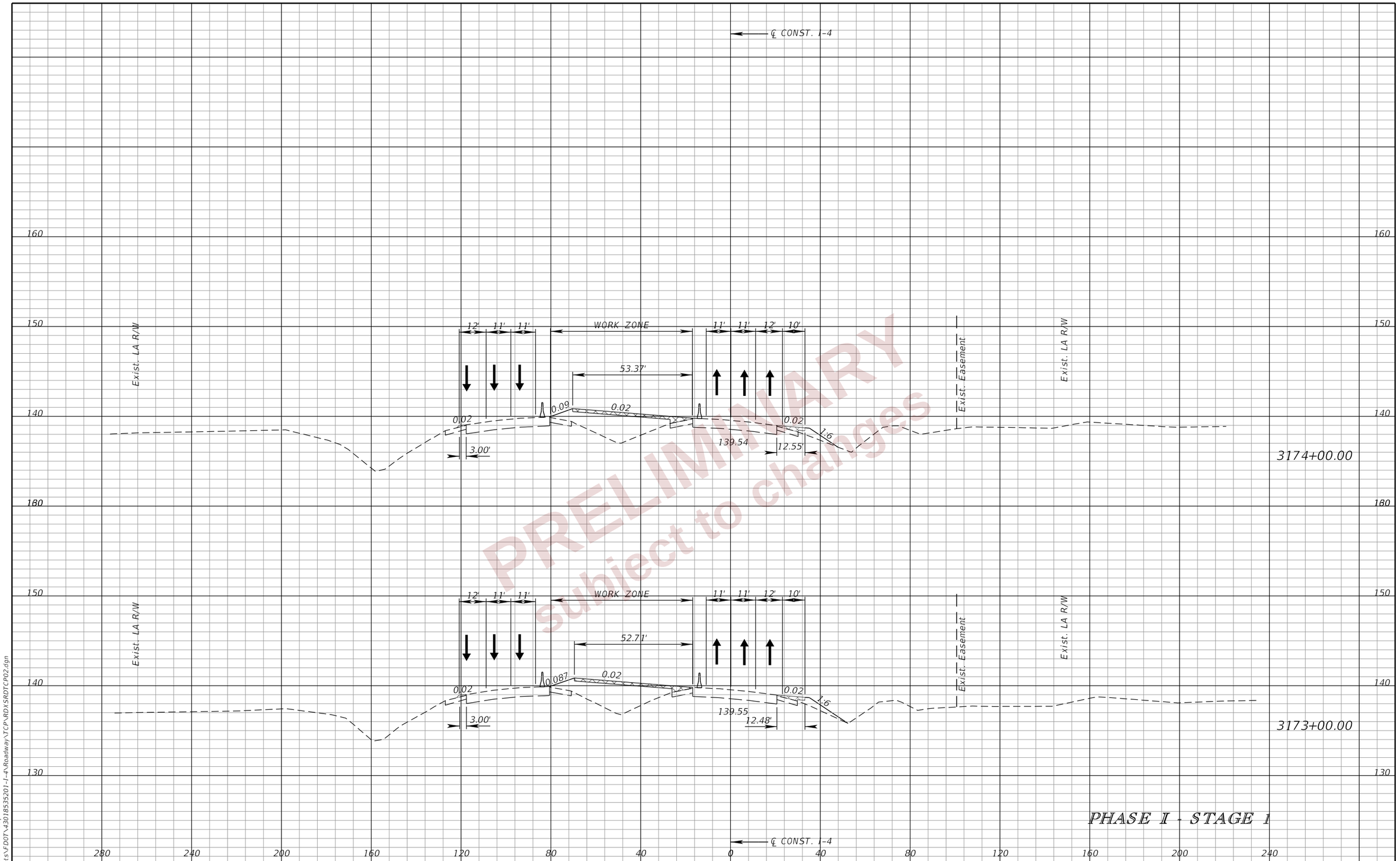

PRELIMINARY
subject to changes

PHASE I - STAGE 1

REVISIONS			
DATE	DESCRIPTION	DATE	DESCRIPTION

ENGINEER OF RECORD
RYAN J. WILLIAMSON, P.E.
LICENSE NUMBER 81421
BURGESS & NIPLE, INC.
1800 PEMBROOK DRIVE, SUITE 265
ORLANDO, FL 32810

STATE OF FLORIDA
DEPARTMENT OF TRANSPORTATION

ROAD NO.	COUNTY	FINANCIAL PROJECT ID
SR 400	POLK	430185-3-52-01

TTC PLAN (54)
CROSS SECTIONS
I-4

SHEET NO. 558

THE OFFICIAL RECORD OF THIS SHEET IS THE ELECTRONIC FILE DIGITALLY SIGNED AND SEALED UNDER RULE 61G15-23.004, F.A.C.

2/28/2024 7:09:38 PM day
P:\ORD_FDOT\WorkSets\FDOT\430185352O1-I-4\Roadway\TCP\RDXSRDTCP02.dgn

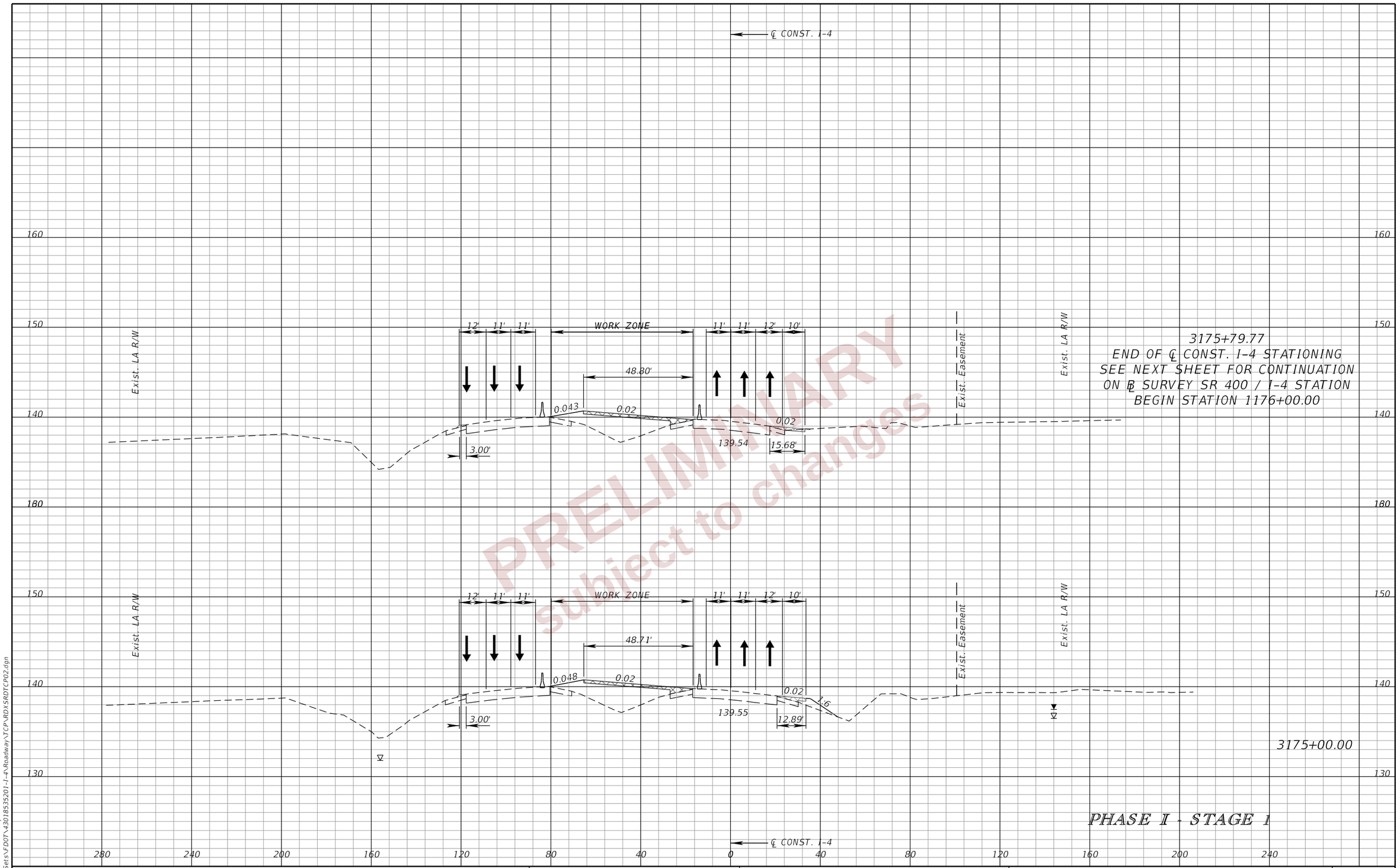

PRELIMINARY
subject to changes

PHASE I - STAGE 1

REVISIONS				ENGINEER OF RECORD	STATE OF FLORIDA DEPARTMENT OF TRANSPORTATION			TTC PLAN (55) CROSS SECTIONS I-4	SHEET NO.
DATE	DESCRIPTION	DATE	DESCRIPTION	RYAN J. WILLIAMSON, P.E. LICENSE NUMBER 81421 BURGESS & NIPLE, INC. 1800 PEMBROOK DRIVE, SUITE 265 ORLANDO, FL 32810	ROAD NO.	COUNTY	FINANCIAL PROJECT ID		559
					SR 400	POLK	430185-3-52-01		

2/28/2024 7:09:41 PM day
P:\ORD_FDOT\WorkSets\FDOT\430185352O1-I-4\Roadway\TCP\RDXSRDTCP02.dgn

THE OFFICIAL RECORD OF THIS SHEET IS THE ELECTRONIC FILE DIGITALLY SIGNED AND SEALED UNDER RULE 61G15-23.004, F.A.C.

PRELIMINARY
subject to changes

PHASE I - STAGE 1

REVISIONS				ENGINEER OF RECORD	STATE OF FLORIDA DEPARTMENT OF TRANSPORTATION			TTC PLAN (56) CROSS SECTIONS I-4	SHEET NO.
DATE	DESCRIPTION	DATE	DESCRIPTION	RYAN J. WILLIAMSON, P.E. LICENSE NUMBER 81421 BURGESS & NIPLE, INC. 1800 PEMBROOK DRIVE, SUITE 265 ORLANDO, FL 32810	ROAD NO.	COUNTY	FINANCIAL PROJECT ID		560
					SR 400	POLK	430185-3-52-01		

2/28/2024 7:09:44 PM day.
P:\ORD_FDOT\WorkSets\FDOT\430185352O1-I-4\Roadway\TCP\RDXSRDTCP02.dgn

THE OFFICIAL RECORD OF THIS SHEET IS THE ELECTRONIC FILE DIGITALLY SIGNED AND SEALED UNDER RULE 61G15-23.004, F.A.C.

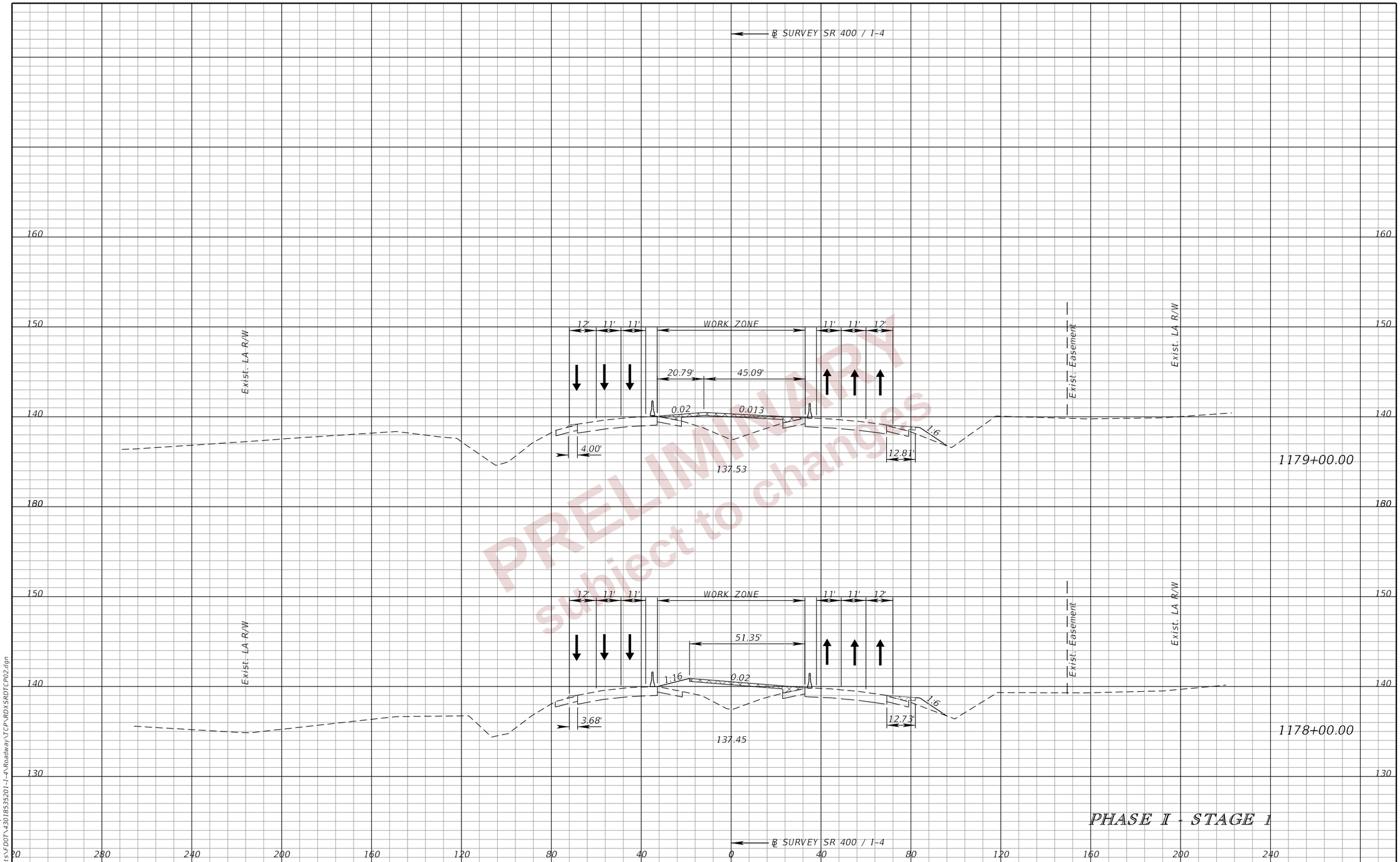

PRELIMINARY
subject to changes

PHASE I - STAGE 1

REVISIONS				ENGINEER OF RECORD	STATE OF FLORIDA DEPARTMENT OF TRANSPORTATION			TTC PLAN (57) CROSS SECTIONS I-4	SHEET NO.
DATE	DESCRIPTION	DATE	DESCRIPTION	RYAN J. WILLIAMSON, P.E. LICENSE NUMBER 81421 BURGESS & NIPLE, INC. 1800 PEMBROOK DRIVE, SUITE 265 ORLANDO, FL 32810	ROAD NO.	COUNTY	FINANCIAL PROJECT ID		561
					SR 400	POLK	430185-3-52-01		

THE OFFICIAL RECORD OF THIS SHEET IS THE ELECTRONIC FILE DIGITALLY SIGNED AND SEALED UNDER RULE 61G15-23.004, F.A.C.

2/28/2024 7:09:47 PM day.
P:\ORD_FDOT\WorkSets\FDOT\430185352O1-I-4\Roadway\TCP\RDXSRDTCP02.dgn

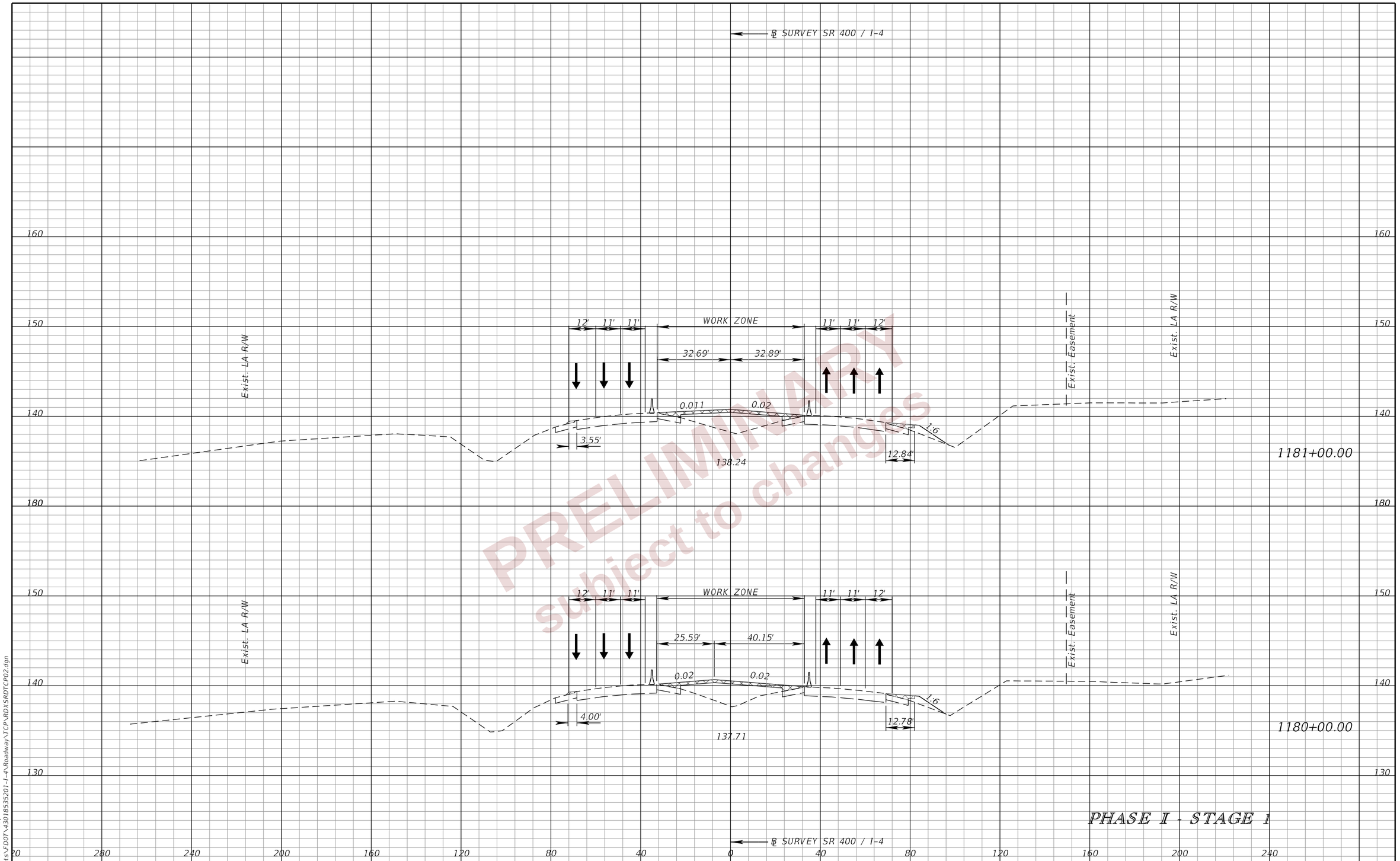

PRELIMINARY
subject to changes

REVISIONS			
DATE	DESCRIPTION	DATE	DESCRIPTION

ENGINEER OF RECORD
RYAN J. WILLIAMSON, P.E.
LICENSE NUMBER 81421
BURGESS & NIPLE, INC.
1800 PEMBROOK DRIVE, SUITE 265
ORLANDO, FL 32810

STATE OF FLORIDA
DEPARTMENT OF TRANSPORTATION

ROAD NO.	COUNTY	FINANCIAL PROJECT ID
SR 400	POLK	430185-3-52-01

TTC PLAN (58)
CROSS SECTIONS
I-4

SHEET NO. 562

THE OFFICIAL RECORD OF THIS SHEET IS THE ELECTRONIC FILE DIGITALLY SIGNED AND SEALED UNDER RULE 61G15-23.004, F.A.C.

2/28/2024 7:09:53 PM day
P:\ORD_FDOT\WorkSets\FDOT\430185352O1-I-4\Roadway\TCP\RDXSRDTCP02.dgn

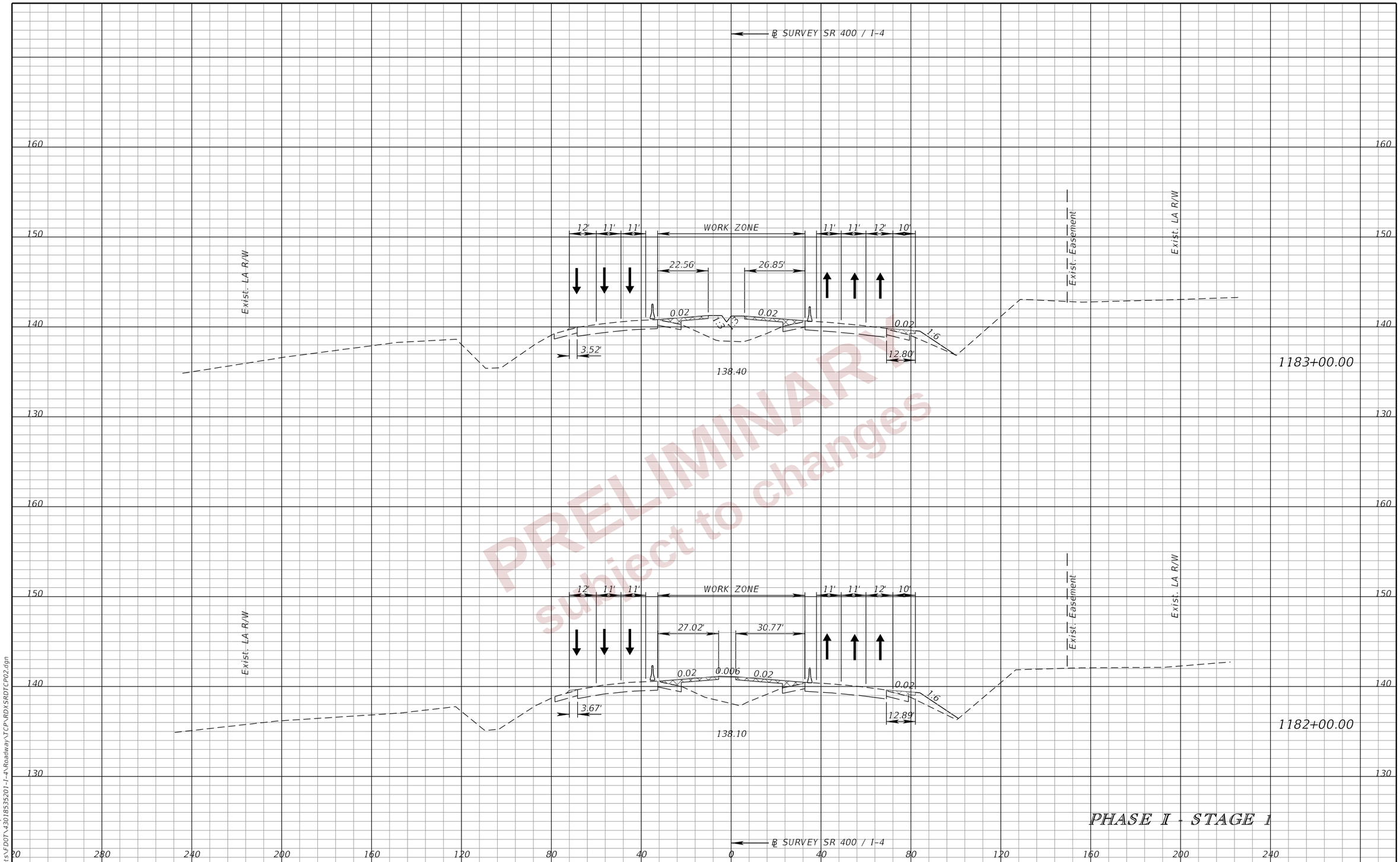

PRELIMINARY
subject to changes

PHASE I - STAGE 1

REVISIONS			
DATE	DESCRIPTION	DATE	DESCRIPTION

ENGINEER OF RECORD
RYAN J. WILLIAMSON, P.E.
LICENSE NUMBER 81421
BURGESS & NIPLE, INC.
1800 PEMBROOK DRIVE, SUITE 265
ORLANDO, FL 32810

STATE OF FLORIDA
DEPARTMENT OF TRANSPORTATION

ROAD NO.	COUNTY	FINANCIAL PROJECT ID
SR 400	POLK	430185-3-52-01

TTC PLAN (59)
CROSS SECTIONS
I-4

SHEET NO. 563

THE OFFICIAL RECORD OF THIS SHEET IS THE ELECTRONIC FILE DIGITALLY SIGNED AND SEALED UNDER RULE 61G15-23.004, F.A.C.

2/28/2024 7:09:57 PM day
P:\ORD_FDOT\WorkSets\FDOT\430185352\01-I-4\Roadway\TCP\RDXSRDTCP02.dgn

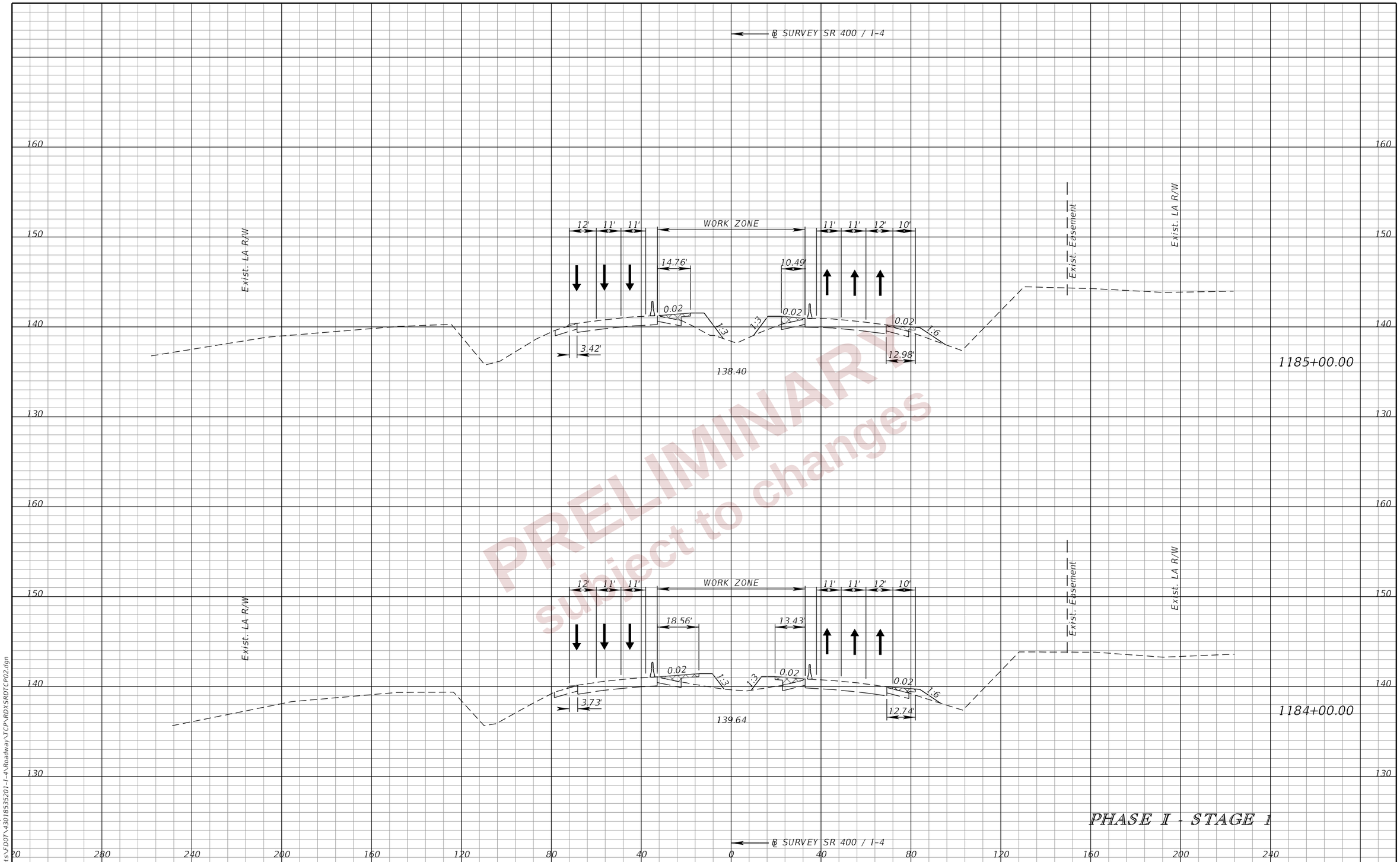

PRELIMINARY
subject to changes

REVISIONS			
DATE	DESCRIPTION	DATE	DESCRIPTION

ENGINEER OF RECORD
RYAN J. WILLIAMSON, P.E.
LICENSE NUMBER 81421
BURGESS & NIPLE, INC.
1800 PEMBROOK DRIVE, SUITE 265
ORLANDO, FL 32810

STATE OF FLORIDA
DEPARTMENT OF TRANSPORTATION

ROAD NO.	COUNTY	FINANCIAL PROJECT ID
SR 400	POLK	430185-3-52-01

TTC PLAN (60)
CROSS SECTIONS
I-4

SHEET NO. 564

THE OFFICIAL RECORD OF THIS SHEET IS THE ELECTRONIC FILE DIGITALLY SIGNED AND SEALED UNDER RULE 61G15-23.004, F.A.C.

2/28/2024 7:10:00 PM day
P:\ORD_FDOT\WorkSets\FDOT\430185352O1-I-4\Roadway\TCP\RDXSRDTCP02.dgn

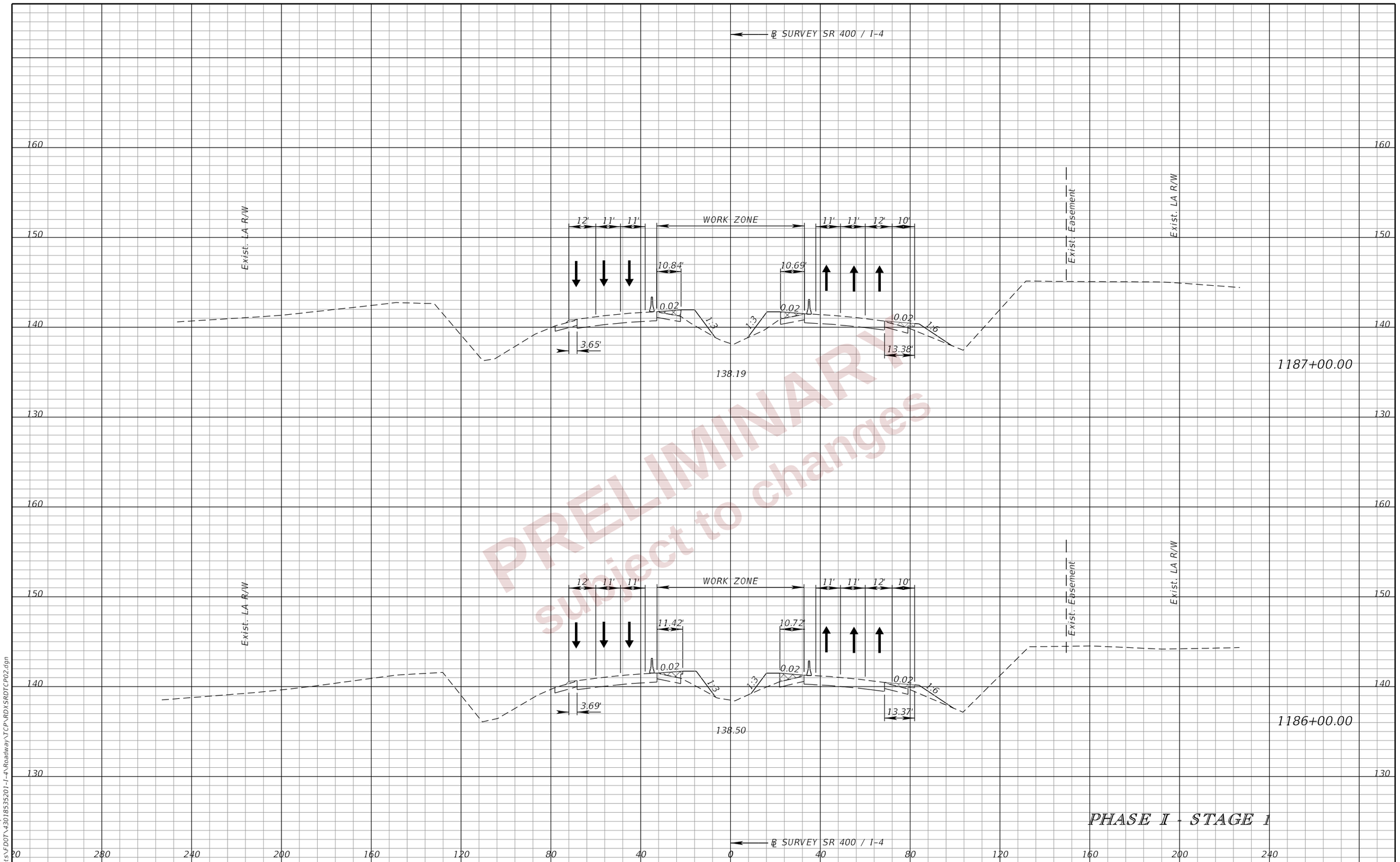

REVISIONS			
DATE	DESCRIPTION	DATE	DESCRIPTION

ENGINEER OF RECORD

RYAN J. WILLIAMSON, P.E.
LICENSE NUMBER 81421
BURGESS & NIPLE, INC.
1800 PEMBROOK DRIVE, SUITE 265
ORLANDO, FL 32810

STATE OF FLORIDA
DEPARTMENT OF TRANSPORTATION

ROAD NO.	COUNTY	FINANCIAL PROJECT ID
SR 400	POLK	430185-3-52-01

TTC PLAN (61)
CROSS SECTIONS
I-4

SHEET NO. 565

2/28/2024 7:10:03 PM day.
P:\ORD_FDOT\Work Sets\FDOT\430185352\01-I-4\Roadway\TCP\RDXSRDTCP02.dgn

THE OFFICIAL RECORD OF THIS SHEET IS THE ELECTRONIC FILE DIGITALLY SIGNED AND SEALED UNDER RULE 61G15-23.004, F.A.C.

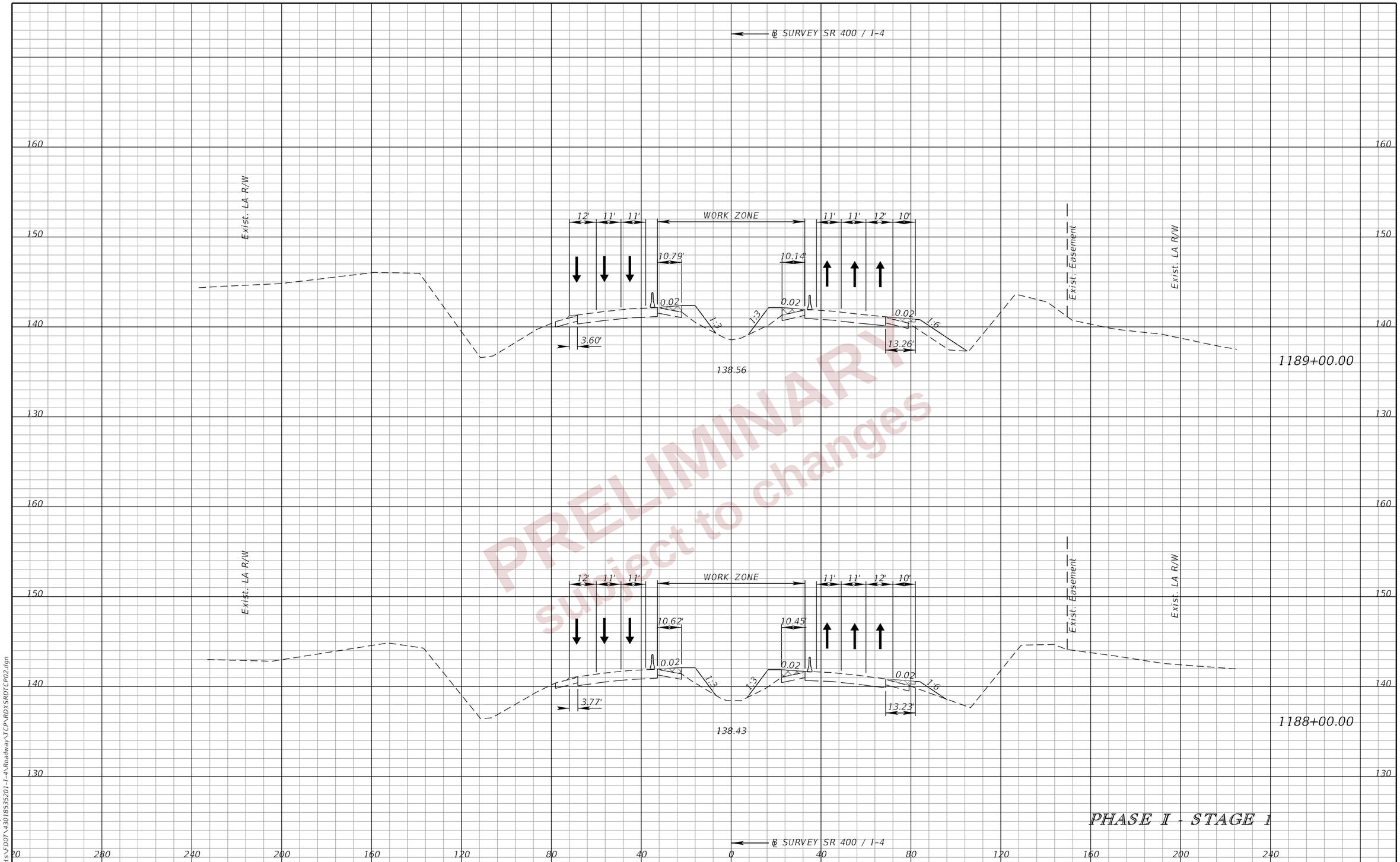

PRELIMINARY
subject to changes

REVISIONS			
DATE	DESCRIPTION	DATE	DESCRIPTION

ENGINEER OF RECORD
RYAN J. WILLIAMSON, P.E.
LICENSE NUMBER 81421
BURGESS & NIPLE, INC.
1800 PEMBROOK DRIVE, SUITE 265
ORLANDO, FL 32810

STATE OF FLORIDA
DEPARTMENT OF TRANSPORTATION

ROAD NO.	COUNTY	FINANCIAL PROJECT ID
SR 400	POLK	430185-3-52-01

TTC PLAN (62)
CROSS SECTIONS
I-4

SHEET NO. 566

2/28/2024 7:10:07 PM day
P:\ORD_FDOT\Work Sets\FDOT\430185352\01-I-4\Roadway\TCP\RDXSRDTCP02.dgn

THE OFFICIAL RECORD OF THIS SHEET IS THE ELECTRONIC FILE DIGITALLY SIGNED AND SEALED UNDER RULE 61G15-23.004, F.A.C.

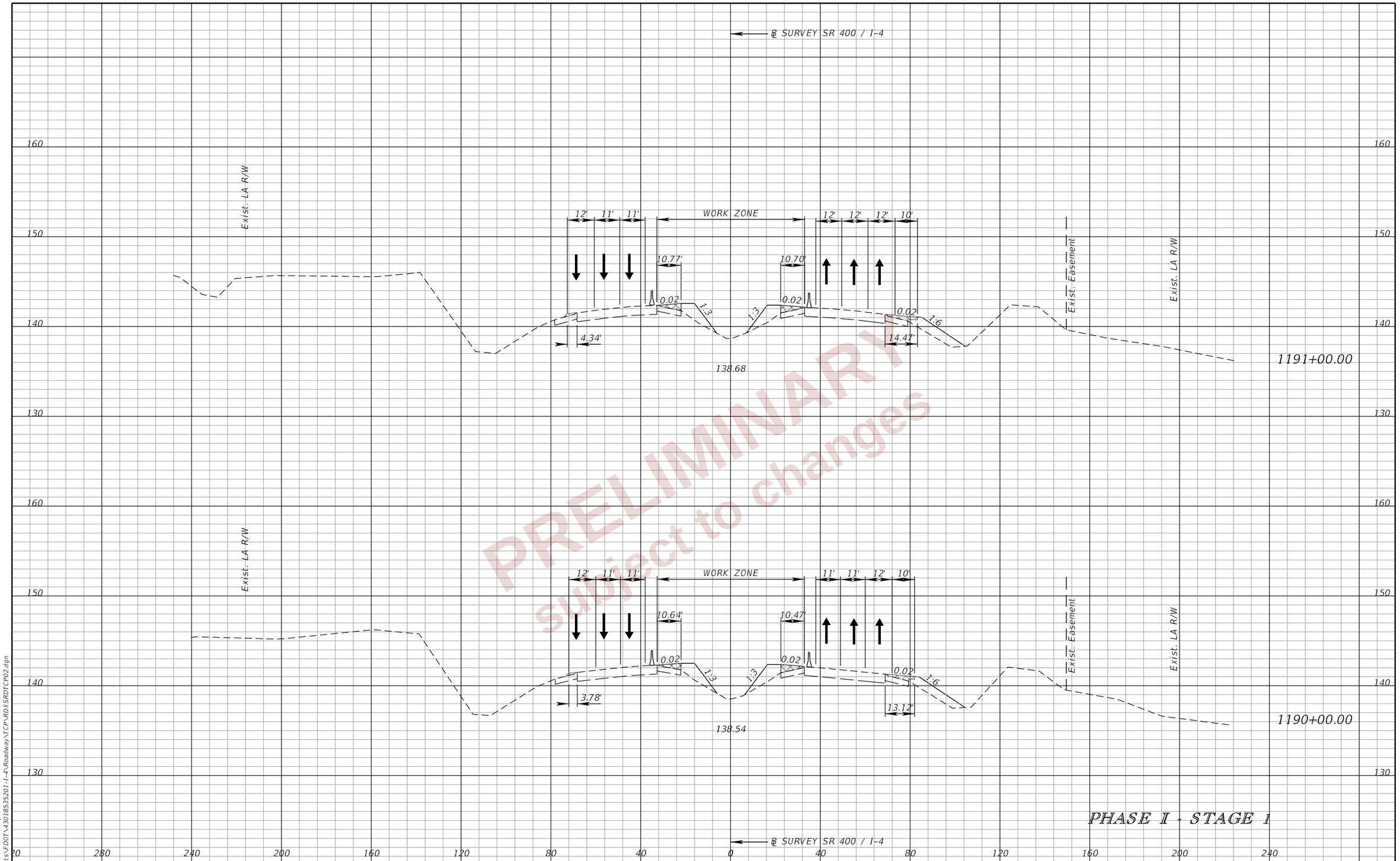

PRELIMINARY
subject to changes

REVISIONS			
DATE	DESCRIPTION	DATE	DESCRIPTION

ENGINEER OF RECORD
RYAN J. WILLIAMSON, P.E.
LICENSE NUMBER 81421
BURGESS & NIPLE, INC.
1800 PEMBROOK DRIVE, SUITE 265
ORLANDO, FL 32810

STATE OF FLORIDA
DEPARTMENT OF TRANSPORTATION

ROAD NO.	COUNTY	FINANCIAL PROJECT ID
SR 400	POLK	430185-3-52-01

TTC PLAN (63)
CROSS SECTIONS
I-4

SHEET NO. 567

THE OFFICIAL RECORD OF THIS SHEET IS THE ELECTRONIC FILE DIGITALLY SIGNED AND SEALED UNDER RULE 61G15-23.004, F.A.C.

2/28/2024 7:10:10 PM day
P:\ORD_FDOT\WorkSets\FDOT\430185352O1-I-4\Roadway\TCP\RDXSRDTCP02.dgn

℄ SURVEY SR 400 / I-4

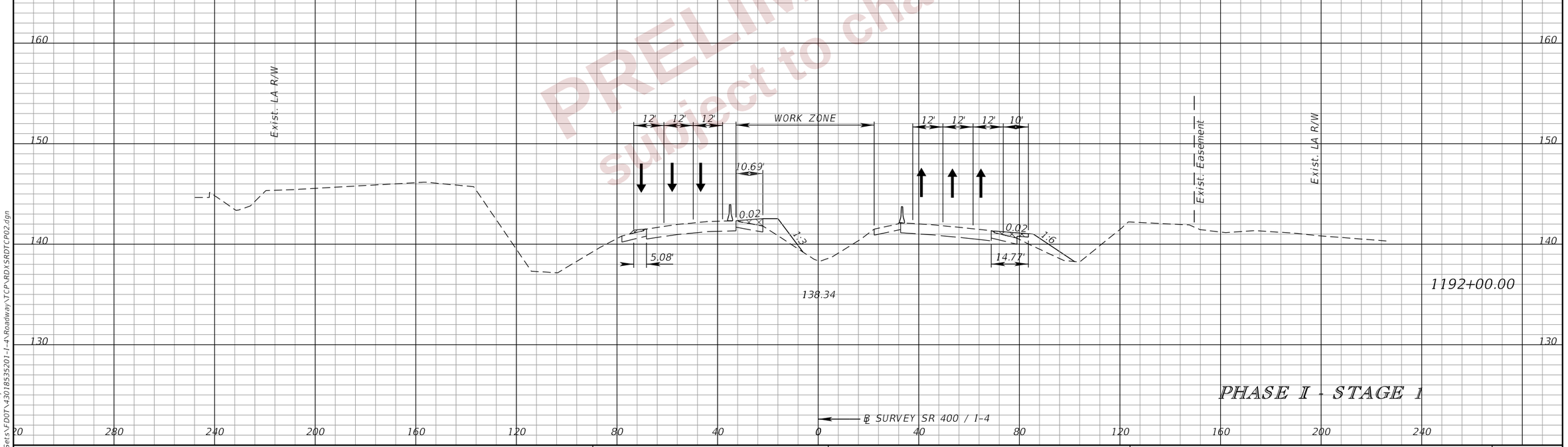

℄ SURVEY SR 400 / I-4

PHASE I - STAGE 1

PRELIMINARY
subject to changes

REVISIONS			
DATE	DESCRIPTION	DATE	DESCRIPTION

ENGINEER OF RECORD
RYAN J. WILLIAMSON, P.E.
LICENSE NUMBER 81421
BURGESS & NIPLE, INC.
1800 PEMBROOK DRIVE, SUITE 265
ORLANDO, FL 32810

STATE OF FLORIDA
DEPARTMENT OF TRANSPORTATION

ROAD NO.	COUNTY	FINANCIAL PROJECT ID
SR 400	POLK	430185-3-52-01

TTC PLAN (64)
CROSS SECTIONS
I-4

SHEET NO. 568

THE OFFICIAL RECORD OF THIS SHEET IS THE ELECTRONIC FILE DIGITALLY SIGNED AND SEALED UNDER RULE 61G15-23.004, F.A.C.

2/28/2024 7:10:13 PM day
P:\ORD_FDOT\WorkSets\FDOT\430185352O1-I-4\Roadway\TCP\RDXSRDTCP02.dgn

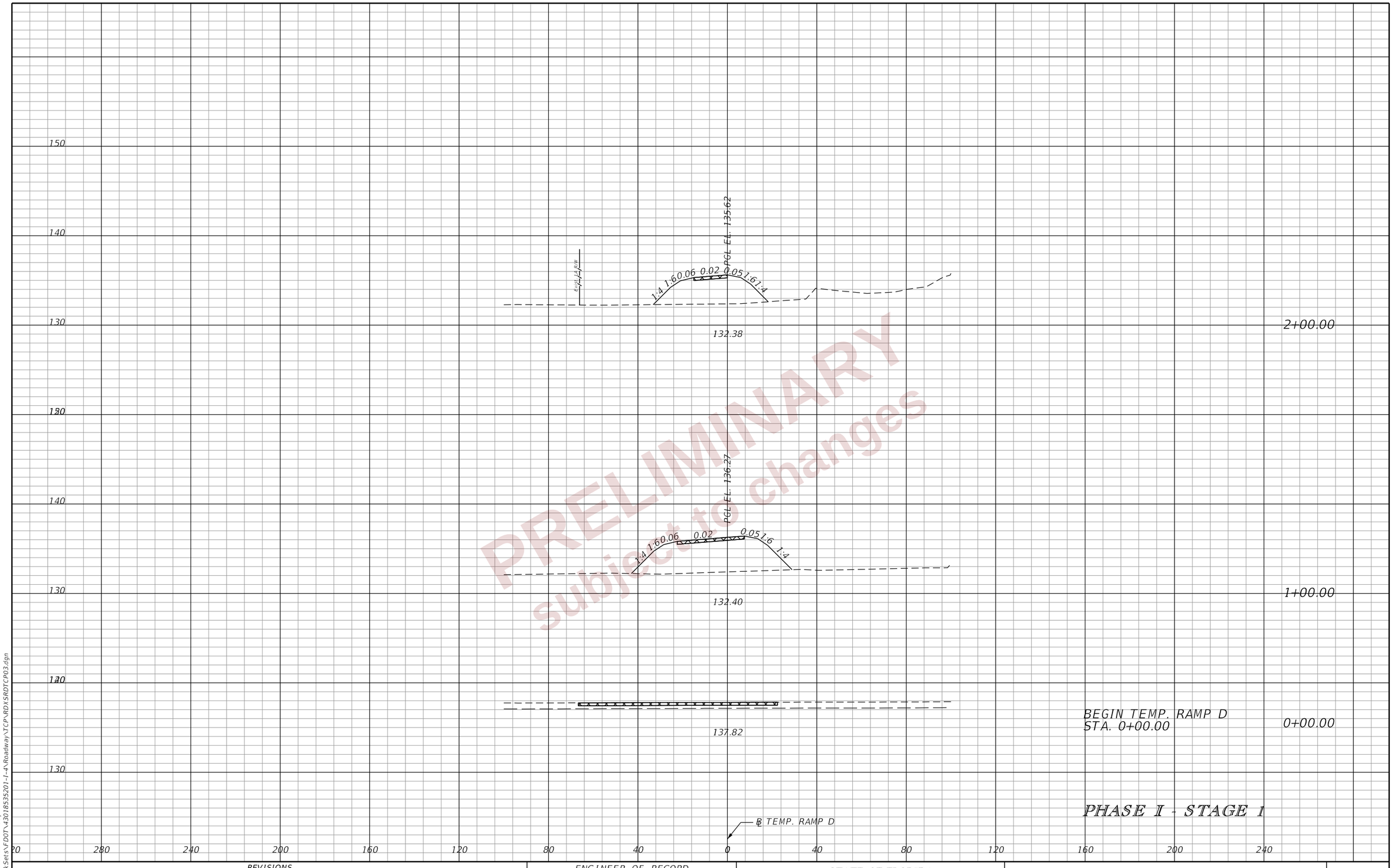

PRELIMINARY
subject to changes

REVISIONS			
DATE	DESCRIPTION	DATE	DESCRIPTION

ENGINEER OF RECORD
RYAN J. WILLIAMSON, P.E.
LICENSE NUMBER 81421
BURGESS & NIPLE, INC.
1800 PEMBROOK DRIVE, SUITE 265
ORLANDO, FL 32810

STATE OF FLORIDA
DEPARTMENT OF TRANSPORTATION

ROAD NO.	COUNTY	FINANCIAL PROJECT ID
SR 400	POLK	430185-3-52-01

TTC PLAN (65)
CROSS SECTIONS
TEMPORARY RAMP D

SHEET NO. 569

THE OFFICIAL RECORD OF THIS SHEET IS THE ELECTRONIC FILE DIGITALLY SIGNED AND SEALED UNDER RULE 61G15-23.004, F.A.C.

2/28/2024 7:10:29 PM day
P:\ORD_FDOT\WorkSets\FDOT\430185352\01-I-4\Roadway\TCP\RDXSRDTCP03.dgn

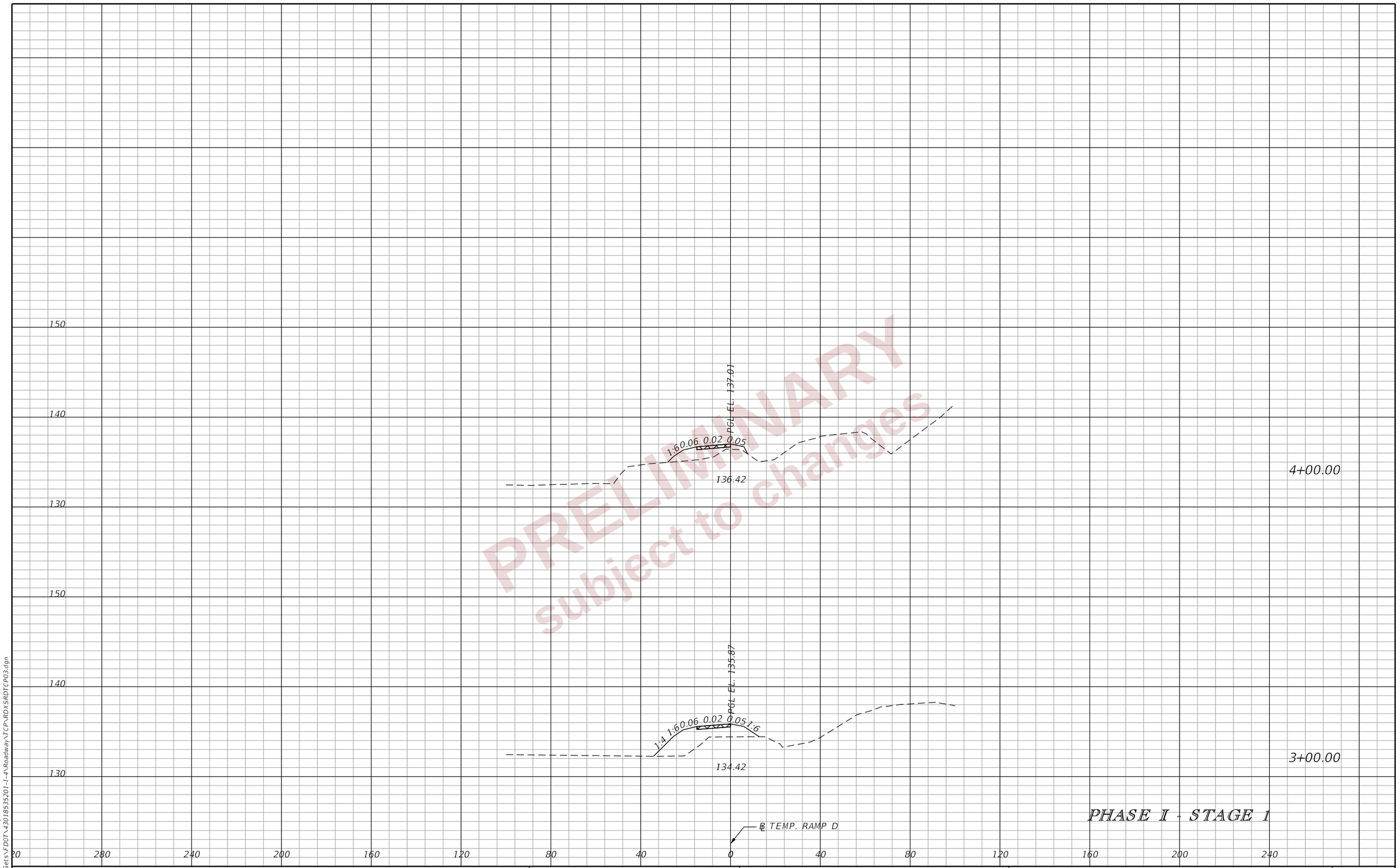

PRELIMINARY
subject to changes

REVISIONS				ENGINEER OF RECORD	STATE OF FLORIDA DEPARTMENT OF TRANSPORTATION			TTC PLAN (66) CROSS SECTIONS TEMPORARY RAMP D	SHEET NO.
DATE	DESCRIPTION	DATE	DESCRIPTION	RYAN J. WILLIAMSON, P.E. LICENSE NUMBER 81421 BURGESS & NIPLE, INC. 1800 PEMBROOK DRIVE, SUITE 265 ORLANDO, FL 32810	ROAD NO.	COUNTY	FINANCIAL PROJECT ID		570
					SR 400	POLK	430185-3-52-01		

THE OFFICIAL RECORD OF THIS SHEET IS THE ELECTRONIC FILE DIGITALLY SIGNED AND SEALED UNDER RULE 61G15-23.004, F.A.C.

2/28/2024 7:10:29 PM day
P:\ORD_FDOT\WorkSets\FDOT\430185352\01-I-4\Roadway\TCP\RDXSRDTCP03.dgn

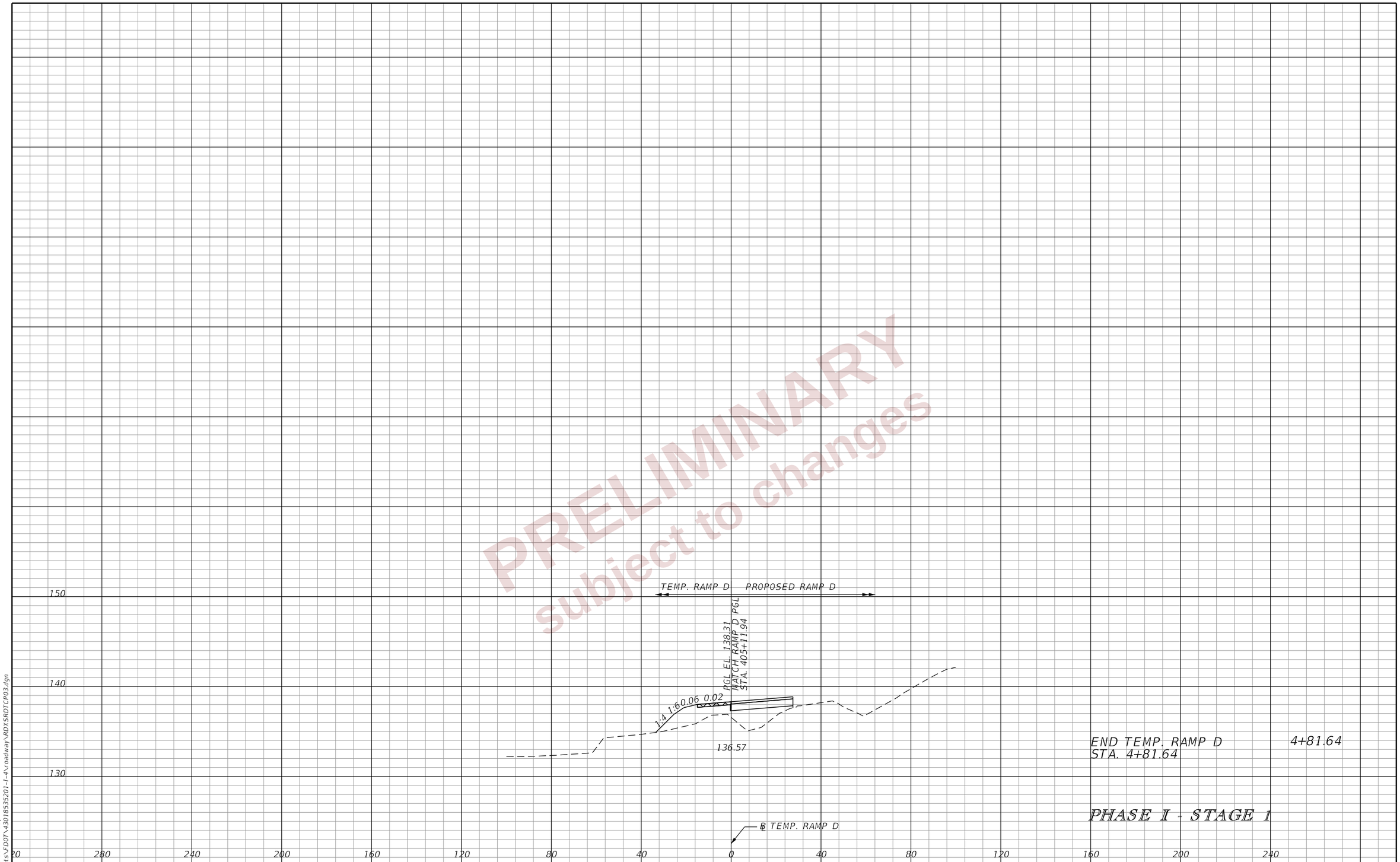

PRELIMINARY
subject to changes

REVISIONS			
DATE	DESCRIPTION	DATE	DESCRIPTION

ENGINEER OF RECORD

RYAN J. WILLIAMSON, P.E.
LICENSE NUMBER 81421
BURGESS & NIPLE, INC.
1800 PEMBROOK DRIVE, SUITE 265
ORLANDO, FL 32810

STATE OF FLORIDA
DEPARTMENT OF TRANSPORTATION

ROAD NO.	COUNTY	FINANCIAL PROJECT ID
SR 400	POLK	430185-3-52-01

TTC PLAN (67)
CROSS SECTIONS
TEMPORARY RAMP D

SHEET NO. 571

THE OFFICIAL RECORD OF THIS SHEET IS THE ELECTRONIC FILE DIGITALLY SIGNED AND SEALED UNDER RULE 61G15-23.004, F.A.C.

2/28/2024 7:10:30 PM day
P:\ORD_FDOT\WorkSets\FDOT\430185352O1-I-4\roadway\RDYSRDTCP03.dgn

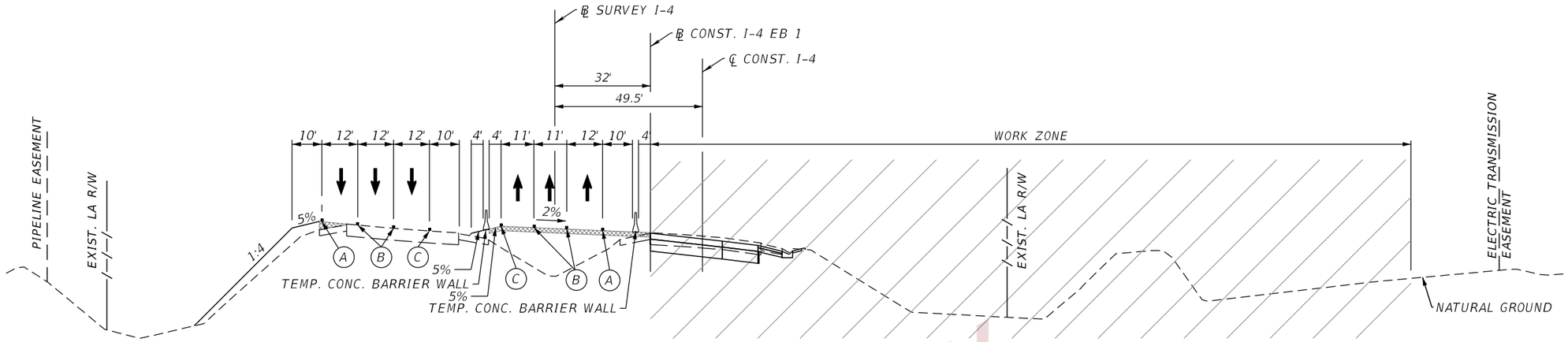

CRITICAL SECTION - PHASE 1, STAGE 2

℄ CONST. I-4
STA. 3075+00

PAVEMENT MARKING LEGEND

- (A) 6" SOLID WHITE TEMPORARY PAVEMENT MARKING
- (B) 6" SKIP WHITE TEMPORARY PAVEMENT MARKING (10'-30')
- (C) 6" SOLID YELLOW TEMPORARY PAVEMENT MARKING
- (D) 6" SKIP YELLOW TEMPORARY PAVEMENT MARKING (10'-30')
- (E) TEMPORARY PAVEMENT MARKINGS PREVIOUSLY APPLIED
- (F) 6" SOLID DOUBLE YELLOW TEMPORARY MARKING
- TEMPORARY PAVEMENT CURRENT PHASE
- TEMPORARY PAVEMENT CONSTRUCTED PREVIOUS PHASE

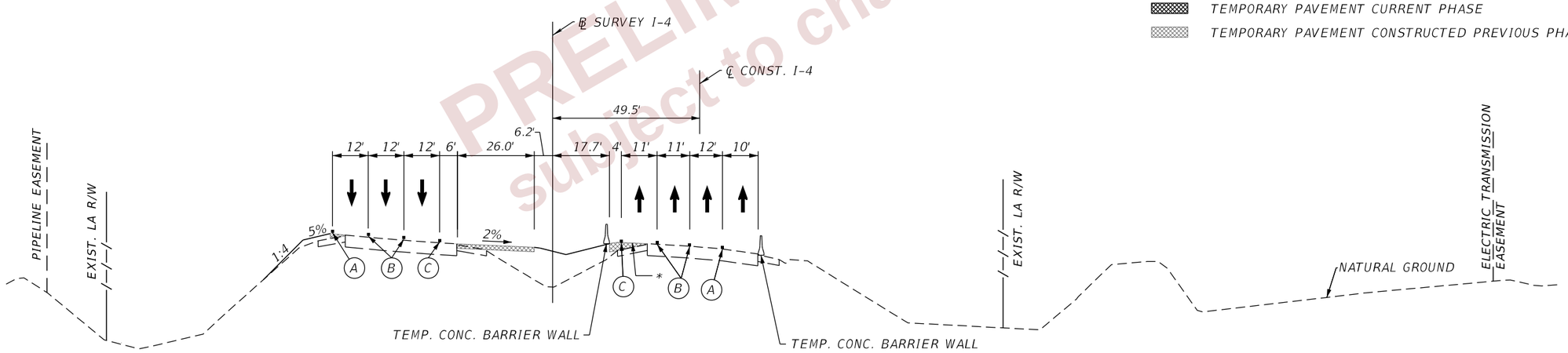

CRITICAL SECTION - PHASE 1, STAGE 2

℄ CONST. I-4
STA. 3065+00

NOTES:
1. SEE TTC PLAN SHEETS FOR TEMP. DRAINAGE LOCATIONS.

PRELIMINARY subject to changes

REVISIONS				ENGINEER OF RECORD	STATE OF FLORIDA DEPARTMENT OF TRANSPORTATION			TTC PLAN (68) CRITICAL SECTIONS	SHEET NO.
DATE	DESCRIPTION	DATE	DESCRIPTION	RYAN J. WILLIAMSON, P.E. LICENSE NUMBER 81421 BURGESS & NIPLE, INC. 1800 PEMBROOK DRIVE, SUITE 265 ORLANDO, FL 32810	ROAD NO.	COUNTY	FINANCIAL PROJECT ID		572
					SR 400	POLK	430185-3-52-01		

THE OFFICIAL RECORD OF THIS SHEET IS THE ELECTRONIC FILE DIGITALLY SIGNED AND SEALED UNDER RULE 61G15-23.004, F.A.C.

2/28/2024 7:10:59 PM dav
P:\ORD_FDOT\WorkSets\FDOT\430185352O1-I-4\Roadway\TCP\TCTYRD01.dgn

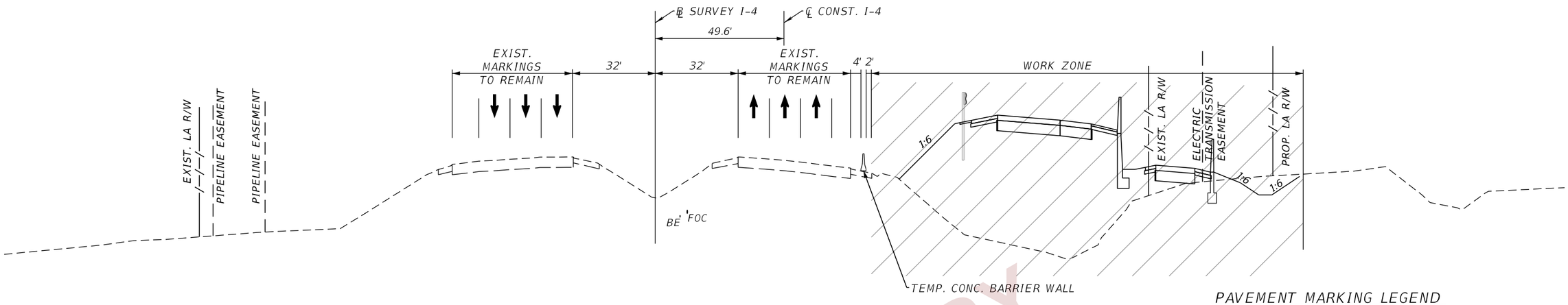

CRITICAL SECTION - PHASE 1, STAGE 2

℄ CONST. I-4
STA. 3103+00

PAVEMENT MARKING LEGEND

- (A) 6" SOLID WHITE TEMPORARY PAVEMENT MARKING
- (B) 6" SKIP WHITE TEMPORARY PAVEMENT MARKING (10'-30')
- (C) 6" SOLID YELLOW TEMPORARY PAVEMENT MARKING
- (D) 6" SKIP YELLOW TEMPORARY PAVEMENT MARKING (10'-30')
- (E) TEMPORARY PAVEMENT MARKINGS PREVIOUSLY APPLIED
- (F) 6" SOLID DOUBLE YELLOW TEMPORARY MARKING
- TEMPORARY PAVEMENT CURRENT PHASE
- TEMPORARY PAVEMENT CONSTRUCTED PREVIOUS PHASE

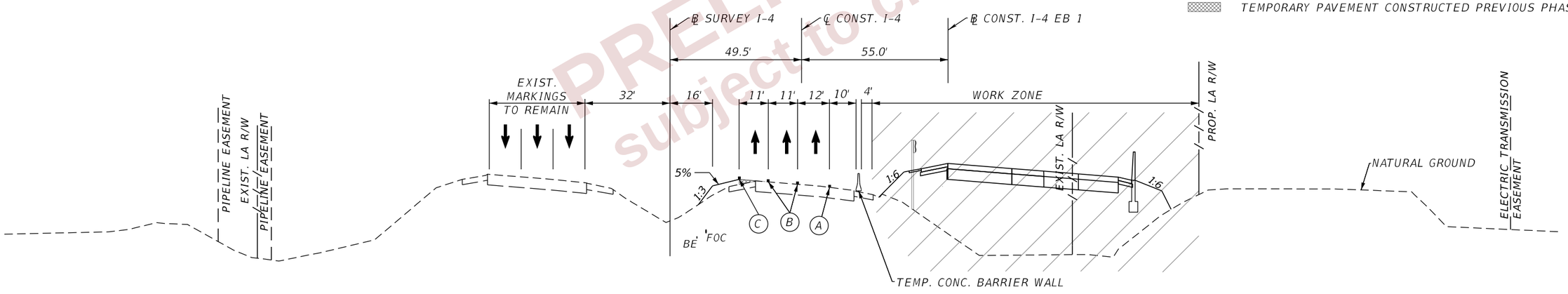

CRITICAL SECTION - PHASE 1, STAGE 2

℄ CONST. I-4
STA. 3093+00

NOTES:
1. SEE TTC PLAN SHEETS FOR TEMP. DRAINAGE LOCATIONS.

PRELIMINARY
subject to changes

REVISIONS				ENGINEER OF RECORD	STATE OF FLORIDA DEPARTMENT OF TRANSPORTATION			TTC PLAN (69) CRITICAL SECTIONS	SHEET NO.
DATE	DESCRIPTION	DATE	DESCRIPTION	RYAN J. WILLIAMSON, P.E. LICENSE NUMBER 81421 BURGESS & NIPLE, INC. 1800 PEMBROOK DRIVE, SUITE 265 ORLANDO, FL 32810	ROAD NO.	COUNTY	FINANCIAL PROJECT ID		
					SR 400	POLK	430185-3-52-01		573

THE OFFICIAL RECORD OF THIS SHEET IS THE ELECTRONIC FILE DIGITALLY SIGNED AND SEALED UNDER RULE 61G15-23.004, F.A.C.

2/28/2024 7:11:00 PM day
P:\ORD_FDOT\WorkSets\FDOT\430185352O1-I-4\Roadway\TCP\TCTYRD01.dgn

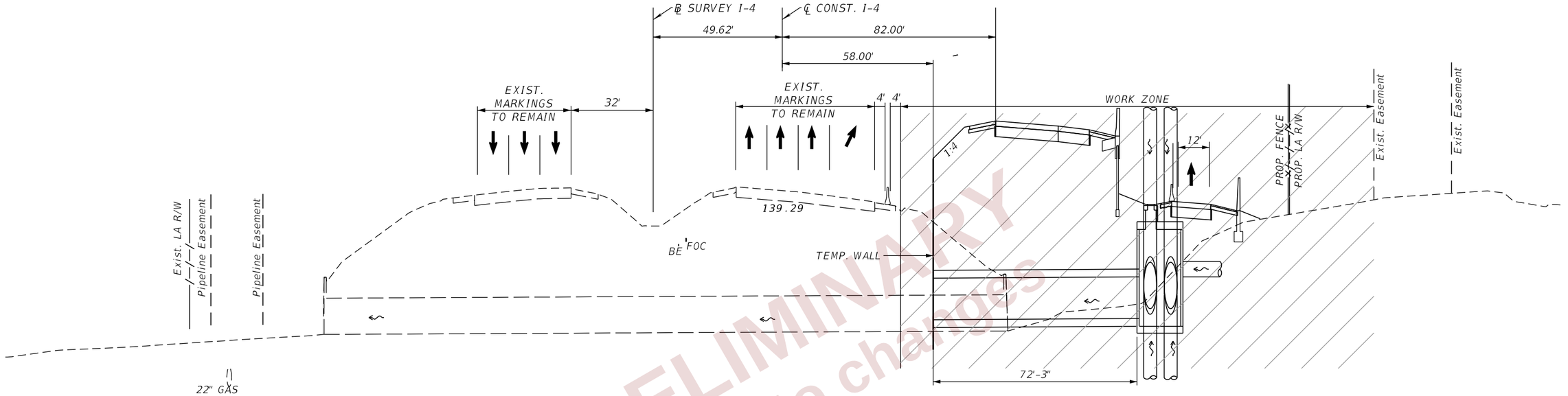

NOTES:
1. SEE STRUCTURE PLANS FOR TEMP. WALL DETAILS.
2. SEE TTC PLAN SHEETS FOR TEMP. DRAINAGE LOCATIONS.

PAVEMENT MARKING LEGEND

- (A) 6" SOLID WHITE TEMPORARY PAVEMENT MARKING
- (B) 6" SKIP WHITE TEMPORARY PAVEMENT MARKING (10'-30')
- (C) 6" SOLID YELLOW TEMPORARY PAVEMENT MARKING
- (D) 6" SKIP YELLOW TEMPORARY PAVEMENT MARKING (10'-30')
- (E) TEMPORARY PAVEMENT MARKINGS PREVIOUSLY APPLIED
- (F) 6" SOLID DOUBLE YELLOW TEMPORARY MARKING
- TEMPORARY PAVEMENT CURRENT PHASE
- TEMPORARY PAVEMENT CONSTRUCTED PREVIOUS PHASE
- * TEMPORARY OVERBUILD EXIST. SHLDR. (MATCH ADJACENT TRAVEL LANE CROSS SLOPE)

CRITICAL SECTION - PHASE 1, STAGE 2

℄ CONST. I-4
STA. 3104+45

PRELIMINARY
subject to changes

REVISIONS				ENGINEER OF RECORD	STATE OF FLORIDA DEPARTMENT OF TRANSPORTATION			TTC PLAN (70) CRITICAL SECTIONS	SHEET NO.
DATE	DESCRIPTION	DATE	DESCRIPTION	RYAN J. WILLIAMSON, P.E. LICENSE NUMBER 81421 BURGESS & NIPLE, INC. 1800 PEMBROOK DRIVE, SUITE 265 ORLANDO, FL 32810	ROAD NO.	COUNTY	FINANCIAL PROJECT ID		574
					SR 400	POLK	430185-3-52-01		

THE OFFICIAL RECORD OF THIS SHEET IS THE ELECTRONIC FILE DIGITALLY SIGNED AND SEALED UNDER RULE 61G15-23.004, F.A.C.

2/28/2024 7:11:05 PM dav
P:\ORD_FDOT\Work Sets\FDOT\430185352O1-I-4\Roadway\TCP\TCTYRD01.dgn

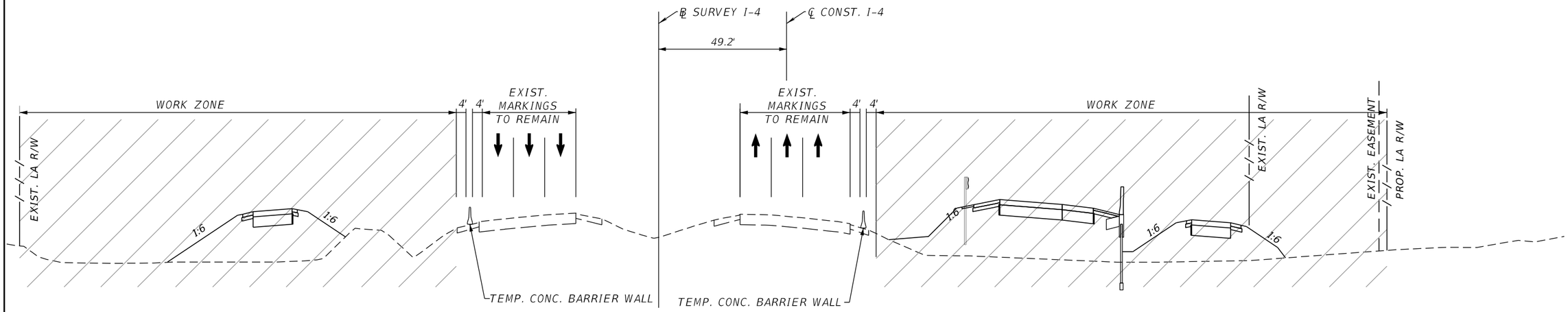

CRITICAL SECTION - PHASE 1, STAGE 2

℄ CONST. I-4
STA. 3138+00

PAVEMENT MARKING LEGEND

- (A) 6" SOLID WHITE TEMPORARY PAVEMENT MARKING
- (B) 6" SKIP WHITE TEMPORARY PAVEMENT MARKING (10'-30')
- (C) 6" SOLID YELLOW TEMPORARY PAVEMENT MARKING
- (D) 6" SKIP YELLOW TEMPORARY PAVEMENT MARKING (10'-30')
- (E) TEMPORARY PAVEMENT MARKINGS PREVIOUSLY APPLIED
- (F) 6" SOLID DOUBLE YELLOW TEMPORARY MARKING
- TEMPORARY PAVEMENT CURRENT PHASE
- TEMPORARY PAVEMENT CONSTRUCTED PREVIOUS PHASE

NOTES:
1. SEE STRUCTURE PLANS FOR TEMP. WALL DETAILS.

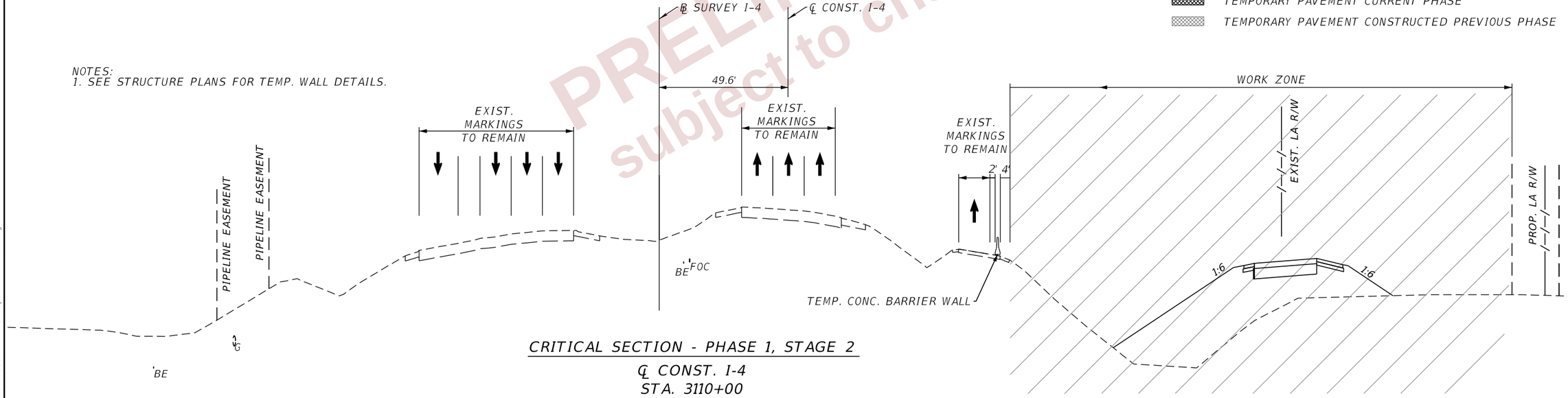

CRITICAL SECTION - PHASE 1, STAGE 2

℄ CONST. I-4
STA. 3110+00

PRELIMINARY
subject to changes

REVISIONS				ENGINEER OF RECORD	STATE OF FLORIDA DEPARTMENT OF TRANSPORTATION			TTC PLAN (71) CRITICAL SECTIONS	SHEET NO.
DATE	DESCRIPTION	DATE	DESCRIPTION	RYAN J. WILLIAMSON, P.E. LICENSE NUMBER 81421 BURGESS & NIPLE, INC. 1800 PEMBROOK DRIVE, SUITE 265 ORLANDO, FL 32810	ROAD NO.	COUNTY	FINANCIAL PROJECT ID		575
					SR 400	POLK	430185-3-52-01		

THE OFFICIAL RECORD OF THIS SHEET IS THE ELECTRONIC FILE DIGITALLY SIGNED AND SEALED UNDER RULE 61G15-23.004, F.A.C.

2/28/2024 7:11:06 PM day
P:\ORD_FDOT\WorkSets\FDOT\430185352O1-I-4\Roadway\TCP\TCTYRD01.dgn

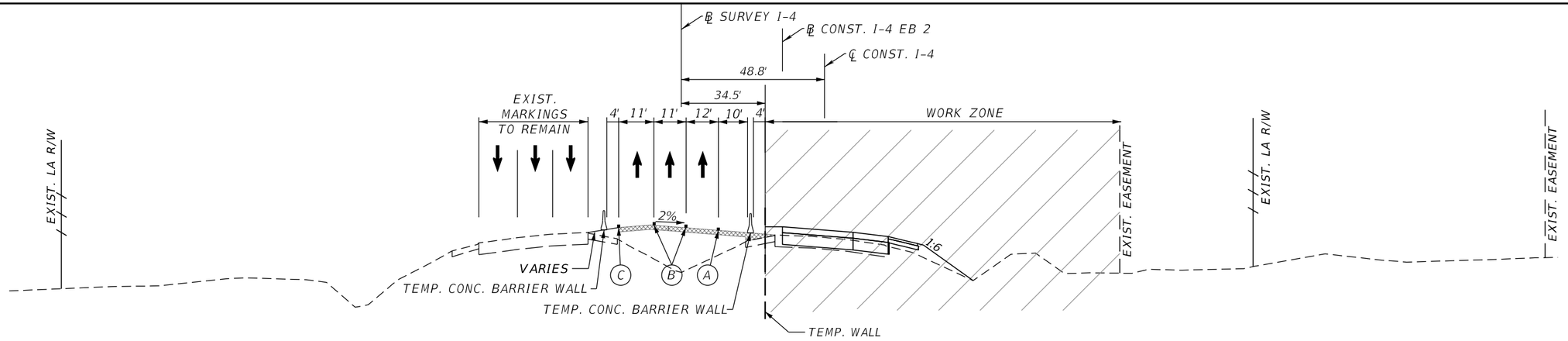

CRITICAL SECTION - PHASE 1, STAGE 2

℄ CONST. I-4
STA. 3172+00

PAVEMENT MARKING LEGEND

- (A) 6" SOLID WHITE TEMPORARY PAVEMENT MARKING
- (B) 6" SKIP WHITE TEMPORARY PAVEMENT MARKING (10'-30')
- (C) 6" SOLID YELLOW TEMPORARY PAVEMENT MARKING
- (D) 6" SKIP YELLOW TEMPORARY PAVEMENT MARKING (10'-30')
- (E) TEMPORARY PAVEMENT MARKINGS PREVIOUSLY APPLIED
- (F) 6" SOLID DOUBLE YELLOW TEMPORARY MARKING
- TEMPORARY PAVEMENT CURRENT PHASE
- TEMPORARY PAVEMENT CONSTRUCTED PREVIOUS PHASE

PRELIMINARY
subject to changes

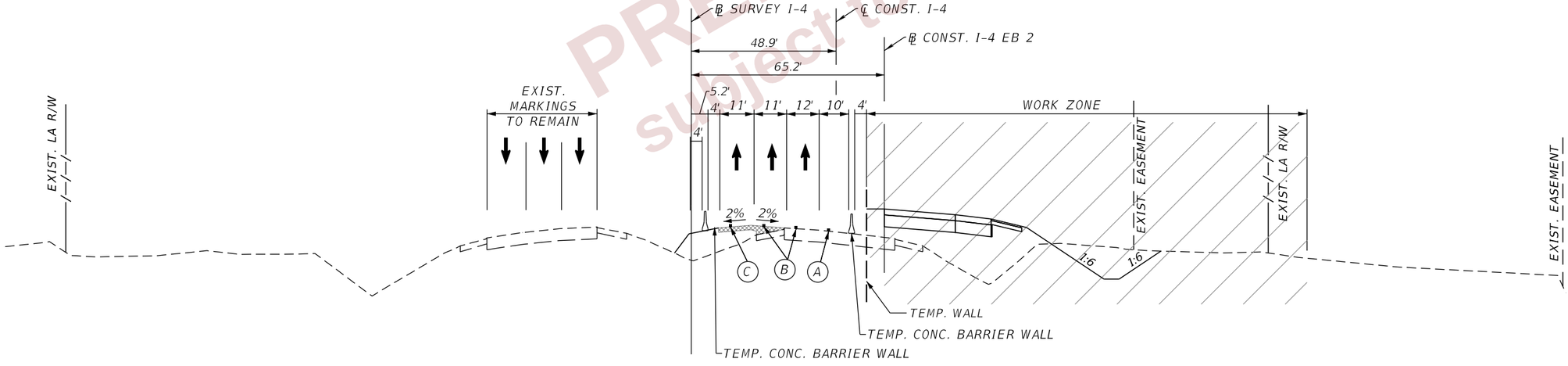

CRITICAL SECTION - PHASE 1, STAGE 2

℄ CONST. I-4
STA. 3163+00

NOTES:
1. SEE STRUCTURE PLANS FOR TEMP. WALL DETAILS.
2. SEE TTC PLAN SHEETS FOR TEMP. DRAINAGE LOCATIONS.

REVISIONS				ENGINEER OF RECORD	STATE OF FLORIDA DEPARTMENT OF TRANSPORTATION			TTC PLAN (72) CRITICAL SECTIONS	SHEET NO.
DATE	DESCRIPTION	DATE	DESCRIPTION	RYAN J. WILLIAMSON, P.E. LICENSE NUMBER 81421 BURGESS & NIPLE, INC. 1800 PEMBROOK DRIVE, SUITE 265 ORLANDO, FL 32810	ROAD NO.	COUNTY	FINANCIAL PROJECT ID		576
					SR 400	POLK	430185-3-52-01		

THE OFFICIAL RECORD OF THIS SHEET IS THE ELECTRONIC FILE DIGITALLY SIGNED AND SEALED UNDER RULE 61G15-23.004, F.A.C.

2/28/2024 7:11:08 PM dav
P:\ORD_FDOT\WorkSets\FDOT\430185352O1-I-4\Roadway\TCP\TCTYRD01.dgn

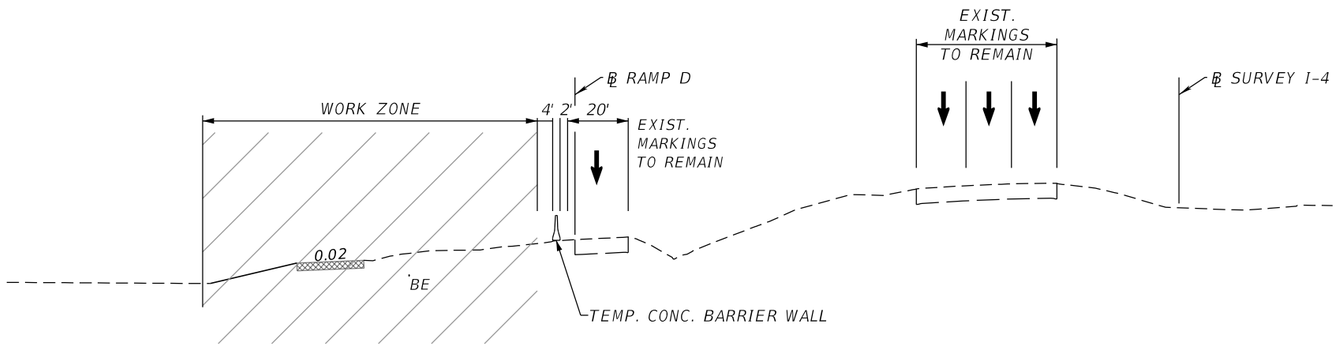

CRITICAL SECTION - PHASE 1, STAGE 2

℄ RAMP D
STA. 404+00

PAVEMENT MARKING LEGEND

- (A) 6" SOLID WHITE TEMPORARY PAVEMENT MARKING
- (B) 6" SKIP WHITE TEMPORARY PAVEMENT MARKING (10'-30')
- (C) 6" SOLID YELLOW TEMPORARY PAVEMENT MARKING
- (D) 6" SKIP YELLOW TEMPORARY PAVEMENT MARKING (10'-30')
- (E) TEMPORARY PAVEMENT MARKINGS PREVIOUSLY APPLIED
- (F) 6" SOLID DOUBLE YELLOW TEMPORARY MARKING
- TEMPORARY PAVEMENT CURRENT PHASE
- TEMPORARY PAVEMENT CONSTRUCTED PREVIOUS PHASE

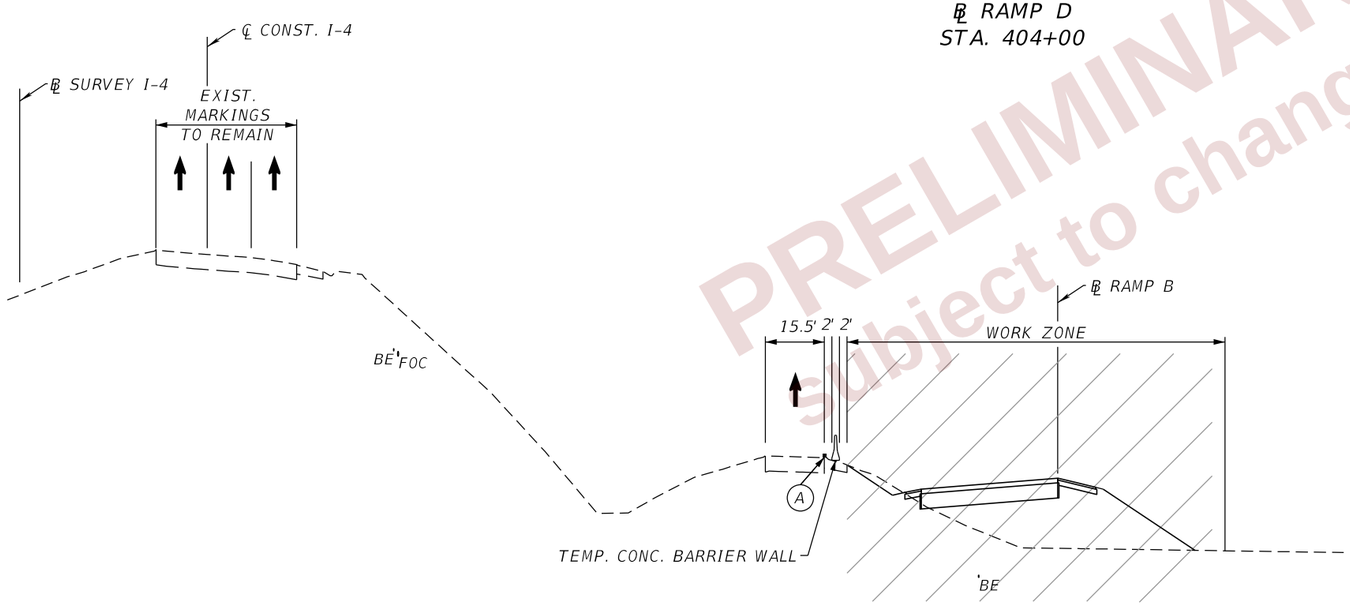

CRITICAL SECTION - PHASE 1, STAGE 2

℄ RAMP B
STA. 225+00

PRELIMINARY
subject to changes

REVISIONS				ENGINEER OF RECORD	STATE OF FLORIDA DEPARTMENT OF TRANSPORTATION			TTC PLAN (73) CRITICAL SECTIONS	SHEET NO.
DATE	DESCRIPTION	DATE	DESCRIPTION	RYAN J. WILLIAMSON, P.E. LICENSE NUMBER 81421 BURGESS & NIPLE, INC. 1800 PEMBROOK DRIVE, SUITE 265 ORLANDO, FL 32810	ROAD NO.	COUNTY	FINANCIAL PROJECT ID		
					SR 400	POLK	430185-3-52-01		577

THE OFFICIAL RECORD OF THIS SHEET IS THE ELECTRONIC FILE DIGITALLY SIGNED AND SEALED UNDER RULE 61G15-23.004, F.A.C.

2/28/2024 7:11:09 PM day
P:\ORD_FDOT\WorkSets\FDOT_430185352O1-I-4\Roadway\TCP\TCTYRD01.dgn

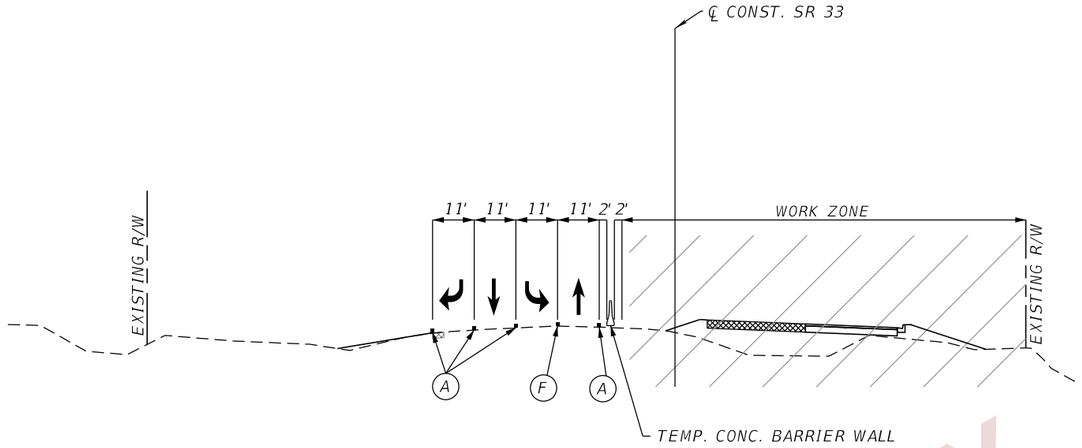

CRITICAL SECTION - PHASE 1, STAGE 2

℄ SR 33
STA. 421+00.00

PAVEMENT MARKING LEGEND

- (A) 6" SOLID WHITE TEMPORARY PAVEMENT MARKING
- (B) 6" SKIP WHITE TEMPORARY PAVEMENT MARKING (10'-30')
- (C) 6" SOLID YELLOW TEMPORARY PAVEMENT MARKING
- (D) 6" SKIP YELLOW TEMPORARY PAVEMENT MARKING (10'-30')
- (E) TEMPORARY PAVEMENT MARKINGS PREVIOUSLY APPLIED
- (F) 6" SOLID DOUBLE YELLOW TEMPORARY MARKING
- TEMPORARY PAVEMENT CURRENT PHASE
- TEMPORARY PAVEMENT CONSTRUCTED PREVIOUS PHASE

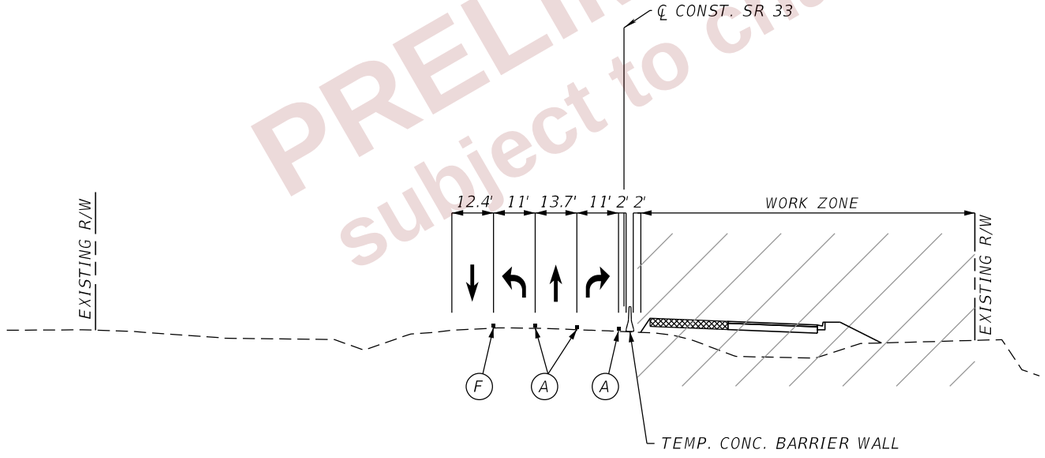

CRITICAL SECTION - PHASE 1, STAGE 2

℄ SR 33
STA. 416+00.00

PRELIMINARY
subject to changes

THE OFFICIAL RECORD OF THIS SHEET IS THE ELECTRONIC FILE DIGITALLY SIGNED AND SEALED UNDER RULE 61G15-23.004, F.A.C.

REVISIONS				ENGINEER OF RECORD	STATE OF FLORIDA DEPARTMENT OF TRANSPORTATION			TTC PLAN (74) CRITICAL SECTIONS	SHEET NO.
DATE	DESCRIPTION	DATE	DESCRIPTION	RYAN J. WILLIAMSON, P.E. LICENSE NUMBER 81421 BURGESS & NIPLE, INC. 1800 PEMBROOK DRIVE, SUITE 265 ORLANDO, FL 32810	ROAD NO.	COUNTY	FINANCIAL PROJECT ID		578
					SR 400	POLK	430185-3-52-01		

2/28/2024 7:11:11 PM dav
P:\ORD_FDOT\WorkSets\FDOT\430185352O1-I-4\Roadway\TCP\TCTYRD01.dgn

PAVEMENT MARKING LEGEND

- (A) 6" SOLID WHITE TEMPORARY PAVEMENT MARKING
- (B) 6" SKIP WHITE TEMPORARY PAVEMENT MARKING (10'-30')
- (C) 6" SOLID YELLOW TEMPORARY PAVEMENT MARKING
- (D) 6" SKIP YELLOW TEMPORARY PAVEMENT MARKING (10'-30')
- (E) TEMPORARY PAVEMENT MARKINGS PREVIOUSLY APPLIED
- (F) 6" SOLID DOUBLE YELLOW TEMPORARY MARKING
- TEMPORARY PAVEMENT CURRENT PHASE
- TEMPORARY PAVEMENT CONSTRUCTED PREVIOUS PHASE

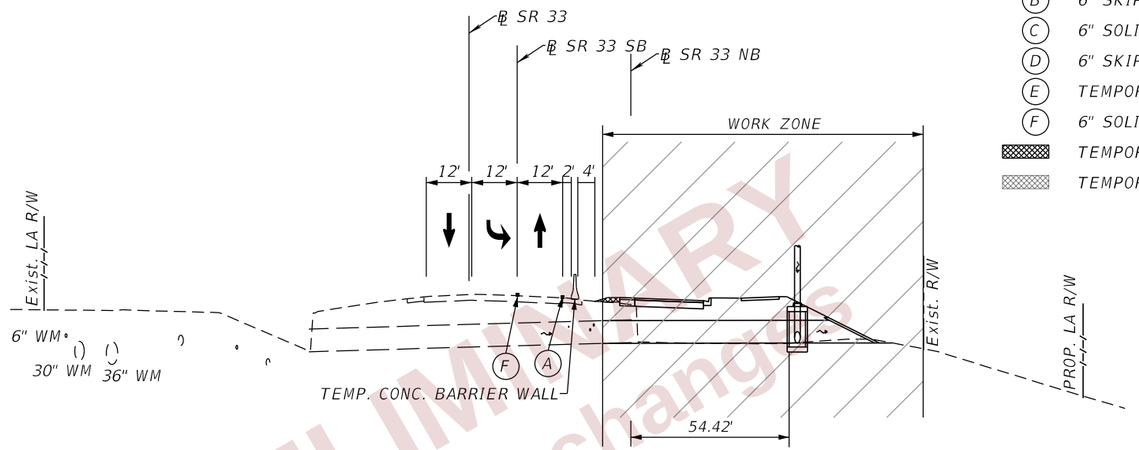

PRELIMINARY
subject to changes

CRITICAL SECTION - PHASE 1, STAGE 2

℄ SR 33
STA. 432+05.00 (CROSS DRAIN)

REVISIONS				ENGINEER OF RECORD	STATE OF FLORIDA DEPARTMENT OF TRANSPORTATION			TTC PLAN (75) CRITICAL SECTIONS	SHEET NO.
DATE	DESCRIPTION	DATE	DESCRIPTION	RYAN J. WILLIAMSON, P.E. LICENSE NUMBER 81421 BURGESS & NIPLE, INC. 1800 PEMBROOK DRIVE, SUITE 265 ORLANDO, FL 32810	ROAD NO.	COUNTY	FINANCIAL PROJECT ID		579
					SR 400	POLK	430185-3-52-01		

THE OFFICIAL RECORD OF THIS SHEET IS THE ELECTRONIC FILE DIGITALLY SIGNED AND SEALED UNDER RULE 61G15-23.004, F.A.C.

2/28/2024 7:11:12 PM day
P:\ORD_FDOT\WorkSets\FDOT\430185352O1-I-4\Roadway\TCP\TCTYRD01.dgn

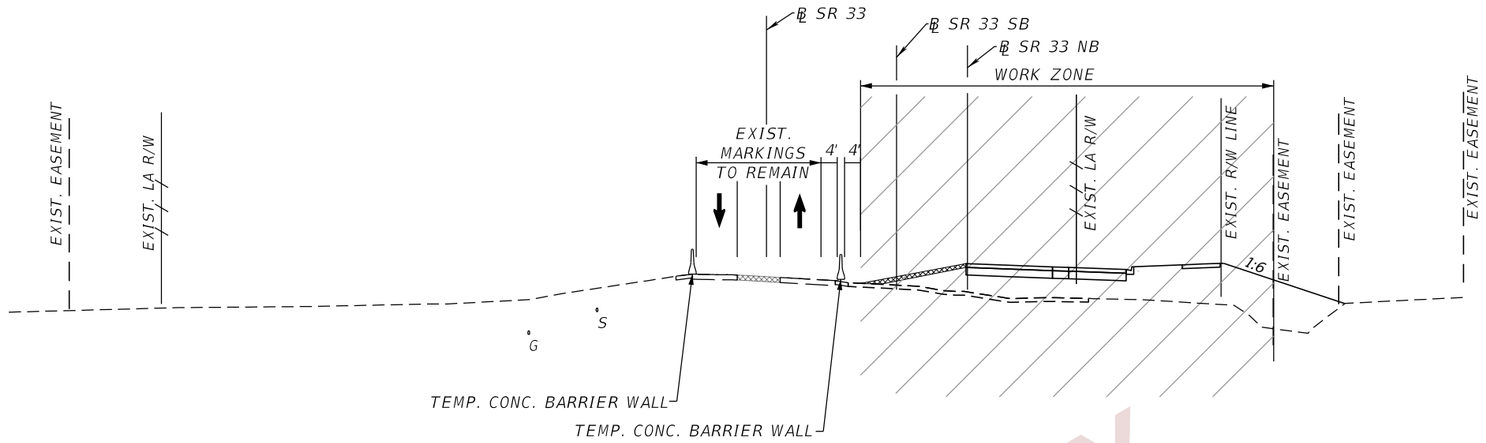

CRITICAL SECTION - PHASE 1, STAGE 2

℄ SR 33
STA. 441+00

PAVEMENT MARKING LEGEND

- (A) 6" SOLID WHITE TEMPORARY PAVEMENT MARKING
- (B) 6" SKIP WHITE TEMPORARY PAVEMENT MARKING (10'-30')
- (C) 6" SOLID YELLOW TEMPORARY PAVEMENT MARKING
- (D) 6" SKIP YELLOW TEMPORARY PAVEMENT MARKING (10'-30')
- (E) TEMPORARY PAVEMENT MARKINGS PREVIOUSLY APPLIED
- (F) 6" SOLID DOUBLE YELLOW TEMPORARY MARKING
- TEMPORARY PAVEMENT CURRENT PHASE
- TEMPORARY PAVEMENT CONSTRUCTED PREVIOUS PHASE

PRELIMINARY
subject to changes

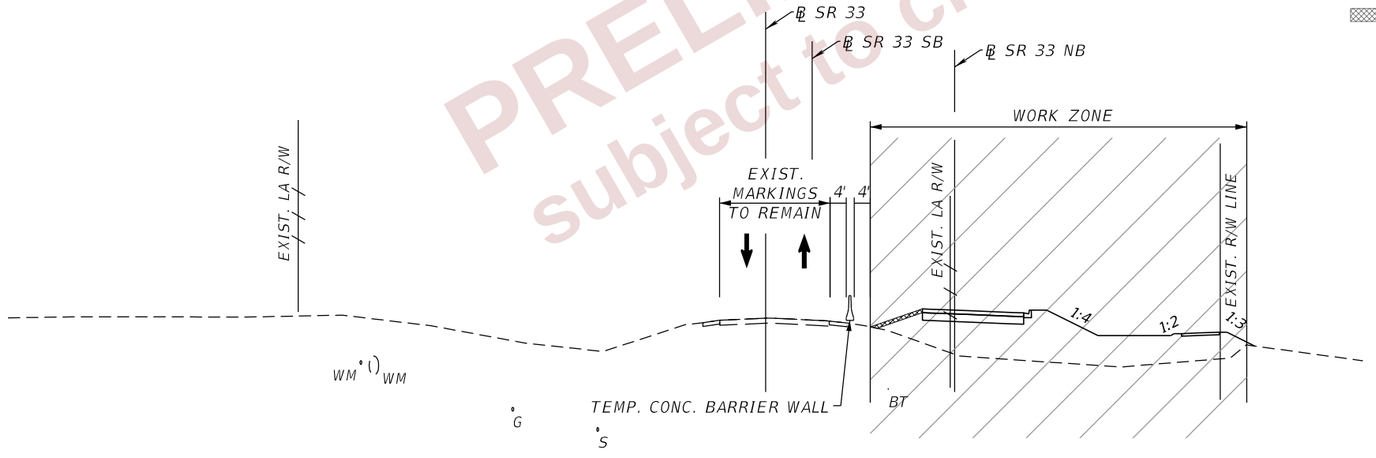

CRITICAL SECTION - PHASE 1, STAGE 2

℄ SR 33
STA. 437+00

THE OFFICIAL RECORD OF THIS SHEET IS THE ELECTRONIC FILE DIGITALLY SIGNED AND SEALED UNDER RULE 61G15-23.004, F.A.C.

REVISIONS				ENGINEER OF RECORD	STATE OF FLORIDA DEPARTMENT OF TRANSPORTATION			TTC PLAN (76) CRITICAL SECTIONS	SHEET NO.
DATE	DESCRIPTION	DATE	DESCRIPTION	RYAN J. WILLIAMSON, P.E. LICENSE NUMBER 81421 BURGESS & NIPLE, INC. 1800 PEMBROOK DRIVE, SUITE 265 ORLANDO, FL 32810	ROAD NO.	COUNTY	FINANCIAL PROJECT ID		580
					SR 400	POLK	430185-3-52-01		

2/28/2024 7:11:17 PM dajr
P:\ORD_FDOT\WorkSets\FDOT\430185352O1-I-4\Roadway\TCP\TCTYRD01.dgn

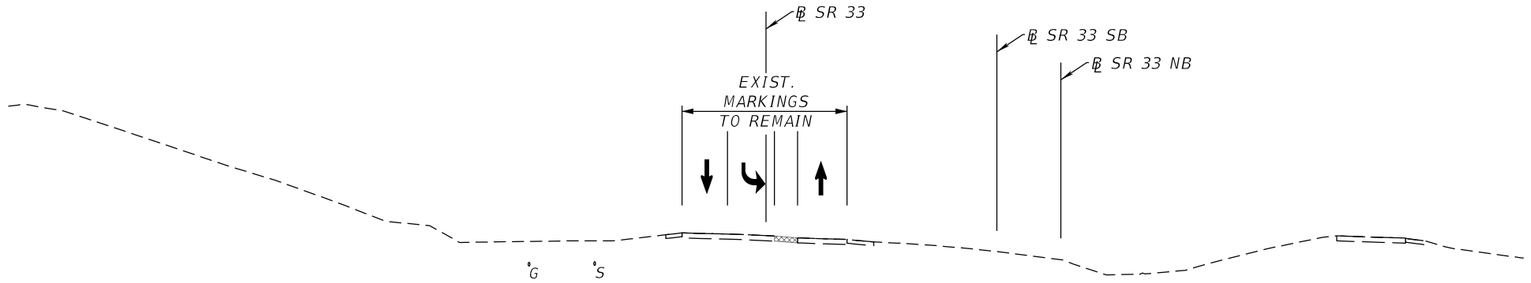

CRITICAL SECTION - PHASE 1, STAGE 2

℄ SR 33
STA. 445+00

PAVEMENT MARKING LEGEND

- (A) 6" SOLID WHITE TEMPORARY PAVEMENT MARKING
- (B) 6" SKIP WHITE TEMPORARY PAVEMENT MARKING (10'-30')
- (C) 6" SOLID YELLOW TEMPORARY PAVEMENT MARKING
- (D) 6" SKIP YELLOW TEMPORARY PAVEMENT MARKING (10'-30')
- (E) TEMPORARY PAVEMENT MARKINGS PREVIOUSLY APPLIED
- (F) 6" SOLID DOUBLE YELLOW TEMPORARY MARKING
- TEMPORARY PAVEMENT CURRENT PHASE
- TEMPORARY PAVEMENT CONSTRUCTED PREVIOUS PHASE

PRELIMINARY
subject to changes

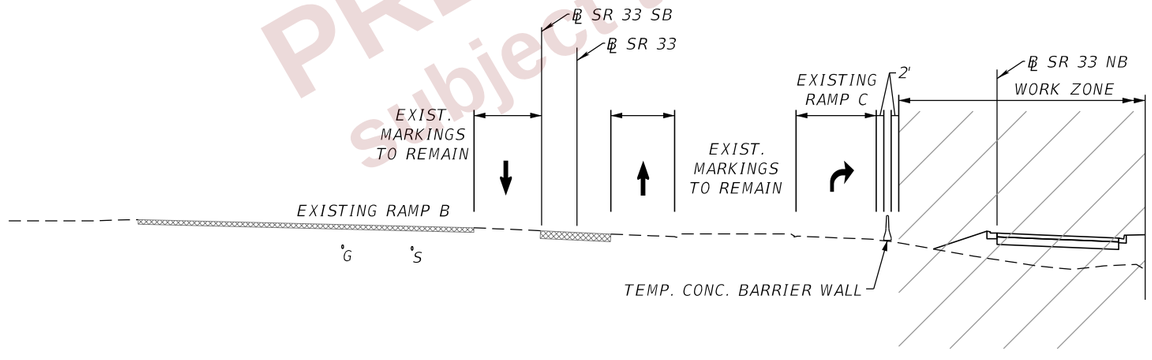

CRITICAL SECTION - PHASE 1, STAGE 2

℄ SR 33
STA. 443+50

REVISIONS				ENGINEER OF RECORD	STATE OF FLORIDA DEPARTMENT OF TRANSPORTATION			TTC PLAN (77) CRITICAL SECTIONS	SHEET NO.
DATE	DESCRIPTION	DATE	DESCRIPTION	RYAN J. WILLIAMSON, P.E. LICENSE NUMBER 81421 BURGESS & NIPLE, INC. 1800 PEMBROOK DRIVE, SUITE 265 ORLANDO, FL 32810	ROAD NO.	COUNTY	FINANCIAL PROJECT ID		581
					SR 400	POLK	430185-3-52-01		

THE OFFICIAL RECORD OF THIS SHEET IS THE ELECTRONIC FILE DIGITALLY SIGNED AND SEALED UNDER RULE 61G15-23.004, F.A.C.

2/28/2024 7:11:17 PM dayP:\ORD_FDOT\WorkSets\FDOT\430185352O1-I-4\Roadway\TCP\TCTYRD01.dgn

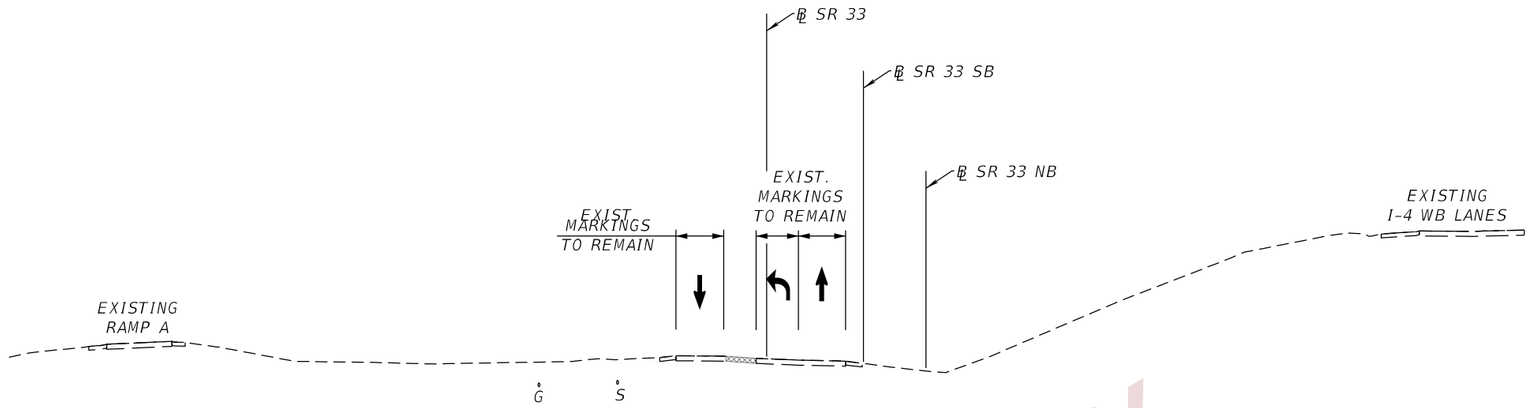

CRITICAL SECTION - PHASE 1, STAGE 2

℄ SR 33
STA. 451+00

PAVEMENT MARKING LEGEND

- (A) 6" SOLID WHITE TEMPORARY PAVEMENT MARKING
- (B) 6" SKIP WHITE TEMPORARY PAVEMENT MARKING (10'-30')
- (C) 6" SOLID YELLOW TEMPORARY PAVEMENT MARKING
- (D) 6" SKIP YELLOW TEMPORARY PAVEMENT MARKING (10'-30')
- (E) TEMPORARY PAVEMENT MARKINGS PREVIOUSLY APPLIED
- (F) 6" SOLID DOUBLE YELLOW TEMPORARY MARKING
- TEMPORARY PAVEMENT CURRENT PHASE
- TEMPORARY PAVEMENT CONSTRUCTED PREVIOUS PHASE

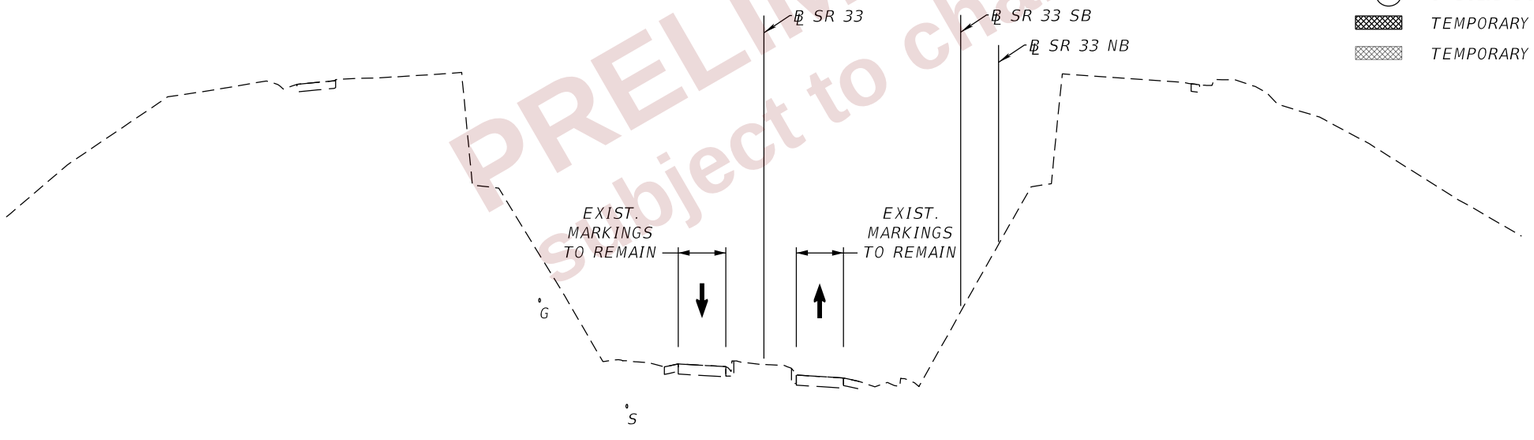

CRITICAL SECTION - PHASE 1, STAGE 2

℄ SR 33
STA. 448+00

PRELIMINARY
Subject to changes

REVISIONS				ENGINEER OF RECORD	STATE OF FLORIDA DEPARTMENT OF TRANSPORTATION			TTC PLAN (78) CRITICAL SECTIONS	SHEET NO.
DATE	DESCRIPTION	DATE	DESCRIPTION	RYAN J. WILLIAMSON, P.E. LICENSE NUMBER 81421 BURGESS & NIPLE, INC. 1800 PEMBROOK DRIVE, SUITE 265 ORLANDO, FL 32810	ROAD NO.	COUNTY	FINANCIAL PROJECT ID		582
					SR 400	POLK	430185-3-52-01		

THE OFFICIAL RECORD OF THIS SHEET IS THE ELECTRONIC FILE DIGITALLY SIGNED AND SEALED UNDER RULE 61G15-23.004, F.A.C.

2/28/2024 7:11:18 PM day
P:\ORD_FDOT\WorkSets\FDOT_430185352O1-I-4\Roadway\TCP\TCTYRD01.dgn

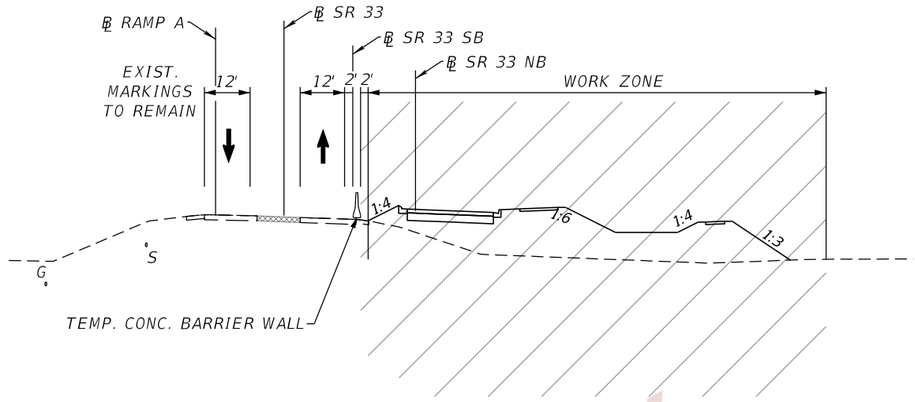

CRITICAL SECTION - PHASE 1, STAGE 2

℄ SR 33
STA. 456+00

PAVEMENT MARKING LEGEND

- (A) 6" SOLID WHITE TEMPORARY PAVEMENT MARKING
- (B) 6" SKIP WHITE TEMPORARY PAVEMENT MARKING (10'-30')
- (C) 6" SOLID YELLOW TEMPORARY PAVEMENT MARKING
- (D) 6" SKIP YELLOW TEMPORARY PAVEMENT MARKING (10'-30')
- (E) TEMPORARY PAVEMENT MARKINGS PREVIOUSLY APPLIED
- (F) 6" SOLID DOUBLE YELLOW TEMPORARY MARKING
- TEMPORARY PAVEMENT CURRENT PHASE
- TEMPORARY PAVEMENT CONSTRUCTED PREVIOUS PHASE

PRELIMINARY
subject to changes

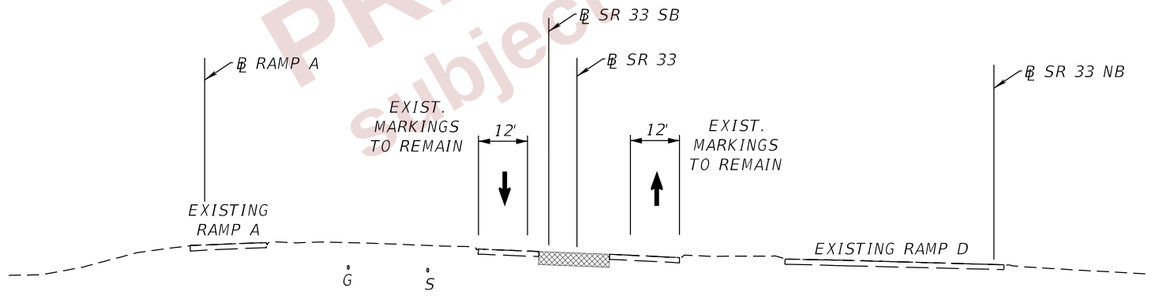

CRITICAL SECTION - PHASE 1, STAGE 2

℄ SR 33
STA. 452+50

REVISIONS				ENGINEER OF RECORD	STATE OF FLORIDA DEPARTMENT OF TRANSPORTATION			TTC PLAN (79) CRITICAL SECTIONS	SHEET NO.
DATE	DESCRIPTION	DATE	DESCRIPTION	RYAN J. WILLIAMSON, P.E. LICENSE NUMBER 81421 BURGESS & NIPLE, INC. 1800 PEMBROOK DRIVE, SUITE 265 ORLANDO, FL 32810	ROAD NO.	COUNTY	FINANCIAL PROJECT ID		583
					SR 400	POLK	430185-3-52-01		

THE OFFICIAL RECORD OF THIS SHEET IS THE ELECTRONIC FILE DIGITALLY SIGNED AND SEALED UNDER RULE 61G15-23.004, F.A.C.

2/28/2024 7:11:19 PM dajr
P:\ORD_FDOT\WorkSets\FDOT\430185352O1-I-4\Roadway\TCP\TCTYRD01.dgn

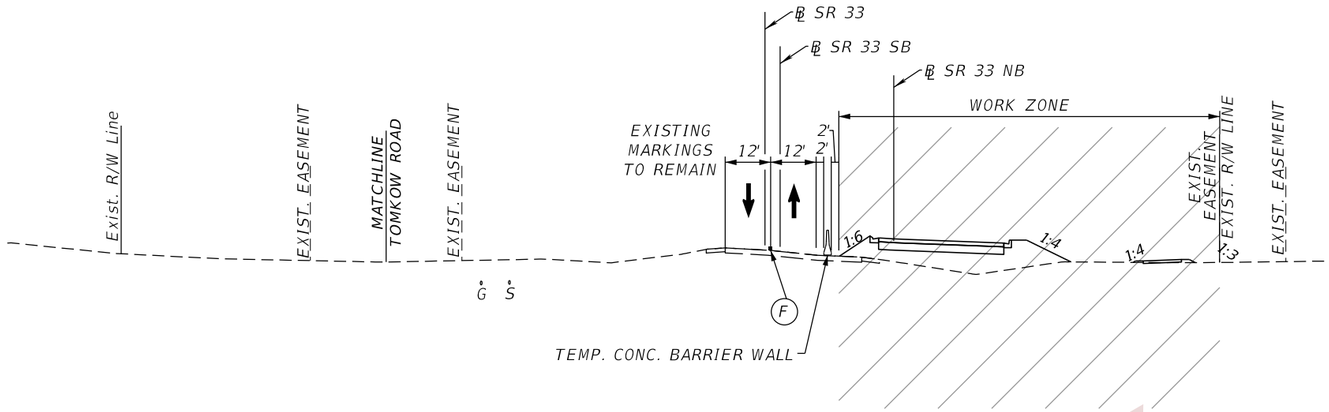

CRITICAL SECTION - PHASE 1, STAGE 2

℄ SR 33
STA. 470+00

PAVEMENT MARKING LEGEND

- (A) 6" SOLID WHITE TEMPORARY PAVEMENT MARKING
- (B) 6" SKIP WHITE TEMPORARY PAVEMENT MARKING (10'-30')
- (C) 6" SOLID YELLOW TEMPORARY PAVEMENT MARKING
- (D) 6" SKIP YELLOW TEMPORARY PAVEMENT MARKING (10'-30')
- (E) TEMPORARY PAVEMENT MARKINGS PREVIOUSLY APPLIED
- (F) 6" SOLID DOUBLE YELLOW TEMPORARY MARKING
- TEMPORARY PAVEMENT CURRENT PHASE
- TEMPORARY PAVEMENT CONSTRUCTED PREVIOUS PHASE

PRELIMINARY
subject to changes

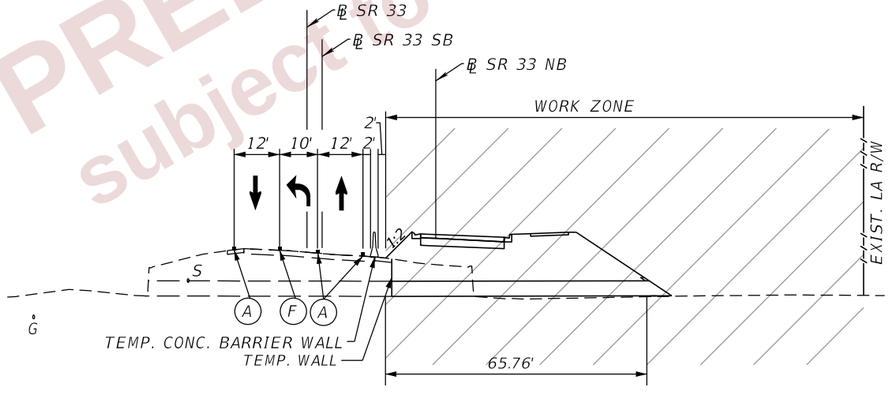

CRITICAL SECTION - PHASE 1, STAGE 2

℄ SR 33
STA. 460+00 (CROSS DRAIN)

REVISIONS				ENGINEER OF RECORD	STATE OF FLORIDA DEPARTMENT OF TRANSPORTATION			TTC PLAN (80) CRITICAL SECTIONS	SHEET NO.
DATE	DESCRIPTION	DATE	DESCRIPTION	RYAN J. WILLIAMSON, P.E. LICENSE NUMBER 81421 BURGESS & NIPLE, INC. 1800 PEMBROOK DRIVE, SUITE 265 ORLANDO, FL 32810	ROAD NO.	COUNTY	FINANCIAL PROJECT ID		584
					SR 400	POLK	430185-3-52-01		

THE OFFICIAL RECORD OF THIS SHEET IS THE ELECTRONIC FILE DIGITALLY SIGNED AND SEALED UNDER RULE 61G15-23.004, F.A.C.

2/28/2024 7:11:20 PM dayl
P:\ORD_FDOT\WorkSets\FDOT\430185352O1-I-4\Roadway\TCP\TCTYRD01.dgn

PAVEMENT MARKING LEGEND

- (A) 6" SOLID WHITE TEMPORARY PAVEMENT MARKING
- (B) 6" SKIP WHITE TEMPORARY PAVEMENT MARKING (10'-30')
- (C) 6" SOLID YELLOW TEMPORARY PAVEMENT MARKING
- (D) 6" SKIP YELLOW TEMPORARY PAVEMENT MARKING (10'-30')
- (E) TEMPORARY PAVEMENT MARKINGS PREVIOUSLY APPLIED
- (F) 6" SOLID DOUBLE YELLOW TEMPORARY MARKING
- TEMPORARY PAVEMENT CURRENT PHASE
- TEMPORARY PAVEMENT CONSTRUCTED PREVIOUS PHASE

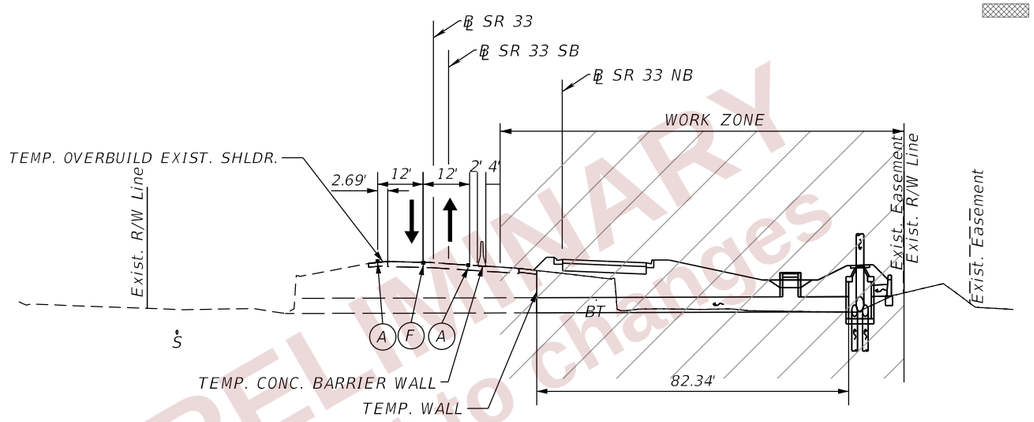

CRITICAL SECTION - PHASE 1, STAGE 2

℄ SR 33
STA. 480+00 (BOX CULVERT)

PRELIMINARY
subject to changes

THE OFFICIAL RECORD OF THIS SHEET IS THE ELECTRONIC FILE DIGITALLY SIGNED AND SEALED UNDER RULE 61G15-23.004, F.A.C.

REVISIONS				ENGINEER OF RECORD	STATE OF FLORIDA DEPARTMENT OF TRANSPORTATION			TTC PLAN (81) CRITICAL SECTIONS	SHEET NO.
DATE	DESCRIPTION	DATE	DESCRIPTION	RYAN J. WILLIAMSON, P.E. LICENSE NUMBER 81421 BURGESS & NIPLE, INC. 1800 PEMBROOK DRIVE, SUITE 265 ORLANDO, FL 32810	ROAD NO.	COUNTY	FINANCIAL PROJECT ID		585
					SR 400	POLK	430185-3-52-01		

2/28/2024 7:11:21 PM day
P:\ORD_FDOT\WorkSets\FDOT\430185352O1-I-4\Roadway\TCP\TCTYRD01.dgn

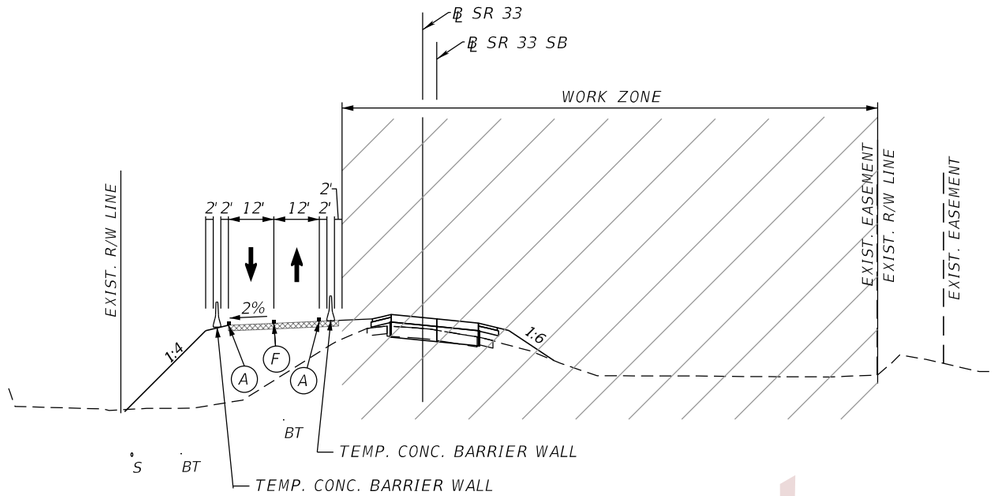

CRITICAL SECTION - PHASE 1, STAGE 2

℄ SR 33
STA. 493+00

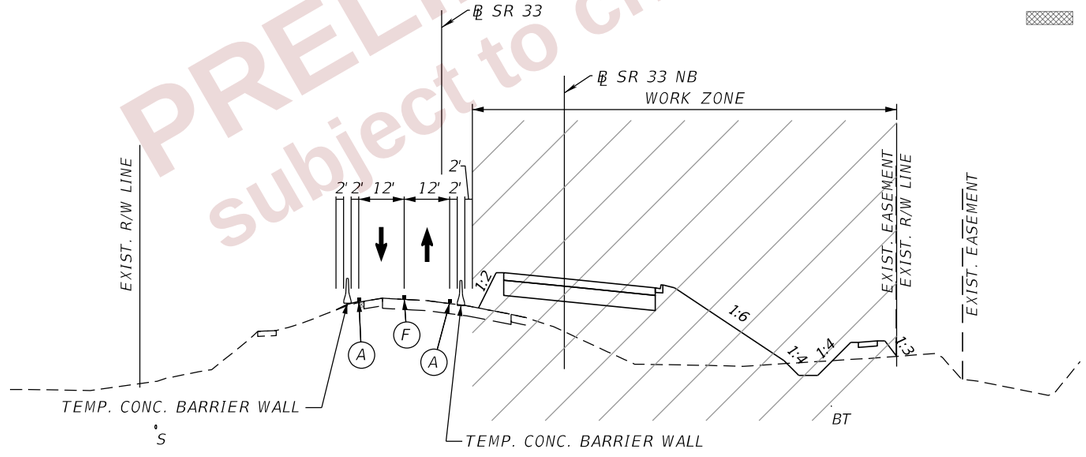

CRITICAL SECTION - PHASE 1, STAGE 2

℄ SR 33
STA. 485+00

PAVEMENT MARKING LEGEND

- (A) 6" SOLID WHITE TEMPORARY PAVEMENT MARKING
- (B) 6" SKIP WHITE TEMPORARY PAVEMENT MARKING (10'-30')
- (C) 6" SOLID YELLOW TEMPORARY PAVEMENT MARKING
- (D) 6" SKIP YELLOW TEMPORARY PAVEMENT MARKING (10'-30')
- (E) TEMPORARY PAVEMENT MARKINGS PREVIOUSLY APPLIED
- (F) 6" SOLID DOUBLE YELLOW TEMPORARY MARKING
- TEMPORARY PAVEMENT CURRENT PHASE
- TEMPORARY PAVEMENT CONSTRUCTED PREVIOUS PHASE

PRELIMINARY
subject to changes

THE OFFICIAL RECORD OF THIS SHEET IS THE ELECTRONIC FILE DIGITALLY SIGNED AND SEALED UNDER RULE 61G15-23.004, F.A.C.

REVISIONS				ENGINEER OF RECORD	STATE OF FLORIDA DEPARTMENT OF TRANSPORTATION			TTC PLAN (82) CRITICAL SECTIONS	SHEET NO.
DATE	DESCRIPTION	DATE	DESCRIPTION	RYAN J. WILLIAMSON, P.E. LICENSE NUMBER 81421 BURGESS & NIPLE, INC. 1800 PEMBROOK DRIVE, SUITE 265 ORLANDO, FL 32810	ROAD NO.	COUNTY	FINANCIAL PROJECT ID		586
					SR 400	POLK	430185-3-52-01		

2/28/2024 7:11:22 PM day
P:\ORD_FDOT\WorkSets\FDOT\430185352O1-I-4\Roadway\TCP\TCTYRD01.dgn

LEGEND

- TEMP PAVEMENT CURRENT PHASE
- TEMP PAVEMENT CONST. PREVIOUS PHASE
- PROP. PAVEMENT CONSTRUCTED CURRENT PHASE
- PROP. PAVEMENT CONSTRUCTED PREVIOUS PHASE
- DIRECTION OF TRAFFIC
- WORK ZONE
- CRASH CUSHION
- WORK ZONE SIGN
- CHANNELIZING DEVICES (INDEX 102-600)

- (1) 6" WHITE
- (2) 6" YELLOW
- (4) 6" WHITE, 10'-30' SKIP

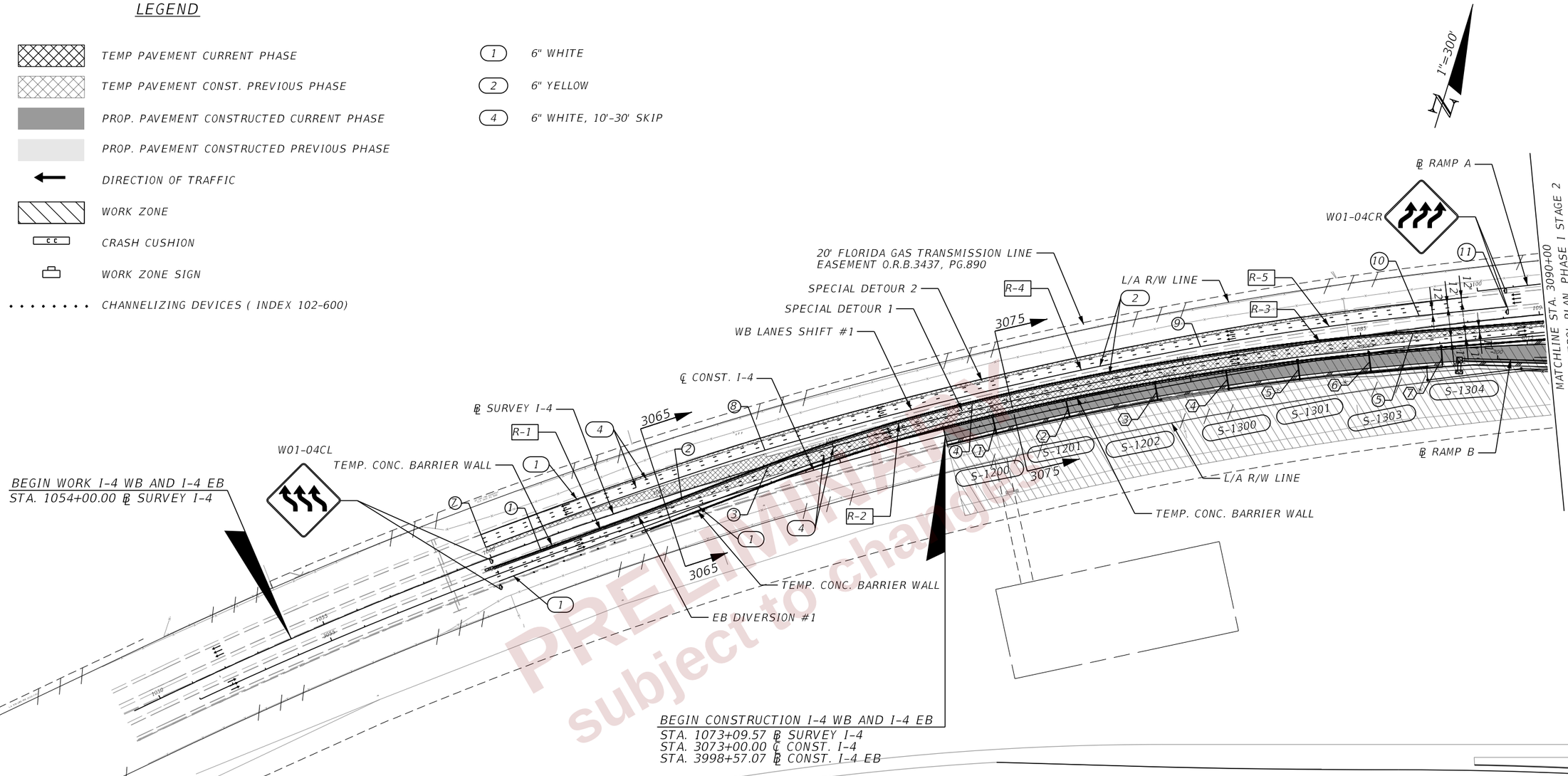

BEGIN CONSTRUCTION I-4 WB AND I-4 EB
STA. 1073+09.57 ℄ SURVEY I-4
STA. 3073+00.00 ℄ CONST. I-4
STA. 3998+57.07 ℄ CONST. I-4 EB

TEMP. DRAINAGE

(1) CONST. 86 LF OF 18" PIPE & TEMP. BARRIER INLET, CONNECT PIPE TO STRUCTURE S-1200
(2) CONST. 51' LF OF 18" PIPE & TEMP. BARRIER INLET, CONNECT PIPE TO STRUCTURE S-1201
(3) CONST. 51 LF OF 18" PIPE & TEMP. BARRIER INLET, CONNECT PIPE TO STRUCTURE S-1202
(4) CONST. 51 LF OF 18" PIPE, CONNECT PIPE TO STRUCTURE S-1300
(5) CONST. 51 LF OF 18" PIPE & TEMP. BARRIER INLET, CONNECT PIPE TO STRUCTURE S-1301
(6) CONST. 51 LF OF 18" PIPE & TEMP. BARRIER INLET, CONNECT PIPE TO STRUCTURE S-1303
(7) CONST. 53 LF OF 18" PIPE & TEMP. BARRIER INLET, CONNECT PIPE TO STRUCTURE S-1304

* TEMP. INLET TO BE CONSTRUCTED DURING NIGHT TIME LANE CLOSURE UTILIZING STANDARD PLANS INDEX 102-613. SEE TTC PLAN GENERAL NOTES SHEET FOR LANE CLOSURE RESTRICTIONS.

EB DIVERSION #1 GEOMETRY

(1) PC 1061+37.20, 32.00' RT.
R-1 RADIUS = 22,918'
(2) PT 1065+54.36, 20.64' RT.
(3) PC 1068+10.02, 4.83' RT.
R-2 RADIUS = 4,624'
(4) PCC 1074+03.85, 18.03' LT.
R-3 RADIUS = 7,750'
(5) PT 1086+44.78, 11.74' RT.

WB LANES SHIFT #1 GEOMETRY

(7) 1059+96.31, MATCH EXIST.
R-4 RADIUS = 11,501'
(8) PC 1068+15.11, 42.00' RT.
(9) PCC 1068+56.32, 42.00' RT.
R-5 RADIUS = 8,000'
(10) PT 1086+68.00, 34.83' LT.
(11) 1089+11.26, MATCH EXIST.

PRELIMINARY
subject to change

REVISIONS			
DATE	DESCRIPTION	DATE	DESCRIPTION

ENGINEER OF RECORD
RYAN J. WILLIAMSON, P.E.
LICENSE NUMBER 81421
BURGESS & NIPLE, INC.
1800 PEMBROOK DRIVE, SUITE 265
ORLANDO, FL 32810

STATE OF FLORIDA
DEPARTMENT OF TRANSPORTATION

ROAD NO.	COUNTY	FINANCIAL PROJECT ID
SR 400	POLK	430185-3-52-01

TTC PLAN (83)
PHASE I STAGE 2
I-4

SHEET NO. 587

THE OFFICIAL RECORD OF THIS SHEET IS THE ELECTRONIC FILE DIGITALLY SIGNED AND SEALED UNDER RULE 61G15-23.004, F.A.C.

2/28/2024 7:11:47 PM dav
P:\ORD_FDOT\WorkSets\FDOT\430185352O1-I-4\Roadway\TCP\TCPLRD0P152_14.dgn

LEGEND

- TEMP PAVEMENT CURRENT PHASE
- TEMP PAVEMENT CONST. PREVIOUS PHASE
- PROP. PAVEMENT CONSTRUCTED CURRENT PHASE
- PROP. PAVEMENT CONSTRUCTED PREVIOUS PHASE
- DIRECTION OF TRAFFIC
- WORK ZONE
- CRASH CUSHION
- WORK ZONE SIGN

- (1) 6" WHITE
- (2) 6" YELLOW
- (4) 6" WHITE, 10'-30' SKIP
- (HR) EXIST. HIGH MAST LIGHTING TO REMAIN ACTIVE IN THIS PHASE (SEE TTC PLAN TEMPORARY LIGHTING)

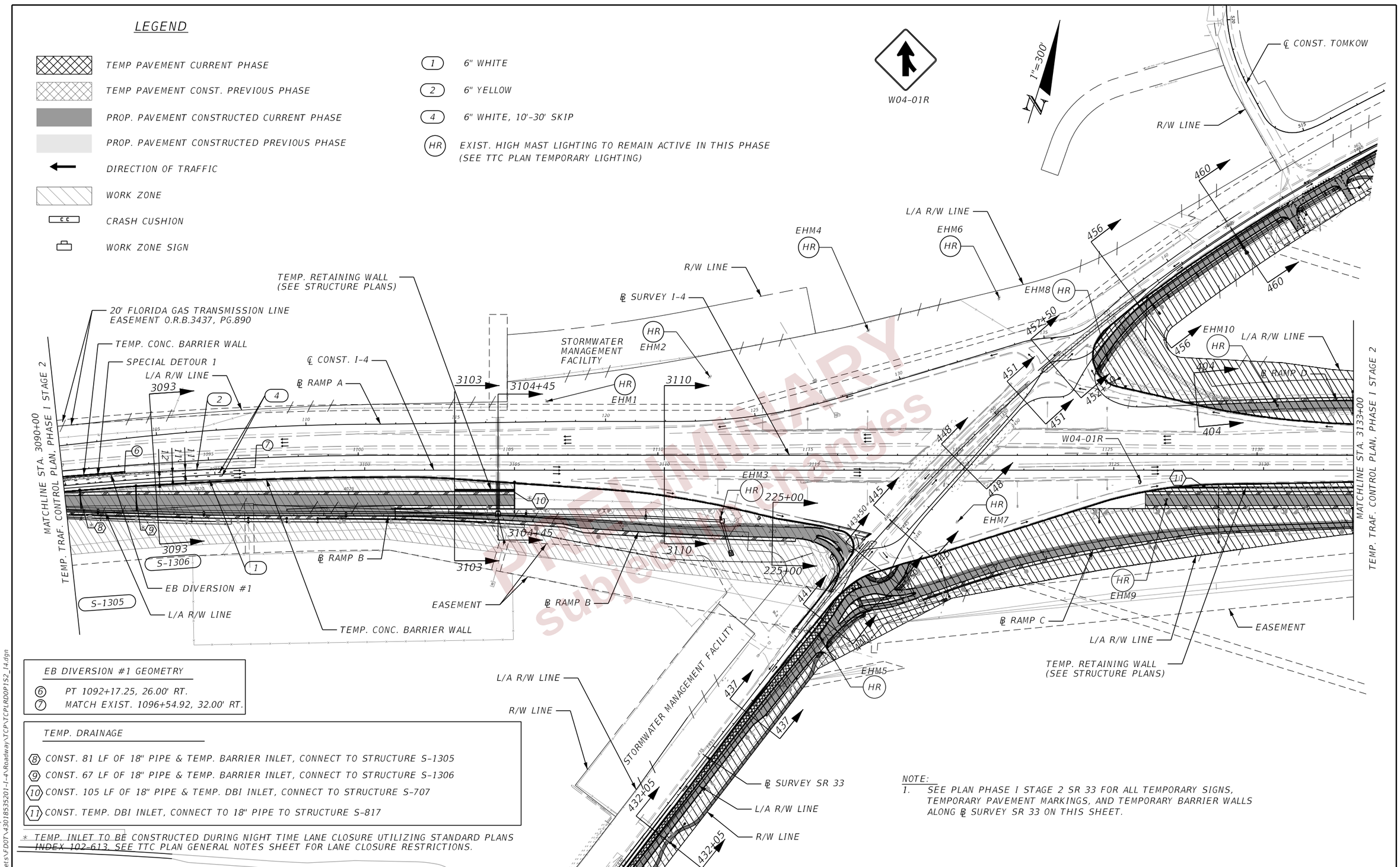

EB DIVERSION #1 GEOMETRY

- (6) PT 1092+17.25, 26.00' RT.
- (7) MATCH EXIST. 1096+54.92, 32.00' RT.

TEMP. DRAINAGE

- (8) CONST. 81 LF OF 18" PIPE & TEMP. BARRIER INLET, CONNECT TO STRUCTURE S-1305
- (9) CONST. 67 LF OF 18" PIPE & TEMP. BARRIER INLET, CONNECT TO STRUCTURE S-1306
- (10) CONST. 105 LF OF 18" PIPE & TEMP. DBI INLET, CONNECT TO STRUCTURE S-707
- (11) CONST. TEMP. DBI INLET, CONNECT TO 18" PIPE TO STRUCTURE S-817

* TEMP. INLET TO BE CONSTRUCTED DURING NIGHT TIME LANE CLOSURE UTILIZING STANDARD PLANS INDEX 102-613. SEE TTC PLAN GENERAL NOTES SHEET FOR LANE CLOSURE RESTRICTIONS.

NOTE:
1. SEE PLAN PHASE I STAGE 2 SR 33 FOR ALL TEMPORARY SIGNS, TEMPORARY PAVEMENT MARKINGS, AND TEMPORARY BARRIER WALLS ALONG ℄ SURVEY SR 33 ON THIS SHEET.

PRELIMINARY subject to changes

REVISIONS			
DATE	DESCRIPTION	DATE	DESCRIPTION

ENGINEER OF RECORD
RYAN J. WILLIAMSON, P.E.
LICENSE NUMBER 81421
BURGESS & NIPLE, INC.
1800 PEMBROOK DRIVE, SUITE 265
ORLANDO, FL 32810

STATE OF FLORIDA
DEPARTMENT OF TRANSPORTATION

ROAD NO.	COUNTY	FINANCIAL PROJECT ID
SR 400	POLK	430185-3-52-01

TTC PLAN (84)
PHASE I STAGE 2
I-4

SHEET NO. 588

THE OFFICIAL RECORD OF THIS SHEET IS THE ELECTRONIC FILE DIGITALLY SIGNED AND SEALED UNDER RULE 61G15-23.004, F.A.C.

2/28/2024 7:11:53 PM dayj
P:\ORD_FDOT\Work Sets\FDOT\430185320 1-4\Roadway\TCP\TCPLRD00P1S2_I4.dgn

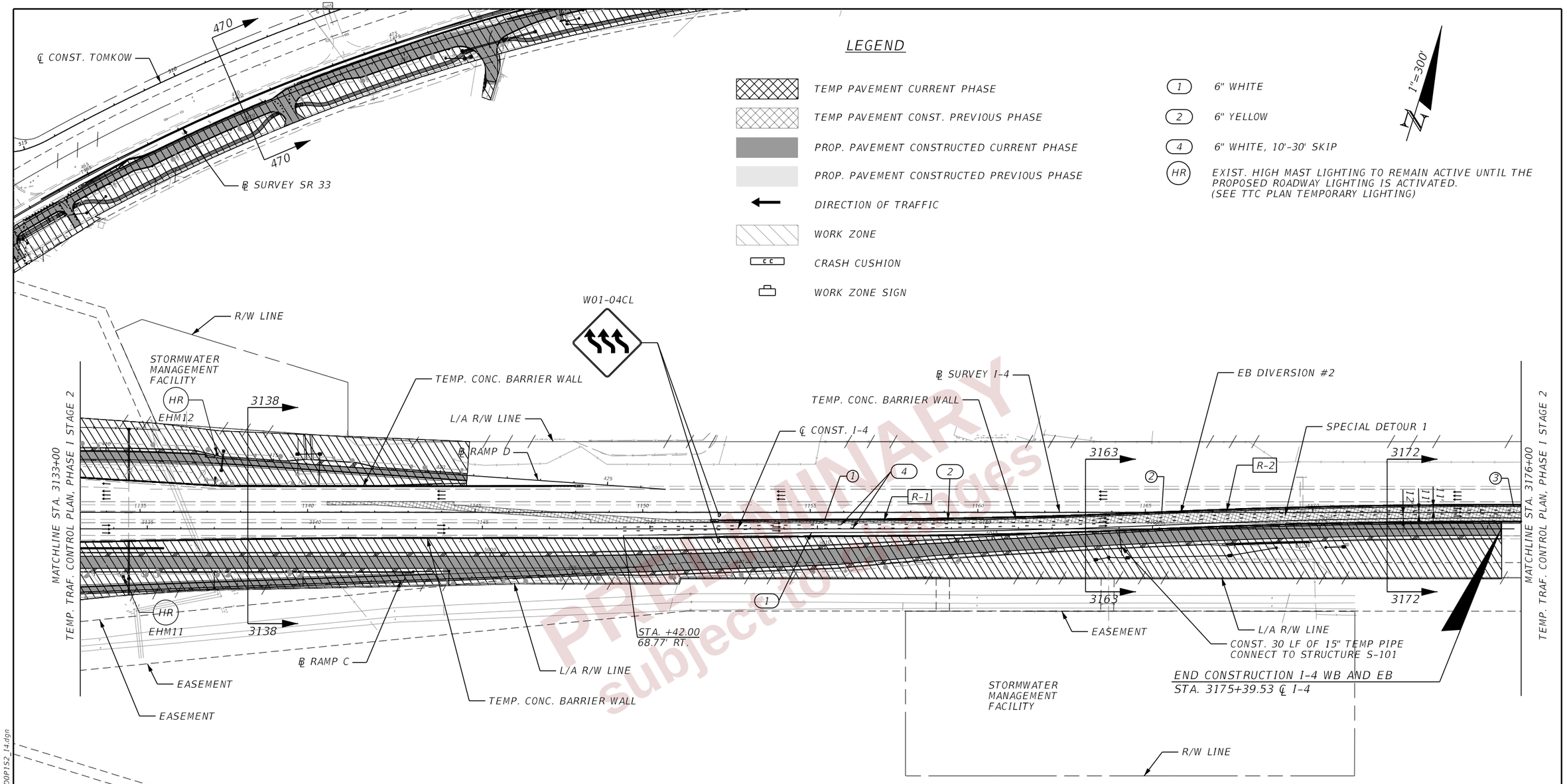

PRELIMINARY
Subject to Revisions

NOTE:
1. SEE PLAN PHASE I STAGE 2 SR 33 FOR ALL TEMPORARY SIGNS, TEMPORARY PAVEMENT MARKINGS, AND TEMPORARY BARRIER WALLS ALONG ℄ SR 33 ON THIS SHEET.

EB DIVERSION #2 GEOMETRY	
1	PC 1155+41.42, 26.00' RT.
R-1	RADIUS = 22,912'
2	PCC 1165+48.54, 4.11' RT.
R-2	RADIUS = 23,004'
3	PT 1175+00.00, 17.82' LT.

REVISIONS			
DATE	DESCRIPTION	DATE	DESCRIPTION

ENGINEER OF RECORD
RYAN J. WILLIAMSON, P.E.
LICENSE NUMBER 81421
BURGESS & NIPLE, INC.
1800 PEMBROOK DRIVE, SUITE 265
ORLANDO, FL 32810

STATE OF FLORIDA
DEPARTMENT OF TRANSPORTATION

ROAD NO.	COUNTY	FINANCIAL PROJECT ID
SR 400	POLK	430185-3-52-01

TTC PLAN (85)
PHASE I STAGE 2
I-4

SHEET NO. 589

THE OFFICIAL RECORD OF THIS SHEET IS THE ELECTRONIC FILE DIGITALLY SIGNED AND SEALED UNDER RULE 61G15-23.004, F.A.C.

2/28/2024 7:12:02 PM day
P:\ORD_FDOT\WorkSets\FDOT\430185352O1-I-4\Roadway\TCP\TCPLRDOP1S2_I4.dgn

LEGEND

- TEMP PAVEMENT CURRENT PHASE
- TEMP PAVEMENT CONST. PREVIOUS PHASE
- PROP. PAVEMENT CONSTRUCTED CURRENT PHASE
- PROP. PAVEMENT CONSTRUCTED PREVIOUS PHASE
- DIRECTION OF TRAFFIC
- WORK ZONE
- CRASH CUSHION
- WORK ZONE SIGN
- CHANNELIZING DEVICES (INDEX 102-600)

(1) 6" WHITE
(2) 6" YELLOW
(4) 6" WHITE, 10'-30' SKIP

1"=300'

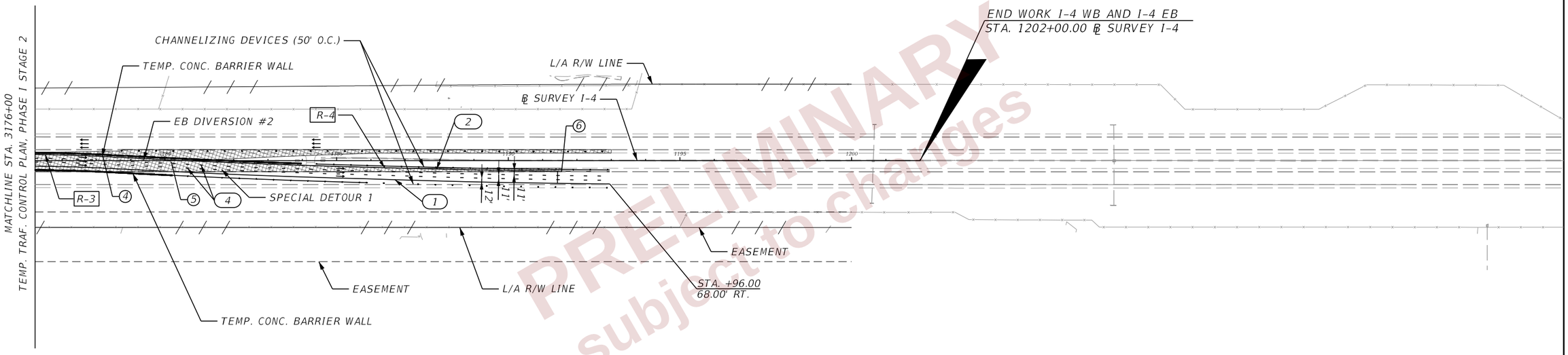

EB DIVERSION #2 GEOMETRY

R-3	RADIUS = 4,618'
(4)	PT 1178+18.62, 6.15' LT.
(5)	PC 1180+18.38, 3.78' RT.
R-4	RADIUS = 22,918'
(6)	PT 1191+55.38, 32.00' RT.

PRELIMINARY subject to changes

THE OFFICIAL RECORD OF THIS SHEET IS THE ELECTRONIC FILE DIGITALLY SIGNED AND SEALED UNDER RULE 61G15-23.004, F.A.C.

2/28/2024 7:12:10 PM day
P:\ORD_FDOT\WorkSets\FDOT_430185352O1-I-4\Roadway\TCP\TCPLRDDP1S2_I4.dgn

REVISIONS			
DATE	DESCRIPTION	DATE	DESCRIPTION

ENGINEER OF RECORD
RYAN J. WILLIAMSON, P.E.
LICENSE NUMBER 81421
BURGESS & NIPLE, INC.
1800 PEMBROOK DRIVE, SUITE 265
ORLANDO, FL 32810

STATE OF FLORIDA
DEPARTMENT OF TRANSPORTATION

ROAD NO.	COUNTY	FINANCIAL PROJECT ID
SR 400	POLK	430185-3-52-01

TTC PLAN (86)
PHASE I STAGE 2
I-4

SHEET NO. 590

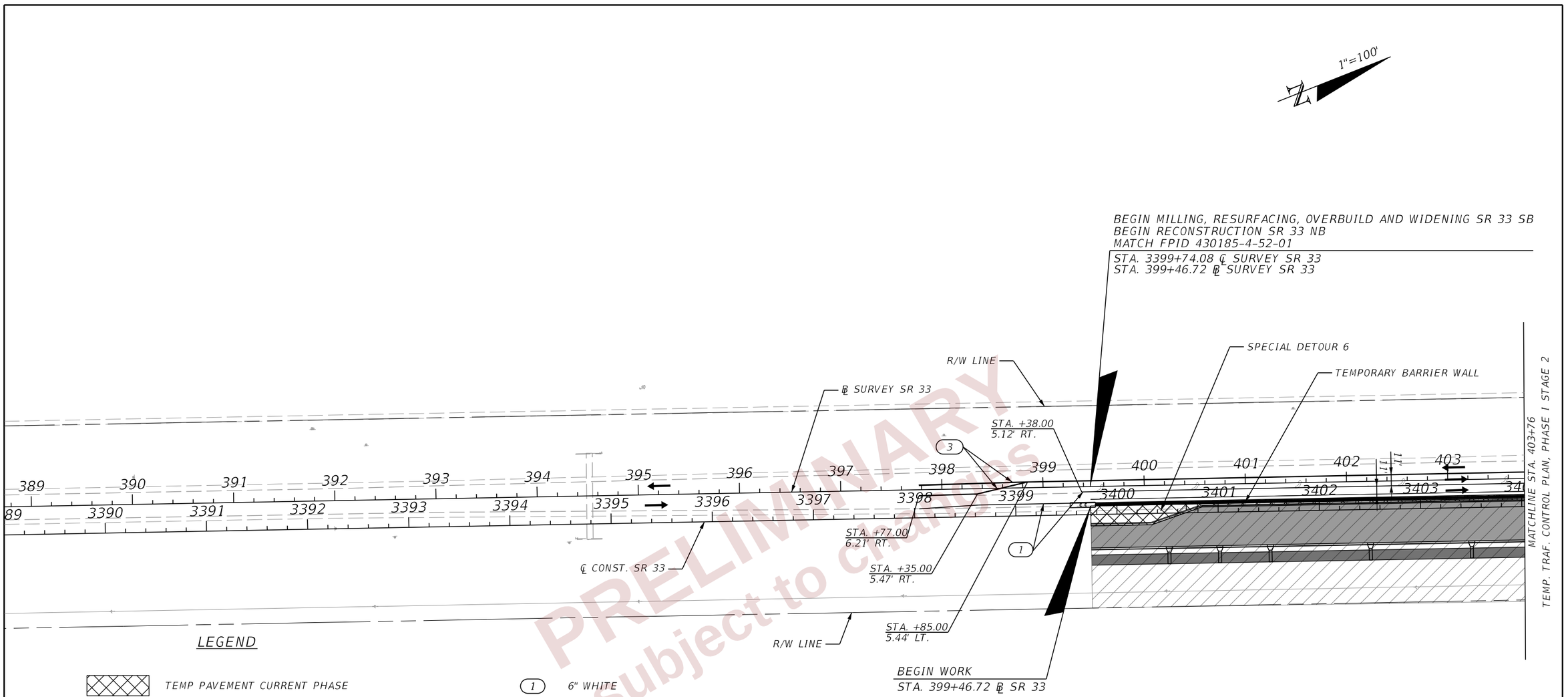

LEGEND

- TEMP PAVEMENT CURRENT PHASE
- TEMP PAVEMENT CONST. PREVIOUS PHASE
- PROP. PAVEMENT CONSTRUCTED CURRENT PHASE
- PROP. PAVEMENT CONSTRUCTED PREVIOUS PHASE
- SHARED USE PATH CONSTRUCTED CURRENT PHASE
- DIRECTION OF TRAFFIC
- WORK ZONE
- CRASH CUSHION
- WORK ZONE SIGN

(1) 6" WHITE

(3) 6" DOUBLE YELLOW

PRELIMINARY
subject to changes

REVISIONS			
DATE	DESCRIPTION	DATE	DESCRIPTION

ENGINEER OF RECORD

RYAN J. WILLIAMSON, P.E.
LICENSE NUMBER 81421
BURGESS & NIPLE, INC.
1800 PEMBROOK DRIVE, SUITE 265
ORLANDO, FL 32810

STATE OF FLORIDA
DEPARTMENT OF TRANSPORTATION

ROAD NO.	COUNTY	FINANCIAL PROJECT ID
SR 400	POLK	430185-3-52-01

TTC PLAN (87)
PHASE I STAGE 2
SR 33

SHEET NO. 591

THE OFFICIAL RECORD OF THIS SHEET IS THE ELECTRONIC FILE DIGITALLY SIGNED AND SEALED UNDER RULE 61G15-23.004, F.A.C.

2/28/2024 7:12:44 PM dav
P:\ORD_FDOT\WorkSets\FDOT\430185352O1-I-4\Roadway\TCP\TCPLRD0P152_33.dgn

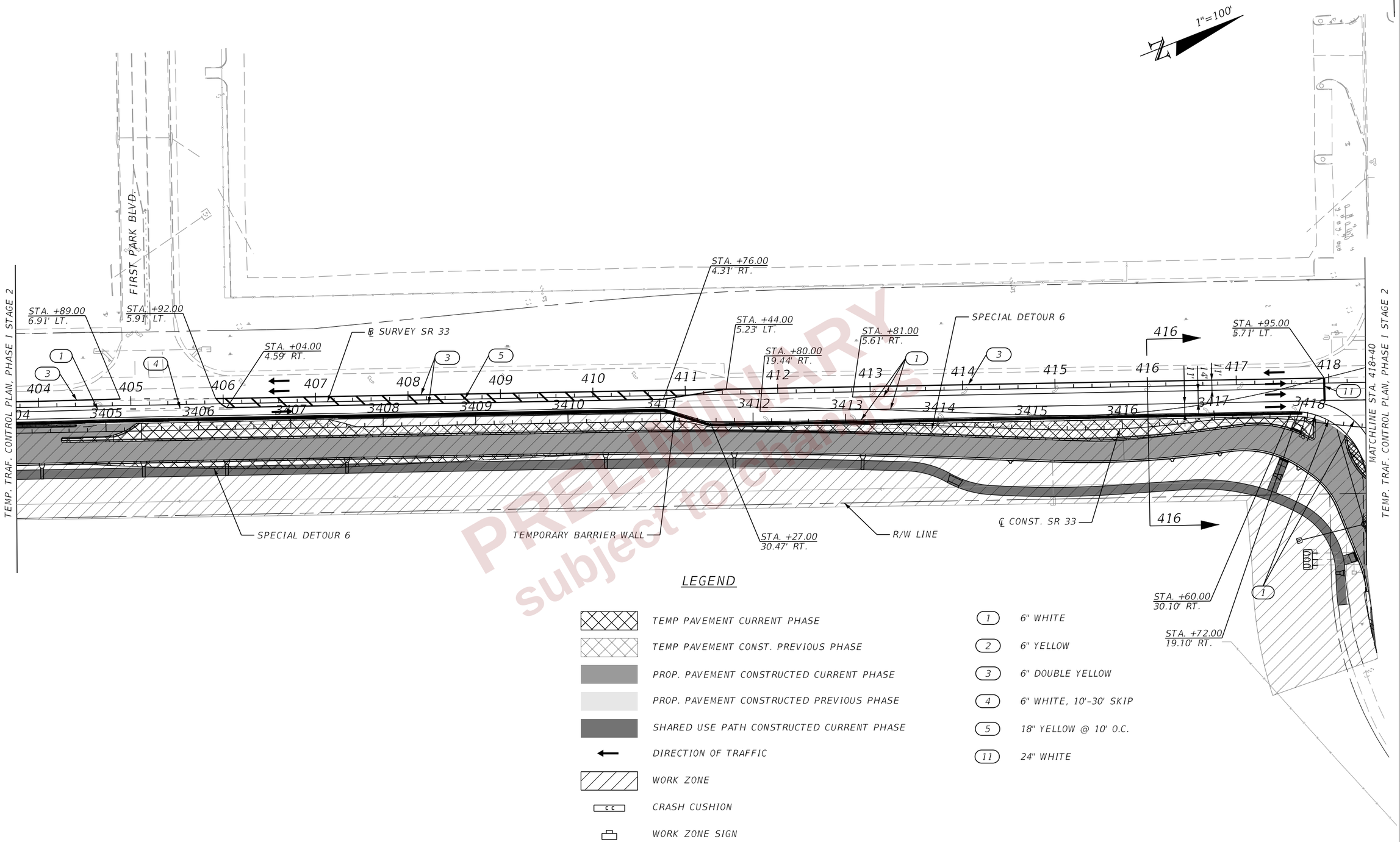

PRELIMINARY
subject to change

LEGEND

- TEMP PAVEMENT CURRENT PHASE
- TEMP PAVEMENT CONST. PREVIOUS PHASE
- PROP. PAVEMENT CONSTRUCTED CURRENT PHASE
- PROP. PAVEMENT CONSTRUCTED PREVIOUS PHASE
- SHARED USE PATH CONSTRUCTED CURRENT PHASE
- DIRECTION OF TRAFFIC
- WORK ZONE
- CRASH CUSHION
- WORK ZONE SIGN

- (1) 6" WHITE
- (2) 6" YELLOW
- (3) 6" DOUBLE YELLOW
- (4) 6" WHITE, 10'-30' SKIP
- (5) 18" YELLOW @ 10' O.C.
- (11) 24" WHITE

REVISIONS			
DATE	DESCRIPTION	DATE	DESCRIPTION

ENGINEER OF RECORD

RYAN J. WILLIAMSON, P.E.
LICENSE NUMBER 81421
BURGESS & NIPLE, INC.
1800 PEMBROOK DRIVE, SUITE 265
ORLANDO, FL 32810

STATE OF FLORIDA
DEPARTMENT OF TRANSPORTATION

ROAD NO.	COUNTY	FINANCIAL PROJECT ID
SR 400	POLK	430185-3-52-01

TTC PLAN (88)
PHASE I STAGE 2
SR 33

SHEET NO. 592

THE OFFICIAL RECORD OF THIS SHEET IS THE ELECTRONIC FILE DIGITALLY SIGNED AND SEALED UNDER RULE 61G15-23.004, F.A.C.

2/28/2024 7:12:45 PM day
P:\ORD_FDOT\WorkSets\FDOT\430185352O1-I-4\Roadway\TCP\TCPLRDDP1S2_33.dgn

1"=100'

R/W LINE

℄ CONST. FIRST PARK

STA. +48.00
19.05' RT.

STA. +58.00
3.17' RT.

STA. +12.00
14.49' RT.

℄ SURVEY SR 33

L/A R/W LINE

STA. +00.00
8.99' RT.

STA. +73.00
0.71' LT.

TEMP. CONC. BARRIER WALL

SPECIAL DETOUR 6

L.A. R/W LINE PER 16320-2403

MATCHLINE STA. 418+40
TEMP. TRAF. CONTROL PLAN, PHASE I STAGE 2

MATCHLINE STA. 433+00
TEMP. TRAF. CONTROL PLAN, PHASE I STAGE 2

80' R

℄ CONST. SR 33

R/W LINE

STA. +01.00
26.87' RT.

STA. +10.00
38.96' RT.

STA. +55.00
38.83' RT.

℄ CONST. UNIVERSITY

PRELIMINARY
subject to change

LEGEND

- TEMP PAVEMENT CURRENT PHASE
- TEMP PAVEMENT CONST. PREVIOUS PHASE
- PROP. PAVEMENT CONSTRUCTED CURRENT PHASE
- PROP. PAVEMENT CONSTRUCTED PREVIOUS PHASE
- PROP. PAVEMENT TO BE CONSTRUCTED WITH DETOUR
- SHARED USE PATH CONSTRUCTED CURRENT PHASE
- DIRECTION OF TRAFFIC
- WORK ZONE
- CRASH CUSHION
- WORK ZONE SIGN
- (1) 6" WHITE
- (3) 6" DOUBLE YELLOW
- (11) 24" WHITE

THE OFFICIAL RECORD OF THIS SHEET IS THE ELECTRONIC FILE DIGITALLY SIGNED AND SEALED UNDER RULE 61G15-23.004, F.A.C.

REVISIONS				ENGINEER OF RECORD	STATE OF FLORIDA DEPARTMENT OF TRANSPORTATION			TTC PLAN (89) PHASE I STAGE 2	SHEET NO.
DATE	DESCRIPTION	DATE	DESCRIPTION	RYAN J. WILLIAMSON, P.E. LICENSE NUMBER 81421 BURGESS & NIPLE, INC. 1800 PEMBROOK DRIVE, SUITE 265 ORLANDO, FL 32810	ROAD NO.	COUNTY	FINANCIAL PROJECT ID		593
					SR 400	POLK	430185-3-52-01		

2/28/2024 7:12:47 PM day
P:\ORD_FDOT\WorkSets\FDOT\430185352O1-I-4\Roadway\TCP\TCPLROOP152_33.dgn

M03-01
FTP-17-06
M06-02L

M03-03
FTP-17-06
M06-02R

R01-02

1"=100'

R06-01L
R01-01

EASEMENT

R/W LINE

EASEMENT

℄ RAMP B

TEMP. CONC. BARRIER WALL

℄ CONST. I-4

℄ SURVEY I-4

STA. +77.00
278.01' LT.

STA. +17.00
228.52' LT.

STA. +49.00
172.34' LT.

L/A R/W LINE

SPECIAL DETOUR 4

L/A R/W LINE

SPECIAL DETOUR 3

℄ SURVEY SR 33

TEMP. CONC. BARRIER WALL

R01-02

STA. +87.00
64.18' LT.

STA. +04.00
30.54' LT.

R06-01L
R01-01

STA. +64.00
27.79' LT.

STA. +23.00
26.87' LT.

STA. +91.00
29.00' LT.

SPECIAL DETOUR 3

℄ CONST. SR 33

L/A R/W LINE

SPECIAL DETOUR 6

R/W LINE

EHM3

HR

TEMP. CONC. BARRIER WALL

EHM7

HR

EASEMENT

L/A R/W LINE

SPECIAL DETOUR 6

℄ RAMP C

EASEMENT

MATCHLINE STA. 433+00
TEMP. TRAF. CONTROL PLAN, PHASE I STAGE 2

MATCHLINE STA. 447+00
TEMP. TRAF. CONTROL PLAN, PHASE I STAGE 2

LEGEND

- TEMP PAVEMENT CURRENT PHASE
- TEMP PAVEMENT CONST. PREVIOUS PHASE
- PROP. PAVEMENT CONSTRUCTED CURRENT PHASE
- PROP. PAVEMENT CONSTRUCTED PREVIOUS PHASE
- SHARED USE PATH CONSTRUCTED CURRENT PHASE
- DIRECTION OF TRAFFIC
- WORK ZONE
- CRASH CUSHION
- WORK ZONE SIGN

(1) 6" WHITE
(2) 6" YELLOW
(7) WHITE DIRECTIONAL ARROWS (TYP.)
(11) 24" WHITE
(HR) EXIST. HIGH MASS LIGHTING TO REMAIN ACTIVE IN THIS PHASE (SEE TTC PLAN TEMPORARY LIGHTING)

PRELIMINARY subject to change

THE OFFICIAL RECORD OF THIS SHEET IS THE ELECTRONIC FILE DIGITALLY SIGNED AND SEALED UNDER RULE 61G15-23.004, F.A.C.

REVISIONS			
DATE	DESCRIPTION	DATE	DESCRIPTION

ENGINEER OF RECORD
RYAN J. WILLIAMSON, P.E.
LICENSE NUMBER 81421
BURGESS & NIPLE, INC.
1800 PEMBROOK DRIVE, SUITE 265
ORLANDO, FL 32810

STATE OF FLORIDA
DEPARTMENT OF TRANSPORTATION

ROAD NO.	COUNTY	FINANCIAL PROJECT ID
SR 400	POLK	430185-3-52-01

TTC PLAN (90)
PHASE I STAGE 2
SR 33

SHEET NO. 594

2/28/2024 7:12:49 PM day
P:\ORD_FDOT\WorkSet\FDOT\430185352O1-I-4\Roadway\TCP\TCPLRDDP1S2_33.dgn

LEGEND

- TEMP PAVEMENT CURRENT PHASE
- TEMP PAVEMENT CONST. PREVIOUS PHASE
- PROP. PAVEMENT CONSTRUCTED CURRENT PHASE
- PROP. PAVEMENT CONSTRUCTED PREVIOUS PHASE
- SHARED USE PATH CONSTRUCTED CURRENT PHASE
- DIRECTION OF TRAFFIC
- WORK ZONE
- CRASH CUSHION
- WORK ZONE SIGN

1"=100'

EHM6 (HR)

℄ RAMP A

℄ SURVEY SR 33

℄ CONST. SR 33

℄ SURVEY I-4

℄ CONST. I-4

℄ RAMP C

℄ RAMP D

EHM8 (HR)

EXIST. SIGN TO REMAIN

L/A R/W LINE

TEMP. CONC. BARRIER WALL

MATCHLINE STA. 447+00
TEMP. TRAF. CONTROL PLAN, PHASE I STAGE 2

MATCHLINE STA. 461+00
TEMP. TRAF. CONTROL PLAN, PHASE I STAGE 2

(HR) EXIST. HIGH MAST LIGHTING TO REMAIN ACTIVE IN THIS PHASE (SEE TTC PLAN TEMPORARY LIGHTING)

NOTE:
SEE PHASE 1 STAGE 1 I-4 FOR TEMP RAMP D CONSTRUCTION DETAILS.

PRELIMINARY subject to change

THE OFFICIAL RECORD OF THIS SHEET IS THE ELECTRONIC FILE DIGITALLY SIGNED AND SEALED UNDER RULE 61G15-23.004, F.A.C.

REVISIONS				ENGINEER OF RECORD	STATE OF FLORIDA DEPARTMENT OF TRANSPORTATION			TTC PLAN (91) PHASE I STAGE 2 SR 33	SHEET NO.
DATE	DESCRIPTION	DATE	DESCRIPTION	RYAN J. WILLIAMSON, P.E. LICENSE NUMBER 81421 BURGESS & NIPLE, INC. 1800 PEMBROOK DRIVE, SUITE 265 ORLANDO, FL 32810	ROAD NO.	COUNTY	FINANCIAL PROJECT ID		595
					SR 400	POLK	430185-3-52-01		

2/28/2024 7:12:52 PM dajr
P:\ORD_FDOT\WorkSets\FDOT\430185352O1-I-4\Roadway\TCP\TCPLRD0P152_33.dgn

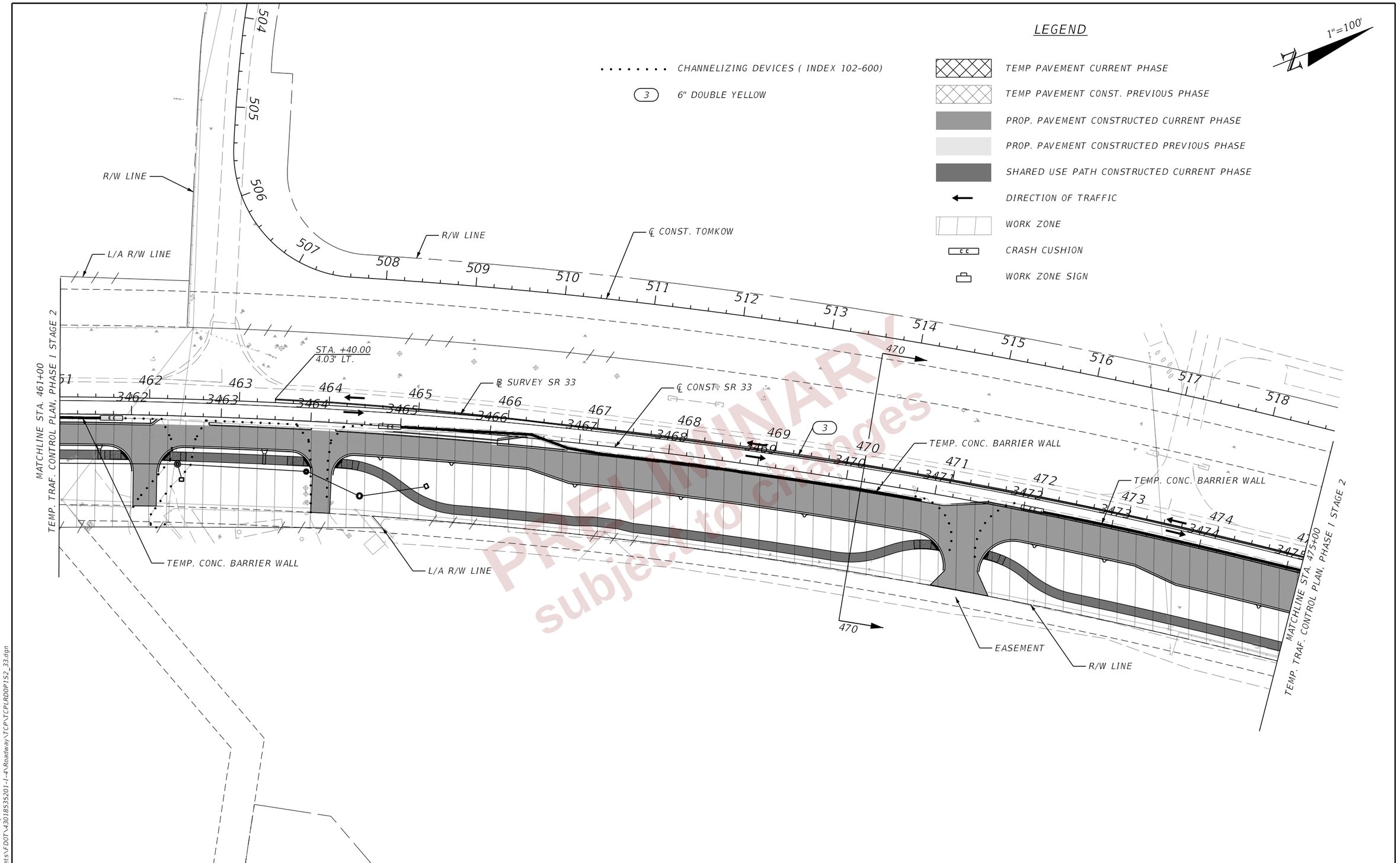

PRELIMINARY subject to changes

REVISIONS				ENGINEER OF RECORD	STATE OF FLORIDA DEPARTMENT OF TRANSPORTATION			TTC PLAN (92) PHASE I STAGE 2 SR 33	SHEET NO.
DATE	DESCRIPTION	DATE	DESCRIPTION	RYAN J. WILLIAMSON, P.E. LICENSE NUMBER 81421 BURGESS & NIPLE, INC. 1800 PEMBROOK DRIVE, SUITE 265 ORLANDO, FL 32810	ROAD NO.	COUNTY	FINANCIAL PROJECT ID		596
					SR 400	POLK	430185-3-52-01		

THE OFFICIAL RECORD OF THIS SHEET IS THE ELECTRONIC FILE DIGITALLY SIGNED AND SEALED UNDER RULE 61G15-23.004, F.A.C.

2/28/2024 7:12:54 PM day
P:\ORD_FDOT\WorkSets\FDOT\430185352O1-I-4\Roadway\TCP\TCPLRDDP152_33.dgn

LEGEND

- WORK ZONE SIGN
- CHANNELIZING DEVICES (INDEX 102-600)
- TEMP PAVEMENT CURRENT PHASE
- TEMP PAVEMENT CONST. PREVIOUS PHASE
- PROP. PAVEMENT CONSTRUCTED CURRENT PHASE
- PROP. PAVEMENT CONSTRUCTED PREVIOUS PHASE
- SHARED USE PATH CONSTRUCTED CURRENT PHASE
- DIRECTION OF TRAFFIC
- WORK ZONE
- CRASH CUSHION
- (1) 6" WHITE
- (3) 6" DOUBLE YELLOW

1"=100'

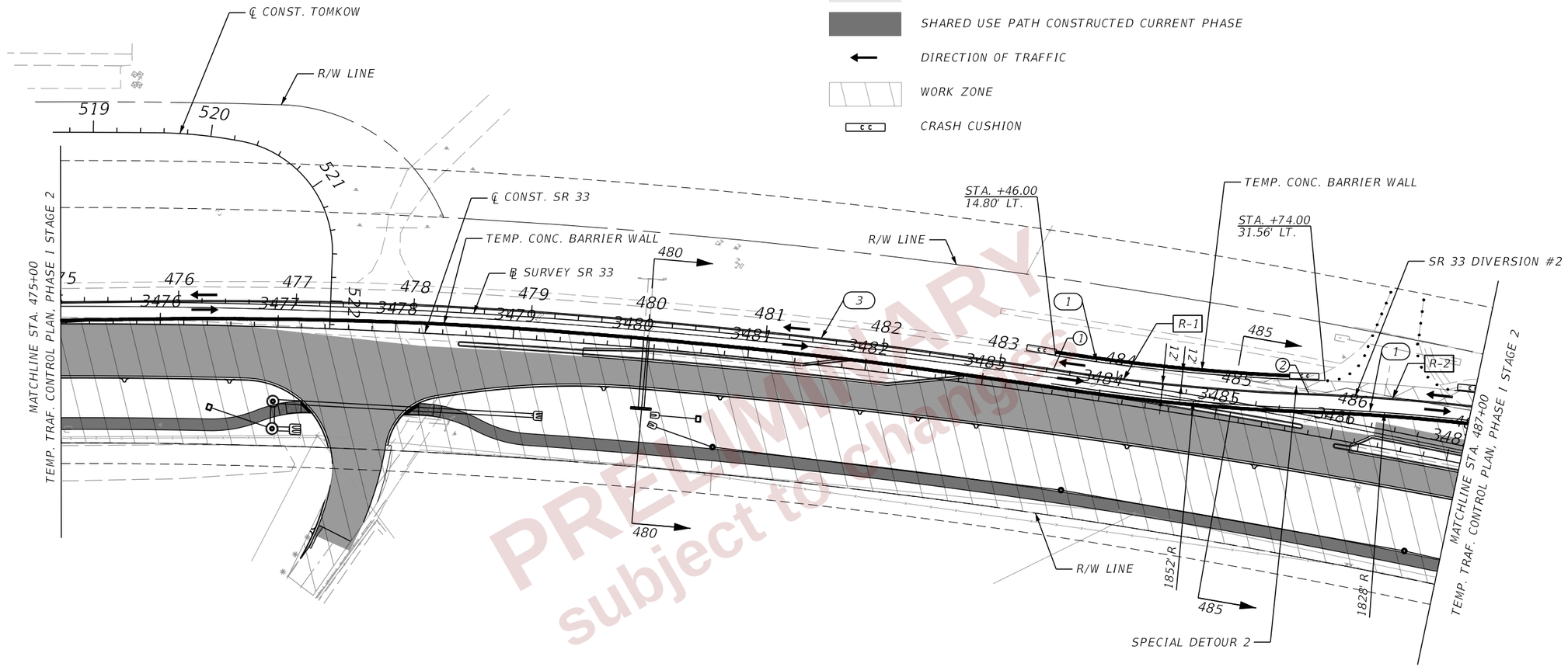

PRELIMINARY
subject to change

SR 33 DIVERSION #2 GEOMETRY

(1)	PC 483+45.56, 2.80' LT.
R-1	RADIUS = 1840'
(2)	PCC 485+62.81, 17.69' LT.
R-2	RADIUS = 1840'

NOTE:

ALL STA./OFFSET CALLOUTS ARE BASED OFF BL SURVEY SR 33.

REVISIONS			
DATE	DESCRIPTION	DATE	DESCRIPTION

ENGINEER OF RECORD
RYAN J. WILLIAMSON, P.E.
LICENSE NUMBER 81421
BURGESS & NIPLE, INC.
1800 PEMBROOK DRIVE, SUITE 265
ORLANDO, FL 32810

STATE OF FLORIDA
DEPARTMENT OF TRANSPORTATION

ROAD NO.	COUNTY	FINANCIAL PROJECT ID
SR 400	POLK	430185-3-52-01

TTC PLAN (93)
PHASE I STAGE 2
SR 33

SHEET NO. 597

THE OFFICIAL RECORD OF THIS SHEET IS THE ELECTRONIC FILE DIGITALLY SIGNED AND SEALED UNDER RULE 61G15-23.004, F.A.C.

2/28/2024 7:12:57 PM day
P:\ORD_FDOT\WorkSets\FDOT\430185352O1-I-4\Roadway\TCP\TCPLROOP1S2_33.dgn

LEGEND

1" = 100'

1	6" WHITE
3	6" DOUBLE YELLOW
	TEMP PAVEMENT CURRENT PHASE
	TEMP PAVEMENT CONST. PREVIOUS PHASE
	PROP. PAVEMENT CONSTRUCTED CURRENT PHASE
	PROP. PAVEMENT CONSTRUCTED PREVIOUS PHASE
	SHARED USE PATH CONSTRUCTED CURRENT PHASE
	DIRECTION OF TRAFFIC
	WORK ZONE
	CRASH CUSHION
	WORK ZONE SIGN
	CHANNELIZING DEVICES (INDEX 102-600)

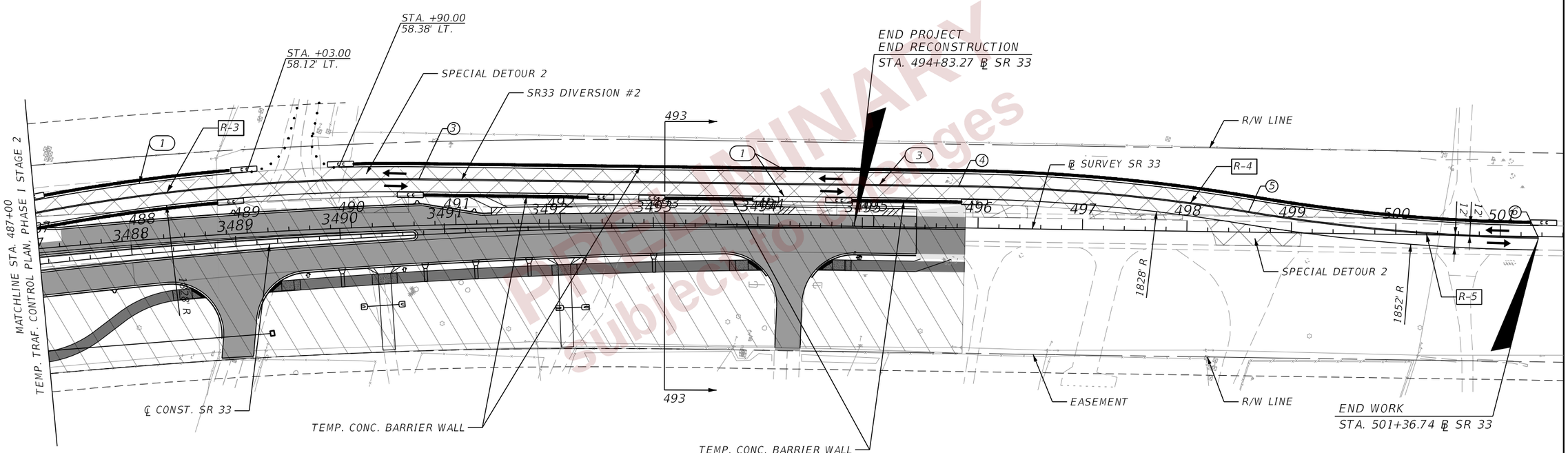

PRELIMINARY subject to changes

SR 33 DIVERSION #2 GEOMETRY

R-3	RADIUS = 1840'
3	PT 490+65.78, 44.28' LT.
4	PC 495+80.83, 39.85' LT.
R-4	RADIUS = 1840'
5	PCC 498+58.79, 19.32' LT.
R-5	RADIUS = 1840'
6	PT 501+36.74, ℄

THE OFFICIAL RECORD OF THIS SHEET IS THE ELECTRONIC FILE DIGITALLY SIGNED AND SEALED UNDER RULE 61G15-23.004, F.A.C.

2/28/2024 7:12:59 PM day
P:\ORD_FDOT\WorkSets\FDOT\43018535201-I-4\Roadway\TCP\TCPLRD0P1S2_33.dgn

REVISIONS			
DATE	DESCRIPTION	DATE	DESCRIPTION

ENGINEER OF RECORD
RYAN J. WILLIAMSON, P.E.
LICENSE NUMBER 81421
BURGESS & NIPLE, INC.
1800 PEMBROOK DRIVE, SUITE 265
ORLANDO, FL 32810

STATE OF FLORIDA
DEPARTMENT OF TRANSPORTATION

ROAD NO.	COUNTY	FINANCIAL PROJECT ID
SR 400	POLK	430185-3-52-01

TTC PLAN (94)
PHASE I STAGE 2
SR 33

SHEET NO.
598

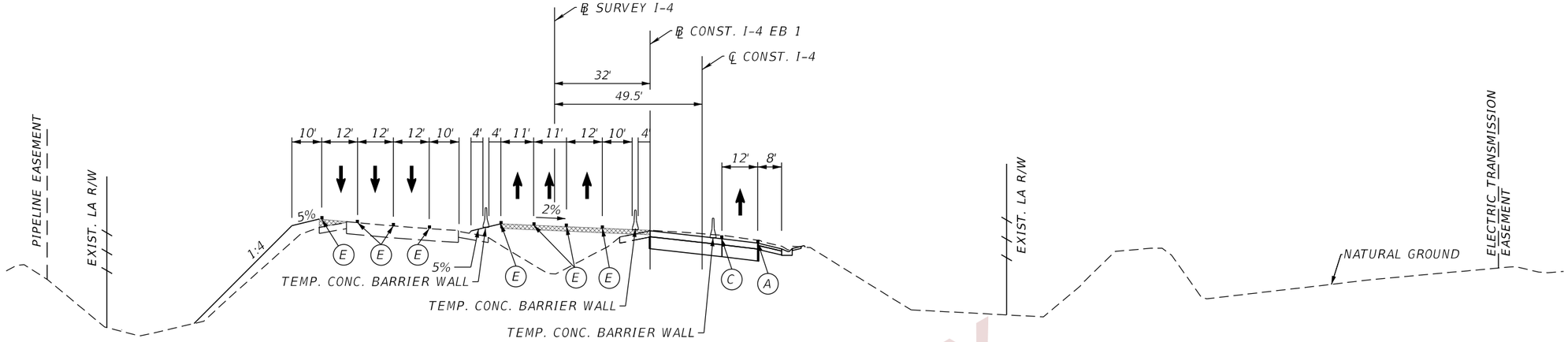

CRITICAL SECTION - PHASE 2, STAGE 2

℄ CONST. I-4
STA. 3075+00

PAVEMENT MARKING LEGEND

- (A) 6" SOLID WHITE TEMPORARY PAVEMENT MARKING
- (B) 6" SKIP WHITE TEMPORARY PAVEMENT MARKING (10'-30')
- (C) 6" SOLID YELLOW TEMPORARY PAVEMENT MARKING
- (D) 6" SKIP YELLOW TEMPORARY PAVEMENT MARKING (10'-30')
- (E) TEMPORARY PAVEMENT MARKINGS PREVIOUSLY APPLIED
- (F) 6" SOLID DOUBLE YELLOW TEMPORARY MARKING
- TEMPORARY PAVEMENT CURRENT PHASE
- TEMPORARY PAVEMENT CONSTRUCTED PREVIOUS PHASE

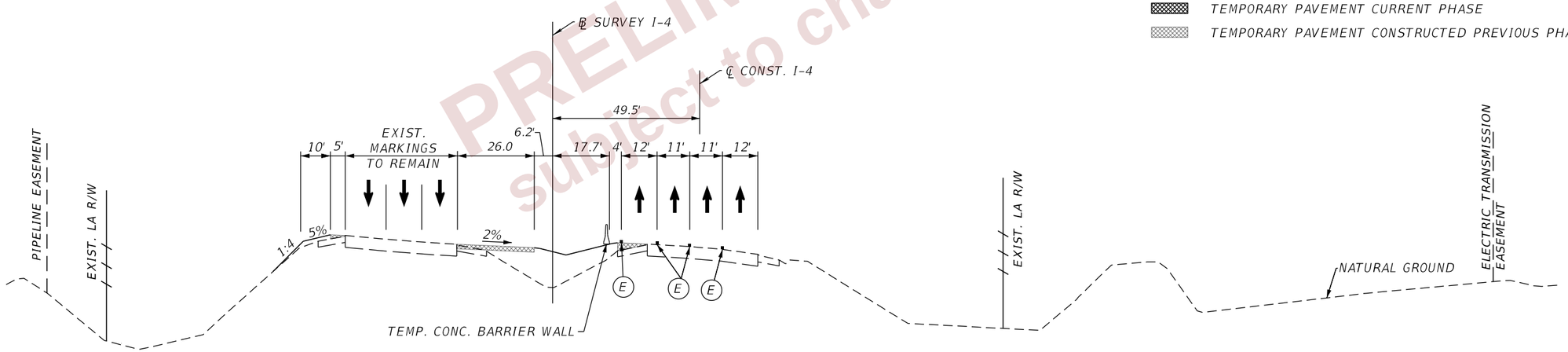

CRITICAL SECTION - PHASE 2, STAGE 2

℄ CONST. I-4
STA. 3065+00

NOTES:
1. SEE STRUCTURE PLANS FOR TEMP. WALL DETAILS.
2. SEE TTC PLAN SHEETS FOR TEMP. DRAINAGE LOCATIONS.

PRELIMINARY subject to changes

REVISIONS				ENGINEER OF RECORD	STATE OF FLORIDA DEPARTMENT OF TRANSPORTATION			TTC PLAN (95) CRITICAL SECTIONS	SHEET NO.
DATE	DESCRIPTION	DATE	DESCRIPTION	RYAN J. WILLIAMSON, P.E. LICENSE NUMBER 81421 BURGESS & NIPLE, INC. 1800 PEMBROOK DRIVE, SUITE 265 ORLANDO, FL 32810	ROAD NO.	COUNTY	FINANCIAL PROJECT ID		599
					SR 400	POLK	430185-3-52-01		

THE OFFICIAL RECORD OF THIS SHEET IS THE ELECTRONIC FILE DIGITALLY SIGNED AND SEALED UNDER RULE 61G15-23.004, F.A.C.

2/28/2024 7:13:27 PM dgy
P:\ORD_FDOT\WorkSets\FDOT\430185352O1-I-4\Roadway\TCP\TCTYRD01.dgn

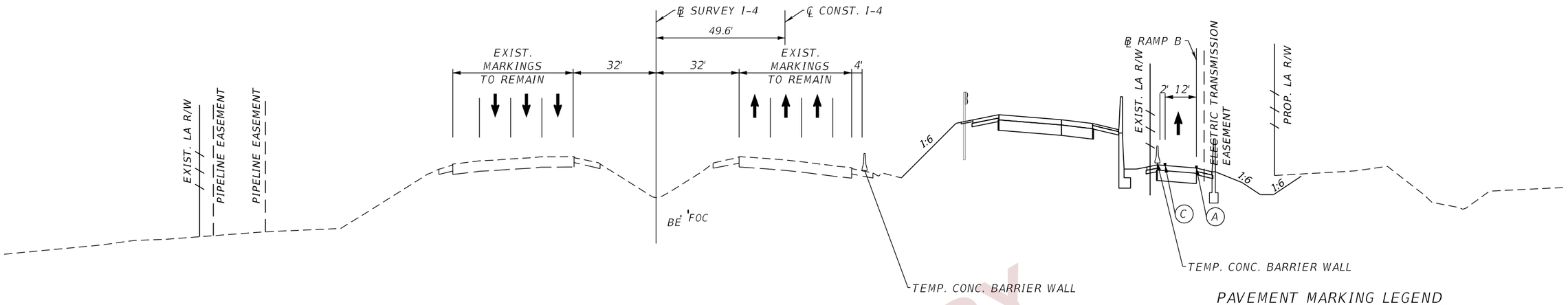

CRITICAL SECTION - PHASE 2, STAGE 2

℄ CONST. I-4
STA. 3103+00

PAVEMENT MARKING LEGEND

- (A) 6" SOLID WHITE TEMPORARY PAVEMENT MARKING
- (B) 6" SKIP WHITE TEMPORARY PAVEMENT MARKING (10'-30')
- (C) 6" SOLID YELLOW TEMPORARY PAVEMENT MARKING
- (D) 6" SKIP YELLOW TEMPORARY PAVEMENT MARKING (10'-30')
- (E) TEMPORARY PAVEMENT MARKINGS PREVIOUSLY APPLIED
- (F) 6" SOLID DOUBLE YELLOW TEMPORARY MARKING
- TEMPORARY PAVEMENT CURRENT PHASE
- TEMPORARY PAVEMENT CONSTRUCTED PREVIOUS PHASE

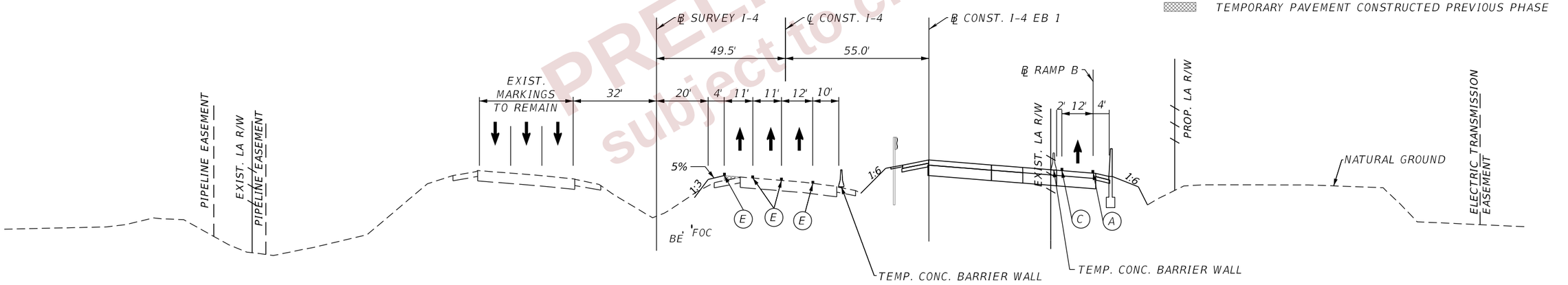

CRITICAL SECTION - PHASE 2, STAGE 2

℄ CONST. I-4
STA. 3093+00

NOTES:
1. SEE STRUCTURE PLANS FOR TEMP. WALL DETAILS.
2. SEE TTC PLAN SHEETS FOR TEMP. DRAINAGE LOCATIONS.

PRELIMINARY
subject to changes

REVISIONS				ENGINEER OF RECORD	STATE OF FLORIDA DEPARTMENT OF TRANSPORTATION			TTC PLAN (96) CRITICAL SECTIONS	SHEET NO.
DATE	DESCRIPTION	DATE	DESCRIPTION	RYAN J. WILLIAMSON, P.E. LICENSE NUMBER 81421 BURGESS & NIPLE, INC. 1800 PEMBROOK DRIVE, SUITE 265 ORLANDO, FL 32810	ROAD NO.	COUNTY	FINANCIAL PROJECT ID		600
					SR 400	POLK	430185-3-52-01		

THE OFFICIAL RECORD OF THIS SHEET IS THE ELECTRONIC FILE DIGITALLY SIGNED AND SEALED UNDER RULE 61G15-23.004, F.A.C.

2/28/2024 7:13:27 PM dayP:\ORD_FDOT\WorkSets\FDOT\430185352O1-I-4\Roadway\TCP\TCTYRD01.dgn

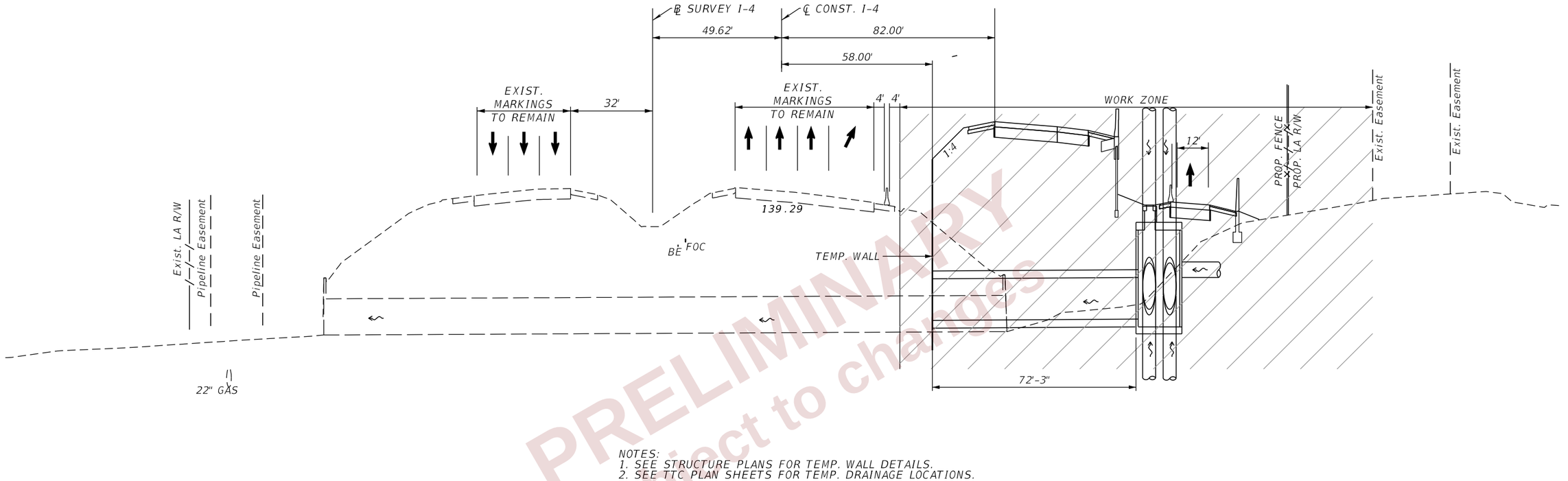

NOTES:
1. SEE STRUCTURE PLANS FOR TEMP. WALL DETAILS.
2. SEE TTC PLAN SHEETS FOR TEMP. DRAINAGE LOCATIONS.

PRELIMINARY
subject to changes

PAVEMENT MARKING LEGEND

- (A) 6" SOLID WHITE TEMPORARY PAVEMENT MARKING
- (B) 6" SKIP WHITE TEMPORARY PAVEMENT MARKING (10'-30')
- (C) 6" SOLID YELLOW TEMPORARY PAVEMENT MARKING
- (D) 6" SKIP YELLOW TEMPORARY PAVEMENT MARKING (10'-30')
- (E) TEMPORARY PAVEMENT MARKINGS PREVIOUSLY APPLIED
- (F) 6" SOLID DOUBLE YELLOW TEMPORARY MARKING
- TEMPORARY PAVEMENT CURRENT PHASE
- TEMPORARY PAVEMENT CONSTRUCTED PREVIOUS PHASE
- * TEMPORARY OVERBUILD EXIST. SHLDR. (MATCH ADJACENT TRAVEL LANE CROSS SLOPE)

CRITICAL SECTION - PHASE 2, STAGE 2

℄ CONST. I-4
STA. 3104+45

REVISIONS				ENGINEER OF RECORD	STATE OF FLORIDA DEPARTMENT OF TRANSPORTATION			TTC PLAN (97) CRITICAL SECTIONS	SHEET NO.
DATE	DESCRIPTION	DATE	DESCRIPTION	RYAN J. WILLIAMSON, P.E. LICENSE NUMBER 81421 BURGESS & NIPLE, INC. 1800 PEMBROOK DRIVE, SUITE 265 ORLANDO, FL 32810	ROAD NO.	COUNTY	FINANCIAL PROJECT ID		601
					SR 400	POLK	430185-3-52-01		

THE OFFICIAL RECORD OF THIS SHEET IS THE ELECTRONIC FILE DIGITALLY SIGNED AND SEALED UNDER RULE 61G15-23.004, F.A.C.

2/28/2024 7:13:32 PM dav
P:\ORD_FDOT\Work Sets\FDOT\430185352O1-I-4\Roadway\TCP\TCTYRD01.dgn

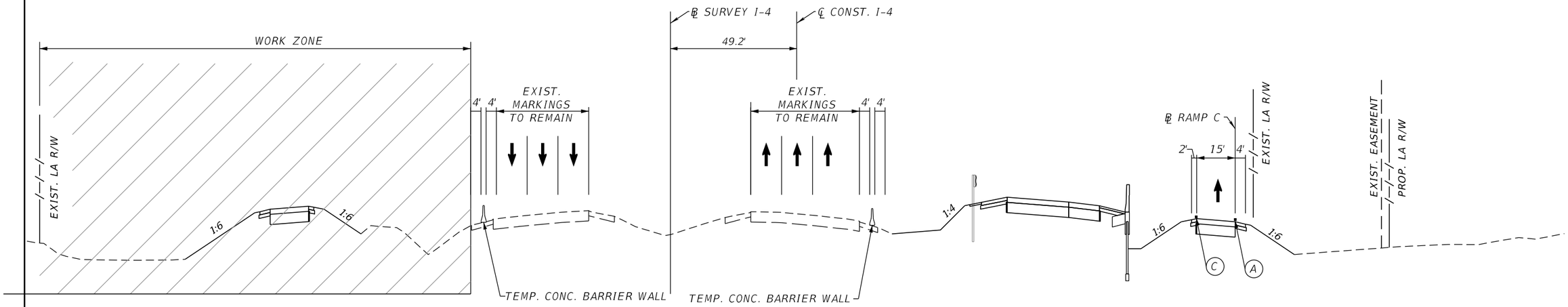

CRITICAL SECTION - PHASE 2, STAGE 2

℄ CONST. I-4
STA. 3138+00

PAVEMENT MARKING LEGEND

- (A) 6" SOLID WHITE TEMPORARY PAVEMENT MARKING
- (B) 6" SKIP WHITE TEMPORARY PAVEMENT MARKING (10'-30')
- (C) 6" SOLID YELLOW TEMPORARY PAVEMENT MARKING
- (D) 6" SKIP YELLOW TEMPORARY PAVEMENT MARKING (10'-30')
- (E) TEMPORARY PAVEMENT MARKINGS PREVIOUSLY APPLIED
- (F) 6" SOLID DOUBLE YELLOW TEMPORARY MARKING
- TEMPORARY PAVEMENT CURRENT PHASE
- TEMPORARY PAVEMENT CONSTRUCTED PREVIOUS PHASE

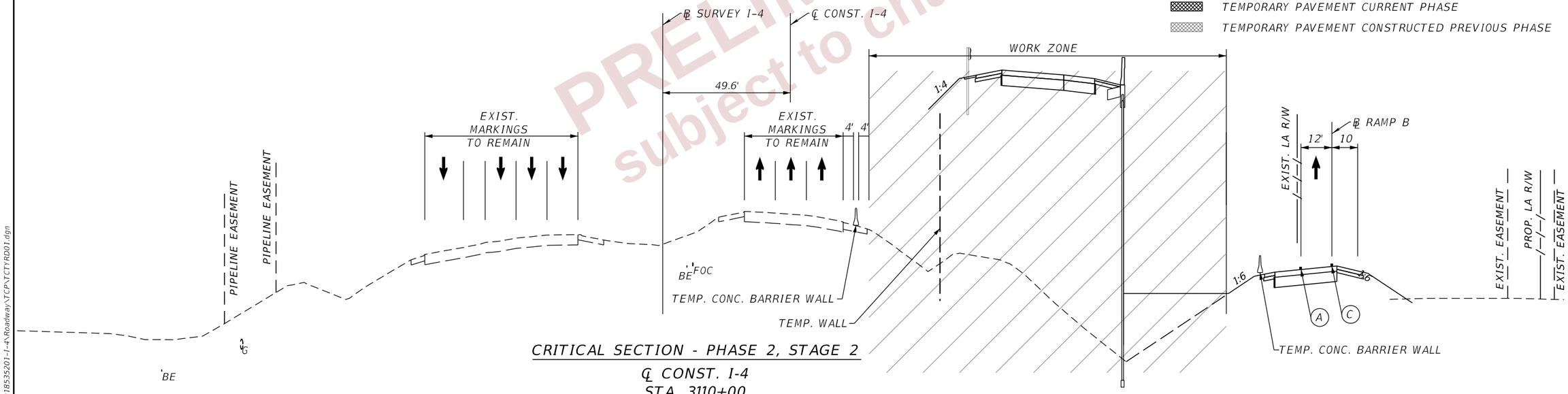

CRITICAL SECTION - PHASE 2, STAGE 2

℄ CONST. I-4
STA. 3110+00

NOTES:
1. SEE STRUCTURE PLANS FOR TEMP. WALL DETAILS.
2. SEE TTC PLAN SHEETS FOR TEMP. DRAINAGE LOCATIONS.

PRELIMINARY
subject to changes

REVISIONS				ENGINEER OF RECORD	STATE OF FLORIDA DEPARTMENT OF TRANSPORTATION			TTC PLAN (98) CRITICAL SECTIONS	SHEET NO.
DATE	DESCRIPTION	DATE	DESCRIPTION	RYAN J. WILLIAMSON, P.E. LICENSE NUMBER 81421 BURGESS & NIPLE, INC. 1800 PEMBROOK DRIVE, SUITE 265 ORLANDO, FL 32810	ROAD NO.	COUNTY	FINANCIAL PROJECT ID		602
					SR 400	POLK	430185-3-52-01		

THE OFFICIAL RECORD OF THIS SHEET IS THE ELECTRONIC FILE DIGITALLY SIGNED AND SEALED UNDER RULE 61G15-23.004, F.A.C.

2/28/2024 7:13:34 PM dayP:\ORD_FDOT\WorkSets\FDOT\430185352O1-I-4\Roadway\TCP\TCTYRD01.dgn

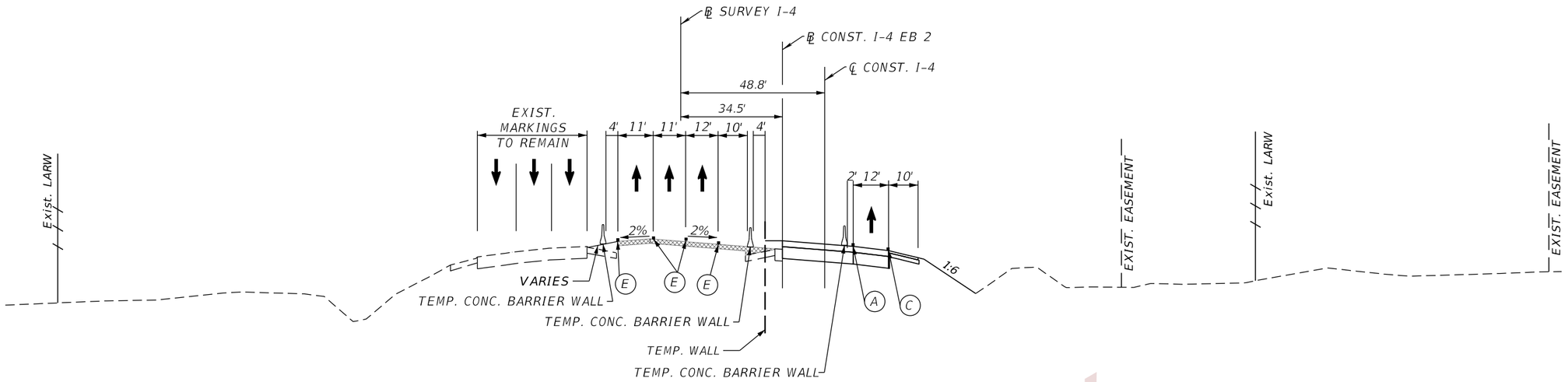

CRITICAL SECTION - PHASE 2, STAGE 2

℄ CONST. I-4
STA. 3172+00

PAVEMENT MARKING LEGEND

- (A) 6" SOLID WHITE TEMPORARY PAVEMENT MARKING
- (B) 6" SKIP WHITE TEMPORARY PAVEMENT MARKING (10'-30')
- (C) 6" SOLID YELLOW TEMPORARY PAVEMENT MARKING
- (D) 6" SKIP YELLOW TEMPORARY PAVEMENT MARKING (10'-30')
- (E) TEMPORARY PAVEMENT MARKINGS PREVIOUSLY APPLIED
- (F) 6" SOLID DOUBLE YELLOW TEMPORARY MARKING
- TEMPORARY PAVEMENT CURRENT PHASE
- TEMPORARY PAVEMENT CONSTRUCTED PREVIOUS PHASE

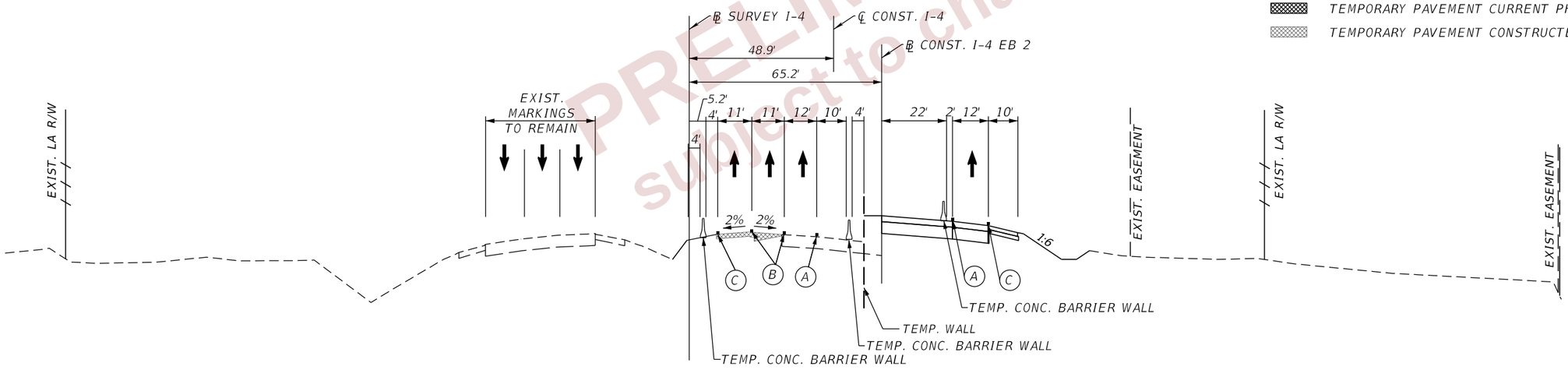

CRITICAL SECTION - PHASE 2, STAGE 2

℄ CONST. I-4
STA. 3163+00

NOTES:
1. SEE STRUCTURE PLANS FOR TEMP. WALL DETAILS.
2. SEE TTC PLAN SHEETS FOR TEMP. DRAINAGE LOCATIONS.

PRELIMINARY subject to change

REVISIONS				ENGINEER OF RECORD	STATE OF FLORIDA DEPARTMENT OF TRANSPORTATION			TTC PLAN (99) CRITICAL SECTIONS	SHEET NO.
DATE	DESCRIPTION	DATE	DESCRIPTION	RYAN J. WILLIAMSON, P.E. LICENSE NUMBER 81421 BURGESS & NIPLE, INC. 1800 PEMBROOK DRIVE, SUITE 265 ORLANDO, FL 32810	ROAD NO.	COUNTY	FINANCIAL PROJECT ID		603
					SR 400	POLK	430185-3-52-01		

THE OFFICIAL RECORD OF THIS SHEET IS THE ELECTRONIC FILE DIGITALLY SIGNED AND SEALED UNDER RULE 61G15-23.004, F.A.C.

2/28/2024 7:13:35 PM dayP:\ORD_FDOT\WorkSets\FDOT\430185352O1-I-4\Roadway\TCP\TCTYRD01.dgn

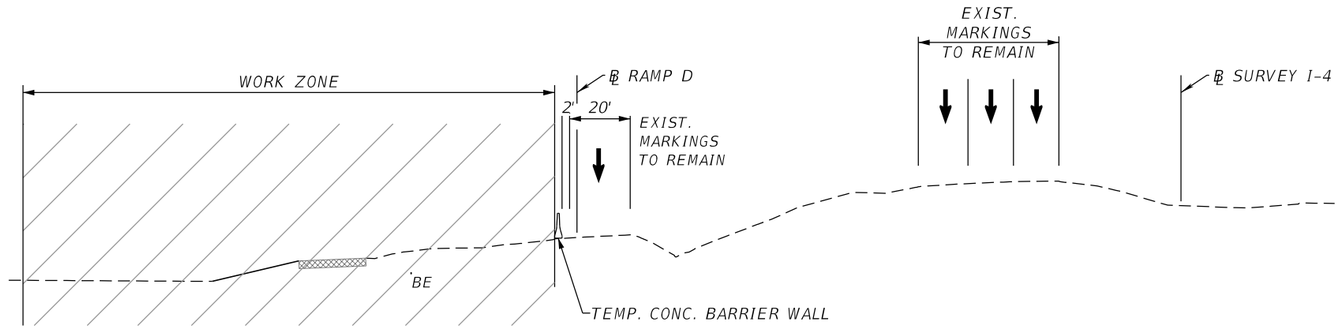

CRITICAL SECTION - PHASE 2, STAGE 2

℄ RAMP D
STA. 404+00

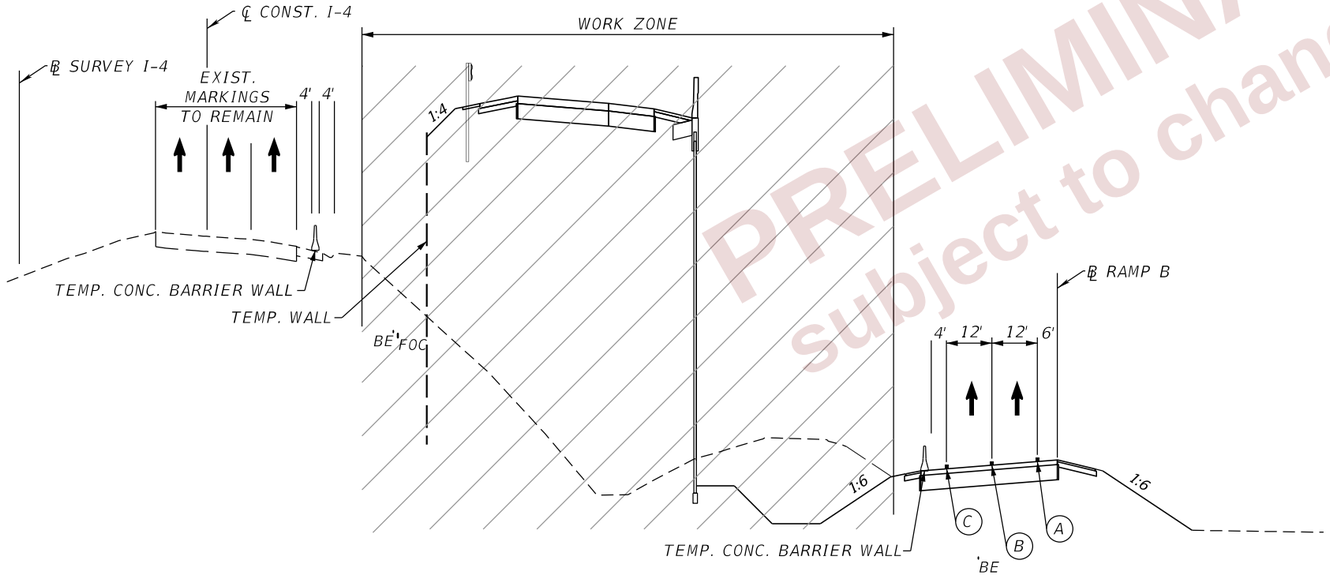

CRITICAL SECTION - PHASE 2, STAGE 2

℄ RAMP B
STA. 225+00

PAVEMENT MARKING LEGEND

- (A) 6" SOLID WHITE TEMPORARY PAVEMENT MARKING
- (B) 6" SKIP WHITE TEMPORARY PAVEMENT MARKING (10'-30')
- (C) 6" SOLID YELLOW TEMPORARY PAVEMENT MARKING
- (D) 6" SKIP YELLOW TEMPORARY PAVEMENT MARKING (10'-30')
- (E) TEMPORARY PAVEMENT MARKINGS PREVIOUSLY APPLIED
- (F) 6" SOLID DOUBLE YELLOW TEMPORARY MARKING
- TEMPORARY PAVEMENT CURRENT PHASE
- TEMPORARY PAVEMENT CONSTRUCTED PREVIOUS PHASE

PRELIMINARY
subject to changes

THE OFFICIAL RECORD OF THIS SHEET IS THE ELECTRONIC FILE DIGITALLY SIGNED AND SEALED UNDER RULE 61G15-23.004, F.A.C.

2/28/2024 7:13:36 PM day
P:\ORD_FDOT\WorkSet\FDOT\430185352O1-I-4\Roadway\TCP\TCTYRD01.dgn

REVISIONS				ENGINEER OF RECORD	STATE OF FLORIDA DEPARTMENT OF TRANSPORTATION			TTC PLAN (100) CRITICAL SECTIONS	SHEET NO.
DATE	DESCRIPTION	DATE	DESCRIPTION	RYAN J. WILLIAMSON, P.E. LICENSE NUMBER 81421 BURGESS & NIPLE, INC. 1800 PEMBROOK DRIVE, SUITE 265 ORLANDO, FL 32810	ROAD NO.	COUNTY	FINANCIAL PROJECT ID		604
					SR 400	POLK	430185-3-52-01		

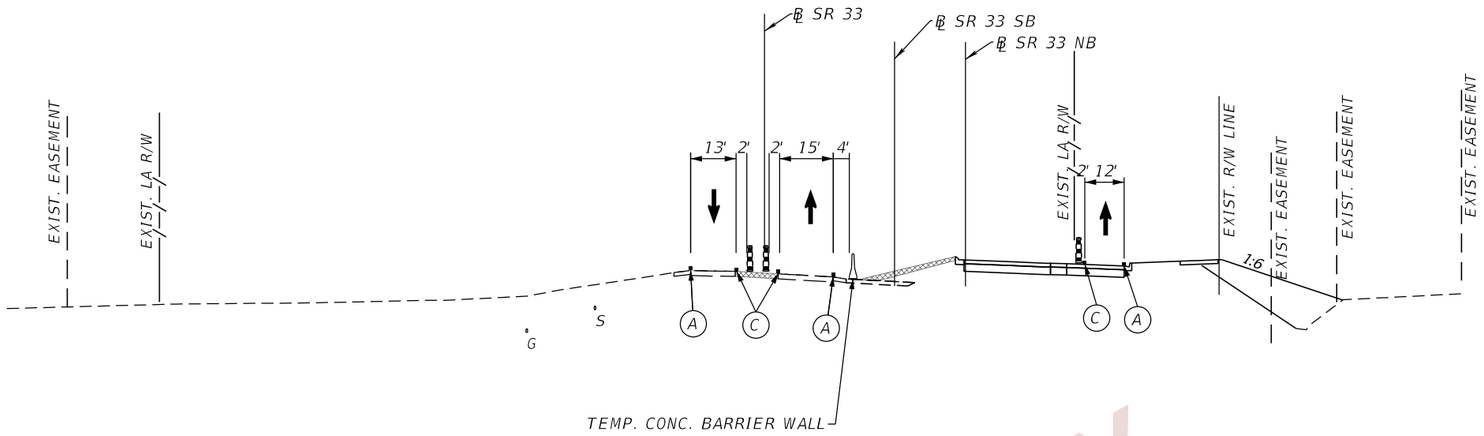

CRITICAL SECTION - PHASE 2, STAGE 2

℄ SR 33
STA. 441+00

PAVEMENT MARKING LEGEND

- (A) 6" SOLID WHITE TEMPORARY PAVEMENT MARKING
- (B) 6" SKIP WHITE TEMPORARY PAVEMENT MARKING (10'-30')
- (C) 6" SOLID YELLOW TEMPORARY PAVEMENT MARKING
- (D) 6" SKIP YELLOW TEMPORARY PAVEMENT MARKING (10'-30')
- (E) TEMPORARY PAVEMENT MARKINGS PREVIOUSLY APPLIED
- (F) 6" SOLID DOUBLE YELLOW TEMPORARY MARKING
- TEMPORARY PAVEMENT CURRENT PHASE
- TEMPORARY PAVEMENT CONSTRUCTED PREVIOUS PHASE
- CHANNELIZING DEVICES

PRELIMINARY
subject to changes

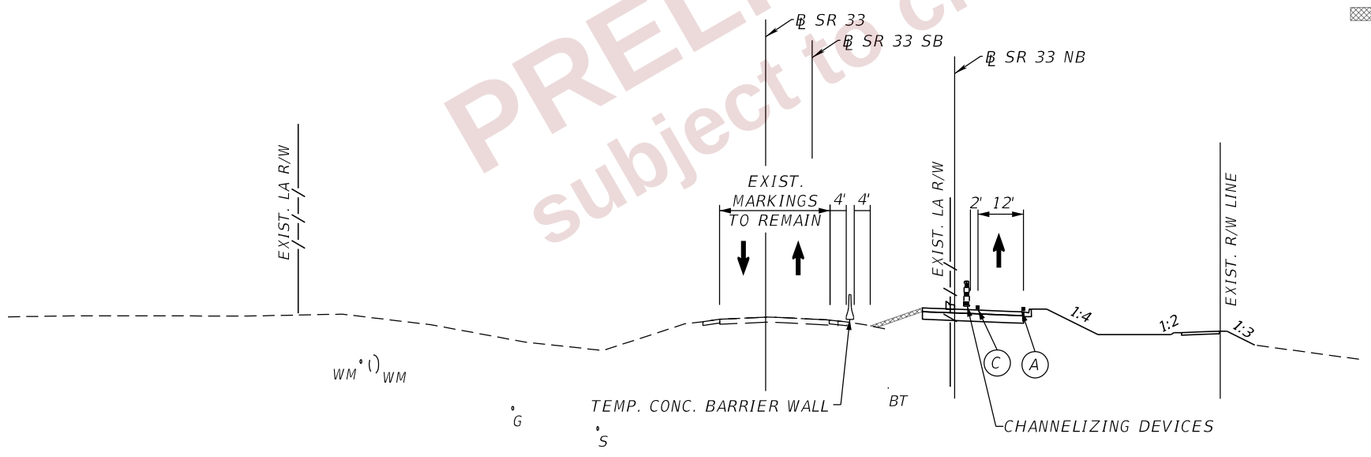

CRITICAL SECTION - PHASE 2, STAGE 2

℄ SR 33
STA. 437+00

REVISIONS				ENGINEER OF RECORD	STATE OF FLORIDA DEPARTMENT OF TRANSPORTATION			TTC PLAN (101) CRITICAL SECTIONS	SHEET NO.
DATE	DESCRIPTION	DATE	DESCRIPTION	RYAN J. WILLIAMSON, P.E. LICENSE NUMBER 81421 BURGESS & NIPLE, INC. 1800 PEMBROOK DRIVE, SUITE 265 ORLANDO, FL 32810	ROAD NO.	COUNTY	FINANCIAL PROJECT ID		605
					SR 400	POLK	430185-3-52-01		

THE OFFICIAL RECORD OF THIS SHEET IS THE ELECTRONIC FILE DIGITALLY SIGNED AND SEALED UNDER RULE 61G15-23.004, F.A.C.

2/28/2024 7:15:00 PM dav
P:\ORD_FDOT\WorkSets\FDOT\430185352O1-I-4\Roadway\TCP\TCTYRD01.dgn

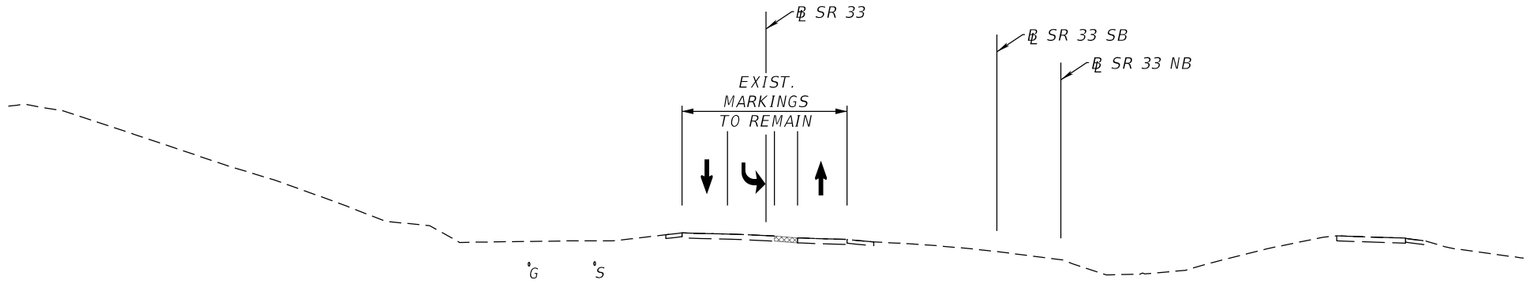

CRITICAL SECTION - PHASE 2, STAGE 2

℄ SR 33
STA. 445+00

PAVEMENT MARKING LEGEND

- (A) 6" SOLID WHITE TEMPORARY PAVEMENT MARKING
- (B) 6" SKIP WHITE TEMPORARY PAVEMENT MARKING (10'-30')
- (C) 6" SOLID YELLOW TEMPORARY PAVEMENT MARKING
- (D) 6" SKIP YELLOW TEMPORARY PAVEMENT MARKING (10'-30')
- (E) TEMPORARY PAVEMENT MARKINGS PREVIOUSLY APPLIED
- (F) 6" SOLID DOUBLE YELLOW TEMPORARY MARKING
- TEMPORARY PAVEMENT CURRENT PHASE
- TEMPORARY PAVEMENT CONSTRUCTED PREVIOUS PHASE

PRELIMINARY
subject to changes

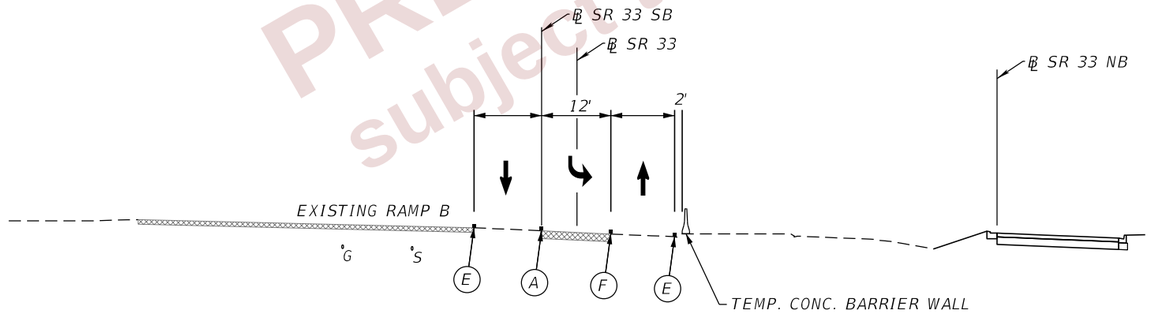

CRITICAL SECTION - PHASE 2, STAGE 2

℄ SR 33
STA. 443+50

REVISIONS				ENGINEER OF RECORD	STATE OF FLORIDA DEPARTMENT OF TRANSPORTATION			TTC PLAN (102) CRITICAL SECTIONS	SHEET NO.
DATE	DESCRIPTION	DATE	DESCRIPTION	RYAN J. WILLIAMSON, P.E. LICENSE NUMBER 81421 BURGESS & NIPLE, INC. 1800 PEMBROOK DRIVE, SUITE 265 ORLANDO, FL 32810	ROAD NO.	COUNTY	FINANCIAL PROJECT ID		606
					SR 400	POLK	430185-3-52-01		

THE OFFICIAL RECORD OF THIS SHEET IS THE ELECTRONIC FILE DIGITALLY SIGNED AND SEALED UNDER RULE 61G15-23.004, F.A.C.

2/28/2024 7:15:02 PM dav
P:\ORD_FDOT\WorkSets\FDOT\430185352O1-I-4\Roadway\TCP\TCTYRD01.dgn

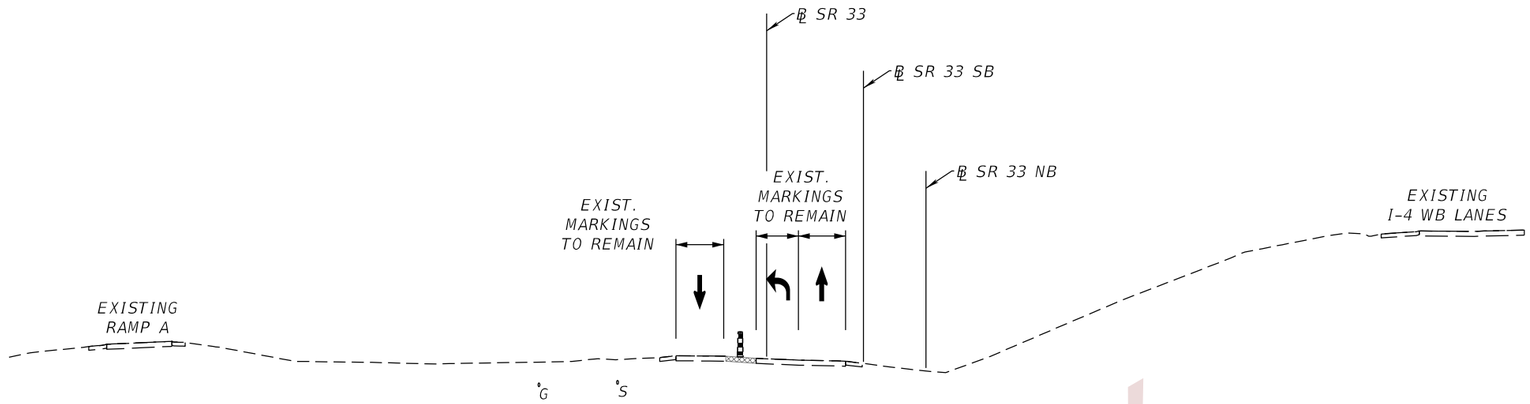

CRITICAL SECTION - PHASE 2, STAGE 2

℄ SR 33
STA. 451+00

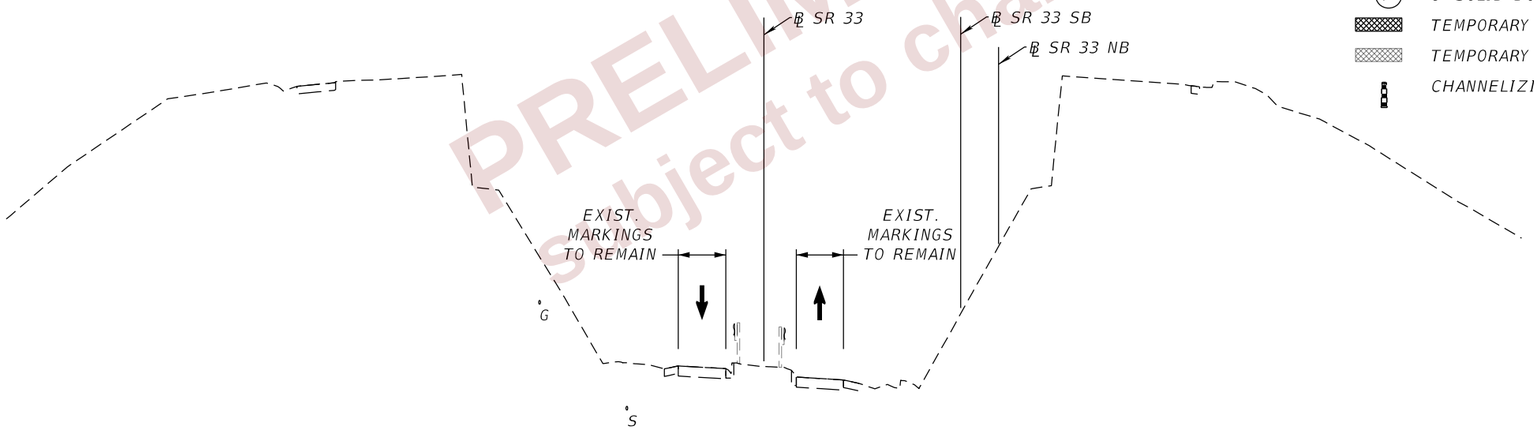

CRITICAL SECTION - PHASE 2, STAGE 2

℄ SR 33
STA. 448+00

PAVEMENT MARKING LEGEND

- (A) 6" SOLID WHITE TEMPORARY PAVEMENT MARKING
- (B) 6" SKIP WHITE TEMPORARY PAVEMENT MARKING (10'-30')
- (C) 6" SOLID YELLOW TEMPORARY PAVEMENT MARKING
- (D) 6" SKIP YELLOW TEMPORARY PAVEMENT MARKING (10'-30')
- (E) TEMPORARY PAVEMENT MARKINGS PREVIOUSLY APPLIED
- (F) 6" SOLID DOUBLE YELLOW TEMPORARY MARKING
- TEMPORARY PAVEMENT CURRENT PHASE
- TEMPORARY PAVEMENT CONSTRUCTED PREVIOUS PHASE
- CHANNELIZING DEVICES

PRELIMINARY
Subject to changes

REVISIONS				ENGINEER OF RECORD	STATE OF FLORIDA DEPARTMENT OF TRANSPORTATION			TTC PLAN (103) CRITICAL SECTIONS	SHEET NO.
DATE	DESCRIPTION	DATE	DESCRIPTION	RYAN J. WILLIAMSON, P.E. LICENSE NUMBER 81421 BURGESS & NIPLE, INC. 1800 PEMBROOK DRIVE, SUITE 265 ORLANDO, FL 32810	ROAD NO.	COUNTY	FINANCIAL PROJECT ID		607
					SR 400	POLK	430185-3-52-01		

THE OFFICIAL RECORD OF THIS SHEET IS THE ELECTRONIC FILE DIGITALLY SIGNED AND SEALED UNDER RULE 61G15-23.004, F.A.C.

2/28/2024 7:15:02 PM day
P:\ORD_FDOT\WorkSets\FDOT_430185325201-I-4\Roadway\TCP\TCTYRD01.dgn

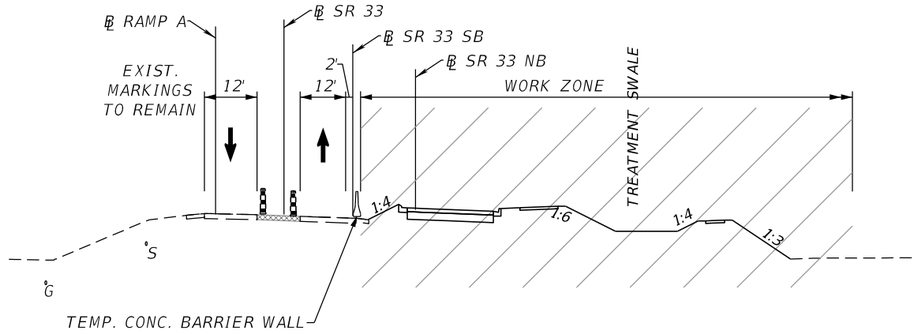

CRITICAL SECTION - PHASE 2, STAGE 2

℄ SR 33
STA. 456+00

PAVEMENT MARKING LEGEND

- (A) 6" SOLID WHITE TEMPORARY PAVEMENT MARKING
- (B) 6" SKIP WHITE TEMPORARY PAVEMENT MARKING (10'-30')
- (C) 6" SOLID YELLOW TEMPORARY PAVEMENT MARKING
- (D) 6" SKIP YELLOW TEMPORARY PAVEMENT MARKING (10'-30')
- (E) TEMPORARY PAVEMENT MARKINGS PREVIOUSLY APPLIED
- (F) 6" SOLID DOUBLE YELLOW TEMPORARY MARKING
- TEMPORARY PAVEMENT CURRENT PHASE
- TEMPORARY PAVEMENT CONSTRUCTED PREVIOUS PHASE
- CHANNELIZING DEVICES

PRELIMINARY
subject to changes

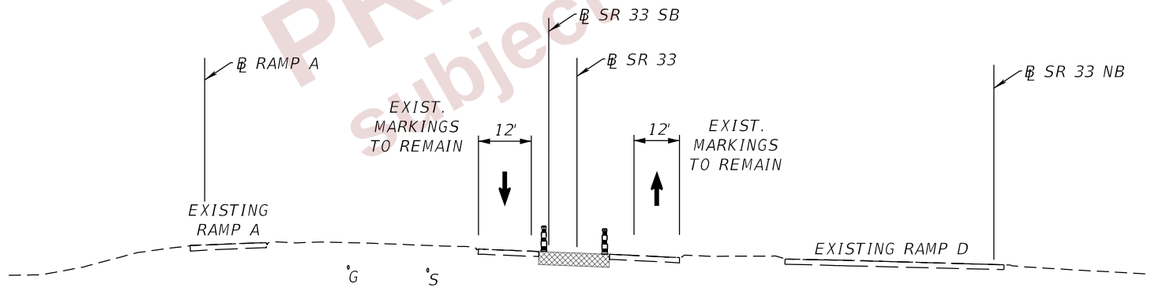

CRITICAL SECTION - PHASE 2, STAGE 2

℄ SR 33
STA. 452+50

REVISIONS				ENGINEER OF RECORD	STATE OF FLORIDA DEPARTMENT OF TRANSPORTATION			TTC PLAN (104) CRITICAL SECTIONS	SHEET NO.
DATE	DESCRIPTION	DATE	DESCRIPTION	RYAN J. WILLIAMSON, P.E. LICENSE NUMBER 81421 BURGESS & NIPLE, INC. 1800 PEMBROOK DRIVE, SUITE 265 ORLANDO, FL 32810	ROAD NO.	COUNTY	FINANCIAL PROJECT ID		608
					SR 400	POLK	430185-3-52-01		

THE OFFICIAL RECORD OF THIS SHEET IS THE ELECTRONIC FILE DIGITALLY SIGNED AND SEALED UNDER RULE 61G15-23.004, F.A.C.

2/28/2024 7:15:03 PM dav
P:\ORD_FDOT\WorkSets\FDOT\430185352O1-I-4\Roadway\TCP\TCTYRD01.dgn

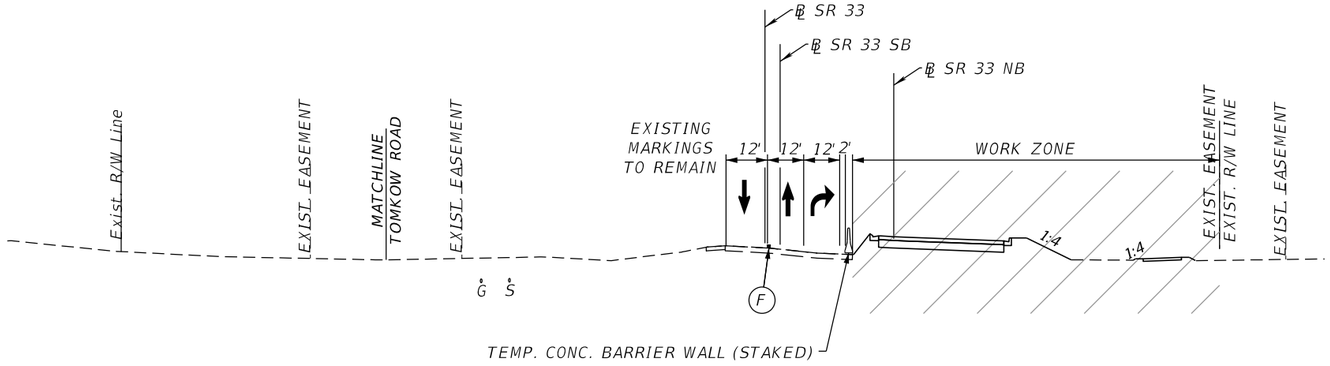

CRITICAL SECTION - PHASE 2, STAGE 2

℄ SR 33
STA. 470+00

PAVEMENT MARKING LEGEND

- (A) 6" SOLID WHITE TEMPORARY PAVEMENT MARKING
- (B) 6" SKIP WHITE TEMPORARY PAVEMENT MARKING (10'-30')
- (C) 6" SOLID YELLOW TEMPORARY PAVEMENT MARKING
- (D) 6" SKIP YELLOW TEMPORARY PAVEMENT MARKING (10'-30')
- (E) TEMPORARY PAVEMENT MARKINGS PREVIOUSLY APPLIED
- (F) 6" SOLID DOUBLE YELLOW TEMPORARY MARKING
- TEMPORARY PAVEMENT CURRENT PHASE
- TEMPORARY PAVEMENT CONSTRUCTED PREVIOUS PHASE

PRELIMINARY
subject to changes

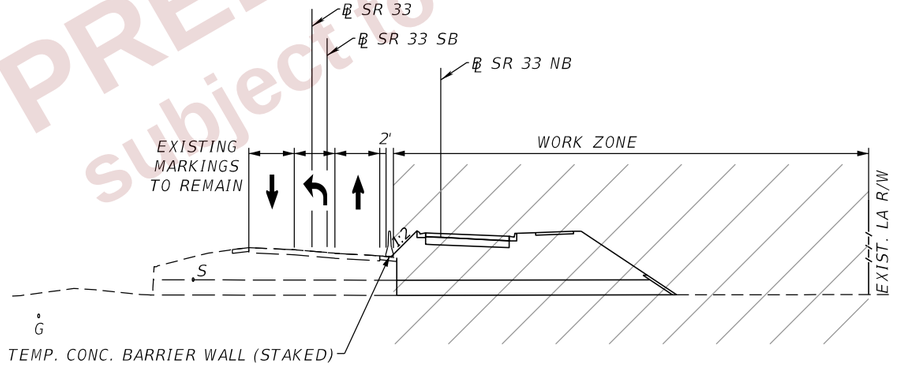

CRITICAL SECTION - PHASE 2, STAGE 2

℄ SR 33
STA. 460+00

REVISIONS				ENGINEER OF RECORD	STATE OF FLORIDA DEPARTMENT OF TRANSPORTATION			TTC PLAN (105) CRITICAL SECTIONS	SHEET NO.
DATE	DESCRIPTION	DATE	DESCRIPTION	RYAN J. WILLIAMSON, P.E. LICENSE NUMBER 81421 BURGESS & NIPLE, INC. 1800 PEMBROOK DRIVE, SUITE 265 ORLANDO, FL 32810	ROAD NO.	COUNTY	FINANCIAL PROJECT ID		609
					SR 400	POLK	430185-3-52-01		

THE OFFICIAL RECORD OF THIS SHEET IS THE ELECTRONIC FILE DIGITALLY SIGNED AND SEALED UNDER RULE 61G15-23.004, F.A.C.

2/28/2024 7:15:04 PM day
P:\ORD_FDOT\WorkSets\FDOT\430185352O1-I-4\Roadway\TCP\TCTYRD01.dgn

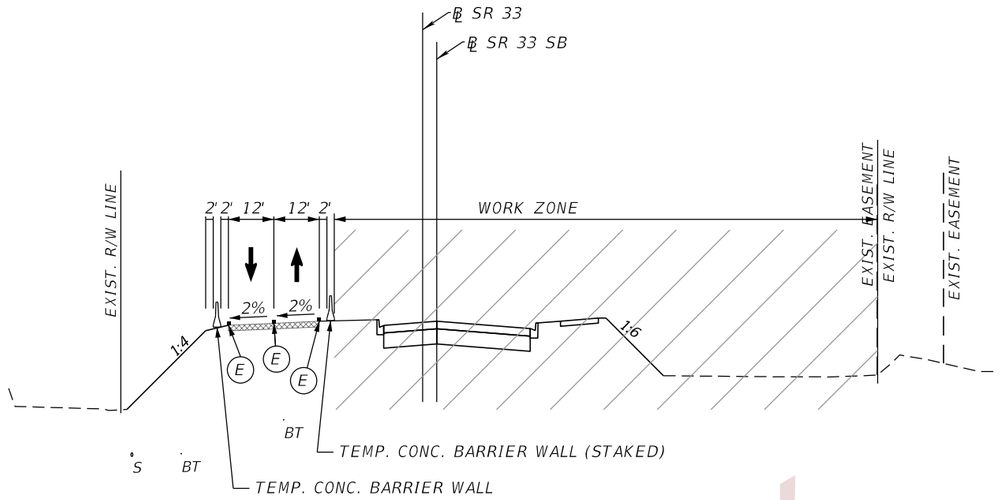

CRITICAL SECTION - PHASE 2, STAGE 2

℄ SR 33
STA. 493+00

PAVEMENT MARKING LEGEND

- (A) 6" SOLID WHITE TEMPORARY PAVEMENT MARKING
- (B) 6" SKIP WHITE TEMPORARY PAVEMENT MARKING (10'-30')
- (C) 6" SOLID YELLOW TEMPORARY PAVEMENT MARKING
- (D) 6" SKIP YELLOW TEMPORARY PAVEMENT MARKING (10'-30')
- (E) TEMPORARY PAVEMENT MARKINGS PREVIOUSLY APPLIED
- (F) 6" SOLID DOUBLE YELLOW TEMPORARY MARKING
- TEMPORARY PAVEMENT CURRENT PHASE
- TEMPORARY PAVEMENT CONSTRUCTED PREVIOUS PHASE

PRELIMINARY
subject to changes

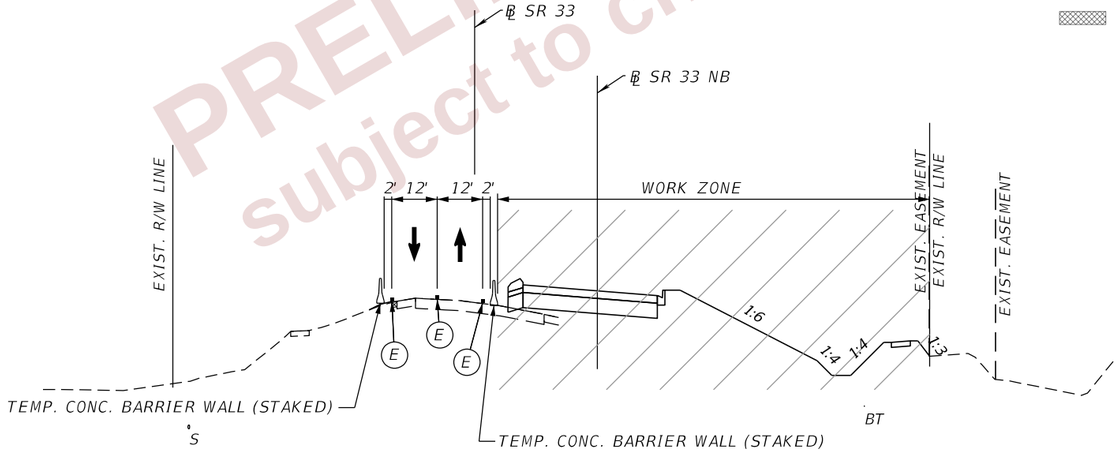

CRITICAL SECTION - PHASE 2, STAGE 2

℄ SR 33
STA. 485+00

REVISIONS				ENGINEER OF RECORD	STATE OF FLORIDA DEPARTMENT OF TRANSPORTATION			TTC PLAN (106) CRITICAL SECTIONS	SHEET NO.
DATE	DESCRIPTION	DATE	DESCRIPTION	RYAN J. WILLIAMSON, P.E. LICENSE NUMBER 81421 BURGESS & NIPLE, INC. 1800 PEMBROOK DRIVE, SUITE 265 ORLANDO, FL 32810	ROAD NO.	COUNTY	FINANCIAL PROJECT ID		610
					SR 400	POLK	430185-3-52-01		

THE OFFICIAL RECORD OF THIS SHEET IS THE ELECTRONIC FILE DIGITALLY SIGNED AND SEALED UNDER RULE 61G15-23.004, F.A.C.

2/28/2024 7:15:05 PM dav
P:\ORD_FDOT\WorkSets\FDOT\430185352O1-I-4\Roadway\TCP\TCTYRD01.dgn

LEGEND

- TEMP PAVEMENT CURRENT PHASE
- TEMP PAVEMENT CONST. PREVIOUS PHASE
- PROP. PAVEMENT CONSTRUCTED CURRENT PHASE
- PROP. PAVEMENT CONSTRUCTED PREVIOUS PHASE
- DIRECTION OF TRAFFIC
- WORK ZONE
- CRASH CUSHION
- WORK ZONE SIGN
- CHANNELIZING DEVICES (INDEX 102-600)

- (1) 6" WHITE
- (2) 6" YELLOW
- (3) 6" DOUBLE YELLOW
- (8) 8" WHITE
- (10) 6" WHITE, 3'-9' SKIP

W01-04CL W01-04CR W13-02

E11-01A
FTP-17-06
M06-02R

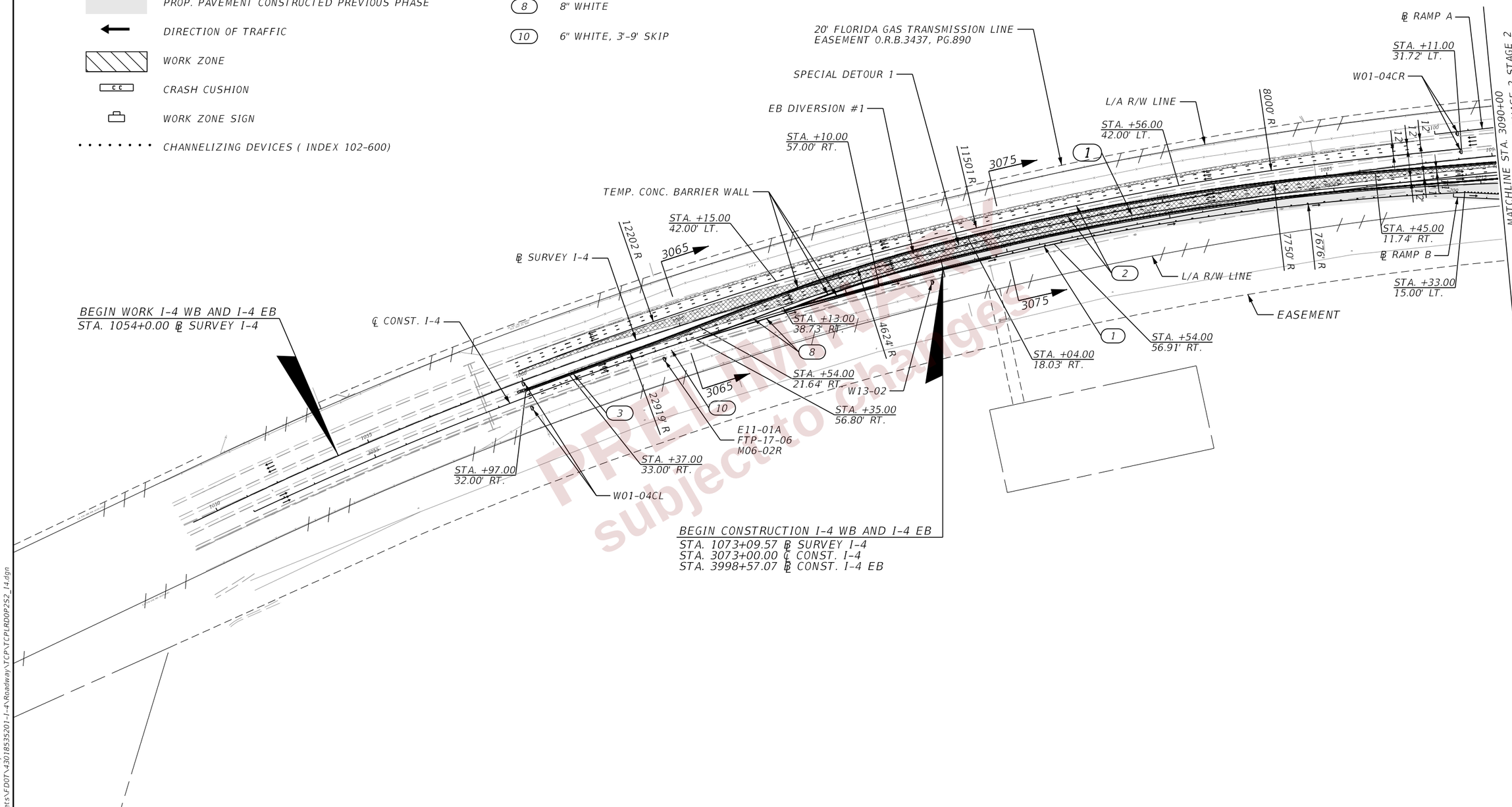

PRELIMINARY
subject to changes

THE OFFICIAL RECORD OF THIS SHEET IS THE ELECTRONIC FILE DIGITALLY SIGNED AND SEALED UNDER RULE 61G15-23.004, F.A.C.

2/28/2024 7:15:19 PM dayP:\ORD_FDOT\WorkSets\FDOT\430185352O1-I-4\Roadway\TCP\TCPLRD0P2S2_I4.dgn

REVISIONS				ENGINEER OF RECORD	STATE OF FLORIDA DEPARTMENT OF TRANSPORTATION			TTC PLAN (107) PHASE 2 STAGE 2 I-4	SHEET NO.
DATE	DESCRIPTION	DATE	DESCRIPTION	RYAN J. WILLIAMSON, P.E. LICENSE NUMBER 81421 BURGESS & NIPLE, INC. 1800 PEMBROOK DRIVE, SUITE 265 ORLANDO, FL 32810	ROAD NO.	COUNTY	FINANCIAL PROJECT ID		611
					SR 400	POLK	430185-3-52-01		

LEGEND

- TEMP PAVEMENT CURRENT PHASE
- TEMP PAVEMENT CONST. PREVIOUS PHASE
- PROP. PAVEMENT CONSTRUCTED CURRENT PHASE
- PROP. PAVEMENT CONSTRUCTED PREVIOUS PHASE
- DIRECTION OF TRAFFIC
- WORK ZONE
- CRASH CUSHION
- WORK ZONE SIGN
- CHANNELIZING DEVICES (INDEX 102-600)

(1) 6" WHITE

(2) 6" YELLOW

(4) 6" WHITE, 10'-30' SKIP

(HR) EXIST. HIGH MAST LIGHTING TO REMAIN ACTIVE IN THIS PHASE (SEE TTC PLAN TEMPORARY LIGHTING)

W04-02R

W04-01R

M03-01
FTP-17-06
M06-02L

M03-03
FTP-17-06
M06-02R

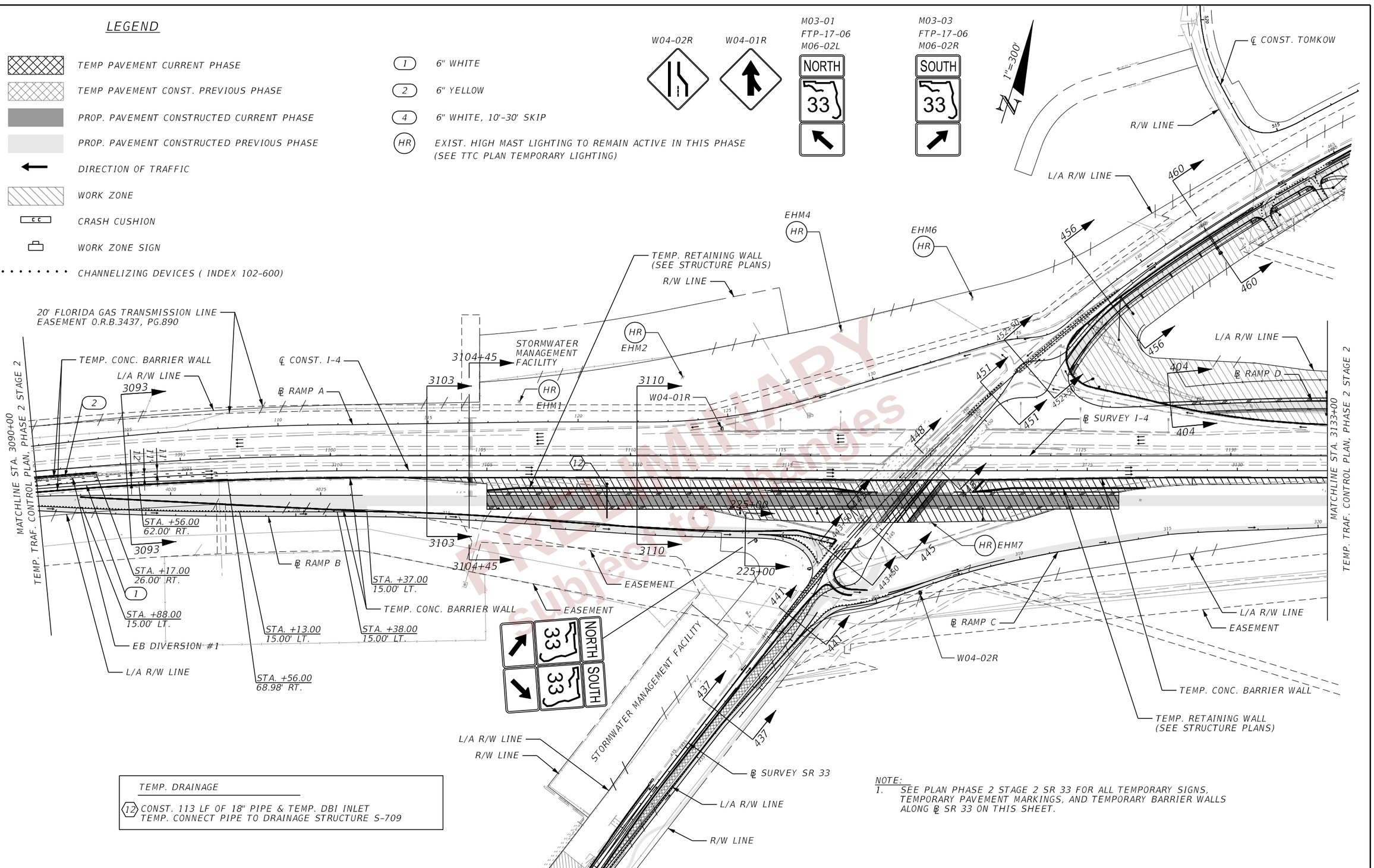

TEMP. DRAINAGE

(12) CONST. 113 LF OF 18" PIPE & TEMP. DBI INLET
TEMP. CONNECT PIPE TO DRAINAGE STRUCTURE S-709

NOTE:
1. SEE PLAN PHASE 2 STAGE 2 SR 33 FOR ALL TEMPORARY SIGNS, TEMPORARY PAVEMENT MARKINGS, AND TEMPORARY BARRIER WALLS ALONG ℄ SR 33 ON THIS SHEET.

PRELIMINARY
Subject to Revisions

REVISIONS				ENGINEER OF RECORD	STATE OF FLORIDA DEPARTMENT OF TRANSPORTATION			TTC PLAN (108) PHASE 2 STAGE 2 I-4	SHEET NO.
DATE	DESCRIPTION	DATE	DESCRIPTION	RYAN J. WILLIAMSON, P.E. LICENSE NUMBER 81421 BURGESS & NIPLE, INC. 1800 PEMBROOK DRIVE, SUITE 265 ORLANDO, FL 32810	ROAD NO.	COUNTY	FINANCIAL PROJECT ID		612
					SR 400	POLK	430185-3-52-01		

THE OFFICIAL RECORD OF THIS SHEET IS THE ELECTRONIC FILE DIGITALLY SIGNED AND SEALED UNDER RULE 61G15-23.004, F.A.C.

2/28/2024 7:15:30 PM dayj
P:\ORD_FDOT\Work Sets\FDOT\430185352O1-I-4\Roadway\TCP\TCPLRD00P2S2_I4.dgn

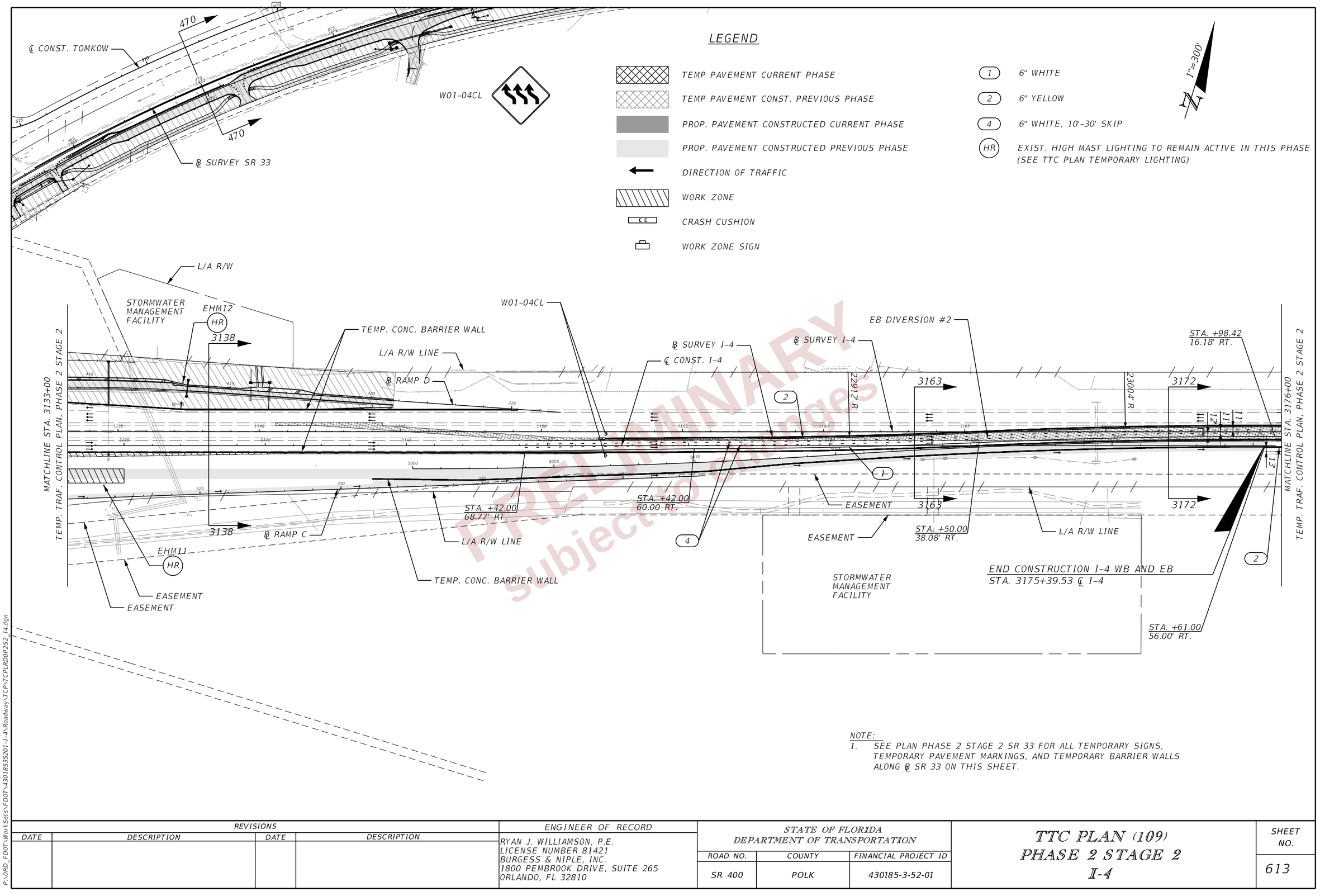

PRELIMINARY
subject to changes

NOTE:
1. SEE PLAN PHASE 2 STAGE 2 SR 33 FOR ALL TEMPORARY SIGNS, TEMPORARY PAVEMENT MARKINGS, AND TEMPORARY BARRIER WALLS ALONG ℄ SR 33 ON THIS SHEET.

REVISIONS				ENGINEER OF RECORD	STATE OF FLORIDA DEPARTMENT OF TRANSPORTATION			TTC PLAN (109) PHASE 2 STAGE 2 I-4	SHEET NO.
DATE	DESCRIPTION	DATE	DESCRIPTION	RYAN J. WILLIAMSON, P.E. LICENSE NUMBER 81421 BURGESS & NIPLE, INC. 1800 PEMBROOK DRIVE, SUITE 265 ORLANDO, FL 32810	ROAD NO.	COUNTY	FINANCIAL PROJECT ID		613
					SR 400	POLK	430185-3-52-01		

THE OFFICIAL RECORD OF THIS SHEET IS THE ELECTRONIC FILE DIGITALLY SIGNED AND SEALED UNDER RULE 61G15-23.004, F.A.C.

2/28/2024 7:15:43 PM day
P:\ORD_FDOT\WorkSet\vFDOT\430185352O1-I-4\Roadway\TCP\TCPLRDDP2S2_14.dgn

LEGEND

- TEMP PAVEMENT CURRENT PHASE
- TEMP PAVEMENT CONST. PREVIOUS PHASE
- PROP. PAVEMENT CONSTRUCTED CURRENT PHASE
- PROP. PAVEMENT CONSTRUCTED PREVIOUS PHASE
- DIRECTION OF TRAFFIC
- WORK ZONE
- CRASH CUSHION
- WORK ZONE SIGN
- (1) 6" WHITE
- (2) 6" YELLOW
- (4) 6" WHITE, 10'-30' SKIP
- CHANNELIZING DEVICES (INDEX 102-600)

W04-01R

1"=300'

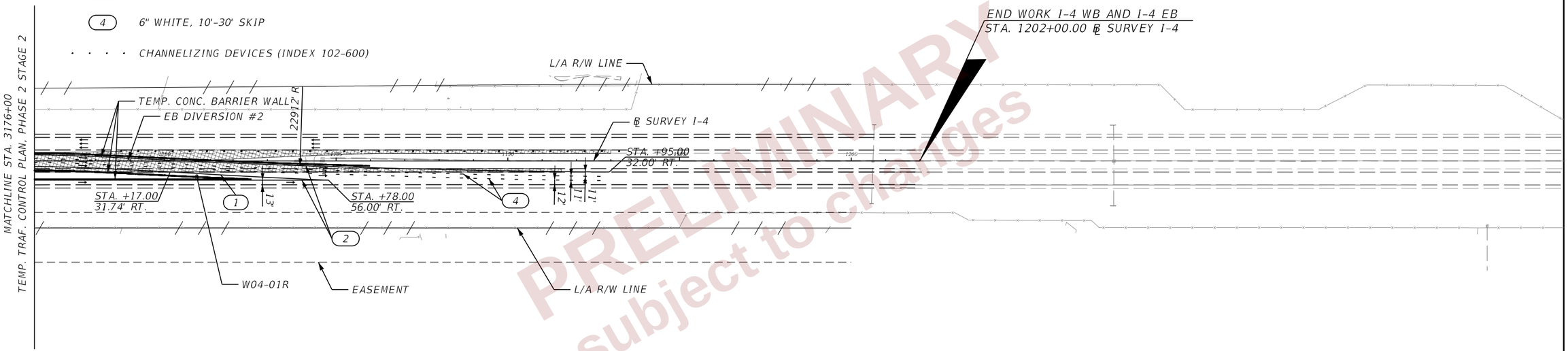

PRELIMINARY
subject to changes

THE OFFICIAL RECORD OF THIS SHEET IS THE ELECTRONIC FILE DIGITALLY SIGNED AND SEALED UNDER RULE 61G15-23.004, F.A.C.

REVISIONS				ENGINEER OF RECORD	STATE OF FLORIDA DEPARTMENT OF TRANSPORTATION			TTC PLAN (110) PHASE 2 STAGE 2 I-4	SHEET NO.
DATE	DESCRIPTION	DATE	DESCRIPTION	RYAN J. WILLIAMSON, P.E. LICENSE NUMBER 81421 BURGESS & NIPLE, INC. 1800 PEMBROOK DRIVE, SUITE 265 ORLANDO, FL 32810	ROAD NO.	COUNTY	FINANCIAL PROJECT ID		614
					SR 400	POLK	430185-3-52-01		

2/28/2024 7:15:51 PM dayP:\ORD_FDOT\Work Sets\FDOT\430185352O1-I-4\Roadway\TCP\TCPLRD0P2S2_I4.dgn

1"=100'

BEGIN MILLING, RESURFACING, OVERBUILD AND WIDENING SR 33 SB
BEGIN RECONSTRUCTION SR 33 NB
MATCH FPID 430185-4-52-01

STA. 3399+74.08 ℄ SURVEY SR 33
STA. 399+46.72 ℄ SURVEY SR 33

℄ SURVEY SR 33

STA. +14.00
16.74' LT.

℄ CONST. SR 33

STA. +77.00
6.21' RT.

STA. +35.00
5.47' RT.

STA. +85.00
5.44' LT.

STA. +13.00
16.51' RT.

R/W LINE

BEGIN WORK
STA. 399+46.72 ℄ SR 33

STA. +60.00
18.53' RT.

478' R

11'
11'
11'

STA. +65.00
55.95' RT.

MATCHLINE STA. 403+76
TEMP. TRAF. CONTROL PLAN, PHASE 2 STAGE 2

389 390 391 392 393 394 395 396 397 398 399 400 401 402 403

3389 3390 3391 3392 3393 3394 3395 3396 3397 3398 3399 3400 3401 3402 3403

LEGEND

TEMP PAVEMENT CURRENT PHASE	1 — 6" WHITE
TEMP PAVEMENT CONST. PREVIOUS PHASE	3 — 6" DOUBLE YELLOW
PROP. PAVEMENT CONSTRUCTED CURRENT PHASE	7 — WHITE DIRECTIONAL ARROWS (TYP.)
PROP. PAVEMENT CONSTRUCTED PREVIOUS PHASE	
DIRECTION OF TRAFFIC	
WORK ZONE	
CRASH CUSHION	
WORK ZONE SIGN	
CHANNELIZING DEVICES (INDEX 102-600)	

PRELIMINARY
subject to changes

THE OFFICIAL RECORD OF THIS SHEET IS THE ELECTRONIC FILE DIGITALLY SIGNED AND SEALED UNDER RULE 61G15-23.004, F.A.C.

2/28/2024 7:16:11 PM day
P:\ORD_FDOT\WorkSets\FDOT\430185352O1-I-4\Roadway\TCP\TCPLRDOP2S2_33.dgn

REVISIONS			
DATE	DESCRIPTION	DATE	DESCRIPTION

ENGINEER OF RECORD
RYAN J. WILLIAMSON, P.E.
LICENSE NUMBER 81421
BURGESS & NIPLE, INC.
1800 PEMBROOK DRIVE, SUITE 265
ORLANDO, FL 32810

STATE OF FLORIDA
DEPARTMENT OF TRANSPORTATION

ROAD NO.	COUNTY	FINANCIAL PROJECT ID
SR 400	POLK	430185-3-52-01

TTC PLAN (111)
PHASE 2 STAGE 2
SR 33

SHEET NO. 615

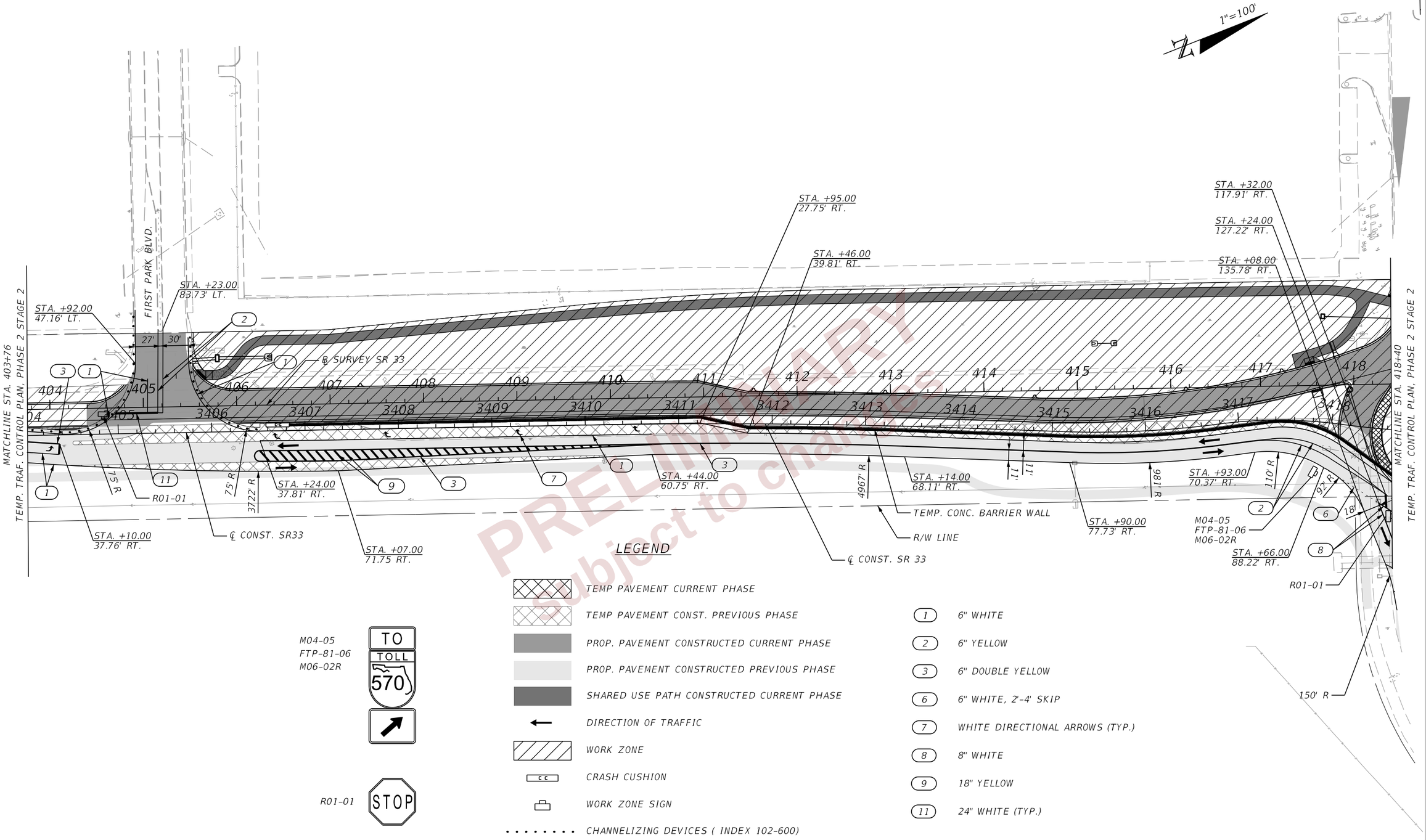

LEGEND

- TEMP PAVEMENT CURRENT PHASE
- TEMP PAVEMENT CONST. PREVIOUS PHASE
- PROP. PAVEMENT CONSTRUCTED CURRENT PHASE
- PROP. PAVEMENT CONSTRUCTED PREVIOUS PHASE
- SHARED USE PATH CONSTRUCTED CURRENT PHASE
- DIRECTION OF TRAFFIC
- WORK ZONE
- CRASH CUSHION
- WORK ZONE SIGN
- CHANNELIZING DEVICES (INDEX 102-600)

(1) 6" WHITE
(2) 6" YELLOW
(3) 6" DOUBLE YELLOW
(6) 6" WHITE, 2'-4' SKIP
(7) WHITE DIRECTIONAL ARROWS (TYP.)
(8) 8" WHITE
(9) 18" YELLOW
(11) 24" WHITE (TYP.)

M04-05
FTP-81-06
M06-02R

R01-01

PRELIMINARY
Subject to change

THE OFFICIAL RECORD OF THIS SHEET IS THE ELECTRONIC FILE DIGITALLY SIGNED AND SEALED UNDER RULE 61G15-23.004, F.A.C.

REVISIONS				ENGINEER OF RECORD	STATE OF FLORIDA DEPARTMENT OF TRANSPORTATION			TTC PLAN (112) PHASE 2 STAGE 2 SR 33	SHEET NO.
DATE	DESCRIPTION	DATE	DESCRIPTION	RYAN J. WILLIAMSON, P.E. LICENSE NUMBER 81421 BURGESS & NIPLE, INC. 1800 PEMBROOK DRIVE, SUITE 265 ORLANDO, FL 32810	ROAD NO.	COUNTY	FINANCIAL PROJECT ID		616
					SR 400	POLK	430185-3-52-01		

2/28/2024 7:16:12 PM day
P:\ORD_FDOT\WorkSets\FDOT\430185352O1-1-4\Roadway\TCP\TCPLRDOP2S2_33.dgn

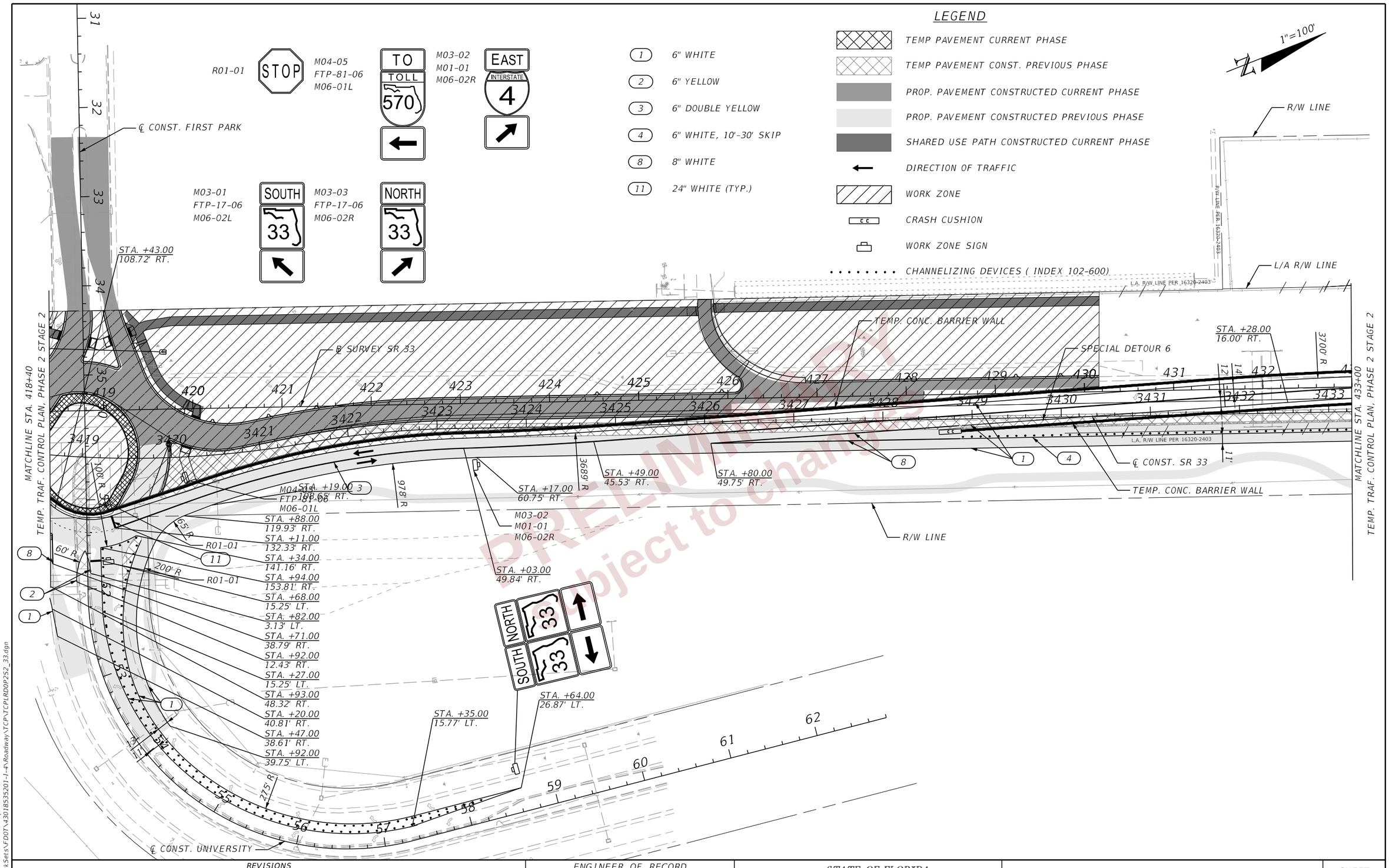

PRELIMINARY
Subject to change

REVISIONS				ENGINEER OF RECORD	STATE OF FLORIDA DEPARTMENT OF TRANSPORTATION			TTC PLAN (113) PHASE 2 STAGE 2 SR 33	SHEET NO.
DATE	DESCRIPTION	DATE	DESCRIPTION	RYAN J. WILLIAMSON, P.E. LICENSE NUMBER 81421 BURGESS & NIPLE, INC. 1800 PEMBROOK DRIVE, SUITE 265 ORLANDO, FL 32810	ROAD NO.	COUNTY	FINANCIAL PROJECT ID		617
					SR 400	POLK	430185-3-52-01		

THE OFFICIAL RECORD OF THIS SHEET IS THE ELECTRONIC FILE DIGITALLY SIGNED AND SEALED UNDER RULE 61G15-23.004, F.A.C.

2/28/2024 7:16:14 PM day
P:\ORD_FDOT\WorkSets\FDOT\430185352O1-I-4\Roadway\TCP\TCPLRD0P252_33.dgn

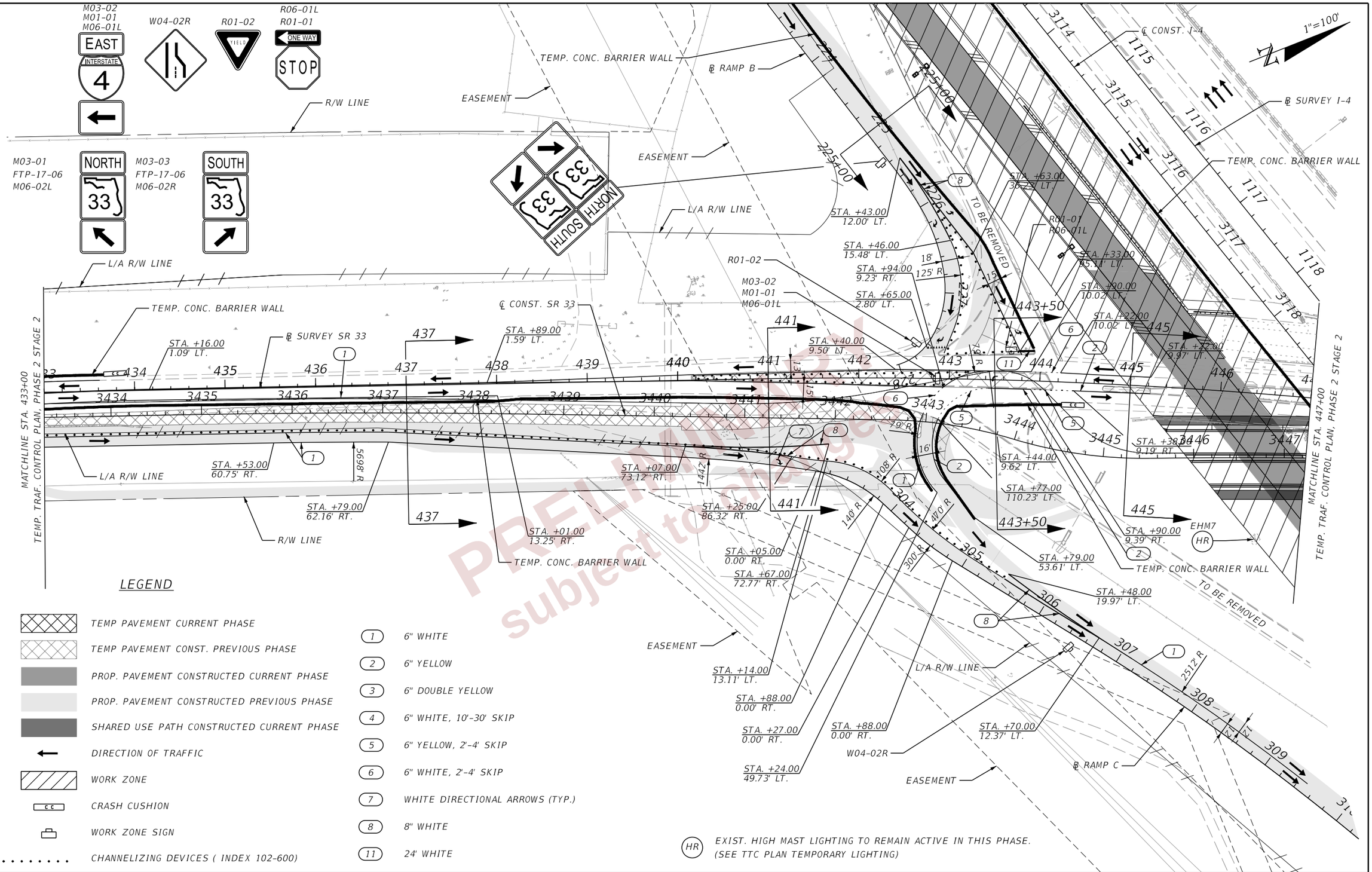

LEGEND

- TEMP PAVEMENT CURRENT PHASE
- TEMP PAVEMENT CONST. PREVIOUS PHASE
- PROP. PAVEMENT CONSTRUCTED CURRENT PHASE
- PROP. PAVEMENT CONSTRUCTED PREVIOUS PHASE
- SHARED USE PATH CONSTRUCTED CURRENT PHASE
- DIRECTION OF TRAFFIC
- WORK ZONE
- CRASH CUSHION
- WORK ZONE SIGN
- CHANNELIZING DEVICES (INDEX 102-600)

(1) 6" WHITE
(2) 6" YELLOW
(3) 6" DOUBLE YELLOW
(4) 6" WHITE, 10'-30' SKIP
(5) 6" YELLOW, 2'-4' SKIP
(6) 6" WHITE, 2'-4' SKIP
(7) WHITE DIRECTIONAL ARROWS (TYP.)
(8) 8" WHITE
(11) 24' WHITE

(HR) EXIST. HIGH MAST LIGHTING TO REMAIN ACTIVE IN THIS PHASE. (SEE TTC PLAN TEMPORARY LIGHTING)

PRELIMINARY subject to change

REVISIONS			
DATE	DESCRIPTION	DATE	DESCRIPTION

ENGINEER OF RECORD
RYAN J. WILLIAMSON, P.E.
LICENSE NUMBER 81421
BURGESS & NIPLE, INC.
1800 PEMBROOK DRIVE, SUITE 265
ORLANDO, FL 32810

STATE OF FLORIDA
DEPARTMENT OF TRANSPORTATION

ROAD NO.	COUNTY	FINANCIAL PROJECT ID
SR 400	POLK	430185-3-52-01

TTC PLAN (114)
PHASE 2 STAGE 2
SR 33

SHEET NO. 618

THE OFFICIAL RECORD OF THIS SHEET IS THE ELECTRONIC FILE DIGITALLY SIGNED AND SEALED UNDER RULE 61G15-23.004, F.A.C.

2/28/2024 7:16:18 PM dgv
P:\ORD_FDOT\WorkSets\FDOT\430185352O1-I-4\Roadway\TCP\TCPLRD0P252_33.dgn

LEGEND

- TEMP PAVEMENT CURRENT PHASE
- TEMP PAVEMENT CONST. PREVIOUS PHASE
- PROP. PAVEMENT CONSTRUCTED CURRENT PHASE
- PROP. PAVEMENT CONSTRUCTED PREVIOUS PHASE
- SHARED USE PATH CONSTRUCTED CURRENT PHASE
- DIRECTION OF TRAFFIC
- WORK ZONE
- CRASH CUSHION
- WORK ZONE SIGN

1"=100'

EHM6 (HR)

℄ SURVEY SR 33

℄ RAMP A

SPECIAL DETOUR 3

L/A R/W LINE

TEMP. CONC. BARRIER WALL

℄ CONST. SR 33

℄ CONST. I-4

℄ SURVEY I-4

℄ RAMP C

℄ RAMP D

SPECIAL DETOUR 5

MATCHLINE STA. 447+00
TEMP. TRAF. CONTROL PLAN, PHASE 2 STAGE 2

MATCHLINE STA. 461+00
TEMP. TRAF. CONTROL PLAN, PHASE 2 STAGE 2

(HR) EXIST. HIGH MAST LIGHTING TO REMAIN ACTIVE IN THIS PHASE. (SEE TTC PLAN TEMPORARY LIGHTING)

NOTE: SEE PHASE 1 STAGE 1 FOR TEMP RAMP D CONSTRUCTION DETAILS.

PRELIMINARY
subject to change

REVISIONS			
DATE	DESCRIPTION	DATE	DESCRIPTION

ENGINEER OF RECORD
RYAN J. WILLIAMSON, P.E.
LICENSE NUMBER 81421
BURGESS & NIPLE, INC.
1800 PEMBROOK DRIVE, SUITE 265
ORLANDO, FL 32810

STATE OF FLORIDA
DEPARTMENT OF TRANSPORTATION

ROAD NO.	COUNTY	FINANCIAL PROJECT ID
SR 400	POLK	430185-3-52-01

TTC PLAN (115)
PHASE 2 STAGE 2
SR 33

SHEET NO. 619

THE OFFICIAL RECORD OF THIS SHEET IS THE ELECTRONIC FILE DIGITALLY SIGNED AND SEALED UNDER RULE 61G15-23.004, F.A.C.

2/28/2024 7:16:22 PM dgy
P:\ORD_FDOT\WorkSets\FDOT\430185352O1-I-4\Roadway\TCP\TCPLRD0P2S2_33.dgn

LEGEND

- CHANNELIZING DEVICES (INDEX 102-600)
- 3 — 6" DOUBLE YELLOW
- TEMP PAVEMENT CURRENT PHASE
- TEMP PAVEMENT CONST. PREVIOUS PHASE
- PROP. PAVEMENT CONSTRUCTED CURRENT PHASE
- PROP. PAVEMENT CONSTRUCTED PREVIOUS PHASE
- DIRECTION OF TRAFFIC
- WORK ZONE
- CRASH CUSHION
- WORK ZONE SIGN

1"=100'

R/W LINE
L/A R/W LINE
℄ CONST. TOMKOW
EASEMENT
STA. +40.00
4.03' LT.
℄ SURVEY SR 33
℄ CONST. SR 33
L/A R/W LINE
L/A R/W LINE
TEMP. CONC. BARRIER WALL
TEMP. CONC. BARRIER WALL
TEMP. CONC. BARRIER WALL
EASEMENT
EASEMENT
EASEMENT
R/W LINE
6036' R
MATCHLINE STA. 461+00
TEMP. TRAF. CONTROL PLAN, PHASE 2 STAGE 2
MATCHLINE STA. 475+00
TEMP. TRAF. CONTROL PLAN, PHASE 2 STAGE 2

PRELIMINARY plans subject to changes

REVISIONS				ENGINEER OF RECORD	STATE OF FLORIDA DEPARTMENT OF TRANSPORTATION			TTC PLAN (116) PHASE 2 STAGE 2 SR 33	SHEET NO.
DATE	DESCRIPTION	DATE	DESCRIPTION	RYAN J. WILLIAMSON, P.E. LICENSE NUMBER 81421 BURGESS & NIPLE, INC. 1800 PEMBROOK DRIVE, SUITE 265 ORLANDO, FL 32810	ROAD NO.	COUNTY	FINANCIAL PROJECT ID		620
					SR 400	POLK	430185-3-52-01		

THE OFFICIAL RECORD OF THIS SHEET IS THE ELECTRONIC FILE DIGITALLY SIGNED AND SEALED UNDER RULE 61G15-23.004, F.A.C.

2/28/2024 7:16:26 PM dgw
P:\ORD_FDOT\WorkSets\FDOT\430185352O1-I-4\Roadway\TCP\TCPLRD0P252_33.dgn

LEGEND

- CHANNELIZING DEVICES (INDEX 102-600)
- 1 — 6" WHITE
- 3 — 6" DOUBLE YELLOW
- TEMP PAVEMENT CURRENT PHASE
- TEMP PAVEMENT CONST. PREVIOUS PHASE
- PROP. PAVEMENT CONSTRUCTED CURRENT PHASE
- PROP. PAVEMENT CONSTRUCTED PREVIOUS PHASE
- DIRECTION OF TRAFFIC
- WORK ZONE
- CRASH CUSHION
- WORK ZONE SIGN

1"=100'

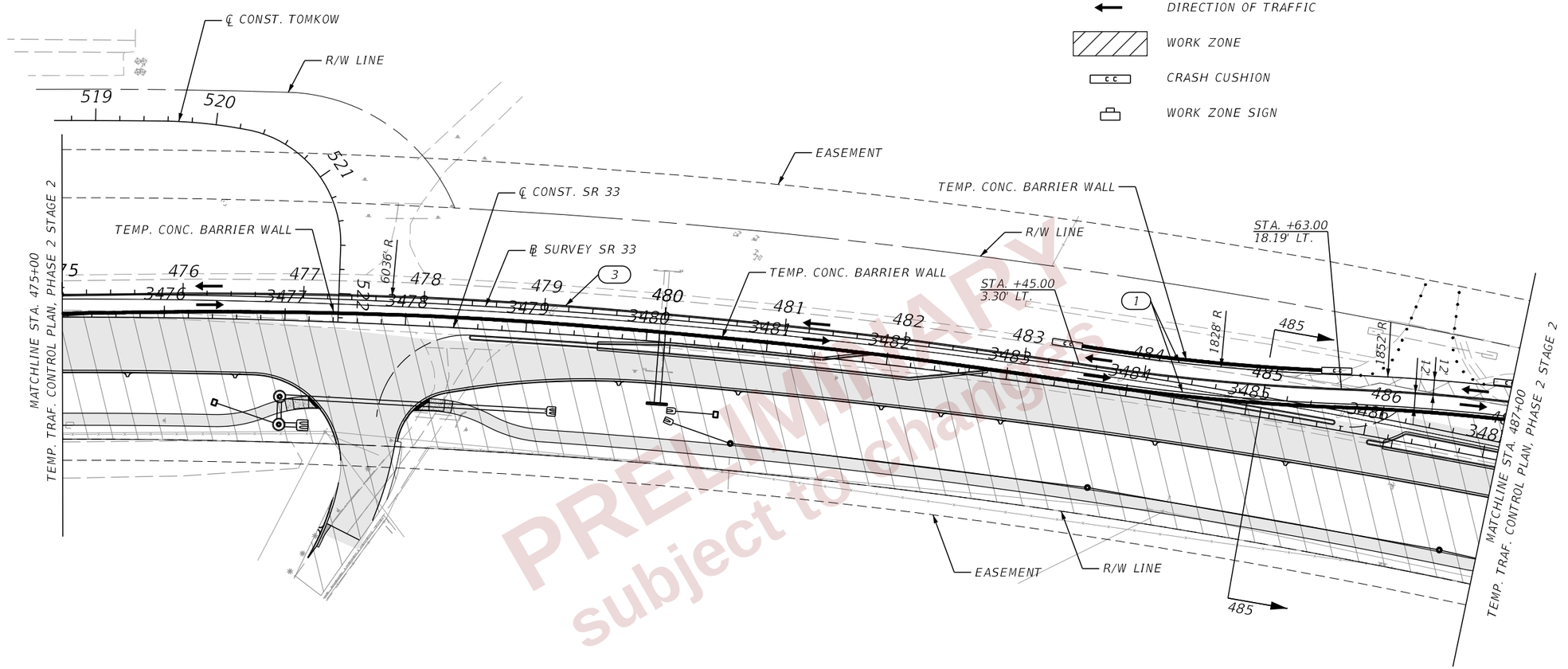

PRELIMINARY
subject to changes

REVISIONS				ENGINEER OF RECORD	STATE OF FLORIDA DEPARTMENT OF TRANSPORTATION			TTC PLAN (117) PHASE 2 STAGE 2 SR 33	SHEET NO.
DATE	DESCRIPTION	DATE	DESCRIPTION	RYAN J. WILLIAMSON, P.E. LICENSE NUMBER 81421 BURGESS & NIPLE, INC. 1800 PEMBROOK DRIVE, SUITE 265 ORLANDO, FL 32810	ROAD NO.	COUNTY	FINANCIAL PROJECT ID		621
					SR 400	POLK	430185-3-52-01		

THE OFFICIAL RECORD OF THIS SHEET IS THE ELECTRONIC FILE DIGITALLY SIGNED AND SEALED UNDER RULE 61G15-23.004, F.A.C.

2/28/2024 7:16:28 PM day
P:\ORD_FDOT\WorkSets\FDOT\430185352O1-I-4\Roadway\TCP\TCPLRDDP2S2_33.dgn

LEGEND

1"=100'

- TEMP PAVEMENT CURRENT PHASE
- TEMP PAVEMENT CONST. PREVIOUS PHASE
- PROP. PAVEMENT CONSTRUCTED CURRENT PHASE
- PROP. PAVEMENT CONSTRUCTED PREVIOUS PHASE
- DIRECTION OF TRAFFIC
- WORK ZONE
- CRASH CUSHION
- WORK ZONE SIGN
- CHANNELIZING DEVICES (INDEX 102-600)
- 1 — 6" WHITE
- 3 — 6" DOUBLE YELLOW

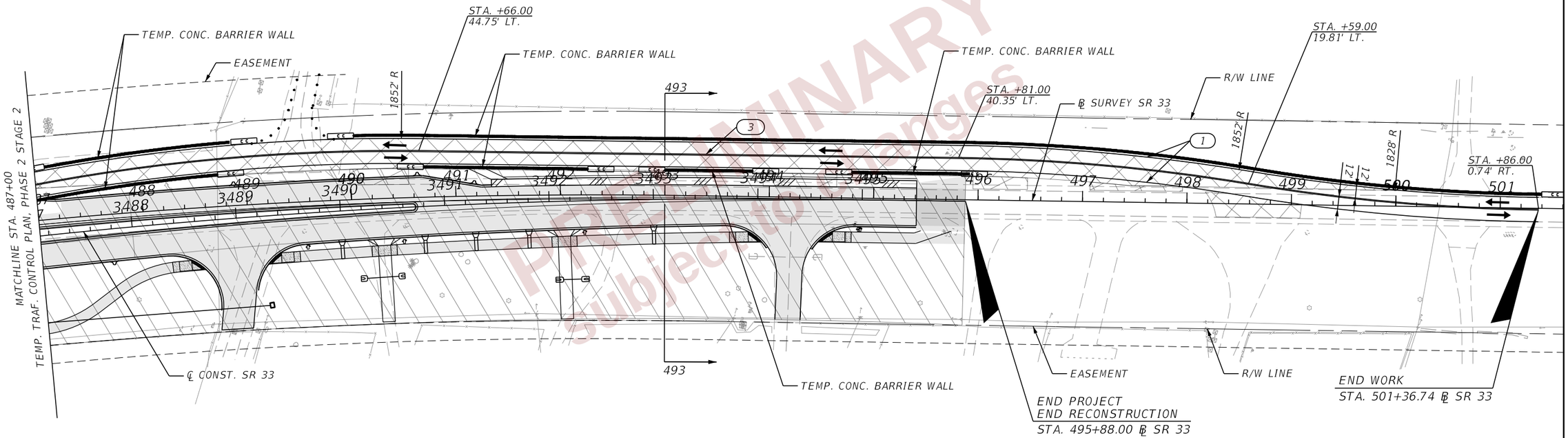

PRELIMINARY
Plans subject to change

THE OFFICIAL RECORD OF THIS SHEET IS THE ELECTRONIC FILE DIGITALLY SIGNED AND SEALED UNDER RULE 61G15-23.004, F.A.C.

REVISIONS				ENGINEER OF RECORD	STATE OF FLORIDA DEPARTMENT OF TRANSPORTATION			TTC PLAN (118) PHASE 2 STAGE 2 SR 33	SHEET NO.
DATE	DESCRIPTION	DATE	DESCRIPTION	RYAN J. WILLIAMSON, P.E. LICENSE NUMBER 81421 BURGESS & NIPLE, INC. 1800 PEMBROOK DRIVE, SUITE 265 ORLANDO, FL 32810	ROAD NO.	COUNTY	FINANCIAL PROJECT ID		622
					SR 400	POLK	430185-3-52-01		

2/28/2024 7:16:30 PM day
P:\ORD_FDOT\WorkSets\FDOT\430185352O1-I-4\Roadway\TCP\TCPLRDDP252_33.dgn

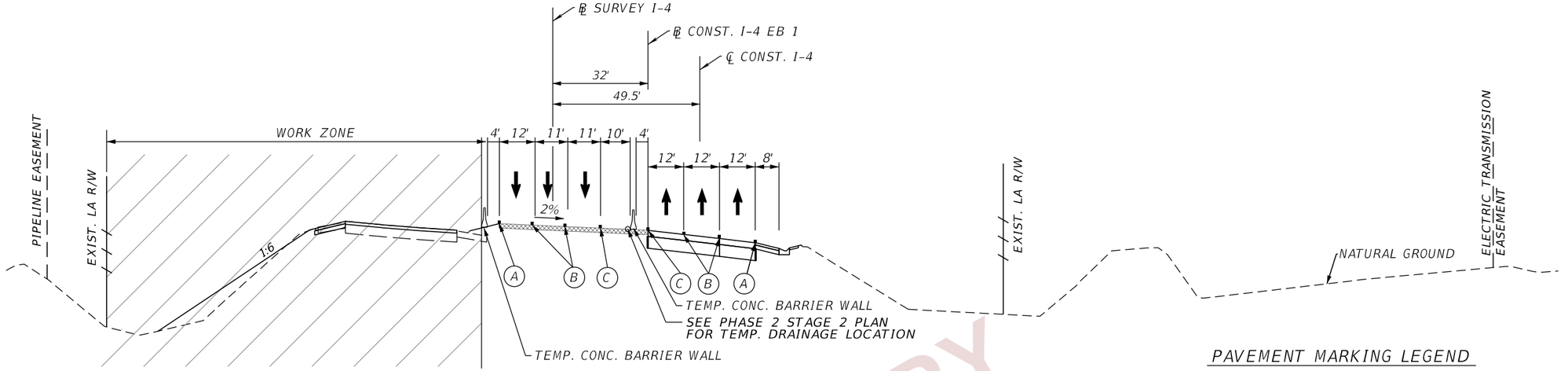

CRITICAL SECTION - PHASE 3, STAGE 2

℄ CONST. I-4
STA. 3075+00

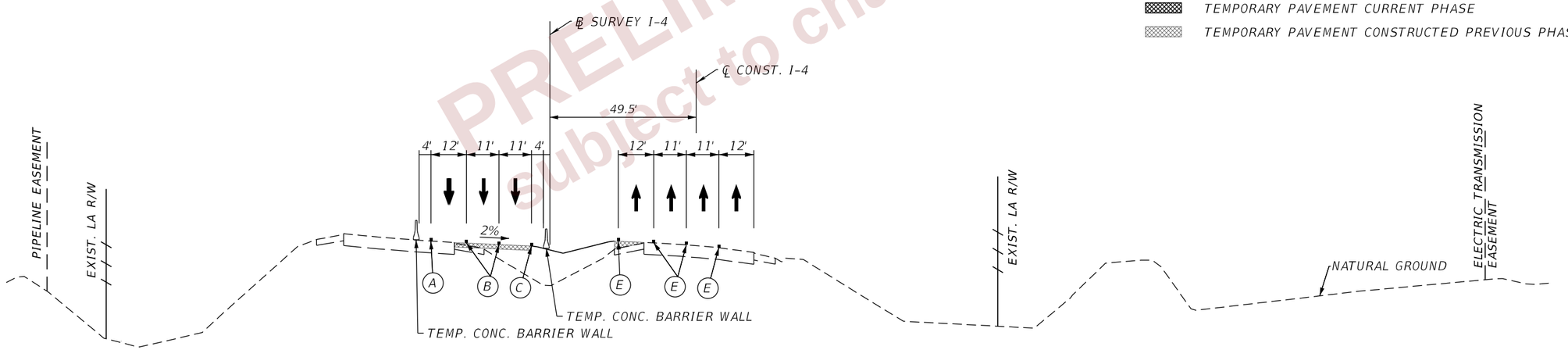

CRITICAL SECTION - PHASE 3, STAGE 2

℄ CONST. I-4
STA. 3065+00

PAVEMENT MARKING LEGEND

- (A) 6" SOLID WHITE TEMPORARY PAVEMENT MARKING
- (B) 6" SKIP WHITE TEMPORARY PAVEMENT MARKING (10'-30')
- (C) 6" SOLID YELLOW TEMPORARY PAVEMENT MARKING
- (D) 6" SKIP YELLOW TEMPORARY PAVEMENT MARKING (10'-30')
- (E) TEMPORARY PAVEMENT MARKINGS PREVIOUSLY APPLIED
- (F) 6" SOLID DOUBLE YELLOW TEMPORARY MARKING
- TEMPORARY PAVEMENT CURRENT PHASE
- TEMPORARY PAVEMENT CONSTRUCTED PREVIOUS PHASE

NOTES:
1. SEE STRUCTURE PLANS FOR TEMP. WALL DETAILS.
2. SEE TTC PLAN SHEETS FOR TEMP. DRAINAGE LOCATIONS.

PRELIMINARY subject to changes

REVISIONS				ENGINEER OF RECORD	STATE OF FLORIDA DEPARTMENT OF TRANSPORTATION			TTC PLAN (119) CRITICAL SECTIONS	SHEET NO.
DATE	DESCRIPTION	DATE	DESCRIPTION	RYAN J. WILLIAMSON, P.E. LICENSE NUMBER 81421 BURGESS & NIPLE, INC. 1800 PEMBROOK DRIVE, SUITE 265 ORLANDO, FL 32810	ROAD NO.	COUNTY	FINANCIAL PROJECT ID		623
					SR 400	POLK	430185-3-52-01		

THE OFFICIAL RECORD OF THIS SHEET IS THE ELECTRONIC FILE DIGITALLY SIGNED AND SEALED UNDER RULE 61G15-23.004, F.A.C.

2/28/2024 7:16:43 PM dayP:\ORD_FDOT\WorkSets\FDOT\430185352O1-I-4\Roadway\TCP\TCTYRD01.dgn

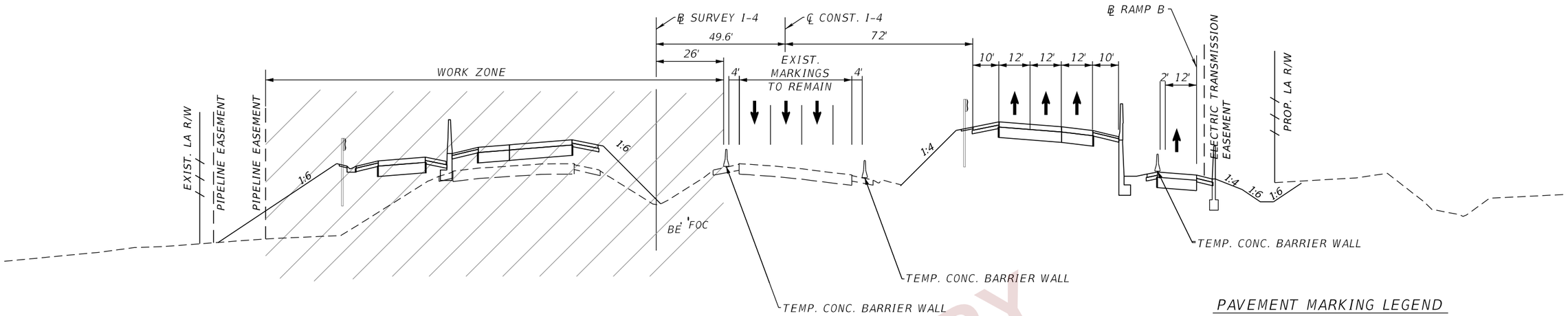

CRITICAL SECTION - PHASE 3, STAGE 2

℄ CONST. I-4
STA. 3103+00

PAVEMENT MARKING LEGEND

- (A) 6" SOLID WHITE TEMPORARY PAVEMENT MARKING
- (B) 6" SKIP WHITE TEMPORARY PAVEMENT MARKING (10'-30')
- (C) 6" SOLID YELLOW TEMPORARY PAVEMENT MARKING
- (D) 6" SKIP YELLOW TEMPORARY PAVEMENT MARKING (10'-30')
- (E) TEMPORARY PAVEMENT MARKINGS PREVIOUSLY APPLIED
- (F) 6" SOLID DOUBLE YELLOW TEMPORARY MARKING
- TEMPORARY PAVEMENT CURRENT PHASE
- TEMPORARY PAVEMENT CONSTRUCTED PREVIOUS PHASE

PRELIMINARY subject to changes

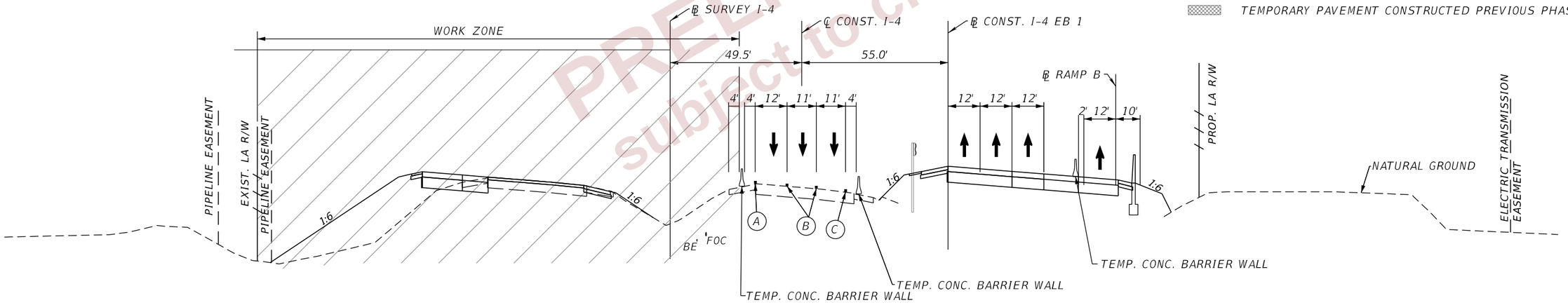

CRITICAL SECTION - PHASE 3, STAGE 2

℄ CONST. I-4
STA. 3093+00

NOTES:
1. SEE STRUCTURE PLANS FOR TEMP. WALL DETAILS.
2. SEE TTC PLAN SHEETS FOR TEMP. DRAINAGE LOCATIONS.

REVISIONS				ENGINEER OF RECORD	STATE OF FLORIDA DEPARTMENT OF TRANSPORTATION			TTC PLAN (120) CRITICAL SECTIONS	SHEET NO.
DATE	DESCRIPTION	DATE	DESCRIPTION	RYAN J. WILLIAMSON, P.E. LICENSE NUMBER 81421 BURGESS & NIPLE, INC. 1800 PEMBROOK DRIVE, SUITE 265 ORLANDO, FL 32810	ROAD NO.	COUNTY	FINANCIAL PROJECT ID		624
					SR 400	POLK	430185-3-52-01		

THE OFFICIAL RECORD OF THIS SHEET IS THE ELECTRONIC FILE DIGITALLY SIGNED AND SEALED UNDER RULE 61G15-23.004, F.A.C.

2/28/2024 7:16:55 PM dav
P:\ORD_FDOT\WorkSets\FDOT\430185352O1-I-4\Roadway\TCP\TCTYRD01.dgn

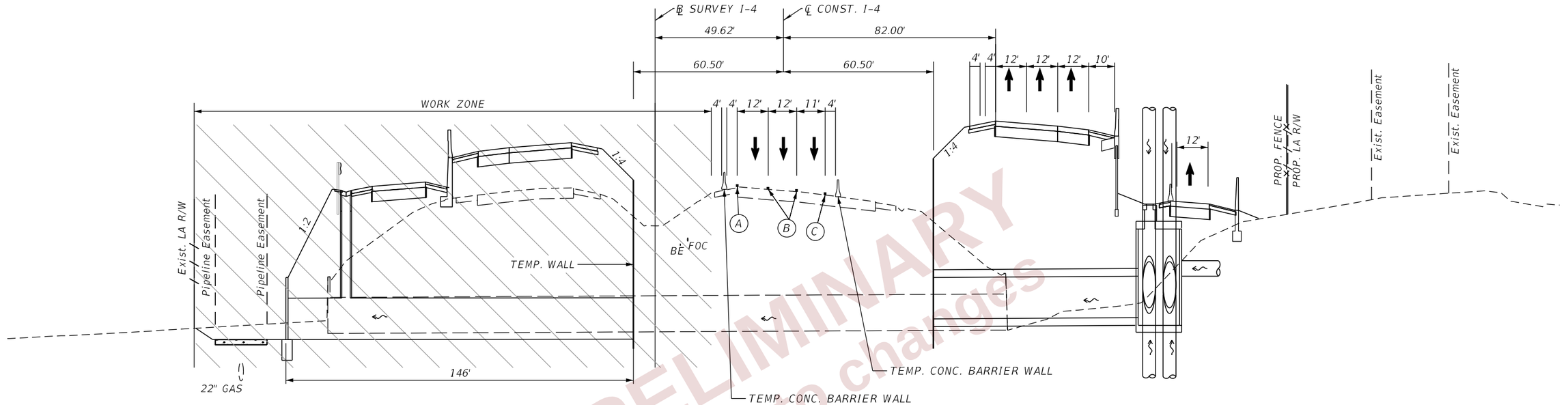

NOTES:
1. SEE STRUCTURE PLANS FOR TEMP. WALL DETAILS.
2. SEE TTC PLAN SHEETS FOR TEMP. DRAINAGE LOCATIONS.

PRELIMINARY
subject to changes

PAVEMENT MARKING LEGEND

- (A) 6" SOLID WHITE TEMPORARY PAVEMENT MARKING
- (B) 6" SKIP WHITE TEMPORARY PAVEMENT MARKING (10'-30')
- (C) 6" SOLID YELLOW TEMPORARY PAVEMENT MARKING
- (D) 6" SKIP YELLOW TEMPORARY PAVEMENT MARKING (10'-30')
- (E) TEMPORARY PAVEMENT MARKINGS PREVIOUSLY APPLIED
- (F) 6" SOLID DOUBLE YELLOW TEMPORARY MARKING
- TEMPORARY PAVEMENT CURRENT PHASE
- TEMPORARY PAVEMENT CONSTRUCTED PREVIOUS PHASE

CRITICAL SECTION - PHASE 3, STAGE 2

℄ CONST. I-4
STA. 3104+45.00 (BOX CULVERT)

REVISIONS				ENGINEER OF RECORD	STATE OF FLORIDA DEPARTMENT OF TRANSPORTATION			TTC PLAN (121) CRITICAL SECTIONS	SHEET NO.
DATE	DESCRIPTION	DATE	DESCRIPTION	RYAN J. WILLIAMSON, P.E. LICENSE NUMBER 81421 BURGESS & NIPLE, INC. 1800 PEMBROOK DRIVE, SUITE 265 ORLANDO, FL 32810	ROAD NO.	COUNTY	FINANCIAL PROJECT ID		625
					SR 400	POLK	430185-3-52-01		

THE OFFICIAL RECORD OF THIS SHEET IS THE ELECTRONIC FILE DIGITALLY SIGNED AND SEALED UNDER RULE 61G15-23.004, F.A.C.

2/28/2024 7:16:59 PM day
P:\ORD_FDOT\WorkSets\FDOT\430185352O1-I-4\Roadway\TCP\TCTYRD01.dgn

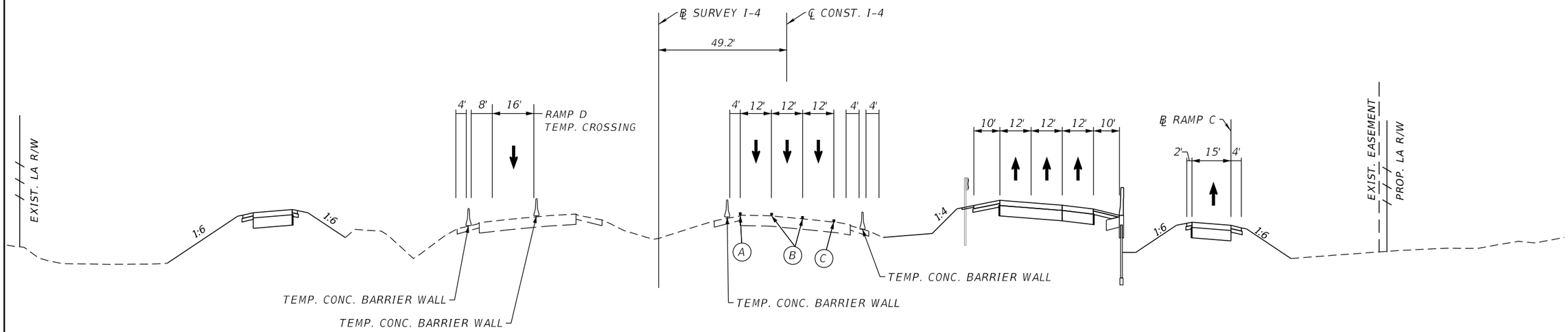

CRITICAL SECTION - PHASE 3, STAGE 2

℄ CONST. I-4
STA. 3138+00

PAVEMENT MARKING LEGEND

- (A) 6" SOLID WHITE TEMPORARY PAVEMENT MARKING
- (B) 6" SKIP WHITE TEMPORARY PAVEMENT MARKING (10'-30')
- (C) 6" SOLID YELLOW TEMPORARY PAVEMENT MARKING
- (D) 6" SKIP YELLOW TEMPORARY PAVEMENT MARKING (10'-30')
- (E) TEMPORARY PAVEMENT MARKINGS PREVIOUSLY APPLIED
- (F) 6" SOLID DOUBLE YELLOW TEMPORARY MARKING
- TEMPORARY PAVEMENT CURRENT PHASE
- TEMPORARY PAVEMENT CONSTRUCTED PREVIOUS PHASE

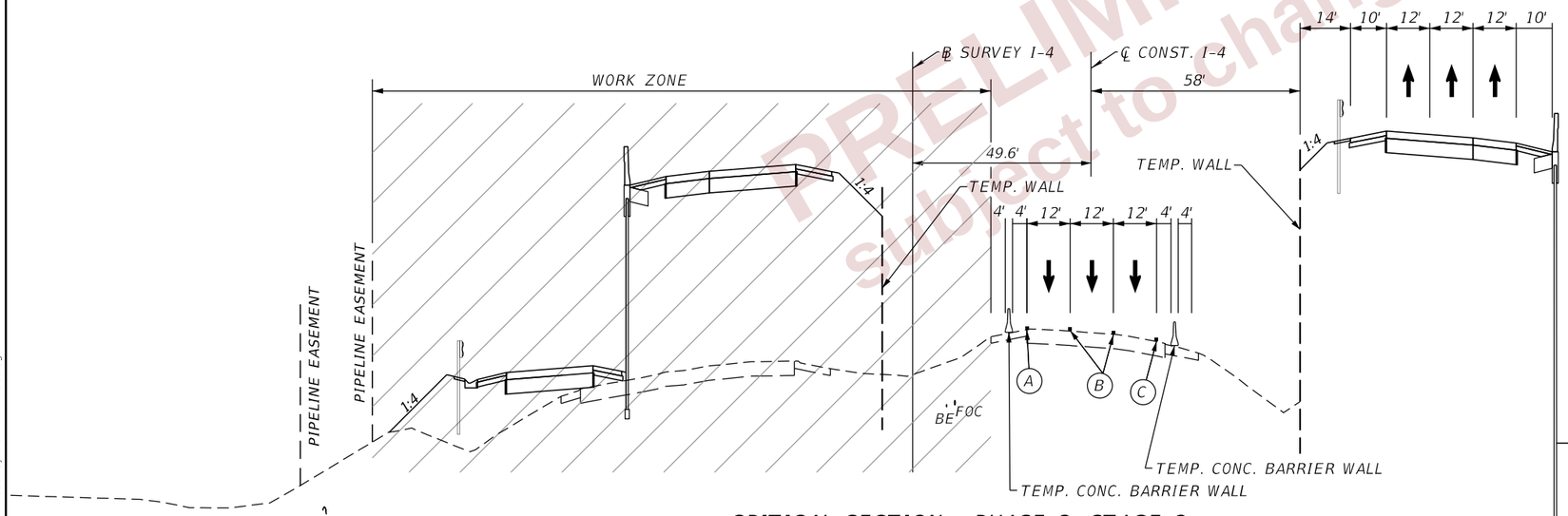

CRITICAL SECTION - PHASE 3, STAGE 2

℄ CONST. I-4
STA. 3110+00

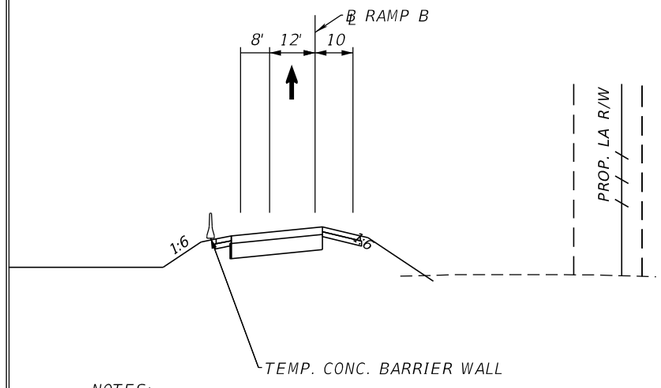

NOTES:
1. SEE STRUCTURE PLANS FOR TEMP. WALL DETAILS.
2. SEE TTC PLAN SHEETS FOR TEMP. DRAINAGE LOCATIONS.

PRELIMINARY
subject to changes

REVISIONS				ENGINEER OF RECORD	STATE OF FLORIDA DEPARTMENT OF TRANSPORTATION			TTC PLAN (122) CRITICAL SECTIONS	SHEET NO.
DATE	DESCRIPTION	DATE	DESCRIPTION	RYAN J. WILLIAMSON, P.E. LICENSE NUMBER 81421 BURGESS & NIPLE, INC. 1800 PEMBROOK DRIVE, SUITE 265 ORLANDO, FL 32810	ROAD NO.	COUNTY	FINANCIAL PROJECT ID		626
					SR 400	POLK	430185-3-52-01		

THE OFFICIAL RECORD OF THIS SHEET IS THE ELECTRONIC FILE DIGITALLY SIGNED AND SEALED UNDER RULE 61G15-23.004, F.A.C.

2/28/2024 7:17:00 PM day
P:\ORD_FDOT\WorkSet\FDOT\430185352O1-I-4\Roadway\TCP\TCTYRD01.dgn

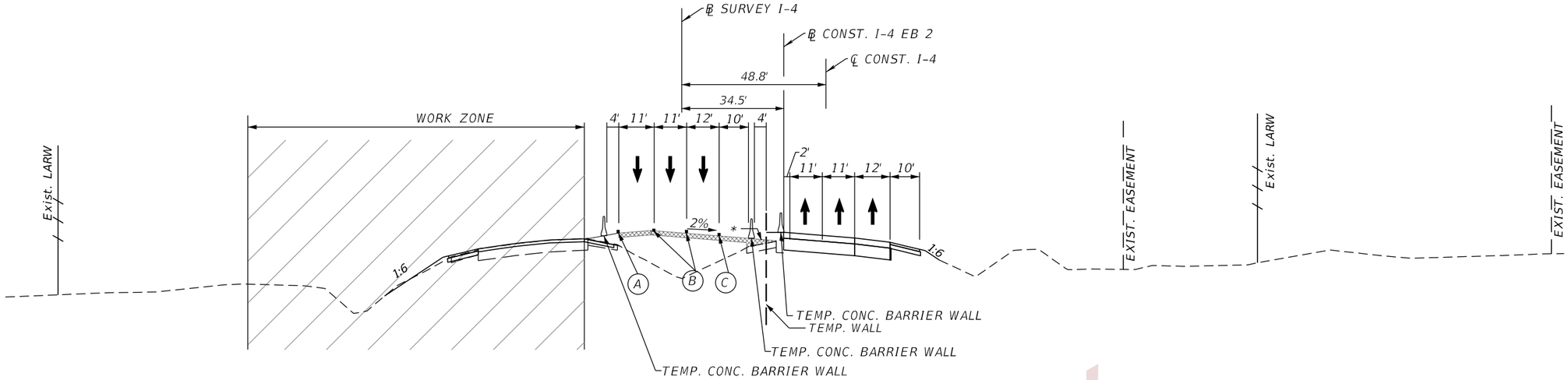

CRITICAL SECTION - PHASE 3, STAGE 2

℄ CONST. I-4
STA. 3172+00

PAVEMENT MARKING LEGEND

- (A) 6" SOLID WHITE TEMPORARY PAVEMENT MARKING
- (B) 6" SKIP WHITE TEMPORARY PAVEMENT MARKING (10'-30')
- (C) 6" SOLID YELLOW TEMPORARY PAVEMENT MARKING
- (D) 6" SKIP YELLOW TEMPORARY PAVEMENT MARKING (10'-30')
- (E) TEMPORARY PAVEMENT MARKINGS PREVIOUSLY APPLIED
- (F) 6" SOLID DOUBLE YELLOW TEMPORARY MARKING
- TEMPORARY PAVEMENT CURRENT PHASE
- TEMPORARY PAVEMENT CONSTRUCTED PREVIOUS PHASE

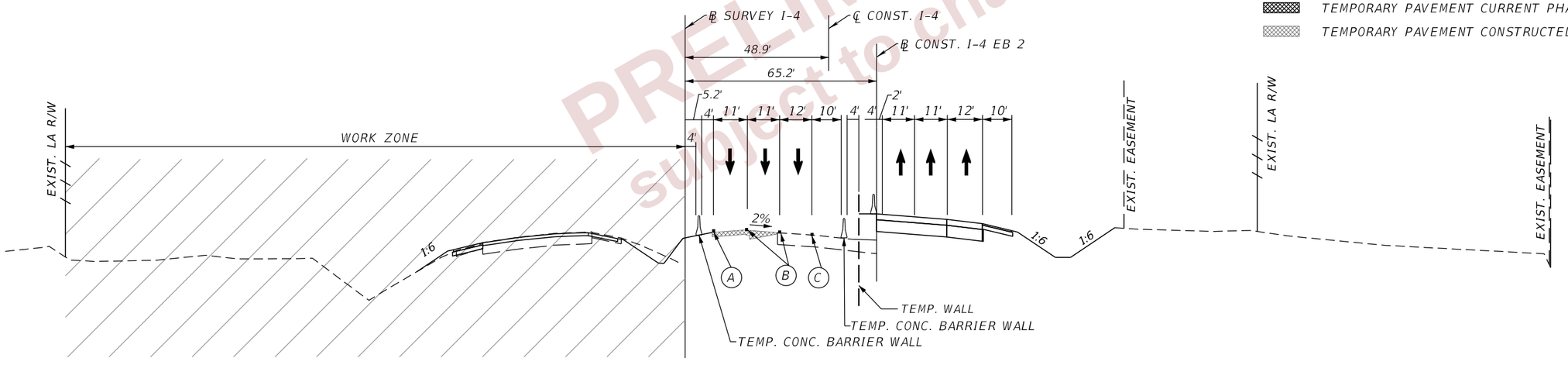

CRITICAL SECTION - PHASE 3, STAGE 2

℄ CONST. I-4
STA. 3163+00

NOTES:
1. SEE STRUCTURE PLANS FOR TEMP. WALL DETAILS.
2. SEE TTC PLAN SHEETS FOR TEMP. DRAINAGE LOCATIONS.

PRELIMINARY
subject to changes

THE OFFICIAL RECORD OF THIS SHEET IS THE ELECTRONIC FILE DIGITALLY SIGNED AND SEALED UNDER RULE 61G15-23.004, F.A.C.

2/28/2024 7:17:01 PM dayl
P:\ORD_FDOT\WorkSets\FDOT\430185352O1-I-4\Roadway\TCP\TCTYRD01.dgn

REVISIONS				ENGINEER OF RECORD	STATE OF FLORIDA DEPARTMENT OF TRANSPORTATION			TTC PLAN (123) CRITICAL SECTIONS	SHEET NO.
DATE	DESCRIPTION	DATE	DESCRIPTION	RYAN J. WILLIAMSON, P.E. LICENSE NUMBER 81421 BURGESS & NIPLE, INC. 1800 PEMBROOK DRIVE, SUITE 265 ORLANDO, FL 32810	ROAD NO.	COUNTY	FINANCIAL PROJECT ID		627
					SR 400	POLK	430185-3-52-01		

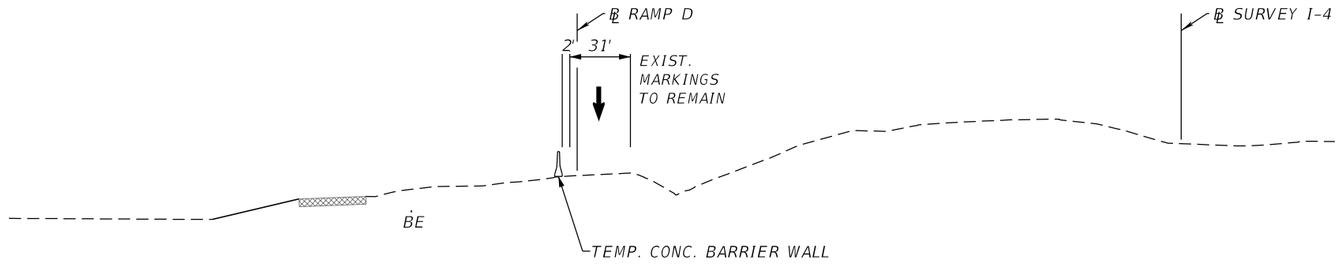

CRITICAL SECTION - PHASE 3, STAGE 2

℄ RAMP D
STA. 404+00

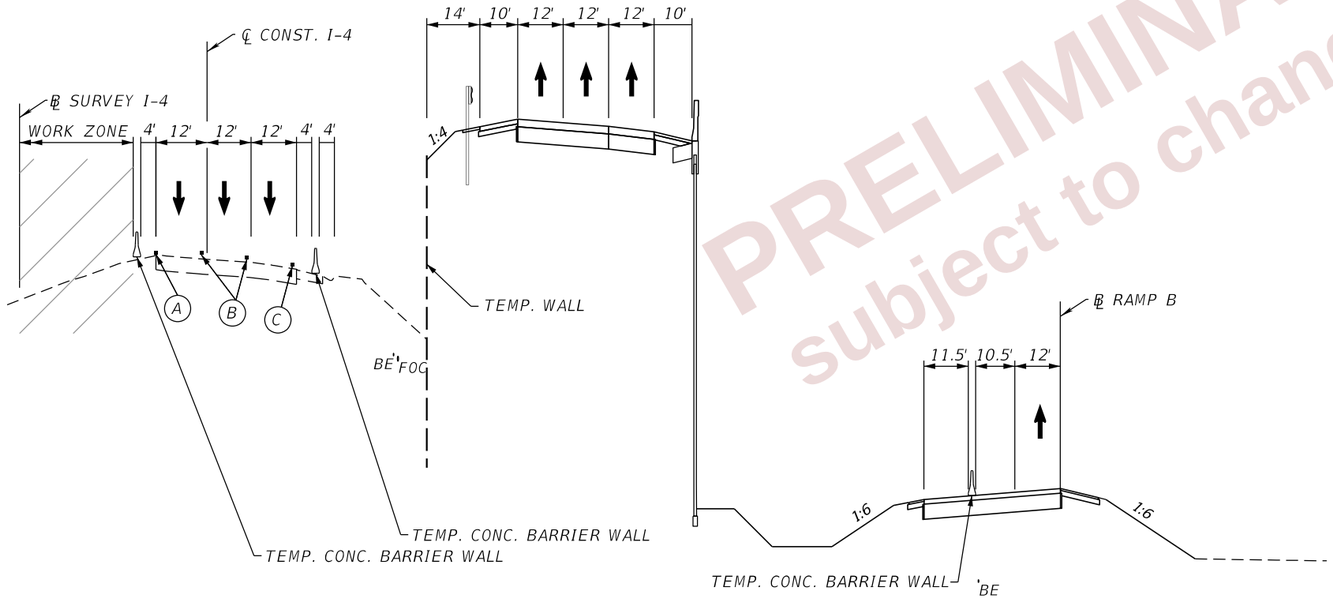

PAVEMENT MARKING LEGEND

- (A) 6" SOLID WHITE TEMPORARY PAVEMENT MARKING
- (B) 6" SKIP WHITE TEMPORARY PAVEMENT MARKING (10'-30')
- (C) 6" SOLID YELLOW TEMPORARY PAVEMENT MARKING
- (D) 6" SKIP YELLOW TEMPORARY PAVEMENT MARKING (10'-30')
- (E) TEMPORARY PAVEMENT MARKINGS PREVIOUSLY APPLIED
- (F) 6" SOLID DOUBLE YELLOW TEMPORARY MARKING
- TEMPORARY PAVEMENT CURRENT PHASE
- TEMPORARY PAVEMENT CONSTRUCTED PREVIOUS PHASE

CRITICAL SECTION - PHASE 3, STAGE 2

℄ RAMP B
STA. 225+00

PRELIMINARY
subject to changes

THE OFFICIAL RECORD OF THIS SHEET IS THE ELECTRONIC FILE DIGITALLY SIGNED AND SEALED UNDER RULE 61G15-23.004, F.A.C.

2/28/2024 7:17:01 PM day
P:\ORD_FDOT\WorkSets\FDOT\430185352O1-I-4\Roadway\TCP\TCTYRD01.dgn

REVISIONS				ENGINEER OF RECORD	STATE OF FLORIDA DEPARTMENT OF TRANSPORTATION			TTC PLAN (124) CRITICAL SECTIONS	SHEET NO.
DATE	DESCRIPTION	DATE	DESCRIPTION	RYAN J. WILLIAMSON, P.E. LICENSE NUMBER 81421 BURGESS & NIPLE, INC. 1800 PEMBROOK DRIVE, SUITE 265 ORLANDO, FL 32810	ROAD NO.	COUNTY	FINANCIAL PROJECT ID		628
					SR 400	POLK	430185-3-52-01		

LEGEND

- TEMP PAVEMENT CURRENT PHASE
- TEMP PAVEMENT CONST. PREVIOUS PHASE
- PROP. PAVEMENT CONSTRUCTED CURRENT PHASE
- PROP. PAVEMENT CONSTRUCTED PREVIOUS PHASE
- DIRECTION OF TRAFFIC
- WORK ZONE
- CRASH CUSHION
- WORK ZONE SIGN

- (1) 6" WHITE
- (2) 6" YELLOW
- (4) 6" WHITE, 10'-30' SKIP

E11-01A
FTP-17-06
M06-02R

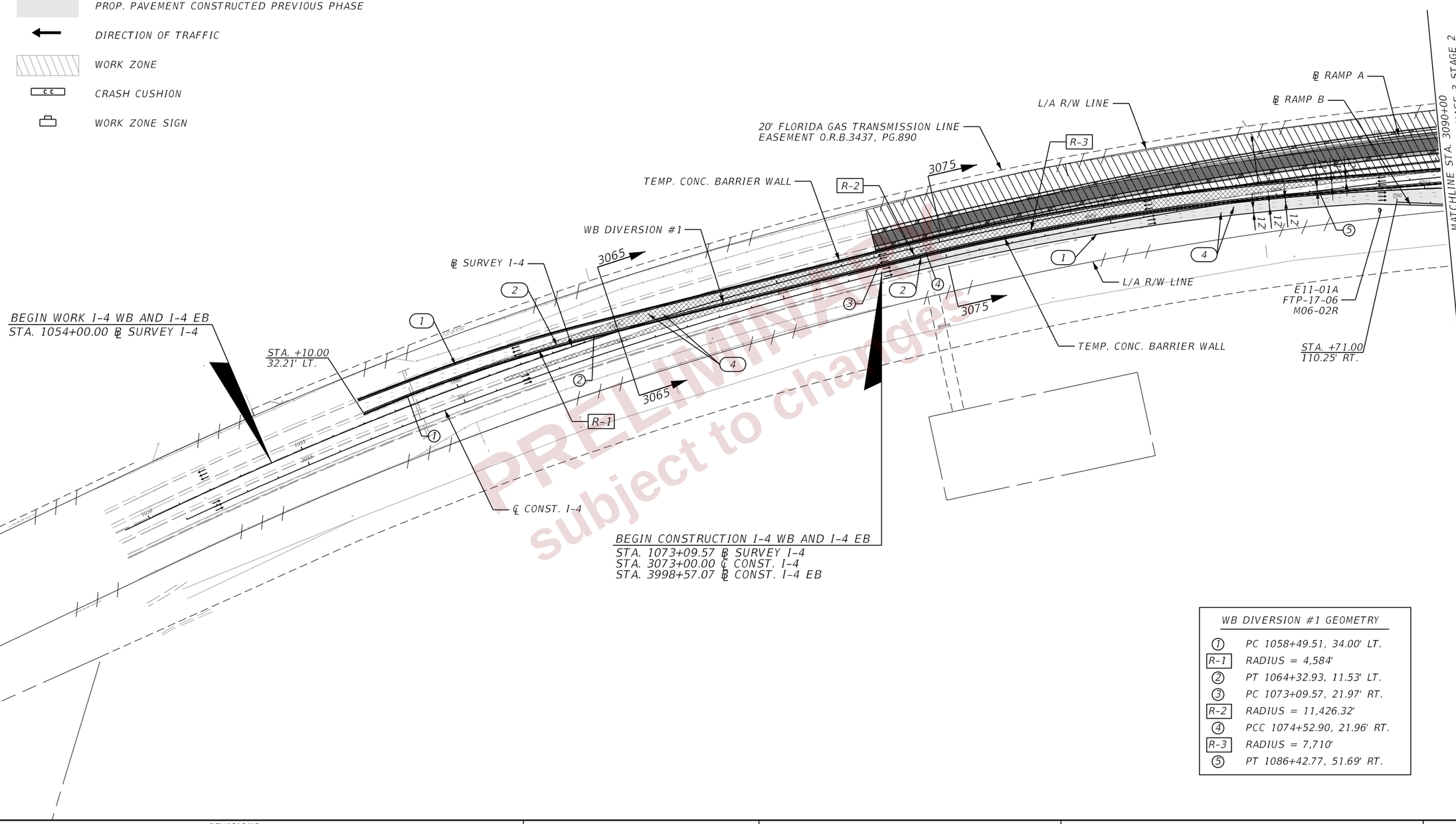

BEGIN CONSTRUCTION I-4 WB AND I-4 EB
STA. 1073+09.57 ℄ SURVEY I-4
STA. 3073+00.00 ℄ CONST. I-4
STA. 3998+57.07 ℄ CONST. I-4 EB

WB DIVERSION #1 GEOMETRY

(1)	PC 1058+49.51, 34.00' LT.
R-1	RADIUS = 4,584'
(2)	PT 1064+32.93, 11.53' LT.
(3)	PC 1073+09.57, 21.97' RT.
R-2	RADIUS = 11,426.32'
(4)	PCC 1074+52.90, 21.96' RT.
R-3	RADIUS = 7,710'
(5)	PT 1086+42.77, 51.69' RT.

PRELIMINARY
subject to changes

THE OFFICIAL RECORD OF THIS SHEET IS THE ELECTRONIC FILE DIGITALLY SIGNED AND SEALED UNDER RULE 61G15-23.004, F.A.C.

REVISIONS				ENGINEER OF RECORD	STATE OF FLORIDA DEPARTMENT OF TRANSPORTATION			TTC PLAN (125) PHASE 3 STAGE 2 I-4	SHEET NO.
DATE	DESCRIPTION	DATE	DESCRIPTION	RYAN J. WILLIAMSON, P.E. LICENSE NUMBER 81421 BURGESS & NIPLE, INC. 1800 PEMBROOK DRIVE, SUITE 265 ORLANDO, FL 32810	ROAD NO.	COUNTY	FINANCIAL PROJECT ID		629
					SR 400	POLK	430185-3-52-01		

2/28/2024 7:17:20 PM day
P:\ORD_FDOT\WorkSets\FDOT\430185352O1-I-4\Roadway\TCP\TCPLRD00P352_I4.dgn

LEGEND

- TEMP PAVEMENT CURRENT PHASE
- TEMP PAVEMENT CONST. PREVIOUS PHASE
- PROP. PAVEMENT CONSTRUCTED CURRENT PHASE
- PROP. PAVEMENT CONSTRUCTED PREVIOUS PHASE
- DIRECTION OF TRAFFIC
- WORK ZONE
- CRASH CUSHION
- WORK ZONE SIGN
- CHANNELIZING DEVICES (INDEX 102-600)

- (1) 6" WHITE
- (2) 6" YELLOW
- (4) 6" WHITE, 10'-30' SKIP
- (8) 8" WHITE
- (HR) EXIST. HIGH MAST LIGHTING TO REMAIN ACTIVE IN THIS PHASE (SEE TTC PLAN TEMPORARY LIGHTING)

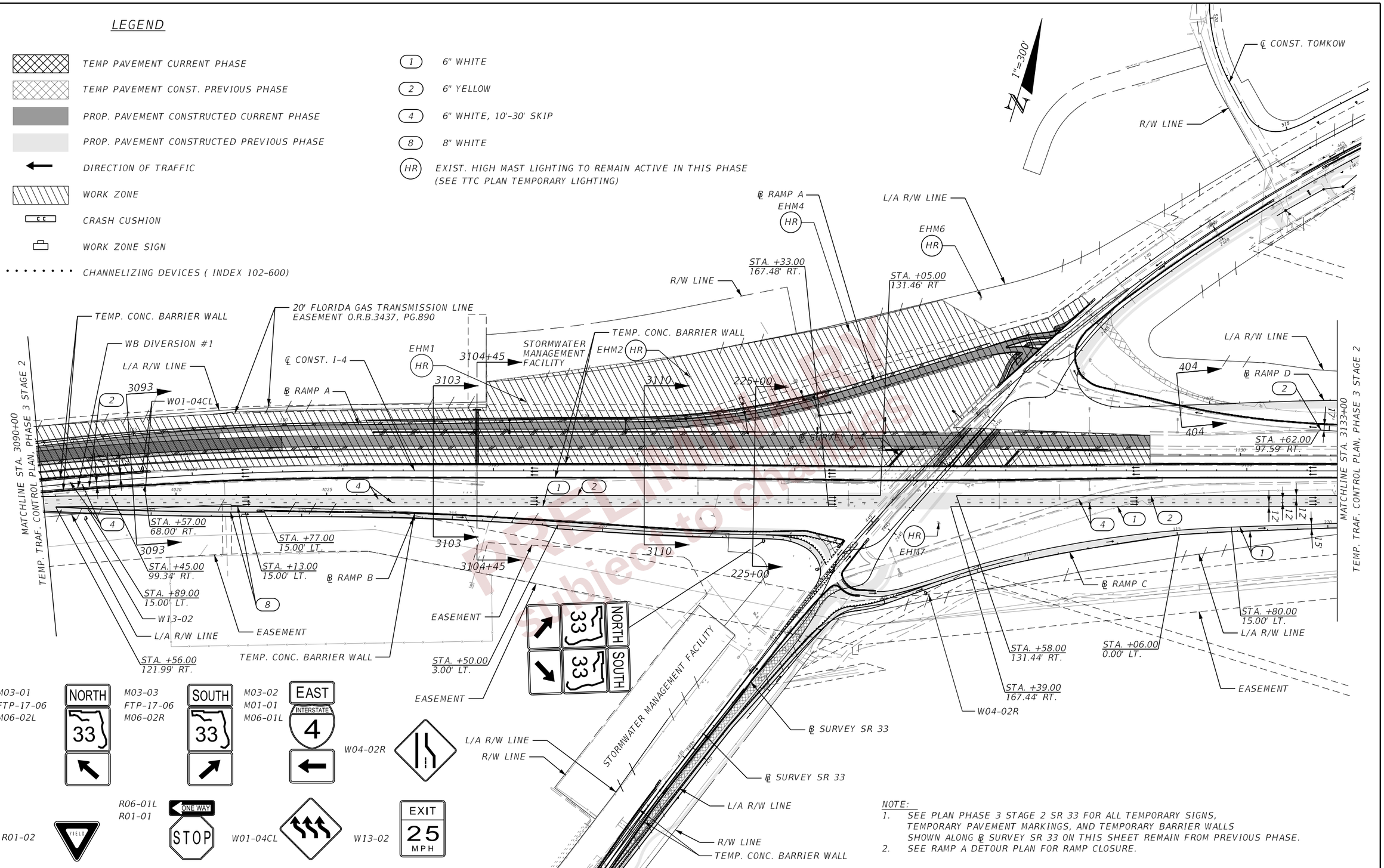

NOTE:
1. SEE PLAN PHASE 3 STAGE 2 SR 33 FOR ALL TEMPORARY SIGNS, TEMPORARY PAVEMENT MARKINGS, AND TEMPORARY BARRIER WALLS SHOWN ALONG ℄ SURVEY SR 33 ON THIS SHEET REMAIN FROM PREVIOUS PHASE.
2. SEE RAMP A DETOUR PLAN FOR RAMP CLOSURE.

REVISIONS			
DATE	DESCRIPTION	DATE	DESCRIPTION

ENGINEER OF RECORD
RYAN J. WILLIAMSON, P.E.
LICENSE NUMBER 81421
BURGESS & NIPLE, INC.
1800 PEMBROOK DRIVE, SUITE 265
ORLANDO, FL 32810

STATE OF FLORIDA
DEPARTMENT OF TRANSPORTATION

ROAD NO.	COUNTY	FINANCIAL PROJECT ID
SR 400	POLK	430185-3-52-01

TTC PLAN (126)
PHASE 3 STAGE 2
I-4

SHEET NO. 630

THE OFFICIAL RECORD OF THIS SHEET IS THE ELECTRONIC FILE DIGITALLY SIGNED AND SEALED UNDER RULE 61G15-23.004, F.A.C.

2/28/2024 7:17:24 PM day
P:\ORD_FDOT\WorkSets\FDOT_430185201-I-4\Roadway\TCP\TCPLRDDP3S2_14.dgn

PRELIMINARY
Subject to change

LEGEND

- TEMP PAVEMENT CURRENT PHASE
- TEMP PAVEMENT CONST. PREVIOUS PHASE
- PROP. PAVEMENT CONSTRUCTED CURRENT PHASE
- PROP. PAVEMENT CONSTRUCTED PREVIOUS PHASE
- DIRECTION OF TRAFFIC
- WORK ZONE
- CRASH CUSHION
- WORK ZONE SIGN

- (1) 6" WHITE
- (2) 6" YELLOW
- (4) 6" WHITE, 10'-30' SKIP
- (8) 8" WHITE
- (HR) EXIST. HIGH MAST LIGHTING TO REMAIN ACTIVE IN THIS PHASE (SEE TTC PLAN TEMPORARY LIGHTING)

1"=300'

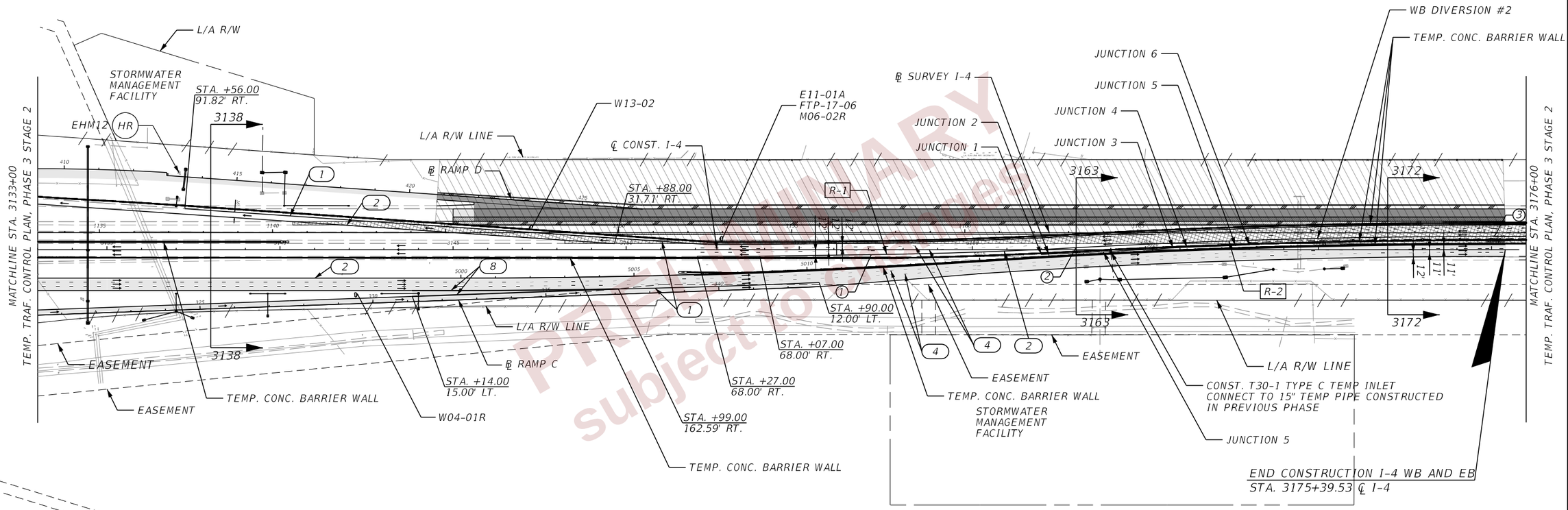

PRELIMINARY
subject to change

W04-01R

W13-02

E11-01A
FTP-17-06
M06-02R

WB DIVERSION #2 GEOMETRY

(1)	PC 1157+29.39, 63.40' RT.
R-1	RADIUS = 15,000'
(2)	PCC 1163+20.70, 43.28' RT.
R-2	RADIUS = 22,996'
(3)	PCC 1175+30.04, 10.11' RT.

NOTE:
1. SEE PLAN PHASE 3 STAGE 2 SR 33 FOR ALL TEMPORARY SIGNS, TEMPORARY PAVEMENT MARKINGS, AND TEMPORARY BARRIER WALLS ALONG ℄ SR 33 ON THIS SHEET.

REVISIONS			
DATE	DESCRIPTION	DATE	DESCRIPTION

ENGINEER OF RECORD

RYAN J. WILLIAMSON, P.E.
LICENSE NUMBER 81421
BURGESS & NIPLE, INC.
1800 PEMBROOK DRIVE, SUITE 265
ORLANDO, FL 32810

STATE OF FLORIDA
DEPARTMENT OF TRANSPORTATION

ROAD NO.	COUNTY	FINANCIAL PROJECT ID
SR 400	POLK	430185-3-52-01

TTC PLAN (127)
PHASE 3 STAGE 2
I-4

SHEET NO. 631

THE OFFICIAL RECORD OF THIS SHEET IS THE ELECTRONIC FILE DIGITALLY SIGNED AND SEALED UNDER RULE 61G15-23.004, F.A.C.

2/28/2024 7:17:39 PM day
P:\ORD_FDOT\WorkSets\FDOT\430185352O1-I-4\Roadway\TCP\TCPLRDDP3S2_I4.dgn

LEGEND

- TEMP PAVEMENT CURRENT PHASE
- TEMP PAVEMENT CONST. PREVIOUS PHASE
- PROP. PAVEMENT CONSTRUCTED CURRENT PHASE
- PROP. PAVEMENT CONSTRUCTED PREVIOUS PHASE
- DIRECTION OF TRAFFIC
- WORK ZONE
- CRASH CUSHION
- WORK ZONE SIGN

- (1) 6" WHITE
- (2) 6" YELLOW
- (4) 6" WHITE, 10'-30' SKIP

W01-04CL

1"=300'

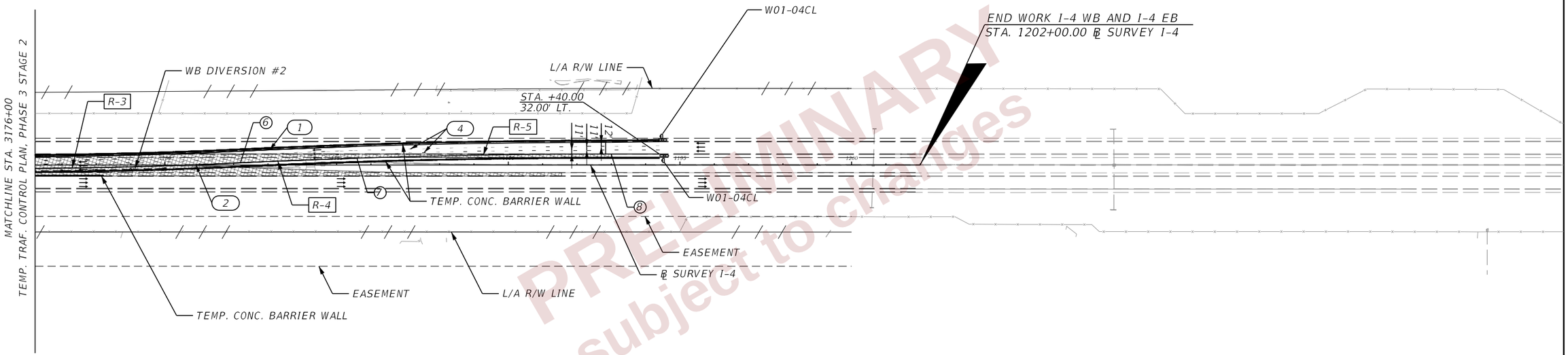

WB DIVERSION #2 GEOMETRY

- R-3 RADIUS = 15,000'
- (6) PC 1182+20.12, 6.54' LT.
- R-4 RADIUS = 22,918'
- (7) PCC 1185+59.04, 20.02' LT.
- R-5 RADIUS = 22,918'
- (8) PT 1193+00.00, 32.00' LT.

PRELIMINARY subject to changes

THE OFFICIAL RECORD OF THIS SHEET IS THE ELECTRONIC FILE DIGITALLY SIGNED AND SEALED UNDER RULE 61G15-23.004, F.A.C.

REVISIONS				ENGINEER OF RECORD	STATE OF FLORIDA DEPARTMENT OF TRANSPORTATION			TTC PLAN (128) PHASE 3 STAGE 2 I-4	SHEET NO.
DATE	DESCRIPTION	DATE	DESCRIPTION	RYAN J. WILLIAMSON, P.E. LICENSE NUMBER 81421 BURGESS & NIPLE, INC. 1800 PEMBROOK DRIVE, SUITE 265 ORLANDO, FL 32810	ROAD NO.	COUNTY	FINANCIAL PROJECT ID		632
					SR 400	POLK	430185-3-52-01		

2/28/2024 7:17:46 PM dajr
P:\ORD_FDOT\WorkSets\FDOT\430185352O1-I-4\Roadway\TCP\TCPLRD0P352_I4.dgn

M03-02
M01-01
M06-01L

R01-02

R06-01L
R01-01

W04-02R

1"=100'

M03-01
FTP-17-06
M06-02L

M03-03
FTP-17-06
M06-02R

TEMP. CONC. BARRIER WALL

℄ RAMP B

EASEMENT

L/A R/W LINE

℄ SURVEY SR 33

℄ CONST. I-4

℄ CONST. SR 33

R/W LINE

TEMP. CONC. BARRIER WALL

R01-02

M03-02
M01-01
M06-01L

R06-01L
R01-01

TEMP. CONC. BARRIER WALL

N22°31'31"E

℄ RAMP C

L/A R/W LINE

W04-02R

EASEMENT

EHM7
HR

MATCHLINE STA. 447+00
TRAF. CONTROL PLAN, PHASE 3 STAGE 2

NOTE: ALL TEMPORARY SIGNS, TEMPORARY PAVEMENT MARKINGS, AND TEMPORARY BARRIER WALLS SHOWN ON THIS SHEET REMAIN FROM PREVIOUS PHASE.

LEGEND

- TEMP PAVEMENT CURRENT PHASE
- TEMP PAVEMENT CONST. PREVIOUS PHASE
- PROP. PAVEMENT CONSTRUCTED CURRENT PHASE
- PROP. PAVEMENT CONSTRUCTED PREVIOUS PHASE
- DIRECTION OF TRAFFIC
- WORK ZONE
- CRASH CUSHION
- WORK ZONE SIGN
- CHANNELIZING DEVICES (INDEX 102-600)

(1) 6" WHITE
(2) 6" YELLOW
(3) 6" DOUBLE YELLOW
(5) 6" YELLOW, 2'-4' SKIP
(6) 6" WHITE, 2'-4' SKIP
(7) WHITE DIRECTIONAL ARROWS (TYP.)
(8) 8" WHITE
(11) 24' WHITE
(HR) EXIST. HIGH MAST LIGHTING TO REMAIN ACTIVE IN THIS PHASE. (SEE TTC PLAN TEMPORARY LIGHTING)

PRELIMINARY subject to changes

REVISIONS				ENGINEER OF RECORD	STATE OF FLORIDA DEPARTMENT OF TRANSPORTATION			TTC PLAN (129) PHASE 3 STAGE 2 SR 33	SHEET NO.
DATE	DESCRIPTION	DATE	DESCRIPTION	RYAN J. WILLIAMSON, P.E. LICENSE NUMBER 81421 BURGESS & NIPLE, INC. 1800 PEMBROOK DRIVE, SUITE 265 ORLANDO, FL 32810	ROAD NO.	COUNTY	FINANCIAL PROJECT ID		633
					SR 400	POLK	430185-3-52-01		

THE OFFICIAL RECORD OF THIS SHEET IS THE ELECTRONIC FILE DIGITALLY SIGNED AND SEALED UNDER RULE 61G15-23.004, F.A.C.

2/28/2024 7:18:03 PM day
P:\ORD_FDOT\WorkSets\FDOT\430185352O1-I-4\Roadway\TCP\TCPLRDOP352_33.dgn

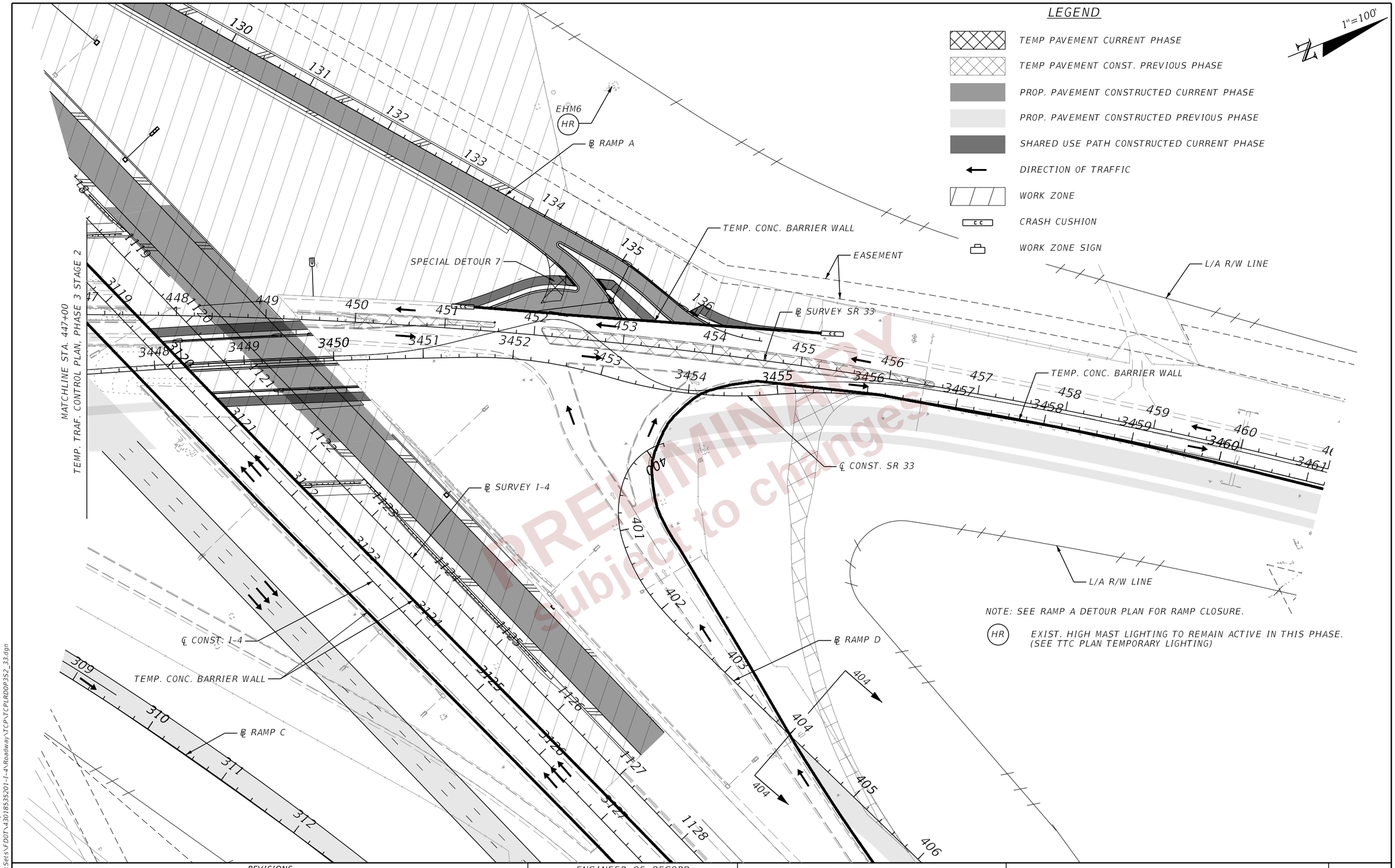

PRELIMINARY subject to changes

REVISIONS				ENGINEER OF RECORD	STATE OF FLORIDA DEPARTMENT OF TRANSPORTATION			TTC PLAN (130) PHASE 3 STAGE 2 SR 33	SHEET NO.
DATE	DESCRIPTION	DATE	DESCRIPTION	RYAN J. WILLIAMSON, P.E. LICENSE NUMBER 81421 BURGESS & NIPLE, INC. 1800 PEMBROOK DRIVE, SUITE 265 ORLANDO, FL 32810	ROAD NO.	COUNTY	FINANCIAL PROJECT ID		634
					SR 400	POLK	430185-3-52-01		

THE OFFICIAL RECORD OF THIS SHEET IS THE ELECTRONIC FILE DIGITALLY SIGNED AND SEALED UNDER RULE 61G15-23.004, F.A.C.

2/28/2024 7:18:10 PM day
P:\ORD_FDOT\WorkSets\FDOT\430185352O1-I-4\Roadway\TCP\TCPLR00P352_33.dgn

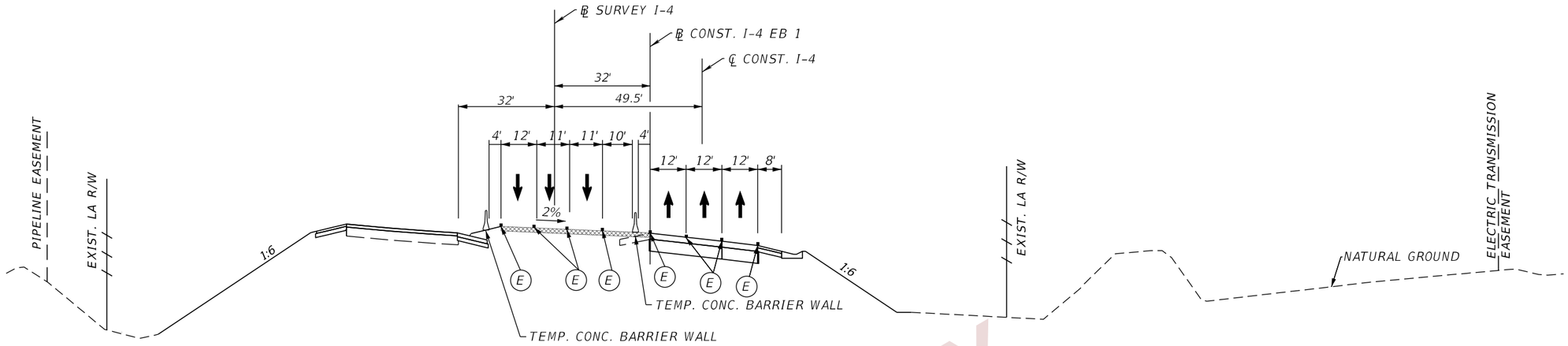

CRITICAL SECTION - PHASE 3, STAGE 3

℄ CONST. I-4
STA. 3075+00

PAVEMENT MARKING LEGEND

- (A) 6" SOLID WHITE TEMPORARY PAVEMENT MARKING
- (B) 6" SKIP WHITE TEMPORARY PAVEMENT MARKING (10'-30')
- (C) 6" SOLID YELLOW TEMPORARY PAVEMENT MARKING
- (D) 6" SKIP YELLOW TEMPORARY PAVEMENT MARKING (10'-30')
- (E) TEMPORARY PAVEMENT MARKINGS PREVIOUSLY APPLIED
- (F) 6" SOLID DOUBLE YELLOW TEMPORARY MARKING
- TEMPORARY PAVEMENT CURRENT PHASE
- TEMPORARY PAVEMENT CONSTRUCTED PREVIOUS PHASE

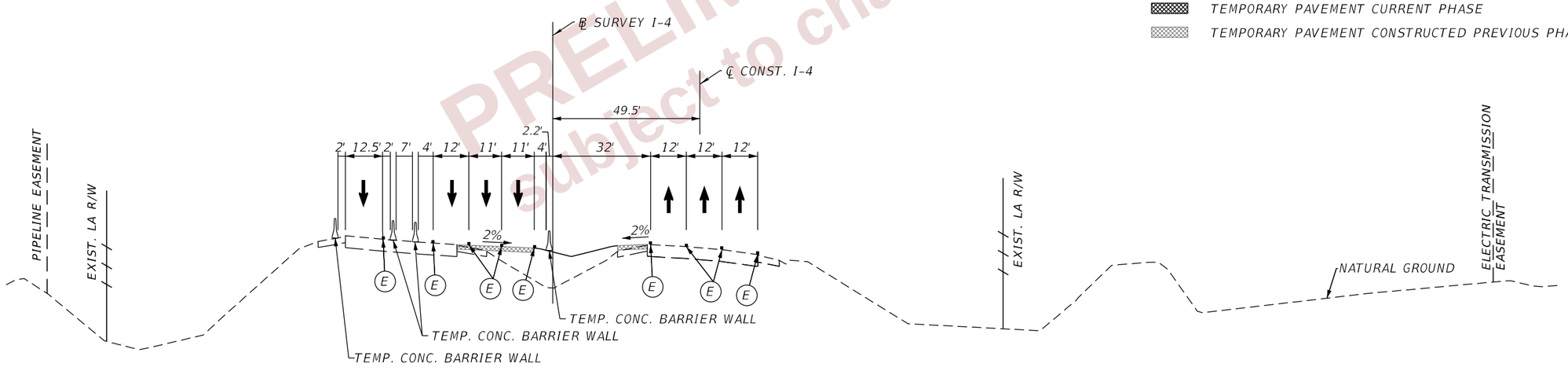

CRITICAL SECTION - PHASE 3, STAGE 3

℄ CONST. I-4
STA. 3065+00

PRELIMINARY
subject to changes

REVISIONS				ENGINEER OF RECORD	STATE OF FLORIDA DEPARTMENT OF TRANSPORTATION			TTC PLAN (131) CRITICAL SECTIONS	SHEET NO.
DATE	DESCRIPTION	DATE	DESCRIPTION	RYAN J. WILLIAMSON, P.E. LICENSE NUMBER 81421 BURGESS & NIPLE, INC. 1800 PEMBROOK DRIVE, SUITE 265 ORLANDO, FL 32810	ROAD NO.	COUNTY	FINANCIAL PROJECT ID		635
					SR 400	POLK	430185-3-52-01		

THE OFFICIAL RECORD OF THIS SHEET IS THE ELECTRONIC FILE DIGITALLY SIGNED AND SEALED UNDER RULE 61G15-23.004, F.A.C.

2/28/2024 7:18:23 PM dayl
P:\ORD_FDOT\WorkSets\FDOT\430185352O1-I-4\Roadway\TCP\TCTYRD01.dgn

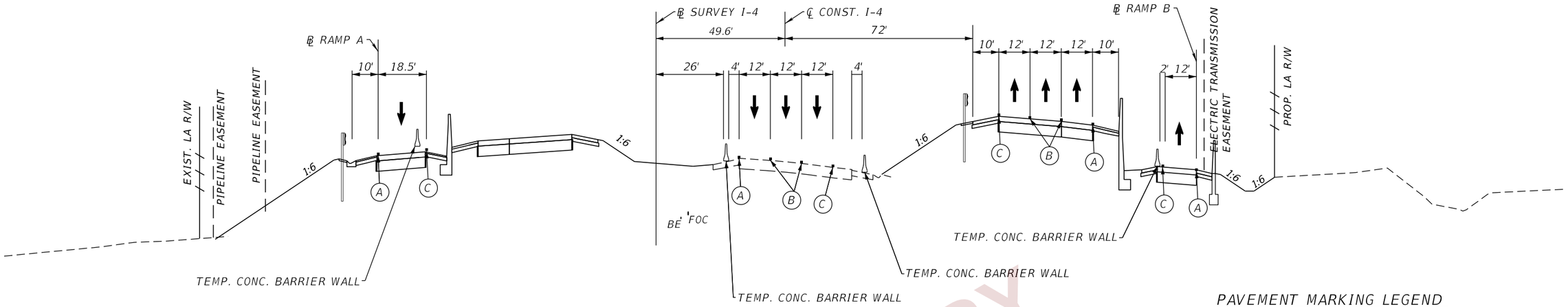

CRITICAL SECTION - PHASE 3, STAGE 3

℄ CONST. I-4
STA. 3103+00

PAVEMENT MARKING LEGEND

- (A) 6" SOLID WHITE TEMPORARY PAVEMENT MARKING
- (B) 6" SKIP WHITE TEMPORARY PAVEMENT MARKING (10'-30')
- (C) 6" SOLID YELLOW TEMPORARY PAVEMENT MARKING
- (D) 6" SKIP YELLOW TEMPORARY PAVEMENT MARKING (10'-30')
- (E) TEMPORARY PAVEMENT MARKINGS PREVIOUSLY APPLIED
- (F) 6" SOLID DOUBLE YELLOW TEMPORARY MARKING
- TEMPORARY PAVEMENT CURRENT PHASE
- TEMPORARY PAVEMENT CONSTRUCTED PREVIOUS PHASE

PRELIMINARY
subject to changes

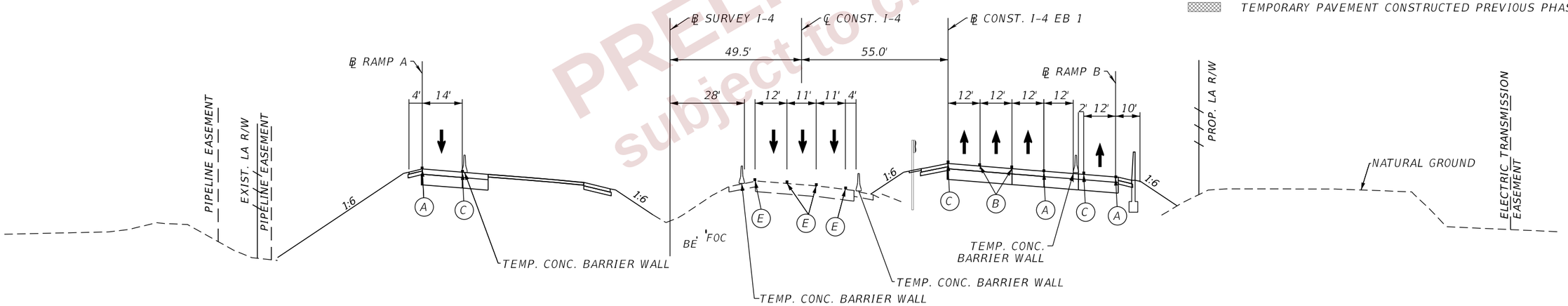

CRITICAL SECTION - PHASE 3, STAGE 3

℄ CONST. I-4
STA. 3093+00

REVISIONS				ENGINEER OF RECORD	STATE OF FLORIDA DEPARTMENT OF TRANSPORTATION			TTC PLAN (132) CRITICAL SECTIONS	SHEET NO.
DATE	DESCRIPTION	DATE	DESCRIPTION	RYAN J. WILLIAMSON, P.E. LICENSE NUMBER 81421 BURGESS & NIPLE, INC. 1800 PEMBROOK DRIVE, SUITE 265 ORLANDO, FL 32810	ROAD NO.	COUNTY	FINANCIAL PROJECT ID		636
					SR 400	POLK	430185-3-52-01		

THE OFFICIAL RECORD OF THIS SHEET IS THE ELECTRONIC FILE DIGITALLY SIGNED AND SEALED UNDER RULE 61G15-23.004, F.A.C.

2/28/2024 7:18:24 PM dayl
P:\ORD_FDOT\WorkSets\FDOT\430185352O1-I-4\Roadway\TCP\TCTYRD01.dgn

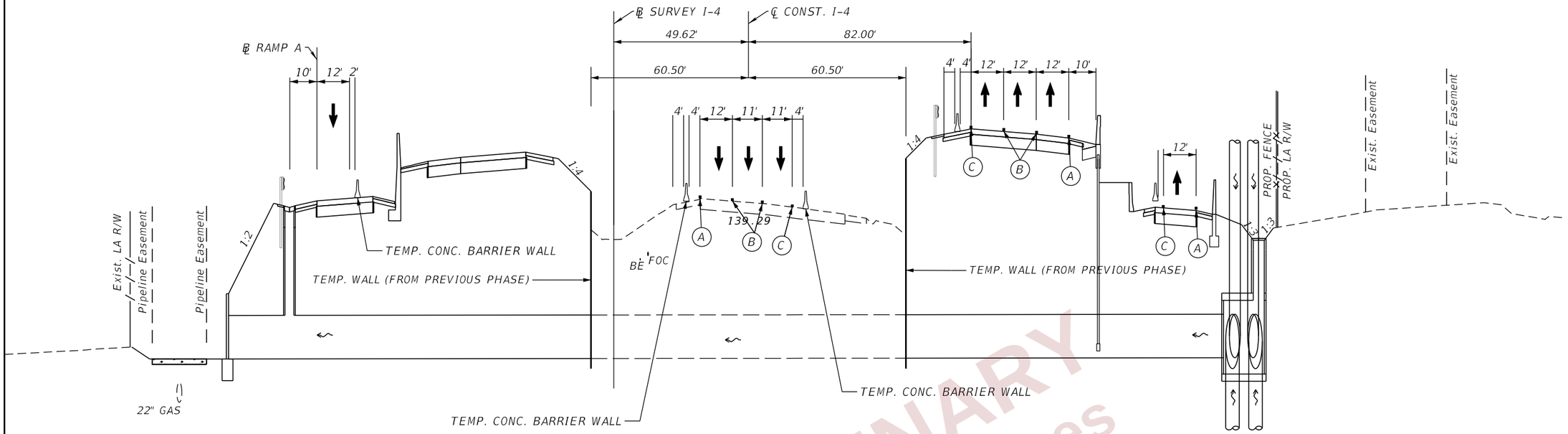

PRELIMINARY
subject to changes

CRITICAL SECTION - PHASE 3, STAGE 3

℄ CONST. I-4
STA. 3104+45.00 (BOX CULVERT)

PAVEMENT MARKING LEGEND

- (A) 6" SOLID WHITE TEMPORARY PAVEMENT MARKING
- (B) 6" SKIP WHITE TEMPORARY PAVEMENT MARKING (10'-30')
- (C) 6" SOLID YELLOW TEMPORARY PAVEMENT MARKING
- (D) 6" SKIP YELLOW TEMPORARY PAVEMENT MARKING (10'-30')
- (E) TEMPORARY PAVEMENT MARKINGS PREVIOUSLY APPLIED
- (F) 6" SOLID DOUBLE YELLOW TEMPORARY MARKING
- TEMPORARY PAVEMENT CURRENT PHASE
- TEMPORARY PAVEMENT CONSTRUCTED PREVIOUS PHASE
- * TEMPORARY OVERBUILD EXIST. SHLDR. (MATCH ADJACENT TRAVEL LANE CROSS SLOPE)

REVISIONS				ENGINEER OF RECORD	STATE OF FLORIDA DEPARTMENT OF TRANSPORTATION			TTC PLAN (133) CRITICAL SECTIONS	SHEET NO.
DATE	DESCRIPTION	DATE	DESCRIPTION	RYAN J. WILLIAMSON, P.E. LICENSE NUMBER 81421 BURGESS & NIPLE, INC. 1800 PEMBROOK DRIVE, SUITE 265 ORLANDO, FL 32810	ROAD NO.	COUNTY	FINANCIAL PROJECT ID		
					SR 400	POLK	430185-3-52-01		637

THE OFFICIAL RECORD OF THIS SHEET IS THE ELECTRONIC FILE DIGITALLY SIGNED AND SEALED UNDER RULE 61G15-23.004, F.A.C.

2/28/2024 7:18:25 PM day
P:\ORD_FDOT\WorkSets\FDOT\430185352O1-I-4\Roadway\TCP\TCTYRD01.dgn

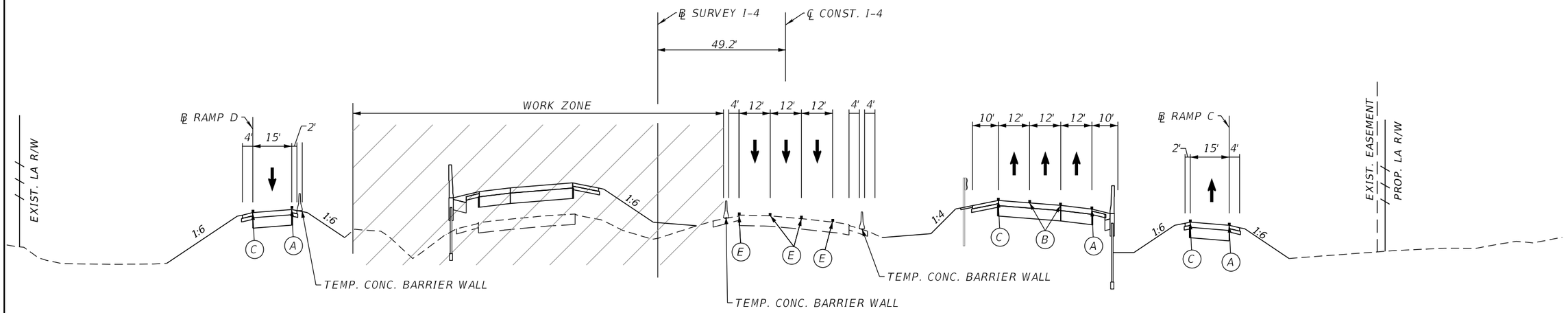

CRITICAL SECTION - PHASE 3, STAGE 3

℄ CONST. I-4
STA. 3138+00

PAVEMENT MARKING LEGEND

- (A) 6" SOLID WHITE TEMPORARY PAVEMENT MARKING
- (B) 6" SKIP WHITE TEMPORARY PAVEMENT MARKING (10'-30')
- (C) 6" SOLID YELLOW TEMPORARY PAVEMENT MARKING
- (D) 6" SKIP YELLOW TEMPORARY PAVEMENT MARKING (10'-30')
- (E) TEMPORARY PAVEMENT MARKINGS PREVIOUSLY APPLIED
- (F) 6" SOLID DOUBLE YELLOW TEMPORARY MARKING
- TEMPORARY PAVEMENT CURRENT PHASE
- TEMPORARY PAVEMENT CONSTRUCTED PREVIOUS PHASE

PRELIMINARY
subject to changes

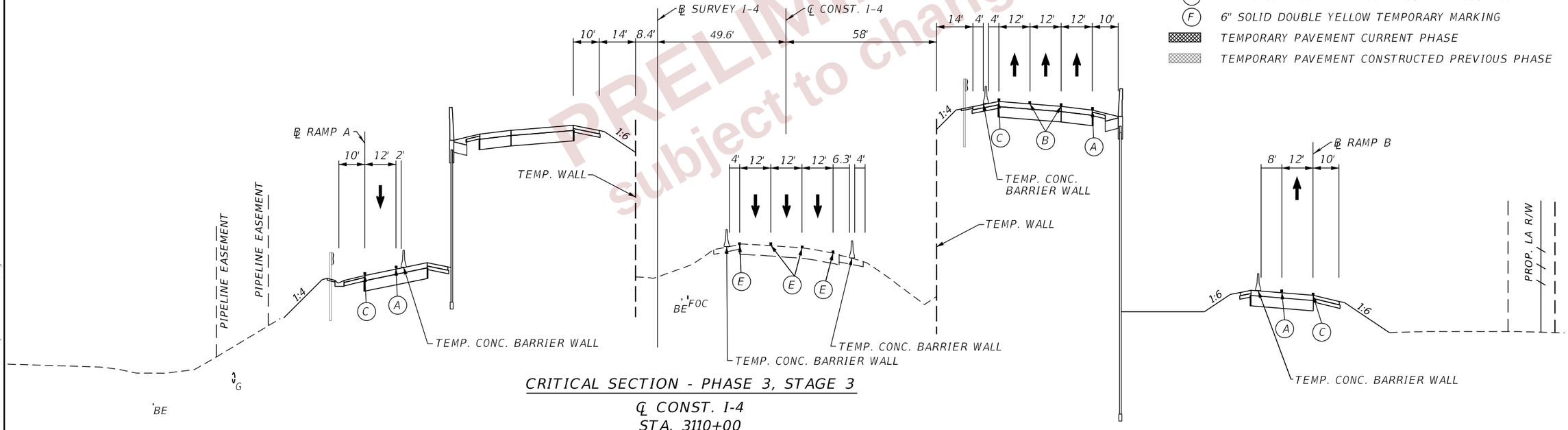

CRITICAL SECTION - PHASE 3, STAGE 3

℄ CONST. I-4
STA. 3110+00

REVISIONS				ENGINEER OF RECORD	STATE OF FLORIDA DEPARTMENT OF TRANSPORTATION			TTC PLAN (134) CRITICAL SECTIONS	SHEET NO.
DATE	DESCRIPTION	DATE	DESCRIPTION	RYAN J. WILLIAMSON, P.E. LICENSE NUMBER 81421 BURGESS & NIPLE, INC. 1800 PEMBROOK DRIVE, SUITE 265 ORLANDO, FL 32810	ROAD NO.	COUNTY	FINANCIAL PROJECT ID		638
					SR 400	POLK	430185-3-52-01		

THE OFFICIAL RECORD OF THIS SHEET IS THE ELECTRONIC FILE DIGITALLY SIGNED AND SEALED UNDER RULE 61G15-23.004, F.A.C.

2/28/2024 7:18:25 PM day
P:\ORD_FDOT\WorkSet\FDOT\430185352O1-I-4\Roadway\TCP\TCTYRD01.dgn

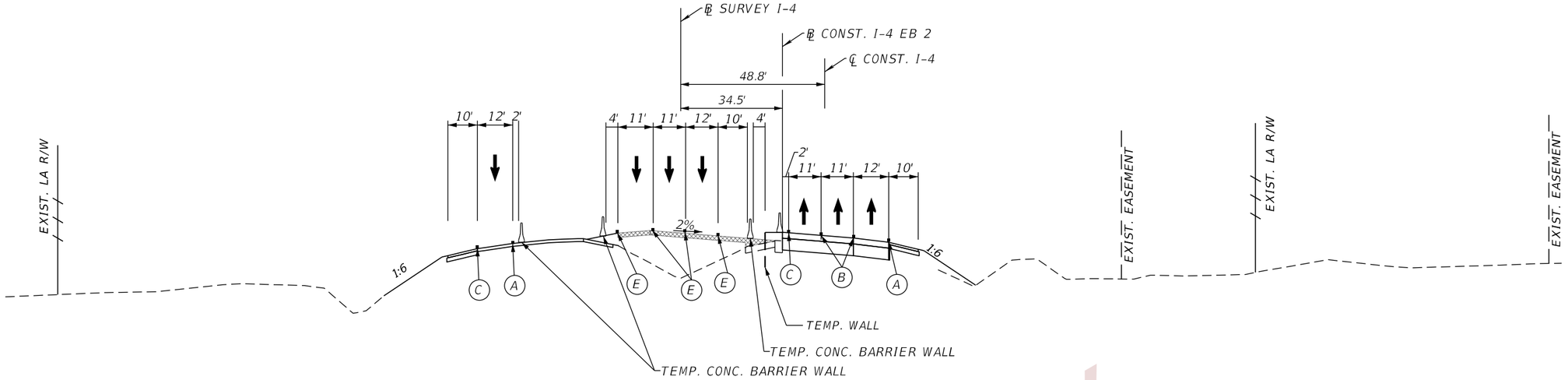

CRITICAL SECTION - PHASE 3, STAGE 3

℄ CONST. I-4
STA. 3172+00

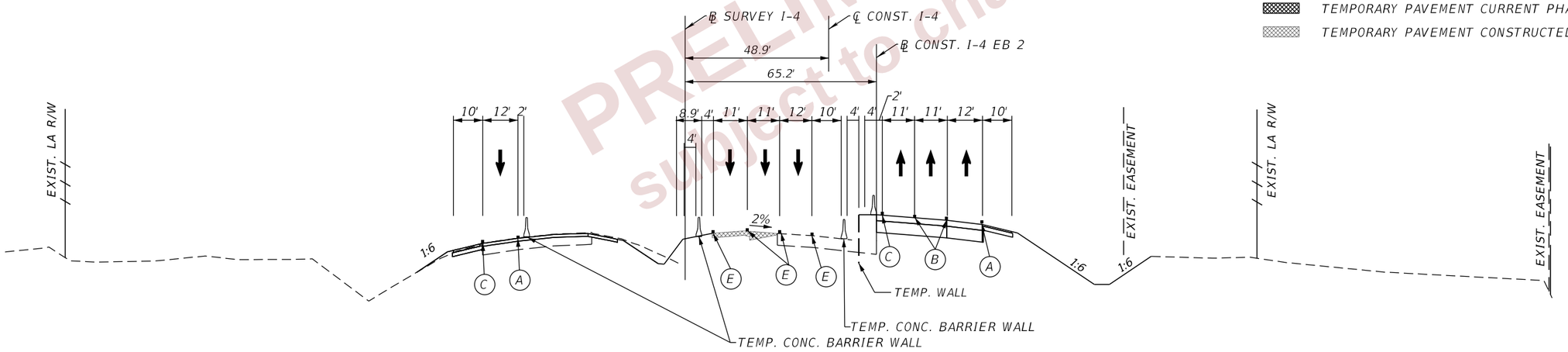

CRITICAL SECTION - PHASE 3, STAGE 3

℄ CONST. I-4
STA. 3163+00

PAVEMENT MARKING LEGEND

- (A) 6" SOLID WHITE TEMPORARY PAVEMENT MARKING
- (B) 6" SKIP WHITE TEMPORARY PAVEMENT MARKING (10'-30')
- (C) 6" SOLID YELLOW TEMPORARY PAVEMENT MARKING
- (D) 6" SKIP YELLOW TEMPORARY PAVEMENT MARKING (10'-30')
- (E) TEMPORARY PAVEMENT MARKINGS PREVIOUSLY APPLIED
- (F) 6" SOLID DOUBLE YELLOW TEMPORARY MARKING
- TEMPORARY PAVEMENT CURRENT PHASE
- TEMPORARY PAVEMENT CONSTRUCTED PREVIOUS PHASE

PRELIMINARY
subject to changes

REVISIONS				ENGINEER OF RECORD	STATE OF FLORIDA DEPARTMENT OF TRANSPORTATION			TTC PLAN (135) CRITICAL SECTIONS	SHEET NO.
DATE	DESCRIPTION	DATE	DESCRIPTION	RYAN J. WILLIAMSON, P.E. LICENSE NUMBER 81421 BURGESS & NIPLE, INC. 1800 PEMBROOK DRIVE, SUITE 265 ORLANDO, FL 32810	ROAD NO.	COUNTY	FINANCIAL PROJECT ID		639
					SR 400	POLK	430185-3-52-01		

THE OFFICIAL RECORD OF THIS SHEET IS THE ELECTRONIC FILE DIGITALLY SIGNED AND SEALED UNDER RULE 61G15-23.004, F.A.C.

2/28/2024 7:18:26 PM dayl
P:\ORD_FDOT\WorkSets\FDOT\430185352O1-I-4\Roadway\TCP\TCTYRD01.dgn

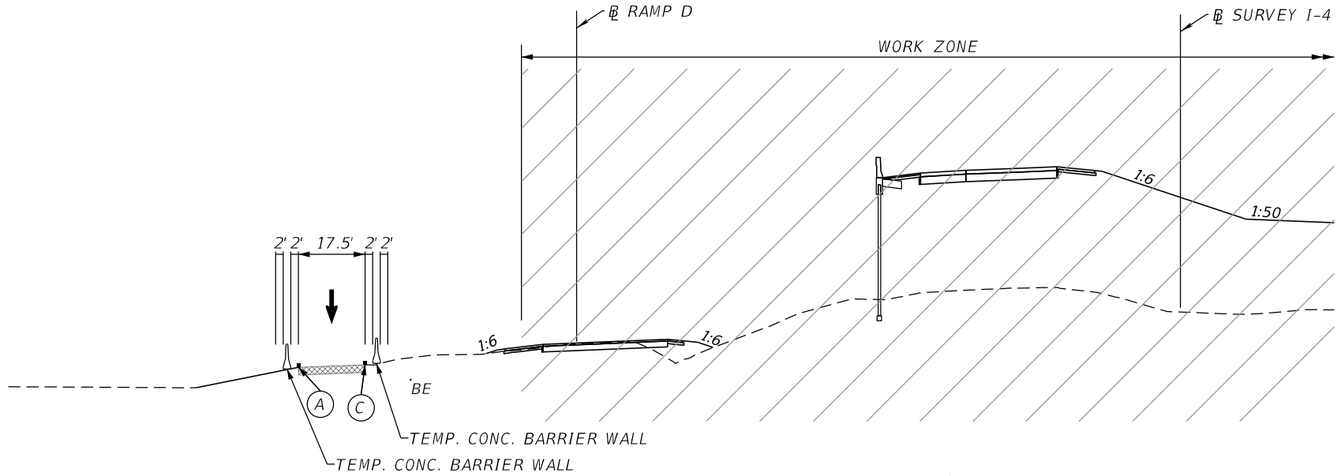

CRITICAL SECTION - PHASE 3, STAGE 3

℄ RAMP D
STA. 404+00

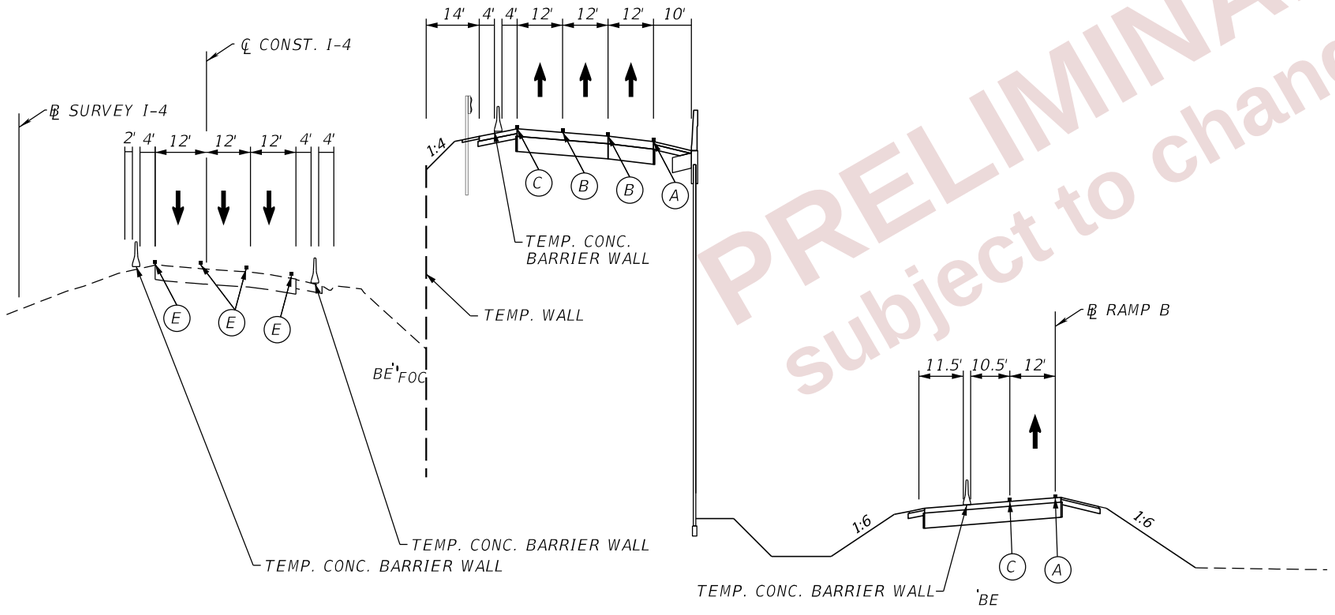

CRITICAL SECTION - PHASE 3, STAGE 3

℄ RAMP B
STA. 225+00

PAVEMENT MARKING LEGEND

- (A) 6" SOLID WHITE TEMPORARY PAVEMENT MARKING
- (B) 6" SKIP WHITE TEMPORARY PAVEMENT MARKING (10'-30')
- (C) 6" SOLID YELLOW TEMPORARY PAVEMENT MARKING
- (D) 6" SKIP YELLOW TEMPORARY PAVEMENT MARKING (10'-30')
- (E) TEMPORARY PAVEMENT MARKINGS PREVIOUSLY APPLIED
- (F) 6" SOLID DOUBLE YELLOW TEMPORARY MARKING
- TEMPORARY PAVEMENT CURRENT PHASE
- TEMPORARY PAVEMENT CONSTRUCTED PREVIOUS PHASE

PRELIMINARY
subject to changes

THE OFFICIAL RECORD OF THIS SHEET IS THE ELECTRONIC FILE DIGITALLY SIGNED AND SEALED UNDER RULE 61G15-23.004, F.A.C.

2/28/2024 7:18:38 PM dayl
P:\ORD_FDOT\WorkSets\FDOT\430185352O1-I-4\Roadway\TCP\TCTYRD01.dgn

REVISIONS				ENGINEER OF RECORD	STATE OF FLORIDA DEPARTMENT OF TRANSPORTATION			TTC PLAN (136) CRITICAL SECTIONS	SHEET NO.
DATE	DESCRIPTION	DATE	DESCRIPTION	RYAN J. WILLIAMSON, P.E. LICENSE NUMBER 81421 BURGESS & NIPLE, INC. 1800 PEMBROOK DRIVE, SUITE 265 ORLANDO, FL 32810	ROAD NO.	COUNTY	FINANCIAL PROJECT ID		640
					SR 400	POLK	430185-3-52-01		

LEGEND

- TEMP PAVEMENT CURRENT PHASE
- TEMP PAVEMENT CONST. PREVIOUS PHASE
- PROP. PAVEMENT CONSTRUCTED CURRENT PHASE
- PROP. PAVEMENT CONSTRUCTED PREVIOUS PHASE
- DIRECTION OF TRAFFIC
- WORK ZONE
- CRASH CUSHION
- WORK ZONE SIGN
- (1) 6" WHITE
- (2) 6" YELLOW
- (4) 6" WHITE, 10'-30' SKIP

W04-01R

E11-01A
FTP-17-06
M6-02R

1"=300'

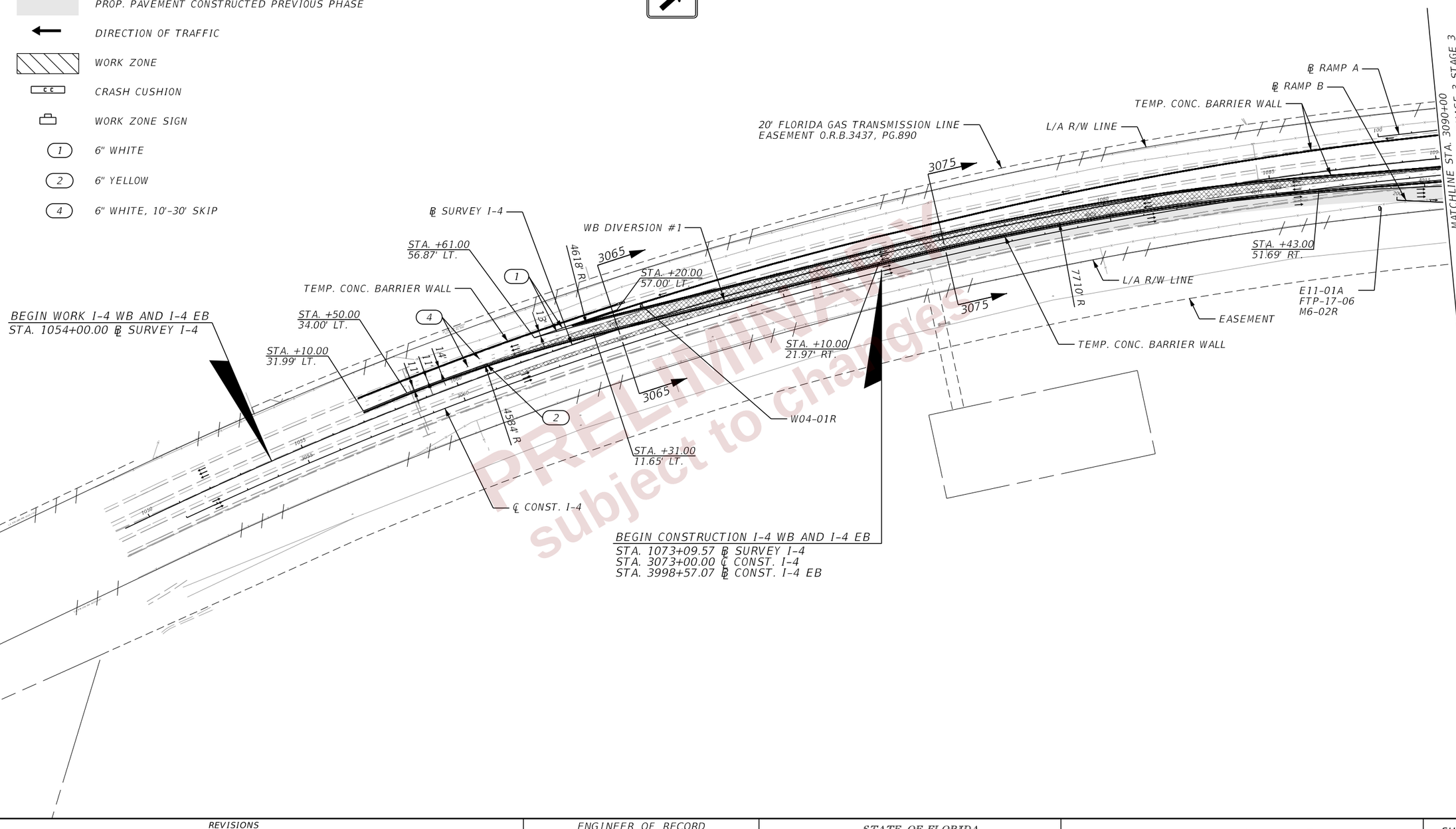

PRELIMINARY
subject to changes

THE OFFICIAL RECORD OF THIS SHEET IS THE ELECTRONIC FILE DIGITALLY SIGNED AND SEALED UNDER RULE 61G15-23.004, F.A.C.

2/28/2024 7:18:54 PM day
P:\ORD_FDOT\WorkSets\FDOT_430185352O1-I-4\Roadway\TCP\TCPLRDDP353_I4.dgn

REVISIONS				ENGINEER OF RECORD	STATE OF FLORIDA DEPARTMENT OF TRANSPORTATION			TTC PLAN (137) PHASE 3 STAGE 3 I-4	SHEET NO.
DATE	DESCRIPTION	DATE	DESCRIPTION	RYAN J. WILLIAMSON, P.E. LICENSE NUMBER 81421 BURGESS & NIPLE, INC. 1800 PEMBROOK DRIVE, SUITE 265 ORLANDO, FL 32810	ROAD NO.	COUNTY	FINANCIAL PROJECT ID		641
					SR 400	POLK	430185-3-52-01		

LEGEND

- TEMP PAVEMENT CURRENT PHASE
- TEMP PAVEMENT CONST. PREVIOUS PHASE
- PROP. PAVEMENT CONSTRUCTED CURRENT PHASE
- PROP. PAVEMENT CONSTRUCTED PREVIOUS PHASE
- DIRECTION OF TRAFFIC
- WORK ZONE
- CRASH CUSHION
- WORK ZONE SIGN

- (1) 6" WHITE
- (2) 6" YELLOW
- (4) 6" WHITE, 10'-30' SKIP
- (8) 8" WHITE

W01-04CL W13-02 EXIT 25 MPH R01-02

M03-01 FTP-17-06 M06-02L NORTH 33

M03-03 FTP-17-06 M06-02R SOUTH 33

W04-02R

1"=300'

TEMP. CONC. BARRIER WALL
℄ CONST. TOMKOW
R/W LINE
SOUTH NORTH 33 33
TEMP. CONC. BARRIER WALL
L/A R/W LINE
STA. +62.00 167.48' RT.
STA. +05.00 131.46' RT
R01-02
TEMP. CONC. BARRIER WALL
L/A R/W LINE
STA. +85.00 24.14' RT.
404
℄ RAMP D
TEMP. CONC. BARRIER WALL
20' FLORIDA GAS TRANSMISSION LINE EASEMENT O.R.B.3437, PG.890
L/A R/W LINE
R/W LINE
TEMP. CONC. BARRIER WALL
STORMWATER MANAGEMENT FACILITY
℄ CONST. I-4
W01-04CL
3104+45
3103
3110
℄ RAMP A
℄ SURVEY I-4
3093
MATCHLINE STA. 3090+00
TEMP. TRAF. CONTROL PLAN, PHASE 3 STAGE 3
STA. +57.00 68.00' RT.
STA. +77.00 15.00' LT.
STA. +45.00 99.34' RT.
STA. +13.00 15.00' LT.
STA. +89.00 15.00' LT.
EASEMENT
℄ RAMP B
WB DIVERSION #1
W13-02
TEMP. CONC. BARRIER WALL
STA. +56.00 121.99' RT.
STA. +50.00 3.00' LT.
L/A R/W LINE
225+00
EASEMENT
EASEMENT
NORTH 33 SOUTH 33
STORMWATER MANAGEMENT FACILITY
L/A R/W LINE
R/W LINE
TEMP. CONC. BARRIER WALL
℄ SURVEY SR 33
L/A R/W LINE
R/W LINE
TEMP. CONC. BARRIER WALL
TEMP. WALL
℄ RAMP C
STA. +74.00 167.32' RT.
L/A R/W LINE
EASEMENT
STA. +58.00 131.44' RT.
STA. +39.00 167.44' RT.
W04-02R
TEMP. CONC. BARRIER WALL
MATCHLINE STA. 3133+00
TEMP. TRAF. CONTROL PLAN, PHASE 3 STAGE 3

NOTE:
1. SEE PLAN PHASE 3 STAGE 3 SR 33 FOR ALL TEMPORARY SIGNS, TEMPORARY PAVEMENT MARKINGS, AND TEMPORARY BARRIER WALLS ALONG ℄ SR 33 ON THIS SHEET.

PRELIMINARY Subject to change

REVISIONS				ENGINEER OF RECORD	STATE OF FLORIDA DEPARTMENT OF TRANSPORTATION			TTC PLAN (138) PHASE 3 STAGE 3 I-4	SHEET NO.
DATE	DESCRIPTION	DATE	DESCRIPTION	RYAN J. WILLIAMSON, P.E. LICENSE NUMBER 81421 BURGESS & NIPLE, INC. 1800 PEMBROOK DRIVE, SUITE 265 ORLANDO, FL 32810	ROAD NO.	COUNTY	FINANCIAL PROJECT ID		642
					SR 400	POLK	430185-3-52-01		

THE OFFICIAL RECORD OF THIS SHEET IS THE ELECTRONIC FILE DIGITALLY SIGNED AND SEALED UNDER RULE 61G15-23.004, F.A.C.

2/28/2024 7:19:00 PM day
P:\ORD_FDOT\WorkSets\FDOT_430185352O1-I-4\Roadway\TCP\TCPLRDDP353_14.dgn

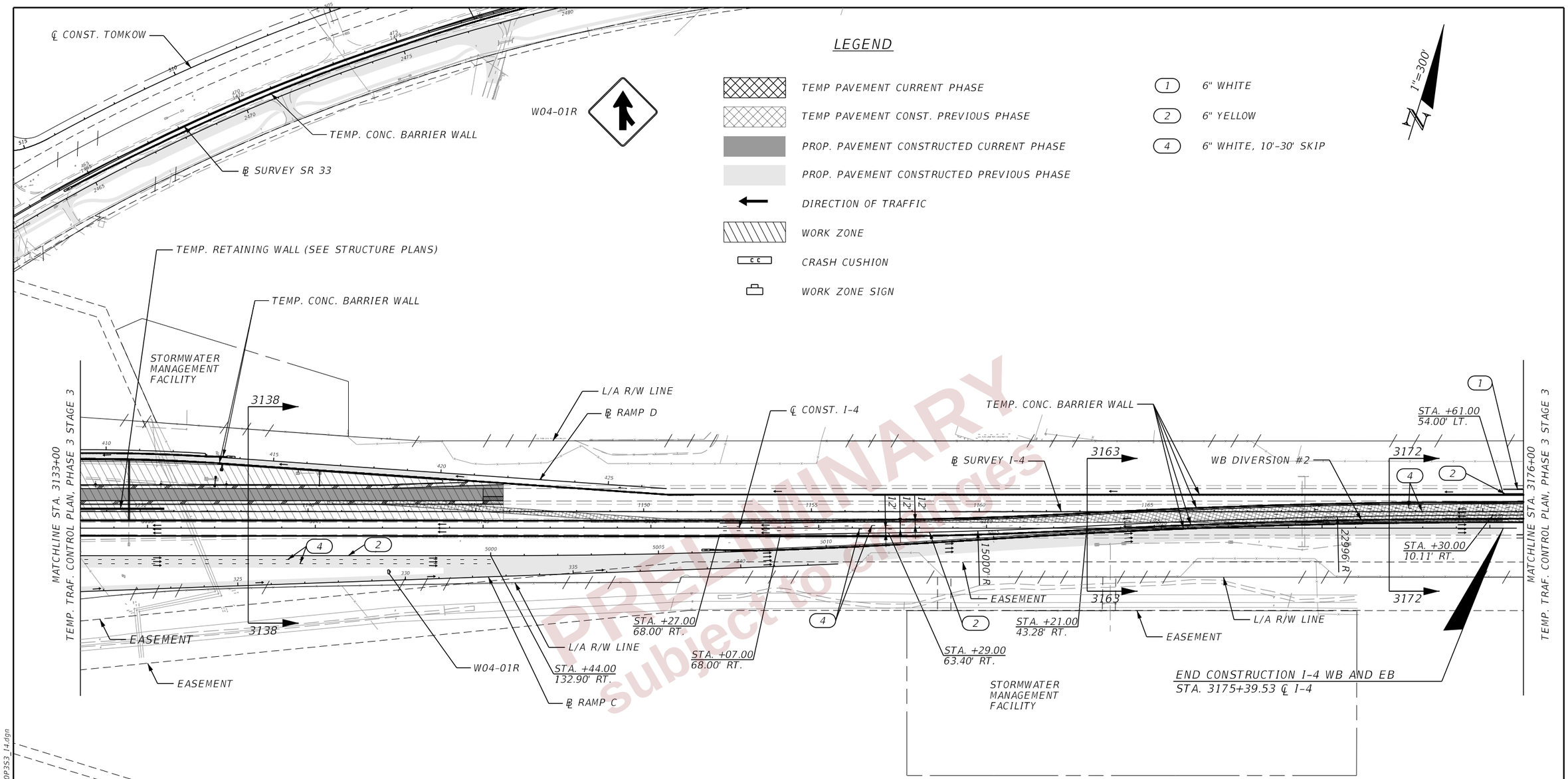

NOTE:
1. SEE PLAN PHASE 3 STAGE 3 SR 33 FOR ALL TEMPORARY SIGNS, TEMPORARY PAVEMENT MARKINGS, AND TEMPORARY BARRIER WALLS ALONG ℄ SR 33 ON THIS SHEET.

THE OFFICIAL RECORD OF THIS SHEET IS THE ELECTRONIC FILE DIGITALLY SIGNED AND SEALED UNDER RULE 61G15-23.004, F.A.C.

2/28/2024 7:19:14 PM day
P:\ORD_FDOT\WorkSets\FDOT\43018535201-I-4\Roadway\TCP\TCPLRD0P3S3_14.dgn

REVISIONS			
DATE	DESCRIPTION	DATE	DESCRIPTION

ENGINEER OF RECORD
RYAN J. WILLIAMSON, P.E.
LICENSE NUMBER 81421
BURGESS & NIPLE, INC.
1800 PEMBROOK DRIVE, SUITE 265
ORLANDO, FL 32810

STATE OF FLORIDA
DEPARTMENT OF TRANSPORTATION

ROAD NO.	COUNTY	FINANCIAL PROJECT ID
SR 400	POLK	430185-3-52-01

TTC PLAN (139)
PHASE 3 STAGE 3
I-4

SHEET NO.
643

LEGEND

- TEMP PAVEMENT CURRENT PHASE
- TEMP PAVEMENT CONST. PREVIOUS PHASE
- PROP. PAVEMENT CONSTRUCTED CURRENT PHASE
- PROP. PAVEMENT CONSTRUCTED PREVIOUS PHASE
- DIRECTION OF TRAFFIC
- WORK ZONE
- CRASH CUSHION
- WORK ZONE SIGN

- (1) 6" WHITE
- (2) 6" YELLOW
- (4) 6" WHITE, 10'-30' SKIP

W13-02

E11-01A
FTP-17-06
M6-02R

W01-04CL

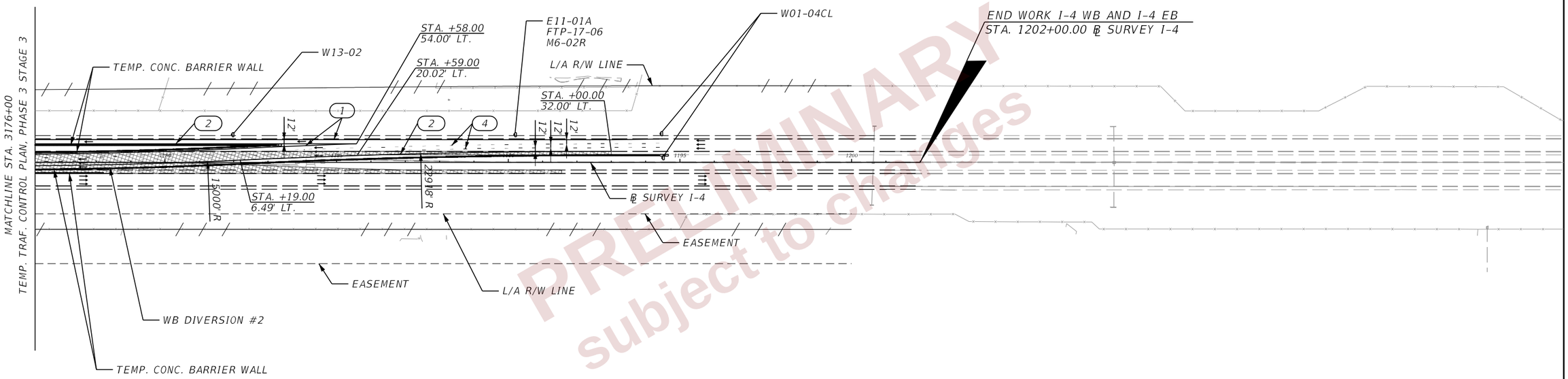

PRELIMINARY
subject to changes

THE OFFICIAL RECORD OF THIS SHEET IS THE ELECTRONIC FILE DIGITALLY SIGNED AND SEALED UNDER RULE 61G15-23.004, F.A.C.

2/28/2024 7:19:24 PM day
P:\ORD_FDOT\WorkSets\FDOT_430185352O1-I-4\Roadway\TCP\TCPLRD0P353_I4.dgn

REVISIONS				ENGINEER OF RECORD	STATE OF FLORIDA DEPARTMENT OF TRANSPORTATION			TTC PLAN (140) PHASE 3 STAGE 3 I-4	SHEET NO.
DATE	DESCRIPTION	DATE	DESCRIPTION	RYAN J. WILLIAMSON, P.E. LICENSE NUMBER 81421 BURGESS & NIPLE, INC. 1800 PEMBROOK DRIVE, SUITE 265 ORLANDO, FL 32810	ROAD NO.	COUNTY	FINANCIAL PROJECT ID		644
					SR 400	POLK	430185-3-52-01		

M03-02
M01-01
M06-01L

R01-02

R06-01L
R01-01

W04-02R

1"=100'

M03-01
FTP-17-06
M06-02L

M03-03
FTP-17-06
M06-02L

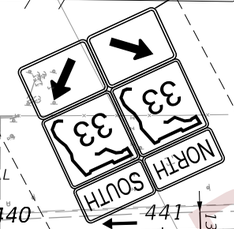

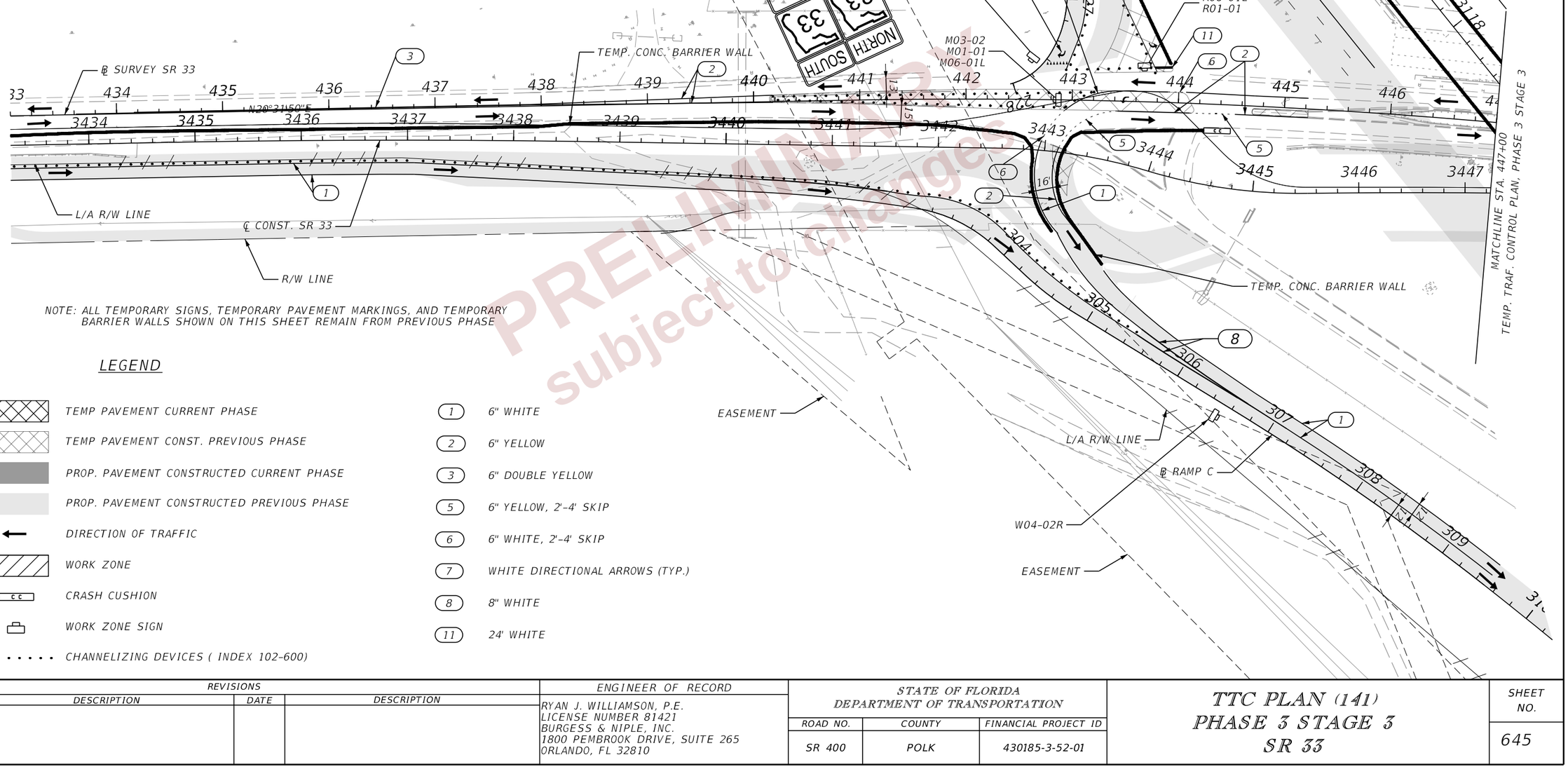

NOTE: ALL TEMPORARY SIGNS, TEMPORARY PAVEMENT MARKINGS, AND TEMPORARY BARRIER WALLS SHOWN ON THIS SHEET REMAIN FROM PREVIOUS PHASE

LEGEND

	TEMP PAVEMENT CURRENT PHASE
	TEMP PAVEMENT CONST. PREVIOUS PHASE
	PROP. PAVEMENT CONSTRUCTED CURRENT PHASE
	PROP. PAVEMENT CONSTRUCTED PREVIOUS PHASE
←	DIRECTION OF TRAFFIC
	WORK ZONE
CC	CRASH CUSHION
	WORK ZONE SIGN
• • • • • • • •	CHANNELIZING DEVICES (INDEX 102-600)

1	6" WHITE
2	6" YELLOW
3	6" DOUBLE YELLOW
5	6" YELLOW, 2'-4' SKIP
6	6" WHITE, 2'-4' SKIP
7	WHITE DIRECTIONAL ARROWS (TYP.)
8	8" WHITE
11	24' WHITE

PRELIMINARY
subject to changes

REVISIONS			
DATE	DESCRIPTION	DATE	DESCRIPTION

ENGINEER OF RECORD

RYAN J. WILLIAMSON, P.E.
LICENSE NUMBER 81421
BURGESS & NIPLE, INC.
1800 PEMBROOK DRIVE, SUITE 265
ORLANDO, FL 32810

STATE OF FLORIDA
DEPARTMENT OF TRANSPORTATION

ROAD NO.	COUNTY	FINANCIAL PROJECT ID
SR 400	POLK	430185-3-52-01

TTC PLAN (141)
PHASE 3 STAGE 3
SR 33

SHEET NO. 645

THE OFFICIAL RECORD OF THIS SHEET IS THE ELECTRONIC FILE DIGITALLY SIGNED AND SEALED UNDER RULE 61G15-23.004, F.A.C.

2/28/2024 7:19:41 PM day
P:\ORD_FDOT\WorkSets\FDOT\430185352O1-I-4\Roadway\TCP\TCPLRD0P352_33.dgn

R01-01 STOP M03-04 M01-01 M06-02L

WEST INTERSTATE 4 M03-04 M01-01 M06-02L

WEST INTERSTATE 4

LEGEND

- 1 — 6" WHITE
- 2 — 6" YELLOW
- 11 — 24" WHITE
- TEMP PAVEMENT CURRENT PHASE
- TEMP PAVEMENT CONST. PREVIOUS PHASE
- PROP. PAVEMENT CONSTRUCTED CURRENT PHASE
- PROP. PAVEMENT CONSTRUCTED PREVIOUS PHASE
- SHARED USE PATH CONSTRUCTED CURRENT PHASE
- DIRECTION OF TRAFFIC
- WORK ZONE
- CRASH CUSHION
- WORK ZONE SIGN

1"=100'

MATCHLINE STA. 447+00
TEMP. TRAF. CONTROL PLAN, PHASE 3 STAGE 3

TEMP. CONC. BARRIER WALL
STA. +88.00 20.63' RT.
℄ RAMP A
STA. +28.00 21.20' RT.
STA. +03.00 10.00' LT.
STA. +81.00 10.10' LT.
STA. +55.00 7.92' RT.
R01-02
TEMP. CONC. BARRIER WALL
STA. +71.00 21.82' RT.
60' R
STA. +16.00 25.27' LT.
STA. +96.00 26.67' RT.
M03-04 M01-01 M06-02R
EASEMENT
L/A R/W LINE
72' R
SPECIAL DETOUR 8
℄ SURVEY SR 33
TEMP. CONC. BARRIER WALL
60' R
STA. +79.00 100.14' RT.
R01-01
℄ CONST. SR 33
STA. +79.00 57.78' RT.
STA. +41.00 167.24' LT.
L/A R/W LINE
NORTH 33 SOUTH 33
587' R
℄ RAMP D
TEMP. CONC. BARRIER WALL
M03-01 FTP-17-06 M06-02L
NORTH 33
M03-03 FTP-17-06 M06-02R
SOUTH 33
R01-02 YIELD
STA. +75.00 1.96' RT.
TEMP. CONC. BARRIER WALL
℄ SURVEY I-4
℄ RAMP C
℄ CONST. I-4

PRELIMINARY Subject to change

REVISIONS				ENGINEER OF RECORD	STATE OF FLORIDA DEPARTMENT OF TRANSPORTATION			TTC PLAN (142) PHASE 3 STAGE 3 SR 33	SHEET NO.
DATE	DESCRIPTION	DATE	DESCRIPTION	RYAN J. WILLIAMSON, P.E. LICENSE NUMBER 81421 BURGESS & NIPLE, INC. 1800 PEMBROOK DRIVE, SUITE 265 ORLANDO, FL 32810	ROAD NO.	COUNTY	FINANCIAL PROJECT ID		646
					SR 400	POLK	430185-3-52-01		

2/28/2024 7:19:47 PM day
P:\ORD_FDOT\WorkSets\FDOT\430185352O1-I-4\Roadway\TCP\TCPLR00P352_33.dgn

THE OFFICIAL RECORD OF THIS SHEET IS THE ELECTRONIC FILE DIGITALLY SIGNED AND SEALED UNDER RULE 61G15-23.004, F.A.C.

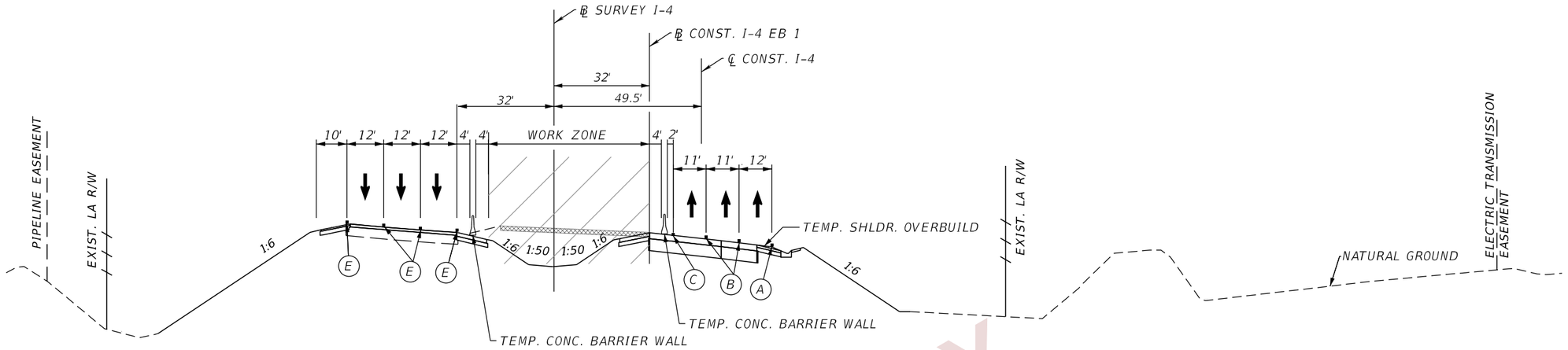

CRITICAL SECTION - PHASE 4, STAGE 1

℄ CONST. I-4
STA. 3075+00

PAVEMENT MARKING LEGEND

- (A) 6" SOLID WHITE TEMPORARY PAVEMENT MARKING
- (B) 6" SKIP WHITE TEMPORARY PAVEMENT MARKING (10'-30')
- (C) 6" SOLID YELLOW TEMPORARY PAVEMENT MARKING
- (D) 6" SKIP YELLOW TEMPORARY PAVEMENT MARKING (10'-30')
- (E) TEMPORARY PAVEMENT MARKINGS PREVIOUSLY APPLIED
- (F) 6" SOLID DOUBLE YELLOW TEMPORARY MARKING
- TEMPORARY PAVEMENT CURRENT PHASE
- TEMPORARY PAVEMENT CONSTRUCTED PREVIOUS PHASE

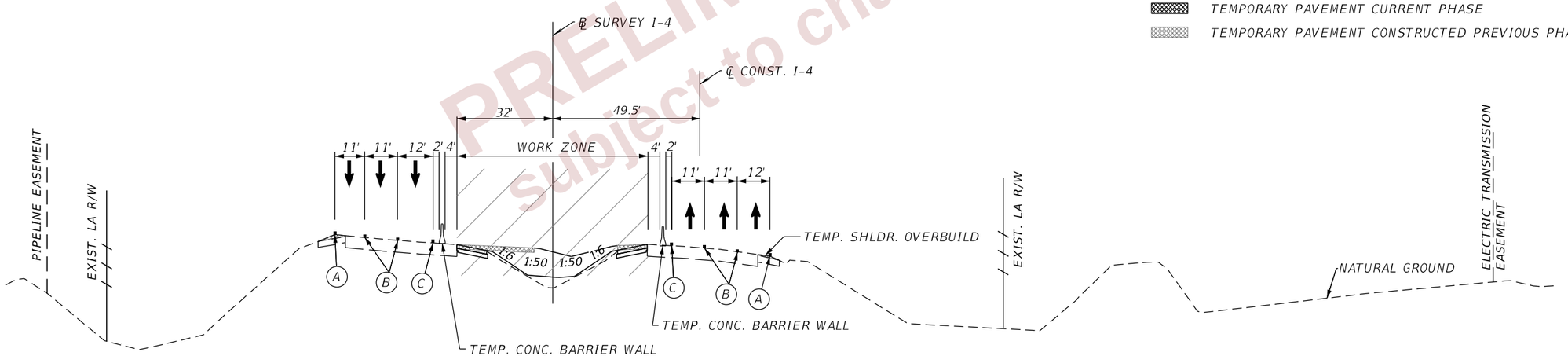

CRITICAL SECTION - PHASE 4, STAGE 1

℄ CONST. I-4
STA. 3065+00

PRELIMINARY subject to changes

REVISIONS				ENGINEER OF RECORD	STATE OF FLORIDA DEPARTMENT OF TRANSPORTATION			TTC PLAN (143) CRITICAL SECTIONS	SHEET NO.
DATE	DESCRIPTION	DATE	DESCRIPTION	RYAN J. WILLIAMSON, P.E. LICENSE NUMBER 81421 BURGESS & NIPLE, INC. 1800 PEMBROOK DRIVE, SUITE 265 ORLANDO, FL 32810	ROAD NO.	COUNTY	FINANCIAL PROJECT ID		647
					SR 400	POLK	430185-3-52-01		

THE OFFICIAL RECORD OF THIS SHEET IS THE ELECTRONIC FILE DIGITALLY SIGNED AND SEALED UNDER RULE 61G15-23.004, F.A.C.

2/28/2024 7:20:03 PM dayP:\ORD_FDOT\WorkSets\FDOT\430185352O1-I-4\Roadway\TCP\TCTYRD01.dgn

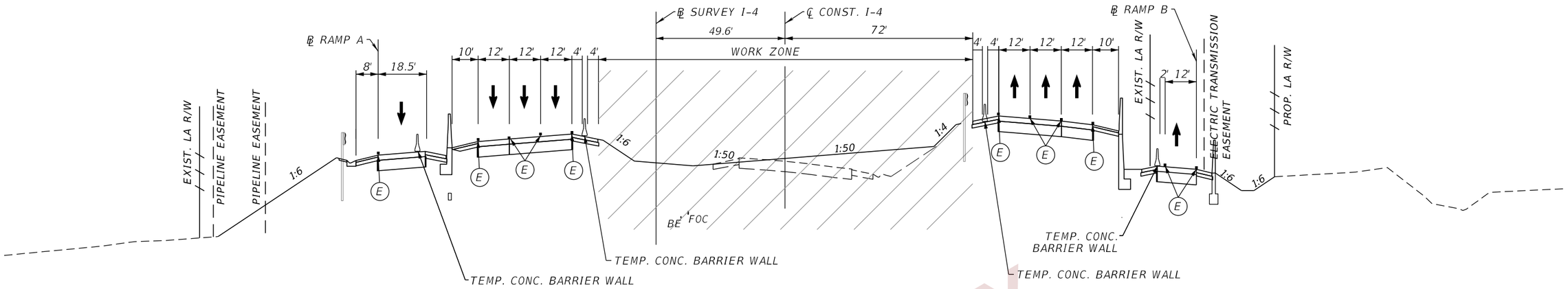

CRITICAL SECTION - PHASE 4, STAGE 1

℄ CONST. I-4
STA. 3103+00

PAVEMENT MARKING LEGEND

- (A) 6" SOLID WHITE TEMPORARY PAVEMENT MARKING
- (B) 6" SKIP WHITE TEMPORARY PAVEMENT MARKING (10'-30')
- (C) 6" SOLID YELLOW TEMPORARY PAVEMENT MARKING
- (D) 6" SKIP YELLOW TEMPORARY PAVEMENT MARKING (10'-30')
- (E) TEMPORARY PAVEMENT MARKINGS PREVIOUSLY APPLIED
- (F) 6" SOLID DOUBLE YELLOW TEMPORARY MARKING
- TEMPORARY PAVEMENT CURRENT PHASE
- TEMPORARY PAVEMENT CONSTRUCTED PREVIOUS PHASE

PRELIMINARY
subject to changes

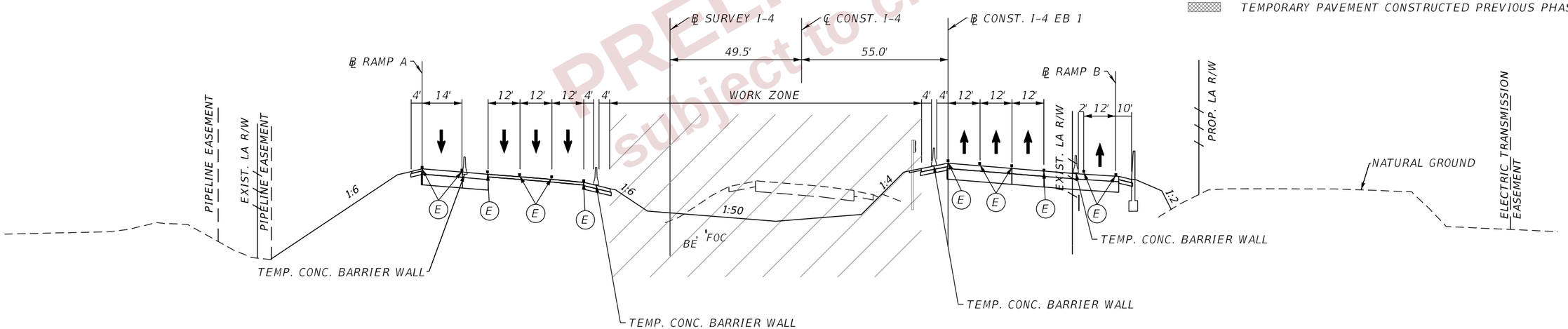

CRITICAL SECTION - PHASE 4, STAGE 1

℄ CONST. I-4
STA. 3093+00

REVISIONS				ENGINEER OF RECORD	STATE OF FLORIDA DEPARTMENT OF TRANSPORTATION			TTC PLAN (144) CRITICAL SECTIONS	SHEET NO.
DATE	DESCRIPTION	DATE	DESCRIPTION	RYAN J. WILLIAMSON, P.E. LICENSE NUMBER 81421 BURGESS & NIPLE, INC. 1800 PEMBROOK DRIVE, SUITE 265 ORLANDO, FL 32810	ROAD NO.	COUNTY	FINANCIAL PROJECT ID		648
					SR 400	POLK	430185-3-52-01		

THE OFFICIAL RECORD OF THIS SHEET IS THE ELECTRONIC FILE DIGITALLY SIGNED AND SEALED UNDER RULE 61G15-23.004, F.A.C.

2/28/2024 7:20:04 PM dayl
P:\ORD_FDOT\WorkSets\FDOT\430185352O1-I-4\Roadway\TCP\TCTYRD01.dgn

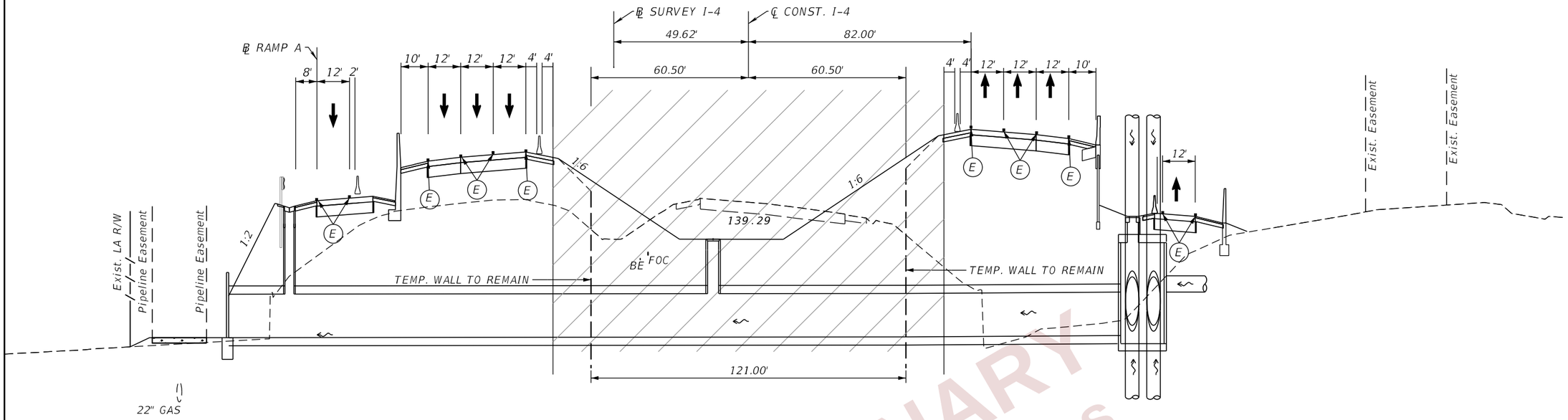

PRELIMINARY
subj ct to changes

CRITICAL SECTION - PHASE 4, STAGE 1

℄ CONST. I-4
STA. 3104+45.00 (BOX CULVERT)

PAVEMENT MARKING LEGEND

- (A) 6" SOLID WHITE TEMPORARY PAVEMENT MARKING
- (B) 6" SKIP WHITE TEMPORARY PAVEMENT MARKING (10'-30')
- (C) 6" SOLID YELLOW TEMPORARY PAVEMENT MARKING
- (D) 6" SKIP YELLOW TEMPORARY PAVEMENT MARKING (10'-30')
- (E) TEMPORARY PAVEMENT MARKINGS PREVIOUSLY APPLIED
- (F) 6" SOLID DOUBLE YELLOW TEMPORARY MARKING
- TEMPORARY PAVEMENT CURRENT PHASE
- TEMPORARY PAVEMENT CONSTRUCTED PREVIOUS PHASE

REVISIONS				ENGINEER OF RECORD	STATE OF FLORIDA DEPARTMENT OF TRANSPORTATION			TTC PLAN (145) CRITICAL SECTIONS	SHEET NO.
DATE	DESCRIPTION	DATE	DESCRIPTION	RYAN J. WILLIAMSON, P.E. LICENSE NUMBER 81421 BURGESS & NIPLE, INC. 1800 PEMBROOK DRIVE, SUITE 265 ORLANDO, FL 32810	ROAD NO.	COUNTY	FINANCIAL PROJECT ID		649
					SR 400	POLK	430185-3-52-01		

THE OFFICIAL RECORD OF THIS SHEET IS THE ELECTRONIC FILE DIGITALLY SIGNED AND SEALED UNDER RULE 61G15-23.004, F.A.C.

2/28/2024 7:20:09 PM day
P:\ORD_FDOT\WorkSets\FDOT\430185352O1-I-4\Roadway\TCP\CTYRD01.dgn

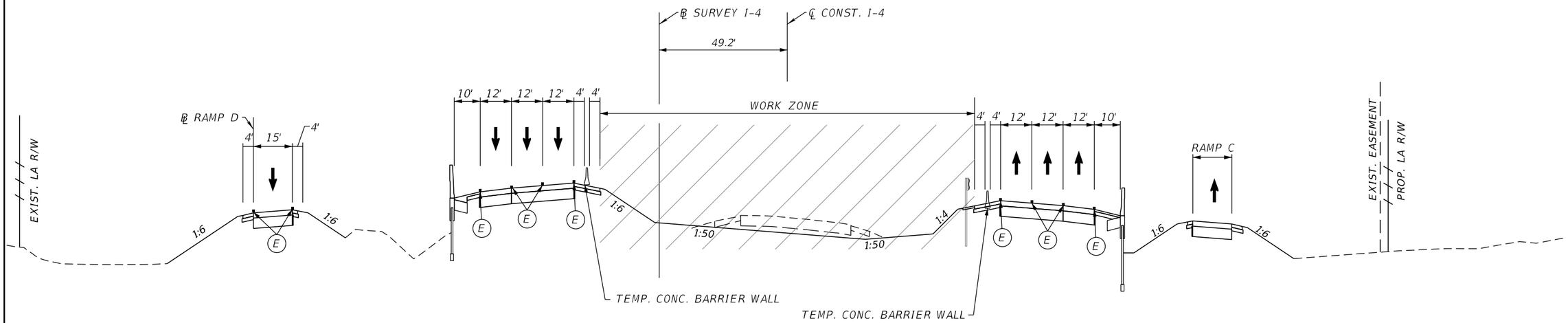

CRITICAL SECTION - PHASE 4 STAGE 1

℄ CONST. I-4
STA. 3138+00

PAVEMENT MARKING LEGEND

- (A) 6" SOLID WHITE TEMPORARY PAVEMENT MARKING
- (B) 6" SKIP WHITE TEMPORARY PAVEMENT MARKING (10'-30')
- (C) 6" SOLID YELLOW TEMPORARY PAVEMENT MARKING
- (D) 6" SKIP YELLOW TEMPORARY PAVEMENT MARKING (10'-30')
- (E) TEMPORARY PAVEMENT MARKINGS PREVIOUSLY APPLIED
- (F) 6" SOLID DOUBLE YELLOW TEMPORARY MARKING
- TEMPORARY PAVEMENT CURRENT PHASE
- TEMPORARY PAVEMENT CONSTRUCTED PREVIOUS PHASE

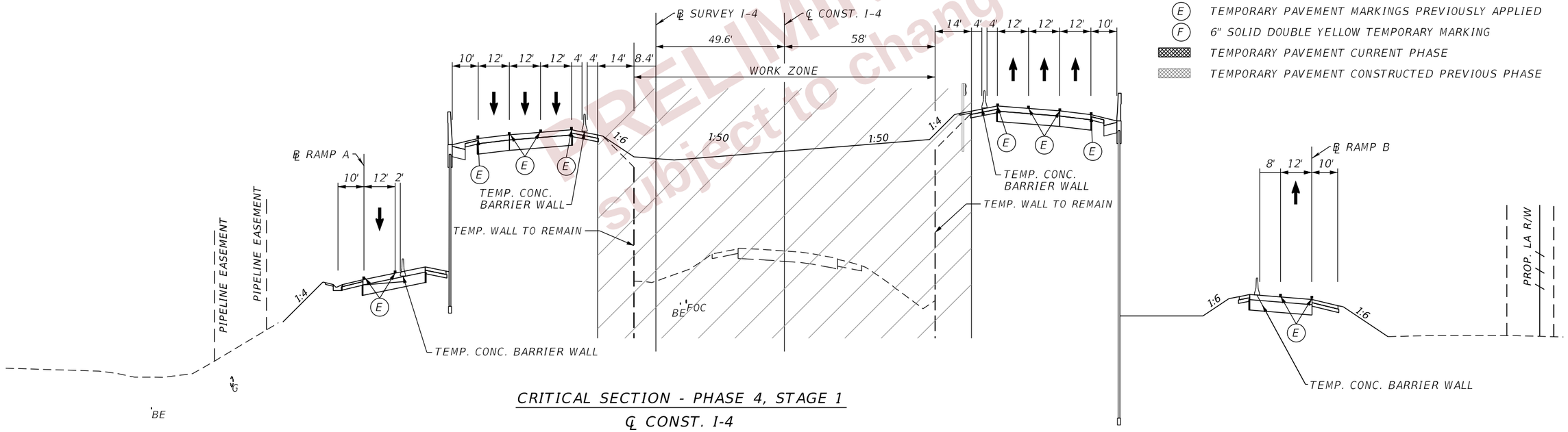

CRITICAL SECTION - PHASE 4, STAGE 1

℄ CONST. I-4
STA. 3110+00

PRELIMINARY
subject to changes

REVISIONS				ENGINEER OF RECORD	STATE OF FLORIDA DEPARTMENT OF TRANSPORTATION			TTC PLAN (146) CRITICAL SECTIONS	SHEET NO.
DATE	DESCRIPTION	DATE	DESCRIPTION	RYAN J. WILLIAMSON, P.E. LICENSE NUMBER 81421 BURGESS & NIPLE, INC. 1800 PEMBROOK DRIVE, SUITE 265 ORLANDO, FL 32810	ROAD NO.	COUNTY	FINANCIAL PROJECT ID		650
					SR 400	POLK	430185-3-52-01		

THE OFFICIAL RECORD OF THIS SHEET IS THE ELECTRONIC FILE DIGITALLY SIGNED AND SEALED UNDER RULE 61G15-23.004, F.A.C.

2/28/2024 7:20:09 PM day
P:\ORD_FDOT\WorkSet\FDOT\430185352O1-I-4\Roadway\TCP\TCTYRD01.dgn

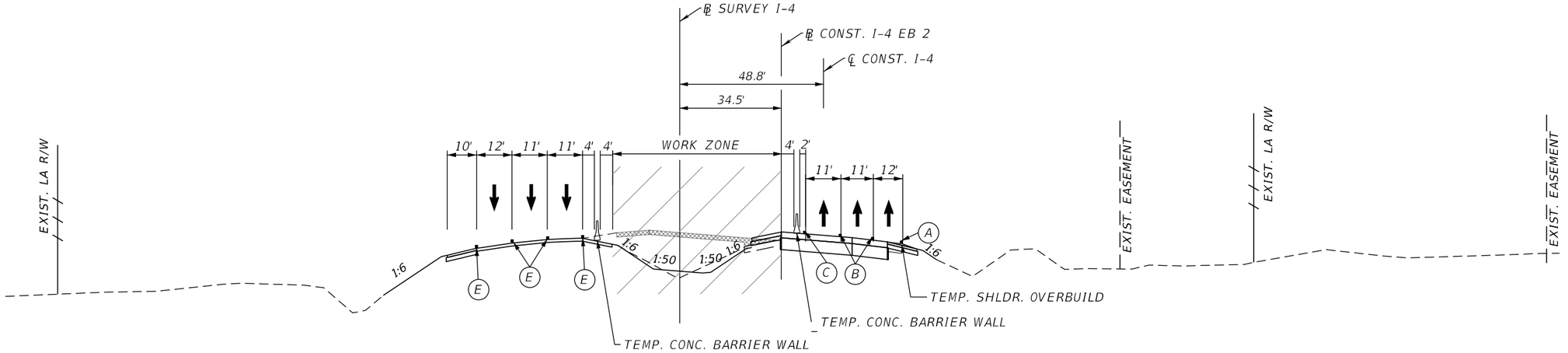

CRITICAL SECTION - PHASE 4, STAGE 1

℄ CONST. I-4
STA. 3172+00

PAVEMENT MARKING LEGEND

- (A) 6" SOLID WHITE TEMPORARY PAVEMENT MARKING
- (B) 6" SKIP WHITE TEMPORARY PAVEMENT MARKING (10'-30')
- (C) 6" SOLID YELLOW TEMPORARY PAVEMENT MARKING
- (D) 6" SKIP YELLOW TEMPORARY PAVEMENT MARKING (10'-30')
- (E) TEMPORARY PAVEMENT MARKINGS PREVIOUSLY APPLIED
- (F) 6" SOLID DOUBLE YELLOW TEMPORARY MARKING
- TEMPORARY PAVEMENT CURRENT PHASE
- TEMPORARY PAVEMENT CONSTRUCTED PREVIOUS PHASE

PRELIMINARY
subject to changes

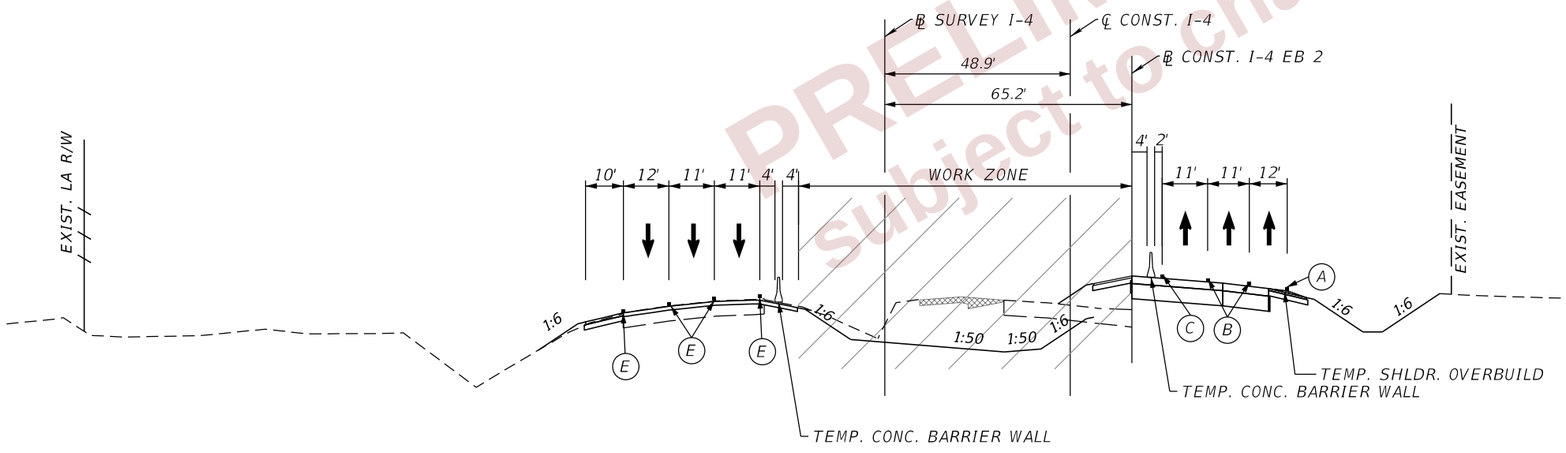

CRITICAL SECTION - PHASE 4, STAGE 1

℄ CONST. I-4
STA. 3163+00

REVISIONS				ENGINEER OF RECORD	STATE OF FLORIDA DEPARTMENT OF TRANSPORTATION			TTC PLAN (147) CRITICAL SECTIONS	SHEET NO.
DATE	DESCRIPTION	DATE	DESCRIPTION	RYAN J. WILLIAMSON, P.E. LICENSE NUMBER 81421 BURGESS & NIPLE, INC. 1800 PEMBROOK DRIVE, SUITE 265 ORLANDO, FL 32810	ROAD NO.	COUNTY	FINANCIAL PROJECT ID		651
					SR 400	POLK	430185-3-52-01		

THE OFFICIAL RECORD OF THIS SHEET IS THE ELECTRONIC FILE DIGITALLY SIGNED AND SEALED UNDER RULE 61G15-23.004, F.A.C.

2/28/2024 7:20:10 PM dayP:\ORD_FDOT\WorkSets\FDOT\430185352O1-I-4\Roadway\TCP\TCTYRD01.dgn

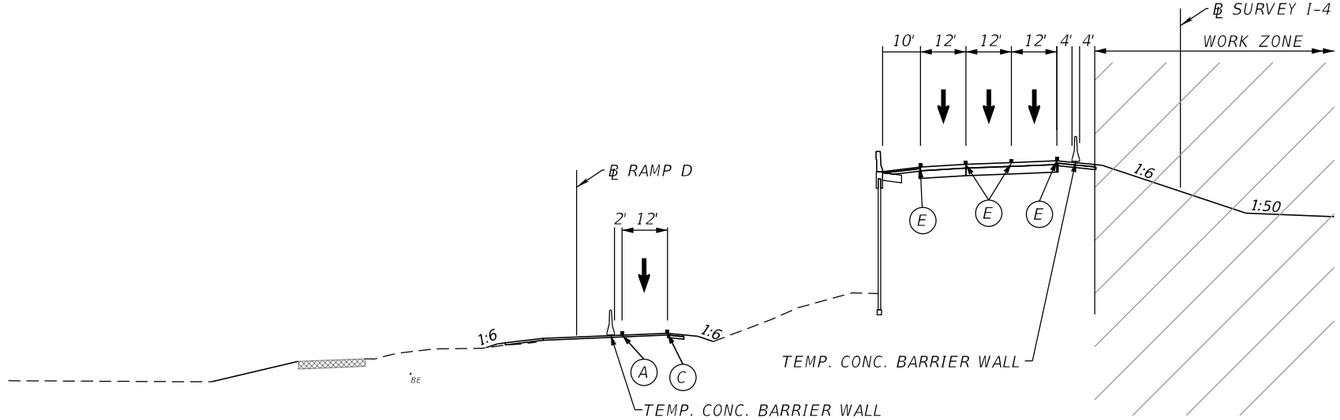

CRITICAL SECTION - PHASE 4, STAGE 1

℄ RAMP D
STA. 404+00

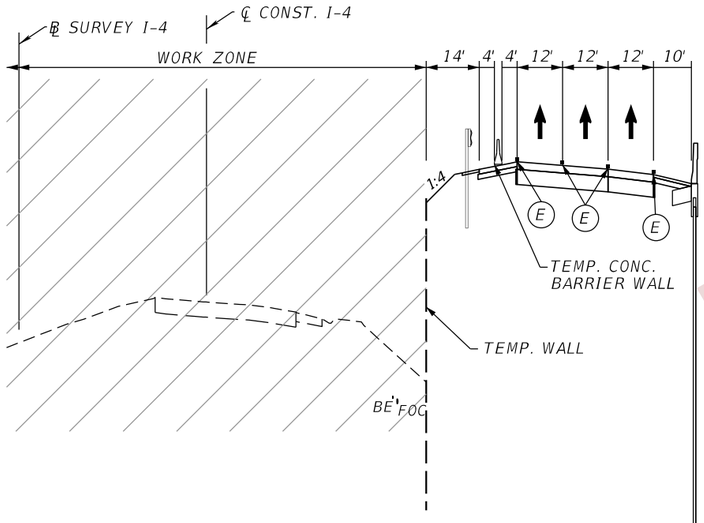

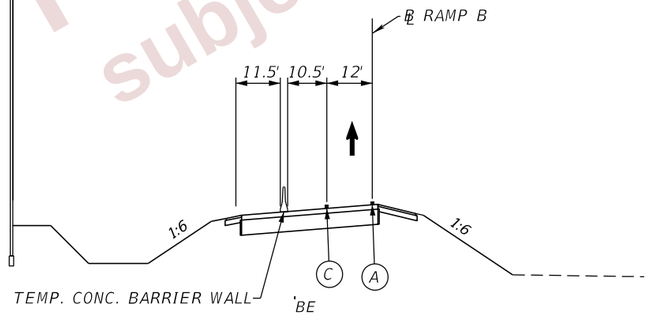

CRITICAL SECTION - PHASE 4, STAGE 1

℄ RAMP B
STA. 225+00

PAVEMENT MARKING LEGEND

- (A) 6" SOLID WHITE TEMPORARY PAVEMENT MARKING
- (B) 6" SKIP WHITE TEMPORARY PAVEMENT MARKING (10'-30')
- (C) 6" SOLID YELLOW TEMPORARY PAVEMENT MARKING
- (D) 6" SKIP YELLOW TEMPORARY PAVEMENT MARKING (10'-30')
- (E) TEMPORARY PAVEMENT MARKINGS PREVIOUSLY APPLIED
- (F) 6" SOLID DOUBLE YELLOW TEMPORARY MARKING
- TEMPORARY PAVEMENT CURRENT PHASE
- TEMPORARY PAVEMENT CONSTRUCTED PREVIOUS PHASE

PRELIMINARY
subject to changes

THE OFFICIAL RECORD OF THIS SHEET IS THE ELECTRONIC FILE DIGITALLY SIGNED AND SEALED UNDER RULE 61G15-23.004, F.A.C.

2/28/2024 7:20:11 PM day
P:\ORD_FDOT\WorkSet\FDOT\430185352O1-I-4\Roadway\TCP\TCTYRD01.dgn

REVISIONS			
DATE	DESCRIPTION	DATE	DESCRIPTION

ENGINEER OF RECORD
RYAN J. WILLIAMSON, P.E.
LICENSE NUMBER 81421
BURGESS & NIPLE, INC.
1800 PEMBROOK DRIVE, SUITE 265
ORLANDO, FL 32810

STATE OF FLORIDA
DEPARTMENT OF TRANSPORTATION

ROAD NO.	COUNTY	FINANCIAL PROJECT ID
SR 400	POLK	430185-3-52-01

TTC PLAN (148)
CRITICAL SECTIONS

SHEET NO. 652

LEGEND

- TEMP PAVEMENT CURRENT PHASE
- TEMP PAVEMENT CONST. PREVIOUS PHASE
- PROP. PAVEMENT CONSTRUCTED CURRENT PHASE
- PROP. PAVEMENT CONSTRUCTED PREVIOUS PHASE
- DIRECTION OF TRAFFIC
- WORK ZONE
- CRASH CUSHION
- WORK ZONE SIGN
- (1) 6" WHITE
- (2) 6" YELLOW
- (4) 6" WHITE, 10'-30' SKIP

E11-01A
FTP-17-06
M06-02R

1"=300'

BEGIN WORK I-4 WB AND I-4 EB
STA. 1054+00.00 ℄ SURVEY I-4

STA. +00.00
74.36' LT.

STA. +70.00
66.31' LT.

STA. +00.00
60.77' RT.

℄ SURVEY I-4

STA. +01.00
74.33' LT.

TEMP. CONC. BARRIER WALL

20' FLORIDA GAS TRANSMISSION LINE
EASEMENT O.R.B.3437, PG.890

STA. +99.00
64.52' LT.

L/A R/W LINE

3075

3065

11441' R

7692' R

STA. +10.00
73.94' RT.

STA. +05.00
73.90' RT.

℄ CONST. I-4

℄ RAMP A

STA. +38.00
120.36' RT.

℄ RAMP B

MATCHLINE STA. 3090+00
TEMP. TRAF. CONTROL PLAN, PHASE 4 STAGE 1

EASEMENT

E11-01A
FTP-17-06
M06-02R

BEGIN CONSTRUCTION I-4 WB AND I-4 EB
STA. 1073+09.57 ℄ SURVEY I-4
STA. 3073+00.00 ℄ CONST. I-4
STA. 3998+57.07 ℄ CONST. I-4 EB

PRELIMINARY
subject to changes

REVISIONS				ENGINEER OF RECORD	STATE OF FLORIDA DEPARTMENT OF TRANSPORTATION			TTC PLAN (149) PHASE 4 STAGE 1 I-4	SHEET NO.
DATE	DESCRIPTION	DATE	DESCRIPTION	RYAN J. WILLIAMSON, P.E. LICENSE NUMBER 81421 BURGESS & NIPLE, INC. 1800 PEMBROOK DRIVE, SUITE 265 ORLANDO, FL 32810	ROAD NO.	COUNTY	FINANCIAL PROJECT ID		653
					SR 400	POLK	430185-3-52-01		

THE OFFICIAL RECORD OF THIS SHEET IS THE ELECTRONIC FILE DIGITALLY SIGNED AND SEALED UNDER RULE 61G15-23.004, F.A.C.

2/28/2024 7:20:28 PM day
P:\ORD_FDOT\WorkSets\FDOT\430185352O1-I-4\Roadway\TCP\TCPLR00P451_I4.dgn

LEGEND

- TEMP PAVEMENT CURRENT PHASE
- TEMP PAVEMENT CONST. PREVIOUS PHASE
- PROP. PAVEMENT CONSTRUCTED CURRENT PHASE
- PROP. PAVEMENT CONSTRUCTED PREVIOUS PHASE
- DIRECTION OF TRAFFIC
- WORK ZONE
- CRASH CUSHION
- WORK ZONE SIGN

(1) 6" WHITE

(2) 6" YELLOW

(4) 6" WHITE, 10'-30 SKIP

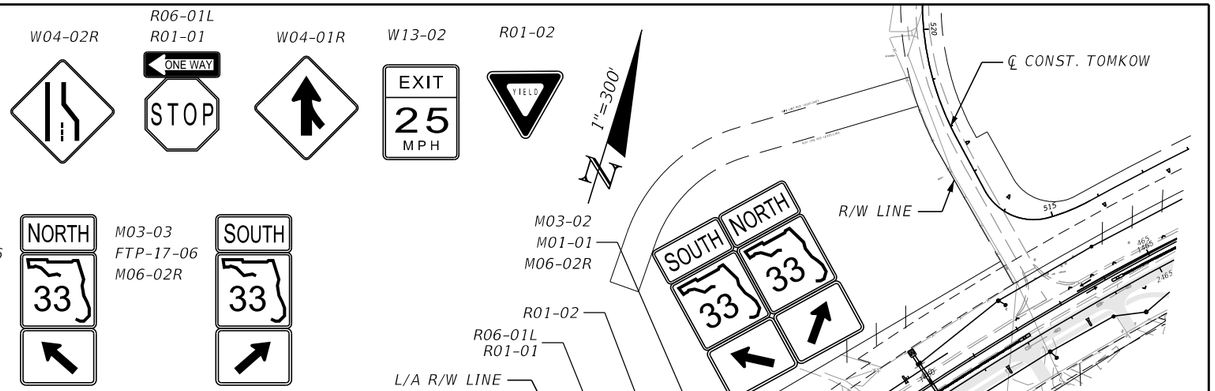

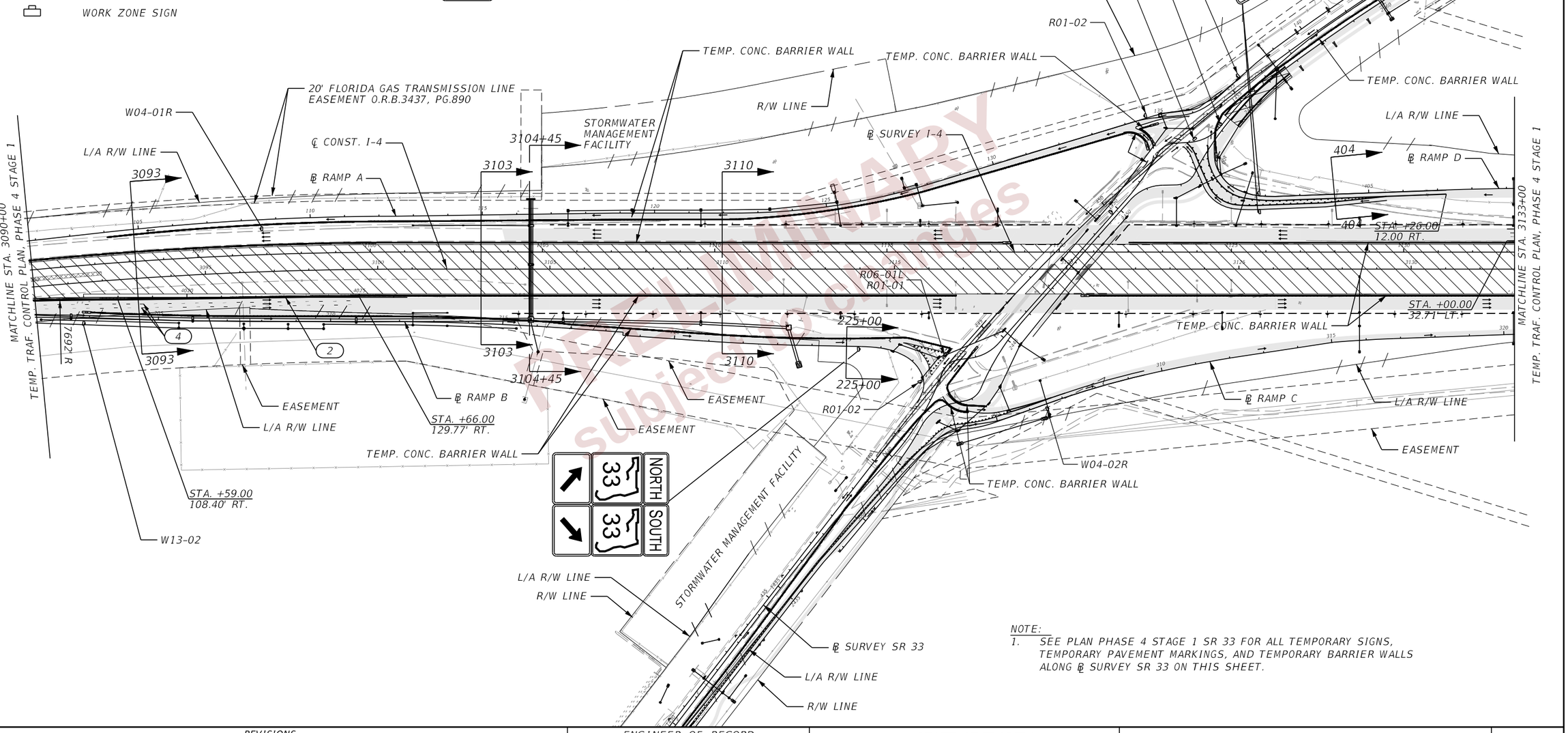

NOTE:

1. SEE PLAN PHASE 4 STAGE 1 SR 33 FOR ALL TEMPORARY SIGNS, TEMPORARY PAVEMENT MARKINGS, AND TEMPORARY BARRIER WALLS ALONG ℄ SURVEY SR 33 ON THIS SHEET.

PRELIMINARY Subject to Change

REVISIONS			
DATE	DESCRIPTION	DATE	DESCRIPTION

ENGINEER OF RECORD
RYAN J. WILLIAMSON, P.E.
LICENSE NUMBER 81421
BURGESS & NIPLE, INC.
1800 PEMBROOK DRIVE, SUITE 265
ORLANDO, FL 32810

STATE OF FLORIDA
DEPARTMENT OF TRANSPORTATION

ROAD NO.	COUNTY	FINANCIAL PROJECT ID
SR 400	POLK	430185-3-52-01

TTC PLAN (150)
PHASE 4 STAGE 1
I-4

SHEET NO. 654

THE OFFICIAL RECORD OF THIS SHEET IS THE ELECTRONIC FILE DIGITALLY SIGNED AND SEALED UNDER RULE 61G15-23.004, F.A.C.

2/28/2024 7:20:32 PM day
P:\ORD_FDOT\WorkSets\FDOT\430185352O1-I-4\Roadway\TCP\TCPLR00P451_I4.dgn

℄ CONST. TOMKOW

℄ SURVEY SR 33

W04-01R

E11-01A
FTP-17-06
M06-02R

EXIT
33

W13-02

EXIT
25
MPH

LEGEND

- TEMP PAVEMENT CURRENT PHASE
- TEMP PAVEMENT CONST. PREVIOUS PHASE
- PROP. PAVEMENT CONSTRUCTED CURRENT PHASE
- PROP. PAVEMENT CONSTRUCTED PREVIOUS PHASE
- DIRECTION OF TRAFFIC
- WORK ZONE
- CRASH CUSHION
- WORK ZONE SIGN

(1) 6" WHITE
(2) 6" YELLOW
(4) 6" WHITE, 10'-30' SKIP

1"=300'

L/A R/W

STORMWATER MANAGEMENT FACILITY

3138

W13-02

STA. +83.00
74.90' LT.

℄ RAMP D

STA. +82.00
74.86' LT.

E11-01A
FTP-17-06
M06-02R

L/A R/W LINE

TEMP. CONC. BARRIER WALL

℄ CONST. I-4

℄ SURVEY I-4

3163

3172

MATCHLINE STA. 3133+00
TEMP. TRAF. CONTROL PLAN, PHASE 4 STAGE 1

MATCHLINE STA. 3176+00
TEMP. TRAF. CONTROL PLAN, PHASE 4 STAGE 1

EASEMENT

3138

W04-01R

EASEMENT

℄ RAMP C

L/A R/W LINE

22918' R

TEMP. CONC. BARRIER WALL

STA. +44.00
115.10' RT.

STA. +52.10
130.74' RT.

STA. +49.00
123.63' RT.

3163

22912' R

EASEMENT

L/A R/W LINE

EASEMENT

22946' R

3172

END CONSTRUCTION I-4 WB AND EB
STA. 3175+39.53 ℄ I-4

STORMWATER MANAGEMENT FACILITY

STA. +61.00
74.00' RT.

NOTE:
1. SEE PLAN PHASE 4 STAGE 1 SR 33 FOR ALL TEMPORARY SIGNS, TEMPORARY PAVEMENT MARKINGS, AND TEMPORARY BARRIER WALLS ALONG ℄ SR 33 ON THIS SHEET.

PRELIMINARY
subject to changes

THE OFFICIAL RECORD OF THIS SHEET IS THE ELECTRONIC FILE DIGITALLY SIGNED AND SEALED UNDER RULE 61G15-23.004, F.A.C.

REVISIONS			
DATE	DESCRIPTION	DATE	DESCRIPTION

ENGINEER OF RECORD
RYAN J. WILLIAMSON, P.E.
LICENSE NUMBER 81421
BURGESS & NIPLE, INC.
1800 PEMBROOK DRIVE, SUITE 265
ORLANDO, FL 32810

STATE OF FLORIDA
DEPARTMENT OF TRANSPORTATION

ROAD NO.	COUNTY	FINANCIAL PROJECT ID
SR 400	POLK	430185-3-52-01

TTC PLAN (151)
PHASE 4 STAGE 1
I-4

SHEET NO. 655

2/28/2024 7:20:44 PM day
P:\ORD_FDOT\WorkSets\FDOT\430185201-I-4\Roadway\TCP\TCPLRDDP451_14.dgn

LEGEND

- TEMP PAVEMENT CURRENT PHASE
- TEMP PAVEMENT CONST. PREVIOUS PHASE
- PROP. PAVEMENT CONSTRUCTED CURRENT PHASE
- PROP. PAVEMENT CONSTRUCTED PREVIOUS PHASE
- DIRECTION OF TRAFFIC
- WORK ZONE
- CRASH CUSHION
- WORK ZONE SIGN

(1) 6" WHITE
(2) 6" YELLOW
(4) 6" WHITE, 10'-30' SKIP

1"=300'

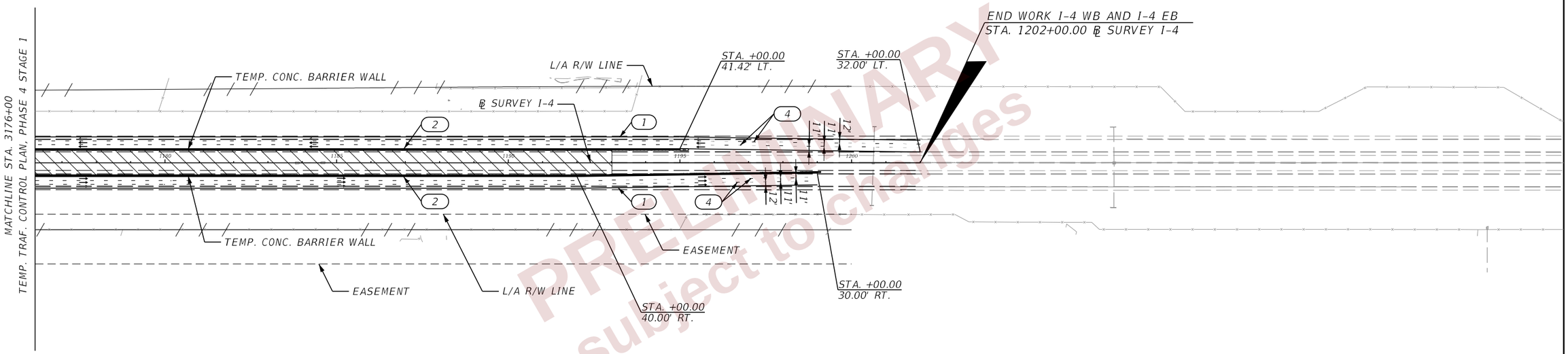

PRELIMINARY
subject to changes

REVISIONS				ENGINEER OF RECORD	STATE OF FLORIDA DEPARTMENT OF TRANSPORTATION			TTC PLAN (152) PHASE 4 STAGE 1 I-4	SHEET NO.
DATE	DESCRIPTION	DATE	DESCRIPTION	RYAN J. WILLIAMSON, P.E. LICENSE NUMBER 81421 BURGESS & NIPLE, INC. 1800 PEMBROOK DRIVE, SUITE 265 ORLANDO, FL 32810	ROAD NO.	COUNTY	FINANCIAL PROJECT ID		656
					SR 400	POLK	430185-3-52-01		

THE OFFICIAL RECORD OF THIS SHEET IS THE ELECTRONIC FILE DIGITALLY SIGNED AND SEALED UNDER RULE 61G15-23.004, F.A.C.

2/28/2024 7:20:50 PM day
P:\ORD_FDOT\WorkSets\FDOT_430185352O1-I-4\Roadway\TCP\TCPLRDDP451_I4.dgn

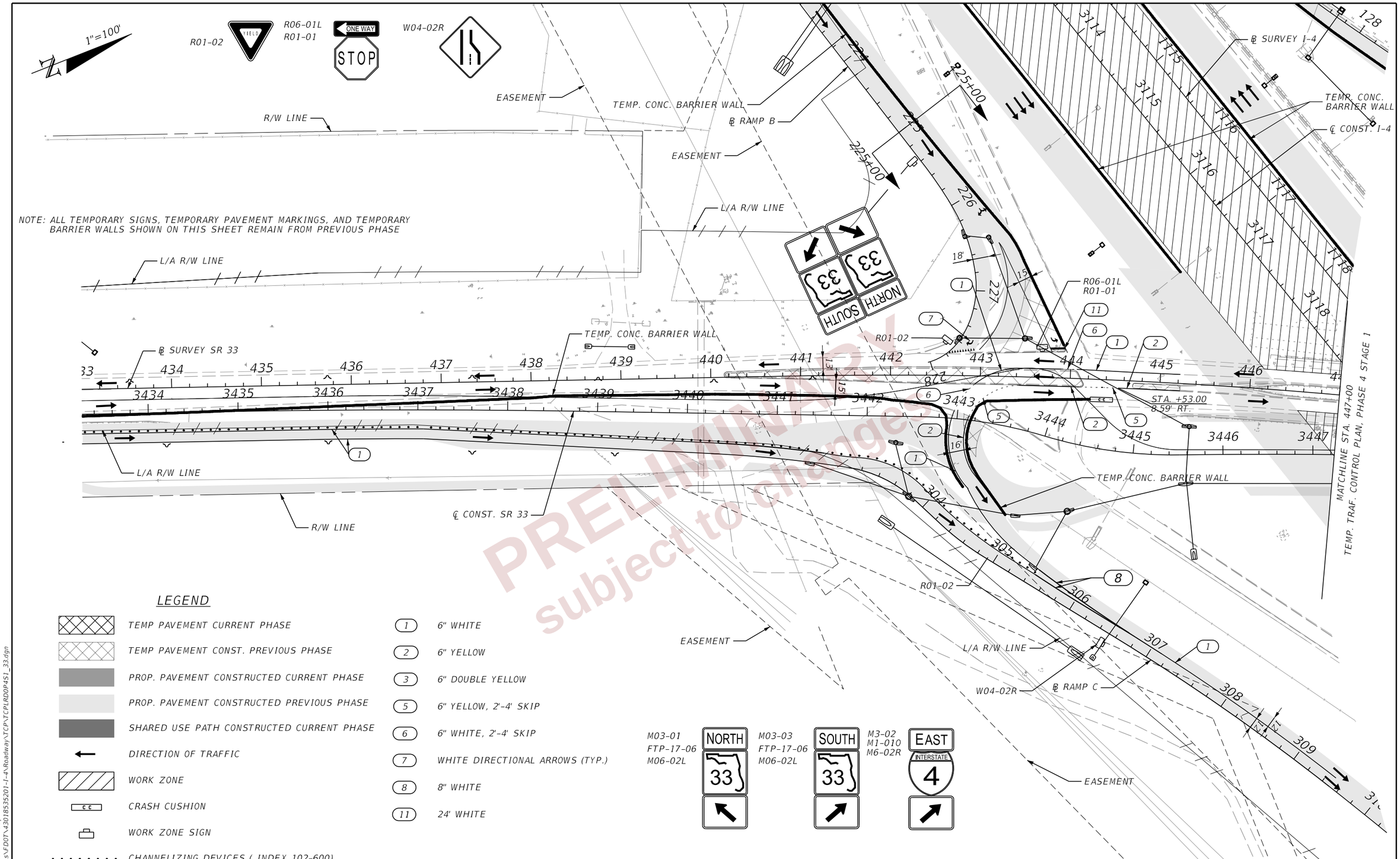

LEGEND

- TEMP PAVEMENT CURRENT PHASE
- TEMP PAVEMENT CONST. PREVIOUS PHASE
- PROP. PAVEMENT CONSTRUCTED CURRENT PHASE
- PROP. PAVEMENT CONSTRUCTED PREVIOUS PHASE
- SHARED USE PATH CONSTRUCTED CURRENT PHASE
- DIRECTION OF TRAFFIC
- WORK ZONE
- CRASH CUSHION
- WORK ZONE SIGN
- CHANNELIZING DEVICES (INDEX 102-600)

1	6" WHITE
2	6" YELLOW
3	6" DOUBLE YELLOW
5	6" YELLOW, 2'-4' SKIP
6	6" WHITE, 2'-4' SKIP
7	WHITE DIRECTIONAL ARROWS (TYP.)
8	8" WHITE
11	24' WHITE

THE OFFICIAL RECORD OF THIS SHEET IS THE ELECTRONIC FILE DIGITALLY SIGNED AND SEALED UNDER RULE 61G15-23.004, F.A.C.

2/28/2024 7:21:09 PM day
P:\ORD_FDOT\WorkSets\FDOT\43018535201-I-4\Roadway\TCP\TCPLRD0P4S1_33.dgn

REVISIONS			
DATE	DESCRIPTION	DATE	DESCRIPTION

ENGINEER OF RECORD
RYAN J. WILLIAMSON, P.E.
LICENSE NUMBER 81421
BURGESS & NIPLE, INC.
1800 PEMBROOK DRIVE, SUITE 265
ORLANDO, FL 32810

STATE OF FLORIDA
DEPARTMENT OF TRANSPORTATION

ROAD NO.	COUNTY	FINANCIAL PROJECT ID
SR 400	POLK	430185-3-52-01

TTC PLAN (153)
PHASE 4 STAGE 1
SR 33

SHEET NO.
657

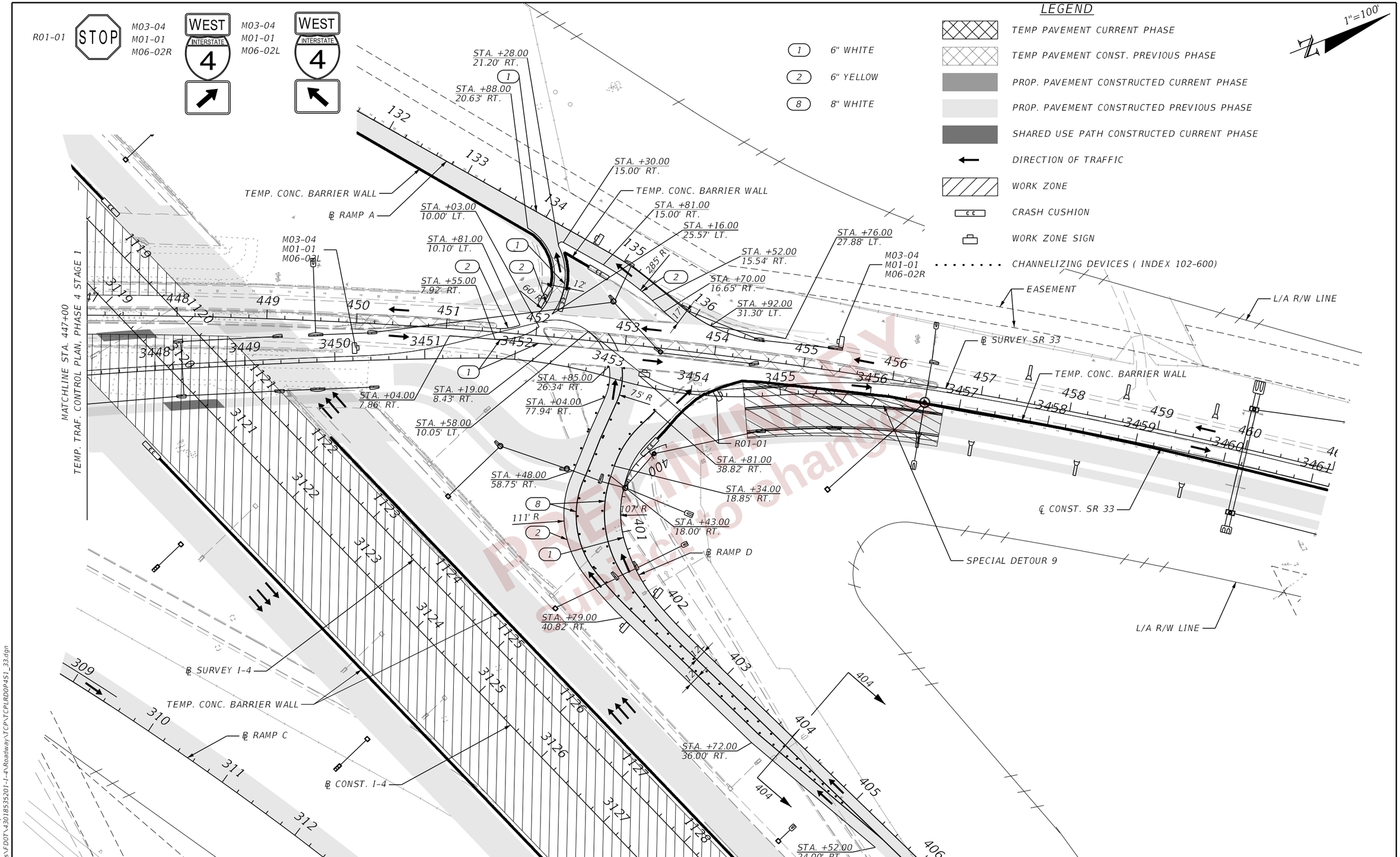

THE OFFICIAL RECORD OF THIS SHEET IS THE ELECTRONIC FILE DIGITALLY SIGNED AND SEALED UNDER RULE 61G15-23.004, F.A.C.

2/28/2024 7:21:12 PM day
P:\ORD_FDOT\WorkSets\FDOT\43018535201-I-4\Roadway\TCP\TCPLRD0P4S1_33.dgn

REVISIONS			
DATE	DESCRIPTION	DATE	DESCRIPTION

ENGINEER OF RECORD
RYAN J. WILLIAMSON, P.E.
LICENSE NUMBER 81421
BURGESS & NIPLE, INC.
1800 PEMBROOK DRIVE, SUITE 265
ORLANDO, FL 32810

STATE OF FLORIDA
DEPARTMENT OF TRANSPORTATION

ROAD NO.	COUNTY	FINANCIAL PROJECT ID
SR 400	POLK	430185-3-52-01

TTC PLAN (154)
PHASE 4 STAGE 1
SR 33

SHEET NO.
658

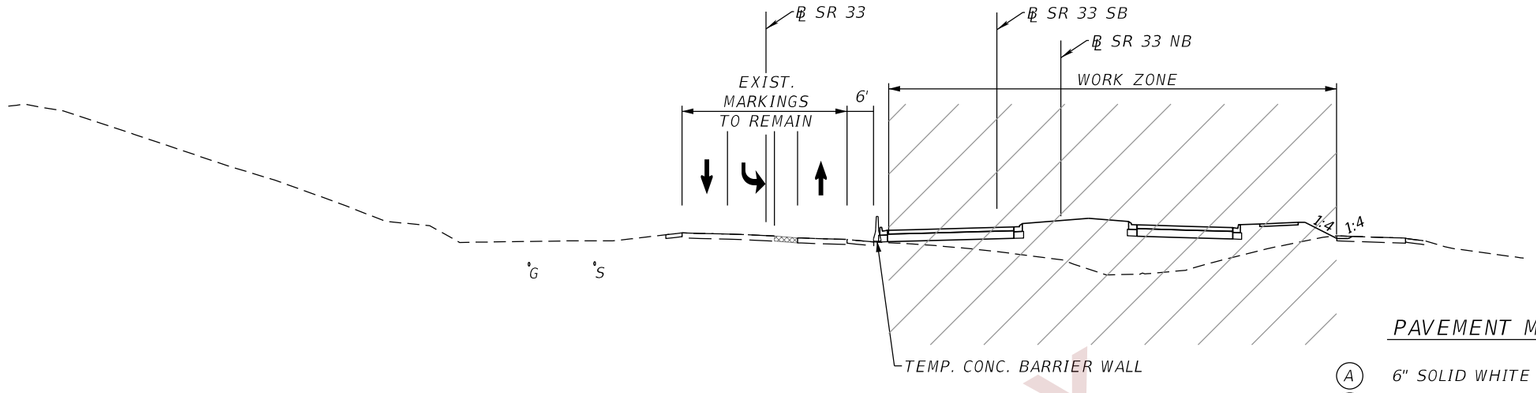

CRITICAL SECTION - PHASE 5, STAGE 1

℄ SR 33
STA. 445+00

PAVEMENT MARKING LEGEND

- (A) 6" SOLID WHITE TEMPORARY PAVEMENT MARKING
- (B) 6" SKIP WHITE TEMPORARY PAVEMENT MARKING (10'-30')
- (C) 6" SOLID YELLOW TEMPORARY PAVEMENT MARKING
- (D) 6" SKIP YELLOW TEMPORARY PAVEMENT MARKING (10'-30')
- (E) TEMPORARY PAVEMENT MARKINGS PREVIOUSLY APPLIED
- (F) 6" SOLID DOUBLE YELLOW TEMPORARY MARKING
- TEMPORARY PAVEMENT CURRENT PHASE
- TEMPORARY PAVEMENT CONSTRUCTED PREVIOUS PHASE

PRELIMINARY
subject to changes

THE OFFICIAL RECORD OF THIS SHEET IS THE ELECTRONIC FILE DIGITALLY SIGNED AND SEALED UNDER RULE 61G15-23.004, F.A.C.

REVISIONS				ENGINEER OF RECORD	STATE OF FLORIDA DEPARTMENT OF TRANSPORTATION			TTC PLAN (155) CRITICAL SECTIONS	SHEET NO.
DATE	DESCRIPTION	DATE	DESCRIPTION	RYAN J. WILLIAMSON, P.E. LICENSE NUMBER 81421 BURGESS & NIPLE, INC. 1800 PEMBROOK DRIVE, SUITE 265 ORLANDO, FL 32810	ROAD NO.	COUNTY	FINANCIAL PROJECT ID		659
					SR 400	POLK	430185-3-52-01		

2/28/2024 7:21:26 PM day
P:\ORD_FDOT\WorkSets\FDOT\430185352O1-I-4\Roadway\TCP\TCTYRD01.dgn

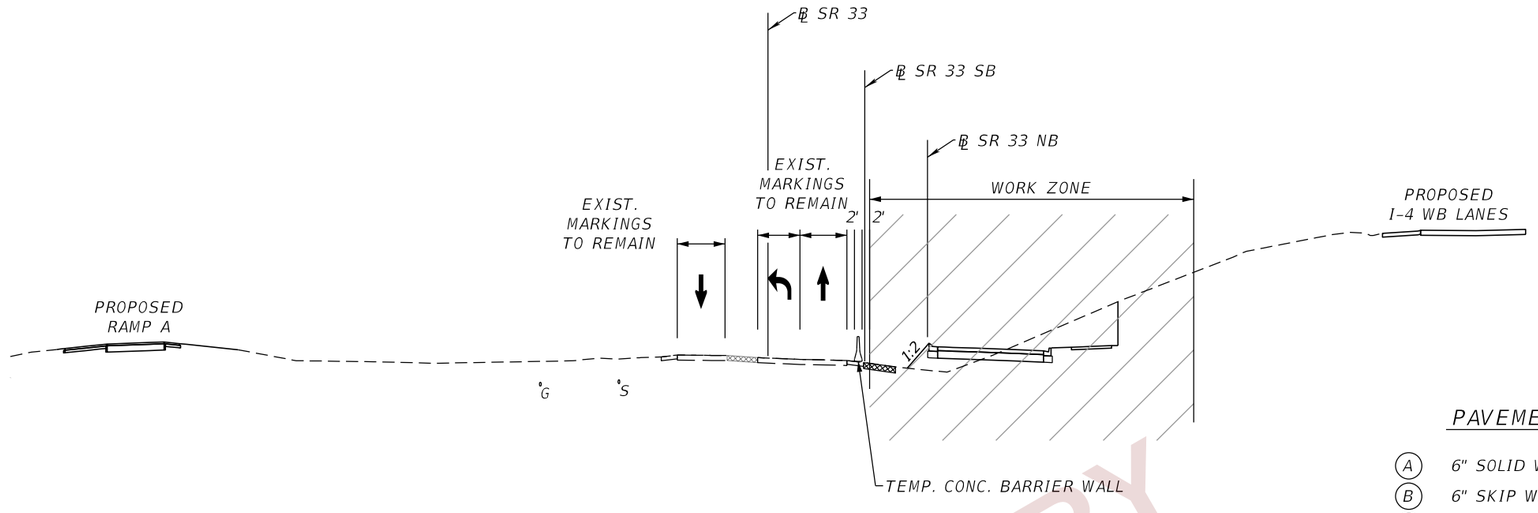

CRITICAL SECTION - PHASE 5, STAGE 1

℄ SR 33
STA. 451+00

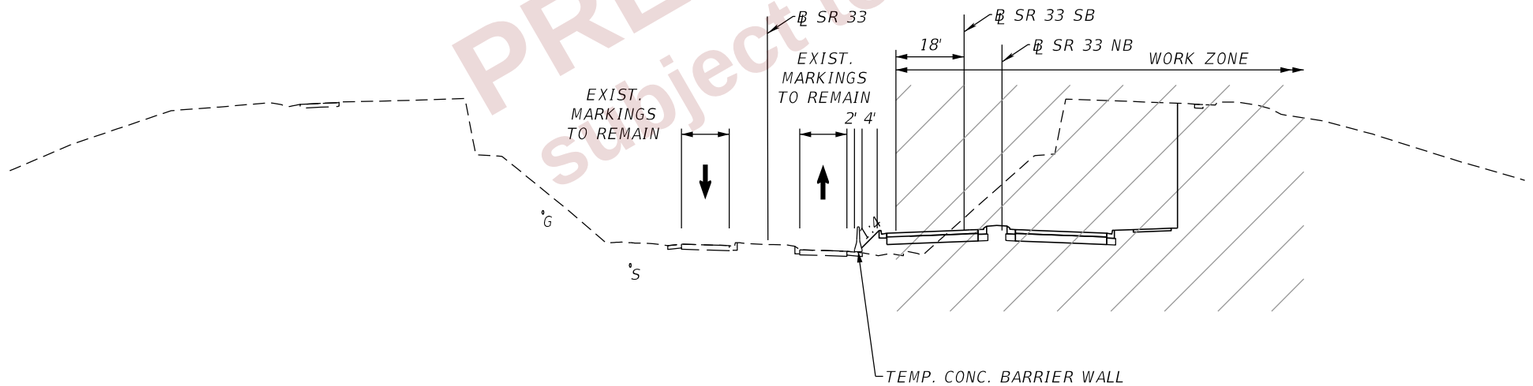

CRITICAL SECTION - PHASE 5, STAGE 1

℄ SR 33
STA. 448+00

PAVEMENT MARKING LEGEND

- (A) 6" SOLID WHITE TEMPORARY PAVEMENT MARKING
- (B) 6" SKIP WHITE TEMPORARY PAVEMENT MARKING (10'-30')
- (C) 6" SOLID YELLOW TEMPORARY PAVEMENT MARKING
- (D) 6" SKIP YELLOW TEMPORARY PAVEMENT MARKING (10'-30')
- (E) TEMPORARY PAVEMENT MARKINGS PREVIOUSLY APPLIED
- (F) 6" SOLID DOUBLE YELLOW TEMPORARY MARKING
- TEMPORARY PAVEMENT CURRENT PHASE
- TEMPORARY PAVEMENT CONSTRUCTED PREVIOUS PHASE

PRELIMINARY subject to changes

REVISIONS				ENGINEER OF RECORD	STATE OF FLORIDA DEPARTMENT OF TRANSPORTATION			TTC PLAN (156) CRITICAL SECTIONS	SHEET NO.
DATE	DESCRIPTION	DATE	DESCRIPTION	RYAN J. WILLIAMSON, P.E. LICENSE NUMBER 81421 BURGESS & NIPLE, INC. 1800 PEMBROOK DRIVE, SUITE 265 ORLANDO, FL 32810	ROAD NO.	COUNTY	FINANCIAL PROJECT ID		660
					SR 400	POLK	430185-3-52-01		

THE OFFICIAL RECORD OF THIS SHEET IS THE ELECTRONIC FILE DIGITALLY SIGNED AND SEALED UNDER RULE 61G15-23.004, F.A.C.

2/28/2024 7:21:27 PM day
P:\ORD_FDOT\WorkSets\FDOT\430185352O1-I-4\Roadway\TCP\TCTYRD01.dgn

M03-01
FTP-17-06
M06-02L

M03-03
FTP-17-06
M06-02L

1"=100'

R01-02

R06-01L
R01-01

NOTE: ALL TEMPORARY SIGNS, TEMPORARY PAVEMENT MARKINGS, AND TEMPORARY BARRIER WALLS SHOWN ON THIS SHEET REMAIN FROM PREVIOUS PHASE

M3-02

M6-02R M1-010

℄ SURVEY SR 33
STA. 426+73
52.00 RT.

LEGEND

- TEMP PAVEMENT CURRENT PHASE
- TEMP PAVEMENT CONST. PREVIOUS PHASE
- PROP. PAVEMENT CONSTRUCTED CURRENT PHASE
- PROP. PAVEMENT CONSTRUCTED PREVIOUS PHASE
- SHARED USE PATH CONSTRUCTED CURRENT PHASE
- DIRECTION OF TRAFFIC
- WORK ZONE
- CRASH CUSHION
- WORK ZONE SIGN
- CHANNELIZING DEVICES (INDEX 102-600)

(1) 6" WHITE
(2) 6" YELLOW
(3) 6" DOUBLE YELLOW
(5) 6" YELLOW, 2'-4' SKIP
(6) 6" WHITE, 2'-4' SKIP
(7) WHITE DIRECTIONAL ARROWS (TYP.)
(8) 8" WHITE
(11) 24' WHITE

EASEMENT
TEMP. CONC. BARRIER WALL
℄ RAMP B
EASEMENT
L/A R/W LINE
R/W LINE
L/A R/W LINE
℄ SURVEY SR 33
TEMP. CONC. BARRIER WALL
L/A R/W LINE
℄ CONST. SR 33
R/W LINE
EASEMENT
R01-02
L/A R/W LINE
℄ RAMP C
EASEMENT
℄ SURVEY I-4
℄ CONST. I-4
R06-01R
R01-02
TEMP. CONC. BARRIER WALL
MATCHLINE STA. 447+00
TEMP. TRAF. CONTROL PLAN, PHASE 5 STAGE 1

PRELIMINARY
subject to change

REVISIONS				ENGINEER OF RECORD	STATE OF FLORIDA DEPARTMENT OF TRANSPORTATION			TTC PLAN (157) PHASE 5 STAGE 1 SR 33	SHEET NO.
DATE	DESCRIPTION	DATE	DESCRIPTION	RYAN J. WILLIAMSON, P.E. LICENSE NUMBER 81421 BURGESS & NIPLE, INC. 1800 PEMBROOK DRIVE, SUITE 265 ORLANDO, FL 32810	ROAD NO.	COUNTY	FINANCIAL PROJECT ID		661
					SR 400	POLK	430185-3-52-01		

THE OFFICIAL RECORD OF THIS SHEET IS THE ELECTRONIC FILE DIGITALLY SIGNED AND SEALED UNDER RULE 61G15-23.004, F.A.C.

2/28/2024 7:21:43 PM day
P:\ORD_FDOT\WorkSet\SFDOT\430185352O1-I-4\Roadway\TCP\TCPLRDOP55I_33.dgn

M03-01
FTP-17-06
M06-02L

M03-03
FTP-17-06
M06-02R

M03-04
M01-01
M06-02R

R01-02

R01-01

M03-04
M01-01
M06-02L

LEGEND

- 1 — 6" WHITE
- 2 — 6" YELLOW
- 8 — 8" WHITE
- TEMP PAVEMENT CURRENT PHASE
- TEMP PAVEMENT CONST. PREVIOUS PHASE
- PROP. PAVEMENT CONSTRUCTED CURRENT PHASE
- PROP. PAVEMENT CONSTRUCTED PREVIOUS PHASE
- SHARED USE PATH CONSTRUCTED CURRENT PHASE
- DIRECTION OF TRAFFIC
- WORK ZONE
- CRASH CUSHION
- WORK ZONE SIGN
- CHANNELIZING DEVICES (INDEX 102-600)

1"=100'

MATCHLINE STA. 447+00
TEMP. TRAF. CONTROL PLAN, PHASE 5 STAGE 1

℄ RAMP A
℄ SURVEY I-4
℄ CONST. I-4
℄ RAMP C
℄ RAMP D
℄ SURVEY SR 33
℄ CONST. SR 33
EASEMENT
L/A R/W LINE
TEMP. CONC. BARRIER WALL
M03-04
M01-01
M06-02L
M03-04
M01-01
M06-02R
R01-02
R01-01
SOUTH
NORTH
33
33

NOTE: ALL TEMPORARY SIGNS, TEMPORARY PAVEMENT MARKINGS, AND TEMPORARY BARRIER WALLS SHOWN ON THIS SHEET REMAIN FROM PREVIOUS PHASE

PRELIMINARY
Subject to changes

REVISIONS				ENGINEER OF RECORD	STATE OF FLORIDA DEPARTMENT OF TRANSPORTATION			TTC PLAN (158) PHASE 5 STAGE 1 SR 33	SHEET NO.
DATE	DESCRIPTION	DATE	DESCRIPTION	RYAN J. WILLIAMSON, P.E. LICENSE NUMBER 81421 BURGESS & NIPLE, INC. 1800 PEMBROOK DRIVE, SUITE 265 ORLANDO, FL 32810	ROAD NO.	COUNTY	FINANCIAL PROJECT ID		662
					SR 400	POLK	430185-3-52-01		

THE OFFICIAL RECORD OF THIS SHEET IS THE ELECTRONIC FILE DIGITALLY SIGNED AND SEALED UNDER RULE 61G15-23.004, F.A.C.

2/28/2024 7:21:46 PM day
P:\ORD_FDOT\WorkSets\FDOT\430185352O1-I-4\Roadway\TCP\TCPLRDOP551_33.dgn

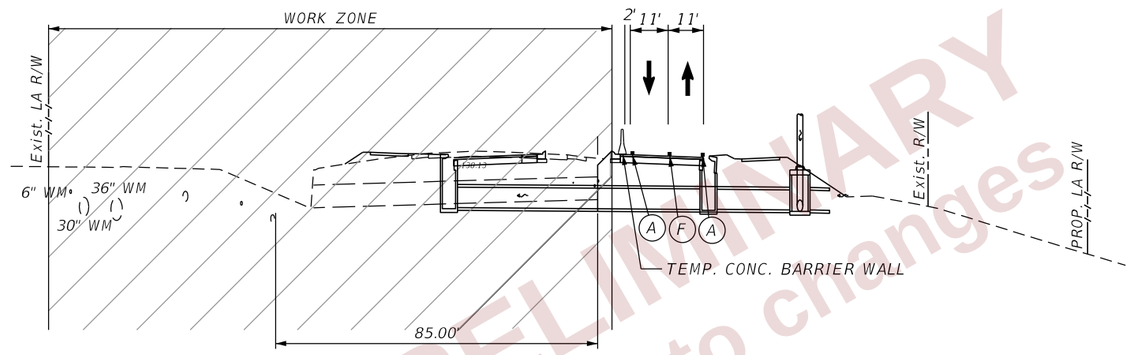

CRITICAL SECTION - PHASE 5, STAGE 2

℄ SR 33

STA. 432+05 (CROSS DRAIN)

PAVEMENT MARKING LEGEND

- (A) 6" SOLID WHITE TEMPORARY PAVEMENT MARKING
- (B) 6" SKIP WHITE TEMPORARY PAVEMENT MARKING (10'-30')
- (C) 6" SOLID YELLOW TEMPORARY PAVEMENT MARKING
- (D) 6" SKIP YELLOW TEMPORARY PAVEMENT MARKING (10'-30')
- (E) TEMPORARY PAVEMENT MARKINGS PREVIOUSLY APPLIED
- (F) 6" SOLID DOUBLE YELLOW TEMPORARY MARKING
- TEMPORARY PAVEMENT CURRENT PHASE
- TEMPORARY PAVEMENT CONSTRUCTED PREVIOUS PHASE

PRELIMINARY
subject to changes

THE OFFICIAL RECORD OF THIS SHEET IS THE ELECTRONIC FILE DIGITALLY SIGNED AND SEALED UNDER RULE 61G15-23.004, F.A.C.

2/28/2024 7:22:00 PM day
P:\ORD_FDOT\WorkSets\FDOT\430185352O1-I-4\Roadway\TCP\TCTYRD01.dgn

REVISIONS				ENGINEER OF RECORD	STATE OF FLORIDA DEPARTMENT OF TRANSPORTATION			TTC PLAN (159) CRITICAL SECTIONS	SHEET NO.
DATE	DESCRIPTION	DATE	DESCRIPTION	RYAN J. WILLIAMSON, P.E. LICENSE NUMBER 81421 BURGESS & NIPLE, INC. 1800 PEMBROOK DRIVE, SUITE 265 ORLANDO, FL 32810	ROAD NO.	COUNTY	FINANCIAL PROJECT ID		663
					SR 400	POLK	430185-3-52-01		

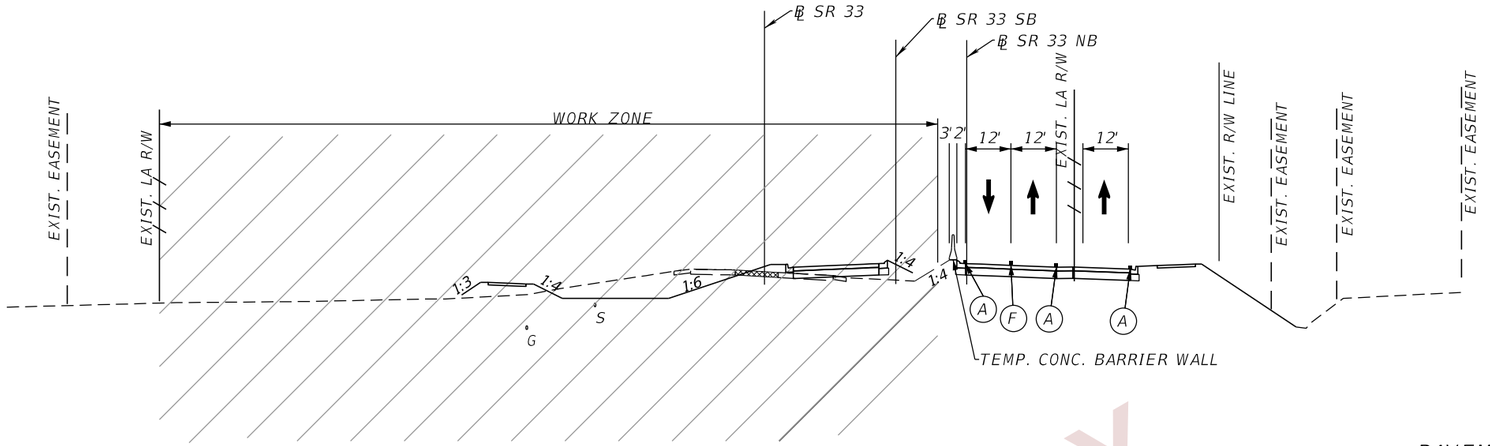

CRITICAL SECTION - PHASE 5, STAGE 2

℄ SR 33
STA. 441+00

PAVEMENT MARKING LEGEND

- (A) 6" SOLID WHITE TEMPORARY PAVEMENT MARKING
- (B) 6" SKIP WHITE TEMPORARY PAVEMENT MARKING (10'-30')
- (C) 6" SOLID YELLOW TEMPORARY PAVEMENT MARKING
- (D) 6" SKIP YELLOW TEMPORARY PAVEMENT MARKING (10'-30')
- (E) TEMPORARY PAVEMENT MARKINGS PREVIOUSLY APPLIED
- (F) 6" SOLID DOUBLE YELLOW TEMPORARY MARKING
- TEMPORARY PAVEMENT CURRENT PHASE
- TEMPORARY PAVEMENT CONSTRUCTED PREVIOUS PHASE

PRELIMINARY
subject to changes

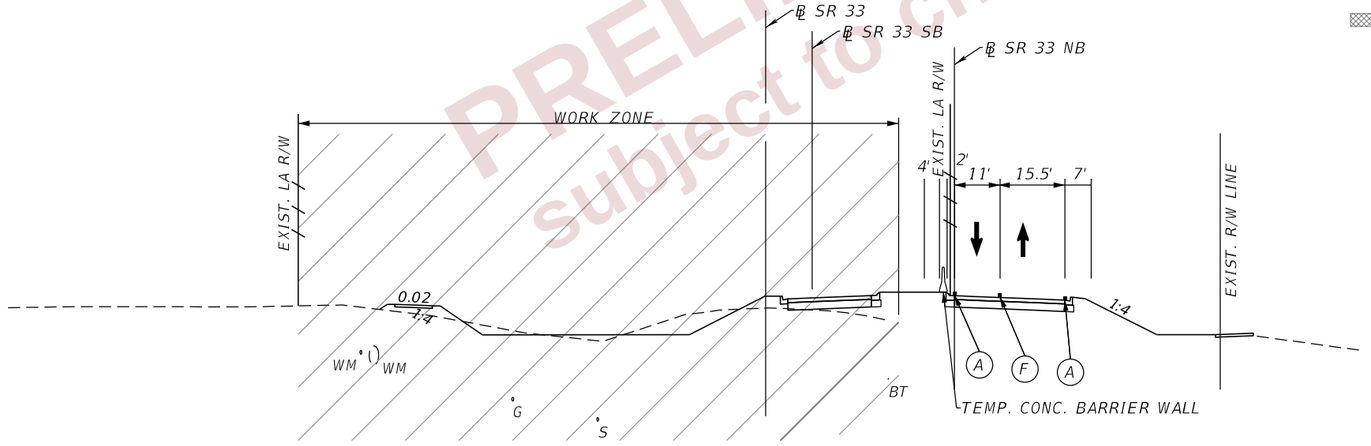

CRITICAL SECTION - PHASE 5, STAGE 2

℄ SR 33
STA. 437+00

REVISIONS				ENGINEER OF RECORD	STATE OF FLORIDA DEPARTMENT OF TRANSPORTATION			TTC PLAN (160) CRITICAL SECTIONS	SHEET NO.
DATE	DESCRIPTION	DATE	DESCRIPTION	RYAN J. WILLIAMSON, P.E. LICENSE NUMBER 81421 BURGESS & NIPLE, INC. 1800 PEMBROOK DRIVE, SUITE 265 ORLANDO, FL 32810	ROAD NO.	COUNTY	FINANCIAL PROJECT ID		664
					SR 400	POLK	430185-3-52-01		

THE OFFICIAL RECORD OF THIS SHEET IS THE ELECTRONIC FILE DIGITALLY SIGNED AND SEALED UNDER RULE 61G15-23.004, F.A.C.

2/28/2024 7:22:01 PM dav
P:\ORD_FDOT\WorkSets\FDOT\430185352O1-I-4\Roadway\TCP\TCTYRD01.dgn

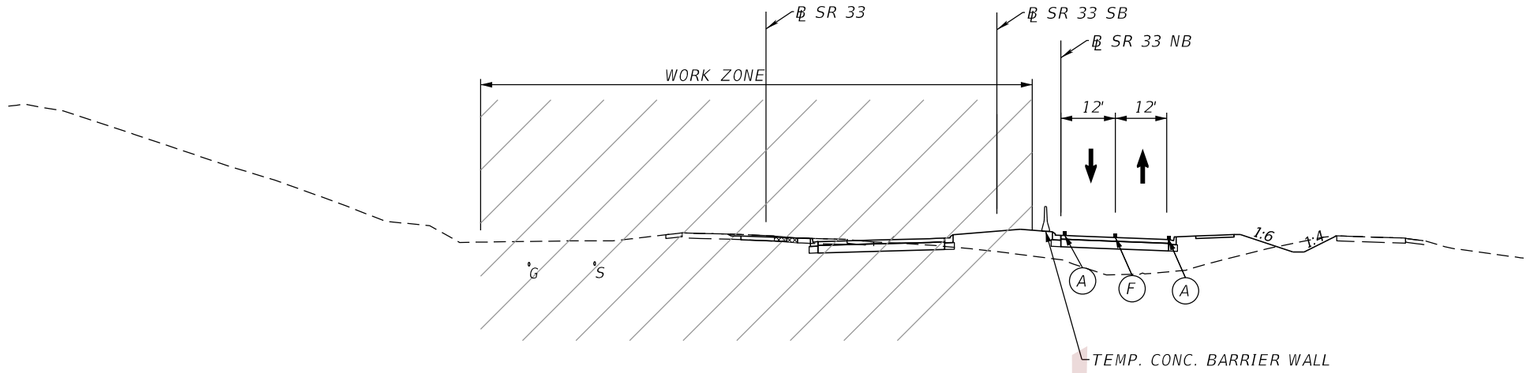

CRITICAL SECTION - PHASE 5, STAGE 2

℄ SR 33
STA. 445+00

PAVEMENT MARKING LEGEND

- (A) 6" SOLID WHITE TEMPORARY PAVEMENT MARKING
- (B) 6" SKIP WHITE TEMPORARY PAVEMENT MARKING (10'-30')
- (C) 6" SOLID YELLOW TEMPORARY PAVEMENT MARKING
- (D) 6" SKIP YELLOW TEMPORARY PAVEMENT MARKING (10'-30')
- (E) TEMPORARY PAVEMENT MARKINGS PREVIOUSLY APPLIED
- (F) 6" SOLID DOUBLE YELLOW TEMPORARY MARKING
- TEMPORARY PAVEMENT CURRENT PHASE
- TEMPORARY PAVEMENT CONSTRUCTED PREVIOUS PHASE

PRELIMINARY
subject to changes

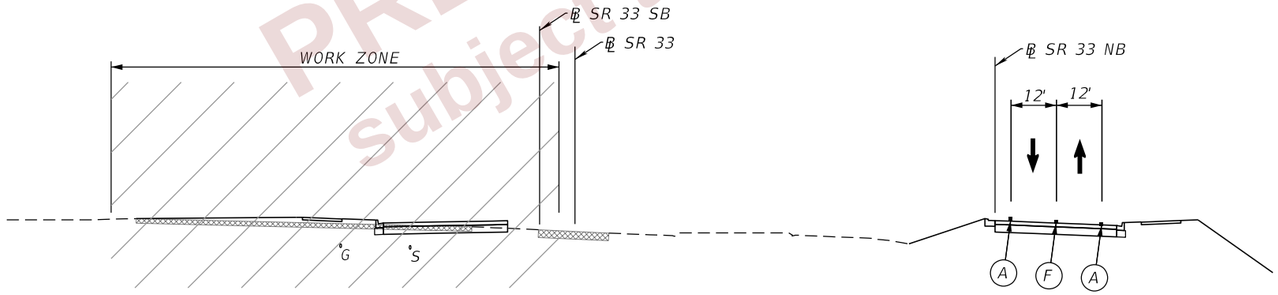

CRITICAL SECTION - PHASE 5, STAGE 2

℄ SR 33
STA. 443+50

REVISIONS				ENGINEER OF RECORD	STATE OF FLORIDA DEPARTMENT OF TRANSPORTATION			TTC PLAN (161) CRITICAL SECTIONS	SHEET NO.
DATE	DESCRIPTION	DATE	DESCRIPTION	RYAN J. WILLIAMSON, P.E. LICENSE NUMBER 81421 BURGESS & NIPLE, INC. 1800 PEMBROOK DRIVE, SUITE 265 ORLANDO, FL 32810	ROAD NO.	COUNTY	FINANCIAL PROJECT ID		665
					SR 400	POLK	430185-3-52-01		

THE OFFICIAL RECORD OF THIS SHEET IS THE ELECTRONIC FILE DIGITALLY SIGNED AND SEALED UNDER RULE 61G15-23.004, F.A.C.

2/28/2024 7:22:02 PM dav
P:\ORD_FDOT\WorkSets\FDOT\430185352O1-I-4\Roadway\TCP\TCTYRD01.dgn

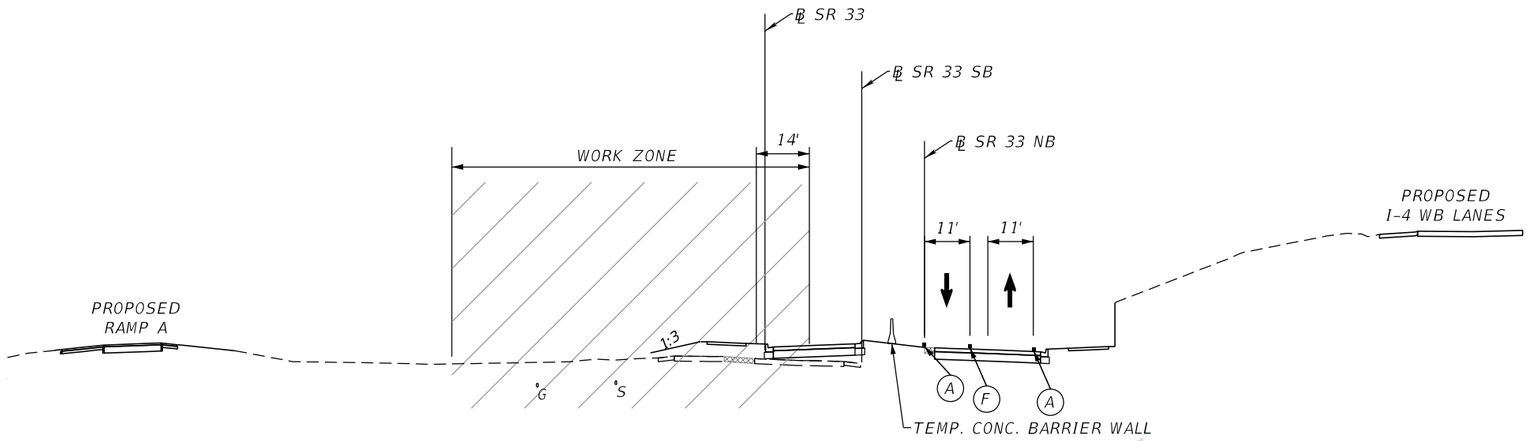

CRITICAL SECTION - PHASE 5, STAGE 2

℄ SR 33
STA. 451+00

PAVEMENT MARKING LEGEND

- (A) 6" SOLID WHITE TEMPORARY PAVEMENT MARKING
- (B) 6" SKIP WHITE TEMPORARY PAVEMENT MARKING (10'-30')
- (C) 6" SOLID YELLOW TEMPORARY PAVEMENT MARKING
- (D) 6" SKIP YELLOW TEMPORARY PAVEMENT MARKING (10'-30')
- (E) TEMPORARY PAVEMENT MARKINGS PREVIOUSLY APPLIED
- (F) 6" SOLID DOUBLE YELLOW TEMPORARY MARKING
- TEMPORARY PAVEMENT CURRENT PHASE
- TEMPORARY PAVEMENT CONSTRUCTED PREVIOUS PHASE

PRELIMINARY
subject to changes

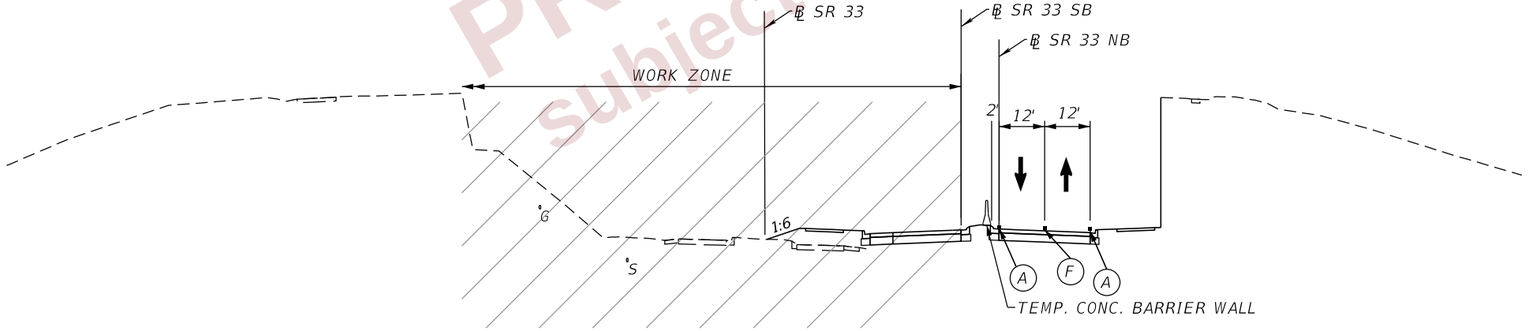

CRITICAL SECTION - PHASE 5, STAGE 2

℄ SR 33
STA. 448+00

REVISIONS				ENGINEER OF RECORD	STATE OF FLORIDA DEPARTMENT OF TRANSPORTATION			TTC PLAN (162) CRITICAL SECTIONS	SHEET NO.
DATE	DESCRIPTION	DATE	DESCRIPTION	RYAN J. WILLIAMSON, P.E. LICENSE NUMBER 81421 BURGESS & NIPLE, INC. 1800 PEMBROOK DRIVE, SUITE 265 ORLANDO, FL 32810	ROAD NO.	COUNTY	FINANCIAL PROJECT ID		666
					SR 400	POLK	430185-3-52-01		

THE OFFICIAL RECORD OF THIS SHEET IS THE ELECTRONIC FILE DIGITALLY SIGNED AND SEALED UNDER RULE 61G15-23.004, F.A.C.

2/28/2024 7:22:02 PM dayl
P:\ORD_FDOT\WorkSets\FDOT\430185352O1-I-4\Roadway\TCP\TCTYRD01.dgn

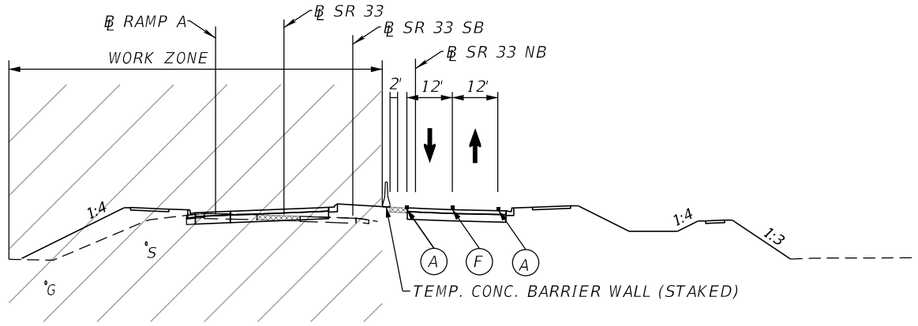

CRITICAL SECTION - PHASE 5, STAGE 2

℄ SR 33
STA. 456+00

PAVEMENT MARKING LEGEND

- (A) 6" SOLID WHITE TEMPORARY PAVEMENT MARKING
- (B) 6" SKIP WHITE TEMPORARY PAVEMENT MARKING (10'-30')
- (C) 6" SOLID YELLOW TEMPORARY PAVEMENT MARKING
- (D) 6" SKIP YELLOW TEMPORARY PAVEMENT MARKING (10'-30')
- (E) TEMPORARY PAVEMENT MARKINGS PREVIOUSLY APPLIED
- (F) 6" SOLID DOUBLE YELLOW TEMPORARY MARKING
- TEMPORARY PAVEMENT CURRENT PHASE
- TEMPORARY PAVEMENT CONSTRUCTED PREVIOUS PHASE

PRELIMINARY
subject to changes

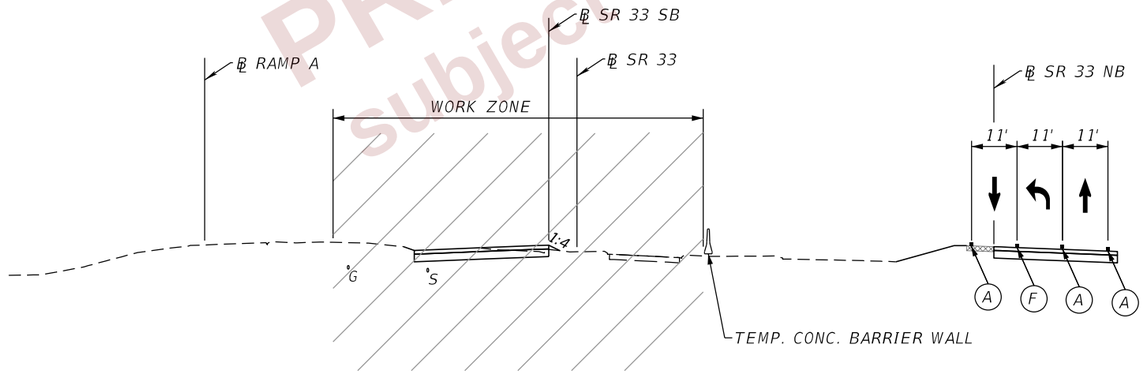

CRITICAL SECTION - PHASE 5, STAGE 2

℄ SR 33
STA. 452+50

REVISIONS				ENGINEER OF RECORD	STATE OF FLORIDA DEPARTMENT OF TRANSPORTATION			TTC PLAN (163) CRITICAL SECTIONS	SHEET NO.
DATE	DESCRIPTION	DATE	DESCRIPTION	RYAN J. WILLIAMSON, P.E. LICENSE NUMBER 81421 BURGESS & NIPLE, INC. 1800 PEMBROOK DRIVE, SUITE 265 ORLANDO, FL 32810	ROAD NO.	COUNTY	FINANCIAL PROJECT ID		667
					SR 400	POLK	430185-3-52-01		

THE OFFICIAL RECORD OF THIS SHEET IS THE ELECTRONIC FILE DIGITALLY SIGNED AND SEALED UNDER RULE 61G15-23.004, F.A.C.

2/28/2024 7:22:03 PM dayl
P:\ORD_FDOT\WorkSets\FDOT\430185352O1-I-4\Roadway\TCP\TCTYRD01.dgn

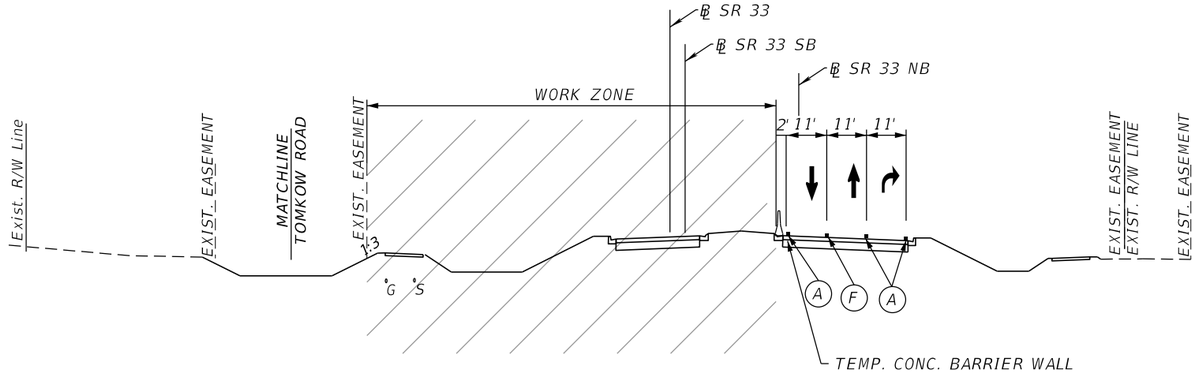

CRITICAL SECTION - PHASE 5, STAGE 2

℄ SR 33
STA. 470+00

PAVEMENT MARKING LEGEND

- (A) 6" SOLID WHITE TEMPORARY PAVEMENT MARKING
- (B) 6" SKIP WHITE TEMPORARY PAVEMENT MARKING (10'-30')
- (C) 6" SOLID YELLOW TEMPORARY PAVEMENT MARKING
- (D) 6" SKIP YELLOW TEMPORARY PAVEMENT MARKING (10'-30')
- (E) TEMPORARY PAVEMENT MARKINGS PREVIOUSLY APPLIED
- (F) 6" SOLID DOUBLE YELLOW TEMPORARY MARKING
- TEMPORARY PAVEMENT CURRENT PHASE
- TEMPORARY PAVEMENT CONSTRUCTED PREVIOUS PHASE

PRELIMINARY
subject to changes

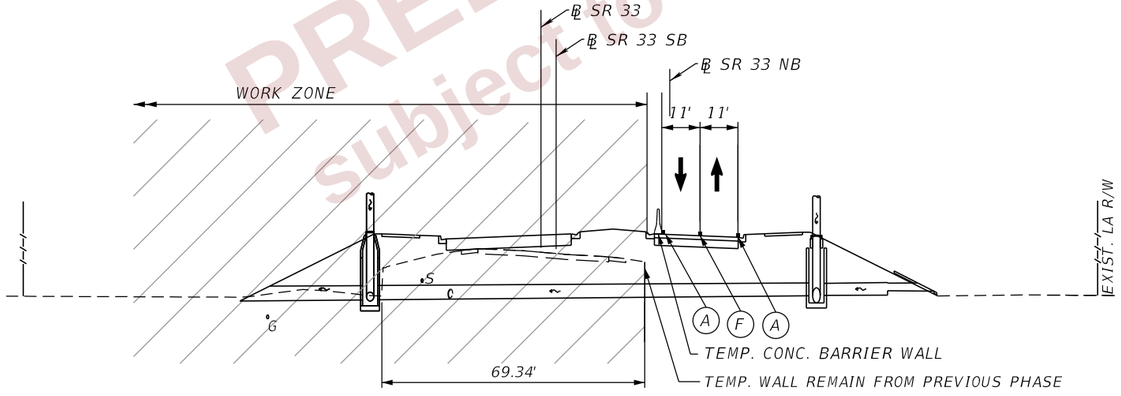

CRITICAL SECTION - PHASE 5, STAGE 2

℄ SR 33
STA. 460+00 (BOX CULVERT)

REVISIONS				ENGINEER OF RECORD	STATE OF FLORIDA DEPARTMENT OF TRANSPORTATION			TTC PLAN (164) CRITICAL SECTIONS	SHEET NO.
DATE	DESCRIPTION	DATE	DESCRIPTION	RYAN J. WILLIAMSON, P.E. LICENSE NUMBER 81421 BURGESS & NIPLE, INC. 1800 PEMBROOK DRIVE, SUITE 265 ORLANDO, FL 32810	ROAD NO.	COUNTY	FINANCIAL PROJECT ID		668
					SR 400	POLK	430185-3-52-01		

THE OFFICIAL RECORD OF THIS SHEET IS THE ELECTRONIC FILE DIGITALLY SIGNED AND SEALED UNDER RULE 61G15-23.004, F.A.C.

2/28/2024 7:22:04 PM dayl
P:\ORD_FDOT\WorkSets\FDOT\430185352O1-I-4\Roadway\TCP\TCTYRD01.dgn

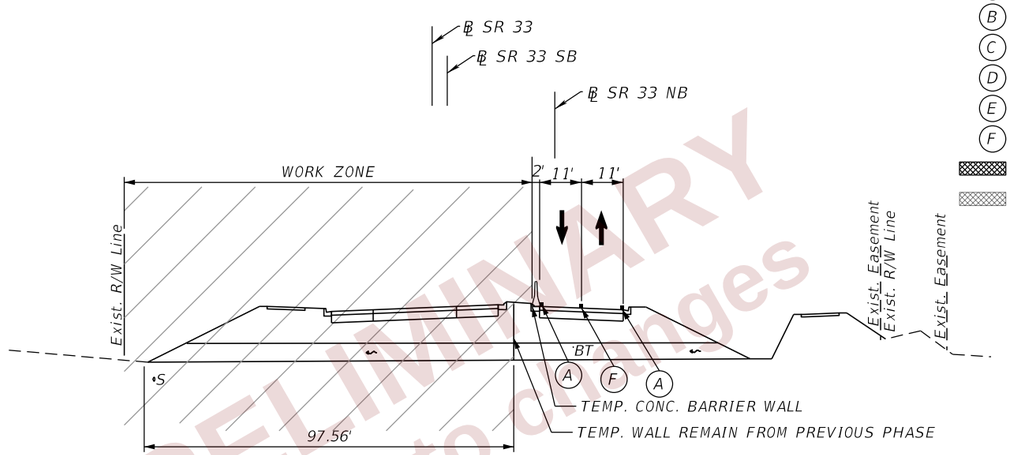

PAVEMENT MARKING LEGEND

- (A) 6" SOLID WHITE TEMPORARY PAVEMENT MARKING
- (B) 6" SKIP WHITE TEMPORARY PAVEMENT MARKING (10'-30')
- (C) 6" SOLID YELLOW TEMPORARY PAVEMENT MARKING
- (D) 6" SKIP YELLOW TEMPORARY PAVEMENT MARKING (10'-30')
- (E) TEMPORARY PAVEMENT MARKINGS PREVIOUSLY APPLIED
- (F) 6" SOLID DOUBLE YELLOW TEMPORARY MARKING
- TEMPORARY PAVEMENT CURRENT PHASE
- TEMPORARY PAVEMENT CONSTRUCTED PREVIOUS PHASE

PRELIMINARY subject to changes

CRITICAL SECTION - PHASE 5, STAGE 2

℄ SR 33
STA. 480+00 (BOX CULVERT)

THE OFFICIAL RECORD OF THIS SHEET IS THE ELECTRONIC FILE DIGITALLY SIGNED AND SEALED UNDER RULE 61G15-23.004, F.A.C.

REVISIONS				ENGINEER OF RECORD	STATE OF FLORIDA DEPARTMENT OF TRANSPORTATION			TTC PLAN (165) CRITICAL SECTIONS	SHEET NO.
DATE	DESCRIPTION	DATE	DESCRIPTION	RYAN J. WILLIAMSON, P.E. LICENSE NUMBER 81421 BURGESS & NIPLE, INC. 1800 PEMBROOK DRIVE, SUITE 265 ORLANDO, FL 32810	ROAD NO.	COUNTY	FINANCIAL PROJECT ID		669
					SR 400	POLK	430185-3-52-01		

2/28/2024 7:22:05 PM day
P:\ORD_FDOT\WorkSets\FDOT\430185352O1-I-4\Roadway\TCP\TCTYRD01.dgn

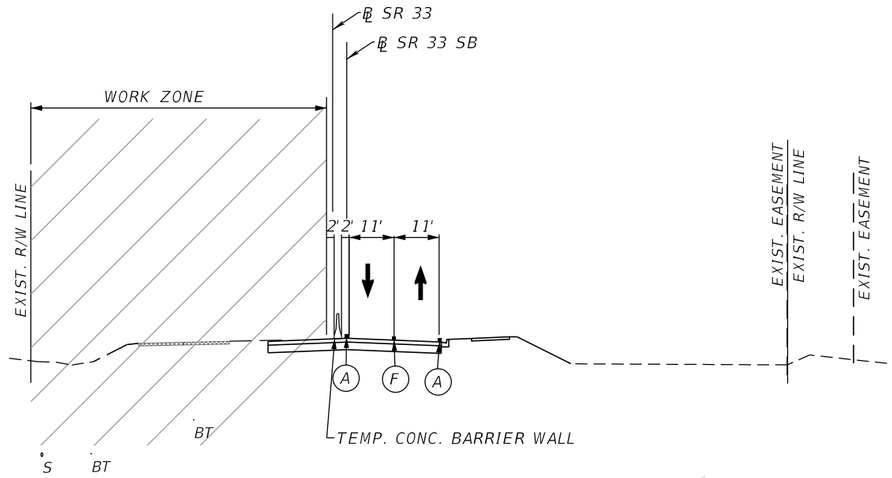

CRITICAL SECTION - PHASE 5, STAGE 2

℄ SR 33
STA. 493+00

PAVEMENT MARKING LEGEND

- (A) 6" SOLID WHITE TEMPORARY PAVEMENT MARKING
- (B) 6" SKIP WHITE TEMPORARY PAVEMENT MARKING (10'-30')
- (C) 6" SOLID YELLOW TEMPORARY PAVEMENT MARKING
- (D) 6" SKIP YELLOW TEMPORARY PAVEMENT MARKING (10'-30')
- (E) TEMPORARY PAVEMENT MARKINGS PREVIOUSLY APPLIED
- (F) 6" SOLID DOUBLE YELLOW TEMPORARY MARKING
- TEMPORARY PAVEMENT CURRENT PHASE
- TEMPORARY PAVEMENT CONSTRUCTED PREVIOUS PHASE

PRELIMINARY
subject to changes

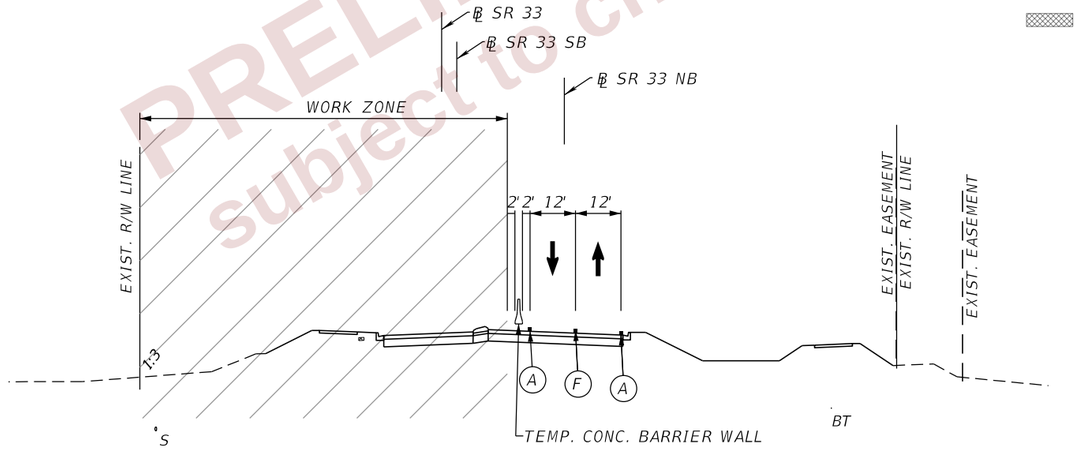

CRITICAL SECTION - PHASE 5, STAGE 2

℄ SR 33
STA. 485+00

REVISIONS				ENGINEER OF RECORD	STATE OF FLORIDA DEPARTMENT OF TRANSPORTATION			TTC PLAN (166) CRITICAL SECTIONS	SHEET NO.
DATE	DESCRIPTION	DATE	DESCRIPTION	RYAN J. WILLIAMSON, P.E. LICENSE NUMBER 81421 BURGESS & NIPLE, INC. 1800 PEMBROOK DRIVE, SUITE 265 ORLANDO, FL 32810	ROAD NO.	COUNTY	FINANCIAL PROJECT ID		670
					SR 400	POLK	430185-3-52-01		

THE OFFICIAL RECORD OF THIS SHEET IS THE ELECTRONIC FILE DIGITALLY SIGNED AND SEALED UNDER RULE 61G15-23.004, F.A.C.

2/28/2024 7:22:06 PM dav
P:\ORD_FDOT\WorkSets\FDOT\430185352O1-I-4\Roadway\TCP\TCTYRD01.dgn

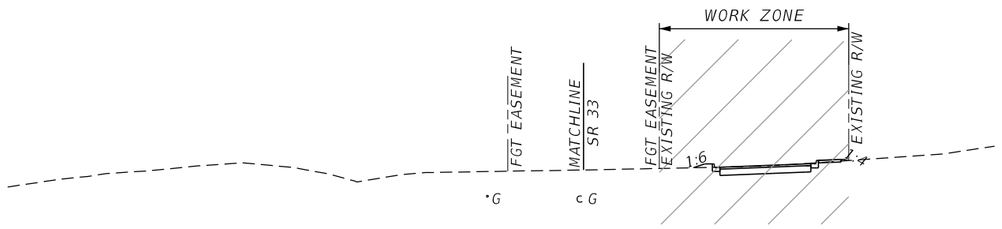

CRITICAL SECTION - PHASE 5, STAGE 2

℄ TOMKOW RD.
STA. 510+00

PAVEMENT MARKING LEGEND

- (A) 6" SOLID WHITE TEMPORARY PAVEMENT MARKING
- (B) 6" SKIP WHITE TEMPORARY PAVEMENT MARKING (10'-30')
- (C) 6" SOLID YELLOW TEMPORARY PAVEMENT MARKING
- (D) 6" SKIP YELLOW TEMPORARY PAVEMENT MARKING (10'-30')
- (E) TEMPORARY PAVEMENT MARKINGS PREVIOUSLY APPLIED
- (F) 6" SOLID DOUBLE YELLOW TEMPORARY MARKING
- TEMPORARY PAVEMENT CURRENT PHASE
- TEMPORARY PAVEMENT CONSTRUCTED PREVIOUS PHASE

PRELIMINARY
subject to changes

REVISIONS				ENGINEER OF RECORD	STATE OF FLORIDA DEPARTMENT OF TRANSPORTATION			TTC PLAN (167) CRITICAL SECTIONS	SHEET NO.
DATE	DESCRIPTION	DATE	DESCRIPTION	RYAN J. WILLIAMSON, P.E. LICENSE NUMBER 81421 BURGESS & NIPLE, INC. 1800 PEMBROOK DRIVE, SUITE 265 ORLANDO, FL 32810	ROAD NO.	COUNTY	FINANCIAL PROJECT ID		671
					SR 400	POLK	430185-3-52-01		

THE OFFICIAL RECORD OF THIS SHEET IS THE ELECTRONIC FILE DIGITALLY SIGNED AND SEALED UNDER RULE 61G15-23.004, F.A.C.

2/28/2024 7:22:06 PM dav
P:\ORD_FDOT\Work Sets\FDOT\430185352O1-I-4\Roadway\TCP\TCTYRD01.dgn

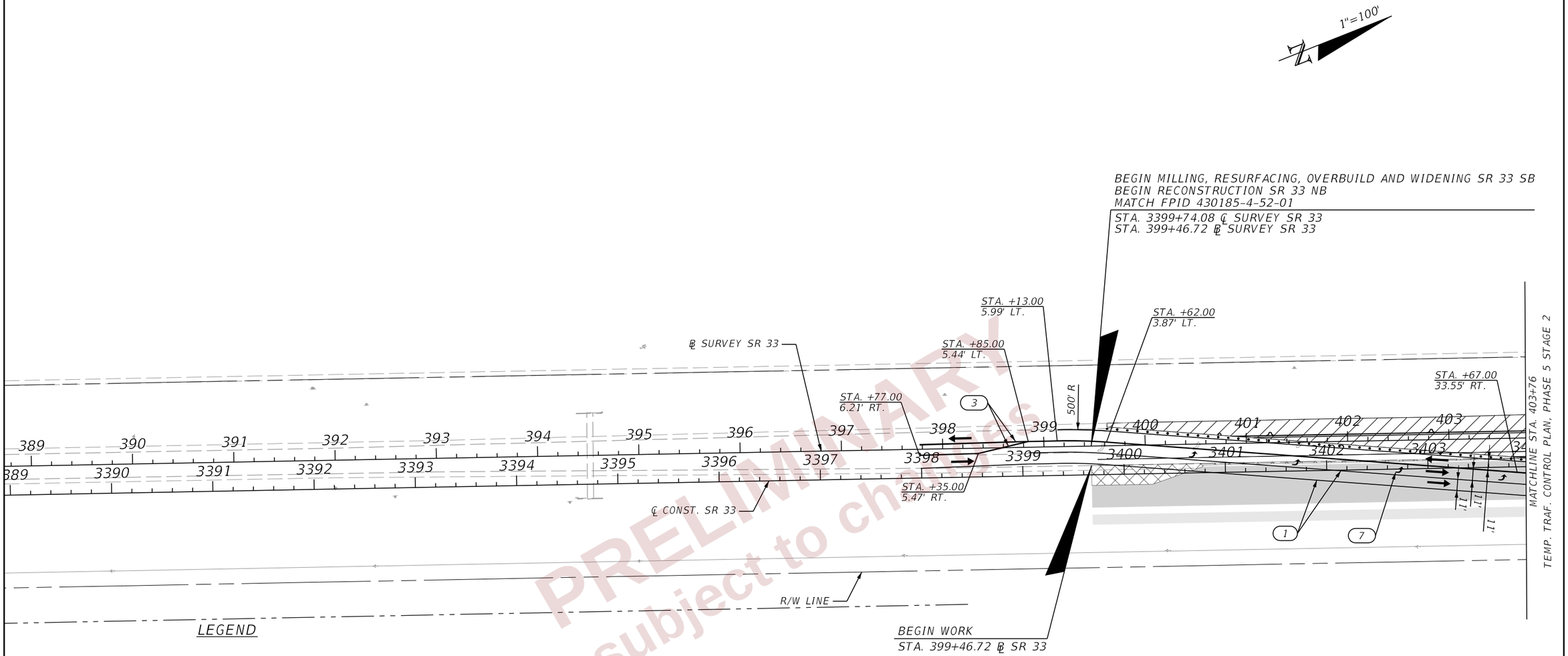

PRELIMINARY
subject to changes

THE OFFICIAL RECORD OF THIS SHEET IS THE ELECTRONIC FILE DIGITALLY SIGNED AND SEALED UNDER RULE 61G15-23.004, F.A.C.

REVISIONS			
DATE	DESCRIPTION	DATE	DESCRIPTION

ENGINEER OF RECORD

RYAN J. WILLIAMSON, P.E.
LICENSE NUMBER 81421
BURGESS & NIPLE, INC.
1800 PEMBROOK DRIVE, SUITE 265
ORLANDO, FL 32810

STATE OF FLORIDA
DEPARTMENT OF TRANSPORTATION

ROAD NO.	COUNTY	FINANCIAL PROJECT ID
SR 400	POLK	430185-3-52-01

TTC PLAN (168)
PHASE 5 STAGE 2
SR 33

SHEET NO. 672

2/28/2024 7:22:24 PM dgy
P:\ORD_FDOT\WorkSets\FDOT\430185201-I-4\Roadway\TCP\TCPLRDDP5S2_33.dgn

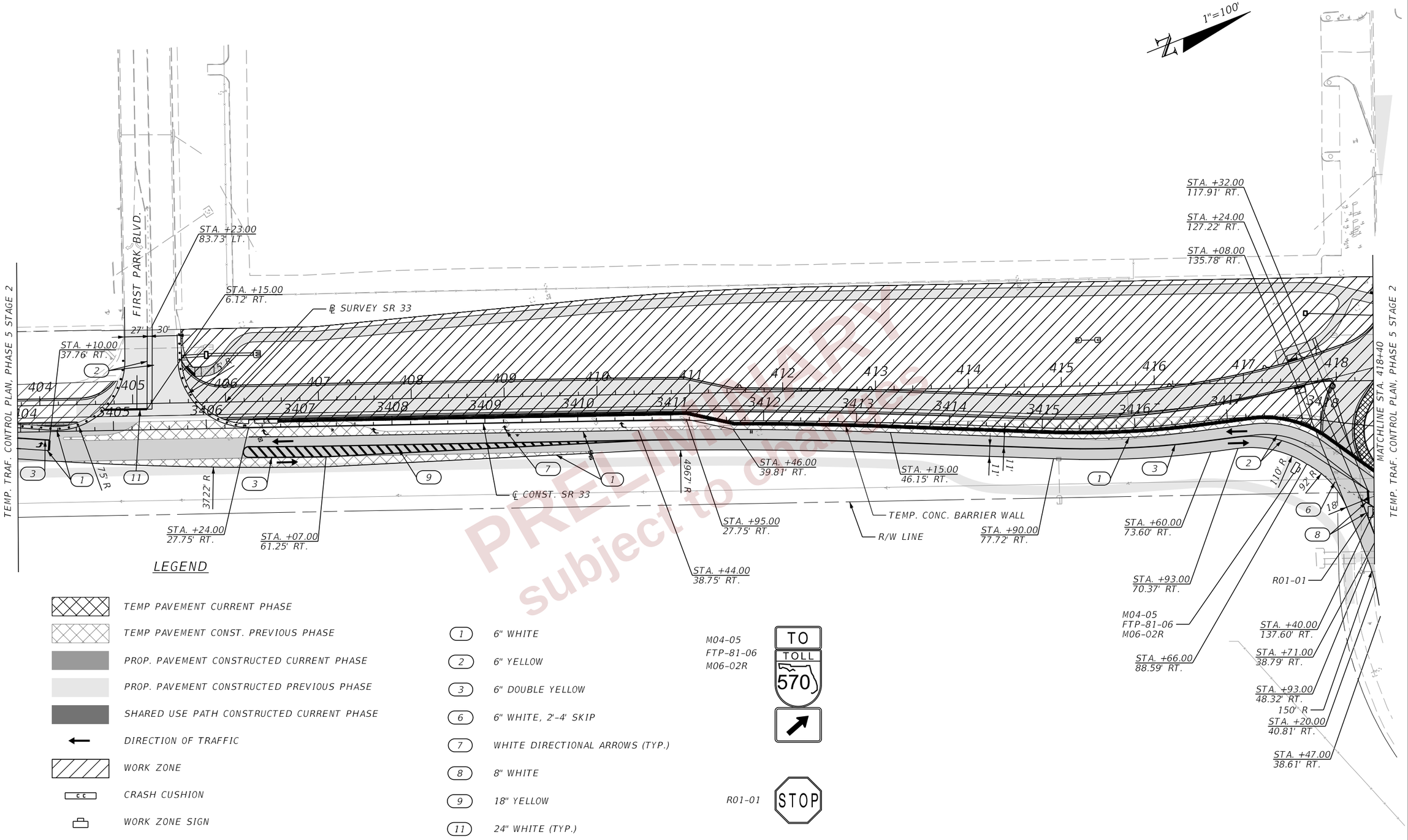

LEGEND

- TEMP PAVEMENT CURRENT PHASE
- TEMP PAVEMENT CONST. PREVIOUS PHASE
- PROP. PAVEMENT CONSTRUCTED CURRENT PHASE
- PROP. PAVEMENT CONSTRUCTED PREVIOUS PHASE
- SHARED USE PATH CONSTRUCTED CURRENT PHASE
- DIRECTION OF TRAFFIC
- WORK ZONE
- CRASH CUSHION
- WORK ZONE SIGN
- CHANNELIZING DEVICES (INDEX 102-600)

(1) 6" WHITE
(2) 6" YELLOW
(3) 6" DOUBLE YELLOW
(6) 6" WHITE, 2'-4' SKIP
(7) WHITE DIRECTIONAL ARROWS (TYP.)
(8) 8" WHITE
(9) 18" YELLOW
(11) 24" WHITE (TYP.)

M04-05
FTP-81-06
M06-02R

R01-01

PRELIMINARY
subject to change

THE OFFICIAL RECORD OF THIS SHEET IS THE ELECTRONIC FILE DIGITALLY SIGNED AND SEALED UNDER RULE 61G15-23.004, F.A.C.

REVISIONS				ENGINEER OF RECORD	STATE OF FLORIDA DEPARTMENT OF TRANSPORTATION			TTC PLAN (169) PHASE 5 STAGE 2 SR 33	SHEET NO.
DATE	DESCRIPTION	DATE	DESCRIPTION	RYAN J. WILLIAMSON, P.E. LICENSE NUMBER 81421 BURGESS & NIPLE, INC. 1800 PEMBROOK DRIVE, SUITE 265 ORLANDO, FL 32810	ROAD NO.	COUNTY	FINANCIAL PROJECT ID		673
					SR 400	POLK	430185-3-52-01		

2/28/2024 7:22:26 PM day
P:\ORD_FDOT\WorkSets\FDOT\430185201-1-4\Roadway\TCP\TCPLRD0P5S2_33.dgn

LEGEND

- TEMP PAVEMENT CURRENT PHASE
- TEMP PAVEMENT CONST. PREVIOUS PHASE
- PROP. PAVEMENT CONSTRUCTED CURRENT PHASE
- PROP. PAVEMENT CONSTRUCTED PREVIOUS PHASE
- SHARED USE PATH CONSTRUCTED CURRENT PHASE
- DIRECTION OF TRAFFIC
- WORK ZONE
- CRASH CUSHION
- WORK ZONE SIGN
- CHANNELIZING DEVICES (INDEX 102-600)
- (1) 6" WHITE
- (2) 6" YELLOW
- (3) 6" DOUBLE YELLOW
- (8) 8" WHITE
- (11) 24" WHITE (TYP.)

1"=100'

R01-01 STOP M04-05 FTP-81-06 M06-01L

TO TOLL 570

M03-01 FTP-17-06 M06-02L SOUTH 33

M03-03 FTP-17-06 M06-02R NORTH 33

℄ CONST. FIRST PARK

℄ SURVEY SR 33

TEMP. CONC. BARRIER WALL

R/W LINE

L/A R/W LINE

L.A. R/W LINE PER 16320-2403

℄ CONST. SR 33

℄ CONST. UNIVERSITY

MATCHLINE STA. 418+40
TEMP. TRAF. CONTROL PLAN, PHASE 5 STAGE 2

MATCHLINE STA. 433+00
TEMP. TRAF. CONTROL PLAN, PHASE 5 STAGE 2

432+05

M04-05 FTP-81-06 M06-01L R01-01

STA. +87.00 120.00' RT.
STA. +19.00 108.65 RT.
STA. +98.00 102.85' RT.
STA. +34.00 141.16' RT.
STA. +94.00 153.81' RT.
STA. +51.00 75.18' LT.
STA. +76.00 156.91' RT.
STA. +11.00 132.37' RT.
STA. +69.00 3.14' LT.
STA. +82.00 3.13' LT.
STA. +43.00 108.72' RT.
STA. +92.00 12.43' RT.
STA. +27.00 15.25' LT.
STA. +35.00 15.77' LT.
STA. +64.00 26.87' LT.
STA. +21.00 60.75' RT.

978' R
65' R
60' R
100' R
200' R
275' R

PRELIMINARY
Subject to change

THE OFFICIAL RECORD OF THIS SHEET IS THE ELECTRONIC FILE DIGITALLY SIGNED AND SEALED UNDER RULE 61G15-23.004, F.A.C.

2/28/2024 7:22:28 PM day
P:\ORD_FDOT\WorkSets\FDOT\430185352O1-I-4\Roadway\TCP\TCPLRDOP552_33.dgn

REVISIONS			
DATE	DESCRIPTION	DATE	DESCRIPTION

ENGINEER OF RECORD
RYAN J. WILLIAMSON, P.E.
LICENSE NUMBER 81421
BURGESS & NIPLE, INC.
1800 PEMBROOK DRIVE, SUITE 265
ORLANDO, FL 32810

STATE OF FLORIDA
DEPARTMENT OF TRANSPORTATION

ROAD NO.	COUNTY	FINANCIAL PROJECT ID
SR 400	POLK	430185-3-52-01

TTC PLAN (170)
PHASE 5 STAGE 2
SR 33

SHEET NO. 674

M03-01
FTP-17-06
M06-02L

M03-03
FTP-17-06
M06-02R

R01-02

W04-02R

1"=100'

EASEMENT

R/W LINE

EASEMENT

℄ RAMP B

TEMP. CONC. BARRIER WALL

EASEMENT

L/A R/W LINE

R01-01

M03-02
M01-01
M06-02R

M03-02
M01-01
M05-01L

Ⓐ STA. +59.00 43.95' RT.

Ⓑ STA. +37.00 7.40' RT.

Ⓒ STA. +89.00 23.00' RT.

Ⓓ STA. +99.00 92.42' RT.

STA. +73.04 5.48' RT.

STA. +94.10 4.97' RT.

STA. +29.59 27.47' LT.

STA. +81.00 6.03' RT.

STA. +72.00 66.67' RT.

STA. +74.00 76.29' RT.

STA. +40.76 34.35' LT.

STA. +50.07 5.65' RT.

STA. +70.57 2.55' RT.

M03-02
M01-01
M05-01L

L/A R/W LINE

℄ SURVEY SR 33

℄ SURVEY I-4

℄ CONST. I-4

MATCHLINE STA. 433+00
TEMP. TRAF. CONTROL PLAN, PHASE 5 STAGE 2

MATCHLINE STA. 447+00
TEMP. TRAF. CONTROL PLAN, PHASE 5 STAGE 2

L/A R/W LINE

STA. +53.00 60.75' RT.

℄ CONST. SR 33

TEMP. CONC. BARRIER WALL

R/W LINE

STA. +51.00 63.20' RT.

STA. +29.00 74.48' RT.

STA. +79.00 62.16' RT.

TEMP. CONC. BARRIER WALL

STA. +53.00 82.23' RT.

STA. +19.00 62.05' RT.

STA. +25.00 86.32' RT.

STA. +52.00 102.59' RT.

STA. +67.00 72.77' RT.

STA. +61.00 75.00' RT.

EASEMENT

STA. +14.00 13.11' LT.

R01-02

STA. +06.00 47.06' RT.

STA. +11.00 43.87' RT.

STA. +57.00 80.51' RT.

STA. +87.00 16.61' LT.

R01-01

STA. +22.00 3.82' LT.

STA. +88.00 125.00' RT.

STA. +82.00 2.82' RT.

R01-02

L/A R/W LINE

W04-02R

℄ RAMP C

STA. +10.00 13.68' LT.

EASEMENT

STA. +64.71 9.58' LT.

STA. +96.00 148.79' RT.

STA. +77.00 104.90' RT.

TEMP. CONC. BARRIER WALL

STA. +19.00 143.53' RT.

STA. +28.00 137.12' RT.

STA. +46.00 20.19' LT.

M03-02
M01-01
M05-01L

R01-01 STOP

M03-02
M01-01
M06-02R

EAST INTERSTATE 4

M03-02
M01-01
M05-01L

EAST INTERSTATE 4

NORTH

SOUTH

M03-01
FTP-17-06
M06-02L

NORTH 33

M03-03
FTP-17-06
M06-02R

SOUTH 33

R01-02 YIELD

W04-02R

LEGEND

- TEMP PAVEMENT CURRENT PHASE
- TEMP PAVEMENT CONST. PREVIOUS PHASE
- PROP. PAVEMENT CONSTRUCTED CURRENT PHASE
- PROP. PAVEMENT CONSTRUCTED PREVIOUS PHASE
- SHARED USE PATH CONSTRUCTED CURRENT PHASE
- PROP. PAVEMENT CONSTRUCTION DURING DETOUR
- DIRECTION OF TRAFFIC
- WORK ZONE
- CRASH CUSHION
- WORK ZONE SIGN
- CHANNELIZING DEVICES (INDEX 102-600)

(1) 6" WHITE
(2) 6" YELLOW
(3) 6" DOUBLE YELLOW
(4) 6" WHITE, 10'-30' SKIP
(5) 6" YELLOW, 2'-4' SKIP
(6) 6" WHITE, 2'-4' SKIP
(7) WHITE DIRECTIONAL ARROWS (TYP.)
(8) 8" WHITE
(11) 24' WHITE

PRELIMINARY subject to change

THE OFFICIAL RECORD OF THIS SHEET IS THE ELECTRONIC FILE DIGITALLY SIGNED AND SEALED UNDER RULE 61G15-23.004, F.A.C.

REVISIONS			
DATE	DESCRIPTION	DATE	DESCRIPTION

ENGINEER OF RECORD
RYAN J. WILLIAMSON, P.E.
LICENSE NUMBER 81421
BURGESS & NIPLE, INC.
1800 PEMBROOK DRIVE, SUITE 265
ORLANDO, FL 32810

STATE OF FLORIDA
DEPARTMENT OF TRANSPORTATION

ROAD NO.	COUNTY	FINANCIAL PROJECT ID
SR 400	POLK	430185-3-52-01

TTC PLAN (171)
PHASE 5 STAGE 2
SR 33

SHEET NO. 675

2/28/2024 7:22:30 PM day
P:\ORD_FDOT\WorkSets\FDOT\430185352\01-I-4\Roadway\TCP\TCPLRDP5S2_33.dgn

M03-01
FTP-17-06
M06-02L

M03-03
FTP-17-06
M06-02R

M03-04
M01-01
M06-02R

R01-02

R01-01

M03-04
M01-01
M06-02L

LEGEND

1	6" WHITE	5	6" YELLOW, 2'-4' SKIP
2	6" YELLOW	6	6" WHITE, 2'-4' SKIP
3	6" DOUBLE YELLOW	8	8" WHITE
		9	18" YELLOW
		11	24' WHITE

- TEMP PAVEMENT CURRENT PHASE
- TEMP PAVEMENT CONST. PREVIOUS PHASE
- PROP. PAVEMENT CONSTRUCTED CURRENT PHASE
- PROP. PAVEMENT CONSTRUCTED PREVIOUS PHASE
- SHARED USE PATH CONSTRUCTED CURRENT PHASE
- PROP. PAVEMENT CONSTUCT DURING DETOUR
- DIRECTION OF TRAFFIC
- WORK ZONE
- CRASH CUSHION
- WORK ZONE SIGN
- CHANNELIZING DEVICES (INDEX 102-600)

1"=100'

MATCHLINE STA. 447+00
TEMP. TRAF. CONTROL PLAN, PHASE 5 STAGE 2

STA. +69.00
15.00' RT.

STA. +52.00
15.00' RT.

℄ RAMP A
STA. +43.00
18.04' RT.

R01-02
STA. +76.00
18.04' RT.

STA. +72.00
47.61' RT.

TEMP. CONC. BARRIER WALL

STA. +77.00
18.94' RT.

STA. +87.00
52.11' RT.

STA. +11.00
18.00' RT.

TEMP. CONC. BARRIER WALL

℄ SURVEY SR 33

L/A R/W LINE

℄ CONST. SR 33

STA. +91.00
22.58' RT.

M03-04
M01-01
M06-02R

STA. +91.00
87.44' RT.

STA. +04.00
129.69' RT.

STA. +78.00
138.62' RT.

STA. +49.00
66.80' RT.
M03-04
M01-01
M06-02L

STA. +66.00
74.39' RT.

STA. +69.00
62.12' RT.

STA. +79.00
52.00' RT.

STA. +60.00
30.10' RT.

STA. +59.00
36.33' RT.

L/A R/W LINE

STA. +61.00
104.62' RT.

STA. +99.00
111.46' RT.

R01-02

STA. +44.00
111.47' RT.

R01-01
STA. +57.00
47.63' RT.

STA. +10.00
5.95' RT.

STA. +46.00
15.37' RT.

STA. +31.00
77.09' RT.

STA. +35.00
93.91' RT.

STA. +66.00
120.51' RT.

℄ SURVEY I-4

℄ CONST. I-4

STA. +21.00
40.94' RT.

STA. +41.00
4.33' RT.

℄ RAMP D

STA. +72.00
40.31' RT.

STA. +47.68
28.31' RT.

℄ RAMP C

MATCHLINE STA. 461+00
TEMP. TRAF. CONTROL PLAN, PHASE 5 STAGE 2

THE OFFICIAL RECORD OF THIS SHEET IS THE ELECTRONIC FILE DIGITALLY SIGNED AND SEALED UNDER RULE 61G15-23.004, F.A.C.

2/28/2024 7:22:33 PM day
P:\ORD_FDOT\WorkSets\FDOT\430185352O1-I-4\Roadway\TCP\TCPLRD0P552_33.dgn

REVISIONS				ENGINEER OF RECORD	STATE OF FLORIDA DEPARTMENT OF TRANSPORTATION			TTC PLAN (172) PHASE 5 STAGE 2 SR 33	SHEET NO.
DATE	DESCRIPTION	DATE	DESCRIPTION	RYAN J. WILLIAMSON, P.E. LICENSE NUMBER 81421 BURGESS & NIPLE, INC. 1800 PEMBROOK DRIVE, SUITE 265 ORLANDO, FL 32810	ROAD NO.	COUNTY	FINANCIAL PROJECT ID		676
					SR 400	POLK	430185-3-52-01		

LEGEND

- TEMP PAVEMENT CURRENT PHASE
- TEMP PAVEMENT CONST. PREVIOUS PHASE
- PROP. PAVEMENT CONSTRUCTED CURRENT PHASE
- PROP. PAVEMENT CONSTRUCTED PREVIOUS PHASE
- SHARED USE PATH CONSTRUCTED CURRENT PHASE
- DIRECTION OF TRAFFIC
- WORK ZONE
- CRASH CUSHION
- WORK ZONE SIGN
- CHANNELIZING DEVICES (INDEX 102-600)
  - (1) 6" WHITE
  - (3) 6" DOUBLE YELLOW

1"=100'

MATCHLINE STA. 461+00
TEMP. TRAF. CONTROL PLAN, PHASE 5 STAGE 2

R/W LINE
L/A R/W LINE
TEMP. CONC. BARRIER WALL
EASEMENT
℄ SURVEY SR 33
℄ CONST. SR 33
℄ CONST. TOMKOW
5700' R
50' R
40' R

STA. +13.00 30.00' RT.
STA. +43.00 30.00' RT.
STA. +28.00 52.00' RT.
STA. +75.00 63.06' RT.
STA. +15.00 52.00' RT.
STA. +97.00 118.59' RT.
STA. +09.00 100.81' RT.
STA. +73.00 52.00' RT.
STA. +73.00 30.00' RT.
STA. +86.00 52.00' RT.
STA. +46.00 95.69' RT.
STA. +63.00 119.73' RT.
STA. +88.00 52.00' RT.
STA. +65.00 63.09' RT.
STA. +18.00 52.00' RT.

MATCHLINE STA. 475+00
TEMP. TRAF. CONTROL PLAN, PHASE 5 STAGE 2

PRELIMINARY subject to change

REVISIONS				ENGINEER OF RECORD	STATE OF FLORIDA DEPARTMENT OF TRANSPORTATION			TTC PLAN (173) PHASE 5 STAGE 2 SR 33	SHEET NO.
DATE	DESCRIPTION	DATE	DESCRIPTION	RYAN J. WILLIAMSON, P.E. LICENSE NUMBER 81421 BURGESS & NIPLE, INC. 1800 PEMBROOK DRIVE, SUITE 265 ORLANDO, FL 32810	ROAD NO.	COUNTY	FINANCIAL PROJECT ID		677
					SR 400	POLK	430185-3-52-01		

THE OFFICIAL RECORD OF THIS SHEET IS THE ELECTRONIC FILE DIGITALLY SIGNED AND SEALED UNDER RULE 61G15-23.004, F.A.C.

2/28/2024 7:22:37 PM day
P:\ORD_FDOT\WorkSets\FDOT\430185352O1-I-4\Roadway\TCP\TCPLR00P552_33.dgn

LEGEND

- TEMP PAVEMENT CURRENT PHASE
- TEMP PAVEMENT CONST. PREVIOUS PHASE
- PROP. PAVEMENT CONSTRUCTED CURRENT PHASE
- PROP. PAVEMENT CONSTRUCTED PREVIOUS PHASE
- SHARED USE PATH CONSTRUCTED CURRENT PHASE
- DIRECTION OF TRAFFIC
- WORK ZONE
- CRASH CUSHION
- WORK ZONE SIGN

- (1) 6" WHITE
- (3) 6" DOUBLE YELLOW
- (6) 6" WHITE, 2'-4' SKIP

1"=100'

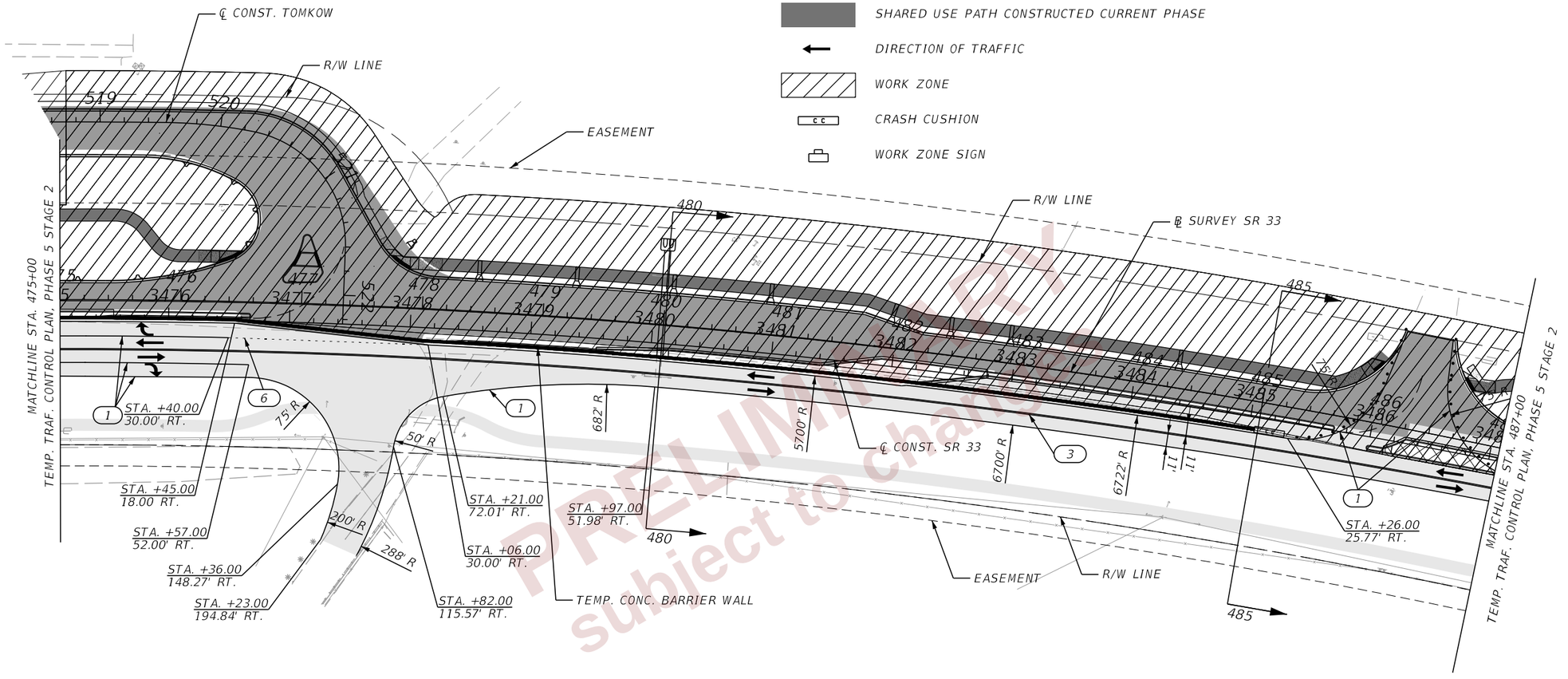

PRELIMINARY
subject to change

REVISIONS				ENGINEER OF RECORD	STATE OF FLORIDA DEPARTMENT OF TRANSPORTATION			TTC PLAN (174) PHASE 5 STAGE 2 SR 33	SHEET NO.
DATE	DESCRIPTION	DATE	DESCRIPTION	RYAN J. WILLIAMSON, P.E. LICENSE NUMBER 81421 BURGESS & NIPLE, INC. 1800 PEMBROOK DRIVE, SUITE 265 ORLANDO, FL 32810	ROAD NO.	COUNTY	FINANCIAL PROJECT ID		678
					SR 400	POLK	430185-3-52-01		

THE OFFICIAL RECORD OF THIS SHEET IS THE ELECTRONIC FILE DIGITALLY SIGNED AND SEALED UNDER RULE 61G15-23.004, F.A.C.

2/28/2024 7:22:39 PM day
P:\ORD_FDOT\WorkSets\FDOT\430185352O1-I-4\Roadway\TCP\TCPLRDDP5S2_33.dgn

LEGEND

- TEMP PAVEMENT CURRENT PHASE
- TEMP PAVEMENT CONST. PREVIOUS PHASE
- PROP. PAVEMENT CONSTRUCTED CURRENT PHASE
- PROP. PAVEMENT CONSTRUCTED PREVIOUS PHASE
- SHARED USE PATH CONSTRUCTED CURRENT PHASE
- DIRECTION OF TRAFFIC
- WORK ZONE
- CRASH CUSHION
- WORK ZONE SIGN
- (1) 6" WHITE
- (3) 6" DOUBLE YELLOW

1"=100'

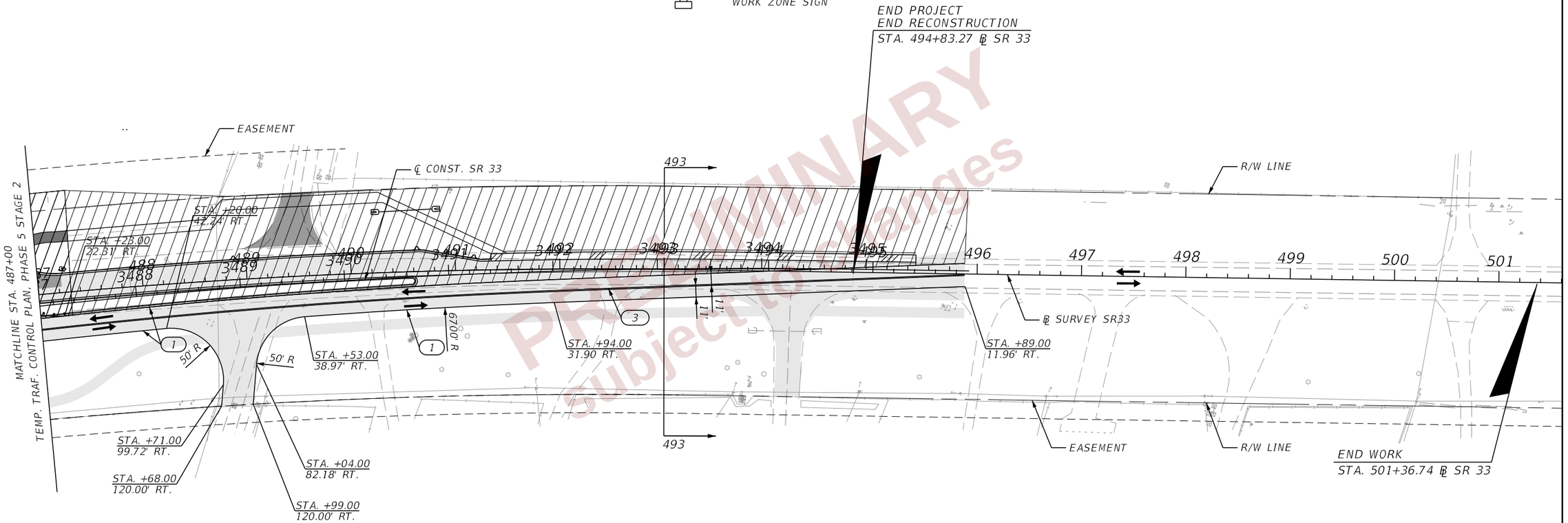

PRELIMINARY
subject to changes

REVISIONS				ENGINEER OF RECORD	STATE OF FLORIDA DEPARTMENT OF TRANSPORTATION			TTC PLAN (175) PHASE 5 STAGE 2 SR 33	SHEET NO.
DATE	DESCRIPTION	DATE	DESCRIPTION	RYAN J. WILLIAMSON, P.E. LICENSE NUMBER 81421 BURGESS & NIPLE, INC. 1800 PEMBROOK DRIVE, SUITE 265 ORLANDO, FL 32810	ROAD NO.	COUNTY	FINANCIAL PROJECT ID		679
					SR 400	POLK	430185-3-52-01		

THE OFFICIAL RECORD OF THIS SHEET IS THE ELECTRONIC FILE DIGITALLY SIGNED AND SEALED UNDER RULE 61G15-23.004, F.A.C.

2/28/2024 7:22:40 PM dgv
P:\ORD_FDOT\WorkSets\FDOT\430185352O1-I-4\Roadway\TCP\TCPLRD0P552_33.dgn

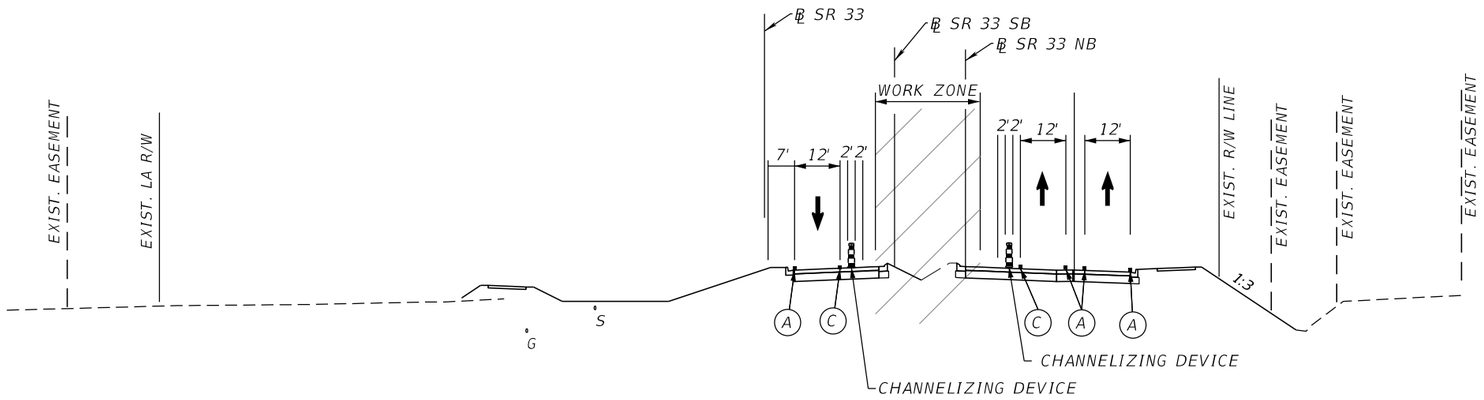

CRITICAL SECTION - PHASE 5, STAGE 3

℄ SR 33
STA. 441+00

PAVEMENT MARKING LEGEND

- (A) 6" SOLID WHITE TEMPORARY PAVEMENT MARKING
- (B) 6" SKIP WHITE TEMPORARY PAVEMENT MARKING (10'-30')
- (C) 6" SOLID YELLOW TEMPORARY PAVEMENT MARKING
- (D) 6" SKIP YELLOW TEMPORARY PAVEMENT MARKING (10'-30')
- (E) TEMPORARY PAVEMENT MARKINGS PREVIOUSLY APPLIED
- (F) 6" SOLID DOUBLE YELLOW TEMPORARY MARKING
- TEMPORARY PAVEMENT CURRENT PHASE
- TEMPORARY PAVEMENT CONSTRUCTED PREVIOUS PHASE

PRELIMINARY
subject to changes

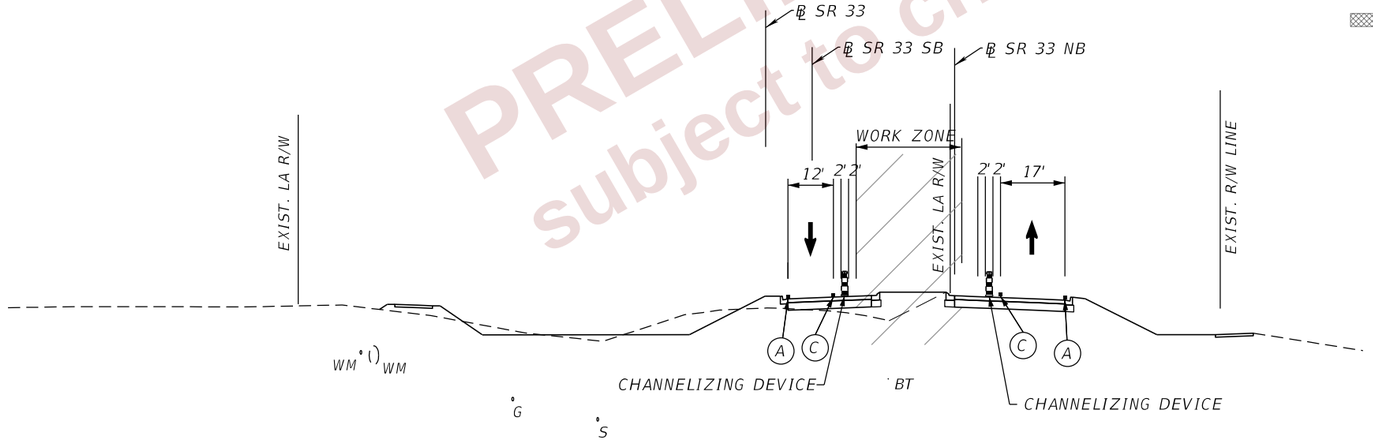

CRITICAL SECTION - PHASE 5, STAGE 3

℄ SR 33
STA. 437+00

REVISIONS				ENGINEER OF RECORD	STATE OF FLORIDA DEPARTMENT OF TRANSPORTATION			TTC PLAN (176) CRITICAL SECTIONS	SHEET NO.
DATE	DESCRIPTION	DATE	DESCRIPTION	RYAN J. WILLIAMSON, P.E. LICENSE NUMBER 81421 BURGESS & NIPLE, INC. 1800 PEMBROOK DRIVE, SUITE 265 ORLANDO, FL 32810	ROAD NO.	COUNTY	FINANCIAL PROJECT ID		680
					SR 400	POLK	430185-3-52-01		

THE OFFICIAL RECORD OF THIS SHEET IS THE ELECTRONIC FILE DIGITALLY SIGNED AND SEALED UNDER RULE 61G15-23.004, F.A.C.

2/28/2024 7:22:51 PM dav
P:\ORD_FDOT\WorkSets\FDOT\430185352O1-I-4\Roadway\TCP\TCTYRD01.dgn

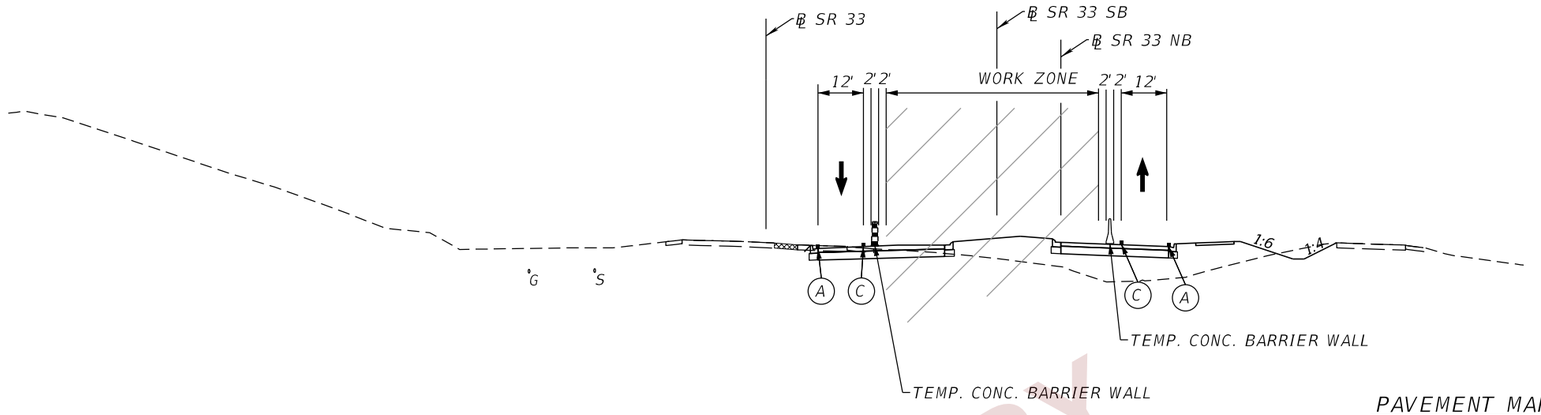

CRITICAL SECTION - PHASE 5, STAGE 3

℄ SR 33
STA. 445+00

PAVEMENT MARKING LEGEND

- (A) 6" SOLID WHITE TEMPORARY PAVEMENT MARKING
- (B) 6" SKIP WHITE TEMPORARY PAVEMENT MARKING (10'-30')
- (C) 6" SOLID YELLOW TEMPORARY PAVEMENT MARKING
- (D) 6" SKIP YELLOW TEMPORARY PAVEMENT MARKING (10'-30')
- (E) TEMPORARY PAVEMENT MARKINGS PREVIOUSLY APPLIED
- (F) 6" SOLID DOUBLE YELLOW TEMPORARY MARKING
- TEMPORARY PAVEMENT CURRENT PHASE
- TEMPORARY PAVEMENT CONSTRUCTED PREVIOUS PHASE

PRELIMINARY
subject to changes

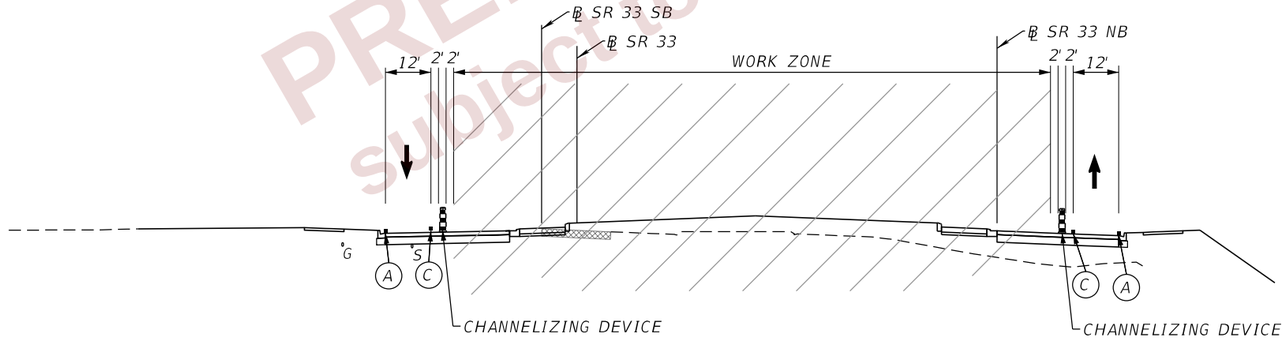

CRITICAL SECTION - PHASE 5, STAGE 3

℄ SR 33
STA. 443+50

REVISIONS				ENGINEER OF RECORD	STATE OF FLORIDA DEPARTMENT OF TRANSPORTATION			TTC PLAN (177) CRITICAL SECTIONS	SHEET NO.
DATE	DESCRIPTION	DATE	DESCRIPTION	RYAN J. WILLIAMSON, P.E. LICENSE NUMBER 81421 BURGESS & NIPLE, INC. 1800 PEMBROOK DRIVE, SUITE 265 ORLANDO, FL 32810	ROAD NO.	COUNTY	FINANCIAL PROJECT ID		681
					SR 400	POLK	430185-3-52-01		

THE OFFICIAL RECORD OF THIS SHEET IS THE ELECTRONIC FILE DIGITALLY SIGNED AND SEALED UNDER RULE 61G15-23.004, F.A.C.

2/28/2024 7:22:52 PM dav
P:\ORD_FDOT\WorkSets\FDOT\430185352O1-I-4\Roadway\TCP\TCTYRD01.dgn

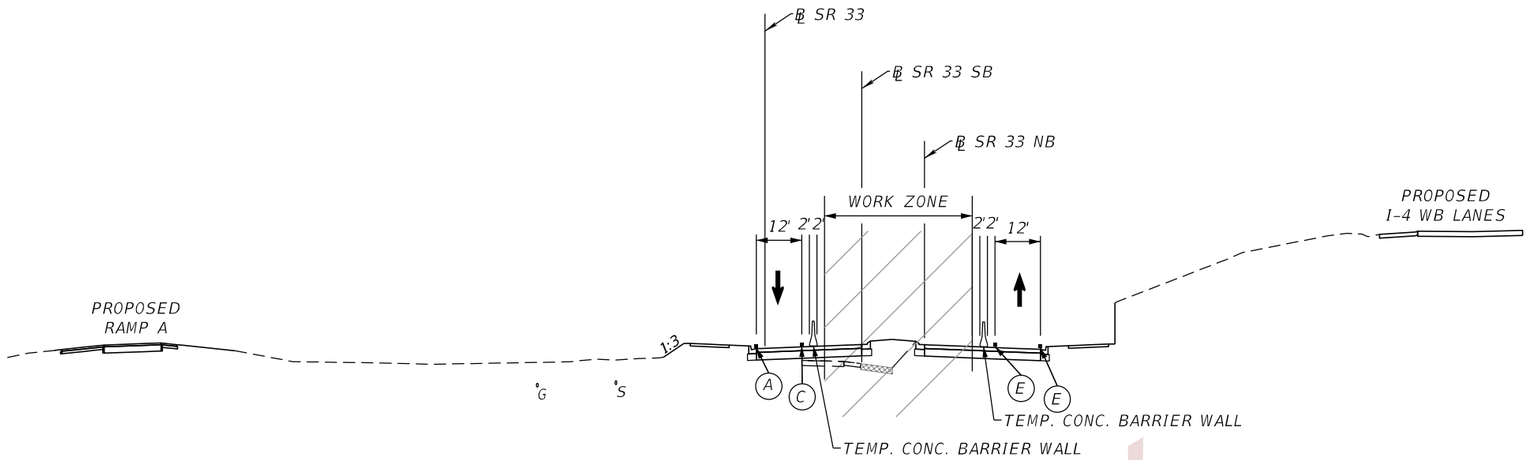

CRITICAL SECTION - PHASE 5, STAGE 3

℄ SR 33
STA. 451+00

PAVEMENT MARKING LEGEND

- (A) 6" SOLID WHITE TEMPORARY PAVEMENT MARKING
- (B) 6" SKIP WHITE TEMPORARY PAVEMENT MARKING (10'-30')
- (C) 6" SOLID YELLOW TEMPORARY PAVEMENT MARKING
- (D) 6" SKIP YELLOW TEMPORARY PAVEMENT MARKING (10'-30')
- (E) TEMPORARY PAVEMENT MARKINGS PREVIOUSLY APPLIED
- (F) 6" SOLID DOUBLE YELLOW TEMPORARY MARKING
- TEMPORARY PAVEMENT CURRENT PHASE
- TEMPORARY PAVEMENT CONSTRUCTED PREVIOUS PHASE

PRELIMINARY
subject to changes

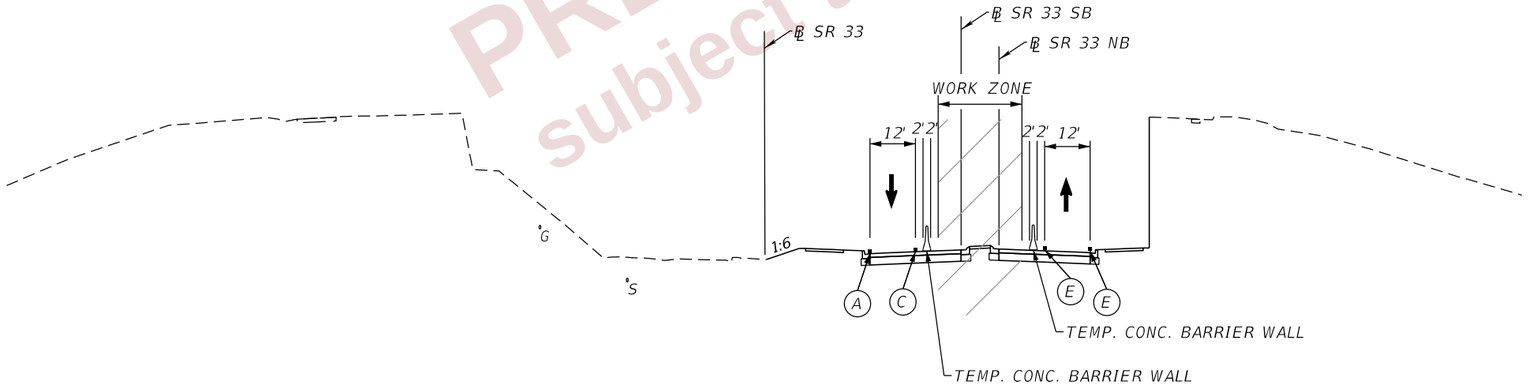

CRITICAL SECTION - PHASE 5, STAGE 3

℄ SR 33
STA. 448+00

REVISIONS				ENGINEER OF RECORD	STATE OF FLORIDA DEPARTMENT OF TRANSPORTATION			TTC PLAN (178) CRITICAL SECTIONS	SHEET NO.
DATE	DESCRIPTION	DATE	DESCRIPTION	RYAN J. WILLIAMSON, P.E. LICENSE NUMBER 81421 BURGESS & NIPLE, INC. 1800 PEMBROOK DRIVE, SUITE 265 ORLANDO, FL 32810	ROAD NO.	COUNTY	FINANCIAL PROJECT ID		682
					SR 400	POLK	430185-3-52-01		

THE OFFICIAL RECORD OF THIS SHEET IS THE ELECTRONIC FILE DIGITALLY SIGNED AND SEALED UNDER RULE 61G15-23.004, F.A.C.

2/28/2024 7:22:53 PM dgy
P:\ORD_FDOT\WorkSets\FDOT\430185352O1-I-4\Roadway\TCP\TCTYRD01.dgn

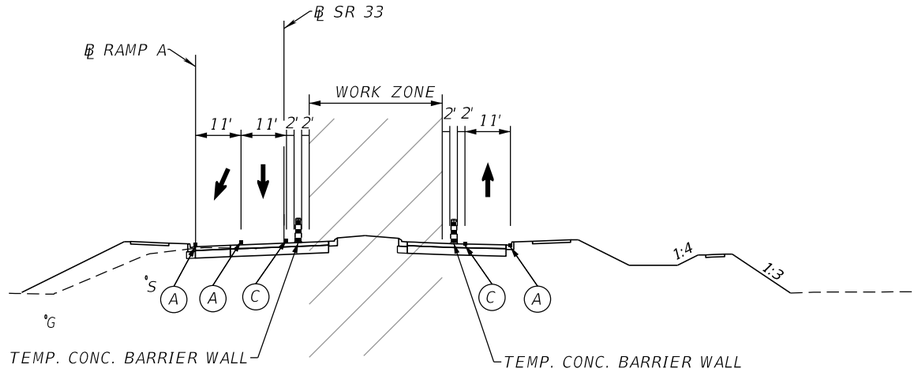

CRITICAL SECTION - PHASE 5, STAGE 3

℄ SR 33
STA. 456+00

PAVEMENT MARKING LEGEND

- (A) 6" SOLID WHITE TEMPORARY PAVEMENT MARKING
- (B) 6" SKIP WHITE TEMPORARY PAVEMENT MARKING (10'-30')
- (C) 6" SOLID YELLOW TEMPORARY PAVEMENT MARKING
- (D) 6" SKIP YELLOW TEMPORARY PAVEMENT MARKING (10'-30')
- (E) TEMPORARY PAVEMENT MARKINGS PREVIOUSLY APPLIED
- (F) 6" SOLID DOUBLE YELLOW TEMPORARY MARKING
- TEMPORARY PAVEMENT CURRENT PHASE
- TEMPORARY PAVEMENT CONSTRUCTED PREVIOUS PHASE

PRELIMINARY
subject to changes

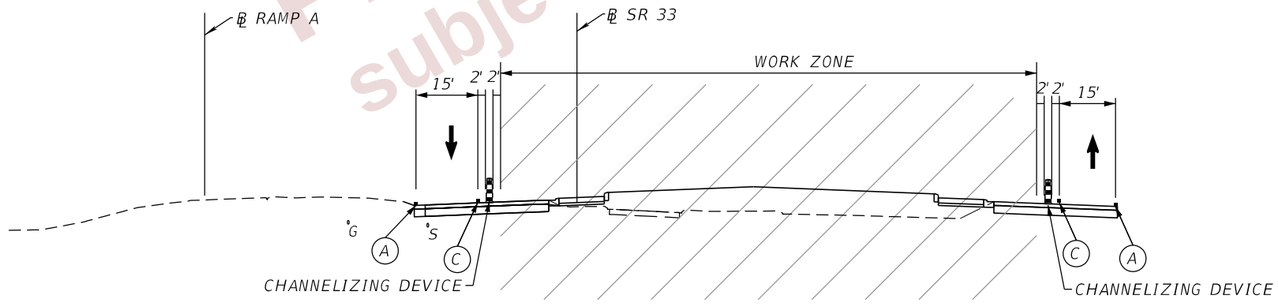

CRITICAL SECTION - PHASE 5, STAGE 3

℄ SR 33
STA. 452+50

REVISIONS				ENGINEER OF RECORD	STATE OF FLORIDA DEPARTMENT OF TRANSPORTATION			TTC PLAN (179) CRITICAL SECTIONS	SHEET NO.
DATE	DESCRIPTION	DATE	DESCRIPTION	RYAN J. WILLIAMSON, P.E. LICENSE NUMBER 81421 BURGESS & NIPLE, INC. 1800 PEMBROOK DRIVE, SUITE 265 ORLANDO, FL 32810	ROAD NO.	COUNTY	FINANCIAL PROJECT ID		683
					SR 400	POLK	430185-3-52-01		

THE OFFICIAL RECORD OF THIS SHEET IS THE ELECTRONIC FILE DIGITALLY SIGNED AND SEALED UNDER RULE 61G15-23.004, F.A.C.

2/28/2024 7:22:53 PM dayl
P:\ORD_FDOT\WorkSets\FDOT\430185352O1-I-4\Roadway\TCP\TCTYRD01.dgn

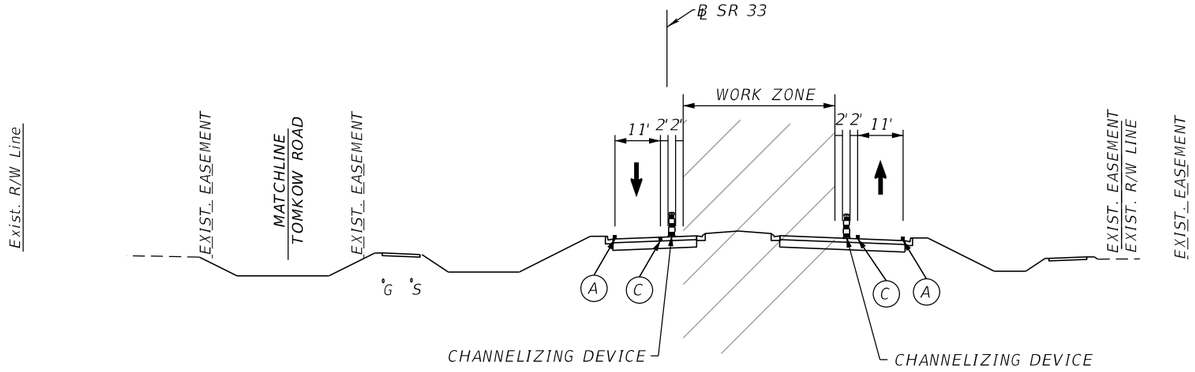

CRITICAL SECTION - PHASE 5, STAGE 3

℄ SR 33
STA. 470+00

PAVEMENT MARKING LEGEND

- (A) 6" SOLID WHITE TEMPORARY PAVEMENT MARKING
- (B) 6" SKIP WHITE TEMPORARY PAVEMENT MARKING (10'-30')
- (C) 6" SOLID YELLOW TEMPORARY PAVEMENT MARKING
- (D) 6" SKIP YELLOW TEMPORARY PAVEMENT MARKING (10'-30')
- (E) TEMPORARY PAVEMENT MARKINGS PREVIOUSLY APPLIED
- (F) 6" SOLID DOUBLE YELLOW TEMPORARY MARKING
- TEMPORARY PAVEMENT CURRENT PHASE
- TEMPORARY PAVEMENT CONSTRUCTED PREVIOUS PHASE

PRELIMINARY
subject to changes

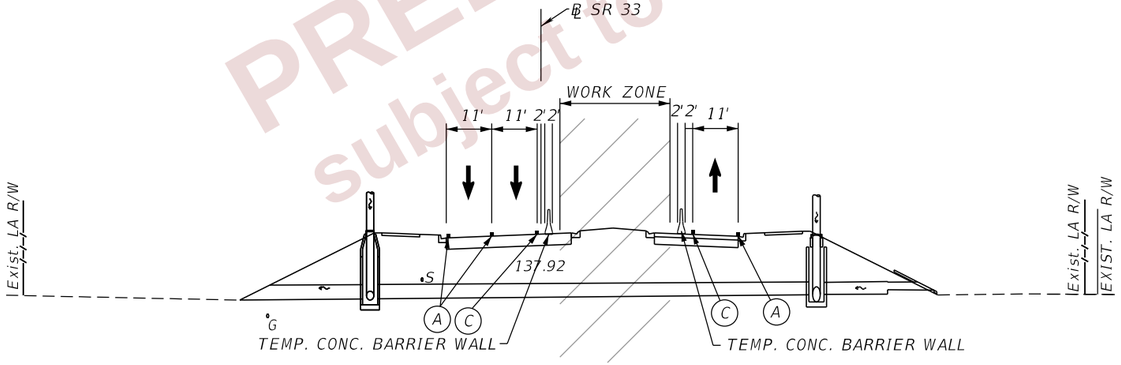

CRITICAL SECTION - PHASE 5, STAGE 3

℄ SR 33
STA. 460+00 (BOX CULVERT)

REVISIONS				ENGINEER OF RECORD	STATE OF FLORIDA DEPARTMENT OF TRANSPORTATION			TTC PLAN (180) CRITICAL SECTIONS	SHEET NO.
DATE	DESCRIPTION	DATE	DESCRIPTION	RYAN J. WILLIAMSON, P.E. LICENSE NUMBER 81421 BURGESS & NIPLE, INC. 1800 PEMBROOK DRIVE, SUITE 265 ORLANDO, FL 32810	ROAD NO.	COUNTY	FINANCIAL PROJECT ID		684
					SR 400	POLK	430185-3-52-01		

THE OFFICIAL RECORD OF THIS SHEET IS THE ELECTRONIC FILE DIGITALLY SIGNED AND SEALED UNDER RULE 61G15-23.004, F.A.C.

2/28/2024 7:22:55 PM dav
P:\ORD_FDOT\WorkSets\FDOT\430185352O1-I-4\Roadway\TCP\TCTYRD01.dgn

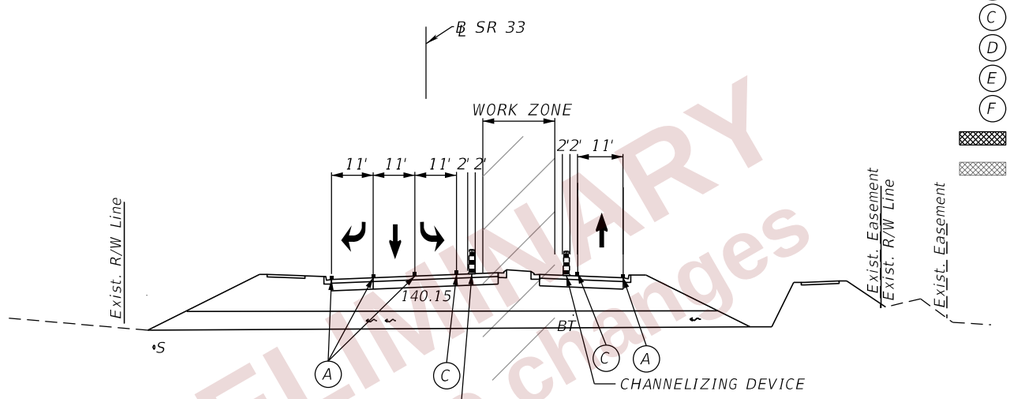

PAVEMENT MARKING LEGEND

- (A) 6" SOLID WHITE TEMPORARY PAVEMENT MARKING
- (B) 6" SKIP WHITE TEMPORARY PAVEMENT MARKING (10'-30')
- (C) 6" SOLID YELLOW TEMPORARY PAVEMENT MARKING
- (D) 6" SKIP YELLOW TEMPORARY PAVEMENT MARKING (10'-30')
- (E) TEMPORARY PAVEMENT MARKINGS PREVIOUSLY APPLIED
- (F) 6" SOLID DOUBLE YELLOW TEMPORARY MARKING
- TEMPORARY PAVEMENT CURRENT PHASE
- TEMPORARY PAVEMENT CONSTRUCTED PREVIOUS PHASE

CRITICAL SECTION - PHASE 5, STAGE 3

℄ SR 33
STA. 480+00 (BOX CULVERT)

PRELIMINARY
subject to changes

REVISIONS				ENGINEER OF RECORD	STATE OF FLORIDA DEPARTMENT OF TRANSPORTATION			TTC PLAN (181) CRITICAL SECTIONS	SHEET NO.
DATE	DESCRIPTION	DATE	DESCRIPTION	RYAN J. WILLIAMSON, P.E. LICENSE NUMBER 81421 BURGESS & NIPLE, INC. 1800 PEMBROOK DRIVE, SUITE 265 ORLANDO, FL 32810	ROAD NO.	COUNTY	FINANCIAL PROJECT ID		685
					SR 400	POLK	430185-3-52-01		

THE OFFICIAL RECORD OF THIS SHEET IS THE ELECTRONIC FILE DIGITALLY SIGNED AND SEALED UNDER RULE 61G15-23.004, F.A.C.

2/28/2024 7:22:56 PM day
P:\ORD_FDOT\Work Sets\FDOT\430185352O1-I-4\Roadway\TCP\TCTYRD01.dgn

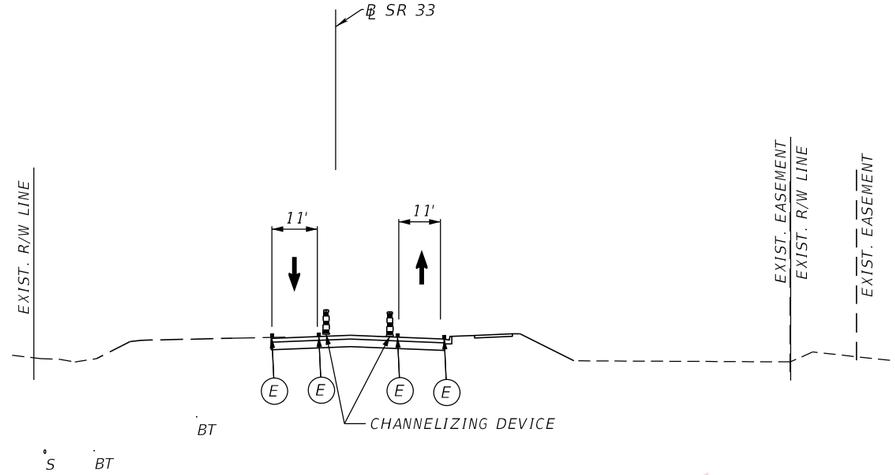

CRITICAL SECTION - PHASE 5, STAGE 3

℄ SR 33
STA. 493+00

PAVEMENT MARKING LEGEND

- (A) 6" SOLID WHITE TEMPORARY PAVEMENT MARKING
- (B) 6" SKIP WHITE TEMPORARY PAVEMENT MARKING (10'-30')
- (C) 6" SOLID YELLOW TEMPORARY PAVEMENT MARKING
- (D) 6" SKIP YELLOW TEMPORARY PAVEMENT MARKING (10'-30')
- (E) TEMPORARY PAVEMENT MARKINGS PREVIOUSLY APPLIED
- (F) 6" SOLID DOUBLE YELLOW TEMPORARY MARKING
- TEMPORARY PAVEMENT CURRENT PHASE
- TEMPORARY PAVEMENT CONSTRUCTED PREVIOUS PHASE

PRELIMINARY
subject to changes

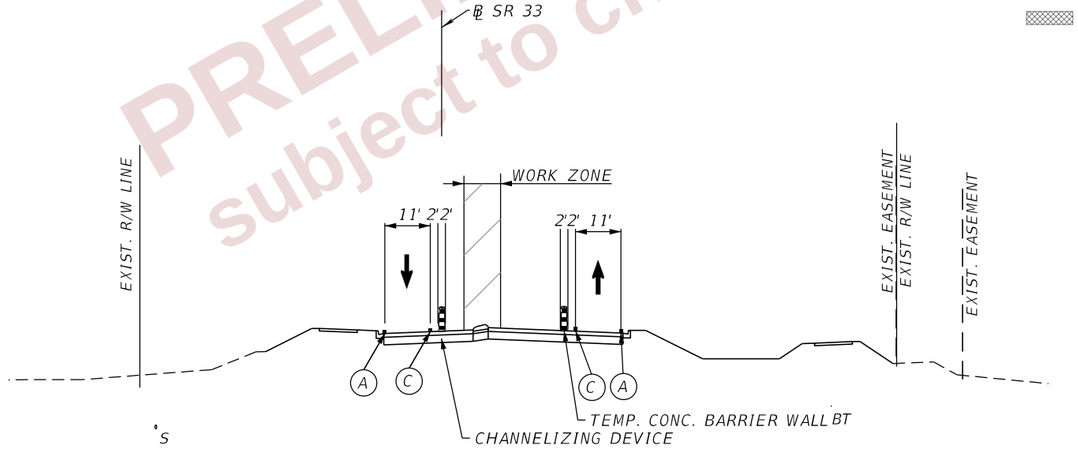

CRITICAL SECTION - PHASE 5, STAGE 3

℄ SR 33
STA. 485+00

REVISIONS				ENGINEER OF RECORD	STATE OF FLORIDA DEPARTMENT OF TRANSPORTATION			TTC PLAN (182) CRITICAL SECTIONS	SHEET NO.
DATE	DESCRIPTION	DATE	DESCRIPTION	RYAN J. WILLIAMSON, P.E. LICENSE NUMBER 81421 BURGESS & NIPLE, INC. 1800 PEMBROOK DRIVE, SUITE 265 ORLANDO, FL 32810	ROAD NO.	COUNTY	FINANCIAL PROJECT ID		686
					SR 400	POLK	430185-3-52-01		

THE OFFICIAL RECORD OF THIS SHEET IS THE ELECTRONIC FILE DIGITALLY SIGNED AND SEALED UNDER RULE 61G15-23.004, F.A.C.

2/28/2024 7:22:57 PM dav
P:\ORD_FDOT\WorkSets\FDOT\430185352O1-I-4\Roadway\TCP\TCTYRD01.dgn

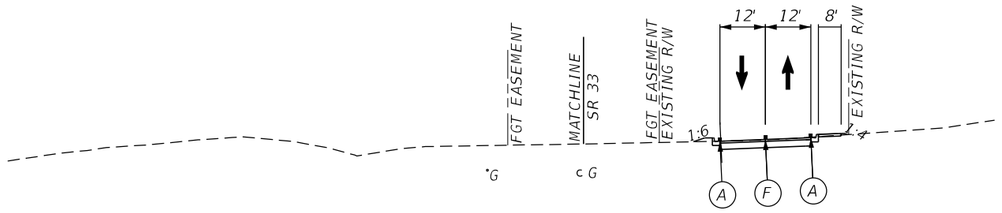

CRITICAL SECTION - PHASE 5, STAGE 3

℄ TOMKOW RD.
STA. 510+00

PRELIMINARY
subject to changes

PAVEMENT MARKING LEGEND

- (A) 6" SOLID WHITE TEMPORARY PAVEMENT MARKING
- (B) 6" SKIP WHITE TEMPORARY PAVEMENT MARKING (10'-30')
- (C) 6" SOLID YELLOW TEMPORARY PAVEMENT MARKING
- (D) 6" SKIP YELLOW TEMPORARY PAVEMENT MARKING (10'-30')
- (E) TEMPORARY PAVEMENT MARKINGS PREVIOUSLY APPLIED
- (F) 6" SOLID DOUBLE YELLOW TEMPORARY MARKING
- TEMPORARY PAVEMENT CURRENT PHASE
- TEMPORARY PAVEMENT CONSTRUCTED PREVIOUS PHASE

THE OFFICIAL RECORD OF THIS SHEET IS THE ELECTRONIC FILE DIGITALLY SIGNED AND SEALED UNDER RULE 61G15-23.004, F.A.C.

REVISIONS				ENGINEER OF RECORD	STATE OF FLORIDA DEPARTMENT OF TRANSPORTATION			TTC PLAN (183) CRITICAL SECTIONS	SHEET NO.
DATE	DESCRIPTION	DATE	DESCRIPTION	RYAN J. WILLIAMSON, P.E. LICENSE NUMBER 81421 BURGESS & NIPLE, INC. 1800 PEMBROOK DRIVE, SUITE 265 ORLANDO, FL 32810	ROAD NO.	COUNTY	FINANCIAL PROJECT ID		687
					SR 400	POLK	430185-3-52-01		

2/28/2024 7:22:57 PM dgy
P:\ORD_FDOT\WorkSets\FDOT\430185352O1-I-4\Roadway\TCP\TCTYRD01.dgn

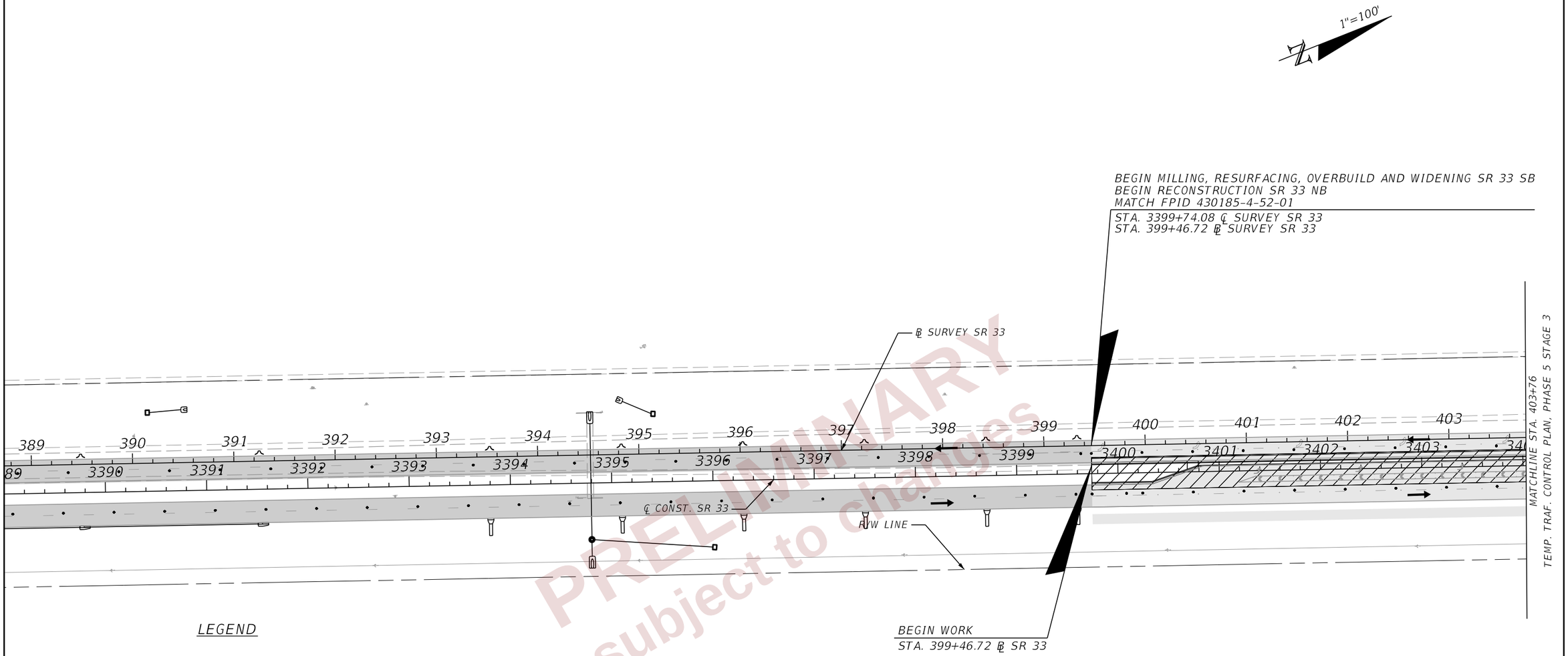

PRELIMINARY subject to changes

LEGEND

- TEMP PAVEMENT CURRENT PHASE
- TEMP PAVEMENT CONST. PREVIOUS PHASE
- PROP. PAVEMENT CONSTRUCTED CURRENT PHASE
- PROP. PAVEMENT CONSTRUCTED PREVIOUS PHASE
- DIRECTION OF TRAFFIC
- WORK ZONE
- CRASH CUSHION
- WORK ZONE SIGN
- CHANNELIZING DEVICES (INDEX 102-600)

NOTE: SEE SIGNING AND PAVEMENT MARKING PLANS FOR FINAL SURFACE PAVEMENT MARKINGS AND SIGNINGS.

THE OFFICIAL RECORD OF THIS SHEET IS THE ELECTRONIC FILE DIGITALLY SIGNED AND SEALED UNDER RULE 61G15-23.004, F.A.C.

REVISIONS				ENGINEER OF RECORD	STATE OF FLORIDA DEPARTMENT OF TRANSPORTATION			TTC PLAN (184) PHASE 5 STAGE 3 SR 33	SHEET NO.
DATE	DESCRIPTION	DATE	DESCRIPTION	RYAN J. WILLIAMSON, P.E. LICENSE NUMBER 81421 BURGESS & NIPLE, INC. 1800 PEMBROOK DRIVE, SUITE 265 ORLANDO, FL 32810	ROAD NO.	COUNTY	FINANCIAL PROJECT ID		688
					SR 400	POLK	430185-3-52-01		

2/28/2024 7:23:15 PM day
P:\ORD_FDOT\WorkSets\FDOT\430185352O1-I-4\Roadway\TCP\TCPLR00P552_33.dgn

NOTE: SEE SIGNING AND PAVEMENT MARKING PLANS FOR FINAL SURFACE PAVEMENT MARKINGS AND SIGNINGS.

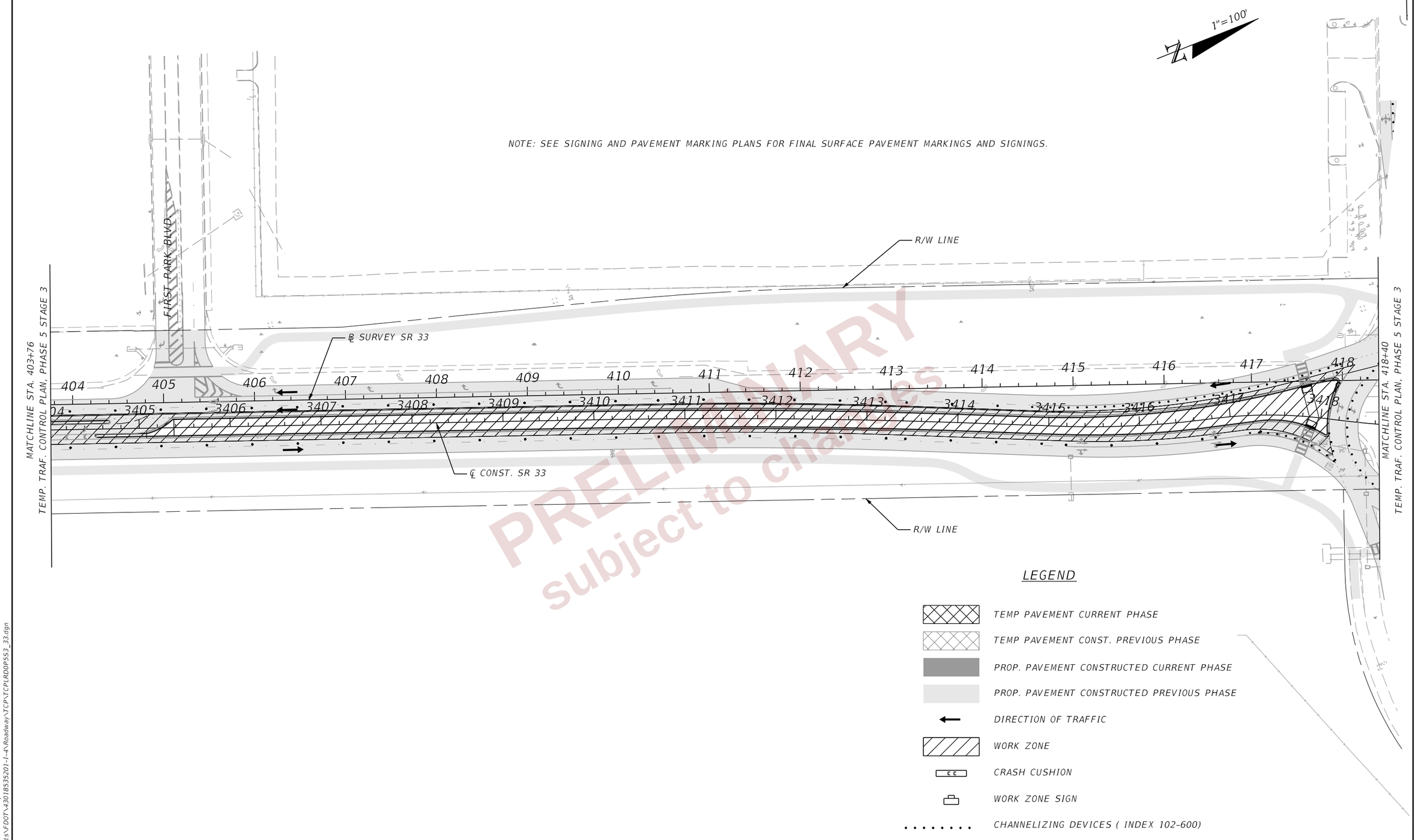

PRELIMINARY
subject to changes

LEGEND

- TEMP PAVEMENT CURRENT PHASE
- TEMP PAVEMENT CONST. PREVIOUS PHASE
- PROP. PAVEMENT CONSTRUCTED CURRENT PHASE
- PROP. PAVEMENT CONSTRUCTED PREVIOUS PHASE
- DIRECTION OF TRAFFIC
- WORK ZONE
- CRASH CUSHION
- WORK ZONE SIGN
- CHANNELIZING DEVICES (INDEX 102-600)

REVISIONS				ENGINEER OF RECORD	STATE OF FLORIDA DEPARTMENT OF TRANSPORTATION			TTC PLAN (185) PHASE 5 STAGE 3 SR 33	SHEET NO.
DATE	DESCRIPTION	DATE	DESCRIPTION	RYAN J. WILLIAMSON, P.E. LICENSE NUMBER 81421 BURGESS & NIPLE, INC. 1800 PEMBROOK DRIVE, SUITE 265 ORLANDO, FL 32810	ROAD NO.	COUNTY	FINANCIAL PROJECT ID		689
					SR 400	POLK	430185-3-52-01		

THE OFFICIAL RECORD OF THIS SHEET IS THE ELECTRONIC FILE DIGITALLY SIGNED AND SEALED UNDER RULE 61G15-23.004, F.A.C.

2/28/2024 7:23:17 PM day
P:\ORD_FDOT\WorkSets\FDOT\430185352O1-I-4\Roadway\TCP\TCPLRDOP5S3_33.dgn

NOTE: SEE SIGNING AND PAVEMENT MARKING PLANS FOR FINAL SURFACE PAVEMENT MARKINGS AND SIGNINGS.

1"=100'

℄ CONST. FIRST PARK

R/W LINE

L/A R/W LINE

L.A. R/W LINE PER 16320-2403

℄ SURVEY SR 33

℄ CONST. SR 33

TEMP. CONC. BARRIER WALL

R/W LINE

℄ CONST. UNIVERSITY

MATCHLINE STA. 418+40
TEMP. TRAF. CONTROL PLAN, PHASE 5 STAGE 3

MATCHLINE STA. 433+00
TEMP. TRAF. CONTROL PLAN, PHASE 5 STAGE 3

PRELIMINARY
subject to change

LEGEND

- TEMP PAVEMENT CURRENT PHASE
- TEMP PAVEMENT CONST. PREVIOUS PHASE
- PROP. PAVEMENT CONSTRUCTED CURRENT PHASE
- PROP. PAVEMENT CONSTRUCTED PREVIOUS PHASE
- DIRECTION OF TRAFFIC
- WORK ZONE
- CRASH CUSHION
- WORK ZONE SIGN
- CHANNELIZING DEVICES (INDEX 102-600)

REVISIONS			
DATE	DESCRIPTION	DATE	DESCRIPTION

ENGINEER OF RECORD

RYAN J. WILLIAMSON, P.E.
LICENSE NUMBER 81421
BURGESS & NIPLE, INC.
1800 PEMBROOK DRIVE, SUITE 265
ORLANDO, FL 32810

STATE OF FLORIDA
DEPARTMENT OF TRANSPORTATION

ROAD NO.	COUNTY	FINANCIAL PROJECT ID
SR 400	POLK	430185-3-52-01

TTC PLAN (186)
PHASE 5 STAGE 3
SR 33

SHEET NO. 690

THE OFFICIAL RECORD OF THIS SHEET IS THE ELECTRONIC FILE DIGITALLY SIGNED AND SEALED UNDER RULE 61G15-23.004, F.A.C.

2/28/2024 7:23:19 PM dgy
P:\ORD_FDOT\WorkSets\FDOT\430185352O1-I-4\Roadway\TCP\TCPLRD0P5S3_33.dgn

1"=100'

EASEMENT

℄ RAMP B

EASEMENT

L/A R/W LINE

L/A R/W LINE

℄ SURVEY SR 33

℄ CONST. SR 33

℄ SURVEY I-4

℄ CONST. I-4

MATCHLINE STA. 433+00

TEMP. TRAF. CONTROL PLAN, PHASE 5 STAGE 3

MATCHLINE STA. 447+00

TEMP. TRAF. CONTROL PLAN, PHASE 5 STAGE 3

L/A R/W LINE

R/W LINE

TEMP. CONC. BARRIER WALL

TEMP. CONC. BARRIER WALL

EASEMENT

L/A R/W LINE

℄ RAMP C

EASEMENT

PRELIMINARY
subject to change

LEGEND

- TEMP PAVEMENT CURRENT PHASE
- TEMP PAVEMENT CONST. PREVIOUS PHASE
- PROP. PAVEMENT CONSTRUCTED CURRENT PHASE
- PROP. PAVEMENT CONSTRUCTED PREVIOUS PHASE
- DIRECTION OF TRAFFIC
- WORK ZONE
- CRASH CUSHION
- WORK ZONE SIGN
- CHANNELIZING DEVICES (INDEX 102-600)

NOTE: SEE SIGNING AND PAVEMENT MARKING PLANS FOR FINAL SURFACE PAVEMENT MARKINGS AND SIGNINGS.

REVISIONS			
DATE	DESCRIPTION	DATE	DESCRIPTION

ENGINEER OF RECORD

RYAN J. WILLIAMSON, P.E.
LICENSE NUMBER 81421
BURGESS & NIPLE, INC.
1800 PEMBROOK DRIVE, SUITE 265
ORLANDO, FL 32810

STATE OF FLORIDA
DEPARTMENT OF TRANSPORTATION

ROAD NO.	COUNTY	FINANCIAL PROJECT ID
SR 400	POLK	430185-3-52-01

TTC PLAN (187)
PHASE 5 STAGE 3
SR 33

SHEET NO. 691

THE OFFICIAL RECORD OF THIS SHEET IS THE ELECTRONIC FILE DIGITALLY SIGNED AND SEALED UNDER RULE 61G15-23.004, F.A.C.

2/28/2024 7:23:21 PM day
P:\ORD_FDOT\WorkSet\VFDOT\430185352O1-I-4\Roadway\TCP\TCPLRDOP553_33.dgn

LEGEND

- TEMP PAVEMENT CURRENT PHASE
- TEMP PAVEMENT CONST. PREVIOUS PHASE
- PROP. PAVEMENT CONSTRUCTED CURRENT PHASE
- PROP. PAVEMENT CONSTRUCTED PREVIOUS PHASE
- DIRECTION OF TRAFFIC
- WORK ZONE
- CRASH CUSHION
- WORK ZONE SIGN
- CHANNELIZING DEVICES (INDEX 102-600)

1"=100'

L/A R/W LINE

℄ RAMP A

TEMP. CONC. BARRIER WALL

MATCHLINE STA. 447+00
TEMP. TRAF. CONTROL PLAN, PHASE 5 STAGE 3

℄ SURVEY SR 33

℄ CONST. SR 33

℄ RAMP D

℄ SURVEY I-4

℄ RAMP C

℄ CONST. I-4

L/A R/W LINE

MATCHLINE STA. 461+00
TEMP. TRAF. CONTROL PLAN, PHASE 5 STAGE 3

NOTE: SEE SIGNING AND PAVEMENT MARKING PLANS FOR FINAL SURFACE PAVEMENT MARKINGS AND SIGNINGS.

PRELIMINARY
Subject to change

THE OFFICIAL RECORD OF THIS SHEET IS THE ELECTRONIC FILE DIGITALLY SIGNED AND SEALED UNDER RULE 61G15-23.004, F.A.C.

REVISIONS				ENGINEER OF RECORD	STATE OF FLORIDA DEPARTMENT OF TRANSPORTATION			TTC PLAN (188) PHASE 5 STAGE 3 SR 33	SHEET NO.
DATE	DESCRIPTION	DATE	DESCRIPTION	RYAN J. WILLIAMSON, P.E. LICENSE NUMBER 81421 BURGESS & NIPLE, INC. 1800 PEMBROOK DRIVE, SUITE 265 ORLANDO, FL 32810	ROAD NO.	COUNTY	FINANCIAL PROJECT ID		692
					SR 400	POLK	430185-3-52-01		

2/28/2024 7:23:23 PM day
P:\ORD_FDOT\WorkSets\FDOT\430185352O1-I-4\Roadway\TCP\TCPLRD0P5S3_33.dgn

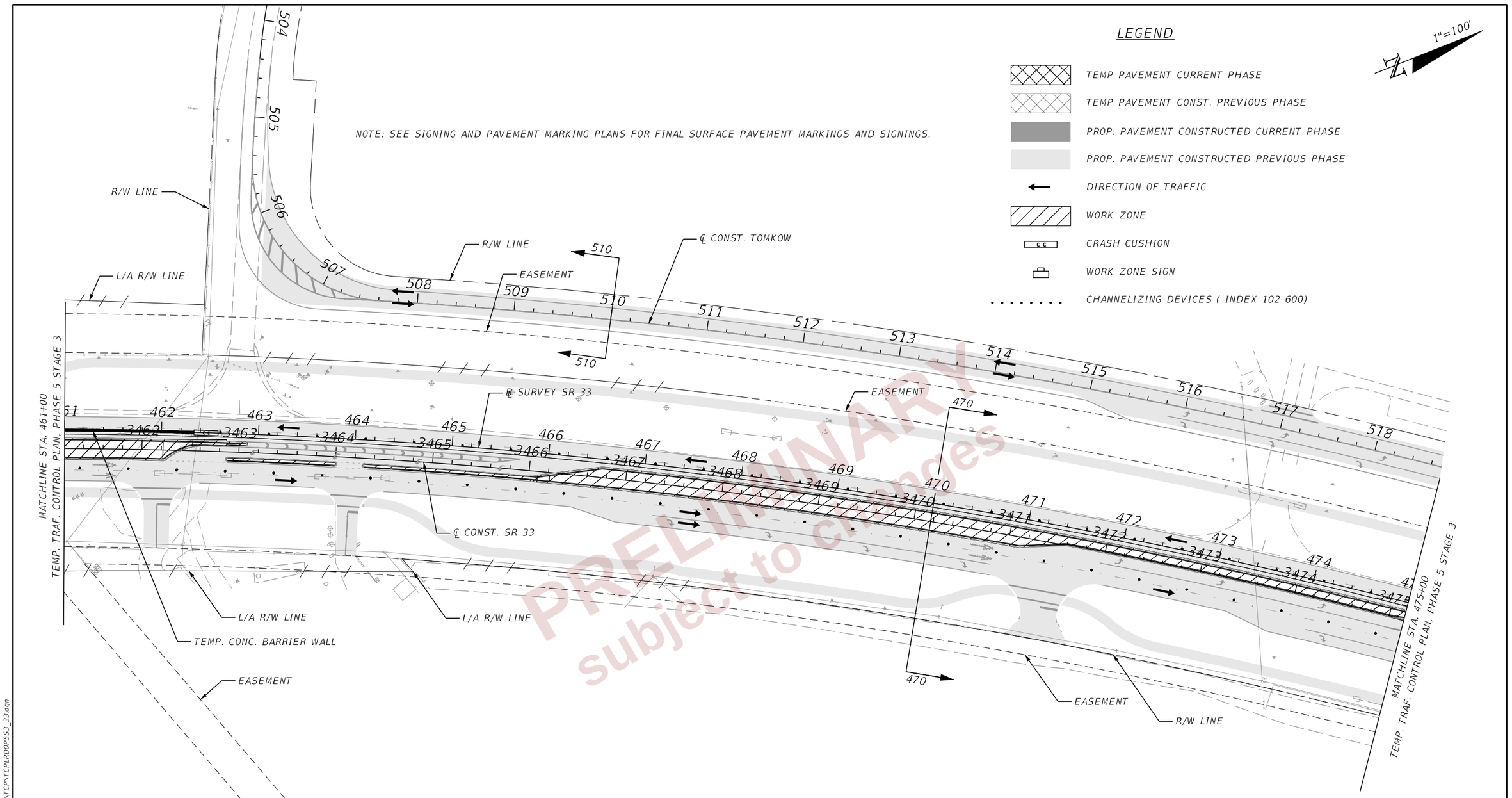

PRELIMINARY subject to change

REVISIONS			
DATE	DESCRIPTION	DATE	DESCRIPTION

ENGINEER OF RECORD

RYAN J. WILLIAMSON, P.E.
LICENSE NUMBER 81421
BURGESS & NIPLE, INC.
1800 PEMBROOK DRIVE, SUITE 265
ORLANDO, FL 32810

STATE OF FLORIDA
DEPARTMENT OF TRANSPORTATION

ROAD NO.	COUNTY	FINANCIAL PROJECT ID
SR 400	POLK	430185-3-52-01

TTC PLAN (189)
PHASE 5 STAGE 3
SR 33

SHEET NO. 693

THE OFFICIAL RECORD OF THIS SHEET IS THE ELECTRONIC FILE DIGITALLY SIGNED AND SEALED UNDER RULE 61G15-23.004, F.A.C.

2/28/2024 7:23:27 PM day
P:\ORD_FDOT\WorkSet\FDOT\430185352O1-I-4\Roadway\TCP\TCPLRDOP5S3_33.dgn

LEGEND

- TEMP PAVEMENT CURRENT PHASE
- TEMP PAVEMENT CONST. PREVIOUS PHASE
- PROP. PAVEMENT CONSTRUCTED CURRENT PHASE
- PROP. PAVEMENT CONSTRUCTED PREVIOUS PHASE
- DIRECTION OF TRAFFIC
- WORK ZONE
- CRASH CUSHION
- WORK ZONE SIGN
- CHANNELIZING DEVICES (INDEX 102-600)

1"=100'

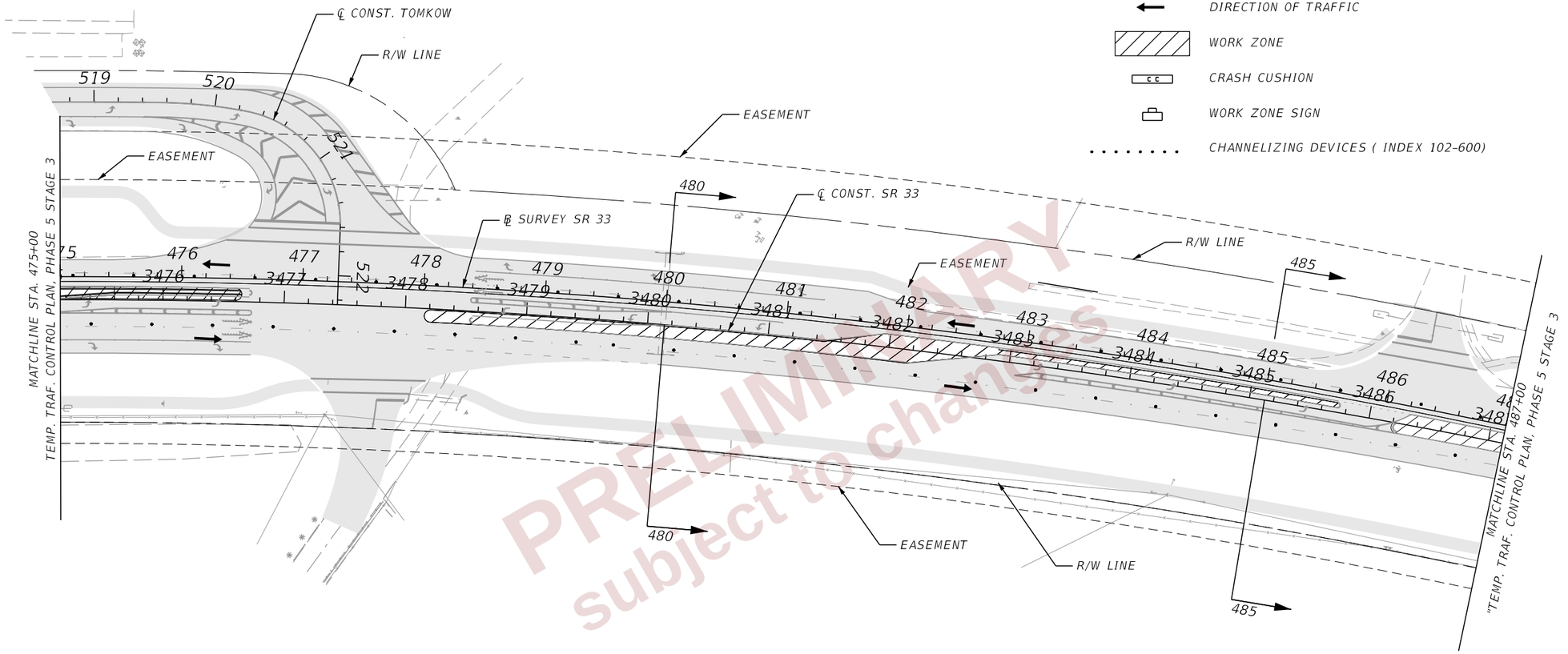

NOTE: SEE SIGNING AND PAVEMENT MARKING PLANS FOR FINAL SURFACE PAVEMENT MARKINGS AND SIGNINGS.

PRELIMINARY
subject to changes

REVISIONS				ENGINEER OF RECORD	STATE OF FLORIDA DEPARTMENT OF TRANSPORTATION			TTC PLAN (190) PHASE 5 STAGE 3 SR 33	SHEET NO.
DATE	DESCRIPTION	DATE	DESCRIPTION	RYAN J. WILLIAMSON, P.E. LICENSE NUMBER 81421 BURGESS & NIPLE, INC. 1800 PEMBROOK DRIVE, SUITE 265 ORLANDO, FL 32810	ROAD NO.	COUNTY	FINANCIAL PROJECT ID		694
					SR 400	POLK	430185-3-52-01		

THE OFFICIAL RECORD OF THIS SHEET IS THE ELECTRONIC FILE DIGITALLY SIGNED AND SEALED UNDER RULE 61G15-23.004, F.A.C.

2/28/2024 7:23:28 PM day
P:\ORD_FDOT\WorkSets\FDOT\430185352O1-I-4\Roadway\TCP\TCPLROOP5S3_33.dgn

LEGEND

1"=100'

- TEMP PAVEMENT CURRENT PHASE
- TEMP PAVEMENT CONST. PREVIOUS PHASE
- PROP. PAVEMENT CONSTRUCTED CURRENT PHASE
- PROP. PAVEMENT CONSTRUCTED PREVIOUS PHASE
- DIRECTION OF TRAFFIC
- WORK ZONE
- CRASH CUSHION
- WORK ZONE SIGN
- CHANNELIZING DEVICES (INDEX 102-600)

NOTE: SEE SIGNING AND PAVEMENT MARKING PLANS FOR FINAL SURFACE PAVEMENT MARKINGS AND SIGNINGS.

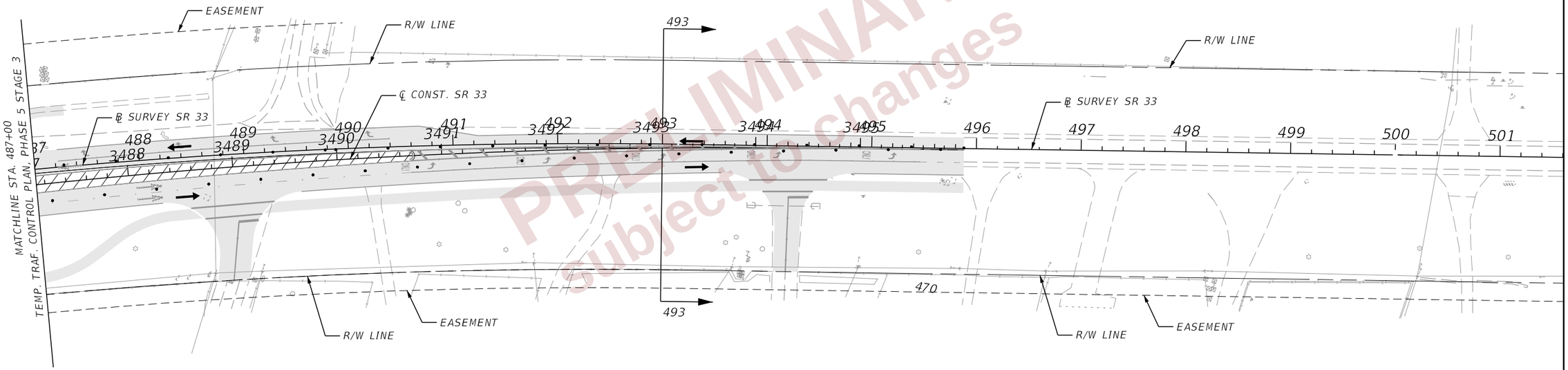

PRELIMINARY
subject to changes

REVISIONS				ENGINEER OF RECORD	STATE OF FLORIDA DEPARTMENT OF TRANSPORTATION			TTC PLAN (191) PHASE 5 STAGE 3 SR 33	SHEET NO.
DATE	DESCRIPTION	DATE	DESCRIPTION	RYAN J. WILLIAMSON, P.E. LICENSE NUMBER 81421 BURGESS & NIPLE, INC. 1800 PEMBROOK DRIVE, SUITE 265 ORLANDO, FL 32810	ROAD NO.	COUNTY	FINANCIAL PROJECT ID		695
					SR 400	POLK	430185-3-52-01		

THE OFFICIAL RECORD OF THIS SHEET IS THE ELECTRONIC FILE DIGITALLY SIGNED AND SEALED UNDER RULE 61G15-23.004, F.A.C.

2/28/2024 7:23:30 PM day
P:\ORD_FDOT\WorkSets\FDOT\430185352O1-I-4\Roadway\TCP\TCPLROOP5S3_33.dgn

DETOUR OBJECTIVE: (NIGHT TIME OPERATION ONLY)

I-4 EB: DETOUR TO NEXT EXIT TO GET TO SR 33 NB

SR 33 NB: DETOUR TO UNIVERSITY BLVD TO GET TO SR 33 NB
DETOUR TRUCKS TO I-4 EB TO GET TO SR 33 NB
DETOUR TO SR 33 SB TO GET TO I-4 WB

NOTE: DETOUR WILL BE PERMITTED MONDAY THROUGH FRIDAY 9.30 PM TO 6:00 AM.
SEE TTC PLAN GENERAL NOTES FOR ADDITIONAL RESTRICTIONS.

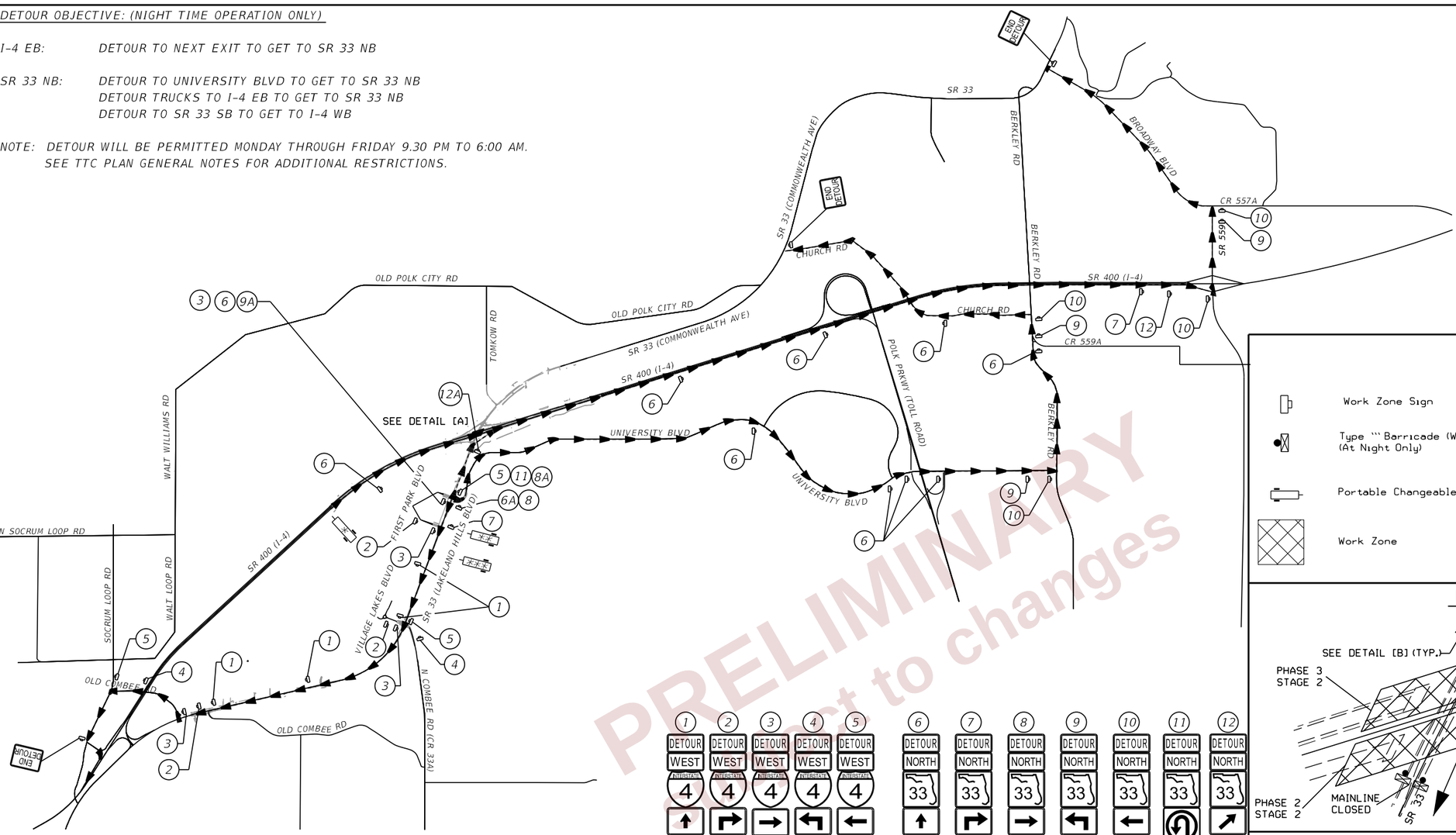

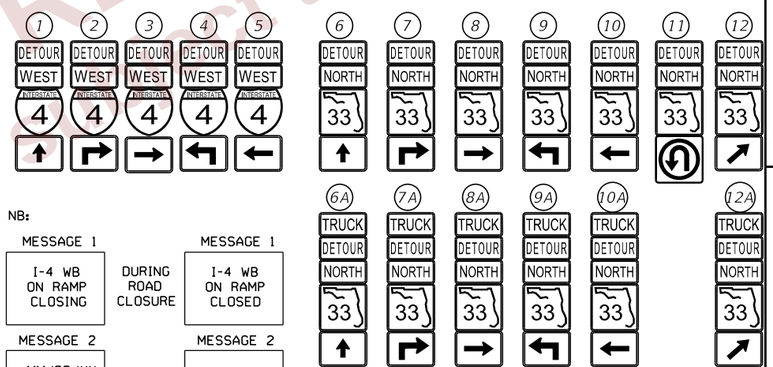

FOR I-4 EB & SR 33 NB:

TWO WEEKS PRIOR TO ROAD CLOSURE		DURING ROAD CLOSURE	
MESSAGE 1	SR 33 NB CLOSING	MESSAGE 1	SR 33 NB CLOSED
MESSAGE 2	MM/DD/YY MM/DD/YY XPM-XAM	MESSAGE 2	FOLLOW DETOUR

PLACE 1 PCMS EACH AT THE FOLLOWING LOCATIONS:

• ON I-4 EB 2640' WEST OF I-4 EB OFF RAMP

•• ON SR 33 NB 2640' SOUTH OF I-4 EB ON RAMP

FOR SR 33 NB:

TWO WEEKS PRIOR TO ROAD CLOSURE		DURING ROAD CLOSURE	
MESSAGE 1	I-4 WB ON RAMP CLOSING	MESSAGE 1	I-4 WB ON RAMP CLOSED
MESSAGE 2	MM/DD/YY MM/DD/YY XPM-XAM	MESSAGE 2	FOLLOW DETOUR

PLACE 1 PCMS EACH AT THE FOLLOWING LOCATIONS:

••• ON SR 33 NB 3000' SOUTH OF I-4 EB ON RAMP

LEGEND

- Work Zone Sign
- Type III Barricade (With Steady Burning Light) (At Night Only)
- Portable Changeable (Variable) Message Sign
- Work Zone

DETAIL [A]

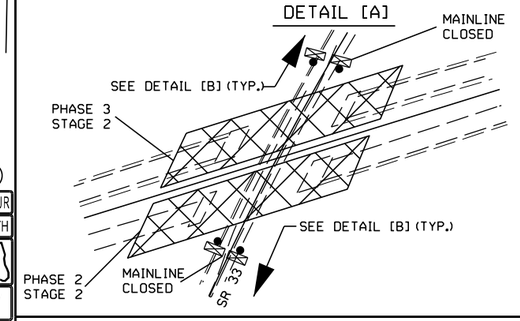

DETAIL [B]

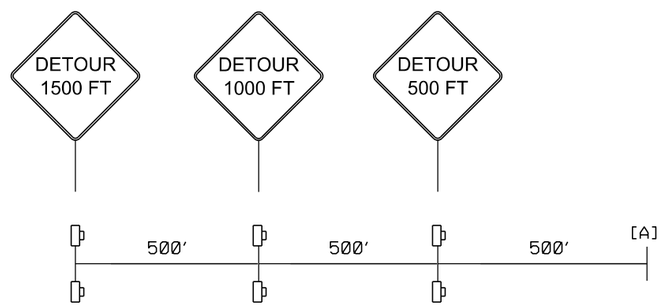

FOR I-4 EB & SR 33 NB

PRELIMINARY
Subject to changes

REVISIONS			
DATE	DESCRIPTION	DATE	DESCRIPTION

ENGINEER OF RECORD

RYAN J. WILLIAMSON, P.E.
LICENSE NUMBER 81421
BURGESS & NIPLE, INC.
1800 PEMBROOK DRIVE, SUITE 265
ORLANDO, FL 32810

STATE OF FLORIDA
DEPARTMENT OF TRANSPORTATION

ROAD NO.	COUNTY	FINANCIAL PROJECT ID
SR 400	POLK	430185-3-52-01

TTC PLAN (192)
DETOUR DETAIL

SHEET NO. 696

THE OFFICIAL RECORD OF THIS SHEET IS THE ELECTRONIC FILE DIGITALLY SIGNED AND SEALED UNDER RULE 61G15-23.004, F.A.C.

2/28/2024 7:23:41 PM dgy
P:\ORD_FDOT\WorkSets\FDOT\430185352O1-I-4\Roadway\TCP\TCDTRD01.dgn

DETOUR OBJECTIVE: (NIGHT TIME OPERATION ONLY)

I-4 WB: *DETOUR TO NEXT EXIT TO GET TO SR 33 SB*

SR 33 SB: *DETOUR TO TOMKOW RD TO GET TO SR 33 SB*
DETOUR TRUCKS TO I-4 WB TO GET TO SR 33 SB
DETOUR TO TOMKOW RD TO GET TO I-4 EB

NOTE: *DETOUR WILL BE PERMITTED MONDAY THROUGH FRIDAY 9.30 PM TO 6:00 AM.*
SEE TTC PLAN GENERAL NOTES FOR ADDITIONAL RESTRICTIONS.

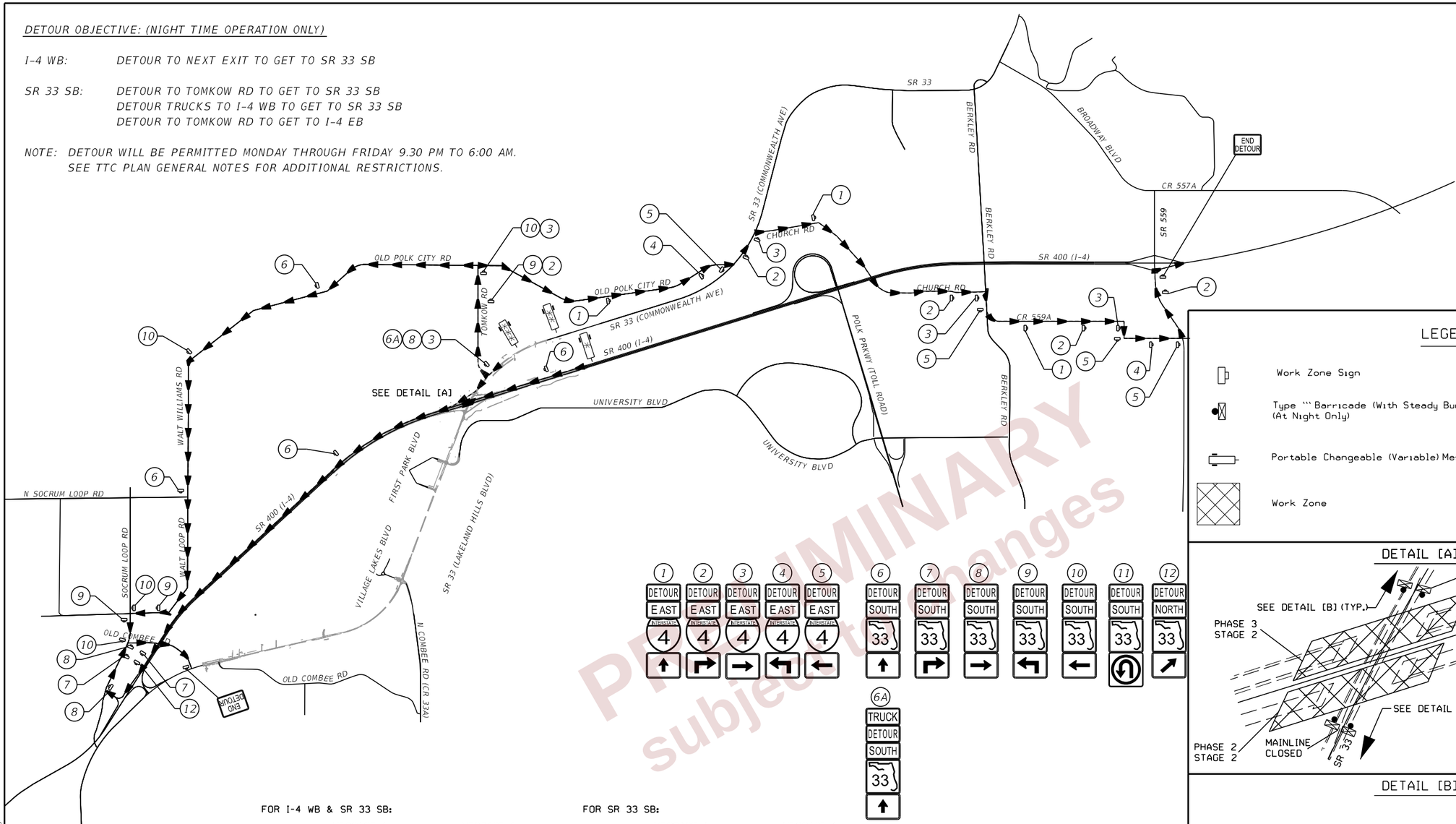

N.T.S.

LEGEND

- Work Zone Sign
- Type III Barricade (With Steady Burning Light) (At Night Only)
- Portable Changeable (Variable) Message Sign
- Work Zone

DETAIL [A]

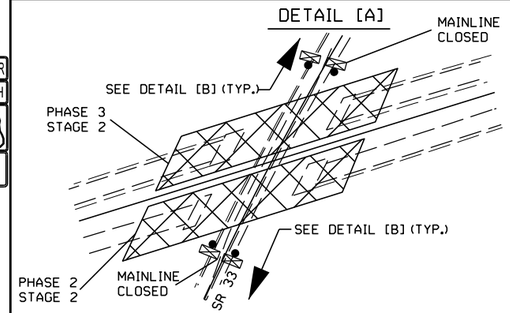

DETAIL [B]

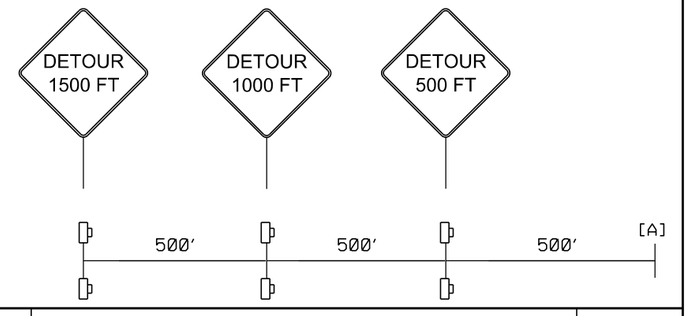

FOR I-4 WB & SR 33 SB:

14 DAYS PRIOR TO ROAD CLOSURE		DURING ROAD CLOSURE	
MESSAGE 1	SR 33 SB CLOSING	MESSAGE 1	SR 33 SB CLOSED
MESSAGE 2	MM/DD/YY MM/DD/YY XPM-XAM	MESSAGE 2	FOLLOW DETOUR

PLACE 1 PCMS EACH AT THE FOLLOWING LOCATIONS:

• ON I-4 WB 2640' WEST OF I-4 WB OFF RAMP

•• ON SR 33 SB 2000' NORTH OF TOMKOW RD

FOR SR 33 SB:

14 DAYS PRIOR TO ROAD CLOSURE		DURING ROAD CLOSURE	
MESSAGE 1	I-4 EB ON RAMP CLOSING	MESSAGE 1	I-4 EB ON RAMP CLOSED
MESSAGE 2	MM/DD/YY MM/DD/YY XPM-XAM	MESSAGE 2	FOLLOW DETOUR

PLACE 1 PCMS EACH AT THE FOLLOWING LOCATIONS:

••• ON SR 33 SB 2640' NORTH OF I-4 EB ON RAMP

FOR I-4 WB & SR 33 SB

PRELIMINARY
subject to changes

REVISIONS			
DATE	DESCRIPTION	DATE	DESCRIPTION

ENGINEER OF RECORD

RYAN J. WILLIAMSON, P.E.
LICENSE NUMBER 81421
BURGESS & NIPLE, INC.
1800 PEMBROOK DRIVE, SUITE 265
ORLANDO, FL 32810

STATE OF FLORIDA
DEPARTMENT OF TRANSPORTATION

ROAD NO.	COUNTY	FINANCIAL PROJECT ID
SR 400	POLK	430185-3-52-01

TTC PLAN (193)
DETOUR DETAIL

SHEET NO. 697

THE OFFICIAL RECORD OF THIS SHEET IS THE ELECTRONIC FILE DIGITALLY SIGNED AND SEALED UNDER RULE 61G15-23.004, F.A.C.

2/28/2024 7:23:42 PM day
P:\ORD_FDOT\WorkSets\FDOT_430185325201-I-4\Roadway\TCP\TCDTRD01.dgn

DETOUR OBJECTIVE: (NIGHT TIME OPERATION ONLY)

I-4 WB
OFF RAMP: *DETOUR TO SR 33 SB TO GET TO I-4 WB RE-ENTRY*

I-4 EB
OFF RAMP: *DETOUR TO SR 33 SB TO GET TO I-4 WB RE-ENTRY*

SR 33 NB: *U-TURN AT UNIVERSITY BLVD, DETOUR TO SR 33 SB TO GET TO I-4 WB*

SR 33 SB: *DETOUR TO SR 33 SB TO GET TO I-4 WB*

NOTE: DETOUR WILL BE PERMITTED MONDAY THROUGH FRIDAY 9.30 PM TO 6:00 AM.
SEE TTC PLAN GENERAL NOTES FOR ADDITIONAL RESTRICTIONS.

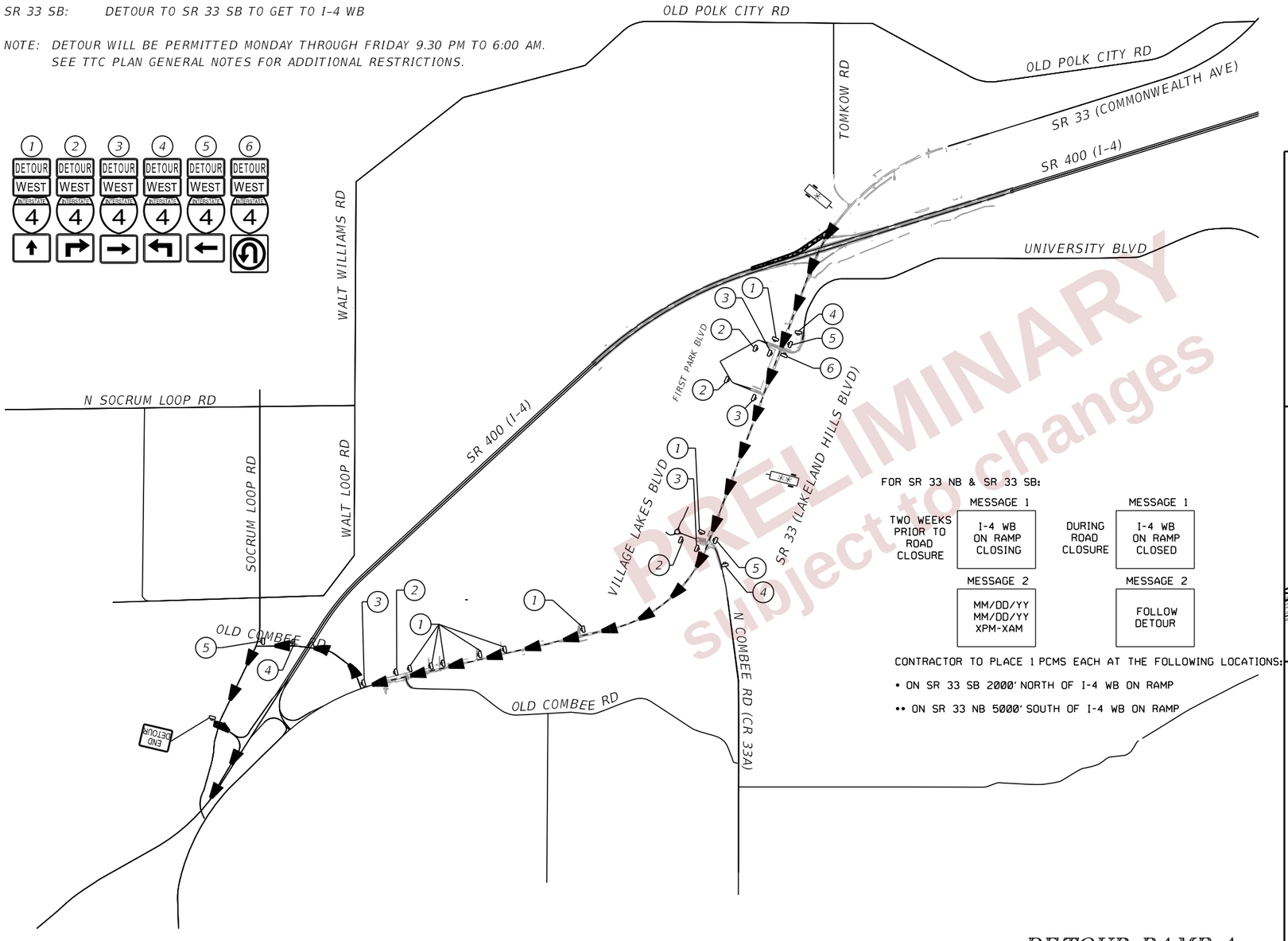

FOR SR 33 NB & SR 33 SB:

	MESSAGE 1	MESSAGE 2
TWO WEEKS PRIOR TO ROAD CLOSURE	I-4 WB ON RAMP CLOSING	MM/DD/YY MM/DD/YY XPM-XAM
DURING ROAD CLOSURE	I-4 WB ON RAMP CLOSED	FOLLOW DETOUR

CONTRACTOR TO PLACE 1 PCMS EACH AT THE FOLLOWING LOCATIONS:

- ON SR 33 SB 2000' NORTH OF I-4 WB ON RAMP
- ON SR 33 NB 5000' SOUTH OF I-4 WB ON RAMP

DETOUR RAMP A

N.T.S.

LEGEND

- Work Zone Sign
- Type III Barricade (With Steady Burning Light) (At Night Only)
- Portable Changeable (Variable) Message Sign
- Work Zone

DETAIL [A]

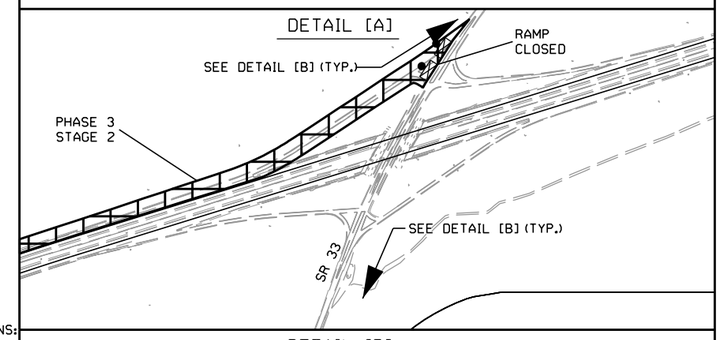

DETAIL [B]

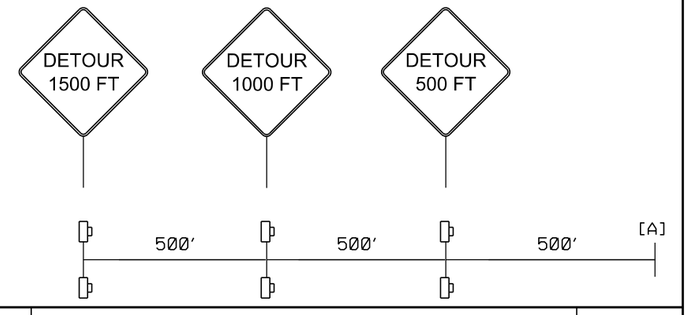

PRELIMINARY subject to changes

REVISIONS				ENGINEER OF RECORD	STATE OF FLORIDA DEPARTMENT OF TRANSPORTATION			TTC PLAN (194) DETOUR DETAIL	SHEET NO.
DATE	DESCRIPTION	DATE	DESCRIPTION	RYAN J. WILLIAMSON, P.E. LICENSE NUMBER 81421 BURGESS & NIPLE, INC. 1800 PEMBROOK DRIVE, SUITE 265 ORLANDO, FL 32810	ROAD NO.	COUNTY	FINANCIAL PROJECT ID		
					SR 400	POLK	430185-3-52-01		698

THE OFFICIAL RECORD OF THIS SHEET IS THE ELECTRONIC FILE DIGITALLY SIGNED AND SEALED UNDER RULE 61G15-23.004, F.A.C.

2/28/2024 7:23:42 PM day
P:\ORD_FDOT\WorkSet\S\FDOT\430185352O1-I-4\Roadway\TCP\TCOTRD01.dgn

DETOUR OBJECTIVE: (NIGHT TIME OPERATION ONLY)

I-4 EB
OFF RAMP: EXIT 38 @ I-4 CLOSED

I-4 EB
OFF RAMP: USE EXIT 33 @ I-4 TO SR 33

NOTE: DETOUR WILL BE PERMITTED MONDAY THROUGH FRIDAY 9.30 PM TO 6:00 AM.
SEE TTC PLAN GENERAL NOTES FOR ADDITIONAL RESTRICTIONS.

• FOR EXIT 33:

14 DAYS PRIOR TO ROAD CLOSURE		DURING ROAD CLOSURE	
MESSAGE 1	EXIT 38 @ SR 33 CLOSING	MESSAGE 1	EXIT 38 CLOSED
MESSAGE 2	MM/DD/YY MM/DD/YY XPM-XAM	MESSAGE 2	USE THIS EXIT

•• FOR EXIT 38 (RAMP B):

14 DAYS PRIOR TO ROAD CLOSURE		DURING ROAD CLOSURE	
MESSAGE 1	EXIT 38 @ SR 33 CLOSING	MESSAGE 1	EXIT 38 CLOSED
MESSAGE 2	MM/DD/YY MM/DD/YY XPM-XAM		

N.T.S.

PLACE 1 PCMS EACH AT THE FOLLOWING LOCATIONS:

• ON I-4 EB 2640' WEST OF EXIT 33

•• ON I-4 EB 2640' WEST OF EXIT 38

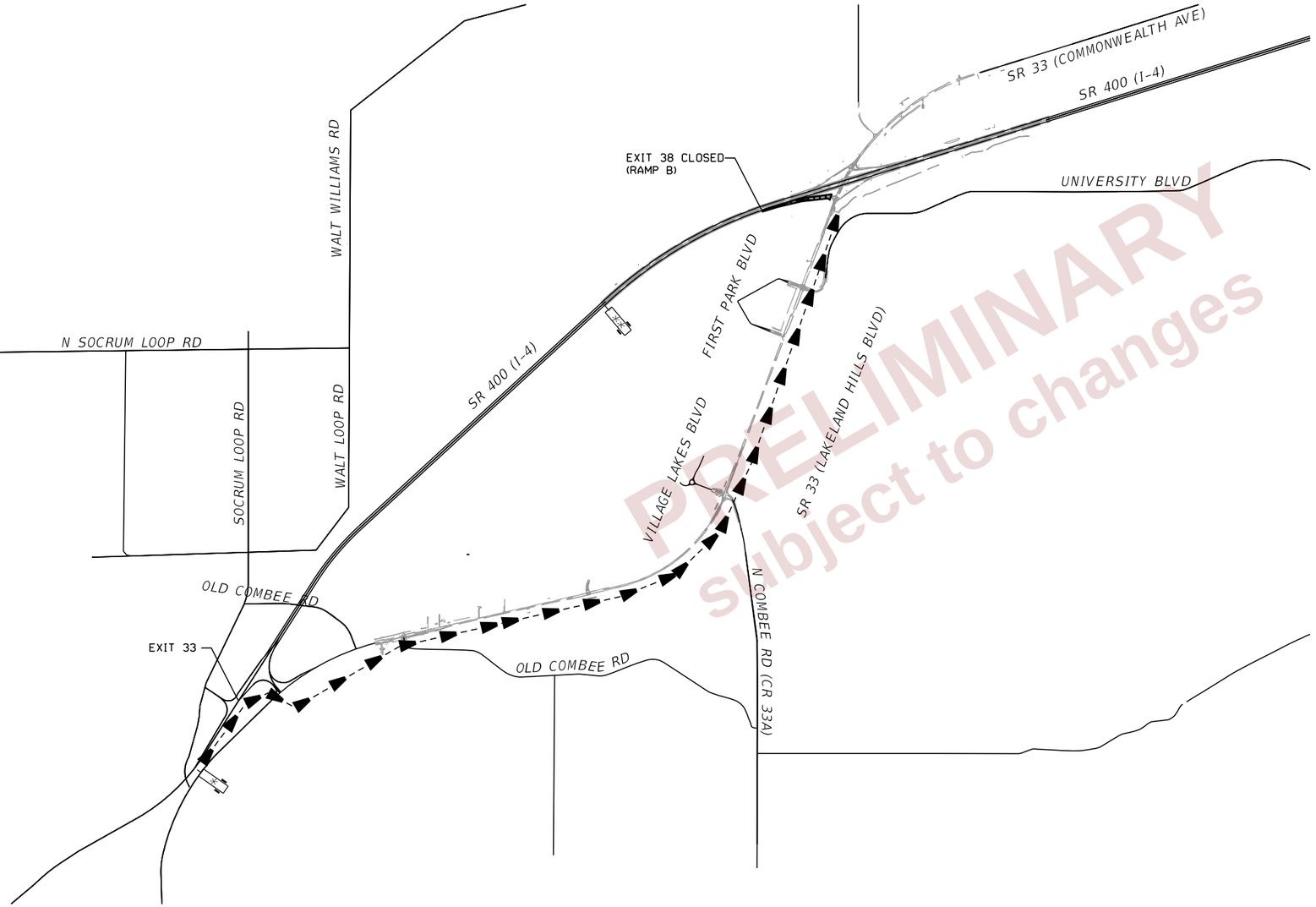

PRELIMINARY
Subject to changes

LEGEND

- Work Zone Sign
- Type III Barricade (With Steady Burning Light) (At Night Only)
- Portable Changeable (Variable) Message Sign
- Work Zone

DETAIL [A]

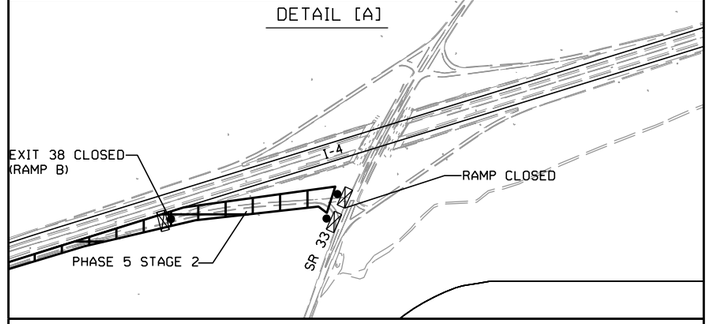

DETOUR RAMP B

REVISIONS				ENGINEER OF RECORD	STATE OF FLORIDA DEPARTMENT OF TRANSPORTATION			TTC PLAN (195) DETOUR DETAIL	SHEET NO.
DATE	DESCRIPTION	DATE	DESCRIPTION	RYAN J. WILLIAMSON, P.E. LICENSE NUMBER 81421 BURGESS & NIPLE, INC. 1800 PEMBROOK DRIVE, INC. ORLANDO, FL 32810	ROAD NO.	COUNTY	FINANCIAL PROJECT ID		699
					SR 400	POLK	430185-3-52-01		

THE OFFICIAL RECORD OF THIS SHEET IS THE ELECTRONIC FILE DIGITALLY SIGNED AND SEALED UNDER RULE 61G15-23.004, F.A.C.

2/28/2024 7:23:43 PM day
P:\ORD_FDOT\WorkSets\FDOT\430185352O1-I-4\Roadway\TCP\TCDTRD01.dgn

DETOUR OBJECTIVE: (NIGHT TIME OPERATION ONLY)

UNIVERSITY BLVD.: DETOUR TO I-4 EB TO POLK PRKWY TO GET TO UNIVERSITY BLVD.

SR 33: DETOUR TO POLK PRKWY TO WB I-4 TO GET TO SR 33

NOTE: DETOUR WILL BE PERMITTED MONDAY THROUGH FRIDAY 9.30 PM TO 6:00 AM.
SEE TTC PLAN GENERAL NOTES FOR ADDITIONAL RESTRICTIONS.

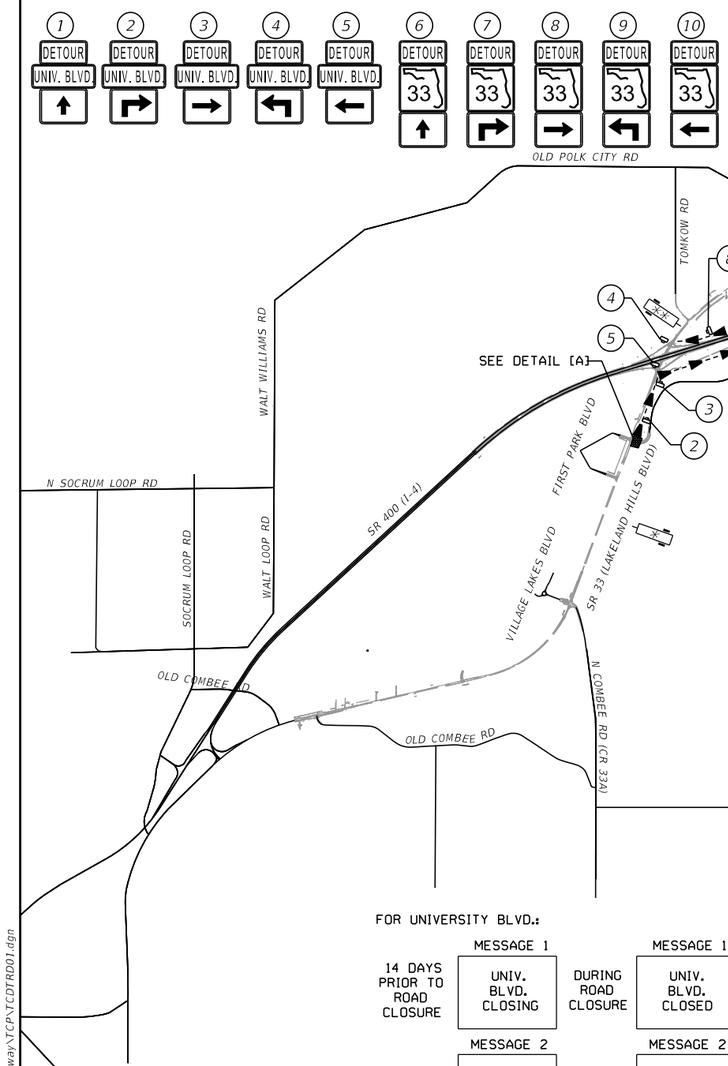

PRELIMINARY
subject to changes

FOR UNIVERSITY BLVD.:

	MESSAGE 1		MESSAGE 1
14 DAYS PRIOR TO ROAD CLOSURE	UNIV. BLVD. CLOSING	DURING ROAD CLOSURE	UNIV. BLVD. CLOSED
	MESSAGE 2		MESSAGE 2
	MM/DD/YY MM/DD/YY XPM-XAM		FOLLOW DETOUR

PLACE 1 PCMS EACH AT THE FOLLOWING LOCATIONS:

- ON SR 33 NB 2000' SOUTH OF UNIVERSITY BLVD.
- •• ON SR 33 SB 2000' NORTH OF I-4 EB ON RAMP

FOR PACE RD.:

	MESSAGE 1		MESSAGE 1
14 DAYS PRIOR TO ROAD CLOSURE	UNI BLVD CLOSING @ SR 33	DURING ROAD CLOSURE	UNI BLVD CLOSED @ SR 33
	MESSAGE 2		MESSAGE 2
	MM/DD/YY MM/DD/YY XPM-XAM		FOLLOW DETOUR

PLACE 1 PCMS EACH AT THE FOLLOWING LOCATIONS:

- ••• ON PACE RD WB 2000' EAST OF POLK PRKWY.
- •••• ON POLK PRKWY. NB 2640' SOUTH OF PACE RD OFF RAMP

FOR UNIVERSITY BLVD

LEGEND

- Work Zone Sign
- Type ''' Barricade (With Steady Burning Light) (At Night Only)
- Portable Changeable (Variable) Message Sign
- Work Zone

DETAIL [A]

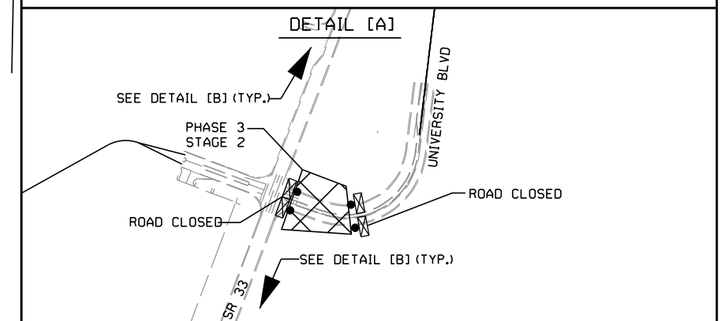

DETAIL [B]

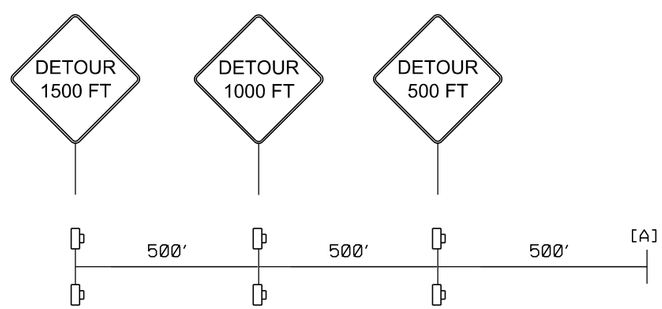

THE OFFICIAL RECORD OF THIS SHEET IS THE ELECTRONIC FILE DIGITALLY SIGNED AND SEALED UNDER RULE 61G15-23.004, F.A.C.

2/28/2024 7:23:44 PM day
P:\ORD_FDOT\WorkSets\FDOT\43018535201-I-4\Roadway\TCP\TCDTRD01.dgn

REVISIONS			
DATE	DESCRIPTION	DATE	DESCRIPTION

ENGINEER OF RECORD
RYAN J, WILLIAMSON, P.E.
LICENSE NUMBER 81421
BURGESS & NIPLE, INC.
1800 PEMBROOK DRIVE, SUITE 265
ORLANDO, FL 32810

STATE OF FLORIDA
DEPARTMENT OF TRANSPORTATION

ROAD NO.	COUNTY	FINANCIAL PROJECT ID
SR 400	POLK	430185-3-52-01

TTC PLAN (196)
DETOUR DETAIL

SHEET NO.
700

DETOUR OBJECTIVE: (NIGHT TIME OPERATION ONLY)

OLD POLK CITY RD.: DETOUR TO EPICENTER RD TO GET TO SR 33

SR 33 NB: DETOUR TO EPICENTER RD TO GET TO OLD POLK CITY RD

NOTE: DETOUR WILL BE PERMITTED MONDAY THROUGH FRIDAY 9.30 PM TO 6:00 AM.
SEE TTC PLAN GENERAL NOTES FOR ADDITIONAL RESTRICTIONS.

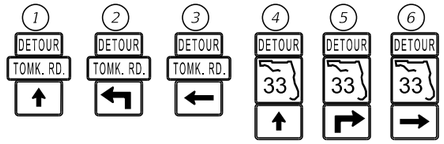

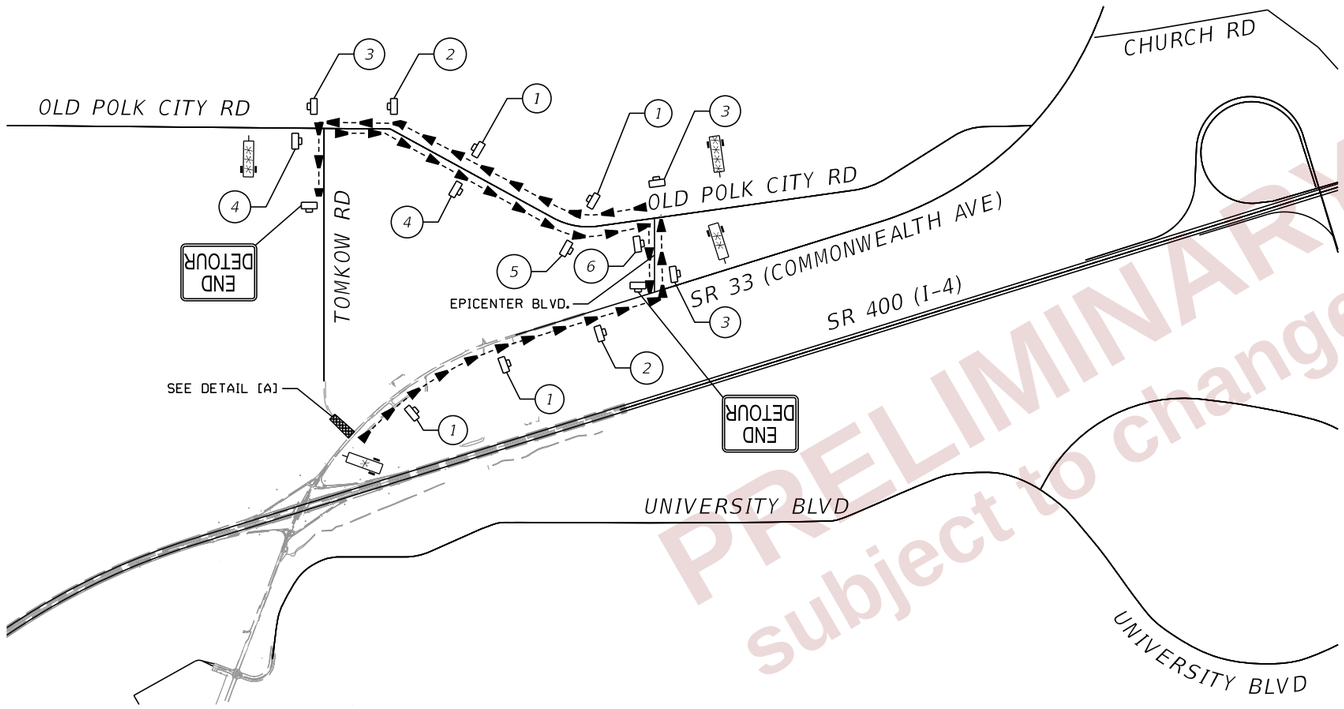

FOR OLD POLK CITY RD.:

14 DAYS PRIOR TO ROAD CLOSURE	MESSAGE 1	DURING ROAD CLOSURE	MESSAGE 1
	TOMKOW RØAD CLOSING		TOMKOW ROAD CLOSED
	MESSAGE 2		MESSAGE 2
	MM/DD/YY MM/DD/YY XPM-XAM		FOLLOW DETOUR

PLACE 1 PCMS EACH AT THE FOLLOWING LOCATIONS:

- ON SR 33 NB 2000' SOUTH OF TOMKOW RD.
- ON SR 33 SB 2000' NORTH OF EPICENTER BLVD.

FOR SR 33 NB & SR 33 SB:

14 DAYS PRIOR TO ROAD CLOSURE	MESSAGE 1	DURING ROAD CLOSURE	MESSAGE 1
	TOMKOW RD CLOSING Ø SR 33		TOMKOW RD CLOSED Ø SR 33
	MESSAGE 2		MESSAGE 2
	MM/DD/YY MM/DD/YY XPM-XAM		FOLLOW DETOUR

PLACE 1 PCMS EACH AT THE FOLLOWING LOCATIONS:

- ON OLD POLK CITY RD. WB 2000' EAST OF TOMKOW RD..
- ON OLD POLK CITY RD. EB 2000' WEST OF EPICENTER BLVD.

FOR TOMKOW RD

PRELIMINARY
subject to changes

N.T.S.

LEGEND

- Work Zone Sign
- Type III Barricade (With Steady Burning Light) (At Night Only)
- Portable Changeable (Variable) Message Sign
- Work Zone

DETAIL [A]

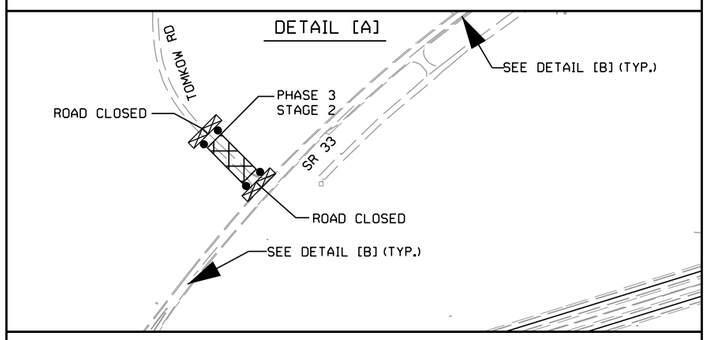

DETAIL [B]

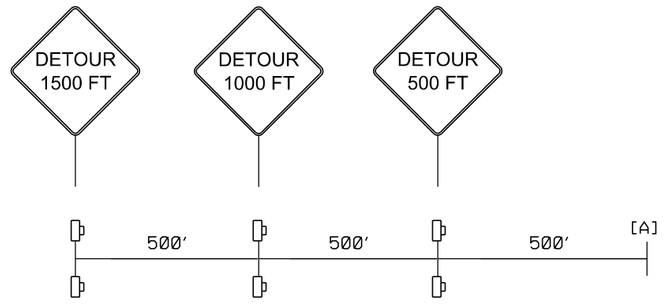

REVISIONS				ENGINEER OF RECORD	STATE OF FLORIDA DEPARTMENT OF TRANSPORTATION			TTC PLAN (197) DETOUR DETAIL	SHEET NO.
DATE	DESCRIPTION	DATE	DESCRIPTION	RYAN J, WILLIAMSON, P.E. LICENSE NUMBER 81421 BURGESS & NIPLE, INC. 1800 PEMBROOK DRIVE, SUITE 265 ORLANDO, FL 32810	ROAD NO.	COUNTY	FINANCIAL PROJECT ID		701
					SR 400	POLK	430185-3-52-01		

THE OFFICIAL RECORD OF THIS SHEET IS THE ELECTRONIC FILE DIGITALLY SIGNED AND SEALED UNDER RULE 61G15-23.004, F.A.C.

2/28/2024 7:23:45 PM day
P:\ORD_FDOT\WorkSets\FDOT\430185352O1-I-4\Roadway\TCP\TCDTRD01.dgn

DETOUR OBJECTIVE: BICYCLE AND PEDESTRIAN DETOUR AT FIRST PARK BLVD. AND UNIVERSITY BLVD. – PHASE I STAGE 2

UNIVERSITY BLVD. : THE EXISTING TRAIL ON THE WEST SIDE OF UNIVERSITY BLVD. END AT SR 33 – NO DETOUR JUST ADVANCE SIGNAGE AT RESEARCH WAY.
THE EXISTING SIDEWALK ON THE EAST SIDE OF UNIVERSITY CROSS OVER AT SR 33 NORTH TO FIRST BLVD – NO DETOUR JUST ADVANCE SIGNAGE.
APPROXIMATELY 3.5 MILES OF WITHOUT ANY RESIDENTIAL OR COMMERCIAL ON UNIVERSITY BETWEEN SR 570 TO SR 33

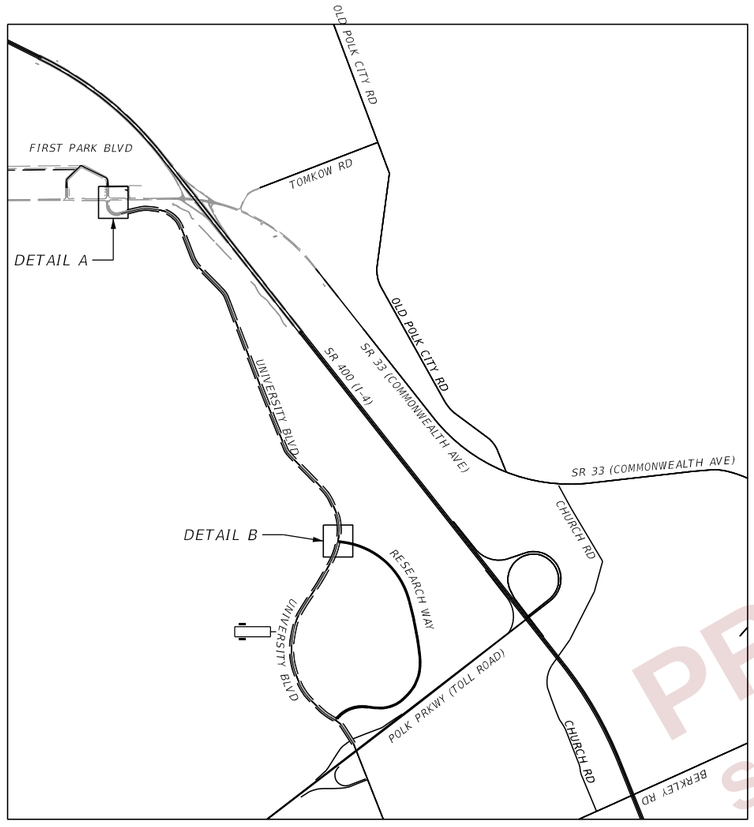

DETAIL A

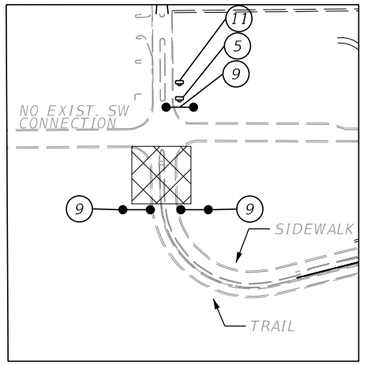

DETAIL B

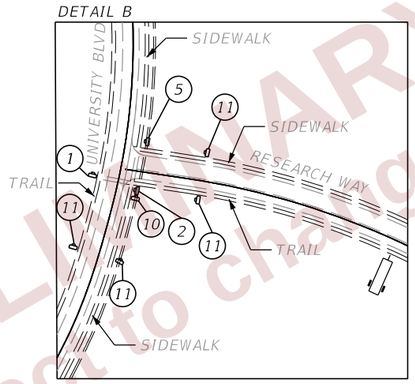

N.T.S.

LEGEND

- Work Zone Sign
- Type III Barricade
- Portable Changeable (Variable) Message Sign
- Work Zone
- CHANNELIZING DEVICE – PEDESTRIAN LCD

FOR TRAIL CLOSURE ON UNIVERSITY BLVD:

	MESSAGE 1	MESSAGE 2
TWO WEEKS PRIOR TO ROAD CLOSURE	TRAIL CLOSED @ SR 33	MM/DD/YY TO MM/DD/YY
DURING ROAD CLOSURE	TRAIL CLOSED	USE ALT ROUTE

(1) M04-09AR

(2) M04-09AL

(5) M04-09BL

(6) M04-09BR

(9) R09-09

(10) R09-10

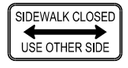

(11) W20-1F

PEDESTRIAN DETOUR - PHASE I - STAGE 2

PRELIMINARY subject to changes

REVISIONS				ENGINEER OF RECORD	STATE OF FLORIDA DEPARTMENT OF TRANSPORTATION			TTC PLAN (198) DETOUR DETAIL	SHEET NO.
DATE	DESCRIPTION	DATE	DESCRIPTION	RYAN J. WILLIAMSON, P.E. LICENSE NUMBER 81421 BURGESS & NIPLE, INC. 1800 PEMBROOK DRIVE, SUITE 265 ORLANDO, FL 32810	ROAD NO.	COUNTY	FINANCIAL PROJECT ID		702
					SR 400	POLK	430185-3-52-01		

THE OFFICIAL RECORD OF THIS SHEET IS THE ELECTRONIC FILE DIGITALLY SIGNED AND SEALED UNDER RULE 61G15-23.004, F.A.C.

2/28/2024 7:24:01 PM day
P:\ORD_FDOT\WorkSets\FDOT\430185352O1-I-4\Roadway\TCP\TCDTRD01.dgn

DETOUR OBJECTIVE: PEDESTRIAN DETOUR AT FIRST PARK BLVD. AND UNIVERSITY BLVD. – PHASE II STAGE 2

UNIVERSITY BLVD. : THE EXISTING TRAIL ON THE WEST SIDE OF UNIVERSITY BLVD. END AT SR 33 – NO DETOUR JUST ADVANCE SIGNAGE.
THE EXISTING SIDEWALK ON THE EAST SIDE OF UNIVERSITY CROSS OVER AT SR 33 NORTH TO FIRST BLVD – NO DETOUR JUST ADVANCE SIGNAGE.
APPROXIMATELY 3.5 MILES WITHOUT ANY RESIDENTIAL OR COMMERCIAL ON UNIVERSITY BETWEEN SR 570 TO SR 33
NO RESIDENTIAL BETWEEN TRADEPORT DR AND UNIVERSITY BLVD.

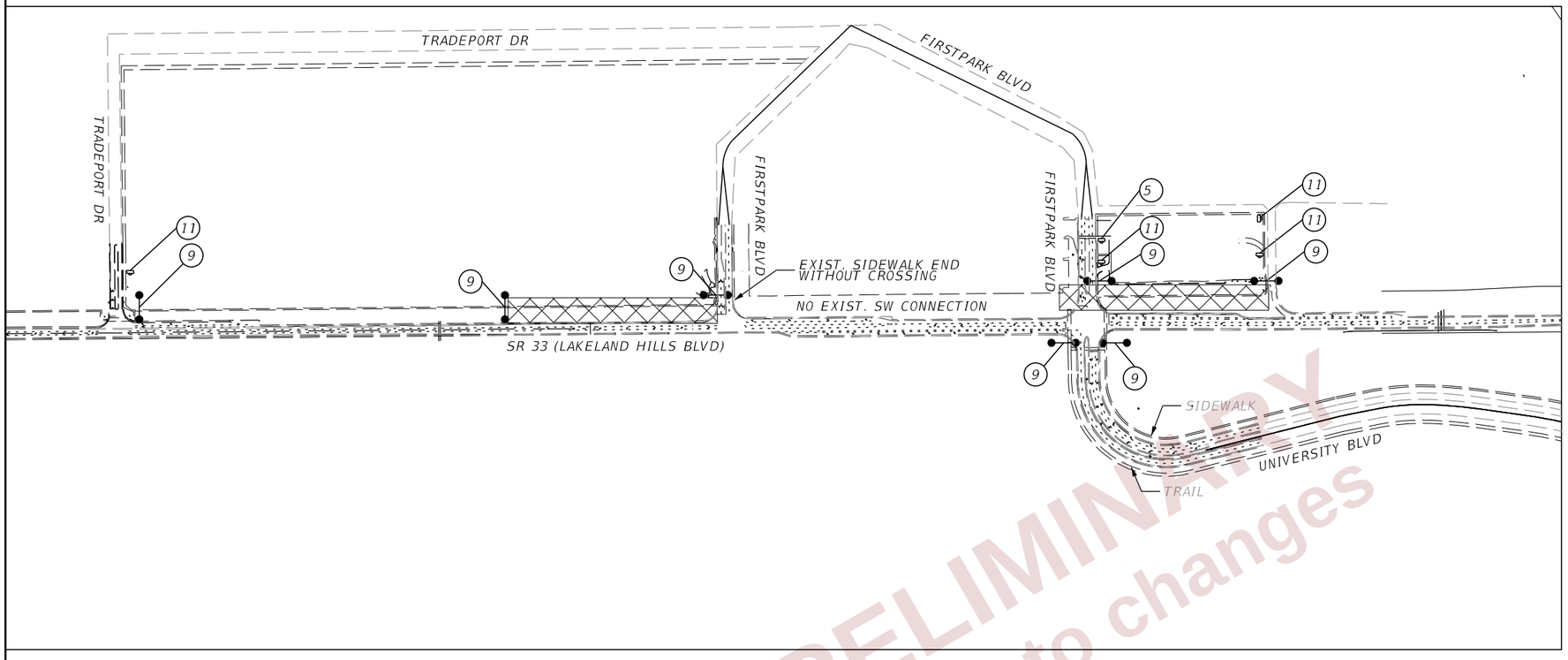

N.T.S.

LEGEND

- Work Zone Sign
- Type III Barricade
- Work Zone
- CHANNELIZING DEVICE – PEDESTRIAN LCD

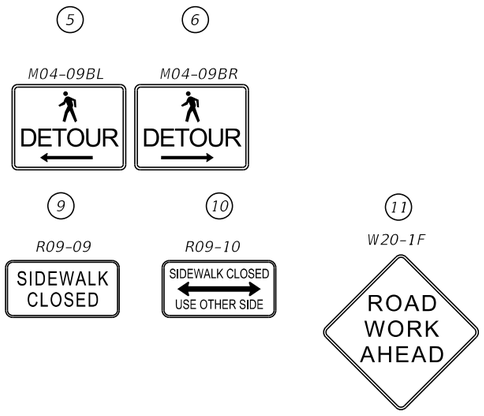

PEDESTRIAN DETOUR - PHASE II - STAGE 2

PRELIMINARY subject to changes

REVISIONS				ENGINEER OF RECORD	STATE OF FLORIDA DEPARTMENT OF TRANSPORTATION			TTC PLAN (199) DETOUR DETAIL	SHEET NO.
DATE	DESCRIPTION	DATE	DESCRIPTION	RYAN J. WILLIAMSON, P.E. LICENSE NUMBER 81421 BURGESS & NIPLE, INC. 1800 PEMBROOK DRIVE, SUITE 265 ORLANDO, FL 32810	ROAD NO.	COUNTY	FINANCIAL PROJECT ID		
					SR 400	POLK	430185-3-52-01		703

THE OFFICIAL RECORD OF THIS SHEET IS THE ELECTRONIC FILE DIGITALLY SIGNED AND SEALED UNDER RULE 61G15-23.004, F.A.C.

2/28/2024 7:24:02 PM day
P:\ORD_FDOT\WorkSets\FDOT\430185352O1-I-4\Roadway\TCP\TCDTRD01.dgn

TEMPORARY SIGNALIZATION NOTES

1. INSTALL TEMPORARY VEHICLE DETECTION FOR ALL MOVEMENTS FOR ALL PHASES OF CONSTRUCTION PER FDOT STANDARDS AND DISTRICT 1 GUIDELINES.
2. PROVIDE SIGNAL CABLE AND CONDUIT AS NEEDED.
3. CONTRACTOR TO ADJUST SIGNAL HEADS AS NEEDED BASED ON CONSTRUCTION PHASE LANE GEOMETRY.
4. CONTRACTOR TO MAINTAIN EXISTING VIDEO DETECTION SYSTEM.
5. CONTRACTOR TO MAINTAIN EXISTING SIGNAL PHASING & TIMING DURING TEMPORARY CONDITION.

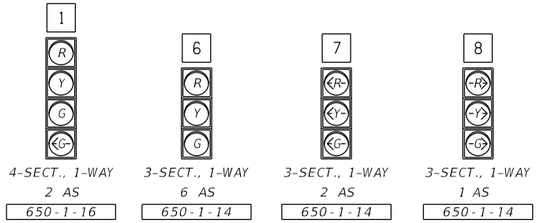

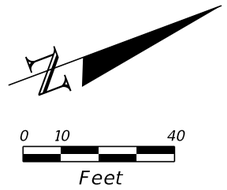

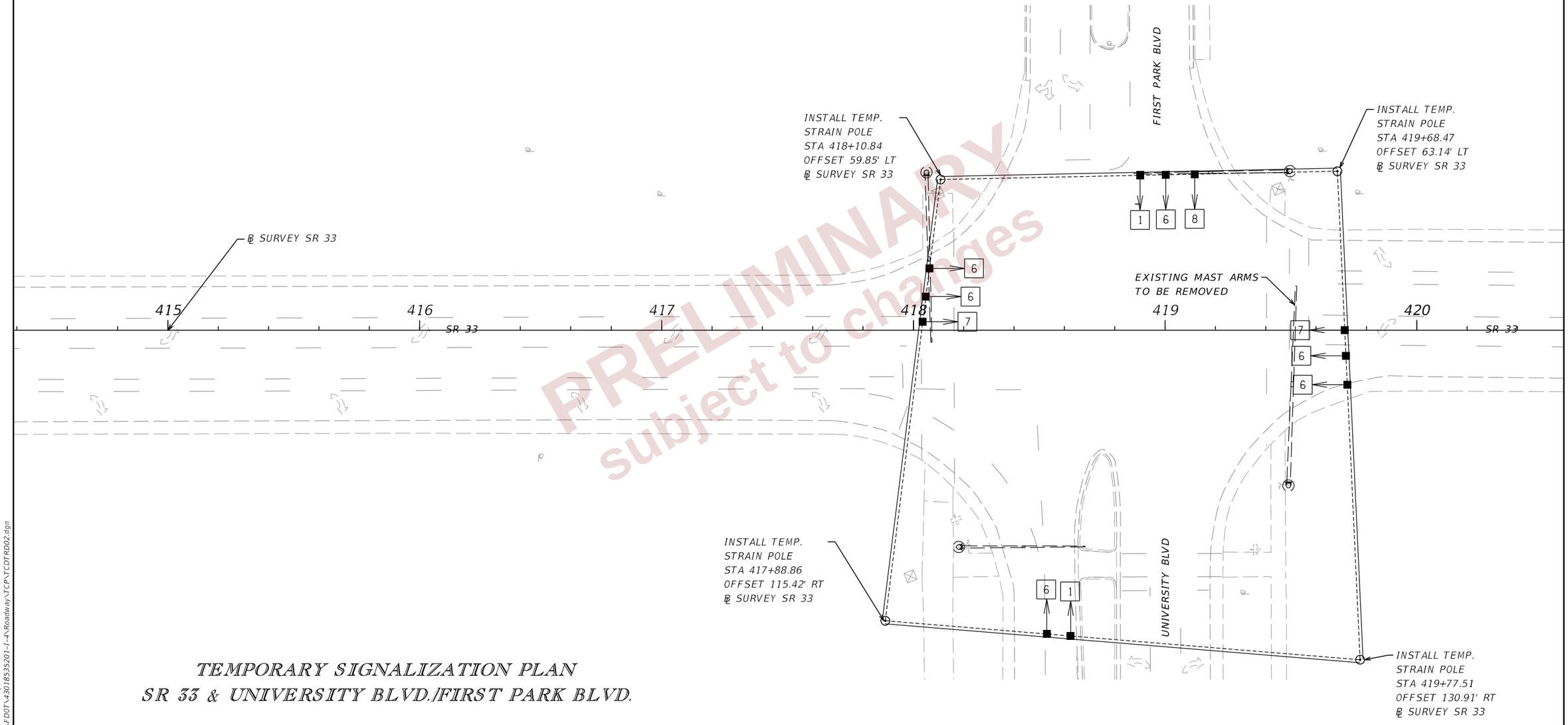

PRELIMINARY subject to changes

TEMPORARY SIGNALIZATION PLAN
SR 33 & UNIVERSITY BLVD./FIRST PARK BLVD.

REVISIONS				ENGINEER OF RECORD	STATE OF FLORIDA DEPARTMENT OF TRANSPORTATION			TTC PLAN (200) TEMPORARY SIGNALIZATION	SHEET NO.
DATE	DESCRIPTION	DATE	DESCRIPTION	RYAN J. WILLIAMSON, P.E. LICENSE NUMBER 81421 BURGESS & NIPLE, INC. 1800 PEMBROOK DRIVE, SUITE 265 ORLANDO, FL 32810	ROAD NO.	COUNTY	FINANCIAL PROJECT ID		704
					SR 400	POLK	430185-3-52-01		

THE OFFICIAL RECORD OF THIS SHEET IS THE ELECTRONIC FILE DIGITALLY SIGNED AND SEALED UNDER RULE 61G15-23.004, F.A.C.

2/28/2024 7:24:21 PM day
P:\ORD_FDOT\WorkSets\FDOT\430185352O1-I-4\Roadway\TCP\TCDTR002.dgn

TEMPORARY SIGNALIZATION NOTES

1. INSTALL TEMPORARY VEHICLE DETECTION FOR ALL MOVEMENTS FOR ALL PHASES OF CONSTRUCTION PER FDOT STANDARDS AND DISTRICT 1 GUIDELINES.
2. PROVIDE SIGNAL CABLE AND CONDUIT AS NEEDED.
3. CONTRACTOR TO ADJUST SIGNAL HEADS AS NEEDED BASED ON CONSTRUCTION PHASE LANE GEOMETRY.
4. CONTRACTOR TO MAINTAIN EXISTING VIDEO DETECTION SYSTEM.
5. CONTRACTOR TO MAINTAIN EXISTING SIGNAL PHASING & TIMING DURING TEMPORARY CONDITION.

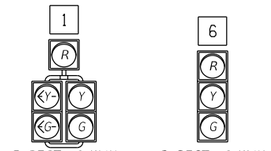

5-SECT., 1-WAY
1 AS
650-1-19

3-SECT., 1-WAY
5 AS
650-1-14

N

0 10 40
Feet

EXIST. STRAIN POLE TO BE REMOVED

INSTALL TEMP. STRAIN POLE STA 442+82.85 OFFSET 84.93' LT ℄ SURVEY SR 33

I-4 RAMP B

EXIST. STRAIN POLE TO BE REMOVED

INSTALL TEMP. STRAIN POLE STA 444+12.41 OFFSET 64.00' LT ℄ SURVEY SR 33

℄ SURVEY SR 33

440 441 442 443 444 445

SR 33

EXIST. STRAIN POLE TO REMAIN STA. 443+52.47 107.29' RT.

EXIST. STRAIN POLE TO REMAIN STA. 444+68.08 63.34' RT. (CCTV TO BE MAINTAINED)

I-4 RAMP C

PRELIMINARY subject to changes

TEMPORARY SIGNALIZATION PLAN
SR 33 & I-4 (RAMPS B & C)

REVISIONS				ENGINEER OF RECORD	STATE OF FLORIDA DEPARTMENT OF TRANSPORTATION			TTC PLAN (201) TEMPORARY SIGNALIZATION	SHEET NO.
DATE	DESCRIPTION	DATE	DESCRIPTION	RYAN J. WILLIAMSON, P.E. LICENSE NUMBER 81421 BURGESS & NIPLE, INC. 1800 PEMBROOK DRIVE, SUITE 265 ORLANDO, FL 32810	ROAD NO.	COUNTY	FINANCIAL PROJECT ID		705
					SR 400	POLK	430185-3-52-01		

2/28/2024 7:25:33 PM day
P:\ORD_FDOT\WorkSets\FDOT\430185352O1-I-4\Roadway\TCP\TCDTROD02.dgn

THE OFFICIAL RECORD OF THIS SHEET IS THE ELECTRONIC FILE DIGITALLY SIGNED AND SEALED UNDER RULE 61G15-23.004, F.A.C.

TEMPORARY SIGNALIZATION NOTES

1. INSTALL TEMPORARY VEHICLE DETECTION FOR ALL MOVEMENTS FOR ALL PHASES OF CONSTRUCTION PER FDOT STANDARDS AND DISTRICT 1 GUIDELINES.
2. PROVIDE SIGNAL CABLE AND CONDUIT AS NEEDED.
3. CONTRACTOR TO ADJUST SIGNAL HEADS AS NEEDED BASED ON CONSTRUCTION PHASE LANE GEOMETRY.
4. CONTRACTOR TO MAINTAIN EXISTING VIDEO DETECTION SYSTEM.
5. CONTRACTOR TO MAINTAIN EXISTING SIGNAL PHASING & TIMING DURING TEMPORARY CONDITION.

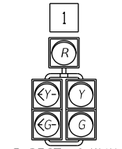

5-SECT., 1-WAY
AS
650-1-19

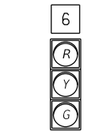

3-SECT., 1-WAY
6 AS
650-1-14

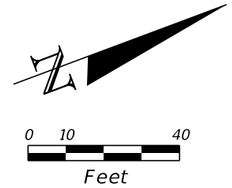

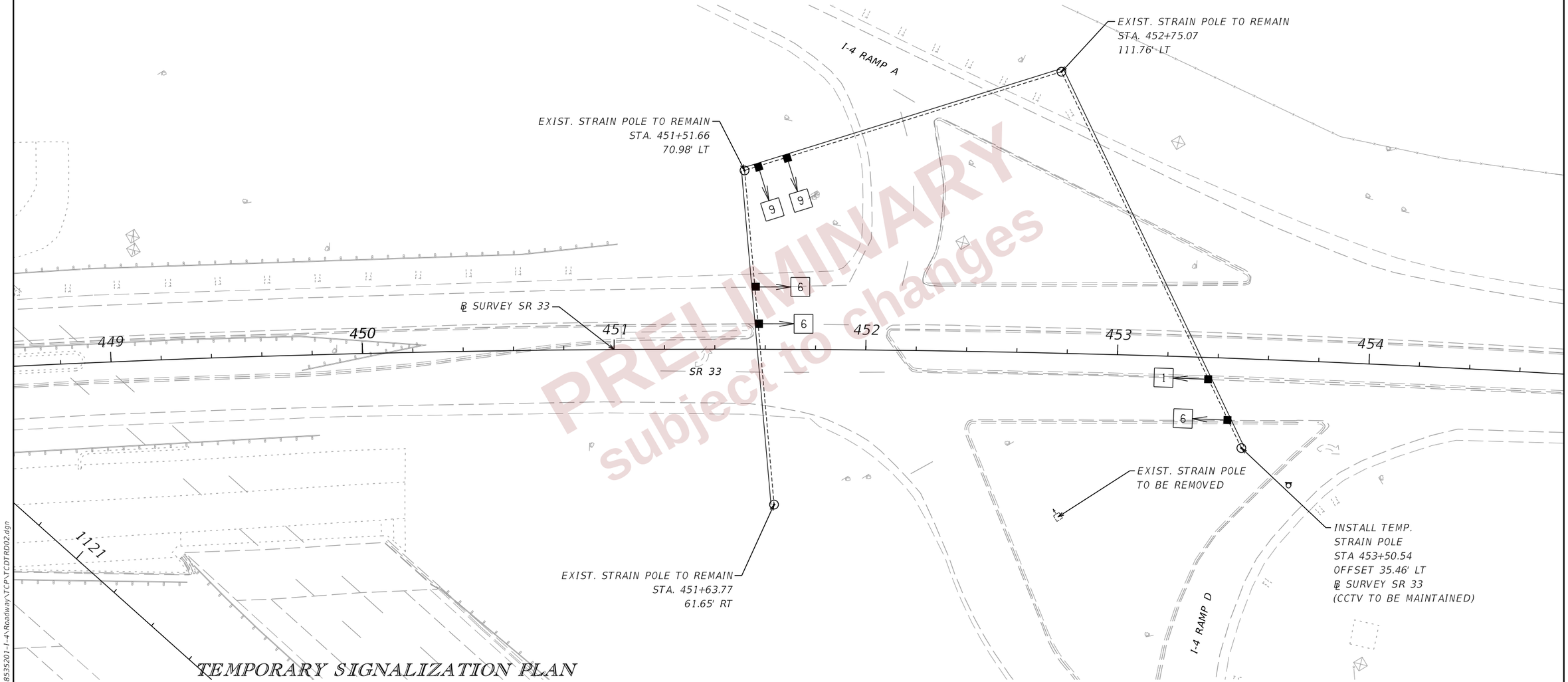

TEMPORARY SIGNALIZATION PLAN
SR 33 & I-4 (RAMPS A & D)

REVISIONS				ENGINEER OF RECORD	STATE OF FLORIDA DEPARTMENT OF TRANSPORTATION			TTC PLAN (202) TEMPORARY SIGNALIZATION	SHEET NO.
DATE	DESCRIPTION	DATE	DESCRIPTION	RYAN J. WILLIAMSON, P.E. LICENSE NUMBER 81421 BURGESS & NIPLE, INC. 1800 PEMBROOK DRIVE, SUITE 265 ORLANDO, FL 32810	ROAD NO.	COUNTY	FINANCIAL PROJECT ID		706
					SR 400	POLK	430185-3-52-01		

THE OFFICIAL RECORD OF THIS SHEET IS THE ELECTRONIC FILE DIGITALLY SIGNED AND SEALED UNDER RULE 61G15-23.004, F.A.C.

2/28/2024 7:25:36 PM day
P:\ORD_FDOT\WorkSets\FDOT\430185352O1_I-4\Roadway\TCP\TCDTRD02.dgn

TEMPORARY LIGHTING GENERAL NOTES:

1. FURNISH AND INSTALL A COMPLETE, OPERATIONAL AND APPROVED TEMPORARY LIGHTING SYSTEM IN ACCORDANCE WITH FDM SECTION 240.2.2.15 – TEMPORARY HIGHWAY LIGHTING, NFPA 70 (NEC) AND NATIONAL ELECTRICAL SAFETY CODE (NESC).
2. TEMPORARY LIGHITNG SYSTEM SHALL BE OPERATIONAL BEFORE REMOVING OR DISCONNECTING EXISTING LIGHTING SYSTEM AND SHALL BE MAINTAINED AT ALL TIMES DURING CONSTRUCTION UNTIL PROPOSED LIGHTING SYSTEM IS OPERATIONAL.
3. PROVIDE OVERHEAD WIRING WHEREEVER POSSIBLE AND DIRECT BURY WIRING IN CONDUITS AND PULL BOXES AT ALL DRIVEWAYS AND WHERE OVERHEAD WIRING INTERFERS WITH CONSTRUCTION OF ANY AND ALL DISCIPLINES. PROVIDE WIRING, CONDUITS AND PULL BOXES IN ACCORDANCE WITH FDOT REQUIREMENTS AND NFPA 70 (NEC).
4. THE FDOT RESERVES THE RIGHT TO APPROVE, REJECT OR REQUEST REPLACEMENT OF ANY OR ALL COMPONENTS FAILING TO SATISFACTORILY MEET FDOT REQUIREMENTS.
5. WHERE NEEDED PROVIDE ALL TRENCHING AND CONDUIT REQUIRED TO INSTALL TEMPORARY LIGHTING, AND MAKE IT OPERATIONAL.
6. PROVIDE ALL WIRING CONNECTORS, CONNECTION OF LUMINAIRES AND ALL OTHER HARDWARE REQUIRED FOR A COMPLETE WORKING SYSTEM.
7. THE TEMPORARY LIGHTING FIXTURES CAN BE POWERED BY EITHER EXISTING CIRCUITS FROM EXISTING DISTRIBUTION POINT, CIRCUITS FROM PROPOSED DISTRIBUTION POINT OR TEMPORARY DISTRIBUTION POINTS COORDINATED WITH THE POWER COMPANY. RESPONSIBILITY OF CONTRACTOR TO VERIFY THE DISTRIBUTION POINTS ARE THE CORRECT VOLTAGE AND CAN ACCOMMODATE THE CONNECTED LOADS.
8. INSTALL PROPOSED POLES DURING DAYLIGHT HOURS. THOSE POLES REPLACED SHALL BE OPERATIONAL AT NIGHT. MAY ELECT TO REPLACE POLES AT NIGHT BUT SHALL PROVIDE SUFFICIENT LIGHTING TO COMPENSATE FOR THE DOWN POLE(S). AFTER ALL TEMPORARY LIGHTING WORK HAS BEEN COMPLETED, REMOVE THE COMPENSATION LIGHTING.
9. COORDINATE ALL TEMPORARY ROADWAY LIGHTING WORK WITH TRAFFIC CONTROL PLANS FOR THE APPROPRIATE CONSTRUCTION SEQUENCE.
10. FURNISH AND INSTALL A COMPLETE AND FUNCTIONING TEMPORARY ROADWAY LIGHTING SYSTEM TO MAINTAIN AN AVERAGE INITIAL ILLUMNINATION OF 0.8 TO 1.0 FOOT CANDLE LIGHT LEVEL WITH A MAXIMUM-TO-MINIMUM UNIFORMITY RATIO OF 10:1 OR LESS, AVERAGE-TO-MINIMUM UNIFORMITY RATIO OF 4:1 OR LESS AND 0.3 VEILING LUMINANCE RATIO OR LESS ON THE TRAVEL LANES WHERE EXISTING ROADWAY LIGHTING IS AFFECTED DURING ALL PHASES OF CONSTRUCTION.
11. COORDINATE WITH NEW CONSTRUCTION DRAWINGS AND UTILITY DRAWINGS FOR LOCATION OF UNDERGROUND PIPING, CONDUITS, STRUCTURES, OR EQUIPMENT PRIOR TO LIGHT POLE PLACEMENT.
12. AFTER THE LIGHTING INSTALLATION IS COMPLETE, TEMPORARY LIGHT POLES, LUMINAIRES, AND CONDUCTORS SHALL REMAIN THE PROPERTY OF THE CONTRACTOR AND SHALL BE DISPOSED OF ACCORDINGLY.
13. THE OVERHEAD ELECTRICAL SUPPLY CONDUCTORS TO THE TEMPORARY LIGHT POLES SHALL BE A MINIMUM OF 18 FEET ABOVE THE HIGHEST CONSTRUCTION GRADE LEVEL DURING ALL PHASES OF CONSTRUCTION.
14. THE NOMINAL HEIGHT OF THE TEMPORARY LIGHT POLES SHALL NOT EXCEED THE NOMINAL HEIGHT OF THE EXISTING LIGHT POLES.
15. REMOVAL OF EXISTING LIGHT POLES, DESIGNATED TO BE REMOVED IN ROADWAY LIGHTING PLANS, MAY BE POSTPONED WHEREVER POSSIBLE TO PROVIDE TEMPORARY LIGHTING. EXISTING POLES DESIGNATED TO REMAIN WERE FACTORED IN TEMPORARY LIGHTING LAYOUT. FOR FINAL PROPOSED LIGHT POLES, SEE ROADWAY LIGHTING PLANS. (NOTE: FINAL PROPOSED LIGHTING IS NOT SHOWN ON THESE TEMPORARY LIGHTING PLANS).
16. TEMPORARY LIGHTING SYSTEM POLE SPACING MAY NEED TO BE ADJUSTED/MODIFIED BASED ON FIELD CONDITIONS. MAINTAIN SPACING IN TEMPORARY LIGHTING DATA TABLE TO THE MAXIMUM EXTENT POSSIBLE AND COORDINATE WITH FDOT ENGINEER WHEN MODIFICATIONS ARE NECESSARY.

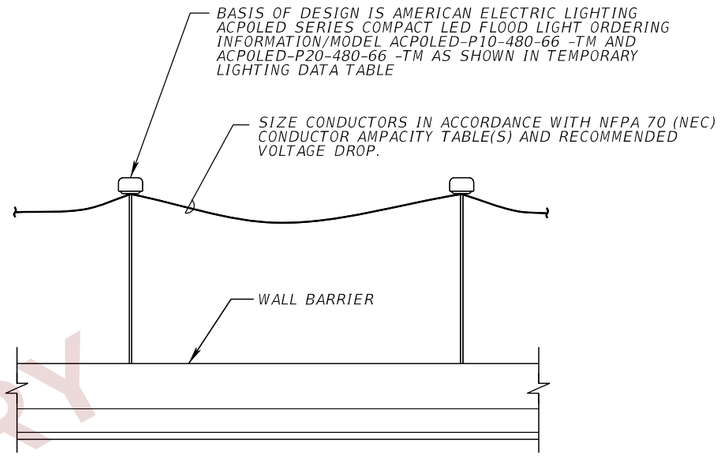

TEMPORARY LIGHTING DETAIL
NTS

DETAIL NOTES:

1. SEE TEMPORARY LIGHTING DATA TABLE FOR APPLICABLE ROADWAY SEGMENT, TTC PHASE, MOUNTING HEIGHT, APPROXIMATE SET BACK, SPACING, WATTAGE, TILT DEGREE, MODEL/IES FILE AND PROPOSED LOCATION.
2. LUMINAIRE VOLTAGE IS 480V LINE TO LINE SINGLE PHASE ALONG I-4 AND 240V LINE TO LINE SINGLE PHASE FOR SR 33 PROPOSED LIGHTING.
3. PROVIDE LUMINAIRE WITH INTEGRAL SURGE PROTECTION AND FUSES.
4. FOR LUMINAIRES OTHER THAN THE BASIS OF DESIGN SUBMIT FOR APPROVAL PHOTOMETRIC LIGHTING CALCULATIONS FOR ALL PHASES AND SEGMENTS SHOWN IN THE TEMPORARY LIGHTING DATA TABLE MEETING THE LIGHTING CRITERIA IN TEMPORARY LIGHTING GENERAL NOTE 10.
5. SUBMIT FOR REVIEW AND APPROVAL VOLTAGE DROP CALCULATIONS AND MOUNTING DETAILS FOR BACK OF BARRIER MOUNTED AND DIRECT BURIED MOUNTED LUMINAIRE SUPPORTS IN ACCORDANCE WITH FDM SECTION 240.2.2.15.

PRELIMINARY
Subject to changes

REVISIONS				ENGINEER OF RECORD	STATE OF FLORIDA DEPARTMENT OF TRANSPORTATION			TTC PLAN (203) TEMPORARY LIGHTING	SHEET NO.
DATE	DESCRIPTION	DATE	DESCRIPTION	JAMIE HEUER, P.E. LICENSE NUMBER 67493 H. W. LOCHNER 4350 W. CYPRESS STREET, SUITE 800 TAMPA, FLORIDA 33607	ROAD NO.	COUNTY	FINANCIAL PROJECT ID		707
					SR 400	POLK	430185-3-52-01		

THE OFFICIAL RECORD OF THIS SHEET IS THE ELECTRONIC FILE DIGITALLY SIGNED AND SEALED UNDER RULE 61G15-23.004, F.A.C.

2/28/2024 7:25:48 PM day
P:\ORD_FDOT\WorkSets\FDOT\430185352O1-I-4\Roadway\TCP\TEMP LIGHTING\TCPLT01.dgn

TEMPORARY LIGHTING PHASING NOTES:

PHASE 1 – STAGE 1
1. ALL EXISTING HIGH MASTS TO REMAIN THROUGHOUT THIS PHASE. THE EXISTING HIGH MASTS ARE NUMBERED AS SHOWN ON TTC PLAN SHEETS.
2. INSTALL TEMPORARY LIGHTING SYSTEM ALONG I-4 EB MAINLINE (STA. 3108+00 TO STA. 3117+40 AND STA. 3122+60 TO STA. 3130+80), EXISTING EB OFF RAMP (STA. 3108+00 TO STA. 3117+00), EXISTING EB ON RAMP (STA. 3123+00 TO 3127+00), EXISTING I-4 WB (STA. 3121+90 TO STA. 3133+60), EXISTING WB OFF RAMP (STA. 3122+80 TO STA. 3132+40) AND SR 33 (STA. 3437+40 TO STA. 3444+00 AND STA. 3449+60 TO STA. 3457+00).
3. TEMPORARY LIGHTING SYSTEM TO BE OPERATIONAL PRIOR TO REMOVING EXISTING HIGH MASTS IN NEXT STAGE.

PHASE 1 – STAGE 2
1. EXISTING HIGH MASTS EHM3, EHM5, EHM8, EHM9 AND EHM10 ARE TO BE REMOVED DURING THIS STAGE. THE REMAINDER OF THE EXISTING HIGH MASTS ARE TO REMAIN OPERATIONAL FOR THE DURATION OF THIS STAGE.
2. THE TEMPORARY LIGHTING INSTALLED IN PREVIOUS STAGE IS TO BE OPERATIONAL PRIOR TO REMOVAL OF HIGH MASTS EHM3, EHM5, EHM8, EHM9 AND EHM10.
3. PROPOSED LIGHTING ALONG EB I-4 MAINLINE, EB ON AND OFF RAMPS, WB OFF RAMP AND SR 33 NB ARE TO BE INSTALLED DURING THIS PHASE.
4. PROPOSED LIGHTING CONTROL CENTER A AND TRANSFORMER ARE TO BE INSTALLED DURING THIS STAGE.
5. PROPOSED LIGHTING CONTROL CENTERS E AND F TO BE INSTALLED DURING THIS STAGE.
6. TEMPORARY LIGHTING ALONG EXISTING I-4 EB TO BE INSTALLED FROM (STA. TO 3065+00 TO STA. 3104+00) AND TO READY FOR OPERATION IN PHASE 2.

PHASE 2
1. TEMPORARY LIGHTING SYSTEM INSTALLED IN PREVIOUS PHASE TO REMAIN AND ADJUSTED AS NECESSARY.
2. EXISTING HIGH MASTS 1, 2, 4, 6, 7, 11 AND 12 ARE STILL OPERATIONAL VIA TEMPORARY FEEDS.
3. EITHER THE PROPOSED LIGHTING CONTROL CENTER OR A TEMPORARY LIGHTING CONTROL CENTER WILL BE REQUIRED DURING THIS PHASE. EXISTING LIGHTING CONTROL CENTER IS TO REMAIN UNTIL ANOTHER POWER SOURCE IS OPERATIONAL.
4. PROPOSED LIGHTING FOR EB ON AND OFF RAMPS ARE NOW OPERATIONAL.
5. PROPOSED LIGHTING INSTALLED DURING PREVIOUS PHASE FOR SR 33 NB IS NOW OPERATIONAL.
6. THE PROPOSED LIGHTING FOR I-4 EB MAINLINE IS BEING INSTALLED DURING THIS PHASE.

PHASE 3
1. I-4 WB AND WB ON RAMP IS CLOSED DURING CONSTRUCTION OF PROPOSED I-4 WB.
2. AFTER PROPOSED LIGHTING ALONG I-4 EB MAINLINE IS OPERATIONAL, THE TEMPORARY LIGHTING ALONG THE EXISTING EB OFF AND ON RAMPS CAN BE REMOVED.
3. TEMPORARY LIGHTING ALONG I-4 WB CAN BE REMOVED AND EXISTING HIGH MASTS 2, 4, 6 AND 11 CAN BE REMOVED AFTER PROPOSED EB I-4 PROPOSED LIGHTING IS OPERATIONAL AND I-4 WB LANES HAVE BEEN PLACED ON EXISTING EB TRAVEL LANES.
4. EXISTING HIGH MASTS 1, 7 AND 12 ARE STILL OPERATIONAL VIA TEMPORARY FEEDS.
5. PROPOSED LIGHTNG ALONG I-4 WB MAINLINE, WB ON RAMP AND WB OFF RAMP ARE BEING INSTALLED DURING THIS PHASE.

PHASE 4
1. ALL PROPOSED LIGHTING HAVE BEEN INSTALLED AND IS OPERATIONAL.
2. ALL TEMPORARY LIGHTING CAN BE REMOVED AFTER PROPOSED LIGHTING OPERATIONAL.
3. REMAINING HIGH MAST LIGHTS CAN BE REMOVED.

TEMPORARY LIGHTING DATA TABLE

Roadway	TCP Phase	Segment Stations	Mounting Height	Set Back	Spacing	Luminaire Wattage	Tilt Degree	Proposed Luminaire	Proposed Location
I-4 EB	1-S2	3108+00 - 3117+40	25	4'	59	52	45	AEL-ACP0LED_P10-XX-66-TM	BEHIND BARRIER
I-4 EB	1-S2	3122+60 - 3130+80	25	4'	64	52	45	AEL-ACP0LED_P10-XX-66-TM	BEHIND BARRIER
I-4 WB	1-S2	3121+90 - 3133+60	25	4'	59	52	45	AEL-ACP0LED_P10-XX-66-TM	BEHIND BARRIER
I-4 WB	1-S2	1205+20 - 1217+01	25	4'	59	52	45	AEL-ACP0LED_P10-XX-66-TM	BEHIND BARRIER
EB OFF RAMP	1-S2	3108+00 - 3117+00	25	4'	59	52	45	AEL-ACP0LED_P10-XX-66-TM	BEHIND BARRIER
EB ON RAMP	1-S2	3123+00 - 3127+00	25	4'	59	52	45	AEL-ACP0LED_P10-XX-66-TM	BEHIND BARRIER
WB OFF RAMP	1-S2	3122+80 - 3132+40	25	4'	59	52	45	AEL-ACP0LED_P10-XX-66-TM	BEHIND BARRIER
SR 33 NB	1-S2	3437+40 - 3444+00	25	4'	59	52	45	AEL-ACP0LED_P10-XX-66-TM	BEHIND BARRIER
SR 33 NB	1-S2	3449+60 - 3457+00	25	4'	59	52	45	AEL-ACP0LED_P10-XX-66-TM	BEHIND BARRIER
I-4 EB	2	3065+00 - 3104+00	25	4'	59	52	45	AEL-ACP0LED_P10-XX-66-TM	BEHIND BARRIER
I-4 EB	2	3108+00 - 3117+40	25	4'	59	52	45	AEL-ACP0LED_P10-XX-66-TM	BEHIND BARRIER
I-4 EB	2	3122+60 - 3130+80	25	4'	59	52	45	AEL-ACP0LED_P10-XX-66-TM	BEHIND BARRIER
I-4 WB	2	3121+90 - 3133+60	25	4'	59	52	45	AEL-ACP0LED_P10-XX-66-TM	BEHIND BARRIER
I-4 WB	2	1205+20 - 1217+01	25	4'	59	52	45	AEL-ACP0LED_P10-XX-66-TM	BEHIND BARRIER
EB OFF RAMP	2	3108+00 - 3117+00	25	4'	59	52	45	AEL-ACP0LED_P10-XX-66-TM	BEHIND BARRIER
EB ON RAMP	2	3123+00 - 3127+00	25	4'	59	52	45	AEL-ACP0LED_P10-XX-66-TM	BEHIND BARRIER
WB OFF RAMP	2	3122+80 - 3132+40	25	4'	59	52	45	AEL-ACP0LED_P10-XX-66-TM	BEHIND BARRIER
SR 33 NB	2	3437+40 - 3444+00	25	4'	59	52	45	AEL-ACP0LED_P10-XX-66-TM	BEHIND BARRIER
SR 33 NB	2	3449+60 - 3457+00	25	4'	59	52	45	AEL-ACP0LED_P10-XX-66-TM	BEHIND BARRIER
I-4 EB (NOW I-4 WB)	3	3065+00 - 3104+00	25	4'	59	52	45	AEL-ACP0LED_P10-XX-66-TM	BEHIND BARRIER
I-4 EB (NOW I-4 WB)	3	3108+00 - 3117+40	25	4'	59	52	45	AEL-ACP0LED_P10-XX-66-TM	BEHIND BARRIER
I-4 EB (NOW I-4 WB)	3	3122+60 - 3130+80	25	4'	59	52	45	AEL-ACP0LED_P10-XX-66-TM	BEHIND BARRIER

NOTES:
1. LUMINAIRE USED AS BASIS OF DESIGN IS AMERICAN ELECTRIC LIGHTING'S ACP0 SERIES FLOOD LIGHT.
2. LUMINAIRES ZERO DEGREE IS WITH THE LIGHTING DISTRIBUTION AIMING STRAIGHT DOWN AND THE REFRACTOR/RELECTOR AT A HORIZONTAL POSITION.

PRELIMINARY
subject to change

THE OFFICIAL RECORD OF THIS SHEET IS THE ELECTRONIC FILE DIGITALLY SIGNED AND SEALED UNDER RULE 61G15-23.004, F.A.C.

REVISIONS				ENGINEER OF RECORD	STATE OF FLORIDA DEPARTMENT OF TRANSPORTATION			TTC PLAN (204) TEMPORARY LIGHTING	SHEET NO.
DATE	DESCRIPTION	DATE	DESCRIPTION	JAMIE HEUER, P.E. LICENSE NUMBER 67493 H. W. LOCHNER 4350 W. CYPRESS STREET, SUITE 800 TAMPA, FLORIDA 33607	ROAD NO.	COUNTY	FINANCIAL PROJECT ID		708
					SR 400	POLK	430185-3-52-01		

2/28/2024 7:25:59 PM day
P:\ORD_FDOT\WorkSets\FDOT\430185352O1-I-4\Roadway\TCP\TEMP LIGHTING\TCPLLT02.dgn

1. THE LOCATION(S) OF THE UTILITIES SHOWN IN THE PLANS (INCLUDING THOSE DESIGNATED VV, VH, AND VVH) ARE BASED ON LIMITED INVESTIGATION TECHNIQUES AND SHOULD BE CONSIDERED APPROXIMATE ONLY. THE VERIFIED LOCATIONS/ELEVATIONS APPLY ONLY AT THE POINTS SHOWN. INTERPOLATIONS BETWEEN THESE POINTS HAVE NOT BEEN VERIFIED.

2.

UAO COMPANY	UAO CONTACT	TELEPHONE NUMBERS
City of Lakeland - Water/Wastewater	Jim Lilly	(863) 834-6175
City of Lakeland - Gas	Micheal Dammer	(863) 834-8660
City of Lakeland - Electric	Naomi A. Tillett	(863) 834-6410
City of Lakeland - IT Fiber	Rex Harris, Jr.	(863) 834-6825
Florida Gas Transmission	Joseph Sanchez	(407) 838-7171
Frontier Communications	Fred Valdes	(863) 688-9714
Spectrum / Charter Communications	Darin Daniels	(863) 333-4764
Uniti Fiber	Terry Young	(251) 422-3872
Verizon / MCI	Tim Cole	(407) 618-2078
Orlando Utilities Commission	Adonis Willis	(407) 434-4134

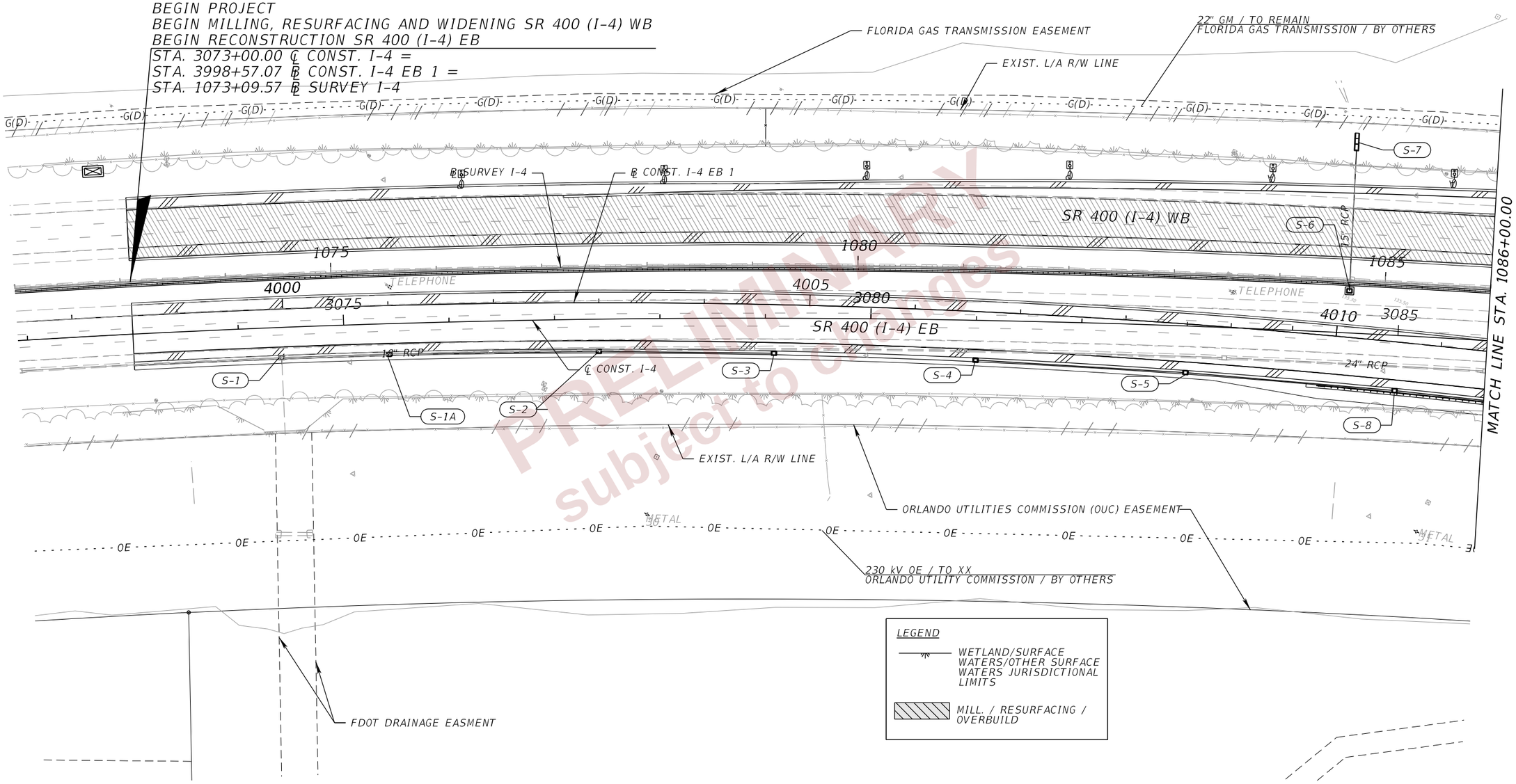

PRELIMINARY
subject to change

REVISIONS				ENGINEER OF RECORD	STATE OF FLORIDA DEPARTMENT OF TRANSPORTATION			UTILITY ADJUSTMENTS (01)	SHEET NO.
DATE	DESCRIPTION	DATE	DESCRIPTION	DEBANANDA PANIGRAHI, P.E. LICENSE NUMBER 68318 H. W. LOCHNER 4300 W. CYPRESS STREET, SUITE 500 TAMPA, FLORIDA 33607	ROAD NO.	COUNTY	FINANCIAL PROJECT ID		709
					SR 400	POLK	430185-3-52-01		

THE OFFICIAL RECORD OF THIS SHEET IS THE ELECTRONIC FILE DIGITALLY SIGNED AND SEALED UNDER RULE 61G15-23.004, F.A.C.

2/29/2024 9:33:05 PM JTAGLIAFERRO
c:\pw_working\lochner-pw-01\dms18802\PLANRD02.dgn

END MILLING, RESURFACING AND WIDENING SR 400 (I-4) WB
BEGIN RECONSTRUCTION SR 400 (I-4) WB
STA. 3098+00.00 ℄ CONST. I-4 =
STA. 1098+20.43 ℄ SURVEY I-4

N

0 20 100
Feet

MATCH LINE STA. 1086+00.00

MATCH LINE STA. 1100+00.00

22" GM / TO REMAIN
FLORIDA GAS TRANSMISSION / BY OTHERS

FLORIDA GAS TRANSMISSION EASEMENT

EXIST. L/A R/W LINE

℄ CONST. RAMP A

RAMP A

SR 400 (I-4) WB

℄ SURVEY I-4

℄ CONST. I-4

BFO / SEE ITS PLANS

BE /SEE ITS PLANS

BFO /SEE ITS PLANS

24" RCP

℄ CONST. I-4 EB 1

TELEPHONE WITH CAMERA
ELECTRIC

N74°23'10"E

℄ CONST. RAMP B

N72°47'29"E

SR 400 (I-4) EB

RAMP B

S-9 S-9A S-10 S-11 S-12 S-12A S-13 S-14 S-14A S-14B S-15 S-16 S-17 S-17A S-18 S-18A S-18B

EX-13

230 kV OE / TO XX
ORLANDO UTILITY COMMISSION / BY OTHERS

ORLANDO UTILITIES COMMISSION (OUC) EASEMENT

DRAINAGE EASEMENT

LEGEND

WETLAND/SURFACE WATERS/OTHER SURFACE WATERS JURISDICTIONAL LIMITS

MILL. / RESURFACING / OVERBUILD

THE OFFICIAL RECORD OF THIS SHEET IS THE ELECTRONIC FILE DIGITALLY SIGNED AND SEALED UNDER RULE 61G15-23.004, F.A.C.

REVISIONS				ENGINEER OF RECORD	STATE OF FLORIDA DEPARTMENT OF TRANSPORTATION			UTILITY ADJUSTMENTS (02)	SHEET NO.
DATE	DESCRIPTION	DATE	DESCRIPTION	DEBANANDA PANIGRAHI, P.E. LICENSE NUMBER 68318 H. W. LOCHNER 4300 W. CYPRESS STREET, SUITE 500 TAMPA, FLORIDA 33607	ROAD NO.	COUNTY	FINANCIAL PROJECT ID		710
					SR 400	POLK	430185-3-52-01		

2/29/2024 9:33:05 PM JTAGLIAFERRO
c:\pw_working\lochner-pw-01\dms18824\UTADRD02.dgn

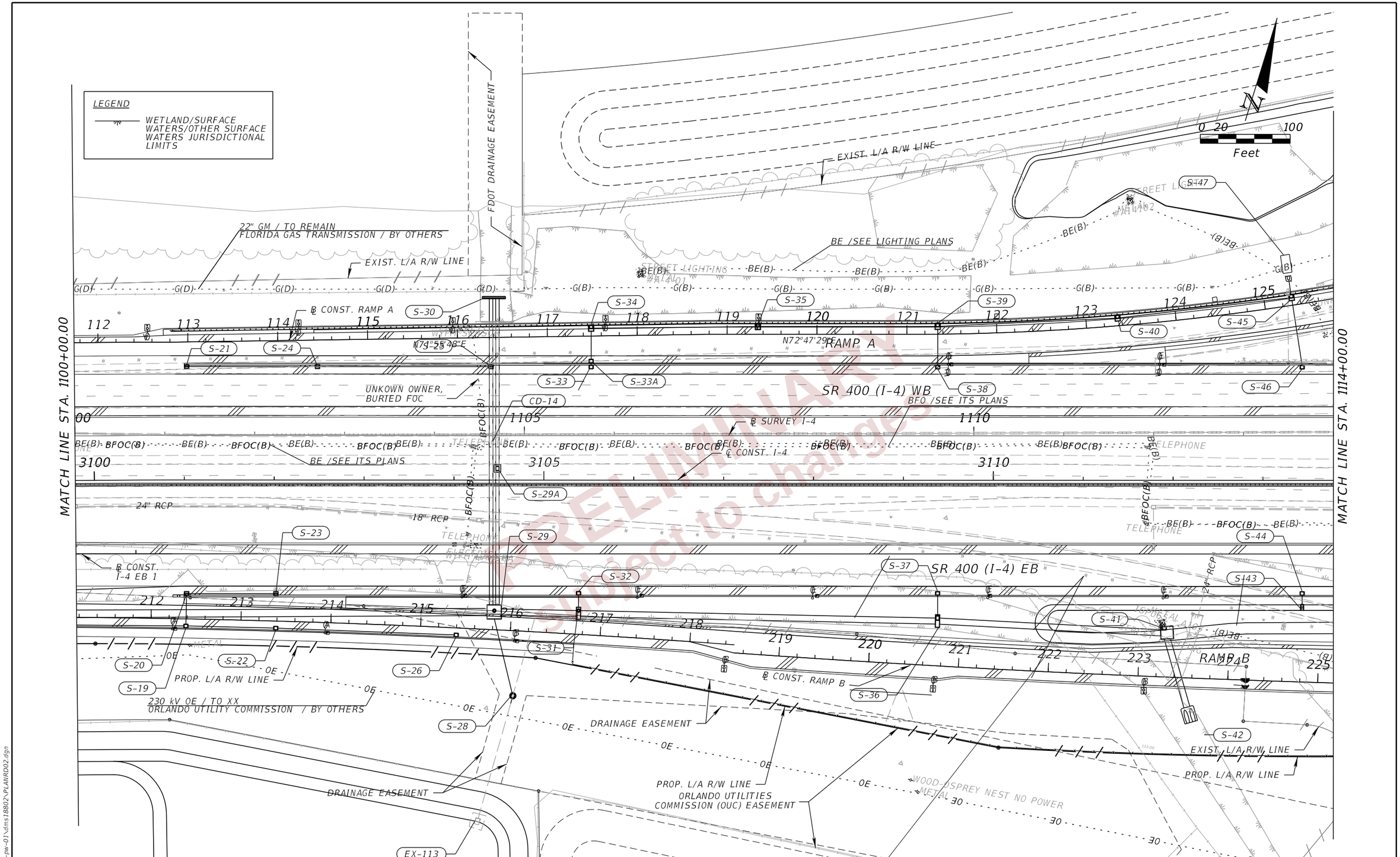

THE OFFICIAL RECORD OF THIS SHEET IS THE ELECTRONIC FILE DIGITALLY SIGNED AND SEALED UNDER RULE 61G15-23.004, F.A.C.

REVISIONS			
DATE	DESCRIPTION	DATE	DESCRIPTION

ENGINEER OF RECORD
DEBANANDA PANIGRAHI, P.E.
LICENSE NUMBER 68318
H. W. LOCHNER
4300 W. CYPRESS STREET, SUITE 500
TAMPA, FLORIDA 33607

STATE OF FLORIDA
DEPARTMENT OF TRANSPORTATION

ROAD NO.	COUNTY	FINANCIAL PROJECT ID
SR 400	POLK	430185-3-52-01

UTILITY ADJUSTMENTS (03)

SHEET NO.
711

2/29/2024 9:33:06 PM JTAGLIAFERRO
c:\pw_working\lochner-pw-01\dms18802\PLANRD02.dgn

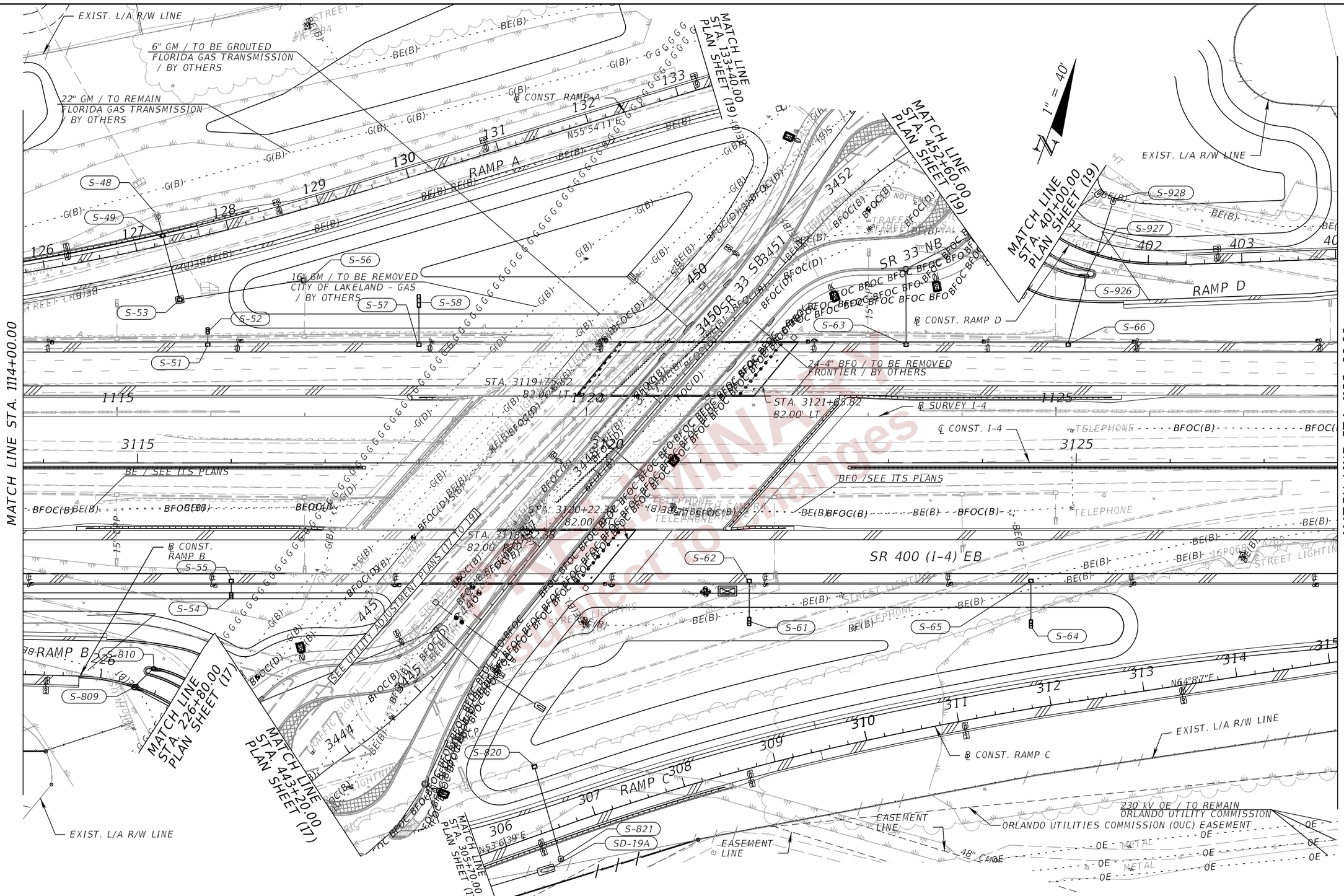

PRELIMINARY
Subject to changes

THE OFFICIAL RECORD OF THIS SHEET IS THE ELECTRONIC FILE DIGITALLY SIGNED AND SEALED UNDER RULE 61G15-23.004, F.A.C.

REVISIONS			
DATE	DESCRIPTION	DATE	DESCRIPTION

ENGINEER OF RECORD
DEBANANDA PANIGRAHI, P.E.
LICENSE NUMBER 68318
H. W. LOCHNER
4300 W. CYPRESS STREET, SUITE 500
TAMPA, FLORIDA 33607

STATE OF FLORIDA
DEPARTMENT OF TRANSPORTATION

ROAD NO.	COUNTY	FINANCIAL PROJECT ID
SR 400	POLK	430185-3-52-01

UTILITY ADJUSTMENTS (04)

SHEET NO.
712

2/29/2024 9:33:07 PM JTAGLIAFERRO
c:\pw_working\lochner-pw-01\dms18802\PLANRD02.dgn

LEGEND

WETLAND/SURFACE WATERS/OTHER SURFACE WATERS JURISDICTIONAL LIMITS

MATCH LINE STA. 1128+00.00

MATCH LINE STA. 1142+00.00

CITY OF LAKELAND EASEMENT

STORMWATER MANAGEMENT FACILITY

EXIST. L/A R/W LINE

0 20 100 Feet

69 KV & 12 KV OE / TO BE ADJUSTED
CITY OF LAKELAND - ELECTRIC / BY OTHERS

69 KV & 12 KV OE / TO REMAIN
CITY OF LAKELAND - ELECTRIC / BY OTHERS

69 KV & 12 KV OE / TO BE PLACED UNDERGROUND
CITY OF LAKELAND - ELECTRIC / BY OTHERS

BE / SEE LIGHTING PLANS

℄ CONST. RAMP D

RAMP D

BE / SEE ITS PLANS

BFO / SEE ITS PLANS

BFOC / TO REMAIN
CITY OF LAKELAND

℄ CONST. I-4

℄ SURVEY I-4

SR 400 (I-4) WB

SR 400 (I-4) EB

℄ CONST. RAMP C

RAMP C

EXIST. L/A R/W LINE

69 KV & 12 KV OE / TO REMAIN
CITY OF LAKELAND / BY OTHERS

OE POLE / TO BE REMOVED
CITY OF LAKELAND - ELECTRIC / BY OTHERS

OE POLE / PROPOSED
CITY OF LAKELAND - ELECTRIC / BY OTHERS

PROPOSED L/A R/W LINE

ELECTRIC TRANSMISSION EASEMENT

ORLANDO UTILITUES COMMISSION (OUC) EASEMENT

ORLANDO UTILITIES COMMISSION (OUC) EASEMENT

230 kV OE / TO XX
ORLANDO UTILITY COMMISSION / BY OTHERS

PRELIMINARY subject to change

THE OFFICIAL RECORD OF THIS SHEET IS THE ELECTRONIC FILE DIGITALLY SIGNED AND SEALED UNDER RULE 61G15-23.004, F.A.C.

REVISIONS			
DATE	DESCRIPTION	DATE	DESCRIPTION

ENGINEER OF RECORD

DEBANANDA PANIGRAHI, P.E.
LICENSE NUMBER 68318
H. W. LOCHNER
4300 W. CYPRESS STREET, SUITE 500
TAMPA, FLORIDA 33607

STATE OF FLORIDA
DEPARTMENT OF TRANSPORTATION

ROAD NO.	COUNTY	FINANCIAL PROJECT ID
SR 400	POLK	430185-3-52-01

UTILITY ADJUSTMENTS (05)

SHEET NO. 713

2/29/2024 9:33:07 PM JTAGLIAFERRO
c:\pw_working\lochner-pw-01\dms18824\UTADRD02.dgn

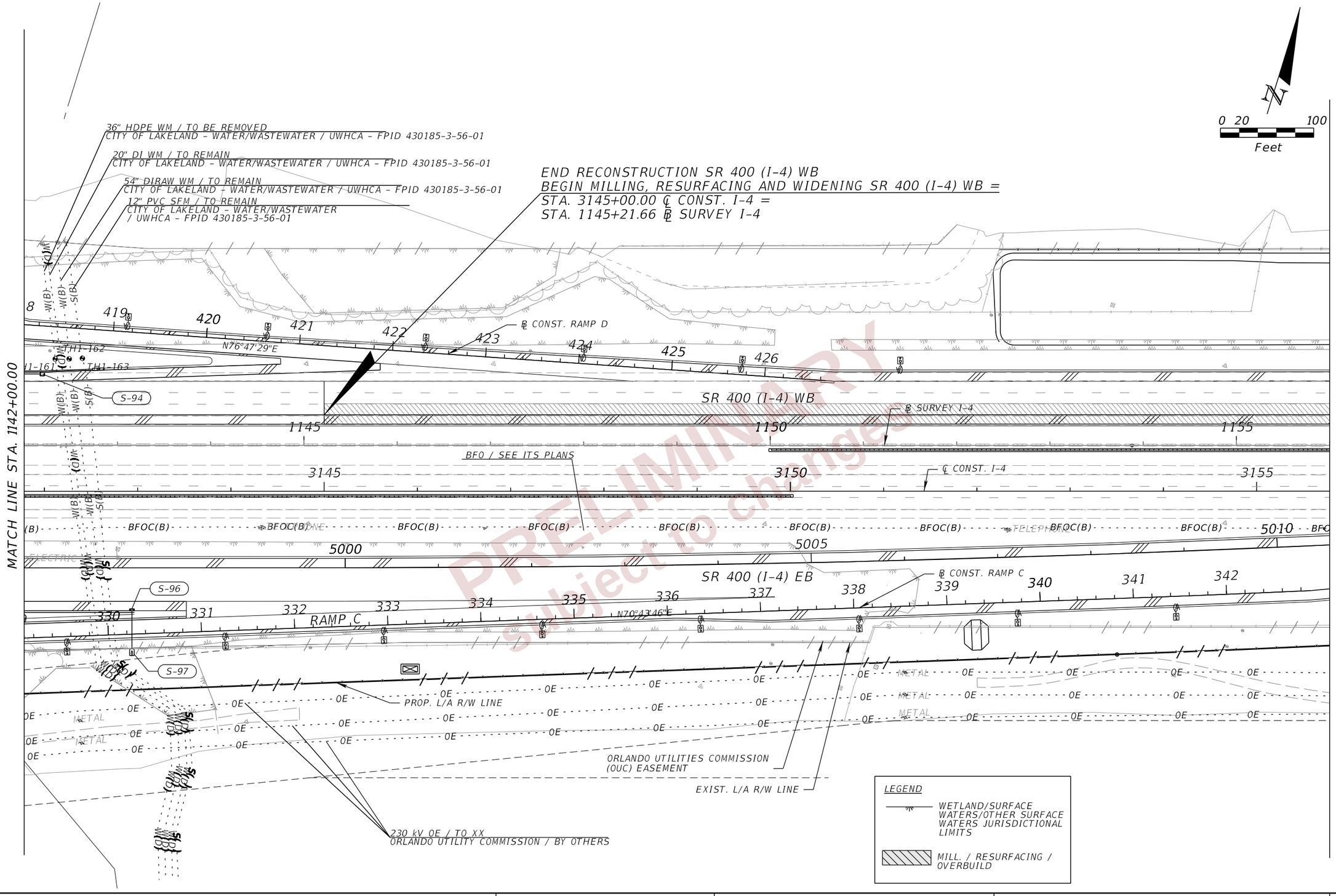

REVISIONS			
DATE	DESCRIPTION	DATE	DESCRIPTION

ENGINEER OF RECORD

DEBANANDA PANIGRAHI, P.E.
LICENSE NUMBER 68318
H. W. LOCHNER
4300 W. CYPRESS STREET, SUITE 500
TAMPA, FLORIDA 33607

STATE OF FLORIDA
DEPARTMENT OF TRANSPORTATION

ROAD NO.	COUNTY	FINANCIAL PROJECT ID
SR 400	POLK	430185-3-52-01

UTILITY ADJUSTMENTS (06)

SHEET NO. 714

THE OFFICIAL RECORD OF THIS SHEET IS THE ELECTRONIC FILE DIGITALLY SIGNED AND SEALED UNDER RULE 61G15-23.004, F.A.C.

2/29/2024 9:33:08 PM JTAGLIAFERRO
c:\pw_working\lochner-pw-01\dms18802\PLANRD02.dgn

0 20 100
Feet

12 KV OE / TO REMAIN
CITY OF LAKELAND - ELECTRIC / BY OTHERS

EXIST. L/A R/W LINE

℄ SURVEY I-4

SR 400 (I-4) WB

MATCH LINE STA. 1156+00.00

1160 1165 1170

3160 3165

5015 5020

BFO / SEE ITS PLANS

C(B) BFOC(B) BFOC(B)

TELEPHONE

℄ CONST. I-4 EB 2

SR 400 (I-4) EB

CD-16

WITH SOLAR PANEL AND UNKNOWN SENSOR

S-99 S-100 S-101 S-102 S-103

OE

METAL

GROUND

EXIST. L/A R/W LINE

ORLANDO UTILITIES COMMISSION (OUC) EASEMENT

PROP. L/A R/W LINE

FDOT DRAINAGE EASEMENT

230 kV OE / TO XX
ORLANDO UTILITY COMMISSION
/ BY OTHERS

FDOT DRAINAGE EASEMENT

MATCH LINE STA. 1170+00.00

LEGEND

WETLAND/SURFACE WATERS/OTHER SURFACE WATERS JURISDICTIONAL LIMITS

MILL. / RESURFACING / OVERBUILD

PRELIMINARY subject to change

THE OFFICIAL RECORD OF THIS SHEET IS THE ELECTRONIC FILE DIGITALLY SIGNED AND SEALED UNDER RULE 61G15-23.004, F.A.C.

REVISIONS				ENGINEER OF RECORD	STATE OF FLORIDA DEPARTMENT OF TRANSPORTATION			UTILITY ADJUSTMENTS (07)	SHEET NO.
DATE	DESCRIPTION	DATE	DESCRIPTION	DEBANANDA PANIGRAHI, P.E. LICENSE NUMBER 68318 H. W. LOCHNER 4300 W. CYPRESS STREET, SUITE 500 TAMPA, FLORIDA 33607	ROAD NO.	COUNTY	FINANCIAL PROJECT ID		715
					SR 400	POLK	430185-3-52-01		

2/29/2024 9:33:08 PM JTAGLIAFERRO
c:\pw_working\lochner-pw-01\dms18802\PLANROD2.dgn

END PROJECT
END MILLING, RESURFACING AND WIDENING SR 400 (I-4) WB
END RECONSTRUCTION SR 400 (I-4) EB
MATCH EXISTING
STA. 3175+39.51 ℄ CONST. I-4

N

0 20 100
Feet

MATCH LINE STA. 1170+00.00

EXIST. L/A R/W LINE

SR 400 (I-4) WB

℄ SURVEY I-4

℄ CONST. I-4 EB 2

1170

1175

1180

5025

3170

5030

3175

3180

SR 400 (I-4) EB

℄ CONST. I-4

FIBER OPTIC

S-105

S-104

EXIST. L/A R/W LINE

OE

OE

OE

230 kV OE / TO XX
ORLANDO UTILITY COMMISSION
/ BY OTHERS

LEGEND

WETLAND/SURFACE WATERS/OTHER SURFACE WATERS JURISDICTIONAL LIMITS

MILL. / RESURFACING / OVERBUILD

ORLANDO UTILITIES COMMISSION (OUC) EASEMENT

ELECTRIC TRANSMISSION EASEMENT

PRELIMINARY
subject to changes

THE OFFICIAL RECORD OF THIS SHEET IS THE ELECTRONIC FILE DIGITALLY SIGNED AND SEALED UNDER RULE 61G15-23.004, F.A.C.

2/29/2024 9:33:09 PM JTAGLIAFERRO
c:\pw_working\lochner-pw-01\dms18802\PLANRD02.dgn

REVISIONS			
DATE	DESCRIPTION	DATE	DESCRIPTION

ENGINEER OF RECORD
DEBANANDA PANIGRAHI, P.E.
LICENSE NUMBER 68318
H. W. LOCHNER
4300 W. CYPRESS STREET, SUITE 500
TAMPA, FLORIDA 33607

STATE OF FLORIDA
DEPARTMENT OF TRANSPORTATION

ROAD NO.	COUNTY	FINANCIAL PROJECT ID
SR 400	POLK	430185-3-52-01

UTILITY ADJUSTMENTS (08)

SHEET NO. 716

BEGIN PROJECT
BEGIN MILLING, RESURFACING AND WIDENING SR 33 SB
BEGIN RECONSTRUCTION SR 33 NB
STA. 399+46.72 ℄ SURVERY SR 33 =
STA. 3399+74.00 ℄ CONST. SR 33

1" = 40'

CITY OF LAKELAND 6" WM
BEGIN UWHCA REMOVAL SECTION
STA. 3399+76.00

CITY OF LAKELAND 12" FM
BEGIN UWHCA PROPOSED SECTION
STA. 3399+76.00

2.27" BFOC / PLACED OUT OF SERVICE
SOUTHERN LIGHT / BY OTHERS

6" HDPE WM / TO REMAIN
CITY OF LAKELAND – WATER/WASTEWATER
/ UWHCA – FPID 430185–3–56–01

6" GM / TO BE REMOVED
FLORIDA GAS TRANSMISSION /
UWHCA – FPID 430185–3–56–05

24" PVC SFM / PROPOSED
CITY OF LAKELAND – WATER/WASTEWATER
/ UWHCA – FPID 430185–3–56–01

30" DI WM / TO REMAIN
CITY OF LAKELAND – WATER/WASTEWATER
/ UWHCA – FPID 430185–3–56–01

36" DI WM / TO REMAIN
CITY OF LAKELAND – WATER/WASTEWATER
/ UWHCA – FPID 430185–3–56–01

EXIST. R/W LINE

BT 1–BFOC / TO REMAIN
FRONTIER / BY OTHERS

FLORIDA GAS TRANSMISSION 6" GM
BEGIN UWHCA REMOVAL SECTION
STA. 3399+74.00

CITY OF LAKELAND 12" FM
BEGIN UWHCA REMOVAL SECTION
STA. 3399+76.00

16" GM / TO BE REMOVED
CITY OF LAKELAND – GAS /
UWHCA – FPID 430185–3–56–03

12" PVC SFM / TO BE REMOVED
CITY OF LAKELAND – WATER/WASTEWATER
/ UWHCA – FPID 430185–3–56–01

F–543 F–545 F–547 F–549

399 400 401 402 403

SR 33 SB

ST. SR 33

3399 3400 3401 3402 3403

SR 33 NB

POT STA. 3400+74.00

24–4" BFO / TO BE REMOVED
FRONTIER / BY OTHERS

12–.75" BT / TO BE REMOVED
FRONTIER / BY OTHERS

2–2" PVC BFOC / TO BE REMOVED
VERIZON BUSINESS / MCI / BY OTHERS

2.27" FOC / PROPOSED
SOUTHERN LIGHT / BY OTHERS

F–544 F–546 F–548 F–548A F–550

OFOC / TO REMAIN
CITY OF LAKELAND – IT FIBER
/ BY OTHERS

2–4" BT W/ BFOC / PROPOSED
FRONTIER / BY OTHERS

2–2" PVC BFOC / PROPOSED
VERIZON BUSINESS / MCI
/ BY OTHERS

EXIST. R/W LINE

BFOC 2'X3' HH / PROPOSED
VERIZON BUSINESS / MCI / BY OTHERS

2–4" BT W/ BFOC / PROPOSED
FRONTIER / BY OTHERS

69 KV & 12 KV OE / TO REMAIN
CITY OF LAKELAND – ELECTRIC
/ BY OTHERS

MATCH LINE STA. 3404+00.00

PRELIMINARY
Subject to changes

THE OFFICIAL RECORD OF THIS SHEET IS THE ELECTRONIC FILE DIGITALLY SIGNED AND SEALED UNDER RULE 61G15-23.004, F.A.C.

REVISIONS			
DATE	DESCRIPTION	DATE	DESCRIPTION

ENGINEER OF RECORD
DEBANANDA PANIGRAHI, P.E.
LICENSE NUMBER 68318
H. W. LOCHNER
4300 W. CYPRESS STREET, SUITE 500
TAMPA, FLORIDA 33607

STATE OF FLORIDA
DEPARTMENT OF TRANSPORTATION

ROAD NO.	COUNTY	FINANCIAL PROJECT ID
SR 400	POLK	430185-3-52-01

UTILITY ADJUSTMENTS (09)

SHEET NO. 717

2/29/2024 9:33:31 PM JTAGLIAFERRO
c:\pw_working\lochner-pw-01\dms18802\PLANRD01.dgn

MATCH LINE STA. 3404+00.00

6" GM / TO BE REMOVED
FLORIDA GAS TRANSMISSION /
UWHCA – FPID 430185-3-56-05

6" GM / TO BE GROUTED
FLORIDA GAS TRANSMISSION

FLORIDA GAS TRANSMISSION 6" GM
END UWHCA REMOVAL SECTION
STA. 3404+49.00

EXIST. R/W LINE

FLORIDA GAS TRANSMISSION 6" GM
BEGIN UWHCA REMOVAL SECTION
STA. 3406+37.00

EXIST. R/W LINE

6" HDPE WM / TO REMAIN
CITY OF LAKELAND – WATER/WASTEWATER
/ UWHCA – FPID 430185-3-56-01

30" DI WM / TO REMAIN
CITY OF LAKELAND – WATER/WASTEWATER
/ UWHCA – FPID 430185-3-56-01

36" DI WM / TO REMAIN
CITY OF LAKELAND – WATER/WASTEWATER
/ UWHCA – FPID 430185-3-56-01

6" GM / TO BE REMOVED
FLORIDA GAS TRANSMISSION /
UWHCA – FPID 430185-3-56-05

1" = 40'

24" PVC SFM / PROPOSED
CITY OF LAKELAND – WATER/WASTEWATER
/ UWHCA – FPID 430185-3-56-01

F-551A
F-551B
S-557
S-556
S-558
F-552
F-554

2.27" BFOC / PLACED OUT OF SERVICE
SOUTHERN LIGHT / BY OTHERS

16" GM / TO BE REMOVED
CITY OF LAKELAND – GAS /
UWHCA – FPID 430185-3-56-03

BFO / TO BE REMOVED
FRONTIER / BY OTHERS

12" PVC SFM / TO BE REMOVED
CITY OF LAKELAND – WATER/WASTEWATER
/ UWHCA – FPID 430185-3-56-01

℄ SURVEY SR 33

3" HDPE BE / TO REMAIN
LAKELAND ELECTRIC / BY OTHERS

4-4" BT W/ BFOC / PROPOSED
FRONTIER / BY OTHERS

12-0.75" BT / TO BE REMOVED
FRONTIER / BY OTHERS

℄ CONST. SR 33

SR 33 SB

SR 33 NB

TH1-70
TH1-71
TH1-72
20°31'50"E

TH1-127

3" HDPE BE / TO REMAIN
LAKELAND ELECTRIC / BY OTHERS

24-4" BFOC / TO BE REMOVED
FRONTIER / BY OTHERS

2-2" PVC BFOC / TO BE REMOVED
VERIZON BUSINESS / MCI
/ BY OTHERS

2.27" CONDUIT BFOC / PROPOSED
SOUTHERN LIGHT / BY OTHERS

F-551
F-551C
F-553
F-555

EXIST. R/W LINE

69 KV & 12 KV OE / TO REMAIN
CITY OF LAKELAND – ELECTRIC
/ BY OTHERS

OFOC / TO REMAIN
CITY OF LAKELAND – IT FIBER
/ BY OTHERS

2-2" PVC BFOC / PROPOSED
VERIZON BUSINESS / MCI
/ BY OTHERS

2-4" BT W/ BFOC / PROPOSED
FRONTIER / BY OTHERS

MATCH LINE STA. 3409+60.00

PRELIMINARY
subject to changes

THE OFFICIAL RECORD OF THIS SHEET IS THE ELECTRONIC FILE DIGITALLY SIGNED AND SEALED UNDER RULE 61G15-23.004, F.A.C.

REVISIONS			
DATE	DESCRIPTION	DATE	DESCRIPTION

ENGINEER OF RECORD
DEBANANDA PANIGRAHI, P.E.
LICENSE NUMBER 68318
H. W. LOCHNER
4300 W. CYPRESS STREET, SUITE 500
TAMPA, FLORIDA 33607

STATE OF FLORIDA
DEPARTMENT OF TRANSPORTATION

ROAD NO.	COUNTY	FINANCIAL PROJECT ID
SR 400	POLK	430185-3-52-01

UTILITY ADJUSTMENTS (10)

SHEET NO. 718

2/29/2024 9:33:31 PM JTAGLIAFERRO
c:\pw_working\lochner-pw-01\dms18802\PLANRD01.dgn

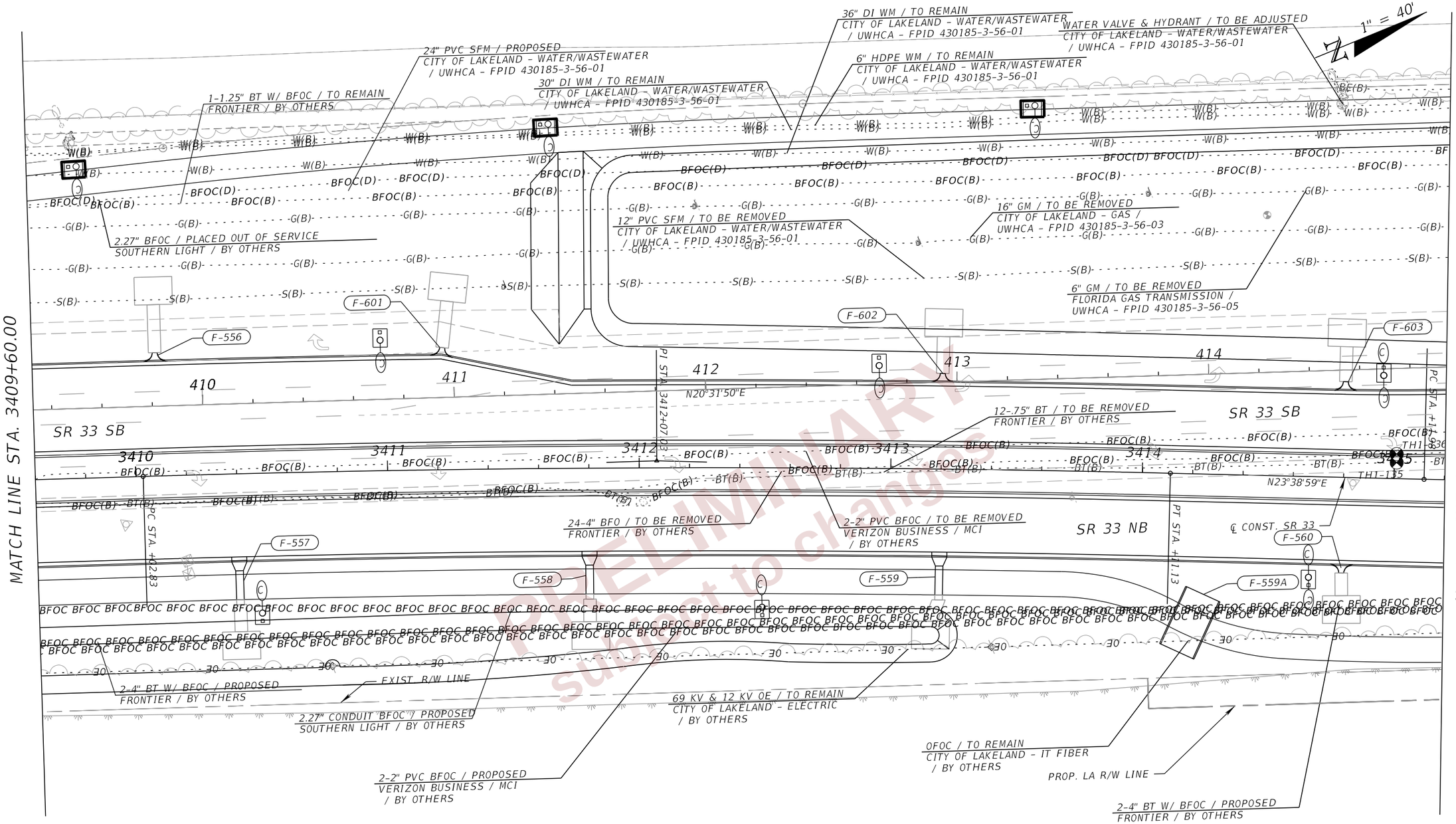

PRELIMINARY
subject to change

THE OFFICIAL RECORD OF THIS SHEET IS THE ELECTRONIC FILE DIGITALLY SIGNED AND SEALED UNDER RULE 61G15-23.004, F.A.C.

REVISIONS				ENGINEER OF RECORD	STATE OF FLORIDA DEPARTMENT OF TRANSPORTATION			UTILITY ADJUSTMENTS (11)	SHEET NO.
DATE	DESCRIPTION	DATE	DESCRIPTION	DEBANANDA PANIGRAHI, P.E. LICENSE NUMBER 68318 H. W. LOCHNER 4300 W. CYPRESS STREET, SUITE 500 TAMPA, FLORIDA 33607	ROAD NO.	COUNTY	FINANCIAL PROJECT ID		719
					SR 400	POLK	430185-3-52-01		

2/29/2024 9:33:32 PM JTAGLIAFERRO
C:\pw_working\lochner-pw-01\dms18802\PLANRD01.dgn

UTILITY ADJUSTMENT SHEET (28)
MATCH LINE STA. 34+20.00

MATCH LINE STA. 3415+20.00

MATCH LINE STA. 3420+80.00

EXIST. R/W LINE

1-1.25" BT W/ BFOC / TO REMAIN
FRONTIER / BY OTHERS

2.27" BFOC / PLACED OUT OF SERVICE
SOUTHERN LIGHT / BY OTHERS

12" PVC SFM / TO REMAIN
CITY OF LAKELAND - WATER/WASTEWATER / UWHCA - FPID 430185-3-56-01

4-4" BT W/ BFOC / TO REMAIN
FRONTIER / BY OTHERS

12" PVC SFM / TO BE REMOVED
CITY OF LAKELAND - WATER/WASTEWATER / BY OTHERS

6" GM / TO BE GROUTED
FLORIDA GAS TRANSMISSION

FLORIDA GAS TRANSMISSION 6" GM
BEGIN UWHCA REMOVAL SECTION
STA. 3406+37.00

6" GM / TO BE REMOVED
FLORIDA GAS TRANSMISSION / UWHCA - FPID 430185-3-56-05

24" PVC SFM / PROPOSED
CITY OF LAKELAND - WATER/WASTEWATER / UWHCA - FPID 430185-3-56-01

16" GM / TO BE REMOVED
CITY OF LAKELAND - GAS / UWHCA - FPID 430185-3-56-03

12" PVC SFM / TO BE REMOVED
CITY OF LAKELAND - WATER/WASTEWATER / BY OTHERS

FLORIDA GAS TRANSMISSION 6" GM
END UWHCA REMOVAL SECTION
STA. 3417+68.00

12 KV UG / TO REMAIN
CITY OF LAKELAND - ELECTRIC / BY OTHERS

36" HDPE WM / TO REMAIN
CITY OF LAKELAND - WATER/WASTEWATER / UWHCA - FPID 430185-3-56-01

6" GM / TO BE REMOVED
FLORIDA GAS TRANSMISSION / UWHCA - FPID 430185-3-56-05

36" DI WM / TO REMAIN
CITY OF LAKELAND - WATER/WASTEWATER / UWHCA - FPID 430185-3-56-01

30" DI WM / TO REMAIN
CITY OF LAKELAND - WATER/WASTEWATER / UWHCA - FPID 430185-3-56-01

1-4" BT W/ BFOC / PROPOSED
FRONTIER / BY OTHERS

BE / TO XX
SPECTRUM / BY OTHERS

2-2" PVC BFOC / TO BE REMOVED
VERIZON BUSINESS / MCI / BY OTHERS

12-.75" BT / TO BE REMOVED
FRONTIER / BY OTHERS

24-4" BFO / TO BE REMOVED
FRONTIER / BY OTHERS

2.27" CONDUIT BFOC / PROPOSED
SOUTHERN LIGHT / BY OTHERS

69 KV & 12 KV OE / TO BE REMOVED
CITY OF LAKELAND - ELECTRIC

OE POLE / PROPOSED
CITY OF LAKELAND - ELECTRIC / BY OTHERS

69 KV & 12 KV OE / TO BE REMOVED
CITY OF LAKELAND - ELECTRIC / BY OTHERS

OFOC / PROPOSED
CITY OF LAKELAND - IT FIBER / BY OTHERS

69 KV & 12 KV OE / PROPOSED
CITY OF LAKELAND - ELECTRIC / BY OTHERS

BFOC 2'X3' HH / PROPOSED
VERIZON BUSINESS / MCI / BY OTHERS

OE POLE / TO BE REMOVED
CITY OF LAKELAND - ELECTRIC / BY OTHERS

2-4" BT W/ BFOC / PROPOSED
FRONTIER / BY OTHERS

OFOC / TO REMAIN
CITY OF LAKELAND - IT FIBER / BY OTHERS

BT 1-3"X5"X3" PB / PROPOSED
FRONTIER / BY OTHERS

2-2" PVC BFOC / PROPOSED
VERIZON BUSINESS / MCI / BY OTHERS

PROP. LA R/W

BFOC / TO BE REMOVED
CITY OF LAKELAND / BY OTHERS

12 KV OE / TO BE REMOVED
CITY OF LAKELAND - ELECTRIC / BY OTHERS

S-601 S-601A S-601B S-602 S-603 S-604 S-605 S-606 S-607 S-608 S-609 S-610 S-611
F-604 F-604A F-605 F-608 F-612 F-560A F-561
SD-15A SD-15B SD-16A SD-16B

415 416 417 418 419 420 3416 3417 3418 3419 3420

℄ SURVEY SR 33
℄ CONST. SR 33

POT STA. 3416+96.58
PRC STA. 3415+94.88
PI STA. 3417+43.22
PRC STA. 3419+83.80
PC STA. +05.70

S69°28'38"E 569.40'

UTLITY ADJUSTMENT SHEET (29)
MATCH LINE STA. 52+32.54

PRELIMINARY
subject to change

REVISIONS				ENGINEER OF RECORD	STATE OF FLORIDA DEPARTMENT OF TRANSPORTATION			UTILITY ADJUSTMENTS (12)	SHEET NO.
DATE	DESCRIPTION	DATE	DESCRIPTION	DEBANANDA PANIGRAHI, P.E. LICENSE NUMBER 68318 H. W. LOCHNER 4300 W. CYPRESS STREET, SUITE 500 TAMPA, FLORIDA 33607	ROAD NO.	COUNTY	FINANCIAL PROJECT ID		720
					SR 400	POLK	430185-3-52-01		

THE OFFICIAL RECORD OF THIS SHEET IS THE ELECTRONIC FILE DIGITALLY SIGNED AND SEALED UNDER RULE 61G15-23.004, F.A.C.

2/29/2024 9:33:32 PM JTAGLIAFERRO
c:\pw_working\lochner-pw-01\dms18802\PLANRD01.dgn

16" GM / TO BE REMOVED
CITY OF LAKELAND – GAS /
UWHCA – FPID 430185-3-56-03

30" DI WM / TO REMAIN
CITY OF LAKELAND – WATER/WASTEWATER
/ UWHCA – FPID 430185-3-56-01

36" DI WM / TO REMAIN
CITY OF LAKELAND – WATER/WASTEWATER
/ UWHCA – FPID 430185-3-56-01

12" PVC WM / TO REMAIN
CITY OF LAKELAND – WATER/WASTEWATER
/ UWHCA – FPID 430185-3-56-01

WATER VALVE / TO BE RELOCATED
CITY OF LAKELAND – WATER/WASTEWATER
/ UWHCA – FPID 430185-3-56-01

6" HDPE WM / TO REMAIN
CITY OF LAKELAND – WATER/WASTEWATER
/ UWHCA – FPID 430185-3-56-01

6" PVC SFM / TO REMAIN
CITY OF LAKELAND – WATER/WASTEWATER
/ UWHCA – FPID 430185-3-56-01

1" = 40'

EXIST. R/W LINE

2.27" BFOC / PLACED OUT OF SERVICE
SOUTHERN LIGHT / BY OTHERS

16" GM / TO BE REMOVED
CITY OF LAKELAND – GAS
/ BY OTHERS

6" GM / TO BE REMOVED
FLORIDA GAS TRANSMISSION /
UWHCA – FPID 430185-3-56-05

12 KV UG / TO REMIAN
CITY OF LAKELAND – ELECTRIC
/ BY OTHERS

6" GM / TO BE GROUTED
FLORIDA GAS TRANSMISSION

24" PVC SFM / PROPOSED
CITY OF LAKELAND – WATER/WASTEWATER
/ UWHCA – FPID 430185-3-56-01

12" PVC SFM / TO BE REMOVED
CITY OF LAKELAND – WATER/WASTEWATER
/ UWHCA – FPID 430185-3-56-01

FLORIDA GAS TRANSMISSION 6" GM
END UWHCA REMOVAL SECTION
STA. 3417+68.00

MATCH LINE STA. 3420+80.00

MATCH LINE STA. 3426+40.00

℄ SURVEY SR 33

PI STA. 3422+35.46

SR 33 SB

SR 33 NB

PRC STA. +58.56

PT STA. +14.04

421 422 423 424 425 426

3421 3422 3423 3424 3425 3426

N20°31'50"E

F-613 F-615 F-617 F-619 F-618

S-612 S-613 S-627A S-627 S-628

12-75" BT / TO BE REMOVED
FRONTIER / BY OTHERS

2-2" PVC BFOC / TO BE REMOVED
VERIZON BUSINESS / MCI
/ BY OTHERS

24-4" BFO / TO BE REMOVED
FRONTIER / BY OTHERS

ITS SIGN STRUCTURE

CANT1-1 CANT1-2 CANT1-3 CANT1-4

CCTV1-1 CCTV1-2 CCTV1-3 CCTV1-4

TH1-80 TH1-73 TH1-74

℄ CONST. SR 33

BEGIN CONST. 10' SHARED USE PATH
STA. 2422+51.22 ℄ CONST. SR 33 NB

EXIST. R/W LINE

0E POLE / TO BE REMOVED
CITY OF LAKELAND – ELECTRIC
/ BY OTHERS

2-2" PVC BFOC / PROPOSED
VERIZON BUSINESS / MCI
/ BY OTHERS

0E POLE / PROPOSED
CITY OF LAKELAND – ELECTRIC
/ BY OTHERS

2-4" BT W/ BFOC / PROPOSED
FRONTIER / BY OTHERS

69 kV & 12 kV 0E / TO BE REMOVED
CITY OF LAKELAND – ELECTRIC
/ BY OTHERS

2.27" BFOC / PROPOSED
SOUTHERN LIGHT / BY OTHERS

0FOC / PROPOSED
CITY OF LAKELAND – IT FIBER
/ BY OTHERS

69 kV & 12 kV 0E / PROPOSED
CITY OF LAKELAND – ELECTRIC
/ BY OTHERS

0E POLE / TO BE REMOVED
CITY OF LAKELAND – ELECTRIC
/ BY OTHERS

2-4" BT W/ BFOC / PROPOSED
FRONTIER / BY OTHERS

69 kV & 12 kV 0E / TO REMIAN
CITY OF LAKELAND – ELECTRIC
/ BY OTHERS

69 kV & 12 kV 0E / TO REMIAN
CITY OF LAKELAND – ELECTRIC
/ BY OTHERS

PRELIMINARY
Subject to Changes

THE OFFICIAL RECORD OF THIS SHEET IS THE ELECTRONIC FILE DIGITALLY SIGNED AND SEALED UNDER RULE 61G15-23.004, F.A.C.

REVISIONS				ENGINEER OF RECORD	STATE OF FLORIDA DEPARTMENT OF TRANSPORTATION			UTILITY ADJUSTMENTS (13)	SHEET NO.
DATE	DESCRIPTION	DATE	DESCRIPTION	DEBANANDA PANIGRAHI, P.E. LICENSE NUMBER 68318 H. W. LOCHNER 4300 W. CYPRESS STREET, SUITE 500 TAMPA, FLORIDA 33607	ROAD NO.	COUNTY	FINANCIAL PROJECT ID		721
					SR 400	POLK	430185-3-52-01		

2/29/2024 9:33:33 PM JTAGLIAFERRO
c:\pw_working\lochner-pw-01\dms18802\PLANRD01.dgn

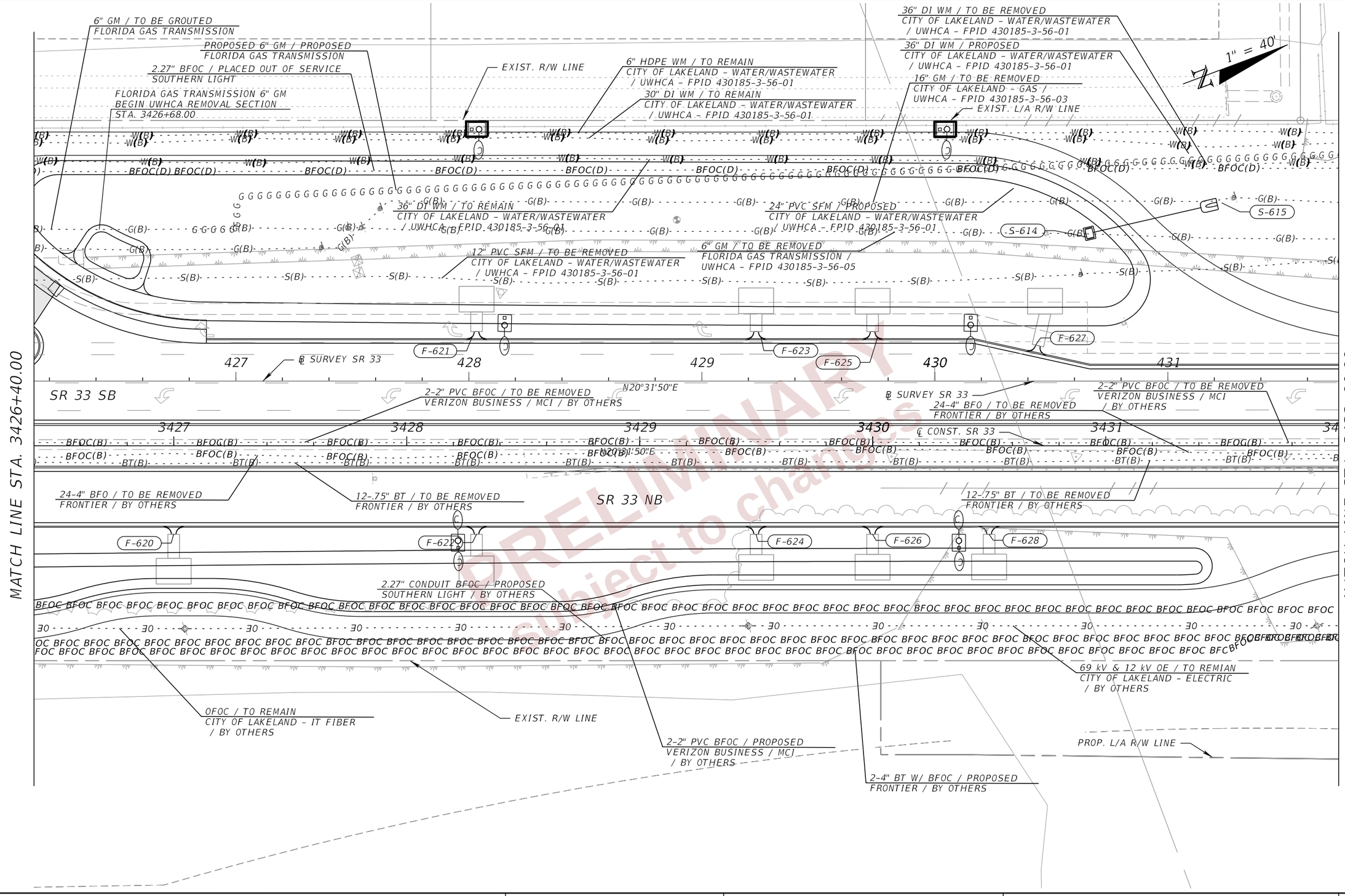

PRELIMINARY
subject to changes

THE OFFICIAL RECORD OF THIS SHEET IS THE ELECTRONIC FILE DIGITALLY SIGNED AND SEALED UNDER RULE 61G15-23.004, F.A.C.

REVISIONS			
DATE	DESCRIPTION	DATE	DESCRIPTION

ENGINEER OF RECORD

DEBANANDA PANIGRAHI, P.E.
LICENSE NUMBER 68318
H. W. LOCHNER
4300 W. CYPRESS STREET, SUITE 500
TAMPA, FLORIDA 33607

STATE OF FLORIDA
DEPARTMENT OF TRANSPORTATION

ROAD NO.	COUNTY	FINANCIAL PROJECT ID
SR 400	POLK	430185-3-52-01

UTILITY ADJUSTMENTS (14)

SHEET NO. 722

2/29/2024 9:33:34 PM JTAGLIAFERRO
c:\pw_working\lochner-pw-01\dms18802\PLANRD01.dgn

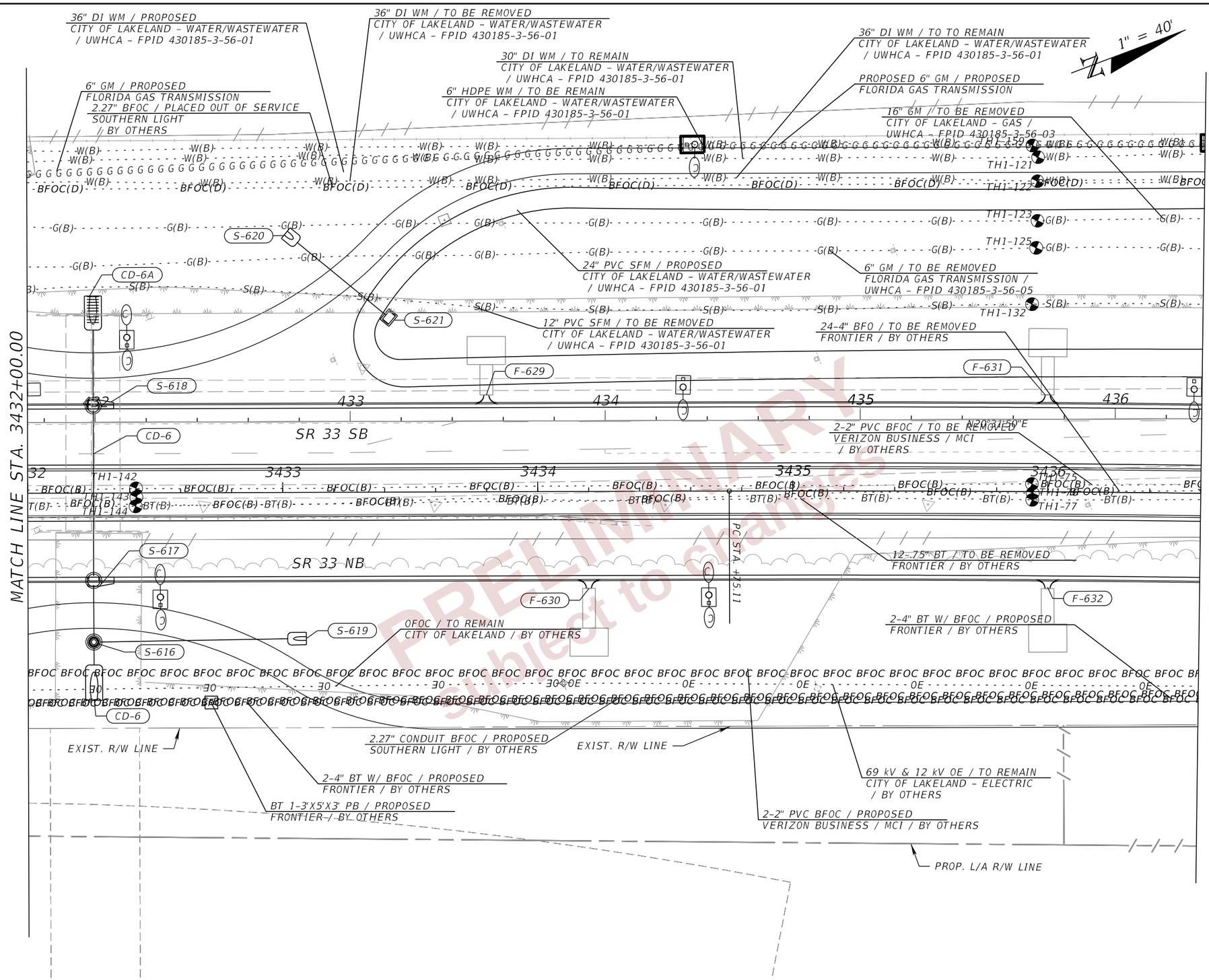

REVISIONS				ENGINEER OF RECORD	STATE OF FLORIDA DEPARTMENT OF TRANSPORTATION			UTILITY ADJUSTMENTS (15)	SHEET NO.
DATE	DESCRIPTION	DATE	DESCRIPTION	DEBANANDA PANIGRAHI, P.E. LICENSE NUMBER 68318 H. W. LOCHNER 4300 W. CYPRESS STREET, SUITE 500 TAMPA, FLORIDA 33607	ROAD NO.	COUNTY	FINANCIAL PROJECT ID		723
					SR 400	POLK	430185-3-52-01		

THE OFFICIAL RECORD OF THIS SHEET IS THE ELECTRONIC FILE DIGITALLY SIGNED AND SEALED UNDER RULE 61G15-23.004, F.A.C.

2/29/2024 9:33:34 PM JTAGLIAFERRO
c:\pw_working\lochner-pw-01\dms18802\PLANRD01.dgn

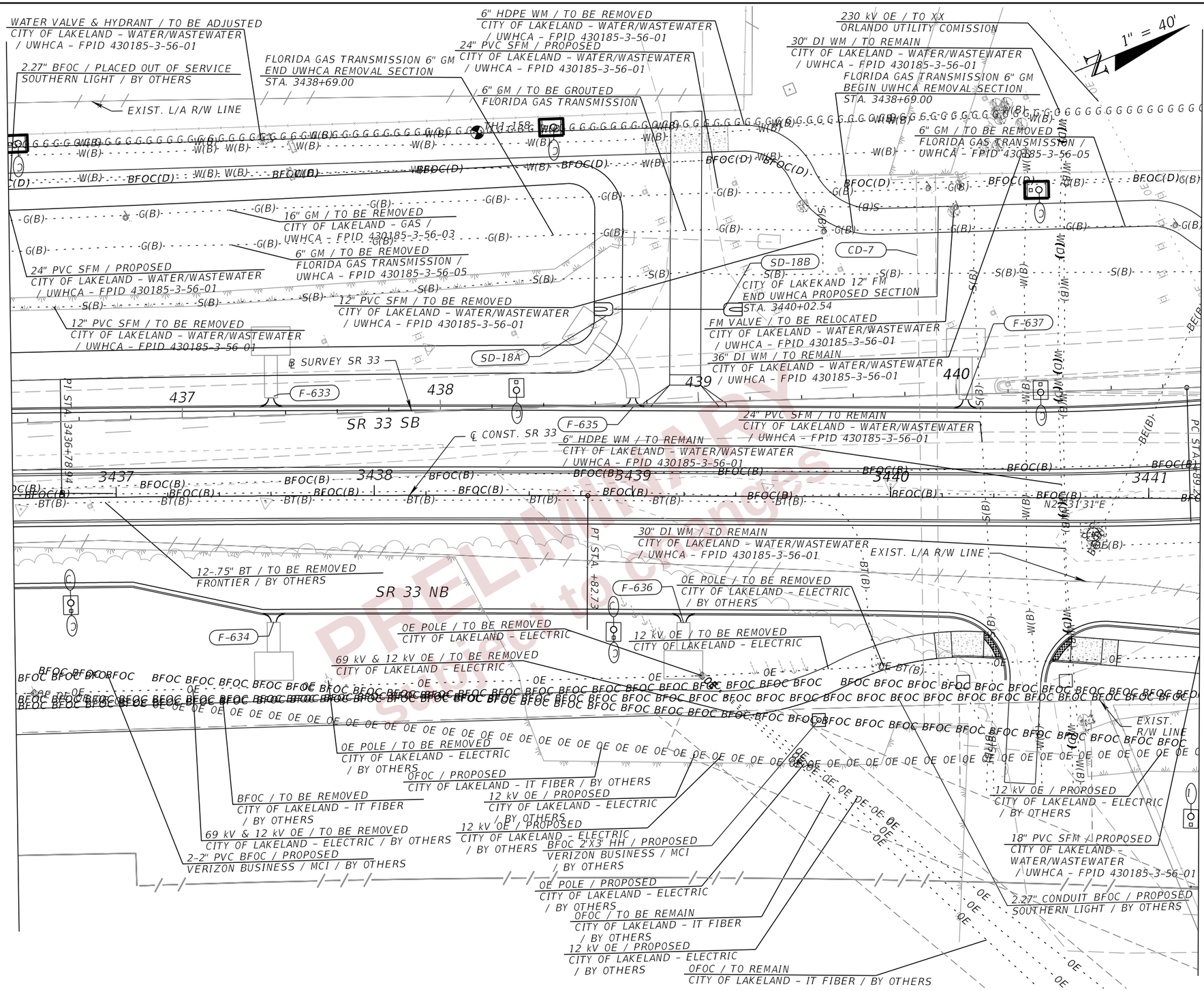

THE OFFICIAL RECORD OF THIS SHEET IS THE ELECTRONIC FILE DIGITALLY SIGNED AND SEALED UNDER RULE 61G15-23.004, F.A.C.

2/29/2024 9:33:35 PM JTAGLIAFERRO
c:\pw_working\lochner-pw-01\dms18802\PLANRD01.dgn

REVISIONS				ENGINEER OF RECORD	STATE OF FLORIDA DEPARTMENT OF TRANSPORTATION			UTILITY ADJUSTMENTS (16)	SHEET NO.
DATE	DESCRIPTION	DATE	DESCRIPTION	DEBANANDA PANIGRAHI, P.E. LICENSE NUMBER 68318 H. W. LOCHNER 4300 W. CYPRESS STREET, SUITE 500 TAMPA, FLORIDA 33607	ROAD NO.	COUNTY	FINANCIAL PROJECT ID		724
					SR 400	POLK	430185-3-52-01		

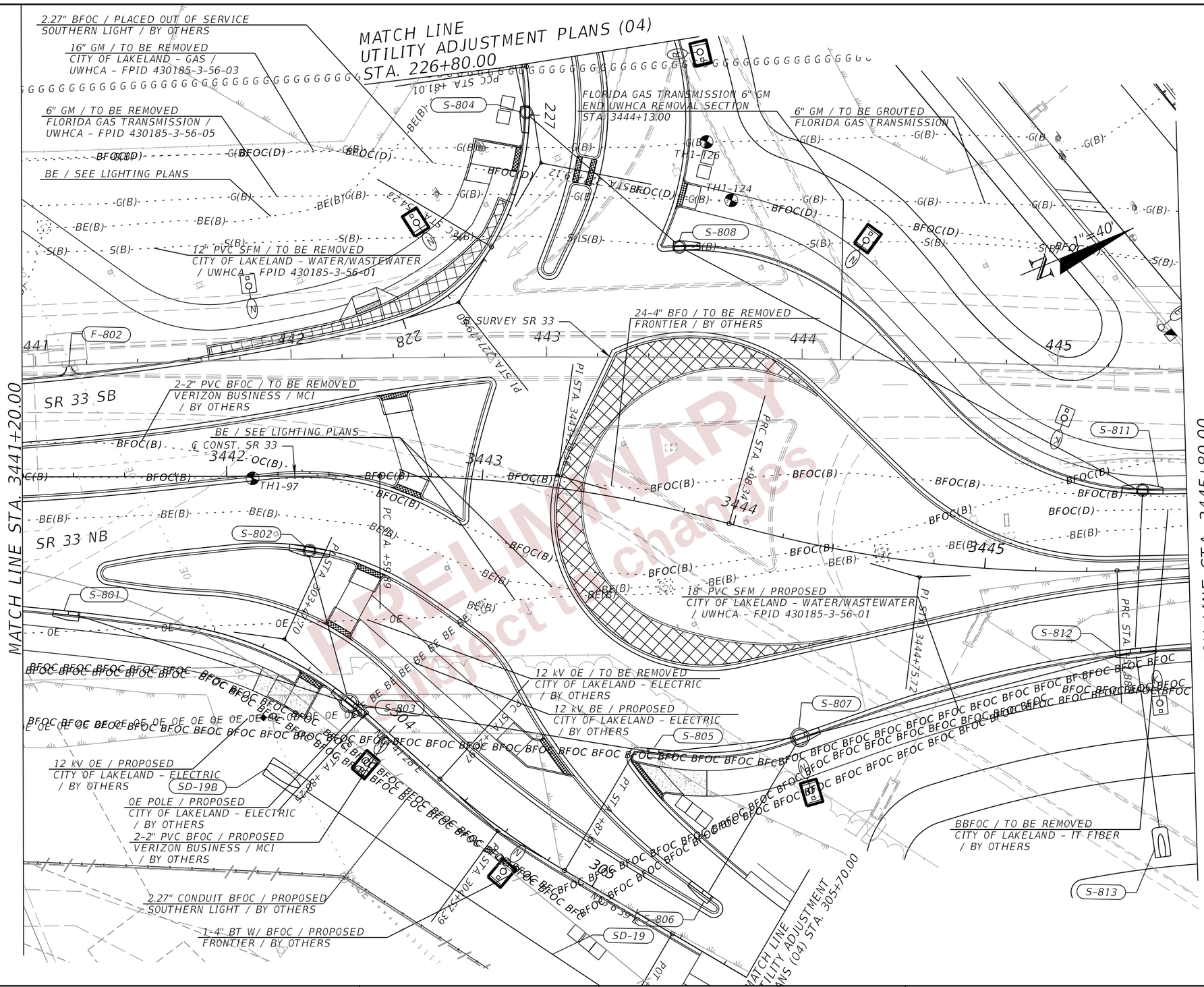

PRELIMINARY
Subject to changes

THE OFFICIAL RECORD OF THIS SHEET IS THE ELECTRONIC FILE DIGITALLY SIGNED AND SEALED UNDER RULE 61G15-23.004, F.A.C.

2/29/2024 9:33:35 PM JTAGLIAFERRO
c:\pw_working\lochner-pw-01\dms18802\PLANRD01.dgn

REVISIONS				ENGINEER OF RECORD	STATE OF FLORIDA DEPARTMENT OF TRANSPORTATION			UTILITY ADJUSTMENTS (17)	SHEET NO.
DATE	DESCRIPTION	DATE	DESCRIPTION	DEBANANDA PANIGRAHI, P.E. LICENSE NUMBER 68318 H. W. LOCHNER 4300 W. CYPRESS STREET, SUITE 500 TAMPA, FLORIDA 33607	ROAD NO.	COUNTY	FINANCIAL PROJECT ID		725
					SR 400	POLK	430185-3-52-01		

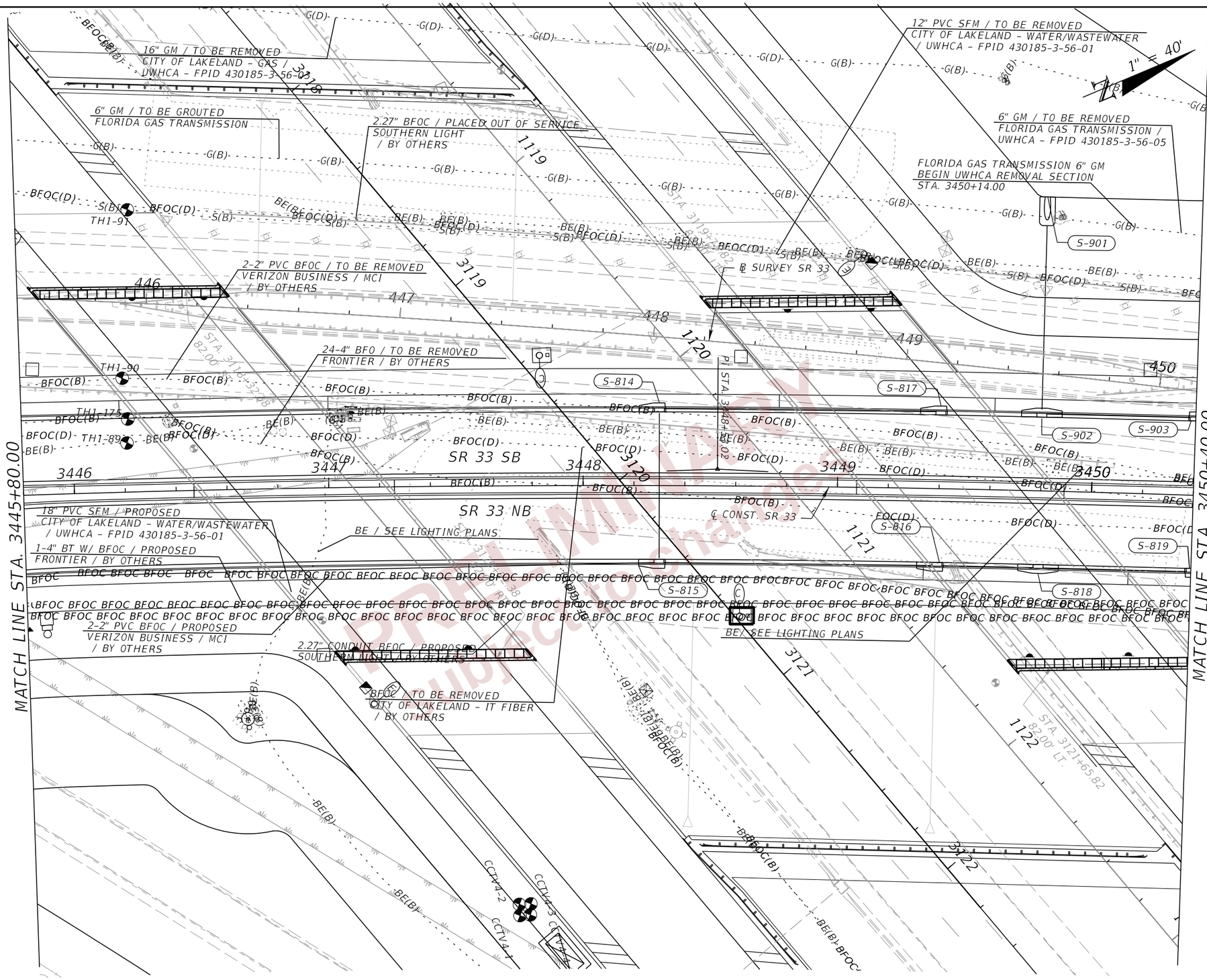

REVISIONS				ENGINEER OF RECORD	STATE OF FLORIDA DEPARTMENT OF TRANSPORTATION			UTILITY ADJUSTMENTS (18)	SHEET NO.
DATE	DESCRIPTION	DATE	DESCRIPTION	DEBANANDA PANIGRAHI, P.E. LICENSE NUMBER 68318 H. W. LOCHNER 4300 W. CYPRESS STREET, SUITE 500 TAMPA, FLORIDA 33607	ROAD NO.	COUNTY	FINANCIAL PROJECT ID		726
					SR 400	POLK	430185-3-52-01		

THE OFFICIAL RECORD OF THIS SHEET IS THE ELECTRONIC FILE DIGITALLY SIGNED AND SEALED UNDER RULE 61G15-23.004, F.A.C.

2/29/2024 9:33:36 PM JTAGLIAFERRO
c:\pw_working\lochner-pw-01\dms18802\PLANROO1.dgn

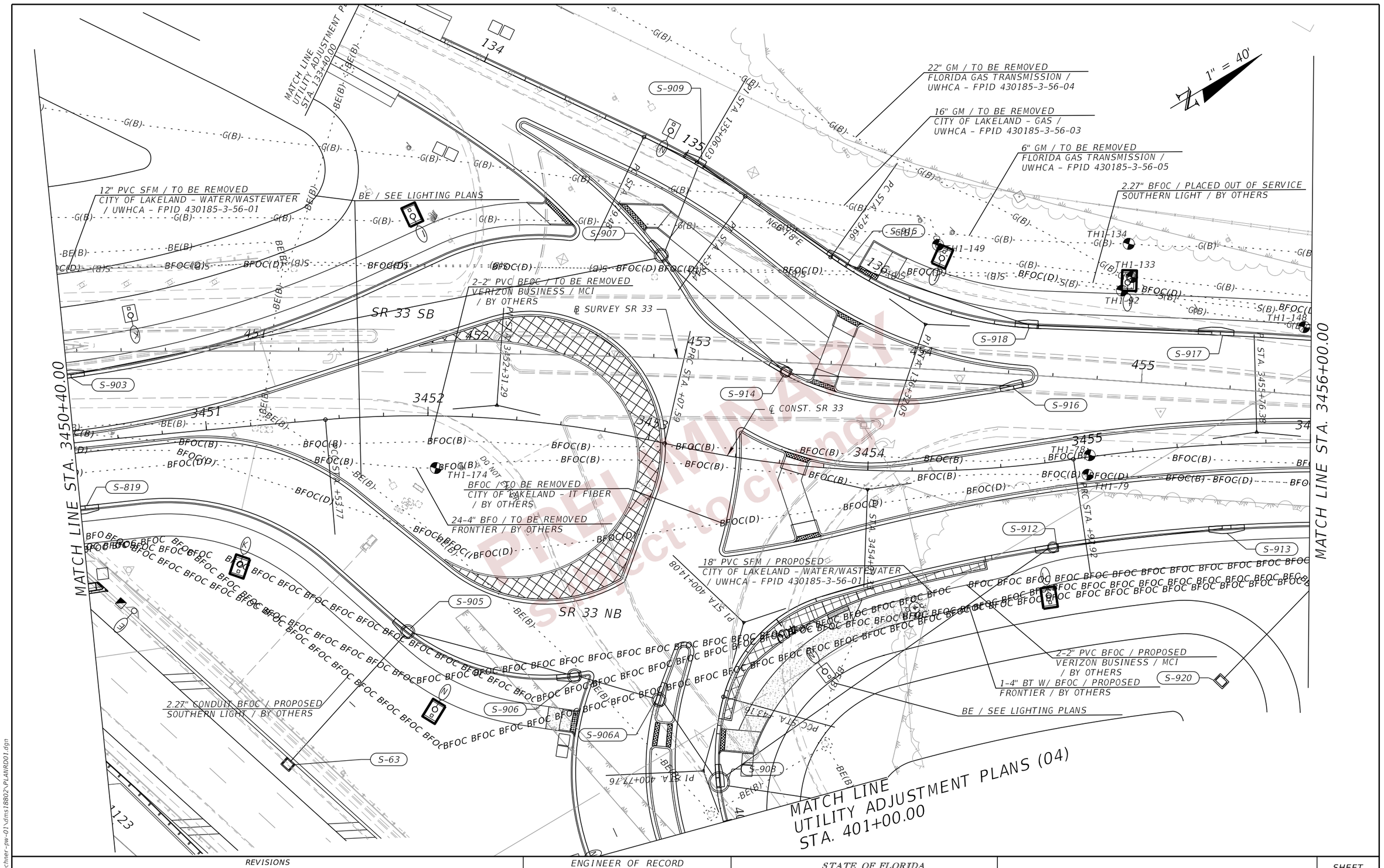

REVISIONS			
DATE	DESCRIPTION	DATE	DESCRIPTION

ENGINEER OF RECORD
DEBANANDA PANIGRAHI, P.E.
LICENSE NUMBER 68318
H. W. LOCHNER
4300 W. CYPRESS STREET, SUITE 500
TAMPA, FLORIDA 33607

STATE OF FLORIDA
DEPARTMENT OF TRANSPORTATION

ROAD NO.	COUNTY	FINANCIAL PROJECT ID
SR 400	POLK	430185-3-52-01

UTILITY ADJUSTMENTS (19)

SHEET NO. 727

THE OFFICIAL RECORD OF THIS SHEET IS THE ELECTRONIC FILE DIGITALLY SIGNED AND SEALED UNDER RULE 61G15-23.004, F.A.C.

2/29/2024 9:33:37 PM JTAGLIAFERRO
c:\pw_working\lochner-pw-01\dms18802\PLANRD01.dgn

EXIST. L/A R/W LINE

1" = 40'

12" DI WM / TO BE REMOVED
CITY OF LAKELAND – WATER/WASTEWATER/ UWHCA – FPID 430185-3-56-01

2.27" BFOC / PLACED OUT OF SERVICE
SOUTHERN LIGHT / BY OTHERS

12" DI WM / PROPOSED
CITY OF LAKELAND – WATER/WASTEWATER / UWHCA – FPID 430185-3-56-01

12" DI WM / TO BE LOWERED
CITY OF LAKELAND – WATER/WASTEWATER / UWHCA – FPID 430185-3-56-01

16" GM / TO BE REMOVED
CITY OF LAKELAND – GAS / UWHCA – FPID 430185-3-56-03

22" GM / TO BE REMOVED
FLORIDA GAS TRANSMISSION / UWHCA – FPID 430185-3-56-04

6" GM / TO BE REMOVED
FLORIDA GAS TRANSMISSION / UWHCA – FPID 430185-3-56-05

12" PVC SFM / TO BE REMOVED
CITY OF LAKELAND – WATER/WASTEWATER /UWHCA – FPID 430185-3-56-01

MATCH LINE STA. 3456+00.00

MATCH LINE STA. 3461+60.00

S-923 S-922 S-921 S-921A S-1002 S-1001

CD-8 CD-8A CD-9 CD-9A CD-9B

TH4 TH1-140' TH1-16

F-1002 F-1003 F-1004 F-1005 F-1006 F-1007

456 457 458 459 460 461

3456 3457 3458 3459 3460 3461

℄ SURVEY SR 33

℄ CONST. SR 33

SR 33 SB

SR 33 NB

STA. 3458+04

12" DI WM / TO REMAIN
CITY OF LAKELAND – WATER/WASTEWATER / UWHCA – FPID 430185-3-56-01

6" HDPE WM / TO BE REMOVED
CITY OF LAKELAND – WATER/WASTEWATER / UWHCA – FPID 430185-3-56-01

CITY OF LAKELAND 6" WM
BEGIN UWHCA REMOVAL SECTION
STA. 3461+02.24

2-2" PVC BFOC / TO BE REMOVED
VERIZON BUSINESS / MCI / BY OTHERS

24-4" BFO / TO BE REMOVED
FRONTIER / BY OTHERS

BFOC / TO BE REMOVED
CITY OF LAKELAND – IT FIBER / BY OTHERS

2.27" CONDUIT BFOC / PROPOSED
SOUTHERN LIGHT / BY OTHERS

BFOC 2'X3' HH / PROPOSED
VERIZON BUSINESS / MCI / BY OTHERS

2-2" PVC BFOC / PROPOSED
VERIZON BUSINESS / MCI / BY OTHERS

BT 1-3' X5'X3'HH / PROPOSED
FRONTIER / BY OTHERS

1-4" BT W/ BFOC / PROPOSED
FRONTIER / BY OTHERS

EXIST. L/A R/W LINE

18" PVC SFM / PROPOSED
CITY OF LAKELAND – WATER/WASTEWATER / UWHCA – FPID 430185-3-56-01

16" DI WM / TO REMAIN
CITY OF LAKELAND – WATER/WASTEWATER / UWHCA – FPID 430185-3-56-01

36" DI WM / TO REMAIN
CITY OF LAKELAND – WATER/WASTEWATER / UWHCA – FPID 430185-3-56-01

69 kV & 12 kV OE / TO REMAIN
CITY OF LAKELAND – ELECTRIC / BY OTHERS

69 kV & 12 kV OE / TO REMAIN
CITY OF LAKELAND – ELECTRIC / BY OTHERS

OFOC / TO REMAIN
CITY OF LAKELAND – IT FIBER / BY OTHERS

G(B) S(B) W(B) BFOC(B) BFOC(D) OE

PRELIMINARY subject to change

THE OFFICIAL RECORD OF THIS SHEET IS THE ELECTRONIC FILE DIGITALLY SIGNED AND SEALED UNDER RULE 61G15-23.004, F.A.C.

2/29/2024 9:33:37 PM JTAGLIAFERRO
c:\pw_working\lochner-pw-01\dms18802\PLANRD01.dgn

REVISIONS				ENGINEER OF RECORD	STATE OF FLORIDA DEPARTMENT OF TRANSPORTATION			UTILITY ADJUSTMENTS (20)	SHEET NO.
DATE	DESCRIPTION	DATE	DESCRIPTION	DEBANANDA PANIGRAHI, P.E. LICENSE NUMBER 68318 H. W. LOCHNER 4300 W. CYPRESS STREET, SUITE 500 TAMPA, FLORIDA 33607	ROAD NO.	COUNTY	FINANCIAL PROJECT ID		728
					SR 400	POLK	430185-3-52-01		

1" = 40'

MATCH LINE STA. 3461+60.00

MATCH LINE UTILITY ADJUSTMENTS PLANS (30)

MATCH LINE UTILITY ADJUSTMENTS PLANS (30)

MATCH LINE UTILITY ADJUSTMENT PLANS (30)

MATCH LINE STA. 3467+20.00

2.27" BFOC / PLACED OUT OF SERVICE
SOUTHERN LIGHT / BY OTHERS

6" GM / TO BE REMOVED
FLORIDA GAS TRANSMISSION / UWHCA - FPID 430185-3-56-05

8" PVC SFM / TO REMAIN
CITY OF LAKELAND - WATER/WASTEWATER / UWHCA - FPID 430185-3-56-01

12" DI WM / PROPOSED
CITY OF LAKELAND - WATER/WASTEWATER / UWHCA - FPID 430185-3-56-01

PROPOSED 6" GM / PROPOSED
FLORIDA GAS TRANSMISSION

EXIST. R/W LIN

12" PVC SFM / PROPOSED
CITY OF LAKELAND - WATER/WASTEWATER / UWHCA - FPID 430185-3-56-01

16" DI WM / TO BE REMOVED
CITY OF LAKELAND - WATER/WASTEWATER / UWHCA - FPID 430185-3-56-01

16" DI WM / PROPOSED
CITY OF LAKELAND - WATER/WASTEWATER / UWHCA - FPID 430185-3-56-01

EXIST. L/A R/W LINE

16" DI WM / PROPOSED
CITY OF LAKELAND - WATER/WASTEWATER / UWHCA - FPID 430185-3-56-01

12" PVC SFM / TO BE REMOVED
CITY OF LAKELAND / UWHCA - FPID 430185-3-56-01

22" GM / TO BE REMOVED
FLORIDA GAS TRANSMISSION / UWHCA - FPID 430185-3-56-04

6" HDPE WM / TO BE REMOVED
CITY OF LAKELAND - WATER/WASTEWATER / UWHCA - FPID 430185-3-56-01

12" DI WM / TO BE REMOVED
CITY OF LAKELAND - WATER/WASTEWATER / UWHCA - FPID 430185-3-56-01

69 kV Ⓞ 12 kV OE / TO REMAIN
CITY OF LAKELAND - ELECTRIC

BFOC / TO BE REMOVED
CITY OF LAKELAND - IT FIBER / BY OTHERS

12" PVC SFM / TO BE REMOVED
CITY OF LAKELAND - WATER/WASTEWATER / UWHCA - FPID 430185-3-56-01

16" DI WM / TO BE REMOVED
CITY OF LAKELAND - WATER/WASTEWATER / UWHCA - FPID 430185-3-56-01

6" PVC SFM / TO BE REMOVED
CITY OF LAKELAND - WATER/WASTEWATER & CONST. SR 33 / UWHCA - FPID 430185-3-56-01

℄ SURVEY SR 33

BFOC / TO REMAIN
CITY OF LAKELAND - IT FIBER / BY OTHERS

18" PVC SFM / PROPOSED
CITY OF LAKELAND - WATER/WASTEWATER / UWHCA - FPID 430185-3-56-01

6" HDPE WM / TO BE REMOVED
CITY OF LAKELAND - WATER/WASTEWATER / UWHCA - FPID 430185-3-56-01

24-4" BFO / TO BE REMOVED
FRONTIER / BY OTHERS

2-2" PVC BFOC / TO BE REMOVED
VERIZON BUSINESS / MCI / BY OTHERS

CITY OF LAKELAND 16" WM BEGIN UWHCA REMOVAL SECTION STA. 3463+66.65

2.27" CONDUIT BFOC / PROPOSED
SOUTHERN LIGHT / BY OTHERS

6" PVC SFM / TO BE REMOVED
CITY OF LAKELAND - WATER/WASTEWATER / BY OTHERS

OE / TO REMAIN
CITY OF LAKELAND - ELECTRIC / BY OTHERS

EXIST. L/A R/W LINE

6" DI RAW WM / TO BE REMOVED
CITY OF LAKELAND - WATER/WASTEWATER / UWHCA - FPID 430185-3-56-01

12" PVC SFM / TO REMAIN
CITY OF LAKELAND - WATER/WASTEWATER / UWHCA - FPID 430185-3-56-01

16" DI WM / TO REMAIN
CITY OF LAKELAND - WATER/WASTEWATER / UWHCA - FPID 430185-3-56-01

12 kV OE / TO REMAIN
CITY OF LAKELAND - ELECTRIC / BY OTHERS

1-4" BT W/ BFOC / PROPOSED
FRONTIER / BY OTHERS

12" PVC SFM / TO BE REMOVED
CITY OF LAKELAND - WATER/WASTEWATER / UWHCA - FPID 430185-3-56-01

36" DI WM / TO REMAIN
CITY OF LAKELAND - WATER/WASTEWATER / UWHCA - FPID 430185-3-56-01

36" DI RAW WM / TO REMAIN
CITY OF LAKELAND - WATER/WASTEWATER / UWHCA - FPID 430185-3-56-01

2-2" PVC BFOC / PROPOSED
VERIZON BUSINESS / MCI / BY OTHERS

12 kV OE / TO BE REMOVED
CITY OF LAKELAND - ELECTRIC / BY OTHERS

1-4" BT W/ BFOC / PROPOSED
FRONTIER / BY OTHERS

6" PVC SFM / PROPOSED
CITY OF LAKELAND - WATER/WASTEWATER / UWHCA - FPID 430185-3-56-01

OE POLE / TO REMAIN
CITY OF LAKELAND - ELECTRIC / BY OTHERS

12 kV OE / PROPOSED
CITY OF LAKELAND - ELECTRIC / BY OTHERS

12 kV OE / TO REMAIN
CITY OF LAKELAND - ELECTRIC / BY OTHERS

SR 33 SB

SR 33 NB

PRELIMINARY
Subject to Change

EXISTING L/A R/W EASEMENT PER SECTION 16320-2403 PER ORB 5084, PG 2116

THE OFFICIAL RECORD OF THIS SHEET IS THE ELECTRONIC FILE DIGITALLY SIGNED AND SEALED UNDER RULE 61G15-23.004, F.A.C.

2/29/2024 9:33:38 PM JTAGLIAFERRO
C:\pw_working\lochner-pw-01\dms18802\PLANRD01.dgn

REVISIONS			
DATE	DESCRIPTION	DATE	DESCRIPTION

ENGINEER OF RECORD
DEBANANDA PANIGRAHI, P.E.
LICENSE NUMBER 68318
H. W. LOCHNER
4300 W. CYPRESS STREET, SUITE 500
TAMPA, FLORIDA 33607

STATE OF FLORIDA
DEPARTMENT OF TRANSPORTATION

ROAD NO.	COUNTY	FINANCIAL PROJECT ID
SR 400	POLK	430185-3-52-01

UTILITY ADJUSTMENTS (21)

SHEET NO. 729

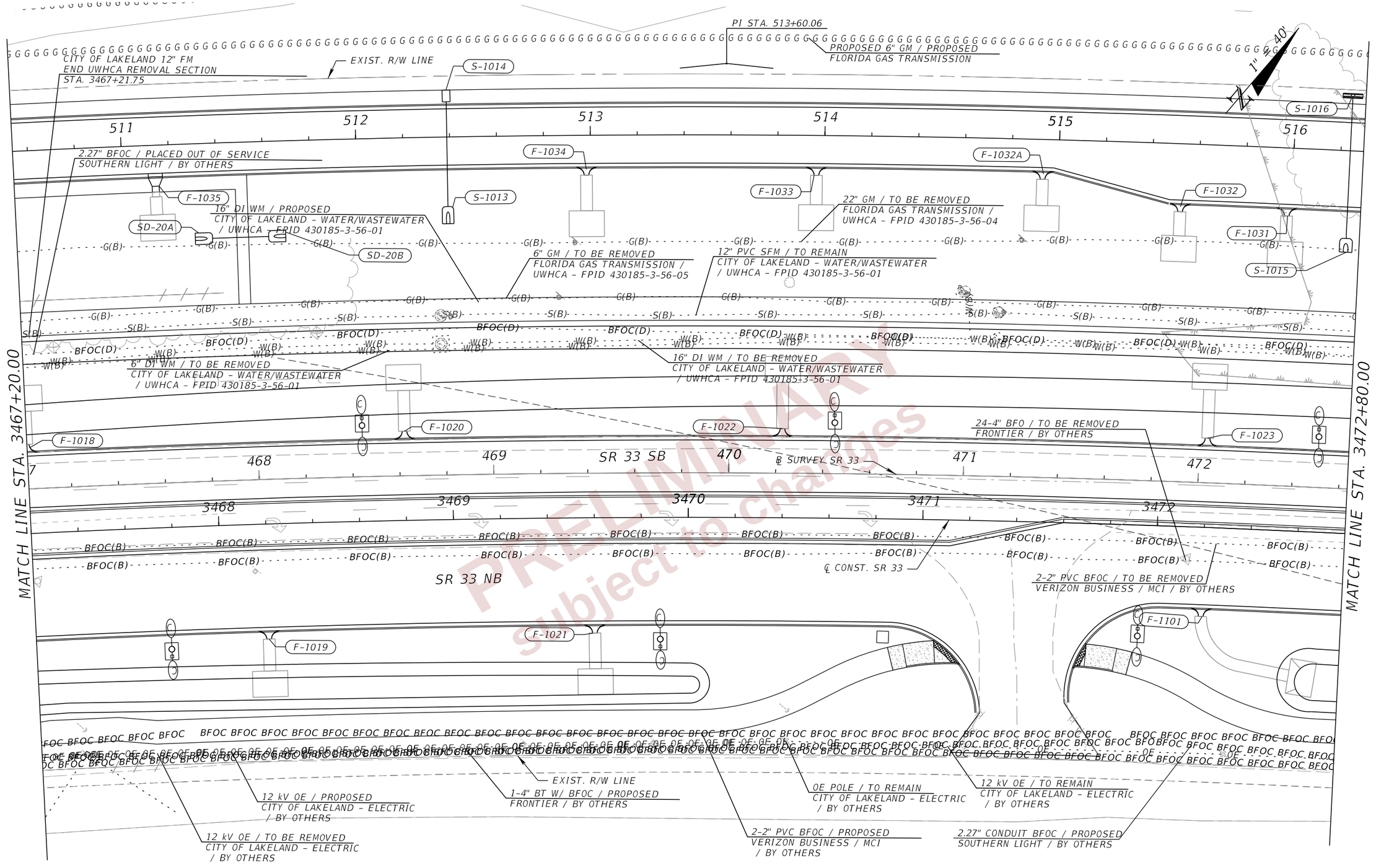

PRELIMINARY
subject to changes

REVISIONS				ENGINEER OF RECORD	STATE OF FLORIDA DEPARTMENT OF TRANSPORTATION			UTILITY ADJUSTMENTS (22)	SHEET NO.
DATE	DESCRIPTION	DATE	DESCRIPTION	DEBANANDA PANIGRAHI, P.E. LICENSE NUMBER 68318 H. W. LOCHNER 4300 W. CYPRESS STREET, SUITE 500 TAMPA, FLORIDA 33607	ROAD NO.	COUNTY	FINANCIAL PROJECT ID		730
					SR 400	POLK	430185-3-52-01		

2/29/2024 9:33:38 PM JTAGLIAFERRO
c:\pw_working\lochner-pw-01\dms18802\PLAVR001.dgn

THE OFFICIAL RECORD OF THIS SHEET IS THE ELECTRONIC FILE DIGITALLY SIGNED AND SEALED UNDER RULE 61G15-23.004, F.A.C.

8" PVC WM / TO REMAIN
CITY OF LAKELAND - WATER/WASTEWATER
/ UWHCA - FPID 430185-3-56-01

PROPOSED 22" GM / PROPOSED
FLORIDA GAS TRANSMISSION

22" GM / TO BE REMOVED
FLORIDA GAS TRANSMISSION

PROPOSED 6" GM / PROPOSED
FLORIDA GAS TRANSMISSION

EXIST. R/W LINE

FLORIDA GAS TRANSMISSION 22" GM
END UWHCA REMOVAL SECTION
STA. 3478+08.00
6" GM / TO BE REMOVED
FLORIDA GAS TRANSMISSION /
UWHCA - FPID 430185-3-56-05
FLORIDA GAS TRANSMISSION 6" GM
END UWHCA REMOVAL SECTION
STA. 3478+08.00

2.27" BFOC / PLACED OUT OF SERVICE
SOUTHERN LIGHT / BY OTHERS

6" GM / TO BE REMOVED
FLORIDA GAS TRANSMISSION /
UWHCA - FPID 430185-3-56-05

22" GM / TO BE REMOVED
FLORIDA GAS TRANSMISSION /
UWHCA - FPID 430185-3-56-04

12" PVC SFM / TO REMAIN
CITY OF LAKELAND - WATER/WASTEWATER
/ UWHCA - FPID 430185-3-56-01

16" DI WM / PROPOSED
CITY OF LAKELAND - WATER/WASTEWATER
/ UWHCA - FPID 430185-3-56-01

8" PVC WM / TO BE REMOVED
CITY OF LAKELAND - WATER/WASTEWATER
/ UWHCA - FPID 430185-3-56-01

6" HDPE WM / TO BE REMOVED
CITY OF LAKELAND - WATER/WASTEWATER
/ UWHCA - FPID 430185-3-56-01

16" DI WM / TO BE REMOVED
CITY OF LAKELAND - WATER/WASTEWATER
/ UWHCA - FPID 430185-3-56-01

12 kV OE / TO REMAIN
CITY OF LAKELAND - ELECTRIC
/ BY OTHERS

PROP. SIGNAL
FOUNDATION

TH3
8" PVC WM / PROPOSED
CITY OF LAKELAND -
WATER/WASTEWATER
/ UWHCA - FPID 430185-3-56-01

℄ SURVEY SR 33

℄ CONST. SR 33

SR 33 NB

SR 33 SB

2-2" PVC BFOC / TO BE REMOVED
VERIZON BUSINESS / MCI
/ BY OTHERS

24-4" BFO / TO BE REMOVED
FRONTIER / BY OTHERS

8" PVC WM / TO REMAIN
CITY OF LAKELAND -
WATER/WASTEWATER
/ UWHCA - FPID 430185-3-56-01

8" PVC WM / PROPOSED
CITY OF LAKELAND -
WATER/WASTEWATER
/ UWHCA - FPID 430185-3-56-01

OHT / TO REMAIN
FRONTIER / BY OTHERS

BT / TO BE ADJUSTED
FRONTIER / BY OTHERS

EXIST. R/W LINE

BT / TO REMAIN
FRONTIER / BY OTHERS

OE POLE / PROPOSED
CITY OF LAKELAND - ELECTRIC / BY OTHERS

12 kV OE / TO BE REMOVED
CITY OF LAKELAND - ELECTRIC
/ BY OTHERS

OE POLE / TO BE REMOVED
CITY OF LAKELAND - ELECTRIC
/ BY OTHERS

2.27" CONDUIT BFOC / PROPOSED
SOUTHERN LIGHT

1-4" BT W/ BFOC / PROPOSED
FRONTIER / BY OTHERS

2-2" PVC BFOC / PROPOSED
VERIZON BUSINESS / MCI
/ BY OTHERS

12 kV OE / TO PROPOSED
CITY OF LAKELAND - ELECTRIC
/ BY OTHERS

12 kV OE / TO BE REMOVED
CITY OF LAKELAND - ELECTRIC
/ BY OTHERS

MATCH LINE STA. 3472+80.00

MATCH LINE STA. 3478+40.00

MATCH LINE PLAN SHEET(31)

F-1024 F-1025 F-1026 F-1027 F-1028 F-1029 F-1030 F-1102 F-1103 F-1104 F-1105 F33B F34 S-1101 S-1102 S-1104

TH1-84 TH1-85 TH1-94 TH1-95 TH1-96 TH1-145 TH1-146

MA1-1 MA1-2 MA2-2 MA3-1 MA3-2 MA3-3 MA3-4

517 518 519 520 521 522 473 474 475 476 477 478 3473 3474 3475 3476 3477 3478

1" = 40'

PRELIMINARY
subject to changes

THE OFFICIAL RECORD OF THIS SHEET IS THE ELECTRONIC FILE DIGITALLY SIGNED AND SEALED UNDER RULE 61G15-23.004, F.A.C.

REVISIONS			
DATE	DESCRIPTION	DATE	DESCRIPTION

ENGINEER OF RECORD
DEBANANDA PANIGRAHI, P.E.
LICENSE NUMBER 68318
H. W. LOCHNER
4300 W. CYPRESS STREET, SUITE 500
TAMPA, FLORIDA 33607

STATE OF FLORIDA
DEPARTMENT OF TRANSPORTATION

ROAD NO.	COUNTY	FINANCIAL PROJECT ID
SR 400	POLK	430185-3-52-01

UTILITY ADJUSTMENTS (23)

SHEET NO. 731

2/29/2024 9:33:39 PM JTAGLIAFERRO
c:\pw_working\lochner-pw-01\dms188021\PLANRD01.dgn

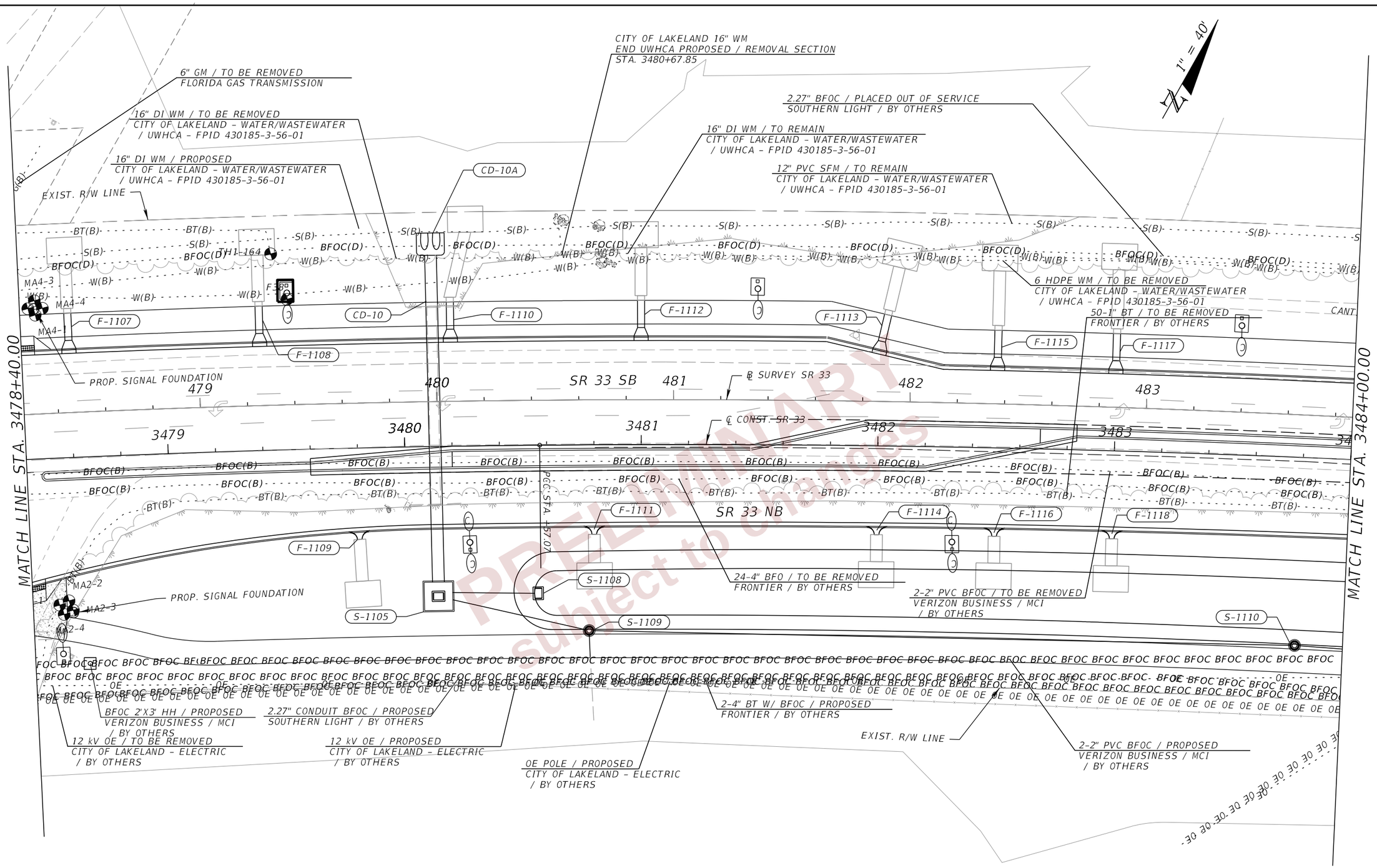

THE OFFICIAL RECORD OF THIS SHEET IS THE ELECTRONIC FILE DIGITALLY SIGNED AND SEALED UNDER RULE 61G15-23.004, F.A.C.

REVISIONS				ENGINEER OF RECORD	STATE OF FLORIDA DEPARTMENT OF TRANSPORTATION			UTILITY ADJUSTMENTS (24)	SHEET NO.
DATE	DESCRIPTION	DATE	DESCRIPTION	DEBANANDA PANIGRAHI, P.E. LICENSE NUMBER 68318 H. W. LOCHNER 4300 W. CYPRESS STREET, SUITE 500 TAMPA, FLORIDA 33607	ROAD NO.	COUNTY	FINANCIAL PROJECT ID		732
					SR 400	POLK	430185-3-52-01		

2/29/2024 9:33:40 PM JTAGLIAFERRO
c:\pw_working\lochner-pw-01\dms18802\PLANR001.dgn

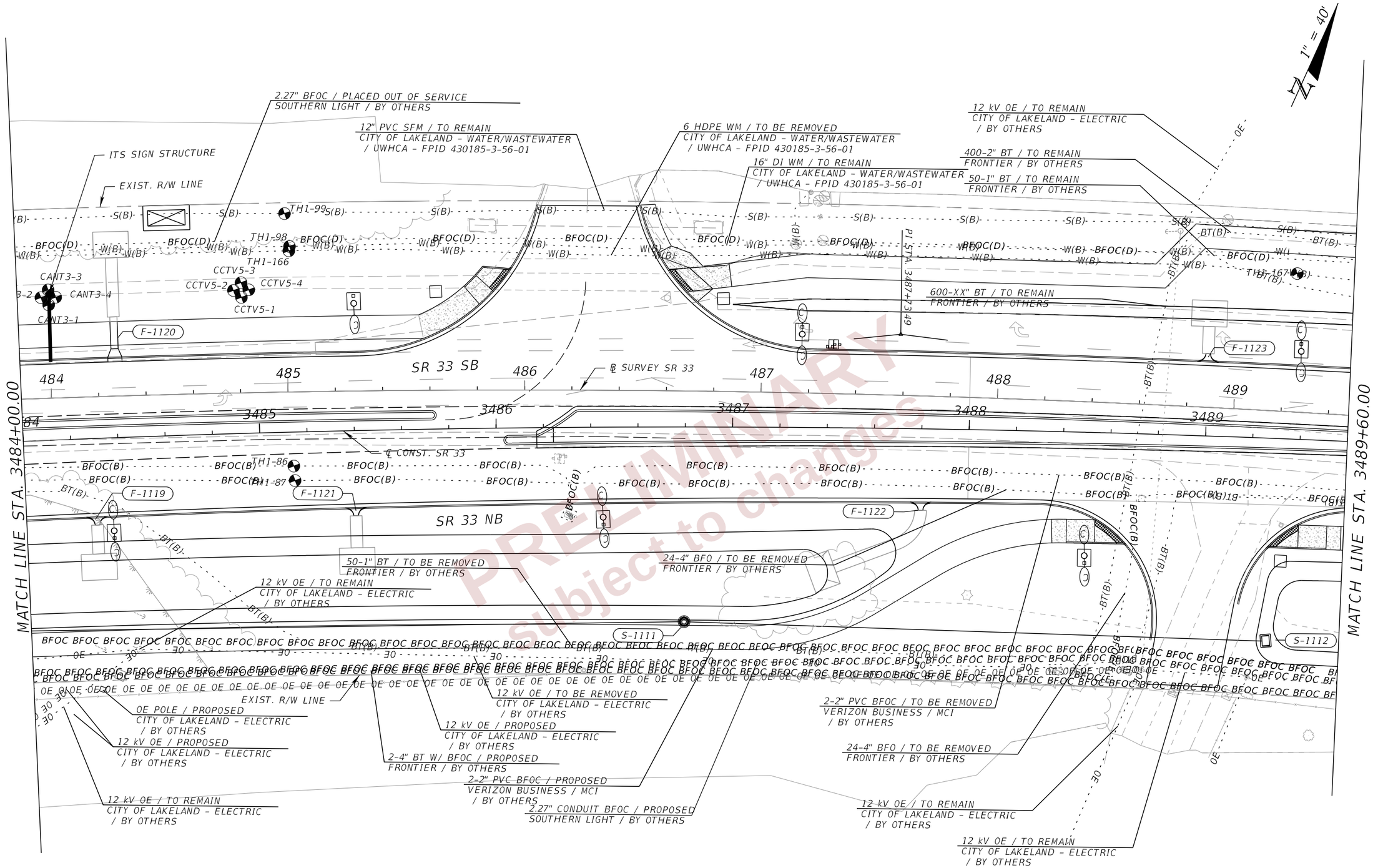

THE OFFICIAL RECORD OF THIS SHEET IS THE ELECTRONIC FILE DIGITALLY SIGNED AND SEALED UNDER RULE 61G15-23.004, F.A.C.

REVISIONS				ENGINEER OF RECORD	STATE OF FLORIDA DEPARTMENT OF TRANSPORTATION			UTILITY ADJUSTMENTS (25)	SHEET NO.
DATE	DESCRIPTION	DATE	DESCRIPTION	DEBANANDA PANIGRAHI, P.E. LICENSE NUMBER 68318 H. W. LOCHNER 4300 W. CYPRESS STREET, SUITE 500 TAMPA, FLORIDA 33607	ROAD NO.	COUNTY	FINANCIAL PROJECT ID		733
					SR 400	POLK	430185-3-52-01		

2/29/2024 9:33:40 PM JTAGLIAFERRO
c:\pw_working\lochner-pw-01\dms18802\PLANRD01.dgn

6" HDPE WM / PROPOSED
CITY OF LAKELAND – WATER/WASTEWATER
/ UWHCA – FPID 430185-3-56-01

6" HDPE WM / TO BE REMOVED
CITY OF LAKELAND – WATER/WASTEWATER
/ UWHCA – FPID 430185-3-56-01

12" PVC SFM / TO REMAIN
CITY OF LAKELAND – WATER/WASTEWATER
/ UWHCA – FPID 430185-3-56-01

END ℄ CONST. SR 33 NB
STA. 2489+32.25 ℄ CONST. SR 33 NB =
STA. 1489+49.14 ℄ CONST. SR 33 SB =
STA. 489+50.73 (4.00' RT.) ℄ SURVEY SR 33

16" DI WM / TO REMAIN
CITY OF LAKELAND – WATER/WASTEWATER
/ UWHCA – FPID 430185-3-56-01

400-2" BT / TO REMAIN
FRONTIER / BY OTHERS

2.27" BFOC / PLACED OUT OF SERVICE
SOUTHERN LIGHT / BY OTHERS

50-1" BT / TO REMIAN
FRONTIER / BY OTHERS

12" STEEL CASING W / 6" PVC WM / TO REMAIN
CITY OF LAKELAND – WATER/WASTEWATER
/ UWHCA – FPID 430185-3-56-01

1" = 40'

EXIST. R/W LINE

SD-22B

SD-22A

F-1125

F-1127

2-2" PVC BFOC / TO BE REMOVED
VERIZON BUSINESS / MCI

TH2

TH1-128

TH1-130

TH1-168

TH1-131

2-2" PVC BFOC / TO BE REMOVED
VERIZON BUSINESS / MCI
/ BY OTHERS

℄ SURVEY SR 33

℄ CONST. SR 33

SR 33 SB

SR 33 NB

N72°47'58"E

PT STA. 1516

24-4" BFO / TO BE REMOVED
FRONTIER

1-4" BT W/ BFOC / TO REMAIN
VERIZON / BY OTHERS

TH1-100

TH1-101

F-1124

F-1126

F-1128

F-1129

F-1130

SD-23B

SD-24A

SD-24B

SD-23A

12 kV OE / TO REMAIN
CITY OF LAKELAND – ELECTRIC
/ BY OTHERS

2-4" BT W/ BFOC / PROPOSED
FRONTIER / BY OTHERS

EXIST. R/W LINE

2.27" CONDUIT BFOC / PROPOSED
SOUTHERN LIGHT / BY OTHERS

2-2" PVC BFOC / PROPOSED
VERIZON BUSINESS / MCI
/ BY OTHERS

25-1" BT / TO REMAIN
FRONTIER / BY OTHERS

MATCH LINE STA. 3489+60.00

MATCH LINE STA. 3495+20.00

490 491 492 493 494 495

3490 3491 3492 3493 3494 3495

PRELIMINARY
subject to changes

THE OFFICIAL RECORD OF THIS SHEET IS THE ELECTRONIC FILE DIGITALLY SIGNED AND SEALED UNDER RULE 61G15-23.004, F.A.C.

2/29/2024 9:33:41 PM JTAGLIAFERRO
c:\pw_working\lochner-pw-01\dms18824\UTADR001.dgn

REVISIONS				ENGINEER OF RECORD	STATE OF FLORIDA DEPARTMENT OF TRANSPORTATION			UTILITY ADJUSTMENTS (26)	SHEET NO.
DATE	DESCRIPTION	DATE	DESCRIPTION	DEBANANDA PANIGRAHI, P.E. LICENSE NUMBER 68318 H. W. LOCHNER 4300 W. CYPRESS STREET, SUITE 500 TAMPA, FLORIDA 33607	ROAD NO.	COUNTY	FINANCIAL PROJECT ID		734
					SR 400	POLK	430185-3-52-01		

1" = 40'

12" PVC SFM / TO REMAIN
CITY OF LAKELAND - WATER/WASTEWATER
/ UWHCA - FPID 430185-3-56-01

16" DI WM / TO REMAIN
CITY OF LAKELAND - WATER/WASTEWATER
/ UWHCA - FPID 430185-3-56-01

6" DI WM / TO BE REMOVED
CITY OF LAKELAND - WATER/WASTEWATER
/ UWHCA - FPID 430185-3-56-01

400-2" BT / TO REMAIN
FRONTIER / BY OTHERS

50-1" BT / TO REMIAN
FRONTIER / BY OTHERS

CITY OF LAKELAND 6" WM
END UWHCA REMOVAL SECTION
STA. 497+22.44 ℄ SURVEY SR 33

2.27" BFOC / PLACED OUT OF SERVICE
SOUTHERN LIGHT / BY OTHERS

EXIST. R/W LINE

END RECONSTRUCTION
STA. 495+41.09 ℄ SURVEY SR 33 =
STA. 3495+51.92 ℄ CONST. SR 33

MATCH LINE STA. 3495+20.00

℄ SURVEY SR 33

496 497 498 499 500

N72°47'58"E

℄ CONST. SR 33

2-2" PVC BFOC / TO BE REMOVED
VERIZON BUSINESS / MCI
/ BY OTHERS

1-4" BT W/ BFOC / TO REMAIN
VERIZON / BY OTHERS

2-2" PVC BFOC / PROPOSED
VERIZON BUSINESS / MCI
/ BY OTHERS

EXIST. R/W LINE

12 kV OE / TO REMAIN
CITY OF LAKELAND - ELECTRIC
/ BY OTHERS

2-2" PVC BFOC / PROPOSED
VERIZON BUSINESS / MCI
/ BY OTHERS

2.27" CONDUIT BFOC / PROPOSED
SOUTHERN LIGHT / BY OTHERS

PRELIMINARY
subject to changes

REVISIONS				ENGINEER OF RECORD	STATE OF FLORIDA DEPARTMENT OF TRANSPORTATION			UTILITY ADJUSTMENTS (27)	SHEET NO.
DATE	DESCRIPTION	DATE	DESCRIPTION	DEBANANDA PANIGRAHI, P.E. LICENSE NUMBER 68318 H. W. LOCHNER 4300 W. CYPRESS STREET, SUITE 500 TAMPA, FLORIDA 33607	ROAD NO.	COUNTY	FINANCIAL PROJECT ID		735
					SR 400	POLK	430185-3-52-01		

THE OFFICIAL RECORD OF THIS SHEET IS THE ELECTRONIC FILE DIGITALLY SIGNED AND SEALED UNDER RULE 61G15-23.004, F.A.C.

2/29/2024 9:33:41 PM JTAGLIAFERRO
c:\pw_working\lochner-pw-01\dms18802\PLANRD01.dgn

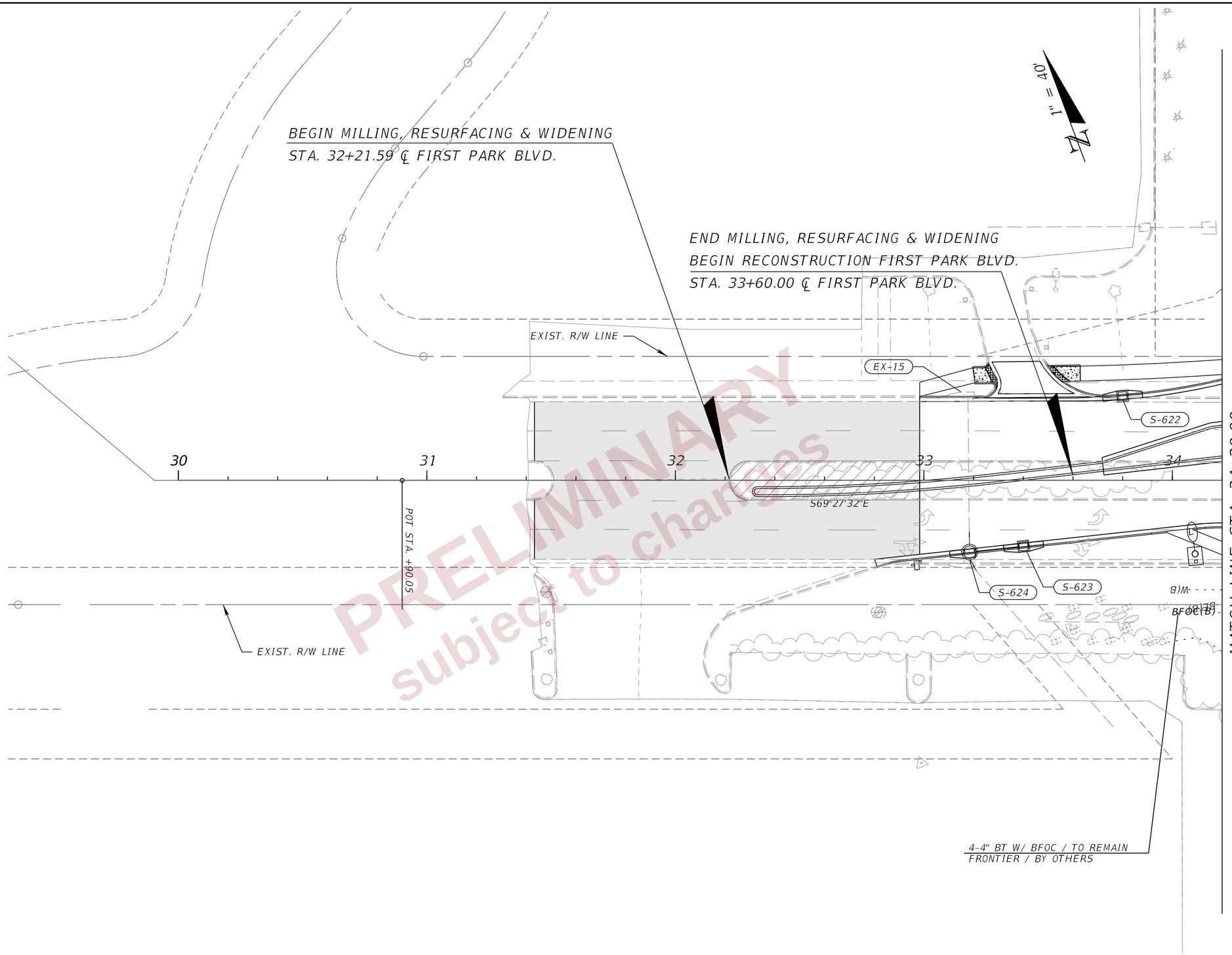

PRELIMINARY
subject to change

REVISIONS				ENGINEER OF RECORD	STATE OF FLORIDA DEPARTMENT OF TRANSPORTATION			UTILITY ADJUSTMENTS (28)	SHEET NO.
DATE	DESCRIPTION	DATE	DESCRIPTION	DEBANANDA PANIGRAHI, P.E. LICENSE NUMBER 68318 H. W. LOCHNER 4300 W. CYPRESS STREET, SUITE 500 TAMPA, FLORIDA 33607	ROAD NO.	COUNTY	FINANCIAL PROJECT ID		736
					SR 400	POLK	430185-3-52-01		

THE OFFICIAL RECORD OF THIS SHEET IS THE ELECTRONIC FILE DIGITALLY SIGNED AND SEALED UNDER RULE 61G15-23.004, F.A.C.

2/29/2024 9:33:42 PM JTAGLIAFERRO
c:\pw_working\lochner-pw-01\dms18802\PLANRD01.dgn

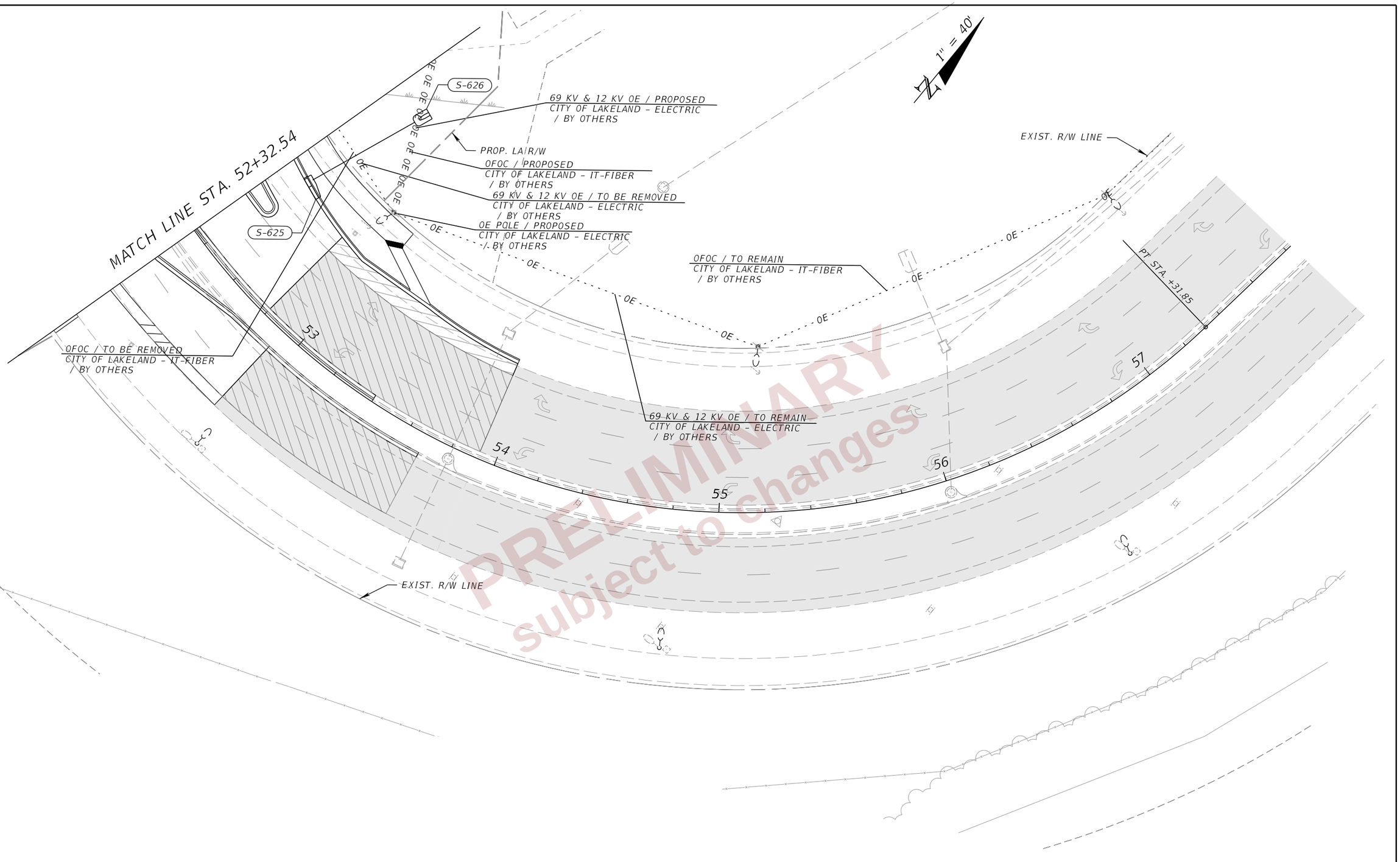

REVISIONS				ENGINEER OF RECORD	STATE OF FLORIDA DEPARTMENT OF TRANSPORTATION			UTILITY ADJUSTMENTS (29)	SHEET NO.
DATE	DESCRIPTION	DATE	DESCRIPTION	DEBANANDA PANIGRAHI, P.E. LICENSE NUMBER 68318 H. W. LOCHNER 4300 W. CYPRESS STREET, SUITE 500 TAMPA, FLORIDA 33607	ROAD NO.	COUNTY	FINANCIAL PROJECT ID		737
					SR 400	POLK	430185-3-52-01		

THE OFFICIAL RECORD OF THIS SHEET IS THE ELECTRONIC FILE DIGITALLY SIGNED AND SEALED UNDER RULE 61G15-23.004, F.A.C.

2/29/2024 9:33:42 PM JTAGLIAFERRO
c:\pw_working\lochner-pw-01\dms18802\PLANRD01.dgn

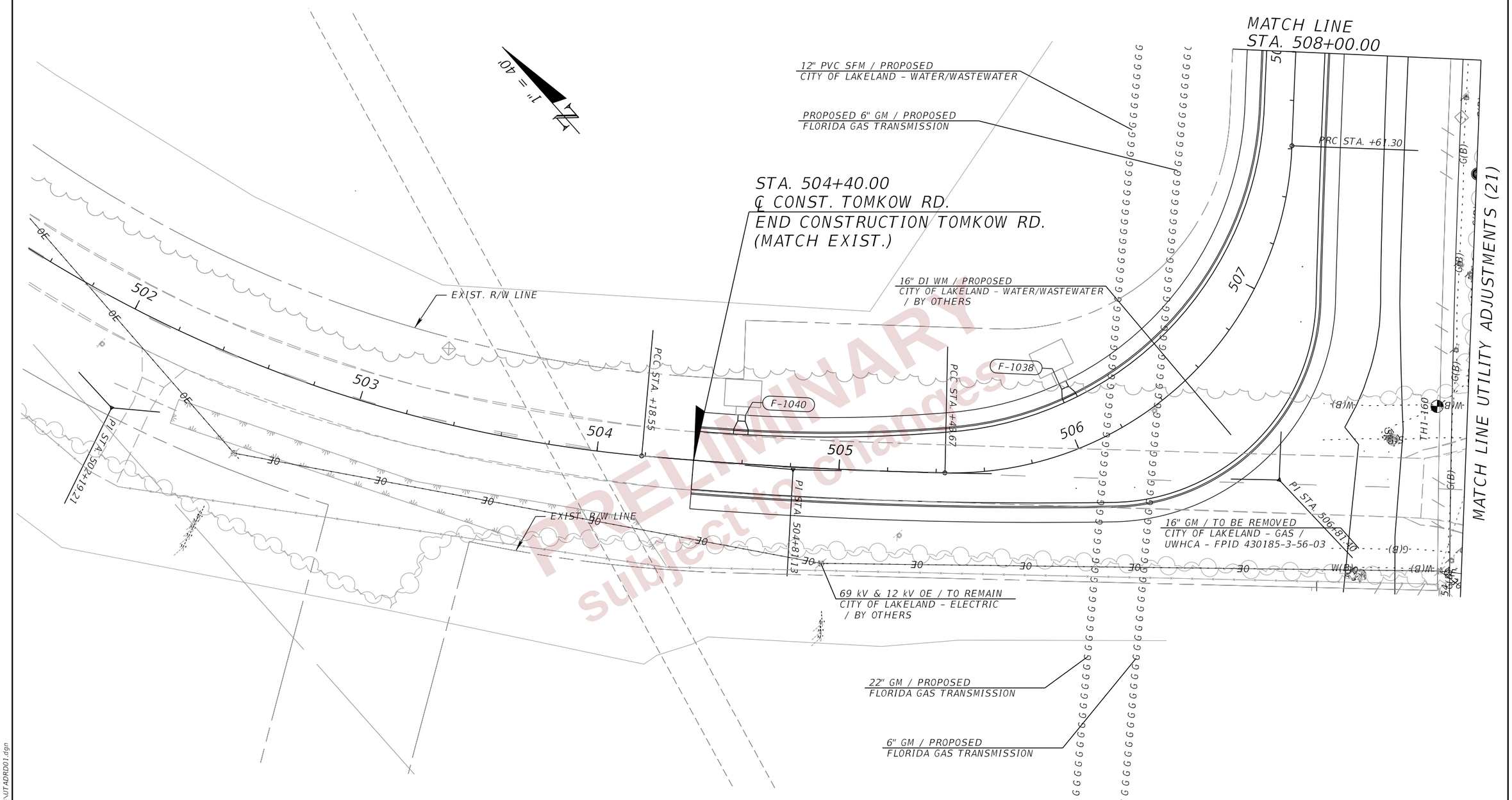

PRELIMINARY
subject to changes

MATCH LINE UTILITY ADJUSTMENTS (21)

THE OFFICIAL RECORD OF THIS SHEET IS THE ELECTRONIC FILE DIGITALLY SIGNED AND SEALED UNDER RULE 61G15-23.004, F.A.C.

REVISIONS				ENGINEER OF RECORD	STATE OF FLORIDA DEPARTMENT OF TRANSPORTATION			UTILITY ADJUSTMENTS (30)	SHEET NO.
DATE	DESCRIPTION	DATE	DESCRIPTION	DEBANANDA PANIGRAHI, P.E. LICENSE NUMBER 68318 H. W. LOCHNER 4300 W. CYPRESS STREET, SUITE 500 TAMPA, FLORIDA 33607	ROAD NO.	COUNTY	FINANCIAL PROJECT ID		738
					SR 400	POLK	430185-3-52-01		

2/29/2024 9:33:42 PM JTAGLIAFERRO
c:\pw_working\lochner-pw-01\dms18824\UTADRD01.dgn

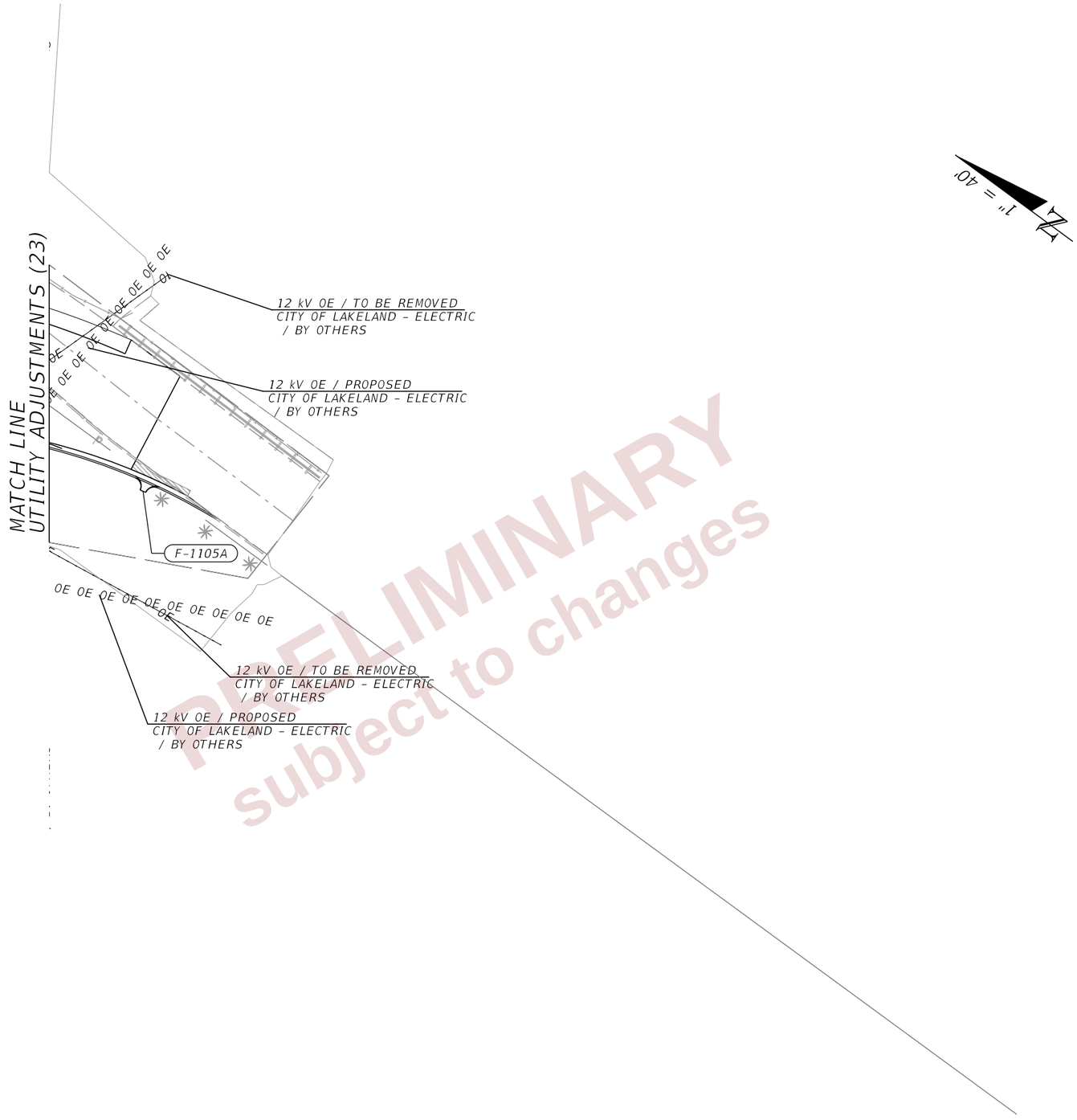

PRELIMINARY
subject to changes

REVISIONS				ENGINEER OF RECORD	STATE OF FLORIDA DEPARTMENT OF TRANSPORTATION			UTILITY ADJUSTMENTS (31)	SHEET NO.
DATE	DESCRIPTION	DATE	DESCRIPTION	DEBANANDA PANIGRAHI, P.E. LICENSE NUMBER 68318 H. W. LOCHNER 4300 W. CYPRESS STREET, SUITE 500 TAMPA, FLORIDA 33607	ROAD NO.	COUNTY	FINANCIAL PROJECT ID		739
					SR 400	POLK	430185-3-52-01		

THE OFFICIAL RECORD OF THIS SHEET IS THE ELECTRONIC FILE DIGITALLY SIGNED AND SEALED UNDER RULE 61G15-23.004, F.A.C.

2/29/2024 9:33:43 PM JTAGLIAFERRO
c:\pw_working\lochner-pw-01\dms18802\PLANRD01.dgn

Test Hole Date	Test Hole Number	Utility Size, Material & Type (Size measured in inches and is O.D.)	Utility Owner	Station	Offset	Ground Elevation	Manual Depth (Top)	Utility Elevation (Top)	Offset From	Cross Sectional View	Utility Direction	ID'd By	Surface Type	Pavement Thickness (Inches)
08/19/14	TH1-1	1.50" DBC BT	Frontier	272+36.12	-71.97	144.53	2.75	141.78	32			24	NG	N/A
08/29/14	TH1-2	2" PVC SL	City of Lakeland	271+58.13	-34.24	141.91	3.12	138.79	32			24	NG	N/A
08/29/14	TH1-3	4" PVC BT AND 3-4" PVC FOC	Frontier	271+58.18	-47.44	138.89	2.28	136.61	32			24	NG	N/A
08/29/14	TH1-4	16" DIP WM	City of Lakeland	271+58.76	-64.65	140.26	4.34	135.92	32			24	NG	N/A
08/29/14	TH1-5	1.75" DBC BT	Frontier	271+58.49	-72.46	142.23	2.34	139.89	32			24	NG	N/A
08/29/14	TH1-6	3-4" PVC FOC	Frontier	275+84.79	-47.16	141.42	2.62	138.80	32			24	NG	N/A
11/06/14	TH1-7	4" PVC BT AND 0.75" DBC BT	Frontier	285+31.71	-55.25	142.41	1.81	140.60	32			24	NG	N/A
11/06/14	TH1-8	8" AC WM	City of Lakeland	285+32.26	-68.68	142.28	3.55	138.73	32			24	NG	N/A
11/06/14	TH1-9	4" PVC BT	Frontier	285+33.18	-72.73	142.38	2.34	140.04	32			24	NG	N/A
11/06/14	TH1-10	6" AC WM	City of Lakeland	285+72.01	-78.86	141.94	3.00	138.94	32			24	NG	N/A
11/06/14	TH1-11	16" DIP WM	City of Lakeland	285+10.42	109.05	141.83	3.30	138.53	32			24	NG	N/A
11/06/14	TH1-12	2-4" PVC FOC AND 2" DBC BT	Frontier	285+11.72	96.12	141.32	2.90	138.42	32			24	NG	N/A
11/25/14	TH1-13	16" DIP WM	City of Lakeland	271+84.04	66.56	144.57	5.94	138.63	32			24	NG	N/A
12/02/14	TH1-14	0.375" DBC BT	Frontier	312+29.21	95.14	145.00	2.76	142.24	32			24	NG	N/A
12/03/14	TH1-15	4" PVC FOC	Frontier	295+08.97	32.53	142.89	2.61	140.28	32			24	NG	N/A
12/03/14	TH1-16	1" DBC BT	Frontier	295+07.84	-65.04	142.82	3.24	139.58	32			24	NG	N/A
12/03/14	TH1-17	16" DIP WM	City of Lakeland	295+12.35	109.75	143.93	4.20	139.73	32			24	NG	N/A
12/04/14	TH1-18	16" STL CASING WM	City of Lakeland	304+77.46	35.81	142.16	3.75	138.41	32			24	NG	N/A
12/04/14	TH1-19	4" PVC FOC	Frontier	304+75.88	32.15	142.36	2.82	139.54	32			24	NG	N/A
12/04/14	TH1-20	16" DIP WM	City of Lakeland	304+90.88	109.79	143.00	4.34	138.66	32			24	NG	N/A
12/04/14	TH1-21	1" DBC BT	Frontier	305+71.85	52.86	142.84	3.22	139.62	32			24	NG	N/A
12/04/14	TH1-22	0.75" DBC BT	Frontier	305+73.41	53.05	142.84	2.86	139.98	32			24	NG	N/A
12/04/14	TH1-23	6" PVC FM	City of Lakeland	312+28.49	100.34	145.16	3.70	141.46	32			24	NG	N/A
12/04/14	TH1-24	" PVC BT AND UNKNOWN SIZE DBC B	Frontier	304+39.24	-63.98	140.42	2.76	137.66	32			24	NG	N/A
12/04/14	TH1-25	18" PVC FM	City of Lakeland	314+40.82	-71.42	145.58	3.30	142.28	32			24	NG	N/A
12/05/14	TH1-26	18" CI FM (90 DEGREE BEND)	City of Lakeland	308+46.39	-68.49	139.99	4.46	135.53	32			24	NG	N/A
12/05/14	TH1-27	4" PVC FOC	Frontier	315+54.77	31.83	144.55	2.86	141.69	32			24	NG	N/A
12/05/14	TH1-28	2-2.50" AND 2" PVC BE	Lakeland Elec.	315+30.07	55.55	144.50	6.24	138.26	32			24	NG	N/A
12/05/14	TH1-29	4" PVC FOC	Frontier	324+53.40	33.20	145.42	3.50	141.92	32			24	NG	N/A
12/05/14	TH1-30	16" DIP WM	City of Lakeland	326+59.21	118.30	147.08	3.80	143.28	32			24	NG	N/A
12/05/14	TH1-31	18" PVC FM	City of Lakeland	324+53.57	-70.73	147.06	3.28	143.78	32			24	NG	N/A
12/08/14	TH1-32	4" PVC FOC	Frontier	334+50.33	32.92	140.98	3.30	137.68	32			24	NG	N/A
12/08/14	TH1-33	16" DIP WM	City of Lakeland	335+07.43	111.73	138.40	2.86	135.54	32			24	NG	N/A
12/08/14	TH1-34	4" PVC UNKNOWN UTILITY	Unknown	305+84.02	26.32	142.76	5.57	137.19	32			24	NG	N/A
12/08/14	TH1-35	3-2" PVC FOC/CATV	Brighthouse	304+92.88	114.55	143.00	2.90	140.10	32			24	NG	N/A
12/08/14	TH1-36	3-2" PVC FOC/CATV	Brighthouse	314+30.75	124.01	145.63	3.50	142.13	32			24	NG	N/A
12/08/14	TH1-37	4" PVC FOC	Frontier	344+56.09	31.12	139.66	2.65	137.01	32			24	NG	N/A
12/08/14	TH1-38	16" DIP WM	City of Lakeland	344+54.11	113.74	138.49	2.96	135.53	32			24	NG	N/A
12/08/14	TH1-39	18" PVC FM	City of Lakeland	344+55.85	-71.42	137.83	3.02	134.81	32			24	NG	N/A
12/08/14	TH1-40	18" PVC FM	City of Lakeland	334+48.07	-69.89	138.95	2.80	136.15	32			24	NG	N/A
12/09/14	TH1-41	4" PVC FOC	Frontier	354+51.88	31.52	139.78	6.05	133.73	32			24	NG	N/A
12/09/14	TH1-42	UNKNOWN SIZE AND MATERIAL WM	City of Lakeland	354+88.93	114.65	134.89	4.74	130.15	32	*		24	NG	N/A
12/09/14	TH1-43	10" STEEL CASING GM	FGT	362+73.28	47.68	137.98	4.84	133.14	32			24	NG	N/A
12/09/14	TH1-44	6" STL GM	FGT	364+44.05	-76.49	136.68	3.90	132.78	32			24	NG	N/A
12/09/14	TH1-45	0.75" DBC BT	Frontier	364+46.40	31.91	137.68	2.72	134.96	32			24	NG	N/A
12/09/14	TH1-46	4" PVC FOC	Frontier	364+46.82	35.68	137.45	3.90	133.55	32			24	NG	N/A
12/09/14	TH1-47	2-2" PE FOC	MCI	364+46.43	29.30	137.87	3.64	134.23	32			24	NG	N/A
12/09/14	TH1-48	18" PVC FM	City of Lakeland	364+03.61	-75.18	136.73	3.93	132.80	32			24	NG	N/A
12/09/14	TH1-49	18" PVC FM	City of Lakeland	354+49.50	-72.89	135.23	3.15	132.08	32			24	NG	N/A
12/10/14	TH1-50	24" CI WM	City of Lakeland	315+61.67	32.57	144.70	4.51	140.19	32			24	NG	N/A
12/10/14	TH1-51	2.50" PE FOC	Frontier	314+30.57	132.63	145.40	1.65	143.75	32			24	NG	N/A

Test Hole Date	Test Hole Number	Utility Size, Material & Type (Size measured in inches and is O.D.)	Utility Owner	Station	Offset	Ground Elevation	Manual Depth (Top)	Utility Elevation (Top)	Offset From	Cross Sectional View	Utility Direction	ID'd By	Surface Type	Pavement Thickness (Inches)
12/11/14	TH1-52	UNKNOWN SIZE PVC BE	Lakeland Elec.	359+41.92	73.59	137.27	4.90	132.37	32	*		24	NG	N/A
12/11/14	TH1-53	2-2" PE FOC/CATV	Brighthouse	361+76.52	87.17	139.96	6.13	133.83	32			24	NG	N/A
12/11/14	TH1-54	UNKNOWN SIZE AND MATERIAL WM	City of Lakeland	361+68.37	84.33	140.34	11.93	128.41	32	*		24	NG	N/A
12/11/14	TH1-55	UNKNOWN SIZE PVC BE	Lakeland Elec.	373+60.03	56.09	136.50	4.22	132.28	32			24	NG	N/A
12/11/14	TH1-56	4" PVC FOC	Frontier	374+47.05	34.21	137.42	4.35	133.07	32			24	NG	N/A
12/11/14	TH1-57	0.50" DBC BT	Frontier	374+47.23	30.18	137.57	3.04	134.53	32			24	NG	N/A
12/11/14	TH1-58	2-2" PE FOC	MCI	376+58.40	25.46	137.83	3.54	134.29	32			24	NG	N/A
12/11/14	TH1-59	2-2" PE FOC	MCI	384+44.56	25.54	136.74	3.09	133.65	32			24	NG	N/A
12/11/14	TH1-60	0.50" DBC BT	Frontier	384+44.63	29.49	136.15	2.31	133.84	32			24	NG	N/A
12/11/14	TH1-61	4" PVC FOC	Frontier	384+44.88	33.14	135.45	2.80	132.65	32			24	NG	N/A
12/12/14	TH1-62	34" DIP WM	City of Lakeland	364+11.57	-99.37	137.52	3.54	133.98	32			24	NG	N/A
12/12/14	TH1-63	30" DIP WM	City of Lakeland	364+12.25	-105.58	137.60	4.44	133.16	32			24	NG	N/A
12/12/14	TH1-64	6" HDPE WM	City of Lakeland	364+11.89	-110.39	137.83	3.11	134.72	32			24	NG	N/A
12/12/14	TH1-65	2-1.25" PE FOC	Frontier	344+55.33	-66.05	137.92	3.16	134.76	32			24	NG	N/A
12/12/14	TH1-66	2-1.25" PE FOC	Frontier	354+49.32	-71.78	135.26	2.93	132.33	32			24	NG	N/A
12/12/14	TH1-67	2-2" PE FOC	MCI	394+81.07	25.80	137.80	3.05	134.75	32			24	NG	N/A
12/12/14	TH1-68	0.375" DBC BT	Frontier	394+81.37	31.14	137.70	2.69	135.01	32			24	NG	N/A
12/12/14	TH1-69	4" PVC FOC	Frontier	394+81.59	35.53	137.35	3.62	133.73	32			24	NG	N/A
12/21/14	TH1-70	2-2" PE FOC	MCI	404+49.12	26.09	137.20	3.10	134.10	32			24	NG	N/A
12/21/14	TH1-71	0.75" DBC BT	Frontier	404+49.41	33.16	136.33	2.68	133.65	32			24	NG	N/A
12/21/14	TH1-72	4" PVC FOC	Frontier	404+49.47	36.01	135.95	3.17	132.78	32			24	NG	N/A
12/21/14	TH1-73	4" PVC FOC	Frontier	424+71.15	32.66	137.22	3.31	133.91	32			24	NG	N/A
12/21/14	TH1-74	0.75" DBC BT	Frontier	424+71.12	36.14	136.85	3.57	133.28	32			24	NG	N/A
12/21/14	TH1-75	2-2" PE FOC	MCI	435+67.23	25.32	137.28	3.44	133.84	32			24	NG	N/A
12/21/14	TH1-76	4" PVC FOC	Frontier	435+67.52	28.95	136.89	3.03	133.86	32			24	NG	N/A
12/21/14	TH1-77	0.75" DBC BT	Frontier	435+67.32	31.59	136.68	2.99	133.69	32			24	NG	N/A
12/21/14	TH1-78	2-2" PE FOC	MCI	454+78.95	34.30	136.92	3.50	133.42	32			24	NG	N/A
12/21/14	TH1-79	4" PVC FOC	Frontier	454+78.62	43.12	135.80	2.72	133.08	32			24	NG	N/A
12/22/14	TH1-80	2-2" PE FOC	MCI	424+70.75	25.79	137.65	3.86	133.79	32			24	NG	N/A
12/22/14	TH1-81	2-2" PE FOC	MCI	464+87.94	25.74	137.54	3.55	133.99	32			24	NG	N/A
12/22/14	TH1-82	4" PVC FOC	Frontier	464+87.67	33.42	136.88	3.24	133.64	32			24	NG	N/A
12/22/14	TH1-83	14" STL CASING FM	City of Lakeland	464+76.32	29.47	137.33	5.81	131.52	32			24	NG	N/A
12/22/14	TH1-84	2-2" PE FOC	MCI	474+96.06	25.86	138.91	3.21	135.70	32			24	NG	N/A
12/22/14	TH1-85	4" PVC FOC	Frontier	474+95.83	33.50	138.22	3.26	134.96	32			24	NG	N/A
12/22/14	TH1-86	2-2" PE FOC	MCI	485+01.94	31.33	138.48	3.68	134.80	32			24	NG	N/A
12/22/14	TH1-87	4" PVC FOC	Frontier	485+02.37	37.46	137.77	3.50	134.27	32			24	NG	N/A
12/22/14	TH1-88	1" DBC BT	Frontier	485+01.71	103.71	136.14	2.67	133.47	32			24	NG	N/A
12/23/14	TH1-89	2" AND 3" PVC BE	FDOT	445+95.03	55.09	136.49	2.71	133.78	32			24	NG	N/A
12/23/14	TH1-90	2-2" PE FOC	MCI	445+91.95	29.76	137.87	3.52	134.35	32			24	NG	N/A
12/23/14	TH1-91	12" PVC FM	City of Lakeland	445+90.94	-36.50	138.38	3.66	134.72	32			24	NG	N/A
12/23/14	TH1-92	12" PVC FM	City of Lakeland	454+88.43	-40.69	137.54	3.94	133.60	32			24	NG	N/A
12/23/14	TH1-93	UNKNOWN SIZE AND MATERIAL WM	City of Lakeland	464+90.85	-49.83	136.83	9.48	127.35	32	*		24	NG	N/A
12/23/14	TH1-94	16" DIP WM	City of Lakeland	474+97.26	-52.84	137.23	3.37	133.86	32			24	NG	N/A
12/23/14	TH1-95	12" PVC FM	City of Lakeland	474+96.98	-63.76	136.96	3.20	133.76	32			24	NG	N/A
12/23/14	TH1-96	1" DBC BT	Frontier	474+96.03	111.17	137.20	2.20	135.00	32			24	NG	N/A
12/28/14	TH1-97	4" PVC FOC	Frontier	441+84.01	46.26	136.20	3.70	132.50	32			24	NG	N/A
12/28/14	TH1-98	16" DIP WM	City of Lakeland	485+01.65	-61.52	136.08	2.86	133.22	32			24	NG	N/A
12/28/14	TH1-99	UNKNOWN SIZE AND MATERIAL FM	City of Lakeland	484+99.81	-75.45	135.03	3.91	131.12	32	*		24	NG	N/A
12/28/14	TH1-100	2 - 2" PE FOC	MCI	494+97.75	25.30	138.86	4.09	134.77	32			24	NG	N/A
12/28/14	TH1-101	4" PVC FOC AND 1" DBC BT	Frontier	494+97.71	30.97	138.15	2.41	135.74	32			24	NG	N/A

DRAFT Manually Signed and Sealed Subject to change

THE OFFICIAL RECORD OF THIS SHEET IS THE ELECTRONIC FILE DIGITALLY SIGNED AND SEALED UNDER RULE 61G15-23.004, F.A.C.

REVISIONS			
DATE	DESCRIPTION	DATE	DESCRIPTION

ENGINEER OF RECORD

DEBANANDA PANIGRAHI, P.E.
LICENSE NUMBER 68318
H. W. LOCHNER
4300 W. CYPRESS STREET, SUITE 500
TAMPA, FLORIDA 33607

STATE OF FLORIDA
DEPARTMENT OF TRANSPORTATION

ROAD NO.	COUNTY	FINANCIAL PROJECT ID
SR 400	POLK	430185-3-52-01

VERIFIED UTILITY LOCATES

SHEET NO. 740

Test Hole Date	Test Hole Number	Utility Size, Material & Type (Size measured in inches and is O.D.)	Utility Owner	Station	Offset	Ground Elevation	Manual Depth (Top)	Utility Elevation (Top)	Offset From	Cross Sectional View	Utility Direction	ID'd By	Surface Type	Pavement Thickness (Inches)
12/29/14	TH1-102	2" PVC SL	City of Lakeland	268+42.75	-41.52	141.71	3.75	137.96	32			24	NG	N/A
12/29/14	TH1-103	2-4" PVC FOC/BT	Frontier	268+43.17	-49.23	140.50	4.53	135.97	32			24	NG	N/A
12/29/14	TH1-104	16" DIP WM	City of Lakeland	268+42.34	-64.93	140.06	4.15	135.91	32			24	NG	N/A
12/29/14	TH1-105	2" DBC BT	Frontier	268+44.43	-72.11	141.00	5.88	135.12	32			23	C	4"
12/29/14	TH1-106	2" PVC SL	City of Lakeland	268+42.17	79.60	141.97	3.91	138.06	32			24	NG	N/A
12/29/14	TH1-107	16" DIP WM	City of Lakeland	273+79.44	111.01	140.37	3.10	137.27	32			24	NG	N/A
12/29/14	TH1-108	UNKNOWN SIZE STL GM	Lakeland Gas	354+47.16	-58.21	134.89	2.95	131.94	32	*		24	NG	N/A
12/29/14	TH1-109	2-4" PVC FOC AND 2" DBC BT	Frontier	278+32.85	95.43	145.80	2.80	143.00	32			24	NG	N/A
12/29/14	TH1-110	16" DIP WM	City of Lakeland	278+34.12	110.05	146.28	3.11	143.17	32			24	NG	N/A
12/29/14	TH1-111	4" PVC BT AND 1.25" DBC BT	Frontier	300+50.89	-64.04	142.89	2.80	140.09	32			24	NG	N/A
12/29/14	TH1-112	16" DIP WM	City of Lakeland	303+49.94	110.32	140.69	4.30	136.39	32			24	NG	N/A
12/29/14	TH1-113	3-2.50" PVC FOC/CATV	Brighthouse	303+49.66	114.06	140.96	2.45	138.51	32			24	NG	N/A
12/29/14	TH1-114	1" DBC BT	Frontier	303+51.64	125.49	142.59	1.90	140.69	32			24	NG	N/A
12/29/14	TH1-115	16" STL GM	Lakeland Gas	308+05.49	-54.53	140.22	3.36	136.86	32			24	NG	N/A
12/29/14	TH1-116	16" STL GM	Lakeland Gas	314+41.51	-55.60	143.00	1.55	141.45	32			24	NG	N/A
12/29/14	TH1-117	16" STL GM	Lakeland Gas	324+52.88	-56.59	146.43	4.10	142.33	32			24	NG	N/A
12/29/14	TH1-118	UNKNOWN SIZE STL GM	Lakeland Gas	334+46.61	-56.70	138.52	4.00	134.52	32			24	NG	N/A
12/29/14	TH1-119	UNKNOWN SIZE PVC BE	Lakeland Elec.	359+46.14	-45.16	135.85	11.58	124.27	32	*		24	NG	N/A
12/29/14	TH1-120	UNKNOWN SIZE & MATERIAL GM	Lakeland Gas	344+55.45	-59.37	137.85	2.62	135.23	32	*		24	NG	N/A
12/29/14	TH1-121	30" DIP WM	City of Lakeland	435+70.03	-102.80	137.97	3.78	134.19	32			24	NG	N/A
12/29/14	TH1-122	36" DIP WM	City of Lakeland	435+69.78	-93.38	137.47	4.06	133.41	32			24	NG	N/A
12/29/14	TH1-123	12" STL GM	Lakeland Gas	435+69.74	-77.86	135.89	3.42	132.47	32			24	NG	N/A
01/13/15	TH1-124	12" STL CASING GM	FGT	443+71.59	-61.67	140.14	7.26	132.88	32			24	NG	N/A
01/13/15	TH1-125	6" STL GM	FGT	435+69.20	-67.25	134.81	3.42	131.39	32			24	NG	N/A
01/13/15	TH1-126	UNKNOWN SIZE AND MATERIAL GM	Lakeland Gas	443+61.77	-84.40	140.39	8.29	132.10	32	*		24	NG	N/A
12/30/14	TH1-127	UNKNOWN SIZE AND MATERIAL BE	Lakeland Elec.	405+62.25	45.63	135.60	6.65	128.95	32	*		24	NG	N/A
12/30/14	TH1-128	UNKNOWN SIZE AND MATERIAL FM	City of Lakeland	494+91.68	-75.84	135.35	3.02	132.33	32	*		24	NG	N/A
12/30/14	TH1-129	2" DBC BT	Frontier	494+92.30	-64.45	135.47	2.16	133.31	32			24	NG	N/A
12/30/14	TH1-130	UNKNOWN SIZE DIP WM	City of Lakeland	494+92.11	-60.77	135.33	3.43	131.90	32			24	NG	N/A
12/30/14	TH1-131	1" DBC BT	Frontier	494+93.27	-42.44	136.19	2.22	133.97	32			24	NG	N/A
01/13/15	TH1-132	UNKNOWN SIZE AND MATERIAL FM	City of Lakeland	435+67.49	-45.16	133.84	2.96	130.88	32	*		24	NG	N/A
01/13/15	TH1-133	16" STL GM	Lakeland Gas	454+92.50	-47.12	136.33	3.42	132.91	32			24	NG	N/A
01/13/15	TH1-134	UNKNOWN SIZE AND MATERIAL GM	FGT	454+90.07	-61.94	133.85	3.19	130.66	32	*		24	NG	N/A
01/14/15	TH1-135	0.75" DBC BT	Frontier	414+73.59	37.35	136.92	3.38	133.54	32			22	A	3"
01/14/15	TH1-136	4" PVC FOC	Frontier	414+73.69	33.99	137.08	3.80	133.28	32			22	A	3"
01/14/15	TH1-137	UNKNOWN SIZE AND MATERIAL WM	City of Lakeland	463+13.56	62.97	135.82	9.41	126.41	32	*		24	NG	N/A
01/14/15	TH1-138	UNKNOWN SIZE AND MATERIAL WM	City of Lakeland	463+47.15	63.55	135.80	8.66	127.14	32	*		24	NG	N/A
01/14/15	TH1-139	UNKNOWN SIZE AND MATERIAL FM	City of Lakeland	463+60.86	58.26	136.00	8.58	127.42	32	*		24	NG	N/A
01/14/15	TH1-140	UNKNOWN SIZE AND MATERIAL WM	City of Lakeland	460+88.07	54.72	133.55	5.90	127.65	32	*		24	NG	N/A
01/14/15	TH1-141	6" STL GM	FGT	466+52.20	-72.60	138.33	2.58	135.75	32			24	NG	N/A
01/14/15	TH1-142	16" CONC. CAP FOC	MCI	432+15.89	25.96	137.60	1.10	136.50	32			22	NG	N/A
01/14/15	TH1-143	EXPLORATORY/HARD PAN (HARD PAN AT 5.64' BELOW GRADE)	Frontier	432+16.02	29.43	N/A			32	*	*	22	A	2"
01/14/15	TH1-144	0.75" DBC BT	Frontier	432+15.72	32.98	137.29	1.33	135.96	32			22	A	2"

Test Hole Date	Test Hole Number	Utility Size, Material & Type (Size measured in inches and is O.D.)	Utility Owner	Station	Offset	Ground Elevation	Manual Depth (Top)	Utility Elevation (Top)	Offset From	Cross Sectional View	Utility Direction	ID'd By	Surface Type	Pavement Thickness (Inches)
01/14/15	TH1-145	6" STL GM	FGT	475+51.63	-70.38	137.05	3.32	133.73	32			24	NG	N/A
01/14/15	TH1-146	20" STL GM	FGT	474+97.59	-100.24	138.05	3.78	134.27	32			24	NG	N/A
01/14/15	TH1-147	20" STL GM	FGT	466+54.15	-101.39	138.54	4.02	134.52	32			24	NG	N/A
01/14/15	TH1-148	20" STL GM	FGT	455+71.06	-30.51	138.16	4.05	134.11	32			24	NG	N/A
01/14/15	TH1-149	UNKNOWN SIZE STL GM	Lakeland Gas	454+05.16	-56.20	137.61	7.45	130.16	32	*		24	NG	N/A
01/16/15	TH1-150	UNKNOWN SIZE STL GM	FGT	462+20.43	-32.79	138.04	6.34	131.70	32			24	NG	N/A
01/16/15	TH1-151	8" PVC FM	City of Lakeland	462+19.38	-44.96	136.78	4.02	132.76	32			24	NG	N/A
01/16/15	TH1-152	16" STL GM	Lakeland Gas	462+19.57	-55.86	135.98	5.98	130.00	32			24	NG	N/A
01/16/15	TH1-153	10" CI WM	City of Lakeland	462+20.33	-64.60	135.13	3.41	131.72	32			24	NG	N/A
01/16/15	TH1-154	6" STL GM	FGT	462+19.66	-74.30	135.18	2.74	132.44	32			24	NG	N/A
01/16/15	TH1-155	16" DIP WM	City of Lakeland	466+53.31	-52.04	137.64	2.12	135.52	32			24	NG	N/A
01/16/15	TH1-156	10" PVC FM	City of Lakeland	466+52.40	-65.79	138.12	2.64	135.48	32			24	NG	N/A
01/19/15	TH1-157	6" PVC FM	City of Lakeland	463+10.21	-63.25	136.87	4.30	132.57	32			24	NG	N/A
01/22/15	TH1-158	6" HDPE WM	City of Lakeland	438+17.51	-107.16	137.72	2.36	135.36	32			24	NG	N/A
01/22/15	TH1-159	6" HDPE WM	City of Lakeland	435+67.87	-107.39	138.32	3.84	134.48	32			24	NG	N/A
01/22/15	TH1-160	UNKNOWN SIZE PVC FM	City of Lakeland	463+13.07	-81.12	135.80	5.02	130.78	32			24	NG	N/A
01/22/15	TH1-161	36" STL CASING WM	City of Lakeland	1142+33.32	-92.77	135.96	3.24	132.72	32			24	NG	N/A
02/09/15	TH1-162	54" STL CASING WM	City of Lakeland	1142+48.27	-92.83	136.02	4.10	131.92	32			24	NG	N/A
02/09/15	TH1-163	UNK SIZE AND MATERIAL FM	City of Lakeland	1142+62.46	-93.43	136.08	10.37	125.71	32	*		24	NG	N/A
TH1-161 THROUGH TH1-163 REFERENCED TO SR 400 (I-4) SURVEY BASELINE														
02/10/15	TH1-164	1" DBC BT (CUT)	Frontier	479+31.55	-63.97	135.14	0.26	134.88	32			24	NG	N/A
02/10/15	TH1-165	6" HDPE WM	City of Lakeland	474+98.93	-50.59	137.25	4.04	133.21	32			24	NG	N/A
02/10/15	TH1-166	6" HDPE WM	City of Lakeland	485+01.36	-59.69	136.11	3.35	132.76	32			24	NG	N/A
02/10/15	TH1-167	6" HDPE WM	City of Lakeland	489+23.56	-58.50	138.53	4.86	133.67	32			24	NG	N/A
02/10/15	TH1-168	UNKNOWN SIZE AND MATERIAL WM	City of Lakeland	494+91.43	-59.78	135.36	4.41	130.95	32	*		24	NG	N/A
02/10/15	TH1-169	6" HDPE WM	City of Lakeland	461+43.74	91.65	134.90	3.05	131.85	32			24	NG	N/A
02/10/15	TH1-170	16" DIP WM	City of Lakeland	461+44.33	93.97	134.77	2.74	132.03	32			24	NG	N/A
02/11/15	TH1-171	6" PVC FM	City of Lakeland	464+77.78	88.02	136.86	3.70	133.16	32			24	NG	N/A
02/11/15	TH1-172	6" HDPE WM	City of Lakeland	466+53.34	-49.30	137.42	2.72	134.70	32			24	NG	N/A
02/11/15	TH1-173	6" HDPE WM	City of Lakeland	463+93.89	-55.55	135.67	5.06	130.61	32			24	NG	N/A
02/11/15	TH1-174	4" PVC FOC	Frontier	451+82.63	52.07	137.34	4.42	132.92	32			24	NG	N/A
02/12/15	TH1-175	4" PVC FOC	Frontier	445+94.91	45.66	136.84	5.00	131.84	32			24	NG	N/A
02/12/15	TH1-176	2-2" PE FOC	MCI	362+99.66	85.79	137.70	3.60	134.10	32			24	NG	N/A
02/12/15	TH1-177	1" DBC BT	Frontier	363+03.40	93.67	137.65	2.62	135.03	32			24	NG	N/A

Notes:
1. Station and Offsets are referenced to the S.R. 33 Survey Baseline.
2. Positive offsets are right of the referenced baseline; negative offsets are left of the referenced baseline.
3. TH1-163 and TH1-168, unable to visually verify pipe size and or material due to depth and cave in.

ORIGINAL MYLAR to replace sunset

THE OFFICIAL RECORD OF THIS SHEET IS THE ELECTRONIC FILE DIGITALLY SIGNED AND SEALED UNDER RULE 61G15-23.004, F.A.C.

REVISIONS				ENGINEER OF RECORD	STATE OF FLORIDA DEPARTMENT OF TRANSPORTATION			VERIFIED UTILITY LOCATES	SHEET NO.
DATE	DESCRIPTION	DATE	DESCRIPTION	DEBANANDA PANIGRAHI, P.E. LICENSE NUMBER 68318 H. W. LOCHNER 4300 W. CYPRESS STREET, SUITE 500 TAMPA, FLORIDA 33607	ROAD NO.	COUNTY	FINANCIAL PROJECT ID		741
					SR 400	POLK	430185-3-52-01		

Test Hole Date	Test Hole Number	Utility Size, Material & Type (Size measured in inches and is O.D.)	Station	Offset	Ground Elevation	Manual Depth (Top)	Utility Elevation (Top)	Offset From	Cross Sectional View	Utility Direction	ID'd By	Surface Type	Pavement Thickness (Inches)
2/12/2024	F33B	EXPLORATORY	477+93.91	99.25	138.31'	10.00'	N/A	32	*	*	24	NG	N/A
2/12/2024	F34	EXPLORATORY	476+15.92	-46.10	137.76'	10.00'	N/A	32	*	*	24	NG	N/A
2/12/2024	F36	EXPLORATORY	477+85.10	-53.06	139.07'	9.00'	N/A	32	*	*	24	NG	N/A
2/12/2024	F38	EXPLORATORY	479+37.86	-44.58	136.93'	8.00'	N/A	32	*	*	24	NG	N/A
12/5/2023	MA1-1	EXPLORATORY	476+37.66	-42.99	137.50'	10.00'	N/A	32	*	*	24	NG	N/A
12/5/2023	MA1-2	EXPLORATORY	476+34.30	-45.79	137.62'	10.00'	N/A	32	*	*	24	NG	N/A
12/5/2023	MA1-3	EXPLORATORY	476+37.23	-48.98	137.63'	9.00'	N/A	32	*	*	24	NG	N/A
12/5/2023	MA1-4	EXPLORATORY	476+40.43	-45.90	137.63'	9.00'	N/A	32	*	*	24	NG	N/A
12/7/2023	MA2-1	EXPLORATORY	478+36.86	81.10	138.09'	10.00'	N/A	32	*	*	24	NG	N/A
12/7/2023	MA2-2	EXPLORATORY	478+40.95	79.47	137.78'	10.00'	N/A	32	*	*	24	NG	N/A
12/7/2023	MA2-3	EXPLORATORY	478+42.62	83.51	136.99'	10.00'	N/A	32	*	*	24	NG	N/A
12/7/2023	MA2-4	EXPLORATORY	478+38.58	85.14	137.59'	10.00'	N/A	32	*	*	24	NG	N/A
12/6/2023	MA3-1	EXPLORATORY	476+51.12	76.36	135.27'	8.02'	N/A	32	*	*	24	NG	N/A
12/6/2023	MA3-2	EXPLORATORY	476+54.26	79.44	135.40'	8.58'	N/A	32	*	*	24	NG	N/A
12/6/2023	MA3-3	EXPLORATORY	476+51.08	82.39	135.80'	9.34'	N/A	32	*	*	24	NG	N/A
12/6/2023	MA3-4	EXPLORATORY	476+48.07	79.24	135.55'	8.34'	N/A	32	*	*	24	NG	N/A
12/5/2023	MA4-1	EXPLORATORY	478+32.07	-41.80	138.19'	10.00'	N/A	32	*	*	24	NG	N/A
12/5/2023	MA4-2	EXPLORATORY	478+29.08	-44.67	137.99'	10.00'	N/A	32	*	*	24	NG	N/A
12/5/2023	MA4-3	EXPLORATORY	478+31.96	-47.87	137.50'	10.00'	N/A	32	*	*	24	NG	N/A
12/5/2023	MA4-4	EXPLORATORY	478+35.18	-44.55	137.71'	9.50'	N/A	32	*	*	24	NG	N/A
10/17/2023	CANT1-1	EXPLORATORY	423+39.82	73.96	135.28'	10.00'	N/A	32	*	*	24	NG	N/A
10/17/2023	CANT1-2	EXPLORATORY	423+42.96	76.78	136.11'	10.00'	N/A	32	*	*	24	NG	N/A
10/17/2023	CANT1-3	EXPLORATORY	423+39.80	79.75	136.80'	10.00'	N/A	32	*	*	24	NG	N/A
10/17/2023	CANT1-4	EXPLORATORY	423+36.87	76.88	136.14'	10.00'	N/A	32	*	*	24	NG	N/A
10/30/2023	CANT3-1	EXPLORATORY	484+00.14	-39.47	137.80'	9.50'	N/A	32	*	*	24	NG	N/A
10/30/2023	CANT3-2	EXPLORATORY	483+96.99	-42.62	137.29'	10.00'	N/A	32	*	*	24	NG	N/A
10/30/2023	CANT3-3	EXPLORATORY	484+00.11	-45.76	137.29'	10.00'	N/A	32	*	*	24	NG	N/A
10/30/2023	CANT3-4	EXPLORATORY	484+03.19	-42.57	137.31'	8.84'	N/A	32	*	*	24	NG	N/A
10/17/2023	CCTV1-1	EXPLORATORY	422+19.72	79.60	136.76'	10.00'	N/A	32	*	*	24	NG	N/A
10/17/2023	CCTV1-2	EXPLORATORY	422+22.95	82.52	136.77'	10.00'	N/A	32	*	*	24	NG	N/A
10/17/2023	CCTV1-3	EXPLORATORY	422+20.04	85.71	136.61'	10.00'	N/A	32	*	*	24	NG	N/A
10/17/2023	CCTV1-4	EXPLORATORY	422+16.85	82.70	136.74	10.00'	N/A	32	*	*	24	NG	N/A
12/26/2023	CCTV5-1	EXPLORATORY	484+81.12	-40.38	138.19'	10.00'	N/A	32	*	*	24	NG	N/A
12/26/2023	CCTV5-2	EXPLORATORY	484+77.83	-43.37	137.82'	9.50'	N/A	32	*	*	24	NG	N/A
12/26/2023	CCTV5-3	EXPLORATORY	484+81.06	-46.59	137.74'	9.50'	N/A	32	*	*	24	NG	N/A
12/26/2023	CCTV5-4	EXPLORATORY	484+84.27	-43.49	137.88'	9.50'	N/A	32	*	*	24	NG	N/A

Notes:

1. Station and Offsets are referenced to the S.R. 33 Survey Baseline.

2. Positive offsets are right of the referenced baseline; negative offsets are left of the referenced baseline.

Test Hole Date	Test Hole Number	Utility Size, Material & Type (Size measured in inches and is O.D.)	Station	Offset	Ground Elevation	Manual Depth (Top)	Utility Elevation (Top)	Offset From	Cross Sectional View	Utility Direction	ID'd By	Surface Type	Pavement Thickness (Inches)
10/18/2023	CANT2-1	EXPLORATORY	1051+82.88	104.68	134.95'	10.00'	N/A	32	*	*	24	NG	N/A
10/18/2023	CANT2-2	EXPLORATORY	1051+85.33	108.31	134.17'	10.00'	N/A	32	*	*	24	NG	N/A
10/18/2023	CANT2-3	EXPLORATORY	1051+82.28	110.80	133.86'	10.00'	N/A	32	*	*	24	NG	N/A
10/18/2023	CANT2-4	EXPLORATORY	1051+79.42	107.20	134.56'	10.00'	N/A	32	*	*	24	NG	N/A
10/18/2023	CCTV2-1	EXPLORATORY	1050+86.61	122.39	133.33'	10.00'	N/A	32	*	*	24	NG	N/A
10/18/2023	CCTV2-2	EXPLORATORY	1050+89.99	133.84	133.84'	10.00'	N/A	32	*	*	24	NG	N/A
10/18/2023	CCTV2-3	EXPLORATORY	1050+87.18	128.38	133.98'	10.00'	N/A	32	*	*	24	NG	N/A
10/18/2023	CCTV2-4	EXPLORATORY	1050+84.01	125.84	133.65'	10.00'	N/A	32	*	*	24	NG	N/A
10/20/2023	CCTV3-1	EXPLORATORY	1073+01.61	-103.79	135.24'	10.00'	N/A	32	*	*	24	NG	N/A
10/20/2023	CCTV3-2	EXPLORATORY	1072+98.44	-106.44	134.47'	10.00'	N/A	32	*	*	24	NG	N/A
10/20/2023	CCTV3-3	EXPLORATORY	1073+01.29	-109.68	133.62'	10.00'	N/A	32	*	*	24	NG	N/A
10/20/2023	CCTV3-4	EXPLORATORY	1073+04.58	-106.76	134.46'	10.00'	N/A	32	*	*	24	NG	N/A
10/19/2023	CCTV4-1	EXPLORATORY	1121+27.33	189.80	136.79'	10.00'	N/A	32	*	*	24	NG	N/A
10/19/2023	CCTV4-2	EXPLORATORY	1121+23.79	187.15	137.43'	10.00'	N/A	32	*	*	24	NG	N/A
10/19/2023	CCTV4-3	EXPLORATORY	1121+26.49	183.99	137.81'	10.00'	N/A	32	*	*	24	NG	N/A
10/19/2023	CCTV4-4	EXPLORATORY	1121+29.72	186.54	137.30'	10.00'	N/A	32	*	*	24	NG	N/A
10/19/2023	CCTV6-1	EXPLORATORY	1171+27.20	132.91	135.59'	5.96'	N/A	32	*	*	24	NG	N/A
10/19/2023	CCTV6-2	EXPLORATORY	1171+30.23	136.12	135.12'	5.26'	N/A	32	*	*	24	NG	N/A
10/19/2023	CCTV6-3	EXPLORATORY	1171+27.03	138.92	135.05'	4.91'	N/A	32	*	*	24	NG	N/A
10/19/2023	CCTV6-4	EXPLORATORY	1171+24.27	135.49	135.15'	5.50'	N/A	32	*	*	24	NG	N/A
10/19/2023	CCTV7-1	EXPLORATORY	1205+54.80	131.16	136.66'	9.50'	N/A	32	*	*	24	NG	N/A
10/19/2023	CCTV7-2	EXPLORATORY	1205+57.97	133.74	136.72'	9.50'	N/A	32	*	*	24	NG	N/A
10/19/2023	CCTV7-3	EXPLORATORY	1205+55.26	136.93	136.74'	9.50'	N/A	32	*	*	24	NG	N/A
10/19/2023	CCTV7-4	EXPLORATORY	1205+52.14	134.35	136.77'	10.00'	N/A	32	*	*	24	NG	N/A
10/20/2023	CCTV8-1	EXPLORATORY	1249+50.71	-93.82	140.29'	8.00'	N/A	32	*	*	24	NG	N/A
10/20/2023	CCTV8-2	EXPLORATORY	1249+47.46	-96.72	139.77'	8.24'	N/A	32	*	*	24	NG	N/A
10/20/2023	CCTV8-3	EXPLORATORY	1249+50.39	-100.01	139.30'	8.00'	N/A	32	*	*	24	NG	N/A
10/20/2023	CCTV8-4	EXPLORATORY	1249+53.59	-96.65	139.76'	8.50'	N/A	32	*	*	24	NG	N/A

Notes:

1. Station and Offsets are referenced to the S.R. 400 Survey Baseline.

2. Positive offsets are right of the referenced baseline; negative offsets are left of the referenced baseline.

PRELIMINARY subject to change

THE OFFICIAL RECORD OF THIS SHEET IS THE ELECTRONIC FILE DIGITALLY SIGNED AND SEALED UNDER RULE 61G15-23.004, F.A.C.

REVISIONS			
DATE	DESCRIPTION	DATE	DESCRIPTION

ENGINEER OF RECORD

DEBANANDA PANIGRAHI, P.E.
LICENSE NUMBER 68318
H. W. LOCHNER
4300 W. CYPRESS STREET, SUITE 500
TAMPA, FLORIDA 33607

STATE OF FLORIDA
DEPARTMENT OF TRANSPORTATION

ROAD NO.	COUNTY	FINANCIAL PROJECT ID
SR 400	POLK	430185-3-52-01

VERIFIED UTILITY LOCATES

SHEET NO. 742