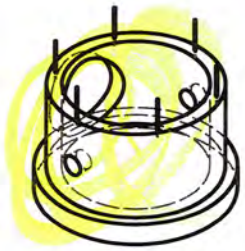

DUE TO NOT HAVING 6" OF CONCRETE ABOVE THE HOLE OPENINGS IN WALL, FDOT WILL REQUIRE THIS SHOP DRAWING TO BE APPROVED BY THE EOR PRIOR TO MANUFACTURE.

FDOT INDEX #200/211 TYPE 5 CURB INLET # S-203

1 ea

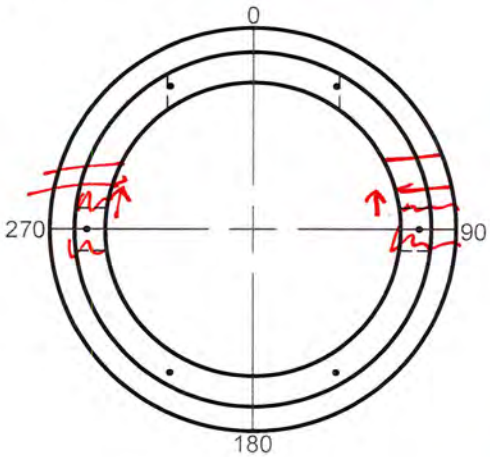

EOP = 161.39

USING DOWEL JOINTS

TPW1 = 160.10

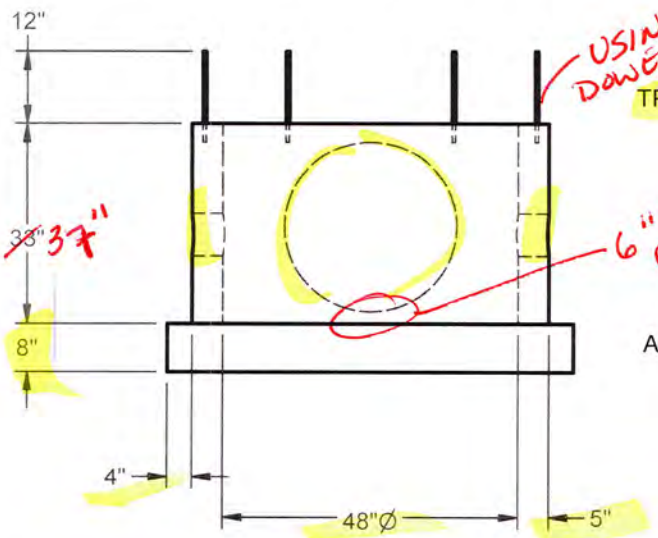

6" HOLE RISE

157.01

ITB = ~~157.35~~

APTB = ~~2.75~~ 3.09

SPECIFICATIONS	
1	BASE STEEL - #3 @ 6" O.C.E.W. (Top);
2	WALL STEEL -3X8 W3.0/W2.0 WWF (ASTM C-478)
3	
4	
5	
6	4000 PSI All wall steel 3/4" cover, 1" cover for top, bottom, and reducer.
7	Provide 1-#4 bar reinforcement ea side of openings and 2-#4 bars at 3" min. spacing above openings

SPECIAL NOTES: 1 FLAT TOP W/DOWELS

0 FDOT STAMP REQUIRED

0 0 TYPE 5 TOP CAST IN FIELD BY OTHERS

PC #	WEIGHT	PIECE DESCRIPTION	PRODUCT CODE
		PER INDEX 201 SHEET 3 OF 5, INCREASING THE UP ELEVATION TO 6" (HOLE RISE) ALLOWS THE CONCRETE ABOVE THE HOLE OPENING TO BE ZERO, USENG DOWEL JOINTS.	
1	4449	048Dia x 05Wall x 033H, MonoBaseExt	SR048B05M036X

PC #	DEG DIR	PIPE SIZE	PIPE INVERT	HOLE SIZE	BOOT TYPE	HOLE INVERT	HOLE RAISE
1	0	18 RCP	157.93	28	NONE	157.51	~~2"~~ 6"
1	90	4 PVC	158.40	7	NONE	158.28	~~11"~~ 15"
1	270	4 PVC	158.40	7	NONE	158.28	~~11"~~ 15"

1 EA CAST USF GRT 6310
1 EA CAST USF FRM 5160 STLPTD

FDOT 434986-1-52-01

STRAIGHT AHEAD CONSTRUCTION

FORTERRA | PIPE & PRECAST

DESIGN BY:	MTT
DATE:	5/11/2018
SCALE:	1:30
ORDER #:	10960723
REVISED DATE:	REV BY:

10960723S-203.idw

5/11/2018

R-048-05-00-CI-D-F1-F-0-0

CONCRETE SERVICES

☑ APPROVED

☐ APPROVED AS CORRECTED

☐ REVISE AND RESUBMIT

☐ REJECTED

☐ FOR INFORMATION ONLY

SUBMITTAL WAS REVIEWED FOR DESIGN CONFORMITY AND GENERAL CONFORMANCE TO CONTRACT DOCUMENTS ONLY. THE CONTRACTOR IS RESPONSIBLE FOR CONFIRMING AND CORRELATING DIMENSIONS AT JOB SITES FOR TOLERANCES, CLEARANCES, QUANTITIES, FABRICATION PROCESSES AND TECHNIQUES OF CONSTRUCTION, COORDINATION OF HIS WORK WITH OTHER TRADES AND FULL COMPLIANCE WITH THE CONTRACT DOCUMENTS.

BY Roy Arias DATE 5/18/2018

COMPREHENSIVE ENGINEERING SERVICES, INC.

☐ No exceptions taken ☐ Amend and Resubmit

☑ Make corrections noted ☐ Rejected (See Remarks)

Review and comments do not relieve the contractor of responsibility for substantial conformance with the contract plans and specifications.

BY: CRL DATE: 5/23/18