FORTERRA™

TRANSMITTAL

The contents of this transmittal is confidential and intended for the addressee only. If incorrectly received, please contact the sender and return to the address opposite.

If there are any problems with this transmittal, please call the sender to resend.

Forterra Pipe and Precast
840 West Avenue
Deland, FL 32720

Office- (386) 734-6228
Fax- (386) 738-7018

Date: **Thursday, May 17, 2018**

To: **Iris Alexander**
Company: **STRAIGHT AHEAD CONSTRUCTION**
Address: **0**
City/ST/Zip **Palmetto Bay, FL 33157**
Phone: **(386) 561-9739**
Fax:

From: **Mark Towne**
Engineering Department

840 West Avenue
Deland, FL 32720
Phone: **Office- (386) 734-6228**
Fax: **Fax- (386) 738-7018**
Email: mark.towne@forterrabp.com

COMPREHENSIVE ENGINEERING SERVICES, INC.
☐ No exceptions taken ☐ Amend and Resubmit
☑ Make corrections noted ☐ Rejected (See Remarks)
Review and comments do not relieve the contractor of responsibility for substantial conformance with the contract plans and specifications.
BY: CRC DATE: 5/23/18

Project: **FDOT 434986-1-52-01 T1701 SR 25**
Contract #: **SO #10960723**

Notes: **SHOP DRAWINGS FOR REVIEW AND APPROVAL**

THE ATTACHED DRAWING(S) ARE:

☐ **APPROVED AS SUBMITTED,** No comments or changes. Please release for production.

☐ **APPROVED AS NOTED,** Please make changes noted and release for production.

☐ **APPROVED WITHOUT REVIEW,** Release for production upon completion of shop drawings.

☐ **NOT APPROVED,** Revise and Resubmit, Do not release for production.

Authorized Approval: _____
(Please sign above)

Approx Date Structures Needed: _____
We will make every effort to accomidate this request

CONCRETE SERVICES

☑ APPROVED

☐ APPROVED AS CORRECTED

☐ REVISE AND RESUBMIT

☐ REJECTED

☐ FOR INFORMATION ONLY

SUBMITTAL WAS REVIEWED FOR DESIGN CONFORMITY AND GENERAL CONFORMANCE TO CONTRACT DOCUMENTS ONLY THE CONTRACTOR IS RESPONSIBLE FOR CONFIRMING AND CORRELATING DIMENSIONS AT JOB SITES FOR TOLERANCES, CLEARANCES, QUANTITIES, FABRICATION PROCESSES AND TECHNIQUES OF CONSTRUCTION, COORDINATION OF HIS WORK WITH OTHER TRADES AND FULL COMPLIANCE WITH THE CONTRACT DOCUMENTS.

BY Roy Arias DATE 5/18/2018

Forterra Pipe and Precast

Date:	**May 17, 2018**
Project:	**FDOT 434986-1-52-01 T1701 SR 25**
Contractor:	**STRAIGHT AHEAD CONSTRUCTION**
Sales Order Number:	**SO #10960723**
Submittals On:	**Precast Concrete Structures**
Designed By:	**Mark Towne**

Forterra Locations:
Deland, FL * Green Cove Springs, FL * Gretna, FL * Marianna, FL * Winter Haven, FL
Athens GA * Rome GA * Pelham AL * Montgomery AL

CONCRETE SERVICES

☑ APPROVED

☐ APPROVED AS CORRECTED

☐ REVISE AND RESUBMIT

☐ REJECTED

☐ FOR INFORMATION ONLY

SUBMITTAL WAS REVIEWED FOR DESIGN CONFORMITY AND GENERAL CONFORMANCE TO CONTRACT DOCUMENTS ONLY. THE CONTRACTOR IS RESPONSIBLE FOR CONFIRMING AND CORRELATING DIMENSIONS AT JOB SITES FOR TOLERANCES, CLEARANCES, QUANTITIES, FABRICATION PROCESSES AND TECHNIQUES OF CONSTRUCTION, COORDINATION OF HIS WORK WITH OTHER TRADES AND FULL COMPLIANCE WITH THE CONTRACT DOCUMENTS.

BY Roy Arias DATE 5/18/2018

FORTERRA™

Date:	**May 17, 2018**
Contractor:	**STRAIGHT AHEAD CONSTRUCTION**
Project:	**FDOT 434986-1-52-01 T1701 SR 25**
Sales Order Number:	**SO #10960723**

To whom it may concern:

This letter is to certify that any and all precast reinforced concrete sections manufactured by Forterra Pipe and Precast contained herein, meet or exceed the following American Society of Testing and Materials (ASTM) specifcations that are in effect at the date listed on this submittal.

Reinforced Circular Concrete Manholes: ASTM C-478

In addition to meeting the above applicable specifications we further certify that our precast products meet or exceed applicable local municipal and Department of Transportation specifications.

In order to better serve our customers, we request a minimum delivery window of two weeks from the time the job Is released for manufacture.

Sincerely,

Mark Towne
Engineering Department

Forterra Pipe and Precast
840 West Avenue
Deland, FL 32720

Office- (386) 734-6228
Fax- (386) 738-7018
mark.towne@forterrabp.com
www.forterrabp.com

Forterra Locations:
Deland, FL * Green Cove Springs, FL * Gretna, FL * Marianna, FL * Winter Haven, FL
Athens GA * Rome GA * Pelham AL * Montgomery AL

CONCRETE SERVICES

- [x] APPROVED
- [ ] APPROVED AS CORRECTED
- [ ] REVISE AND RESUBMIT
- [ ] REJECTED
- [ ] FOR INFORMATION ONLY

SUBMITTAL WAS REVIEWED FOR DESIGN CONFORMITY AND GENERAL CONFORMANCE TO CONTRACT DOCUMENTS ONLY THE CONTRACTOR IS RESPONSIBLE FOR CONFIRMING AND CORRELATING DIMENSIONS AT JOB SITES FOR TOLERANCES, CLEARANCES, QUANTITIES, FABRICATION PROCESSES AND TECHNIQUES OF CONSTRUCTION, COORDINATION OF HIS WORK WITH OTHER TRADES AND FULL COMPLIANCE WITH THE CONTRACT DOCUMENTS.

BY Roy Arias DATE 5/18/2018

FORTERRA™

Helpful Precast Abbreviations

Abbreviation	Meaning
APTB	Amount of precast to build (FT)
ITB	Inside top of base (ELEV)
TPW	Top of poured wall (ELEV)
TTS	Top of top slab (ELEV)
TRS	Top of reducer slab (ELEV)
FG	Finished grade (ELEV)
TOP	Top elevation (ELEV)
EOP	Edge of pavement (ELEV)
TB	Top of brick (ELEV)
TPC	Top of cone (ELEV)
TA	Throat adjustment (FT)

CONCRETE SERVICES

- [x] APPROVED
- [ ] APPROVED AS CORRECTED
- [ ] REVISE AND RESUBMIT
- [ ] REJECTED
- [ ] FOR INFORMATION ONLY

SUBMITTAL WAS REVIEWED FOR DESIGN CONFORMITY AND GENERAL CONFORMANCE TO CONTRACT DOCUMENTS ONLY THE CONTRACTOR IS RESPONSIBLE FOR CONFIRMING AND CORRELATING DIMENSIONS AT JOB SITES FOR TOLERANCES, CLEARANCES, QUANTITIES, FABRICATION PROCESSES AND TECHNIQUES OF CONSTRUCTION, COORDINATION OF HIS WORK WITH OTHER TRADES AND FULL COMPLIANCE WITH THE CONTRACT DOCUMENTS.

BY Roy Arias DATE 5/18/2018

CONTRACTOR'S OPTION TO USE MANHOLE TYPE P ALT. A BASED ON INDEX 245, GENERAL NOTE #5.

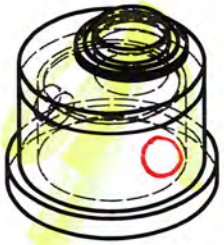

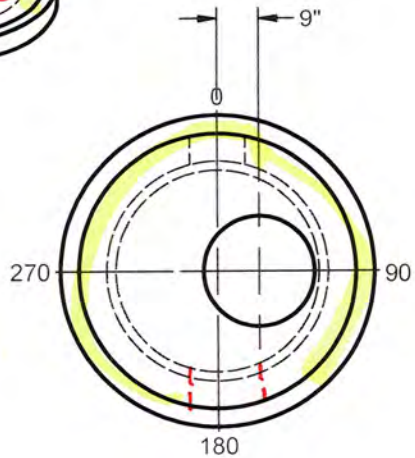

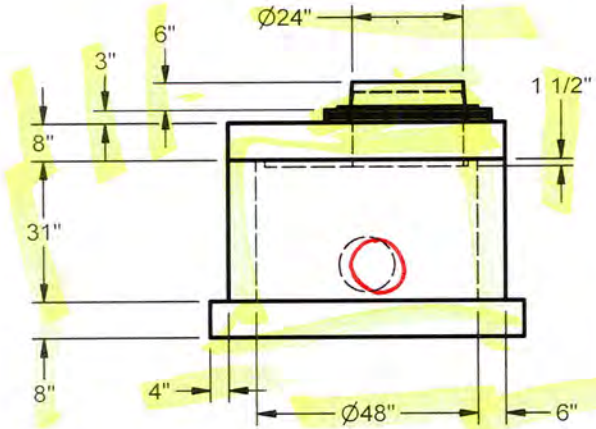

FG =	168.60
TA =	168.10
TTS =	167.85
TPW1 =	167.19
ITB =	164.60
APTB =	3.50

VERIFY PIPE SIZE & INVERT

1 EA CAST USF R&C 170-XB~FDOT~STORM

FDOT INDEX #200/201 UD INSPECTION MANHOLE # 968+00 L ~~966+0L~~

1 ea

SPECIFICATIONS	
1	BASE STEEL - #4 @ 6" O.C.E.W. (Top);
2	WALL STEEL -3X8 W3.0/W2.0 WWF (ASTM C-478)
3	TOP SLAB - #3 @ 6" O.C.E.W.
4	
5	
6	4000 PSI All wall steel 3/4" cover, 1" cover for top, bottom, and reducer.
7	Provide 1-#4 bar reinforcement ea side of openings and 2-#4 bars at 3" min. spacing above openings

SPECIAL NOTES: 0 NO COATING REQUIRED

0 FDOT STAMP REQUIRED

1 FLAT TOP

PC #	WEIGHT	PIECE DESCRIPTION	PRODUCT CODE
	CONTRACTOR TO FIELD VERIFY EXIST. 36" RCP INVERT AT EDGEDRAIN TIE-IN TO VERIFY POSITIVE DRAINAGE, PRIOR TO ORDERING STRUCTURE.		
2	1788	048Dia x 06Wall x 08H,024Dia Ecc, TopSlab	SR048S06M008C
1	5202	048Dia x 06Wall x 031H, MonoBaseExt	SR048B06M036X

PC #	DEG/ DIR	PIPE SIZE	PIPE INVERT	HOLE SIZE	BOOT TYPE	HOLE INVERT	HOLE RAISE
1	0	4 ~~6~~ PVC	165.02	10 ~~12~~	NONE	164.77	2"
	180	4"	165.02	10		164.77	2"

FDOT 434986-1-52-01

STRAIGHT AHEAD CONSTRUCTION

FORTERRA | PIPE & PRECAST

DESIGN BY:	MTT
DATE:	5/9/2018
SCALE:	1:40
ORDER #:	10960723
REVISED DATE:	REV BY:

10960723966+0L.idw

5/9/2018

R-048-05-00-MH-T-DE-F-0-0

CONCRETE SERVICES

☑ APPROVED

☐ APPROVED AS CORRECTED

☐ REVISE AND RESUBMIT

☐ REJECTED

☐ FOR INFORMATION ONLY

SUBMITTAL WAS REVIEWED FOR DESIGN CONFORMITY AND GENERAL CONFORMANCE TO CONTRACT DOCUMENTS ONLY. THE CONTRACTOR IS RESPONSIBLE FOR CONFIRMING AND CORRELATING DIMENSIONS AT JOB SITES FOR TOLERANCES, CLEARANCES, QUANTITIES, FABRICATION PROCESSES AND TECHNIQUES OF CONSTRUCTION, COORDINATION OF HIS WORK WITH OTHER TRADES AND FULL COMPLIANCE WITH THE CONTRACT DOCUMENTS.

BY Roy Arias DATE 5/18/2018

COMPREHENSIVE ENGINEERING SERVICES, INC.

☐ No exceptions taken ☐ Amend and Resubmit

☑ Make corrections noted ☐ Rejected (See Remarks)

Review and comments do not relieve the contractor of responsibility for substantial conformance with the contract plans and specifications.

BY: CRL DATE: 5/23/18

CONTRACTOR'S OPTION TO USE MANHOLE TYPE P ALT. A BASED ON INDEX 245, GENERAL NOTE #5.

FDOT INDEX #200/201 UD INSPECTION MANHOLE # ~~966+00R~~ 968+00 R

1 ea

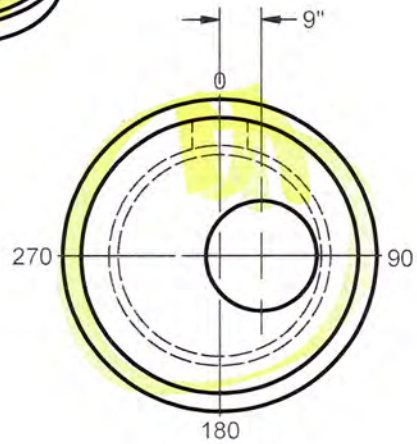

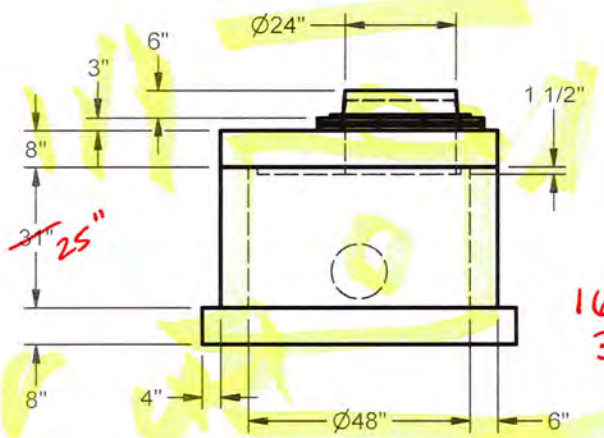

FG =	168.60
TA =	168.10
TTS =	167.85
TPW1 =	167.19
ITB =	~~164.60~~ 165.10
APTB =	~~3.50~~ 3.00

VERIFY PIPE SIZE & INVERT

1 EA CAST USF R&C 170-XB~FDOT~STORM

SPECIFICATIONS	
1	BASE STEEL - #4 @ 6" O.C.E.W. (Top);
2	WALL STEEL -3X8 W3.0/W2.0 WWF (ASTM C-478)
3	TOP SLAB - #3 @ 6" O.C.E.W.
4	
5	
6	4000 PSI All wall steel 3/4" cover, 1" cover for top, bottom, and reducer.
7	Provide 1-#4 bar reinforcement ea side of openings and 2-#4 bars at 3" min. spacing above openings

SPECIAL NOTES: 0 NO COATING REQUIRED

0 FDOT STAMP REQUIRED

1 FLAT TOP

PC #	WEIGHT	PIECE DESCRIPTION	PRODUCT CODE
	SEE NOTE ON PLANS. NOT FOR OUTFALL PURPOSES SLOPE PIPE TOWARD ROADWAY		
2	1788	048Dia x 06Wall x 08H,024Dia Ecc, TopSlab	SR048S06M008N
1	5202	048Dia x 06Wall x 031H, MonoBaseExt	SR048B06M036X

PC #	DEG/ DIR	PIPE SIZE	PIPE INVERT	HOLE SIZE	BOOT TYPE	HOLE INVERT	HOLE RAISE
1	0	4" ~~8~~ PVC	~~165.02~~ 165.52	~~12~~ 10	NONE	~~164.77~~ 165.27	2"

FDOT 434986-1-52-01

STRAIGHT AHEAD CONSTRUCTION

FORTERRA | PIPE & PRECAST

DESIGN BY:	MTT
DATE:	5/9/2018
SCALE:	1:40
ORDER #:	10960723
REVISED DATE:	REV BY:

10960723966+0R.idw

5/9/2018

R-048-05-00-MH-T-DE-F-0-0

CONCRETE SERVICES

☑ APPROVED

☐ APPROVED AS CORRECTED

☐ REVISE AND RESUBMIT

☐ REJECTED

☐ FOR INFORMATION ONLY

SUBMITTAL WAS REVIEWED FOR DESIGN CONFORMITY AND GENERAL CONFORMANCE TO CONTRACT DOCUMENTS ONLY. THE CONTRACTOR IS RESPONSIBLE FOR CONFIRMING AND CORRELATING DIMENSIONS AT JOB SITES FOR TOLERANCES, CLEARANCES, QUANTITIES, FABRICATION PROCESSES AND TECHNIQUES OF CONSTRUCTION, COORDINATION OF HIS WORK WITH OTHER TRADES AND FULL COMPLIANCE WITH THE CONTRACT DOCUMENTS.

BY Roy Arias DATE 5/18/2018

COMPREHENSIVE ENGINEERING SERVICES, INC.

☐ No exceptions taken ☐ Amend and Resubmit

☑ Make corrections noted ☐ Rejected (See Remarks)

Review and comments do not relieve the contractor of responsibility for substantial conformance with the contract plans and specifications.

BY: CRC DATE: 5/23/18

CONTRACTOR'S OPTION TO USE MANHOLE TYPE PALT. A BASED ON INDEX 245, GENERAL NOTE #5.

FDOT INDEX #200/201 UD INSPECTION MANHOLE # 966+20 L

1 ea

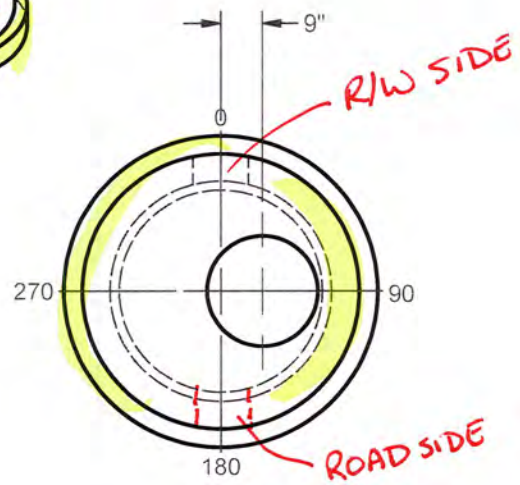

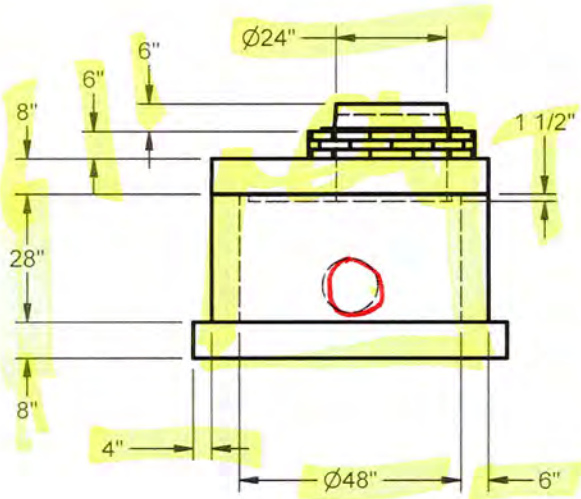

FG =	165.10
TA =	164.60
TTS =	164.10
TPW1 =	163.44
ITB =	161.10
APTB =	3.50

VERIFY PIPE SIZE & INVERT

1 EA CAST USF R&C 170-XB~FDOT~STORM

SPECIFICATIONS

1	BASE STEEL - #4 @ 6" O.C.E.W. (Top);
2	WALL STEEL -3X8 W3.0/W2.0 WWF (ASTM C-478)
3	TOP SLAB - #3 @ 6" O.C.E.W.
4	
5	
6	4000 PSI All wall steel 3/4" cover, 1" cover for top, bottom, and reducer.
7	Provide 1-#4 bar reinforcement ea side of openings and 2-#4 bars at 3" min. spacing above openings

SPECIAL NOTES: 0 NO COATING REQUIRED

0 FDOT STAMP REQUIRED

1 FLAT TOP

PC #	WEIGHT	PIECE DESCRIPTION	PRODUCT CODE
	CONTRACTOR TO FIELD VERIFY EXIST. 36" RCP INVERT AT EDGE DRAIN TIE-IN TO VERIFY POSITIVE DRAINAGE PRIOR TO ORDERING STRUCTURE.		
2	1788	048Dia x 06Wall x 08H,024Dia Ecc, TopSlab	SR048S06M008N
1	4937	048Dia x 06Wall x 028H, MonoBaseExt	SR048B06M030X

PC #	DEG/ DIR	PIPE SIZE	PIPE INVERT	HOLE SIZE	BOOT TYPE	HOLE INVERT	HOLE RAISE
1	0	~~6~~ 4" PVC	~~161.52~~ OK	~~12~~ 10	NONE	~~161.27~~ OK	2"
	180	4"	161.62	10	–	161.27	2"

FDOT 434986-1-52-01

STRAIGHT AHEAD CONSTRUCTION

FORTERRA | PIPE & PRECAST

DESIGN BY:	MTT
DATE:	5/9/2018
SCALE:	1:40
ORDER #:	10960723
REVISED DATE:	REV BY:

10960723966+20.idw

5/9/2018

R-048-05-00-MH-T-DE-F-0-0

CONCRETE SERVICES

- [x] APPROVED
- [ ] APPROVED AS CORRECTED
- [ ] REVISE AND RESUBMIT
- [ ] REJECTED
- [ ] FOR INFORMATION ONLY

SUBMITTAL WAS REVIEWED FOR DESIGN CONFORMITY AND GENERAL CONFORMANCE TO CONTRACT DOCUMENTS ONLY. THE CONTRACTOR IS RESPONSIBLE FOR CONFIRMING AND CORRELATING DIMENSIONS AT JOB SITES FOR TOLERANCES, CLEARANCES, QUANTITIES, FABRICATION PROCESSES AND TECHNIQUES OF CONSTRUCTION, COORDINATION OF HIS WORK WITH OTHER TRADES AND FULL COMPLIANCE WITH THE CONTRACT DOCUMENTS.

BY Roy Arias DATE 5/18/2018

COMPREHENSIVE ENGINEERING SERVICES, INC.

- [ ] No exceptions taken
- [ ] Amend and Resubmit
- [x] Make corrections noted
- [ ] Rejected (See Remarks)

Review and comments do not relieve the contractor of responsibility for substantial conformance with the contract plans and specifications.

BY: CRL DATE 5/23/18

CONTRACTOR'S OPTION TO USE MANHOLE TYPE ALT. A. BASED ON INDEX 215, GENERAL NOTE #5.

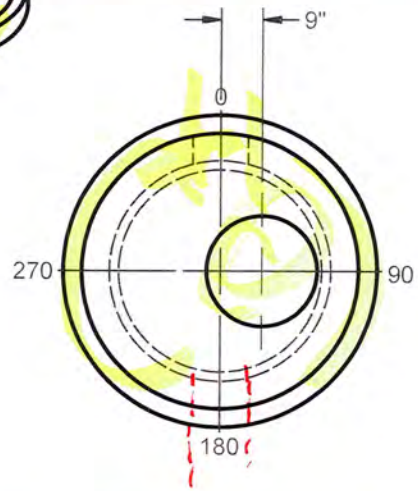

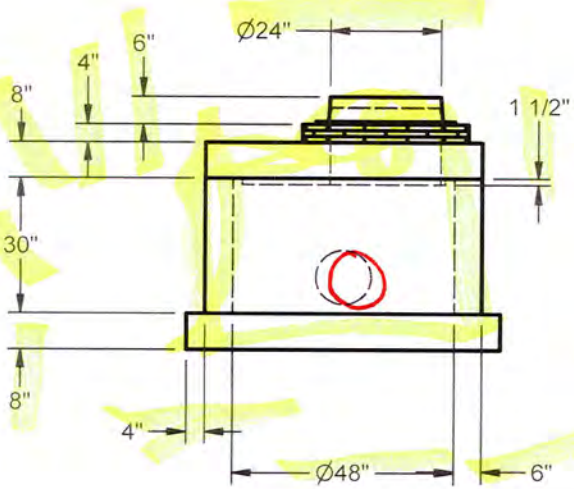

FG =	170.60
TA =	170.10
TTS =	169.77
TPW1 =	169.10
ITB =	166.60
APTB =	3.50

VERIFY PIPE SIZE & INVERT

1 EA CAST USF R&C 170-XB~FDOT~STORM

FDOT INDEX #200/201 UD INSPECTION MANHOLE # 973+00 L

1 ea

SPECIFICATIONS	
1	BASE STEEL - #4 @ 6" O.C.E.W. (Top);
2	WALL STEEL -3X8 W3.0/W2.0 WWF (ASTM C-478)
3	TOP SLAB - #3 @ 6" O.C.E.W.
4	
5	
6	4000 PSI All wall steel 3/4" cover, 1" cover for top, bottom, and reducer.
7	Provide 1-#4 bar reinforcement ea side of openings and 2-#4 bars at 3" min. spacing above openings

SPECIAL NOTES: 0 NO COATING REQUIRED

0 FDOT STAMP REQUIRED

1 FLAT TOP

PC #	WEIGHT	PIECE DESCRIPTION	PRODUCT CODE
		CONTRACTOR TO FIELD VERIFY EXIST. 36" RCP ~~PIPE~~ INVERT AT EDGE DRAIN TIE-IN TO VERIFY POSITIVE DRAINAGE PRIOR TO ORDERING STRUCTURE	
2	1788	048Dia x 06Wall x 08H,024Dia Ecc, TopSlab	SR048S06M008X
1	5113	048Dia x 06Wall x 030H, MonoBaseExt	SR048B06M030X

PC #	DEG/ DIR	PIPE SIZE	PIPE INVERT	HOLE SIZE	BOOT TYPE	HOLE INVERT	HOLE RAISE
1	0	4" ~~8~~ PVC	167.02	~~12~~ 10	NONE	166.77	2"
	180	4"	167.02	10	–	166.77	2"

FDOT 434986-1-52-01

STRAIGHT AHEAD CONSTRUCTION

FORTERRA | PIPE & PRECAST

DESIGN BY:	MTT
DATE:	5/9/2018
SCALE:	1:40
ORDER #:	10960723
REVISED DATE:	REV BY:

10960723973+00.idw

5/9/2018

R-048-05-00-MH-T-DE-F-0-0

CONCRETE SERVICES

☑ APPROVED

☐ APPROVED AS CORRECTED

☐ REVISE AND RESUBMIT

☐ REJECTED

☐ FOR INFORMATION ONLY

SUBMITTAL WAS REVIEWED FOR DESIGN CONFORMITY AND GENERAL CONFORMANCE TO CONTRACT DOCUMENTS ONLY. THE CONTRACTOR IS RESPONSIBLE FOR CONFIRMING AND CORRELATING DIMENSIONS AT JOB SITES FOR TOLERANCES, CLEARANCES, QUANTITIES, FABRICATION PROCESSES AND TECHNIQUES OF CONSTRUCTION, COORDINATION OF HIS WORK WITH OTHER TRADES AND FULL COMPLIANCE WITH THE CONTRACT DOCUMENTS.

BY Roy Arias DATE 5/18/2018

COMPREHENSIVE ENGINEERING SERVICES, INC.

☐ No exceptions taken ☐ Amend and Resubmit

☑ Make corrections noted ☐ Rejected (See Remarks)

Review and comments do not relieve the contractor of responsibility for substantial conformance with the contract plans and specifications.

BY: CRC DATE: 5/23/18

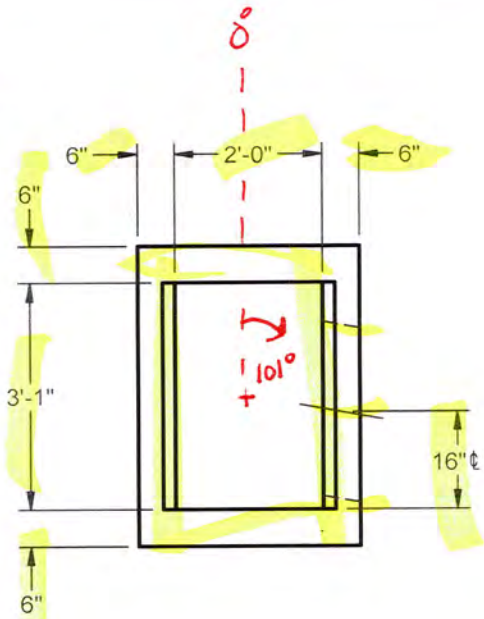

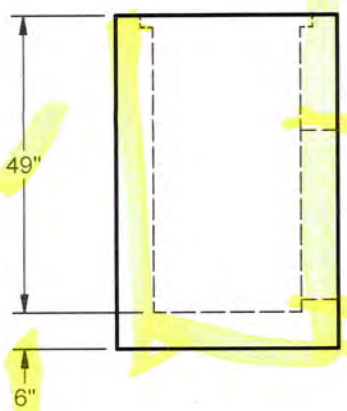

N

NOT PROJECT NORTH

FG = 163.50

159.58 - 2/12 =

ITB = 159.42

APTB = 4.08

1 EA EYEBOLTS&CHAINS SET
1 EA CAST USF GRT 6210

FDOT INDEX #232/200 C-INLET # S-116 / 1 ea

SPECIFICATIONS	
1	BASE STEEL - #4 @ 12" O.C.E.W. (Top);
2	WALL STEEL -3X4 W5.0/W6.7 WWF
3	
4	
5	
6	4000 PSI All wall steel 3" cover (2" for double mat), 2" cover for slabs.
7	Provide 1-#4 bar reinforcement ea side of openings and 2-#4 bars at 3" min. spacing above openings

SPECIAL NOTES: 0 EYEBOLTS & CHAINS REQUIRED

0 FDOT STAMP REQUIRED

PC #	WEIGHT	PIECE DESCRIPTION	PRODUCT CODE
1	4293	024L x 037W x 06Wall x 049H, MonoBase	SS02403706B054N

PC #	DEG/ DIR	PIPE SIZE	PIPE INVERT	HOLE SIZE	BOOT TYPE	HOLE INVERT	HOLE RAISE
1	E 101°	18 RCP	160.00	28 (16 Off S Wall)	NONE	159.58	2"

160.0 - (28-18)/2·12 = 159.58

FDOT 434986-1-52-01

STRAIGHT AHEAD CONSTRUCTION

FORTERRA | PIPE & PRECAST

DESIGN BY:	MTT
DATE:	5/9/2018
SCALE:	1:30
ORDER #:	10960723
REVISED DATE:	REV BY:

10960723S-116.idw

5/9/2018

S-024-037-06-00-DB-G-FC-M-0-0

CONCRETE SERVICES

☑ APPROVED

☐ APPROVED AS CORRECTED

☐ REVISE AND RESUBMIT

☐ REJECTED

☐ FOR INFORMATION ONLY

SUBMITTAL WAS REVIEWED FOR DESIGN CONFORMITY AND GENERAL CONFORMANCE TO CONTRACT DOCUMENTS ONLY. THE CONTRACTOR IS RESPONSIBLE FOR CONFIRMING AND CORRELATING DIMENSIONS AT JOB SITES FOR TOLERANCES, CLEARANCES, QUANTITIES, FABRICATION PROCESSES AND TECHNIQUES OF CONSTRUCTION, COORDINATION OF HIS WORK WITH OTHER TRADES AND FULL COMPLIANCE WITH THE CONTRACT DOCUMENTS.

BY Roy Arias DATE 5/18/2018

COMPREHENSIVE ENGINEERING SERVICES, INC.

☐ No exceptions taken ☐ Amend and Resubmit

☑ Make corrections noted ☐ Rejected (See Remarks)

Review and comments do not relieve the contractor of responsibility for substantial conformance with the contract plans and specifications.

BY: CLE DATE: 5/23/18

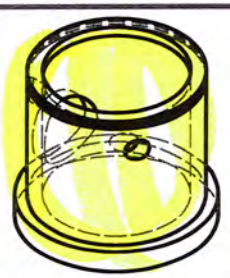

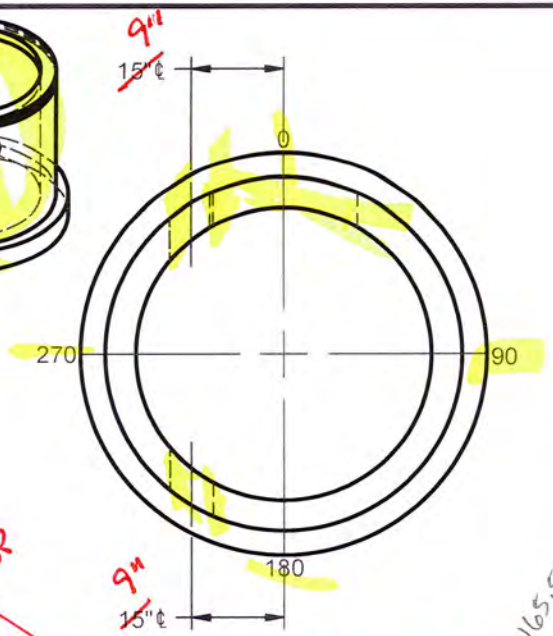

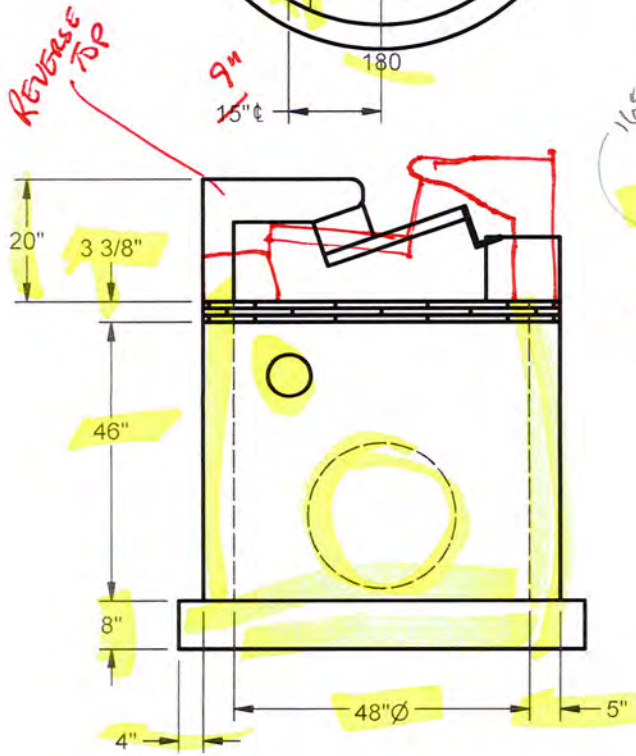

165.57 - 10.54 5/12

EOP = 165.57

TA = 164.28

TPW1 = 164.00

160.71 - 0.375 - 7/12

ITB = 160.17

APTB = 4.11

1 EA CAST USF GRT 6310
1 EA CAST USF FRM 5160 STLPTD
1 EA 0~0~0~CI TOP~FDOT TYPE 5~FRAME R

FDOT INDEX #200/211 TYPE 5 CURB INLET # S-100

1 ea

SPECIFICATIONS	
1	BASE STEEL - #4 @ 6" O.C.E.W. (Top);
2	WALL STEEL -3X8 W3.0/W2.0 WWF (ASTM C-478)
3	
4	
5	
6	4000 PSI All wall steel 3/4" cover, 1" cover for top, bottom, and reducer.
7	Provide 1-#4 bar reinforcement ea side of openings and 2-#4 bars at 3" min. spacing above openings

SPECIAL NOTES: 1 FLAT TOP

0 FDOT STAMP REQUIRED

0 SEE DETAIL FOR TYPE 5 PRECAST TOP

PC #	WEIGHT	PIECE DESCRIPTION	PRODUCT CODE
1	5457	048Dia x 05Wall x 046H, MonoBaseExt	SR048B05M048X

PC #	DEG/ DIR	PIPE SIZE	PIPE INVERT	HOLE SIZE	BOOT TYPE	HOLE INVERT	HOLE RAISE
1	0	15 RCP	160.71	24 9"	NONE	160.34	2"
1	0	4 PVC	163.10	~~18~~ OK ~~7~~ (C/L Offset ~~15~~ Right)	NONE	OK ~~162.96~~	~~33 1/2"~~
1	180	4 PVC	163.10	~~18~~ OK ~~7~~ (C/L Offset ~~15~~ Left) 9"	NONE	OK ~~162.96~~	~~33 1/2"~~

FDOT 434986-1-52-01

STRAIGHT AHEAD CONSTRUCTION

FORTERRA | PIPE & PRECAST

DESIGN BY:	MTT
DATE:	5/10/2018
SCALE:	1:30
ORDER #:	10960723
REVISED DATE:	REV BY:

10960723S-100.idw

5/10/2018

R-048-05-00-CI-P-F6-F-0-0

CONCRETE SERVICES

☑ APPROVED

☐ APPROVED AS CORRECTED

☐ REVISE AND RESUBMIT

☐ REJECTED

☐ FOR INFORMATION ONLY

SUBMITTAL WAS REVIEWED FOR DESIGN CONFORMITY AND GENERAL CONFORMANCE TO CONTRACT DOCUMENTS ONLY. THE CONTRACTOR IS RESPONSIBLE FOR CONFIRMING AND CORRELATING DIMENSIONS AT JOB SITES FOR TOLERANCES, CLEARANCES, QUANTITIES, FABRICATION PROCESSES AND TECHNIQUES OF CONSTRUCTION, COORDINATION OF HIS WORK WITH OTHER TRADES AND FULL COMPLIANCE WITH THE CONTRACT DOCUMENTS.

BY Roy Arias DATE 5/18/2018

COMPREHENSIVE ENGINEERING SERVICES, INC.

☐ No exceptions taken ☐ Amend and Resubmit

☑ Make corrections noted ☐ Rejected (See Remarks)

Review and comments do not relieve the contractor of responsibility for substantial conformance with the contract plans and specifications.

BY: CRC DATE: 5/23/18

FDOT INDEX #200/211 TYPE 5 CURB INLET # S-101

1 ea

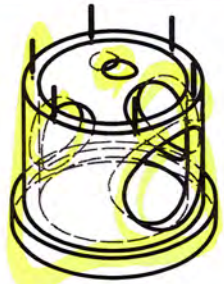

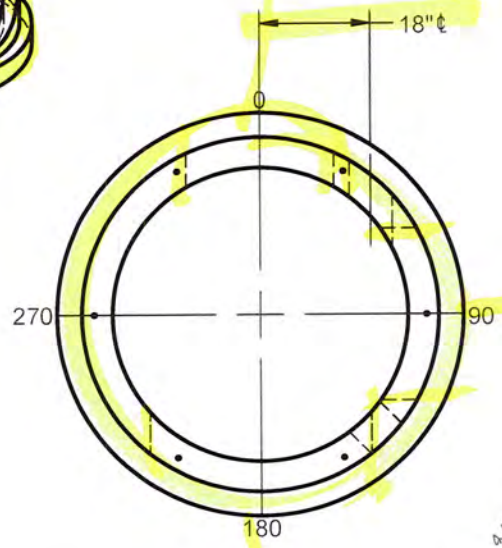

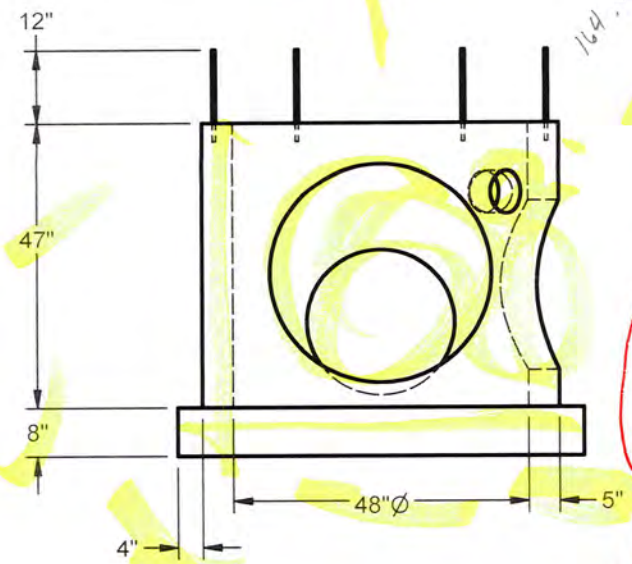

164.94 - 105+5/12 =

EOP = 164.94

TPW1 = 163.63 .65

ITB = 159.71

APTB = 3.94

163.65 - 159.71

1 EA CAST USF GRT 6310
1 EA CAST USF FRM 5160 STLPTD

CAST IN PLACE TOP

SPECIFICATIONS	
1	BASE STEEL - #3 @ 6" O.C.E.W. (Top);
2	WALL STEEL -3X8 W3.0/W2.0 WWF (ASTM C-478)
3	
4	
5	
6	4000 PSI All wall steel 3/4" cover, 1" cover for top, bottom, and reducer.
7	Provide 1-#4 bar reinforcement ea side of openings and 2-#4 bars at 3" min. spacing above openings

SPECIAL NOTES: 1 FLAT TOP W/DOWELS

0 FDOT STAMP REQUIRED

0 TYPE 5 TOP CAST IN FIELD BY OTHERS

PC #	WEIGHT	PIECE DESCRIPTION	PRODUCT CODE
1	4779	048Dia x 05Wall x 047H, MonoBaseExt	SR048B05M048X

PC #	DEG/ DIR	PIPE SIZE	PIPE INVERT	HOLE SIZE	BOOT TYPE	HOLE INVERT	HOLE RAISE
1	0	15 RCP	160.25	24	NONE	159.88	2"
1	0	4 PVC	162.50	7 (C/L 18 Offset Left)	NONE	162.38	32"
1	90	18 RCP	160.63	28	NONE	160.21	6"
1	180	24 RCP	160.55	36	NONE	160.05	4"
1	135	4 PVC	162.50	7	NONE	162.38	32"

FDOT 434986-1-52-01

STRAIGHT AHEAD CONSTRUCTION

FORTERRA | PIPE & PRECAST

DESIGN BY:	MTT
DATE:	5/11/2018
SCALE:	1:30
ORDER #:	10960723
REVISED DATE:	REV BY:

10960723S-101.idw

5/11/2018

R-048-05-00-CI-D-F1-F-0-0

CONCRETE SERVICES

☑ APPROVED

☐ APPROVED AS CORRECTED

☐ REVISE AND RESUBMIT

☐ REJECTED

☐ FOR INFORMATION ONLY

SUBMITTAL WAS REVIEWED FOR DESIGN CONFORMITY AND GENERAL CONFORMANCE TO CONTRACT DOCUMENTS ONLY. THE CONTRACTOR IS RESPONSIBLE FOR CONFIRMING AND CORRELATING DIMENSIONS AT JOB SITES FOR TOLERANCES, CLEARANCES, QUANTITIES, FABRICATION PROCESSES AND TECHNIQUES OF CONSTRUCTION, COORDINATION OF HIS WORK WITH OTHER TRADES AND FULL COMPLIANCE WITH THE CONTRACT DOCUMENTS.

BY Roy Arias DATE 5/18/2018

COMPREHENSIVE ENGINEERING SERVICES, INC.

☐ No exceptions taken ☐ Amend and Resubmit

☑ Make corrections noted ☐ Rejected (See Remarks)

Review and comments do not relieve the contractor of responsibility for substantial conformance with the contract plans and specifications.

BY: CRC DATE: 5/23/18

FDOT INDEX #200/211 TYPE 5 CURB INLET # S-102

1 ea

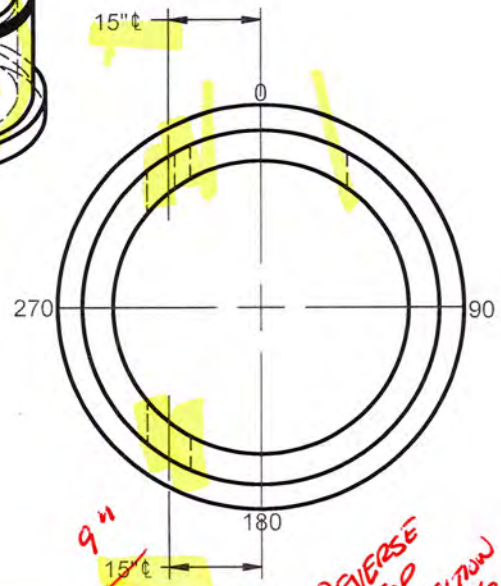

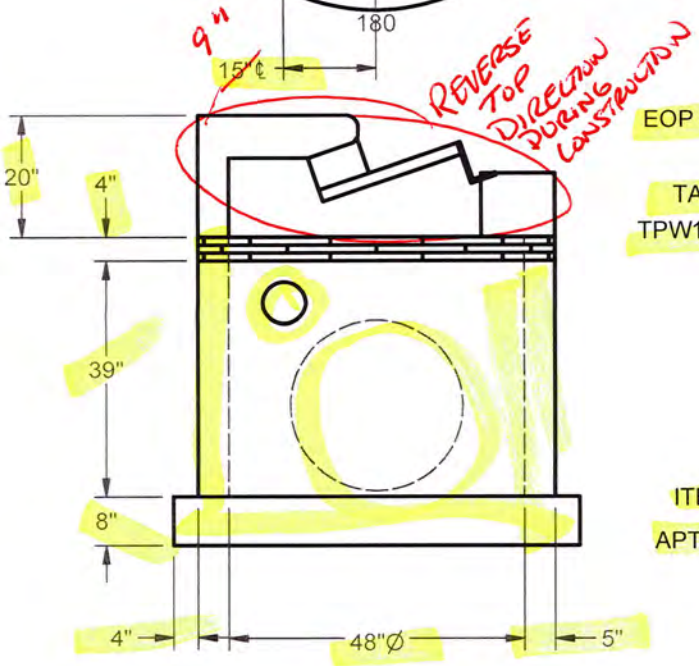

EOP = 164.37

TA = 163.08

TPW1 = 162.75

ITB = 159.50

APTB = 3.58

1 EA CAST USF GRT 6310
1 EA CAST USF FRM 5160 STLPTD
1 EA 0~0~0~CI TOP~FDOT TYPE 5~FRAME R

SPECIFICATIONS	
1	BASE STEEL - #4 @ 6" O.C.E.W. (Top);
2	WALL STEEL -3X8 W3.0/W2.0 WWF (ASTM C-478)
3	
4	
5	
6	4000 PSI All wall steel 3/4" cover, 1" cover for top, bottom, and reducer.
7	Provide 1-#4 bar reinforcement ea side of openings and 2-#4 bars at 3" min. spacing above openings

SPECIAL NOTES: 1 FLAT TOP

0 FDOT STAMP REQUIRED

0 SEE DETAIL FOR TYPE 5 PRECAST TOP

PC #	WEIGHT	PIECE DESCRIPTION	PRODUCT CODE
1	4875	048Dia x 05Wall x 039H, MonoBaseExt	SR048B05M042X

PC #	DEG/ DIR	PIPE SIZE	PIPE INVERT	HOLE SIZE	BOOT TYPE	HOLE INVERT	HOLE RAISE
1	0	18 RCP	160.00	28	NONE	159.58	1"
1	0	4 PVC	162.00	7 (C/L Offset 15 Right)	NONE	161.88	28 1/2"
1	180	4 PVC	162.00	7 (C/L Offset ~~15~~ 9 Left)	NONE	161.88	28 1/2"

FDOT 434986-1-52-01

STRAIGHT AHEAD CONSTRUCTION

FORTERRA | PIPE & PRECAST

DESIGN BY:	MTT
DATE:	5/11/2018
SCALE:	1:30
ORDER #:	10960723
REVISED DATE:	REV BY:

10960723S-102.idw

5/11/2018

R-048-05-00-CI-P-F6-F-0-0

CONCRETE SERVICES

☑ APPROVED

☐ APPROVED AS CORRECTED

☐ REVISE AND RESUBMIT

☐ REJECTED

☐ FOR INFORMATION ONLY

SUBMITTAL WAS REVIEWED FOR DESIGN CONFORMITY AND GENERAL CONFORMANCE TO CONTRACT DOCUMENTS ONLY. THE CONTRACTOR IS RESPONSIBLE FOR CONFIRMING AND CORRELATING DIMENSIONS AT JOB SITES FOR TOLERANCES, CLEARANCES, QUANTITIES, FABRICATION PROCESSES AND TECHNIQUES OF CONSTRUCTION, COORDINATION OF HIS WORK WITH OTHER TRADES AND FULL COMPLIANCE WITH THE CONTRACT DOCUMENTS.

BY Roy Arias DATE 5/18/2018

COMPREHENSIVE ENGINEERING SERVICES, INC.

☐ No exceptions taken ☐ Amend and Resubmit

☑ Make corrections noted ☐ Rejected (See Remarks)

Review and comments do not relieve the contractor of responsibility for substantial conformance with the contract plans and specifications.

BY: CRC DATE: 5/23/18

FDOT INDEX #200/211 TYPE 6 CURB INLET # S-103

1 ea

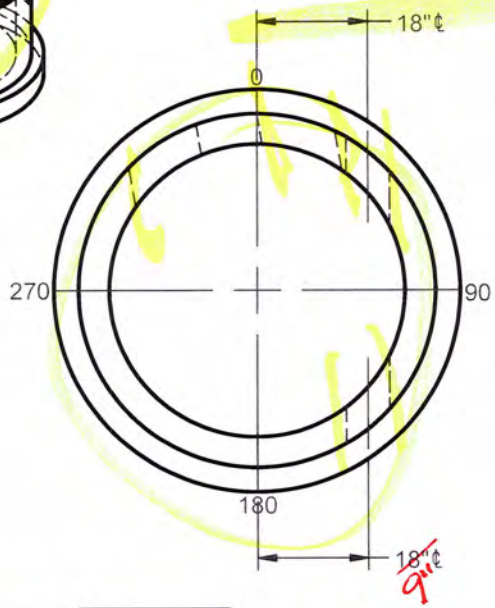

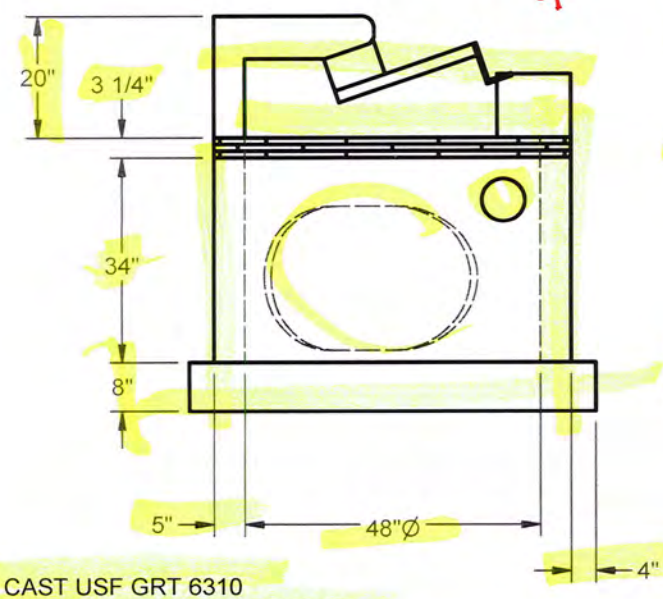

EOP = 164.21

TA = 162.92

TPW1 = 162.65

ITB = 159.82

APTB = 3.10

1 EA CAST USF GRT 6310
1 EA CAST USF FRM 5160 STLPTD
1 EA 0~0~0~CI TOP~FDOT TYPE 6~FRAME

SPECIFICATIONS

1	BASE STEEL - #4 @ 6" O.C.E.W. (Top);
2	WALL STEEL -3X8 W3.0/W2.0 WWF (ASTM C-478)
3	
4	
5	
6	4000 PSI All wall steel 3/4" cover, 1" cover for top, bottom, and reducer.
7	Provide 1-#4 bar reinforcement ea side of openings and 2-#4 bars at 3" min. spacing above openings

SPECIAL NOTES: 1 FLAT TOP

0 FDOT STAMP REQUIRED

0 SEE DETAIL FOR TYPE 6 PRECAST TOP

PC #	WEIGHT	PIECE DESCRIPTION	PRODUCT CODE
1	4466	048Dia x 05Wall x 034H, MonoBaseExt	SR048B05M036X

PC #	DEG/ DIR	PIPE SIZE	PIPE INVERT	HOLE SIZE	BOOT TYPE	HOLE INVERT	HOLE RAISE
1	350	14x23 RCP	160.40	24x34	NONE	159.98	2"
1	0	4 PVC	161.90	7 (C/L Offset 18 Right)	NONE	161.78	23 1/2"
1	180	4 PVC	161.90	7 (C/L Offset ~~18~~ 9" Left)	NONE	161.78	23 1/2"

FDOT 434986-1-52-01

STRAIGHT AHEAD CONSTRUCTION

FORTERRA | PIPE & PRECAST

DESIGN BY:	MTT
DATE:	5/11/2018
SCALE:	1:30
ORDER #:	10960723
REVISED DATE:	REV BY:

10960723S-103.idw

5/11/2018

R-048-05-00-CI-P-F6-F-0-0

CONCRETE SERVICES

☑ APPROVED

☐ APPROVED AS CORRECTED

☐ REVISE AND RESUBMIT

☐ REJECTED

☐ FOR INFORMATION ONLY

SUBMITTAL WAS REVIEWED FOR DESIGN CONFORMITY AND GENERAL CONFORMANCE TO CONTRACT DOCUMENTS ONLY. THE CONTRACTOR IS RESPONSIBLE FOR CONFIRMING AND CORRELATING DIMENSIONS AT JOB SITES FOR TOLERANCES, CLEARANCES, QUANTITIES, FABRICATION PROCESSES AND TECHNIQUES OF CONSTRUCTION, COORDINATION OF HIS WORK WITH OTHER TRADES AND FULL COMPLIANCE WITH THE CONTRACT DOCUMENTS.

BY Roy Arias DATE 5/18/2018

COMPREHENSIVE ENGINEERING SERVICES, INC.

☐ No exceptions taken ☐ Amend and Resubmit

☑ Make corrections noted ☐ Rejected (See Remarks)

Review and comments do not relieve the contractor of responsibility for substantial conformance with the contract plans and specifications.

BY: CLC DATE: 5/23/18

FDOT INDEX #200/211 TYPE 5 CURB INLET # S-104 / 1 ea

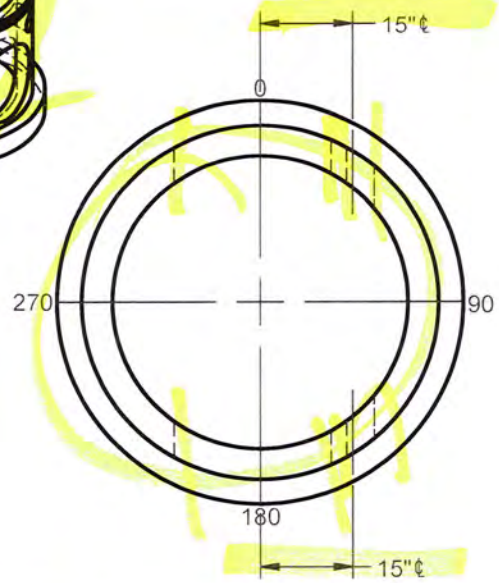

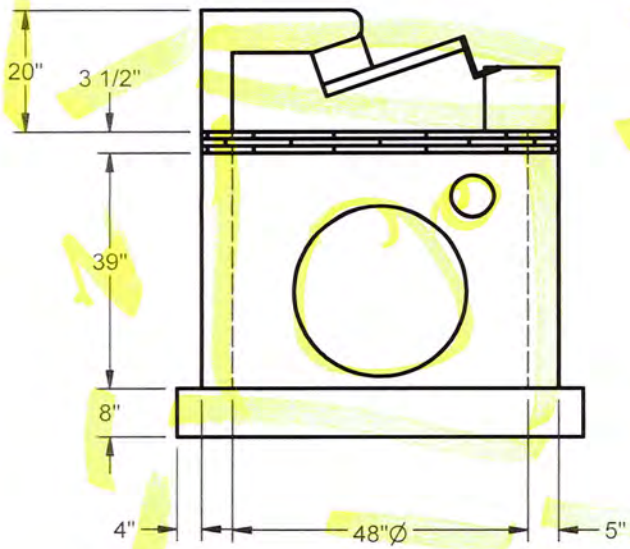

EOP = 164.15

TA = 162.86

TPW1 = 162.57

ITB = 159.32

APTB = 3.54

1 EA CAST USF GRT 6310
1 EA CAST USF FRM 5160 STLPTD
1 EA 0~0~0~CI TOP~FDOT TYPE 5~FRAME R

SPECIFICATIONS	
1	BASE STEEL - #4 @ 6" O.C.E.W. (Top);
2	WALL STEEL -3X8 W3.0/W2.0 WWF (ASTM C-478)
3	
4	
5	
6	4000 PSI All wall steel 3/4" cover, 1" cover for top, bottom, and reducer.
7	Provide 1-#4 bar reinforcement ea side of openings and 2-#4 bars at 3" min. spacing above openings

SPECIAL NOTES: 1 FLAT TOP

0 FDOT STAMP REQUIRED

0 SEE DETAIL FOR TYPE 5 PRECAST TOP

PC #	WEIGHT	PIECE DESCRIPTION	PRODUCT CODE
1	4598	048Dia x 05Wall x 039H, MonoBaseExt	SR048B05M042X

PC #	DEG/ DIR	PIPE SIZE	PIPE INVERT	HOLE SIZE	BOOT TYPE	HOLE INVERT	HOLE RAISE
1	0	18 RCP	159.90	28	NONE	159.48	2"
1	0	4 PVC	161.80	7 (C/L Offset 15 Left)	NONE	161.68	28 1/2"
1	180	18 RCP	159.90	28	NONE	159.48	2"
1	180	4 PVC	161.80	7 (C/L Offset 15 Right)	NONE	161.68	28 1/2"

FDOT 434986-1-52-01

STRAIGHT AHEAD CONSTRUCTION

FORTERRA | PIPE & PRECAST

DESIGN BY:	MTT
DATE:	5/10/2018
SCALE:	1:30
ORDER #:	10960723
REVISED DATE:	REV BY:

10960723S-104.idw

5/10/2018

R-048-05-00-CI-P-F6-F-0-0

CONCRETE SERVICES

☑ APPROVED

☐ APPROVED AS CORRECTED

☐ REVISE AND RESUBMIT

☐ REJECTED

☐ FOR INFORMATION ONLY

SUBMITTAL WAS REVIEWED FOR DESIGN CONFORMITY AND GENERAL CONFORMANCE TO CONTRACT DOCUMENTS ONLY. THE CONTRACTOR IS RESPONSIBLE FOR CONFIRMING AND CORRELATING DIMENSIONS AT JOB SITES FOR TOLERANCES, CLEARANCES, QUANTITIES, FABRICATION PROCESSES AND TECHNIQUES OF CONSTRUCTION, COORDINATION OF HIS WORK WITH OTHER TRADES AND FULL COMPLIANCE WITH THE CONTRACT DOCUMENTS.

BY Roy Arias DATE 5/18/2018

COMPREHENSIVE ENGINEERING SERVICES, INC.

☑ No exceptions taken ☐ Amend and Resubmit

☐ Make corrections noted ☐ Rejected (See Remarks)

Review and comments do not relieve the contractor of responsibility for substantial conformance with the contract plans and specifications.

BY: CRL DATE: 5/23/18

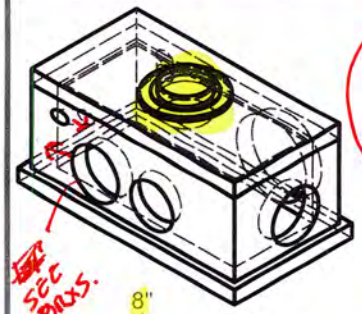

DUE TO NOT HAVING 6" OF CONCRETE ABOVE THE HOLE OPENINGS IN WALL, FDOT WILL REQUIRE THIS SHOP DRAWING TO BE APPROVED BY THE EOR PRIOR TO MANUFACTURE.

N

NOT PROJECT NORTH

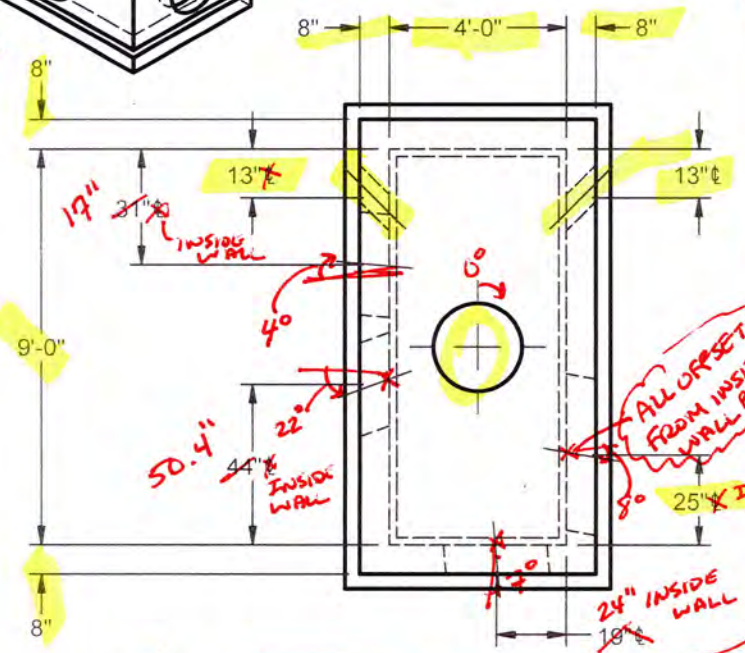

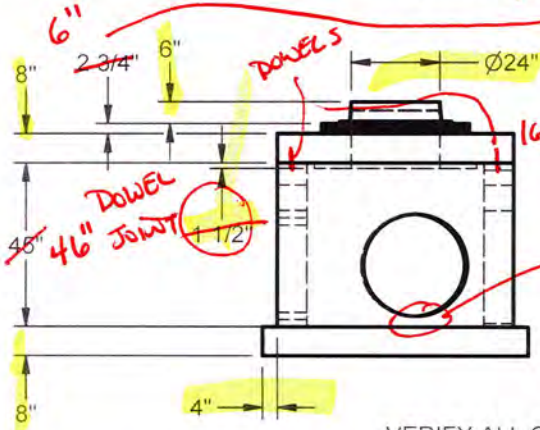

FG =	164.28
TA =	163.78
TTS =	~~163.55~~ 163.28
TPW1 =	~~162.88~~ 162.62
ITB =	~~159.13~~ 158.80
APTB =	~~4.65~~ 4.98

VERIFY ALL OFFSETS

1 EA CAST USF R&C 170-XB~FDOT~STORM

FDOT INDEX #200/201 STORM MANHOLE # S-106

1 ea

SPECIFICATIONS	
1	BASE STEEL - #3 @ 5" Short;#4 @ 10" Long(Top);
2	WALL STEEL- #4 @ 12" Vert; #4 @ 6" Hor(In Mat);#4 @ 12" Vert;#4 @ 6" Hor(Ot Mat)
3	TOP SLAB - #3 @ 5" Short;#4 @ 10" Long(Top);
4	
5	
6	4000 PSI All wall steel 3" cover (2" for double mat), 2" cover for slabs.
7	Provide 1-#4 bar reinforcement ea side of openings and 2-#4 bars at 3" min. spacing above openings

SPECIAL NOTES:

0 FDOT STAMP REQUIRED

1 FLAT TOP

PC #	WEIGHT	PIECE DESCRIPTION	PRODUCT CODE
		PER INDEX 201 SHEET 3 OF 5, INCREASING THE UP ELEVATION TO 6" (HOLE RISE) ALLOWS THE CONCRETE ABOVE THE HOLE OPENING TO BE ZERO, USING DOWEL JOINTS.	
		INCREASE ADJUSTMENT TO STAY OUT OF CONCRETE ROAD TOP OF PIPE WILL BE CLOSE TO ~~BOT~~ BOTTOM OF 8" SLAB (0" BLANKOUT ON TOP OF 30" RCP)	
2	5734 (30" RCP	048L x 108W x 08Wall x 08H, TopSlab	SS08408408S008N
1	15105	048L x 108W x 08Wall x 045H, MonoBaseExt	SS08408408B048X

PC #	DEG/ DIR	PIPE SIZE	PIPE INVERT	HOLE SIZE (INSIDE WALL OFFSET)	BOOT TYPE	HOLE INVERT	HOLE RAISE
1	E	4 PVC	162.00	7H x 18W (C/L 13 Off N Wall)	NONE	161.88	~~33"~~ 37"
1	E 98°	30 RCP	159.80	42 (C/L 25 Off S Wall)	NONE	159.3	~~2"~~ 6"
1	S 193°	18 RCP	159.80	28 (C/L 19 Off E Wall) 24"	NONE	159.38	~~3"~~ 7"
1	W 248°	18 PVC	159.93	24 (C/L 44 Off S Wall) 50"	NONE	159.68	~~6 1/2"~~ 10 1/2"
1	W 274°	18 RCP	159.80	28 (C/L 31 Off N Wall) 17"	NONE	159.38	~~3"~~ 7"
1	W	4 PVC	162.00	7H x 18W (C/L 13 Off N Wall)	NONE	161.88	~~33"~~ 37"

INSURE NOT CONFLICT W/ 18" RCP

FDOT 434986-1-52-01

STRAIGHT AHEAD CONSTRUCTION

FORTERRA | PIPE & PRECAST

DESIGN BY:	MTT
DATE:	5/11/2018
SCALE:	1:50
ORDER #:	10960723
REVISED DATE:	REV BY:

10960723S-106.idw

5/11/2018

S-072-072-08-00-MH-T-JS-M-0-0

CONCRETE SERVICES

☑ APPROVED

☐ APPROVED AS CORRECTED

☐ REVISE AND RESUBMIT

☐ REJECTED

☐ FOR INFORMATION ONLY

SUBMITTAL WAS REVIEWED FOR DESIGN CONFORMITY AND GENERAL CONFORMANCE TO CONTRACT DOCUMENTS ONLY. THE CONTRACTOR IS RESPONSIBLE FOR CONFIRMING AND CORRELATING DIMENSIONS AT JOB SITES FOR TOLERANCES, CLEARANCES, QUANTITIES, FABRICATION PROCESSES AND TECHNIQUES OF CONSTRUCTION, COORDINATION OF HIS WORK WITH OTHER TRADES AND FULL COMPLIANCE WITH THE CONTRACT DOCUMENTS.

BY Roy Arias DATE 5/18/2018

COMPREHENSIVE ENGINEERING SERVICES, INC.

☐ No exceptions taken ☐ Amend and Resubmit

☑ Make corrections noted ☐ Rejected (See Remarks)

Review and comments do not relieve the contractor of responsibility for substantial conformance with the contract plans and specifications.

BY: CRC DATE: 5/23/18

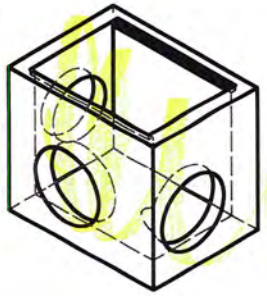

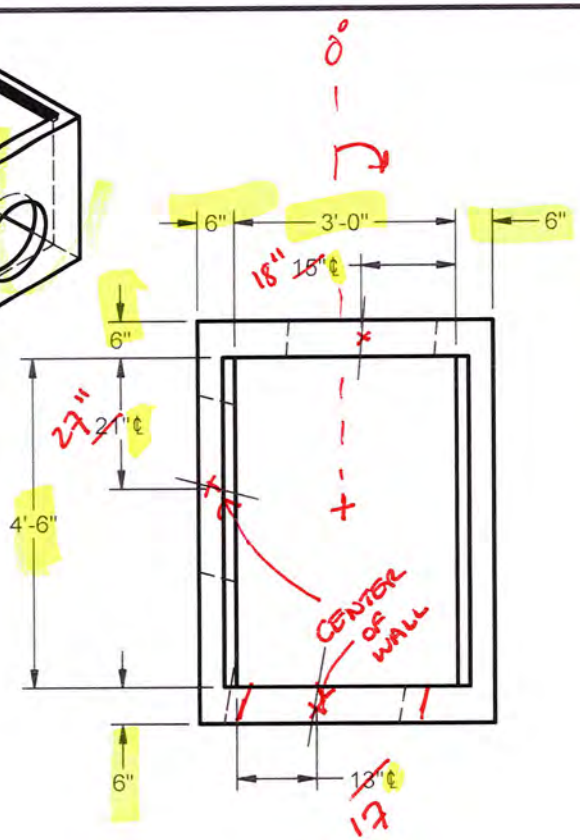

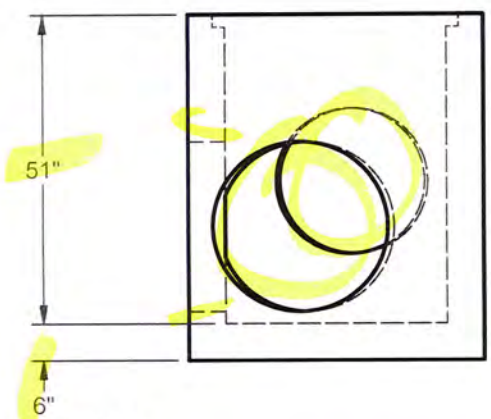

1 EA EYEBOLTS&CHAINS SET
1 EA CAST USF GRT 6300 SET(2PCS6301)

N

NOT PROJECT NORTH

FG = 163.90

ITB = 159.62

APTB = 4.28

FDOT INDEX #232/200 E-INLET - 0 RISERS # S-108 / 1 ea

SPECIFICATIONS	
1	BASE STEEL - #4 @ 12" Short;#4 @ 10" Long(Top);
2	WALL STEEL -3X4 W5.0/W6.7 WWF
3	
4	
5	
6	4000 PSI All wall steel 3" cover (2" for double mat), 2" cover for slabs.
7	Provide 1-#4 bar reinforcement ea side of openings and 2-#4 bars at 3" min. spacing above openings

SPECIAL NOTES: 0 EYEBOLTS & CHAINS REQUIRED

0 FDOT STAMP REQUIRED

PC #	WEIGHT	PIECE DESCRIPTION	PRODUCT CODE
1	6136	036L x 054W x 06Wall x 051H, MonoBase	SS03605406B054N

PC #	DEG/ DIR	PIPE SIZE	PIPE INVERT	HOLE SIZE	BOOT TYPE	HOLE INVERT	HOLE RAISE
1	N 5°	15 RCP	~~160.95~~ 160.59	24 (C/L ~~15~~ 18 Off E Wall)	NONE	~~160.58~~ 160.22	~~11 1/2"~~ 7"
1	S 198°	18 RCP	160.20	28 (C/L ~~13~~ 17 Off W Wall)	NONE	159.78	2"
1	W 288°	18 RCP	160.20	28 (C/L ~~21~~ 27 Off N Wall)	NONE	159.78	2"

FDOT 434986-1-52-0

STRAIGHT AHEAD CONSTRUCTION

FORTERRA | PIPE & PRECAST

DESIGN BY:	MTT
DATE:	5/11/2018
SCALE:	1:30
ORDER #:	10960723
REVISED DATE:	REV BY:

10960723S-108.idw

5/11/2018

S-036-054-06-00-DB-G-FE-M-0-0

CONCRETE SERVICES

☑ APPROVED

☐ APPROVED AS CORRECTED

☐ REVISE AND RESUBMIT

☐ REJECTED

☐ FOR INFORMATION ONLY

SUBMITTAL WAS REVIEWED FOR DESIGN CONFORMITY AND GENERAL CONFORMANCE TO CONTRACT DOCUMENTS ONLY. THE CONTRACTOR IS RESPONSIBLE FOR CONFIRMING AND CORRELATING DIMENSIONS AT JOB SITES FOR TOLERANCES, CLEARANCES, QUANTITIES, FABRICATION PROCESSES AND TECHNIQUES OF CONSTRUCTION, COORDINATION OF HIS WORK WITH OTHER TRADES AND FULL COMPLIANCE WITH THE CONTRACT DOCUMENTS.

BY Roy Arias DATE 5/18/2018

COMPREHENSIVE ENGINEERING SERVICES, INC.

☐ No exceptions taken ☐ Amend and Resubmit

☑ Make corrections noted ☐ Rejected (See Remarks)

Review and comments do not relieve the contractor of responsibility for substantial conformance with the contract plans and specifications.

BY: CRC DATE: 5/23/18

FDOT INDEX #200/211 TYPE 5 CURB INLET # S-109

1 ea

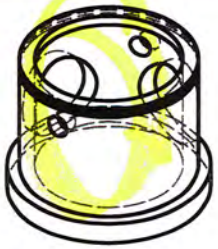

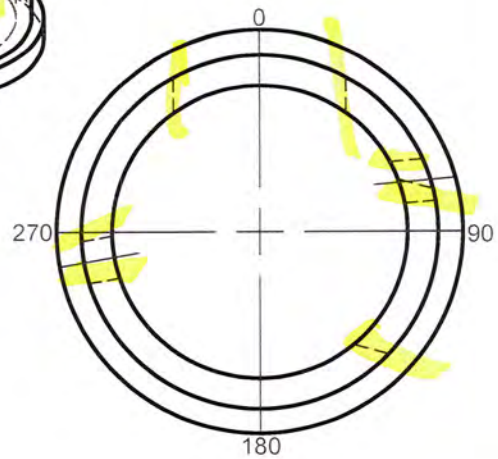

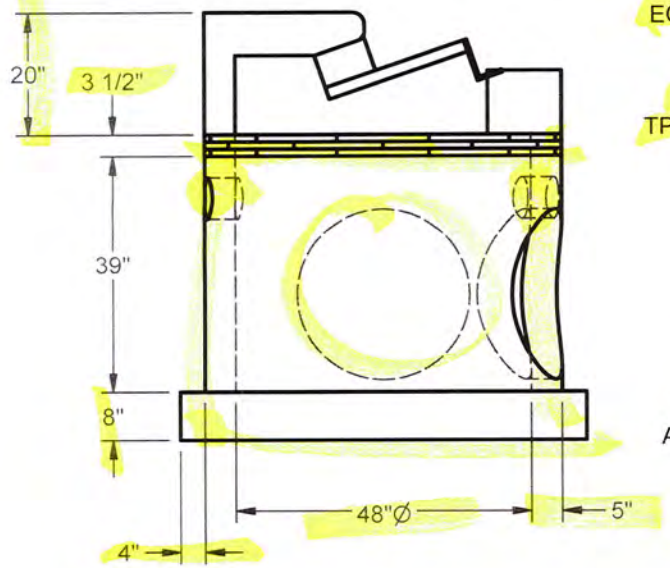

EOP = 164.25

TA = 162.96

TPW1 = 162.67

ITB = 159.42

APTB = 3.54

1 EA CAST USF GRT 6310
1 EA CAST USF FRM 5160 STLPTD
1 EA 0~0~0~CI TOP~FDOT TYPE 5~FRAME L

SPECIFICATIONS	
1	BASE STEEL - #4 @ 6" O.C.E.W. (Top);
2	WALL STEEL -3X8 W3.0/W2.0 WWF (ASTM C-478)
3	
4	
5	
6	4000 PSI All wall steel 3/4" cover, 1" cover for top, bottom, and reducer.
7	Provide 1-#4 bar reinforcement ea side of openings and 2-#4 bars at 3" min. spacing above openings

SPECIAL NOTES: 1 FLAT TOP

0 FDOT STAMP REQUIRED

0 SEE DETAIL FOR TYPE 5 PRECAST TOP

PC #	WEIGHT	PIECE DESCRIPTION	PRODUCT CODE
1	4605	048Dia x 05Wall x 039H, MonoBaseExt	SR048B05M042X

PC #	DEG/ DIR	PIPE SIZE	PIPE INVERT	HOLE SIZE	BOOT TYPE	HOLE INVERT	HOLE RAISE
1	0	18 RCP	160.00	28	NONE	159.58	2"
1	85	4 PVC	162.00	7	NONE	161.88	29 1/2"
1	105	18 RCP	160.00	28	NONE	159.58	2"
1	260	4 PVC	162.00	7	NONE	161.88	29 1/2"

FDOT 434986-1-52-01

STRAIGHT AHEAD CONSTRUCTION

FORTERRA | PIPE & PRECAST

DESIGN BY:	MTT
DATE:	5/11/2018
SCALE:	1:30
ORDER #:	10960723
REVISED DATE:	REV BY:

10960723S-109.idw

5/11/2018

R-048-05-00-CI-P-F6-F-0-0

CONCRETE SERVICES

☑ APPROVED

☐ APPROVED AS CORRECTED

☐ REVISE AND RESUBMIT

☐ REJECTED

☐ FOR INFORMATION ONLY

SUBMITTAL WAS REVIEWED FOR DESIGN CONFORMITY AND GENERAL CONFORMANCE TO CONTRACT DOCUMENTS ONLY. THE CONTRACTOR IS RESPONSIBLE FOR CONFIRMING AND CORRELATING DIMENSIONS AT JOB SITES FOR TOLERANCES, CLEARANCES, QUANTITIES, FABRICATION PROCESSES AND TECHNIQUES OF CONSTRUCTION, COORDINATION OF HIS WORK WITH OTHER TRADES AND FULL COMPLIANCE WITH THE CONTRACT DOCUMENTS

BY Roy Arias DATE 5/18/2018

COMPREHENSIVE ENGINEERING SERVICES, INC.

☑ No exceptions taken ☐ Amend and Resubmit

☐ Make corrections noted ☐ Rejected (See Remarks)

Review and comments do not relieve the contractor of responsibility for substantial conformance with the contract plans and specifications.

BY: CHC DATE: 5/23/18

FDOT INDEX #200/211 TYPE 5 CURB INLET # S-110 / 1 ea

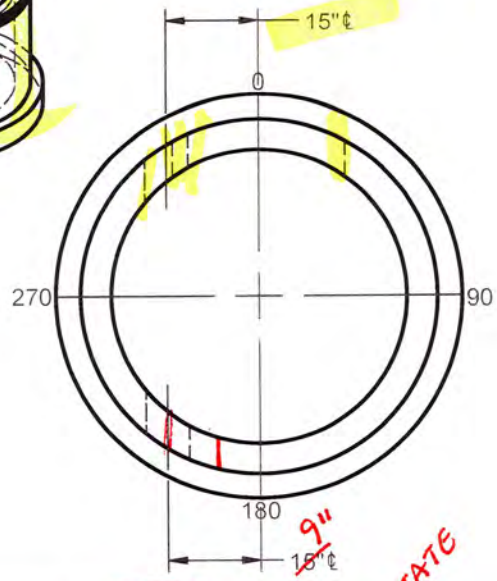

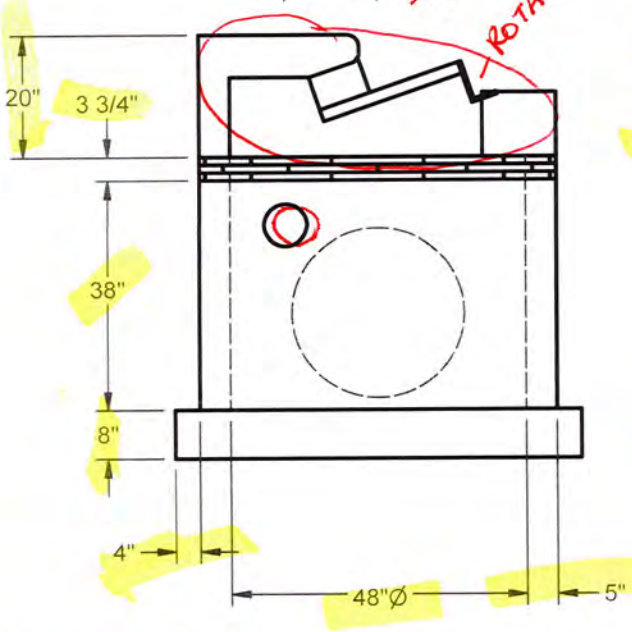

EOP = 168.69

TA = 167.40

TPW1 = 167.08

ITB = 163.92

APTB = 3.48

1 EA CAST USF GRT 6310
1 EA CAST USF FRM 5160 STLPTD
1 EA 0~0~0~CI TOP~FDOT TYPE 5~FRAME R

SPECIFICATIONS

1	BASE STEEL - #4 @ 6" O.C.E.W. (Top);
2	WALL STEEL -3X8 W3.0/W2.0 WWF (ASTM C-478)
3	
4	
5	
6	4000 PSI All wall steel 3/4" cover, 1" cover for top, bottom, and reducer.
7	Provide 1-#4 bar reinforcement ea side of openings and 2-#4 bars at 3" min. spacing above openings

SPECIAL NOTES: 1 FLAT TOP

0 FDOT STAMP REQUIRED

0 SEE DETAIL FOR TYPE 5 PRECAST TOP

PC #	WEIGHT	PIECE DESCRIPTION	PRODUCT CODE
1	4803	048Dia x 05Wall x 038H, MonoBaseExt	SR048B05M042X

PC #	DEG/ DIR	PIPE SIZE	PIPE INVERT	HOLE SIZE	BOOT TYPE	HOLE INVERT	HOLE RAISE
1	0	18 RCP	164.50	28	NONE	164.08	2"
1	0	4 PVC	166.30	7 (C/L Offset 15 Right)	NONE	166.18	27"
1	180	4 PVC	166.30	7 (C/L Offset ~~15~~ 9" Left)	NONE	166.18	27"

FDOT 434986-1-52-01

STRAIGHT AHEAD CONSTRUCTION

FORTERRA | PIPE & PRECAST

DESIGN BY:	MTT
DATE:	5/10/2018
SCALE:	1:30
ORDER #:	10960723
REVISED DATE:	REV BY:

10960723S-110.rdw

5/10/2018

R-048-05-00-CI-P-F6-F-0-0

CONCRETE SERVICES

☑ APPROVED

☐ APPROVED AS CORRECTED

☐ REVISE AND RESUBMIT

☐ REJECTED

☐ FOR INFORMATION ONLY

SUBMITTAL WAS REVIEWED FOR DESIGN CONFORMITY AND GENERAL CONFORMANCE TO CONTRACT DOCUMENTS ONLY. THE CONTRACTOR IS RESPONSIBLE FOR CONFIRMING AND CORRELATING DIMENSIONS AT JOB SITES FOR TOLERANCES, CLEARANCES, QUANTITIES, FABRICATION PROCESSES AND TECHNIQUES OF CONSTRUCTION, COORDINATION OF HIS WORK WITH OTHER TRADES AND FULL COMPLIANCE WITH THE CONTRACT DOCUMENTS.

BY Roy Arias DATE 5/18/2018

COMPREHENSIVE ENGINEERING SERVICES, INC.

☐ No exceptions taken ☐ Amend and Resubmit

☑ Make corrections noted ☐ Rejected (See Remarks)

Review and comments do not relieve the contractor of responsibility for substantial conformance with the contract plans and specifications.

BY: CRC DATE: 5/23/18

FDOT INDEX #221/200 V-INLET # S-111 / 1 ea

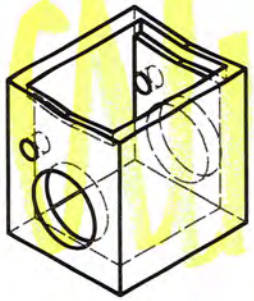

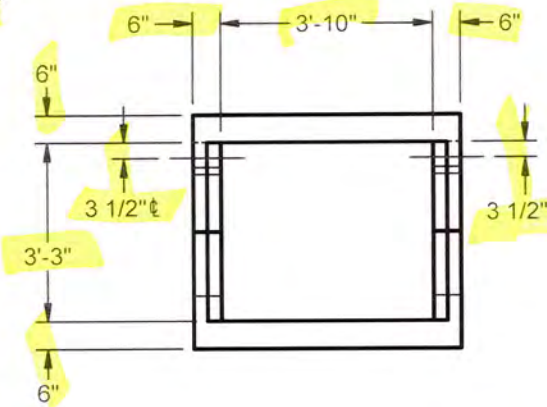

N

NOT PROJECT NORTH

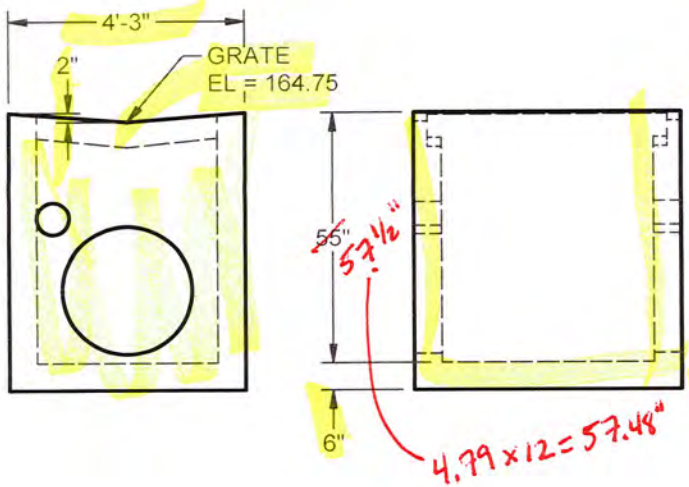

EOP = 164.91

ITB = 160.12

APTB = 4.79

1 EA EYEBOLTS&CHAINS SET
1 EA CAST USF GRT 6651-PTD "V" STLPTDSET

SPECIFICATIONS	
1	BASE STEEL - #4 @ 8" Short;#4 @ 11" Long(Top);
2	WALL STEEL -3X4 W5.0/W6.7 WWF
3	
4	
5	
6	4000 PSI All wall steel 3" cover (2" for double mat), 2" cover for slabs.
7	Provide 1-#4 bar reinforcement ea side of openings and 2-#4 bars at 3" min. spacing above openings

SPECIAL NOTES: 0 EYEBOLTS & CHAINS REQUIRED

0 FDOT STAMP REQUIRED

PC #	WEIGHT	PIECE DESCRIPTION	PRODUCT CODE
1	6245	046L x 039W x 06Wall x 055H, MonoBase	SS04603906B060N

PC #	DEG/ DIR	PIPE SIZE	PIPE INVERT	HOLE SIZE	BOOT TYPE	HOLE INVERT	HOLE RAISE
1	E	18 RCP	160.70	28	NONE	160.28	2"
1	W	18 RCP	160.70	28	NONE	160.28	2"
1	E	4 PVC	162.60	7 (C/L 3 1/2 Off N Wall)	NONE	162.48	28 1/2"
1	W	4 PVC	162.60	7 (C/L 3 1/2 Off N Wall)	NONE	162.48	28 1/2"

FDOT 434986-1-52-01

STRAIGHT AHEAD CONSTRUCTION

FORTERRA | PIPE & PRECAST

DESIGN BY:	MTT
DATE:	5/11/2018
SCALE:	1:40
ORDER #:	10960723
REVISED DATE:	REV BY:

10960723S-111.idw

5/11/2018

S-039-046-06-00-DB-G-FV-M-0-0

CONCRETE SERVICES

☑ APPROVED

☐ APPROVED AS CORRECTED

☐ REVISE AND RESUBMIT

☐ REJECTED

☐ FOR INFORMATION ONLY

SUBMITTAL WAS REVIEWED FOR DESIGN CONFORMITY AND GENERAL CONFORMANCE TO CONTRACT DOCUMENTS ONLY. THE CONTRACTOR IS RESPONSIBLE FOR CONFIRMING AND CORRELATING DIMENSIONS AT JOB SITES FOR TOLERANCES, CLEARANCES, QUANTITIES, FABRICATION PROCESSES AND TECHNIQUES OF CONSTRUCTION, COORDINATION OF HIS WORK WITH OTHER TRADES AND FULL COMPLIANCE WITH THE CONTRACT DOCUMENTS

BY Roy Arias DATE 5/18/2018

COMPREHENSIVE ENGINEERING SERVICES, INC.

☐ No exceptions taken ☐ Amend and Resubmit

☑ Make corrections noted ☐ Rejected (See Remarks)

Review and comments do not relieve the contractor of responsibility for substantial conformance with the contract plans and specifications.

BY: CRC DATE: 5/23/18

FDOT INDEX #200/211 TYPE 5 CURB INLET # S-112

1 ea

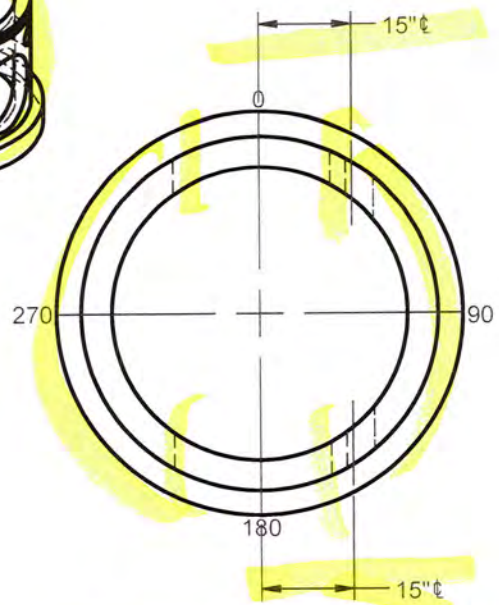

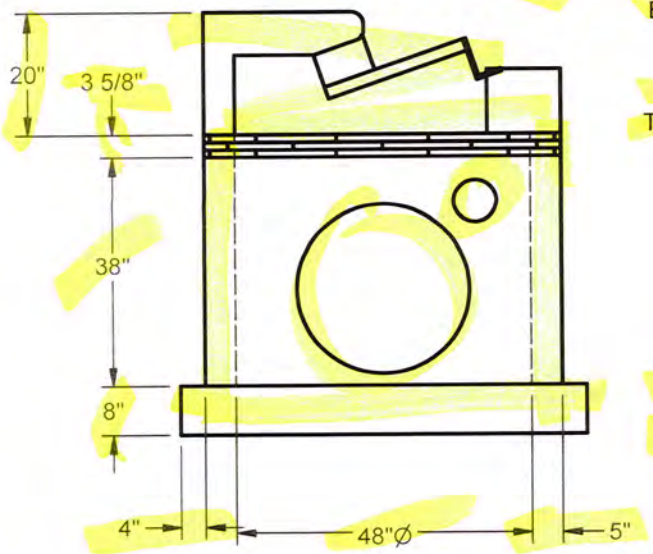

EOP = 164.68

TA = 163.39

TPW1 = 163.08

ITB = 159.92

APTB = 3.47

1 EA CAST USF GRT 6310
1 EA CAST USF FRM 5160 STLPTD
1 EA 0~0~0~CI TOP~FDOT TYPE 5~FRAME R

SPECIFICATIONS

1	BASE STEEL - #4 @ 6" O.C.E.W. (Top);
2	WALL STEEL -3X8 W3.0/W2.0 WWF (ASTM C-478)
3	
4	
5	
6	4000 PSI All wall steel 3/4" cover, 1" cover for top, bottom, and reducer.
7	Provide 1-#4 bar reinforcement ea side of openings and 2-#4 bars at 3" min. spacing above openings

SPECIAL NOTES: 1 FLAT TOP

0 FDOT STAMP REQUIRED

0 SEE DETAIL FOR TYPE 5 PRECAST TOP

PC #	WEIGHT	PIECE DESCRIPTION	PRODUCT CODE
1	4525	048Dia x 05Wall x 038H, MonoBaseExt	SR048B05M042X

PC #	DEG/ DIR	PIPE SIZE	PIPE INVERT	HOLE SIZE	BOOT TYPE	HOLE INVERT	HOLE RAISE
1	0	18 RCP	160.50	28	NONE	160.08	2"
1	0	4 PVC	162.30	7 (C/L Offset 15 Left)	NONE	162.18	27"
1	180	18 RCP	160.50	28	NONE	160.08	2"
1	180	4 PVC	162.30	7 (C/L Offset 15 Right)	NONE	162.18	27"

FDOT 434986-1-52-01

STRAIGHT AHEAD CONSTRUCTION

FORTERRA | PIPE & PRECAST

DESIGN BY:	MTT
DATE:	5/10/2018
SCALE:	1:30
ORDER #:	**10960723**
REVISED DATE:	REV BY:

10960723S-112.idw

5/10/2018

R-048-05-00-CI-P-F6-F-0-0

CONCRETE SERVICES

☑ APPROVED

☐ APPROVED AS CORRECTED

☐ REVISE AND RESUBMIT

☐ REJECTED

☐ FOR INFORMATION ONLY

SUBMITTAL WAS REVIEWED FOR DESIGN CONFORMITY AND GENERAL CONFORMANCE TO CONTRACT DOCUMENTS ONLY THE CONTRACTOR IS RESPONSIBLE FOR CONFIRMING AND CORRELATING DIMENSIONS AT JOB SITES FOR TOLERANCES, CLEARANCES, QUANTITIES, FABRICATION PROCESSES AND TECHNIQUES OF CONSTRUCTION, COORDINATION OF HIS WORK WITH OTHER TRADES AND FULL COMPLIANCE WITH THE CONTRACT DOCUMENTS.

BY Roy Arias DATE 5/18/2018

COMPREHENSIVE ENGINEERING SERVICES, INC.

☑ No exceptions taken ☐ Amend and Resubmit

☐ Make corrections noted ☐ Rejected (See Remarks)

Review and comments do not relieve the contractor of responsibility for substantial conformance with the contract plans and specifications.

BY CRC DATE: 5/23/18

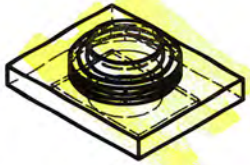

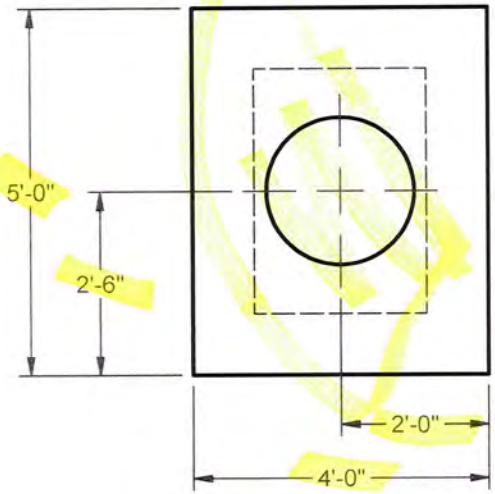

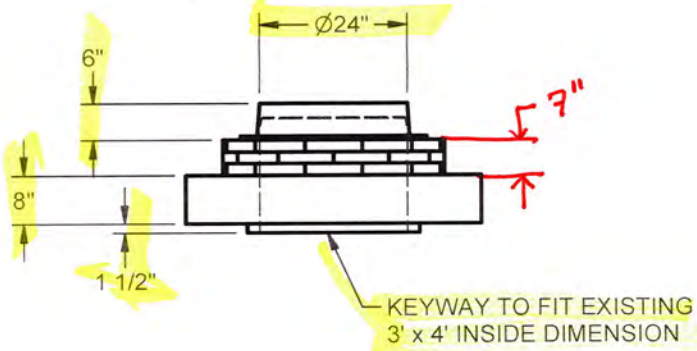

N

NOT PROJECT NORTH

FDOT INDEX #200/201 TOP SLAB # S-113 / 1 ea

SPECIFICATIONS	
1	
2	
3	TOP SLAB - #3 @ 5" Short;#4 @ 10" Long(Top);
4	
5	
6	4000 PSI All wall steel 3" cover (2" for double mat), 2" cover for slabs.
7	Provide 1-#4 bar reinforcement ea side of openings and 2-#4 bars at 3" min. spacing above openings

SPECIAL NOTES:

0 FDOT STAMP REQUIRED

PC #	WEIGHT	PIECE DESCRIPTION	PRODUCT CODE
2	1773	036L x 048W x 06Wall x 08H, TopSlab	SS04804806S008N

PC #	DEG/ DIR	PIPE SIZE	PIPE INVERT	HOLE SIZE	BOOT TYPE	HOLE INVERT	HOLE RAISE

FDOT 434986-1-52-01

STRAIGHT AHEAD CONSTRUCTION

FORTERRA | PIPE & PRECAST

DESIGN BY:	MTT
DATE:	5/11/2018
SCALE:	1:30
ORDER #:	10960723
REVISED DATE:	REV BY:

1 EA CAST USF R&C 170-XB~FDOT~STORM

10960723S-113.dw

5/11/2018

S-072-072-08-00-MH-T-JS-M-0-0

CONCRETE SERVICES

☑ APPROVED

☐ APPROVED AS CORRECTED

☐ REVISE AND RESUBMIT

☐ REJECTED

☐ FOR INFORMATION ONLY

SUBMITTAL WAS REVIEWED FOR DESIGN CONFORMITY AND GENERAL CONFORMANCE TO CONTRACT DOCUMENTS ONLY. THE CONTRACTOR IS RESPONSIBLE FOR CONFIRMING AND CORRELATING DIMENSIONS AT JOB SITES FOR TOLERANCES, CLEARANCES, QUANTITIES, FABRICATION PROCESSES AND TECHNIQUES OF CONSTRUCTION, COORDINATION OF HIS WORK WITH OTHER TRADES AND FULL COMPLIANCE WITH THE CONTRACT DOCUMENTS.

BY Roy Arias DATE 5/18/2018

COMPREHENSIVE ENGINEERING SERVICES, INC.

☐ No exceptions taken ☐ Amend and Resubmit

☑ Make corrections noted ☐ Rejected (See Remarks)

Review and comments do not relieve the contractor of responsibility for substantial conformance with the contract plans and specifications.

BY: CAC DATE: 5/23/18

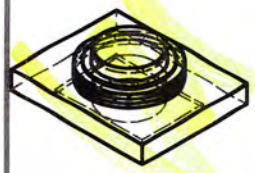

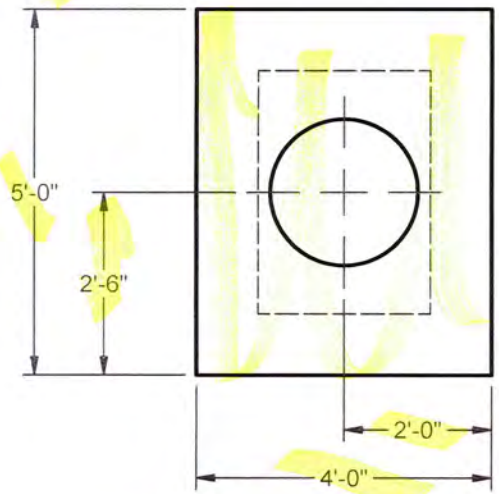

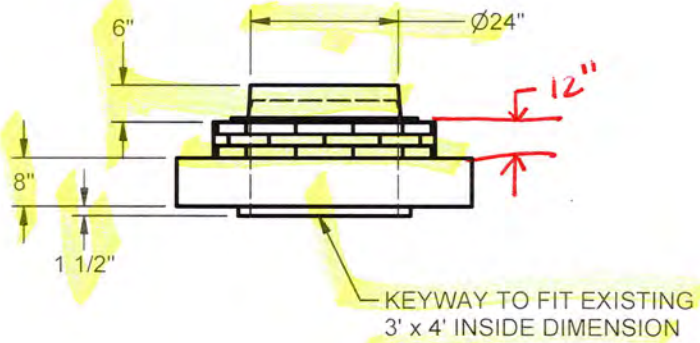

1 EA CAST USF R&C 170-XB~FDOT~STORM

N

NOT PROJECT NORTH

FDOT INDEX #200/201 TOP SLAB # S-114 / 1 ea

SPECIFICATIONS	
1	
2	
3	TOP SLAB - #3 @ 5" Short;#4 @ 10" Long(Top);
4	
5	
6	4000 PSI All wall steel 3" cover (2" for double mat), 2" cover for slabs.
7	Provide 1-#4 bar reinforcement ea side of openings and 2-#4 bars at 3" min. spacing above openings

SPECIAL NOTES:

0 FDOT STAMP REQUIRED

PC #	WEIGHT	PIECE DESCRIPTION	PRODUCT CODE
2	1773	036L x 048W x 06Wall x 08H, TopSlab	SS04804806S008N

PC #	DEG/ DIR	PIPE SIZE	PIPE INVERT	HOLE SIZE	BOOT TYPE	HOLE INVERT	HOLE RAISE

FDOT 434986-1-52-01

STRAIGHT AHEAD CONSTRUCTION

FORTERRA | PIPE & PRECAST

DESIGN BY:	MTT
DATE:	5/11/2018
SCALE:	1:30
ORDER #:	10960723
REVISED DATE:	REV BY:

10960723S-114.idw

5/11/2018

S-072-072-08-00-MH-T-JS-M-0-0

CONCRETE SERVICES

☑ APPROVED

☐ APPROVED AS CORRECTED

☐ REVISE AND RESUBMIT

☐ REJECTED

☐ FOR INFORMATION ONLY

SUBMITTAL WAS REVIEWED FOR DESIGN CONFORMITY AND GENERAL CONFORMANCE TO CONTRACT DOCUMENTS ONLY. THE CONTRACTOR IS RESPONSIBLE FOR CONFIRMING AND CORRELATING DIMENSIONS AT JOB SITES FOR TOLERANCES, CLEARANCES, QUANTITIES, FABRICATION PROCESSES AND TECHNIQUES OF CONSTRUCTION, COORDINATION OF HIS WORK WITH OTHER TRADES AND FULL COMPLIANCE WITH THE CONTRACT DOCUMENTS.

BY Roy Arias DATE 5/18/2018

COMPREHENSIVE ENGINEERING SERVICES, INC.

☐ No exceptions taken ☐ Amend and Resubmit

☑ Make corrections noted ☐ Rejected (See Remarks)

Review and comments do not relieve the contractor of responsibility for substantial conformance with the contract plans and specifications.

BY: CRC DATE: 5/23/18

CONTRACTOR CHOOSING TO USE TYPE 7 MH. PLANS CALL FOR TYPE 8 MH (ALT. B) BOTTOM.

PROPOSED TYPE 7 IS ACCEPTABLE WITH THE 7" BRICK ADJUSTMENT PROVIDED.

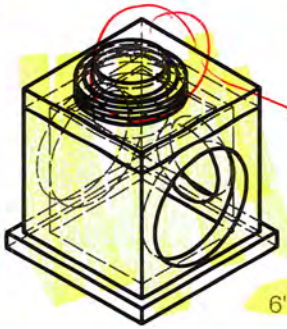

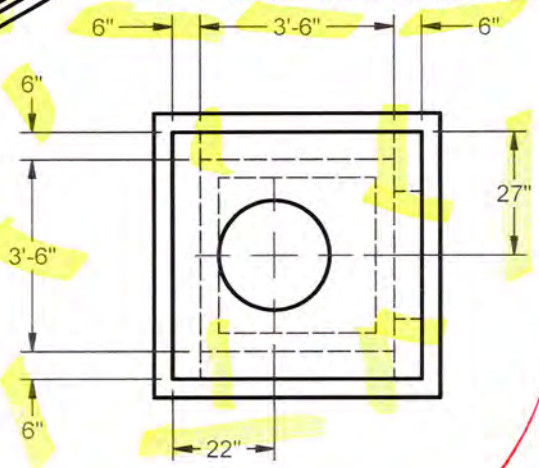

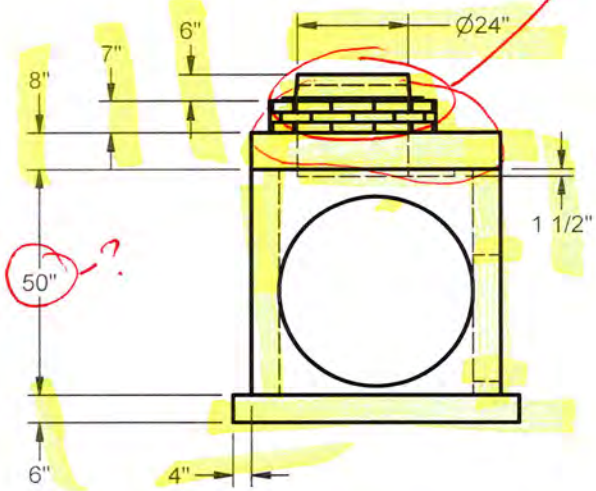

FG =	164.59
TA =	164.09
TTS =	163.52
TPW1 =	162.85
ITB =	158.68
APTB =	5.41

N

NOT PROJECT NORTH

FDOT INDEX #200/201 P-7 STORM MANHOLE # S-115

1 ea

SPECIFICATIONS	
1	BASE STEEL - #4 @ 10" O.C.E.W. (Top);
2	WALL STEEL- #4 @ 12" Vert; #4 @ 10" Hor
3	TOP SLAB - #4 @ 10" O.C.E.W.
4	
5	
6	4000 PSI All wall steel 3" cover (2" for double mat), 2" cover for slabs.
7	Provide 1-#4 bar reinforcement ea side of openings and 2-#4 bars at 3" min. spacing above openings

SPECIAL NOTES: 1 FLAT TOP

0 FDOT STAMP REQUIRED

PC #	WEIGHT	PIECE DESCRIPTION	PRODUCT CODE
		SEE PLANS: CONTRACTOR TO FIELD VERIFY EXIST. PIPE INVERT PRIOR TO ORDERING STRUCTURE	
		ESTIMATED INVERTS.	
2	1802	042L x 042W x 06Wall x 08H, TopSlab	SS04204206S008N
1	5238	042L x 042W x 06Wall x 050H, MonoBaseExt	SS04204206B054X

PC #	DEG/ DIR	PIPE SIZE	PIPE INVERT	HOLE SIZE	BOOT TYPE	HOLE INVERT	HOLE RAISE
1	N	30 RCP	159.35	42	NONE	158.85	2"
1	E	18 RCP	159.35	28	NONE	158.93	3"
1	S	30 RCP	159.35	42	NONE	158.85	2"

FDOT 434986-1-52-01

STRAIGHT AHEAD CONSTRUCTION

FORTERRA | PIPE & PRECAST

DESIGN BY:	MTT
DATE:	5/9/2018
SCALE:	1:40
ORDER #:	10960723
REVISED DATE:	REV BY:

1 EA CAST USF R&C 170-XB~FDOT~STORM

10960723S-115.idw

5/9/2018

S-072-072-08-00-MH-T-JS-M-0-0

CONCRETE SERVICES

☑ APPROVED

☐ APPROVED AS CORRECTED

☐ REVISE AND RESUBMIT

☐ REJECTED

☐ FOR INFORMATION ONLY

SUBMITTAL WAS REVIEWED FOR DESIGN CONFORMITY AND GENERAL CONFORMANCE TO CONTRACT DOCUMENTS ONLY. THE CONTRACTOR IS RESPONSIBLE FOR CONFIRMING AND CORRELATING DIMENSIONS AT JOB SITES FOR TOLERANCES, CLEARANCES, QUANTITIES, FABRICATION PROCESSES AND TECHNIQUES OF CONSTRUCTION, COORDINATION OF HIS WORK WITH OTHER TRADES AND FULL COMPLIANCE WITH THE CONTRACT DOCUMENTS

BY Roy Arias DATE 5/18/2018

COMPREHENSIVE ENGINEERING SERVICES, INC.

☐ No exceptions taken ☐ Amend and Resubmit

☑ Make corrections noted ☐ Rejected (See Remarks)

Review and comments do not relieve the contractor of responsibility for substantial conformance with the contract plans and specifications

BY: CRC DATE: 5/23/18

DUPLICATED STRUCTURE S-116
SEE P6.17 OF THIS SHOP DRAWING
PACKAGE FOR MARK UPS.

FDOT INDEX #232/200 C-INLET # S-116 / 1 ea

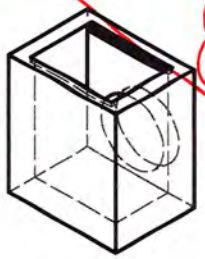

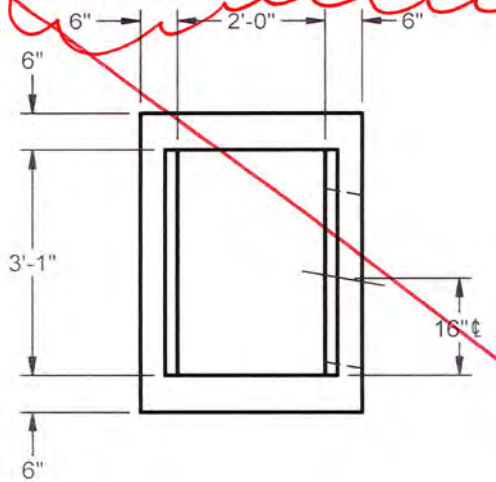

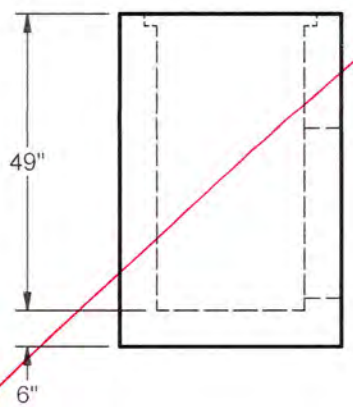

FG = 163.50

ITB = 159.42

APTB = 4.08

1 EA EYEBOLTS&CHAINS SET
1 EA CAST USF GRT 6210

SPECIFICATIONS

1	BASE STEEL - #4 @ 12" O.C.E.W. (Top);
2	WALL STEEL -3X4 W5.0/W6.7 WWF
3	
4	
5	
6	4000 PSI All wall steel 3" cover (2" for double mat), 2" cover for slabs.
7	Provide 1-#4 bar reinforcement ea side of openings and 2-#4 bars at 3" min. spacing above openings

SPECIAL NOTES: 0 EYEBOLTS & CHAINS REQUIRED

0 FDOT STAMP REQUIRED

PC #	WEIGHT	PIECE DESCRIPTION	PRODUCT CODE
1	4293	024L x 037W x 06Wall x 049H, MonoBase	SS02403706B054N

PC #	DEG DIR	PIPE SIZE	PIPE INVERT	HOLE SIZE	BOOT TYPE	HOLE INVERT	HOLE RAISE
1	E	18 RCP	160.00	28 (16 Off S Wall)	NONE	159.58	2"

FDOT 434986-1-52-01

STRAIGHT AHEAD CONSTRUCTION

FORTERRA | PIPE & PRECAST

DESIGN BY:	MTT
DATE:	5/9/2018
SCALE:	1:30
ORDER #:	10960723
REVISED DATE:	REV BY:

10960723S-116.idw

5/9/2018

S-024-037-06-00-DB-G-FC-M-0-0

SEE PREVIOUSLY MARKED UP S-116

CONCRETE SERVICES

- [x] APPROVED
- [ ] APPROVED AS CORRECTED
- [ ] REVISE AND RESUBMIT
- [ ] REJECTED
- [ ] FOR INFORMATION ONLY

SUBMITTAL WAS REVIEWED FOR DESIGN CONFORMITY AND GENERAL CONFORMANCE TO CONTRACT DOCUMENTS ONLY. THE CONTRACTOR IS RESPONSIBLE FOR CONFIRMING AND CORRELATING DIMENSIONS AT JOB SITES FOR TOLERANCES, CLEARANCES, QUANTITIES, FABRICATION PROCESSES AND TECHNIQUES OF CONSTRUCTION, COORDINATION OF HIS WORK WITH OTHER TRADES AND FULL COMPLIANCE WITH THE CONTRACT DOCUMENTS.

BY Roy Arias DATE 5/18/2018

FDOT INDEX #200/211 TYPE 5 CURB INLET # S-117

1 ea

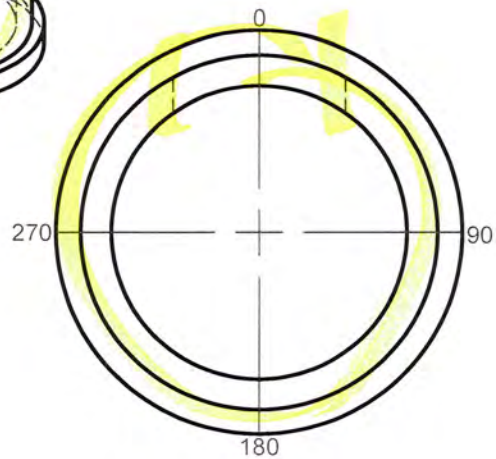

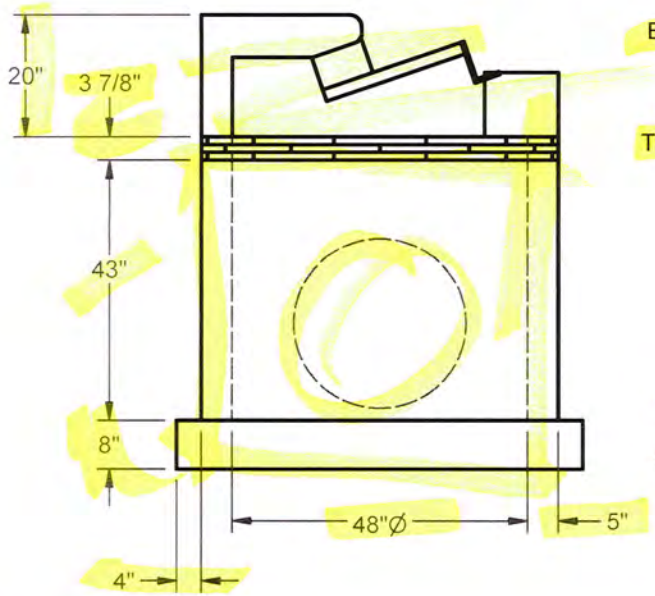

EOP = 164.61

TA = 163.32

TPW1 = 163.00

ITB = 159.42

APTB = 3.90

1 EA CAST USF GRT 6310
1 EA CAST USF FRM 5160 STLPTD
1 EA 0~0~0~CI TOP~FDOT TYPE 5~FRAME L

SPECIFICATIONS	
1	BASE STEEL - #4 @ 6" O.C.E.W. (Top);
2	WALL STEEL -3X8 W3.0/W2.0 WWF (ASTM C-478)
3	
4	
5	
6	4000 PSI All wall steel 3/4" cover, 1" cover for top, bottom, and reducer.
7	Provide 1-#4 bar reinforcement ea side of openings and 2-#4 bars at 3" min. spacing above openings

SPECIAL NOTES: 1 FLAT TOP

0 FDOT STAMP REQUIRED

0 SEE DETAIL FOR TYPE 5 PRECAST TOP

PC #	WEIGHT	PIECE DESCRIPTION	PRODUCT CODE
1	5205	048Dia x 05Wall x 043H, MonoBaseExt	SR048B05M048X

PC #	DEG/ DIR	PIPE SIZE	PIPE INVERT	HOLE SIZE	BOOT TYPE	HOLE INVERT	HOLE RAISE
1	0	18 RCP	160.00	28	NONE	159.58	2"

FDOT 434986-1-52-01

STRAIGHT AHEAD CONSTRUCTION

FORTERRA | PIPE & PRECAST

DESIGN BY:	MTT
DATE:	5/10/2018
SCALE:	1:30
ORDER #:	10960723
REVISED DATE:	REV BY:

10960723S-117.idw

5/10/2018

R-048-05-00-CI-P-F6-F-0-0

CONCRETE SERVICES

☑ APPROVED

☐ APPROVED AS CORRECTED

☐ REVISE AND RESUBMIT

☐ REJECTED

☐ FOR INFORMATION ONLY

SUBMITTAL WAS REVIEWED FOR DESIGN CONFORMITY AND GENERAL CONFORMANCE TO CONTRACT DOCUMENTS ONLY. THE CONTRACTOR IS RESPONSIBLE FOR CONFIRMING AND CORRELATING DIMENSIONS AT JOB SITES FOR TOLERANCES, CLEARANCES, QUANTITIES, FABRICATION PROCESSES AND TECHNIQUES OF CONSTRUCTION, COORDINATION OF HIS WORK WITH OTHER TRADES AND FULL COMPLIANCE WITH THE CONTRACT DOCUMENTS.

BY Roy Arias DATE 5/18/2018

COMPREHENSIVE ENGINEERING SERVICES, INC.

☑ No exceptions taken ☐ Amend and Resubmit

☐ Make corrections noted ☐ Rejected (See Remarks)

Review and comments do not relieve the contractor of responsibility for substantial conformance with the contract plans and specifications.

BY CRL DATE: 5/23/18

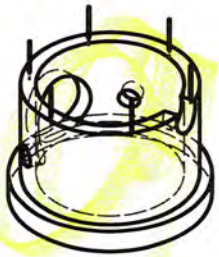

DUE TO NOT HAVING 6" OF CONCRETE ABOVE THE HOLE OPENINGS IN WALL, FDOT WILL REQUIRE THIS SHOP DRAWING TO BE APPROVED BY THE EOR PRIOR TO MANUFACTURE.

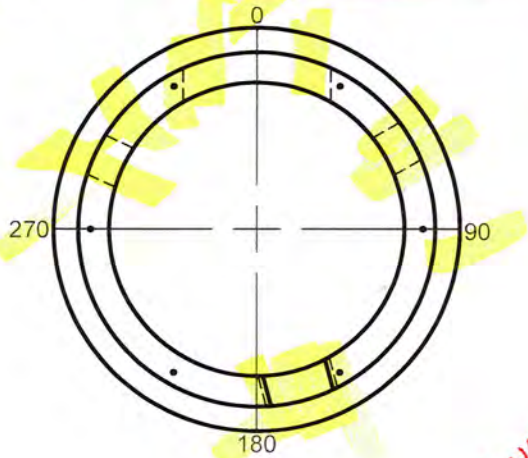

USING DOWEL JOINT ALREADY

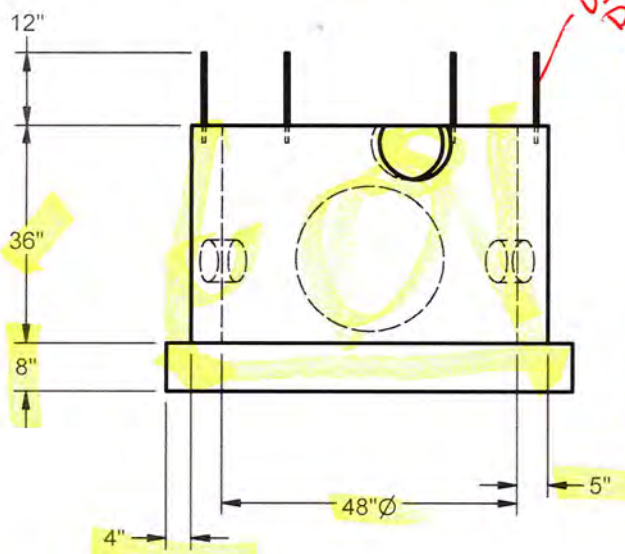

EOP = 163.20

TPW1 = 161.93

ITB = 158.93

APTB = 2.98

1 EA CAST USF GRT 6310
1 EA CAST USF FRM 5160 STLPTD

FDOT INDEX #200/211 TYPE 5 CURB INLET # S-200 / 1 ea

SPECIFICATIONS	
1	BASE STEEL - #3 @ 6" O.C.E.W. (Top);
2	WALL STEEL -3X8 W3.0/W2.0 WWF (ASTM C-478)
3	
4	
5	
6	4000 PSI All wall steel 3/4" cover, 1" cover for top, bottom, and reducer.
7	Provide 1-#4 bar reinforcement ea side of openings and 2-#4 bars at 3" min. spacing above openings

SPECIAL NOTES: 1 FLAT TOP W/DOWELS

0 FDOT STAMP REQUIRED

0 TYPE 5 TOP CAST IN FIELD BY OTHERS

PC #	WEIGHT	PIECE DESCRIPTION	PRODUCT CODE
		PER INDEX 201 SHEET 3 OF 5, THE UP ELEVATION (HOLE RISE) MUST BE AT LEAST 6" TO HAVE ZERO CONCRETE ABOVE THE HOLE OPENING. THIS 8" PVC PIPE HAS A HOLE RISE OF 27". STRUCTURE IS OK.	
		PIPE INVERT IS ESTIMATED, CONTRACTOR TO FIELD VERIFY PRIOR TO ORDERING STRUCTURE	
1	4703	048Dia x 05Wall x 036H, MonoBaseExt	SR048B05M036X

PC #	DEG/ DIR	PIPE SIZE	PIPE INVERT	HOLE SIZE	BOOT TYPE	HOLE INVERT	HOLE RAISE
1	0	15 RCP	159.47	24	NONE	159.1	2"
1	60	4 PVC	159.90	7	NONE	159.78	10"
1	165	8 PVC	161.35	12	NONE	161.18	27"
1	295	4 PVC	159.90	7	NONE	159.78	10"

FDOT 434986-1-52-01

STRAIGHT AHEAD CONSTRUCTION

FORTERRA | PIPE & PRECAST

DESIGN BY:	MTT
DATE:	5/11/2018
SCALE:	1:30
ORDER #:	10960723
REVISED DATE:	REV BY:

10960723S-200.idw

5/11/2018

R-048-05-00-CI-D-F1-F-0-0

CONCRETE SERVICES

☑ APPROVED

☐ APPROVED AS CORRECTED

☐ REVISE AND RESUBMIT

☐ REJECTED

☐ FOR INFORMATION ONLY

SUBMITTAL WAS REVIEWED FOR DESIGN CONFORMITY AND GENERAL CONFORMANCE TO CONTRACT DOCUMENTS ONLY. THE CONTRACTOR IS RESPONSIBLE FOR CONFIRMING AND CORRELATING DIMENSIONS AT JOB SITES FOR TOLERANCES, CLEARANCES, QUANTITIES, FABRICATION PROCESSES AND TECHNIQUES OF CONSTRUCTION, COORDINATION OF HIS WORK WITH OTHER TRADES AND FULL COMPLIANCE WITH THE CONTRACT DOCUMENTS.

BY Roy Arias DATE 5/18/2018

COMPREHENSIVE ENGINEERING SERVICES, INC.

☐ No exceptions taken ☐ Amend and Resubmit

☑ Make corrections noted ☐ Rejected (See Remarks)

Review and comments do not relieve the contractor of responsibility for substantial conformance with the contract plans and specifications.

BY CRC DATE: 5/23/18

FDOT INDEX #200/201 TOP SLAB # S-202 / 1 ea

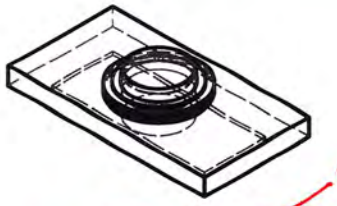

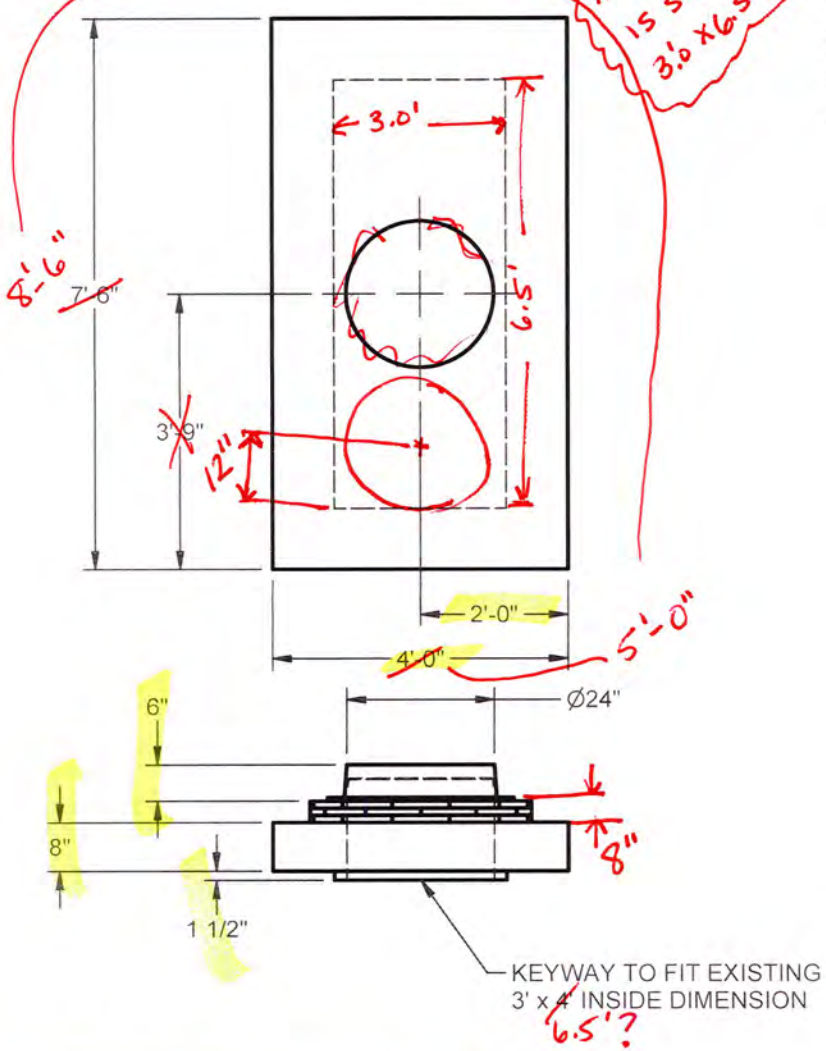

1 EA CAST USF R&C 170-XB~FDOT~STORM

SPECIFICATIONS	
1	
2	
3	TOP SLAB - #3 @ 5" Short;#4 @ 10" Long(Top);
4	
5	
6	4000 PSI All wall steel 3" cover (2" for double mat), 2" cover for slabs.
7	Provide 1-#4 bar reinforcement ea side of openings and 2-#4 bars at 3" min. spacing above openings

SPECIAL NOTES:

PC #	WEIGHT	PIECE DESCRIPTION	PRODUCT CODE
2	2882	036L x 078W x 06Wall x 08H, TopSlab	SS06006006S008N

PC #	DEG/ DIR	PIPE SIZE	PIPE INVERT	HOLE SIZE	BOOT TYPE	HOLE INVERT	HOLE RAISE

FDOT 434986-1-52-01

STRAIGHT AHEAD CONSTRUCTION

FORTERRA | PIPE & PRECAST

DESIGN BY:	MTT
DATE:	5/11/2018
SCALE:	1:30
ORDER #:	10960723
REVISED DATE:	REV BY:

10960723S-202.idw

5/11/2018

S-072-072-08-00-MH-T-JS-M-0-0

CONCRETE SERVICES

☑ APPROVED

☐ APPROVED AS CORRECTED

☐ REVISE AND RESUBMIT

☐ REJECTED

☐ FOR INFORMATION ONLY

SUBMITTAL WAS REVIEWED FOR DESIGN CONFORMITY AND GENERAL CONFORMANCE TO CONTRACT DOCUMENTS ONLY. THE CONTRACTOR IS RESPONSIBLE FOR CONFIRMING AND CORRELATING DIMENSIONS AT JOB SITES FOR TOLERANCES, CLEARANCES, QUANTITIES, FABRICATION PROCESSES AND TECHNIQUES OF CONSTRUCTION, COORDINATION OF HIS WORK WITH OTHER TRADES AND FULL COMPLIANCE WITH THE CONTRACT DOCUMENTS.

BY Roy Arias DATE 5/18/2018

COMPREHENSIVE ENGINEERING SERVICES, INC.

☐ No exceptions taken ☐ Amend and Resubmit

☑ Make corrections noted ☐ Rejected (See Remarks)

Review and comments do not relieve the contractor of responsibility for full and total conformance with the contract plans and specifications.

BY: CRC DATE: 5/23/18

FDOT INDEX #200/211 TYPE 5 CURB INLET # S-202A

1 ea

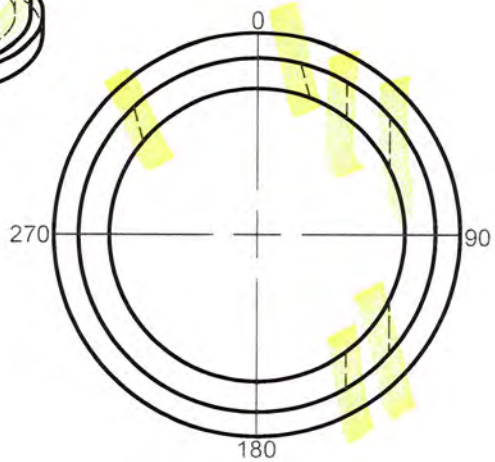

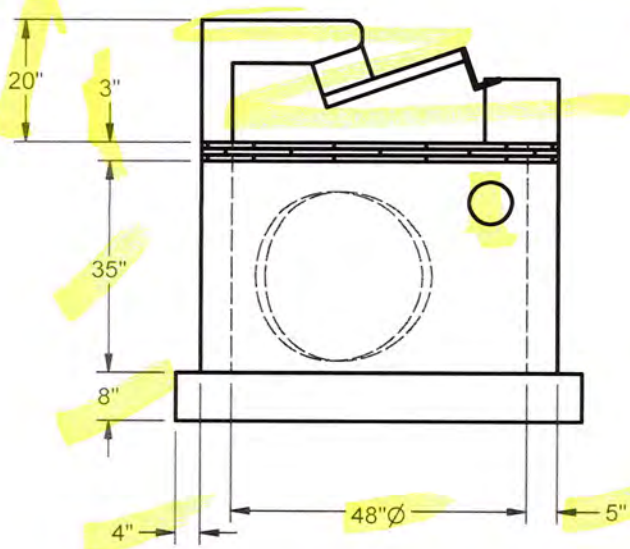

EOP = 162.48

TA = 161.19

TPW1 = 160.93

ITB = 158.02

APTB = 3.17

SPECIFICATIONS	
1	BASE STEEL - #4 @ 6" O.C.E.W. (Top);
2	WALL STEEL -3X8 W3.0/W2.0 WWF (ASTM C-478)
3	
4	
5	
6	4000 PSI All wall steel 3/4" cover, 1" cover for top, bottom, and reducer.
7	Provide 1-#4 bar reinforcement ea side of openings and 2-#4 bars at 3" min. spacing above openings

SPECIAL NOTES: 1 FLAT TOP

0 FDOT STAMP REQUIRED

0 SEE DETAIL FOR TYPE 5 PRECAST TOP

PC #	WEIGHT	PIECE DESCRIPTION	PRODUCT CODE
1	4581	048Dia x 05Wall x 035H, MonoBaseExt	SR048B05M036X

PC #	DEG/ DIR	PIPE SIZE	PIPE INVERT	HOLE SIZE	BOOT TYPE	HOLE INVERT	HOLE RAISE
1	345	18 RCP	158.60	28	NONE	158.18	2"
1	0	4 PVC	160.20	7 (C/L Offset 18 Left)	NONE	160.08	24 1/2"
1	180	4 PVC	160.20	7 (C/L Offset 18 Right)	NONE	160.08	24 1/2"

1 EA CAST USF GRT 6310
1 EA CAST USF FRM 5160 STLPTD
1 EA 0~0~0~CI TOP~FDOT TYPE 5~FRAME L

FDOT 434986-1-52-01

STRAIGHT AHEAD CONSTRUCTION

FORTERRA | PIPE & PRECAST

DESIGN BY:	MTT
DATE:	5/11/2018
SCALE:	1:30
ORDER #:	10960723
REVISED DATE:	REV BY:

10960723S-202A.idw

5/11/2018

R-048-05-00-CI-P-F6-F-0-0

CONCRETE SERVICES

☑ APPROVED

☐ APPROVED AS CORRECTED

☐ REVISE AND RESUBMIT

☐ REJECTED

☐ FOR INFORMATION ONLY

SUBMITTAL WAS REVIEWED FOR DESIGN CONFORMITY AND GENERAL CONFORMANCE TO CONTRACT DOCUMENTS ONLY THE CONTRACTOR IS RESPONSIBLE FOR CONFIRMING AND CORRELATING DIMENSIONS AT JOB SITES FOR TOLERANCES, CLEARANCES, QUANTITIES, FABRICATION PROCESSES AND TECHNIQUES OF CONSTRUCTION, COORDINATION OF HIS WORK WITH OTHER TRADES AND FULL COMPLIANCE WITH THE CONTRACT DOCUMENTS.

BY Roy Arias DATE 5/18/2018

COMPREHENSIVE ENGINEERING SERVICES, INC.

☑ No exceptions taken ☐ Amend and Resubmit

☐ Make corrections noted ☐ Rejected (See Remarks)

Review and comments do not relieve the contractor of responsibility for substantial conformance with the contract plans and specifications.

BY: CRC DATE: 5/23/18

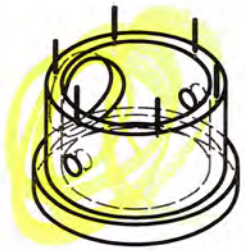

DUE TO NOT HAVING 6" OF CONCRETE ABOVE THE HOLE OPENINGS IN WALL, FDOT WILL REQUIRE THIS SHOP DRAWING TO BE APPROVED BY THE EOR PRIOR TO MANUFACTURE.

FDOT INDEX #200/211 TYPE 5 CURB INLET # S-203

1 ea

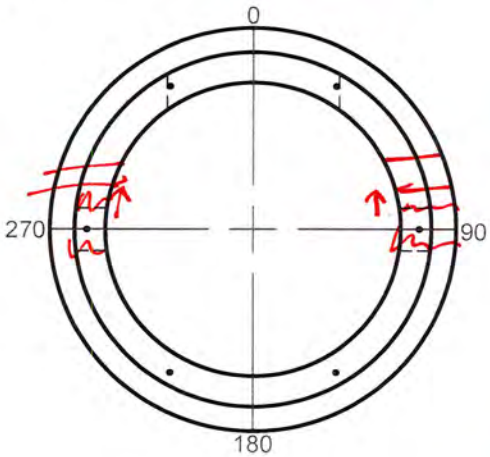

EOP = 161.39

USING DOWEL JOINTS

TPW1 = 160.10

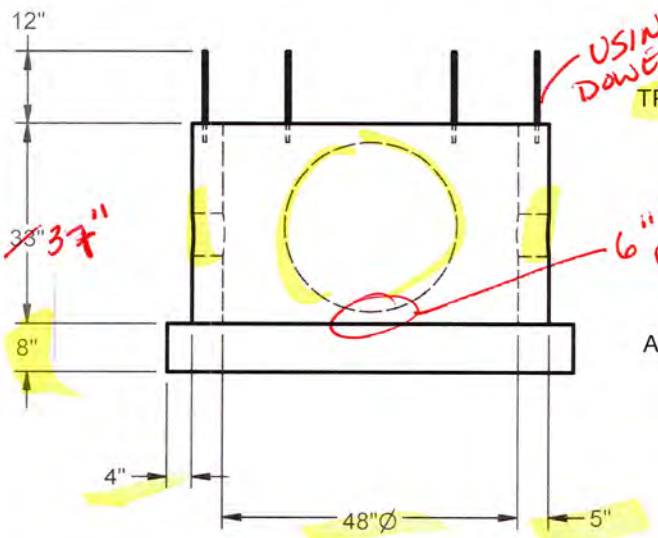

6" HOLE RISE

157.01

ITB = ~~157.35~~

APTB = ~~2.75~~ 3.09

SPECIFICATIONS	
1	BASE STEEL - #3 @ 6" O.C.E.W. (Top);
2	WALL STEEL -3X8 W3.0/W2.0 WWF (ASTM C-478)
3	
4	
5	
6	4000 PSI All wall steel 3/4" cover, 1" cover for top, bottom, and reducer.
7	Provide 1-#4 bar reinforcement ea side of openings and 2-#4 bars at 3" min. spacing above openings

SPECIAL NOTES: 1 FLAT TOP W/DOWELS

0 FDOT STAMP REQUIRED

0 0 TYPE 5 TOP CAST IN FIELD BY OTHERS

PC #	WEIGHT	PIECE DESCRIPTION	PRODUCT CODE
		PER INDEX 201 SHEET 3 OF 5, INCREASING THE UP ELEVATION TO 6" (HOLE RISE) ALLOWS THE CONCRETE ABOVE THE HOLE OPENING TO BE ZERO, USENG DOWEL JOINTS.	
1	4449	048Dia x 05Wall x 033H, MonoBaseExt	SR048B05M036X

PC #	DEG DIR	PIPE SIZE	PIPE INVERT	HOLE SIZE	BOOT TYPE	HOLE INVERT	HOLE RAISE
1	0	18 RCP	157.93	28	NONE	157.51	~~2"~~ 6"
1	90	4 PVC	158.40	7	NONE	158.28	~~11"~~ 15"
1	270	4 PVC	158.40	7	NONE	158.28	~~11"~~ 15"

1 EA CAST USF GRT 6310
1 EA CAST USF FRM 5160 STLPTD

FDOT 434986-1-52-01

STRAIGHT AHEAD CONSTRUCTION

FORTERRA | PIPE & PRECAST

DESIGN BY:	MTT
DATE:	5/11/2018
SCALE:	1:30
ORDER #:	10960723
REVISED DATE:	REV BY:

10960723S-203.idw

5/11/2018

R-048-05-00-CI-D-F1-F-0-0

CONCRETE SERVICES

☑ APPROVED

☐ APPROVED AS CORRECTED

☐ REVISE AND RESUBMIT

☐ REJECTED

☐ FOR INFORMATION ONLY

SUBMITTAL WAS REVIEWED FOR DESIGN CONFORMITY AND GENERAL CONFORMANCE TO CONTRACT DOCUMENTS ONLY. THE CONTRACTOR IS RESPONSIBLE FOR CONFIRMING AND CORRELATING DIMENSIONS AT JOB SITES FOR TOLERANCES, CLEARANCES, QUANTITIES, FABRICATION PROCESSES AND TECHNIQUES OF CONSTRUCTION, COORDINATION OF HIS WORK WITH OTHER TRADES AND FULL COMPLIANCE WITH THE CONTRACT DOCUMENTS.

BY Roy Arias DATE 5/18/2018

COMPREHENSIVE ENGINEERING SERVICES, INC.

☐ No exceptions taken ☐ Amend and Resubmit

☑ Make corrections noted ☐ Rejected (See Remarks)

Review and comments do not relieve the contractor of responsibility for substantial conformance with the contract plans and specifications.

BY: CRL DATE: 5/23/18

FDOT INDEX #232/200 C-INLET # SD-1 / 1 ea

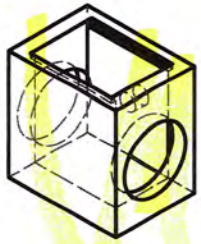

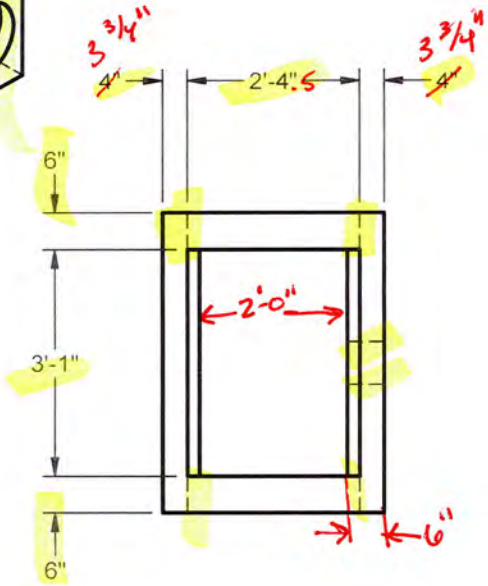

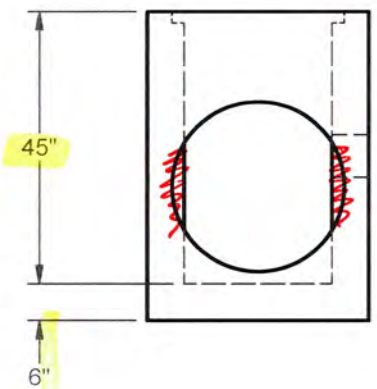

N

NOT PROJECT NORTH

FG = 163.56

ITB = 159.82

APTB = 3.74

1 EA EYEBOLTS&CHAINS SET
1 EA CAST USF GRT 6210

SPECIFICATIONS	
1	BASE STEEL - #4 @ 12" O.C.E.W. (Top);
2	WALL STEEL -3X4 W5.0/W6.7 WWF
3	
4	
5	
6	4000 PSI All wall steel 3" cover (2" for double mat), 2" cover for slabs.
7	Provide 1-#4 bar reinforcement ea side of openings and 2-#4 bars at 3" min. spacing above openings

SPECIAL NOTES: 0 EYEBOLTS & CHAINS REQUIRED

0 FDOT STAMP REQUIRED

PC #	WEIGHT	PIECE DESCRIPTION	PRODUCT CODE
1	3653	024L x 037W x 06Wall x 045H, MonoBase	SS02403706B048N

PC #	DEG/ DIR	PIPE SIZE	PIPE INVERT	HOLE SIZE	BOOT TYPE	HOLE INVERT	HOLE RAISE
1	N	18 RCP	160.40	28	NONE	159.98	2"
1	E	4 PVC	161.40	7	NONE	161.28	17 1/2"
1	S	18 RCP	160.40	28	NONE	159.98	2"

FDOT 434986-1-52-01

STRAIGHT AHEAD CONSTRUCTION

FORTERRA | PIPE & PRECAST

DESIGN BY:	MTT
DATE:	5/9/2018
SCALE:	1:30
ORDER #:	10960723
REVISED DATE:	REV BY:

10960723SD-1.idw

5/9/2018

S-024-037-06-00-DB-G-FC-M-0-0

CONCRETE SERVICES

☑ APPROVED

☐ APPROVED AS CORRECTED

☐ REVISE AND RESUBMIT

☐ REJECTED

☐ FOR INFORMATION ONLY

SUBMITTAL WAS REVIEWED FOR DESIGN CONFORMITY AND GENERAL CONFORMANCE TO CONTRACT DOCUMENTS ONLY THE CONTRACTOR IS RESPONSIBLE FOR CONFIRMING AND CORRELATING DIMENSIONS AT JOB SITES FOR TOLERANCES, CLEARANCES, QUANTITIES, FABRICATION PROCESSES AND TECHNIQUES OF CONSTRUCTION, COORDINATION OF HIS WORK WITH OTHER TRADES AND FULL COMPLIANCE WITH THE CONTRACT DOCUMENTS

BY Roy Arias DATE 5/18/2018

COMPREHENSIVE ENGINEERING SERVICES, INC.

☐ No exceptions taken ☐ Amend and Resubmit

☑ Make corrections noted ☐ Rejected (See Remarks)

Review and comments do not relieve the contractor of responsibility for substantial conformance with the contract plans and specifications.

BY: CRC DATE: 5/23/18

FDOT INDEX #232/200 C-INLET # SD-2 1 ea

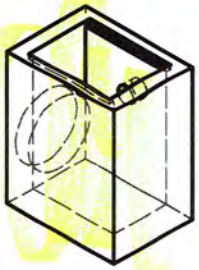

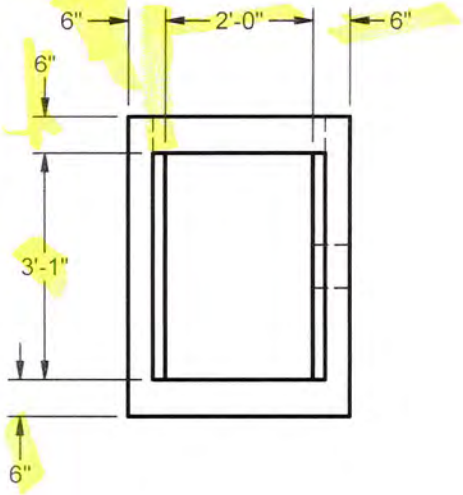

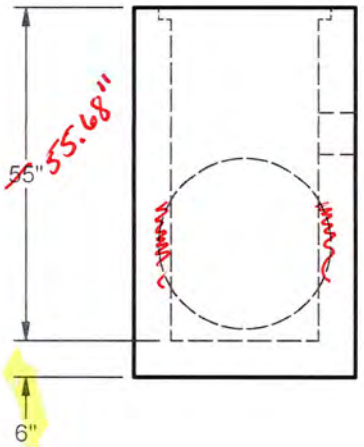

N

NOT PROJECT NORTH

FG = 164.66

ITB = 160.02

APTB = 4.64

SPECIFICATIONS	
1	BASE STEEL - #4 @ 12" O.C.E.W. (Top);
2	WALL STEEL -3X4 W5.0/W6.7 WWF
3	
4	
5	
6	4000 PSI All wall steel 3" cover (2" for double mat), 2" cover for slabs.
7	Provide 1-#4 bar reinforcement ea side of openings and 2-#4 bars at 3" min. spacing above openings

SPECIAL NOTES: 0 EYEBOLTS & CHAINS REQUIRED

0 FDOT STAMP REQUIRED

PC #	WEIGHT	PIECE DESCRIPTION	PRODUCT CODE
1	4735	024L x 037W x 06Wall x 055H, MonoBase	SS02403706B060N

PC #	DEG/ DIR	PIPE SIZE	PIPE INVERT	HOLE SIZE	BOOT TYPE	HOLE INVERT	HOLE RAISE
1	N	18 RCP	160.60	28	NONE	160.18	2"
1	E	4 PVC	162.70	7	NONE	162.58	30 1/2"

1 EA EYEBOLTS&CHAINS SET

1 EA CAST USF GRT 6210

FDOT 434986-1-52-01

STRAIGHT AHEAD CONSTRUCTION

FORTERRA | PIPE & PRECAST

DESIGN BY:	MTT
DATE:	5/11/2018
SCALE:	1:30
ORDER #:	**10960723**
REVISED DATE:	REV BY:

10960723SD-2.idw

5/11/2018

S-024-037-06-00-DB-G-FC-M-0-0

CONCRETE SERVICES

☑ APPROVED

☐ APPROVED AS CORRECTED

☐ REVISE AND RESUBMIT

☐ REJECTED

☐ FOR INFORMATION ONLY

SUBMITTAL WAS REVIEWED FOR DESIGN CONFORMITY AND GENERAL CONFORMANCE TO CONTRACT DOCUMENTS ONLY. THE CONTRACTOR IS RESPONSIBLE FOR CONFIRMING AND CORRELATING DIMENSIONS AT JOB SITES FOR TOLERANCES, CLEARANCES, QUANTITIES, FABRICATION PROCESSES AND TECHNIQUES OF CONSTRUCTION, COORDINATION OF HIS WORK WITH OTHER TRADES AND FULL COMPLIANCE WITH THE CONTRACT DOCUMENTS

BY Roy Arias DATE 5/18/2018

COMPREHENSIVE ENGINEERING SERVICES, INC.

☐ No exceptions taken ☐ Amend and Resubmit

☑ Make corrections noted ☐ Rejected (See Remarks)

Review and comments do not relieve the contractor of responsibility for substantial conformance with the contract plans and specifications.

BY: CRC DATE: 5/23/18

INDEX 232 DBI E

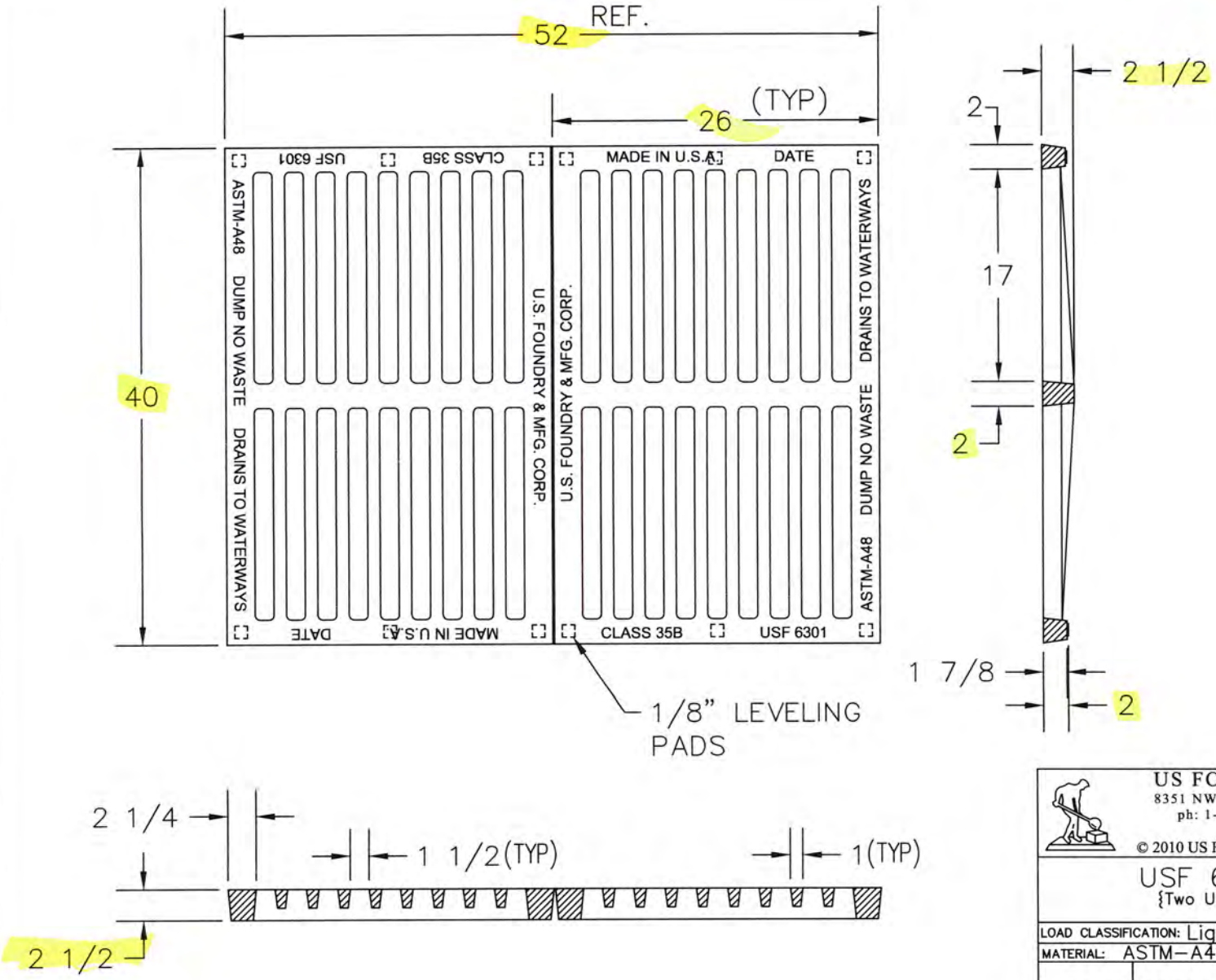

US FOUNDRY & MFG. CORP.
8351 NW 93rd Street, Medley, FL 33166-2025
ph: 1-800-432-9709; fax: 305-887-9429
www.usfoundry.com

© 2010 US Foundry & Mfg. Corp. All Rights Reserved

USF 6300 Grate
{Two USF 6301 Grates}

LOAD CLASSIFICATION: Light Duty			FLOW AREA=915(in)
MATERIAL: ASTM-A48 GRAY IRON CLASS35B			
		WGHT:	SCALE: 1"=1"
Grate No:	8070266	470	DATE: 03-11-96
			DWN. BY: JWS
UNLESS OTHERWISE NOTED WEIGHT IS IN POUNDS AND APPROXIMATED			
REV: 1	DATE: 10-27-06	REV BY: NR	QUOTE# A3558

CONCRETE SERVICES

☑ APPROVED

☐ APPROVED AS CORRECTED

☐ REVISE AND RESUBMIT

☐ REJECTED

☐ FOR INFORMATION ONLY

SUBMITTAL WAS REVIEWED FOR DESIGN CONFORMITY AND GENERAL CONFORMANCE TO CONTRACT DOCUMENTS ONLY THE CONTRACTOR IS RESPONSIBLE FOR CONFIRMING AND CORRELATING DIMENSIONS AT JOB SITES FOR TOLERANCES, CLEARANCES, QUANTITIES, FABRICATION PROCESSES AND TECHNIQUES OF CONSTRUCTION, COORDINATION OF HIS WORK WITH OTHER TRADES AND FULL COMPLIANCE WITH THE CONTRACT DOCUMENTS.

BY Roy Arias DATE 5/18/2018

COMPREHENSIVE ENGINEERING SERVICES, INC.

☑ No exceptions taken ☐ Amend and Resubmit

☐ Make corrections noted ☐ Rejected (See Remarks)

Review and comments do not relieve the contractor of responsibility for substantial conformance with the contract plans and specifications.

BY: CRC DATE: 5/23/18

INDEX 211

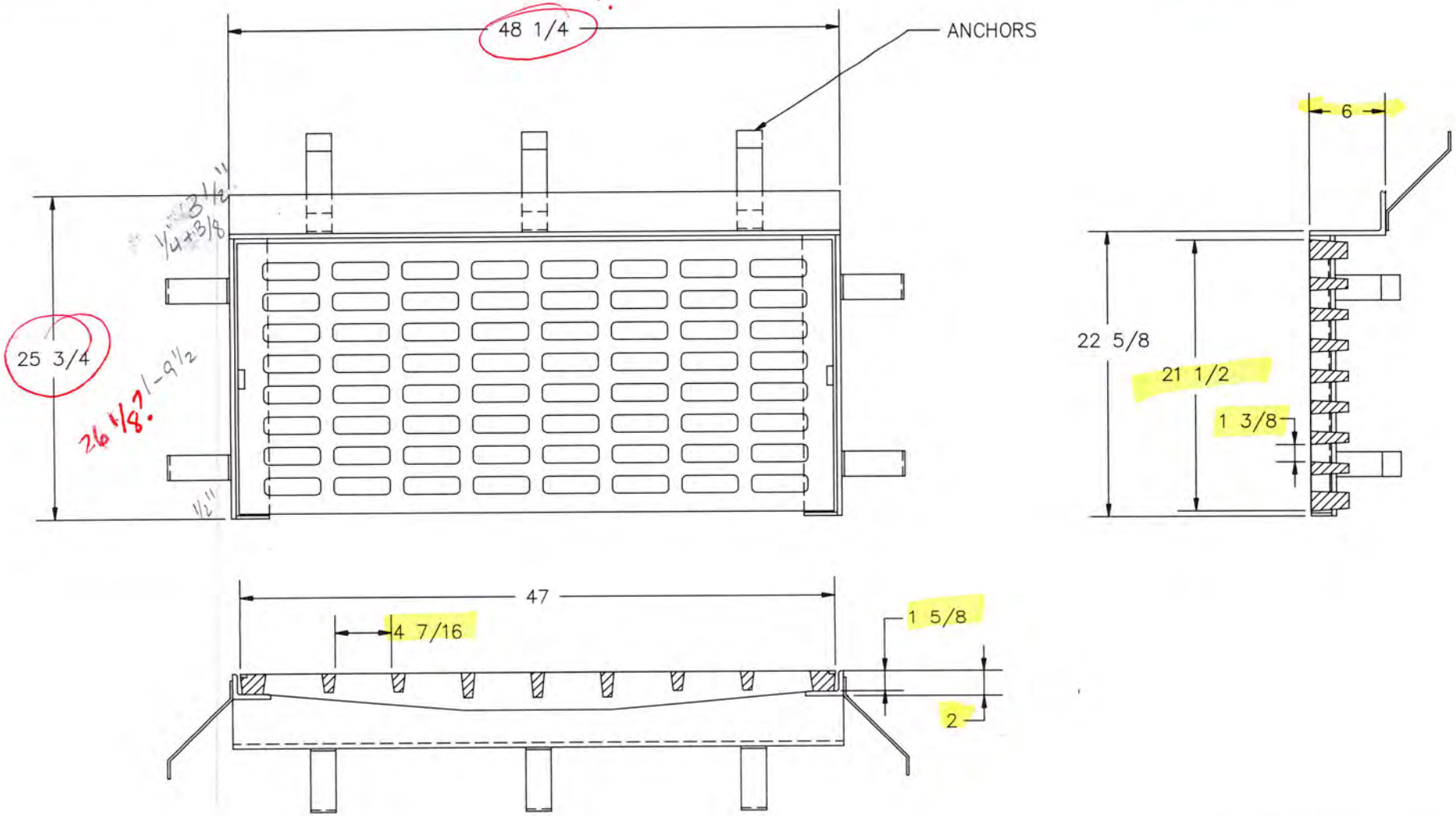

NOTES:
1– FRAME MATERIAL: STEEL, PAINTED TO F.DO.T. SPECIFICATIONS.
2– GRATE MATERIAL: ASTM–A48 CLASS 35B GRAY IRON.
3– FRAME WT: 75 LBS. APP.
4– GRATE WT: 315 LBS. APP.

U.S. FOUNDRY & MFG. CORP. MIAMI, FLORIDA	
USF 5160 FRAME & 6310 GRATE	
DWN. BY:	DATE: 10/19/90
CHK. BY:	DWG. NO: A2409

CONCRETE SERVICES

☑ APPROVED

☐ APPROVED AS CORRECTED

☐ REVISE AND RESUBMIT

☐ REJECTED

☐ FOR INFORMATION ONLY

SUBMITTAL WAS REVIEWED FOR DESIGN CONFORMITY AND GENERAL CONFORMANCE TO CONTRACT DOCUMENTS ONLY. THE CONTRACTOR IS RESPONSIBLE FOR CONFIRMING AND CORRELATING DIMENSIONS AT JOB SITES FOR TOLERANCES, CLEARANCES, QUANTITIES, FABRICATION PROCESSES AND TECHNIQUES OF CONSTRUCTION, COORDINATION OF HIS WORK WITH OTHER TRADES AND FULL COMPLIANCE WITH THE CONTRACT DOCUMENTS.

BY Roy Arias DATE 5/18/2018

COMPREHENSIVE ENGINEERING SERVICES, INC.

☐ No exceptions taken ☐ Amend and Resubmit

☑ Make corrections noted ☐ Rejected (See Remarks)

Review and comments do not relieve the contractor of responsibility for full conformance with the contract plans and specifications.

ARC DATE: 5/23/18

INDEX 232 DBI C

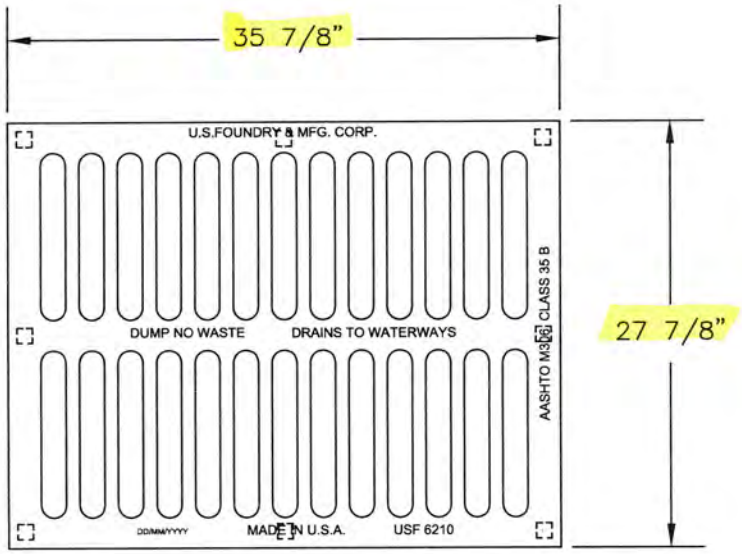

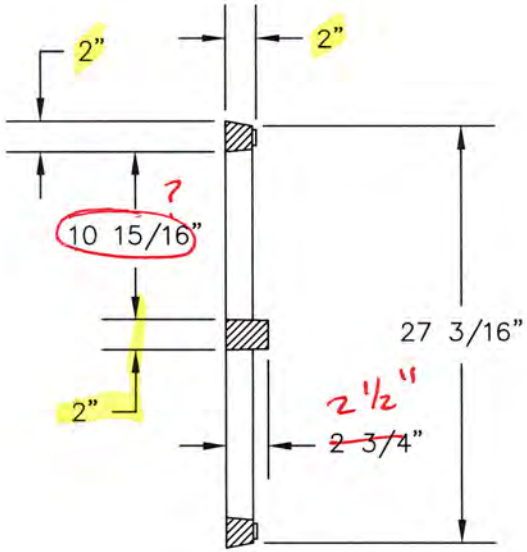

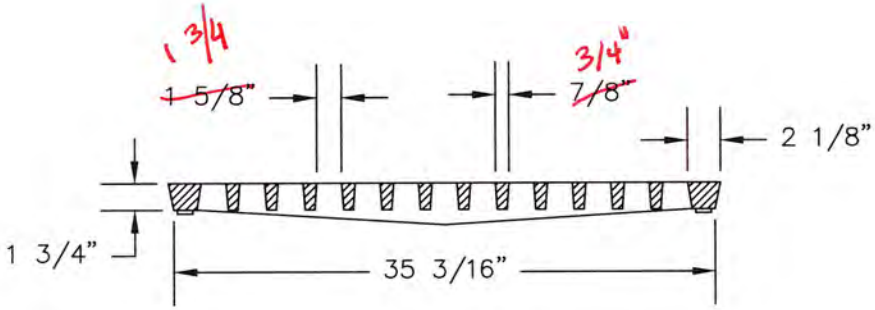

US FOUNDRY & MFG. CORP.
8351 NW 93rd Street, Medley, FL 33166-2025
ph: 1-800-432-9709; fax: 305-887-9429
www.usfoundry.com
© 2010 US Foundry & Mfg. Corp. All Rights Reserved

USF 6210 GRATE

LOAD CLASSIFICATION: Light Duty			FLOW AREA=447.46in²
MATERIAL: ASTM-A48 GRAY IRON CLASS35B			
		WGHT:	SCALE: 1"=1"
Grate No:	8070112	235	DATE: 03-31-95
			DWN. BY: AM
UNLESS OTHERWISE NOTED WEIGHT IS IN POUNDS AND APPROXIMATED			
REV:	DATE:	REV BY:	QUOTE#

CONCRETE SERVICES

☑ APPROVED

☐ APPROVED AS CORRECTED

☐ REVISE AND RESUBMIT

☐ REJECTED

☐ FOR INFORMATION ONLY

SUBMITTAL WAS REVIEWED FOR DESIGN CONFORMITY AND GENERAL CONFORMANCE TO CONTRACT DOCUMENTS ONLY THE CONTRACTOR IS RESPONSIBLE FOR CONFIRMING AND CORRELATING DIMENSIONS AT JOB SITES FOR TOLERANCES, CLEARANCES, QUANTITIES, FABRICATION PROCESSES AND TECHNIQUES OF CONSTRUCTION, COORDINATION OF HIS WORK WITH OTHER TRADES AND FULL COMPLIANCE WITH THE CONTRACT DOCUMENTS.

BY Roy Arias DATE 5/18/2018

COMPREHENSIVE ENGINEERING SERVICES, INC.

☐ No exceptions taken ☐ Amend and Resubmit

☑ Make corrections noted ☐ Rejected (See Remarks)

Review and comments do not relieve the contractor of responsibility for substantial conformance with the contract plans and specifications.

BY ORC DATE: 5/23/18

INDEX 221, TYPE V

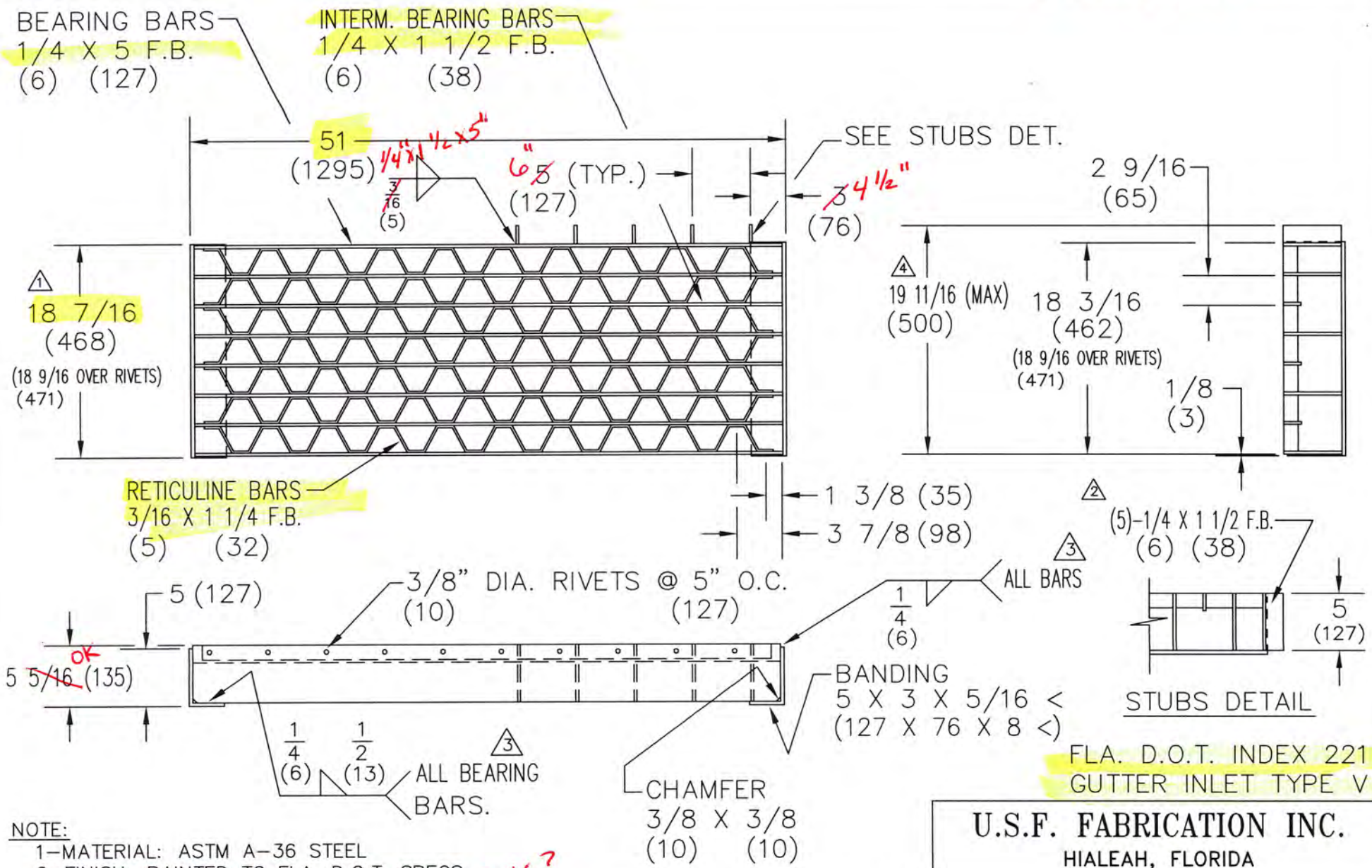

FLA. D.O.T. INDEX 221
GUTTER INLET TYPE V

NOTE:
1–MATERIAL: ASTM A–36 STEEL
2–FINISH: ~~PAINTED~~ TO FLA. D.O.T. SPECS.
3–LOADING NON–TRAFFIC. TRAFFIC LOADING?
4–(2)GRATES REQ'D. PER INLET.
5–1PC. = USF 6653
6–ALL DIM. ARE IN INCHES WITH METRIC EQUIVALENTS (mm) SHOWN IN PARENTHESES.

REV.	DATE	BY	CHK.	DESCRIPTION
5	7/9/97	D.B.		CHANGED FROM HAND DWG. TO AUTOCAD DWG. ADDED METRIC DIM.
4	9/28/92			ADD 'MAX' DIM (19 11/16)
3	8/26/92			REVISED WELDING
2	3/14/90			ADDED LUG, CHANGED SPACING
1	11/15/82			CHANGED: 18 7/16 WAS 18 1/4

U.S.F. FABRICATION INC.
HIALEAH, FLORIDA

USF 6651 GRATE

DWN. BY: DBB	SCALE: 1"= 1'–0"	DATE: 3/19/96
CHK. BY:	DWG. NO: 209A	REV: 5

CONCRETE SERVICES

☑ APPROVED

☐ APPROVED AS CORRECTED

☐ REVISE AND RESUBMIT

☐ REJECTED

☐ FOR INFORMATION ONLY

SUBMITTAL WAS REVIEWED FOR DESIGN CONFORMITY AND GENERAL CONFORMANCE TO CONTRACT DOCUMENTS ONLY THE CONTRACTOR IS RESPONSIBLE FOR CONFIRMING AND CORRELATING DIMENSIONS AT JOB SITES FOR TOLERANCES, CLEARANCES, QUANTITIES, FABRICATION PROCESSES AND TECHNIQUES OF CONSTRUCTION, COORDINATION OF HIS WORK WITH OTHER TRADES AND FULL COMPLIANCE WITH THE CONTRACT DOCUMENTS

BY Roy Arias DATE 5/18/2018

COMPREHENSIVE ENGINEERING SERVICES, INC.

☐ No exceptions taken ☐ Amend and Resubmit

☑ Make corrections noted ☐ Rejected (See Remarks)

Review and comments do not relieve the contractor of responsibility for substantial conformance with the contract plans and specifications

BY: CBC DATE: 5/23/18

INDEX 201 , MH

THE INFORMATION CONTAINED IN THIS DRAWING IS THE SOLE PROPERTY OF U.S. FOUNDRY & MANUFACTURING CORP. ANY REPRODUCTION IN PART OR AS A WHOLE WITHOUT THE WRITTEN PERMISSION OF U.S. FOUNDRY & MANUFACTURING CORP. IS PROHIBITED. U.S. FOUNDRY & MANUFACTURING CORP. RESERVES THE RIGHT TO MAKE MODIFICATIONS TO DESIGN WITHOUT PRIOR NOTICE. DRAWING IS UNCONTROLLED WHEN PRINTED. WEIGHTS AND DIMENSIONS ARE PROVIDED FOR REFERENCE ONLY **© 2014 US FOUNDRY AN EAGLE MANUFACTURING COMPANY**

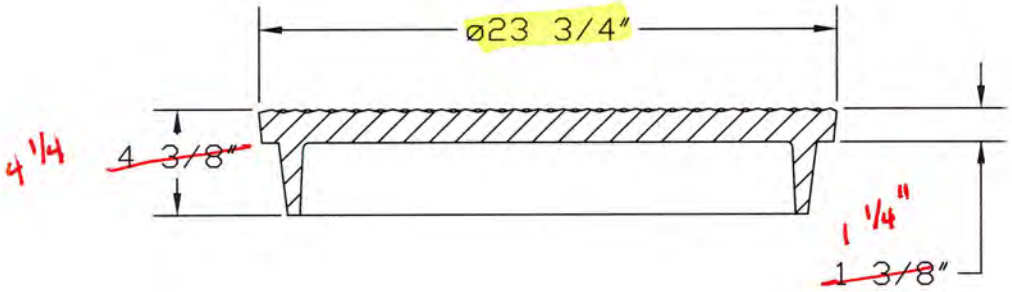

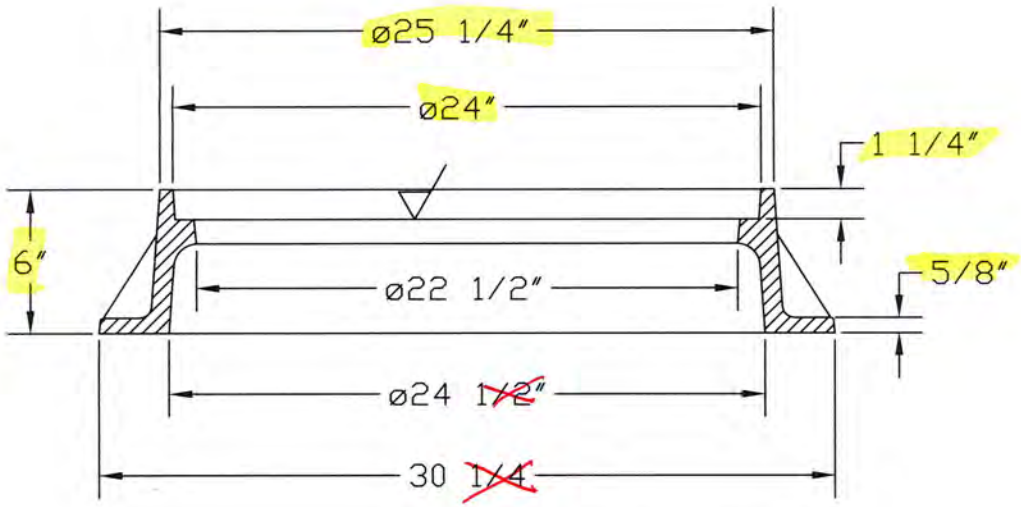

US FOUNDRY
AN EAGLE MANUFACTURING COMPANY
8351 NW 93rd Street
Medley, FL, 33166-2025
ph: 1-800-432-9709
fax: 305-887-9429
www.usfoundry.com
© 2014 All Rights Reserved

USF 170 Ring & XB Cover

LOAD CLASSIFICATION: Heavy Duty			
MATERIAL: ASTM–A48 GRAY IRON CLASS35B			
Ring No:	8021468	SCALE:	1/8"=1"
Cover No:	8010282	DATE:	2/22/2012
		DWN. BY:	ULS/OD
Assembly No:	8022047		
REV: 1	DATE: 2/22/2012	REV BY: OD	QUOTE#

CONCRETE SERVICES

☑ APPROVED

☐ APPROVED AS CORRECTED

☐ REVISE AND RESUBMIT

☐ REJECTED

☐ FOR INFORMATION ONLY

SUBMITTAL WAS REVIEWED FOR DESIGN CONFORMITY AND GENERAL CONFORMANCE TO CONTRACT DOCUMENTS ONLY THE CONTRACTOR IS RESPONSIBLE FOR CONFIRMING AND CORRELATING DIMENSIONS AT JOB SITES FOR TOLERANCES, CLEARANCES, QUANTITIES, FABRICATION PROCESSES AND TECHNIQUES OF CONSTRUCTION, COORDINATION OF HIS WORK WITH OTHER TRADES AND FULL COMPLIANCE WITH THE CONTRACT DOCUMENTS

BY Roy Arias DATE 5/18/2018

COMPREHENSIVE ENGINEERING SERVICES, INC.

☐ No exceptions taken ☐ Amend and Resubmit

☑ Make corrections noted ☐ Rejected (See Remarks)

Review and comments do not relieve the contractor of responsibility for substantial conformance with the contract plans and specifications.

BY CAC DATE 5/23/18

INDEX 211

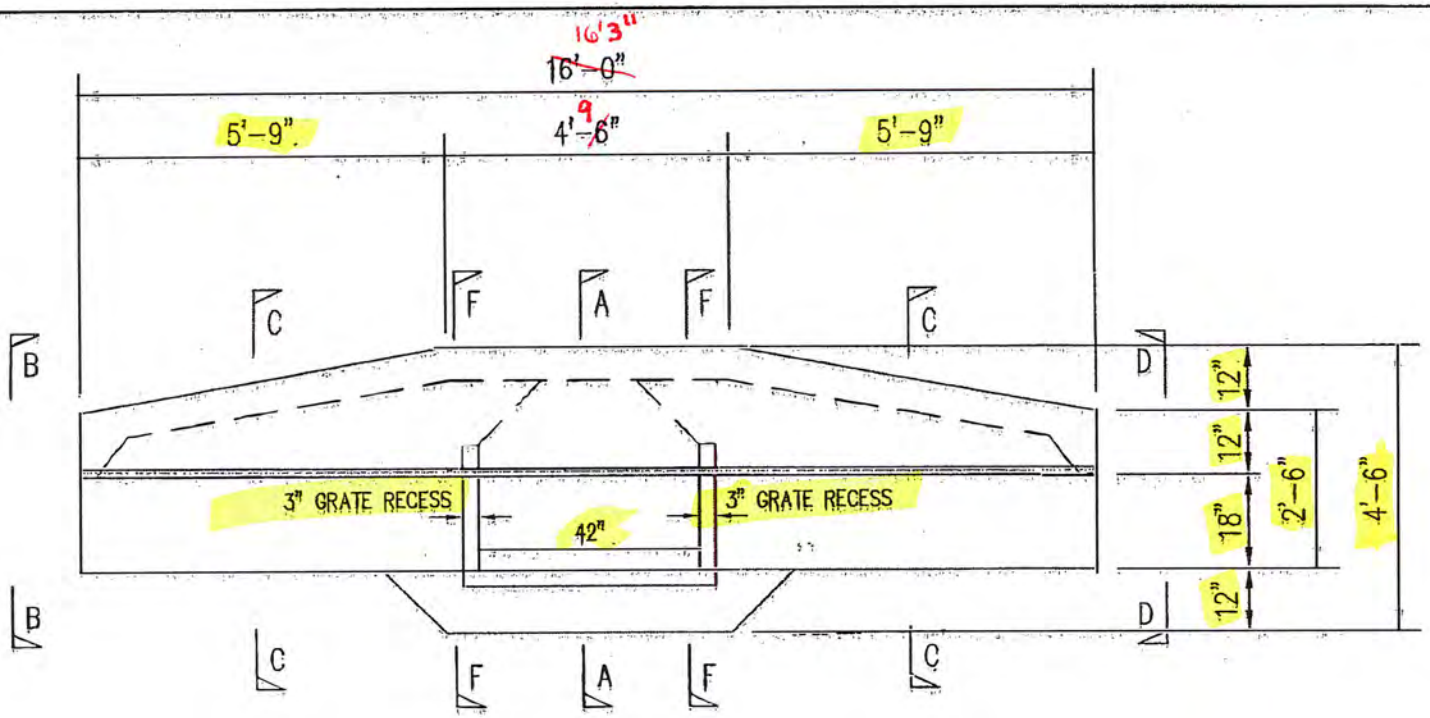

PLAN VIEW OF TYPE 6 THROAT TOP
FDOT INDEX 211
TOP SLAB DETAIL FOR TYPE "F" CURB

DESIGN APPROVED
FLORIDA DEPARTMENT OF TRANSPORTATION

DATE: 03/05/12
BY: Jennifer Green for Rick Renna
State Drainage Engineer

Revised 1-25-2012

TYPE ~~5&~~6 THROAT INLET TOPS
VARIOUS FDOT PROJECTS

DRAWN BY: MHL
SCALE : 3/8"=1'-0"

FORTERRA | PIPE & PRECAST

C:\r13\Jobs\TYPE5TOP.DWG

Date: 6/1/1998

CONCRETE SERVICES

☑ APPROVED

☐ APPROVED AS CORRECTED

☐ REVISE AND RESUBMIT

☐ REJECTED

☐ FOR INFORMATION ONLY

SUBMITTAL WAS REVIEWED FOR DESIGN CONFORMITY AND GENERAL CONFORMANCE TO CONTRACT DOCUMENTS ONLY. THE CONTRACTOR IS RESPONSIBLE FOR CONFIRMING AND CORRELATING DIMENSIONS AT JOB SITES FOR TOLERANCES, CLEARANCES, QUANTITIES, FABRICATION PROCESSES AND TECHNIQUES OF CONSTRUCTION, COORDINATION OF HIS WORK WITH OTHER TRADES AND FULL COMPLIANCE WITH THE CONTRACT DOCUMENTS.

BY Roy Arias DATE 5/18/2018

COMPREHENSIVE ENGINEERING SERVICES, INC.

☐ No exceptions taken ☐ Amend and Resubmit

☑ Make corrections noted ☐ Rejected (See Remarks)

Review and comments do not relieve the contractor of responsibility for substantial conformance with the contract plans and specifications.

BY: CRL DATE: 5/23/18

INDEX 211

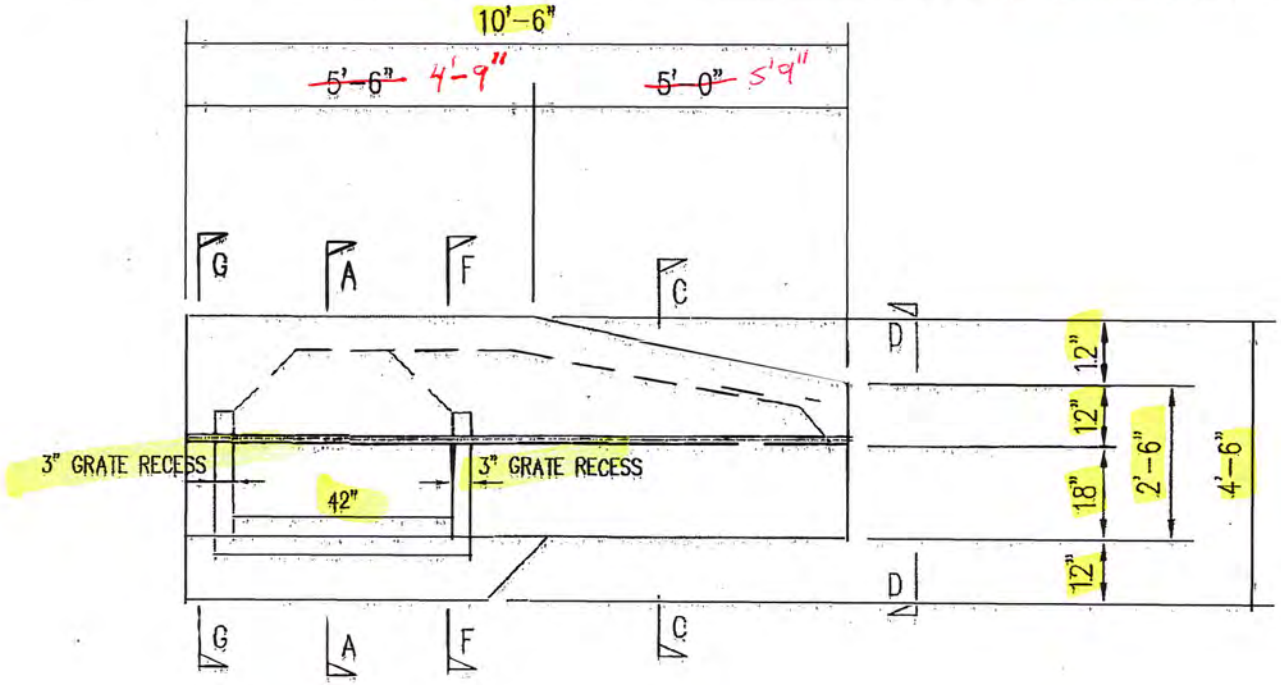

PLAN VIEW OF TYPE 5-RIGHT THROAT TOP
FDOT INDEX 211
TOP SLAB DETAIL FOR TYPE "F" CURB

DESIGN APPROVED
FLORIDA DEPARTMENT OF TRANSPORTATION

DATE: 03/05/12
BY: Jennifer Hom for Rick Rama
~~State Drainage Engineer~~

Revised 1-25-2012

TYPE ~~5&6~~ THROAT INLET TOPS
VARIOUS FDOT PROJECTS

MHL

SCALE : 3/8"=1'-0"

FORTERRA | PIPE & PRECAST

C:\r13\Jobs\TYP5TOP.DWG

Date: 6/1/1998

CONCRETE SERVICES

☑ APPROVED

☐ APPROVED AS CORRECTED

☐ REVISE AND RESUBMIT

☐ REJECTED

☐ FOR INFORMATION ONLY

SUBMITTAL WAS REVIEWED FOR DESIGN CONFORMITY AND GENERAL CONFORMANCE TO CONTRACT DOCUMENTS ONLY. THE CONTRACTOR IS RESPONSIBLE FOR CONFIRMING AND CORRELATING DIMENSIONS AT JOB SITES FOR TOLERANCES, CLEARANCES, QUANTITIES, FABRICATION PROCESSES AND TECHNIQUES OF CONSTRUCTION, COORDINATION OF HIS WORK WITH OTHER TRADES AND FULL COMPLIANCE WITH THE CONTRACT DOCUMENTS.

BY Roy Arias DATE 5/18/2018

COMPREHENSIVE ENGINEERING SERVICES, INC.

☐ No exceptions taken ☐ Amend and Resubmit

☑ Make corrections noted ☐ Rejected (See Remarks)

Review and comments do not relieve the contractor of responsibility for substantial conformance with the contract plans and specifications.

BY: CRC DATE: 5/23/18

INDEX 211

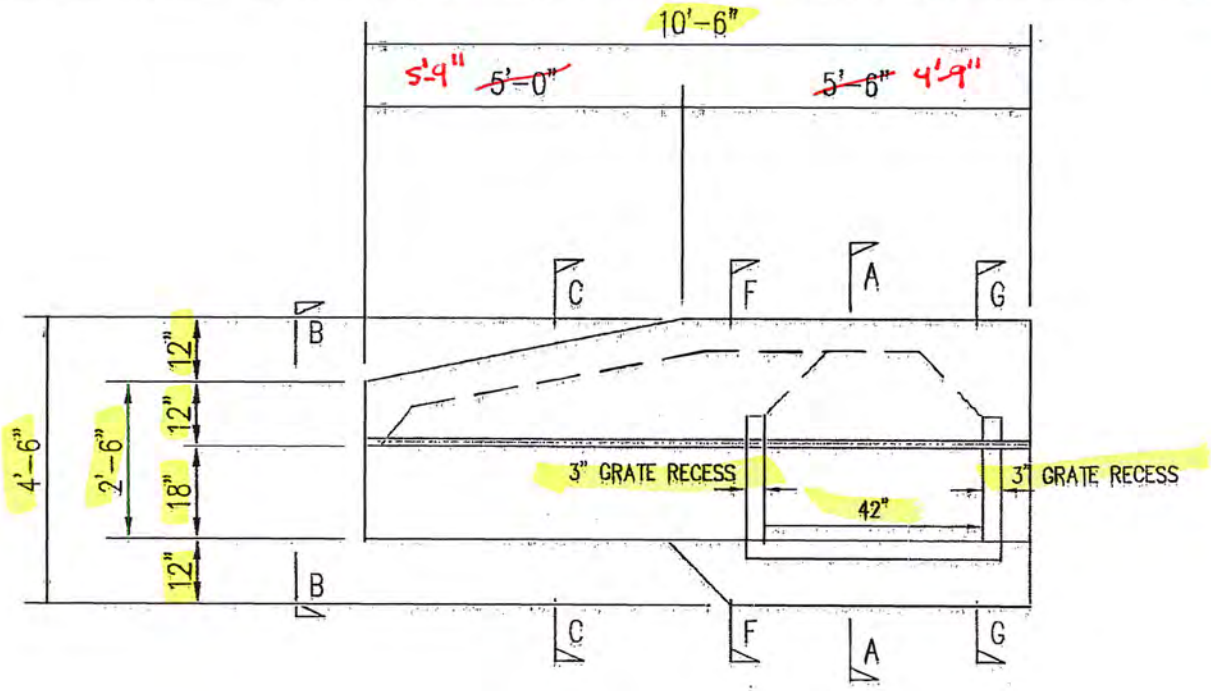

PLAN VIEW OF TYPE 5-LEFT THROAT TOP
FDOT INDEX 211
TOP SLAB DETAIL FOR TYPE "F" CURB

DESIGN APPROVED
FLORIDA DEPARTMENT OF TRANSPORTATION

DATE: 03/05/12
BY: Dinesh Gheen for Rick Renna
State Drainage Engineer

Rev. 1-25-2012

TYPE 5~~&6~~ THROAT INLET TOPS
VARIOUS FDOT PROJECTS

DRAWN BY: MHL
SCALE : 3/8"=1'-0"

FORTERRA | PIPE & PRECAST

C:\r18\Jobs\TYPE5TOP.DWG

Date: 6/1/1998

CONCRETE SERVICES

☑ APPROVED

☐ APPROVED AS CORRECTED

☐ REVISE AND RESUBMIT

☐ REJECTED

☐ FOR INFORMATION ONLY

SUBMITTAL WAS REVIEWED FOR DESIGN CONFORMITY AND GENERAL CONFORMANCE TO CONTRACT DOCUMENTS ONLY. THE CONTRACTOR IS RESPONSIBLE FOR CONFIRMING AND CORRELATING DIMENSIONS AT JOB SITES FOR TOLERANCES, CLEARANCES, QUANTITIES, FABRICATION PROCESSES AND TECHNIQUES OF CONSTRUCTION, COORDINATION OF HIS WORK WITH OTHER TRADES AND FULL COMPLIANCE WITH THE CONTRACT DOCUMENTS.

BY Roy Arias DATE 5/18/2018

COMPREHENSIVE ENGINEERING SERVICES, INC.

☐ No exceptions taken ☐ Amend and Resubmit

☑ Make corrections noted ☐ Rejected (See Remarks)

Review and comments do not relieve the contractor of responsibility for substantial conformance with the contract plans and specifications.

BY: CBC DATE: 5/23/18

INDEX 211

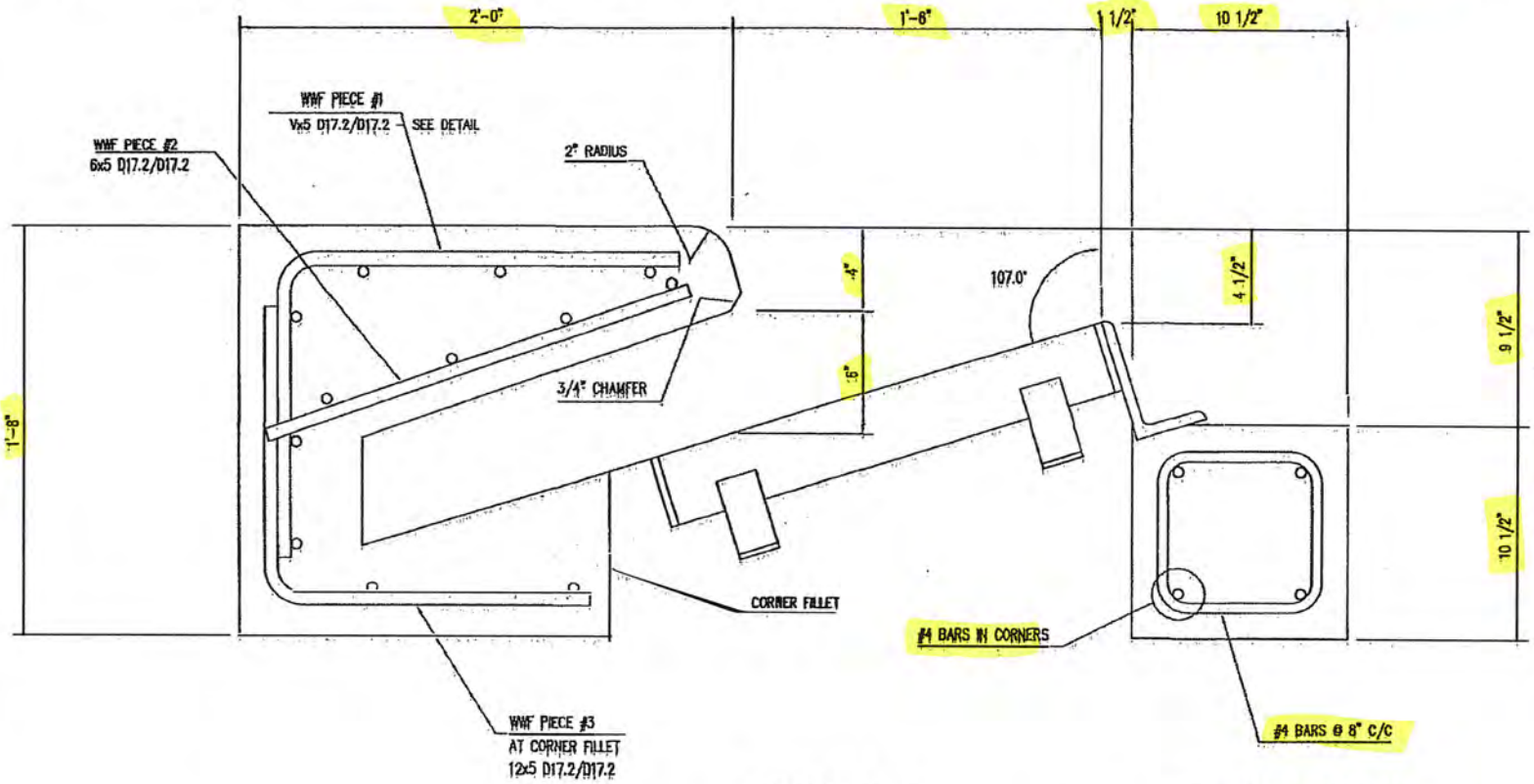

SECTION A-A

DESIGN APPROVED
FLORIDA DEPARTMENT OF TRANSPORTATION

DATE: 03/05/12
BY: Jennifer Hunter for Rick Renna
State Drainage Engineer

SPECIFICATIONS:
1. ALL REINFORCING MATS TO BE GRADE 70 WELDED WIRE FABRIC.
   ALL REINFORCING BARS TO BE GRADE 60.
2. 4000 PSI CONCRETE @ 28 DAY WITH TYPE I/II CEMENT
3. ALL STEEL COVER TO BE 1 1/4"

Revised 1-25-2012

TYPE 5&6 THROAT INLET TOPS
VARIOUS FDOT PROJECTS

DRAWN BY: MHL
SCALE : 1 1/2"=1'-0"

FORTERRA | PIPE & PRECAST

C:\x13\Jobs\TYP5&6T02.DWG
Date: 8/1/1998

CONCRETE SERVICES

☑ APPROVED

☐ APPROVED AS CORRECTED

☐ REVISE AND RESUBMIT

☐ REJECTED

☐ FOR INFORMATION ONLY

SUBMITTAL WAS REVIEWED FOR DESIGN CONFORMITY AND GENERAL CONFORMANCE TO CONTRACT DOCUMENTS ONLY. THE CONTRACTOR IS RESPONSIBLE FOR CONFIRMING AND CORRELATING DIMENSIONS AT JOB SITES FOR TOLERANCES, CLEARANCES, QUANTITIES, FABRICATION PROCESSES AND TECHNIQUES OF CONSTRUCTION, COORDINATION OF HIS WORK WITH OTHER TRADES AND FULL COMPLIANCE WITH THE CONTRACT DOCUMENTS.

BY Roy Arias DATE 5/18/2018

COMPREHENSIVE ENGINEERING SERVICES, INC.

☑ No exceptions taken ☐ Amend and Resubmit

☐ Make corrections noted ☐ Rejected (See Remarks)

Review and comments do not relieve the contractor of responsibility for substantial conformance with the contract plans and specifications.

BY CH DATE: 5/23/18

INDEX 211

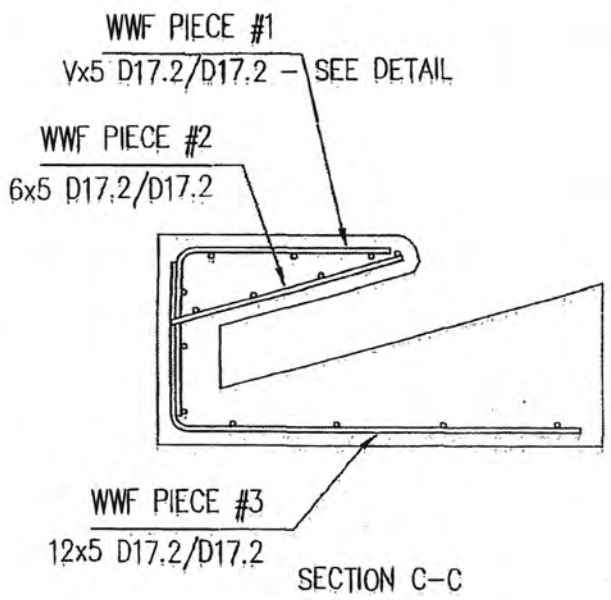

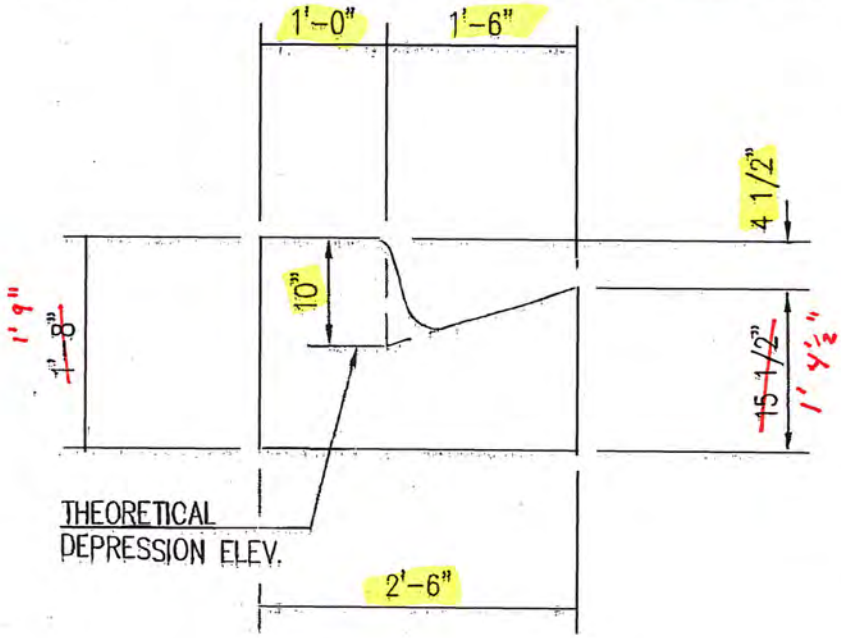

DESIGN APPROVED
FLORIDA DEPARTMENT OF TRANSPORTATION

DATE: 03/05/13
BY: Jennifer Green for Rick Renna
State Drainage Engineer

SECTION B–B (SHOWN)
SECTION D–D (OPPOSITE HAND)

COMPREHENSIVE ENGINEERING SERVICES, INC.

☐ No exceptions taken ☐ Amend and Resubmit
☑ Make corrections noted ☐ Rejected (See Remarks)

Review and comments do not relieve the contractor of responsibility for substantial conformance with the contract plans and specifications.

BY: CHL DATE: 5/23/18

Revised 2–28–2012

TYPE 5&6 THROAT INLET TOPS
VARIOUS FDOT PROJECTS

MHL
3/4"=1'-0"

FORTERRA | PIPE & PRECAST

C:\r18\Jobs\TYPE5TOP.DWG

Date: 6/1/1998

CONCRETE SERVICES

☑ APPROVED

☐ APPROVED AS CORRECTED

☐ REVISE AND RESUBMIT

☐ REJECTED

☐ FOR INFORMATION ONLY

SUBMITTAL WAS REVIEWED FOR DESIGN CONFORMITY AND GENERAL CONFORMANCE TO CONTRACT DOCUMENTS ONLY. THE CONTRACTOR IS RESPONSIBLE FOR CONFIRMING AND CORRELATING DIMENSIONS AT JOB SITES FOR TOLERANCES, CLEARANCES, QUANTITIES, FABRICATION PROCESSES AND TECHNIQUES OF CONSTRUCTION, COORDINATION OF HIS WORK WITH OTHER TRADES AND FULL COMPLIANCE WITH THE CONTRACT DOCUMENTS.

BY Roy Arias DATE 5/18/2018

COMPREHENSIVE ENGINEERING SERVICES, INC

☐ No exceptions taken ☐ Amend and Resubmit

☑ Make corrections noted ☐ Rejected (See Remarks)

Review and comments do not relieve the contractor of responsibility for substantial conformance with the contract plans and specifications.

BY: CLC DATE: 5/23/18

INDEX 211

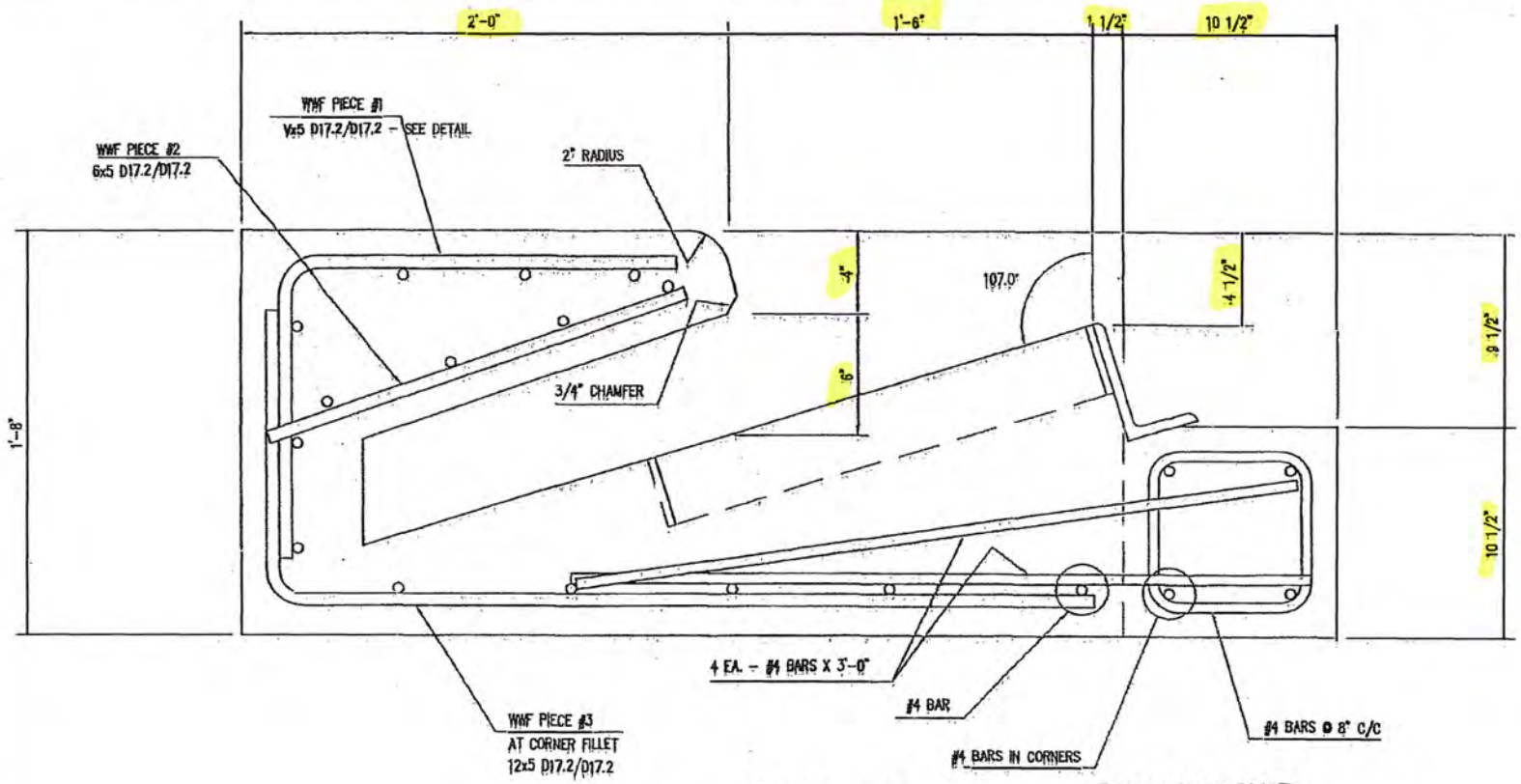

SECTION F-F

DESIGN APPROVED
FLORIDA DEPARTMENT OF TRANSPORTATION

DATE: 03/05/13
BY: Jennifer Green for Rick Renna
State Drainage Engineer

SPECIFICATIONS:
1. ALL REINFORCING MATS TO BE GRADE 70 WELDED WIRE FABRIC. ALL REINFORCING BARS TO BE GRADE 60.
2. 4000 PSI CONCRETE @ 28 DAY WITH TYPE I/II CEMENT
3. ALL STEEL COVER TO BE 1 1/4"

Revised 1-25-2012

TYPE 5&6 THROAT INLET TOPS
VARIOUS FDOT PROJECTS

DRAWN BY: MHL
SCALE : 1 1/2"=1'-0"

FORTERRA | PIPE & PRECAST

C:\r13\Jobs\TYP5&6TOP.DWG

Date: 6/1/1988

CONCRETE SERVICES

☑ APPROVED

☐ APPROVED AS CORRECTED

☐ REVISE AND RESUBMIT

☐ REJECTED

☐ FOR INFORMATION ONLY

SUBMITTAL WAS REVIEWED FOR DESIGN CONFORMITY AND GENERAL CONFORMANCE TO CONTRACT DOCUMENTS ONLY. THE CONTRACTOR IS RESPONSIBLE FOR CONFIRMING AND CORRELATING DIMENSIONS AT JOB SITES FOR TOLERANCES, CLEARANCES, QUANTITIES, FABRICATION PROCESSES AND TECHNIQUES OF CONSTRUCTION, COORDINATION OF HIS WORK WITH OTHER TRADES AND FULL COMPLIANCE WITH THE CONTRACT DOCUMENTS.

BY Roy Arias DATE 5/18/2018

COMPREHENSIVE ENGINEERING SERVICES, INC.

☑ No exceptions taken ☐ Amend and Resubmit

☐ Make corrections noted ☐ Rejected (See Remarks)

Review and comments do not relieve the contractor of responsibility for substantial conformance with the contract plans and specifications.

BY CHC DATE: 5/23/18

INDEX 211

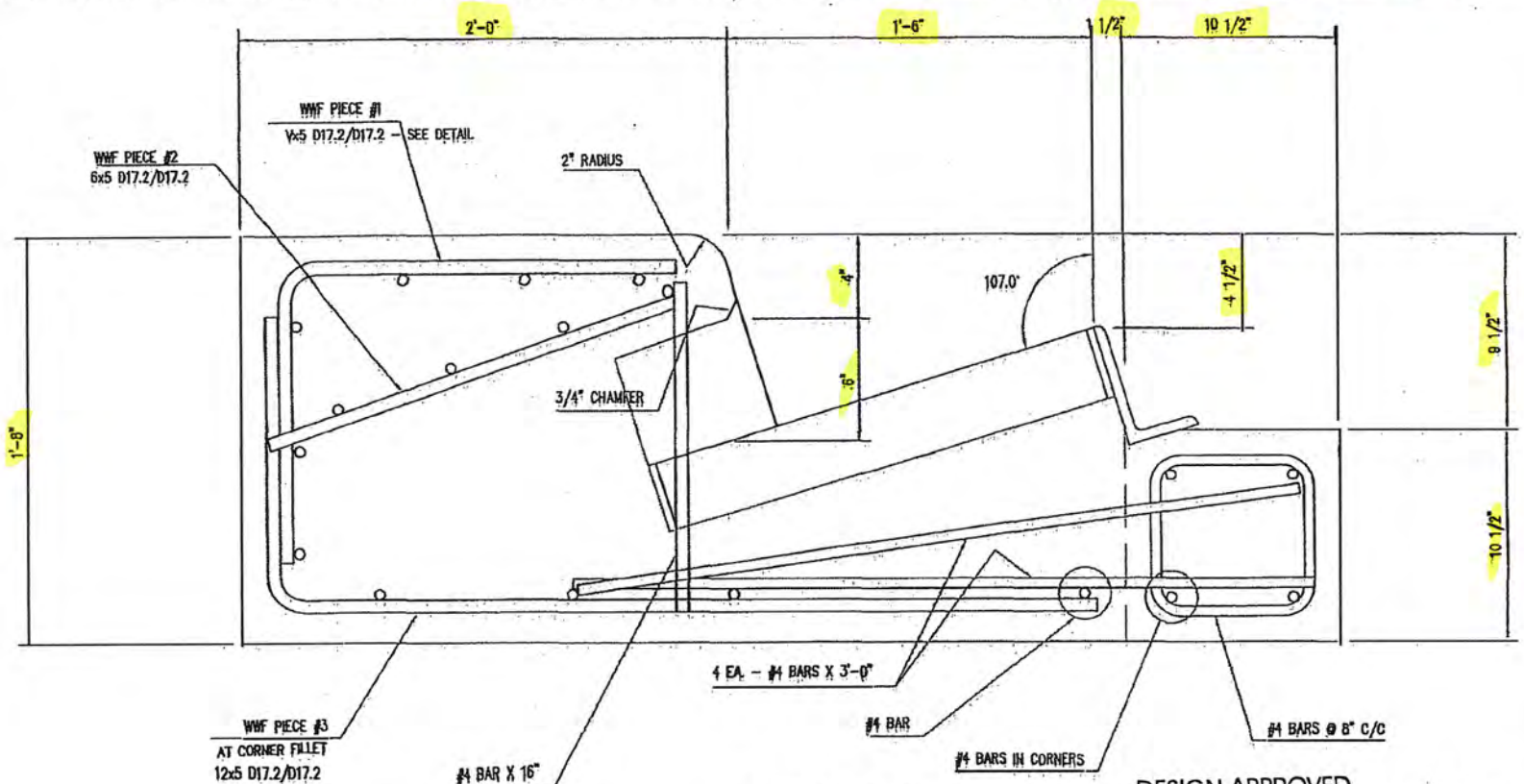

SECTION G–G
(TYPE 5 TOP ONLY)

DESIGN APPROVED
FLORIDA DEPARTMENT OF TRANSPORTATION

DATE: 03/05/12
DIV. Jennifer Allen for Rick Renne
State Drainage Engineer

SPECIFICATIONS:
1. ALL REINFORCING MATS TO BE GRADE 70 WELDED WIRE FABRIC. ALL REINFORCING BARS TO BE GRADE 60.
2. 4000 PSI CONCRETE @ 28 DAY WITH TYPE I/II CEMENT
3. ALL STEEL COVER TO BE 1 1/4"

Revised 1-25-2012

TYPE 5&6 THROAT INLET TOPS
VARIOUS FDOT PROJECTS

DRAWN BY: MHL
SCALE : 1 1/2"=1'-0"

FORTERRA | PIPE & PRECAST

C:\r18\Jobs\TYPE5TOP.DWG
Date: 8/1/1998

CONCRETE SERVICES

☑ APPROVED

☐ APPROVED AS CORRECTED

☐ REVISE AND RESUBMIT

☐ REJECTED

☐ FOR INFORMATION ONLY

SUBMITTAL WAS REVIEWED FOR DESIGN CONFORMITY AND GENERAL CONFORMANCE TO CONTRACT DOCUMENTS ONLY. THE CONTRACTOR IS RESPONSIBLE FOR CONFIRMING AND CORRELATING DIMENSIONS AT JOB SITES FOR TOLERANCES, CLEARANCES, QUANTITIES, FABRICATION PROCESSES AND TECHNIQUES OF CONSTRUCTION, COORDINATION OF HIS WORK WITH OTHER TRADES AND FULL COMPLIANCE WITH THE CONTRACT DOCUMENTS.

BY Roy Arias DATE 5/18/2018

COMPREHENSIVE ENGINEERING SERVICES, INC.

☑ No exceptions taken ☐ Amend and Resubmit

☐ Make corrections noted ☐ Rejected (See Remarks)

Review and comments do not relieve the contractor of responsibility for substantial conformance with the contract plans and specifications.

BY: CAL DATE: 5/23/18

INDOX 211

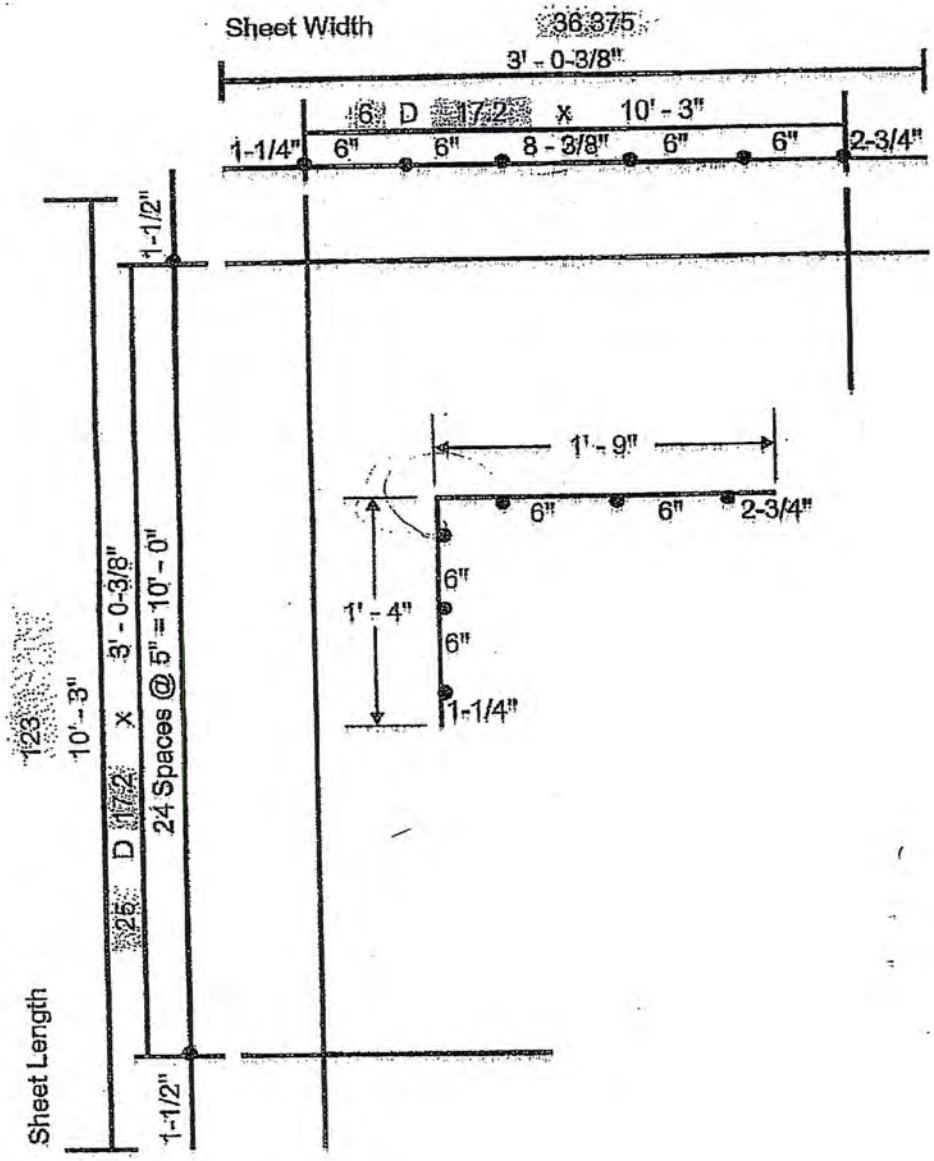

Phone:
Fax:

CUSTOMER: Stock

PHONE:
PROJECT P-5 -2008 Curb Inlet
LOCATION Florida
DATE 12/28/2007 MK-NO: Piece #1

	Wires	L.W.1	L.W.2	C.W.
L.W. SPA				
C.W. SPA				
L.W. 1 SIZE	NO. PER			
L.W. 2 SIZE	SHEET	6		25
C.W. SIZE	AREA	0.172		0.172
WIDTH	LENGTH	10.25		3.031
LENGTH	WT./SHT	36.0		44.3
OHLS	SHT./WT	80.3		
OHRS	QTY	1		
OHT	SUBTTL			
OHB	WEIGHT	36.0		44.3
YIELD	TOTAL			
BENT	WEIGHT	80.3		
COLOR	Pcs/Ordr	6		25
CODE	#CSF			
SPECIAL INSTR				
Price / Sheet:				
Approved By:				

DESIGN APPROVED
FLORIDA DEPARTMENT OF TRANSPORTATION

DATE: 03/05/12
BY: [signature] for Rick Renna
State Drainage Engineer

CONCRETE SERVICES

- [x] APPROVED
- [ ] APPROVED AS CORRECTED
- [ ] REVISE AND RESUBMIT
- [ ] REJECTED
- [ ] FOR INFORMATION ONLY

SUBMITTAL WAS REVIEWED FOR DESIGN CONFORMITY AND GENERAL CONFORMANCE TO CONTRACT DOCUMENTS ONLY. THE CONTRACTOR IS RESPONSIBLE FOR CONFIRMING AND CORRELATING DIMENSIONS AT JOB SITES FOR TOLERANCES, CLEARANCES, QUANTITIES, FABRICATION PROCESSES AND TECHNIQUES OF CONSTRUCTION, COORDINATION OF HIS WORK WITH OTHER TRADES AND FULL COMPLIANCE WITH THE CONTRACT DOCUMENTS.

BY Roy Arias DATE 5/18/2018

INDEX 211

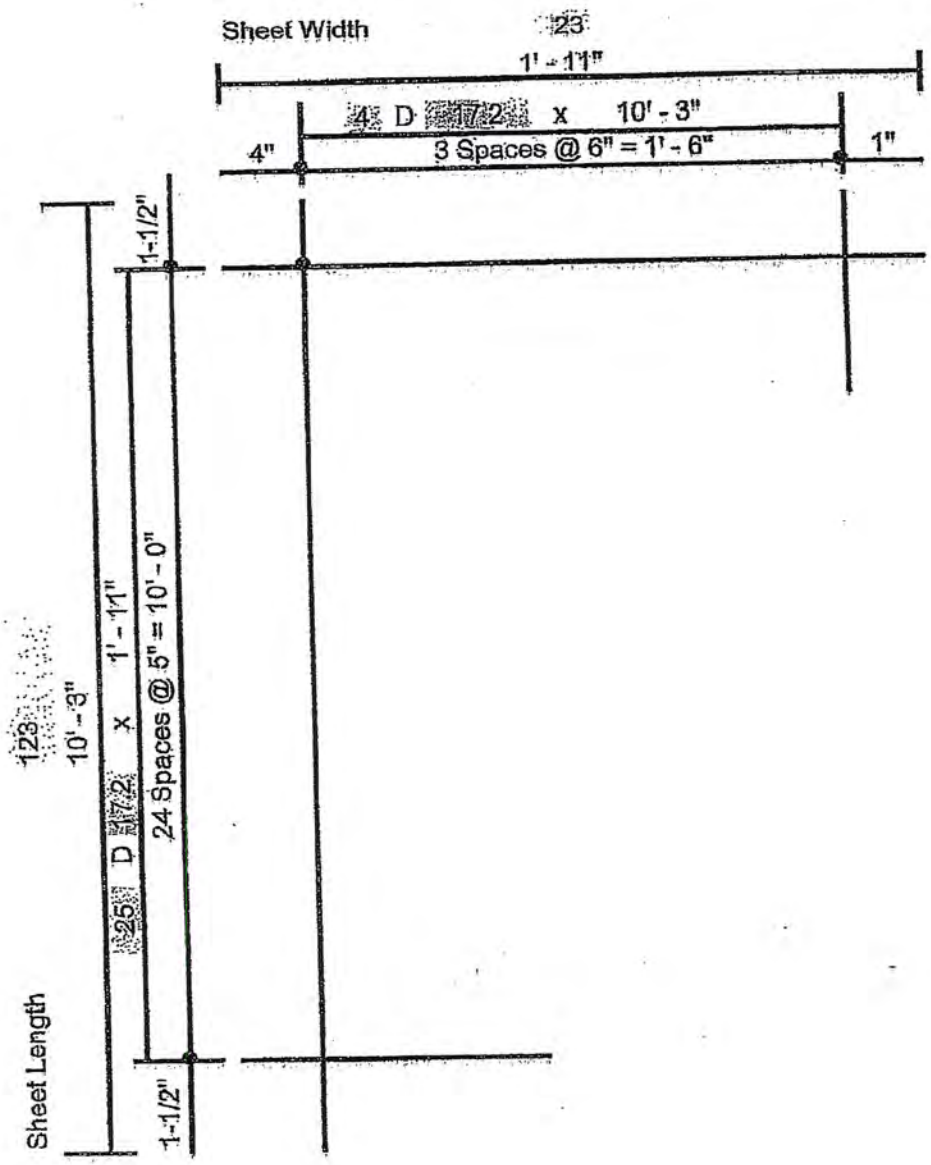

Phone:
Fax:

CUSTOMER: Stock

PHONE:
PROJECT P-5 -2008 Curb Inlet
LOCATION Florida
DATE 12/28/2007 MK-NO: Piece #2

	Wires	L.W.1	L.W.2	C.W.
L.W. SPA				
C.W. SPA				
L.W. 1 SIZE	NO. PER SHEET	4		25
L.W. 2 SIZE				
C.W. SIZE	AREA	0.172		0.172
WIDTH	LENGTH	10.25		1.92
LENGTH	WT./SHT	24.0		28.0
OHLS	SHT./WT	52.0		
OHRS	QTY	1		
OHT	SUBTTL WEIGHT	24.0		28.0
OHB				
YIELD	TOTAL WEIGHT	52.0		
BENT				
COLOR	Pcs/Ordr	4		25
CODE	#CSF			
SPECIAL INSTR				
Price / Sheet:				
Approved By:				

DESIGN APPROVED
FLORIDA DEPARTMENT OF TRANSPORTATION

DATE: 03/05/12
BY: [signature] for Rick Renna
State Drainage Engineer

CONCRETE SERVICES

- [x] APPROVED
- [ ] APPROVED AS CORRECTED
- [ ] REVISE AND RESUBMIT
- [ ] REJECTED
- [ ] FOR INFORMATION ONLY

SUBMITTAL WAS REVIEWED FOR DESIGN CONFORMITY AND GENERAL CONFORMANCE TO CONTRACT DOCUMENTS ONLY THE CONTRACTOR IS RESPONSIBLE FOR CONFIRMING AND CORRELATING DIMENSIONS AT JOB SITES FOR TOLERANCES, CLEARANCES, QUANTITIES, FABRICATION PROCESSES AND TECHNIQUES OF CONSTRUCTION, COORDINATION OF HIS WORK WITH OTHER TRADES AND FULL COMPLIANCE WITH THE CONTRACT DOCUMENTS

BY Roy Arias DATE 5/18/2018

INDEX 211

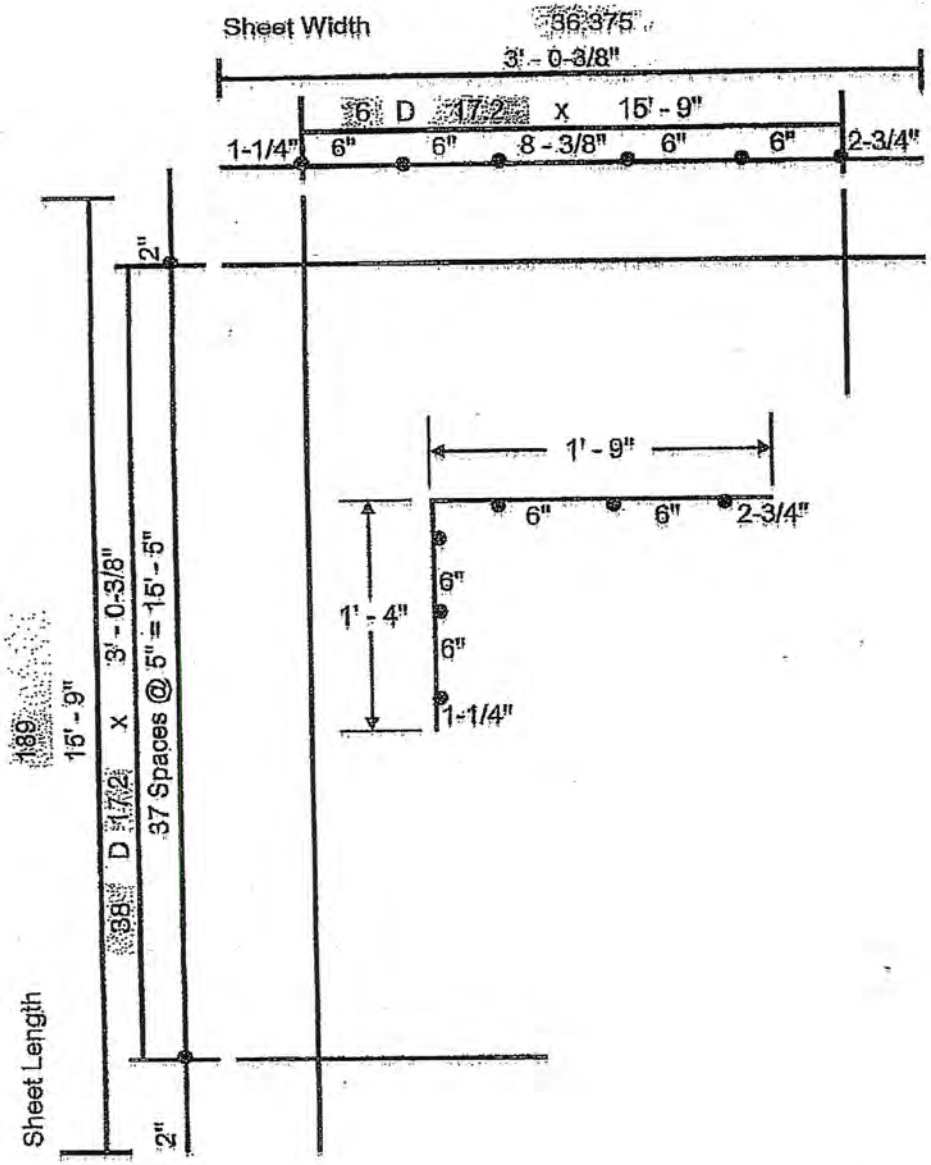

Phone:
Fax:

CUSTOMER: Stock

PHONE:
PROJECT P-6 -2008 Curb Inlet
LOCATION Florida
DATE 12/28/2007 MK-NO: Piece #1

	Wires	L.W.1	L.W.2	C.W.
L.W. SPA				
C.W. SPA				
L.W. 1 SIZE	NO. PER			
L.W. 2 SIZE	SHEET	6		38
C.W. SIZE	AREA	0.172		0.172
WIDTH	LENGTH	15.75		3.03
LENGTH	WT./SHT	55.3		67.4
OHLS	SHT./WT	122.6		
OHRS	QTY	1		
OHT	SUBTTL			
OHB	WEIGHT	55.3		67.4
YIELD	TOTAL			
BENT	WEIGHT	122.6		
COLOR	Pcs/Ordr	6		38
CODE	#CSF			
SPECIAL INSTR.				
Price / Sheet:				

Approved By:

DESIGN APPROVED
FLORIDA DEPARTMENT OF TRANSPORTATION

DATE: 03/05/12
BY: [signature] for Rick Renner
State Drainage Engineer

CONCRETE SERVICES

☑ APPROVED

☐ APPROVED AS CORRECTED

☐ REVISE AND RESUBMIT

☐ REJECTED

☐ FOR INFORMATION ONLY

SUBMITTAL WAS REVIEWED FOR DESIGN CONFORMITY AND GENERAL CONFORMANCE TO CONTRACT DOCUMENTS ONLY THE CONTRACTOR IS RESPONSIBLE FOR CONFIRMING AND CORRELATING DIMENSIONS AT JOB SITES FOR TOLERANCES, CLEARANCES, QUANTITIES, FABRICATION PROCESSES AND TECHNIQUES OF CONSTRUCTION, COORDINATION OF HIS WORK WITH OTHER TRADES AND FULL COMPLIANCE WITH THE CONTRACT DOCUMENTS

BY Roy Arias DATE 5/18/2018

INDEX 211

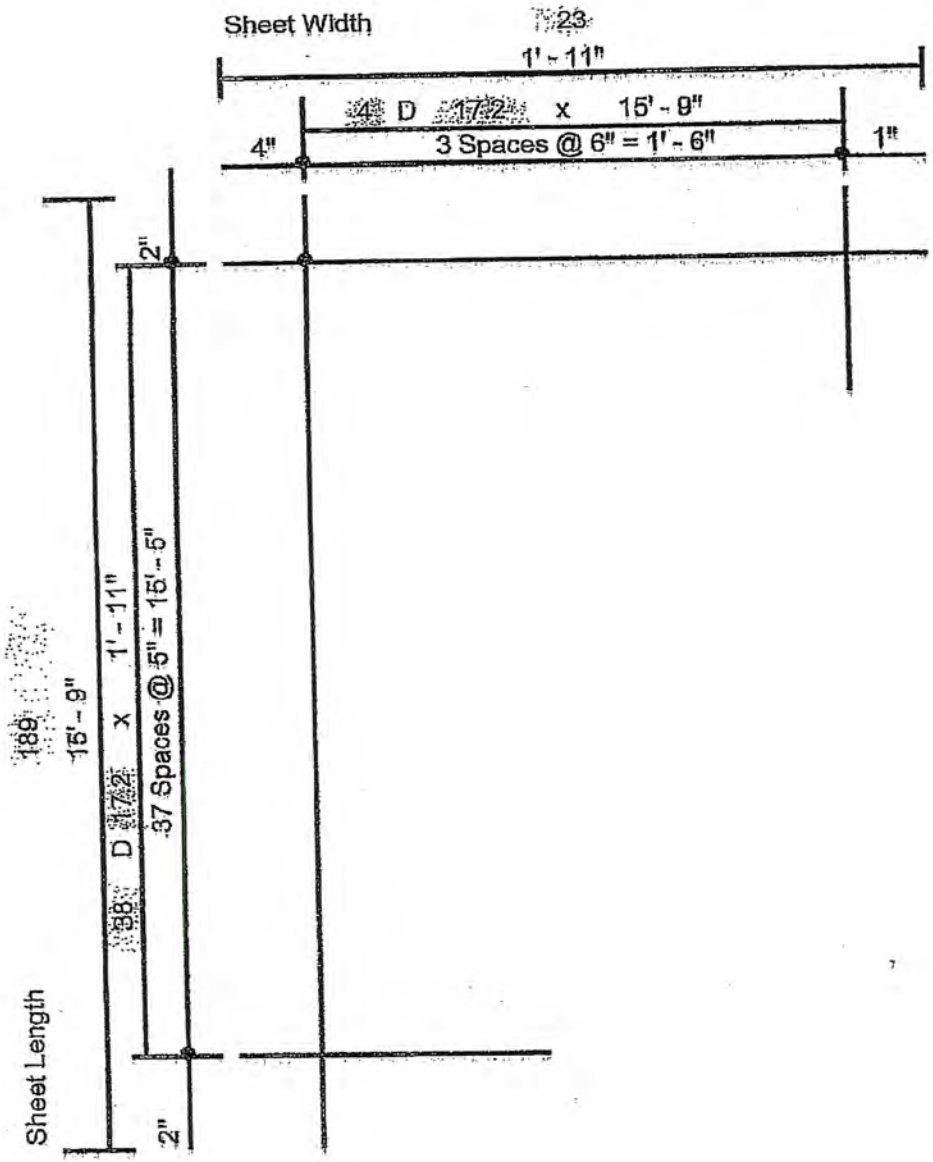

Phone:
Fax:

CUSTOMER: Stock

PHONE:
PROJECT P-6 -2008 Curb Inlet
LOCATION Florida
DATE 12/28/2007 MK-NO: Piece #2

	Wires	L.W.1	L.W.2	C.W.
L.W. SPA				
C.W. SPA				
L.W. 1 SIZE	NO. PER SHEET	4		38
L.W. 2 SIZE				
C.W. SIZE	AREA	0.172		0.172
WIDTH	LENGTH	15.75		1.92
LENGTH	WT./SHT	36.8		42.6
OHLS	SHT./WT	79.4		
OHRS	QTY	1		
OHT	SUBTTL WEIGHT	36.8		42.6
OHB				
YIELD	TOTAL WEIGHT	79.4		
BENT				
COLOR	Pcs/Ordr	4		38
CODE	#CSF			
SPECIAL INSTR				
Price / Sheet:				
Approved By:				

DESIGN APPROVED
FLORIDA DEPARTMENT OF TRANSPORTATION

DATE: 03/05/12
BY: Jamie Green for Rick Renne
State Drainage Engineer

CONCRETE SERVICES

☑ APPROVED

☐ APPROVED AS CORRECTED

☐ REVISE AND RESUBMIT

☐ REJECTED

☐ FOR INFORMATION ONLY

SUBMITTAL WAS REVIEWED FOR DESIGN CONFORMITY AND GENERAL CONFORMANCE TO CONTRACT DOCUMENTS ONLY THE CONTRACTOR IS RESPONSIBLE FOR CONFIRMING AND CORRELATING DIMENSIONS AT JOB SITES FOR TOLERANCES, CLEARANCES, QUANTITIES, FABRICATION PROCESSES AND TECHNIQUES OF CONSTRUCTION, COORDINATION OF HIS WORK WITH OTHER TRADES AND FULL COMPLIANCE WITH THE CONTRACT DOCUMENTS

BY Roy Arias DATE 5/18/2018

INDEX 211

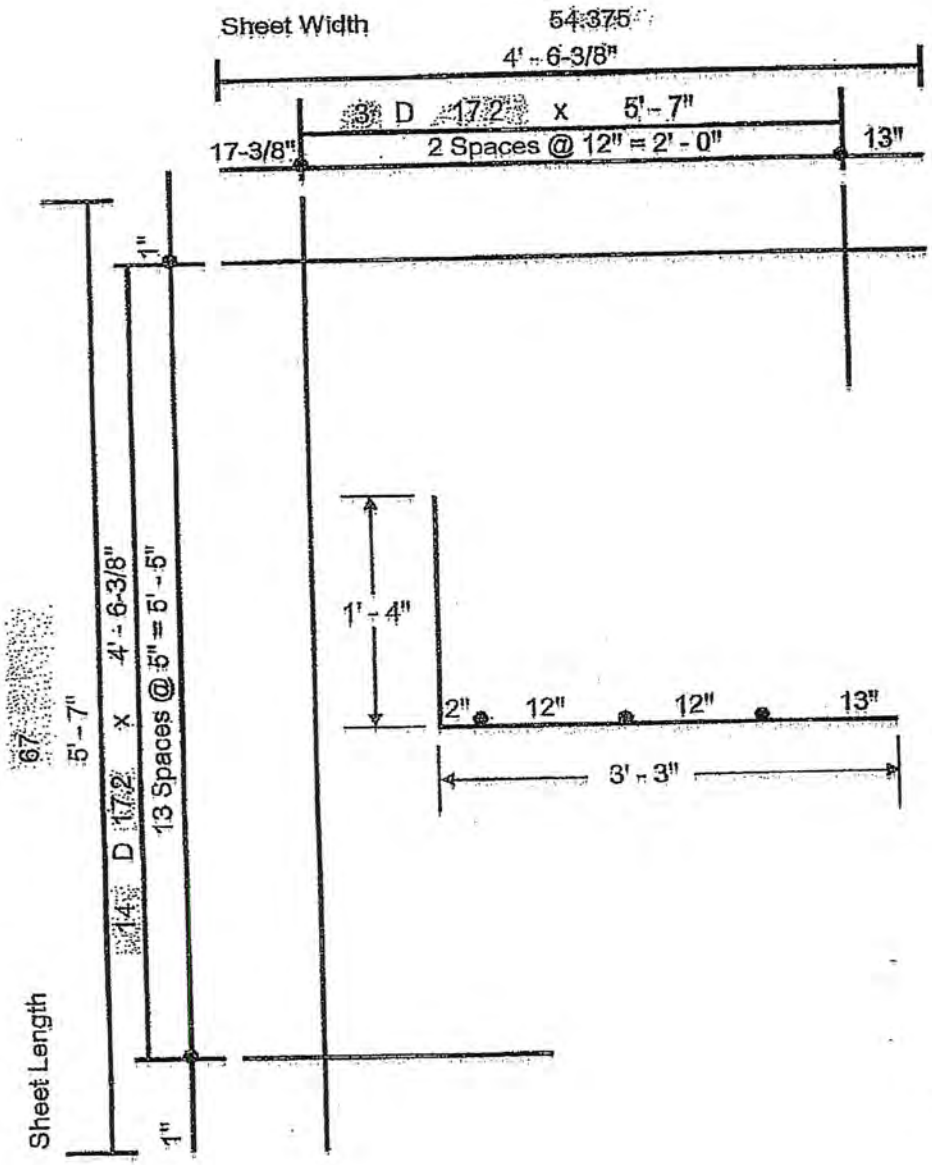

Phone:
Fax:

CUSTOMER: Stock

PHONE:
PROJECT P-5/6 -2008 Curb Inlet
LOCATION Florida
DATE 12/28/2007 MK-NO: Piece #3

	Wires	L.W.1	L.W.2	C.W.
L.W. SPA				
C.W. SPA				
L.W. 1 SIZE	NO. PER SHEET	3		14
L.W. 2 SIZE				
C.W. SIZE	AREA	0.172		0.172
WIDTH	LENGTH	5.58		4.53
LENGTH	WT./SHT	9.8		37.1
OHLS	SHT./WT	46.9		
OHRS	QTY	1		
OHT	SUBTTL WEIGHT	9.8		37.1
OHB				
YIELD	TOTAL WEIGHT	46.9		
BENT				
COLOR	Pcs/Ordr	3		14
CODE	#CSF			
SPECIAL INSTR				
Price / Sheet:				
Approved By:				

DESIGN APPROVED
FLORIDA DEPARTMENT OF TRANSPORTATION

DATE: 03/05/12
BY: [signature] for Rich Renna
State Drainage Engineer

CONCRETE SERVICES

☑ APPROVED

☐ APPROVED AS CORRECTED

☐ REVISE AND RESUBMIT

☐ REJECTED

☐ FOR INFORMATION ONLY

SUBMITTAL WAS REVIEWED FOR DESIGN CONFORMITY AND GENERAL CONFORMANCE TO CONTRACT DOCUMENTS ONLY THE CONTRACTOR IS RESPONSIBLE FOR CONFIRMING AND CORRELATING DIMENSIONS AT JOB SITES FOR TOLERANCES, CLEARANCES, QUANTITIES, FABRICATION PROCESSES AND TECHNIQUES OF CONSTRUCTION, COORDINATION OF HIS WORK WITH OTHER TRADES AND FULL COMPLIANCE WITH THE CONTRACT DOCUMENTS

BY Roy Arias DATE 5/18/2018