CONTRACTOR'S OPTION TO USE MANHOLE TYPE P ALT. A BASED ON INDEX 245, GENERAL NOTE #5.

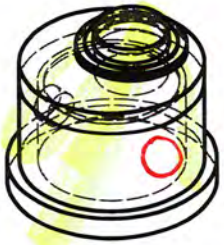

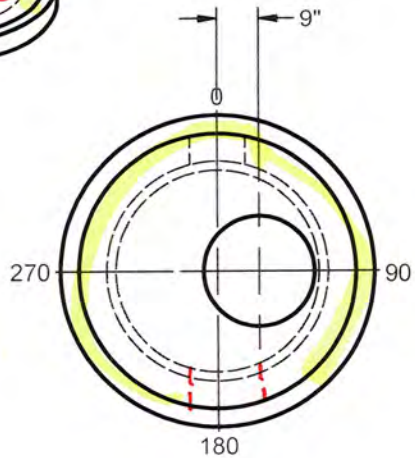

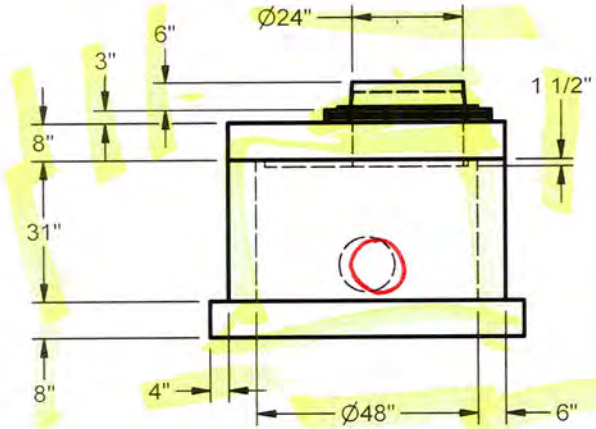

FG =	168.60
TA =	168.10
TTS =	167.85
TPW1 =	167.19
ITB =	164.60
APTB =	3.50

VERIFY PIPE SIZE & INVERT

1 EA CAST USF R&C 170-XB~FDOT~STORM

FDOT INDEX #200/201 UD INSPECTION MANHOLE # 968+00 L ~~966+0L~~

1 ea

SPECIFICATIONS	
1	BASE STEEL - #4 @ 6" O.C.E.W. (Top);
2	WALL STEEL -3X8 W3.0/W2.0 WWF (ASTM C-478)
3	TOP SLAB - #3 @ 6" O.C.E.W.
4	
5	
6	4000 PSI All wall steel 3/4" cover, 1" cover for top, bottom, and reducer.
7	Provide 1-#4 bar reinforcement ea side of openings and 2-#4 bars at 3" min. spacing above openings

SPECIAL NOTES: 0 NO COATING REQUIRED

0 FDOT STAMP REQUIRED

1 FLAT TOP

PC #	WEIGHT	PIECE DESCRIPTION	PRODUCT CODE
	CONTRACTOR TO FIELD VERIFY EXIST. 36" RCP INVERT AT EDGEDRAIN TIE-IN TO VERIFY POSITIVE DRAINAGE, PRIOR TO ORDERING STRUCTURE.		
2	1788	048Dia x 06Wall x 08H,024Dia Ecc, TopSlab	SR048S06M008C
1	5202	048Dia x 06Wall x 031H, MonoBaseExt	SR048B06M036X

PC #	DEG/ DIR	PIPE SIZE	PIPE INVERT	HOLE SIZE	BOOT TYPE	HOLE INVERT	HOLE RAISE
1	0	4 ~~6~~ PVC	165.02	10 ~~12~~	NONE	164.77	2"
	180	4"	165.02	10		164.77	2"

FDOT 434986-1-52-01

STRAIGHT AHEAD CONSTRUCTION

FORTERRA | PIPE & PRECAST

DESIGN BY:	MTT
DATE:	5/9/2018
SCALE:	1:40
ORDER #:	10960723
REVISED DATE:	REV BY:

10960723966+0L.idw

5/9/2018

R-048-05-00-MH-T-DE-F-0-0

CONCRETE SERVICES

☑ APPROVED

☐ APPROVED AS CORRECTED

☐ REVISE AND RESUBMIT

☐ REJECTED

☐ FOR INFORMATION ONLY

SUBMITTAL WAS REVIEWED FOR DESIGN CONFORMITY AND GENERAL CONFORMANCE TO CONTRACT DOCUMENTS ONLY. THE CONTRACTOR IS RESPONSIBLE FOR CONFIRMING AND CORRELATING DIMENSIONS AT JOB SITES FOR TOLERANCES, CLEARANCES, QUANTITIES, FABRICATION PROCESSES AND TECHNIQUES OF CONSTRUCTION, COORDINATION OF HIS WORK WITH OTHER TRADES AND FULL COMPLIANCE WITH THE CONTRACT DOCUMENTS.

BY Roy Arias DATE 5/18/2018

COMPREHENSIVE ENGINEERING SERVICES, INC.

☐ No exceptions taken ☐ Amend and Resubmit

☑ Make corrections noted ☐ Rejected (See Remarks)

Review and comments do not relieve the contractor of responsibility for substantial conformance with the contract plans and specifications.

BY: CRL DATE: 5/23/18

CONTRACTOR'S OPTION TO USE MANHOLE TYPE P ALT. A BASED ON INDEX 245, GENERAL NOTE #5.

FDOT INDEX #200/201 UD INSPECTION MANHOLE # ~~966+00R~~ 968+00 R

1 ea

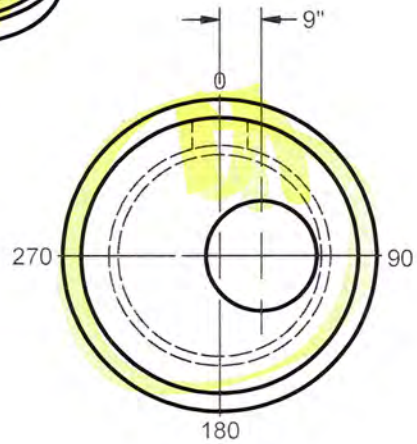

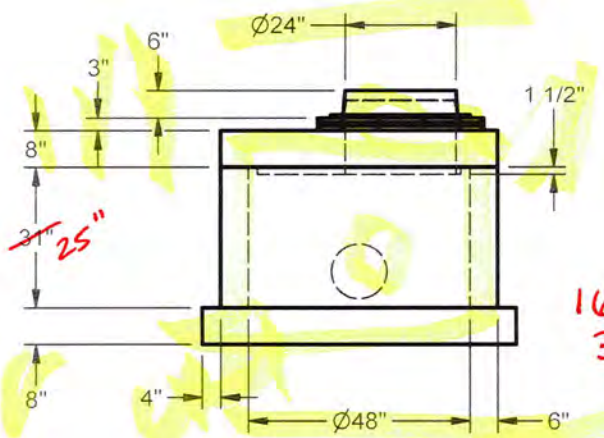

FG =	168.60
TA =	168.10
TTS =	167.85
TPW1 =	167.19
ITB =	~~164.60~~ 165.10
APTB =	~~3.50~~ 3.00

VERIFY PIPE SIZE & INVERT

1 EA CAST USF R&C 170-XB~FDOT~STORM

SPECIFICATIONS	
1	BASE STEEL - #4 @ 6" O.C.E.W. (Top);
2	WALL STEEL -3X8 W3.0/W2.0 WWF (ASTM C-478)
3	TOP SLAB - #3 @ 6" O.C.E.W.
4	
5	
6	4000 PSI All wall steel 3/4" cover, 1" cover for top, bottom, and reducer.
7	Provide 1-#4 bar reinforcement ea side of openings and 2-#4 bars at 3" min. spacing above openings

SPECIAL NOTES: 0 NO COATING REQUIRED

0 FDOT STAMP REQUIRED

1 FLAT TOP

PC #	WEIGHT	PIECE DESCRIPTION	PRODUCT CODE
	SEE NOTE ON PLANS. NOT FOR OUTFALL PURPOSES SLOPE PIPE TOWARD ROADWAY		
2	1788	048Dia x 06Wall x 08H,024Dia Ecc, TopSlab	SR048S06M008N
1	5202	048Dia x 06Wall x 031H, MonoBaseExt	SR048B06M036X

PC #	DEG/ DIR	PIPE SIZE	PIPE INVERT	HOLE SIZE	BOOT TYPE	HOLE INVERT	HOLE RAISE
1	0	4" ~~8~~ PVC	~~165.02~~ 165.52	~~12~~ 10	NONE	~~164.77~~ 165.27	2"

FDOT 434986-1-52-01

STRAIGHT AHEAD CONSTRUCTION

FORTERRA | PIPE & PRECAST

DESIGN BY:	MTT
DATE:	5/9/2018
SCALE:	1:40
ORDER #:	10960723
REVISED DATE:	REV BY:

10960723966+0R.idw

5/9/2018

R-048-05-00-MH-T-DE-F-0-0

CONCRETE SERVICES

☑ APPROVED

☐ APPROVED AS CORRECTED

☐ REVISE AND RESUBMIT

☐ REJECTED

☐ FOR INFORMATION ONLY

SUBMITTAL WAS REVIEWED FOR DESIGN CONFORMITY AND GENERAL CONFORMANCE TO CONTRACT DOCUMENTS ONLY. THE CONTRACTOR IS RESPONSIBLE FOR CONFIRMING AND CORRELATING DIMENSIONS AT JOB SITES FOR TOLERANCES, CLEARANCES, QUANTITIES, FABRICATION PROCESSES AND TECHNIQUES OF CONSTRUCTION, COORDINATION OF HIS WORK WITH OTHER TRADES AND FULL COMPLIANCE WITH THE CONTRACT DOCUMENTS.

BY Roy Arias DATE 5/18/2018

COMPREHENSIVE ENGINEERING SERVICES, INC.

☐ No exceptions taken ☐ Amend and Resubmit

☑ Make corrections noted ☐ Rejected (See Remarks)

Review and comments do not relieve the contractor of responsibility for substantial conformance with the contract plans and specifications.

BY: CRC DATE: 5/23/18

CONTRACTOR'S OPTION TO USE MANHOLE TYPE PALT. A BASED ON INDEX 245, GENERAL NOTE #5.

FDOT INDEX #200/201 UD INSPECTION MANHOLE # 966+20 L

1 ea

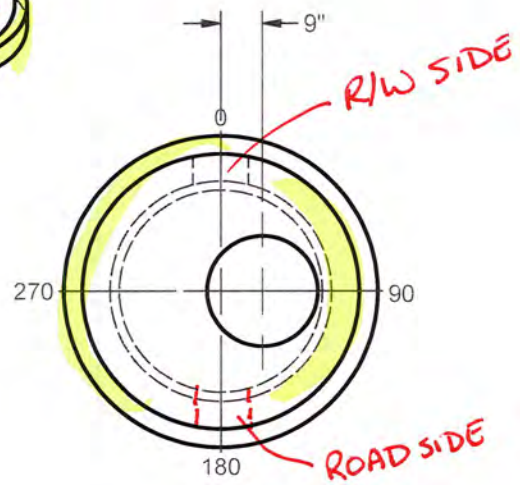

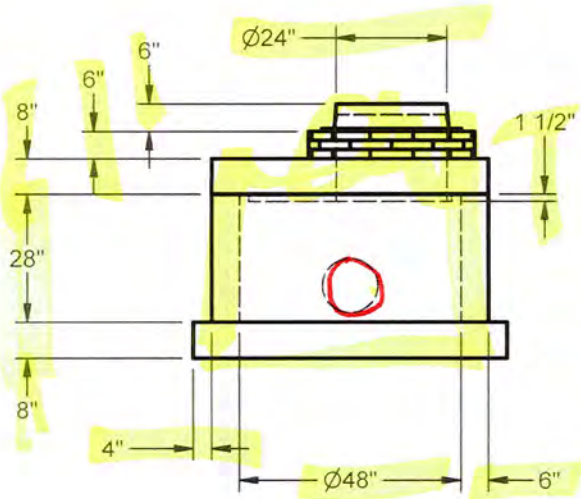

FG =	165.10
TA =	164.60
TTS =	164.10
TPW1 =	163.44
ITB =	161.10
APTB =	3.50

VERIFY PIPE SIZE & INVERT

1 EA CAST USF R&C 170-XB~FDOT~STORM

SPECIFICATIONS

1	BASE STEEL - #4 @ 6" O.C.E.W. (Top);
2	WALL STEEL -3X8 W3.0/W2.0 WWF (ASTM C-478)
3	TOP SLAB - #3 @ 6" O.C.E.W.
4	
5	
6	4000 PSI All wall steel 3/4" cover, 1" cover for top, bottom, and reducer.
7	Provide 1-#4 bar reinforcement ea side of openings and 2-#4 bars at 3" min. spacing above openings

SPECIAL NOTES: 0 NO COATING REQUIRED

0 FDOT STAMP REQUIRED

1 FLAT TOP

PC #	WEIGHT	PIECE DESCRIPTION	PRODUCT CODE
	CONTRACTOR TO FIELD VERIFY EXIST. 36" RCP INVERT AT EDGE DRAIN TIE-IN TO VERIFY POSITIVE DRAINAGE PRIOR TO ORDERING STRUCTURE.		
2	1788	048Dia x 06Wall x 08H,024Dia Ecc, TopSlab	SR048S06M008N
1	4937	048Dia x 06Wall x 028H, MonoBaseExt	SR048B06M030X

PC #	DEG/ DIR	PIPE SIZE	PIPE INVERT	HOLE SIZE	BOOT TYPE	HOLE INVERT	HOLE RAISE
1	0	~~6~~ 4" PVC	~~161.52~~ OK	~~12~~ 10	NONE	~~161.27~~ OK	2"
	180	4"	161.62	10	–	161.27	2"

FDOT 434986-1-52-01

STRAIGHT AHEAD CONSTRUCTION

FORTERRA | PIPE & PRECAST

DESIGN BY:	MTT
DATE:	5/9/2018
SCALE:	1:40
ORDER #:	10960723
REVISED DATE:	REV BY:

10960723966+20.idw

5/9/2018

R-048-05-00-MH-T-DE-F-0-0

CONCRETE SERVICES

- [x] APPROVED
- [ ] APPROVED AS CORRECTED
- [ ] REVISE AND RESUBMIT
- [ ] REJECTED
- [ ] FOR INFORMATION ONLY

SUBMITTAL WAS REVIEWED FOR DESIGN CONFORMITY AND GENERAL CONFORMANCE TO CONTRACT DOCUMENTS ONLY. THE CONTRACTOR IS RESPONSIBLE FOR CONFIRMING AND CORRELATING DIMENSIONS AT JOB SITES FOR TOLERANCES, CLEARANCES, QUANTITIES, FABRICATION PROCESSES AND TECHNIQUES OF CONSTRUCTION, COORDINATION OF HIS WORK WITH OTHER TRADES AND FULL COMPLIANCE WITH THE CONTRACT DOCUMENTS.

BY Roy Arias DATE 5/18/2018

COMPREHENSIVE ENGINEERING SERVICES, INC.

- [ ] No exceptions taken
- [ ] Amend and Resubmit
- [x] Make corrections noted
- [ ] Rejected (See Remarks)

Review and comments do not relieve the contractor of responsibility for substantial conformance with the contract plans and specifications.

BY: CRL DATE 5/23/18

CONTRACTOR'S OPTION TO USE MANHOLE TYPE ALT. A. BASED ON INDEX 215, GENERAL NOTE #5.

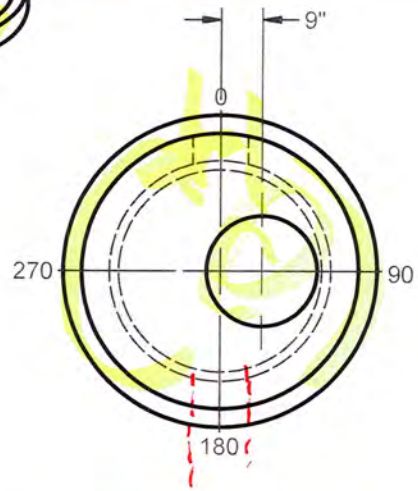

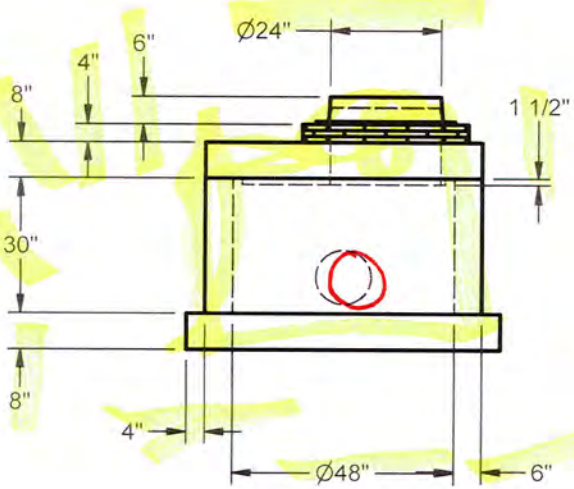

FG =	170.60
TA =	170.10
TTS =	169.77
TPW1 =	169.10
ITB =	166.60
APTB =	3.50

VERIFY PIPE SIZE & INVERT

1 EA CAST USF R&C 170-XB~FDOT~STORM

FDOT INDEX #200/201 UD INSPECTION MANHOLE # 973+00 L

1 ea

SPECIFICATIONS	
1	BASE STEEL - #4 @ 6" O.C.E.W. (Top);
2	WALL STEEL -3X8 W3.0/W2.0 WWF (ASTM C-478)
3	TOP SLAB - #3 @ 6" O.C.E.W.
4	
5	
6	4000 PSI All wall steel 3/4" cover, 1" cover for top, bottom, and reducer.
7	Provide 1-#4 bar reinforcement ea side of openings and 2-#4 bars at 3" min. spacing above openings

SPECIAL NOTES: 0 NO COATING REQUIRED

0 FDOT STAMP REQUIRED

1 FLAT TOP

PC #	WEIGHT	PIECE DESCRIPTION	PRODUCT CODE
		CONTRACTOR TO FIELD VERIFY EXIST. 36" RCP ~~PIPE~~ INVERT AT EDGE DRAIN TIE-IN TO VERIFY POSITIVE DRAINAGE PRIOR TO ORDERING STRUCTURE	
2	1788	048Dia x 06Wall x 08H,024Dia Ecc, TopSlab	SR048S06M008X
1	5113	048Dia x 06Wall x 030H, MonoBaseExt	SR048B06M030X

PC #	DEG/ DIR	PIPE SIZE	PIPE INVERT	HOLE SIZE	BOOT TYPE	HOLE INVERT	HOLE RAISE
1	0	4" ~~8~~ PVC	167.02	~~12~~ 10	NONE	166.77	2"
	180	4"	167.02	10	–	166.77	2"

FDOT 434986-1-52-01

STRAIGHT AHEAD CONSTRUCTION

FORTERRA | PIPE & PRECAST

DESIGN BY:	MTT
DATE:	5/9/2018
SCALE:	1:40
ORDER #:	10960723
REVISED DATE:	REV BY:

10960723973+00.idw

5/9/2018

R-048-05-00-MH-T-DE-F-0-0

CONCRETE SERVICES

☑ APPROVED

☐ APPROVED AS CORRECTED

☐ REVISE AND RESUBMIT

☐ REJECTED

☐ FOR INFORMATION ONLY

SUBMITTAL WAS REVIEWED FOR DESIGN CONFORMITY AND GENERAL CONFORMANCE TO CONTRACT DOCUMENTS ONLY. THE CONTRACTOR IS RESPONSIBLE FOR CONFIRMING AND CORRELATING DIMENSIONS AT JOB SITES FOR TOLERANCES, CLEARANCES, QUANTITIES, FABRICATION PROCESSES AND TECHNIQUES OF CONSTRUCTION, COORDINATION OF HIS WORK WITH OTHER TRADES AND FULL COMPLIANCE WITH THE CONTRACT DOCUMENTS.

BY Roy Arias DATE 5/18/2018

COMPREHENSIVE ENGINEERING SERVICES, INC.

☐ No exceptions taken ☐ Amend and Resubmit

☑ Make corrections noted ☐ Rejected (See Remarks)

Review and comments do not relieve the contractor of responsibility for substantial conformance with the contract plans and specifications.

BY: CRC DATE: 5/23/18