ALTERNATIVE 3: WEST ALIGNMENT

NTS
SEBASTIAN INLET STATE PARK
Added Acceleration Lane
Required Right of Way
Entrance Reconfiguration
Added 12-foot Wide Shared Use Path
Lengthened Right Turn Lane
Existing Right of Way
Sebastian Fishing Museum
INDIAN RIVER COUNTY
BREVARD COUNTY
8-foot Shoulder
Two 12-foot Lanes
Sebastian Inlet Swimming Cove
Existing Right of Way
Fish and Wildlife Conservation
Reconfigured SID Access Road
Added 12-Foot Wide Shared Use Path
Indian River
SEBASTIAN INLET STATE PARK
Entrance Reconfiguraton
Required Right of Way
Lengthened Right Turn Lane
A1A
A1A
Sebastian Inlet Beach South Parking Lot
A
Existing Right of Way
B
Added 12-foot Wide Shared Use Path
C
D
E
Begin Bridge
12-foot Shared Use Path
Overlook
E
Begin Bridge
D
B
Existing Right of Way
Inlet Bait & Tackle
Inlet Grill & Gifts
Sebastian Inlet
Sebastian Inlet Fishing Pier
EXISTING R/W
PROPOSED R/W
ASPHALT PAVEMENT
SHOULDER
SHARED USE PATH
TRAFFIC SEPARATOR
MSE WALL
GRASS

A

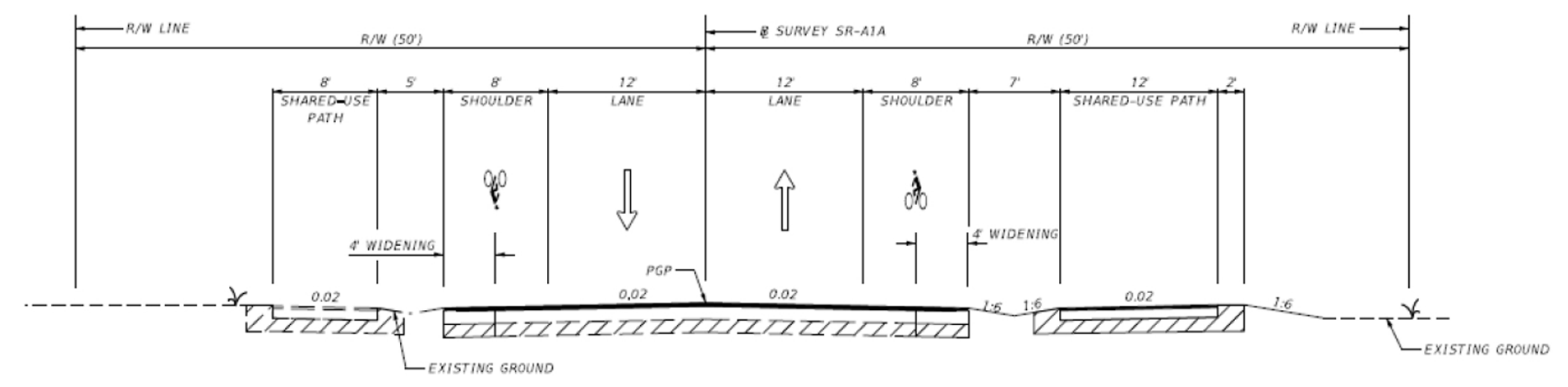
R/W LINE
R/W (50')
℄ SURVEY SR-A1A
R/W (50')
R/W LINE
8' SHARED-USE PATH
5'
8' SHOULDER
12' LANE
12' LANE
8' SHOULDER
7'
12' SHARED-USE PATH
2'
4' WIDENING
4' WIDENING
PGP
0.02
0.02
0.02
0.02
1:6
1:6
EXISTING GROUND
EXISTING GROUND

B

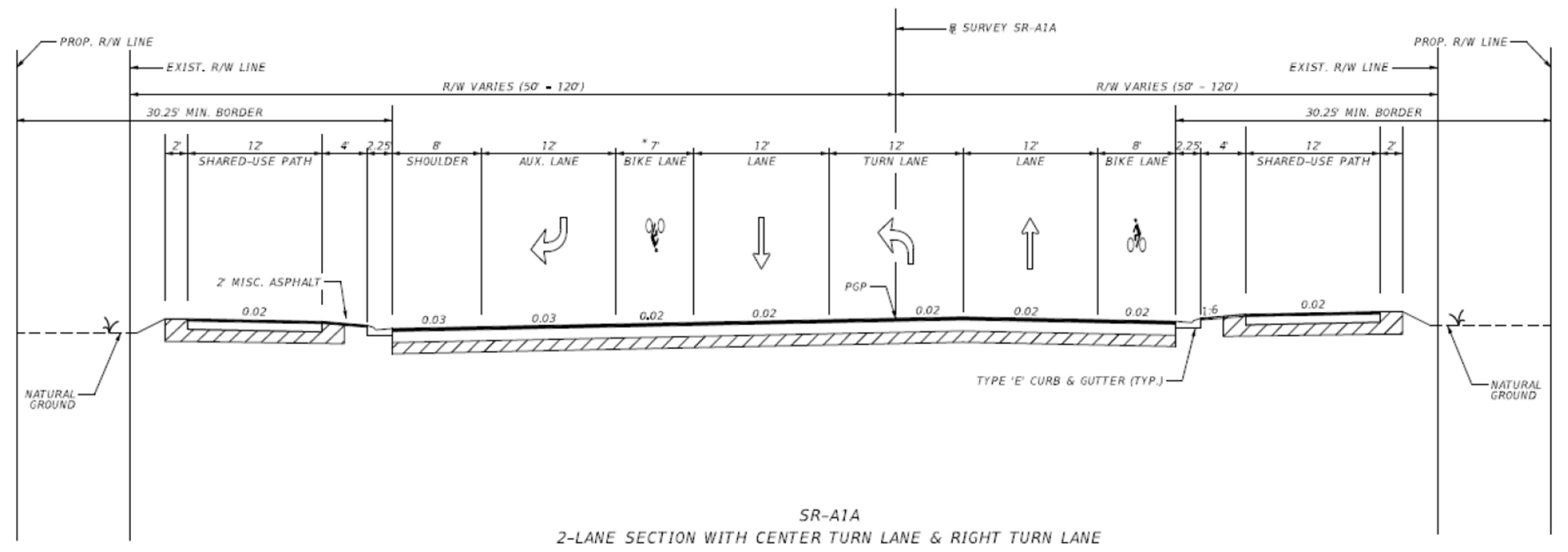
PROP. R/W LINE
EXIST. R/W LINE
℄ SURVEY SR-A1A
R/W VARIES (50' - 120')
30.25' MIN. BORDER
2'
12' SHARED-USE PATH
4'
2.25'
8' SHOULDER
12' AUX. LANE
*7' BIKE LANE
12' LANE
12' TURN LANE
12' LANE
8' BIKE LANE
2' MISC. ASPHALT
PGP
NATURAL GROUND
TYPE 'E' CURB & GUTTER (TYP.)

SR-A1A
2-LANE SECTION WITH CENTER TURN LANE & RIGHT TURN LANE
M.P. 22.009 TO M.P. 22.210
M.P. 0.212 TO M.P. 0.307

C

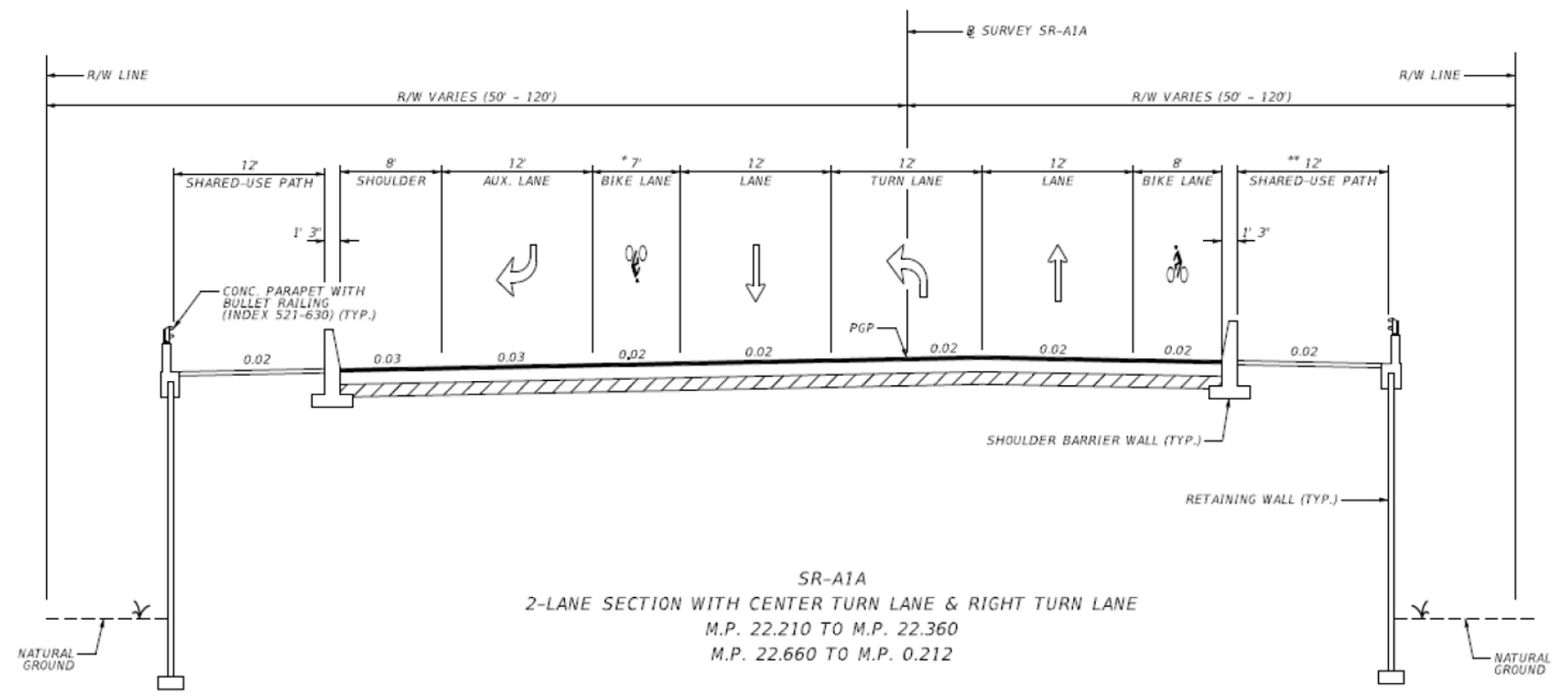
R/W LINE
℄ SURVEY SR-A1A
R/W VARIES (50' - 120')
R/W VARIES (50' - 120')
R/W LINE
12' SHARED-USE PATH
8' SHOULDER
12' AUX. LANE
*7' BIKE LANE
12' LANE
12' TURN LANE
12' LANE
8' BIKE LANE
**12' SHARED-USE PATH
1' 3"
1' 3"
CONC. PARAPET WITH BULLET RAILING (INDEX 521-630) (TYP.)
PGP
SHOULDER BARRIER WALL (TYP.)
RETAINING WALL (TYP.)
NATURAL GROUND
NATURAL GROUND

SR-A1A
2-LANE SECTION WITH CENTER TURN LANE & RIGHT TURN LANE
M.P. 22.210 TO M.P. 22.360
M.P. 22.660 TO M.P. 0.212

D

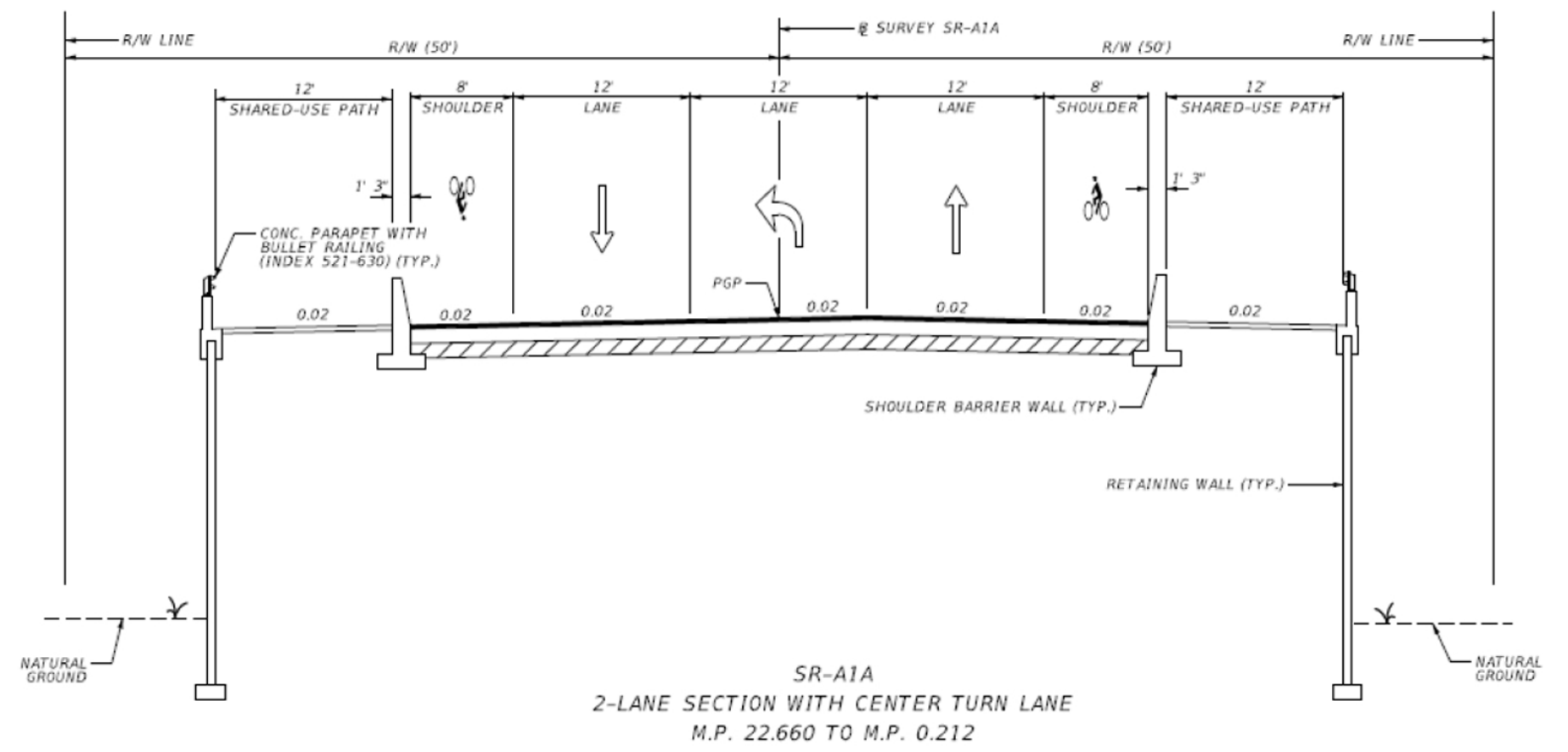
R/W LINE
R/W (50')
℄ SURVEY SR-A1A
R/W (50')
R/W LINE
12' SHARED-USE PATH
8' SHOULDER
12' LANE
12' LANE
12' LANE
8' SHOULDER
12' SHARED-USE PATH
1' 3"
1' 3"
CONC. PARAPET WITH BULLET RAILING (INDEX 521-630) (TYP.)
PGP
SHOULDER BARRIER WALL (TYP.)
RETAINING WALL (TYP.)
NATURAL GROUND
NATURAL GROUND

SR-A1A
2-LANE SECTION WITH CENTER TURN LANE
M.P. 22.660 TO M.P. 0.212

E

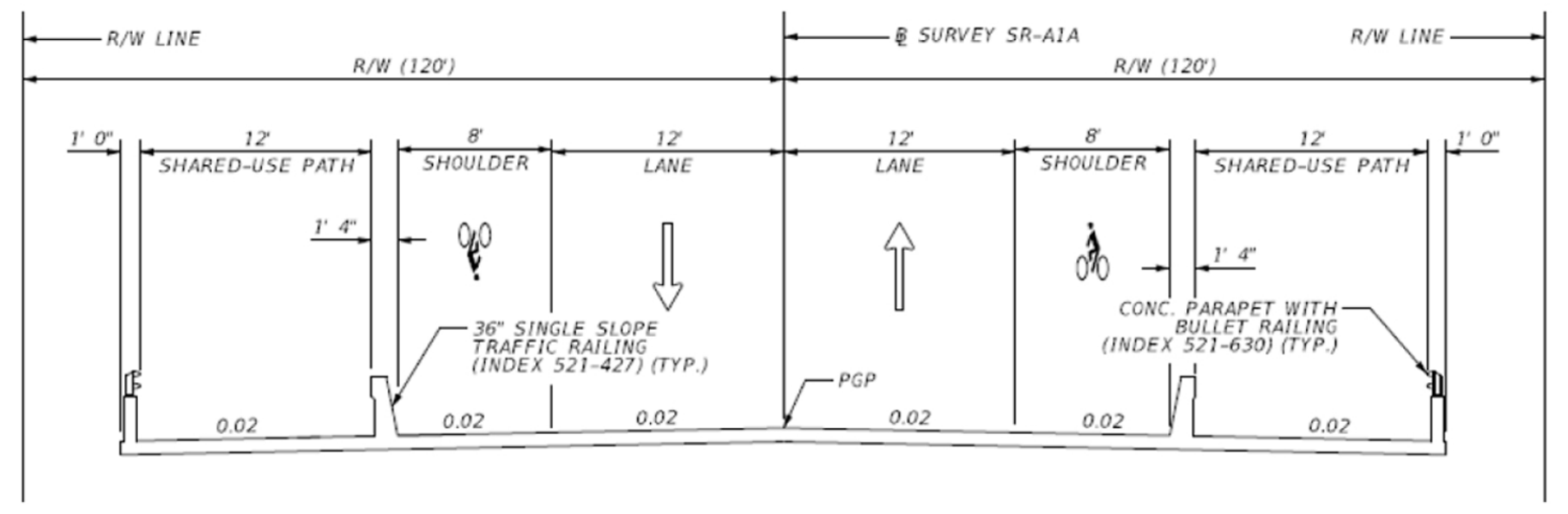
R/W LINE
℄ SURVEY SR-A1A
R/W LINE
R/W (120')
R/W (120')
1' 0"
12' SHARED-USE PATH
8' SHOULDER
12' LANE
12' LANE
8' SHOULDER
12' SHARED-USE PATH
1' 0"
1' 4"
1' 4"
36" SINGLE SLOPE TRAFFIC RAILING (INDEX 521-427) (TYP.)
CONC. PARAPET WITH BULLET RAILING (INDEX 521-630) (TYP.)
PGP
0.02

SR-A1A BRIDGE OVER SEBASTIAN INLET
M.P. 22.360 TO M.P. 22.660