Check collision scenario similar to what is shown below:

Scenario A: Nose/Extruder Hit End-on

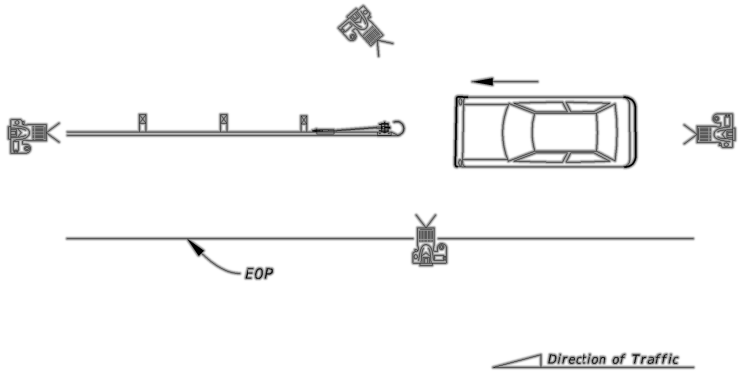

Scenario B: Nose/Extruder Hit Broadside

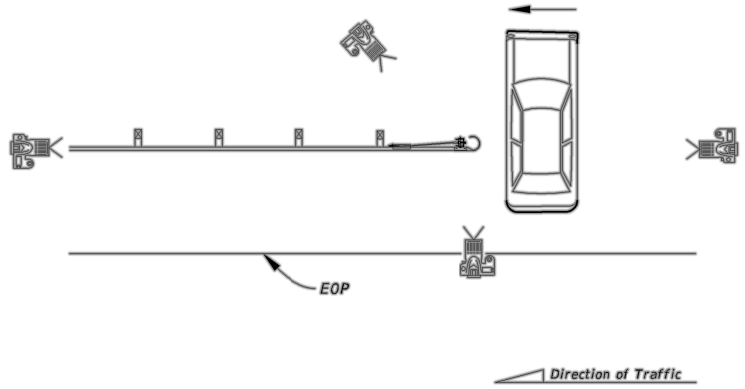

Scenario C: Nose/Extruder Hit Edge Away From Traffic

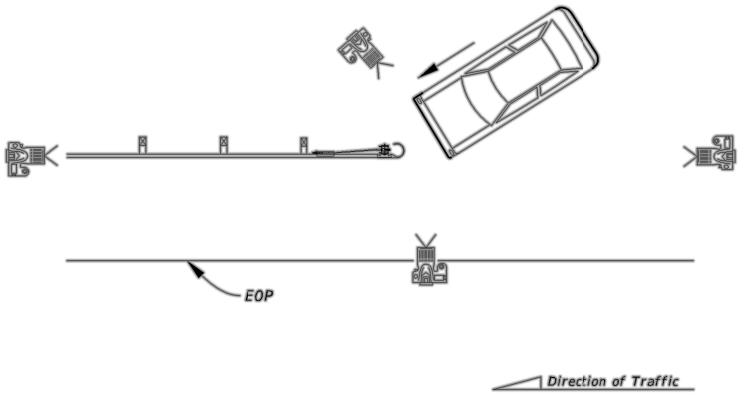

Scenario D: Nose/Extruder Hit at Edge Facing Traffic

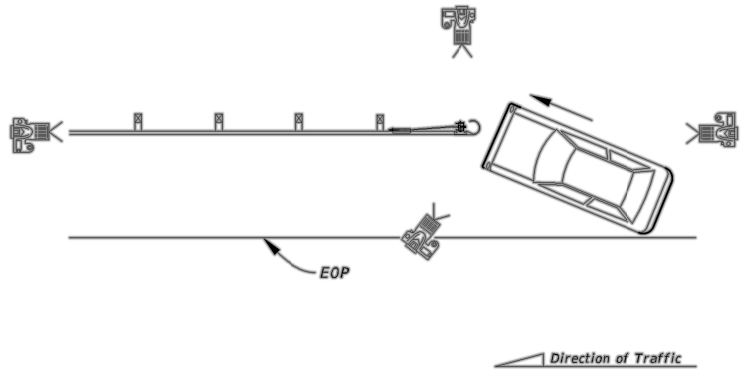

Scenario E: Mid-Section Hit Redirection

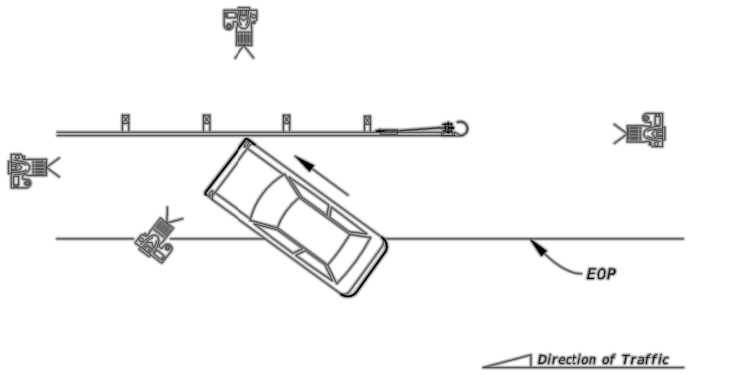

Scenario F: Mid-Section Hit Penetration

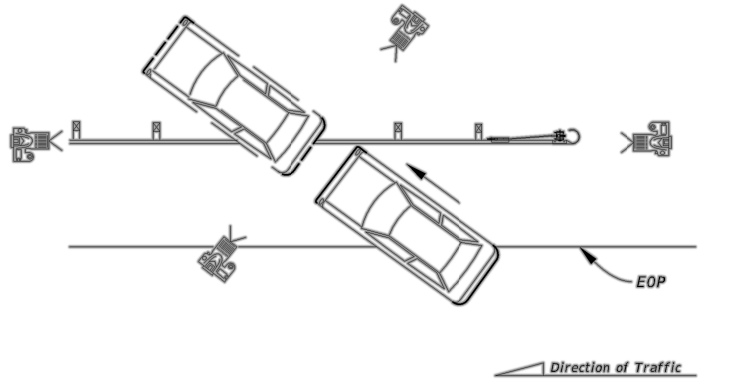

Scenario G: Mid-Section Hit From Behind

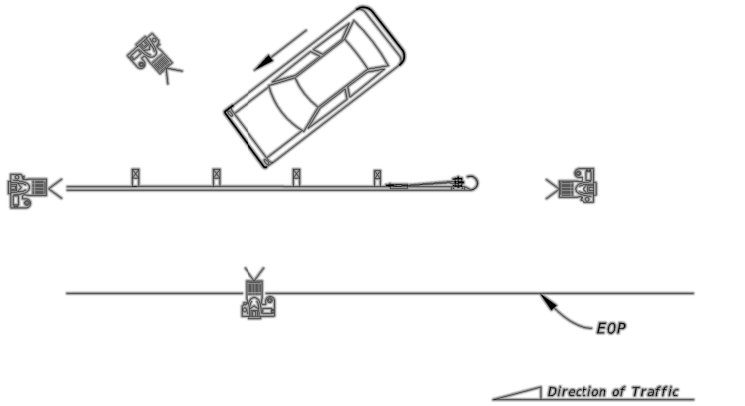
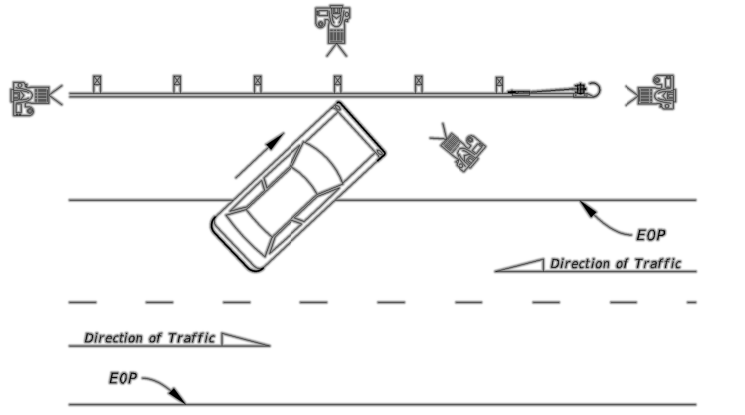
Scenario H: Reverse Hit Redirection