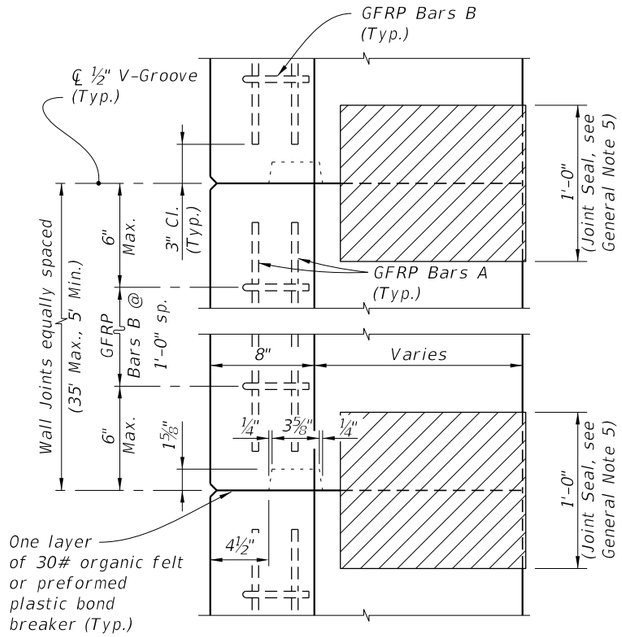

KEYWAY & WALL JOINT DETAIL
(TOP VIEW)

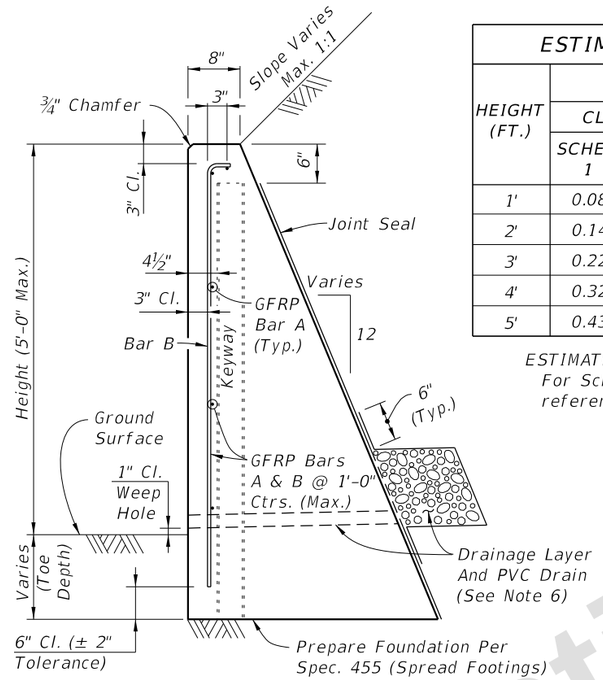

TYPICAL SECTION
CORROSION RESISTANT GRAVITY WALL
(OPTION C)

ESTIMATED QUANTITIES FOR C-I-P WALL					
HEIGHT (FT.)	PER LINEAR FOOT OF WALL				WEEP HOLES & DRAIN REQD.
	CLASS NS CONCRETE (CY)			REINF. (LF)	
	SCHEME 1	SCHEME 2	SCHEME 3**		
1'	0.08	0.11 (0.20*)	0.03	5.5 (9.5*)	No
2'	0.14	0.20 (0.32*)	0.09	7.5 (11.5*)	No
3'	0.22	0.32 (0.47*)	0.29	9.5 (13.5*)	Yes
4'	0.32	0.47 (0.65*)	0.43	11.5 (15.5*)	Yes
5'	0.43	0.65 (0.85*)	0.60	13.5 (17.5*)	Yes

ESTIMATED QUANTITIES NOTES:
For Scheme 3 Junction Slab and Traffic Railing see the referenced Design Standards for estimated quantities.
* Quantity for 2'-0" Toe Depth in Scheme 2.
** Quantity for Scheme 3 assumes 1'-3" thick coping above Gravity Wall.

GRAVITY WALL (Option C) NOTES

1. C-I-P Gravity Walls constructed as extensions of reinforced concrete retaining walls, except walls of proprietary designs, shall have the same face texture and finish as the reinforced concrete retaining wall.
2. Concrete for Gravity Wall shall be Class NS per Section 347. Concrete for Scheme 3 Junction Slab and Traffic Railing shall be Class II per Section 346, unless otherwise specified in the plans.
3. Reinforcing bars shall meet the requirements of Specification Section 932 for GFRP.
4. When required, for adjunct guiderail, see Index 515-070 or 515-080 as appropriate. For adjunct Type B fence see Index 550-002.
5. Joint seal to be two layers of Type II organic felt or Type D-5 geotextile fabric in accordance with Specification Section 985. Mop all contact surfaces of concrete and organic felt or geotextile fabric with cut-back asphalt. Stop organic felt or geotextile fabric 6" below top of wall.
6. Provide a continuous 1'x1' clean gravel or crushed rock drain for wall heights 3 ft. and higher. Wrap drainage layer as shown, with Type D-3 geotextile fabric in accordance with Specification Section 985. Provide 8"x8" galvanized mesh with ¼" openings, at the inside end of the PVC Drain Pipe. Provide 2" Ø PVC Drain Pipe (Sch. 40) at 10 ft. max. spacing (when Drainage Layer is required). Locate outermost edge of Drain Pipe a minimum of 2'-0" from wall joints.
7. Cost of reinforcing, face texture, finish, joint seal, drain pipes, drainage layer, galvanized mesh and geotextile fabric to be included in the Contract Unit Price for Concrete Class NS, Gravity Wall. Cost of concrete for Junction Slab in Scheme 3, to be included in Contract Unit Price for Concrete Traffic Railing Barrier With Junction Slab. Adjunct railings or fences to be paid for separately.

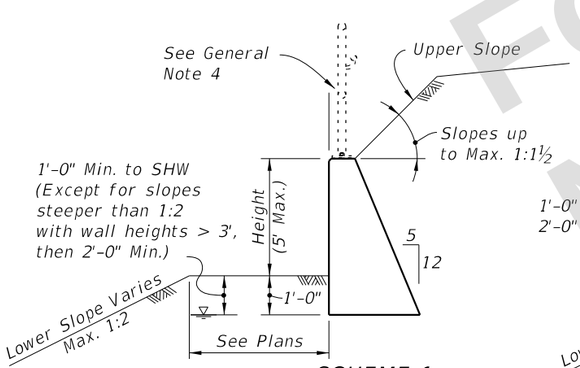

SCHEME 1
(No Traffic Loading Effects &
Upper Slopes ≤ 1:1½)

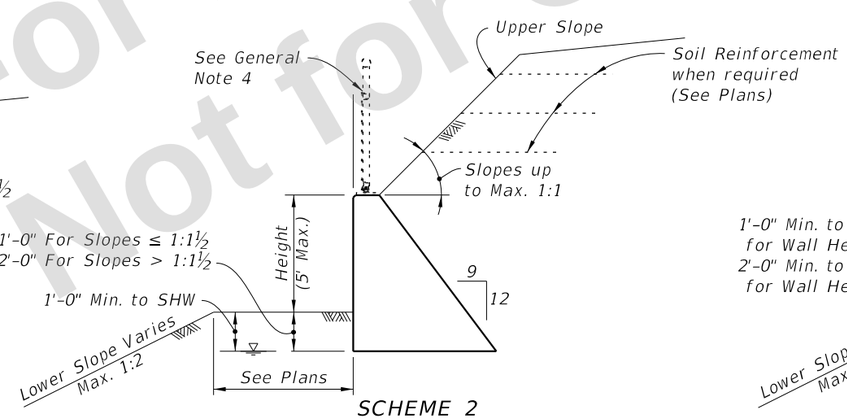

SCHEME 2
(With Traffic Loading or
Upper Slopes > 1:1½)

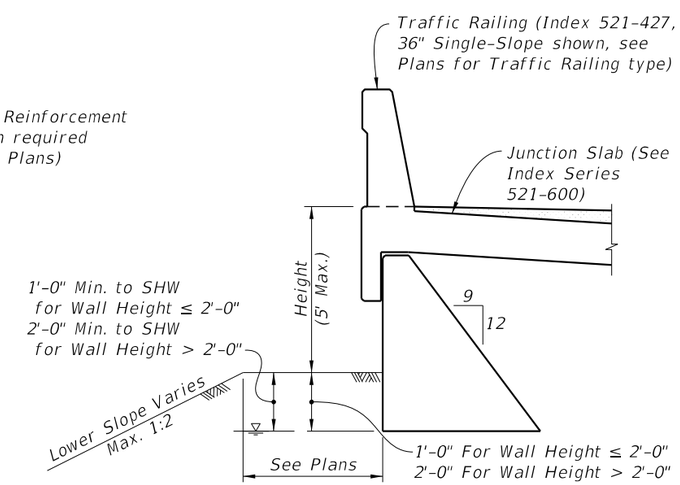

SCHEME 3
(With Traffic Railing)

BILL OF REINFORCING BARS		
MARK	SIZE	LENGTH
A	3	As Reqd.
B	3	As Reqd.

BAR BENDING DIAGRAM

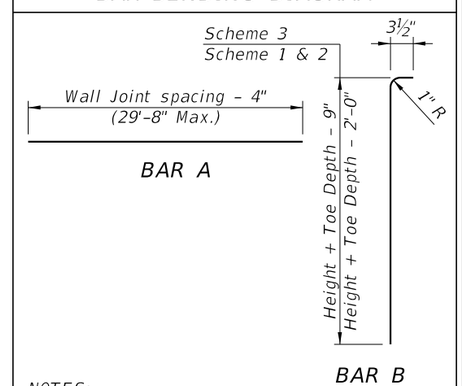

NOTES:
1. All bar dimensions are out to out.
2. Lap splices for Bars A must be a minimum of 1'-0".

For Information Only
Not for Construction