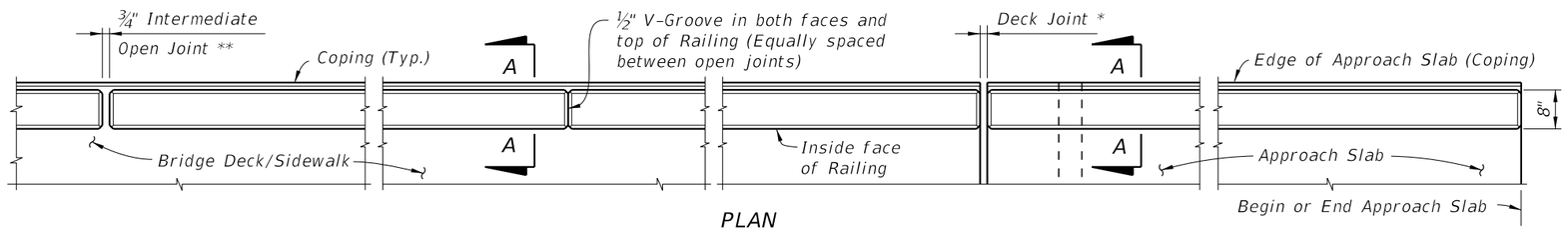

PLAN
(Reinforcing Steel not shown for clarity)

* See Structures Plans, Superstructure Sheets for actual dimensions and joint orientation. Open Railing Joints at Deck Expansion Joint locations shall match the dimension of the Deck Joint. For treatment of Railings on skewed bridges see Index 521-427. Deck Joint at Begin Bridge or End Bridge shown. Deck Joint at ℄ Pier or Intermediate Bent similar.

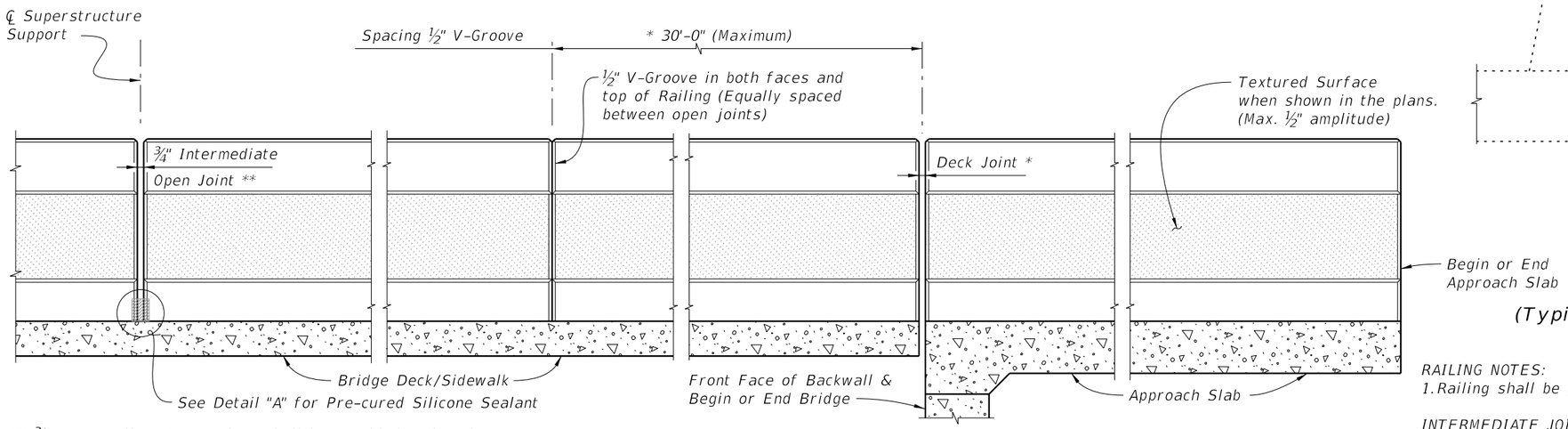

** ¾" Intermediate Open Joints shall be provided at locations coinciding with ¾" Joints for the Traffic Railing.

ELEVATION OF INSIDE FACE OF RAILING
(Reinforcing Steel not shown for clarity)

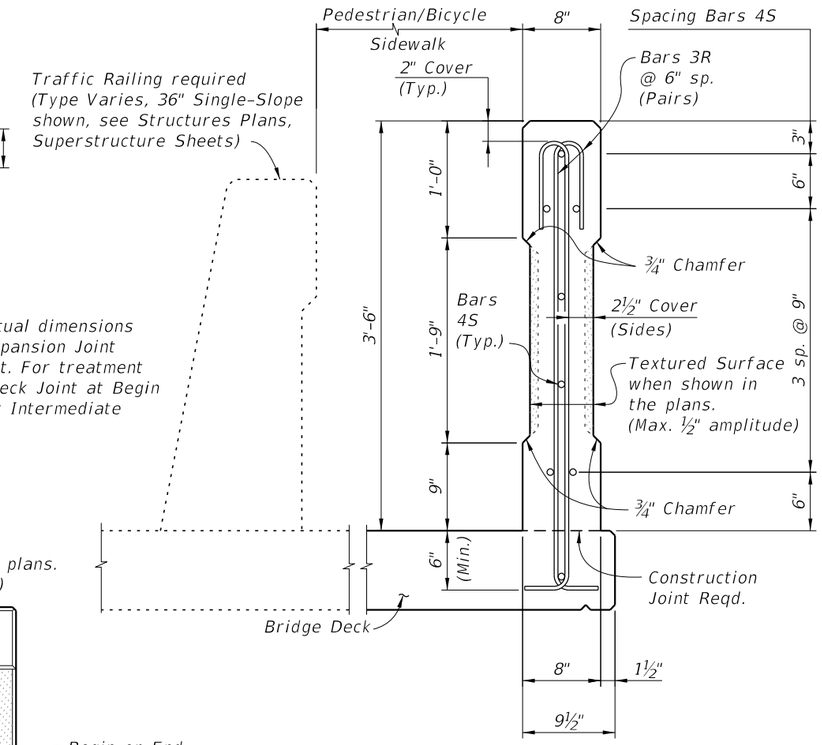

SECTION A-A
(Typical C-I-P Section Thru Bridge Deck Shown, Section Thru Approach Slab Similar)

RAILING NOTES:
1. Railing shall be placed vertical and top surface shall be level transversely.

INTERMEDIATE JOINT SEAL NOTES:
1. At Intermediate Open Joints, seal the lower 6" portion of the open joint with Pre-cured Silicone Sealant in accordance with Specification Section 932.
2. Apply sealant prior to any Class 5 Finish Coating and remove all curing compound and loose material from the surface prior to application of bonding agent.
3. The cost of the Pre-cured Silicone Sealant shall be included in the Contract Unit Price for the Railing.
4. As an alternative option, a mortar plug may be used to seal the joint as shown in the mortar plug detail and in accordance with Specification Section 400.

REINFORCING STEEL NOTES:
1. All bar dimensions in the bending diagrams are out to out.
2. The reinforcement for the railing on a retaining wall shall be the same as detailed above for an 8" deck.
3. All reinforcing steel at the open joints shall have a 2" minimum cover.
4. Bar splices for Bars 4S shall be a minimum of 1'-8".
5. At the option of the Contractor deformed WWR may be used in lieu of all Bars 3R and 4S.

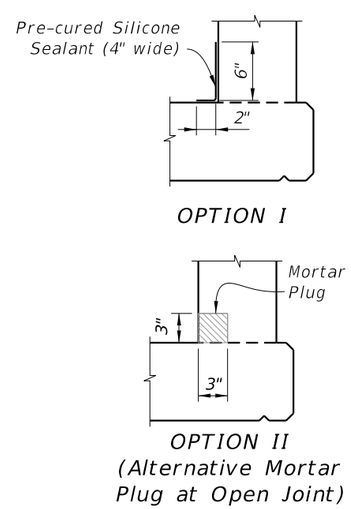

DETAIL "A"

ALTERNATE REINFORCING (WELDED WIRE REINF.) DETAILS

NOTE: Place wire panels to ensure vertical wire is within 4" of open joints.

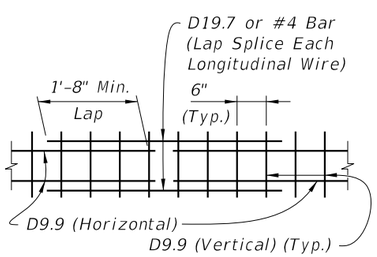

SPLICE DETAIL
(Between WWR Sections)

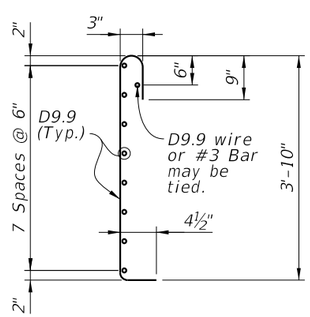

WELDED WIRE REINFORCEMENT (WWR)
(2 Pieces Reqd.)

CONVENTIONAL REINFORCING STEEL BENDING DIAGRAMS

BILL OF REINFORCING STEEL

MARK	SIZE	LENGTH
R	3	5'-2"
S	4	As Reqd.

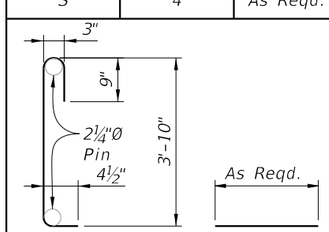

BAR 3R BAR 4S

ESTIMATED CONCRETE RAILING QUANTITIES

ITEM	UNIT	QUANTITY
Concrete	CY/LF	0.079
Reinforcing Steel	LB/LF	13.12

(The above quantities are based on a deck with a 2% cross slope)

10/6/2025 3:24:43 PM

LAST REVISION	REVISION	DESCRIPTION:			INDEX	SHEET
11/01/25			FDOT FY 2026-27 STANDARD PLANS	42" CONCRETE PEDESTRIAN/BICYCLE RAILING	521-825	1 of 1