GENERAL NOTES:

1. Work this Index with Index 425-001 and Index 425-010.

2. All reinforcing is Grade 60 bars with 2" minimum cover unless otherwise noted. Cut or bend bars out of way of pipe to clear pipe by 1½".
   See Index 425-001 for equivalent area of welded wire fabric.

2. Chamfer all exposed edges and corners ¾" or tooled to ¼" radius.

4. All dimensions are for both precast and cast-in-place inlets unless otherwise noted.

5. Quantities are for informational and estimating purposes only.

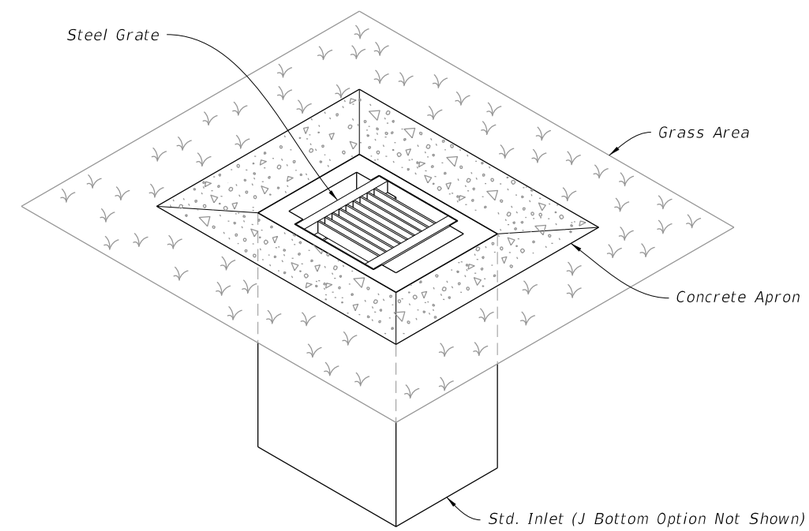

DITCH BOTTOM INLET TYPE A

(Pipe Opening Not Shown)

TABLE OF CONTENTS:

Sheet	Description
1	General Notes and Contents
2	Dimensional, Reinforcing, and Steel Grate Details
3	Concrete Apron and Sodded Area Details
4	Alternate A Structure Bottom - Top Slab Details

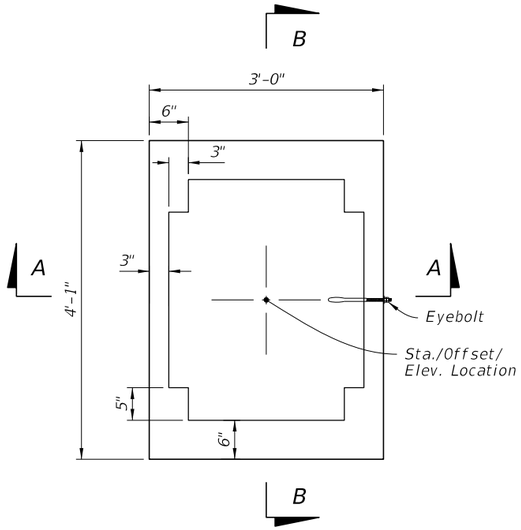

PLAN

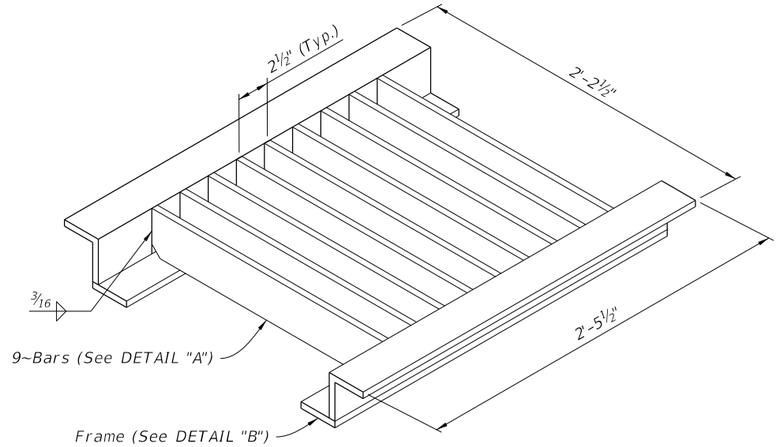

ISOMETRIC VIEW

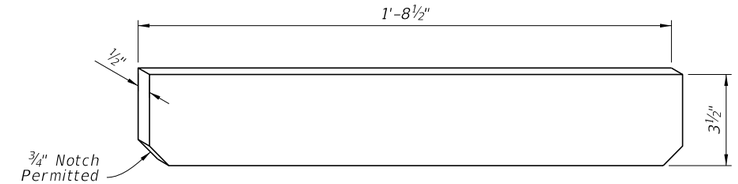

DETAIL "A"

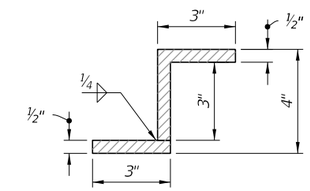

DETAIL "B"

STEEL GRATE DETAILS

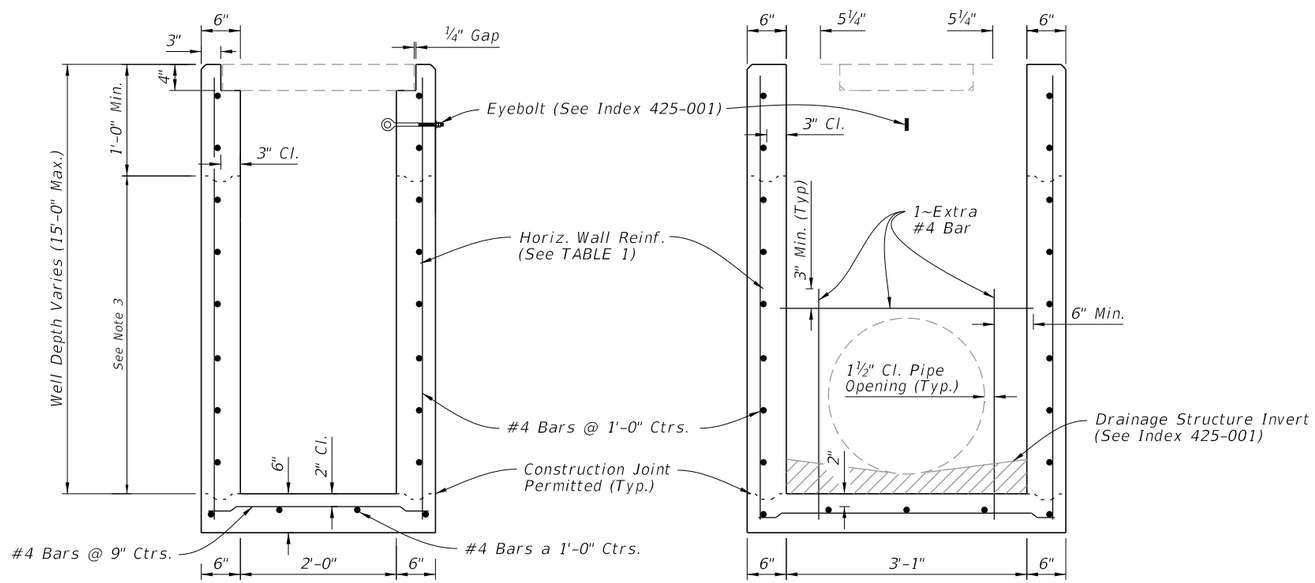

SECTION A-A
(Pipe Opening Not Shown)

SECTION B-B
(Pipe Opening Shown)

DIMENSIONAL AND REINFORCING DETAILS

TABLE 1
HORIZONTAL WALL REINFORCING SCHEDULE

WALL DEPTH	SCHEDULE	AREA (in.²/ft.)	MAX. SPACING	
			BARS	WWR
0' - 10'	A12	0.20	12"	8"
10' - 15'	A6	0.20	6"	5"

NOTES:

1. Plan View: The Steel Grate, Concrete Apron, and Sod are not shown.
2. See Sheet 3 for Concrete Apron and Sodded Area details.
3. Construction joints permitted between these limits. See Index 425-001 for minimum dimensions.

DIMENSIONAL, REINFORCING, AND STEEL GRATE DETAILS

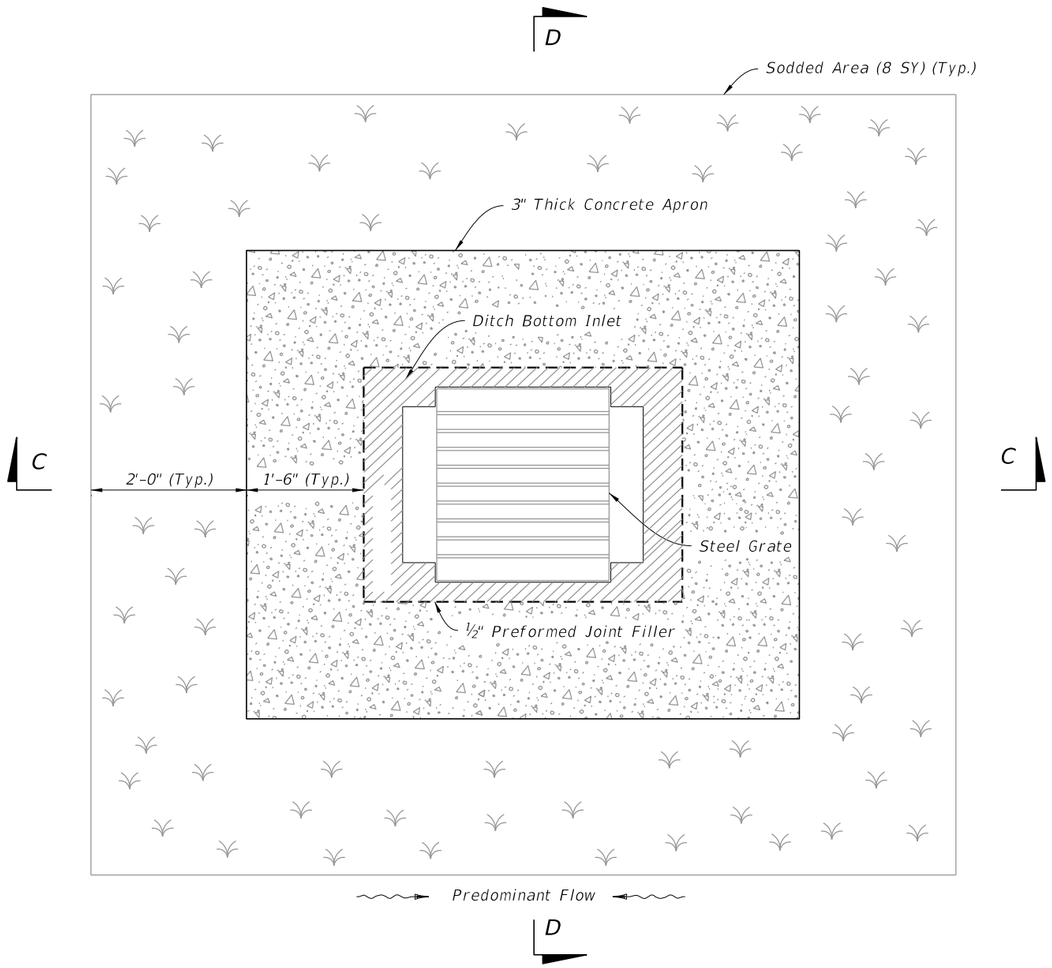

PLAN

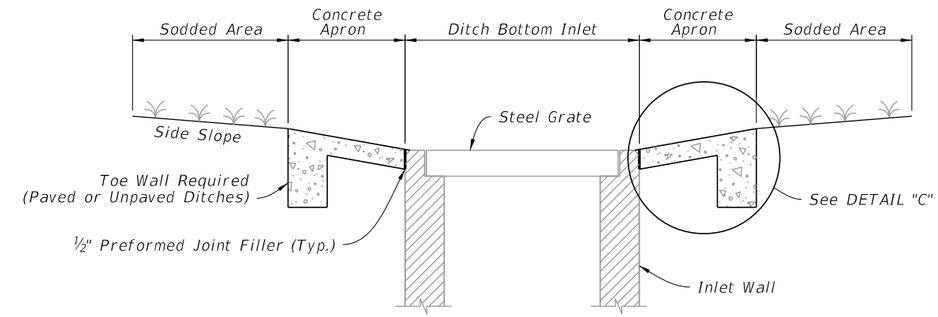

SECTION D-D

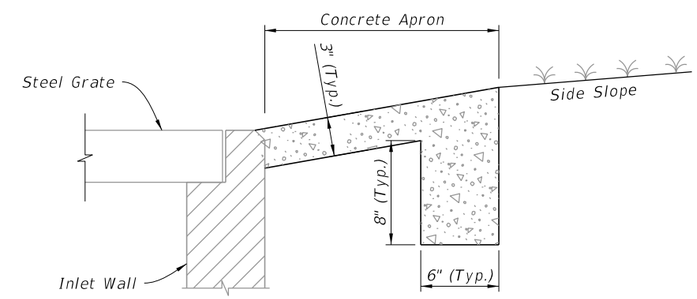

DETAIL "C"

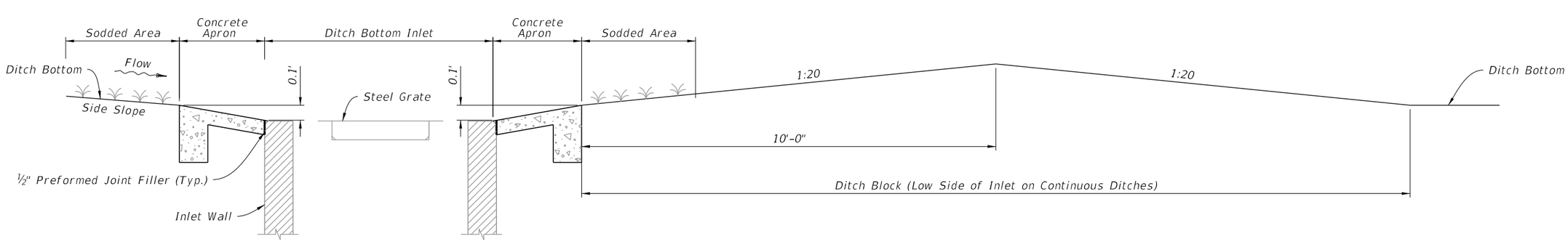

SECTION C-C AND DITCH BLOCK DETAIL

CONCRETE APRON AND SODDED AREA DETAILS

LAST REVISION	REVISION	DESCRIPTION:			INDEX	SHEET
11/01/20			FY 2026-27 STANDARD PLANS	DITCH BOTTOM INLET TYPE A	425-050	3 of 4

9/26/2025 11:56:31 AM

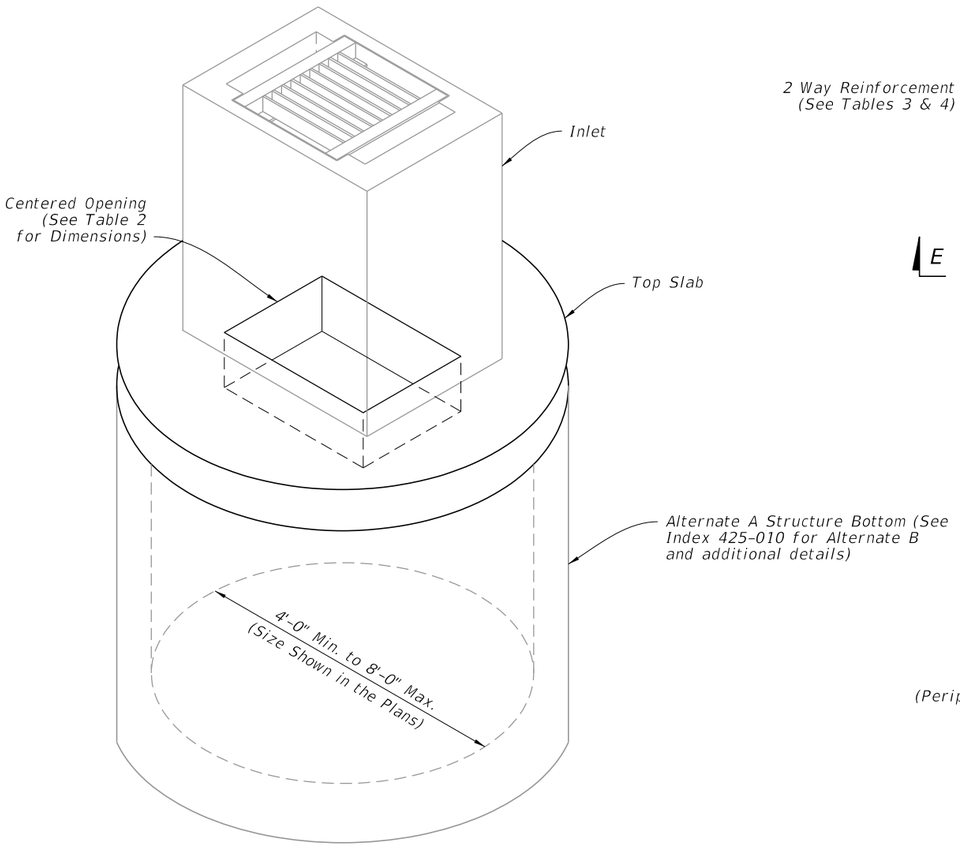

ISOMETRIC VIEW

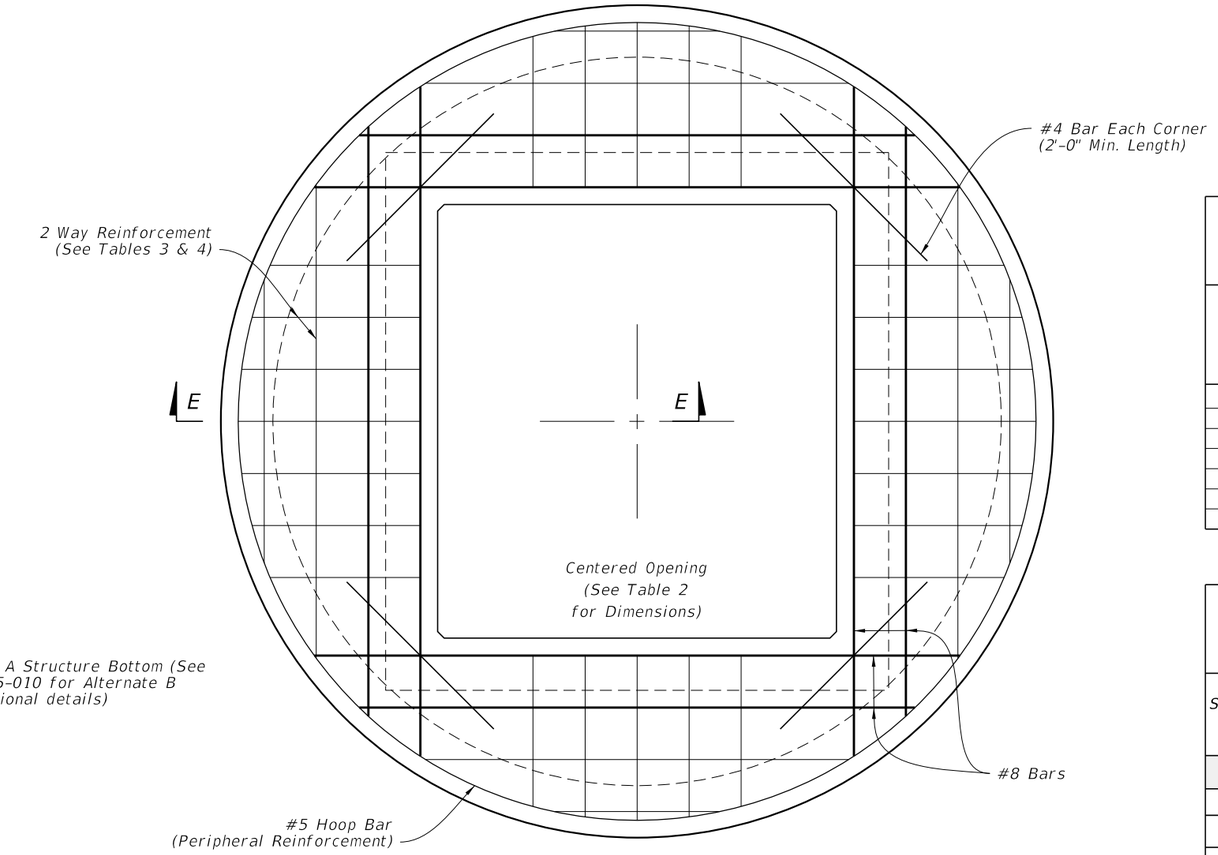

PLAN

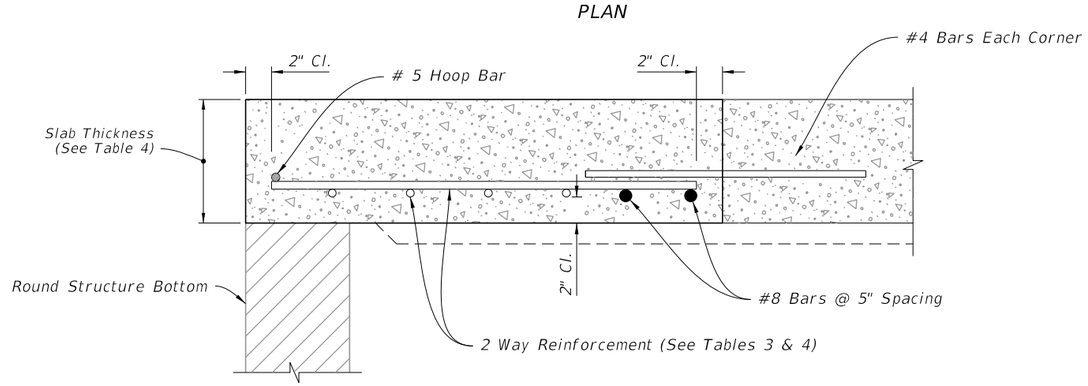

SECTION E-E

TOP SLAB REINFORCEMENT DETAILS

TABLE 2
TOP SLAB OPENING

BOTTOM STRUCTURE DIAMETER	OPENING SIZE	
	Min.	Max.
4'-0" to 8'-0"	2'-0" x 3'-1"	--

TABLE 3
TOP SLAB
REINFORCING SCHEDULE

SCHEDULE	GRADE 60 (BAR) OR 65 KSI & 70 KSI (WIRE FABRIC) In.²/ft.
A	0.20
B	0.24
C	0.37
D	0.53
E	0.73
F	1.06
G	1.45

TABLE 4
TOP SLAB WITH
CENTERED OPENING

STRUCTURE DEPTH	SLAB THICKNESS	REINFORCING (2 WAY) SCHEDULE
SIZE: 4'-0"		
≥0.5'-40'	9½"	C
SIZE: 5'-0"		
≥0.5'<30'	9½"	C
30'-40'	9½"	D
SIZE: 6'-0"		
0.5'<8'	9½"	B
8'<18'	9½"	C
18'<30'	9½"	D
30'<37'	9½"	E
37'-40'	9½"	G
SIZE: 8'-0"		
≥0.5'<9'	11½"	C
9'<15'	11½"	D
15'<23'	11½"	E
23'<33'	11½"	E
33'-40'	11½"	G

ALTERNATE A STRUCTURE BOTTOM - TOP SLAB DETAILS