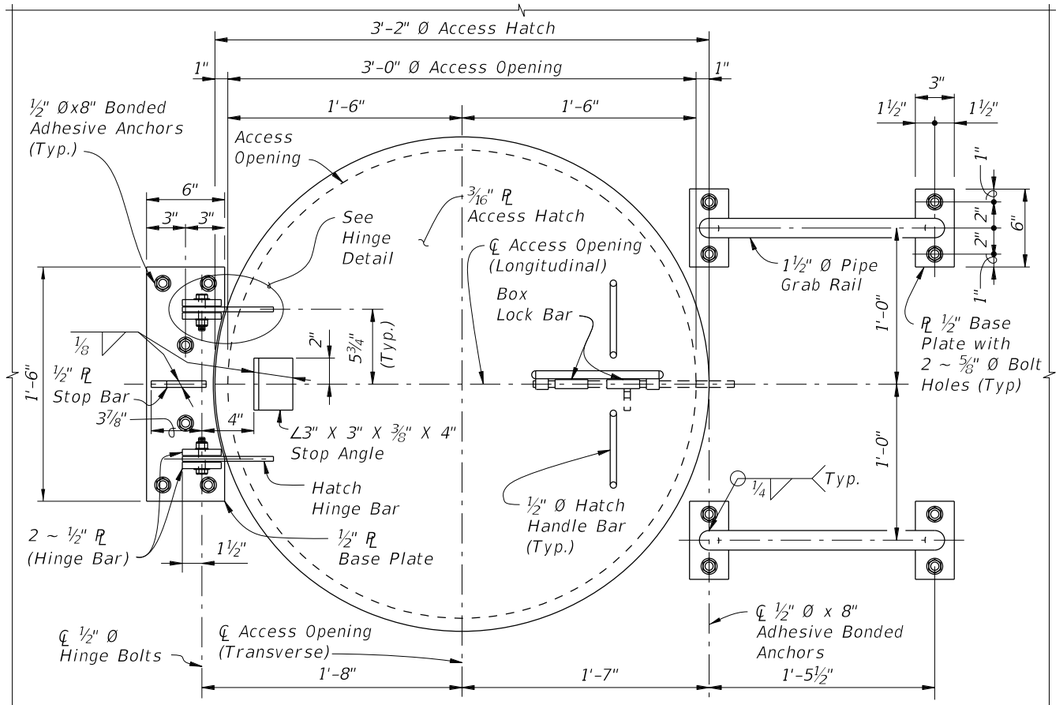

PLAN VIEW OF ACCESS HATCH ASSEMBLY

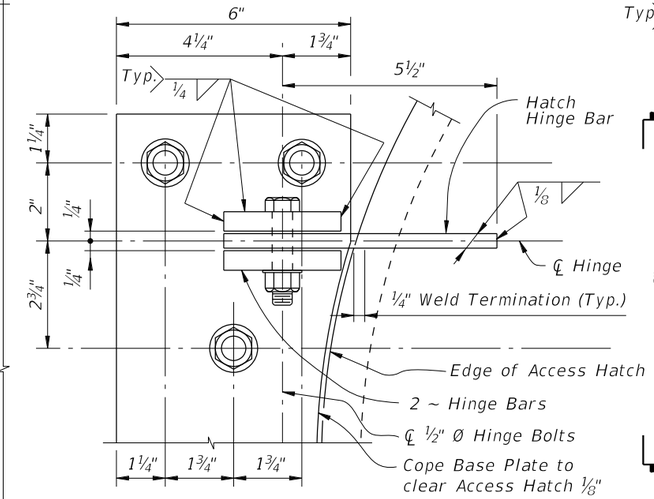

HINGE DETAIL

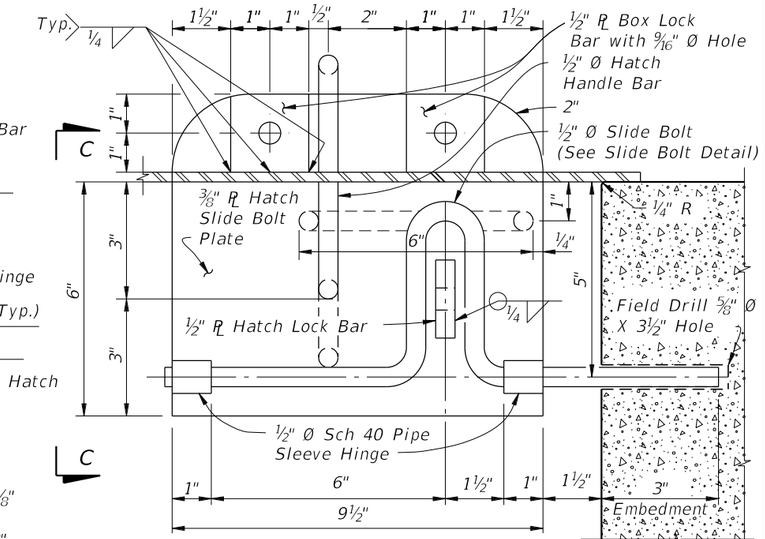

SLIDE BOLT PLATE DETAIL

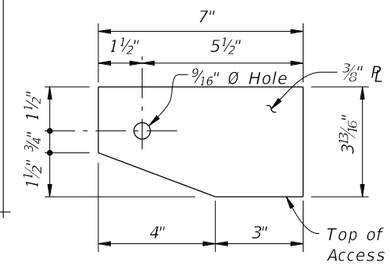

HATCH HINGE BAR DETAIL

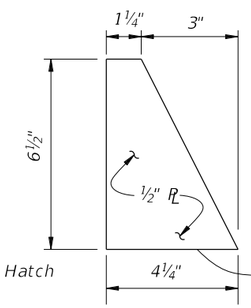

STOP BAR DETAIL

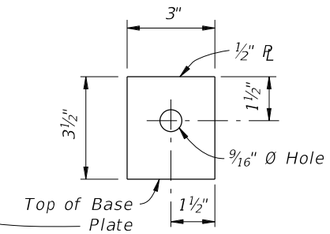

HINGE BAR DETAIL

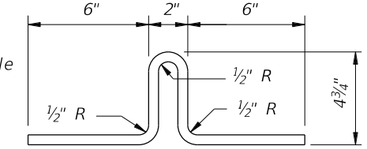

SLIDE BOLT DETAIL

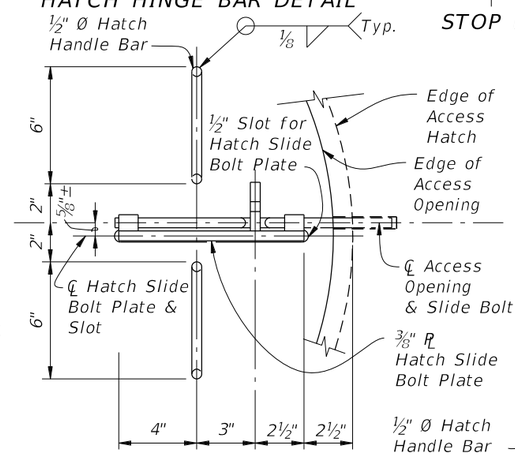

VIEW B-B

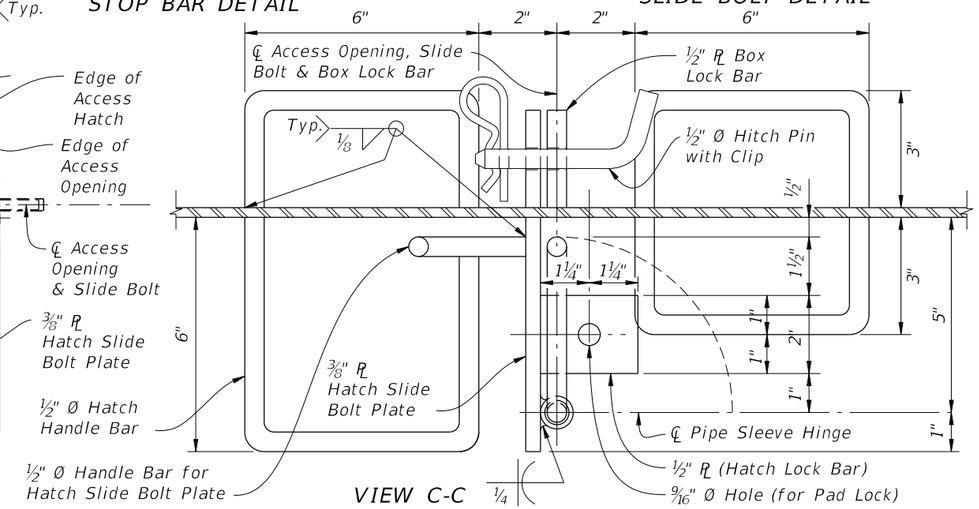

VIEW C-C

HINGE NOTE:
1. Orient the Access Hatch so that the hinges are located down-grade.

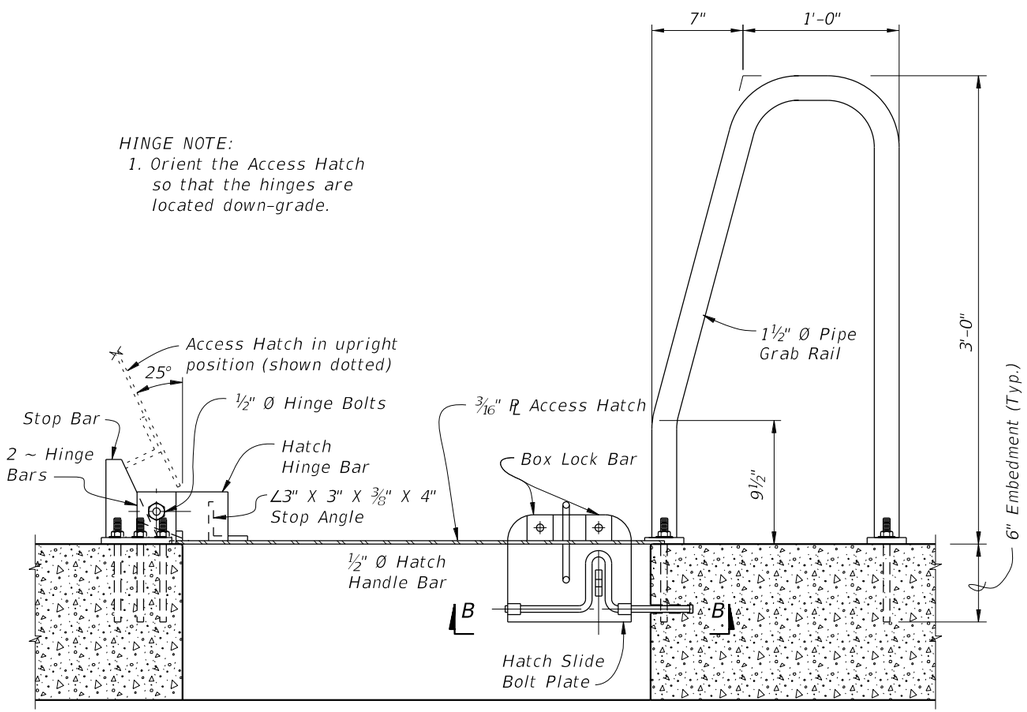

SECTION THRU ACCESS OPENING

NOTES:
1. All Structural Steel material in Access Hatch Assemblies shall conform to ASTM A709 Grade 36.
2. 1½" Ø Pipe Grab Rail shall be in accordance with ASTM A53 Grade B for standard weight pipe (Schedule 40).
3. ½" Ø Hatch Handle Bar and Hitch Pin shall be in accordance with ASTM A36.
4. All bolts shall conform to ASTM A307 or A449. All nuts shall conform to ASTM A563 and all washers shall conform to ASTM F-436.
5. All exposed edges of plates and openings shall be ground smooth.
6. See Framing Plan sheets for locations of Access Hatch Openings.
7. Coat structural steel in accordance with Specification Section 560.
8. Include the cost of the Access Hatch Assembly and incidental items in the cost of the Concrete Box Section. No separate payment will be made for coating structural steel.

10/17/2024 10:11:52 AM

LAST REVISION	REVISION	DESCRIPTION:			INDEX	SHEET
07/01/15			FY 2025-26 STANDARD PLANS	ACCESS HATCH ASSEMBLY FOR CONCRETE BOX SECTIONS	460-251	1 of 1