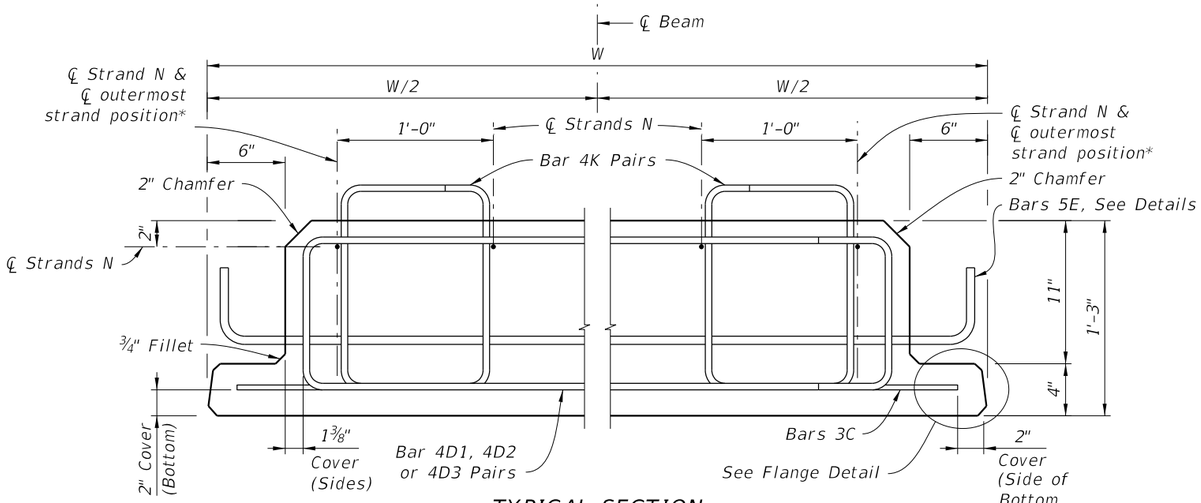

TYPICAL SECTION
(INTERIOR BEAM SHOWN; EXTERIOR BEAM SIMILAR, SEE BARS 5E DETAILS)

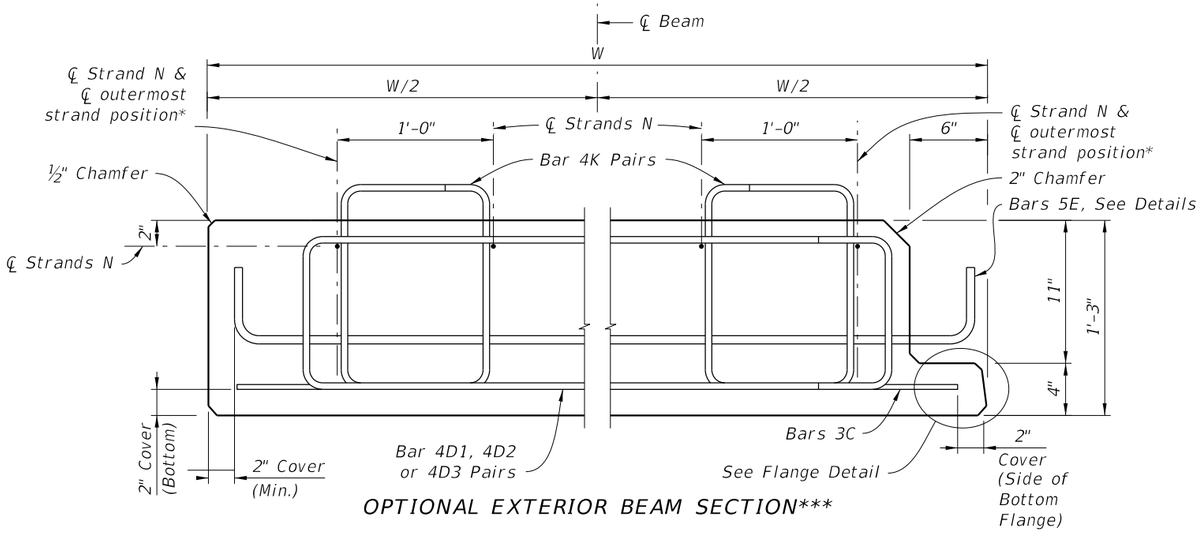

OPTIONAL EXTERIOR BEAM SECTION***

*** At the Contractor's option, the Optional Exterior Beam Section may be used.

NOTES:
Work this Index with Index 450-450 and Florida Slab Beams - Table of Variables in Structures Plans.

For Dimensions C, D, E, L, R, W & Y and Angle Ø, see Florida Slab Beam - Table of Variables in Structures Plans.

For referenced notes, see Index 450-450, Sheet 1.

* For ℄ of outermost strand positions, see corresponding Strand Pattern on Florida Slab Beams - Table of Variables in Structures Plans.

** At the Contractor's option, the Detail as shown for Interior Beams may be used for Exterior Beams and the Bars 5E field bent on the exterior side of the Beam to provide the specified cover to the coping line.

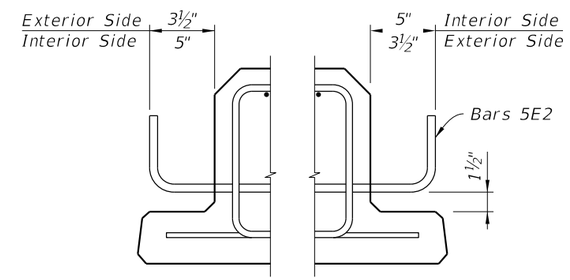

EXTERIOR BEAMS**
BARS 5E DETAIL

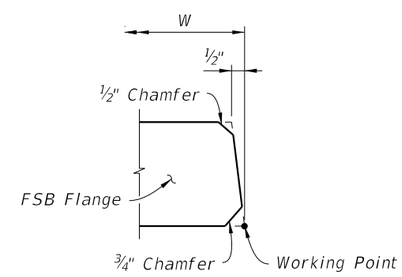

FLANGE DETAIL
(TYPICAL BOTH SIDES OF FSB)

BILL OF REINFORCING STEEL
FOR ONE BEAM ONLY

MARK	SIZE	NOTE NUMBERS	NUMBER REQUIRED	LENGTH (NOTE 1)
C	3		See Table	Varies
D1	4	6	10 (End 1)	Varies
D2	4	6	10 (End 2)	Varies
D3	4		See Table	Varies
E1	5	7	See Table	Varies
E2	5	7	See Table	Varies
K	4		See Table	2'-8"
N	See Note 3	3	4	Varies
Y1	6	6	3 (End 1)	Varies
Y2	6	6	3 (End 2)	Varies
Z	5		6	4'-10½"

BENDING DIAGRAMS (See Note 1)

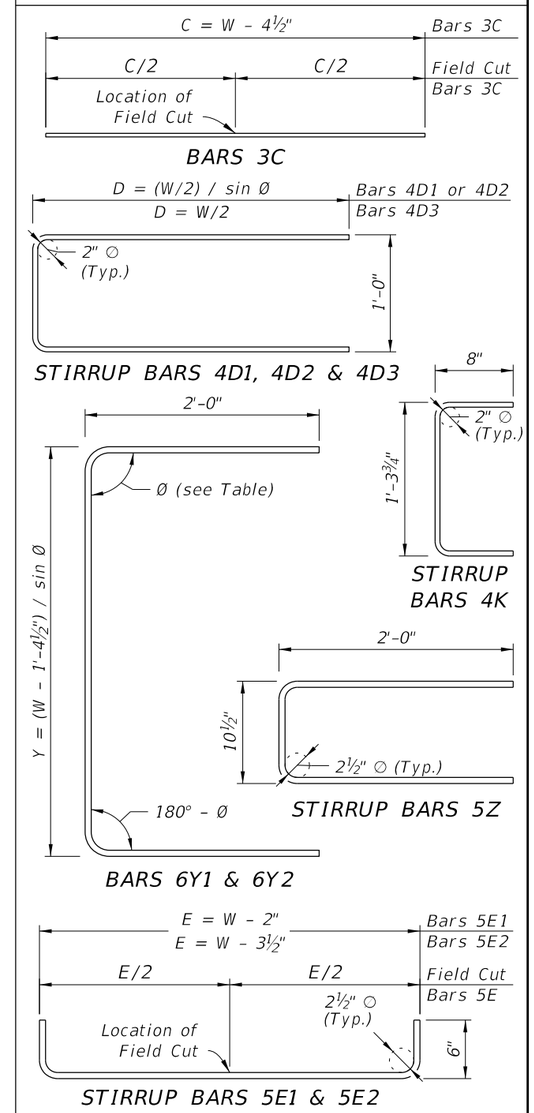

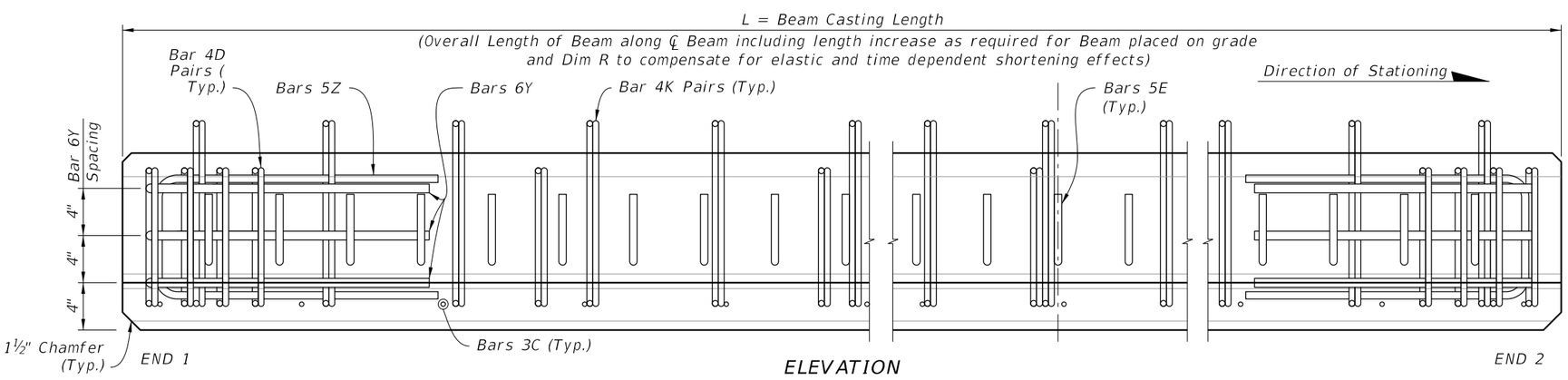

ELEVATION

LAST REVISION	REVISION	DESCRIPTION:			INDEX	SHEET
11/01/20			FY 2024-25 STANDARD PLANS	15" FLORIDA SLAB BEAM	450-452	1 of 1

10/15/2023 11:41:45 AM