FY 2023-24 STANDARD PLANS FOR ROAD CONSTRUCTION

Effective for Projects with Lettings in the Fiscal Year (FY) from

July 1, 2023 through June 30, 2024

State of Florida Department of Transportation
Office of Design
Mail Station 32
605 Suwannee Street
Tallahassee, Florida 32399-0450

FY 2023-24 Standard Plans for
Road and Bridge Construction
Topic No. 625-010-003

FDOT FY 2023-24 Standard Plans

NOTICE

The Standard Plans are intended to support the various engineering processes for construction operations on the State Highway System. They are established to ensure the application of uniform standards in the preparation of contract plans for construction of roadways and structures. These Standard Plans may be used for maintenance operations or adopted by other authorities for use on projects under their jurisdiction.

It is the responsibility of the Engineer of Record using these Standard Plans to determine the fitness for a particular use of each standard in the design of a project. The inappropriate use of and adherence to these standard Plans does not exempt the engineer from the professional responsibility of developing an appropriate design.

PATENTED DEVICES, MATERIALS AND PROCESSES

The use of any design, method, process, material or device either expressed or implied by these standards that are covered by patent, copyright, or proprietary privilege is the sole responsibility of the user. Any infringement on the rights of the inventor, patentee, assignee or licensee shall be the sole responsibility of the user. For additional information refer to Subsection 7-3 of the FDOT Standard Specifications for Road and Bridge Construction.

DISTRIBUTION OF EXEMPT PUBLIC DOCUMENTS:

It is the policy of the Department to protect the State Highway System's infrastructure by defining the responsibilities for disclosure and use of sensitive documents showing the structural elements used in the design and construction of Department structures. Section 119.071(3)(b), Florida Statute (F.S.), provides that these sensitive documents are exempt from Chapter 119, F.S., Florida's public records law. In accordance with Section 119.071(3)(b), F.S., the Department has adopted Procedure 050-020-026, Distribution of Exempt Public Documents Concerning Department Structures and Security System Plans, to define the method and responsibilities for disclosure and use of these sensitive documents.

Structure is defined in Section 334.03(27), F.S., as "a bridge, viaduct, tunnel, causeway, approach, ferry slip, culvert, toll plaza, gate, or other similar facility used in connection with a transportation facility" which would include related pipes and pipe systems. However, for the purpose of the public records law and Procedure 050-020-026, the Department has determined that the term "structure" includes "bridges with an opening of more than 20 feet between undercopings of abutments or spring lines of arches or extreme ends of openings for multiple boxes, and those other bridges subject to safety inspection under Section 335.074, F.S." A roadway is not otherwise a structure for the purposes of Procedure 050-020-026.

Therefore, plans, blueprints, schematic drawings, and diagrams of structures owned by the Department are exempt from the public records provisions of Chapter 119, F.S. This exemption includes draft, preliminary, and final formats as described in Procedure 050-020-026 and includes paper, electronic, and other formats. The Department has provided for the limited release of such documents in Procedure 050-020-026.

Entities or persons outside the Department requesting or receiving copies of any portion of plans or other documents considered Exempt Documents under Procedure 050-020-026 must complete and submit a request form (Form No. 050-020-26). The form also advises the requestor that the entity or person receiving the documents shall maintain their exempt status. This procedure applies to all Department internal or contracted staff who have access to such Exempt Documents in their Department work. Refer to Procedure 050-020-026 for additional requirements.

CERTIFICATION STATEMENT

I hereby certify that these Standard Plans were prepared by me or under my responsible charge, compiled from designs prepared, examined, adopted and implemented by the Florida Department of Transportation in accordance with established procedures, and as approved by the Federal Highway Administration.

This document has been digitally signed and sealed by Derwood Sheppard. Printed copies of this document are not considered signed and sealed and the signature must be verified on any electronic copies.

Derwood C. Sheppard, Jr. M.Eng., P.E.
State Standard Plans Engineer

The official version of the Standard Plans is the PDF version and can be found at:

http://www.fdot.gov/design/standardplans

Florida Department of Transportation

RON DESANTIS
GOVERNOR

605 Suwannee Street
Tallahassee, FL 32399-0450

JARED W. PERDUE, P.E.
SECRETARY

October 17, 2022

James Christian
Division Administrator
Federal Highway Administration
3500 Financial Plaza, Suite 400
Tallahassee, Florida 32312

Re: Office of Design
FY 2023-24 Standard Plans for Road and Bridge Construction

Dear Mr. Christian:

In accordance with the *Stewardship and Oversight Agreement on Project Assumption and Program Oversight by and between the Federal Highway Administration, Florida Division, and the State of Florida Department of Transportation* we are requesting approval of the ***FY 2023-24 Standard Plans for Road and Bridge Construction (Standard Plans)*** for use on federal aid projects. Copies of all revised Indexes for the ***FY 2023-24 Standard Plans*** were previously provided to the Florida Division Office for review and approval. All comments from the reviews have been addressed.

Sincerely,

10/17/22

Derwood Sheppard, P.E.
State Standard Plans Engineer

For *FHWA Florida Division Office* use:

Approved for Use on Federal Aid Projects:

BREN I GEORGE Digitally signed by BREN I GEORGE
Date: 2022.10.25 13:02:07 -04'00'

For James Christian, P.E.
Division Administrator

ABBREVIATIONS

FY 2023-24 STANDARD PLANS

Abbreviation	Meaning
A	
AASHTO	American Association Of State Highway And Transportation Officials
AC	Alternating Current
Accel.	Acceleration
ACI	American Concrete Institute
ADA	Americans With Disabilities Act
ADT	Average Daily Traffic
AFAD	Automated Flagger Assistance Device
AISC	American Institute Of Steel Construction
AISI	American Iron and Steel Institute
Alt.	Alternate
Alum.	Aluminum
ANSI	American National Standards Institute
AOS	Apparent Opening Size
APL	Approved Products List
App.	Approach
Approx.	Approximate
ARTBA	American Road & Transportation Builders Association
Asph.	Asphalt
Assem.	Assembly
ASTM	American Society For Testing And Materials
ATPB	Asphalt Treated Permeable Base
Auxil.	Auxiliary
AWG	American Wire Gauge
AWS	American Welding Society
B	
Bot.	Bottom
Brkwy.	Breakaway
b/w	Between
C	
CC, C to C	Center to Center
C & G	Curb And Gutter
C.C.	Crash Cushion
CCTV	Closed-Circuit Television
CFR	Code of Federal Regulations
CFRP	Carbon Fiber Reinforced Polymer
cfs, CFS	Cubic Feet Per Second
CIP, C.I.P. or C-I-P	Cast In Place
CJP	Complete Joint Penetration
Ckt.	Circuit
℄	Center Line
Cl.	Clearance
CMP	Corrugated Metal Pipe
Con.	Connection
Conc.	Concrete
Const.	Construct or Construction
Cont.	Continuation or Continuous
Corr.	Corrugated
Cov.	Cover
CP	Concrete Pipe
C	
CSIP	Cost Savings Initiative Proposal
CSL	Cross-hole Sonic Logging
CTPB	Cement Treated Permeable Base
Ctr., Ctrs.	Center
Cu. Ft.	Cubic Feet
Cu. Yd., CY,	Cubic Yard
D	
D	Depth, Distance or Diameter
Dia. or Ø	Diameter
Dbl.	Double
Decel.	Deceleration
Deg.	Degree
Dim.	Dimension
Dist.	Distance
DMM	Domestic Mail Manual
DPI	Ditch Point Intersection
Dt	Ditch
DTOE	District Traffic Operations Engineer
E	
e	Superelevation Rate
E.P. or EOP	Edge Of Pavement
EA or Ea.	Each
EIA	Electronic Industries Alliance
El. or Elev.	Elevation
Embed.	Embedment
EPDM	Ethylene Propylene Diene Monomer
Eq.	Equation or Equal
Equip.	Equipment
etc.	Et Cetera (And So Forth)
ETP	Electronic Tough Pitch
Ex.	Example
Exist.	Existing
Exp.	Expansion
Ext.	Extension
F	
FAC	Florida Administrative Code
FC	Friction Course
Fdn.	Foundation
F.L. or ℄	Flow Line
Fl.	Florida
FDEP	Florida Department Of Environmental Protection
FDOT	Florida Department Of Transportation
FHWA	Federal Highway Administration
FIB	Florida-I Beam
F.S.	Florida Statutes
FS	Far Side
FSB	Florida Slab Beam
Ft.	Foot or Feet
FTP	Florida Traffic Plans
G	
G	Shear Modulus
g	Gram
Ga.	Gauge or Gage
Galv.	Galvanized
GFI	Ground Fault Interrupter
GFRP	Glass Fiber Reinforced Polymer
Grd.	Ground
H	
Hd.	Head
H.S., HS	High Strength
HDPE	High Density Polyethylene
Horiz.	Horizontal
HP	Horsepower or H-Pile
HSHV	High Strength Horizontal Vertical
I	
ID, I.D.	Inside Diameter or Identification
in.	Inch(es)
Inc.	Incorporated
Int.	Interior
Inv.	Invert
ITS	Intelligent Transportation Systems
J	
JCT	Junction
Jt.	Joint
K	
k	kip
kip	1000 Pounds
ksi	Kips Per Square Inch
kVA	Kilovolt Ampere
L	
L	Length
LA	Limited Access
lb or lbs.	Pound(s)
lb/sy	Pounds Per Square Yard
lbf	Pound force
LBR	Lime rock Bearing Ratio
LF	Linear Foot (Feet)
Lgth.	Length
Long.	Longitudinally or Longitudinal
LRFD	Load Resistance Factor Design
LRS	Low-Relaxation Strand
LS	Lump Sum
LSD	Lump Sum per Day
Lt.	Left

ABBREVIATIONS

FY 2023-24 STANDARD PLANS

Abbreviation	Meaning
M	
m	Meter
m^2	Meter Square
Mach.	Machine
MAS	Motorist Awareness System
MASH	Manual for Assessing Safety Hardware (AASHTO)
Max.	Maximum
MES	Mitered End Section
M.H.	Manhole or Mounting Height
MHW	Mean High Water
Mid.	Middle
Mil or Mils	One-Thousandth Of An Inch
Min.	Minimum or Minute
Misc.	Miscellaneous
MLW	Mean Low Water
mm	Millimeter
Mod.	Modification
MOT	Maintenance Of Traffic
MPH or mph	Miles Per Hour
MUTCD	Manual On Uniform Traffic Control Devices
N	
N	Standard Penetration Number
NA or N/A	Not Available or Not Applicable
NC	Normal Crown
NCHRP	National Cooperative Highway Research Program
NDCBU	Neighborhood Delivery And Collection Box Unit
NEMA	National Electrical Manufacturers Association
NHW	Normal High Water
No.	Number
Nom.	Nominal
NPS	Nominal Pipe Size
NPT	National Pipe Thread
NS or N.S.	Near Side
NS	Non-Structural
NTS	Not To Scale
O	
O.C.	On Center
O to O or O.O.	Out to Out
O.B.G.	Optional Base Group
OD or O.D.	Outside Diameter
Oz.	Ounce
P	
Pavt.	Pavement
PBR	Pedestrian/Bicycle Railing
PC	Point Of Curvature
PCC	Plain Cement Concrete
pcf	Pounds per Cubic Foot
PCMS	Portable Changeable Message Sign
P.E. or PE	Professional Engineer
P	
Pen.	Penetration
PPB	Pier Protection Barrier
PPP	Polypropylene pipe
Prest.	Prestressed
PRS	Portable Regulatory Sign
psf	Pounds Per Square Foot
PSI or psi	Pounds Per Square Inch
PT	Point of Tangency or Pressure Treated
PTFE	Polytetrafluoroethylene
PVC	Polyvinyl Chloride
Q	
Q	Flow Volume
Qty.	Quantity
R	
R or Rad.	Radius
Rt.	Right
R/W	Right Of Way
RC	Reverse Crown
RCP	Reinforced Concrete Pipe
Rd.	Road or Round
Rdwy.	Roadway
Rect.	Reticuline or Rectangular
Ref.	Reference
Reinf.	Reinforced or Reinforcement
Req. or Reqd.	Required
RGS	Rigid Galvanized Steel
RPM	Raised Pavement Markers
R/R or RR	Railroad
RSDU	Radar Speed Display Unit
RU	Rack Unit
RX	Receive
S	
S or s	Speed, Spacing or Second
Sch.	Schedule
SHBR	Special Height Bicycle Railing
Shldr.	Shoulder
SHW	Seasonal High Water
SIP	Stay In Place
SP	Superpave
Spa., Spcg. or Sp.	Space(ing)(s)
Spec.	Specification
sq	Square
Sq. Ft., SF, sf or S.F.	Square Foot
sq. in.	Square Inch
Sq. Yd., SY or S.Y.	Square Yard
SR	State Road
FSB	Florida Slab Beam
SS	Stainless Steel
S	
St. or ST.	Street
Sta.	Station
Std.	Standard
Stg.	Strong
Stl.	Steel
SW	Skewed Angle
Swk.	Sidewalk
SYM	Symmetrical
T	
T or t	Thickness, Tangent Distance or Time
Tan	Tangent
T&G	Tongue and Groove
TCP	Traffic Control Plan(s)
TCZ	Traffic Control Zone
Temp.	Temperature or Temporary
Theo.	Theoretical
THW or THWN	Insulation (Flame Retardant, Moisture And Heat Resistant Thermoplastic)
TMA	Truck/Trailer Mounted Attenuator
TN	Ton
Trans.	Transition or Transverse
TTC	Temporary Traffic Control
TVSS	Transient Voltage Surge Suppression
TX	Transmit
Typ.	Typical
U	
UL	Underwriters Laboratories
UPS	Uninterruptible Power Supply
USPS	United States Postal Service
Util.	Utilities
UV	Ultraviolet
V	
Veh.	Vehicle
Vert.	Vertical
VPD or Vpd.	Vehicles Per Day
W	
W	Width or Wide
WT	Weight
WWM	Welded Wire Mesh
WWR	Welded Wire Reinforcing
Y	
Yd.	Yard
Yr.	Year

TABLE OF CONTENTS

FY 2023-24 STANDARD PLANS FOR ROAD CONSTRUCTION

Standard Plans Index	Index Title
Miscellaneous	
000-510	Superelevation Transitions - High Speed Roadways
000-511	Superelevation Transitions - Low Speed Roadways
000-525	Ramp Terminals
General Construction Operations	
Maintenance of Traffic	
102-100	Temporary Barrier
102-110	Type K Temporary Concrete Barrier System
102-120	Low Profile Barrier
102-600	General Information for Traffic Control Through Work Zones
102-601	Two-Lane and Multilane Roadway, Work Beyond Shoulder
102-602	Two-Lane and Multilane, Work on Shoulder
102-603	Two-Lane, Two-Way, Work Within the Travel Way
102-604	Two-Lane, Two-Way, Intersection Work
102-606	Two-Lane Roadway, Lane Closure Using Temporary Traffic Signals
102-607	Mobile Operations
102-608	Two-Lane, Two-Way, Temporary Diversion Connection
102-613	Multilane Roadway, Lane Closures
102-615	Multilane Roadway, Intersection Work
102-620	Multilane Roadway, Temporary Diversion
102-625	Temporary Road Closure
102-628	Two-Way Left-Turn Lanes
102-655	Traffic Pacing
102-660	Sidewalk Closure
102-661	Bicycle Facility Closures
102-665	Limited Access Temporary Opening
102-680	Haul Road Crossing
Clearing Construction Site	
Clearing and Grubbing	
110-100	Tree Protection and Preservation
110-200	Mailboxes
Earthwork and Related Operations	
120-001	Embankment Utilization
120-002	Subsoil Excavation
125-001	Utility Adjustments thru Existing Pavement
141-T01	Settlement Plate
160-001	Miscellaneous Earthwork Details

Standard Plans Index	Index Title
Bituminous Treatments, Surface Courses, and Concrete Pavement	
Concrete Pavement	
330-001	Paved and Graded Driveways
350-001	Concrete Pavement Joints
353-001	Concrete Slab Replacement
370-001	Bridge Approach Expansion Joint - Concrete Pavement with Special Select Soil Base
Structures	
Concrete Structures	
400-010	Cantilever Retaining Wall (C-I-P)
400-011	Gravity Wall
400-021	Concrete Steps
Inlets, Manholes and Junction Boxes	
425-001	Supplementary Details for Manholes and Inlets
425-010	Structure Bottoms - Type J and P
425-020	Curb Inlet Tops - Types 1, 2, 3 and 4
425-021	Curb Inlet Tops - Types 5 and 6
425-022	Curb Inlet - Type 7
425-023	Curb Inlet - Type 8
425-024	Curb Inlet Top - Type 9
425-025	Curb Inlet Top - Type 10
425-030	Median Barrier Inlets Types 1 and 2
425-031	Adjacent Barrier Inlet
425-032	Curb and Gutter Barrier Inlet
425-040	Gutter Inlet - Type S
425-041	Gutter Inlet - Type V
425-050	Ditch Bottom Inlet - Type A
425-051	Ditch Bottom Inlet - Type B
425-052	Ditch Bottom Inlets - Types C, D, E and H
425-053	Ditch Bottom Inlets - Types F and G
425-054	Ditch Bottom Inlet - Type J
425-055	Ditch Bottom Inlet - Type K
425-060	Back of Sidewalk Drainage
425-061	Closed Flume Inlet
425-070	Skimmer for Outlet Control Structures
425-080	Utility Conflicts thru Drainage Structures
425-090	Safety Modifications for Inlets In Box Culverts

TABLE OF CONTENTS

FY 2023-24 STANDARD PLANS FOR ROAD CONSTRUCTION

Standard Plans Index	Index Title
Pipe Culverts - End Treatments	
430-001	Miscellaneous Drainage Details
430-010	U-Type Concrete Endwalls With Grates - 15" to 30" Pipe
430-011	U-Type Concrete Endwalls - Baffles and Grate Optional - 15" to 30" Pipe
430-012	U-Type Concrete Endwall - Energy Dissipator - 30" to 72" Pipe
430-020	Flared End Section
430-021	Cross Drain Mitered End Section
430-022	Side Drain Mitered End Section
430-030	Straight Concrete Endwalls - Single and Multiple Pipe
430-031	Straight Concrete Endwalls - Single and Double 60" Pipe
430-032	Straight Concrete Endwalls - Single and Double 66" Pipe
430-033	Straight Concrete Endwalls - Single and Double 72" Pipe
430-034	Straight Concrete Endwalls - Single 84" Pipe
430-040	Winged Concrete Endwalls
430-090	Safety Modifications for Endwalls
Structures - Miscellaneous Drainage	
436-001	Trench Drain
440-001	Underdrain
440-002	Underdrain Inspection Box
443-001	French Drain
443-002	Skimmers for French Drain Outlets
444-T01	Deep Well Injection Box
446-001	Concrete Pavement Subdrainage
Structures Foundations - Sheet Pile Wall	
455-400	Precast Concrete Sheet Pile Wall (Conventional)
455-440	Precast Concrete Sheet Pile Wall (CFRP/GFRP & HSSS/GFRP)
Incidental Construction	
Miscellaneous	
508-T01	Traffic Control Devices for Movable Span Bridge Signals
509-070	Railroad Grade Crossing Traffic Control Devices
509-100	Advance Warning for R/R Crossing
Metal Pedestrian/Bicycle Railings, Guiderails and Handrails	
515-052	Pedestrian/Bicycle Railing (Steel)
515-062	Pedestrian/Bicycle Railing (Aluminum)
515-070	Pipe Guiderail (Aluminum)
515-080	Pipe Guiderail (Steel)
Concrete Gutter, Curb Elements and Traffic Separator	
520-001	Curb and Gutter
520-005	Concrete Shoulder Gutter Spillway
520-010	Median Opening Flume
520-020	Traffic Separators
Concrete Barriers, Traffic Railings, and Parapets	
521-001	Concrete Barrier
521-002	Pier Protection Barrier
521-010	Opaque Visual Barrier
521-510	Concrete Barrier/Noise Wall (8'-0")
521-511	Concrete Barrier/Noise Wall (14'-0")
521-512	Concrete Barrier/Noise Wall-Junction Slab
521-513	Concrete Barrier/Noise Wall T-Shaped Spread Footing
521-514	Concrete Barrier/Noise Wall L-Shaped Spread Footing
521-515	Concrete Barrier/Noise Wall Trench Footing
521-600	MSE Wall Coping (Precast or C-I-P)
521-610	Concrete Barrier/Junction Slab - Wall Coping
521-611	Concrete Barrier/Junction Slab-Wall Coping (FRP)
521-620	Concrete Barrier/Raised Sidewalk - Wall Coping
521-630	Parapet with C-I-P Sidewalk - Wall Coping
521-640	Drainage Inlet Openings in Junction Slab - Wall Coping
521-650	Light Pole Pedestal - Wall Coping
Concrete Sidewalk and Driveways	
522-001	Concrete Sidewalk
522-002	Detectable Warnings and Sidewalk Curb Ramps
522-003	Concrete Flared Driveways
Ditch and Slope Pavement	
524-001	Ditch Pavement and Sodding
Noise and Perimeter Walls	
534-200	Noise Walls (Precast)
534-250	Perimeter Walls
Guardrail	
536-001	Guardrail
536-002	Guardrail Transitions and Connections for Existing Bridges
Crash Cushions	
544-001	Crash Cushion Transition Details
Rumble Strips	
546-001	Raised Rumble Strips
546-010	Ground-In Rumble Strips
Retaining Wall Systems	
548-020	MSE Retaining Wall Systems - Permanent
548-030	MSE Retaining Wall Systems - Temporary
Fencing	
550-001	Fence - Type A
550-002	Fence - Type B
550-003	Cantilever Slide Gate - Type B Fence
550-004	Fence Location

TABLE OF CONTENTS

FY 2023-24 STANDARD PLANS FOR ROAD CONSTRUCTION

Standard Plans Index	Index Title
Performance Turf	
570-001	Permanent Erosion Control
570-010	Shoulder Sodding and Turf on Existing Facilities
Landscape	
580-001	Landscape Installation
Traffic Control Signals and Devices	
630-001	Conduit Installation Details
634-001	Signal Cable and Span Wire Installation Details
634-002	Aerial Interconnect
635-001	Pull and Splice Boxes
639-001	Service Point Details
639-002	Electric Power Service
641-010	Concrete Poles
641-020	Concrete CCTV Pole
646-001	Aluminum Post and Pedestal Mounted Pedestrian Detectors and Signals
649-010	Steel Strain Pole
649-020	Steel CCTV Pole
649-030	Standard Mast Arm Assemblies
649-031	Mast Arm Assemblies
653-001	Pedestrian Control Signal Installation Details
654-001	Rectangular Rapid Flashing Beacon Assembly
659-010	Span Wire Mounted Sign Details
659-020	Camera Mounting Details
660-001	Vehicle Loop Installation Details
665-001	Pedestrian Detector Assembly Installation Details
671-001	Standard Signal Operating Plans
676-010	Cabinet Installation Details
695-001	Traffic Monitoring Site
Signing, Pavement Markings and Lighting	
Highway Signing	
700-010	Single Column Ground Signs
700-011	Single Column Cantilever Ground Mounted Sign
700-012	Single Post Sign Support Barrier Side-Mounted
700-013	Single Post Sign Support Barrier Top-Mounted
700-020	Multi-Column Ground Sign
700-030	Wind and Hanger Beams for Overhead Signs
700-031	External Lighting for Signs
700-040	Cantilever Sign Structure
700-041	Span Sign Structure
Highway Signing (Cont.)	
700-050	Free-Swinging, Internally-Illuminated Street Sign Assemblies
700-090	Dynamic Message Sign Walk-In
700-091	Catwalk Details
700-101	Typical Sections for Placement of Single and Multi-Column Signs
700-102	Special Sign Details
700-104	Signing for Motorist Services
700-105	Welcome Center Signing
700-106	Rural Narrow Bridge Treatment
700-107	Bridge Weight Restrictions
700-108	Typical Signing for Truck Weigh and Inspection Stations
700-110	Mounting Exit Number Panels to Signs
700-120	Enhanced Highway Signing Assemblies
Pavement Markings	
706-001	Typical Placement of Raised Pavement Markers
711-001	Pavement Markings
711-002	Bicycle Markings
711-003	Interchange Markings
Highway Lighting Systems	
715-001	Conventional Lighting
715-002	Standard Aluminum Lighting
715-003	Utility Conflict Pole
715-010	High Mast Lighting
Railroad Crossing	
830-T01	Railroad (Grade) Crossings

STANDARD PLANS
FY 2023-24 REVISIONS LOG

Standard Plans Index	Description
102-200	**Sheet 1:** Changed the bridge design type in General Notes. **Sheet 2:** Removed double bearing note. **Sheet 3:** Corrected the raker beam connection; Removed double bearing Notes. **Sheet 4:** Removed double bearing Notes and details. **Sheet 5:** Removed double bearing Notes and details. **Sheet 6**: Added slight gap between beam stops and beam.
102-201	**Sheet 2:** Updated guardrail backplate details to add clarifying information and remove errors.
102-604	**Sheet 1:** Deleted Note 6 "District Traffic Operations Engineer must approve temporary signal phasing modifications prior to beginning or work". Added note to Specification 102-9.
102-606	Deleted Note 2 "District Traffic Operations Engineer must approve the installation and timing of temporary signals modifications prior to beginning or work. Adjust timing based on changing field conditions as approved by the Worksite Traffic Supervisor. Obtain approval from the District Traffic Operations Engineer for any timing changes that are either reoccurring or last longer than 24 hours". Added note to Specification 102-9.
102-607	**Sheet 1:** Deleted "Flashing" from the Arrow Board Mode.
102-615	**Sheet 1:** Deleted Note 3 and added to Specification 102-9.
102-680	Deleted Note 2 and added Note to Specification 102-9.
400-090	**Sheet 1:** Updated Note 9 into 2 Notes.
415-010	**Sheet 1:** Added new bar bend type.
425-060	**Sheet 2:** EDITORIAL - Revise both Section A-A Details to show the short side #5s in the slab on the bottom of the long side #4s.
455-001	**Sheet 1:** Changed Class V (Special) concrete to Class V.
455-030	Reverted to the previous version of the Standard.
455-031	Reverted to the previous version of the Standard.

Standard Plans Index	Description
455-054	**Sheet 1:** Changed Class V (Special) concrete to Class V.
455-060	**Sheet 1:** Changed Class V (Special) concrete to Class V.
455-101	**Sheet 1:** Changed Class V (Special) concrete to Class V.
455-154	**Sheet 1:** Changed Class V (Special) concrete to Class V.
455-160	**Sheet 1:** Changed Class V (Special) concrete to Class V.
455-400	**Sheet 1:** Changed Class V (Special) concrete to Class V.
455-440	**Sheet 1:** Changed Class V (Special) concrete to Class V. **Sheet 2:** Updated Dimension B which takes into account the latest FRP bar bending radius's; Removed note 5 which was only required because of dimension B.
515-022	**Sheet 3:** Corrected the relative location and dimensions of the base plate and post with respect to the edge of the bullet rail.
521-001	**Sheet 1:** Note 1 - Changed Concrete Surface Finish Class 3 to General Surface Finish; Note 7 - Clarified that doweled joint connection includes Wall Coping barriers. **Sheet 2:** Changed "NOTES" heading to "MEDIAN BARRIER NOTES" to clarify applicability throughout Index; Note 2 - Changed wording of "Space joints" to "Place joints" to clarify need for joints; Elevation - Removed junction slab callout; Note 5 - Replaced existing redundant note with "Minor Grade Separation" note. **Sheet 13:** Elevation - Added Wall Coping Barrier to callout at dowel connection; Changed "NOTES" heading to "SHOULDER BARRIER NOTES" to clarify applicability throughout Index. **Sheet 19:** Section A-A Option 'B' - Corrected height callout of 36" Height Traffic Railing to remove 1/16" CADD error. **Sheet 20:** Elevation - Added Wall Coping Barrier to callout at dowel connection.
521-010	**Sheet 1:** Section Views - Added barrier delineator placement details and callout; Note 9: Added explanation for how to locate barrier delineators with split barrier sections.
521-512	**Sheet 2:** Changed BILL OF REINFORCING STEEL table MARK A Type 1 to 7-10"" and TYPE 2 to 8'-10"; Changed dimension in BAR 5A TYPE 1 to 6'-0" and TYPE 2 to 7'-0".

STANDARD PLANS
FY 2023-24 REVISIONS LOG

Standard Plans Index	Description
521-600	**Sheet 1:** Added note to clarify the type of concrete for the CIP buildup above the wall. CIP buildup can be Class NS.
521-610	**Sheet 2:** Corrected 6 1/2" Asphalt dimension to be consistent at 6" with the other details and configurations; Added note to clarify the type of concrete for the CIP buildup above the wall. CIP buildup can be Class NS. **Sheet 3:** Corrected language in Note 9 which allows contractor to form stirrup out of a single bar rather than two. The note stated use a #5 but there are two conditions, one for a #4 and one for #5. Adjusted the language accordingly.
521-611	**Sheet 2:** Added note to clarify the type of concrete for the CIP buildup above the wall. CIP buildup can be Class NS.
521-620	**Sheet 2:** Added note to clarify the type of concrete for the CIP buildup above the wall. CIP buildup can be Class NS.
521-630	**Sheet 2:** Changed footing depth below sidewalk to 18" from 10"; Updated the name of the barrier; Added note to clarify the type of concrete for the CIP buildup above the wall. CIP buildup can be Class NS.
524-001	**All Sheets:** Redeveloped and Reorganized Index, moved Specification language to Specifications. **Sheet 1:** Updated General Notes; Moved General Notes 2 and 8 to Specifications; Moved Note 5 to Sheet 3; Deleted Notes 10 and 11; Moved the PROFILE OF DITCH PAVEMENT AT LOCATIONS OTHER THAN JUNCTION WITH LATERAL DITCH details to Sheet 2; Moved ALTERNATE DITCH PAVEMENT details, MATTING FOR DITCH details, and WEEP HOLE ARRANGEMENT details to Sheet 3. **Sheet 2:** Moved FILTER FABRIC PLACEMENT AT CONCRETE STRUCTURE detail to Sheet 3. **Sheet 3:** (New Sheet).
550-010	**Sheet 2:** Changed the shim thickness at the base of the pole to indicate that it varies based on railing type.
550-012	**Sheet 3:** Changed the shim thickness at the base of the pole to indicate that it varies based on railing type.
550-013	**Sheet 2:** Changed the shim thickness at the base of the pole to indicate that it varies based on railing type.

Standard Plans Index	Description
630-010	**Sheet 2:** Changed the conduit to extend the run of conduit that exists in the barrier/traffic rail to the longitudinal end of the barrier/traffic rail. **Sheet 4:** Changed the conduit to extend the run of conduit that exists in the barrier/traffic rail to the longitudinal end of the barrier/traffic rail.
641-010	**Sheet 1:** Changed reference to Class V Special to Class V. **Sheet 5:** Added new sheet for a new 16 ft pole version P-IID.
649-030	**Sheet 1:** Changed columns in Arm and Base Plate table to consolidate cells with repeated information.
700-010	**Sheet 1:** Added New Note 1 - "Meet the requirements of Specification 700"; Deleted General Notes 2 through 7: Renumber General Notes. **Sheet 4:** Updated Note 1.A. - Deleted Concrete Class. **Sheet 6:** Deleted General Note reference in the BACK-TO-BACK SIGN DETAIL. **Sheet 7:** Deleted General Note references in the SIGN PANEL SIDE VIEW details. **Sheet 8:** Deleted General Note reference in Detail "B".
700-011	**Sheet 1:** Updated General Note 1 - "Work with Index 700-010 for additional Notes and the assembly of base connection"; Changed General Note 2 - "Meet the requirements of Specification 700". Deleted first sentence from General Note 5; Updated General Note references in the SIGN DETAIL, VIEW A-A, SECTION B-B, and SECTION C-C.
700-012	**All Sheets:** Renamed Index "Single Post Sign Support Barrier Side-Mounted". **Sheet 1:** Updated Notes to General Notes; Added New Note 1 - "Meet the requirements of Specification 700"; Deleted Note 3; Moved Note 4 to Specification 962; Deleted Note 5; Renumbered Notes; Added New Notes from Sheet 2, Note 6 - "Bridge deck shown, approach slabs, junction slabs, and miscellaneous structures are similar." and Note 7 - "Traffic railings are shown. Concrete barriers and parapets are similar."; Updated General Note references in the SIGN SUPPORT ASSEMBLY detail. **Sheet 2:** Moved Notes 3 and 4 to the General Notes on Sheet 1; Updated General Note references. **Sheet 3:** Updated the General Note references in the SIGN SUPPORT ASSEMBLY detail.

STANDARD PLANS
FY 2023-24 REVISIONS LOG

Standard Plans Index	Description
700-013	**All Sheets:** Renamed Index "Single Post Sign Support Barrier Top-Mounted". **Sheet 1:** Updated Notes to General Notes; Added New Note 1 - "Meet the requirements of Specification 700."; Deleted Note 3; Moved Note 4 to Specification 962; Deleted Note 5; Renumbered Notes; Deleted Note 8; Added "or Traffic Railing" to the Concrete Barrier callouts in the ELEVATION detail.
700-020	**Sheet 1:** Added New Note 1 - "Meet requirements of Specification 700."; Renumbered Notes; Deleted Notes 3 through 6; Moved Notes 5.C., 6.A second sentence, and 6.C to Sheet 2 Notes; Updated General Note references in the MULTI-COLUMN SIGN ASSEMBLY Detail. **Sheet 2:** Updated Instruction Notes to "Base Connection Notes"; Added Note 3 from Sheet 1 - ."Assemble post to stub with base bolts and three flat washers per bolt (See Base Connection Details). Tighten base bolts in accordance with Note 2.", Note 4 - "Weld base plate to post and stub or if using the Alternate Connection Detail weld base plate and stiffeners to post and stub." and Note 5 - "Orient stub post according to direction of traffic." **Sheet 3:** Deleted General Note reference in DETAIL "B".
700-030	Added New General Note 1 - "Meet requirements of Specification 700."; Deleted Notes 6 and 7; Renumbered Notes; Updated General Note references in the TYPICAL SIGN FOR OVERHEAD TRUSS details; Changed the tolerance symbol "+/-" for the edge distance of the bottom U-bolt to a "Min."
700-031	**Sheet 2:** Added Note 1 - "Meet the requirements of Specification 700".; Deleted Note 2 and 3; Renumbered Notes.

Standard Plans Index	Description
700-040	**Sheet 1:** Updated Notes to General Notes; Added New General Note 1 - "Meet the requirements of Specification 700."; Deleted Notes 4 through 7; Moved Note 5.B to Sheet 5 Notes; Renumbered Notes. **Sheet 2:** Deleted Note 7; Added new note detailing the weld pattern of the 'BD' plates indicating that they should be welded in a star pattern: Added Washers to the FOUNDATION details; Added new callout "5 Nuts Per Anchor Bolt (Typ.)" in the DRILLED SHAFT detail: Changed dimension 'BK' extents in the Elevation View to match calculations and Updated the Plate Washer callout and the weld references in the BASE PLATE CONNECTION detail. **Sheet 3:** Updated line work on Section A-A to correctly reflect correct geometry. **Sheet 4:** Corrected reference in Detail F. **Sheet 5:** Added General Note 5.B as New Note 3 - "Chord Splices: "SD" Panel from upright is the closest panel in which chord splice may be used; See Plans for CANTILEVER SIGN STRUCTURE DATA TABLE; Minimum splice spacing is two truss panel lengths apart."
700-041	**Sheet 1:** Updated Notes to General Notes; Added New General Note 1 - "Meet the requirements of Specification 700"; Deleted Notes 4 through 7; Moved Note 5.B and 5.C to Sheet 5 Notes; Renumbered Notes. **Sheet 2:** Added Note 6 detailing the weld pattern of the 'BD' and 'CD' plates indicating that they should be welded in a star pattern; Changed dimension 'DF' extents in Base Plate Connection detail to match calculations. **Sheet 3:** Updated line work on Section A-A to correctly reflect correct geometry. **Sheet 4:** Update member orientations in Truss Front Elevation to reflect correct geometry. **Sheet 5:** Added General Note 5.B and 5.C as New Note 2 - "Chord Splices: Minimum splice spacing is three truss panel lengths apart and three truss panel lengths from the uprights when panel lengths are 10'-0" or less. Chord Splices may be either the Standard Splice or the Alternate Splice, but not both on the same structure." and Note 3 - "Upright splice: Not allowed unless the upright exceeds available mill lengths (35' - 40')."
700-090	**Sheet 1:** Updated General Note 1 - "Meet the requirements of Specification 700."; Deleted Note 5; Renumbered General Notes.

STANDARD PLANS
FY 2023-24 REVISIONS LOG

Standard Plans Index	Description
700-091	**Sheet 1:** Updated General Note 1 - "Meet the requirements of Specification 700."; Deleted Note 9 through 11; Renumbered General Notes.
700-110	Updated Notes to General Notes; Added New General Note 1 - "Meet the requirements of Specification 700."; Deleted Note 2 and 3.B.; Renumbered General Notes.
700-120	**Sheet 1:** New General Note 1 - "Meet the requirements of Specifications 646 and 700."; Deleted Notes 1, 2, and 4; renumbered General Notes. **Sheet 9:** Added Solar Power Assembly details: Updated call out references; Updated Notes.
711-001	**Sheet 2:** Changed "SHADOW" with "CONTRAST" in the 10-30' Skip Line and Dotted Line Details; Added Longitudinal Solid Lane Line With Contrast Markings detail. **Sheet 8:** EDITORIAL - Revised 75' min dimension to face of stop line. **Sheet 10:** EDITORIAL - Revised 25' min dimension to face of stop line.
711-003	**Sheet 1 and 2:** EDITORIAL - RPM's added on extension from the gores.
715-001	**Sheet 1:** Added a detail to define luminaire tilt angle for designers and contractors; Added reference to Index 715-002 & 715-003 to the Metal Pole Detail; Changed sheet title to "Wiring and Installation Details" to capture the installation details beyond wiring.
715-002	**Sheets 1-9:** Updated all sheet numbers in details, Notes, and borders to account for new Sheet 5. **Sheet 2:** Added a spread footing example in elevation details; Changed elevation titles to explain shaft footing option and new spread footing option; Added callout and Index 522-001 reference for cold joint connection between spread footing and raised curb. **Sheet 4:** Changed sheet title to "Shaft Foundation Option with Light Pole & Base Details"; Changed table and elevation detail titles from "Foundation" to "Shaft Foundation". Within Tables, changed "Assembly Height" to "Mounting Height" for consistency with SPI and FDM. **Sheet 5:** Added all-new sheet for "Spread Footing Foundation Option".

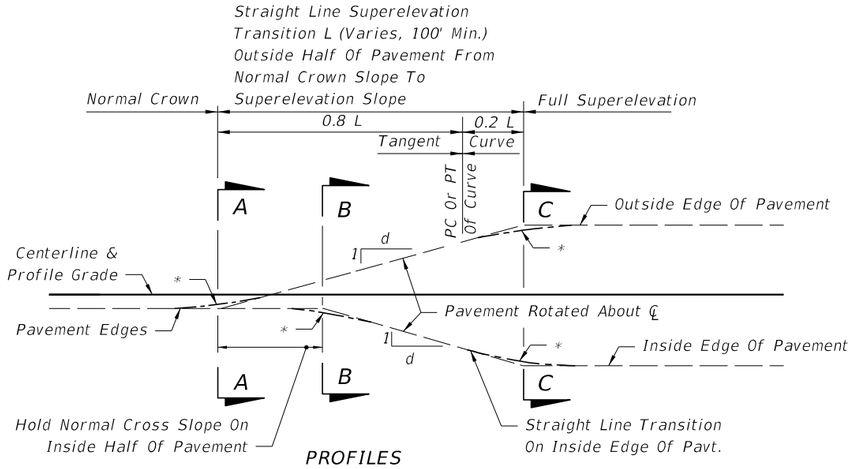

PROFILES

SLOPE RATIOS FOR SUPERELEVATION TRANSITIONS

NUMBER OF LANES IN ONE DIRECTION	DESIGN SPEED, MPH			
	25-40	45-50	55-60	65-70
	1 : d			
1 Lane & 2 Lane	1:175	1:200	1:225	1:250
3 Lane	--	1:160	1:180	1:200
4 Lane or More	--	1:170	1:170	1:190

The length of superelevation transition is to be determined by the relative slope between the travel way edge of pavement and the profile grade, except that the minimum length of transition shall be 100 ft.

* Short Vertical Curves Are To Be Used On Construction To Avoid Angular Breaks In Edge Profiles

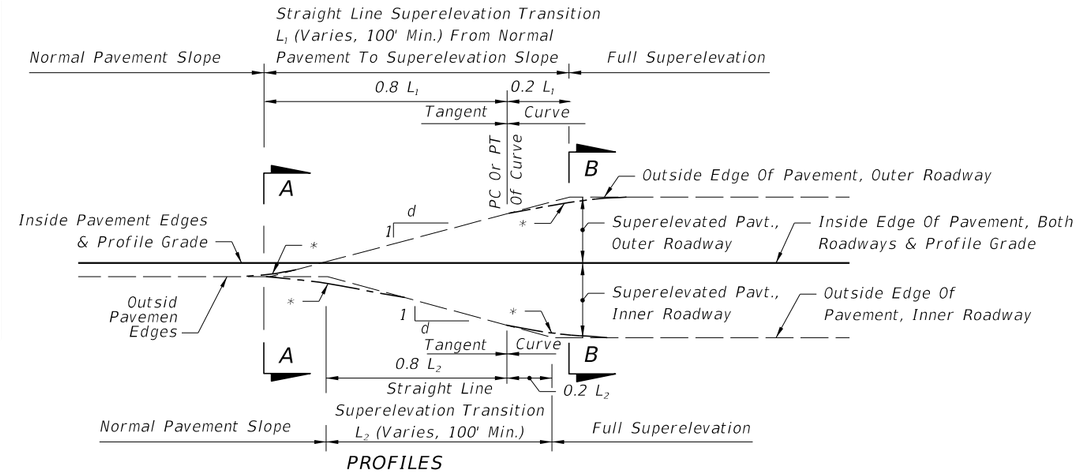

PROFILES

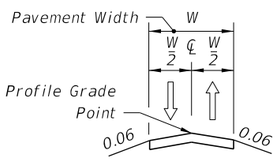

NORMAL CROWN
SECTION AA

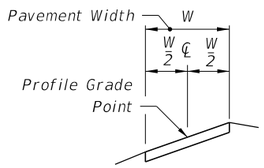

REVERSE CROWN
SECTION BB

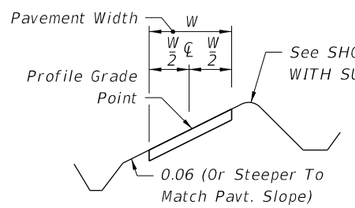

FULLY SUPERELEVATED
SECTION CC

THESE TRANSITION DETAILS ARE TO APPLY IN ALL CASES, EXCEPT UNDER THE FOLLOWING CONDITIONS:

1. Curves of insufficient length.
2. Insufficient tangent length between curves.
3. Deficient transition distance between a curve and other control point(s).
4. At PCC's or PRC's (Runoff rates are applicable).

Transitions for these exceptions are to be as detailed in the plans.

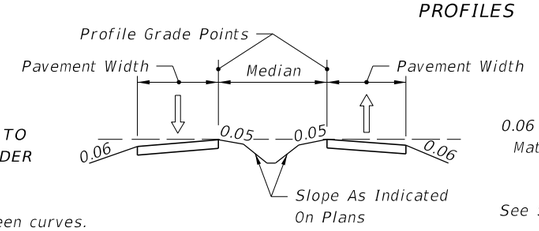

NORMAL SECTION
SECTION AA

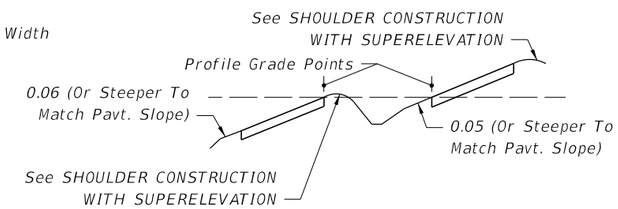

FULLY SUPERELEVATED
SECTION BB

2-LANE, 4-LANE OR 6-LANE PAVEMENT, NO MEDIAN

2-LANE, 4-LANE OR 6-LANE PAVEMENT WITH MEDIAN

SUPERELEVATION TRANSITIONS

SYMBOL:

⇨ Direction of Traffic

NOTES:

1. These details apply to both paved and grassed shoulders. For median shoulders use 0.05 in lieu of 0.06.

2. SHOULDER ON HIGH SIDE: A shoulder slope of 0.06 downward from the edge of travel way will be maintained until a 0.07 break in slope at the pavement edge is reached due to superelevation of the pavement. As the pavement superelevation increases, the 0.07 break in slope will be maintained and the shoulder flattened until the shoulder slope reaches the minimum of 0.02 downward from the edge of travel way. Any further increase in pavement superelevation will necessitate sloping the inside half of the shoulder toward the travel way and the outer half outward, both at 0.02 for superelevations 0.06–0.09 and both at 0.03 for superelevation 0.10. For shoulders with paved widths 5 feet or less see Special Shoulder Break Over Details on Sheet 2 of 2.

3. SHOULDER ON LOW SIDE: Maintain 0.06 cross slope across shoulder until pavement cross slope reaches 0.06. For pavement cross slopes greater than 0.06, shoulder to have same slope as pavement. See SHOULDER SLOPES ON SUPERELEVATION SECTION (Sheet 2).

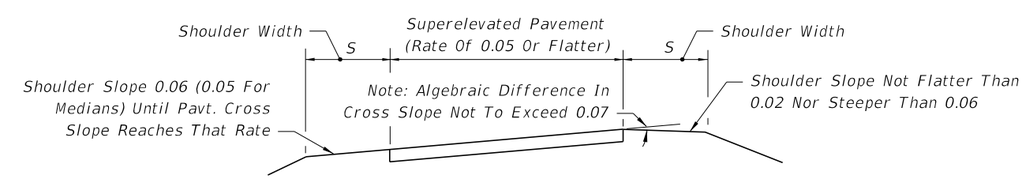

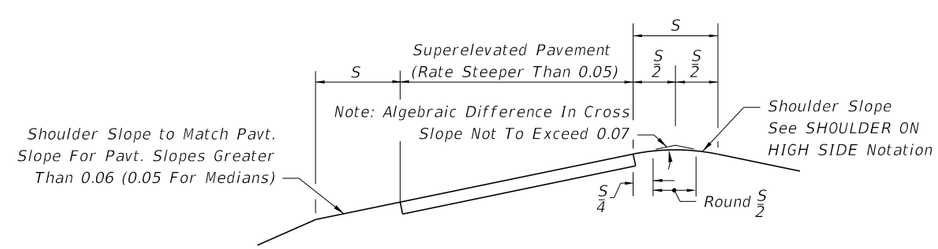

SHOULDER CONSTRUCTION WITH SUPERELEVATION

10/20/2022 8:44:54 AM

LAST REVISION	REVISION	DESCRIPTION:			INDEX	SHEET
11/01/21			FY 2023-24 STANDARD PLANS	SUPERELEVATION TRANSITIONS - HIGH SPEED ROADWAYS	000-510	1 of 2

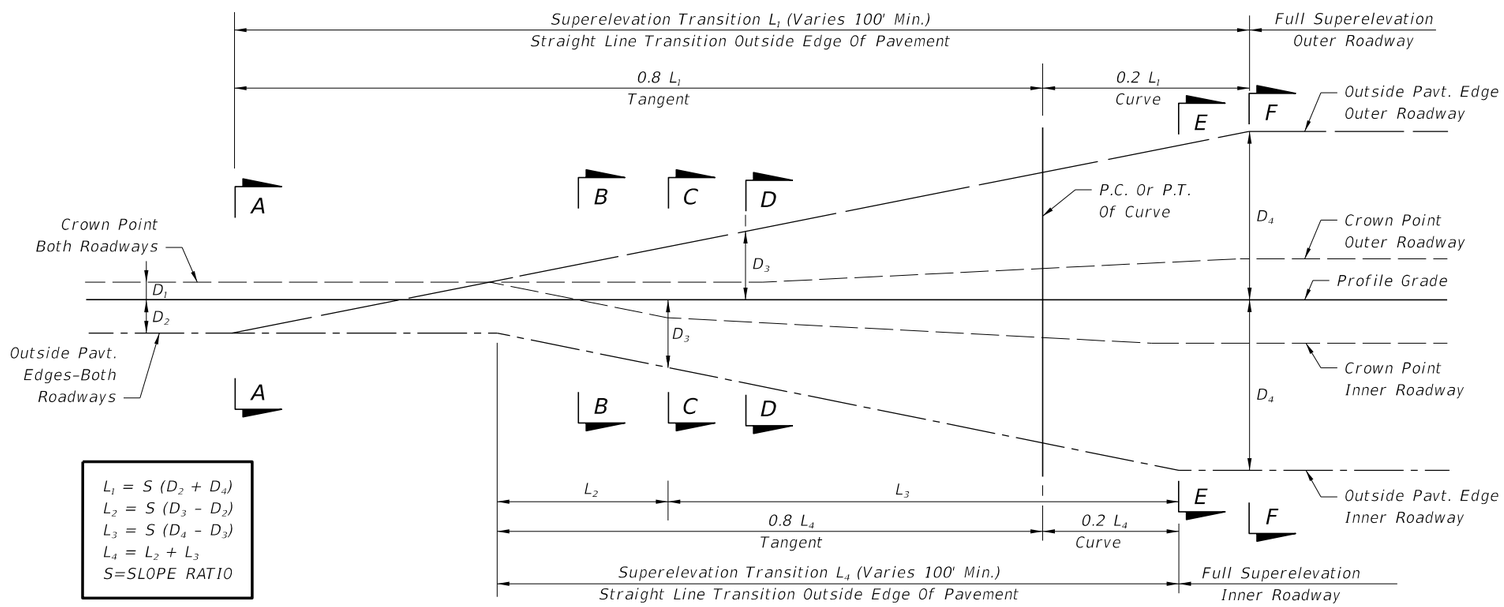

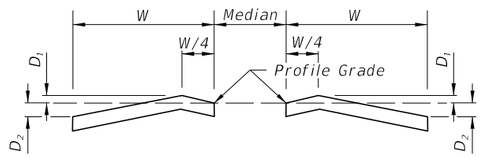

SECTION A-A
NORMAL CROWNED SECTION

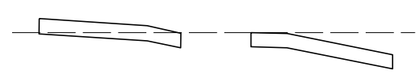

SECTION B-B
SUPERELEVATION SECTION LT. & RT.

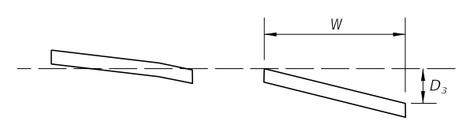

SECTION C-C
SUPERELEVATION SECTION LT.
PLANE INCLINED SECTION RT.

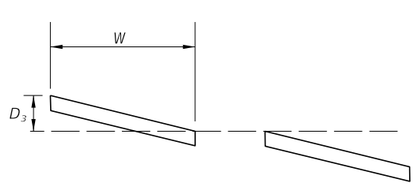

SECTION D-D
PLANE INCLINED SECTION LT.
SUPERELEVATION TRANSITION RT.

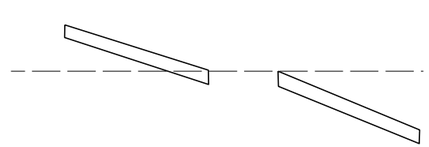

SECTION E-E
SUPERELEVATION TRANSITION LT.
FULL SUPERLEVATION RT.

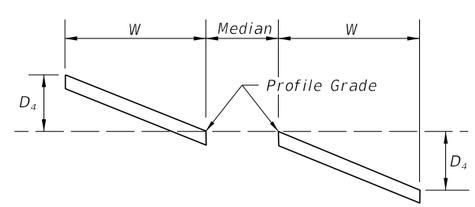

SECTION F-F
FULL SUPERELEVATION LT. & RT.

8-LANE PAVEMENT WITH TWO LANES SLOPED TO MEDIAN

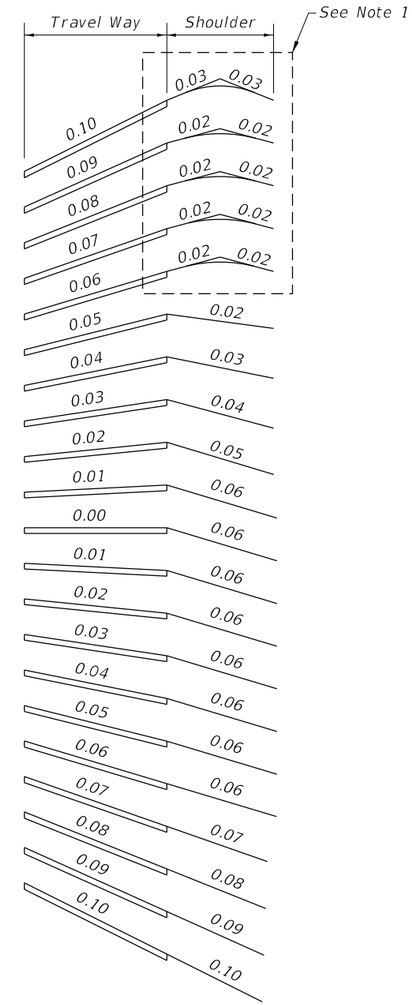

SLOPES OF TRAVELED WAY
AND ABUTTING SHOULDERS

SHOULDER SLOPES ON SUPERELEVATION SECTIONS

1. For shoulders with paved widths 5 feet or less see special shoulder break over details.

2. For Concrete pavement, the first 1'-0" of the outside shoulder is cast with the outside travel lane and will have the same cross slope as the outside lane. The shoulder break over will occur at the outside edge of the outside slab.

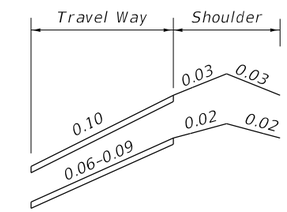

a) 12' AND 10' FULL WIDTH SHOULDERS WITH 5' OR LESS PAVED WIDTHS,

b) 8' FULL WIDTH SHOULDERS WITH 4' OR LESS PAVED WIDTHS,

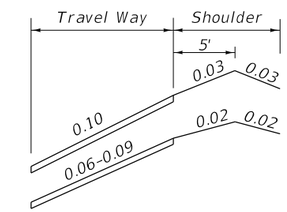

8' FULL WIDTH SHOULDER WITH 5' PAVED WIDTH

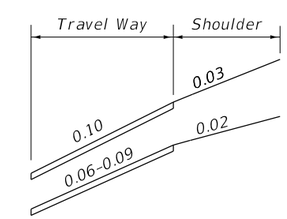

6' FULL WIDTH SHOULDER WITH 5' OR LESS PAVED WIDTH

SPECIAL SHOULDER BREAK OVER DETAILS

10/20/2022 8:44:56 AM

LAST REVISION	REVISION	DESCRIPTION:			INDEX	SHEET
11/01/18			FY 2023-24 STANDARD PLANS	SUPERELEVATION TRANSITIONS - HIGH SPEED ROADWAYS	000-510	2 of 2

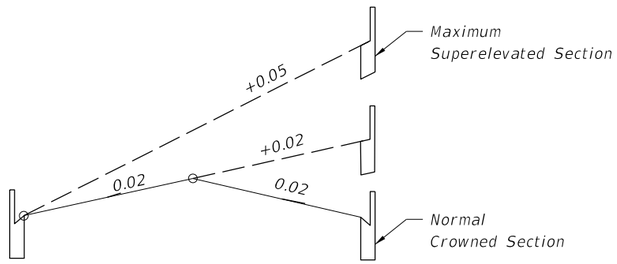

ONE OR TWO TRAVEL LANES EACH DIRECTION

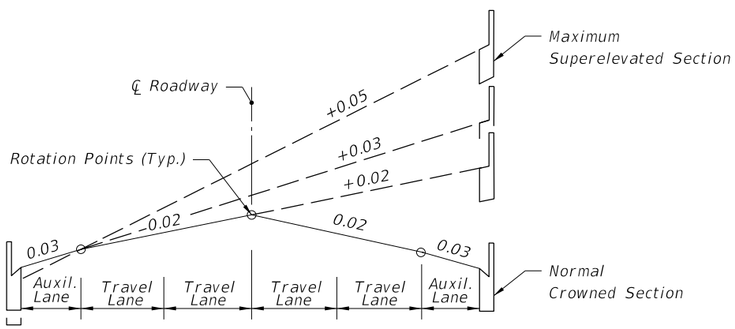

TWO TRAVEL LANES EACH DIRECTION WITH AUXILIARY LANES

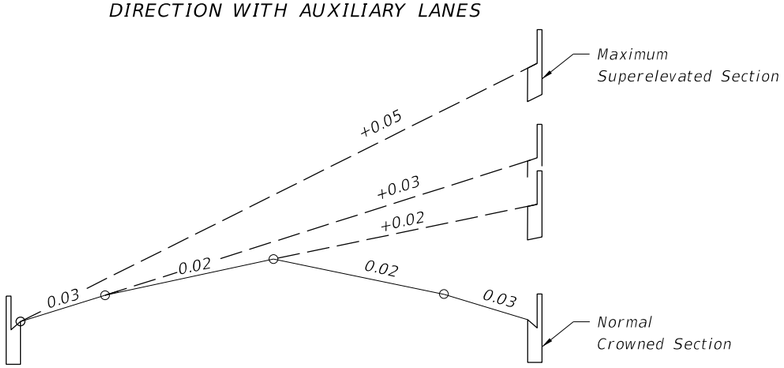

UNDIVIDED FACILITIES

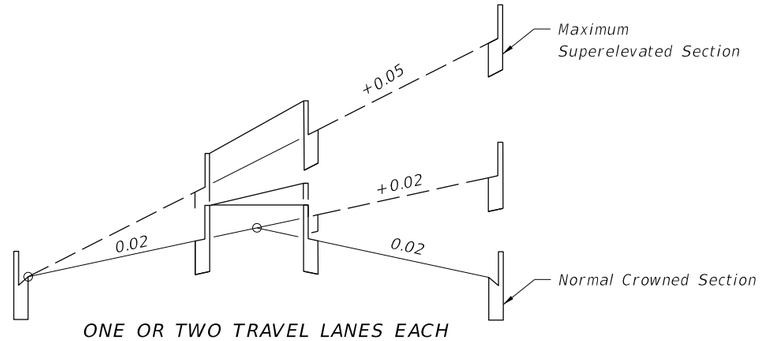

ONE OR TWO TRAVEL LANES EACH DIRECTION WITH MEDIAN

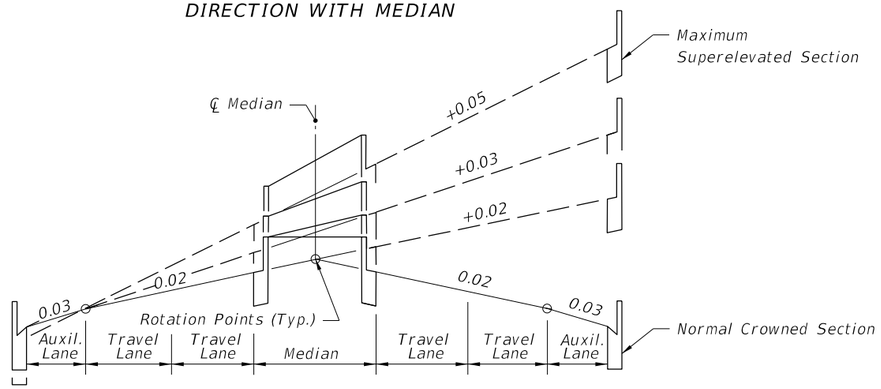

TWO TRAVEL LANES EACH DIRECTION WITH MEDIAN AND AUXILIARY LANES

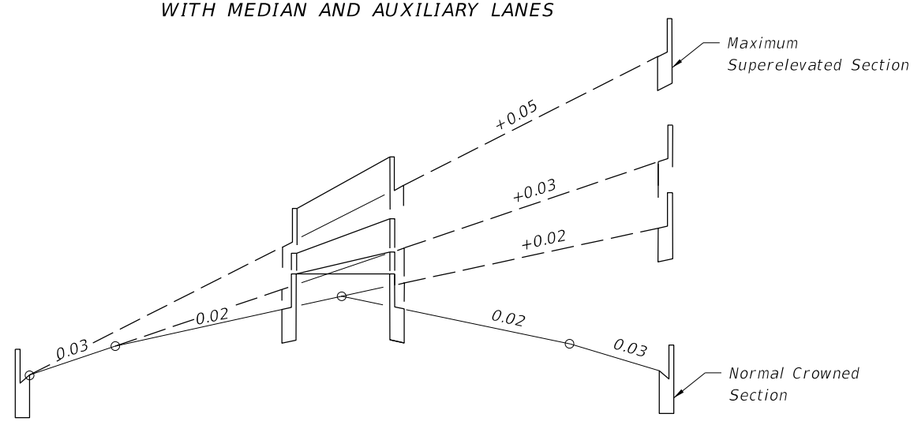

THREE TRAVEL LANES EACH DIRECTION WITH MEDIAN

DIVIDED FACILITIES

GENERAL NOTES:

1. Obtain Superelevation by rotating the plane successively about the break points of the section until the plane has attained a slope equal to that required by the Plans. Should the rotation traverse the entire section and further superelevation be required, the remaining rotation of the plane shall be about the low edge of the inside travel lane. Crown is to be removed in the auxiliary lane to the outside of the curve only when the adjoining travel lanes require positive superelevation.

2. When positive superelevation is required, continue the slope of the pavement across the gutter on the high side.

3. Place short vertical curves at all angular profile breaks within the limits of the superelevation transition.

4. The variable superelevation transition length "L" has a minimum value of 50 feet for design speeds of 25-30 MPH and 75 feet for design speeds of 40-45 MPH.

5. Roadway sections having lane arrangements different from those shown, but composed of a series of planes, are superelevation in a similar manner.

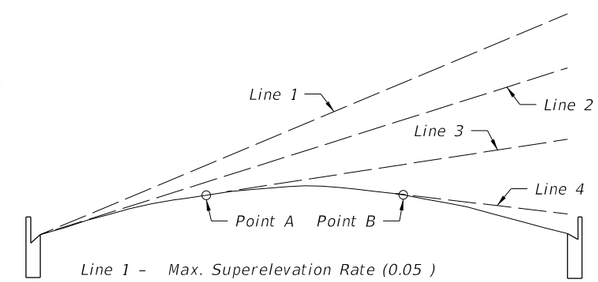

Line 1 - Max. Superelevation Rate (0.05)
Line 2 - Slope Of Parabola At Inside Edge Of Pavt.
Line 3 - Positive Superelevation Rate Less Than Max. Slope Of Parabola.
Line 4 - Adverse Superelevation.

When this section is used, superelevation is established by rotating a tangent about the arc of the parabolic crown until the desired slope is attained (points A & B on sketch). The normal parabolic crown will be maintained outside the limits of the plane thus formed.

PARABOLIC SECTION

SUPERELEVATION TRANSITION SECTIONS FOR LOW SPEED HIGHWAYS

NOTE:

The sections and profiles shown are examples of superelevation transitions. Similar schemes should be used for roadways having other sections.

LINE	DESCRIPTION
T	Inside Travel Lane
U	Inside Lane Line
V	Inside Median Edge Pavement
W	℄ Construction
X	Outside Median Edge Pavement
Y	Outside Lane Line
Z	Outside Travel Lane
Inside And Outside Are Relative To Curve Center	

SLOPE RATIOS FOR SUPERELEVATION TRANSITIONS	
DESIGN SPEED MPH	1:d
25-35	1:100
40	1:125
45	1:150
1:125 May Be Used For 45 mph Under Restricted Conditions.	

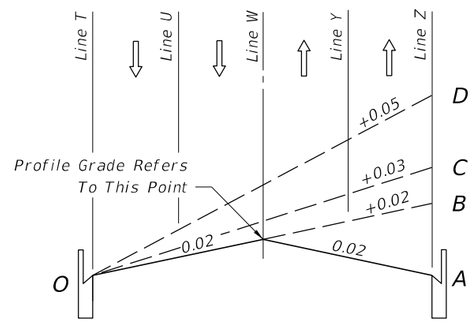

SECTION 0-A to 0-D

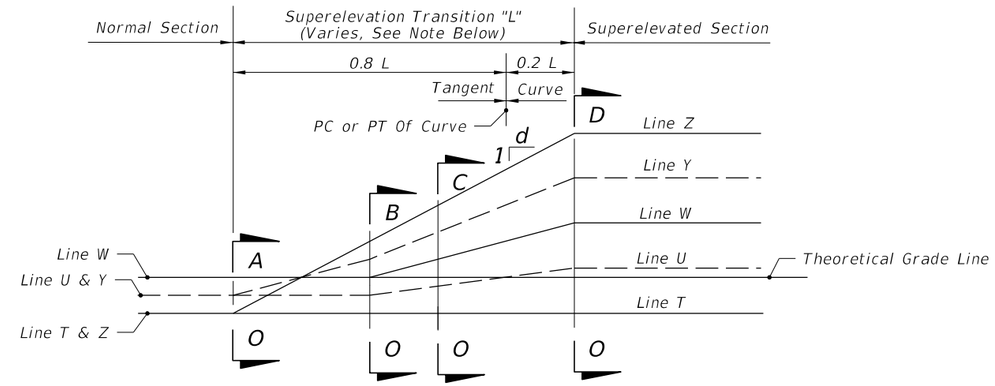

PROFILE

TWO LANES EACH DIRECTION

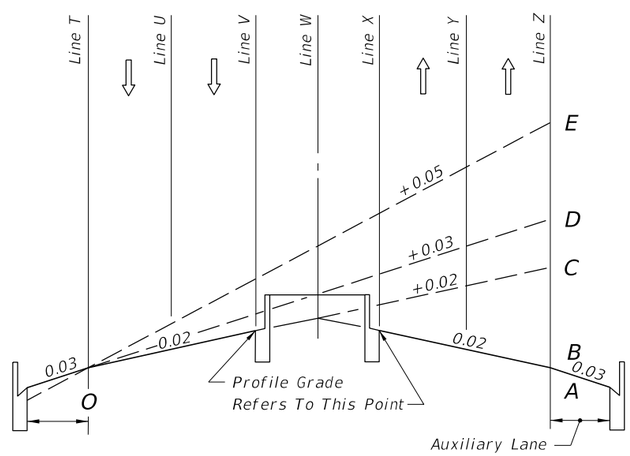

SECTION 0-A to 0-E

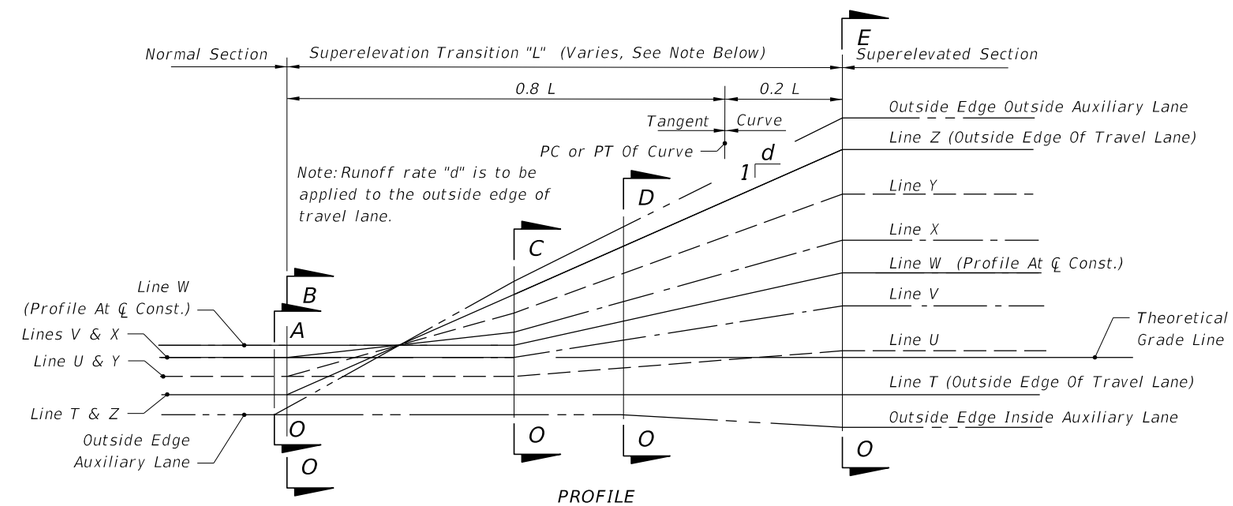

PROFILE

TWO LANES EACH DIRECTION WITH MEDIAN AND AUXILIARY LANE

EXAMPLE SUPERELEVATION SECTIONS AND PROFILES FOR LOW SPEED HIGHWAYS

10/20/2022 8:44:58 AM

LAST REVISION	REVISION	DESCRIPTION:			INDEX	SHEET
11/01/21			FY 2023-24 STANDARD PLANS	SUPERELEVATION TRANSITIONS - LOW SPEED HIGHWAYS	000-511	2 of 2

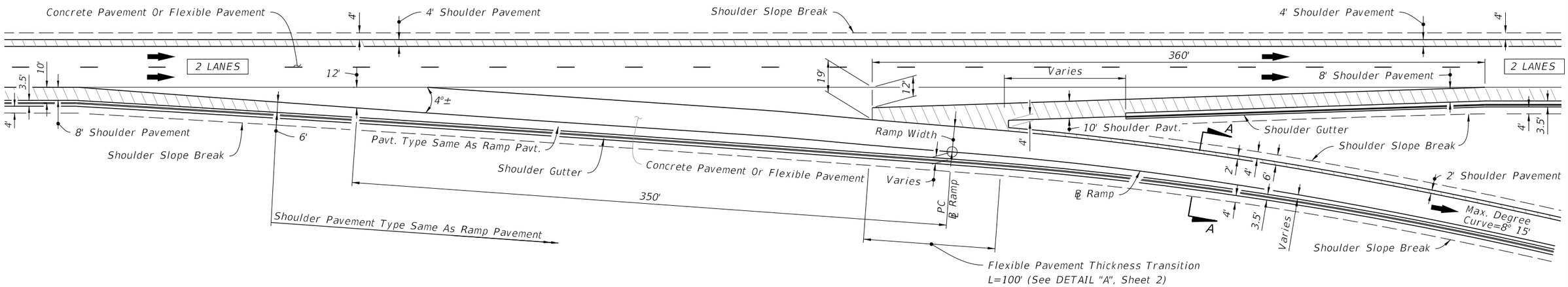

TWO THRU LANES
(Shown With Shoulder Gutter)

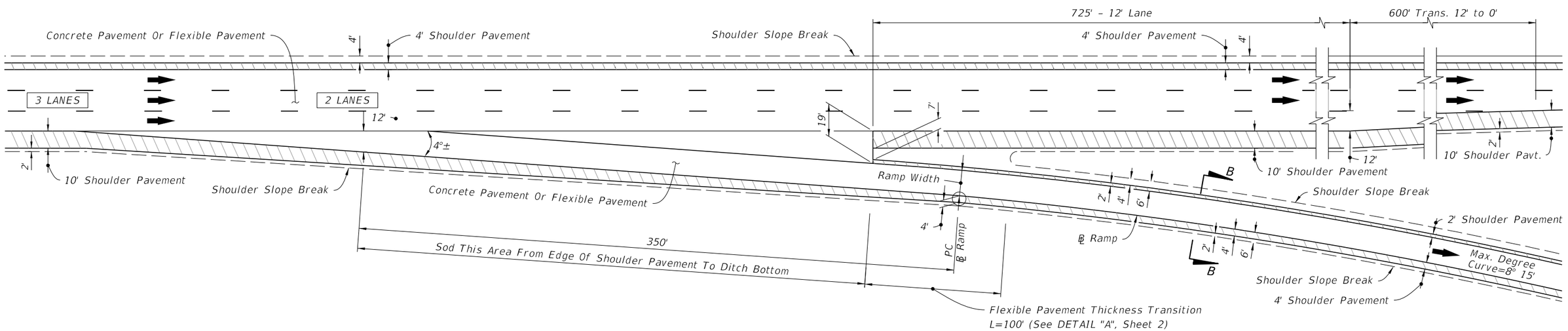

THREE APPROACH LANES - TWO THRU LANES
(Shown Without Shoulder Gutter)

GENERAL NOTES:

1. Taper-Type exit and entrance terminals as detailed shall not be used on ramps for which a speed of 50 MPH or greater cannot be maintained. For such ramps, parallel deceleration and acceleration lanes shall be used in place of tapers with lengths set according to AASHTO.

2. Shoulder Pavement:
   A. Concrete Pavement Projects: Where shoulder pavement adjacent to shoulder gutter is less than 6' wide, it shall be identical to the adjacent roadway pavement beginning with the transverse joint nearest the point of 6' width.

   B. Flexible Pavement Projects: Where shoulder pavement used in conjunction with shoulder gutter is less than 6' uniform width, it shall be identical to the adjacent roadway pavement.

3. For concrete pavement joint details and layouts at entrance and exit ramp terminals, see Index 350-001.

LEGEND:

Shoulder Pavement

SINGLE LANE RAMPS - EXIT TERMINALS

LAST REVISION	REVISION	DESCRIPTION:			INDEX	SHEET
11/01/17			FY 2023-24 STANDARD PLANS	RAMP TERMINALS	000-525	1 of 5

10/20/2022 8:44:58 AM

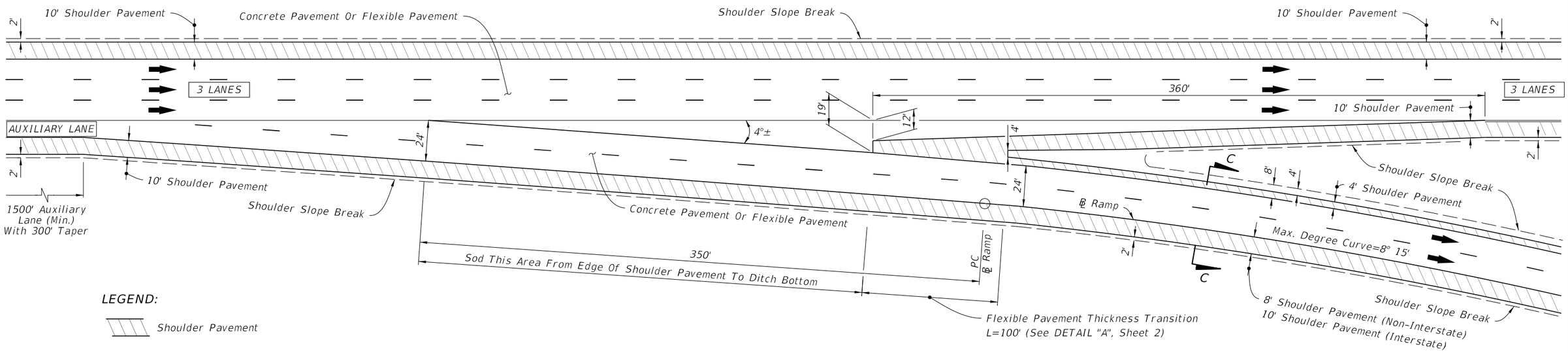

THREE THRU LANES - APPROACH AUXILIARY LANE
(Shown Without Shoulder Gutter)

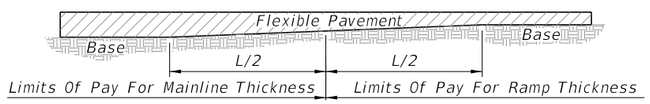

FLEXIBLE PAVEMENT THICKNESS TRANSITION

DETAIL "A"

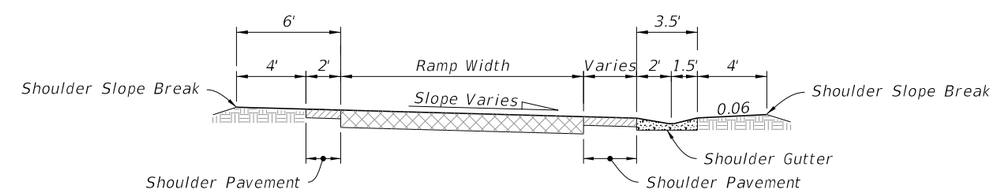

SECTION A-A

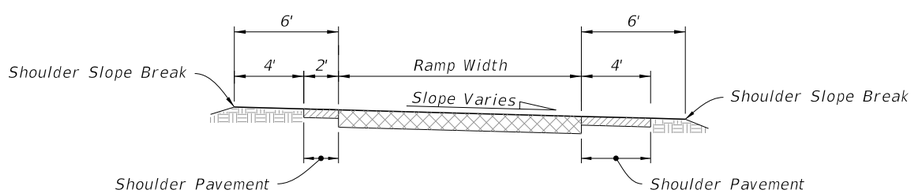

SECTION B-B

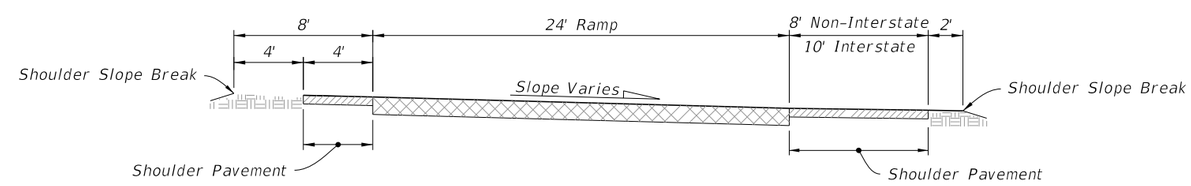

SECTION C-C

TWO LANE RAMPS - EXIT TERMINALS

LAST REVISION	REVISION	DESCRIPTION:			INDEX	SHEET
11/01/17			FY 2023-24 STANDARD PLANS	RAMP TERMINALS	000-525	2 of 5

5/9/2023 9:55:48 AM

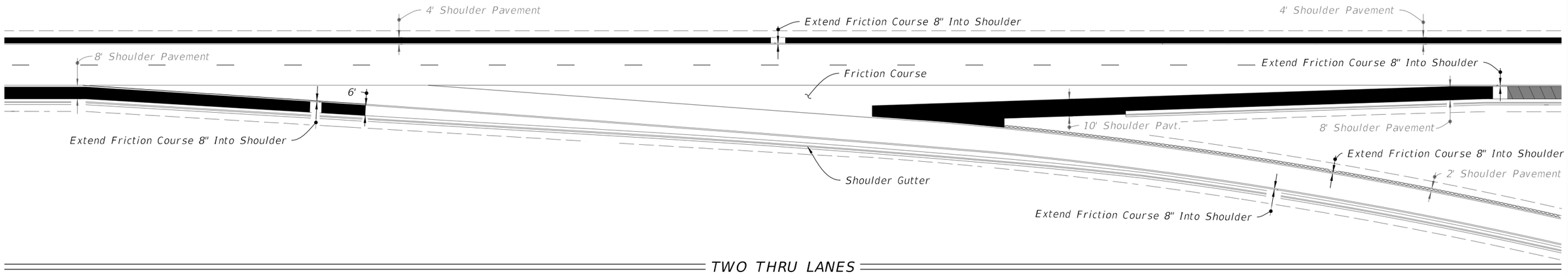

TWO THRU LANES
(Shown With Shoulder Gutter)

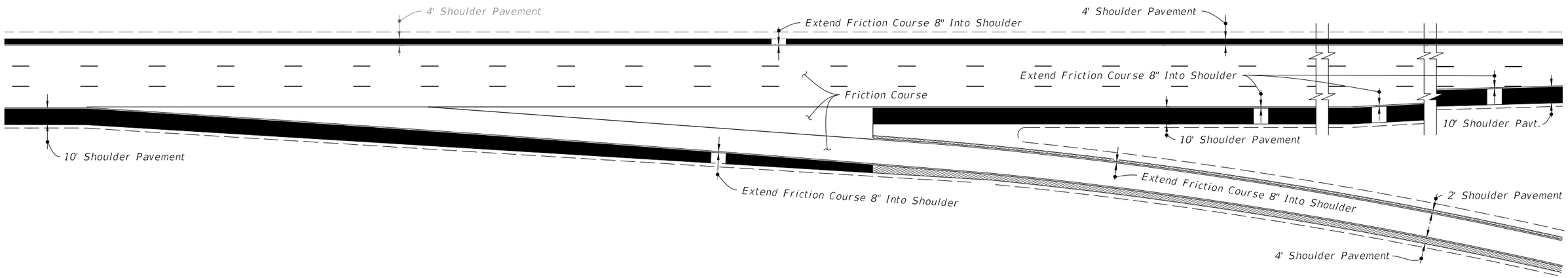

THREE APPROACH LANES - TWO THRU LANES
(Shown Without Shoulder Gutter)

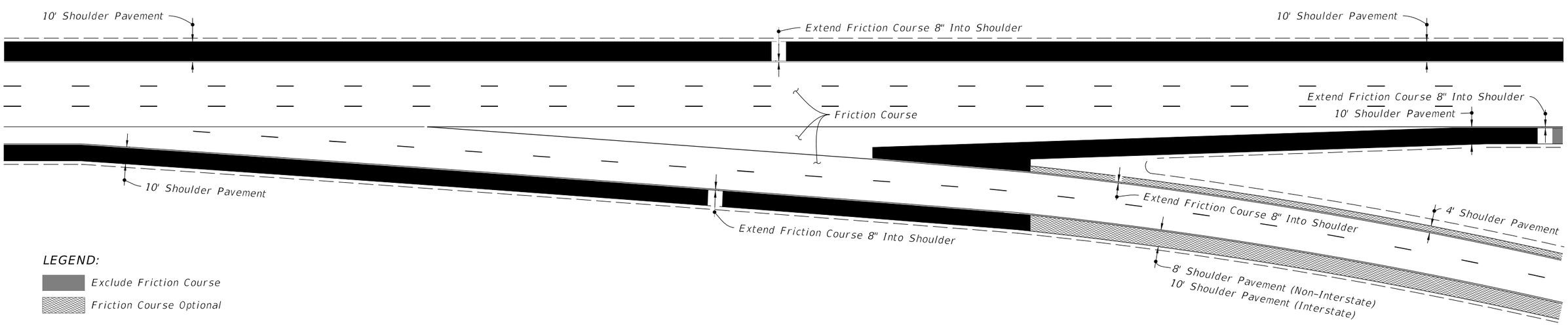

THREE THRU LANES - APPROACH AUXILIARY LANE
(Shown Without Shoulder Gutter)

EXIT TERMINALS - FRICTION COURSE LOCATION (FOR FLEXIBLE PAVEMENT)

10/20/2022 8:45:00 AM

LAST REVISION	REVISION	DESCRIPTION:			INDEX	SHEET
11/01/17			FY 2023-24 STANDARD PLANS	RAMP TERMINALS	000-525	3 of 5

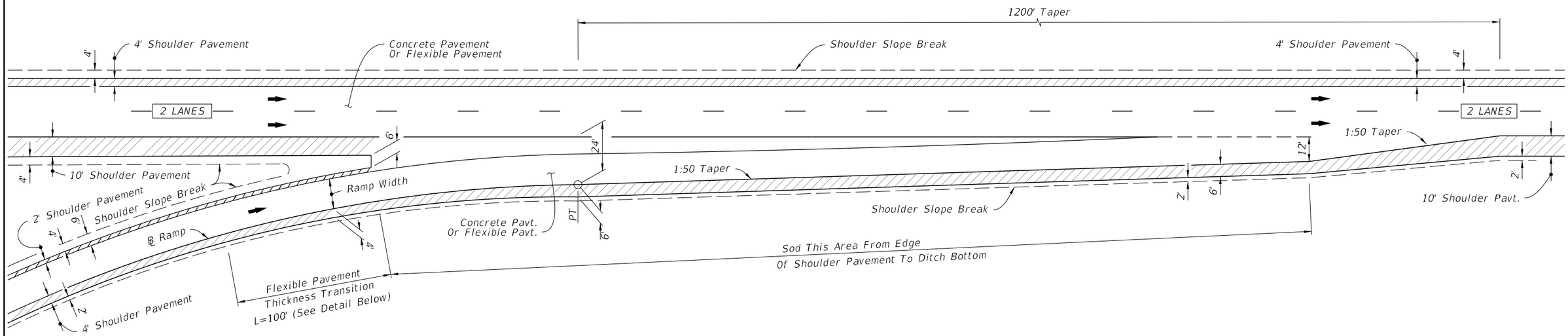

TAPER - TYPE ENTRANCE

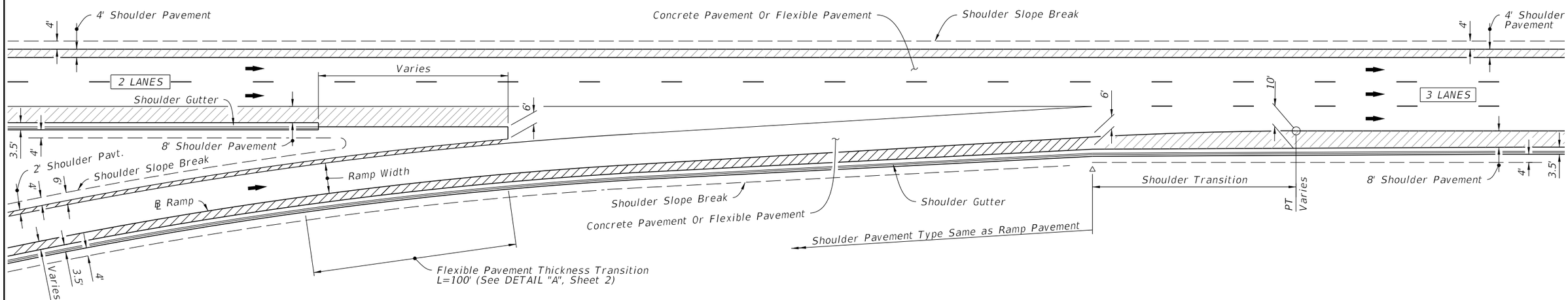

PARALLEL - TYPE ENTRANCE

LEGEND:

Shoulder Pavement

SINGLE LANE RAMPS - ENTRANCE TERMINALS

LAST REVISION	REVISION	DESCRIPTION:			INDEX	SHEET
11/01/17			FY 2023-24 STANDARD PLANS	RAMP TERMINALS	000-525	4 of 5

10/20/2022 8:45:00 AM

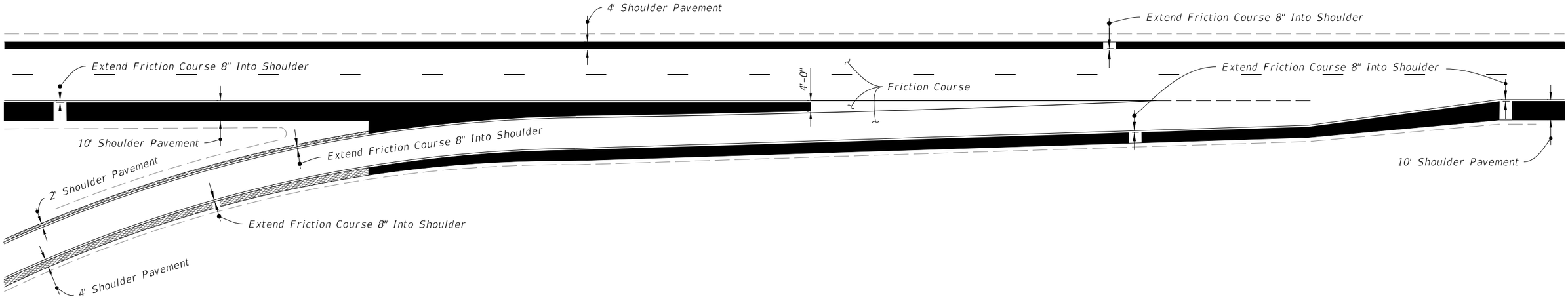

TAPER - TYPE ENTRANCE
(Shown Without Shoulder Gutter)

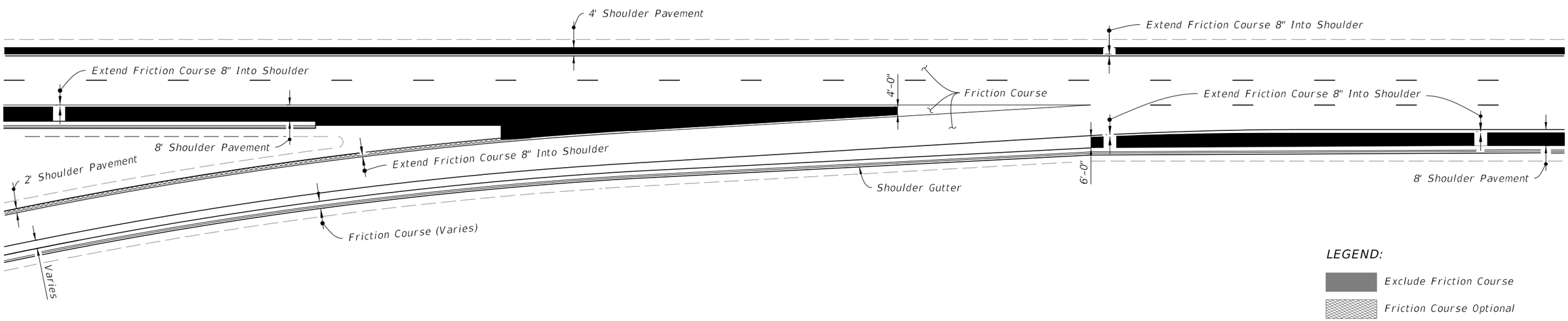

PARALLEL - TYPE ENTRANCE
(Shown With Shoulder Gutter)

10/20/2022 8:45:01 AM

ENTRANCE TERMINALS - FRICTION COURSE LOCATION (FOR FLEXIBLE PAVEMENT)

LAST REVISION	REVISION	DESCRIPTION:			INDEX	SHEET
11/01/17			FY 2023-24 STANDARD PLANS	RAMP TERMINALS	000-525	5 of 5

GENERAL NOTES:

1. Temporary barrier systems may be any of the following:

   A. Type K Temporary Concrete Barrier System (Index 102-110) installed as either Free-Standing or Anchored.

   B. Proprietary Temporary Barrier Systems on the Approved Product List (APL).
      a. Concrete Barrier (Free-Standing or Anchored)
      b. Steel Barrier (Anchored)
      c. Water Filled Barrier (Free-Standing)

2. Where existing flexible pavement is not present, construct a minimum 2" thick temporary Asphalt Pad using Miscellaneous Asphalt Pavement in accordance with Specification 339 with the exception that the use of a pre-emergent herbicide is not required.

3. For Barrier Delineators, see Specification 102. Mount on top of temporary barriers. Color must match adjacent longitudinal pavement marking.

4. Remove all grass debris, loose dirt, and sand for the pavement, bridge deck, or asphalt pad surface within the barrier footprint just prior to placement of the temporary barrier.

5. Ensure the setback distance is clear of any grass, construction debris, stockpiled materials, equipment, and objects.

6. Transitions are required between Type K Barrier and free-standing, anchored, back-filled or other types of temporary barrier. See Index 102-110 for transitions between Type K Barrier and permanent bridge or traffic railing. Refer to the APL for transitions allowed for Proprietary Temporary Barrier Systems.

7. Anchoring (Bolting) of temporary barrier or crash cushions is not permitted on bridge superstructures that contain post-tensioned tendons within the concrete deck (top flange of concrete box girders) or on bridge superstructures consisting of longitudinally prestressed, transversely post-tensioned, solid or voided concrete slab units.

8. Anchor abutting segments of temporary barrier terminated with a Crash Cushion as shown in Index 102-110 or the APL.

9. The requirements of this Index do not apply to Temporary Low Profile Barrier, See Index 102-120.

10. Setback requirements below cover most Temporary Barrier options. Provide additional setback distance for APL products that require additional setback (deflection) space.

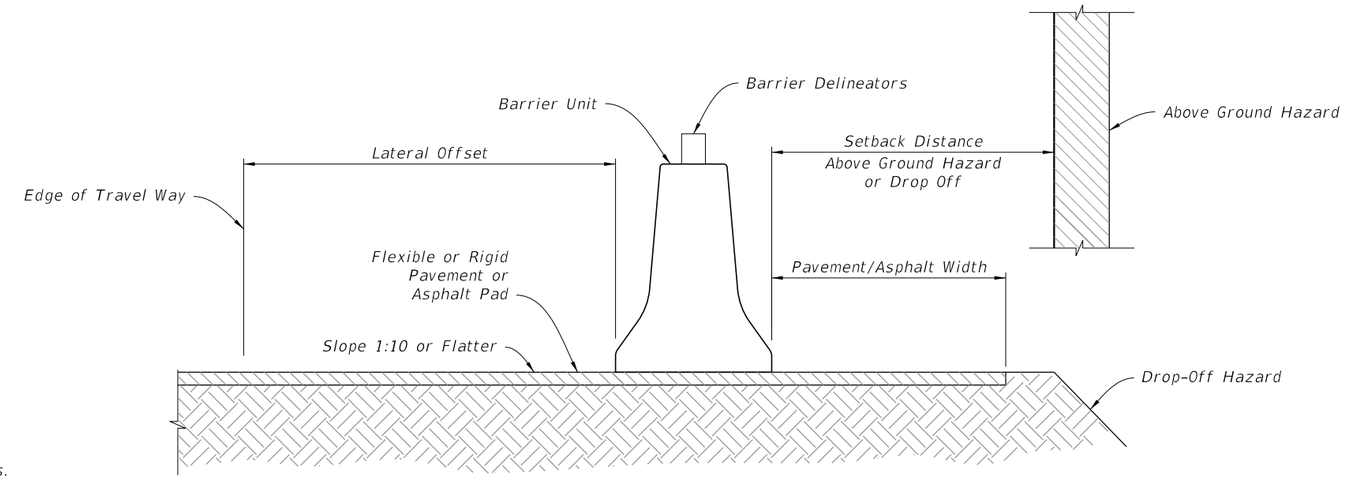

ROADSIDE INSTALLATION

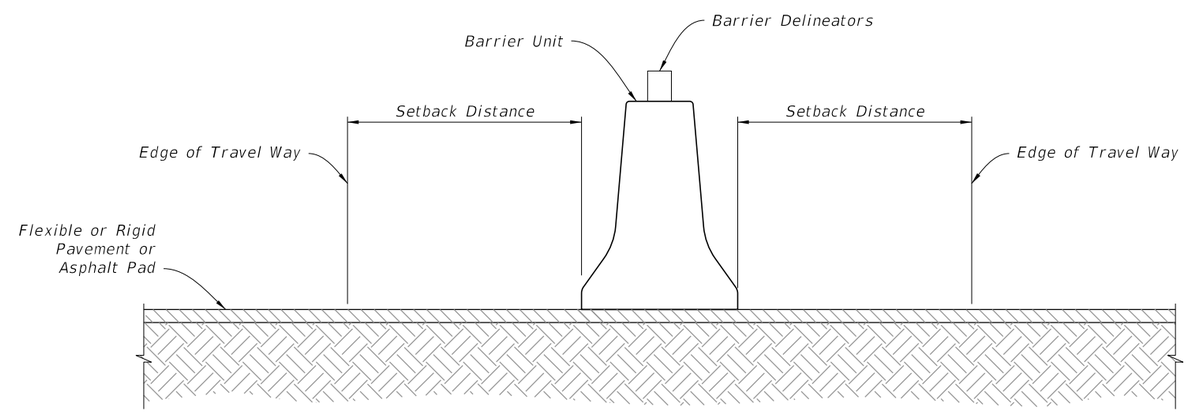

MEDIAN INSTALLATION

INSTALLATION DATA			
CONDITION	LATERAL OFFSET	SETBACK DISTANCE	PAVEMENT/ ASPHALT WIDTH
Anchored	2' Min.	2' Min. (See Note)	1' Min.
Free-standing	2' Min.	4' Min.	4' Min.
NOTE: For Bridge Decks see Index 102-110 or APL.			

10/20/2022 8:45:02 AM

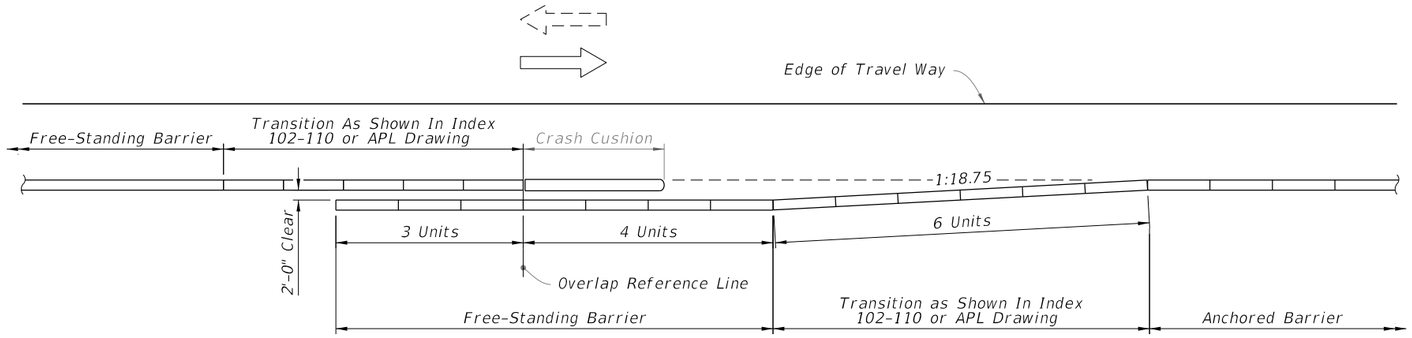

APPROACH SHOULDER BARRIER TRANSITION ON UNDIVIDED FACILITIES

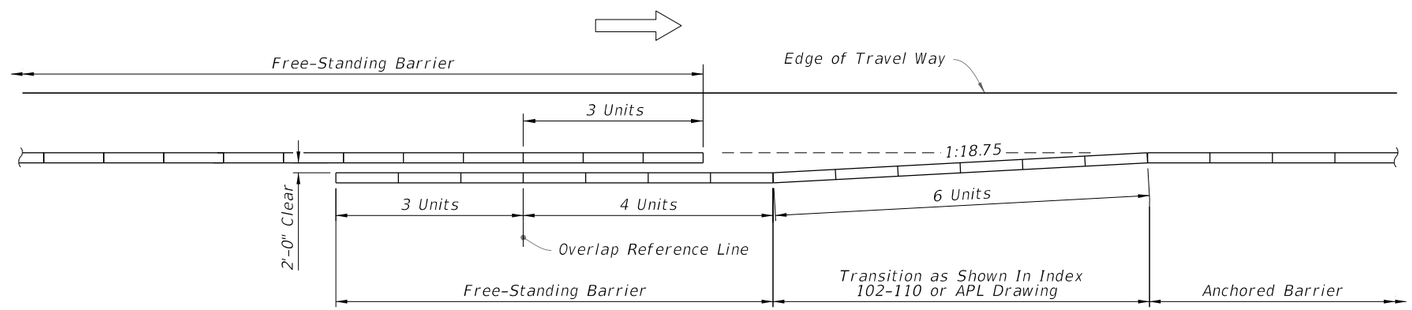

APPROACH SHOULDER BARRIER TRANSITION ON DIVIDED FACILITIES

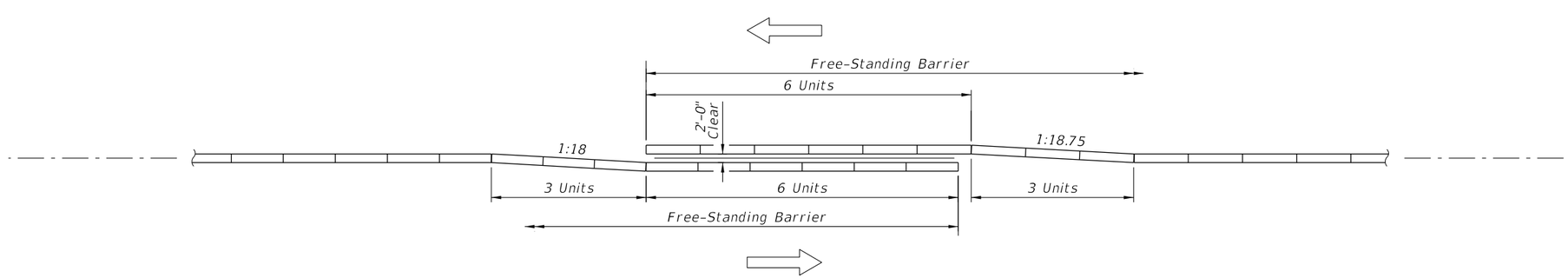

SYMBOL:

Direction of Traffic

MEDIAN BARRIER TRANSITION

10/20/2022 8:45:03 AM

LAST REVISION	REVISION	DESCRIPTION:			INDEX	SHEET
11/01/20			FY 2023-24 STANDARD PLANS	TEMPORARY BARRIER	102-100	2 of 4

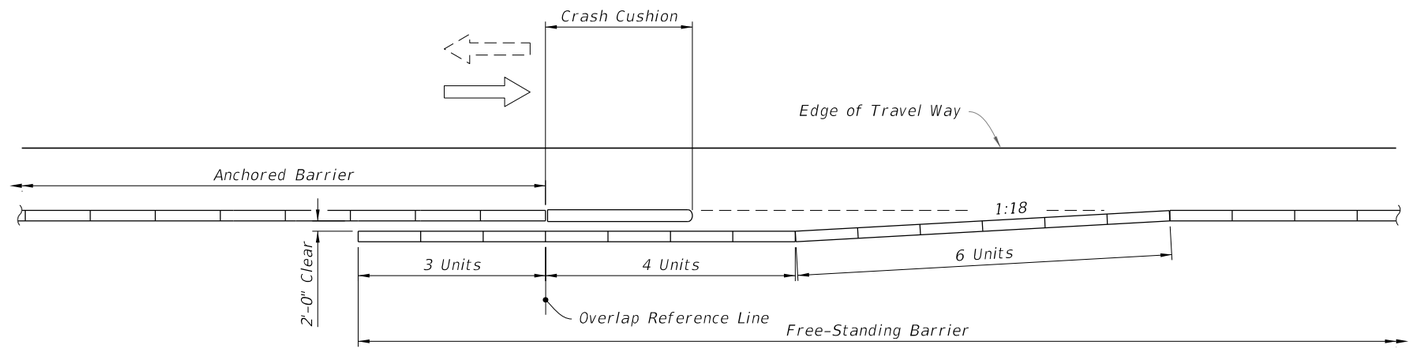

DEPARTURE SHOULDER BARRIER TRANSITION ON UNDIVIDED FACILITIES

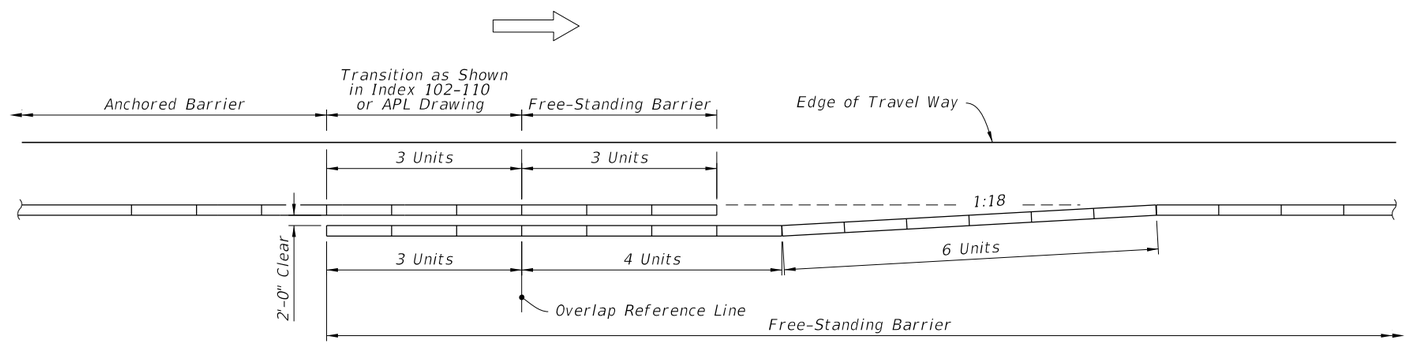

DEPARTURE (TRAILING) SHOULDER BARRIER TRANSITION ON DIVIDED FACILITIES

SYMBOL:

⇨ Direction of Traffic

10/20/2022 8:45:03 AM

LAST REVISION	REVISION	DESCRIPTION:			INDEX	SHEET
11/01/20			FY 2023-24 STANDARD PLANS	TEMPORARY BARRIER	102-100	3 of 4

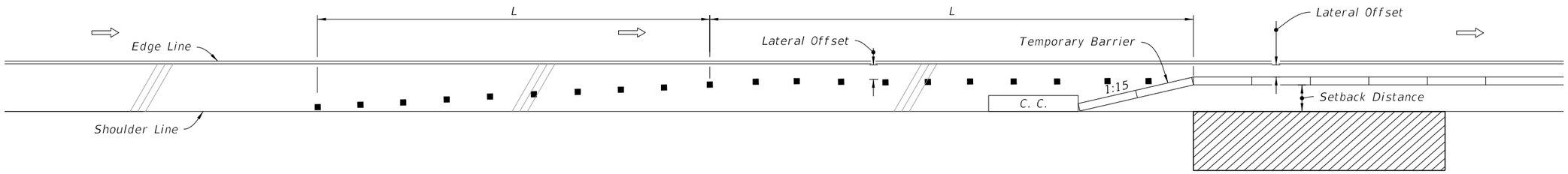

BARRIER AND TRANSITION LOCATED ON SHOULDERS

(Right Lane Shown - Inverted For Left Lane)

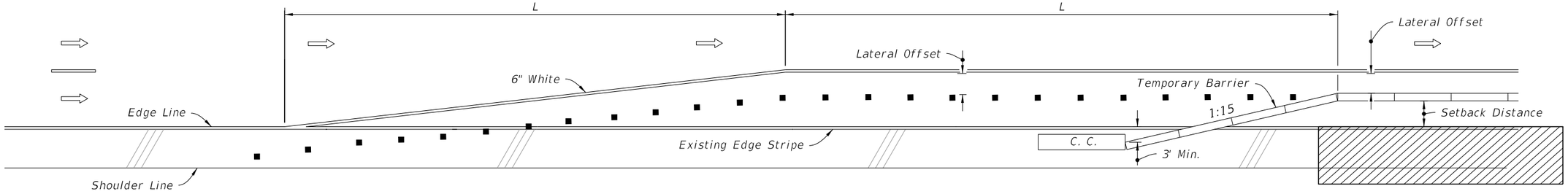

BARRIER AND TRANSITION WITH LANE DROP ON MULTILANE FACILITIES

(Right Lane Merge Left Shown - Inverted For Left Lane Merge Right)

NOTE:

L = Taper Length, See Index 102-600 for "L" and channelizing device spacing values.

SYMBOLS:

- Work Area
- Channelizing Device (See Index 102-600)
- C. C. Crash Cushion
- Lane Identification and Direction of Traffic

10/26/2022 11:54:46 AM

LAST REVISION	REVISION	DESCRIPTION:			INDEX	SHEET
11/01/20			FY 2023-24 STANDARD PLANS	TEMPORARY BARRIER	102-100	4 of 4

GENERAL NOTES:

1. Meet the requirements of Index 102-100.

2. For fabrication details see Sheets 15 thru 17.

3. HANDLING: Do not lift or move the Barrier Units by using Bars 6D that extend from the ends of the units. Approximate weight of one unit equals 2.7 tons.

4. CONNECTION PIN ASSEMBLY: Use steel for Connection Pin and Top Plate assemblies in accordance with ASTM A36 or ASTM A709 Grade 36. Nondestructive testing of welds is not required. At the Contractor's option, a 3/8" diameter hole may be provided at the bottom of the Connection Pin, as shown, for the installation of a vandal resistance bolt.

5. CONNECTION PIN INSTALLATION: Initially set Barrier Units by using a 3 5/8" wooden block between ends of adjacent units. Install Connection Pin between adjacent Barrier Units as shown, then pull newly placed Barrier Unit away from adjacent Barrier Unit to remove slack between Connection Pin and Bars 6D (except as shown on Sheet 2). Do not use Barrier Units unconnected.

6. REUSE OF CONNECTION PINS AND STAKES: Connection pins and stakes may be reused if they have the structural integrity of new pins.

7. REMOVAL OF BOLTS, STAKES AND KEEPER PINS: Upon removal or relocation of Barrier Units, remove all Anchor Bolts and completely fill the remaining holes in bridge decks, approach slabs and roadway rigid pavements that are to remain with Magnesium Ammonium Phosphate Concrete in accordance with Specification 930 or with an Epoxy Resin Compound, Type F or Q, in accordance with Specification 926. If a flexible pavement is present and is to remain, completely fill the remaining holes in the flexible pavement with hot or cold patch asphalt material.

8. TYPE K ANCHORED TO FREE-STANDING TRANSITIONS: Use the 3-3-2-1 Anchorage Transition Detail when transitioning Free-Standing and Anchored Units or when connecting Free-Standing runs to Crash Cushions, as shown in this Index.

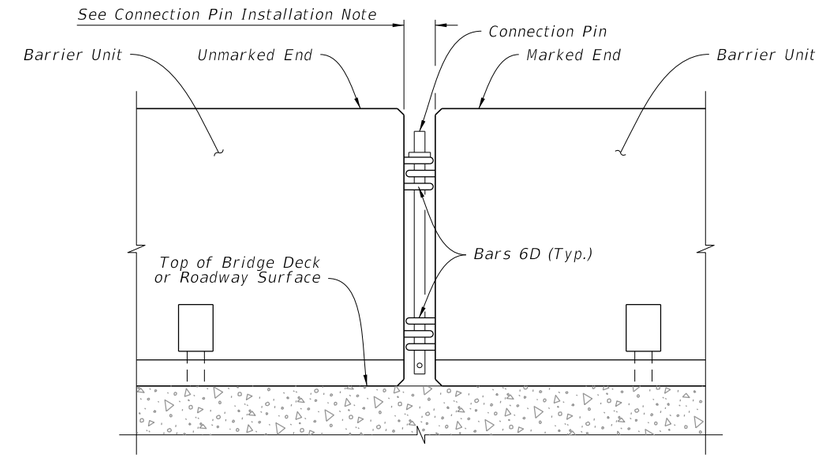

DETAIL OF CONNECTION BETWEEN BARRIER UNITS

THRIE-BEAM GUARDRAIL SPLICE INSTALLATION NOTES:

1. THRIE-BEAM GUARDRAIL: Provide Thrie-Beam Guardrail for splices meeting the requirements of specification 967 and as follows: Two panels per splice (One panel per side) of Class B (10 Gauge), or Four panels per splice (Two nested panels per side) of Class A (12 Gauge). Use a 12'-6" guardrail panel. Provide and install all other associated metallic guardrail components (Terminal Connectors, Shoulder Bolts, Hex Bolts and Nuts, Filler Plates, etc.) in accordance with Index 536-001. Install five Guardrail Anchor Bolts at each end of each splice in any of the standard seven anchor bolt holes in the Thrie-Beam Terminal Connector. If reinforcing steel is encountered when drilling holes for Guardrail Anchor Bolts in Type K Barrier Units, shift Thrie-Beam Terminal Connector so as to clear reinforcing steel within the given tolerances or select a different bolt hole to use. Do not drill or cut through reinforcing steel within Type K Barrier Units. Drilling or cutting through reinforcing steel within permanent concrete traffic railings is permitted.

2. GUARDRAIL OFFSET BLOCKS: Provide and install timber Offset Blocks meeting the requirements of Specification 967. Field trim Offset Blocks as required for proper fit. Utilize Offset Blocks as shown and required in order to prevent bending or kinking of Thrie-Beam Guardrail panels.

3. CONCRETE FOR FILLING TAPERED TRAFFIC RAILING TOES: Provide concrete for filling tapered toes of Traffic Railings as shown meeting the material requirements of Specification 346, any Class, or a commercially available pre-bagged concrete mix (3000 psi minimum compressive strength). Sampling, testing, evaluation and certification of the concrete in accordance with Specification 346 is not required. Saturate with water the surfaces upon and against which the concrete fill will be placed prior to placing concrete. Place and finish concrete fill using forms or by hand methods to the general configurations shown so as to provide a smooth shape transition between the Type K Barrier and the adjacent traffic railing. A low slump is desirable if placing and finishing concrete by hand methods. Cure the concrete fill by application of a curing compound, or by covering with a wet tarp or burlap for a minimum of 24 hours. Completely remove the concrete fill upon relocation or removal of the Type K Temporary Concrete Barrier.

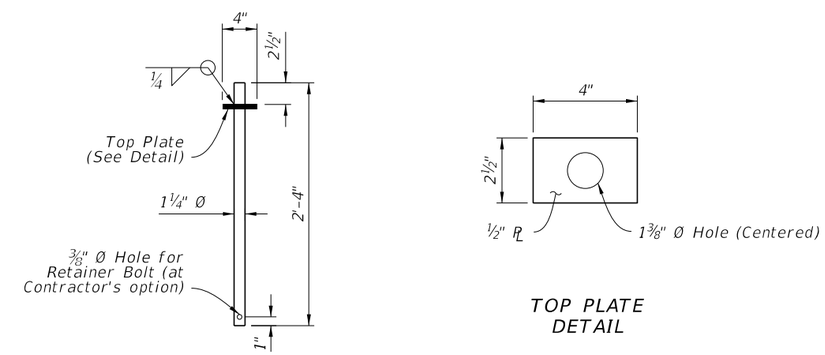

CONNECTION PIN DETAIL

SYMBOL:

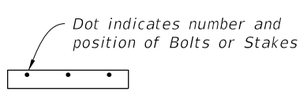

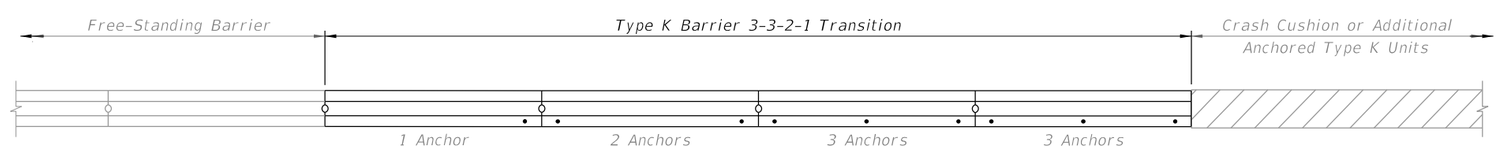

3-3-2-1 ANCHORAGE TRANSITION DETAIL

10/20/2022 8:45:05 AM

LAST REVISION	REVISION	DESCRIPTION:			INDEX	SHEET
11/01/20			FDOT FY 2023-24 STANDARD PLANS	TYPE K TEMPORARY CONCRETE BARRIER SYSTEM	102-110	1 of 17

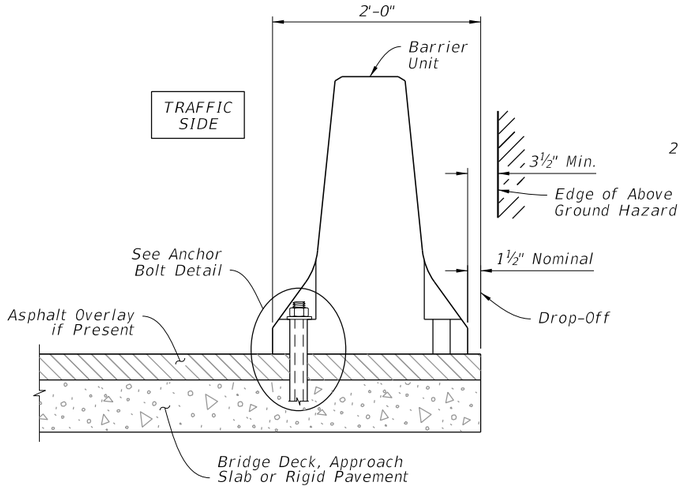

NOTE: Traffic Side for Transition to Median Traffic Railings, see Sheet 6

TYPICAL SECTION

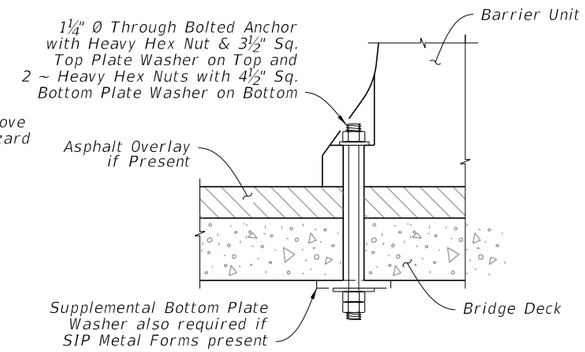

THROUGH BOLTED ANCHOR

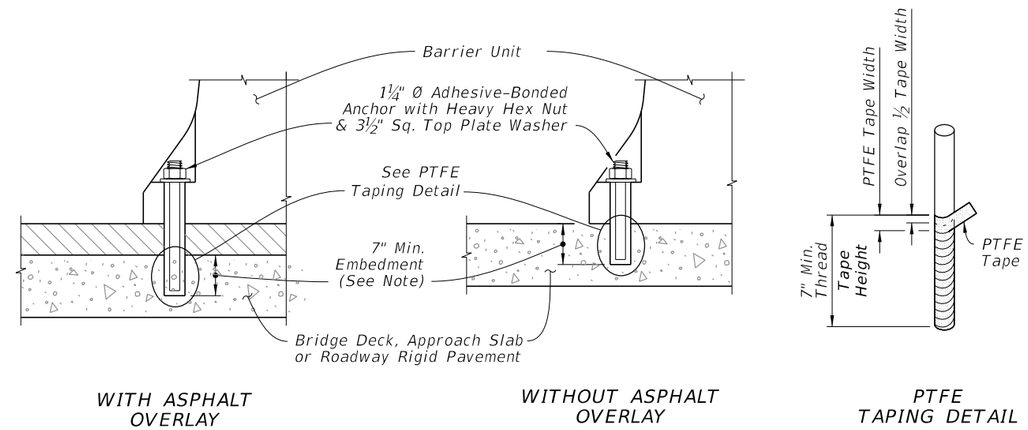

NOTE: Wrap threads with a single overlapping layer of PTFE tape to facilitate removal of anchors.

ADHESIVE BONDED ANCHOR INSTALLATION

NOTES FOR BOLTED INSTALLATIONS:

Bridge deck shown, approach slab or rigid pavement similar; installation adjacent to drop-off shown, median transition installation similar.

LIMITATION OF USE: This installation technique can only be used on rigid pavement and concrete bridge decks as shown. Anchor Bolts must not be installed on both sides of the Barrier Units. Do not bolt down Barrier Units across bridge finger or modular expansion joints.

ANCHOR BOLTS, NUTS AND WASHERS: When using Adhesive-Bonded Anchor Bolts, use fully threaded rods in accordance with ASTM F 1554 Grade 36. Install Anchor Bolts for through bolting in accordance with ASTM A 307 or ASTM F 1554 Grade 36. Install nuts in accordance with ASTM A 563 or ASTM A 194. Install Flat Washers in accordance with ASTM F 436 and Plate Washers in accordance with ASTM A 36 or ASTM A 709 Grade 36.

Install three (3) Anchor Bolts per Barrier Unit on the traffic side of the Barrier Units as shown, except for Transition Installations. For the number and positions of Anchor Bolts required in Transition Installations see Sheets 8 and 9 and Index 102-100. Drilling through deck reinforcing steel to install Anchor Bolts is permitted. Unless otherwise shown in the Plans, at the Contractor's option Barrier Units may be installed by through bolting (where geometrically possible) or by the use of Adhesive-Bonded Anchor Bolts. Do not drill into or otherwise damage the tops of supporting beams or girders, bridge deck expansion joints or drains. Install Anchor Bolts and Nuts so that the maximum extension beyond the face of the Barrier Units is ½". Snug tighten the Nuts on the Anchor Bolts. For through bolted installations, snug tighten the double Nuts on the underside of the deck against each other to minimize the potential for loosening.

Omit one (1) Anchor Bolt within a single Barrier Unit if a conflict exists between the Anchor Bolt location and a bridge deck expansion joint or drain. The adjacent Barrier Units must each be installed with the standard three (3) Anchor Bolts.

Omit one (1) Anchor Bolt within a single Barrier Unit as shown in the Treatment at Bridge Deck Expansion Joint Schematic if the Barrier Unit straddles a bridge deck expansion joint. The adjacent Barrier Units must each be installed with the standard three (3) Anchor Bolts.

ADHESIVE-BONDING MATERIAL SYSTEMS: When using Adhesive Bonding Material Systems for Anchor Bolts, Use Type HSHV in accordance with Specification 937 and installed them in accordance with Specification 416. Prior to installation of the Barrier Units in the Plan location(s), install a demonstration Barrier Unit using the proposed production installation method, at a location approved by the Engineer. In lieu of the production test requirements of Specification 416, install six (6) Adhesive-Bonded Anchor Bolts in the demonstration Barrier Unit and test each Anchor Bolt with a 29,800 pound tensile proof load. Install and test additional demonstration Barrier Units when requested by the Engineer. Remove the demonstration Barrier Unit prior to testing the Anchor Bolts. Remove the test Anchor Bolts after testing as directed by the Engineer.

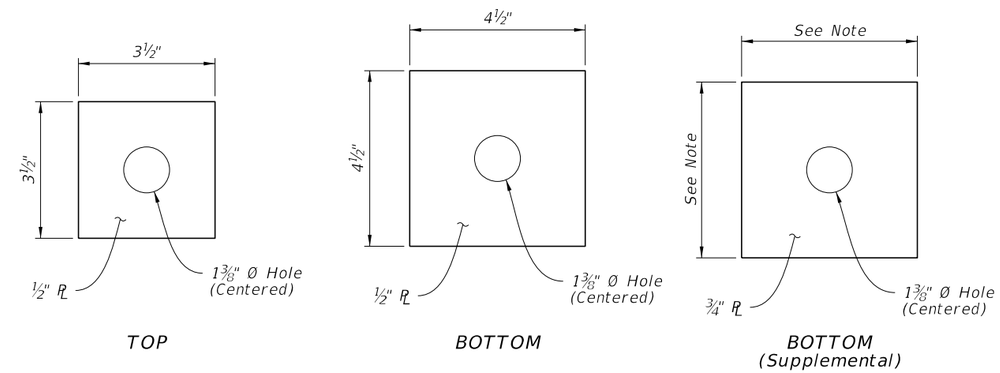

NOTE: Dimension as required to span SIP Metal Form Corrugations plus ½" Minimum overlap each side.

PLATE WASHER DETAIL

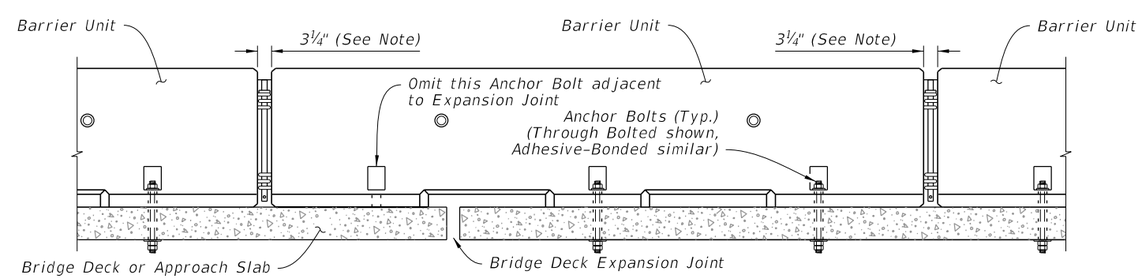

NOTE: To accommodate movement at Expansion Joint, set Barrier Units with 3¾" gap at locations shown.

TREATMENT AT BRIDGE DECK EXPANSION JOINT SCHEMATIC

ANCHORED INSTALLATIONS - BOLTED

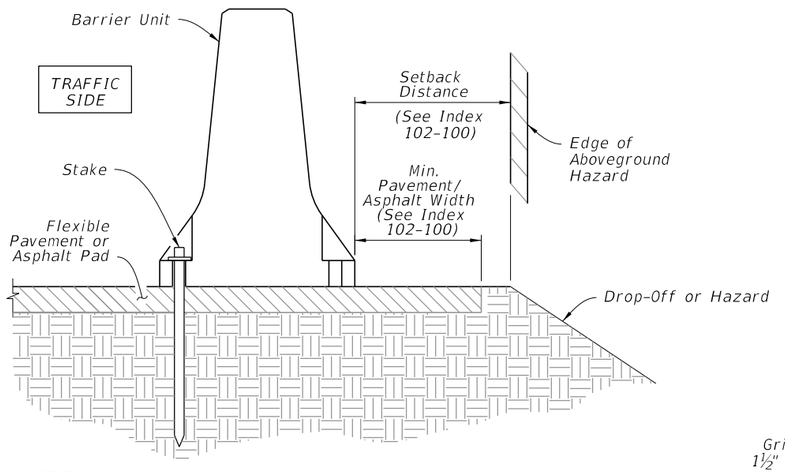

NOTE: Traffic Side for transition to median traffic railings, see Sheet 6

TYPICAL SECTION

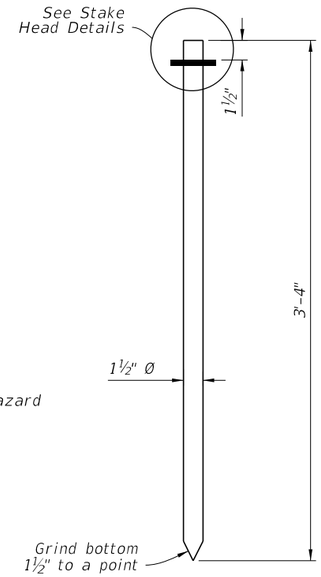

STAKE DETAIL

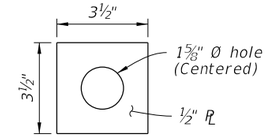

STOP PLATE DETAIL

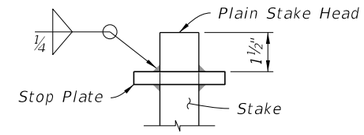

PLAIN STAKE HEAD DETAIL

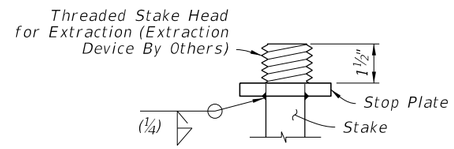

OPTIONAL EXTRACTION STAKE HEAD DETAIL

STAKED INSTALLATION NOTES:

LIMITATION OF USE: This installation technique can only be used on flexible pavement or an Asphalt Pad as shown. Stakes must not be installed on both sides of the Barrier Units.

STAKES: Provide steel for Stake assemblies in accordance with ASTM A 36 or ASTM A 709 Grade 36. Weld in accordance with the American Welding Society Structural Welding Code (Steel) ANSI/AWS D1.1 (current edition). Welding metal are E60XX or E70XX. Nondestructive testing of welds is not required.

Install three (3) Stakes on the traffic side of the Barrier Units as shown, except for Transition Installations. For the number and positions of stakes required in Transition Installations see Sheets 4, 5 and 6 and Index 102-100. Install Stakes so that the Stop Plate is snug against the bottom of the Anchor Blockout.

BURIED UTILITIES: Prior to installation of Stakes verify locations of all adjacent buried utilities, drainage structures, pipes, etc. If conflicts between Stake locations and buried elements exist, a maximum of two (2) Stakes within a single Barrier Unit may be omitted if the adjacent Barrier Units are installed with the standard three (3) Stakes.

ANCHORED INSTALLATIONS - STAKED

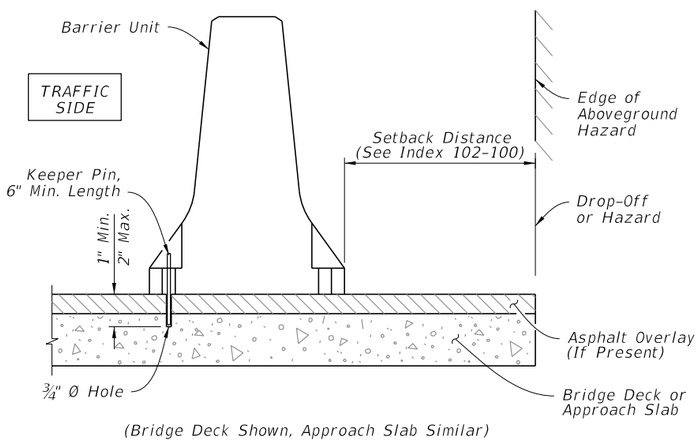

TYPICAL BRIDGE SECTION

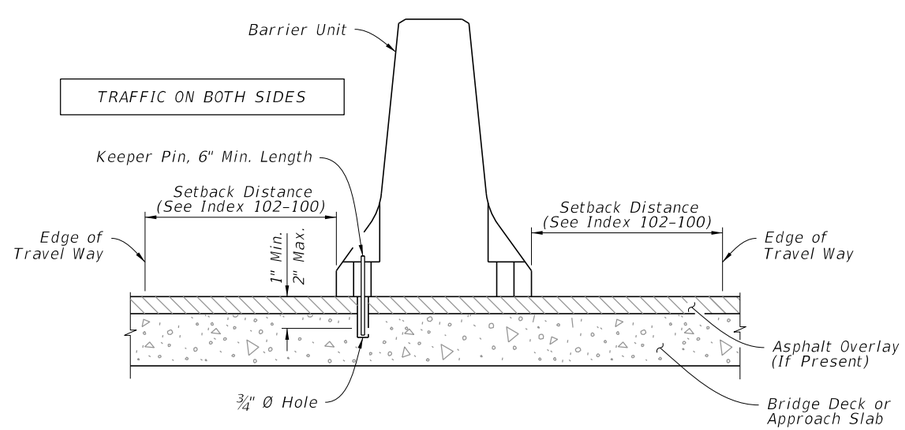

TYPICAL MEDIAN SECTION

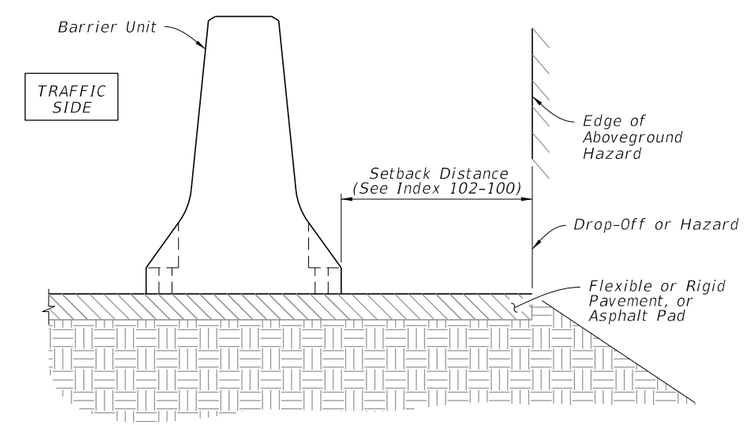

TYPICAL ROADWAY SECTION

FREE-STANDING INSTALLATION NOTES:

1. For Bridge Decks only, use Keeper Pins that are 1#2" diameter, smooth steel bar in accordance with ASTM A36 or ASTM A709 Grade 36. As directed by the Engineer in order to limit vibration induced translation of the Barrier Units, install one (1) Keeper Pin per Barrier Unit as shown.
2. If traffic is on both sides of the Barrier (i.e. Median Installation), alternate Keeper Pin locations from side to side of Barrier Units along the length of the installation. If traffic is on only one side of the barrier install keeper pins on the traffic side as shown.
3. Do not drill into or otherwise damage bridge deck expansion joints or drains.

FREE-STANDING INSTALLATION

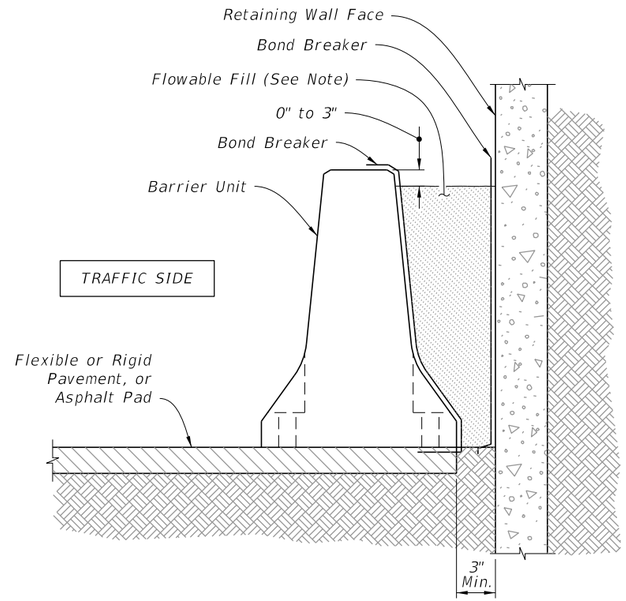

NOTE:
Provide Excavatable Flowable Fill in accordance with Specification 121.

TYPICAL SECTION
ADJACENT TO RETAINING WALL WITH FLOWABLE FILL BACK-FILL

FLOWABLE FILL BACK-FILL ROADSIDE INSTALLATIONS

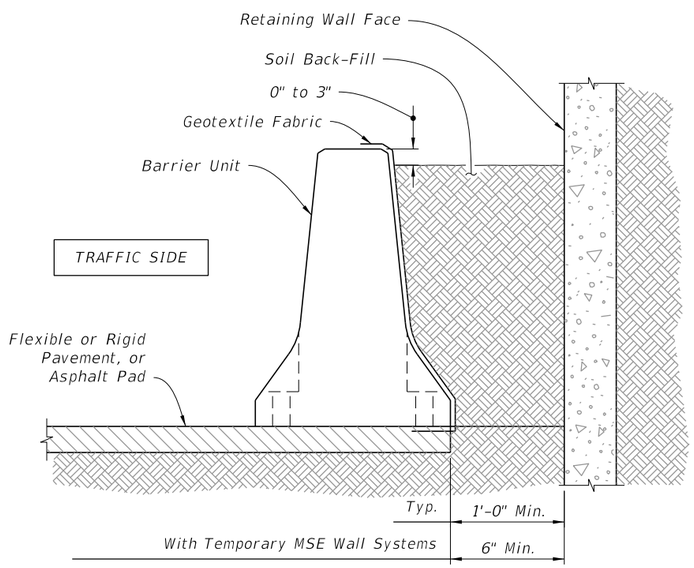

TYPICAL SECTION
ADJACENT TO RETAINING WALL WITH SOIL BACK-FILL

NOTES:

SOIL BACK-FILL MATERIAL: Provide Back-Fill Material consisting of any available clean soil. Compact Back-Fill Material until the soil mass is firm and unyielding. Provide erosion control as specified in the Plans. If none is specified in the Plans, provide erosion control as required tomaintain the integrity of the Back Fill embankment.

GEOTEXTILE FABRIC: Provide Type D-5 Geotextile Fabric in accordance with Specification 985 to contain Back Fill Material behind Barrier Units. Geotextile Fabric may be continuous over the length and height of the installation or may be individual pieces as required to cover the Lift/DrainSlots and open vertical joints between Barrier Units.

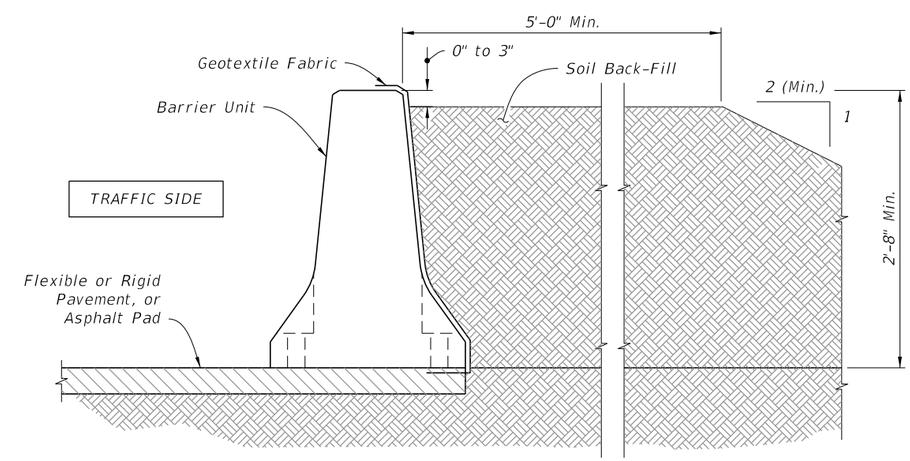

TYPICAL SECTION
WITH SOIL BACK-FILL

SOIL BACK-FILLED ROADSIDE INSTALLATIONS

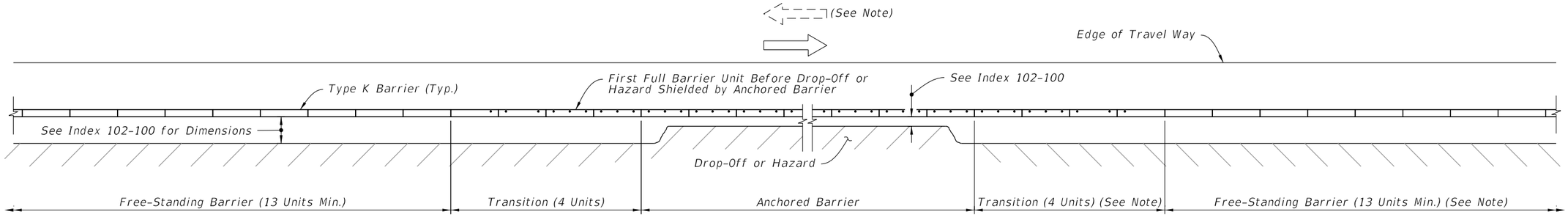

APPROACH TRANSITION FROM FREE-STANDING TO ANCHORED TYPE K TEMPORARY CONCRETE BARRIERS

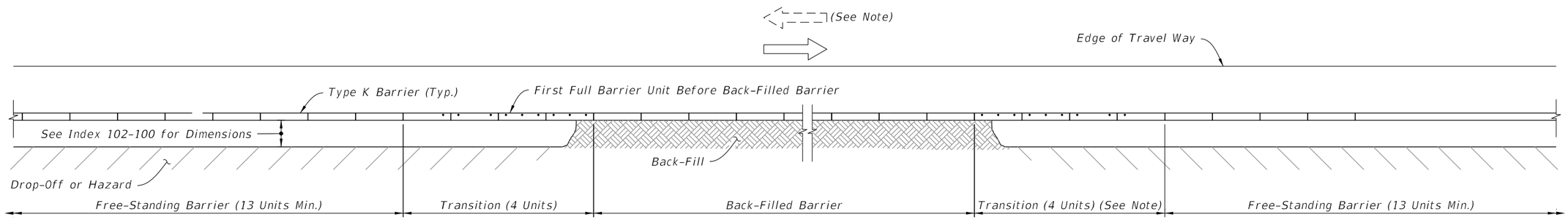

APPROACH TRANSITION FROM FREE-STANDING TO BACK-FILLED TYPE K TEMPORARY CONCRETE BARRIERS

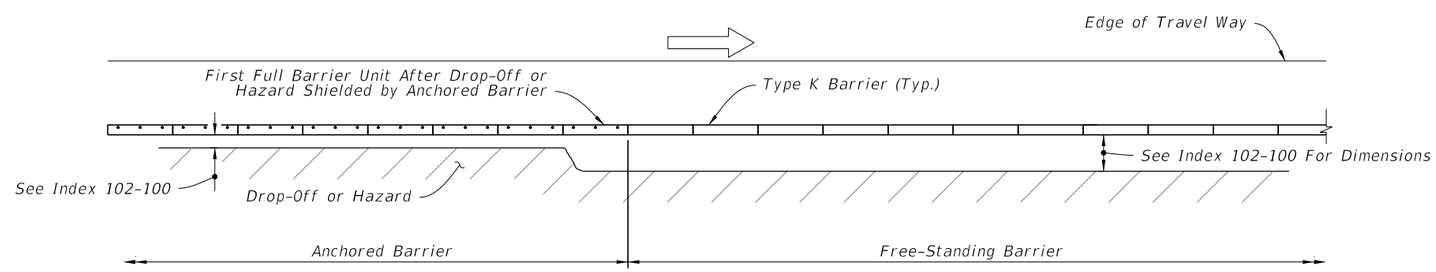

TRAILING END TRANSITION FROM ANCHORED TO FREE-STANDING TYPE K TEMPORARY CONCRETE BARRIERS

NOTE:

Where Barrier is located within Clear Zone of opposing traffic, Approach Transition is required.

SYMBOLS:

Dot indicates number and position of Bolts or Stakes

Direction of Traffic

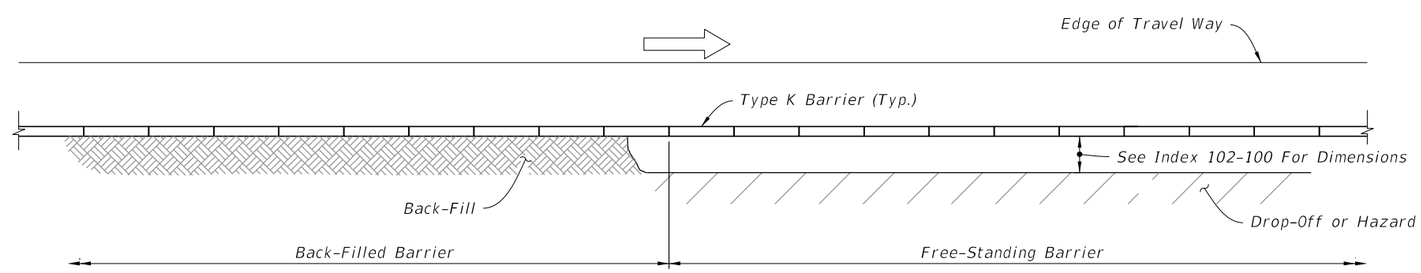

TRAILING END TRANSITION FROM BACK-FILLED TO FREE-STANDING TYPE K TEMPORARY CONCRETE BARRIERS

8:45:09 AM

10/20/2022

LAST REVISION	REVISION	DESCRIPTION:			INDEX	SHEET
11/01/17			FDOT FY 2023-24 STANDARD PLANS	TYPE K TEMPORARY CONCRETE BARRIER SYSTEM	102-110	5 of 17

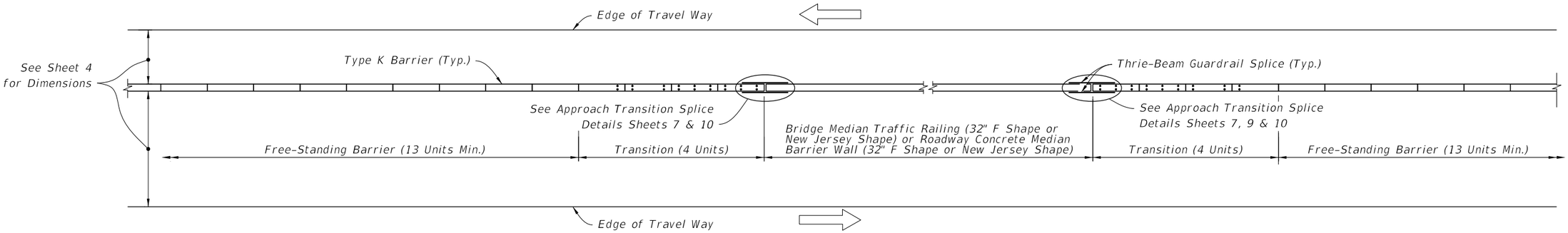

TRANSITION FROM FREE-STANDING TYPE K TEMPORARY CONCRETE BARRIERS TO BRIDGE MEDIAN TRAFFIC RAILING OR ROADWAY MEDIAN CONCRETE BARRIER WALL

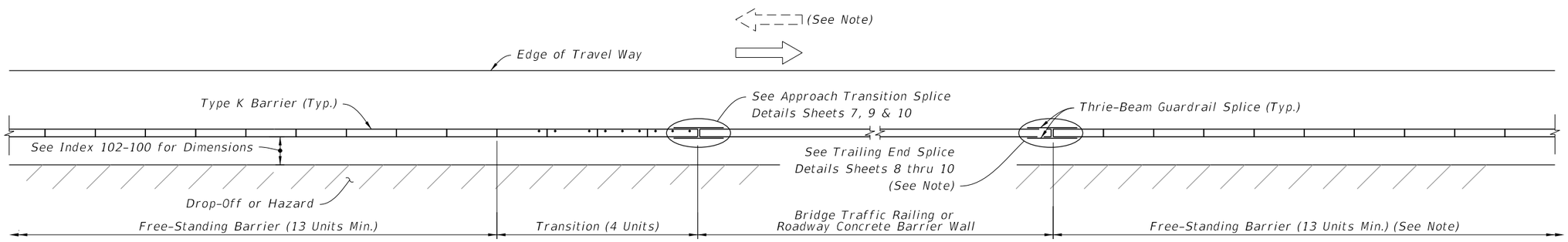

TRANSITION FROM FREE-STANDING TYPE K TEMPORARY CONCRETE BARRIERS TO BRIDGE TRAFFIC RAILING OR ROADWAY CONCRETE BARRIER WALL

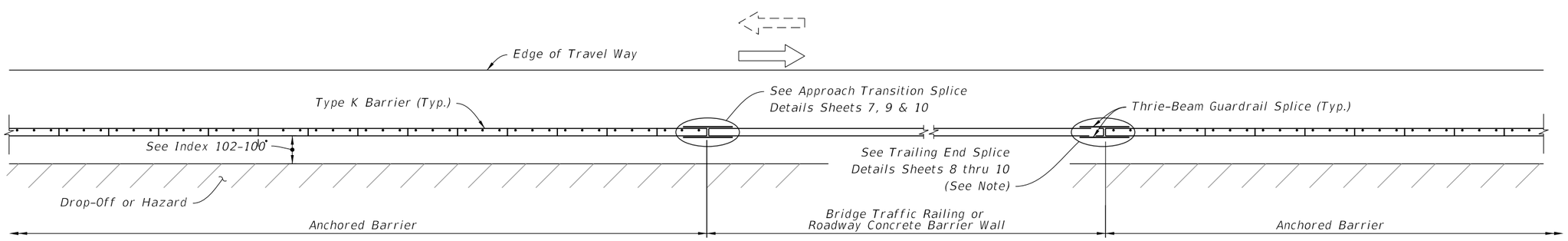

TRANSITION FROM ANCHORED TYPE K TEMPORARY CONCRETE BARRIERS TO BRIDGE TRAFFIC RAILING OR ROADWAY CONCRETE BARRIER WALL

NOTE:

Where Barrier is located within clear zone of opposing traffic, Approach Transition is required.

SYMBOLS:

Dot indicates number and position of Bolts or Stakes

Direction of Traffic

10/20/2022 8:45:10 AM

LAST REVISION	REVISION	DESCRIPTION:			INDEX	SHEET
11/01/17			FDOT FY 2023-24 STANDARD PLANS	TYPE K TEMPORARY CONCRETE BARRIER SYSTEM	102-110	6 of 17

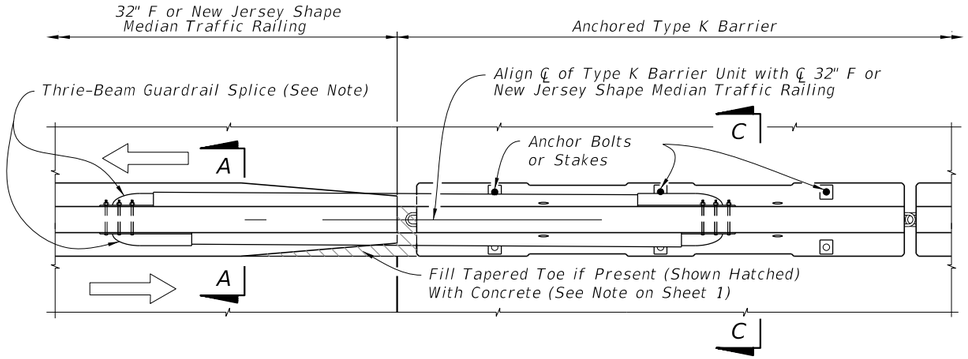

PARTIAL PLAN VIEW AT MEDIAN TRAFFIC RAILING

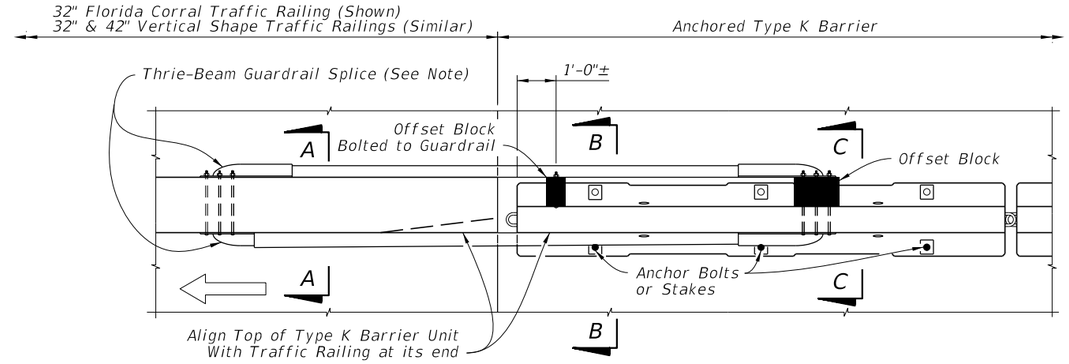

PARTIAL PLAN VIEW

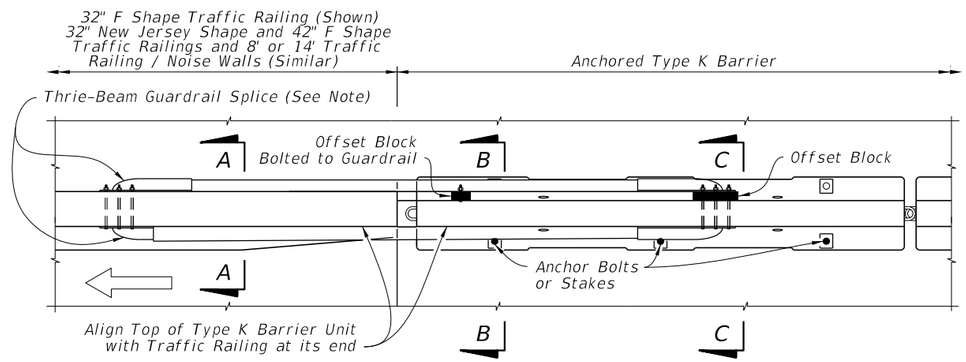

PARTIAL PLAN VIEW AT SHOULDER TRAFFIC RAILING

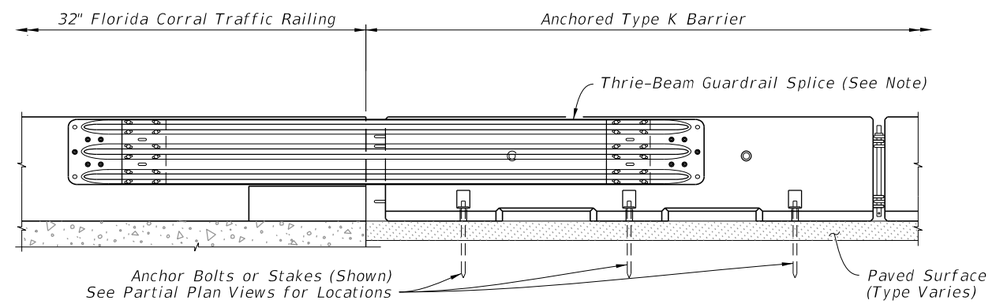

PARTIAL ELEVATION VIEW - FLORIDA CORRAL TRAFFIC RAILING

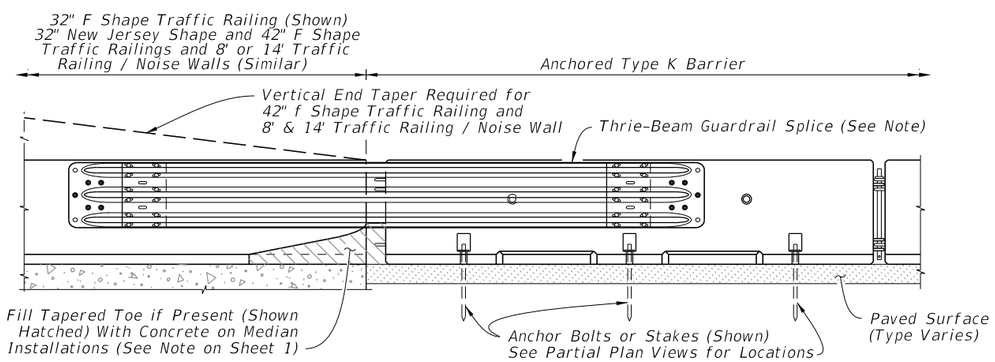

PARTIAL ELEVATION VIEW

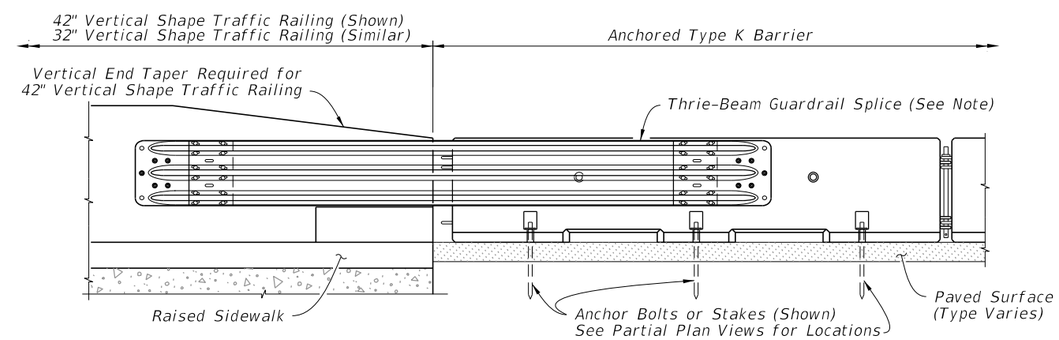

PARTIAL ELEVATION VIEW - VERTICAL SHAPE TRAFFIC RAILINGS

APPROACH TRANSITION SPLICE DETAIL
FOR F AND NEW JERSEY SHAPE TRAFFIC RAILINGS AND 8' & 14' TRAFFIC RAILING / NOISE WALLS (CONCRETE BARRIER WALL SIMILAR)

APPROACH TRANSITION SPLICE DETAIL
FOR FLORIDA CORRAL AND VERTICAL SHAPE TRAFFIC RAILINGS

SYMBOL:

⟹ Direction of Traffic

NOTE:

See Thrie-Beam Guardrail Positioning Detail, Sheet 10 and Notes for Thrie-Beam Guardrail Splice Installations, Sheet 1.

CROSS REFERENCES:

See Sheet 10 for Section A-A, Section B-B and Section C-C.

10/20/2022 8:45:11 AM

LAST REVISION	REVISION	DESCRIPTION:			INDEX	SHEET
11/01/17			FY 2023-24 STANDARD PLANS	TYPE K TEMPORARY CONCRETE BARRIER SYSTEM	102-110	7 of 17

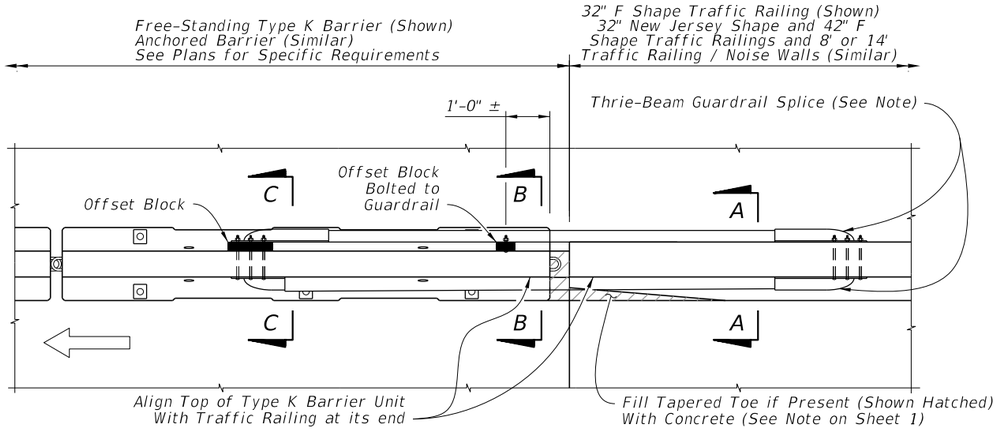

PARTIAL PLAN VIEW

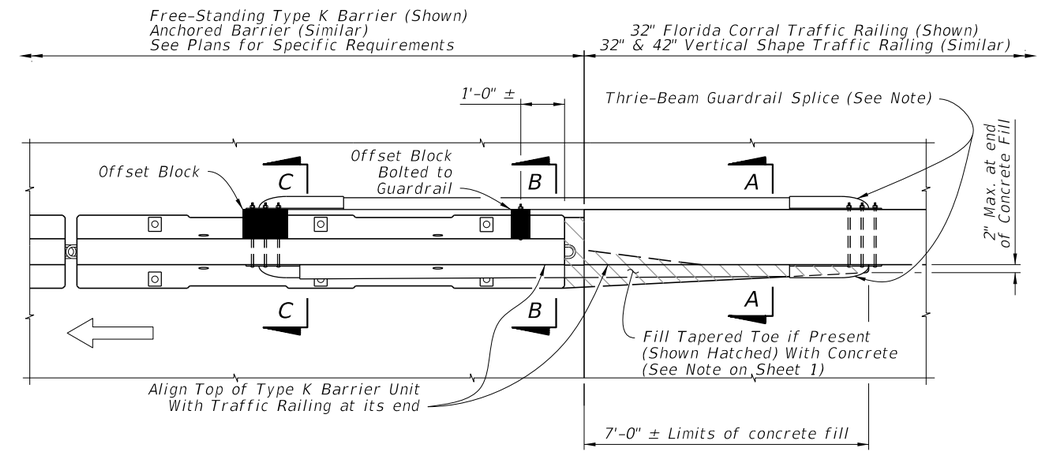

PARTIAL PLAN VIEW

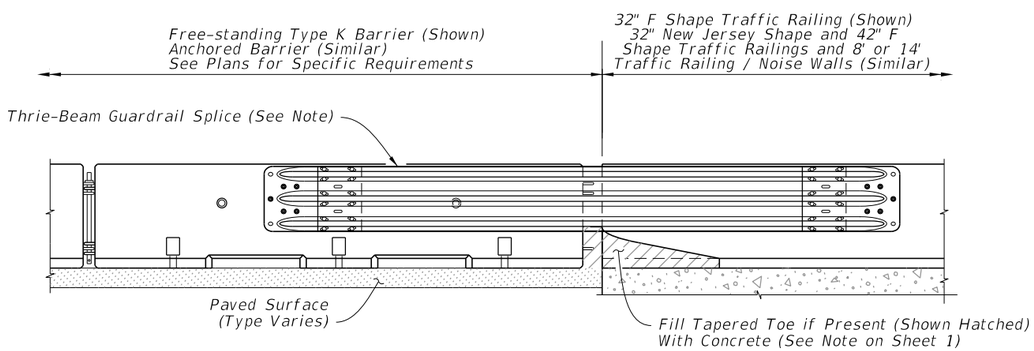

PARTIAL ELEVATION VIEW

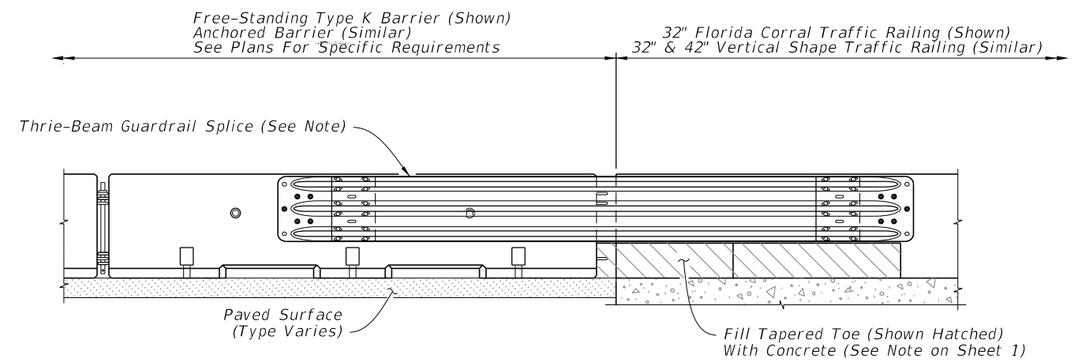

PARTIAL ELEVATION VIEW

TRAILING END SPLICE DETAIL
FOR F AND NEW JERSEY SHAPE TRAFFIC RAILINGS AND 8' & 14' TRAFFIC RAILING / NOISE WALLS

TRAILING END SPLICE DETAIL
FOR FLORIDA CORRAL AND VERTICAL SHAPE TRAFFIC RAILINGS

SYMBOL:

⇨ Direction of Traffic

NOTE:

See Thrie-Beam Guardrail Positioning Detail, Sheet 10 and Notes for Thrie-Beam Guardrail Splice Installations, Sheet 1.

CROSS REFERENCES:

See Sheet 10 for Section A-A, Section B-B and Section C-C.

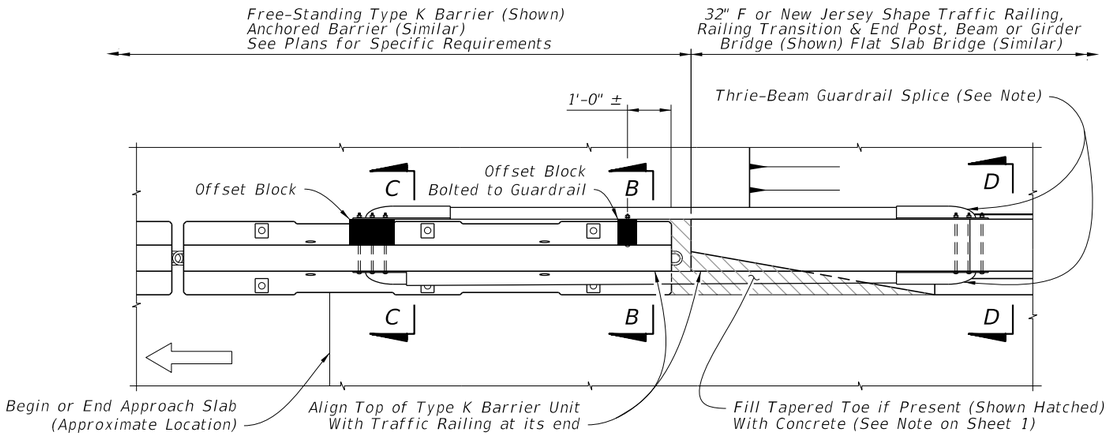

PARTIAL PLAN VIEW

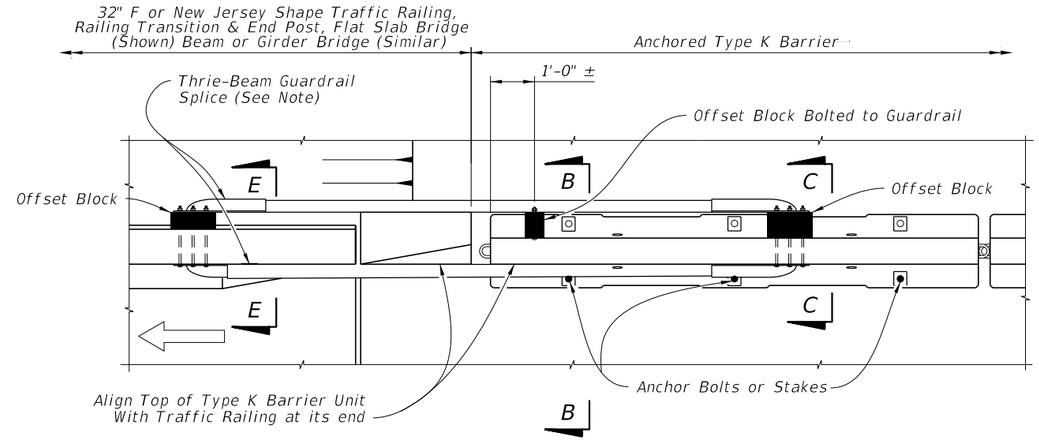

PARTIAL PLAN VIEW

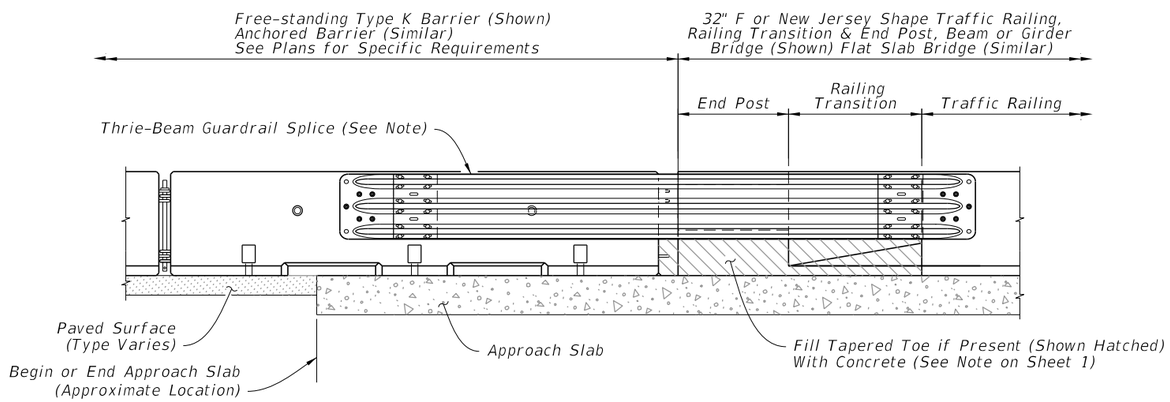

CROSS REFERENCES:
See Sheet 10 for Section B-B,
Section C-C and Section D-D.

PARTIAL ELEVATION VIEW

TRAILING END SPLICE DETAIL
FOR 32" F AND NEW JERSEY SHAPE TRAFFIC RAILINGS WITH RAILING TRANSITION AND END POST

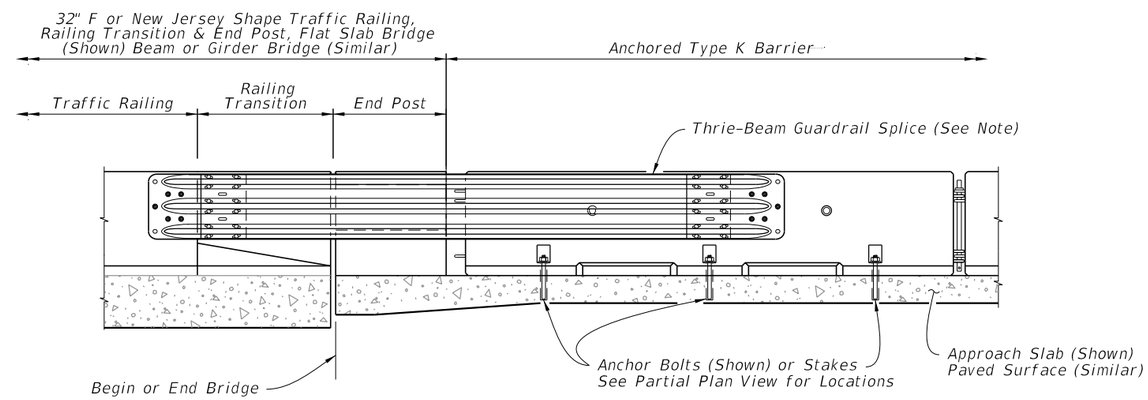

PARTIAL ELEVATION VIEW

CROSS REFERENCES:
See Sheet 10 for Section B-B,
Section C-C and Section E-E.

APPROACH TRANSITION SPLICE DETAIL
FOR 32" F AND NEW JERSEY SHAPE TRAFFIC RAILINGS WITH RAILING TRANSITION AND END POST

SYMBOL:

⇨ Direction of Traffic

NOTE:
See Thrie-Beam Guardrail Positioning Detail, Sheet 10 and Notes for Thrie-Beam Guardrail Splice Installations, Sheet 1.

10/20/2022 8:45:13 AM

LAST REVISION	REVISION	DESCRIPTION:			INDEX	SHEET
11/01/17			FDOT FY 2023-24 STANDARD PLANS	TYPE K TEMPORARY CONCRETE BARRIER SYSTEM	102-110	9 of 17

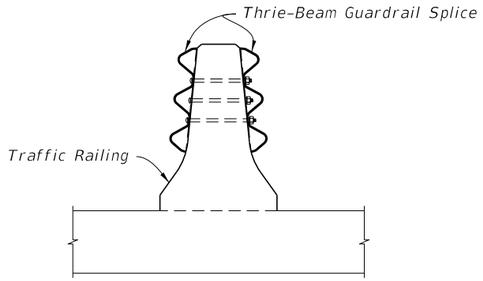

SECTION A-A

32" F Shape Median Traffic Railing (Shown) Median Concrete Barrier Wall (Similar)

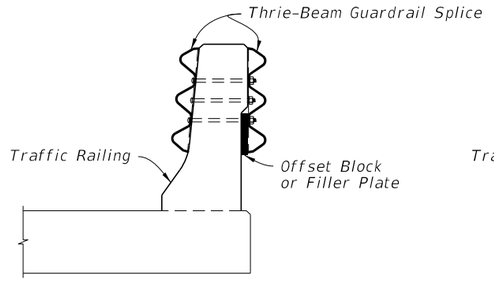

SECTION A-A

32" F Shape Traffic Railing (Shown), 42" Traffic Railing and 8' & 14' Traffic Railing / Noise Walls (Similar)

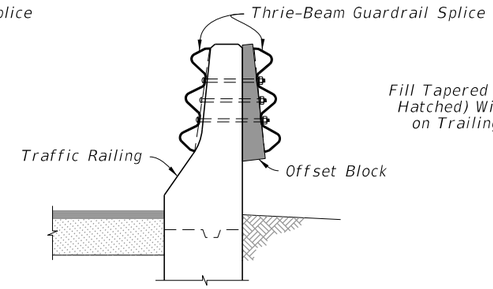

SECTION A-A

32" New Jersey Shape Concrete Barrier Wall (Shown) 32" New Jersey Shape Traffic Railing & Other Narrow Traffic Railings (Similar)

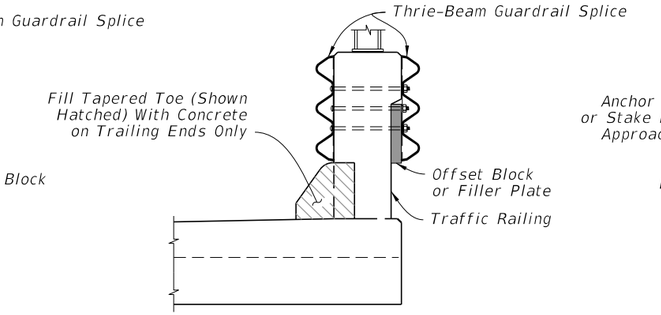

SECTION A-A

32" & 42" Vertical Shape Traffic Railing (Shown) Florida Corral Traffic Railing (Similar)

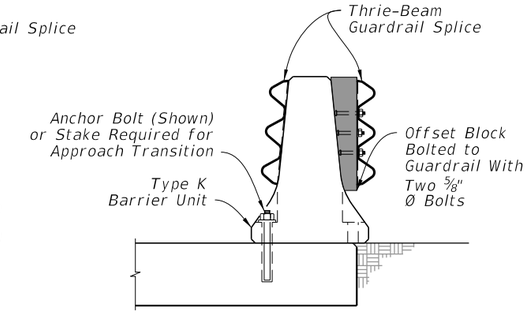

SECTION B-B

Adjacent to Shoulder Traffic Railings

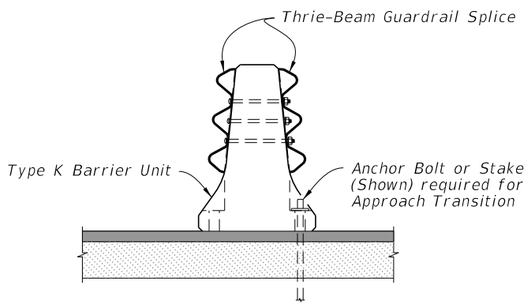

SECTION C-C

Adjacent to 32" F or New Jersey Shape Median Traffic Railing or Median Concrete Barrier Wall

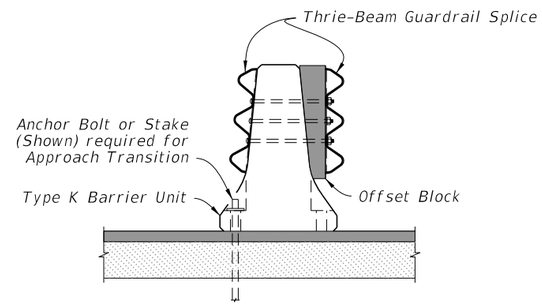

SECTION C-C

Adjacent to Shoulder Traffic Railings

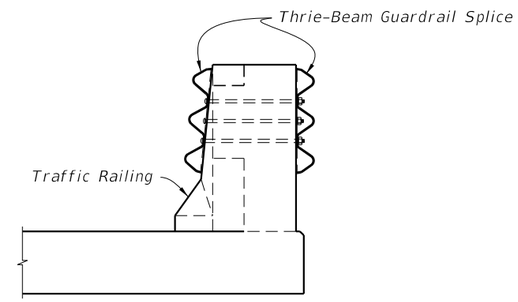

SECTION D-D

32" F or New Jersey Shape Traffic Railing, Railing Transition & End Post

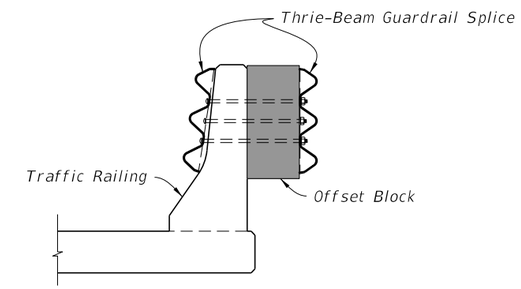

SECTION E-E

32" New Jersey Shape Traffic Railing (Shown) 32" F Shape Traffic Railing (Similar)

CROSS SECTIONS

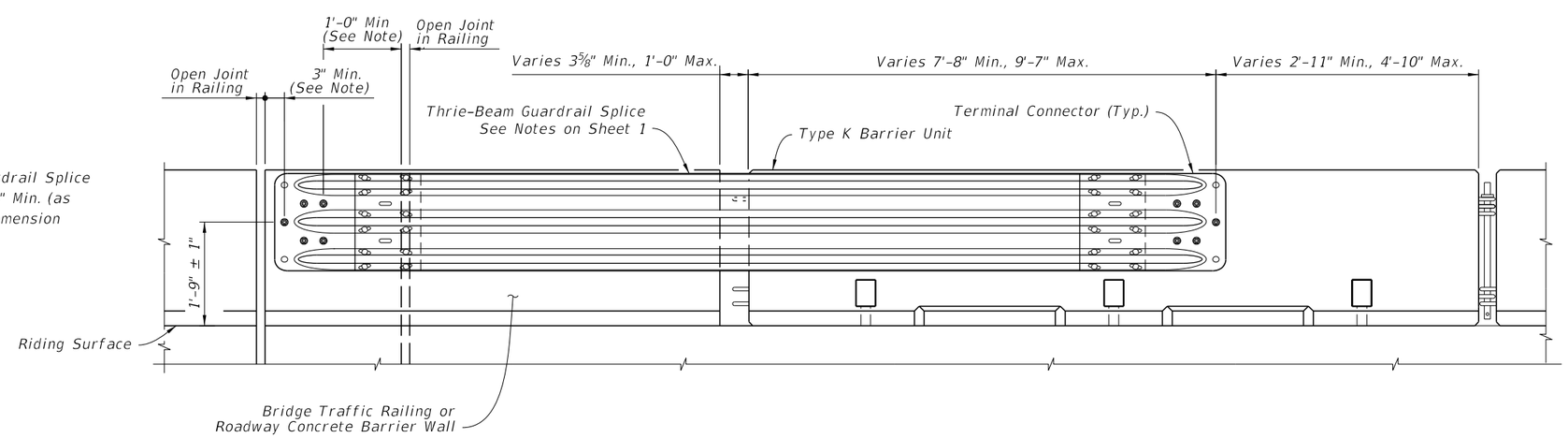

NOTE:

Shift Thrie-Beam Guardrail Splice beyond Open Joint 1'-0" Min. (as shown) when 3" Min. dimension can not be obtained

THRIE-BEAM GUARDRAIL POSITIONING DETAIL

10/20/2022 8:45:14 AM

LAST REVISION	REVISION	DESCRIPTION:			INDEX	SHEET
11/01/17			FY 2023-24 STANDARD PLANS	TYPE K TEMPORARY CONCRETE BARRIER SYSTEM	102-110	10 of 17

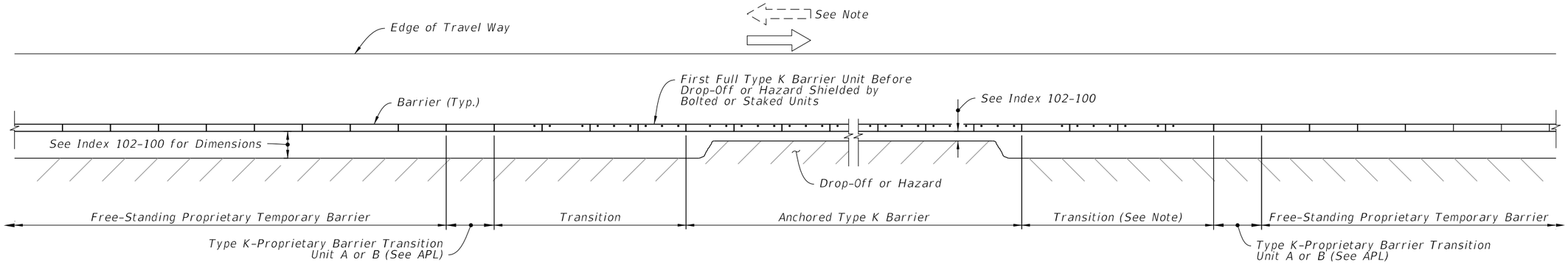

APPROACH TRANSITION FROM FREE-STANDING PROPRIETARY TEMPORARY BARRIERS TO ANCHORED TYPE K TEMPORARY CONCRETE BARRIERS

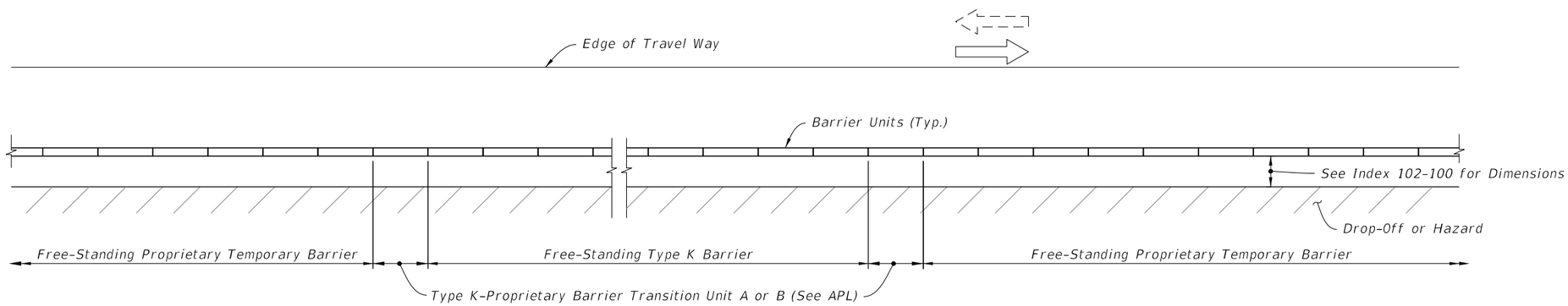

APPROACH AND TRAILING END TRANSITIONS FROM FREE-STANDING TYPE K TEMPORARY CONCRETE BARRIERS TO FREE-STANDING PROPRIETARY TEMPORARY BARRIERS

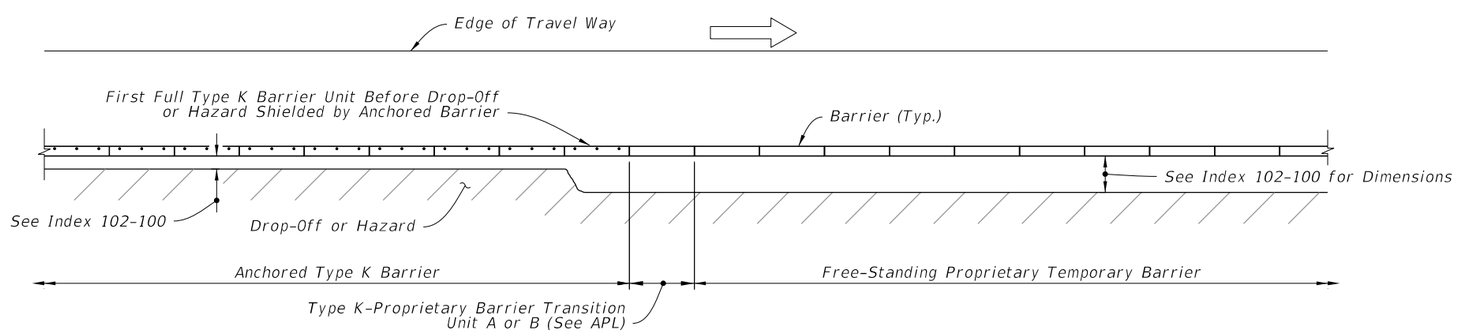

TRAILING END TRANSITION FROM ANCHORED TYPE K TEMPORARY CONCRETE BARRIERS TO FREE-STANDING PROPRIETARY TEMPORARY BARRIERS

NOTE:

Where Barrier is located within Clear Zone of opposing traffic, Approach Transition is required.

SYMBOLS:

Dot indicates number and position of Bolts or Stakes

Direction of Traffic

TYPE K-PROPRIETARY TEMPORARY CONCRETE BARRIER TRANSITIONS

10/20/2022 8:45:15 AM

LAST REVISION	REVISION	DESCRIPTION:			INDEX	SHEET
11/01/17			FDOT FY 2023-24 STANDARD PLANS	TYPE K TEMPORARY CONCRETE BARRIER SYSTEM	102-110	11 of 17

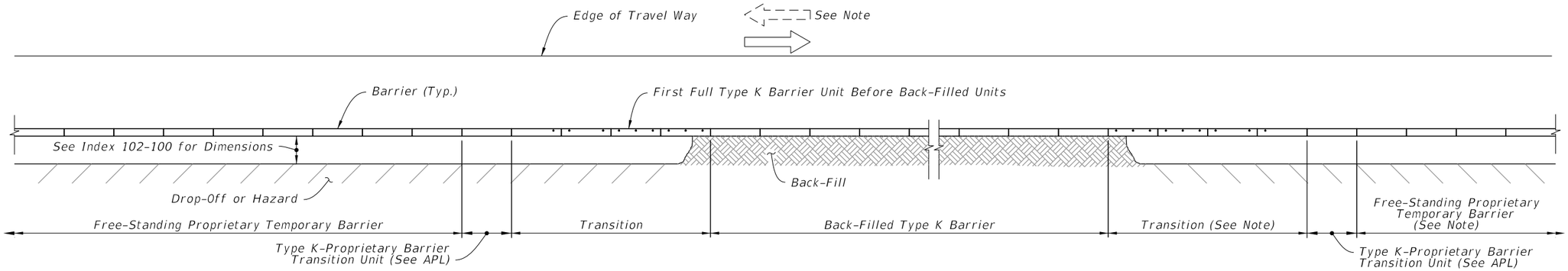

APPROACH TRANSITION FROM FREE-STANDING PROPRIETARY TEMPORARY BARRIERS TO BACK-FILLED TYPE K TEMPORARY CONCRETE BARRIERS

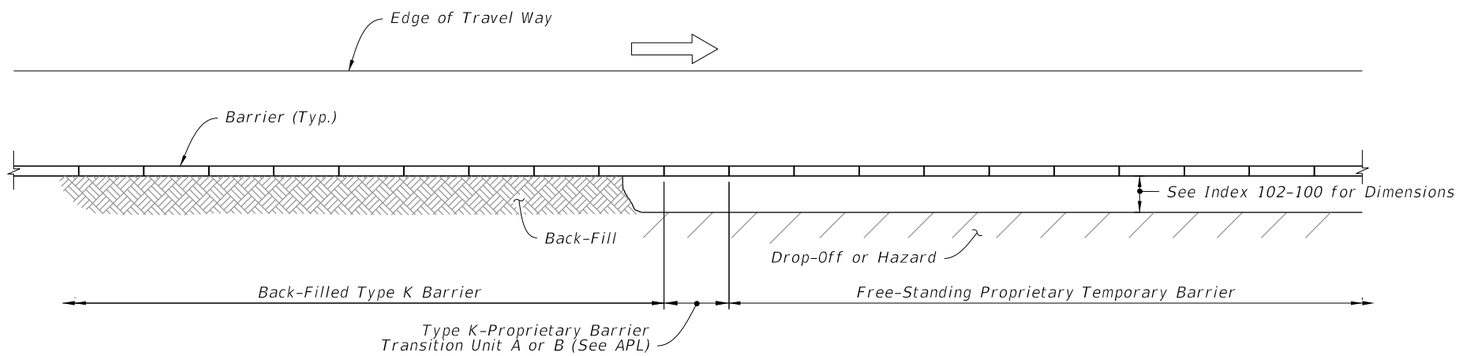

TRAILING END TRANSITION FROM BACK-FILLED TYPE K TEMPORARY CONCRETE BARRIERS TO FREE-STANDING PROPRIETARY TEMPORARY BARRIERS

NOTE:

Where Barrier is located within Clear Zone of opposing traffic, Approach Transition is required.

SYMBOLS:

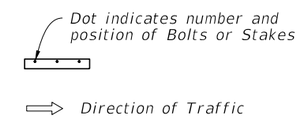

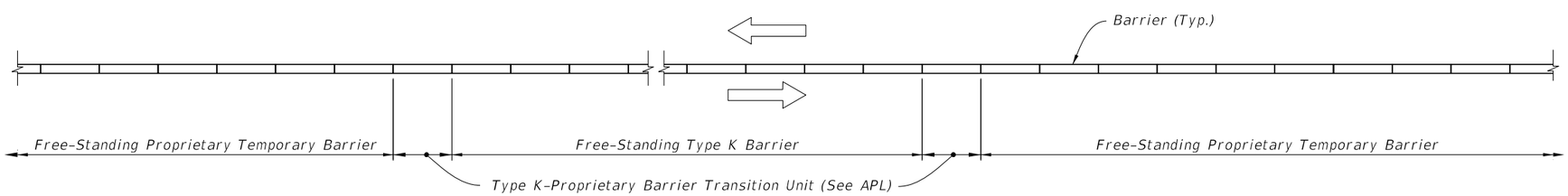

MEDIAN APPROACH AND TRAILING END TRANSITIONS FROM FREE-STANDING TYPE K TEMPORARY CONCRETE BARRIERS TO FREE-STANDING PROPRIETARY TEMPORARY BARRIERS

TYPE K-PROPRIETARY TEMPORARY CONCRETE BARRIER TRANSITIONS

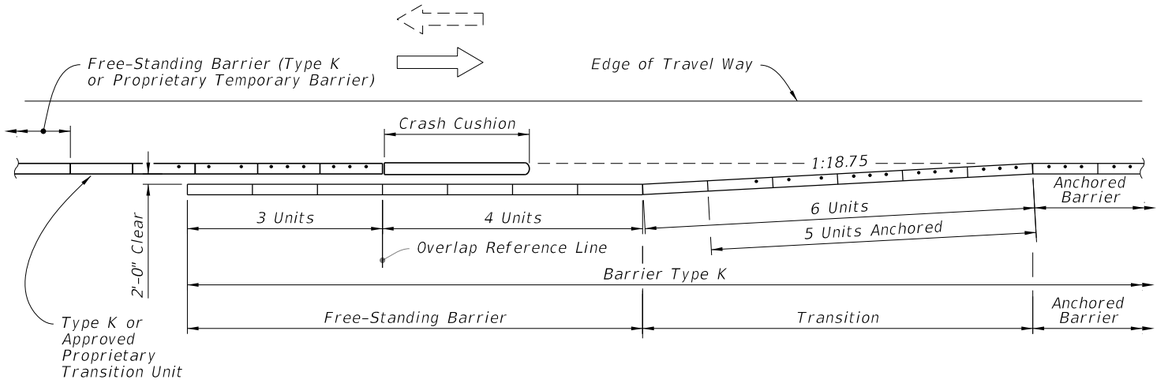

APPROACH SHOULDER BARRIER ON UNDIVIDED FACILITIES

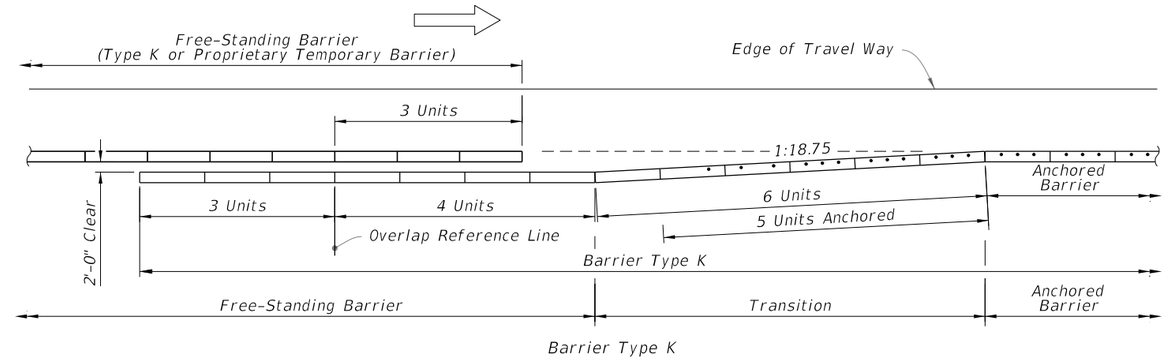

APPROACH SHOULDER BARRIER ON DIVIDED FACILITIES

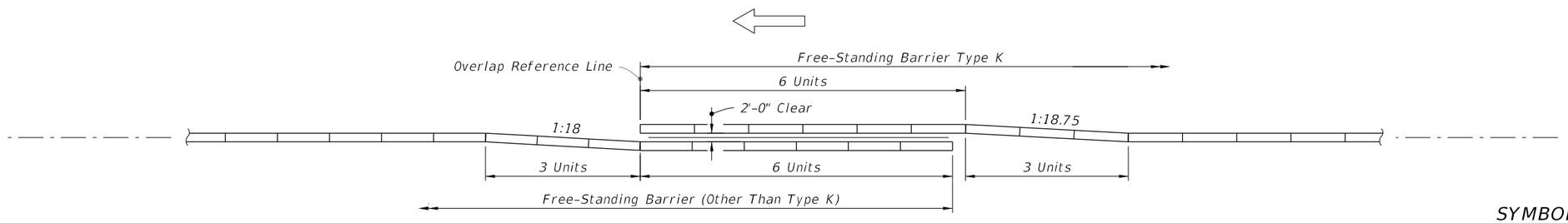

INTERIOR MEDIAN BARRIER

SYMBOLS:

Dot indicates number and position of Bolts or Stakes

Direction of Traffic

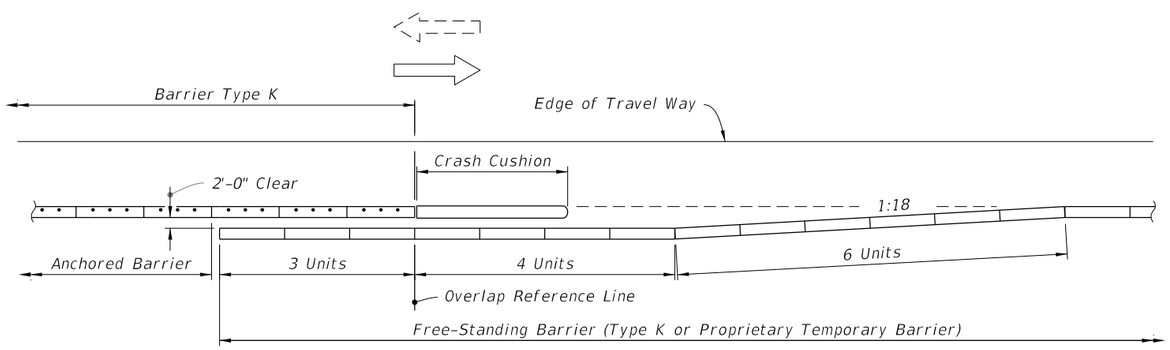

DEPARTURE (TRAILING) SHOULDER BARRIER ON UNDIVIDED FACILITIES
(BARRIER TYPE K ON BRIDGES AND APPROACH SLABS)

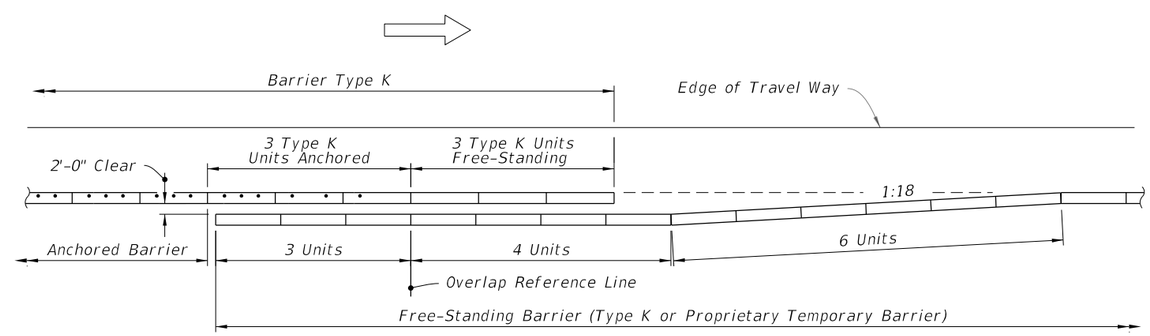

DEPARTURE (TRAILING) SHOULDER BARRIER ON DIVIDED FACILITIES
(BARRIER TYPE K ON BRIDGES AND APPROACH SLABS)

CONTINUATION OF BARRIER • FROM OTHER TYPE BARRIERS TO BARRIER TYPE K

10/20/2022 8:45:17 AM

LAST REVISION	REVISION	DESCRIPTION:			INDEX	SHEET
11/01/17			FY 2023-24 STANDARD PLANS	TYPE K TEMPORARY CONCRETE BARRIER SYSTEM	102-110	13 of 17

NOTE:

When subjected to reverse direction hits, construct Transition Panels from Temporary Barrier to Crash Cushions; for additional details refer to the applicable crash cushion drawings on the APL.

SYMBOLS:

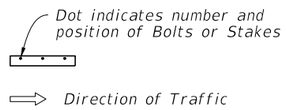

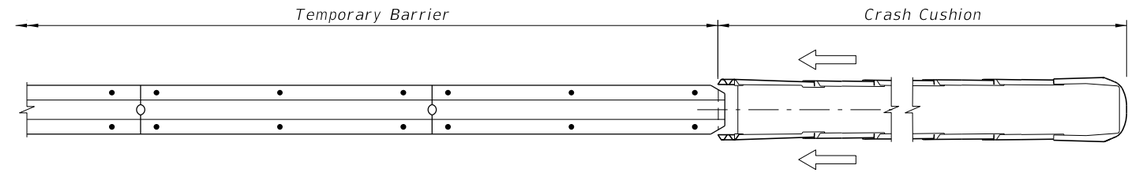

UNIDIRECTIONAL - SEPARATED TRAFFIC

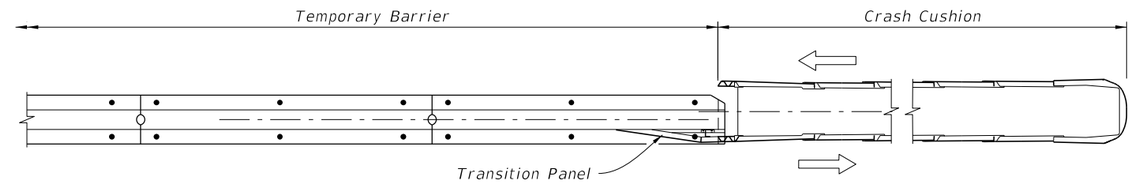

BIDIRECTIONAL - SEPARATED TRAFFIC

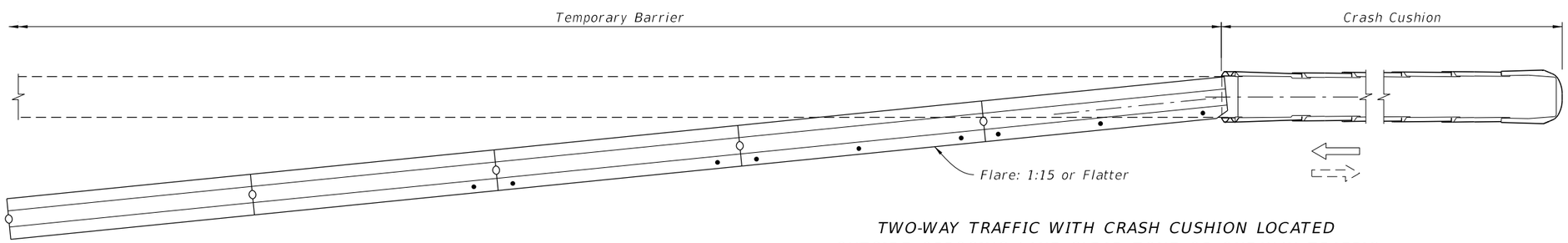

TWO-WAY TRAFFIC WITH CRASH CUSHION LOCATED
OUTSIDE OPPOSING LANE CLEAR ZONE OR ONE-WAY TRAFFIC

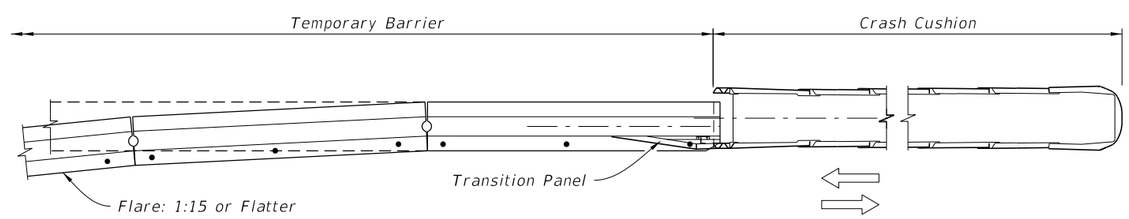

TWO-WAY TRAFFIC WITH CRASH CUSHION LOCATED WITHIN OPPOSING LANE CLEAR ZONE

END TREATMENT WHEN SHIELDED BY A CRASH CUSHION
SHOULDER - RIGHT OR LEFT (RIGHT SIDE SHOWN)

SHIELDING ENDS WITH REDIRECTIVE CRASH CUSHIONS (REDIRECTIVE OPTION)

FABRICATION NOTES:

In order to maintain crashworthiness of the Barrier System, do not substitute different grades, sizes, shapes or types of reinforcing steel for those shown for constructing Type K Barrier Units. Also, do not substitute different type, size, length or material grade anchor bolts, nuts, washers, adhesives, connector pins, stakes, keeper pins, or guardrail components for installing Type K Barrier Units.

FABRICATOR PREQUALIFICATIONS:

A. The Concrete Plant that meets the requirements;
   a. Specification 450 for prestressed concrete
   b. Specification 105 for precast.

CONCRETE:

A. Construct Barrier Units with Class IV concrete in accordance with Specification 346.
B. Specification 346-10 is not applicable.
C. Barrier Units represented by concrete acceptance strength tests which fall below 5000 psi will be rejected.

REINFORCING STEEL:

A. Use only steel reinforcing that meet ASTM A 615, Grade 60, with the exception of Bars 6D1, 6D2 and 6D3.
B. Bars 6D1, 6D2 and 6D3 use steel reinforcing that meets ASTM A 706, with the exception that a 2¾" diameter pin must be used for the 180 degree bend test.
C. After steel reinforcing fabrication, hot dip galvanized in accordance with Specification 962 or coated with a cold galvanizing compound in accordance with Specification 562, all or part of Bars 6D.
D. At the Fabricator's option, the entire length of Bars 6D may be galvanized or coated.
E. The minimum limit of galvanizing or coating is shown in the Bending Diagrams.
F. Install Bars 6D within ⅛" of the plan dimensions.
G. Correct placement of Bars 6D is critical for proper fit up and performance of individual Barrier Units.
H. At the option of the Fabricator, Deformed Welded Wire Fabric in accordance with Specification 931 and the details shown on Sheet 15 may be utilized in lieu of Bars 4A and 5B.
I. All dimensions in the Bending Diagrams are out to out.
J. Install all reinforcing steel with a 2" minimum cover, except as noted.

LIFTING SLEEVE ASSEMBLY:

A. Inclusion of the Lifting Sleeve Assemblies is optional.
B. Use steel in accordance with ASTM A 53 for the Pipe Sleeve.
C. Hot-dip galvanize the Lifting Sleeve Assemblies after their fabrication in accordance with the Specifications.

SURFACE FINISH:

A. Construct Barrier Units in accordance with Specifications 400 and 521.
B. Finish the top and sides of the Barrier Units with a General Surface Finish.
C. Finish the bottom of the Barrier Units to a dense uniform surface by floating in lieu of the General Surface Finish.
D. Use stationary metal forms or stationary timber forms with a form liner.

MARKING:

A. Permanently mark the top left end of each Barrier Unit by the use of an embedded and anchored metallic plate with letters and figures a minimum of 0.5" tall.
B. Ink stamps are not allowed.
C. Permanently mark with the following information:
   - Type K1
   - Fabricator's name or symbol
   - Date of manufacture (day, month and year)

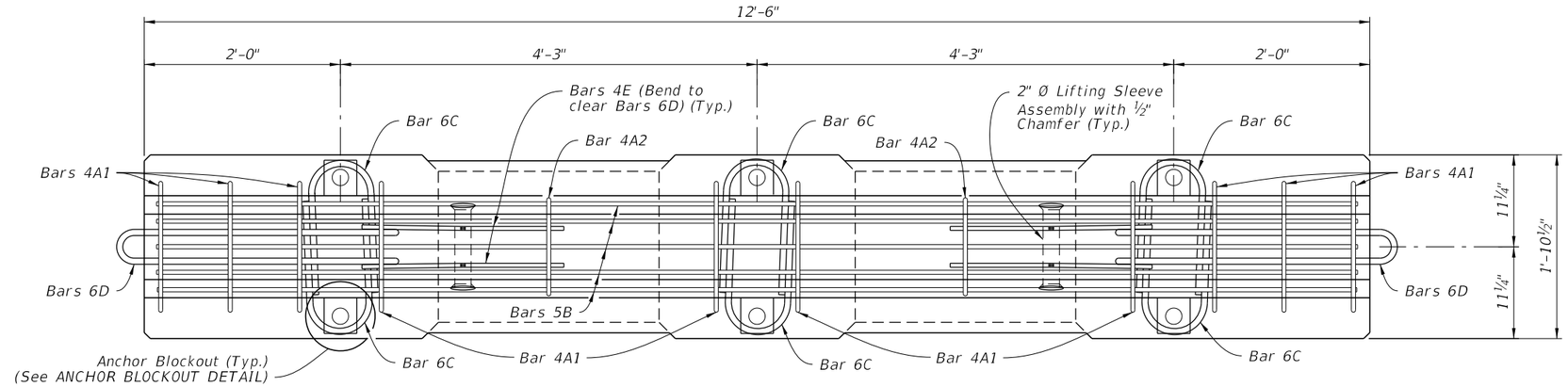

PLAN VIEW

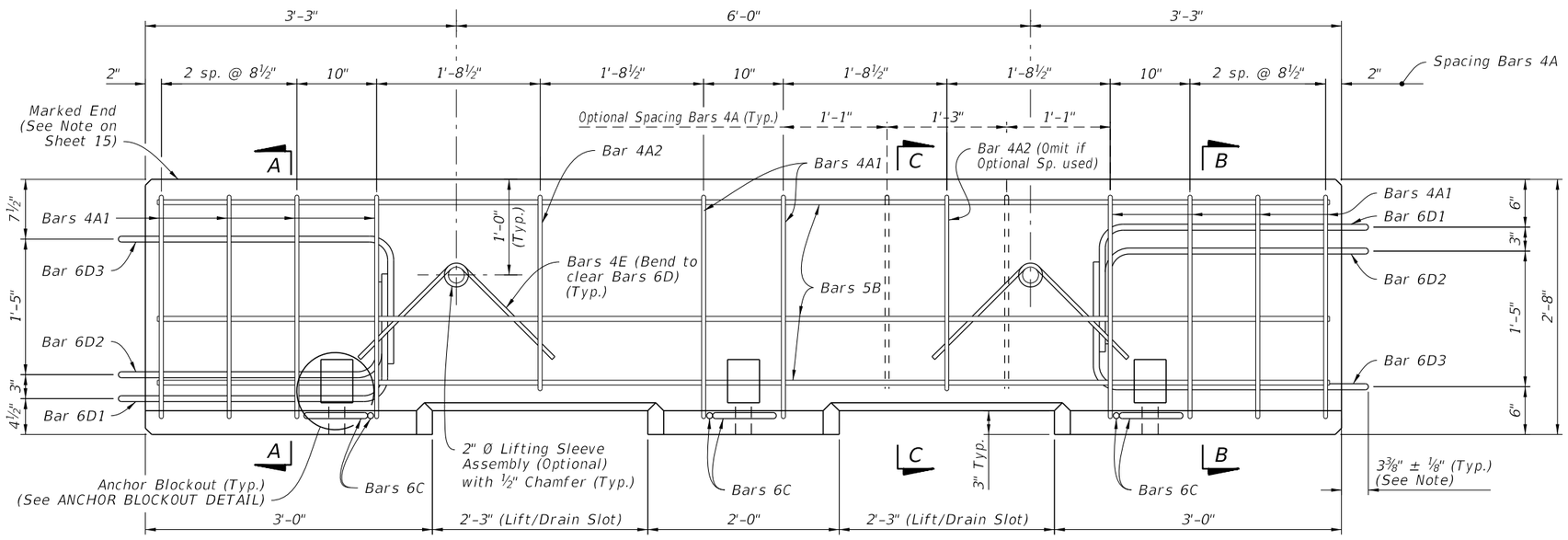

ELEVATION VIEW

NOTE:

Measured for end to barrier unit to outside edge of Bars 6D.

ESTIMATED TEMPORARY CONCRETE BARRIER QUANTITIES		
ITEM	UNIT	QUANTITY
Concrete	CY	1.29
Reinforcing Steel	LB	218

The above quantities are for one Barrier Unit.

Cross References:

For Section A-A, Section B-B and Section C-C see Sheet 17.

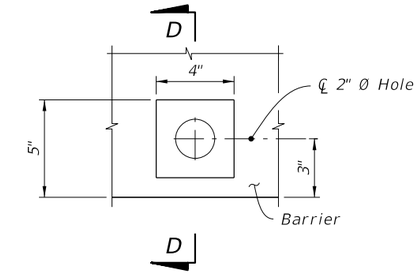

PLAN VIEW

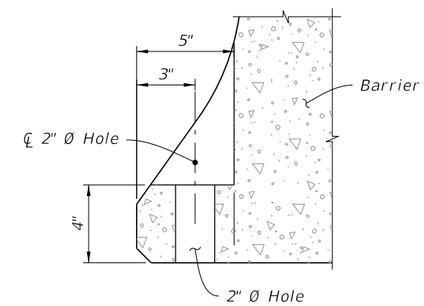

SECTION D-D

(Reinforcement Not shown)

ANCHOR BLOCKOUT DETAIL

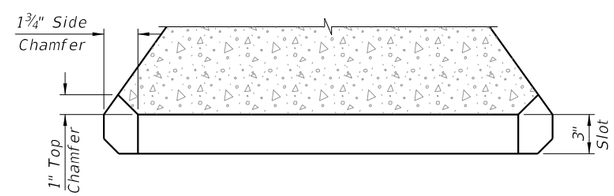

SECTION THRU LIFT/DRAIN SLOT

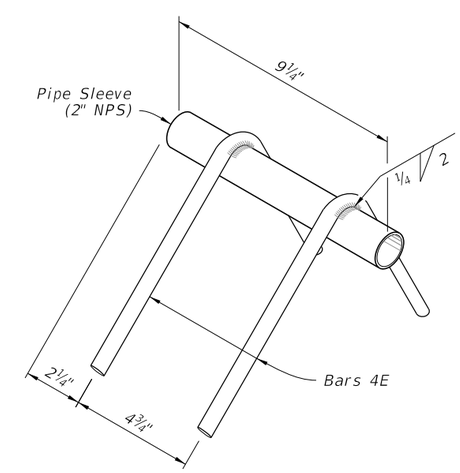

LIFTING SLEEVE ASSEMBLY DETAIL (OPTIONAL)

10/20/2022 8:45:20 AM

LAST REVISION	REVISION	DESCRIPTION:			INDEX	SHEET
11/01/17			FY 2023-24 STANDARD PLANS	TYPE K TEMPORARY CONCRETE BARRIER SYSTEM	102-110	16 of 17

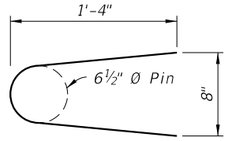

BAR 6C

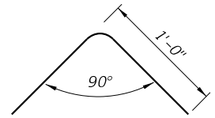

BAR 4E

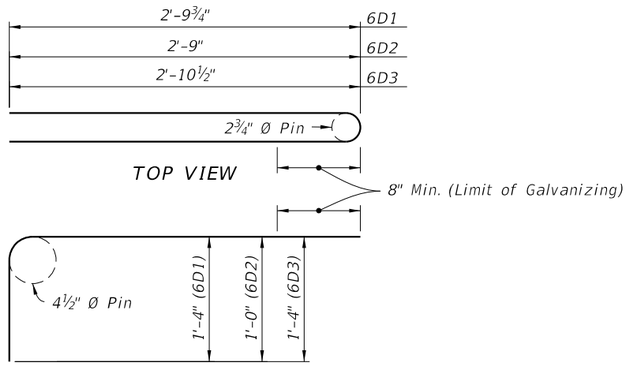

SIDE VIEW
BARS 6D1, 6D2 & 6D3

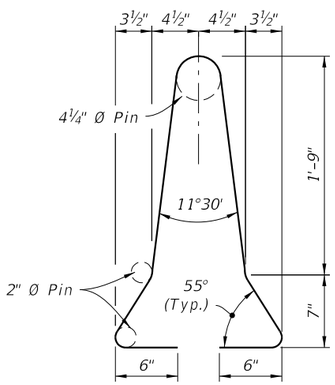

STIRRUP BAR 4A1

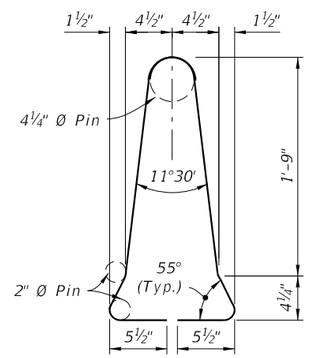

STIRRUP BAR 4A2

BILL OF REINFORCING STEEL			
MARK	SIZE	NUMBER	LENGTH
A1	4	10	6'-1"
A2	4	2	5'-5"
B	5	5	12'-3" (Straight)
C	6	6	3'-1"
D1	6	2	8'-4"
D2	6	2	7'-6"
D3	6	2	8'-6"
E	4	4	2'-0"

CONVENTIONAL REINFORCING STEEL BENDING DIAGRAMS

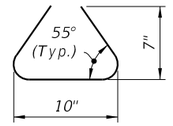

NO. 4 DRAIN BAR OVER DRAIN SLOTS (CONVENTIONAL STEEL)

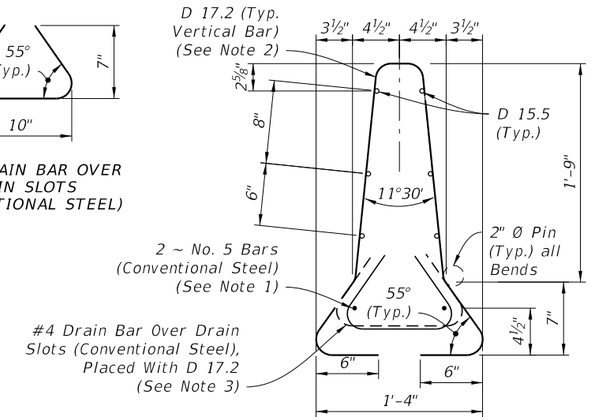

CONFIGURATION ONE

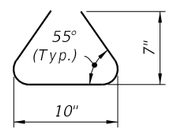

NO. 4 DRAIN BAR OVER DRAIN SLOTS (CONVENTIONAL STEEL)

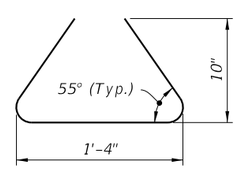

NO. 4 TYPICAL BAR (CONVENTIONAL STEEL)

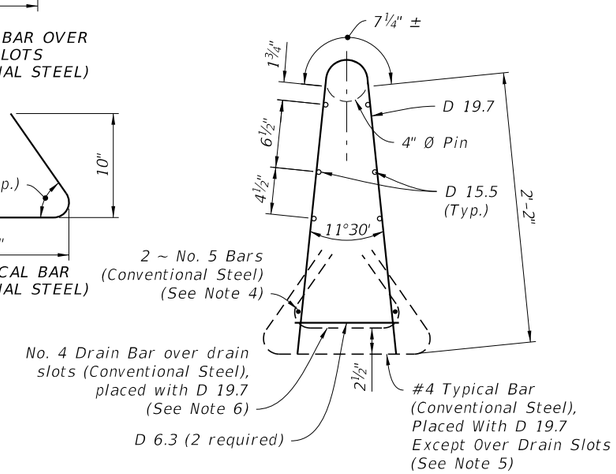

CONFIGURATION TWO

NOTES:

1. Place 2 ~ No. 5 Bars (12'-3" long) in bottom of Welded Wire Reinforcement cage as shown.
2. Match D17.2 spacing to Bars 4A in the Elevation View, Sheet 15.
3. Field trim D17.2 to clear drain slot by 2".
4. Place 2 ~ No. 5 Bars (12'-3" long) tied to D 19.7 inside of bottom Welded Wire Reinforcement cage as shown.
5. Match D19.7 spacing to Bars 4A in the Elevation View, Sheet 15.
6. Field trim D19.7 to clear drain slot by 2".

ALTERNATE REINFORCING STEEL DETAIL WELDED WIRE REINFORCEMENT

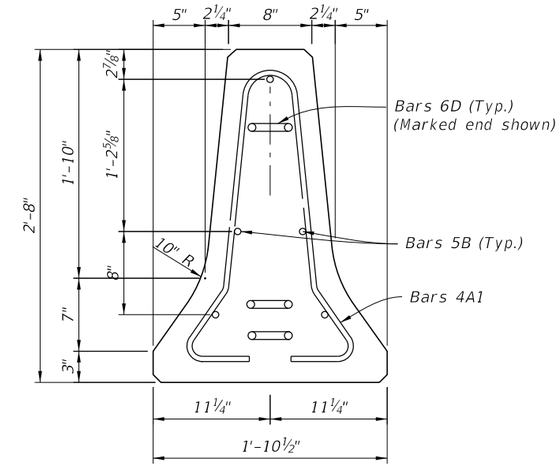

SECTION A-A (SHOWN)
(SECTION B-B SIMILAR)

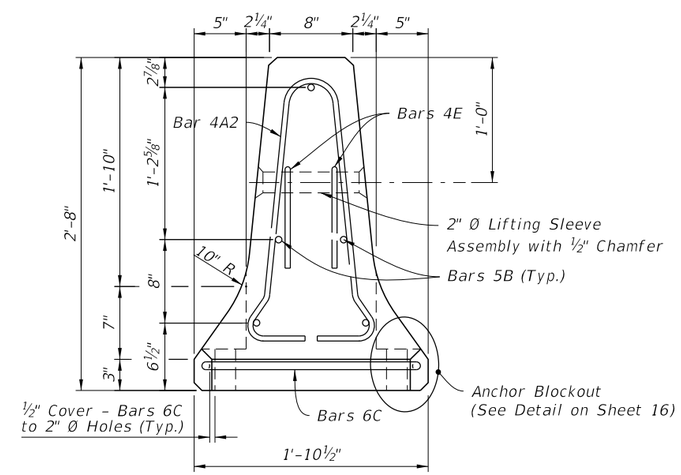

SECTION C-C
(Bars 6D not shown for clarity)

NOTES:

1. Provide ¾" Chamfer at top and bottom corners of Barrier.
2. Provide a minimum of 2" cover on the top and bottom.
3. Provide a minimum of 1¾" cover on both sides.

CROSS SECTION

10/20/2022 8:45:21 AM

LAST REVISION	REVISION	DESCRIPTION:			INDEX	SHEET
11/01/17			FY 2023-24 STANDARD PLANS	TYPE K TEMPORARY CONCRETE BARRIER SYSTEM	102-110	17 of 17

GENERAL NOTES:

1. Pursuant to 35 United States Code, Chapter 18, also known as the Bayh Dole Act of 1980, the non mountable curb was developed through federal funding. The 'Portable Temporary Low Profile Barrier For Roadside Safety' is a licensed design by the University Of Florida. Any infringement on the rights of the designer shall be the sole responsibility of the user.

2. This Index is provided by the Florida Department Of Transportation solely for use by the Department and its assignees. The purpose for this Index is to indicate the approval of use of the barrier on the State Highway System; to provide sufficient pictorials for identifying the barrier unit; and, to provide general installation geometry for the barrier.

3. This legally mandated relationship is unique to federally funded University patents that Department contractors use on Contracts. Pursuant to federal law, the University may pursue royalties for a valid patent. Only those barrier units cast by producers licensed by the University Of Florida will be allowed for installation on the State Highway System in Florida. Barrier wall units shall conform to Specification 521 and shall be produced in Department-approved plants with quality control plans for precasting concrete barrier walls. Each barrier wall unit shall be permanently marked with an identification that is traceable to the manufacturer, the producing precast concrete plant and the date of production. This permanent identification mark will serve as certification that the unit has been manufactured in accordance with University of Florida drawings and specifications, and the approved quality control program.

4. The low profile barrier is to be installed only with hardware and accessories furnished by the licensed barrier producer. Units shall be used for no purpose other than as interconnected segments in a run of barrier. Low profile barrier wall units shall maintain firm contact with adjoining units. Nuts on tensioning rods shall be installed snug tight.

5. The low profile barrier is applicable for work zone speeds of 45 mph or less.

6. If the plans specify Low Profile Barrier then substitution with other barrier types is not permitted.

7. Tubular markers shall be orange in color and installed along the run of barrier at the ends and at 50' centers on tangents and 25' centers on radii. The markers shall be fixed to the top of the barrier by an adhesive or other method approved by the engineer. Approach end units shall be marked with a Type I object marker. The cost of the tubular markers and Type I object marker shall be included in the cost of the low profile barrier.

8. Information regarding licensing, shop drawings, specifications, quality control and certification of compliance can be obtained from the University Of Florida: Office of Technology Licensing, P.O. Box 115500, Gainesville, Florida, 32611-5500. Telephone: 352-392-8929, Fax: 352-392-6600. Reference UF#11052.

9. The Portable Temporary Low Profile Barrier For Roadside Safety shall be paid for under the contract unit price for Barrier Wall (Temporary) Low Profile Concrete, LF, and will be full compensation for furnishing, installing, maintaining and removing barrier wall.

10. Setback distance shall be kept clear of any grass, construction debris, stockpiled materials, equipment, and objects.

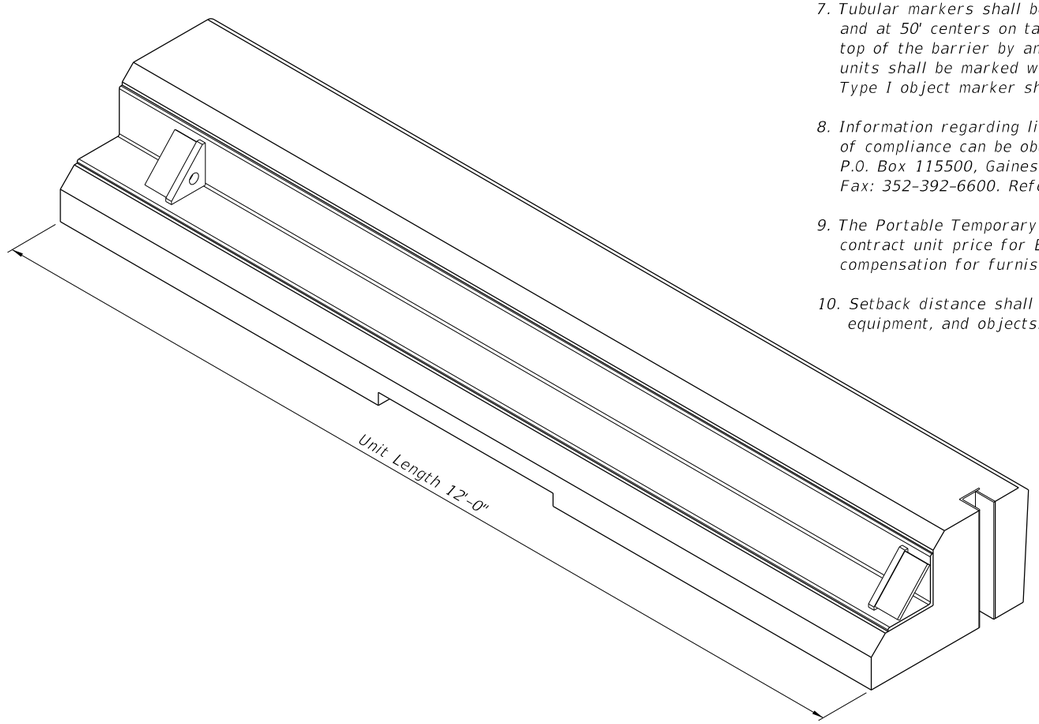

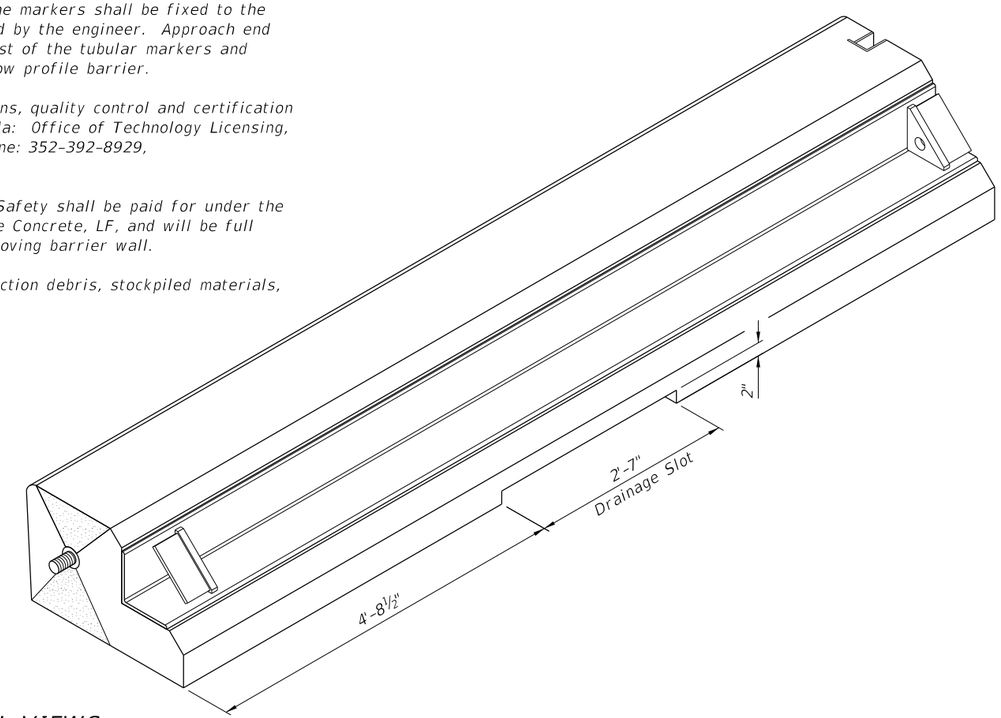

BACKSIDE AND END PICTORIAL VIEWS

PORTABLE TEMPORARY LOW PROFILE BARRIER FOR ROADSIDE SAFETY

10/20/2022 8:45:21 AM

LAST REVISION	REVISION	DESCRIPTION:			INDEX	SHEET
11/01/19			FY 2023-24 STANDARD PLANS	LOW PROFILE BARRIER	102-120	1 of 5

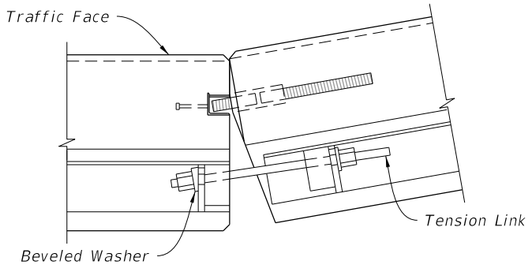

CONCAVE CONNECTION

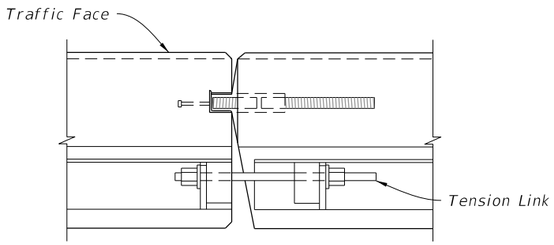

PARALLEL CONNECTION

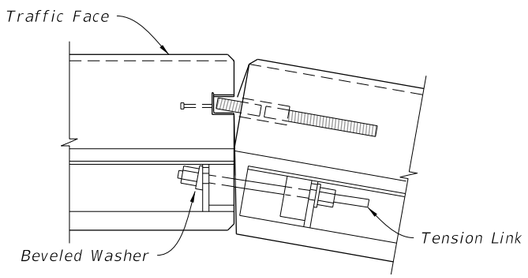

CONVEX CONNECTION

PLAN VIEWS OF CONNECTIONS

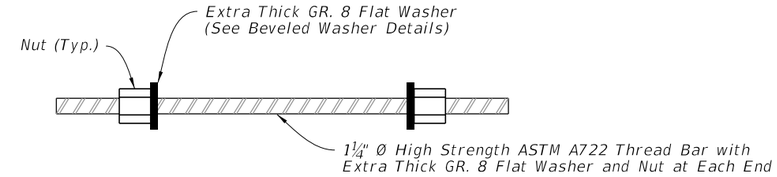

TENSION LINK DETAIL

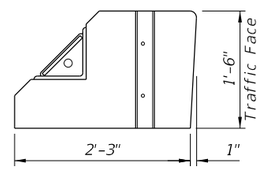

FLAT FACE FEMALE END

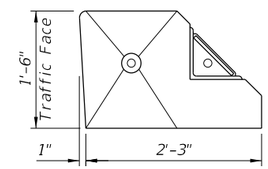

BEVELED FACE MALE END

END VIEWS

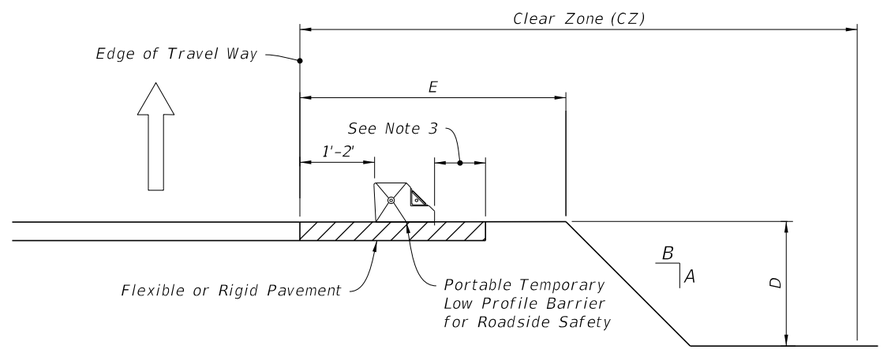

SETBACK DISTANCE AT DROP-OFFS

NOTES:

1. LIMITATION OF USE: This installation technique can only be used on flexible or rigid pavement.

2. ASPHALT PAD: Where existing pavement is not present, construct 2" Asphalt Pad using miscellaneous asphalt pavement in accordance with Specification 339 with the exception that the use of a pre-emergent herbicide is not required. Payment for asphalt pad will be included in the cost of the barrier.

3. Minimum 9" on 1:10 or flatter slopes for 'Portable Temporary Low Profile Barrier For Roadside Safety.' For values A, B, D and E see Index 102-600.

SYMBOLS:

Type I Object Marker

Direction of Traffic

WORK ZONE SPEED	LATERAL OFFSET	SETBACK DISTANCE
45 MPH OR LESS	1' MIN, 2' PREFERRED	9"

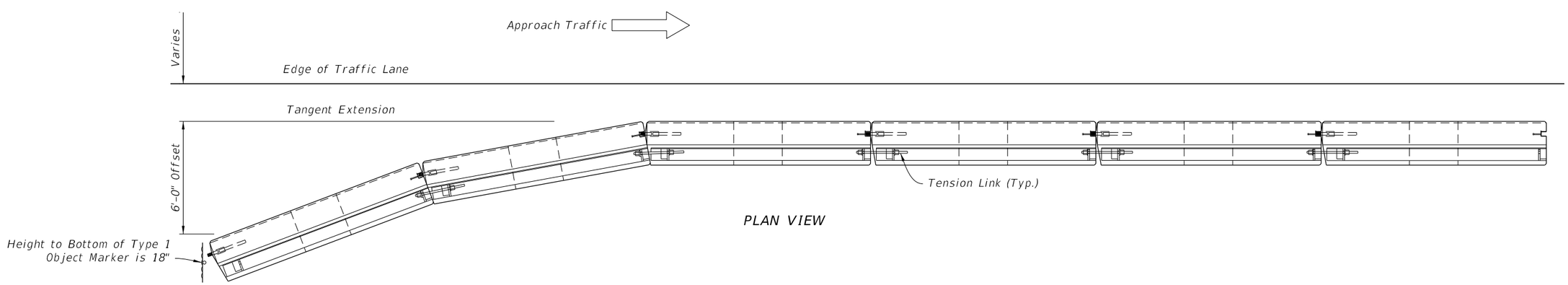

PLAN VIEW

APPROACH END OFFSET

6/26/2025 7:11:08 AM

LAST REVISION	REVISION	DESCRIPTION:			INDEX	SHEET
11/01/22			FY 2023-24 STANDARD PLANS	LOW PROFILE BARRIER	102-120	2 of 5

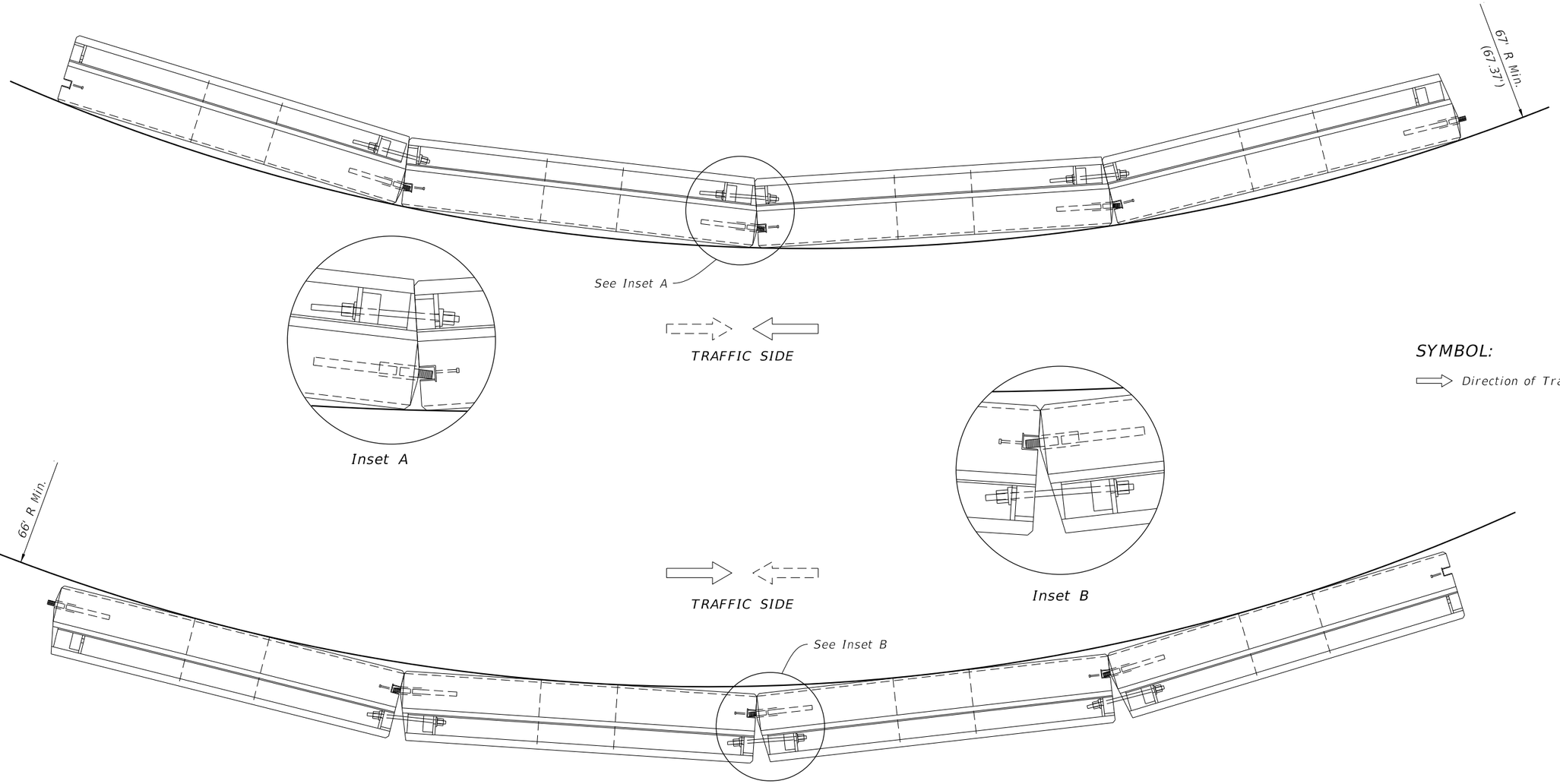

SYMBOL:

Direction of Traffic

MAXIMUM CURVATURE - MINIMUM RADIUS

10/20/2022 8:45:23 AM

LAST REVISION	REVISION	DESCRIPTION:			INDEX	SHEET
11/01/19			FY 2023-24 STANDARD PLANS	LOW PROFILE BARRIER	102-120	3 of 5

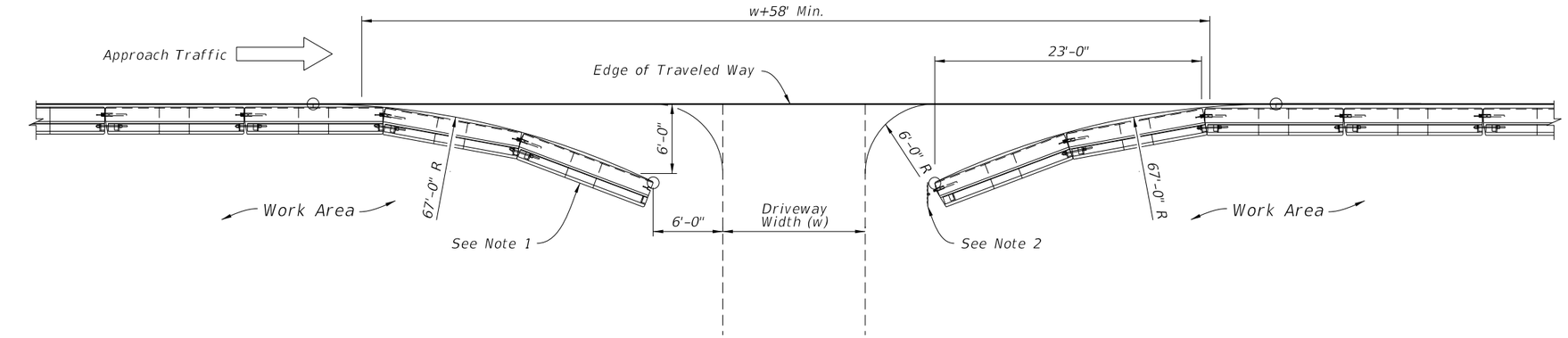

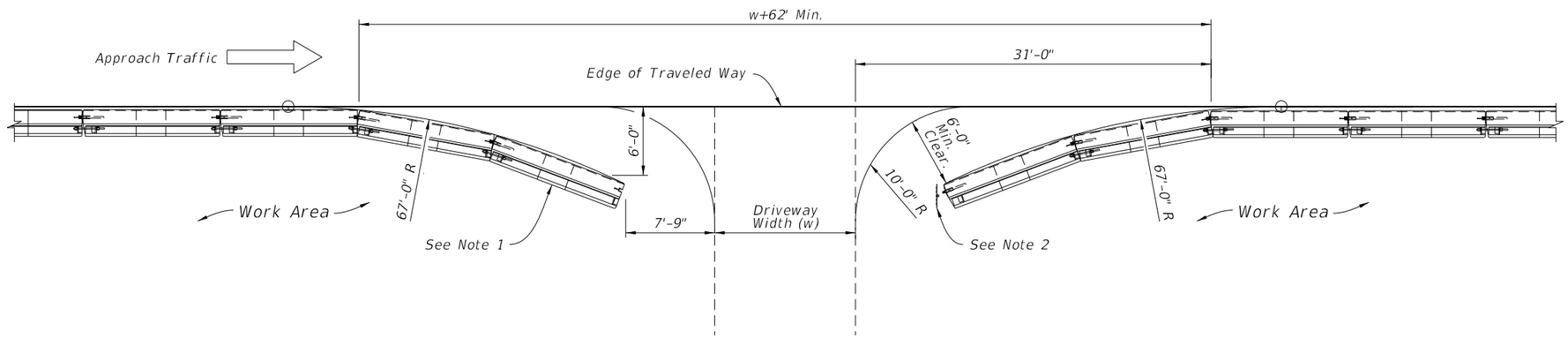

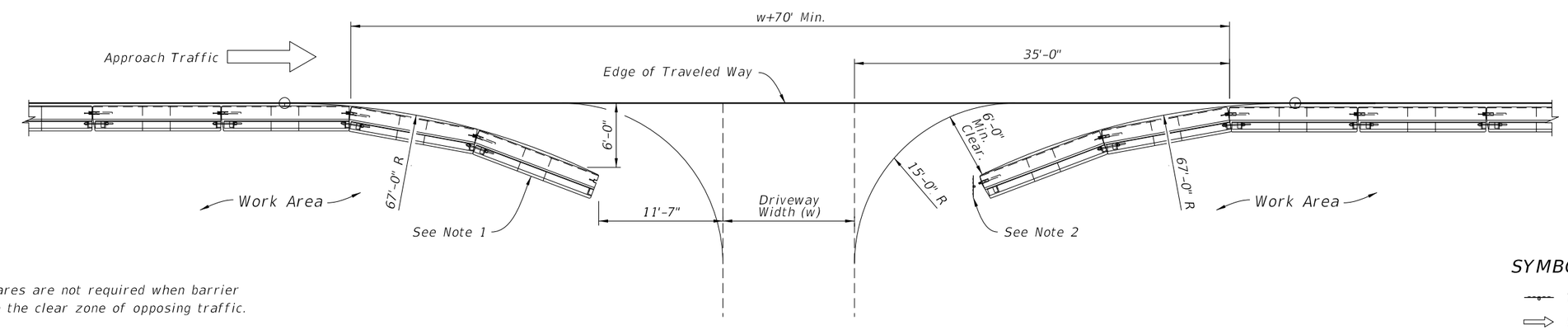

NOTES:

1. Trailing end flares are not required when barrier located outside the clear zone of opposing traffic.

2. Type I Object Marker to be installed when trailing end flare falls within the clear zone of opposing traffic.

SYMBOLS:

Type I Object Marker

Direction of Traffic

BARRIER OPENINGS AT DRIVEWAYS

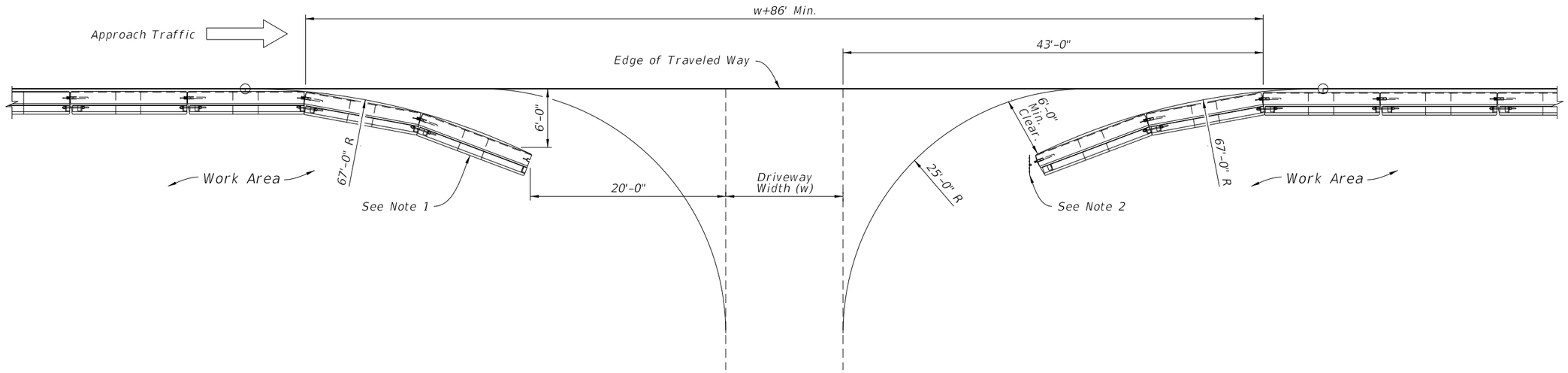

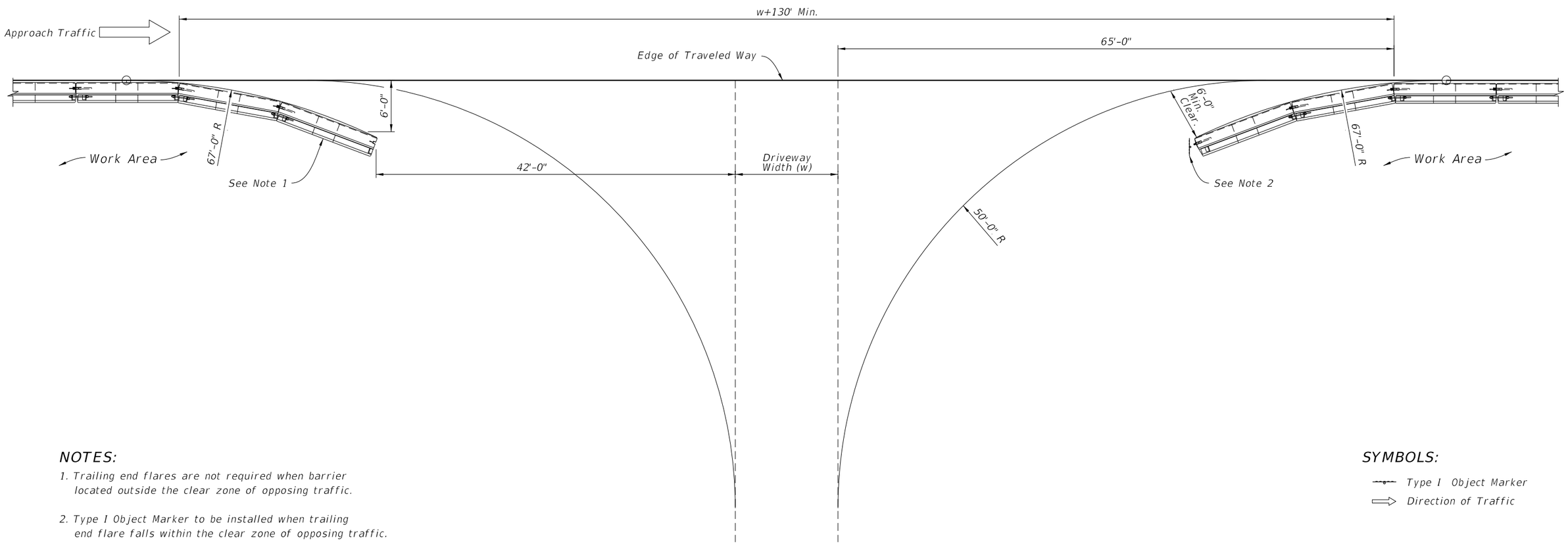

NOTES:

1. Trailing end flares are not required when barrier located outside the clear zone of opposing traffic.

2. Type I Object Marker to be installed when trailing end flare falls within the clear zone of opposing traffic.

SYMBOLS:

Type I Object Marker

Direction of Traffic

BARRIER OPENINGS AT DRIVEWAYS

10/20/2022 8:45:24 AM

LAST REVISION	REVISION	DESCRIPTION:			INDEX	SHEET
11/01/19			FY 2023-24 STANDARD PLANS	LOW PROFILE BARRIER	102-120	5 of 5

SHEET	TABLE OF CONTENTS
1	General Notes, TTC Tables
2	Definitions Temporary Traffic Control Devices Overhead Work Railroads Sight Distance Above Ground Hazard
3	Clear Zone Widths For Work Zones Superelevation Length Of Lane Closures Overweight/Oversize Vehicles Lane Widths High-Visibility Safety Apparel Speed Reduction Signing
4	Flagger Control Survey Work Zones Signs
5	Work Zone Sign Supports
6	Commonly Used Warning and Regulatory Signs In Work Zones
7	Manholes/Crosswalks/Joints Truck Mounted Attenuators Signals Channelizing Devices Channelizing Devices Consistency Advanced Warning Arrow Boards
8	Drop-Offs In Work Zones
9	Business Entrance Temporary Asphalt Separator
10	Channelizing Devices Notes Temporary Barrier Notes
11	Pavement Markings

GENERAL NOTES:

1. This Index contains information specific to the Federal and State guidelines and standards for the preparation of traffic control plans and for the execution of traffic control in work zones, for construction and maintenance operations and utility work on highways, roads and streets on the State Highway System. Certain requirements in this Index are based on the high volume nature of State Highways. For highways, roads and streets off the State Highway System, the local agency (City/County) having jurisdiction may adopt requirements based on the minimum requirements provided in the MUTCD.

2. Use this Index in accordance with the Plans and Indexes 102-601 through 102-680. Indexes 102-601 through 102-680 are Department-specific typical applications of commonly encountered situations. Adjust device location or number thereof as recommended by the Worksite Traffic Supervisor and approved by the Engineer. Devices include, but are not limited to, flaggers, portable temporary signals, signs, pavement markings, and channelizing devices. Comply with MUTCD or applicable Department criteria for any changes and document the reason for the change.

3. Except for emergencies, any road closure on State Highway System must comply with Section 335.15, F.S.

TABLE 1
CHANNELIZING DEVICE SPACING

Work Zone Speed (mph)	Max. Spacing (feet)			
	Cones or Temporary Tubular Markers		Type I Barricades, Type II Barricades, Vertical Panels, or Drums	
	Taper	Tangent	Taper	Tangent
≤ 45	25	50	25	50
≥ 50	25	50	50	100

TABLE 2
TAPER LENGTH "L"

Work Zone Speed (mph)	Min. Length (feet)
≤ 40	$L = \frac{WS^2}{60}$
≥ 45	$L = WS$

Where: W = width of offset in feet
S = speed in mph

TABLE 3
WORK ZONE SIGN SPACING "X"

Road Type	Min. Spacing (feet)
Arterials and Collectors with Work Zone Speed ≤ 40 mph	200
Arterials and Collectors with Work Zone Speed ≥ 45 mph	500
Limited Access Roadways *	1,500

* For Limited access roadways with work zone speed ≤ 55 mph, the minimum spacing may be reduced in accordance with the MUTCD and as approved by the Engineer.

TABLE 4
BUFFER LENGTH "B"

Work Zone Speed (mph)	Min. Length (feet)
25	155
30	200
35	250
40	305
45	360
50	425
55	495
60	570
65	645
70	730

Note: When Buffer Length "B" cannot be attained due to geometric constraints, use the greatest length possible, but not less than 155 feet.

DEFINITIONS:

Regulatory Speed (In Work Zones)

The maximum permitted travel speed posted for the work zone is indicated by the regulatory speed limit signs. The work zone speed must be shown or noted in the plans. This speed should be used as the minimum design speed to determine runout lengths, departure rates, flare rates, lengths of need, clear zone widths, taper lengths, crash cushion requirements, marker spacings, superelevation and other similar features.

Advisory Speed

The maximum recommended travel speed through a curve or a hazardous area.

Travel Way

The portion of the roadway for the movement of vehicles. For traffic control through work zones, travel way may include the temporary use of shoulders and any other permanent or temporary surface intended for use as a lane for the movement of vehicular traffic.

a. Travel Lane: The designated widths of roadway pavement marked to carry through traffic and to separate it from opposing traffic or traffic occupying other traffic lanes.

b. Auxiliary Lane: The designated widths of roadway pavement marked to separate speed change, turning, passing and climbing maneuvers from through traffic.

Detour, Lane Shift, and Diversion

A detour is the redirection of traffic onto another roadway to bypass the temporary traffic control zone. A lane shift is the redirection of traffic onto a different section of the permanent pavement. A diversion is the redirection of traffic onto a temporary roadway, usually adjacent to the permanent roadway and within the limits of the right of way.

Aboveground Hazard

An aboveground hazard is any object, material or equipment other than traffic control devices that encroaches upon the travel way or that is located within the clear zone which does not meet the Department's safety criteria, i.e., anything that is greater than 4" in height and is firm and unyielding or doesn't meet breakaway requirements.

TEMPORARY TRAFFIC CONTROL DEVICES:

1. All temporary traffic control devices shall be ON the Department's Approved Products List (APL). Ensure the appropriate APL number is permanently marked on the device in a readily visible location.

2. All temporary traffic control devices shall be removed as soon as practical when they are no longer needed. When work is suspended for short periods of time, temporary traffic control devices that are no longer appropriate shall be removed or covered. Do not store temporary traffic control devices on the shoulder, sidewalk, or other roadway facility not affected by the work when work is suspended.

3. Arrow Boards, Portable Changeable Message Signs, Radar Speed Display Trailer, Portable Regulatory Signs, and any other trailer mounted device shall be delineated with a channelizing device placed at each corner when in use and shall be moved outside the travel way and clear zone or be shielded by a barrier or crash cushion when not in use.

OVERHEAD WORK:

Work is only allowed over a traffic lane when one of the following options is used:

OPTION 1 (OVERHEAD WORK USING A MODIFIED LANE CLOSURE)

Overhead work using a modified lane closure is allowed if all of the following conditions are met:

a. Work operation is located in a signalized intersection and limited to signals, signs, lighting and utilities.
b. Work operations are 60 minutes or less.
c. Speed limit is 45 mph or less.
d. Aerial lift equipment in the work area has high-intensity, rotating, flashing, oscillating, or strobe lights operating.
e. Aerial lift equipment is placed directly below the work area to close the lane.
f. Traffic control devices are placed in advance of the vehicle/equipment closing the lane using a minimum 100 foot taper.
g. Volume or complexity of the roadway may dictate additional devices, signs, flagmen and/or a traffic control officer.

OPTION 2 (OVERHEAD WORK ABOVE AN OPEN TRAFFIC LANE)

Overhead work above a open traffic lane is allowed if all of the following conditions are met:

a. Work operation is located on a utility pole, light pole, signal pole, or their appurtenances.
b. Work operations are 60 minutes or less.
c. Speed limit is 45 mph or less.
d. No encroachment by any part of the work activities and equipment within an area bounded by 2 feet outside the edge of travel way and 18 feet high.
e. Aerial lift equipment in the work area has high-intensity, rotating, flashing, oscillating, or strobe lights operating.
f. Volume or complexity of the roadway may dictate additional devices, signs, flagmen and/or a traffic control officer.
g. Adequate precautions are taken to prevent parts, tools, equipment and other objects from falling into open lanes of traffic.
h. Other Governmental Agencies, Rail facilities, or Codes may require a greater clearance. The greater clearance required prevails as the rule.

OPTION 3 (OVERHEAD WORK ADJACENT TO AN OPEN TRAFFIC LANE)

Overhead work adjacent to an open traffic lane is allowed if all of the following conditions are met:

a. Work operation is located on a utility pole, light pole, signal pole, or their appurtenances.
b .Work operations are 1 day or less.
c. Speed limit is 45 mph or less.
d. No encroachment by any part of the work activities and equipment within 2 foot from the edge of travel way up to 18' height. Above 18' in height, no encroachment by any part of the work activities and equipment over the open traffic lane (except as allowed in Option 2 for work operations of 60 minutes or less).
e. Aerial lift equipment in the work area has high-intensity, rotating, flashing, oscillating, or strobe lights operating.
f. Volume or complexity of the roadway may dictate additional devices, signs, flagmen and/or a traffic control officer.
g. Adequate precautions are taken to prevent parts, tools, equipment and other objects from falling into open lanes of traffic.
h. Other Governmental Agencies, Rail facilities, or Codes may require a greater clearance. The greater clearance required prevails as the rule.

OVERHEAD WORK: (Cont.)

OPTION 4 (OVERHEAD WORK MAINTAINING TRAFFIC WITH NO ENCROACHMENT BELOW THE OVERHEAD WORK AREA)

Traffic shall be detoured, shifted, diverted or paced as to not encroach in the area directly below the overhead work operations in accordance with the appropriate index drawing or detailed in the plans. This option applies to, but not limited to, the following construction activities:

a. Beam, girder, segment, and bent/pier cap placement.
b. Form and falsework placement and removal.
c. Concrete placement.
d. Railing construction located at edge of deck.
e. Structure demolition.

OPTION 5 (CONDUCTOR/CABLE PULLING ABOVE AN OPEN TRAFFIC LANE)

Overhead cable and/or de-energized conductor installations initial pull to proper tension shall be done in accordance with the appropriate Index or temporary traffic control plan.

Continuous pulling operations of secured cable and/or conductors are allowed over open lane(s) of traffic with no encroachment by any part of the work activities, materials or equipment within the minimal vertical clearance above the travel way. The utility shall take precautions to ensure that pull ropes and conductors/cables at no time fall below the minimum vertical clearance.

On Limited Access facilities, a site specific temporary traffic control plan is required. The temporary traffic control plan shall include:

a. The temporary traffic control set up for the initial pulling of the pull rope across the roadway.
b. During pulling operations, advance warning consisting of no less than a Changeable Message Sign upstream of the work area with alternating messages, "Overhead Work Ahead" and "Be Prepared to Stop" followed by a traffic control officer and police vehicle with blue lights flashing during the pulling operation.

RAILROADS:

Railroad crossings affected by a construction project should be evaluated for traffic controls to reduce queuing on the tracks. The evaluation should include as a minimum: traffic volumes, distance from the tracks to the intersections, lane closure or taper locations, signal timing, etc.

SIGHT DISTANCE:

1. Tapers: Transition tapers should be obvious to drivers. If restricted sight distance is a problem (e.g., a sharp vertical or horizontal curve), the taper should begin well in advance of the view obstruction. The beginning of tapers should not be hidden behind curves.

2. Intersections: Traffic control devices at intersections must provide sight distances for the road user to perceive potential conflicts and to traverse the intersection safely. Construction equipment and materials shall not restrict intersection sight distance.

ABOVEGROUND HAZARD:

1. Aboveground hazards (see definitions) are to be considered work areas during working hours and treated with appropriate work zone traffic control procedures. During nonworking hours, all objects, materials and equipment that constitute an aboveground hazard must be stored/placed outside the travel way and clear zone or be shielded by a barrier or crash cushion.

2. For aboveground hazards within a work zone the clear zone required should be based on the regulatory speed posted during construction.

CLEAR ZONE WIDTHS FOR WORK ZONES:

The term 'clear zone' describes the unobstructed relatively flat area, impacted by construction, extending outward from the edge of the traffic lane. The table below gives clear zone widths in work zones for medians and roadside conditions other than for roadside canals; where roadside canals are present, clear zone widths are to conform with the distances to canals as described in the FDOT Design Manual 215.2.

TABLE 5

CLEAR ZONE WIDTHS FOR WORK ZONES

WORK ZONE SPEED (MPH)	TRAVEL LANES & MULTILANE RAMPS (feet)	AUXILIARY LANES & SINGLE LANE RAMPS (feet)
60-70	30	18
55	24	14
45-50	18	10
30-40	14	10
ALL SPEEDS CURB & GUTTER	4' BEHIND FACE OF CURB	4' BEHIND FACE OF CURB

NOTE: For temporary conditions where existing curb has been removed but not reconstructed, curb and gutter values may be used.

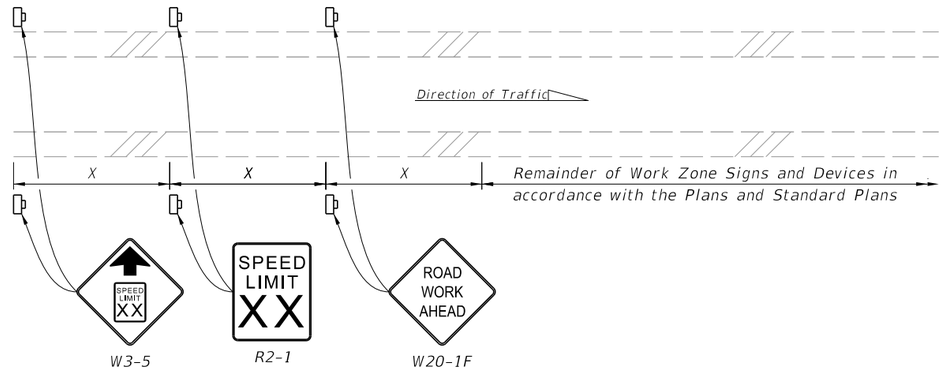

NOTES:

1. X = Work Zone Sign Spacing
2. When called for in the Plans, use this detail in accordance with the Plans and Standard Plans. Place the speed reduction signs (W3-5 and R2-1) in advance of the "Road Work Ahead" sign (W20-1F) as shown.
3. Do not use this detail in conjunction with the Motorist Awareness System.
4. For speed reductions greater than 10 MPH, reduce the speed in 10 MPH increments of 'X' distance. Do not reduce the speed below the minimum statutory speed for the class of facility.
5. Place additional "Speed Limit" signs (R2-1) at intervals of no more than one mile for rural conditions and 1,000 feet for urban conditions.
6. For undivided roadways, omit the signs shown in the median.
7. Remove temporary regulatory speed signs as soon as the conditions requiring the reduced speed no longer exist. Once the work zone regulatory speeds are removed, the regulatory speed existing prior to construction will automatically go back into effect.

SPEED REDUCTION SIGNING

SUPERELEVATION:

Horizontal curves constructed in conjunction with work zone traffic control should have the required superelevation applied to the design radii. Under conditions where normal crown controls curvature, the minimum radii that can be applied are listed in the table below.

TABLE 6

MINIMUM RADII FOR NORMAL CROWN

WORK ZONE POSTED SPEED	MINIMUM RADIUS
MPH	feet
70	4090
65	3130
60	2400
55	1840
50	1390
45	1080
40	820
35	610
30	430
Superelevate When Smaller Radii is Used	

OVERWEIGHT/OVERSIZE VEHICLES:

Restrictions to Lane Widths, Heights or Load Capacity can greatly impact the movement of over dimensioned loads. The Contractor shall notify the Engineer who in turn shall notify the State Permits Office, phone no. (850) 410-5777, at least seven calendar days in advance of implementing a maintenance of traffic plan which will impact the flow of overweight/oversized vehicles. Information provided shall include location, type of restriction (height, width or weight) and restriction time frames. When the roadway is restored to normal service the State Permits Office shall be notified immediately.

LANE WIDTHS:

Lane widths of through roadways should be maintained through work zone travel ways wherever practical. Provide minimum widths for work zone travel lanes as follows: 11' for Interstate with at least one 12' lane provided in each direction, unless formally excepted by the Federal Highway Administration; 11' for all other limited access roadways; and 10' for all other facilities.

HIGH-VISIBILITY SAFETY APPAREL:

All high-visibility safety apparel shall meet the requirements of the International Safety Equipment Association (ISEA) and the American National Standards Institute (ANSI) for "High-Visibility Safety Apparel", and labeled as ANSI/ISEA 107-2004 or newer. The apparel background (outer) material color shall be either fluorescent orange-red or fluorescent yellow-green as defined by the standard. The retroreflective material shall be orange, yellow, white, silver, yellow-green, or a fluorescent version of these colors, and shall be visible at a minimum distance of 1,000 feet. Class 3 apparel may be substituted for Class 2 apparel. Replace apparel that is not visible at 1,000 feet.

WORKERS: All workers within the right-of-way shall wear ANSI/ISEA Class 2 apparel. Workers operating machinery or equipment in which loose clothing could become entangled during operation shall wear fitted high-visibility safety apparel. Workers inside the bucket of a bucket truck are not required to wear high-visibility safety apparel.

UTILITIES: When other industry apparel safety standards require utility workers to wear apparel that is inconsistent with FDOT requirements such as NFPA, OSHA, ANSI, etc., the other standards for apparel may prevail.

FLAGGERS: For daytime activities, Flaggers shall wear ANSI/ISEA Class 2 apparel. For nighttime activities, Flaggers shall wear ANSI/ISEA Class 3 apparel.

LENGTH OF LANE CLOSURES:

For interstates and state highways with a posted speed of 55MPH or greater, lane closures must not exceed 3 miles (includes taper, buffer, and work zone) in any given direction and must not close two consecutive interchanges.

FLAGGER CONTROL:

Regulatory Speed (In Work Zones)

Where flaggers are used, a FLAGGER symbol or legend sign must replace the WORKERS symbol or legend sign.

The flagger must be clearly visible to approaching traffic for a distance sufficient to permit proper response by the motorist to the flagging instructions, and to permit traffic to reduce speed or to stop as required before entering the work site. Flaggers shall be positioned to maintain maximum color contrast between the Flagger's high-visibility safety apparel and equipment and the work area background.

Hand-Signaling Devices

STOP/SLOW paddles are the primary hand-signaling device. The STOP/SLOW paddle shall have an octagonal shape on a rigid handle. If the STOP/SLOW paddle is placed on a rigid staff, the minimum length of the staff, measured from the bottom of the paddle to the end of the staff that rests on the ground, must not be less than 6 ft. STOP/SLOW paddles shall be at least 24 inches wide with letters at least 6 inches high and should be fabricated from light semirigid material. The background of the STOP face shall be red with white letters and border. The background of the SLOW face shall be orange with black letters and border. When used at night-time, the STOP/SLOW paddle shall be retroreflectorized.

Flag use is limited to immediate emergencies, intersections, and when working on the centerline or shared left turn lanes where two (2) flaggers are required and there is opposing traffic in the adjacent lanes. Flags, when used, shall be a minimum of 24 inches square, made of a good grade of red material, and securely fastened to a staff that is approximately 36 inches in length. When used at nighttime, flags shall be retroreflectorized red.

Flashlight, lantern or other lighted signal that will display a red warning light shall be used at night.

Flagger Stations

Flagger stations shall be located far enough in advance of the work area so that approaching road users will have sufficient distance to stop before entering the work area. When used at nighttime, the flagger station shall be illuminated.

SURVEY WORK ZONES:

The SURVEY CREW AHEAD symbol or legend sign shall be the principal Advance Warning Sign used for Traffic Control Through Survey Work Zones and may replace the ROAD WORK AHEAD sign when lane closures occur, at the discretion of the Party Chief.

When Traffic Control Through Work Zones is being used for survey purposes only, the END ROAD WORK sign as called for on certain 102 Series of Indexes should be omitted.

Survey Between Active Traffic Lanes or Shared Left Turn Lanes

The following provisions apply to Main Roadway Traffic Control Work Zones. These provisions must be adjusted by the Party Chief to fit roadway and traffic conditions when the Survey Work Zone includes intersections.

(A) A STAY IN YOUR LANE (MOT-1-06) sign shall be added to the Advance Warning Sign sequence as the second most immediate sign from the work area.

(B) Elevation Surveys-Cones may be used at the discretion of the Party Chief to protect prism holder and flagger(s). Cones, if used, may be placed at up to 50' intervals along the break line throughout the work zone.

SURVEY WORK ZONES: (Cont.)

(C) Horizontal Control-With traffic flow in the same direction, cones shall be used to protect the backsight tripod and/or instrument. Cones shall be placed at the equipment, and up to 50' intervals for at least 200' towards the flow of traffic.

(D) Horizontal Control-With traffic flow in opposite directions, cones shall be used to protect the backsight tripod and/or instrument. Cones shall be placed at the equipment, and up to 50' intervals for at least 200' in both directions towards the flow of traffic.

SIGNS:

SIGN MATERIALS

Mesh signs and non-retroreflectice vinyl signs may only be used for daylight operations. Non-retroreflectice vinyl signs must meet the requirements of Specifications Section 994.

Retroreflective vinyl signs meeting the requirements of Specification Section 994 may be used for daylight or night operations not to exceed 1 day except as noted in the Indexes.

Rigid or Lightweight sign panels may be used in accordance with the vendor APL drawing for the sign stand to which they are attached.

INTERSECTING ROAD SIGNING

Signing for the control of traffic entering and leaving work zones by way of intersecting crossroads shall be adequate to make drivers aware of work zone conditions. When Work operations exceed 60 minutes, place the ROAD WORK AHEAD sign on the side street entering the work zone.

ADJOINING AND/OR OVERLAPPING WORK ZONE SIGNING

Adjoining work zones may not have sufficient spacing for standard placement of signs and other traffic control devices in their advance warning areas or in some cases other areas within their traffic control zones. Where such restraints or conflicts occur or are likely to occur, one of the following methods will be employed to avoid conflicts and prevent conditions that could lead to misunderstanding on the part of the traveling public as to the intended travel way by the traffic control procedure applied:

(A) For scheduled projects the engineer in responsible charge of project design will resolve anticipated work zone conflicts during the development of the project traffic control plan. This may entail revision of plans on preceding projects and coordination of plans on concurrent projects.

(B) Unanticipated conflicts arising between adjoining in progress highway construction projects will be resolved by the Resident Engineer for projects under his residency, and, by the District Construction Engineer for in progress projects under adjoining residencies.

(C) The District Maintenance Engineer will resolve anticipated and occurring conflicts within scheduled maintenance operations.

(D) The Unit Maintenance Engineer will resolve conflicts that occur within routine maintenance works; between routine maintenance work, unscheduled work and/or permitted work; and, between unit controlled maintenance works and highway construction projects.

SIGNS: (Cont.)

SIGN COVERING AND INTERMITTENT WORK STOPPAGE SIGNING

Existing or temporary traffic control signs that are no longer applicable or are inconsistent with intended travel paths shall be removed or fully covered.

Sign blanks or other available coverings must completely cover the existing sign. Rigid sign coverings shall be the same size as the sign it is covering, and bolted in a manner to prevent movement.

Sign covers are incidental to work operations and are not paid for separately.

SIGNING FOR DETOURS, LANE SHIFTS AND DIVERSIONS

Detours should be signed clearly over their entire length so that motorists can easily determine how to return to the original roadway. The reverse curve (W1-4) warning sign should be used for the advanced warning for a lane shift. A diversion should be signed as a lane shift.

EXTENDED DISTANCE ADVANCE WARNING SIGN

Advance Warning Signs shall be used at extended distance of one-half mile or more when limited sight distance or the nature of the obstruction may require a motorist to bring their vehicle to a stop. Extended distance Advanced Warning Signs may be required on any type roadway, but particularly be considered on multilane divided highways where vehicle speed is generally in the higher range (45 MPH or more).

UTILITY WORK AHEAD SIGN

The UTILITY WORK AHEAD (W21-7) sign may be used as an alternate to the ROAD WORK AHEAD or the ROAD WORK XX FT (W20-1) sign for utility operations on or adjacent to a highway.

LENGTH OF ROAD WORK SIGN

The length of road work sign (G20-1) bearing the legend ROAD WORK NEXT_____ MILES is required for all projects of more than 2 miles in length. The number of miles entered should be rounded up to the nearest mile. The sign shall be located at begin construction points.

GROOVED PAVEMENT AHEAD SIGN

The GROOVED PAVEMENT AHEAD sign is required 500 feet in advance of a milled or grooved surface open to traffic. The W8-15P placard shall be used in conjunction with the GROOVED PAVEMENT AHEAD sign.

END ROAD WORK SIGN

The END ROAD WORK sign (G20-2) should be installed on all projects, but may be omitted where the work operation is less than 1 day. The sign should be placed approximately 500 feet beyond the end of a construction or maintenance project unless other distance is called for in the plans. When other Construction or Maintenance Operations occur within 1 mile this sign should be omitted and signing coordinated in accordance with Index 102-600, ADJOINING AND/OR OVERLAPPING WORK ZONE SIGNING.

NOTES:

1. All signs shall be post mounted when work operations exceed one day except for:

   a. Road closure signs mounted in accordance with the vendor drawing for the Type III Barricade shown on the APL.
   b. Pedestrian and bicycle advanced warning or pedestrian regulatory signs mounted on sign supports in accordance with the vendor drawing shown on the APL.
   c. Median barrier mounted signs per Index 700-013.
   d. Bridge mounted signs per Index 700-012.

2. Unless shielded with barrier or outside of the Clear Zone, signs mounted on temporary supports or barricades, and barricade/sign combination must be crashworthy in accordance with NCHRP 350 requirements and included on the Approved Products List (APL).

3. Use only approved systems listed on the Department's Approved Products List (APL).

4. Manufacturers seeking approval of U-Channel and steel square tube sign support assemblies for inclusion on the Approved Products List (APL) must submit a APL application, design calculations (for square tube only), and detailed drawings showing the product meets all the requirements of this Index.

5. Provide 3 lb/ft Steel U-Channel Posts with a minimum section modulus of 0.43 in³ for 60 ksi steel, a minimum section modulus of 0.37 in³ for 70 ksi steel, or a minimum section modulus of 0.34 in³ for 80 ksi steel.

6. Provide 4 lb/ft Steel U-Channel Posts with a minimum section modulus of 0.56 in³ for 60 ksi steel, or a minimum section modulus of 0.47 in³ for 70 ksi or 80 ksi steel.

7. U-channel posts shall conform with ASTM A 499, Grade 60, or ASTM A 576, Grade 1080 (with a minimum yield strength of 60 ksi). Square tube posts shall conform with ASTM A 653, Grade 50, or ASTM A 1011, Grade 50.

8. Sign attachment bolts, washers, nuts, and spacers shall conform with ASTM A307 or A 36.

9. Install 4 lb/ft Steel U-Channel Posts with approved breakaway splice in accordance with the manufacturer's detail shown on the APL.

10. The contractor may install 3 lb/ft Steel U-Channel Posts with approved breakaway splice in accordance with the manufacturer's detail shown on the APL.

11. Install all posts plumb.

12. The contractor may set posts in preformed holes to the specified depth with suitable backfill tamped securely on all sides, or drive 3 lb/ft sign posts and any size base post in accordance with the manufacturer's detail shown on the APL.

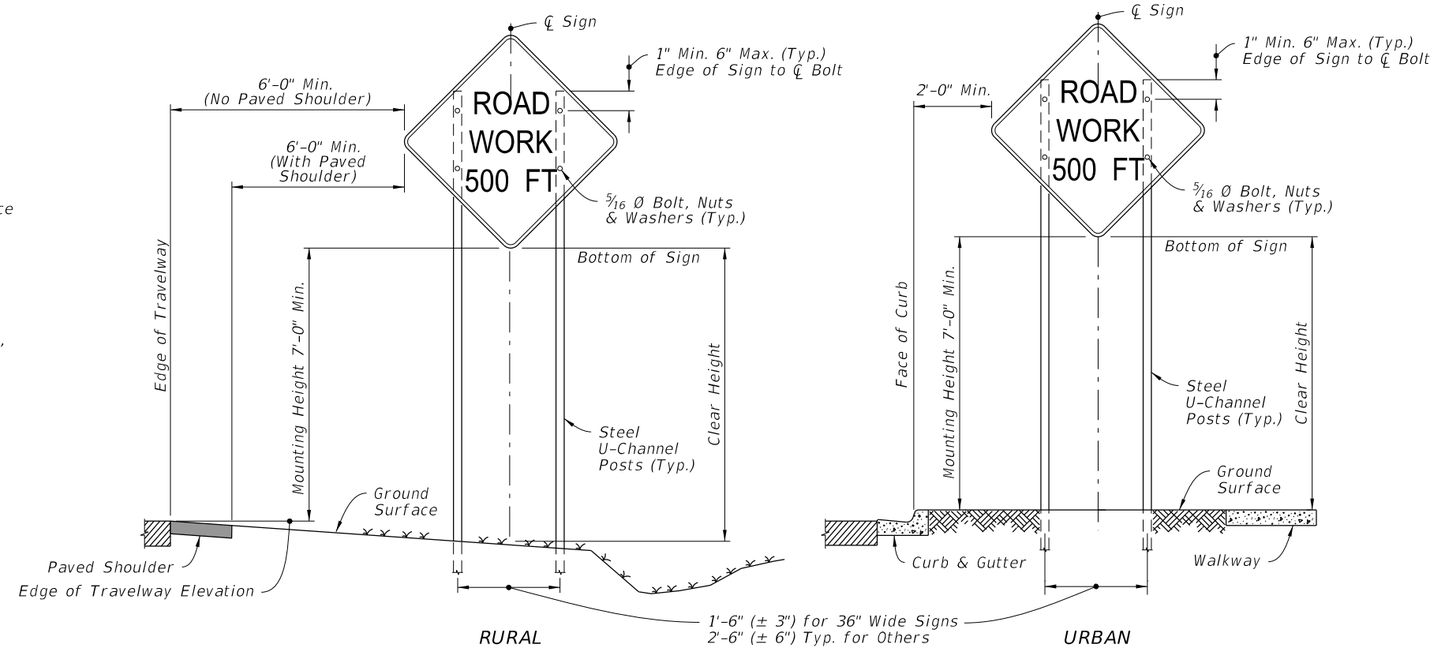

2 POST SIGN SUPPORT MOUNTING DETAILS
(SINGLE POST SIMILAR)

Where:
W = 48": a = 1' - 4½" (± 1")
W = 72": a = 2' - 1" (± 1")

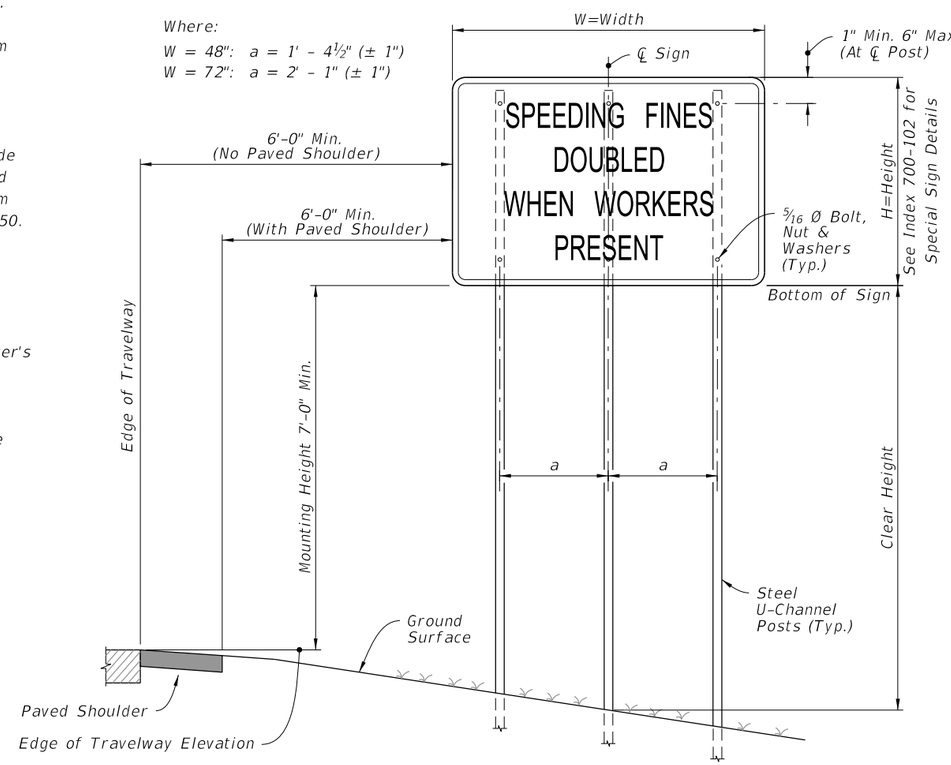

3 POST SIGN SUPPORT MOUNTING DETAILS

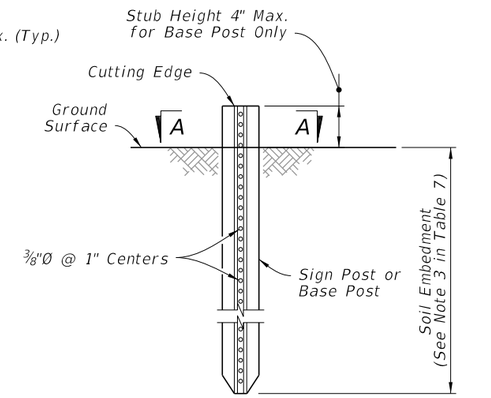

See APL for post, splice and connection details.
No bolts installed closer than 1" to cutting edge.

FOUNDATION DETAIL

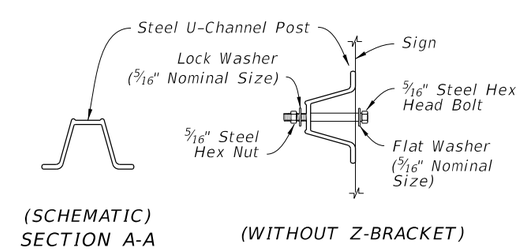

SIGN ATTACHMENT DETAIL

TABLE 7
POST AND FOUNDATION TABLE FOR WORK ZONE SIGNS

SIGN SHAPE	SIGN SIZE (inches)	NUMBER OF STEEL U CHANNEL POSTS
Octagon	30x30	1
Triangle	36x36x36	1
	48x48x48	1
	60x60x60	2
Rectangle (W x H)	24x18	1
	24x30	1
	30x24	1
	36x18	1
	36x24	1
	48x18	1
	48x24	1
	36x48	2
	48x30	2
	48x36	2
	54x36	2
	48x60	3
	72x48	3
Square	30x30	1
	36x36	2
	48x48	2
Diamond	48x48	2
Circle	36Ø	2

Notes For Table:

1. Use 3 lb/ft posts for Clear Height up to 10' and 4 lb/ft posts for Clear Height up to 12'.

2. Minimum foundation depth is 4.0' for 3 lb/ft posts and 4.5' for 4 lb/ft posts.

3. For both 3 lb/ft and 4 lb/ft base or sign posts installed in rock, a minimum cumulative depth of 2' of rock layer is required.

4. The soil plate as shown on the APL vendor drawing is not required for base posts or sign posts installed in existing rock (as defined in Note 3), asphalt roadway, shoulder pavement or soil under sidewalk.

5. For diamond warning signs with supplement plaque (up to 5 ft² in area), use 4 lb/ft posts for up to 10 ft Clear Height (measure to the bottom of diamond warning sign).

WORK ZONE SIGN SUPPORTS

10/27/2022 7:36:03 AM

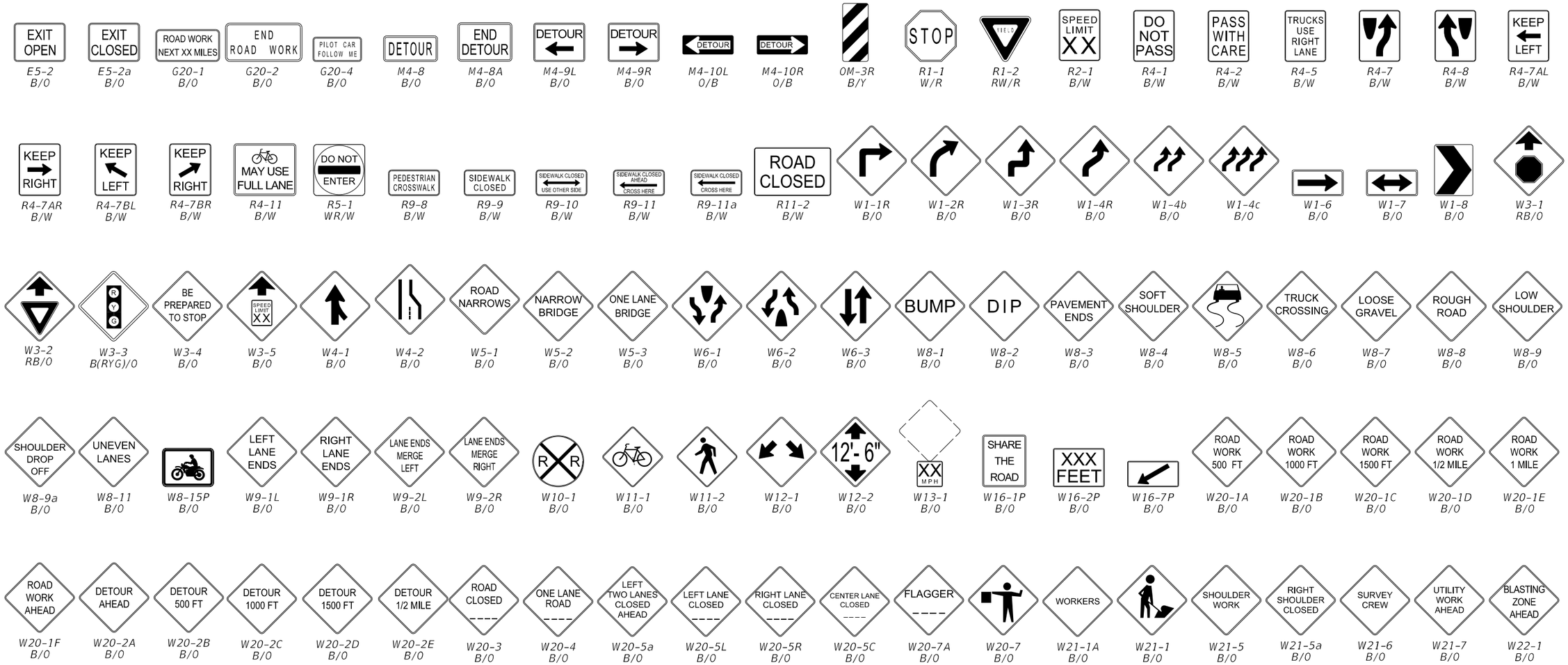

NOTES:

1. The size of diamond shaped Temporary Traffic Control (TTC) warning signs shall be a minimum of 48" X 48".
2. Fluorescent orange shall be used for all orange colored work zone signs.
3. The sign shields, symbols and messages contained on this sheet are provided for ready reference to those signs used in the development of the 102 Series of Indexes and are commonly used in the development of traffic control plans. For additional signs and sign detail information refer to the STANDARD HIGHWAY SIGNS MANUAL as specified in the MUTCD. Special signs for traffic control plans will be as approved by the State Traffic Plans Engineer.

   The sign codes shown on this sheet are for the purpose of identifying cell names found in the Traffic Control Cell Library (TCZ.Cel).

   The STANDARD HIGHWAY SIGNS MANUAL should be referenced for the official sign codes for use in the development of traffic control plans.

   See Index 700-102 for MOT sign details.

COLOR CODES:

Legend and/or
Symbol Background

R-Red (Reflectorized)
Y-Yellow (Reflectorized)
G-Green (Reflectorized)
O-Orange (Reflectorized)
B-Black (Non-Reflectorized)
W-White (Reflectorized)

10/27/2022 7:36:06 AM

COMMONLY USED WARNING AND REGULATORY SIGNS IN WORK ZONES

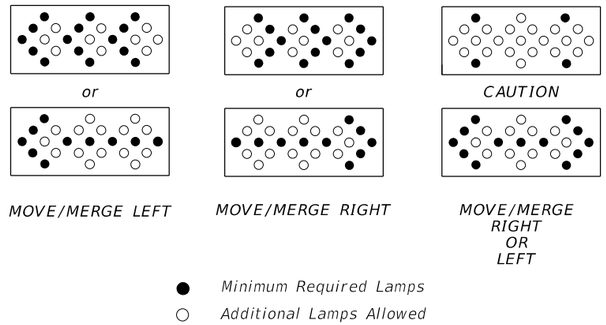

MODES

NOTES:

An arrow board in the arrow or chevron mode shall be used only for stationary or moving lane closures on multilane roadways.

For shoulder work, blocking the shoulder, for roadside work near the shoulder, or for temporarily closing one lane on a two-lane, two-way roadway, an arrow board shall be used only in the caution mode.

A single arrow board shall not be used to merge traffic laterally more than one lane. When arrow boards are used to close multiple lanes, a single board shall be used at the merging taper for each closed lane.

When Advance Warning Arrow Boards are used at night, the intensity of the flashers shall be reduced during darkness when lower intensities are desirable.

ADVANCE WARNING ARROW BOARDS

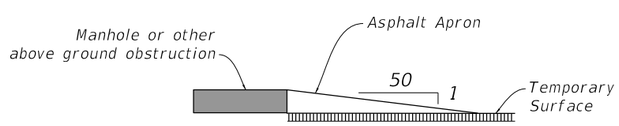

NOTES:

Manholes extending 1" or more above the travel lane and crosswalks having an uneven surface greater than ¼" shall have a temporary asphalt apron constructed as shown above.

All transverse joints that have a difference in elevation of 1" or more shall have a temporary asphalt apron constructed as shown above.

The apron is to be removed prior to constructing the next lift of asphalt. The cost of the temporary asphalt shall be included in the contract unit price for Maintenance of Traffic, LS.

MANHOLES/CROSSWALKS/JOINTS

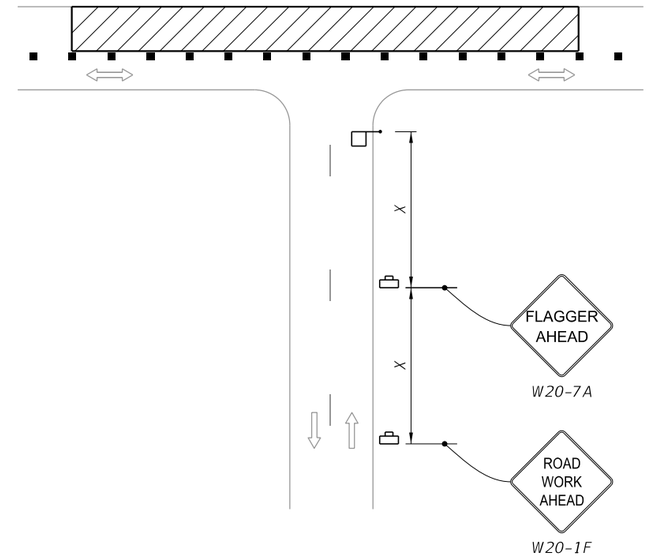

NOTE:

Optionally, use "Flagger Ahead" sign with text (W20-7A) instead of "Flagger Ahead" sign with symbol (W20-7).

SIDE ROAD INTERSECTING THE WORK ZONE

SIGNALS:

Existing traffic signal operations that require modification in order to carry out work zone traffic control shall be included in the Plans and be approved by the District Traffic Operations Engineer.

Refer to Specification 102-9 for additional information.

CHANNELIZING DEVICES:

Channelizing devices for work zone traffic control shall be as prescribed in Part VI of the MUTCD, subject to supplemental revisions provided in the contract documents and the 102 Series of Indexes. Lighting Devices must not be used to supplement channelization. Omit tapers and channelizing devices for paved shoulders less than 4' in width.

CHANNELIZING DEVICE CONSISTENCY:

Barricades, vertical panels, cones, tubular markers and drums shall not be intermixed within either the lateral transition or within the tangent alignment.

TRUCK/TRAILER-MOUNTED ATTENUATORS:

Truck/Trailer-mounted attenuators (TMA) can be used for moving operations and short-term stationary operations. For moving operations, see Index 102-607. For short-term, stationary operations, see Part VI of the MUTCD.

DROP-OFF CONDITION NOTES

1. These conditions and treatments can be applied only in work areas that fall within a properly signed work zone.

2. When drop-offs occur within the clear zone due to construction or maintenance activities, protection devices are required (See Table 8). A drop-off is defined as a drop in elevation, parallel to the adjacent travel lanes, greater than 3" with slope (A:B) steeper than 1:4. In superelevated sections, the algebraic difference in slopes should not exceed 0.25 (See Drop-off Condition Detail).

3. Drop-offs may be mitigated by placement of slopes with optional base material per Specifications Section 285. Slopes shallower than 1:4 may be required to avoid algebraic difference in slopes greater than 0.25. Include the cost for the placement and removal of the material in Maintenance of Traffic, LS. Use of this treatment in lieu of a temporary barrier is not eligible for CSIP consideration. Conduct daily inspections for deficiencies related to erosion, excessive slopes, rutting or other adverse conditions. Repair any deficiencies immediately.

4. For Setback Distance, refer to the Index or Approved Products List (APL) drawing of the selected barrier.

5. For Conditions 1 and 3 provided in Table 8, any drop-off condition that is created and restored within the same work period will not be subject to use of temporary barriers; however, channelizing devices will be required.

6. When permanent curb heights are ≥ 6", no channelizing device will be required. For curb heights < 6", see Table 8.

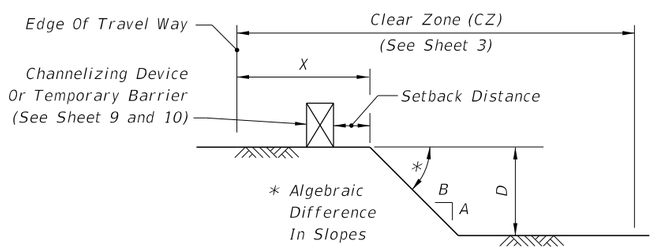

DROP-OFF CONDITION DETAIL

Table 8 Drop-off Protection Requirements			
Condition	X (ft)	D (in.)	Device Required
1	0-12	> 3	Temporary Barrier
2	> 12-CZ	> 3 to ≤ 5	Channelizing Device
3	0-CZ	> 5	Temporary Barrier
4	Removal of Bridge or Retaining Wall Barrier		Temporary Barrier
5	Removal of portions of Bridge Deck		Temporary Barrier

TRAVEL LANE TREATMENT FOR MILLING OR RESURFACING NOTES

1. This treatment applies to resurfacing or milling operations between adjacent travel lanes.

2. Whenever there is a difference in elevation between adjacent travel lanes, the W8-11 sign with "UNEVEN LANES" is required at intervals of ½ mile maximum.

3. If D is 1½" or less, no treatment is required.

4. Treatment allowed only when D is 3" or less.

5. If the slope is steeper than 1:4 (not to be steeper than 1:1), the R4-1 and MOT-1-06 signs shall be used as a supplement to the W8-11; this condition should never exceed 3 miles in length.

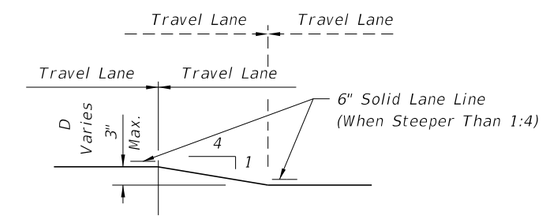

TRAVEL LANE TREATMENT FOR MILLING OR RESURFACING DETAIL

PEDESTRIAN WAY DROP-OFF CONDITION NOTES

1. A pedestrian way drop-off is defined as:

   a. a drop in elevation greater than 10" that is closer than 2' from the edge of the pedestrian way

   b. a slope steeper than 1:2 that begins closer than 2' from the edge of the pedestrian way when the total drop-off is greater than 60"

2. Protect any drop-off adjacent to a pedestrian way with pedestrian longitudinal channelizing devices, temporary barrier wall, or approved handrail.

DROP-OFFS IN WORK ZONES

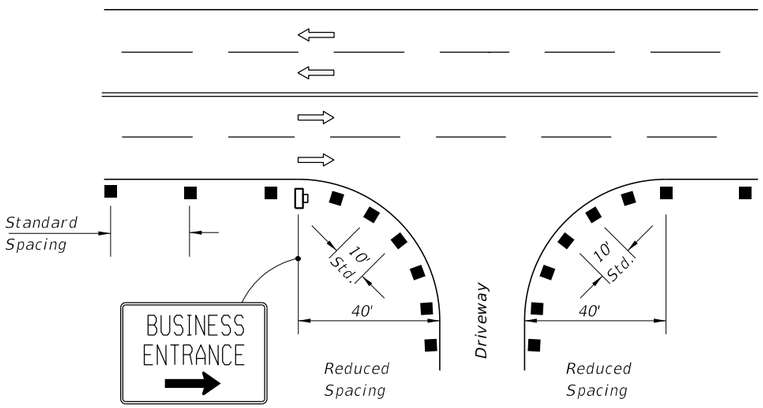

1. For single business entrances, place one 24" x 36" business sign for each driveway entrance affected. Signs shall show specific business names. Logos may be provided by business owners. Standard BUSINESS ENTRANCE sign in Index 700-102 may be used when approved by the Engineer.

2. When several businesses share a common driveway entrance, place one 24" x 36" standard BUSINESS ENTRANCE sign in accordance with Index 700-102 at the common driveway entrance.

3. Channelizing devices shall be placed at a reduced spacing on each side of the driveway entrance, but shall not restrict sight distance for the driveway users.

4. Business entrance signs are intended to guide motorist to business entrances moved/modified or disturbed during construction projects. Business entrance signs are not required where there is minimal disruption to business driveways which is often the case with resurfacing type projects.

PLACEMENT OF BUSINESS ENTRANCE SIGNS AND CHANNELIZING DEVICES AT BUSINESS ENTRANCE

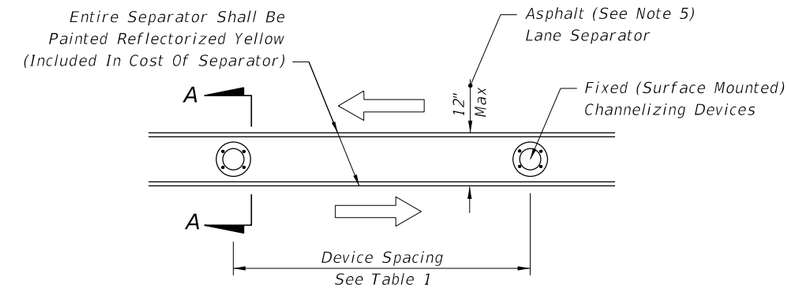

PLAN

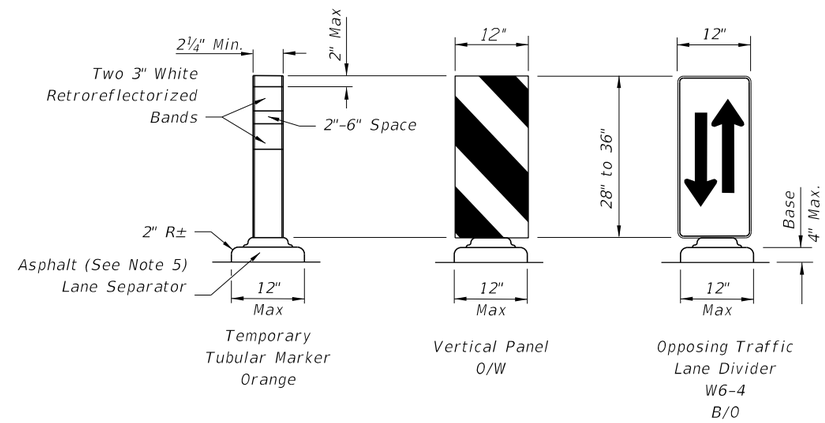

FIXED (SURFACE MOUNTED)
CHANNELIZING DEVICES

SECTION A-A

1. Temporary lane separators shall be supplemented with any of the following approved fixed (surface mounted) channelizing devices: temporary tubular markers, vertical panels, or opposing traffic lane divider panels. Opposing traffic lane divider panels (W6-4) shall only be used as center lane dividers to separate opposing vehicular traffic on a two-lane, two-way operation. Temporary Tubular Markers, Vertical Panels and Opposing Traffic Lane Divider panels shall not be intermixed within the limits where the temporary lane separator is used. The connection between the channelizing device and the temporary lane separator curb shall hold the channelizing device in a vertical position.

2. Reflectorized materials shall have a smooth sealed outer surface which will display the same approximate color day and night. Furnish channelizing devices having retroreflective sheeting meeting the requirements of Section 990.

3. 12" openings for drainage shall be constructed in the asphalt and portable temporary lane separator at a maximum spacing of 25' in areas with grades of 1% or less or 50' in areas with grades over 1% as directed by the Engineer.

4. Tapered ends shall be used at the beginning and end of each run of the temporary lane separator to form a gradual increase in height from the pavement level to the top of the temporary lane separator.

5. The Contractor has the option of using portable temporary lane separators containing fixed channelizing devices in lieu of the temporary asphalt separator and channelizing devices detailed on this sheet. The portable temporary lane separator shall come in portable sections that can be connected to maintain continuous alignment between the separate curb sections. Each temporary lane separator section shall be 36 inches to 48 inches in total length. Portable temporary lane separators shall duplicate the color of the pavement marking. Portable temporary lane separators shall be one of those listed on the Approved Products List.

TEMPORARY LANE SEPARATOR

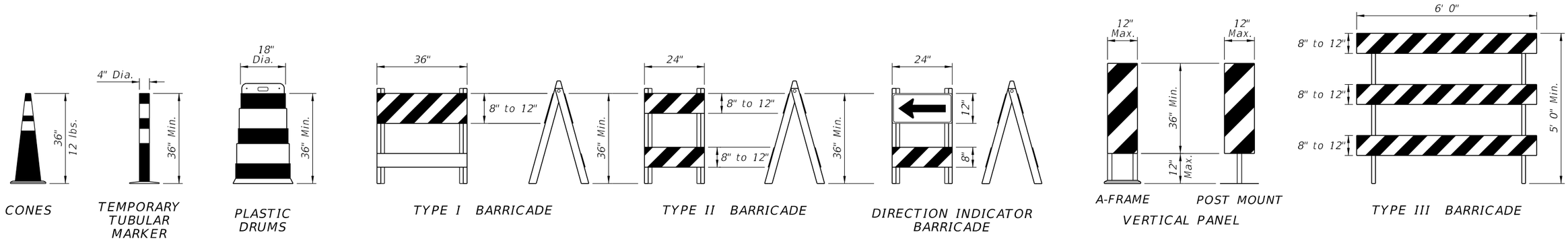

CHANNELIZING DEVICES

CHANNELIZING DEVICE NOTES:

1. The details shown on this sheet are for the following purposes:
   a. For ease of identification and
   b. To provide information that supplements or supersedes that provided by the MUTCD.

2. The Type III Barricade shall have a unit length of 6'-0" only. When barricades of greater lengths are required those lengths shall be in multiples of the 6'-0" unit.

3. No sign panel should be mounted on any channelizing device unless the channelizing device/sign combination was found to be crashworthy and the sign panel is mounted in accordance with the vendor drawing for the channelizing device shown on the Approved Products List (APL).

4. Ballast shall not be placed on top rails or any striped rails or higher than 13" above the driving surface.

5. The direction indicator barricade may be used in tapers and transitions where specific directional guidance to drivers is necessary. If used, direction indicator barricades shall be used in series to direct the driver through the transition and into the intended travel lane.

6. The splicing of sheeting is not permitted on channelizing devices or MOT signs.

7. For rails less than 3'-0" long, 4" stripes shall be used.

8. Cones shall:
   a. Be used only in active work zones where workers are present.
   b. Be reflectorized as per the MUTCD with Department-approved reflective collars when used at night.

9. For pedestrian longitudinal channelizing devices, the device shall have a minimum of 8" continuous detectable edging above the walkway. A gap not exceeding a height of 2" is allowed to facilitate drainage. The top surface of the device shall be a minimum height of 32" and have a ⅛" or less difference in any plane at all connection points between the devices to facilitate hand trailing. The bottom and the top surface of the device shall be in the same vertical plane. If pedestrian drop-off protection is required, the device shall have a footprint or offset of at least 2', otherwise the device must be at least 42" in height above the walkway and be anchored or ballasted to withstand a 200 lb lateral point load at the top of the device.

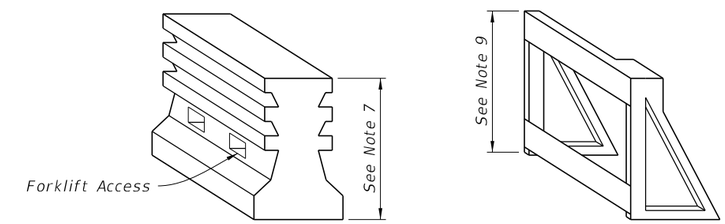

PEDESTRIAN LONGITUDINAL CHANNELIZING DEVICES

TEMPORARY BARRIER NOTES:

1. Where a barrier is specified, any of the types below may be used in accordance with the applicable Index:

Index	Description
102-100	Temporary Barrier
102-120	Low Profile Barrier
536-001	Guardrail

2. Trailer Mounted Barriers may be used to provide positive protection for workers within the work areas. APL drawings may be used as a guide to develop project specific Temporary Traffic Control Plans that are signed and sealed by the Contractor's Engineer.

10/27/2022 7:36:10 AM

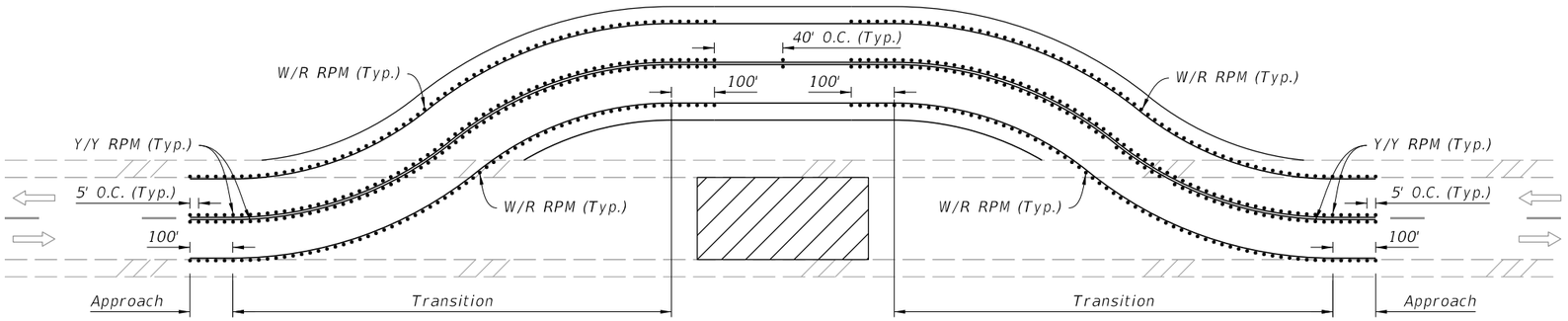

RPM PLACEMENT ON TWO-LANE ROADWAYS

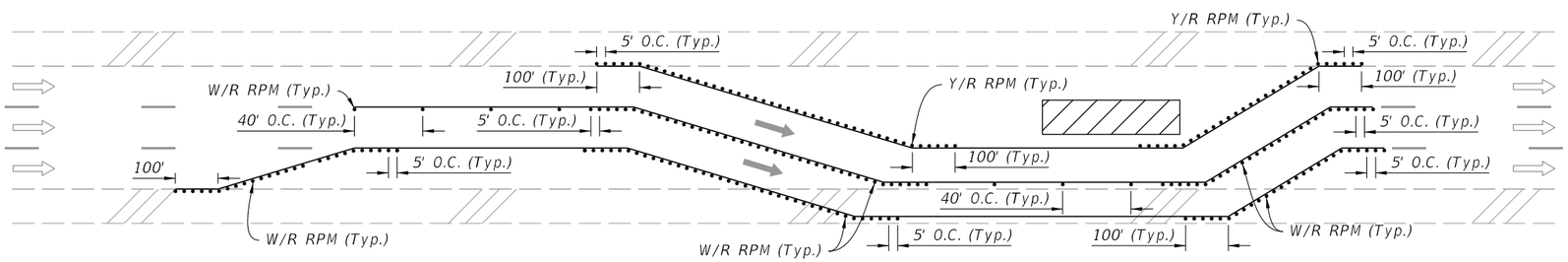

RPM PLACEMENT ON MULTILANE ROADWAYS
(Lane Shift Shown, Other Multilane Typical Applications Similar)

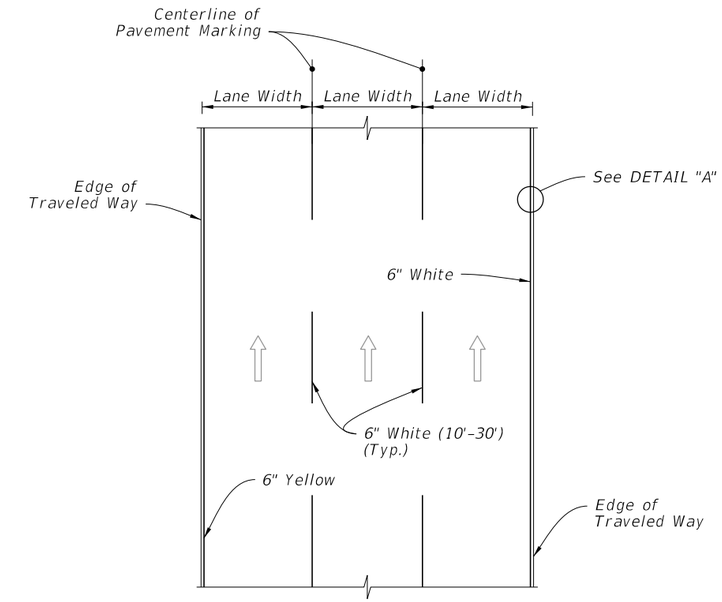

PLAN VIEW

NOTES:

1. Install RPMs as a supplement to:
   a. All lane lines
   b. Edge lines in transitions (e.g., merges, diversions, lane shifts)
   c. Edge lines of gore areas
2. Extend pavement marking and 5' RPM spacing by 100' in each direction for all transitions regardless of the line type.
3. Place RPMs in accordance with this detail and Index 706-001.

SYMBOLS:

Work Area

Lane Identification and Direction of Traffic

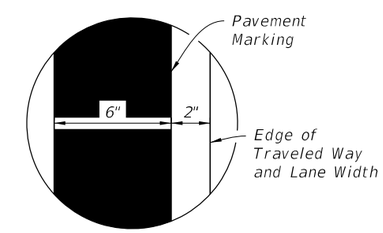

DETAIL "A"

RPM PLACEMENT IN WORK ZONES

PAVEMENT MARKINGS PLACEMENT

WORK ZONE PAVEMENT MARKINGS

LAST REVISION	REVISION	DESCRIPTION:			INDEX	SHEET
11/01/20			FY 2023-24 STANDARD PLANS	GENERAL INFORMATION FOR TRAFFIC CONTROL THROUGH WORK ZONES	102-600	11 of 11

10/27/2022 7:36:11 AM

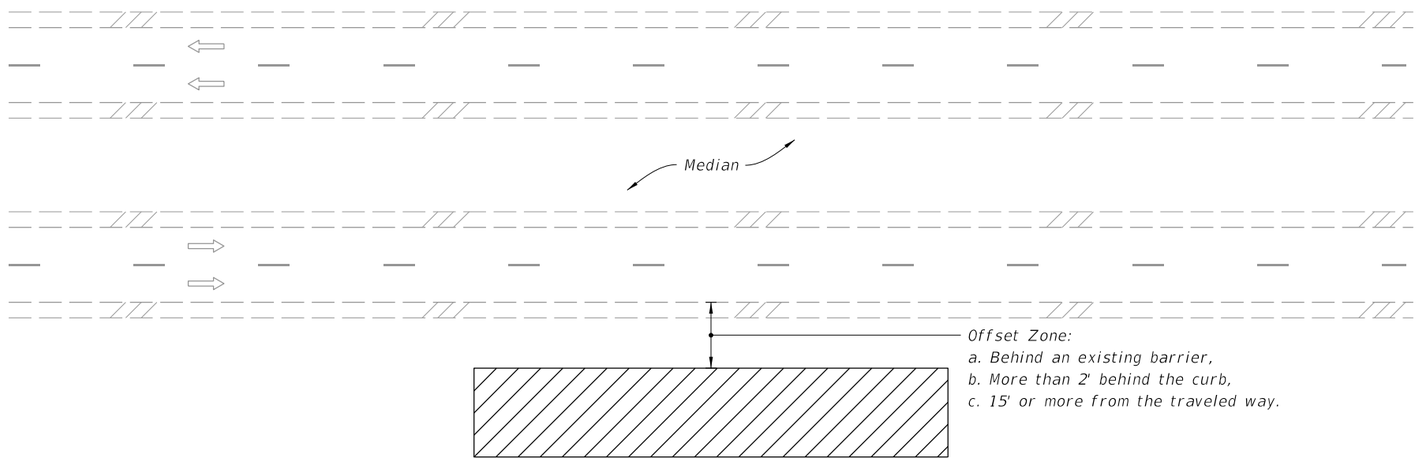

MULTILANE ROADWAY SHOWN, TWO-LANE ROADWAY SIMILAR

NOTES:

1. This Index applies to Two-Lane, Two-Way and Multilane Roadways, including Medians of divided roadways, with work beyond the shoulder.

2. Use Index 102-602 when the work operation (excluding establishing and terminating the work area) requires that two or more work vehicles cross the Offset Zone in any one hour period.

3. Use Index 102-660 when Work Area encroaches a Sidewalk.

SYMBOLS:

Work Area

Lane Identification and Direction of Traffic

10/20/2022 8:45:33 AM

LAST REVISION	REVISION	DESCRIPTION:			INDEX	SHEET
11/01/20			FY 2023-24 STANDARD PLANS	TWO-LANE AND MULTILANE ROADWAY, WORK BEYOND THE SHOULDER	102-601	1 of 1

NOTE:

1. This Index applies to Two-Lane, Two-Way and Multilane Roadways, including Medians of divided roadways, with work on the shoulder.

2. L = Taper Length
   X = Work Zone Sign Spacing
   B = Buffer Length
   See Index 102-600 for "L", "X", "B", and channelizing device spacing values.

3. Where work activities are between 2' and 15' from the edge of traveled way, the Engineer may omit signs and channelizing devices for work operations 60 minutes or less.

4. When four or more work vehicles enter the through traffic lanes in a one hour period (excluding establishing and terminating the work area), use a flagger or lane closure to accommodate work vehicle ingress and egress.

5. For work less than 2' from the traveled way and work zone speed is greater than 45 MPH, use a lane closure.

6. The "Speeding Fines Doubled When Workers Present" signs (MOT-13-06) and "End Road Work" Signs (G20-2) along with the associated work zone sign spacing distances may be omitted when the work operation is in place for 24 hours or less.

7. Temporary pavement markings may be omitted when the work operation is in place for 3 days or less.

8. Omit "Shoulder Closed" signs (W21-5a) along with associated work zone sign spacing distances for work on the median.

9. When there is no paved shoulder, the "Worker" sign (W21-1) may be used instead of the "Shoulder Closed" sign (W21-5a).

SYMBOLS:

- Work Area
- Channelizing Device (See Index 102-600)
- Work Zone Sign
- Lane Identification and Direction of Traffic

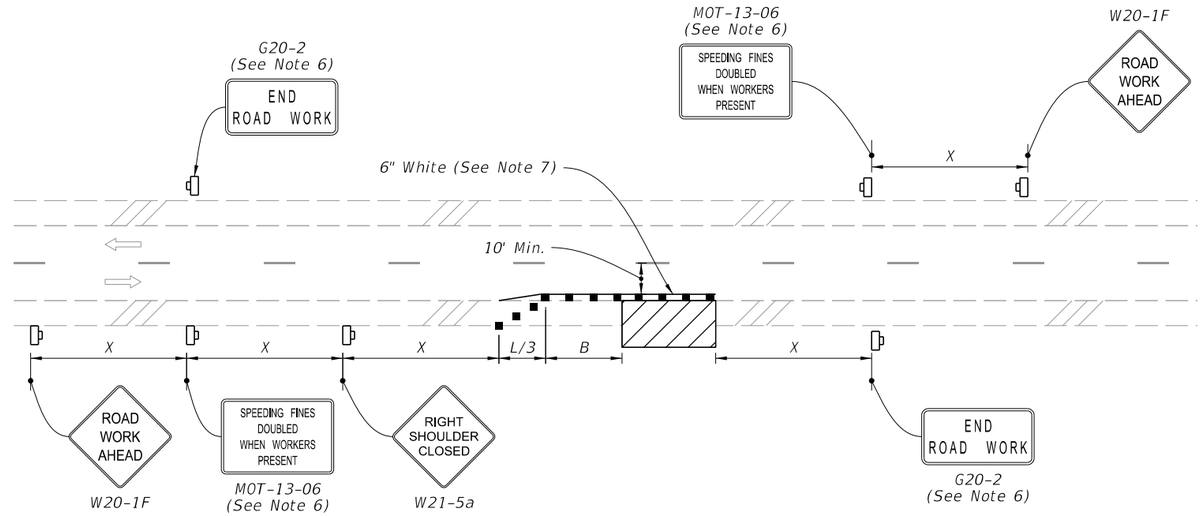

TWO-LANE ROADWAY
SHOULDER WORK LESS THAN 2' FROM THE TRAVELED WAY WITH WORK ZONE SPEED OF 45 MPH OR LESS

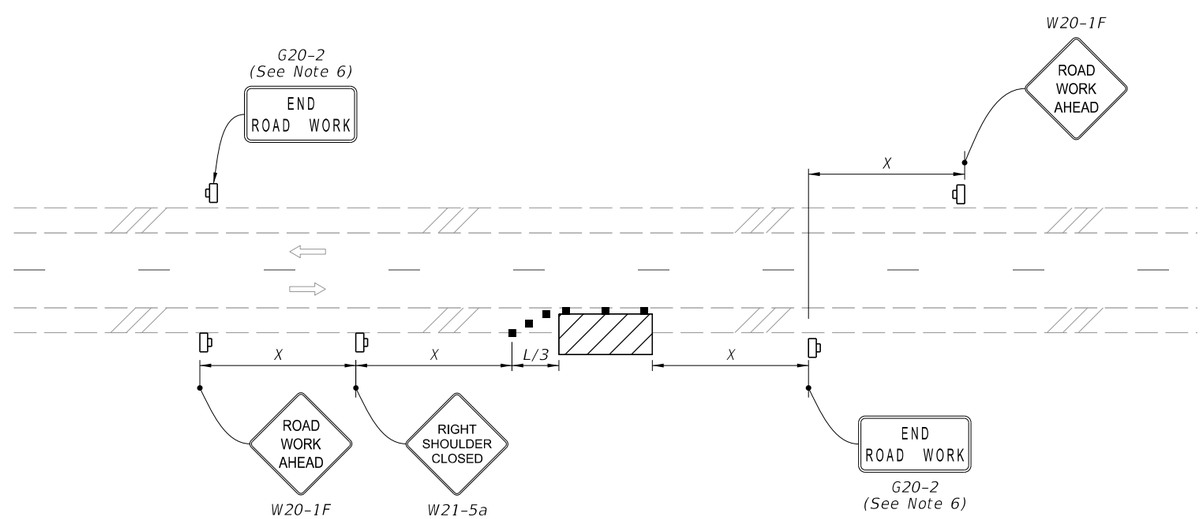

TWO-LANE ROADWAY
SHOULDER WORK BETWEEN 2' AND 15' FROM THE TRAVELED WAY

2/2/2023 10:33:35 AM

LAST REVISION	REVISION	DESCRIPTION:			INDEX	SHEET
11/01/21			FY 2023-24 STANDARD PLANS	TWO-LANE AND MULTILANE, WORK ON SHOULDER	102-602	1 of 2

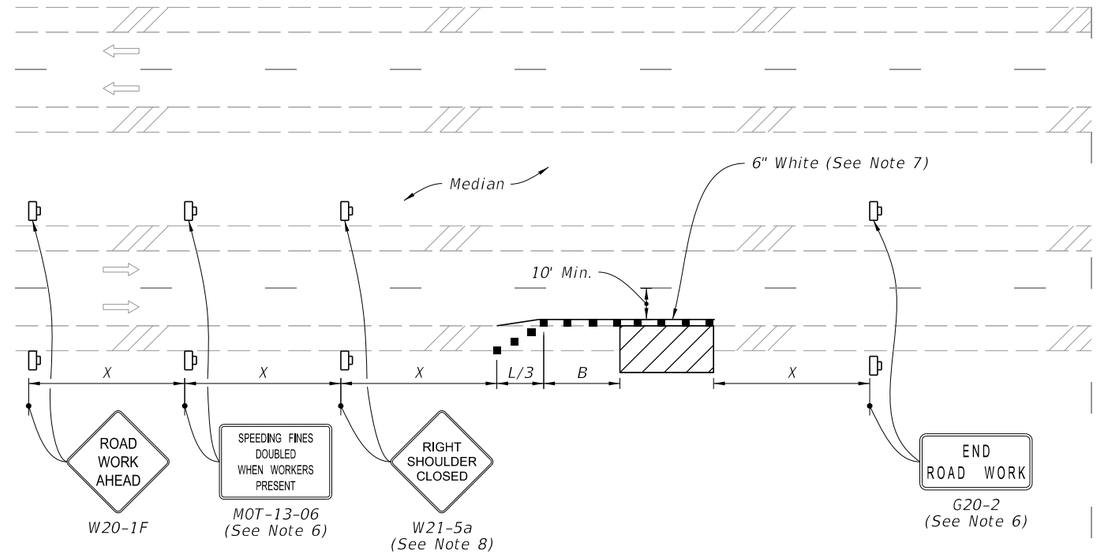

MULTILANE ROADWAY
SHOULDER WORK LESS THAN 2' FROM THE TRAVELED WAY
WITH WORK ZONE SPEED OF 45 MPH OR LESS

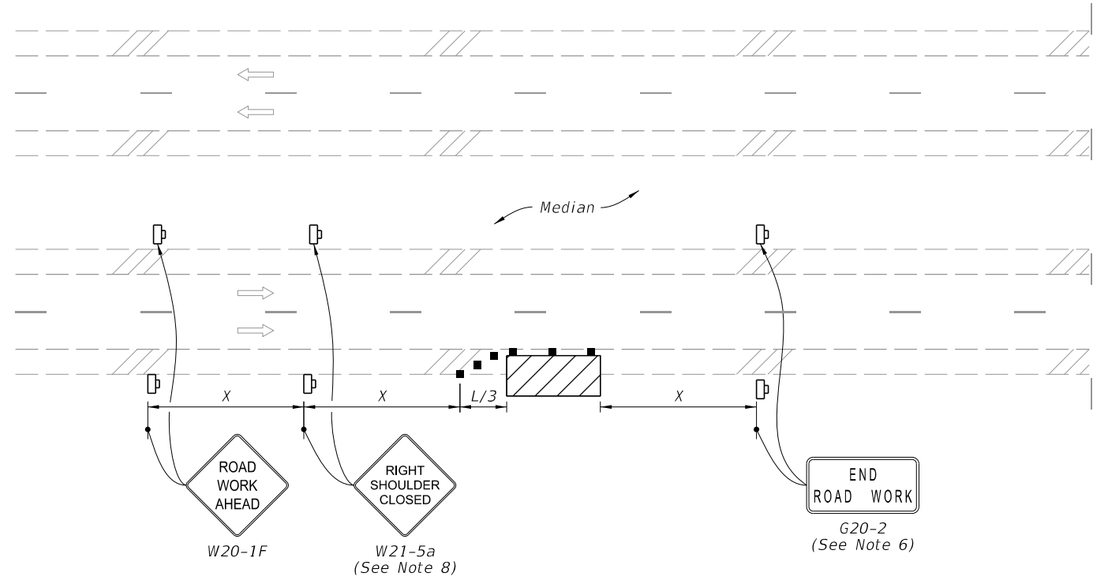

MULTILANE ROADWAY
SHOULDER WORK BETWEEN 2' AND 15' FROM THE TRAVELED WAY

SYMBOLS:

- Work Area
- Channelizing Device (See Index 102-600)
- Work Zone Sign
- Lane Identification and Direction of Traffic

10:33:38 AM

2/2/2023

LAST REVISION	REVISION	DESCRIPTION:	FY 2023-24 STANDARD PLANS	TWO-LANE AND MULTILANE, WORK ON SHOULDER	INDEX	SHEET
11/01/20					102-602	2 of 2

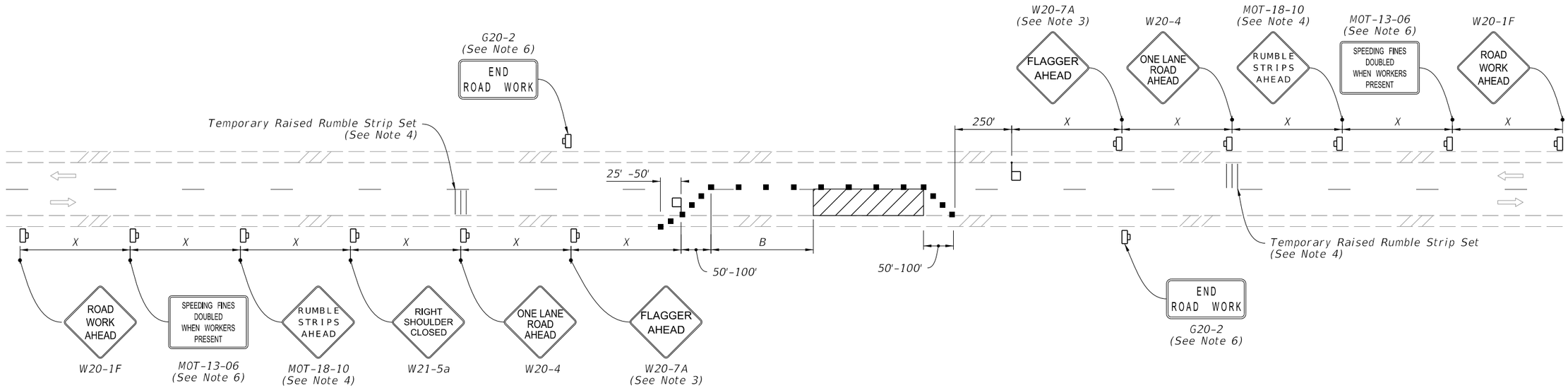

NOTES:

1. This Index applies to Two-Lane, Two-Way Roadways with work within the traveled way.

2. L = Taper Length
   B = Buffer Length
   X = Work Zone Sign Spacing
   See Index 102-600 for "L", "B", "X" and channelizing device spacing values.

3. Optionally, use "Flagger Ahead" sign with symbol (W20-7) instead of "Flagger Ahead" sign with text (W20-7A).

4. Use temporary raised rumble strips when the existing posted speed is 55 mph or greater and the work duration is greater than 60 minutes. If temporary raised rumble strips are not used, omit "Rumble Strips Ahead" signs (MOT-18-10) and associated work zone sign spacing.

5. Additional one-way control may be provided by the following means:
   a. Flag-carrying vehicle
   b. Official vehicle
   c. Pilot vehicles
   d. Traffic signals

   When flaggers are the sole means of one-way control, the flaggers must be in sight of each other or in direct communication at all times.

6. The "Speeding Fines Doubled When Workers Present" signs (MOT-13-06) and "End Road Work" signs (G20-2), along with associated work zone sign spacing, may be omitted when the work operation will be in place for 24 hours or less.

7. Automated Flagger Assistance Devices (AFADs) may be used in accordance with Specification Sections 102, 990 and the APL vendor drawings.

8. Railroad Crossings:

   a. If an active railroad crossing is located closer to the Work Area than the queue length plus 300 feet, extend the Buffer Space as shown on Sheet 2.

   b. If the queuing of vehicles across an active railroad crossing cannot be avoided, provide a uniformed traffic control officer or flagger at the highway-rail grade crossing to prevent vehicles from stopping within the highway-rail grade crossing, even if automatic train warning devices are in place.

SYMBOLS:

- Work Area
- Channelizing Device (See Index 102-600)
- Work Zone Sign
- Flagger
- Lane Identification and Direction of Traffic

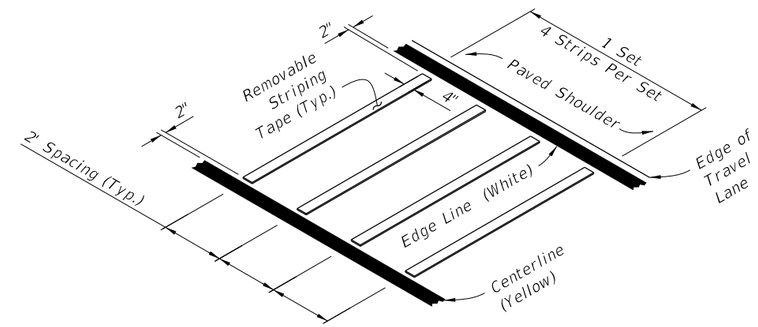

OPTION - 1
REMOVABLE STRIPING TYPE

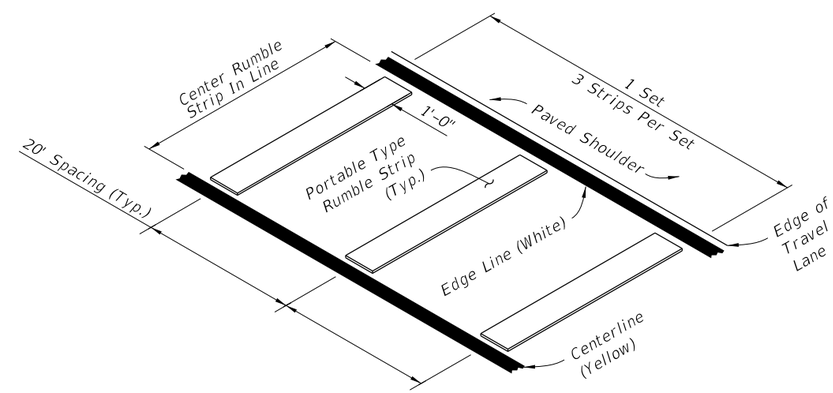

OPTION - 2
PORTABLE TYPE

RUMBLE STRIP SETS

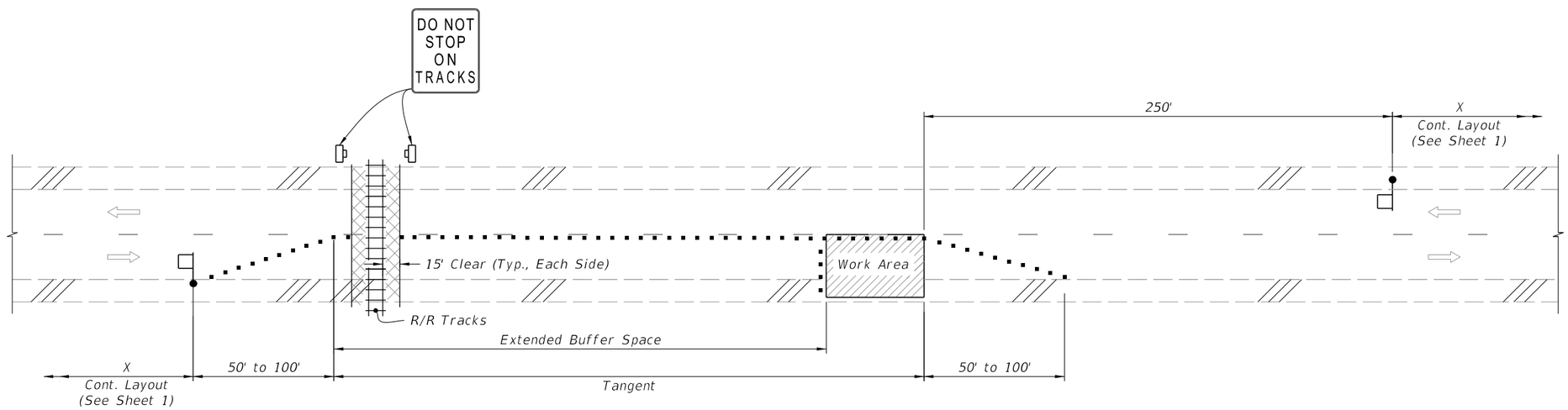

TEMPORARY RAILROAD CROSSING BUFFER SPACE EXTENSION

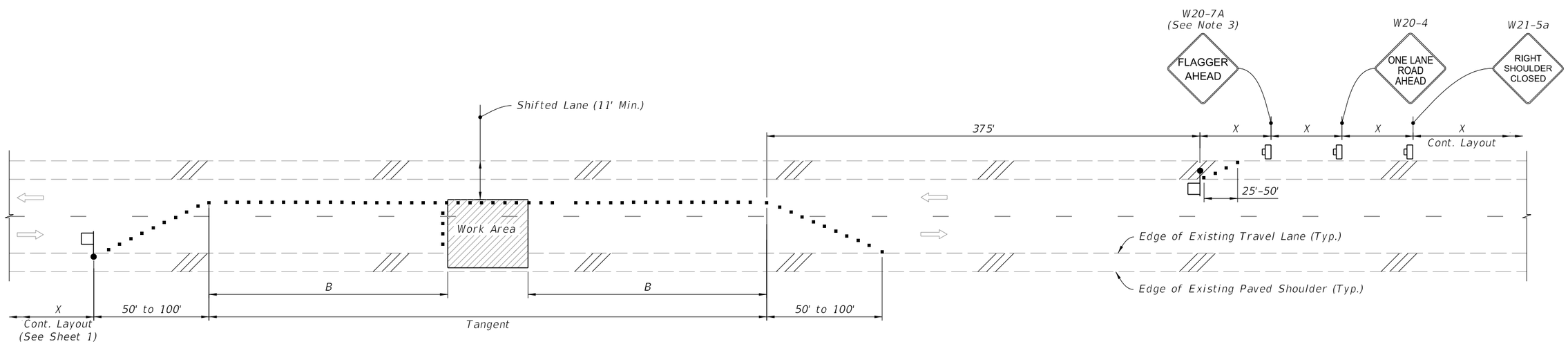

TEMPORARY LANE SHIFT TO SHOULDER WHEN WORK AREA ENCROACHES ON THE CENTERLINE
(For Work Operations In place 24 Hours or Less)

SYMBOLS:

- Work Area
- Channelizing Device (See Index 102-600)
- Work Zone Sign
- Flagger
- Lane Identification and Direction of Traffic

SPECIAL CONDITIONS

LAST REVISION	REVISION	DESCRIPTION:			INDEX	SHEET
11/01/21			FY 2023-24 STANDARD PLANS	TWO-LANE, TWO-WAY WORK WITHIN THE TRAVEL WAY	102-603	2 of 2

10/20/2022 8:45:35 AM

GENERAL NOTES:

1. This Index applies to two-lane, two-way roadways with work within or near the intersection.

2. X = Work Zone Sign Spacing
   See Index 102-600 for "X" and channelizing device spacing values.

3. Optionally, use "Flagger Ahead" sign with text (W20-7A) instead of "Flagger Ahead" sign with symbol (W20-7).

4. If vehicles in a parking zone block the line of sight to TCZ signs, locate and post mount signs in accordance with Index 700-101.

5. If the work area extends across a crosswalk, close the crosswalk in accordance with Index 102-660.

6. For unsignalized intersections, use Temporary Raised Rumble Strips in accordance with Index 102-603. Placement of Rumble Strips and additional signs should begin at FLAGGER sign location.

7. The "End Road Work" signs (G20-2) along with the associated work zone sign distances may be omitted when the work zone will be in place for 24 hours or less.

8. As an option to the "STOP" sign (R1-1) and Restricted Left/Right Turning Movement sign (R3-1 or R3-2), the "SIDE ROAD INTERSECTING THE WORK ZONE" flagging operation from Index 102-600 may be used.

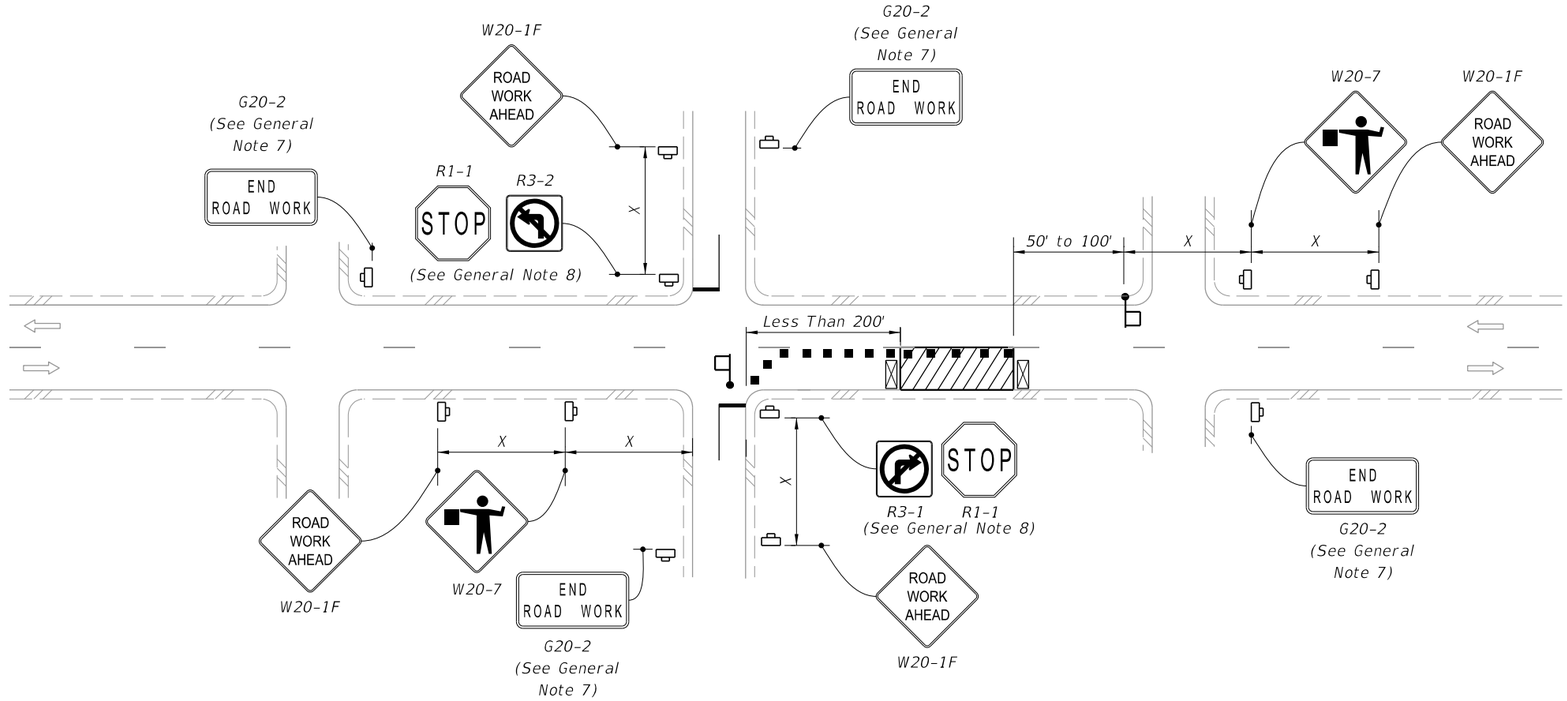

LANE CLOSURE FOR WORK LESS THAN 200' FROM INTERSECTION

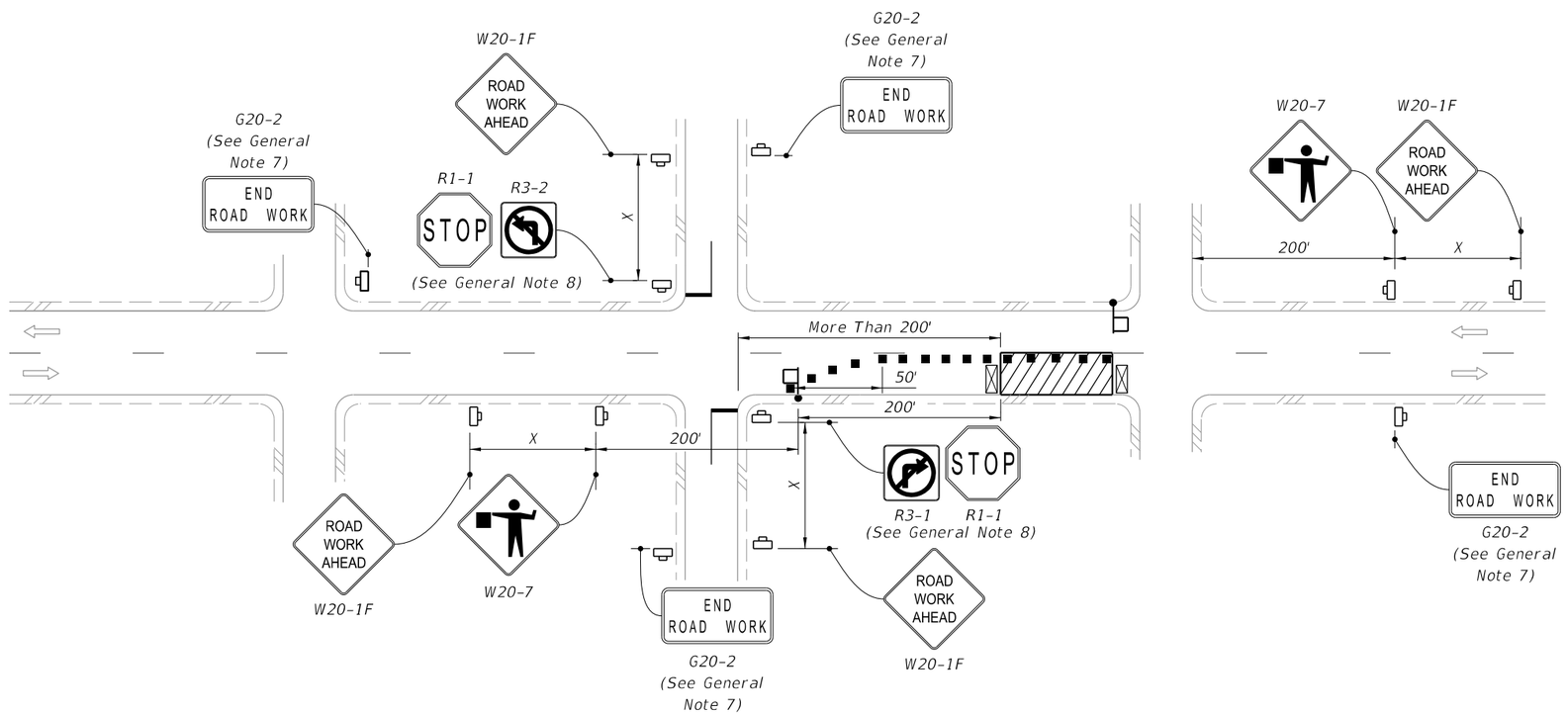

LANE CLOSURE FOR WORK MORE THAN 200' FROM INTERSECTION

SYMBOLS:

- Work Area
- Channelizing Device (See Index 102-600)
- Work Zone Sign
- Type III Barricade
- Stop Bar
- Flagger
- Lane Identification and Direction of Traffic

10/20/2022 8:45:36 AM

LAST REVISION	REVISION	DESCRIPTION:			INDEX	SHEET
11/01/22			FY 2023-24 STANDARD PLANS	TWO-LANE, TWO-WAY, INTERSECTION WORK	102-604	1 of 2

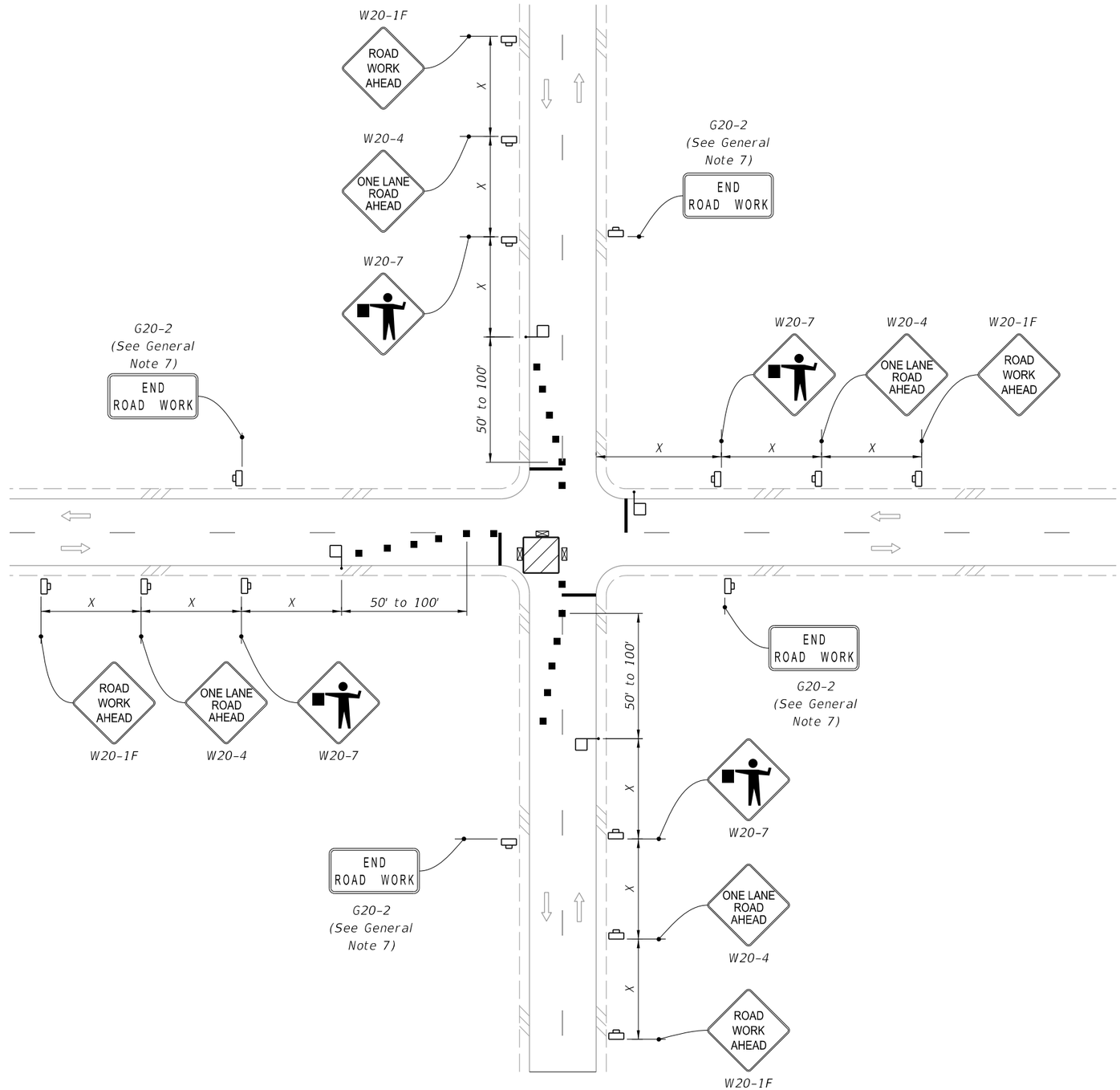

SYMBOLS:

- Work Area
- Channelizing Device (See Index 102-600)
- Work Zone Sign
- Type III Barricade
- Stop Bar
- Flagger
- Lane Identification and Direction of Traffic

WORK IN INTERSECTION OF TWO-LANE ROADWAY

10/20/2022 8:45:37 AM

LAST REVISION	REVISION	DESCRIPTION:			INDEX	SHEET
11/01/22			FY 2023-24 STANDARD PLANS	TWO-LANE, TWO-WAY, INTERSECTION WORK	102-604	2 of 2

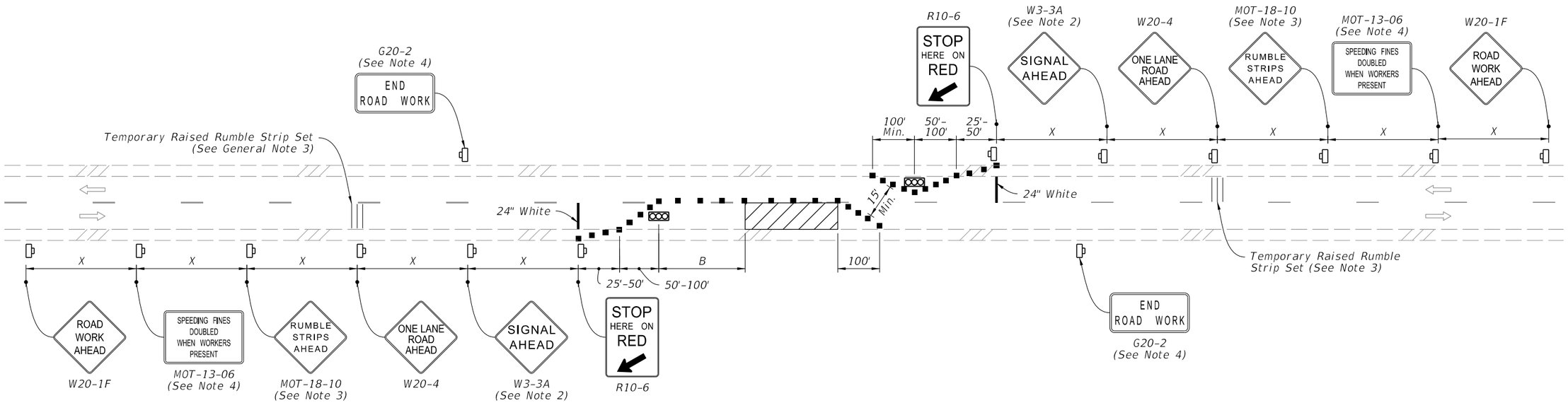

NOTES:

1. L = Taper Length
   B = Buffer Length
   X = Work Zone Sign Distance
   See Index 102-600 for "L", "B", "X", and channelizing device spacing values.

2. Optionally, use "Signal Ahead" signs with symbols (W3-3) instead of "Signal Ahead" signs with text (W3-3A).

3. Use temporary raised rumble strips in accordance with Index 102-603.

4. The "Speeding Fines Doubled When Workers Present" signs (MOT-13-06) and "End Road Work" signs (G20-2), along with associated work zone sign distances, may be omitted when the work operation will be in place for 24 hours or less.

5. For the maximum distance between temporary traffic signals, do not exceed the distance at which the temporary traffic signals can safely communicate. When the distance temporary traffic signals is greater than 0.25 miles, use a combination of a pilot vehicle and manually-controlled temporary traffic signals.

6. Monitor temporary traffic signals by having one or more workers present during operation. In the event of a temporary traffic signal failure, use flaggers to control traffic.

SYMBOLS:

- Work Area
- Channelizing Device (See Index 102-600)
- Work Zone Sign
- Temporary Traffic Signal
- Lane Identification and Direction of Traffic

10:37:26 AM

2/2/2023

LAST REVISION	REVISION	DESCRIPTION:				
11/01/22			FY 2023-24 STANDARD PLANS	TWO-LANE ROADWAY, LANE CLOSURE USING TEMPORARY TRAFFIC SIGNALS	INDEX 102-606	SHEET 1 of 1

GENERAL NOTES:

1. This Index applies to two-lane, two-way and multilane roadways with work that requires a moving operation.

2. Mount vehicle-mounted signs with the bottom of the sign at a minimum height of 48 inches above the pavement. Vehicle mounted changeable message signs may be used in lieu of truck mounted static signs and arrow boards. Ensure changeable message signs flash alternately to read "Left or Right Lane" or "Two Left or Two Right Lanes", "Closed Ahead", and the arrow symbol. Do not use arrow boards in combination with truck mounted changeable message signs or obscure boards with equipment, supplies, signs, or enclosure. Cover or turn sign legends from view when work is not in progress.

3. For multilane roadways with curb and no paved shoulder, omit the shadow vehicle that would have been used on the paved shoulder. In such instances, the warning sign should be mounted on the shadow vehicle farthest from the work vehicle.

4. Where work activities within 2' of the edge of travel way are incidental (i.e., Mowing, Litter Removal), the Engineer may omit requirements for signs and the Shadow vehicle on the shoulder.

5. Minimize the longitudinal spacing between vehicles to deter road users from driving in between.

6. Use inverted plan of the illustrations for work on left side of roadways.

7. Ensure that all vehicles in the mobile operation convoy have functional two-way communication.

8. If the speed of the mobile operation exceeds the existing posted minimum speed limit on limited access roadways and one half the existing posted speed limit on other roadways, the Engineer may delete requirements for shadow vehicles and attenuators. In such situations, mount arrow board and sign on the work vehicle.

9. The distance between the advance warning sign and the work location should not exceed 5 miles.

SYMBOLS:

- Lane Identification and Direction of Traffic
- A — Truck/Trailer Mounted Attenuator (TMA)
- W — Work Vehicle With Warning Lights
- S — Shadow (S) Vehicle With Warning Lights And Arrow Board
- Work Zone Sign

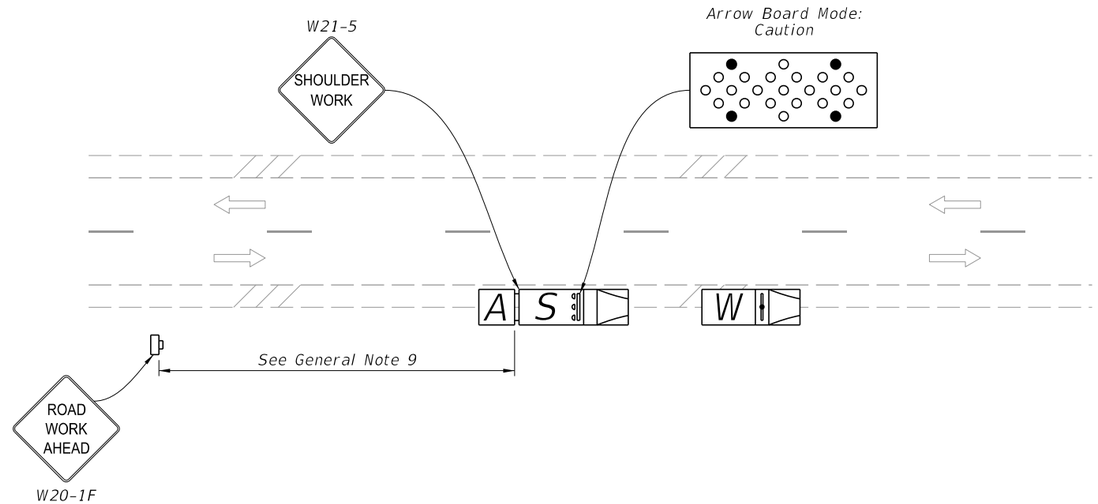

WORK ON SHOULDER

(Two-Lane Roadway Shown, Multilane Roadway Similar)

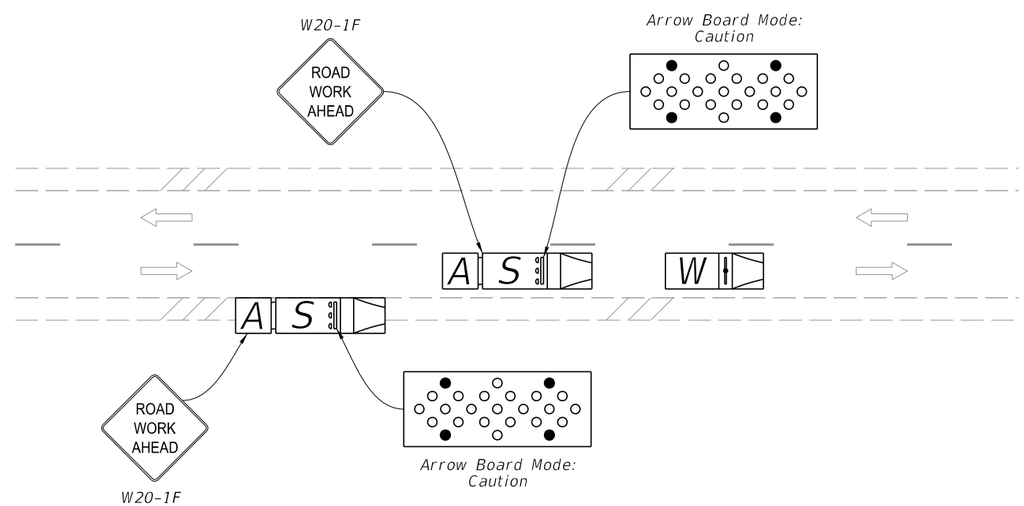

WORK IN TRAVELED WAY - TWO-LANE ROADWAY, LANE CLOSURE

10/20/2022 8:45:38 AM

LAST REVISION	REVISION	DESCRIPTION:			INDEX	SHEET
11/01/22			FY 2023-24 STANDARD PLANS	MOBILE OPERATIONS	102-607	1 of 2

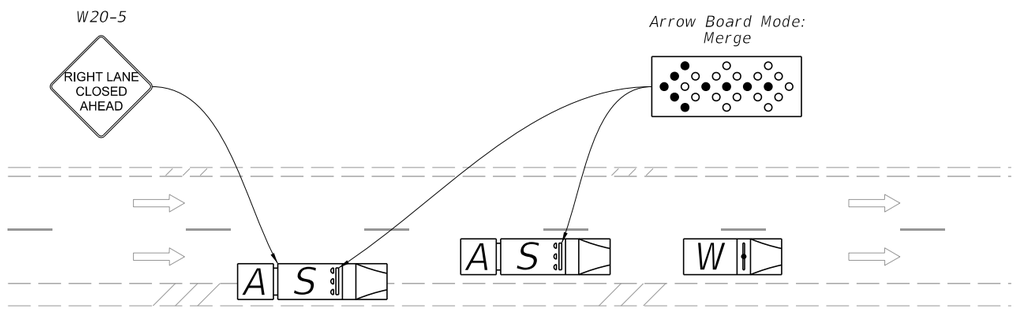

WORK IN TRAVELED WAY - MULTILANE ROADWAY, SINGLE LANE CLOSURE

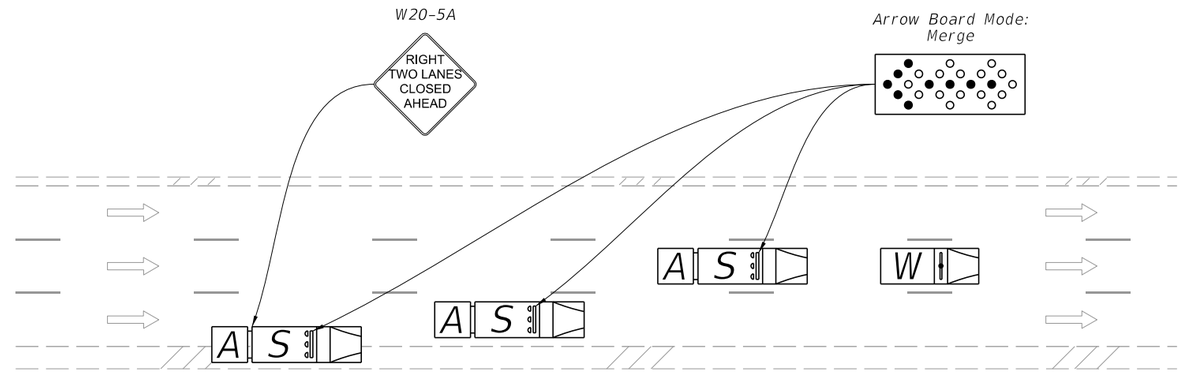

WORK IN TRAVELED WAY - MULTILANE ROADWAY, DOUBLE LANE CLOSURE

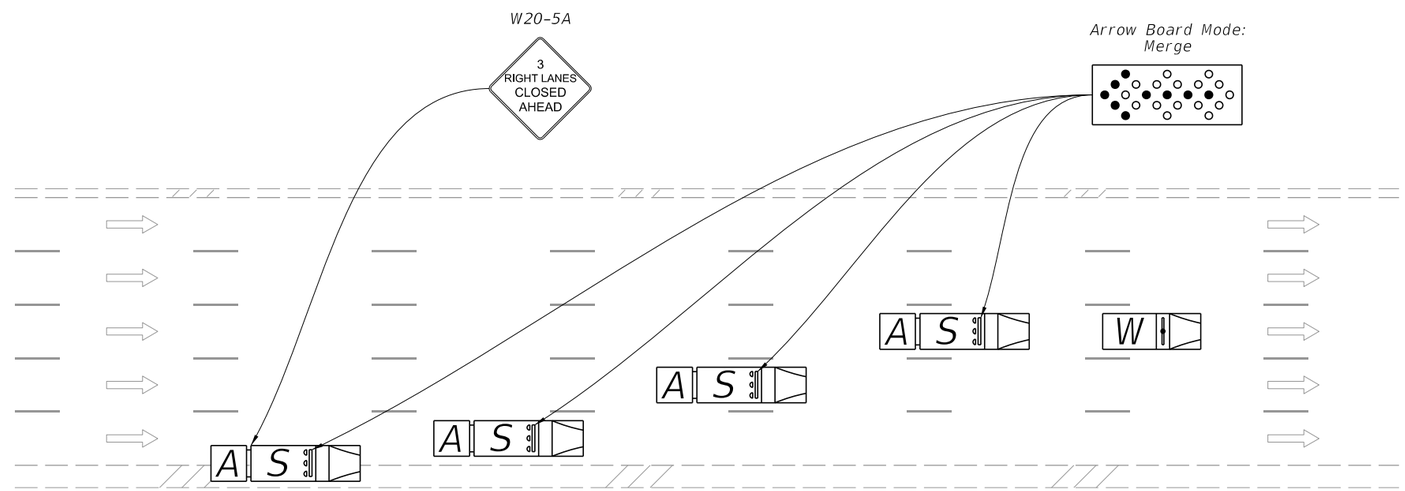

WORK IN TRAVELED WAY - MULTILANE ROADWAY, TRIPLE LANE CLOSURE

SYMBOLS:

- W — Work Vehicle With Warning Lights
- S — Shadow (S) Vehicle With Warning Lights And Arrow Board
- A — Truck/Trailer Mounted Attenuator (TMA)
- Lane Identification and Direction of Traffic

10/20/2022 8:45:39 AM

LAST REVISION	REVISION	DESCRIPTION:			INDEX	SHEET
11/01/22			FY 2023-24 STANDARD PLANS	MOBILE OPERATIONS	102-607	2 of 2

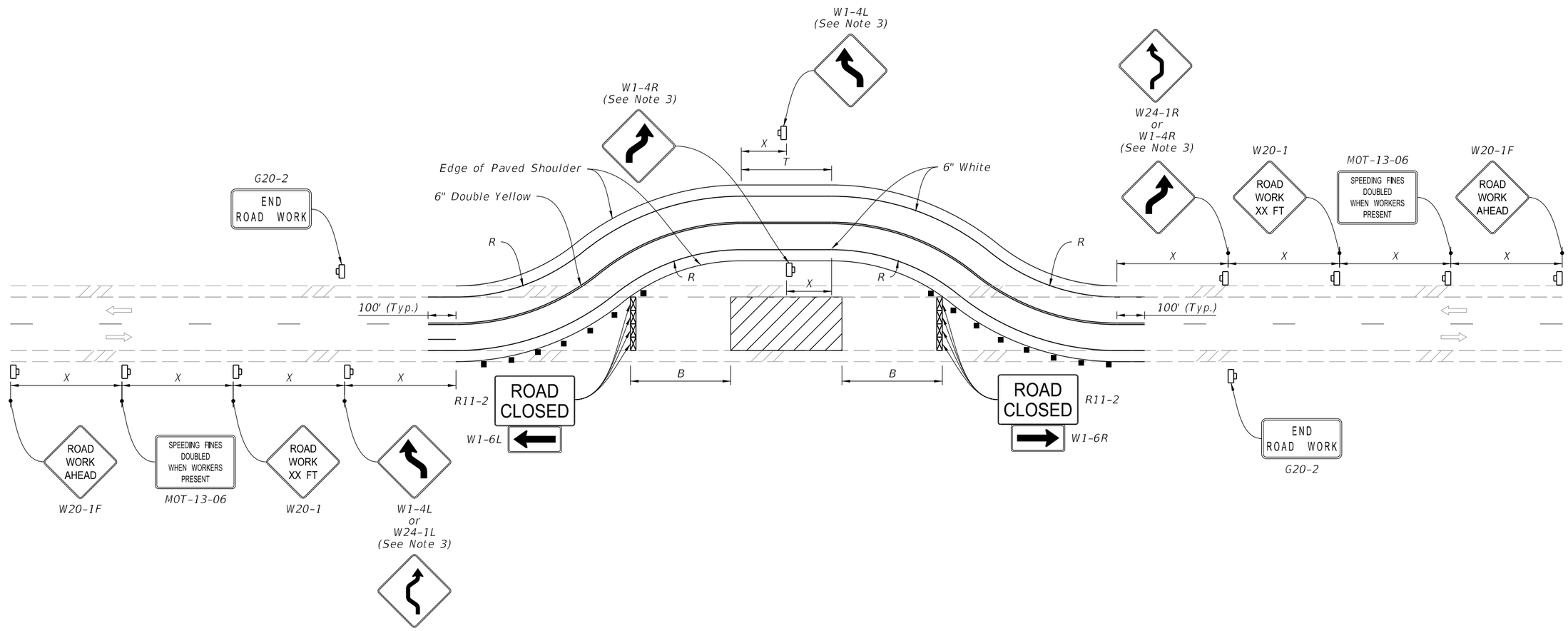

SYMBOLS:

- Work Area
- Channelizing Device (See Index 102-600)
- Work Zone Sign
- Type III Barricade
- Lane Identification and Direction of Traffic

NOTES:

1. This Index applies to Two-Lane, Two-Way Roadways with temporary diversions.

2. B = Buffer Length
   X = Work Zone Sign Distance
   R = Radius of Curve
   See Index 102-600 for "B", "X", and channelizing device spacing values.
   See Plans for "R" values.

3. If the tangent distance "T" is less than 600', for each direction use a "Double Reverse Curve" sign (W24-1) instead of the first "Reverse Curve" sign (W1-4) and omit the second "Reverse Curve" sign.

10/20/2022 8:45:39 AM

LAST REVISION	REVISION	DESCRIPTION:			INDEX	SHEET
11/01/20			FY 2023-24 STANDARD PLANS	TWO-LANE, TWO-WAY TEMPORARY DIVERSION CONNECTION	102-608	1 of 1

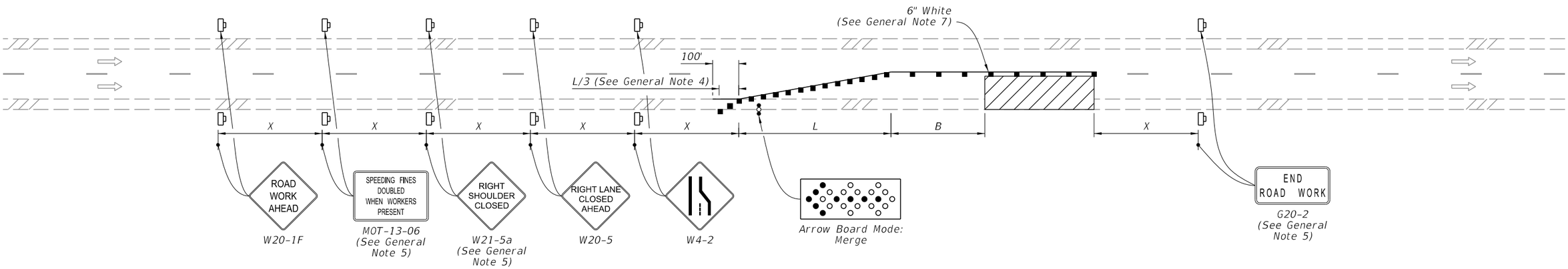

SINGLE LANE CLOSURE

SYMBOLS:

- Work Area
- Channelizing Device (See Index 102-600)
- Work Zone Sign
- Arrow Board
- Lane Identification and Direction of Traffic

GENERAL NOTE:

1. L = Taper Length
   B = Buffer Length
   X = Work Zone Sign Distance
   See Index 102-600 for "L", "B", "X", and channelizing device spacing values.

2. On undivided highways the median signs as shown are to be omitted.

3. On limited access facilities, omit "Right Shoulder Closed" signs (W21-5a) and associated work zone sign spacing distances.

4. If the paved shoulder is less than 4' in width, omit the taper and channelizing devices from the paved shoulder.

5. The "Speeding Fines Doubled When Workers Present" signs (MOT-13-06) and "End Road Work" signs (G20-2) and "Right Shoulder Closed" (W21-5a), along with associated work zone sign distances, may be omitted when the work operation will be in place for 24 hours or less. For Single Lane Closures, arrow boards and buffer (B) may also be omitted when the work operation will be in place for 60 minutes or less and the speed limit is 45 mph or less.

6. Use inverted plan of the illustrations for work on left side of roadways.

7. Temporary pavement markings may be omitted when the work operation is in place for 3 days or less.

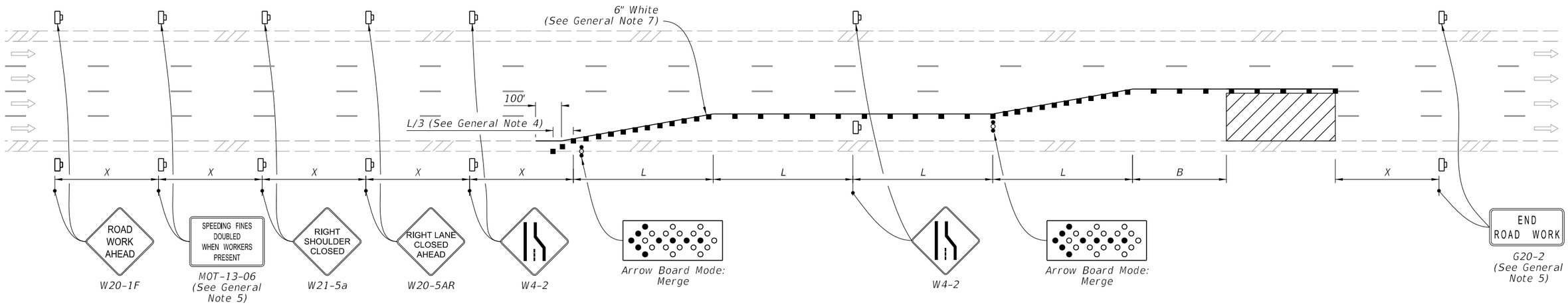

DOUBLE LANE CLOSURE

SYMBOLS:

- Work Area
- Channelizing Device (See Index 102-600)
- Work Zone Sign
- Arrow Board
- Lane Identification and Direction of Traffic

10:34:25 AM

2/2/2023

LAST REVISION	REVISION	DESCRIPTION:				
11/01/20			FY 2023-24 STANDARD PLANS	MULTILANE ROADWAY, LANE CLOSURES	INDEX 102-613	SHEET 2 of 5

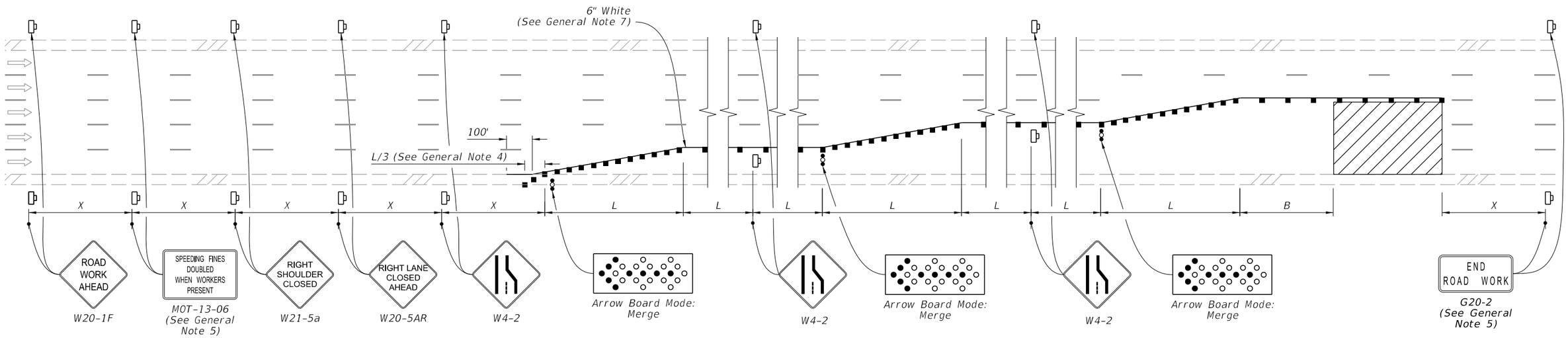

TRIPLE LANE CLOSURE

SYMBOLS:

- Work Area
- Channelizing Device (See Index 102-600)
- Work Zone Sign
- Arrow Board
- Lane Identification and Direction of Traffic

10:34:26 AM

2/2/2023

LAST REVISION	REVISION	DESCRIPTION:			INDEX	SHEET
11/01/20			FDOT FY 2023-24 STANDARD PLANS	MULTILANE ROADWAY, LANE CLOSURES	102-613	3 of 5

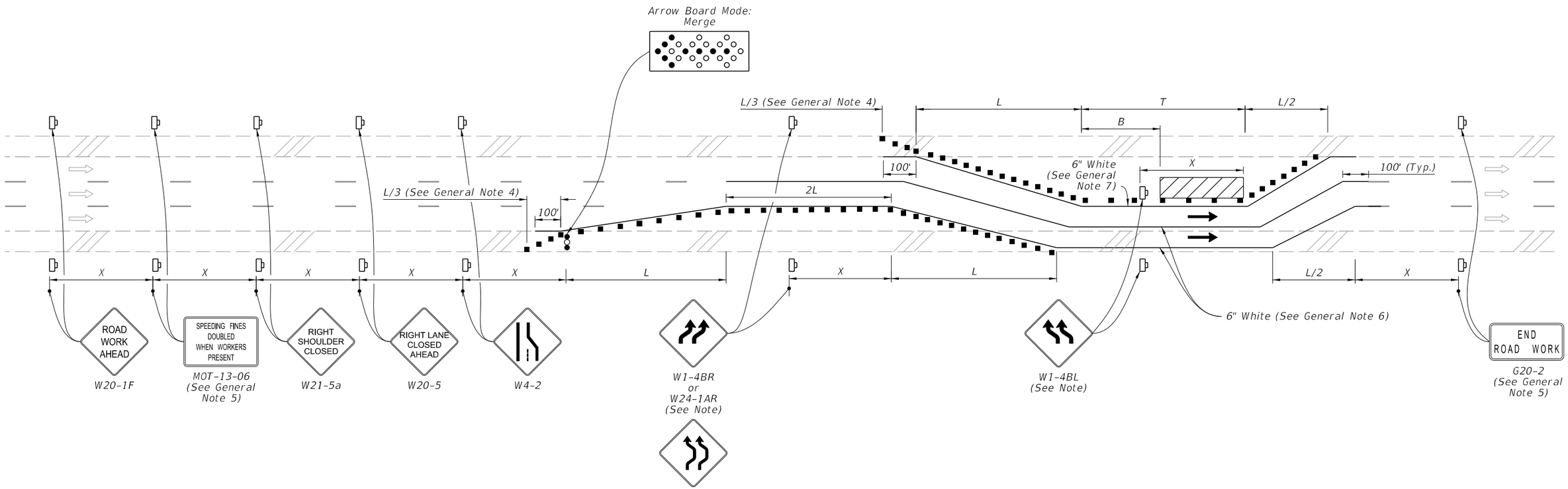

LANE CLOSURE WITH LANE SHIFT

NOTE:

If the tangent distance "T" is less than 600', then use "Double Reverse Curve" signs (W24-1A) instead of the first pair of "Reverse Curve" signs (W1-4B) and omit the second pair of "Reverse Curve" signs.

SYMBOLS:

- Work Area
- Channelizing Device (See Index 102-600)
- Work Zone Sign
- Arrow Board
- Lane Identification and Direction of Traffic

10:34:27 AM

2/2/2023

LAST REVISION	REVISION	DESCRIPTION:			INDEX	SHEET
11/01/20			FY 2023-24 STANDARD PLANS	MULTILANE ROADWAY, LANE CLOSURES	102-613	4 of 5

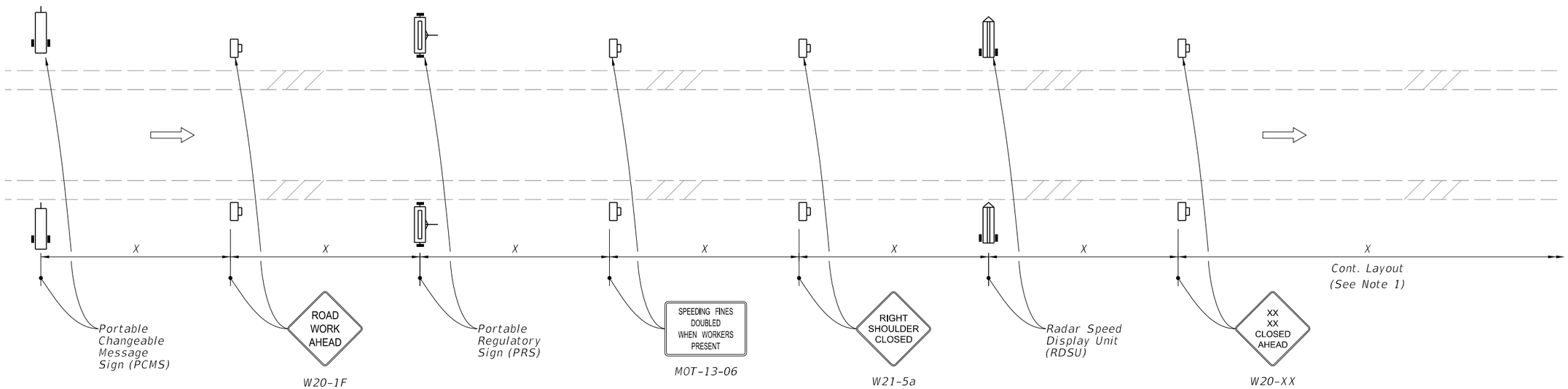

MOTORIST AWARENESS SYSTEM

SYMBOLS:

- Work Zone Sign
- (1) PCMS= Portable Changeable (Variable) Message Sign
- (2) PRS= Portable Regulatory Sign-Speed Limit When Flashing
- (2) RSDU= Radar Speed Display Unit
- Lane Identification and Direction of Traffic

NOTES:

1. Use the Motorist Awareness System (MAS) for lane closures of at least 5 days (consecutive or not) on multilane divided facilities with a posted speed of 55 or greater when workers are present and not protected by a barrier.

2. Locate the Motorist MAS devices (i.e., PCMS, PRS, and RDSU) within the advance warning signs as shown. Continue with the remainder of the work zone signs and devices in accordance with the Plans or Standard Plans after the appropriate "Lane Closed Ahead" (W20-XX) sign.

3. For a posted speed of 65 mph or greater, display speed with a ten mph reduction. For a posted speed of 60 mph, display a reduced speed of 55 mph. For areas outside of the lane closure, use the posted speed as the work zone speed.

4. Omit the PCMS in the median for roadways with three lanes or less in the same direction of traffic.

TYPICAL PCMS DISPLAY:

With speed reduction:
Message 1: WORKERS PRESENT AHEAD
Message 2: SPEED REDUCED NEXT XXMI

Without speed reduction:
Message 1: WORKERS PRESENT AHEAD
Message 2: NEXT XX MILES

10:34:28 AM

2/2/2023

GENERAL NOTES:

1. L = Taper Length
   B = Buffer Length
   X = Work Zone Sign Distance
   See Index 102-600 for "L", "B", "X", and channelizing device spacing values.

2. If vehicles in a parking zone block the line of sight to TCZ signs, locate and post mount signs in accordance with Index 700-101.

3. Use temporary "STOP" sign (R1-1) where the existing stop bar is more than 30' from the taper, remove or cover existing sign.

4. The "Speeding Fines Doubled When Workers Present" sign (MOT-13-06) and "End Road Work" Sign (G20-2), along with associated Work Zone Sign Distances, may be omitted when the work operation will be in place for 24 hours or less. Additionally, arrow boards may be omitted when the work operation will be in place for 60 minutes or less and the speed limit is 45 mph or less.

5. If the work area extends across a crosswalk, close the crosswalk in accordance with Index 102-660.

6. Dual signs are required for divided roadways.

SYMBOLS:

- Work Area
- Channelizing Device (See Index 102-600)
- Work Zone Sign
- Type III Barricade
- Arrow Board
- Stop Bar
- Lane Identification and Direction of Traffic

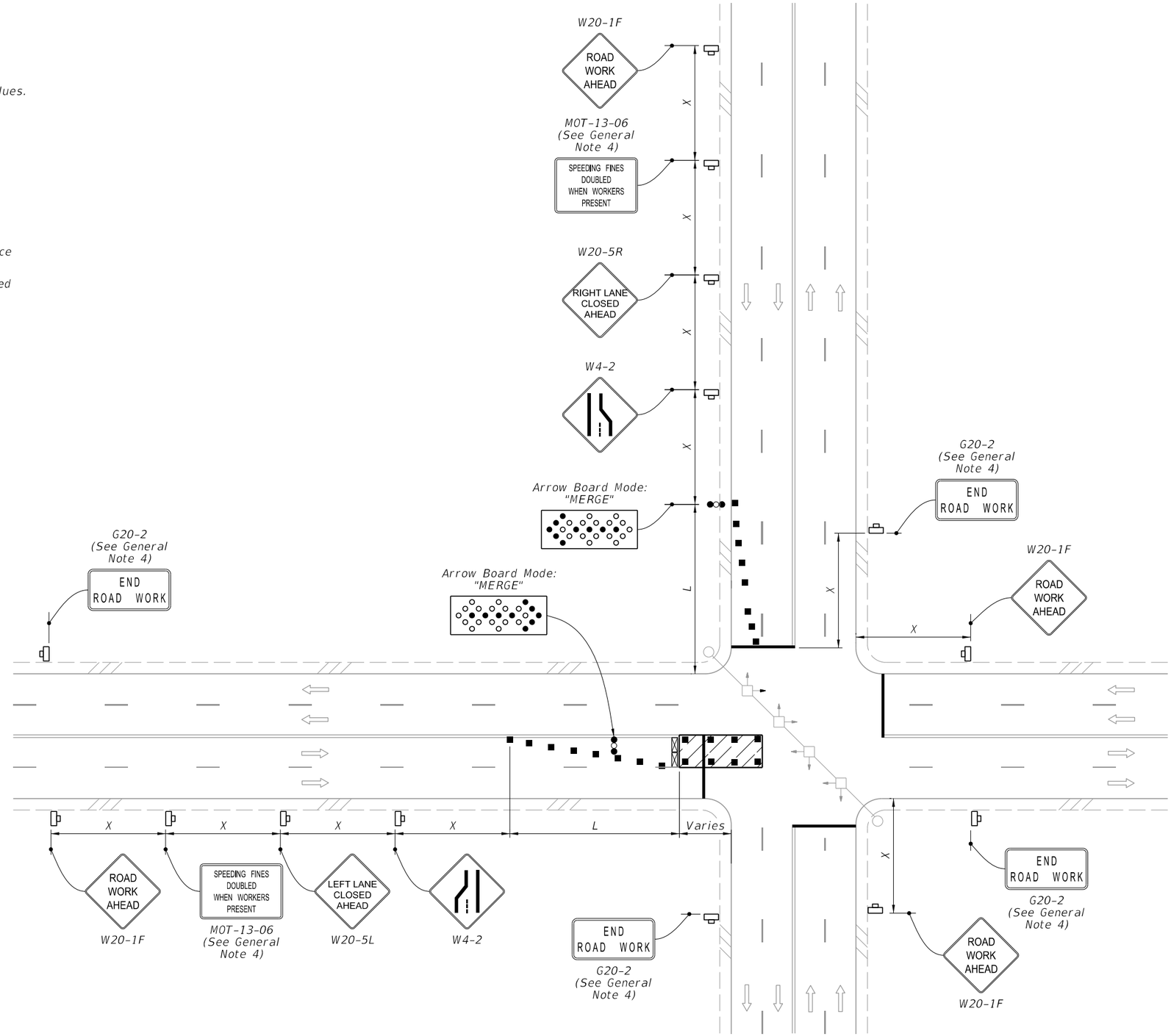

WORK IN INTERSECTION OF MULTILANE ROADWAY

3/4/2024 10:45:09 AM

LAST REVISION	REVISION	DESCRIPTION:			INDEX	SHEET
11/01/22			FY 2023-24 STANDARD PLANS	MULTILANE ROADWAY, INTERSECTION WORK	102-615	1 of 5

NOTE:

Confine work operations to the following lane or lane combinations:

a. Outside travel lane
b. Outside auxiliary lane
c. Outside travel lane and adjoining auxiliary lane
d. Inside travel lane
e. Inside auxiliary lane
f. Inside travel lane and adjoining auxiliary lane

If the work area is confined to an auxiliary lane, the work area must be barricaded. Replace the RIGHT (LEFT) LANE CLOSED AHEAD signs with ROAD WORK AHEAD signs, and omit the merge symbol signs and arrow board.

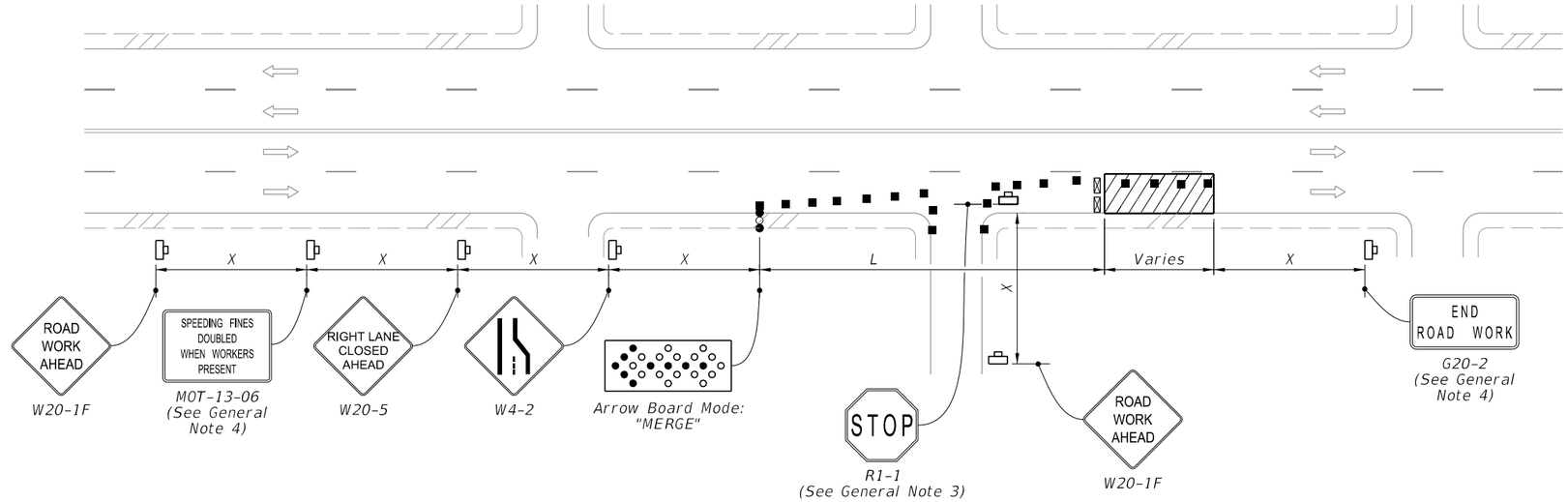

RIGHT LANE CLOSED ON FAR SIDE OF MINOR SIDE STREET

SYMBOLS:

- Work Area
- Channelizing Device (See Index 102-600)
- Work Zone Sign
- Type III Barricade
- Arrow Board
- Stop Bar
- Lane Identification and Direction of Traffic

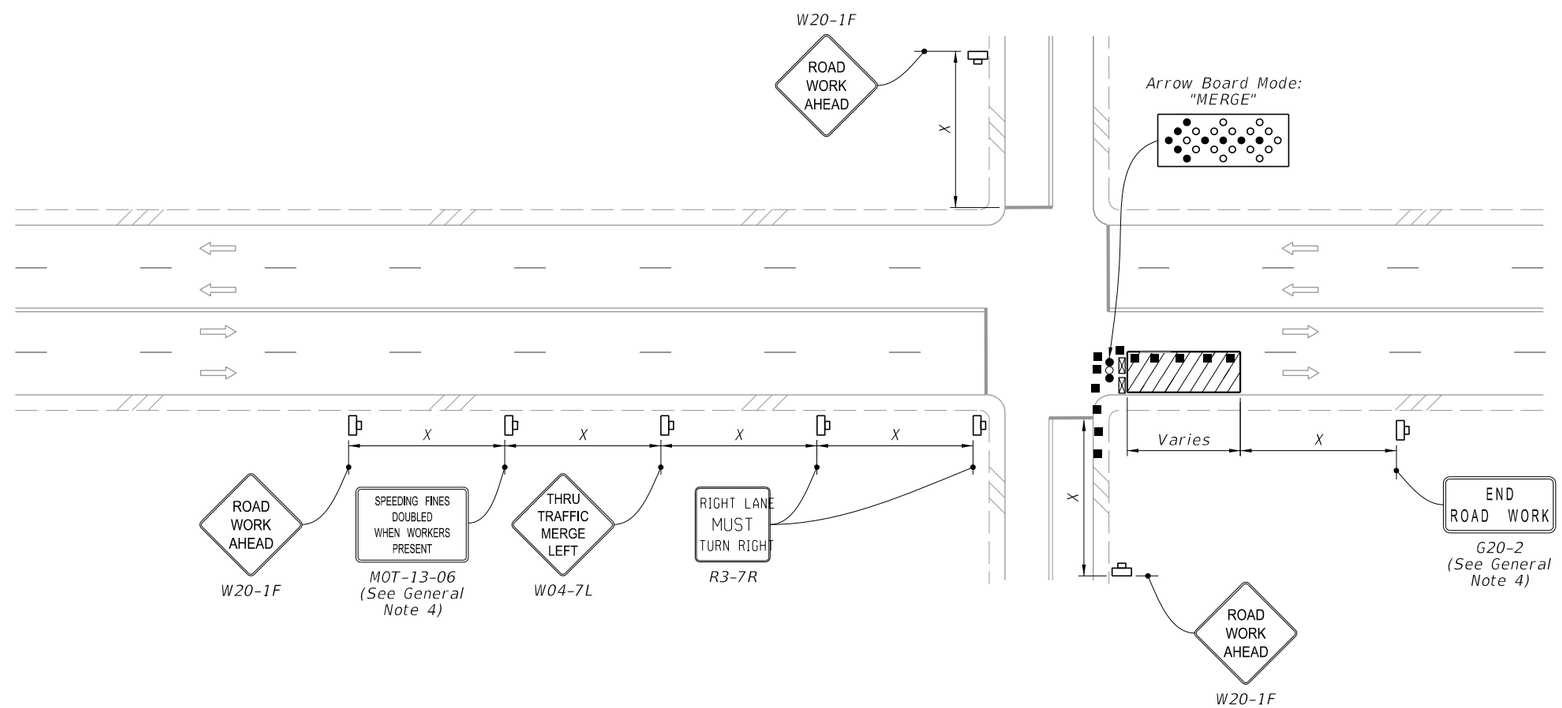

RIGHT LANE CLOSED ON FAR SIDE OF INTERSECTION WITH SIGNIFICANT RIGHT TURNING MOVEMENTS

11/1/2022 1:39:11 PM

LAST REVISION	REVISION	DESCRIPTION:			INDEX	SHEET
11/01/22			FY 2023-24 STANDARD PLANS	MULTILANE ROADWAY, INTERSECTION WORK	102-615	2 of 5

NOTES:

1. Confine work operations to the following lane or lane combinations:

   a. Outside travel lane
   b. Outside auxiliary lane
   c. Outside travel lane and adjoining auxiliary lane
   d. Inside travel lane
   e. Inside auxiliary lane
   f. Inside travel lane and adjoining auxiliary lane

   If the work area is confined to an auxiliary lane, the work area must be barricaded. Replace the RIGHT (LEFT) LANE CLOSED AHEAD signs with ROAD WORK AHEAD signs, and omit the merge symbol signs and arrow board.

2. Provide sufficient Queue Length so that left-turning vehicles do not block through lanes.

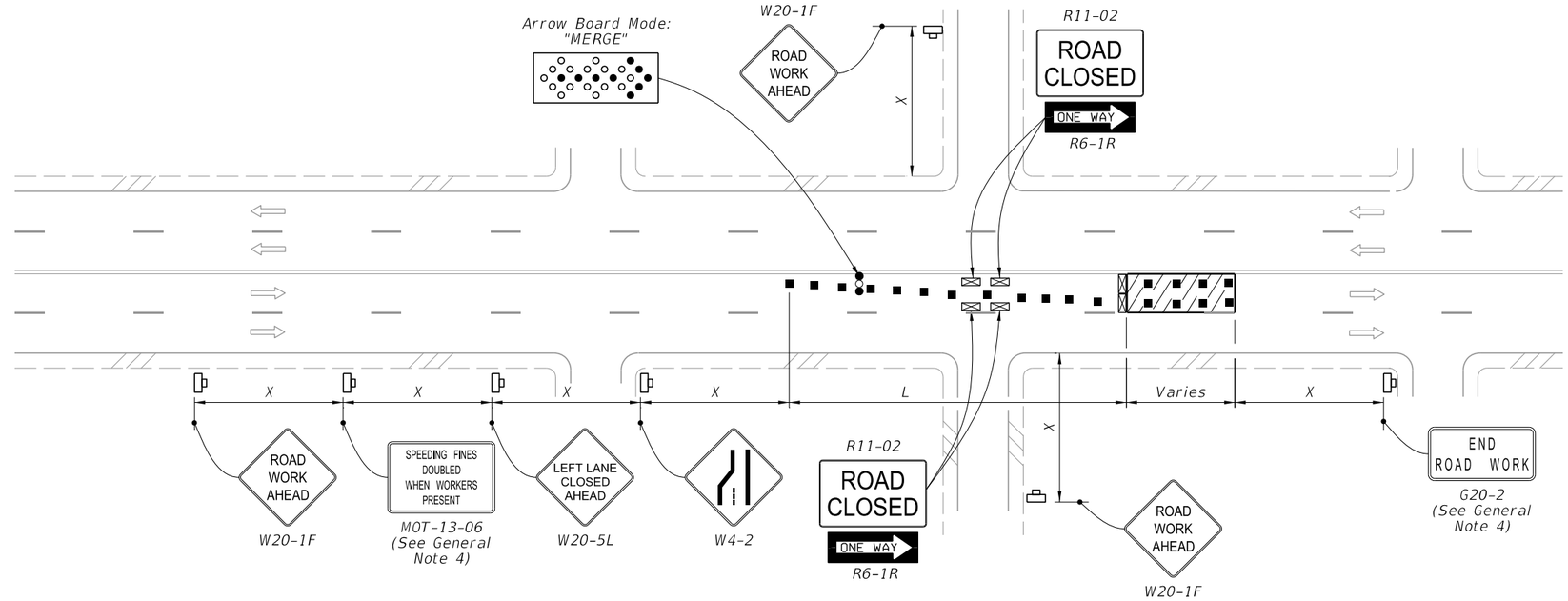

LEFT LANE CLOSED ON FAR SIDE OF MINOR SIDE STREET - RESTRICTED TURNING MOVEMENTS

SYMBOLS:

- Work Area
- Channelizing Device (See Index 102-600)
- Work Zone Sign
- Type III Barricade
- Arrow Board
- Stop Bar
- Lane Identification and Direction of Traffic

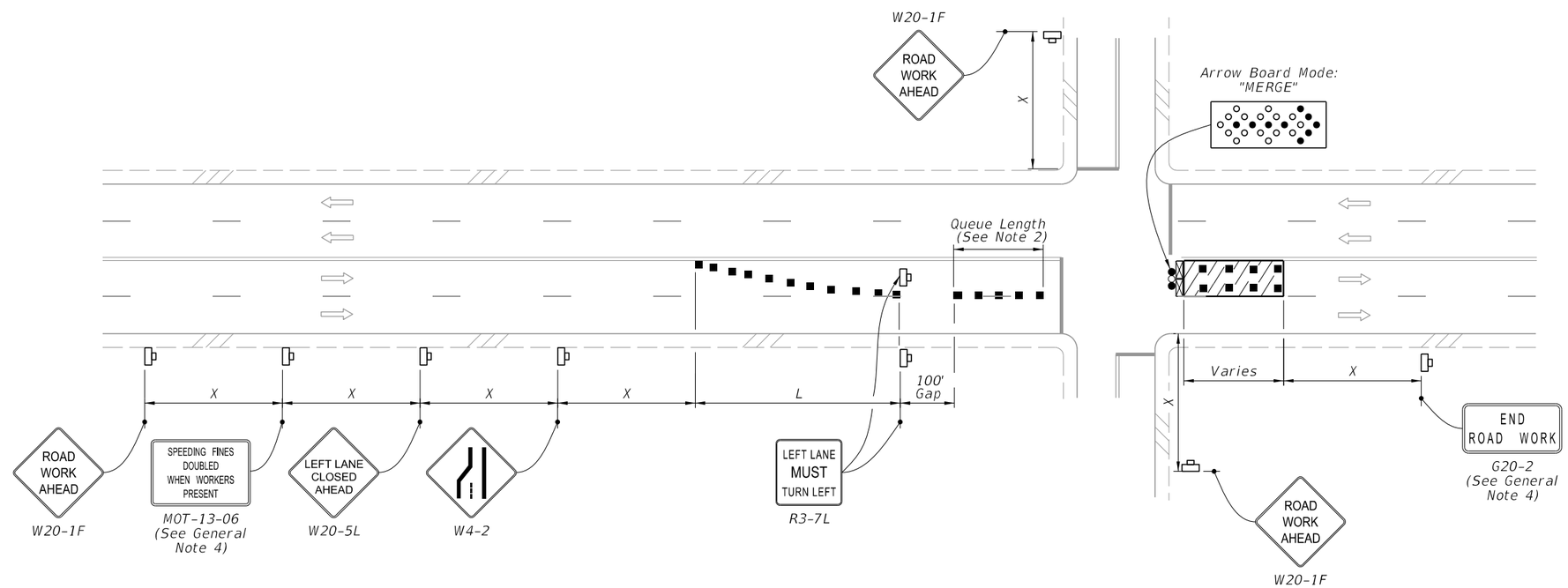

LEFT LANE CLOSED ON FAR SIDE OF INTERSECTION TURNING MOVEMENTS ALLOWED

3/4/2024 10:45:21 AM

LAST REVISION	REVISION	DESCRIPTION:			INDEX	SHEET
11/01/22			FY 2023-24 STANDARD PLANS	MULTILANE ROADWAY, INTERSECTION WORK	102-615	3 of 5

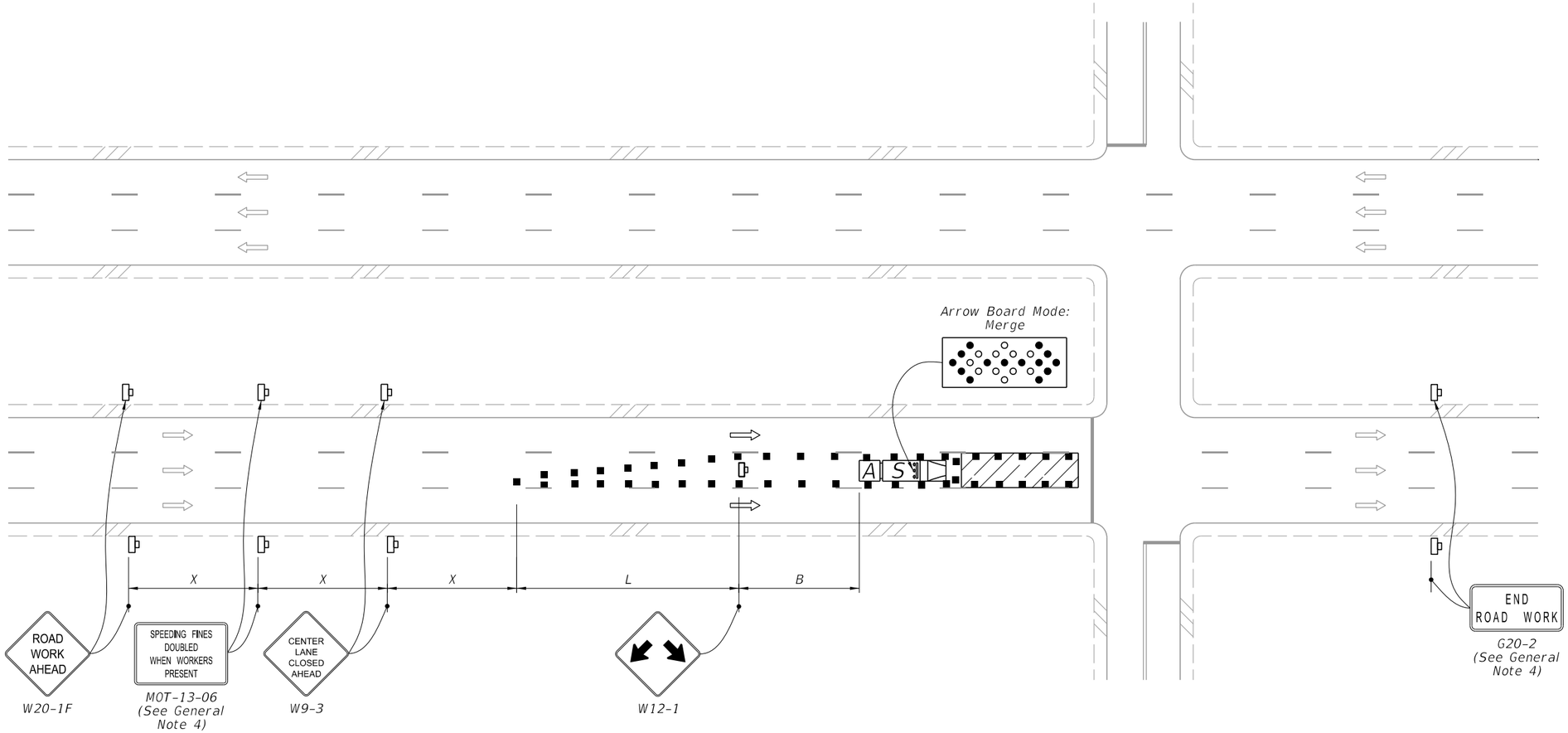

MULTILANE, WORK IN INTERSECTION CENTER LANE

NOTES:

1. Confine work operations to one center travel lane and leave the adjacent travel lanes open to traffic.

2. Ensure that the merging taper only directs vehicular traffic into either the right or left lane.

SYMBOLS:

- Work Area
- Channelizing Device (See Index 102-600)
- Work Zone Sign
- Type III Barricade
- Arrow Board
- Stop Bar
- Shadow (S) Vehicle With Warning Lights And Arrow Board
- Truck/Trailer Mounted Attenuator (TMA)
- Lane Identification and Direction of Traffic

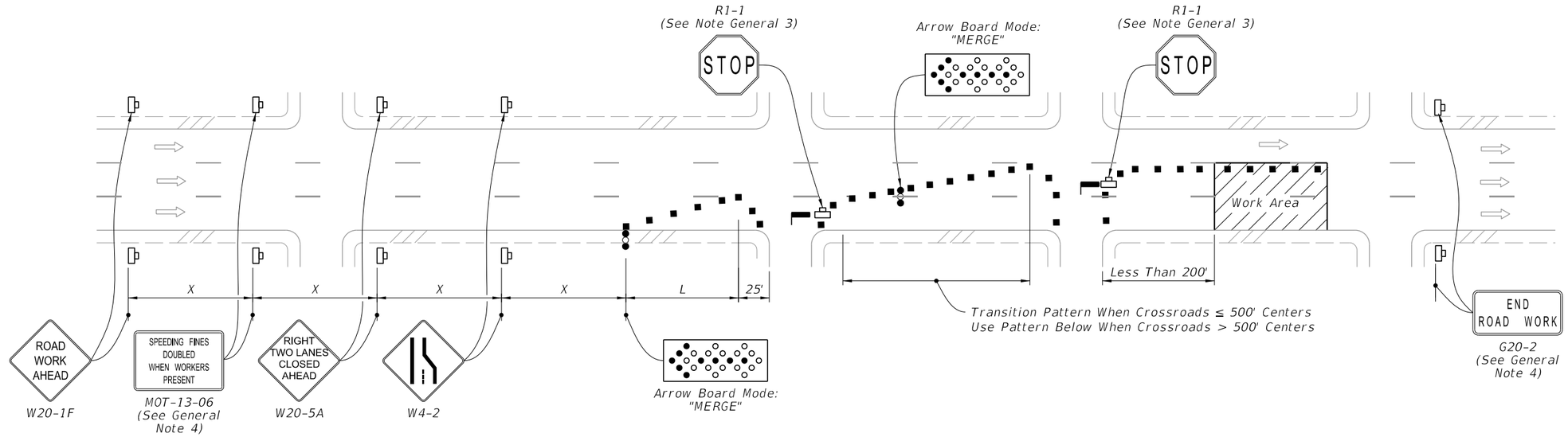

DOUBLE LANE CLOSURE FOR WORK LESS THAN 200' FROM INTERSECTION

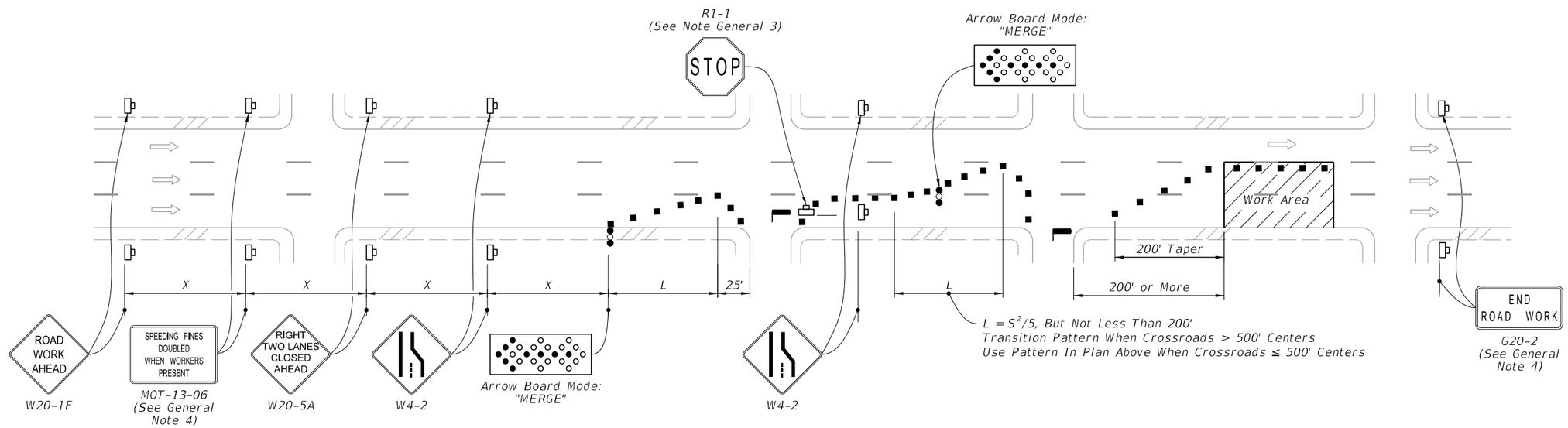

(See General Note 5)

DOUBLE LANE CLOSURE FOR WORK MORE THAN 200' FROM INTERSECTION

SYMBOLS:

- Work Area
- Channelizing Device (See Index 102-600)
- Work Zone Sign
- Arrow Board
- Stop Bar
- Lane Identification and Direction of Traffic

10/20/2022 8:45:45 AM

LAST REVISION	REVISION	DESCRIPTION:			INDEX	SHEET
11/01/22			FY 2023-24 STANDARD PLANS	MULTILANE ROADWAY, INTERSECTION WORK	102-615	5 of 5

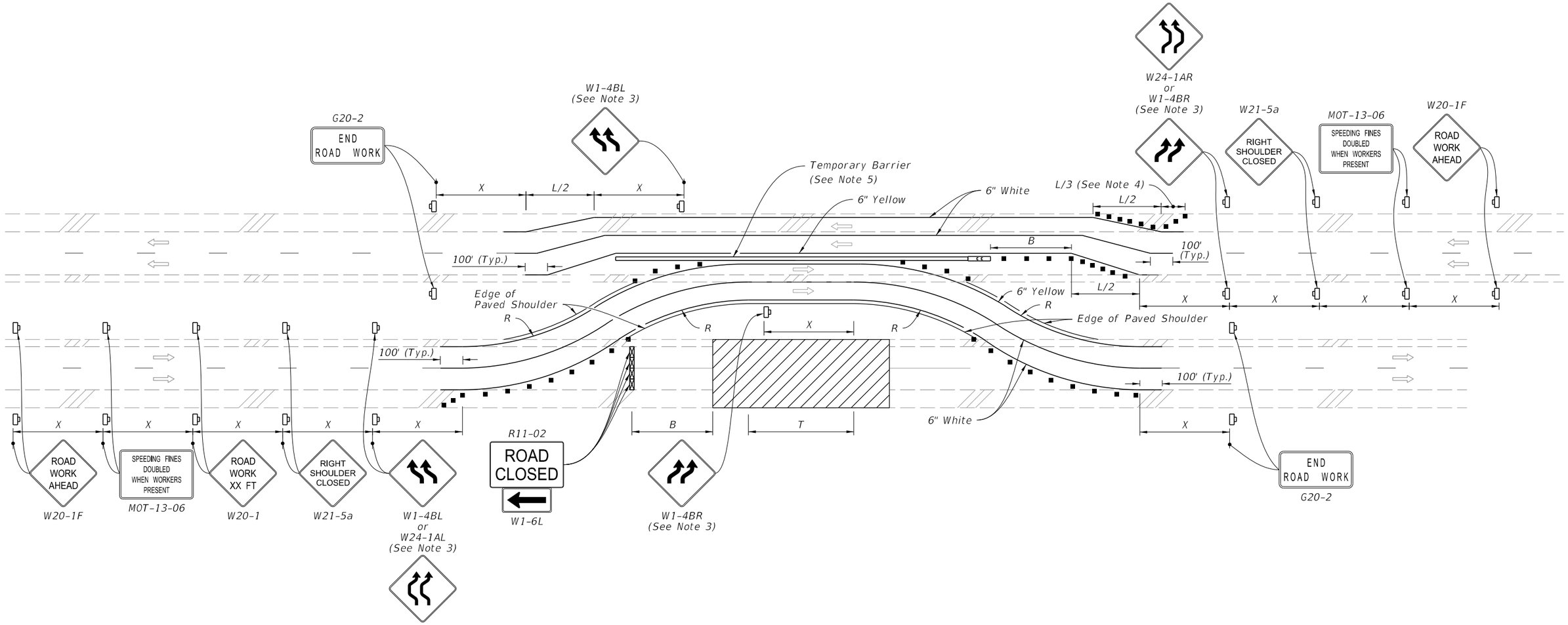

TEMPORARY DIVERSION FOR DIVIDED ROADWAYS

SYMBOLS:

- Work Area
- Channelizing Device (See Index 102-600)
- Work Zone Sign
- Type III Barricade
- Crash Cushion
- Lane Identification and Direction of Traffic

NOTES:

1. This Index applies to multilane roadways, except with undivided roadways with 6 or more lanes, where the work requires the closure of the lanes in one direction and diversion is provided to convert the opposing traffic lanes to temporary two-way travel.

2. L = Taper Length
   B = Buffer Length
   X = Work Zone Sign Distance
   R = Radius of Curve
   See Index 102-600 for "L", "B", "X", channelizing device spacing values. See Plans for "R" values.

3. For undivided roadways with a tangent distance "T" less than 600', use "Double Reverse Curve" signs (W24-1A) instead of the first pair of "Reverse Curve" signs (W1-4B) and omit the second pair of "Reverse Curve" signs.

4. If the paved shoulder is less than 4' in width, omit the taper and channelizing devices shown on the paved shoulder.

5. Temporary Lane Separator may be used in lieu of Temporary Barrier for speed limits of 45 mph or less.

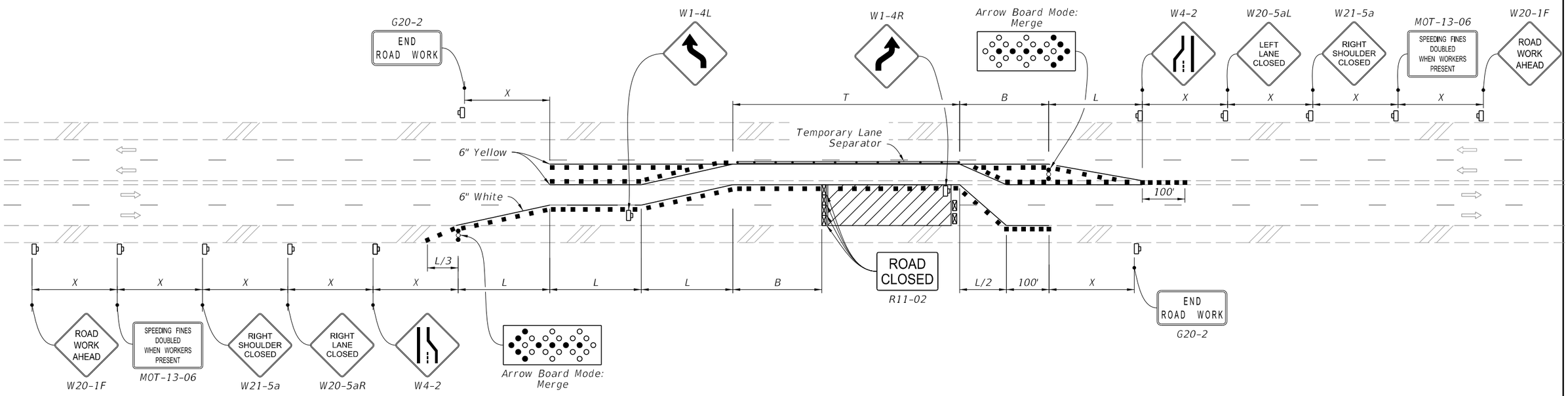

TEMPORARY DIVERSION FOR UNDIVIDED ROADWAYS

NOTE:

Temporary pavement markings may be omitted when the work operation is in place for 3 days or less.

SYMBOLS:

- Work Area
- Channelizing Device (See Index 102-600)
- Work Zone Sign
- Type III Barricade
- Crash Cushion
- Lane Identification and Direction of Traffic

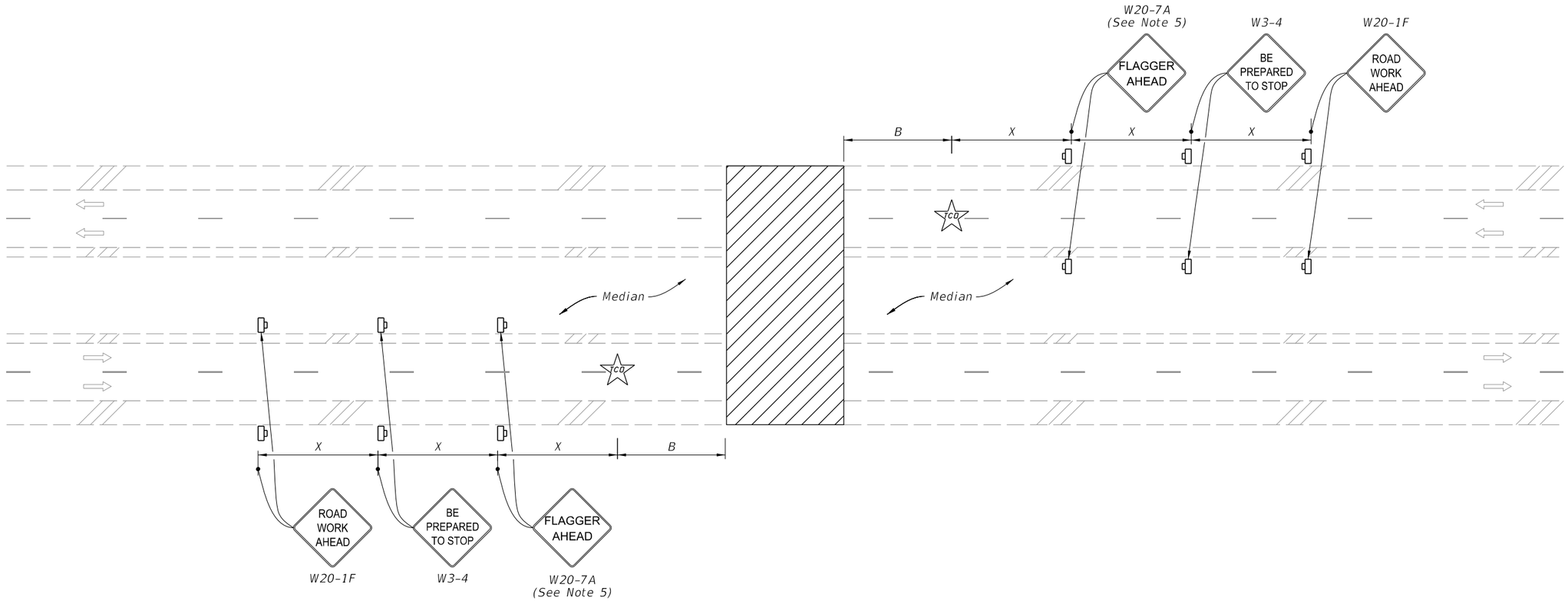

(Multilane Roadway Shown, Two-Lane Roadway Similar)

SYMBOLS:

- Work Area
- Work Zone Sign
- Traffic Control Officer
- Lane Identification and Direction of Traffic

NOTES:

1. This Index applies to two-lane, two-way and multilane roadways, except limited access facilities, with temporary daytime roadway closures of 5 minutes or less.

2. B = Buffer Length
   X = Work Zone Sign Distance
   See Index 102-600 for "B" and "X" values.

3. For Two-Lane Roadways, a Flagger may substitute the traffic control officer with approval of the Engineer.

4. Traffic volume or complexly of the roadway may dictate additional signs, devices or traffic control officers.

5. Optionally, use FLAGGER AHEAD sign with symbol (W20-7) instead of FLAGGER AHEAD sign with text (W20-7A).

6. Dual Signs are required for divided roadways only.

10/20/2022 8:45:47 AM

LAST REVISION	REVISION	DESCRIPTION:	FY 2023-24 STANDARD PLANS	TEMPORARY ROADWAY CLOSURE	INDEX	SHEET
11/01/20					102-625	1 of 1

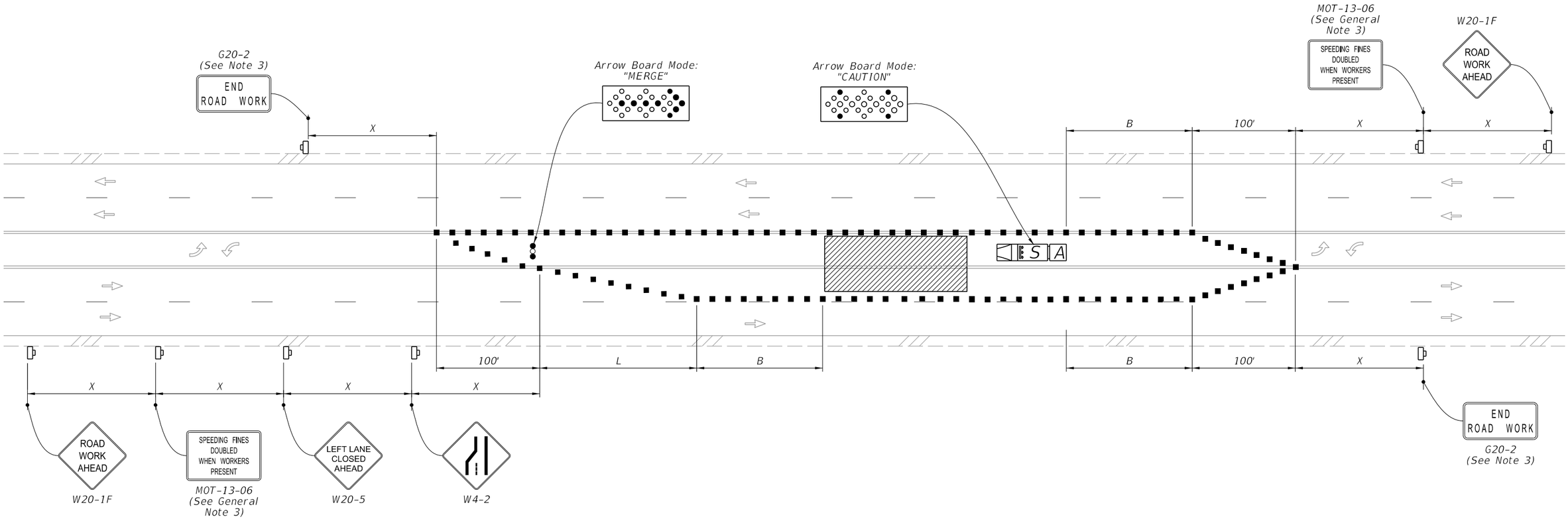

TEMPORARY MULTILANE, TWO-WAY LEFT-TURN LANE, TURN LANE CLOSURE

(Closure of One Inside Lane Shown, Closure of both Similar)

SYMBOLS:

- Work Area
- Channelizing Device (See Index 102-600)
- Work Zone Sign
- Arrow Board
- Shadow (S) Vehicle With Warning Lights And Arrow Board
- Truck/Trailer Mounted Attenuator (TMA)
- Lane Identification and Direction of Traffic

GENERAL NOTES:

1. This Index applies to roadways with work in the two-way left-turn lane.

2. L = Taper Length
   X = Work Zone Sign Distance
   B = Buffer Length
   See Index 102-600 for "L", "X", "B", and channelizing device spacing values.

3. The "Speeding Fines Doubled When Workers Present" signs (MOT-13-06) and "End Road Work" Sign (G20-2), along with associated Work Zone Sign Distances, may be omitted when the work operation will be in place for 24 hours or less.

4. If closure of both inside lanes on multilane roadways is needed, duplicate lane closure and merge; signs, channelizing devices, taper, and arrow board, for both directions

10/20/2022 8:45:48 AM

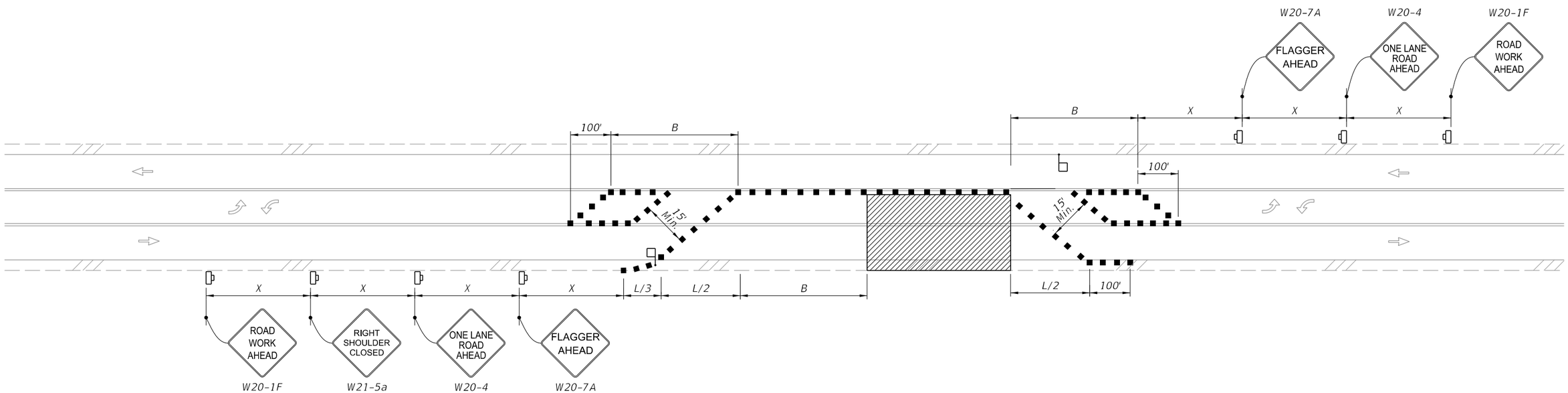

TEMPORARY TWO-WAY LEFT-TURN LANE CLOSURE, TWO-LANE, TWO-WAY ROADWAY, WORK WITHIN THE TRAVELED WAY WITH LANE CLOSURES OF 24 HRS OR LESS AND WORK ZONE SPEED OF 45 MPH OR LESS

SYMBOLS:

- Work Area
- Channelizing Device (See Index 102-600)
- Work Zone Sign
- Flagger
- Lane Identification and Direction of Traffic

10/20/2022 8:45:48 AM

LAST REVISION	REVISION	DESCRIPTION:			INDEX	SHEET
11/01/20			FY 2023-24 STANDARD PLANS	TWO-WAY LEFT-TURN LANES	102-628	2 of 3

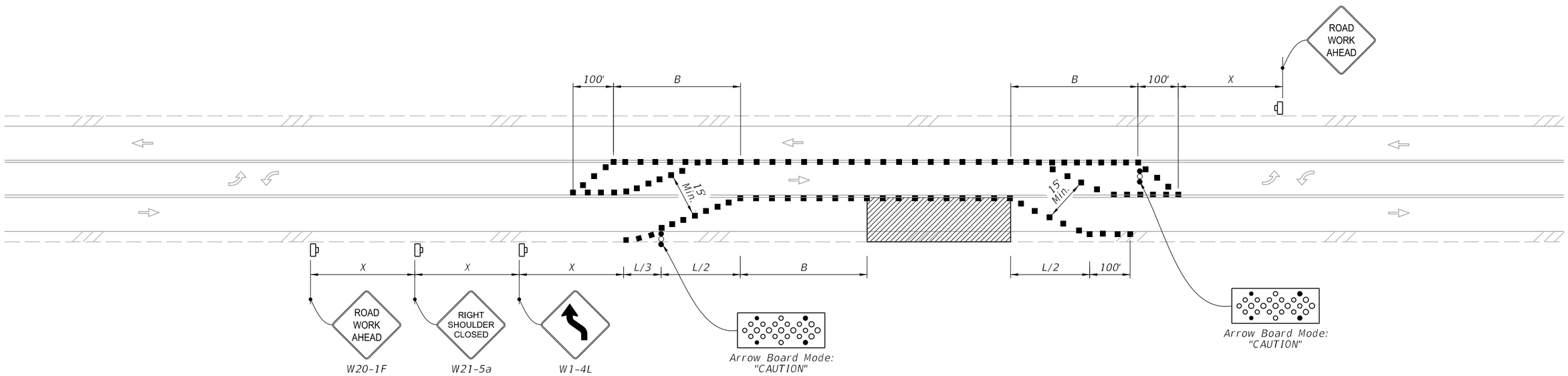

TEMPORARY SHIFT TO TWO-WAY LEFT-TURN LANE, WORK WITHIN THE TRAVELED WAY WITH LANE CLOSURES OF 24 HRS OR LESS AND WORK ZONE SPEED OF 45 MPH OR LESS

SYMBOLS:

- Work Area
- Channelizing Device (See Index 102-600)
- Work Zone Sign
- Arrow Board
- Flagger
- Lane Identification and Direction of Traffic

10/20/2022 8:45:49 AM

LAST REVISION	REVISION	DESCRIPTION:			INDEX	SHEET
11/01/21			FY 2023-24 STANDARD PLANS	TWO-WAY LEFT-TURN LANES	102-628	3 of 3

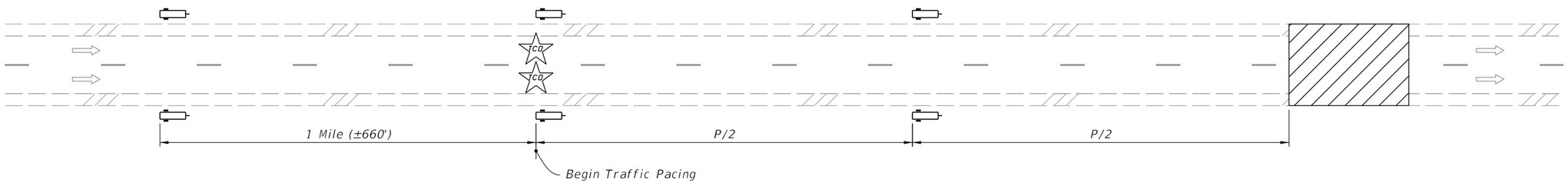

TYPICAL PCMS DISPLAY:

During day of pacing operation:
Message 1: ROAD WORK TONIGHT
Message 2: EXPECT PERIODIC DELAYS

During pacing operation:
Message 1: SLOW TRAFFIC AHEAD
Message 2: BE PREPARED TO STOP

One week prior to pacing operation (Optional):
Message 1: EXPECT DELAYS ON
Message 2: (Month Day Time)

SYMBOLS:

- Work Area
- Portable Changeable Message Sign (PCMS)
- TCO — Traffic Control Officer
- Lane Identification and Direction of Traffic

NOTES:

1. P = Traffic Pacing Length
   For "P" value, see Traffic Pacing Length table or calculate using Formulas.
2. See the Plans for traffic pacing restrictions.
3. Do not exceed work duration of 30 minutes or traffic pacing length of 10 miles.
4. Coordinate with the traffic control officer supervisor to provide the correct number of traffic control officers for each traffic pacing operation. Ensure traffic control officers are located at roadway access points in accordance with the pacing plan.
5. Ensure that the necessary equipment is properly positioned for the work before requesting that the traffic control officer supervisor initiate the traffic pacing operation.
6. If workers or equipment are within the traveled way during the traffic pacing operation, use a truck- or trailer-mounted attenuator with portable changeable message sign to protect the work.
7. For work durations of less than five minutes (e.g, moving large vehicles across the roadway), portable changeable message signs and truck-mounted attenuators are not required. Use traffic pacing length values from the five minute column of the table.
8. Where feasible, do not pace traffic past the last available existing egress until the work has been completed.
9. When more than one traffic pacing operation is required in a calendar day, allow sufficient time between pacing operations to permit traffic to return to normal speed and flow.
10. Maintain communications with all police vehicles throughout the traffic pacing.

TRAFFIC PACING LENGTH "P"

Pacing Speed = 20 mph

Work Zone Speed (mph)	Work Duration (minutes)					
	5	10	15	20	25	30
70	2.3	4.7	7.0	9.3	–	–
65	2.4	4.8	7.2	9.6	–	–
60	2.5	5.0	7.5	10.0	–	–
55	2.6	5.2	7.9	–	–	–
50	2.8	5.6	8.3	–	–	–

NOTES: (1) All lengths in the above table are in miles.
(2) For work durations with no values shown above, calculate length using a reduced pacing speed, but not less than 10 mph.

FORMULAS:

S_w = Work Zone Speed (mph)
S_p = Pacing Speed (mph)
t_w = Work Duration (minutes)
P = Traffic Pacing Length (miles)

$$P = \frac{t_w}{60} S_p \left(\frac{S_p}{S_w - S_p} + 1 \right)$$

$$P = P_c + P_w$$

P_c = distance paced vehicles must travel before the vehicles at regulatory speed have cleared the work zone

$$P_c = \left(\frac{\frac{t_w}{60} \times S_p^2}{S_w - S_p} \right)$$

P_w = distance paced vehicles travel while work is performed

$$P_w = \left(\frac{t_w}{60} \times S_p \right)$$

10/20/2022 8:45:50 AM

LAST REVISION	REVISION	DESCRIPTION:			INDEX	SHEET
11/01/20			FY 2023-24 STANDARD PLANS	TRAFFIC PACING	102-655	1 of 1

NOTES:

1. Cover or deactivate pedestrian traffic signal display(s) controlling closed crosswalks.
2. Place pedestrian LCDs across the full width of the closed sidewalk.
3. For post mounted signs located near or adjacent to a sidewalk, maintain a minimum 7' clearance from the bottom of the sign panel to the surface of the sidewalk.
4. "Sidewalk Closed" signs (R9-XX) may be mounted on pedestrian LCDs in accordance with the manufacturer's instructions.
5. Omit the Advance Closure LCD if it blocks access to other pedestrian facilities (e,g,, transit stops, residences, or business entrances).

SYMBOLS:

- Work Area
- Work Zone Sign
- Pedestrian Longitudinal Channelizing Device (LCD)
- Lane Identification and Direction of Traffic

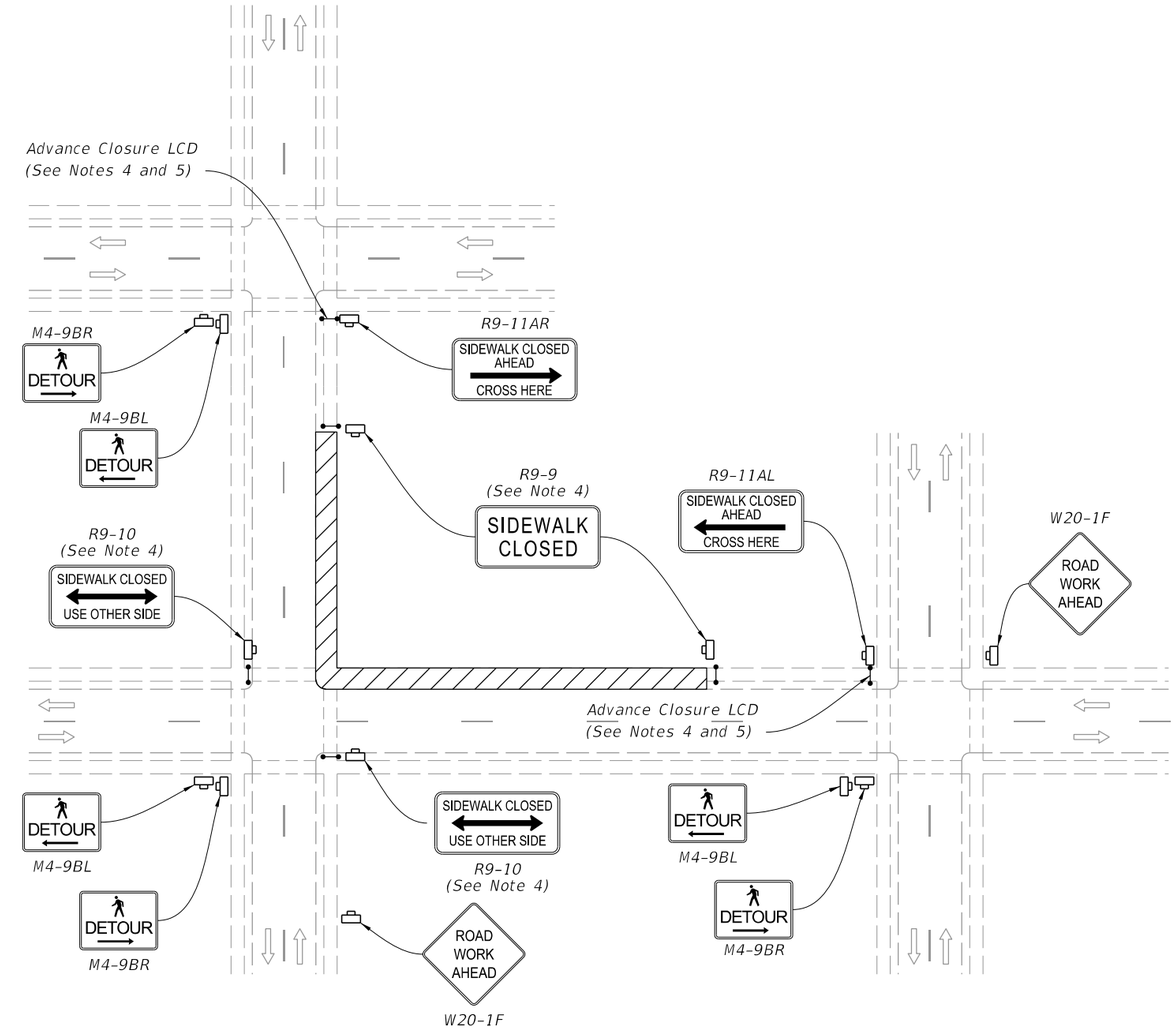

PEDESTRIAN DETOUR

10/20/2022 8:45:50 AM

LAST REVISION	REVISION	DESCRIPTION:			INDEX	SHEET
11/01/20			FY 2023-24 STANDARD PLANS	SIDEWALK CLOSURE	102-660	1 of 2

NOTES:

1. L = Taper Length
   B = Buffer Length
   X = Work Zone Sign Distance
   See Index 102-600 for "L", "B", "X", channelizing device spacing values.

2. Provide a 5' wide temporary pedestrian way with a maximum cross-slope of 0.02, except where space restrictions warrant a minimum width of 4'. Provide a 5' x 5' passing space for temporary pedestrian ways less than 5' in width at intervals not to exceed 200'.

3. When temporary pedestrian ways require curb ramps, meet the requirements of Index 522-002. Detectable warnings are not required for curb ramps diverting pedestrian traffic into a closed lane.

4. The "Speeding Fines Doubled When Workers Present" signs (MOT-13-06) and "End Road Work" signs (G20-2), along with associated work zone sign distances, may be omitted when the work operation will be in place for 24 hours or less.

5. Pedestrian Diversion Option 2 may only be used when called for in the Plans or as approved by an Engineer.

SYMBOLS:

- Work Area
- Temporary Pedestrian Way
- Channelizing Device (See Index 102-600)
- Pedestrian Longitudinal Channelizing Device (LCD)
- Work Zone Sign
- Arrow Board
- Crash Cushion
- Lane Identification and Direction of Traffic

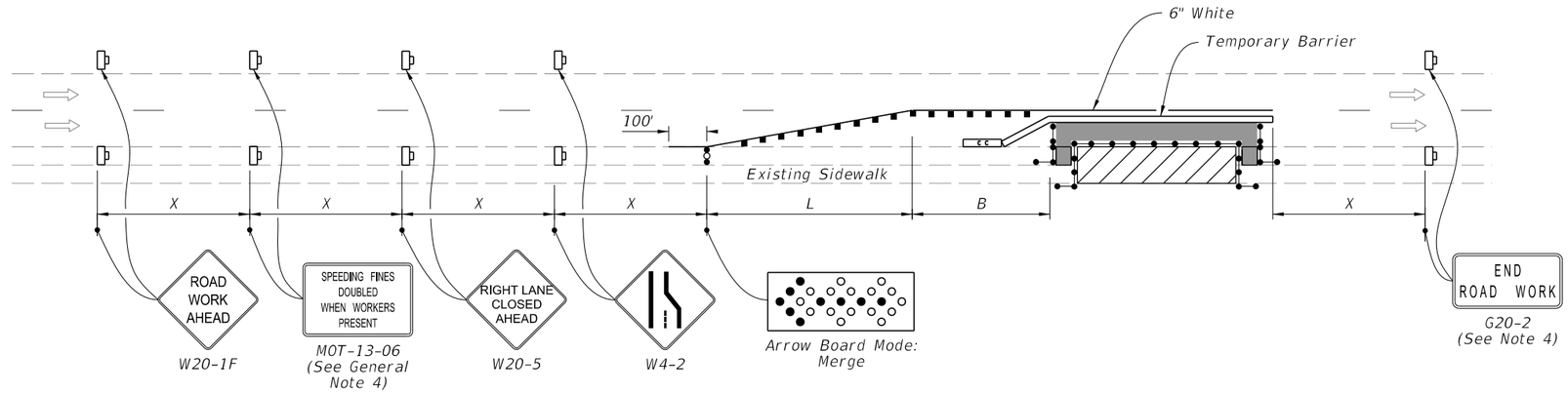

PEDESTRIAN DIVERSION - OPTION 1
(Temporary Barrier Shown, Low Profile Barrier Similar)

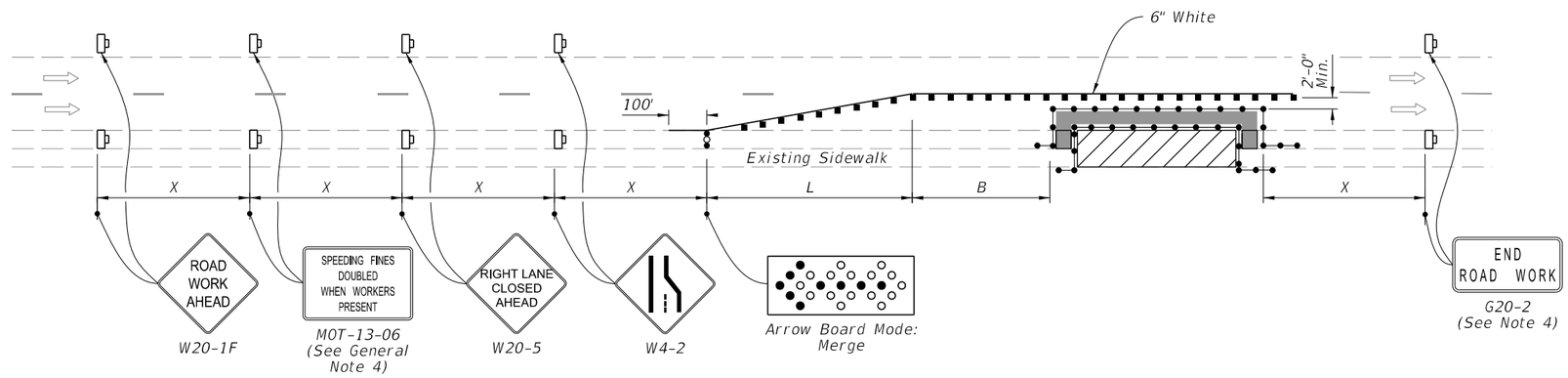

PEDESTRIAN DIVERSION - OPTION 2
(Work Zone Speed 35 mph or Less)

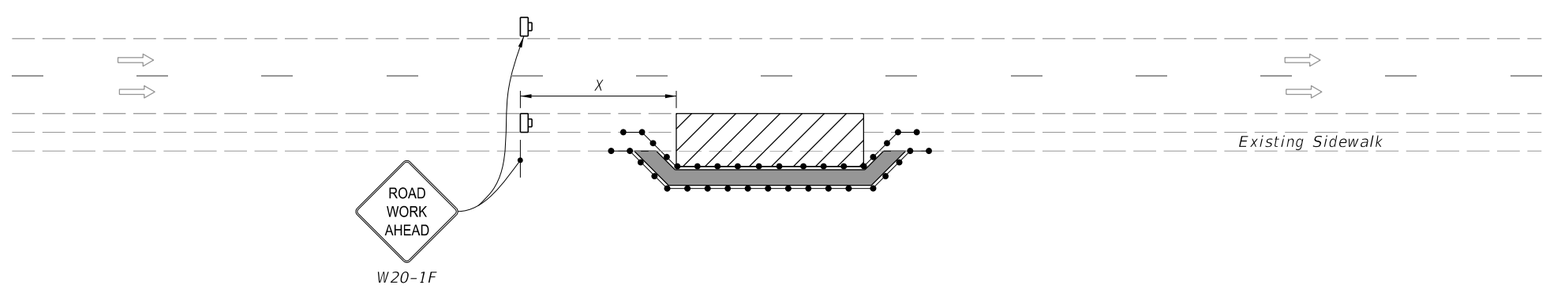

PEDESTRIAN SPECIAL DETOUR

10:19:10 AM

2/21/2023

LAST REVISION	REVISION	DESCRIPTION:			INDEX	SHEET
11/01/21			FY 2023-24 STANDARD PLANS	SIDEWALK CLOSURE	102-660	2 of 2

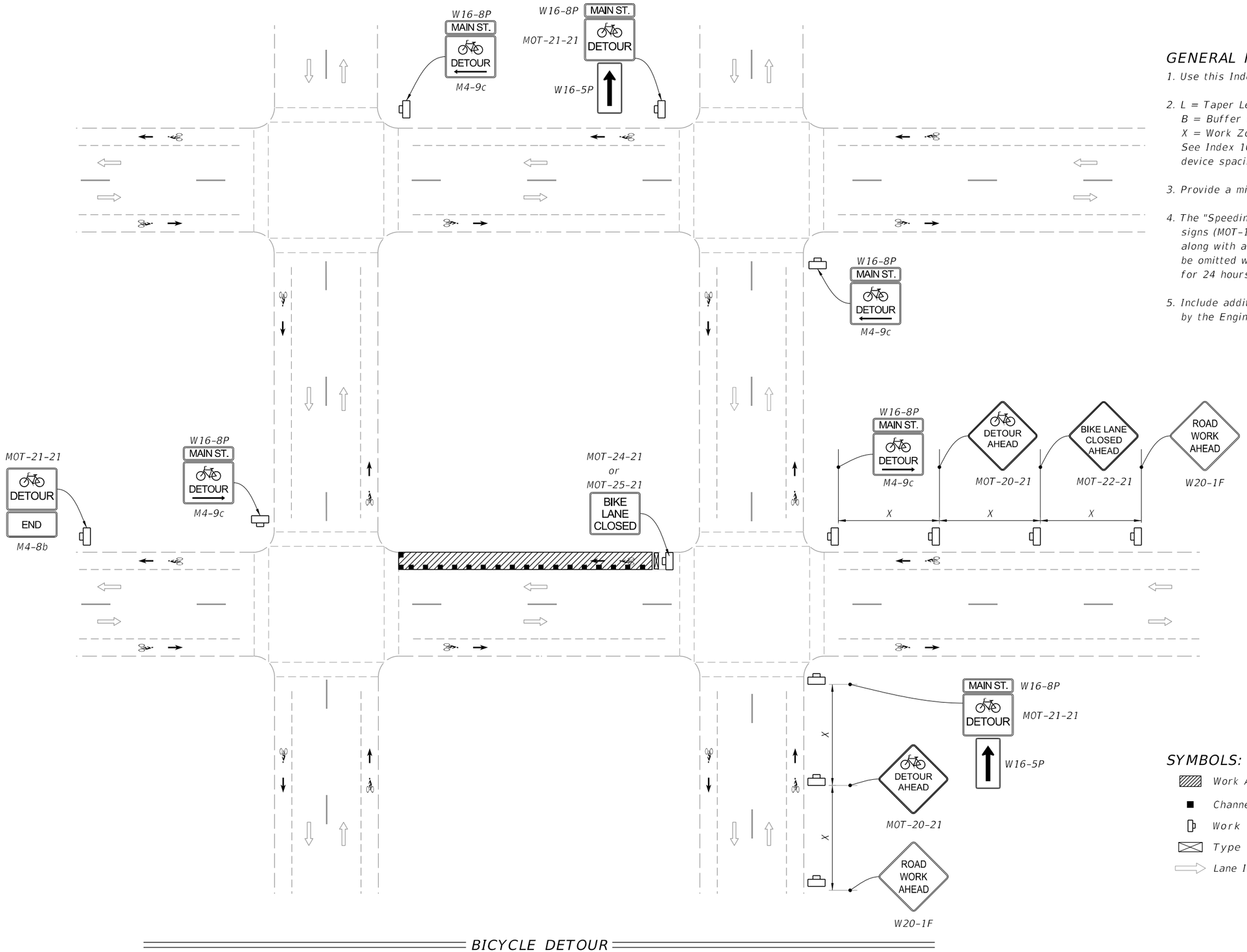

BICYCLE DETOUR

GENERAL NOTES:

1. Use this Index only when called for in the Plans.
2. L = Taper Length
   B = Buffer Length
   X = Work Zone Sign Distance
   See Index 102-600 for "L", "B", "X", channelizing device spacing values.
3. Provide a minimum 5'-0" wide bicycle path.
4. The "Speeding Fines Doubled When Workers Present" signs (MOT-13-06) and "End Road Work" signs (G20-2), along with associated work zone sign distances, may be omitted when the work operation will be in place for 24 hours or less.
5. Include additional signage at intersections as required by the Engineer or shown in the Plans.

SYMBOLS:

- Work Area
- Channelizing Device (See Index 102-600)
- Work Zone Sign
- Type III Barricade
- Lane Identification and Direction of Traffic

10/20/2022 8:45:52 AM

LAST REVISION	REVISION	DESCRIPTION:			INDEX	SHEET
11/01/21			FDOT FY 2023-24 STANDARD PLANS	BICYCLE FACILITY CLOSURES	102-661	1 of 2

NOTES:

1. Temporary pavement markings may be omitted when the work operation is in place for 3 days or less.
2. If the Closed Bicycle Facility is a marked bicycle lane, use sign MOT 22-21 instead of sign W21-5a.
3. If the travel lane is less than 14' wide, use sign R4-11.

SYMBOLS:

- Work Area
- Temporary Bicycle Way
- Channelizing Device (See Index 102-600)
- Work Zone Sign
- Arrow Board
- Lane Identification and Direction of Traffic
- (1) PCMS=Portable Changeable (Variable) Message Sign

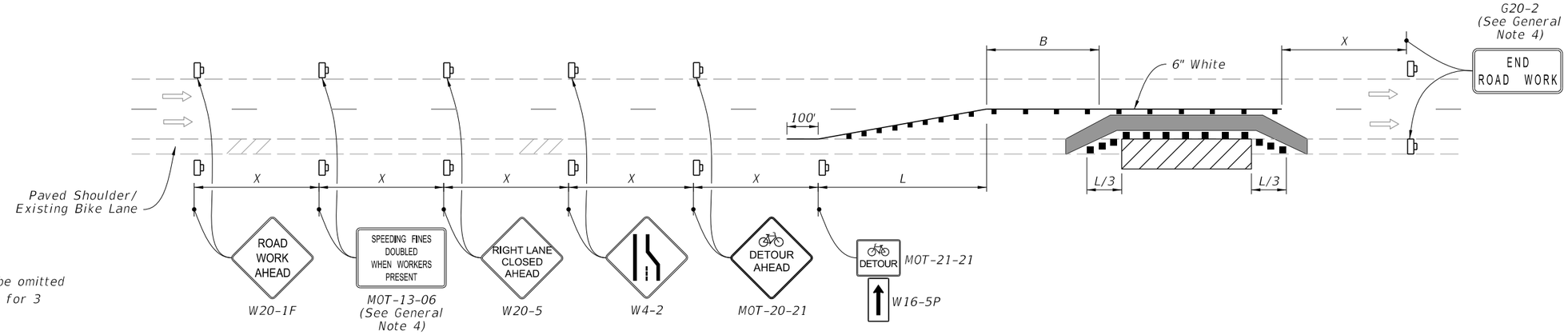

BICYCLE FACILITY SHIFT
(With Lane Closure)

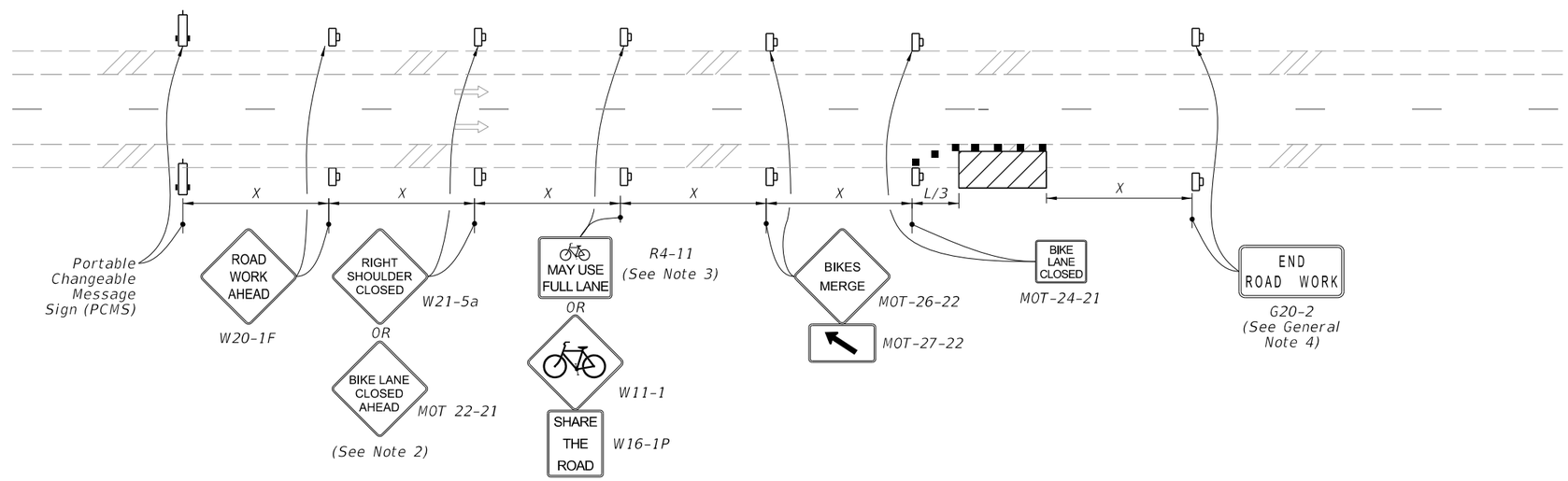

BICYCLE FACILITY SHIFT
(Work Zone Speed of 35 mph or Less)

TYPICAL PCMS DISPLAY:

Message 1: BIKE FACILITY CLOSED

Message 2: BICYCLES ON ROAD

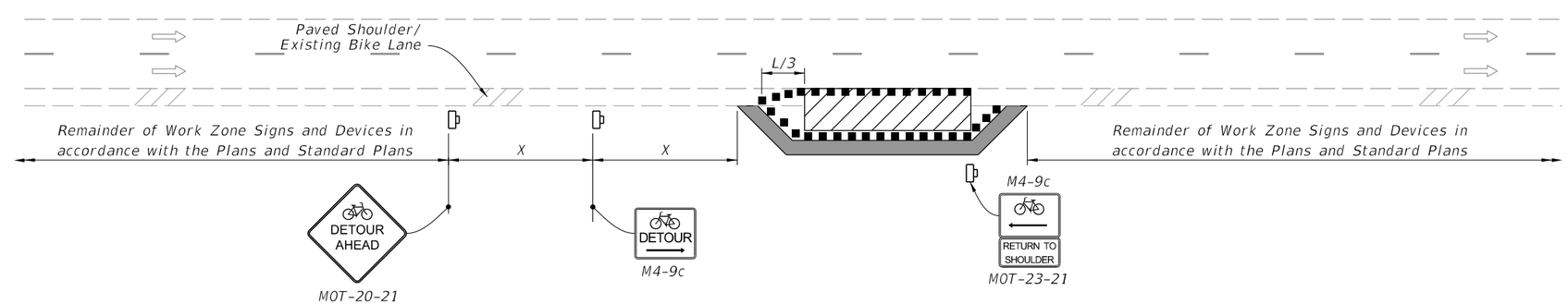

BICYCLE SPECIAL DETOUR

10/20/2022 8:45:52 AM

LAST REVISION	REVISION	DESCRIPTION:			INDEX	SHEET
11/01/21			FY 2023-24 STANDARD PLANS	BICYCLE FACILITY CLOSURES	102-661	2 of 2

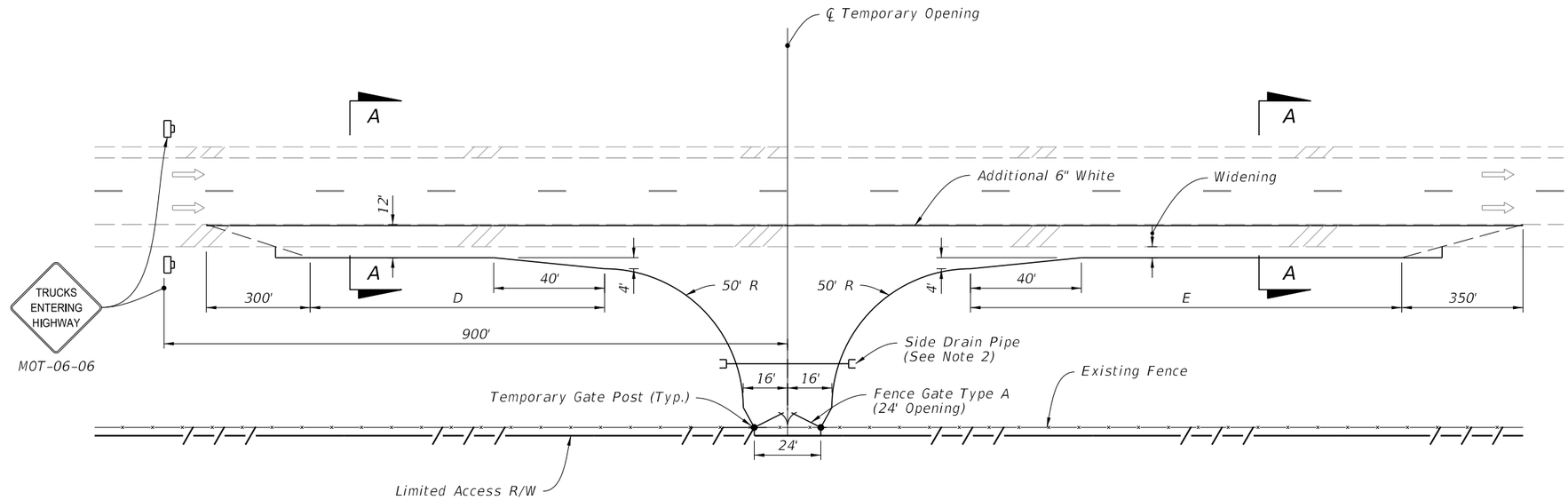

NOTES:

1. X = Work Zone Sign Distance, see Index 102-600 for "X" value.
2. Use mitered end sections for any end sections within the clear zone.
3. Match cross slope of existing shoulder for widening.
4. Provide 2' of unpaved shoulder outside of the widening.
5. No more than two (2) access openings will be allowed on each project.
6. Do not vary from the plan detail without approval of the Engineer.

SYMBOLS:

Work Zone Sign

Lane Identification and Direction of Traffic

LENGTH OF ACCESS LANES		
Grade	D (feet)	E (feet)
2% or less	590	1540
3 to 4% Upgrade	530	2310
3 to 4% Downgrade	710	925

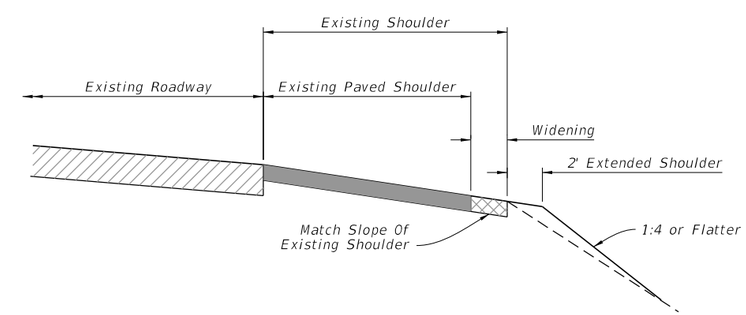

SECTION A-A

10/20/2022 8:45:53 AM

LAST REVISION	REVISION	DESCRIPTION:				
11/01/20			FY 2023-24 STANDARD PLANS	LIMITED ACCESS TEMPORARY OPENING	INDEX 102-665	SHEET 1 of 1

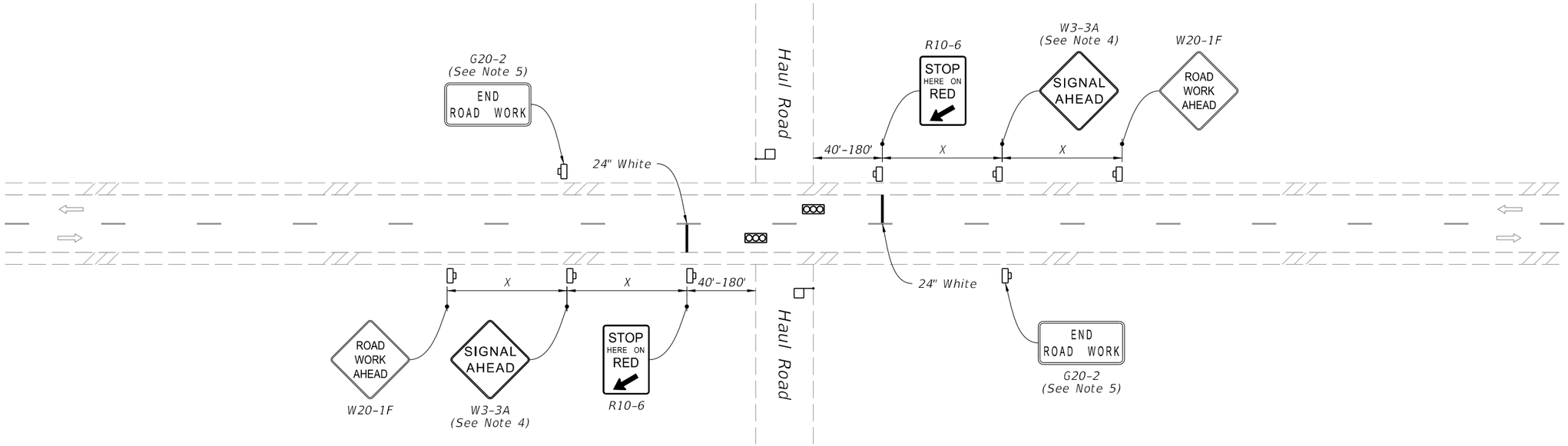

(Two-Lane Roadway Shown, Multilane Roadway Similar)

SYMBOLS:

- Work Zone Sign
- Temporary Traffic Signal
- Flagger
- Lane Identification and Direction of Traffic

NOTES:

1. This Index is intended for two-way and multilane roadways, excluding limited access facilities, with haul roads that intersect the roadway.
2. X=Work Zone Sign Distance, see Index 102-600 for "X" values.
3. Use Type III Barricades to block haul road access when the haul road is not in operation and a flagger/signal operator is not on duty, except when the haul road is an existing properly marked road.
4. Optionally, use "Signal Ahead" signs with symbols (W3-3) instead of "Signal Ahead" signs with text (W3-3A).
5. The "End Road Work" signs (G20-2) may be omitted when the work operation is in place for 24 hours or less.
6. Optionally, use temporary traffic signals for control of the haul road.

NOTES:

1. Critical Root Zone: Extends in all directions from trunk of tree to a distance equal to one foot per inch of trunk diameter at breast height.
2. Staging, storage, dumping, washing and operation of equipment is not permitted within the limits of the tree protection barrier, including during barrier installation.
3. Install all tree protection prior to commencement of construction and remove when directed by the Engineer. Maintain protection at all times.
4. For closely spaced groups of trees, place the tree protection barrier around the entire group.
5. Inspect trunk protection and tree quarterly to prevent girdling. Adjust bands to allow tree growth as needed.
6. See plans for any additional requirements or modifications within the tree protection area.
7. Place weather resistant sign every 50' along the barrier, with 6" minimum text height and provide text in English and Spanish. Sign should read " Keep Out Tree Protection Area".
8. Alternate tree protection systems approved by the Engineer may be used in lieu of the tree protection barrier detailed on this Index as long as the critical root zone is protected.
9. The Critical Root Zone may be reduced, in the field, by a certified Arborist or Landscape Architect.

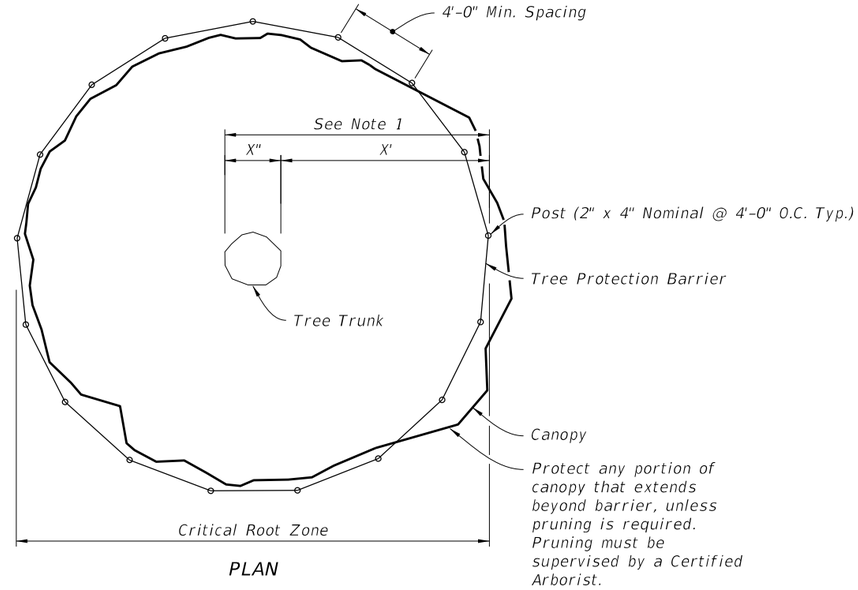

PLAN

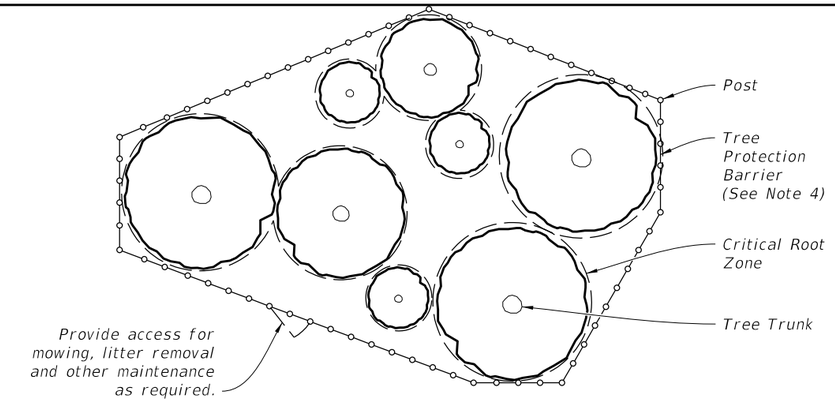

PLAN

PROTECTION BARRIER FOR TREE GROUPINGS

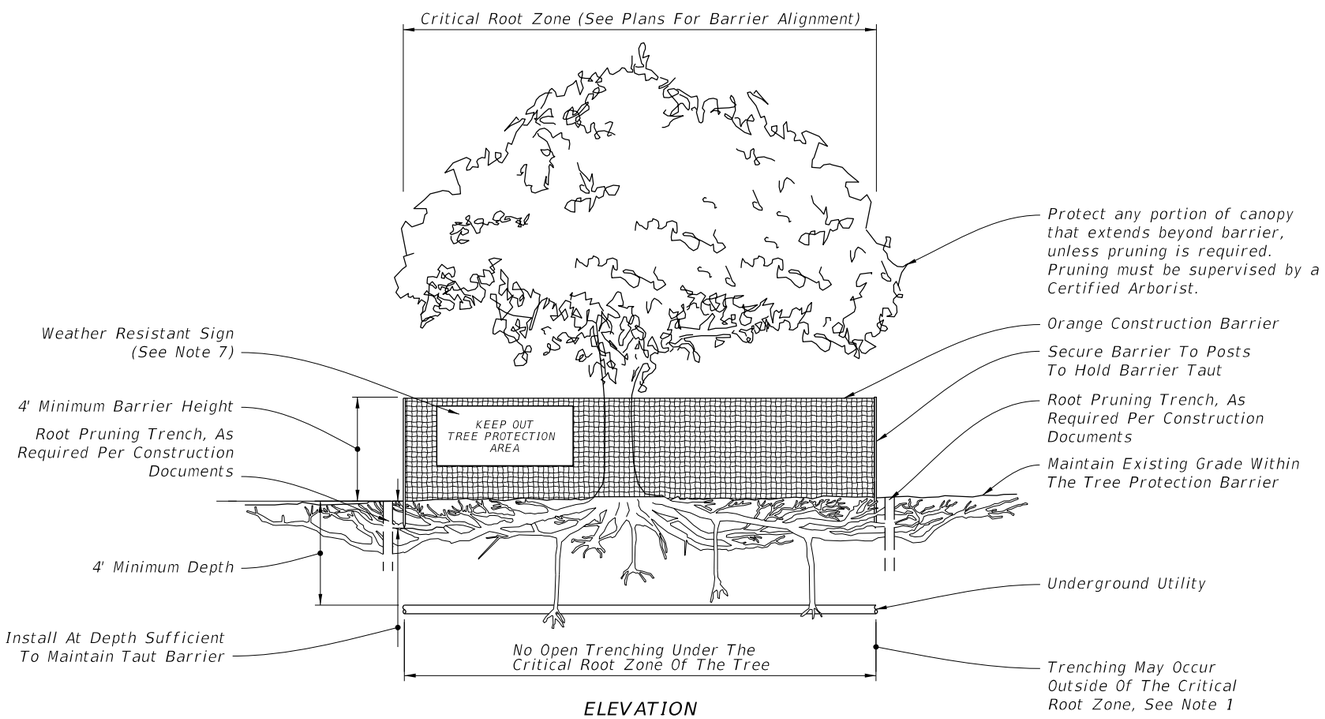

ELEVATION

TREE PROTECTION BARRIER

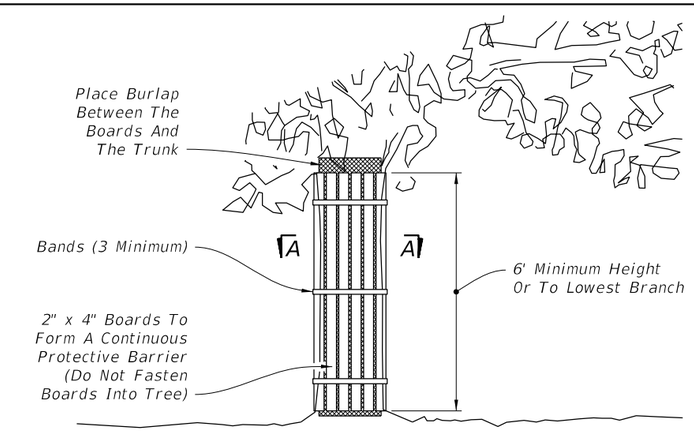

ELEVATION

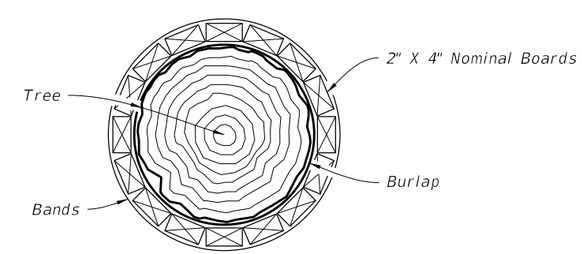

SECTION A-A

NOTES:

1. Trunk protection may be used when Tree Protection Barrier can not be reasonably erected, when approved by Engineer.
2. See Selective Clearing and Grubbing Plan for location of trunk protection, when applicable.
3. Adjust bands to allow tree growth (inspect quarterly to prevent girdling).

TRUNK PROTECTION

10/20/2022 8:45:55 AM

LAST REVISION	REVISION	DESCRIPTION:			INDEX	SHEET
11/01/18			FY 2023-24 STANDARD PLANS	TREE PROTECTION AND PRESERVATION	110-100	1 of 1

GENERAL NOTES:

1. The location and construction of mailboxes shall conform to the rules and regulations of the United States Postal Service as modified by this Index.

2. Mailboxes will not be permitted on Interstate highways, freeways, or other highways where prohibited by law or regulation.

3. The contractor shall give the Postmaster of the delivery route(s) written notice of project construction 7 days prior to the beginning of work, with Saturdays, Sundays and Holidays excluded.

   The Contractor shall furnish and install one mailbox in accordance with this Index at each mail patron delivery location and maintain the box throughout the contract period. The Contractor shall apply box numbers to each patron box in accordance with identification specifications of the Domestics Mail Manual of the U. S. Postal Service; where local street names and house numbers are authorized by the Postmaster as a postal address, the Contractor shall inscribe the house number on the box; if the box is located on a different street from the patrons residence, the Contractor shall inscribe the street name and house number on the box.

   The Contractor shall coordinate removal of the patrons existing mailboxes. Immediately after installing the new mailboxes the Contractor must notify each "Mail Delivery Patron" by Certified Mail that removal of the existing mailboxes must be accomplished in 21 days after receipt of notices. Patrons shall have the option of removing their existing mailboxes or leaving the mailboxes in place for removal by the Contractor; removal by the Contractor shall be included in the contract unit price for Mailbox, Each. The Contractor shall dispose of mailboxes and supports in areas provided by him.

   Reuse of existing mailboxes by the Contractor will not be a requirement under any construction project; however where an existing mailbox meets the design requirements of this Index and is structurally and functionally sound, the Contractor at his option may elect to reuse the existing mailbox in lieu of constructing a new mailbox. Any use of existing mailboxes must be approved by the Engineer.

4. Mailboxes shall be light sheet metal or plastic construction, in traditional style only, and only in Size 1 as prescribed by the Domestic Mail Manual of the U. S. Postal Service (DMM).

   Mailbox production standards, lists of approved manufacturers and suppliers of mailboxes, design approval and guidance may be obtained by writing to the Rural Delivery Division, Delivery Service Department, Operations Group, USPS Headquarters, Washington, DC 20260.

5. Mailboxes shall be located on the right-hand side of the roadway in the direction of the delivery route, except on one-way roads and streets where they may be placed on the left-hand side.

   Mailboxes on rural highways shall be set with the roadside face of the box offset from the edge of the traveled way a minimum distance of the greater of the following:

   a. Shoulder width plus 8" to 12"

   b. 10' for ADT over 10,000 vpd
      8' for ADT 100 to 10,000 vpd
      6' for ADT under 100 vpd
      2'-6" for low speed and ADT under 100 vpd

   When a mailbox is installed within the limits of guardrail it should be placed behind the guardrail whenever practical.

   Mailboxes on curbed highways, roads, and streets shall be set with the face of the box between 6" and 12" behind the face of curb. If the sidewalk abuts the curb or if an unusual condition exists which makes it difficult or impractical to install or serve boxes at the curb, the Contractor, with concurrence of the local postal authority, may be permitted to install all mailboxes at the back edge of the sidewalk, where they can be served by the carrier from the sidewalk.

6. Mailboxes shall be set with the bottom of the box between 42" and 48" above the mail stop surface, unless the U.S. Postal Service establishes other height restrictions.

7. No more than two mailboxes may be mounted on a support structure unless the support structure and mailbox arrangements have been shown to be safe by crash testing in accordance with NCHRP Report 350.

   Neighborhood Delivery and Collection Box Units (NDCBU) are a specialized multiple mailbox installation that must be located outside the highway and street clear zones. The location of NDCBUs is the sole responsibility of the Postmaster for the delivery route under consideration.

8. Lightweight newspaper receptacles may be mounted below the mailbox on the side of the support post in conformance with the USPS Domestic Mail Manual. The mail patron shall be responsible for newspaper receptacle installation and maintenance.

9. Wood and steel support posts for both single and double mailbox mountings shall be embedded no more than 24" into the ground.

   Concrete, block, brick, stone or other rigid foundation structure or encasement, either above or below the shoulder ground line, will not be permitted for mailboxes on rural highways. On urban roads and streets where mailbox support posts are set within rigid pavement back of curb, the support posts shall be separated from the pavement by a minimum of 1" of expansion material.

   Support posts shall not be fitted nor installed with surface mount base plates.

10. At driveway entrances mailboxes shall be placed on the far side of the driveway in the direction of the delivery route.

    At intersecting roads mailboxes shall be located 100' or more from the centerline of the intersecting road on the far side in the direction of the delivery route, with the distance increased to 200' when the route volume exceeds 400 vehicles per day.

11. Wood support posts shall be in conformance with the material and dimensional requirements of Specification 952 and the treatment requirements of Specification 955.

    Steel support posts shall have an external finish equal to or better than two coats of weather resistant, air dried or baked, paint or enamel. Surface(s) shall be cleaned of all loose scale prior to finishing. The Postal Service prefers that posts be painted white, but other colors may be used when approved by the Engineer. When galvanized posts are used painting is not required.

    Mounting brackets, plates, platforms, shelves and accessory hardware surface finishes are to be suited to support post finish.

12. Mailboxes shall be paid for under the contract unit price for Mailboxes, Each. Payment shall be full compensation for boxes, posts and accessory items essential for installation in accordance with this standard; erection; adjustments to suit construction needs; and, for identification letters and numbers.

    Payment shall be limited to one mailbox per patron address whether the mailbox is new, reused, salvaged, reset or relocated. Payment shall be per mailbox regardless of the number of mailboxes per support or grouping arrangement.

    The above compensation shall include any work and cost incurred by the contractor for removal and disposal of existing mailboxes.

    There shall be no payment participation for NDCBU furnishing, assembly, installation, resetting or relocation.

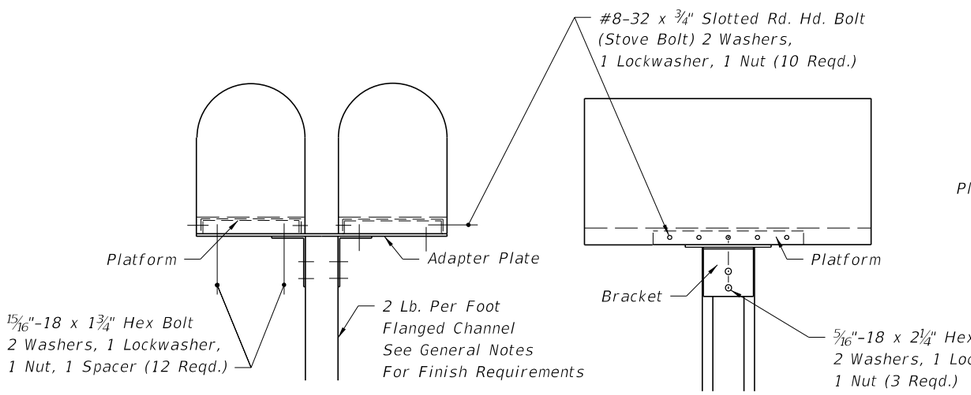

FRONT VIEW

SIDE VIEW

FLANGED CHANNEL

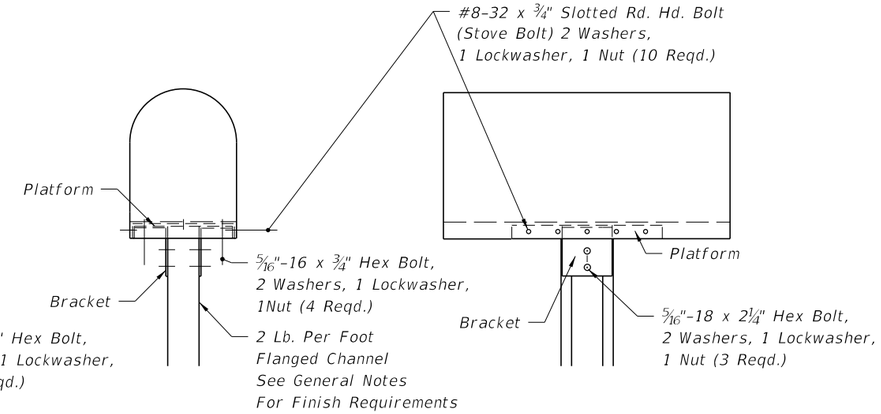

FRONT VIEW

SIDE VIEW

FLANGED CHANNEL

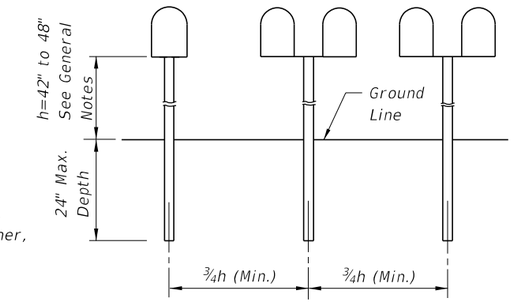

ELEVATION

SINGLE OR COMBINED WOOD, FLANGED CHANNEL
OR PIPE POST TYPES SHOWN ON THIS INDEX

POST SPACING

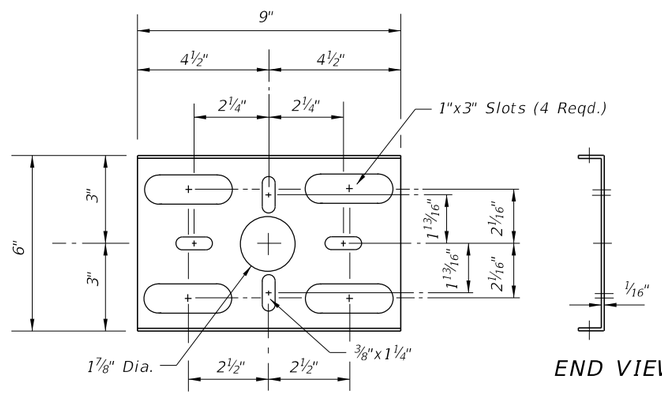

BOTTOM VIEW

END VIEW

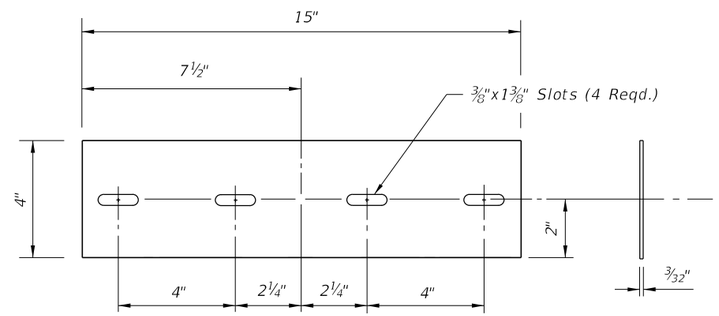

TOP VIEW

END VIEW

STEEL ADAPTER PLATE

NOTE:

See General Notes for finish requirements.

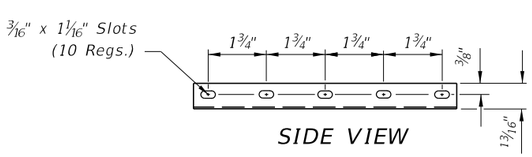

SIDE VIEW

STEEL PLATFORM

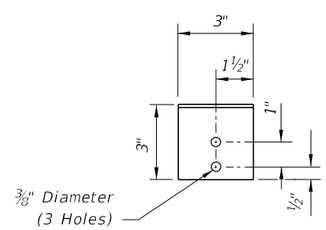

FRONT VIEW

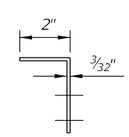

END VIEW

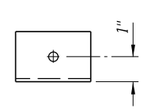

TOP VIEW

STEEL BRACKET

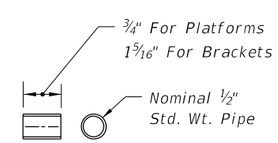

STEEL SPACER

STEEL FLANGED CHANNEL SUPPORT POSTS

4/4/2023 8:24:56 AM

LAST REVISION	REVISION	DESCRIPTION:			INDEX	SHEET
11/01/17			FY 2023-24 STANDARD PLANS	MAILBOXES	110-200	2 of 3

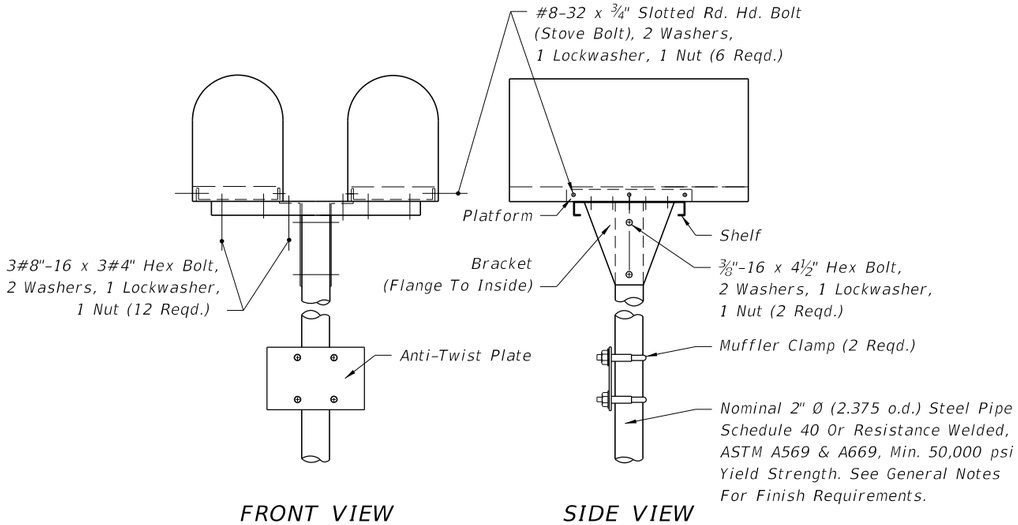

FRONT VIEW SIDE VIEW

2" Ø PIPE POST

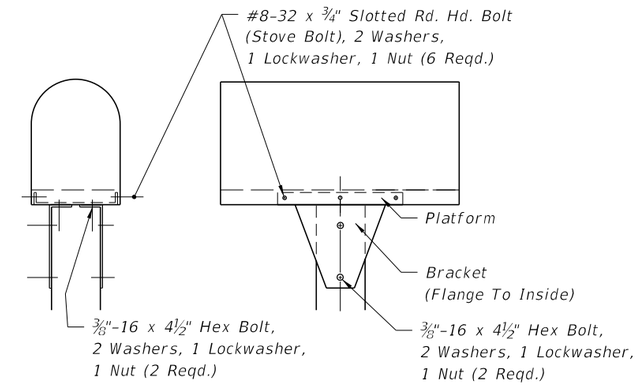

FRONT VIEW SIDE VIEW

4" X 4" WOOD POST

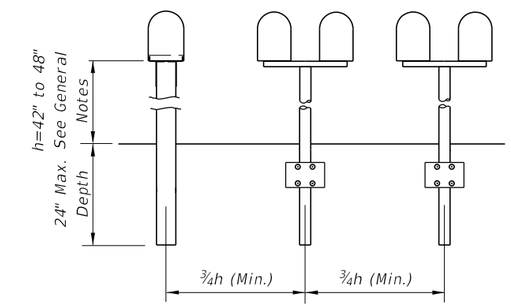

SINGLE OR COMBINED WOOD, FLANGED CHANNEL
OR PIPE POST TYPES SHOWN ON THIS INDEX

ELEVATION

POST SPACING

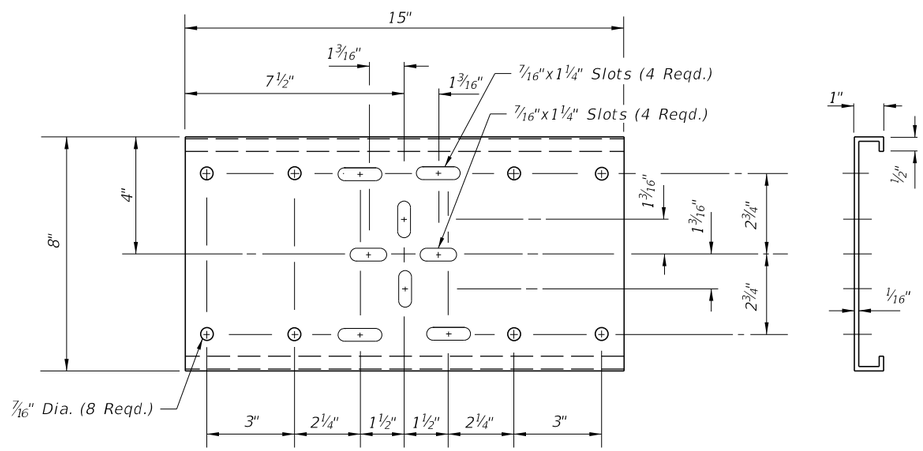

TOP VIEW END VIEW

STEEL SHELF

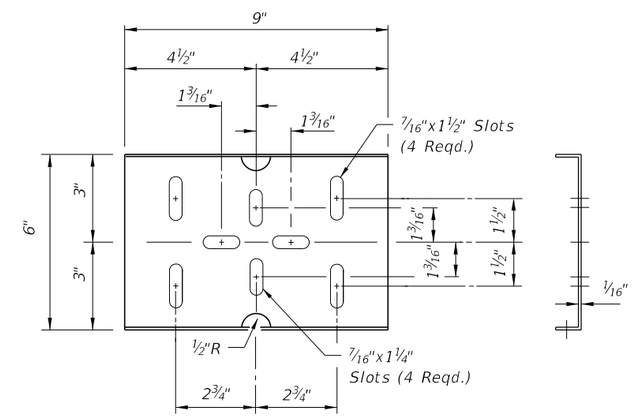

BOTTOM VIEW END VIEW

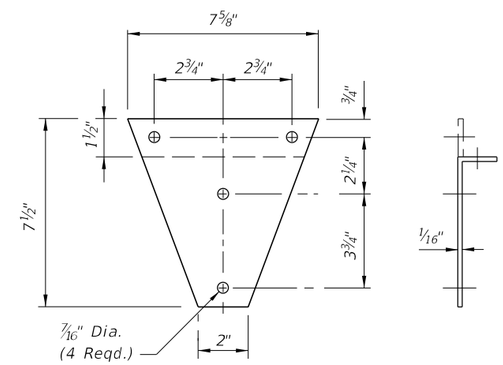

SIDE VIEW END VIEW

STEEL BRACKET

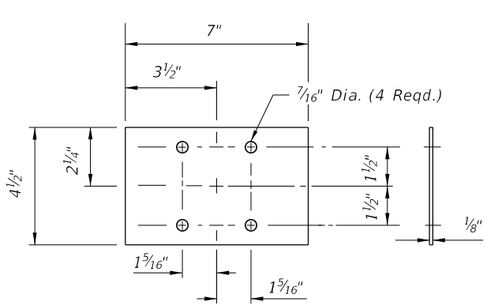

FRONT VIEW END VIEW

STEEL ANTI-TWIST PLATE

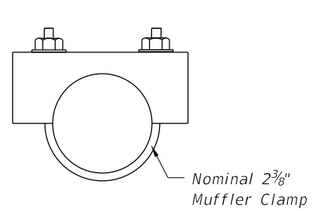

TOP VIEW

STEEL CLAMP

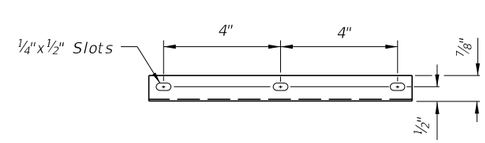

SIDE VIEW

STEEL PLATFORM

NOTE:

See General Notes for finish requirements.

STEEL PIPE AND WOOD SUPPORT POSTS

LAST REVISION	REVISION	DESCRIPTION:			INDEX	SHEET
11/01/17			FY 2023-24 STANDARD PLANS	MAILBOXES	110-200	3 of 3

10/20/2022 8:45:58 AM

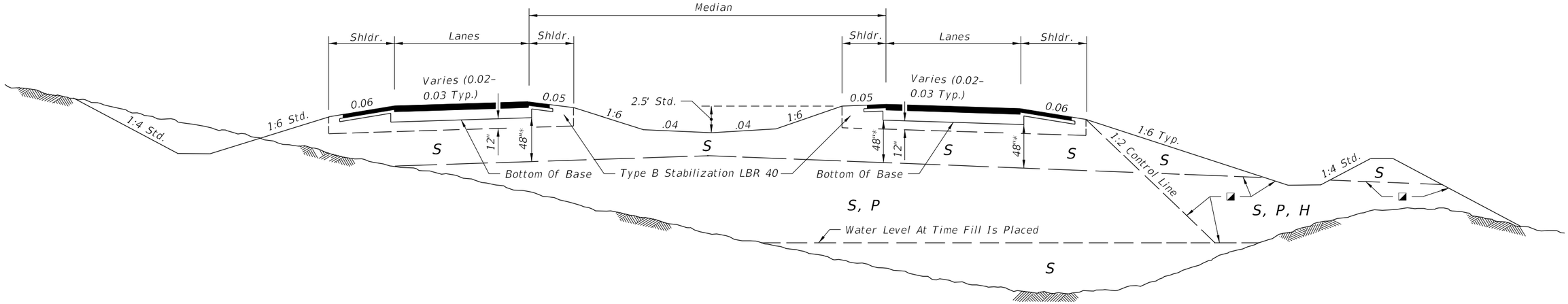

DIVIDED ROADWAYS

GENERAL NOTES:

1. Roadway dimensions are representative. Subgrade dimensions and control lines are standard. The details shown on this Index do not supersede the details shown in the Plans or Indexes 120-002 and 160-001.

2. Plastic (P) soils may be placed above the existing water level (at the time of construction) to within 4 feet of the proposed base. It should be placed uniformly in the lower portion of the embankment for some distance along the project rather than full depth for short distances.

3. High Plastic (H) soils excavated within the project limits may be used in embankment construction as indicated on this Index. High Plastic soils are not to be used for embankment construction when obtained from outside the project limits.

4. Select (S) soils having an average organic content of more than two and one-half (2.5) percent, or having an individual test value which exceeds four (4) percent, are not permitted in the subgrade portion of the roadbed. Select (S), Plastic (P), or High Plastic (H) soils having an average organic content of more than five (5) percent, or an organic content individual test result which exceeds seven (7) percent, are not permitted in the portion of embankment inside the control line, unless written authorization is provided by the District Geotechnical Engineer; these soils may be used for embankment construction outside the control line, unless restricted by the Plans or otherwise specified in the Plans, provided they can be compacted sufficiently to sustain a drivable surface for operational vehicles as approved by the Engineer. Determine average organic content from the test results from a minimum of three randomly selected samples from each stratum or stockpile of a particular material. Perform tests in accordance with AASHTO T 267 on the portion of a sample passing the No. 4 sieve.

5. Highly organic soils, composed primarily of partially decayed organic matter, often dark brown or black in color with an odor of decay, and sometimes fibrous, are designated as muck. Further, any stratum or stockpile of soil which contains pockets of highly organic material may be designated as Muck (M). Highly organic soils are not permitted within the subgrade or embankment portion of the roadbed.

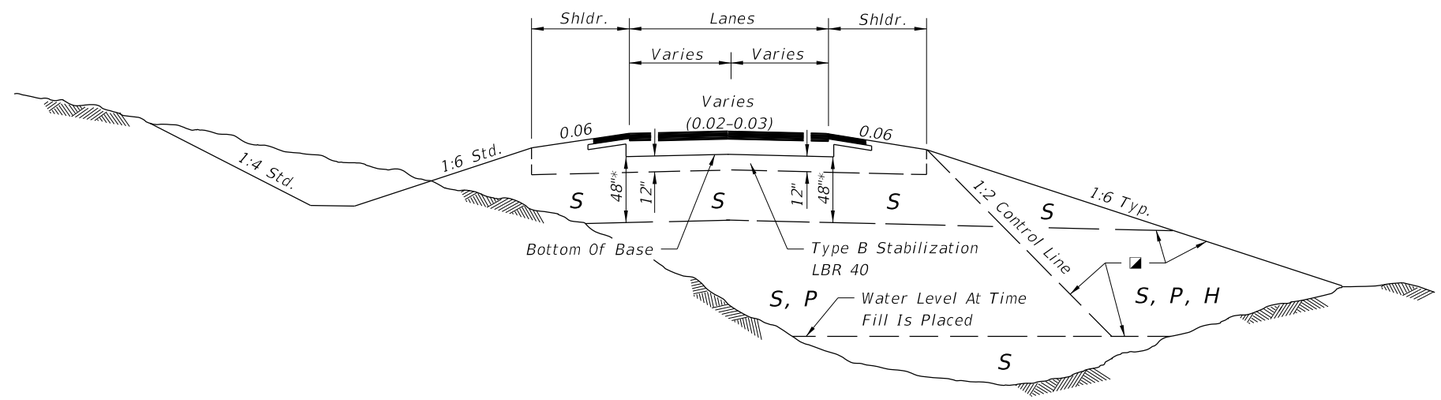

UNDIVIDED ROADWAY

SYMBOL	SOIL	CLASSIFICATION (AASHTO M 145)
S	Select	A-1, A-3, A-2-4 **
P	Plastic	A-2-5, A-2-6, A-2-7, A-4, A-5, A-6, A-7 (ALL WITH LL < 50)
H	High Plastic	A-2-5, A-2-7, A-5 Or A-7 (ALL WITH LL > 50)
M	Muck	A-8

Classification listed left to right in order of preference.

◪ See General Notes Nos. 4 & 5 for utilization of soils classified as organic material or muck.

** Certain types of A-2-4 material are likely to retain excess moisture and may be difficult to dry and compact. They should be used in the embankment above the water level existing at time of construction. They may be used in the subgrade portion of the roadbed when approved by the District Materials Engineer. A-2-4 material placed below the existing water level must be nonplastic and contain less than 15% passing the No. 200 U.S. Standard sieve.

* For cut sections this dimension may be reduced to 24"; see Index 120-002. For minor collectors and local facilities this dimension may be reduced to 18".

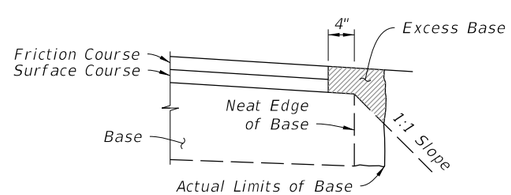

NOTES:

1. All material in the shaded area is excess base to be removed.

2. There is no additional payment for removal of excess base material.

REMOVAL OF EXCESS BASE MATERIAL

GENERAL NOTES AND FLEXIBLE PAVEMENT

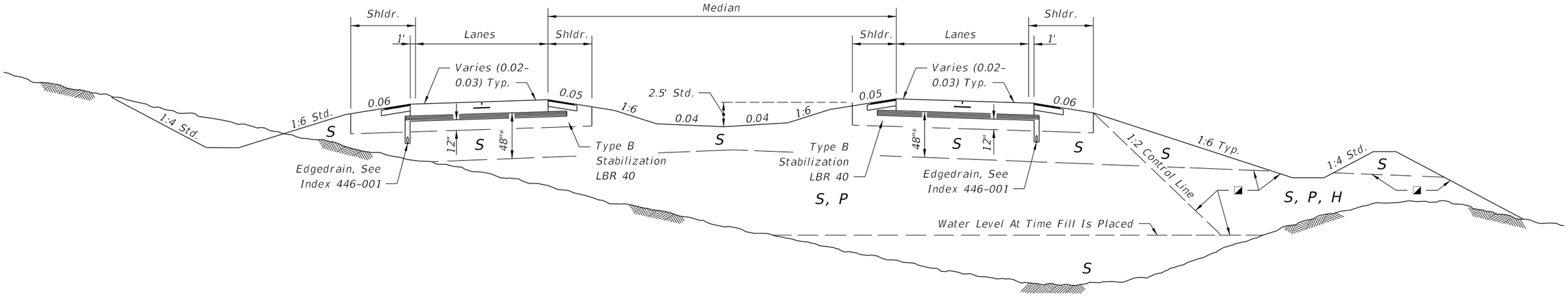

DIVIDED ROADWAYS

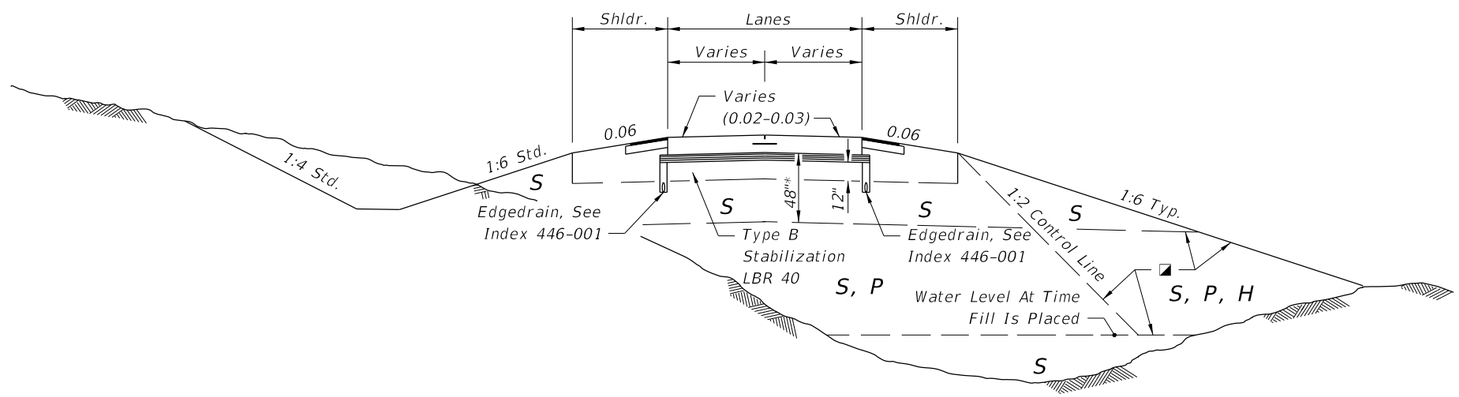

UNDIVIDED ROADWAY

SYMBOL	SOIL	CLASSIFICATION (AASHTO M 145)
S	Select	A-1, A-3, A-2-4 **
P	Plastic	A-2-5, A-2-6, A-2-7, A-4, A-5, A-6, A-7 (ALL WITH LL < 50)
H	High Plastic	A-2-5, A-2-7, A-5 Or A-7 (ALL WITH LL > 50)
M	Muck	A-8

Classification listed left to right in order of preference.

◪ See General Notes Nos. 4 & 5 for utilization of soils classified as organic material or muck.

** Certain types of A-2-4 material are likely to retain excess moisture and may be difficult to dry and compact. They should be used in the embankment above the water level existing at time of construction. They may be used in the subgrade portion of the roadbed when approved by the District Materials Engineer. A-2-4 material placed below the existing water level must be nonplastic and contain less than 15% passing the No. 200 U.S. Standard sieve.

* For cut sections this dimension may be reduced to 24"; see Index 120-002. For minor collectors and local facilities this dimension may be reduced to 18".

RIGID PAVEMENT - ASPHALT BASE OPTION

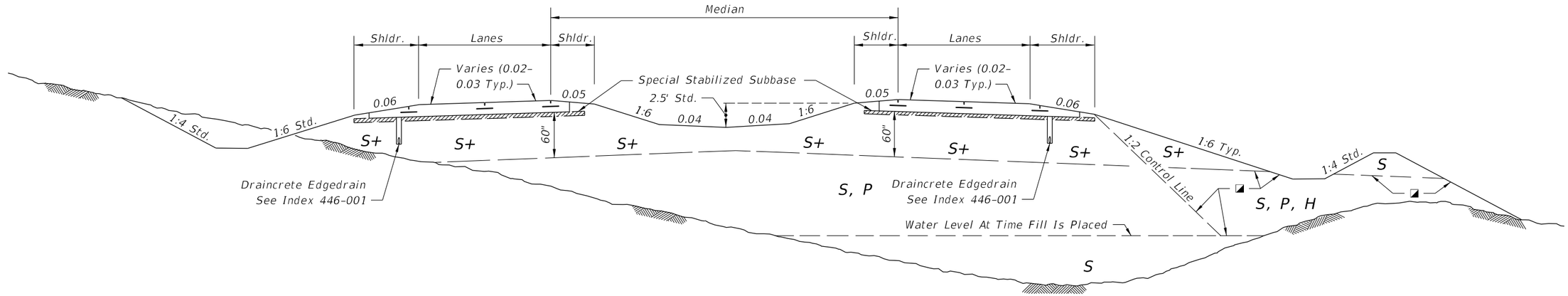

DIVIDED ROADWAYS

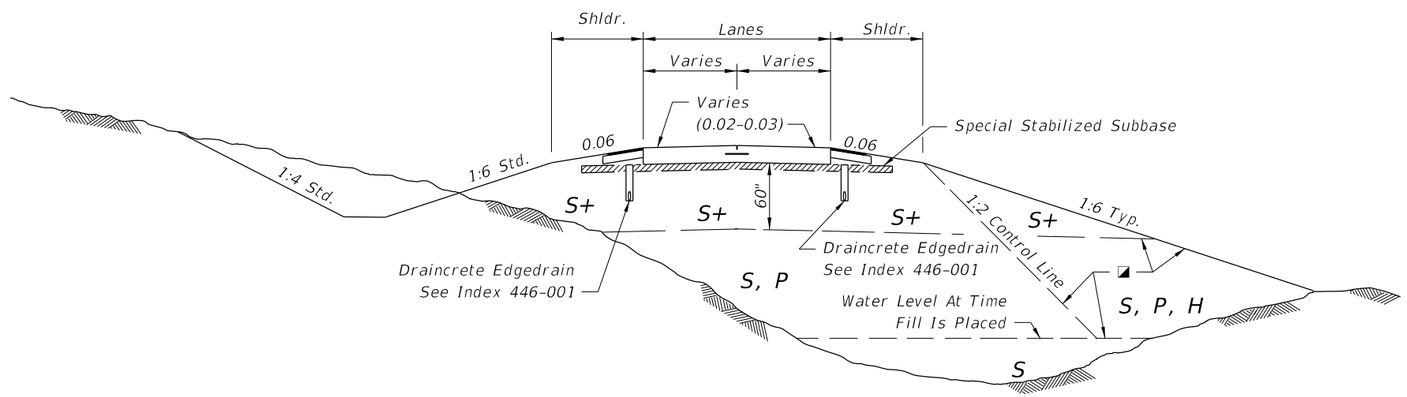

UNDIVIDED ROADWAY

SYMBOL	SOIL	CLASSIFICATION (AASHTO M 145)
S	Select	A-1, A-3, A-2-4 **
S+	Special Select	A-3 *** With Minimum Average Lab Permeability of $5x10^{-5}$ cm/sec. (0.14 ft./day) as per AASHTO T 215
P	Plastic	A-2-5, A-2-6, A-2-7, A-4, A-5, A-6, A-7 (ALL WITH LL<50)
H	High Plastic	A-2-5, A-2-7, A-5 Or A-7 (ALL WITH LL>50)
M	Muck	A-8

Classification listed left to right in order of preference.

◪ See General Notes Nos. 4 & 5 for utilization of soils classified as organic material or muck.

*** When called for in the Plans, some types of A-2-4 material may be approved in writing by the District Materials Engineer. This material must meet the minimum lab permeability requirement, be nonplastic, and not exceed 12% passing the No. 200 U.S. Standard sieve.

** Certain types of A-2-4 material are likely to retain excess moisture and may be difficult to dry and compact. They should be used in the embankment above the water level existing at time of construction. A-2-4 material placed below the existing water level must be nonplastic and contain less than 15% passing the No. 200 U.S. Standard sieve.

Special Stabilized Subbase: 3" of #57 or #89 Coarse Aggregate Mixed Into Top 6".

RIGID PAVEMENT - SPECIAL SELECT SOIL OPTION

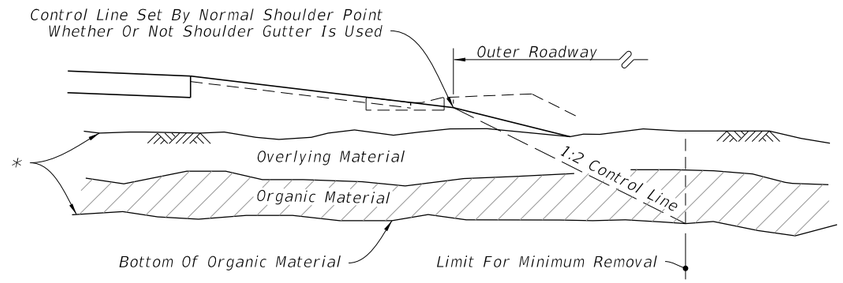

WITH OVERBURDEN - HALF SECTION

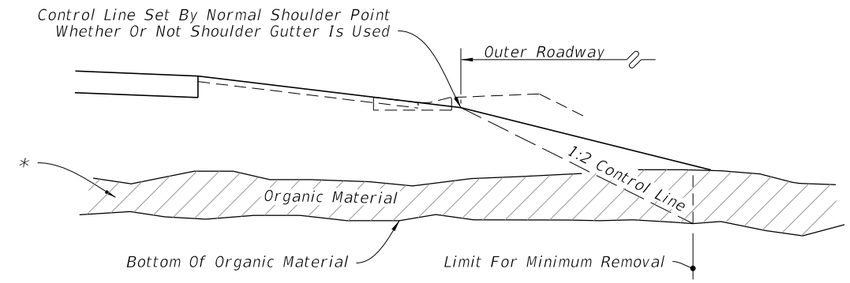

WITHOUT OVERBURDEN - HALF SECTION

CONSTRUCTION OF FLUSH SHOULDER ROADWAY

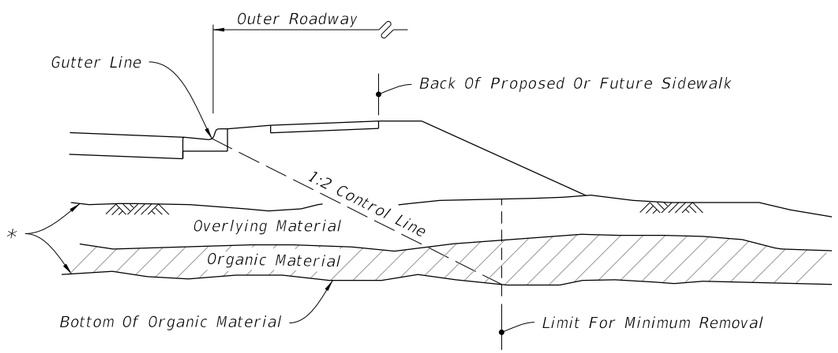

WITH OVERBURDEN - HALF SECTION

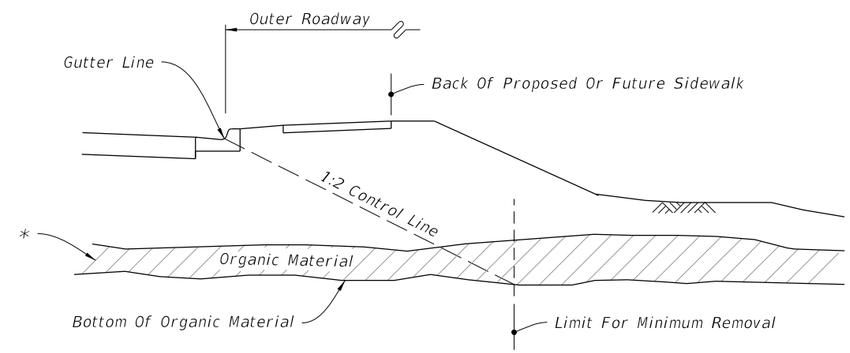

WITHOUT OVERBURDEN - HALF SECTION

CONSTRUCTION OF CURBED ROADWAY

* Remove overlying material and organic material within the limits shown and backfill in accordance with Index 120-001, unless approved otherwise by the District Geotechnical Engineer; The limits include full median width when applied to divided facilities with median widths up to 64'; When median width is greater than 64' and for bifurcated roadways the organic material removal limits will be set by a 1:2 control line complimentary to the outer roadway that will accommodate one future median lane on each roadway unless specified otherwise by the plans.

GENERAL NOTES:

1. All details shown on this Index for removal of organic and plastic materials apply unless otherwise shown on the plans.
2. Utilize excavated materials in accordance with Index 120-001.
3. Where organic or plastic material is undercut, backfill with suitable material in accordance with Index 120-001, unless otherwise shown on the plans.
4. The term "Plastic Material" used in this Index in conjunction with removal of plastic soil is as defined under soil classifications for Plastic (P) and High Plastic (H) on Index 120-001.
5. See Index 160-001 for miscellaneous earthwork details.
6. The term "Organic Material" as used on this Index is defined as any soil which has an average organic content greater than five (5.0) percent, or an individual organic content test result which exceeds seven (7.0) percent. Remove organic material as shown on this Index and the plans unless directed otherwise by the District Geotechnical Engineer. Determine the average organic content from the test results from a minimum of three randomly selected samples from each stratum. Perform tests in accordance with AASHTO T267 on the portion of a sample passing the No. 4 sieve.
7. In areas of curbed roadway, where underdrain is to be constructed beneath the proposed pavement, the grade of the underdrain filter material will not extend above the bottom of the stabilized section of the subgrade. Gradation of the filter material must conform to Standard Specifications. The minimum grade of underdrain pipe is 0.2%.

10/20/2022 8:46:01 AM

GENERAL NOTES AND REMOVAL OF ORGANIC MATERIAL

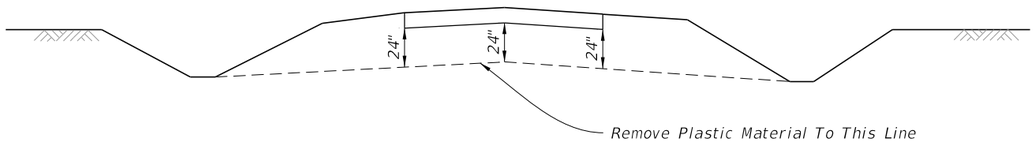

TYPICAL CUT SECTION ON TANGENT

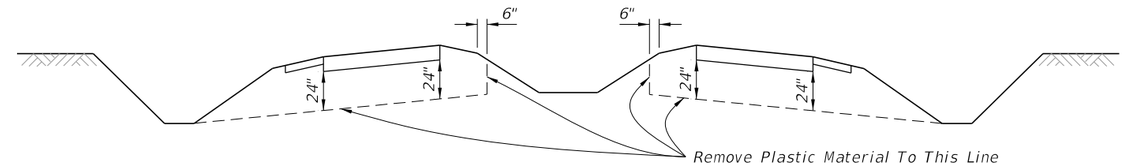

TYPICAL CUT SECTION ON TANGENT

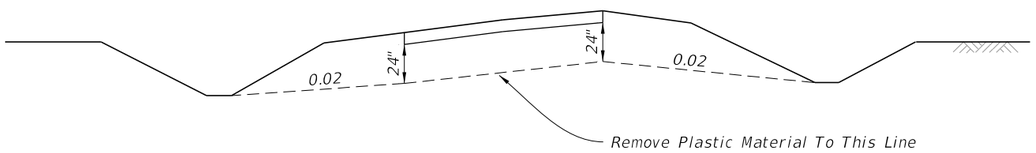

TYPICAL CUT SECTION ON SUPERELEVATION

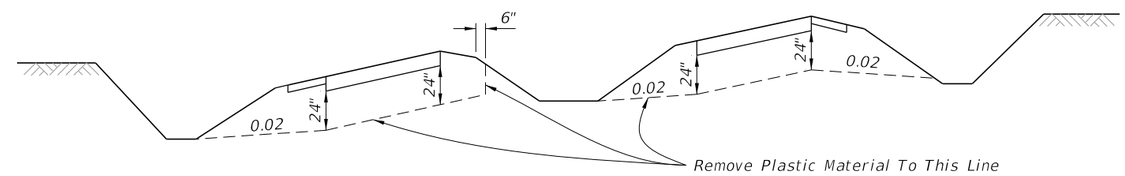

TYPICAL CUT SECTION ON SUPERELEVATION

DIVIDED FREEWAYS, ARTERIALS, MAJOR COLLECTORS HAVING FLUSH MEDIANS, ON UNDIVIDED ARTERIALS AND MAJOR COLLECTORS

INTERSTATE FACILITIES, FREEWAYS, DIVIDED ARTERIALS AND MAJOR COLLECTORS HAVING DEPRESSED MEDIANS

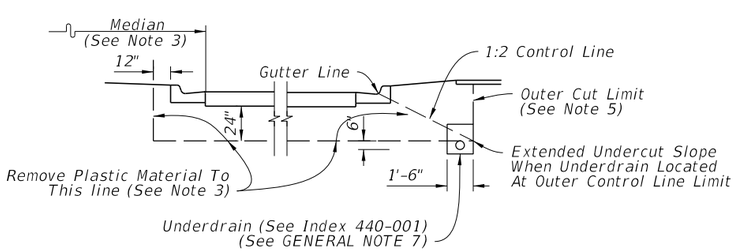

PREFERABLE REMOVAL

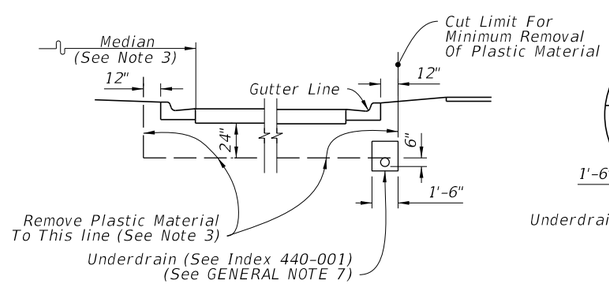

MINIMUM REMOVAL

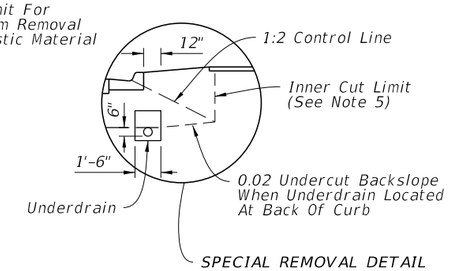

SPECIAL REMOVAL DETAIL

CONSTRUCTION AND LOCATION OF UNDERDRAIN IN CURBED ROADWAY

(See Note 4)

NOTES:

1. See Sheet 1 for the GENERAL NOTES.
2. When the typical cut details are applied to minor collectors and local facilities, the undercut may be reduced from 24" to 18".
3. Where frequency of median breaks indicates that it is impractical to leave plastic material in the median, the designer may elect to indicate total removal of this material. If during construction it becomes apparent, due to normal required construction procedures, that it is impractical to leave the plastic material in the median, total removal of this material shall be approved by the Engineer.
4. Refer to roadway cross sections to determine whether minimum or preferable removal is used.
5. Where the Preferable Removal method is shown in the plans and it is impossible to place the underdrain at the Outer Cut Limit due to conflict with storm drain trunk lines, remove to Inner Cut Limit and place underdrain at location shown for Minimum Removal. (See Special Removal Detail)
6. Cross slopes of 0.02 shown above are minimums. Follow the cross slope of the pavement to the extent possible.

REMOVAL OF PLASTIC MATERIAL

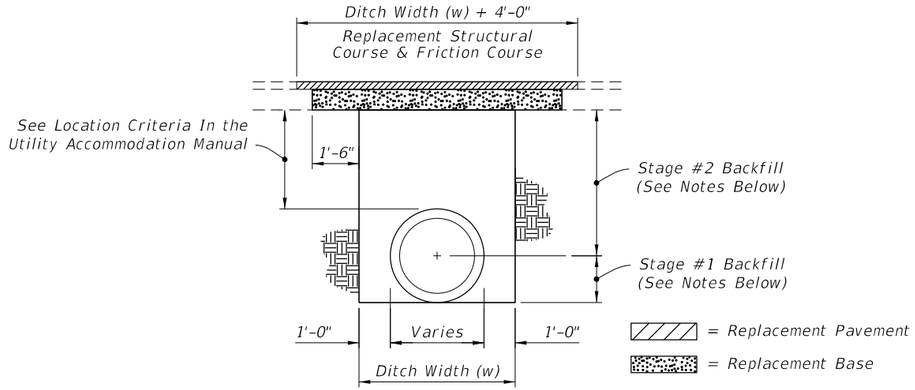

NOTES:

PAVEMENT REMOVAL AND REPLACEMENT

1. Pavement shall be mechanically sawed.
2. The replacement asphalt shall match the existing structural and friction courses for type and thickness in accordance with current FDOT asphalt mix specifications.
3. The new base materials shall be either of the same type and composition as the materials removed or of equal or greater structural adequacy.

BACKFILL OPTION

1. COMPACTED AND STABILIZED FILL

   A. Place backfill material in accordance with Specification 125.

   B. In Stage #1, construct compacted fill beneath the haunches of the pipe, using mechanical tamps suitable for this purpose. This compaction applies to the material placed beneath the haunches of the pipe and above any bedding.

   C. In Stage #2, construct compacted fill along the sides of the pipe and up to the bottom of the base, with the upper 12" receiving Type B Stabilization. In lieu of Type B Stabilization, the Contractor may construct using Optional Base Group 3.

2. FLOWABLE FILL

   A. If compaction can not be achieved through normal mechanical methods then flowable fill may be used.

   B. Flowable fill is to be placed in accordance with Specification 121, as approved by the Engineer.

   C. Do not allow the utility being installed to float. If a method is provided to prevent flotation from occurring, Stages #1 and #2 can be combined, if approved by the Engineer.

   D. In Stage #1, place flowable fill midway up on both sides of the utility. Allow to harden before placing Stage #2.

   E. In Stage #2, place flowable fill to the bottom of the existing base course.

FLEXIBLE PAVEMENT CUT

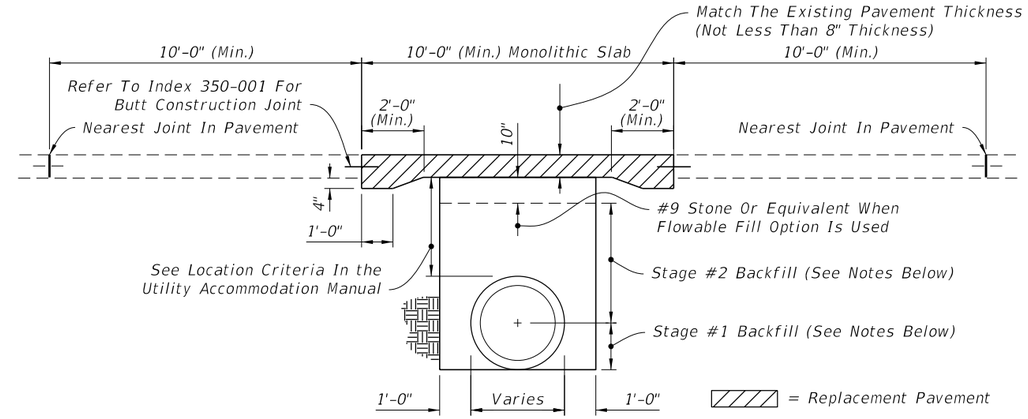

NOTES:

PAVEMENT REMOVAL AND REPLACEMENT

1. High early strength cement concrete (3000 psi) meeting the requirements of Specification 346 shall be used for rigid pavement replacement.
2. Pavement shall be mechanically sawed and restored to conform with existing pavement joints within 12 hours. (See Index 350-001)

BACKFILL OPTION

1. GRANULAR BACKFILL

   A. Any edgedrain system that is removed shall be replaced with the same type materials. Any edgedrain system that is damaged shall be repaired with methods approved by the Engineer.

   B. Fill material shall be placed in accordance with the Standard Specifications. Fill material shall be special select soil in accordance with Index 350-001.

   C. In Stage #1, construct compacted fill beneath the haunches of the pipe, using mechanical tamps suitable for this purpose. This compaction applies to the material placed beneath the haunches of the pipe and above any bedding.

   D. In Stage #2, construct fill along the sides of the pipe and up to the bottom of replacement pavement.

2. FLOWABLE FILL

   A. If mechanical compaction can not be achieved through normal mechanical methods then flowable fill may be used.

   B. Flowable fill is to be placed in accordance with Specification 121, as approved by the Engineer.

   C. Do not allow the utility being installed to float. If a method is provided to prevent flotation from occurring, Stages #1 and #2 can be combined, if approved by the Engineer.

   D. In Stage #1, place flowable fill midway up on both sides of the utility. Allow to harden before placing Stage #2.

   E. In Stage #2, place flowable fill to the bottom of the stone layer.

RIGID PAVEMENT CUT

GENERAL NOTES

1. The details provided in this Index apply to cases in which jack and bore or directional boring methods are not required by the Engineer.
2. Flowable fill shall not be placed directly over loose, or high plastic, or muck material (see Index 120-001) which will cause settlement due to fill weight. Where highly compressible material exists, the amount, shape and depth of flowable fill must be engineered to prevent pavement settlement.
3. These details do not apply to utility cuts longitudinal to the centerline of the roadway which may require the additional use of geotextiles, special bedding and backfill, or other special requirements.
4. Method of construction must be approved by the Engineer.
5. Some pipe may require special granular backfill up to 6" above top of pipe. Geotextiles may be required to encapsulate the special granular material.
6. Where asphalt concrete overlays exist over full slab concrete pavement, the replacement pavement shall have an overlay constructed over the replacement slab. The overlay shall match the existing asphalt pavement thickness. The replacement friction course shall match the existing friction course, except structural course may be used in lieu of dense graded friction course.
7. All shoulder pavement, curb, curb and gutter, and their substructure disturbed by utility trench cut construction shall be restored in kind.
8. The use of flowable fill to reduce the time traffic is taken off a facility is acceptable but must have prior approval by the Engineer. Flowable fill use is allowed only when properly engineered for pavement crossings, whether straight or diagonal, and shall not be installed for significant depths or lengths. The maximum length shall be fifty (50) feet and a maximum depth of six (6) feet unless supported by an engineering document prepared by a registered professional engineer that specializes in soils engineering. The engineering document shall address the evaluation of local groundwater flow interruption and settlement potential.
9. Excavatable flowable fill is to be used when the flowable fill option is selected.

TRENCH CUTS AND RESTORATIONS ACROSS ROADWAYS

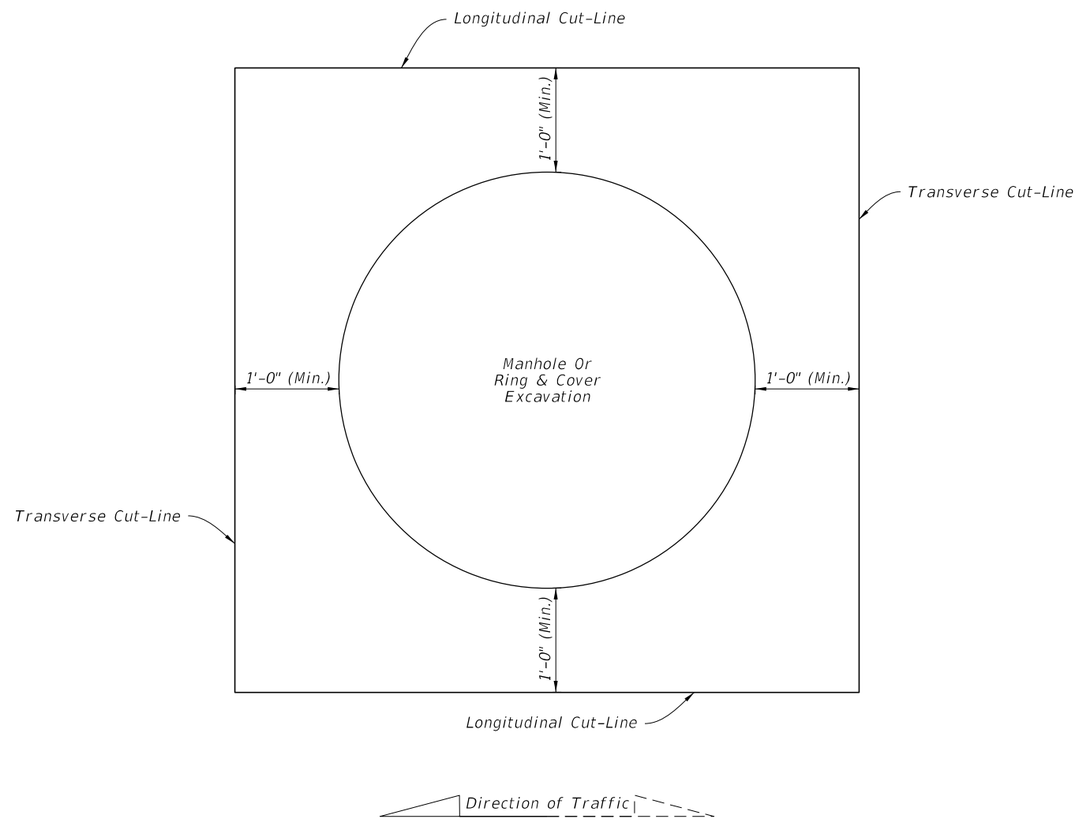

PARTIAL CUTS FOR RING AND COVER ADJUSTMENTS

NOTES

1. Cut-Lines must be straight and cleanly sawed.
2. See Sheet 1 for replacement pavement.
3. Adjust manholes prior to placing friction course when pavement resurfacing is occurring in the area adjacent to the manhole.
4. Align Longitudinal Cut-Lines with pavement joint or center of traffic lane to avoid wheel path.
5. For rigid pavement, align Transverse Cut-Lines with nearest existing joint.

10/20/2022 8:46:03 AM

NONTRENCH PAVEMENT CUTS FOR UNDERGROUND UTILITY STRUCTURES IN PAVEMENT

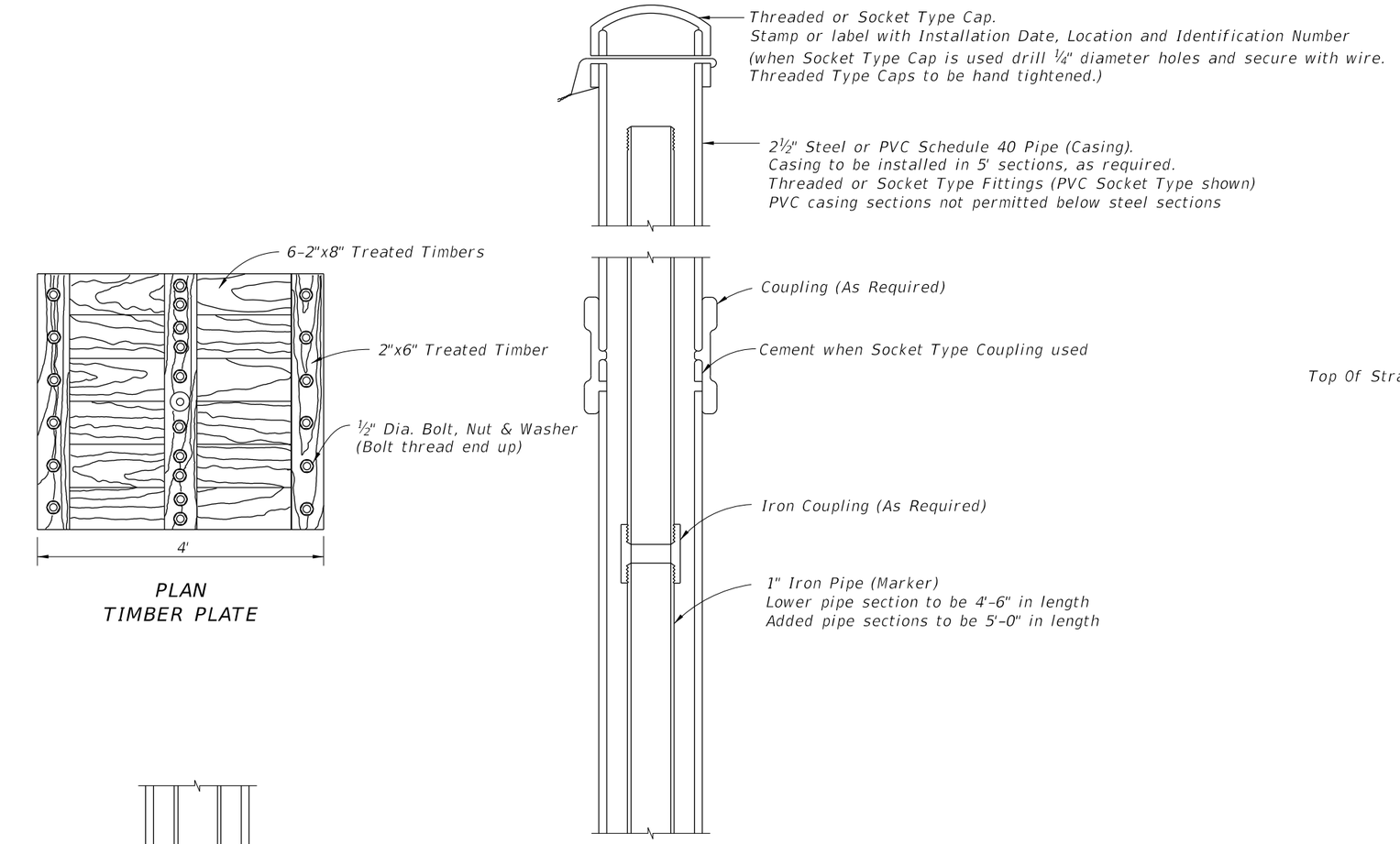

PLAN
TIMBER PLATE

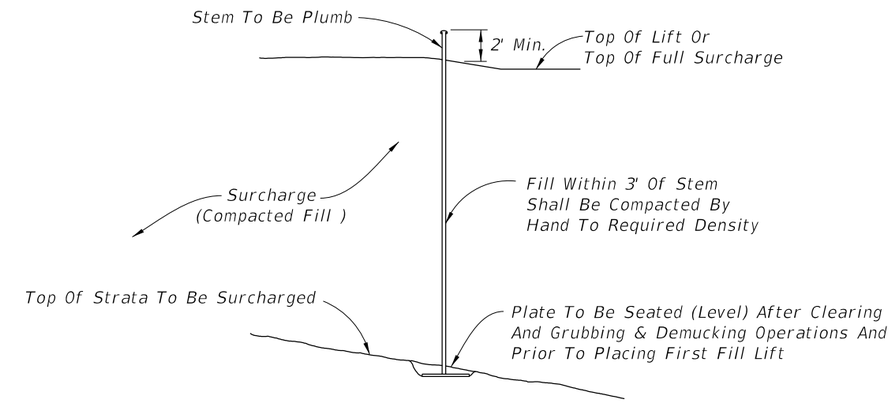

INSTALLATION

NOTES:

1. Elevation of the top of each length of marker pipe shall be determined as soon as it is installed and also immediately before the next length of marker pipe is added.
2. Settlement plate locations shall be flagged and protected from construction vehicles and equipment. If settlement plates are disturbed, they shall be replaced in kind.
3. Oakum used to construct seal should not have a mesh covering (plastic or other synthetic material).
4. The settlement plates shall be paid for under the contract unit price for Settlement Plate Assembly, AS.

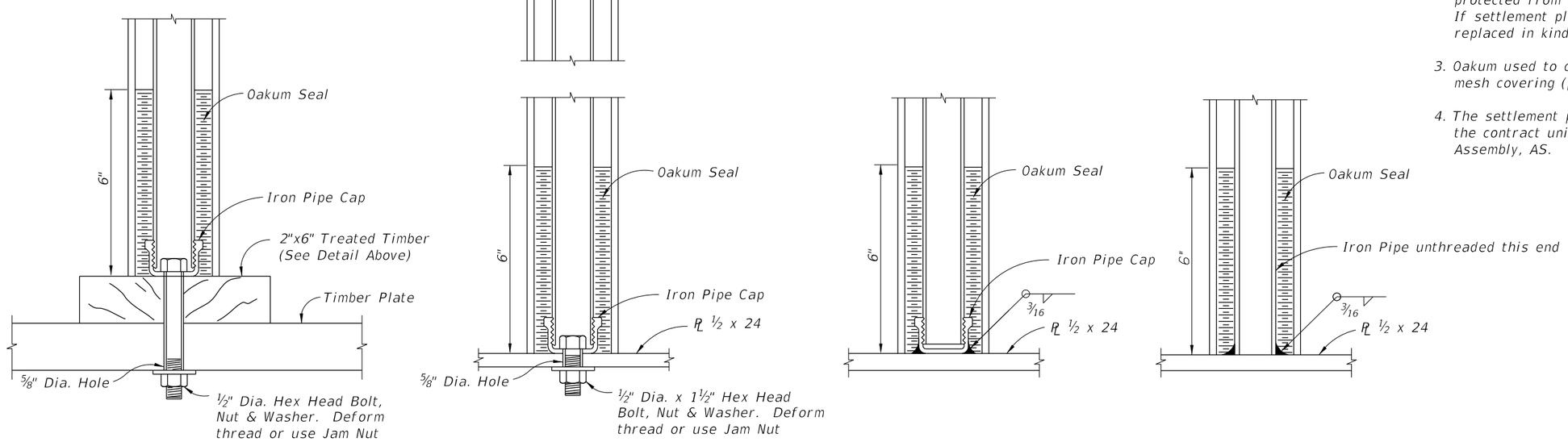

TIMBER PLATE | STEEL PLATE | STEEL PLATE | STEEL PLATE

STEM AND PLATE OPTIONS

10/20/2022 8:46:04 AM

LAST REVISION	REVISION	DESCRIPTION:			INDEX	SHEET
01/01/00			FY 2023-24 STANDARD PLANS	SETTLEMENT PLATE	141-T01	1 of 1

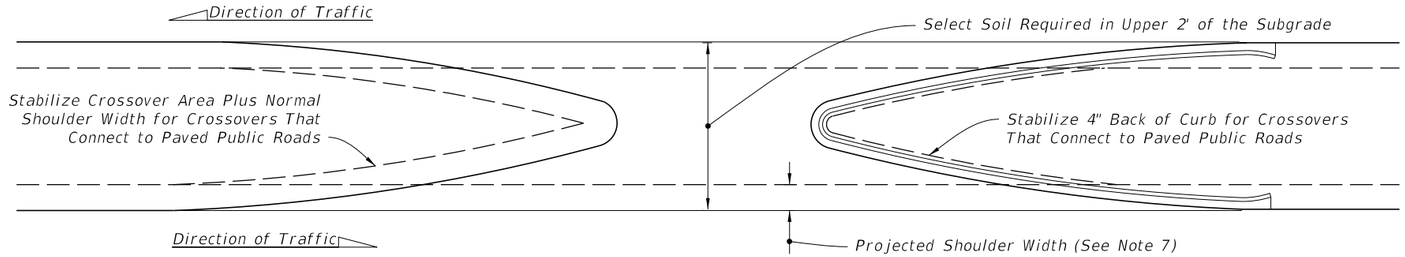

TYPICAL CROSSOVER

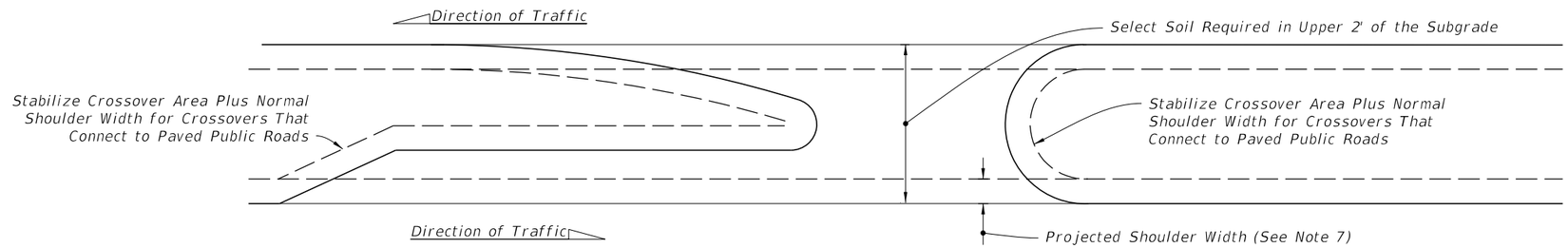

TURN LANE

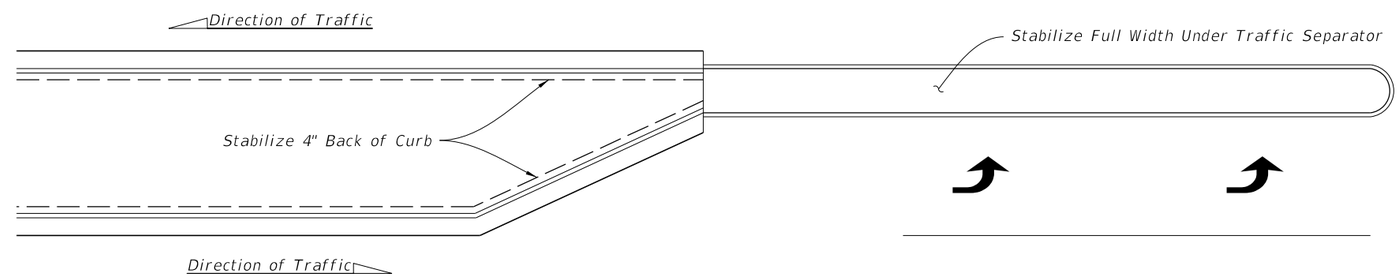

TRAFFIC SEPARATOR

NOTES:

1. When the median has curb or curb and gutter, stabilize 4" back of curb.
2. When the median has shoulder with no curb or curb and gutter, stabilize to normal shoulder width.
3. See the details above for stabilizing requirements at crossroads.
4. Stabilize entire area under all paved traffic islands.
5. Stabilize full width under all traffic separators.
6. Provide select soil where shown above and as defined on Index 120-001. For minor collectors and local facilities the depth of select material thickness may be reduced from 24" to 18".
7. Limits of Stabilization for Intermediate U-Turn Crossovers and, unless otherwise specified in the Plans, at paved and unpaved private roads and unpaved public roads.

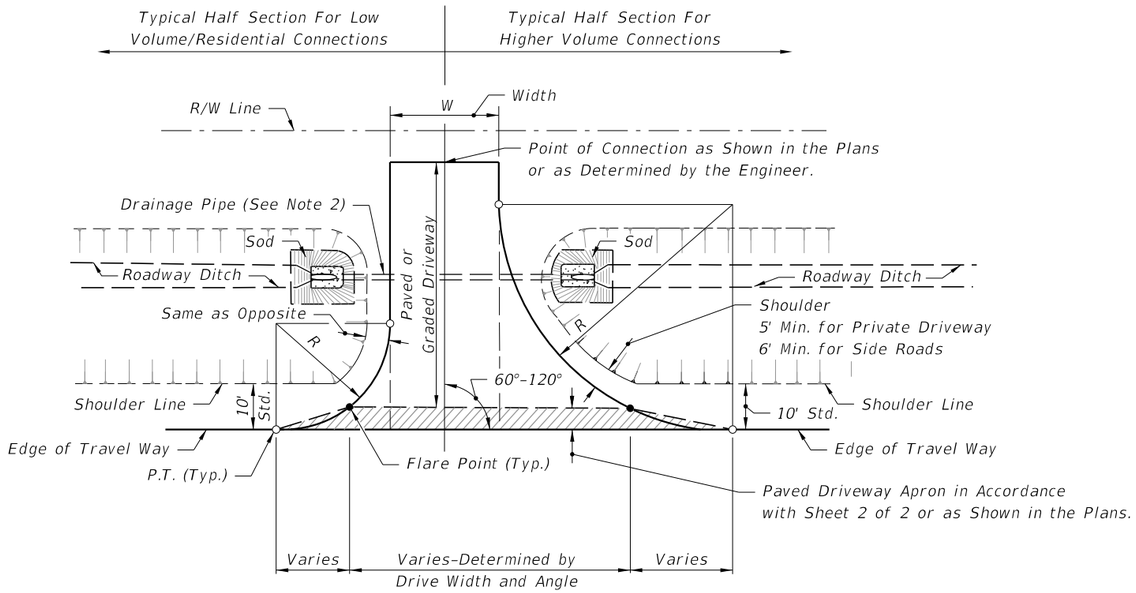

PLAN

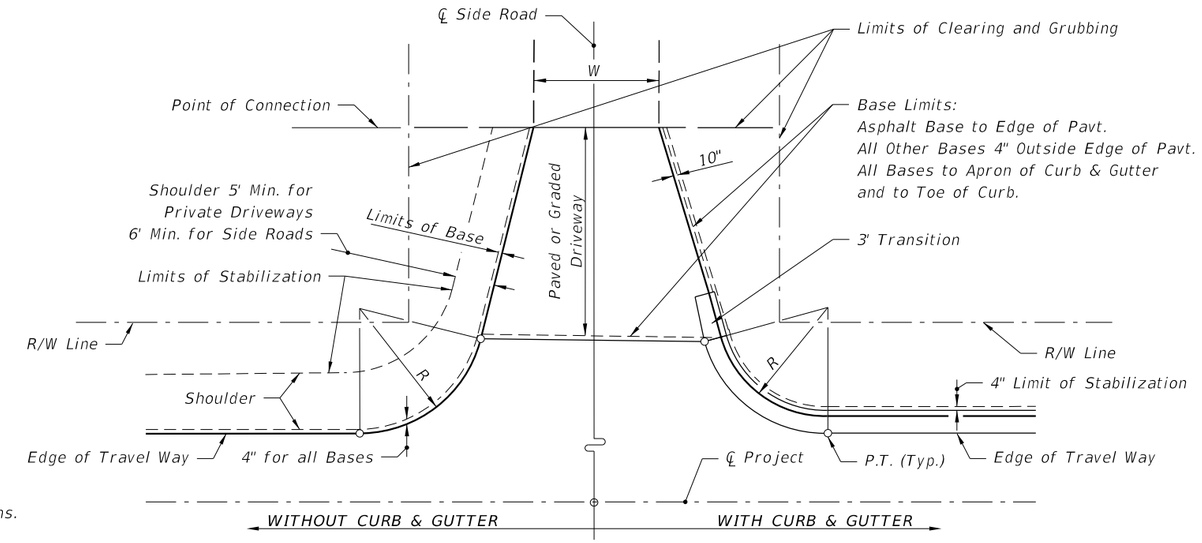

PLAN

LIMITS OF CLEARING & GRUBBING, STABILIZING AND BASE AT DRIVEWAYS

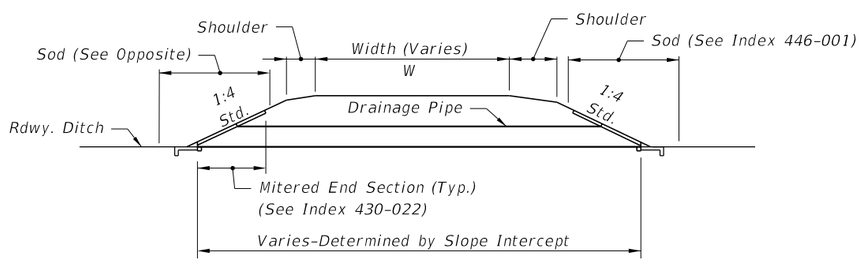

DRAINAGE SECTION

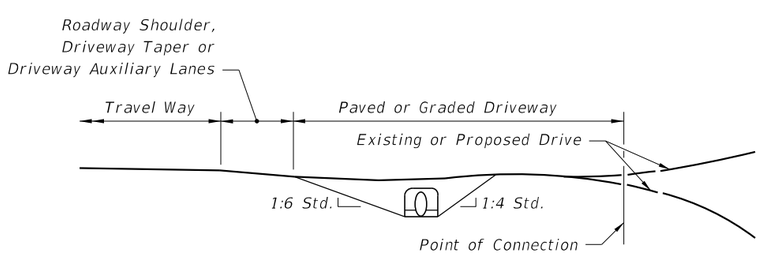

DRIVEWAY PROFILE AND END VIEW

FLUSH SHOULDER ROADWAY - DRIVEWAY CONSTRUCTION

DRIVEWAY ENTRANCES NOTES:

1. See Plans for Driveway Width (W) and Return Radius (R).

2. See the Plans for drainage pipe size and length or as determined by the Engineer. The size will be no less than 15" diameter or equivalent.

3. Stable material may be required for graded driveways to private property as directed by the Engineer in accordance with Specification 102-8.

4. The driveway pavement requirement at graded connections may be waived for connections serving one or two homes or field entrances with less than 20 trips per day, or 5 trips per hour as approved by the Engineer, or when not shown in the Plans.

5. Point of Connection:

   a. Construct paved driveways for all paved connecting facilities. The connecting point will be determined by the Engineer.

   b. Construct paved driveways for all business, commercial, industrial or high volume residential graded connecting facilities. Construct the connecting point 30'-0' from edge of travel way or at R/W line, whichever is less.

   c. Construct paved driveways for all side road connections. The R/W is the connecting point.

10/20/2022 8:46:05 AM

LAST REVISION	REVISION	DESCRIPTION:			INDEX	SHEET
11/01/18			FY 2023-24 STANDARD PLANS	PAVED AND GRADED DRIVEWAYS	330-001	1 of 2

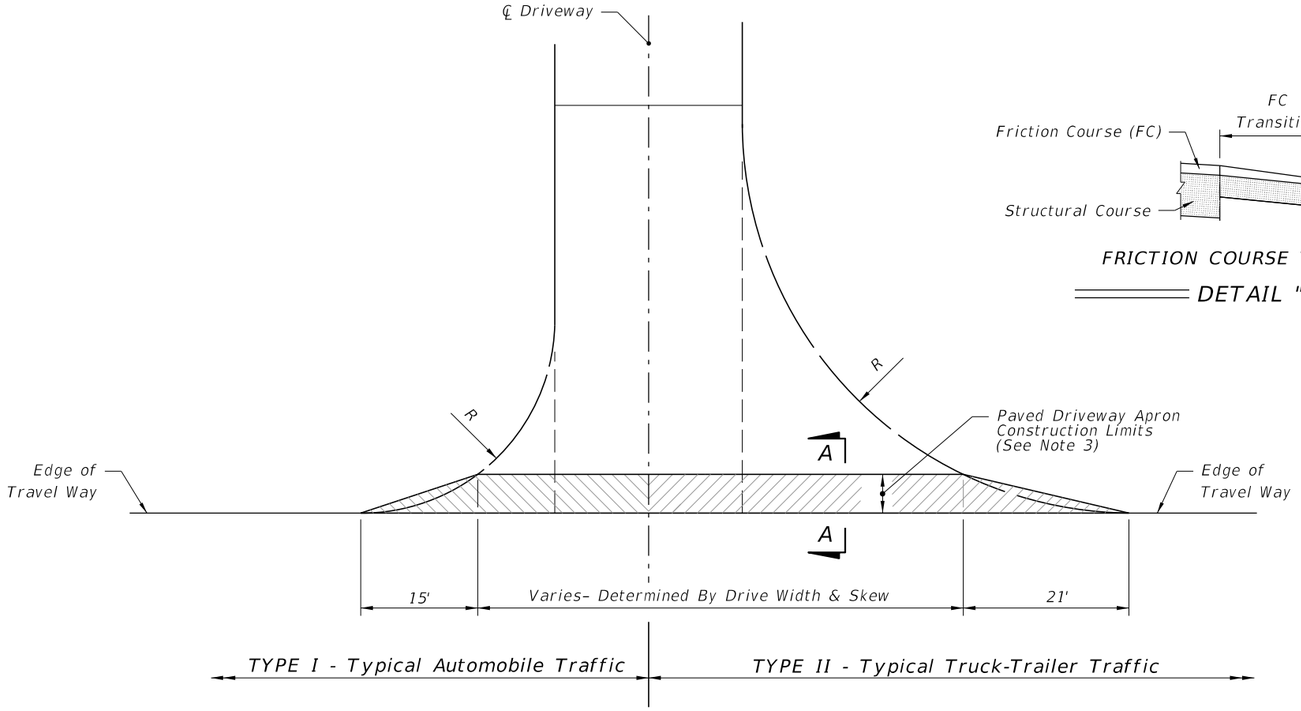

DRIVEWAY TYPES

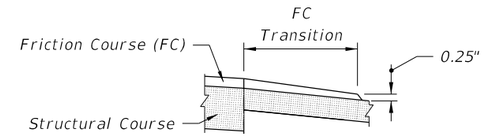

FRICTION COURSE TRANSITION

DETAIL "A"

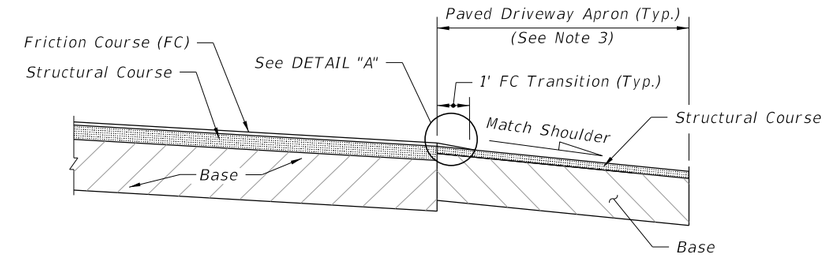

SECTION AA - NEW CONSTRUCTION

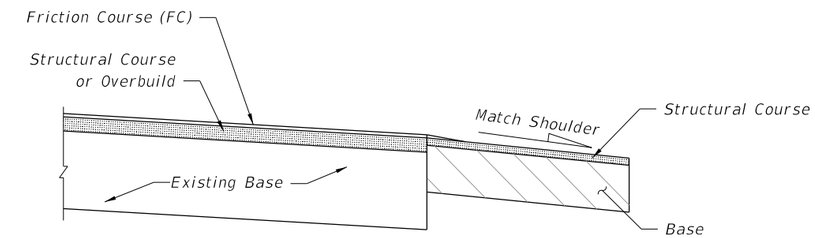

SECTION AA - RESURFACING

NEW DRIVEWAY

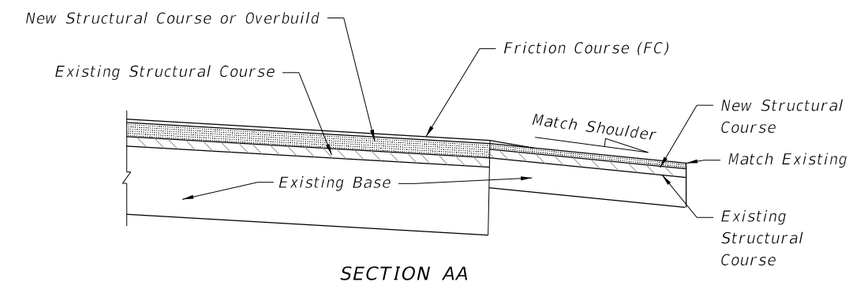

SECTION AA

RESURFACING EXISTING DRIVEWAY

AREAS FOR ONE 5' DEEP DRIVEWAY APRON (SY)

Drive Width (Ft.)	Intersection			
	Normal		Skewed	
	Type I	Type II	Type I	Type II
12	26	51	31	60
14	27	52	33	61
16	28	53	34	63
18	29	54	35	64
20	31	55	37	65
22	32	56	38	67
24	33	57	39	68
26	34	58	40	69
28	35	59	42	70
30	36	61	43	72
32	37	62	44	73
34	38	63	46	74
36	39	64	47	76
38	41	65	48	77
40	42	66	49	78
42	43	67	51	79
44	44	68	52	81
46	45	69	53	82
48	46	71	55	83
50	47	72	56	85
52	48	73	57	86
54	49	74	58	87
56	51	75	60	88
58	52	76	61	90
60	53	77	62	91

MATERIAL TYPES AND THICKNESSES FOR PAVED CONNECTIONS

Course	Materials	Minimum Thickness (in.)	
		Connections	Roadway*
Structural	Asphaltic Concrete	1½"	1½"
Bases	Optional Base (See Specification 285)	O.B.G. 2	O.B.G. 3

* Travel way flares (bypass lanes), auxiliary lanes serving more than a single connection, and all median crossovers including their auxiliary lanes and/or transition tapers.

NOTES

1. Use same material for driveway structural course and roadway overbuild or structural course, except as approved by the Engineer for graded connections. Other Department-approved equivalent pavements may be used at the discretion of the Engineer.
2. Auxiliary lanes and their transition tapers shall be the same structure as the abutting travel way pavement thickness or any of the roadway structures tabulated above, whichever is thicker.
3. If an asphalt base course is used for a driveway, its thickness may be increased to match the edge of travel way pavement thickness in lieu of a separate structural course. 6" of Portland cement concrete will be acceptable in lieu of the asphalt base and structural courses. See Notes 4 and 5 below.
4. A structural course is required for flexible pavements when they are used for auxiliary lanes serving more than a single connection.
5. Use Class NS concrete at least 6" thick for driveways paved with Portland Cement Concrete. Construct in accordance with Specifications 347, 350, and 522.
6. The Department may require other pavement criteria where local conditions warrant.

GENERAL NOTES:

1. Driveways are to be constructed or resurfaced for low volume (single family, duplex, farm, etc.) residential connections as directed by the Engineer.
2. Driveways construction is not required for low volume residential connections where roadway shoulders are paved.
3. Match existing paved shoulder widths ≥ 4'. For all other shoulders conditions, construct at 5' wide.
4. Connections beyond the shoulder width are to be constructed as directed by the Engineer.
5. Construct Driveway Base in accordance with Specification 286.
6. Payment for structural course and friction course is to be included in roadway pavement pay item.

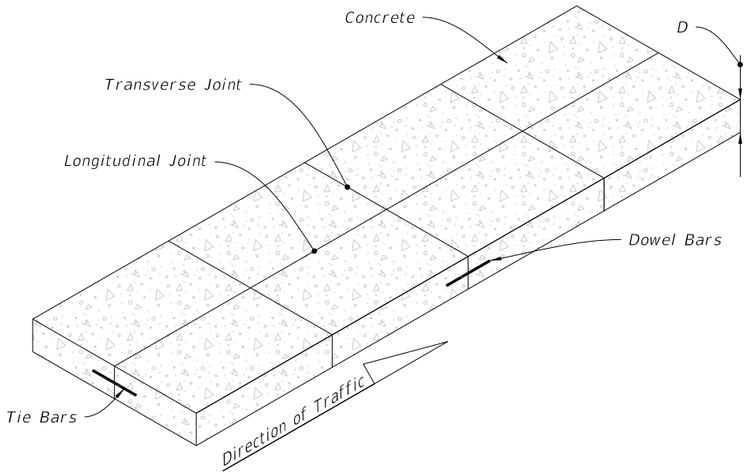

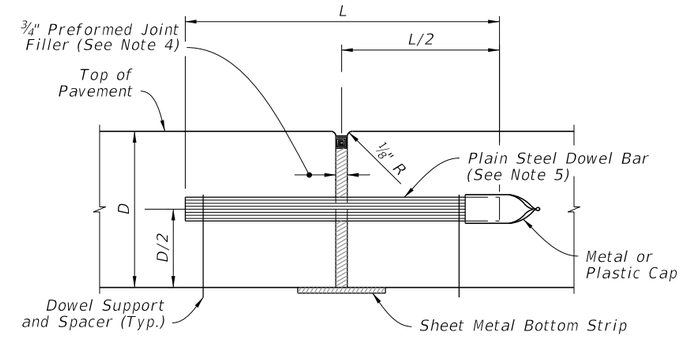

EXPANSION JOINT
(See General Notes 4 and 7)

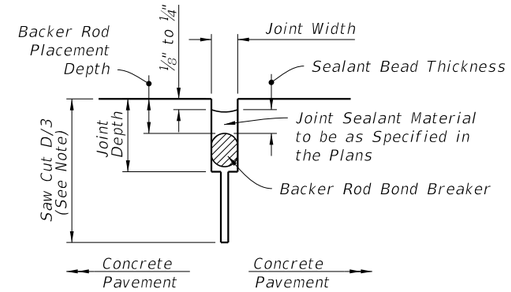

NOTE:
(D=Conc. Pavt. Thick.) Not required for construction joints, existing joints, or cracks.

BACKER ROD BOND BREAKER (CONCRETE-CONCRETE JOINTS)

JOINT DIMENSIONS (INCHES)				
JOINT WIDTH	SEALANT BEAD THICKNESS	BACKER ROD DIA.	MINIMUM JOINT DEPTH	BACKER ROD PLACEMENT DEPTH
1/4	1/4	3/8	1	1/2
3/8	1/4	1/2	1 1/4	1/2

Unless otherwise indicated on the plans the joint width for new construction will be 1/4" for construction joints, 3/8" for all other joints.

For rehabilitation projects the joint width will be shown on the plans or established by the Engineer based on field conditions.

CONCRETE-CONCRETE JOINTS

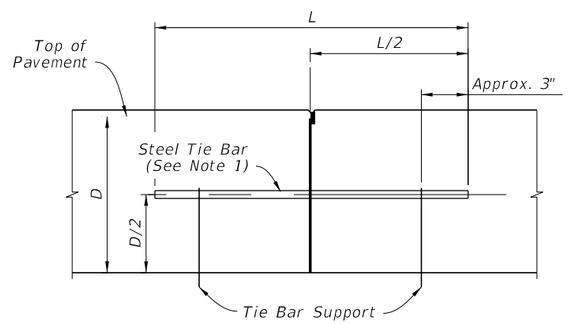

BUTT CONSTRUCTION JOINT

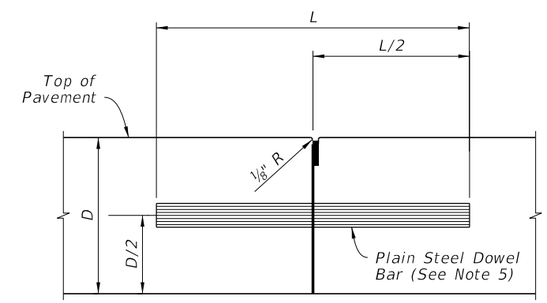

BUTT CONSTRUCTION JOINT
(Used At Discontinuance Of Work)

GENERAL NOTES:

1. For Longitudinal Joints:

   A. Tie bars are deformed #4 or #5 reinforcing steel bars meeting the requirements of Specification 931.

   B. Provide a tied joint with #4 bars 25" in length at 24" spacing or #5 bars 30" in length at 36" spacing.

2. Transverse joints are to be spaced at a maximum of 15'. Dowel Bars are required at all transverse joints unless otherwise noted in the plans.

3. For bridge expansion joints, see Index 370-001.

4. Punch clean holes in preformed joint filler greater than bar diameter.

5. Coat plain steel dowel bars and welded wire basket assemblies in accordance with Specification 931. Lubricate dowel bars in accordance with Specification 350.

6. New and rehabilitation projects, backer rod bond breaker is required. Shoulder must be repaired if proper joint shape can not be attained.

7. Sheet metal bottom strips in accordance with Specification 931. Not required with asphalt base.

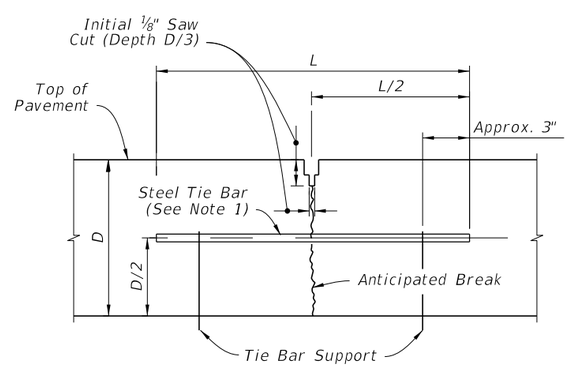

LANE-TIE JOINT

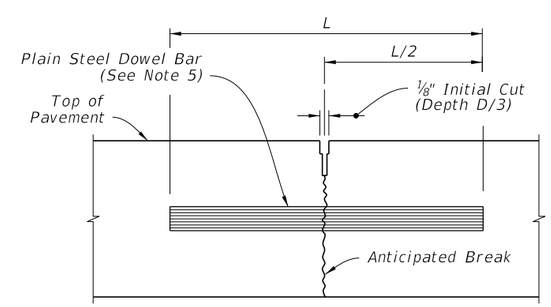

CONTRACTION JOINT
(Sawed Method)

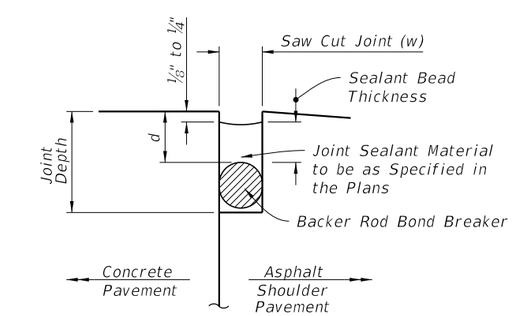

NOTE:
"d" and "w" = 3/4", unless specified in the Plans.

CONCRETE-ASPHALT SHOULDER JOINTS

LONGITUDINAL JOINTS

TRANSVERSE JOINTS

JOINT SEAL DIMENSIONS

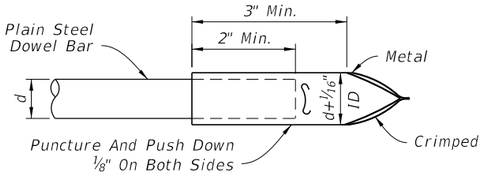

METAL

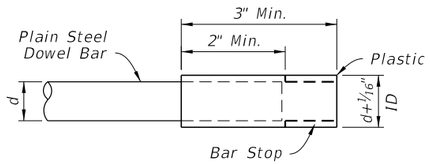

PLASTIC

DOWEL BARS CAPS

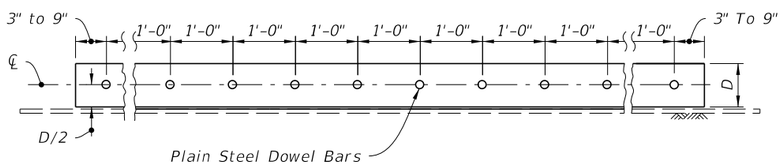

DOWEL BAR LAYOUT

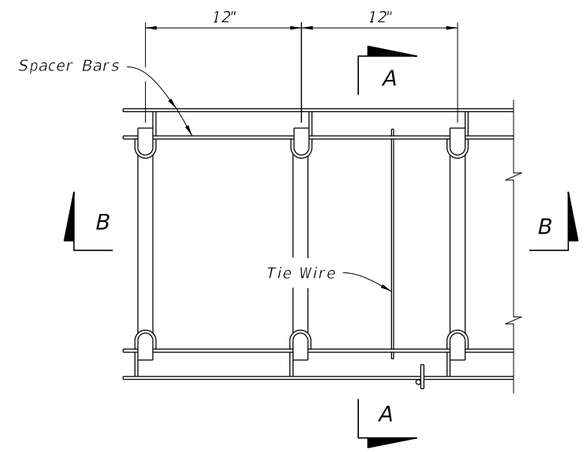

PLAN VIEW

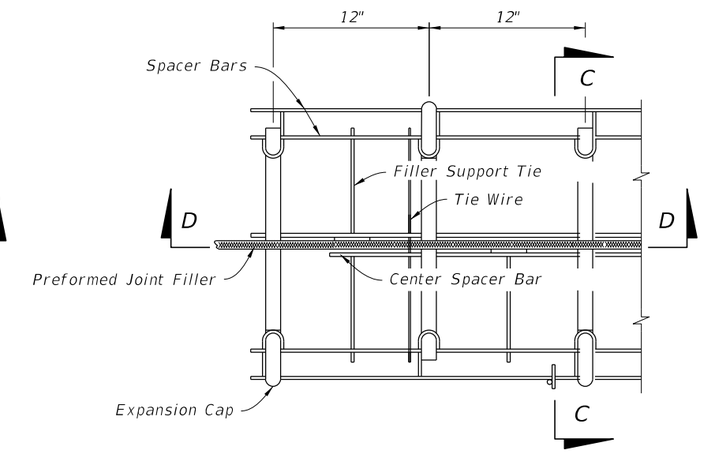

PLAN VIEW

DOWEL BARS (LENGTH 18")	
Pavement Thickness "D"	Diameter
6"-6½"	¾"
7"-8"	1"
8½"-10½"	1¼"
≥11"	1½"

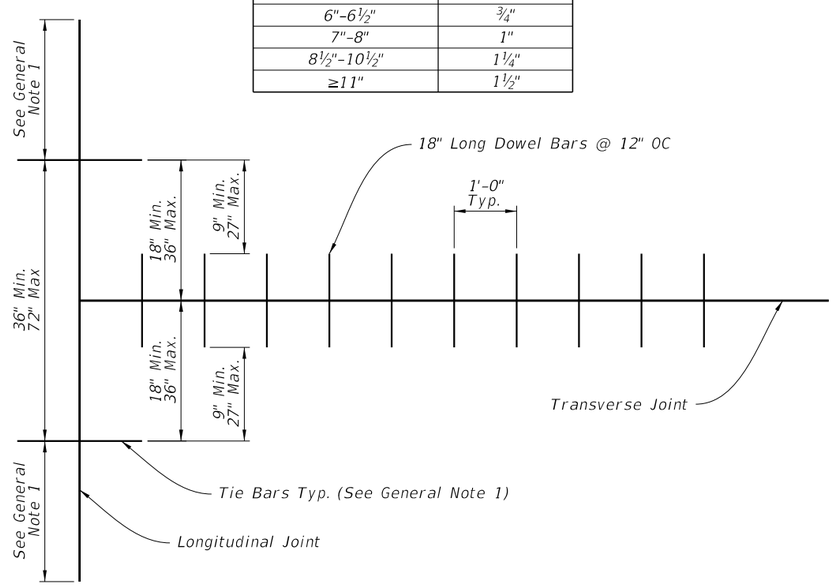

RELATION OF TIE BARS TO DOWEL BARS

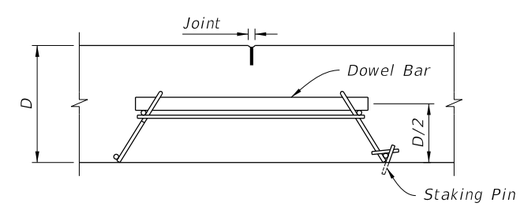

SECTION A-A

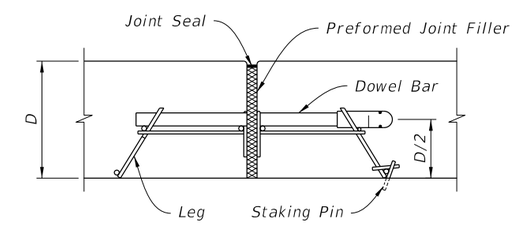

SECTION C-C

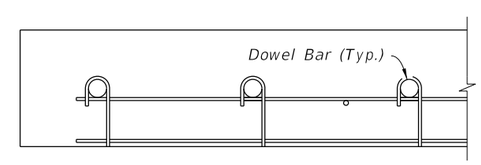

SECTION B-B

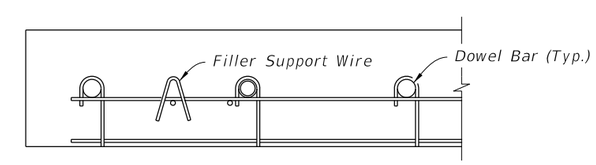

SECTION D-D

CONTRACTION ASSEMBLY

EXPANSION ASSEMBLY

10/20/2022 8:46:34 AM

LAST REVISION	REVISION	DESCRIPTION:			INDEX	SHEET
11/01/22			FY 2023-24 STANDARD PLANS	CONCRETE PAVEMENT JOINTS	350-001	2 of 5

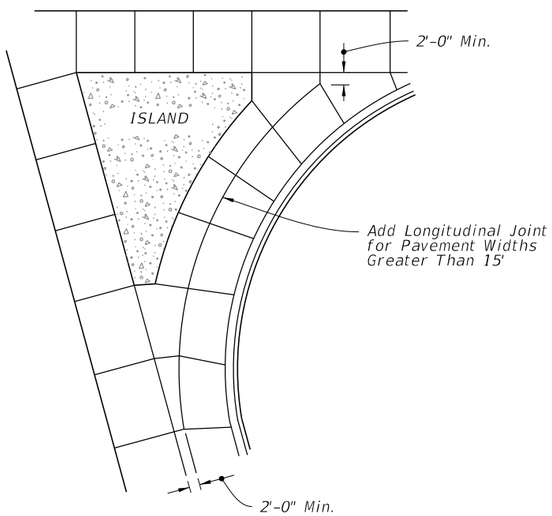

LARGE RIGHT TURN

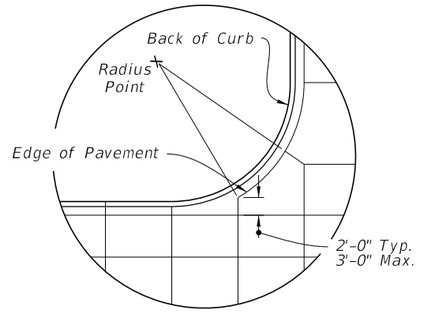

DETAIL "A"

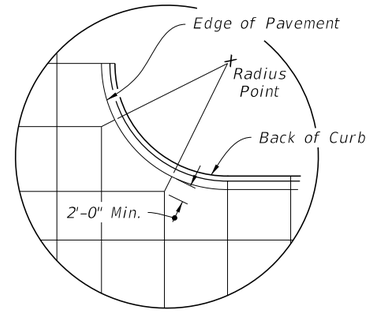

DETAIL "B"

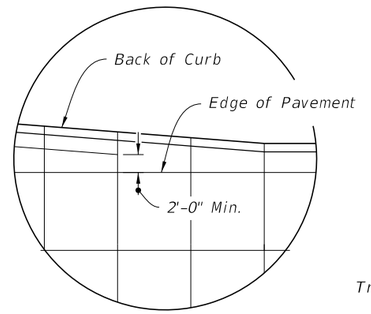

DETAIL "C"

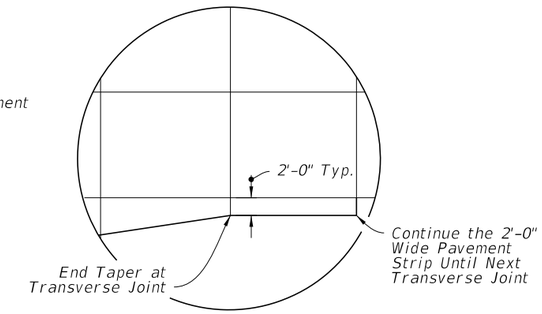

DETAIL "D"

NOTES:

1. The primary roadway controls the transverse joint pattern.
2. Align new joints with existing joints or cracks.
3. Construct transverse joints perpendicular to the roadway.
4. Adjust transverse joints to align with utility fixtures (e.g., manholes and inlets) in the pavement structure when possible.
5. Avoid slabs less than 2 feet wide or greater than 15 feet wide.
6. Avoid angles less than 60° by doglegging joints through curve radius points. Use 90° angles when possible.
7. Correlate longitudinal joints with lane lines when possible.
8. Longitudinal joints are not required for single lane pavement 14' or less in width. For entrance and exit ramp joint details, see sheet 5.

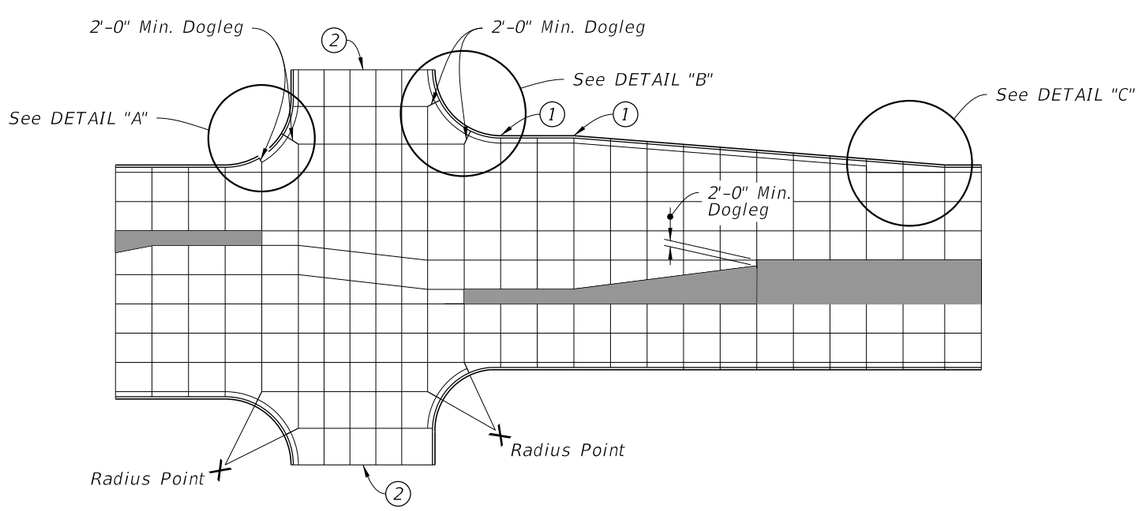

STANDARD INTERSECTION

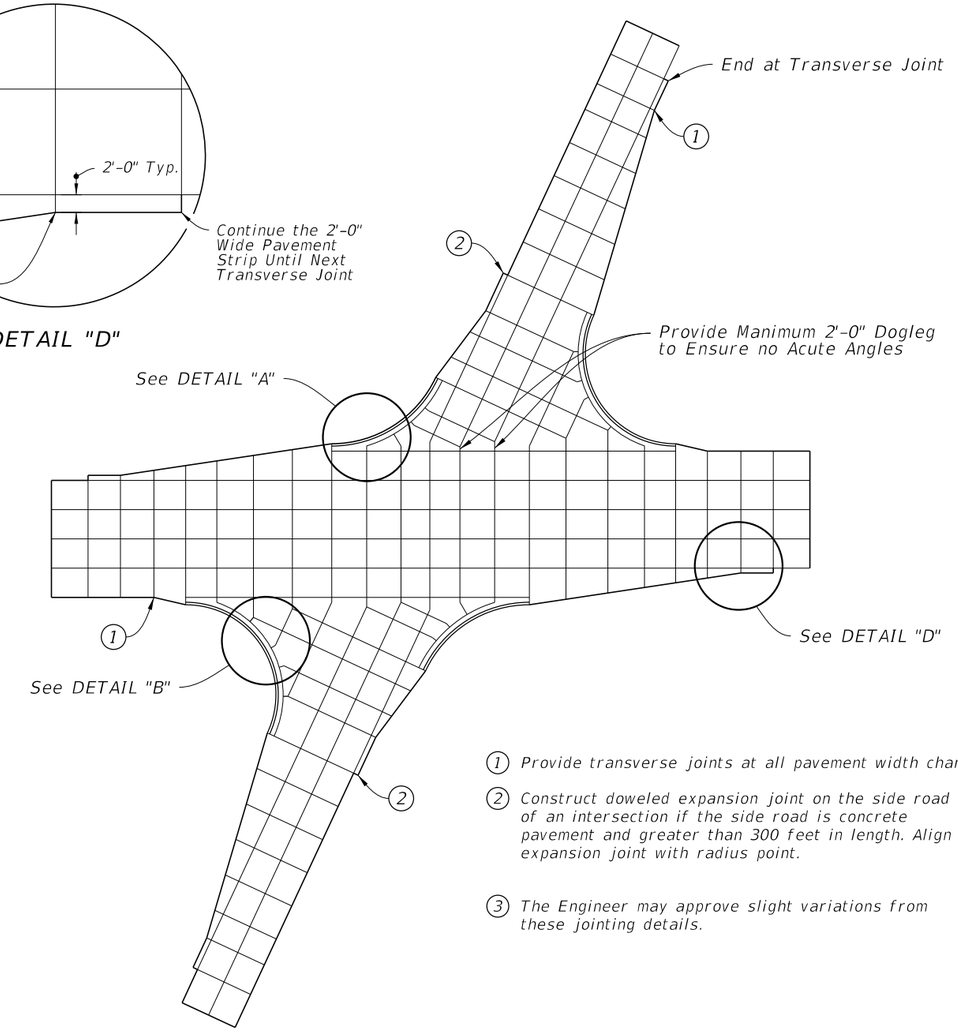

1. Provide transverse joints at all pavement width changes.
2. Construct doweled expansion joint on the side road of an intersection if the side road is concrete pavement and greater than 300 feet in length. Align expansion joint with radius point.
3. The Engineer may approve slight variations from these jointing details.

SKEWED INTERSECTION

JOINT LAYOUTS FOR INTERSECTIONS

LAST REVISION	REVISION	DESCRIPTION:			INDEX	SHEET
11/01/22			FY 2023-24 STANDARD PLANS	CONCRETE PAVEMENT JOINTS	350-001	3 of 5

10/20/2022 8:46:35 AM

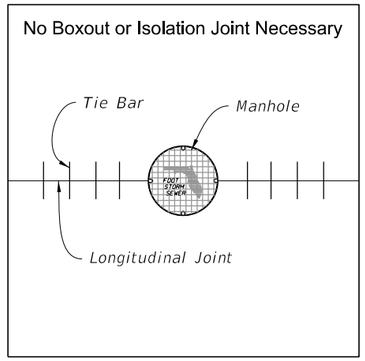

MANHOLE WITH LONGITUDINAL JOINT

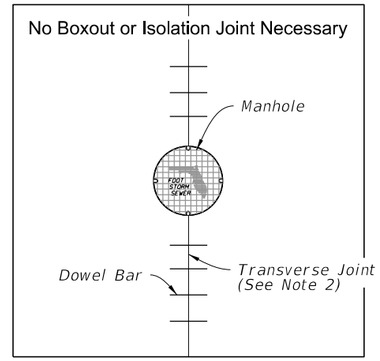

MANHOLE WITH TRANSVERSE JOINT

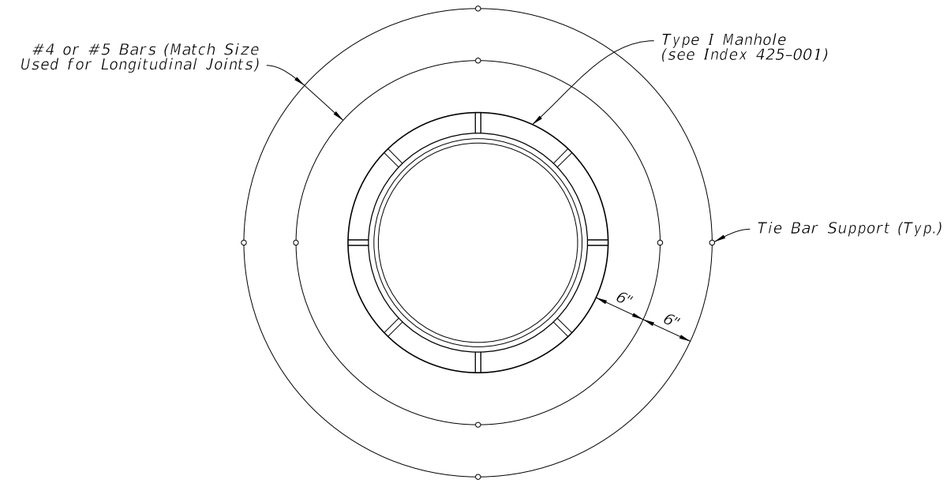

PLAN

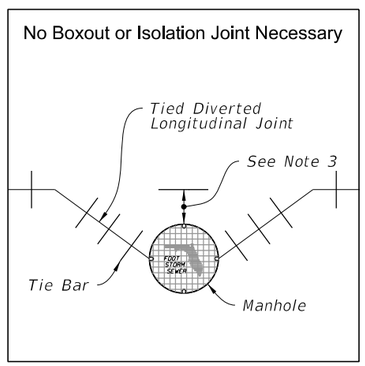

MANHOLE WITH DIVERTED LONGITUDINAL CONTRACTION JOINT

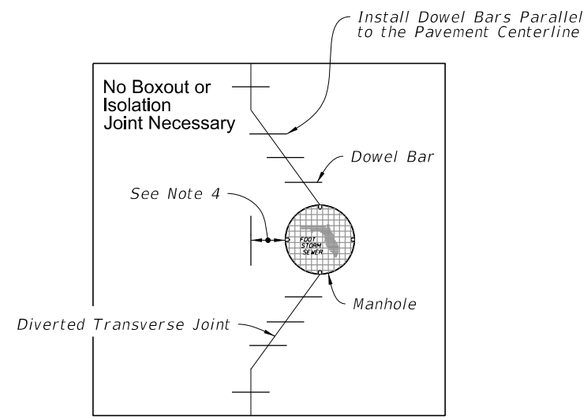

MANHOLE WITH DIVERTED TRANSVERSE CONTRACTION JOINT

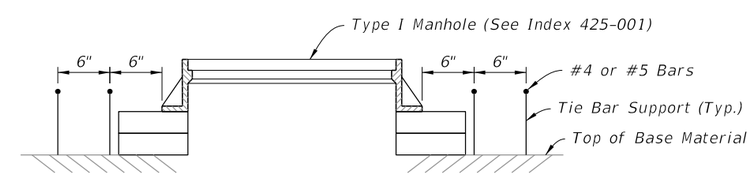

ELEVATION

MANHOLE REINFORCEMENT
(See Notes 3 and 4)

NOTES:

1. Use boxouts when utility structure is in the path of construction joints. Provide a 1 foot minimum clearance between the exterior limit of the structure to the diamond boxout.

2. Adjust transverse joint to intersect manhole, if possible.

3. If distance between the longitudinal joint and the edge of manhole is 2 feet or less, divert the longitudinal joint at a 2:1 taper rate to the center of the manhole. If the distance is greater than 2 feet, do not divert the joint, saw as normal, and place reinforcement rebar around the manhole.

4. If the distance from the edge of the manhole to the nearest transverse joint is 4 feet or less, redirect joint at 2:1 taper to intersect the center of the manhole. If distance is greater than 4 feet, do not divert the joint, saw as normal, and place reinforcement rebar around the manhole.

5. Align transverse joint with one edge of inlet when practical.

6. All manholes, meter boxes and other projections into the pavement shall be boxed-in with ½" preformed expansion joint material.

ISOLATION JOINT DETAILS

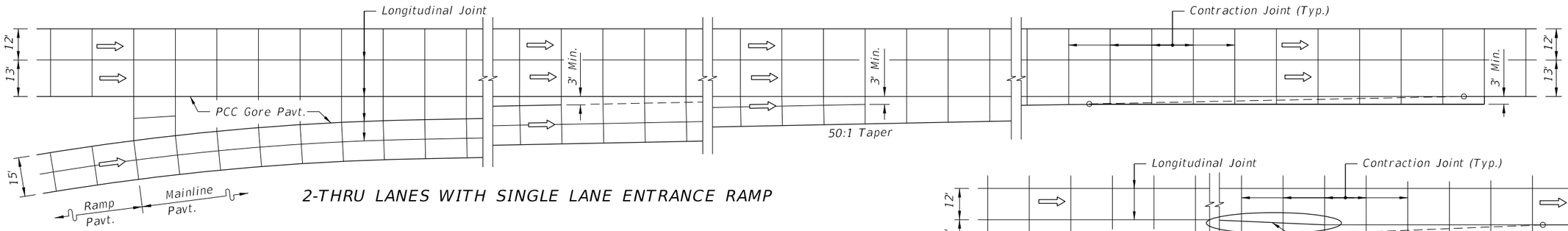

2-THRU LANES WITH SINGLE LANE ENTRANCE RAMP

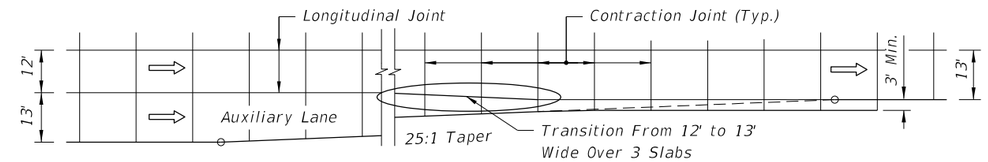

ENTRANCE TAPER WITH AUXILIARY LANE

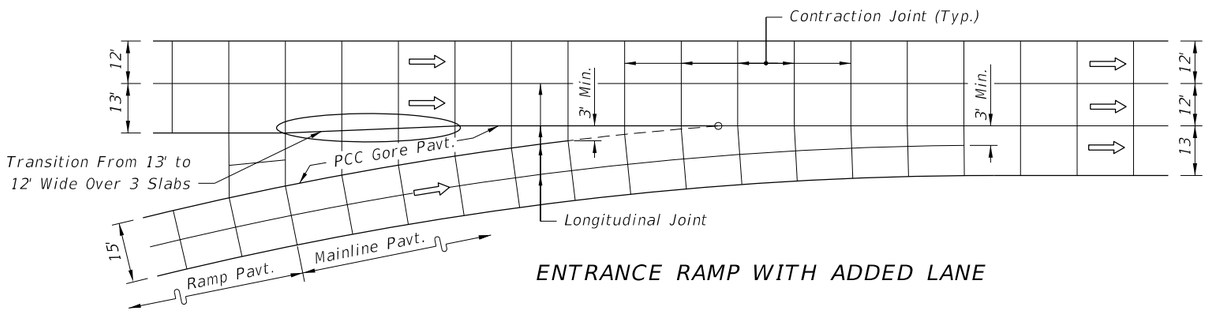

ENTRANCE RAMP WITH ADDED LANE

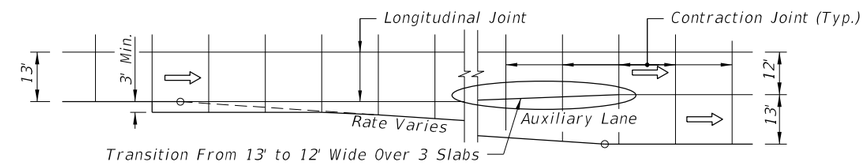

EXIT TAPER WITH AUXILIARY LANE

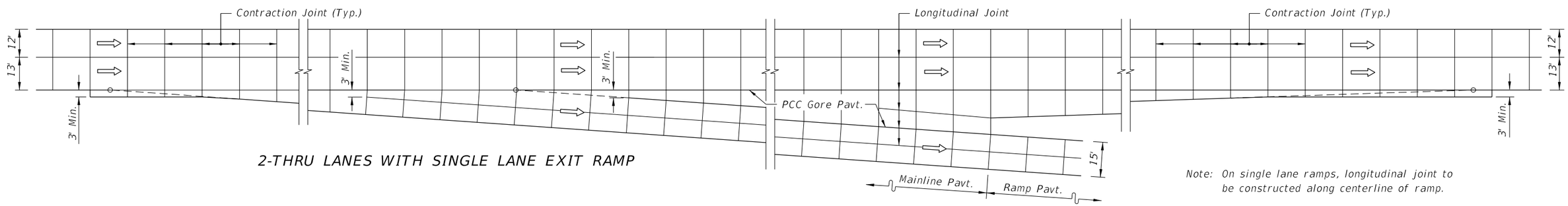

2-THRU LANES WITH SINGLE LANE EXIT RAMP

Note: On single lane ramps, longitudinal joint to be constructed along centerline of ramp.

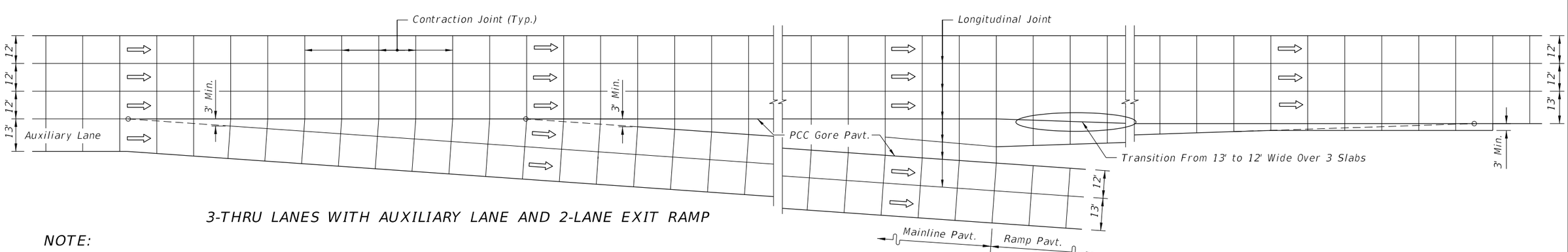

3-THRU LANES WITH AUXILIARY LANE AND 2-LANE EXIT RAMP

NOTE:

Transverse joint spacing should not exceed 15-ft or twenty-four times the slab thickness, whichever is less. Construct a longitudinal joint in the center of single-lane ramps.

JOINT LAYOUT AT ENTRANCE AND EXIT RAMP TERMINALS

LAST REVISION	REVISION	DESCRIPTION:			INDEX	SHEET
11/01/22			FY 2023-24 STANDARD PLANS	CONCRETE PAVEMENT JOINTS	350-001	5 of 5

10/20/2022 8:46:36 AM

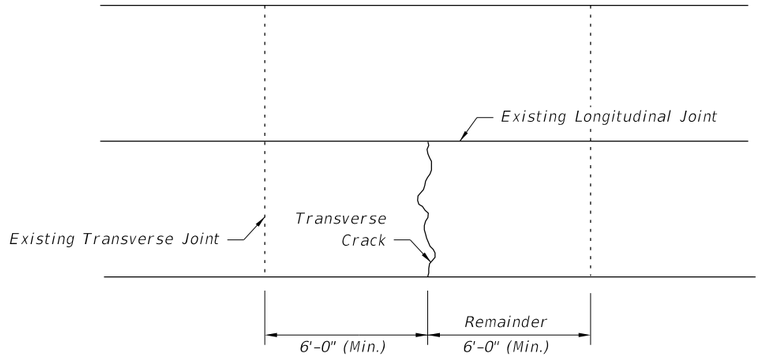

FIGURE 10.2 - REPAIR METHOD: NONE OR CLEAN AND SEAL

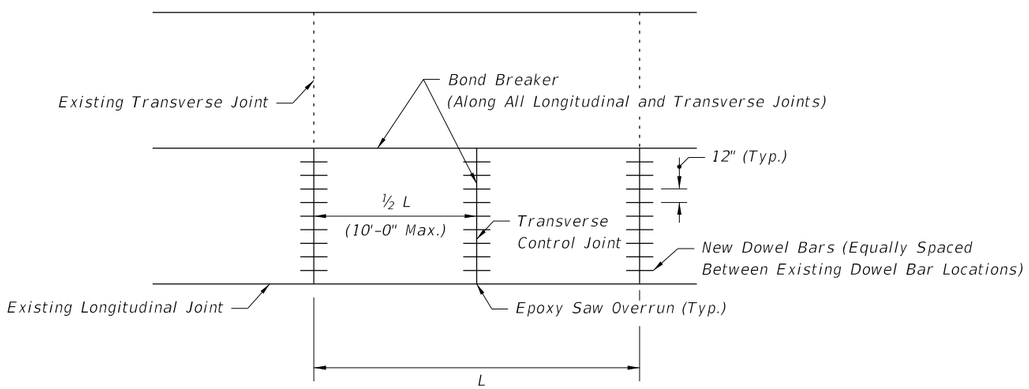

FIGURE 10.3 - FULL SLAB FULL DEPTH REPLACEMENT

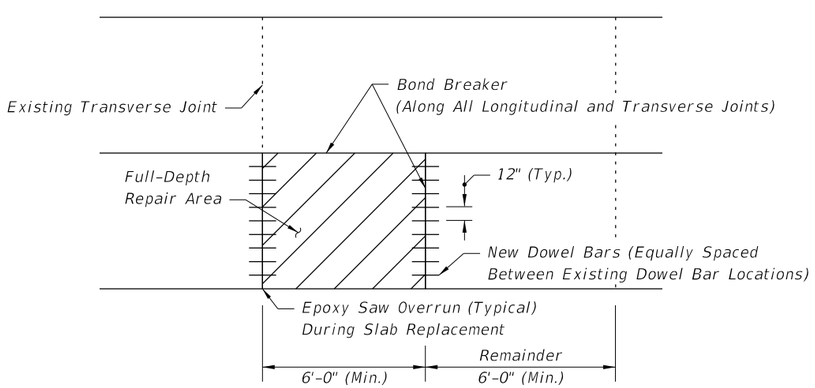

FIGURE 10.4 - PARTIAL SLAB FULL DEPTH REPLACEMENT

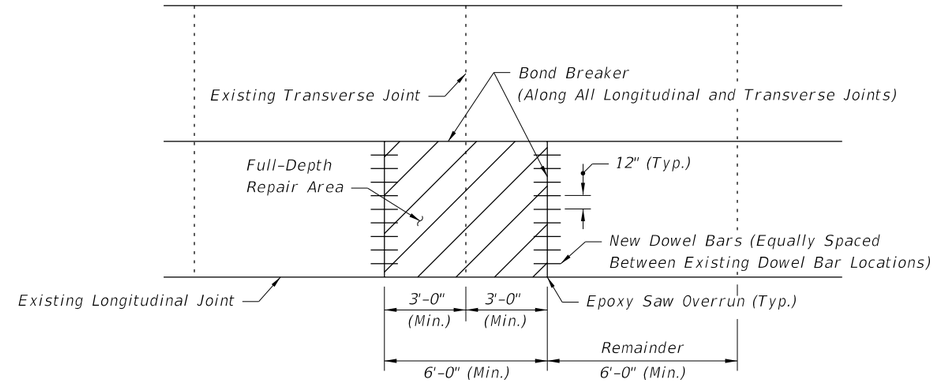

FIGURE 10.5 - FULL-DEPTH REPAIR ON BOTH SIDES OF THE JOINT

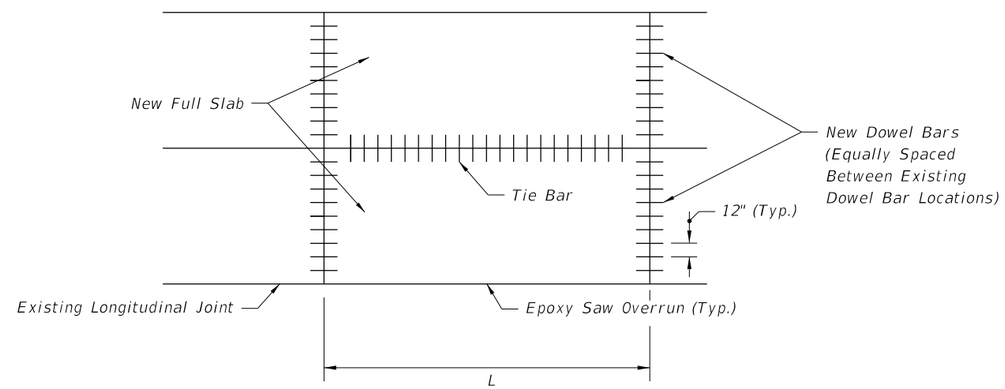

FIGURE 10.6 - MULTIPLE SLAB FULL DEPTH REPLACEMENT

GENERAL NOTES

1. For Repair and Replacement Criteria see Sheet 2.
2. Full depth repairs consist of removing and replacing at least a portion of the existing slab to the bottom of the concrete.
3. Repair boundaries shall be sawed full-depth with diamond saw blades. On hot days, it may not be possible to make this cut without first making a wide, pressure relief cut within the repair boundaries. A carbide-tipped wheel saw may be used for this purpose, but the wheel saw must not intrude on the adjacent lane, unless the lane is slated for repair. The wheel saw cuts produce a ragged edge that promotes excessive spalling along joints. Hence, if wheel saw cuts are made, diamond saw cuts must be made 18 in. outside the wheel saw cuts. To prevent damage to the base, the wheel saw must not be allowed to penetrate more than 0.5 in. into the base.
4. No additional base or subgrade material shall be added and all loose base or subgrade material shall be removed prior to placement of the new concrete slab. The concrete slab shall be placed to the full depth of the material removed. No additional compensation will be allowed for additional concrete required to bring proposed concrete slab up to finished grade.
5. Removal of the damaged concrete pavement shall be by lifting. Any good concrete pavement which is damaged during removal of damaged areas shall be removed and replaced by the contractor at his expense.
6. If the roadway contract includes grinding, then the slab replacement shall be performed first.
7. During slab replacement operations, fill any saw cut over runs into adjacent slabs with epoxy.
8. Install tie bars at longitudinal joints when two full adjacent or multiple replaced slabs.

SLAB REPAIR AND REPLACEMENT CRITERIA

DISTRESS PATTERN	SEVERITY/DESCRIPTION		REPAIR METHOD	REFERENCE
CRACKING				
Longitudinal	Light	<⅛", no faulting, spalling <½" wide	None	Figure 10.2
	Moderate	⅛" <width <½", spalling <3" wide	Clean and Seal	Figure 10.2
	Severe	width >½", spalling >3" faulting >½"	Replace	Figure 10.3
Transverse	Light	<⅛", no faulting, spalling <½" wide	None	Figure 10.2
	Moderate	⅛" <width <½", spalling <3" wide	Clean and Seal	
	Severe	width >½", spalling >3" faulting >½"	Replace	Figure 10.3, 10.4 and 10.5
Corner Breaks	A corner of the slab is separated by a crack that intersects the adjacent longitudinal and transverse joint, describing an approximate 45° angle with the direction of traffic.		Full Depth	Figure 10.4 and 10.5
Intersecting Random Cracks (Shattered Slab)	Cracking patterns that divide the slab into three or more segments.		Full Depth	Figure 10.3 and 10.4
JOINT DEFICIENCIES				
Spall Nonwheel Path	Light	spall width <1½", < ⅓ slab depth, <12" in length	None	Figure 10.4 and 10.5
	Moderate	1½" <spall width <3", < ⅓ slab depth, <12" in length	None	Figure 10.4 and 10.5
	Severe	spall width >3" or length >12"	Full Depth	Figure 10.4 and 10.5
Spall Wheel Path	Light	spall width <1½", <than ⅓ slab depth, <12" in length	None	Figure 10.4 and 10.5
	Moderate	1½" <spall width <3", < ⅓ slab depth, <12" in length	Full Depth	Figure 10.4 and 10.5
	Severe	spall width >3" or length >12"	Full Depth	Figure 10.4 and 10.5
SURFACE DETERIORATION				
Pop Outs Nonwheel Path	Small pieces of surface pavement broken loose, normally ranging from 1 to 4 in. diameter and ½ to 2 in. in depth.			
	Light	Not deemed to be a traffic hazard	Keep under observation	
	Severe	Flying debris deemed a traffic hazard	Full Depth	Figure 10.4
Pop Outs Wheel Path	Small pieces of surface pavement broken loose, normally >3" diameter and 2" in depth.			
	Light	Deemed to be a traffic hazard	Full Depth	Figure 10.4
	Severe	Flying debris deemed a traffic hazard	Full Depth	Figure 10.4
MISCELLANEOUS DISTRESS				
Faulting	Elevation differences across joints or cracks.			
	Light	Faulting <4/32"	None	
	Moderate	4 <Faulting <16/32"	Grind	
	Severe	Faulting >16/32"	Grind	
Lane To Shoulder Drop-Off	Light	0 <drop-off <1"	None	N/A
	Moderate	1" <drop-off <3"	Build Up	
	Severe	drop-off >3 "	Build Up	
Water Bleeding Or Pumping	Seeping or ejection of water through joints or cracks.		Install appropriate drainage, edge drain, permeable subbase, reseal joints, etc.	N/A
Blowups	Upward movement at transverse joints or cracks often accompanied by shattering of the concrete.		Full Depth	Figure 10.3 and 10.4

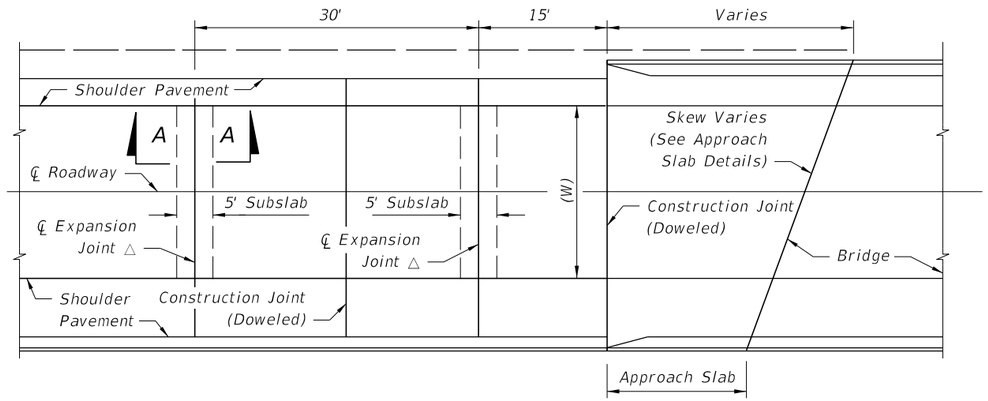

△ Construct Expansion Joints Parallel To The Existing Transverse Pavement Joints On Rehabilitation Projects, And Parallel To The Standard Transverse Pavement Joints Shown In The Plans For New Construction.

PLAN

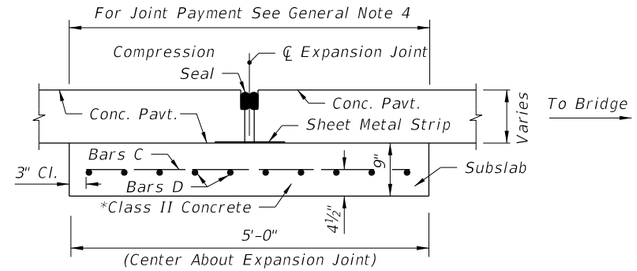

REINFORCING STEEL				
Mark	Size	Spac.	No. Reqd.	Length
C	5	6"	Varies	4'-6"
D	5	6"	10	W Minus 6"

* Finish surface smooth. Cure with heavy coating of wax base white pigmented curing compound. Apply second application immediately prior to placing pavement.

SECTION A-A

GENERAL NOTES:

1. For asphalt base, use four expansion joints, spaced at 15 feet, per Index 350-001.
2. The centerline of roadway and the centerline of bridge do not necessarily coincide. Determine the centerline of the roadway pavement prior to the placement of the expansion joint.
3. For information on other types of concrete pavement joints see Index 350-001.
4. Pay quantity for expansion joint is the length of joint to be constructed across the roadway and shoulder pavements, measured at right angles to the centerline of the roadway. Payment for expansion joint is full compensation for joint construction, including reinforced concrete subslab, sheet metal strip and compression seal, but, not including roadway pavement reconstruction associated with joint replacement or reconstruction. Expansion joint to be paid for under the contract unit price for Bridge Approach Expansion Joint, LF.

EXPANSION JOINT

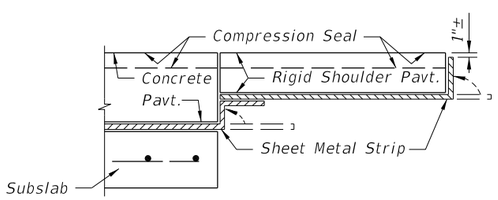

RIGID SHOULDER PAVEMENT

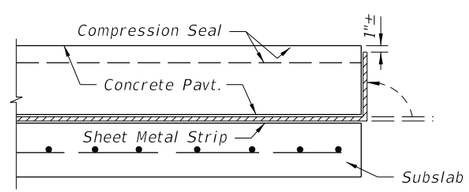

SODDED SHOULDER OR FLEXIBLE SHOULDER PAVEMENT

NOTES:

1. Immediately prior to placing the seal, thoroughly clean the joint of all foreign material. Immediately after the seal is placed, bend up the sheet metal strip against the pavement edge.
2. Use a minimum 16 gage steel, 12" wide sheet metal strip, Galvanized in accordance with ASTM A-526, Coating Designation G90.

SHEET METAL STRIP DETAILS

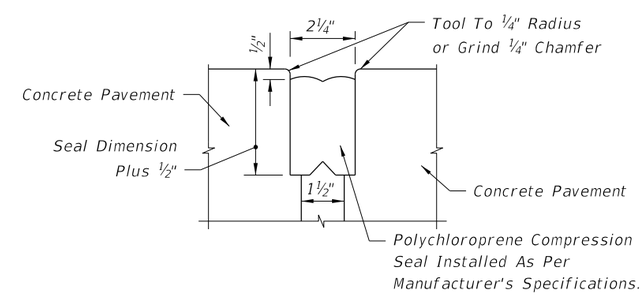

NOTE:
Thoroughly coat all contacting surfaces between the compression seal and concrete with a lubricant-adhesive.

JOINT DIMENSIONS

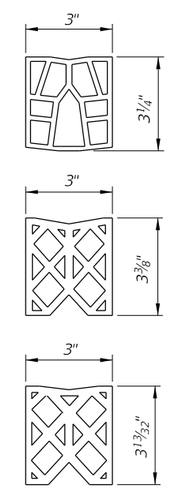

OPTIONAL SEALS

COMPRESSION SEAL DETAIL

10/20/2022 8:46:39 AM

LAST REVISION	REVISION	DESCRIPTION:				
11/01/21			FY 2023-24 STANDARD PLANS	BRIDGE APPROACH EXPANSION JOINT CONCRETE PAVEMENT WITH SPECIAL SELECT SOIL BASE	INDEX 370-001	SHEET 1 of 1

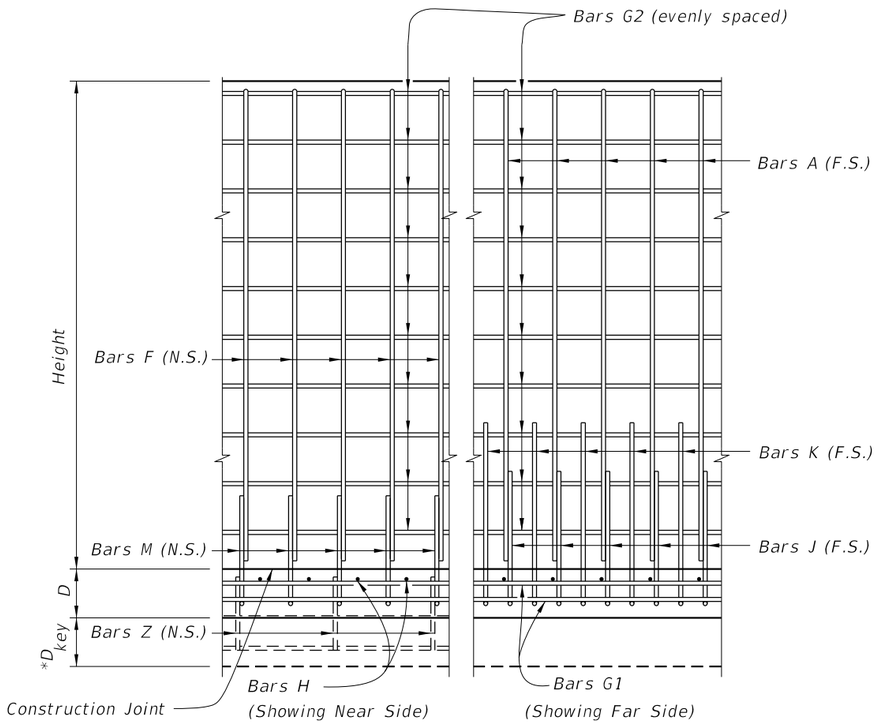

VIEW A-A

(Shear key shown dashed)

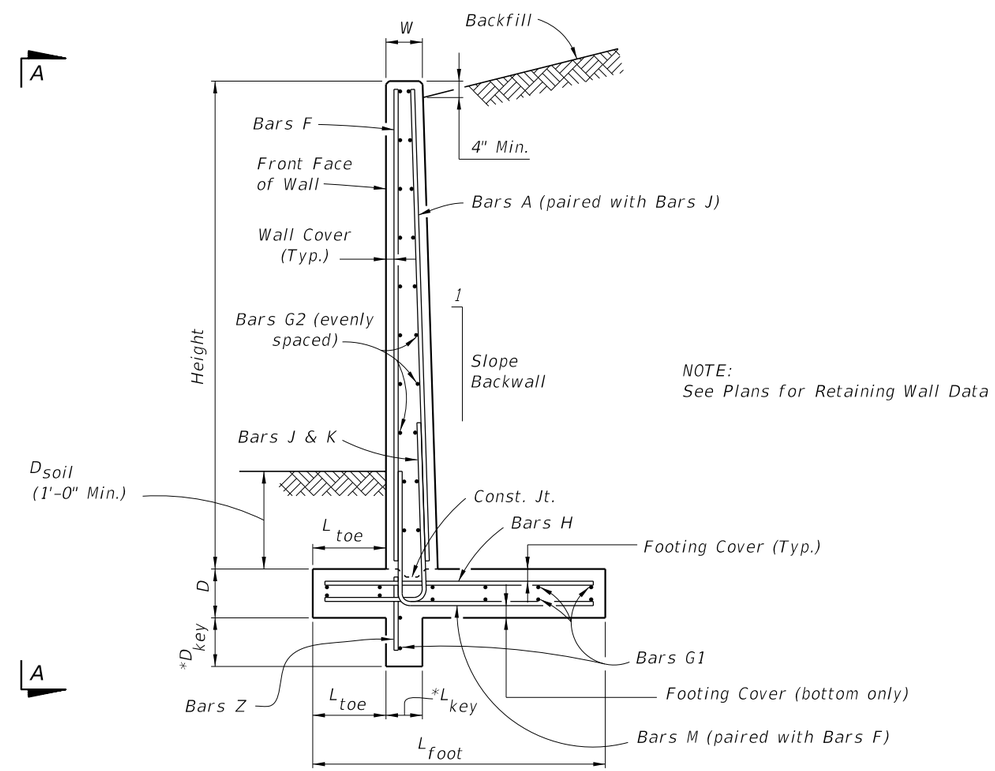

* Shear Key is required only when specified in the Plans.

TYPICAL SECTION

NOTES

TRAFFIC RAILINGS OR PARAPETS:
If there is a Traffic Railing or Parapet on the wall, align Wall Joints with V-Grooves, and Wall Expansion Joints with Barrier Open Joints.

FOUNDATION:
Prepare the soil below the footing in accordance with the requirements for spread footings in Specification Section 455.

REINFORCING BENDING DIAGRAMS

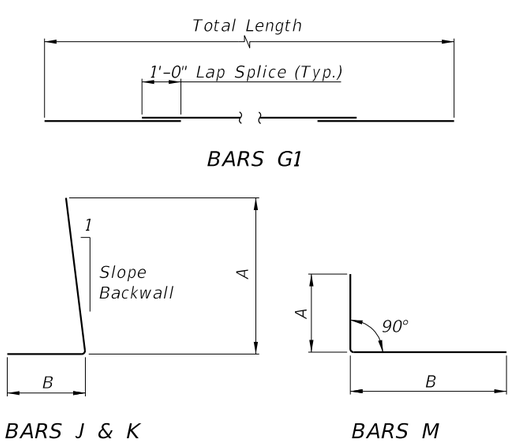

NOTE:
All bar dimensions are out-to-out

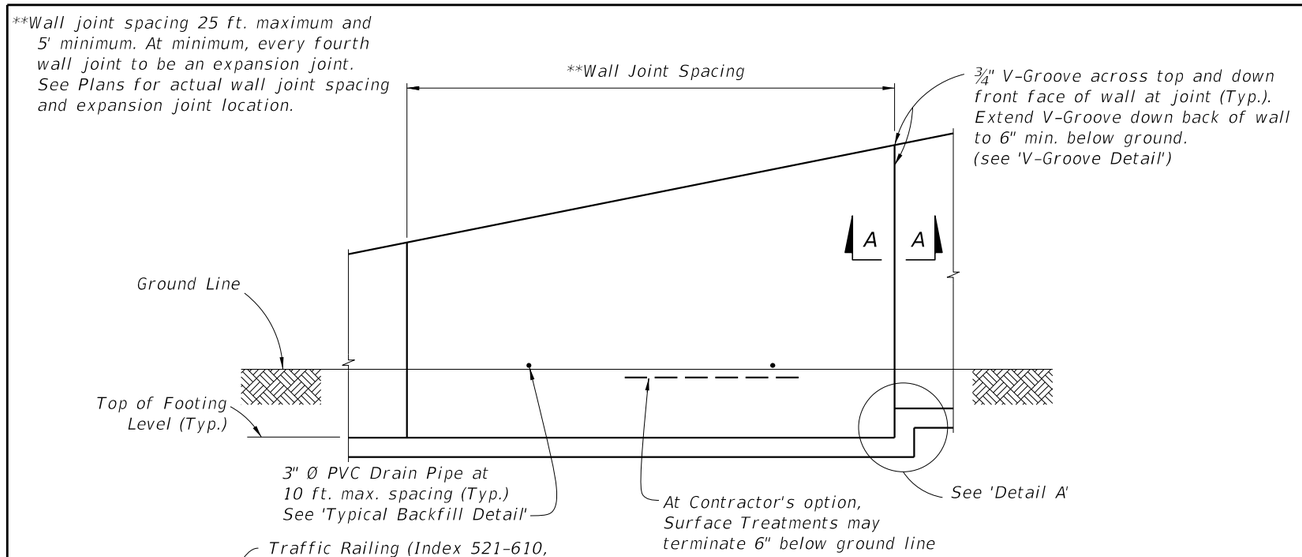

FRONT ELEVATION

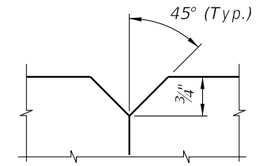

V-GROOVE DETAIL

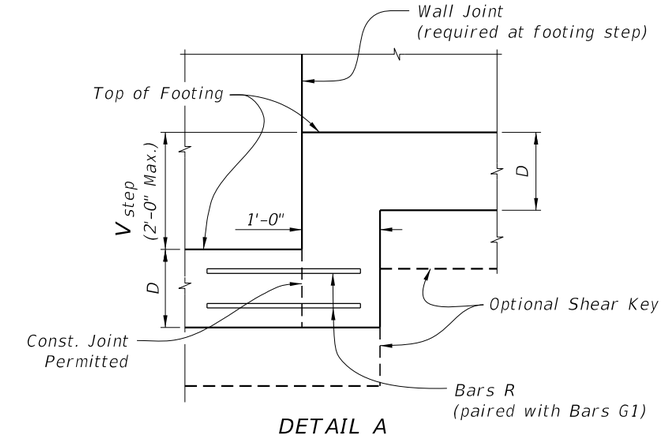

DETAIL A

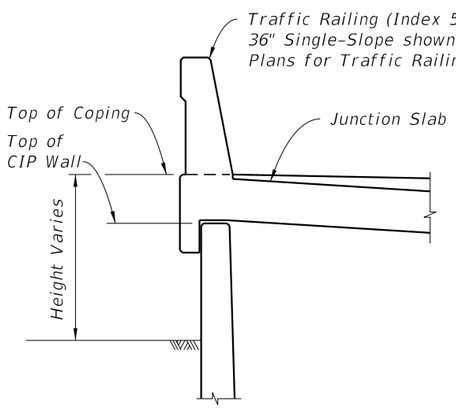

TRAFFIC RAILING/JUNCTION SLAB DETAIL

(36" Single-Slope shown, other Traffic Railings similar)

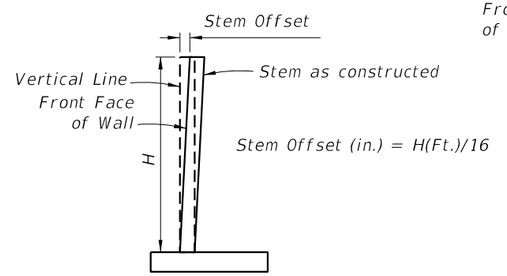

STEM OFFSET VALUES

(for H < 20 Ft.)

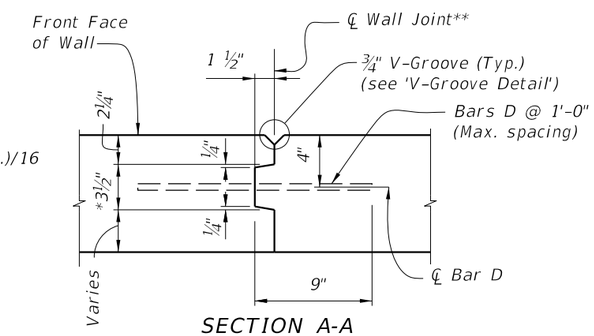

SECTION A-A
WALL JOINT DETAIL

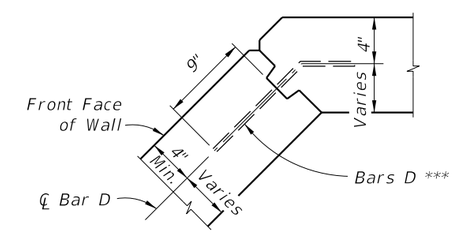

TYPICAL CORNER JOINT DETAIL

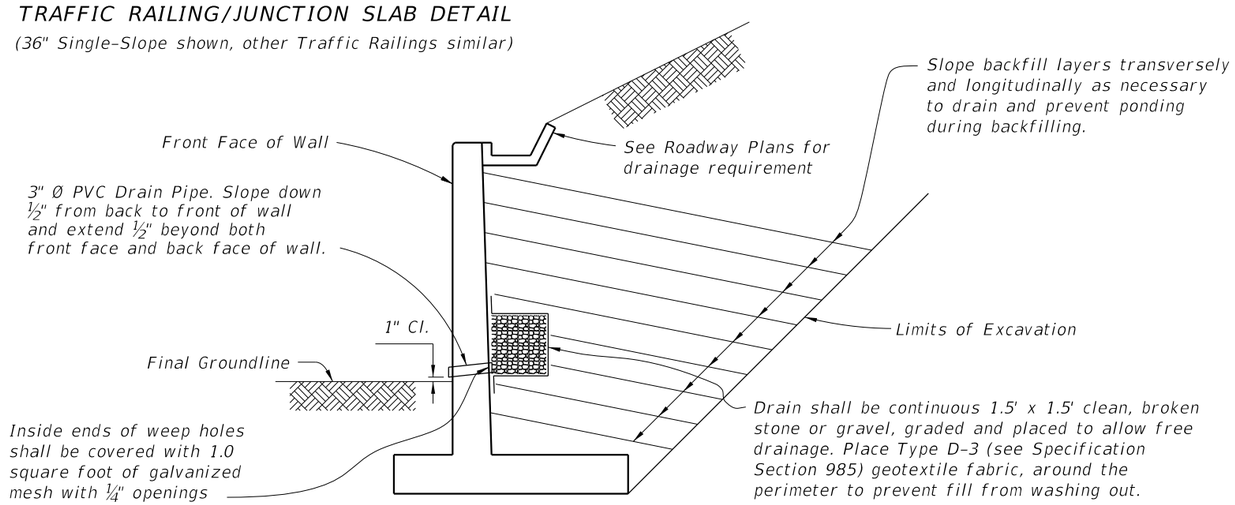

TYPICAL BACKFILL DETAIL

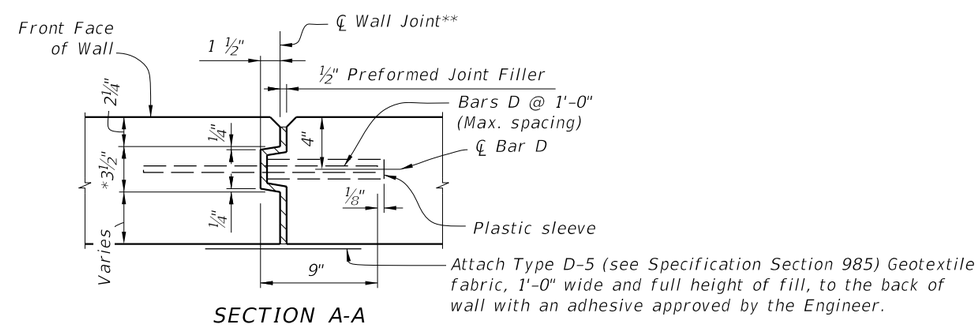

SECTION A-A
EXPANSION JOINT DETAIL

* Key to stop at top of footing and 6" from top of wall. Joint across footing and top of wall to be a straight line.

** Stay-In-Place Plastic Preformed Bond Beakers are permitted to form joints.

*** Bars D: Where a bend is required to maintain clearances, submit bend angle to GFRP supplier; steel reinforcing may be field bent.

10/20/2022 8:46:41 AM

LAST REVISION	REVISION	DESCRIPTION:			INDEX	SHEET
11/01/20			FY 2023-24 STANDARD PLANS	CANTILEVER RETAINING WALL (C-I-P)	400-010	2 of 2

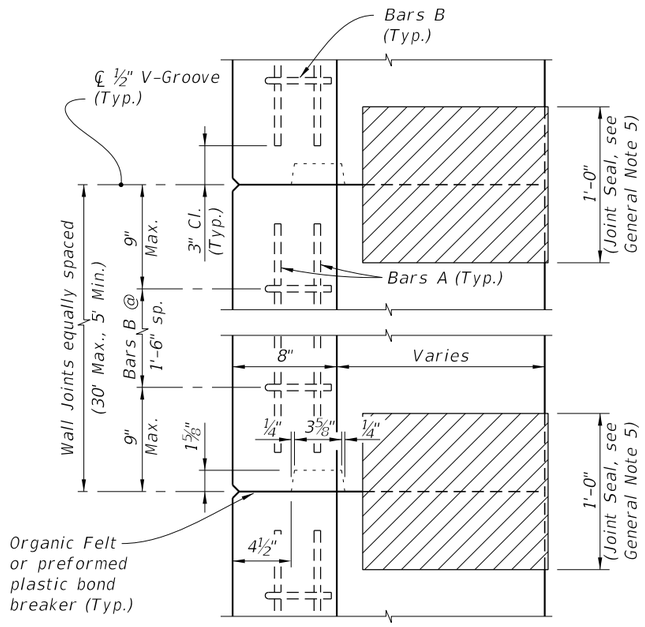

KEYWAY & WALL JOINT DETAIL
(TOP VIEW)

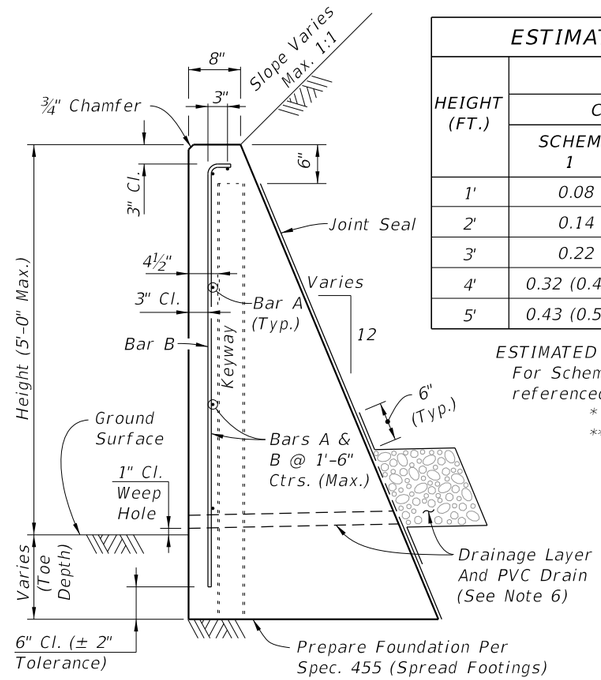

TYPICAL SECTION
C-I-P CONCRETE GRAVITY WALL

ESTIMATED QUANTITIES FOR C-I-P WALL					
HEIGHT (FT.)	PER LINEAR FOOT OF WALL				WEEP HOLES & DRAIN REQD.
	CLASS NS CONCRETE (CY)			REINF. STEEL (LB.)	
	SCHEME 1	SCHEME 2	SCHEME 3**		
1'	0.08	0.11 (0.20*)	0.03	3 (4*)	No
2'	0.14	0.20 (0.32*)	0.09	4 (5*)	No
3'	0.22	0.32 (0.47*)	0.29	5 (6*)	Yes
4'	0.32 (0.43*)	0.47 (0.65*)	0.43	6 (7*)	Yes
5'	0.43 (0.55*)	0.65 (0.85*)	0.60	7 (8*)	Yes

ESTIMATED QUANTITIES NOTES:
For Scheme 3 Junction Slab and Traffic Railing see the referenced Index for estimated quantities.
* Quantity for 2'-0" Toe Depth.
** Quantity for Scheme 3 assumes 1'-3" thick coping above Gravity Wall.

GENERAL NOTES

1. C-I-P Gravity Walls constructed as extensions of reinforced concrete retaining walls, except walls of proprietary designs, shall have the same face texture and finish as the reinforced concrete retaining wall.
2. Concrete for Gravity Wall shall be Class NS per Section 347. Concrete for Scheme 3 Junction Slab and Traffic Railing shall be Class II per Section 346, unless otherwise specified in the plans.
3. Reinforcing steel shall meet the requirements of Specification Section 931 (Grade 40 or 60). Smooth or Deformed Welded Wire Reinforcement (WWR) may be substituted on an equal area basis. Do not increase bar/wire spacing for Grade 60 reinforcing steel or WWR.
4. When required, for adjunct guiderail, see Index 515-070 or 515-080 as appropriate. For adjunct Type B fence see Index 550-002.
5. Joint Seal: Organic Felt bond breaker in accordance with Specification Section 400 or Type D-5 geotextile fabric in accordance with Specification Section 985. Mop all contact surfaces of concrete and Organic Felt or geotextile fabric with cut-back asphalt. Stop Organic Felt or geotextile fabric 6" below top of wall.
6. Provide a continuous 1'x1' clean gravel or crushed rock drain for wall heights 3 ft. and higher. Wrap drainage layer as shown, with Type D-3 geotextile fabric in accordance with Specification Section 985. Provide 8"x8" galvanized mesh with ¼" openings, at the inside end of the PVC Drain Pipe. Provide 2" Ø PVC Drain Pipe (Sch. 40) at 10 ft. max. spacing (when Drainage Layer is required). Locate outermost edge of Drain Pipe a minimum of 2'-0" from wall joints.
7. Cost of reinforcing steel, face texture, finish, joint seal, drain pipes, drainage layer, galvanized mesh and geotextile fabric to be included in the Contract Unit Price for Concrete Class NS, Gravity Wall. Cost of concrete for Junction Slab in Scheme 3, to be included in Contract Unit Price for Concrete Traffic Railing Barrier With Junction Slab. Adjunct railings or fences to be paid for separately.

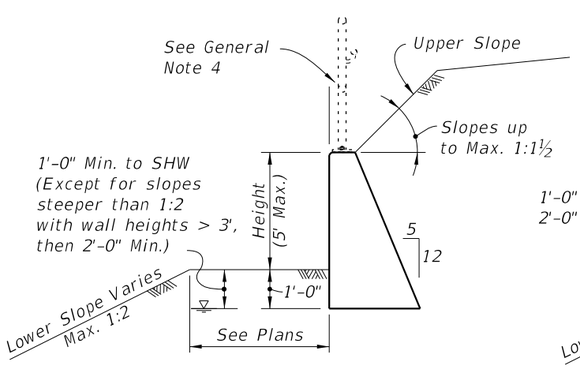

SCHEME 1
(No Traffic Loading Effects &
Upper Slopes ≤ 1:1½)

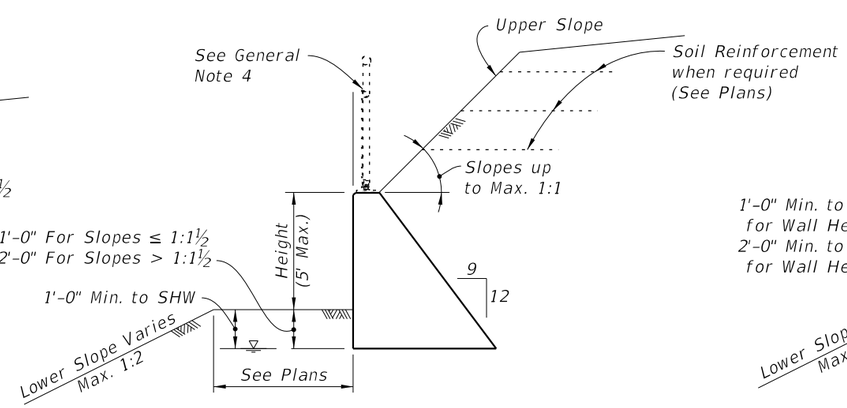

SCHEME 2
(With Traffic Loading or
Upper Slopes > 1:1½)

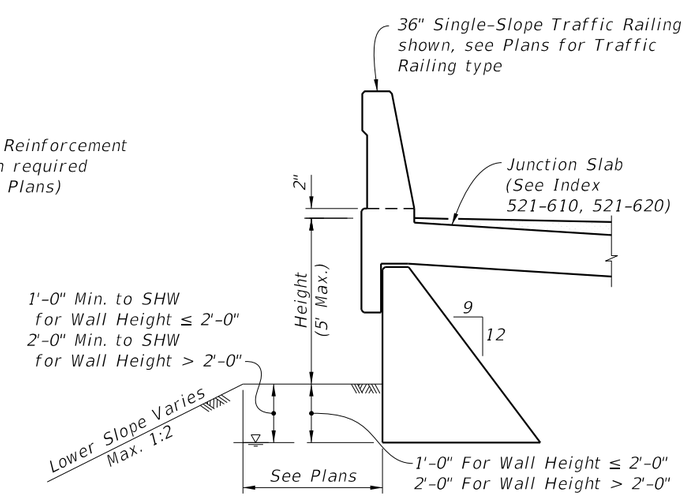

SCHEME 3
(With Traffic Railing)

BILL OF REINFORCING STEEL		
MARK	SIZE	LENGTH
A	4	As Reqd.
B	4	As Reqd.

BAR BENDING DIAGRAM

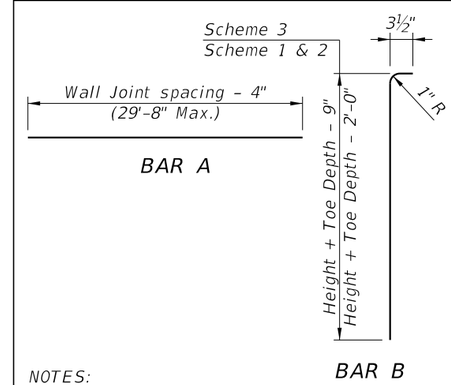

NOTES:
1. All bar dimensions are out to out.
2. Lap splices for Bars A must be a minimum of 1'-10".

10/20/2022 8:46:41 AM

LAST REVISION	REVISION	DESCRIPTION:			INDEX	SHEET
11/01/17			FY 2023-24 STANDARD PLANS	GRAVITY WALL	400-011	1 of 1

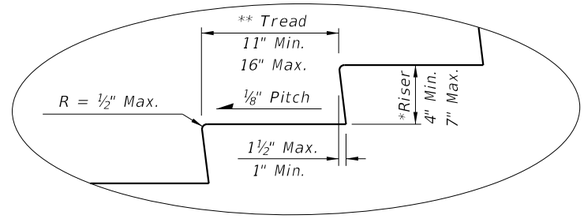

STAIR TREAD AND RISER DETAILS

* The greatest riser height within the flight of steps shall not exceed the smallest by more than ⅜".
** The greatest tread depth within the flight of steps shall not exceed the smallest by more than ⅜".

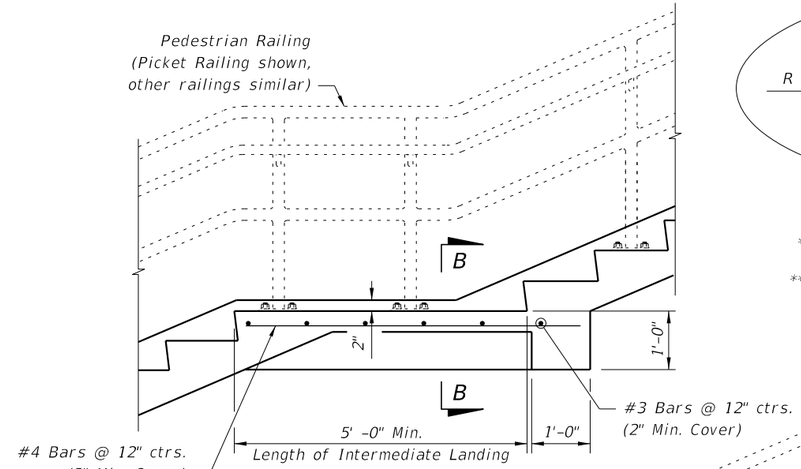

ELEVATION

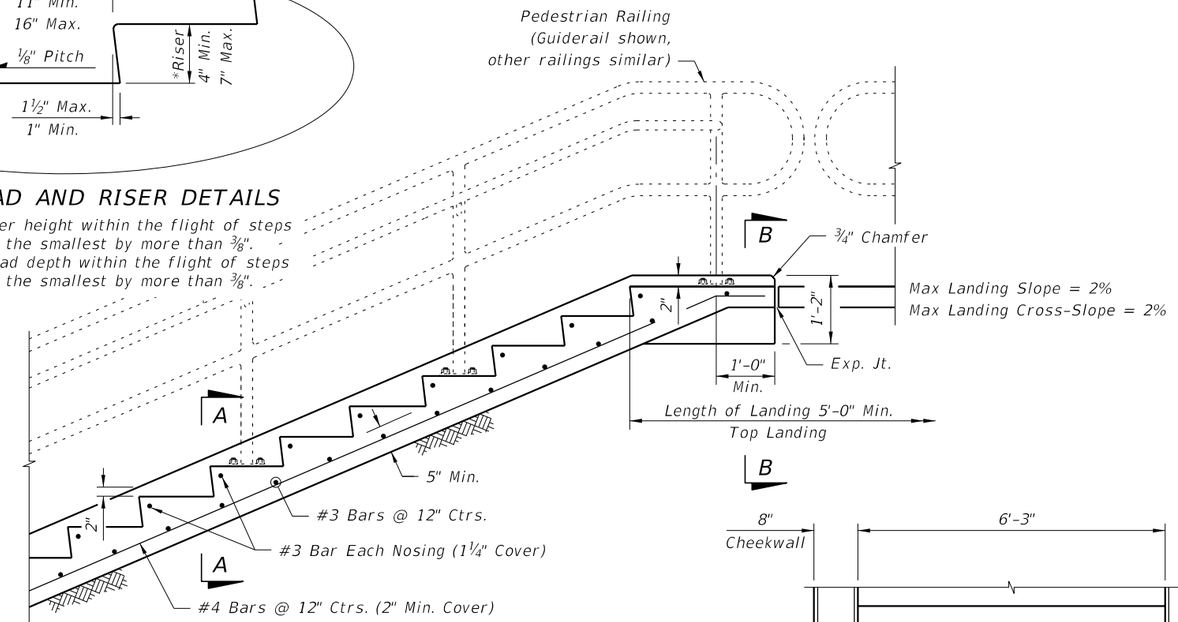

NOTE: Provide a maximum of 12 risers between landings.

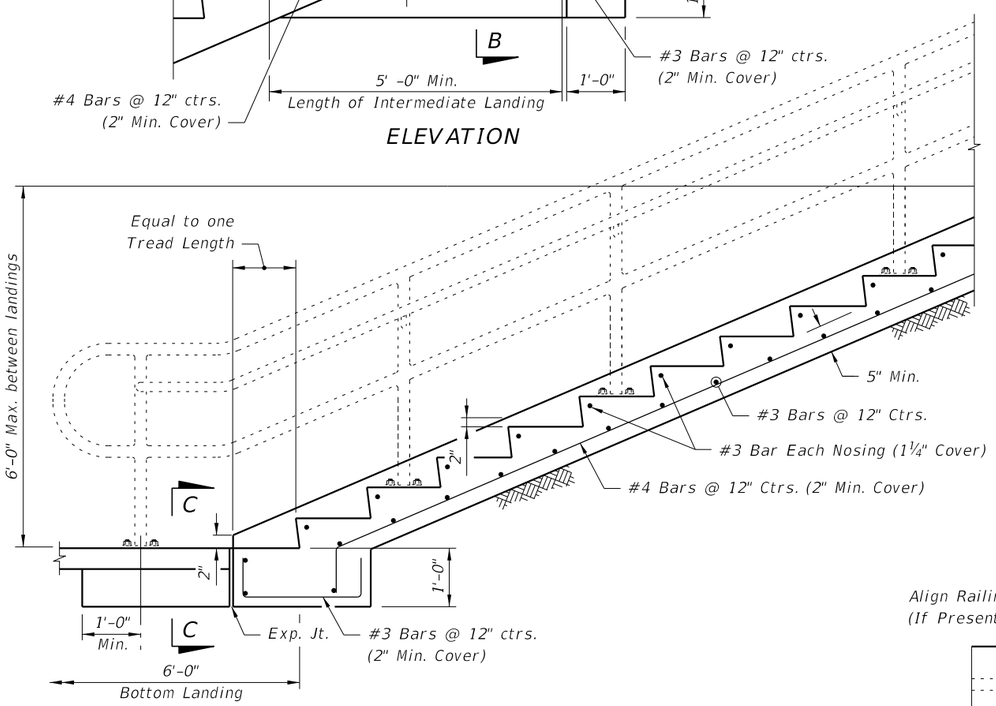

Max Landing Slope = 2%
Max Landing Cross-Slope = 2%

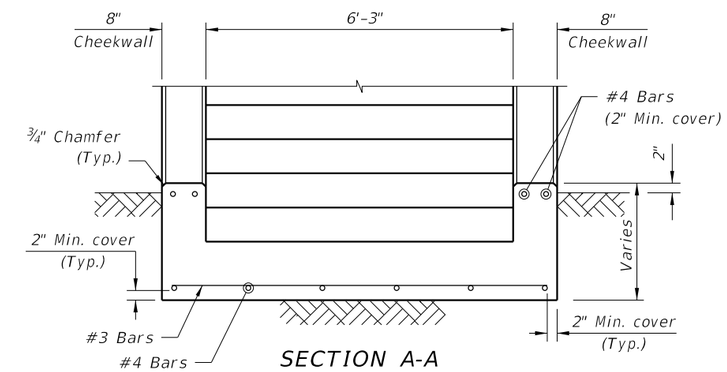

SECTION A-A

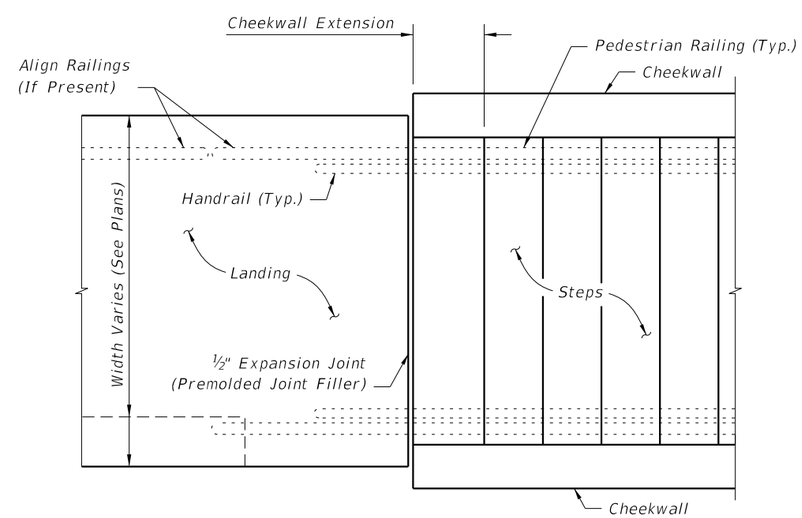

PLAN AT JUNCTION OF STEPS & LANDING
(Bottom Landing shown, Top Landing similar)

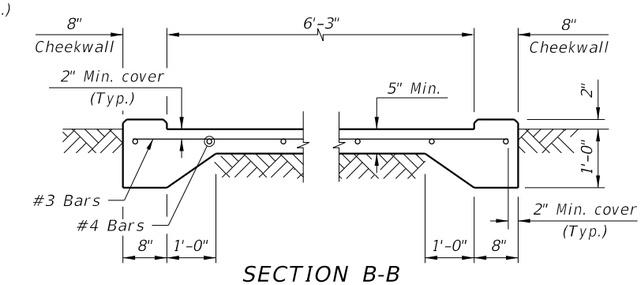

SECTION B-B

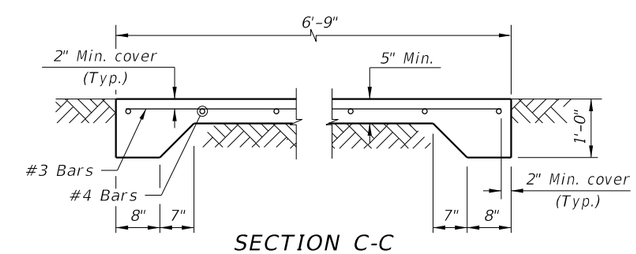

SECTION C-C

NOTES:

1. Do not use this Index for suspended (structural) steps or stairways.
2. Construct steps in accordance with Specification 522.
3. Concrete: Class NS, Specification 347.
4. Tread Finish: Broom finish parallel to steps unless otherwise shown in Plans.
5. Pedestrian Railing: See Indexes 515-052, 515-062, 515-070, 515-080 or Project Specific Design.
6. Cost of concrete steps, landings and cheekwalls shall be paid for under the contract unit price for Class NS Concrete (Concrete Steps), CY. Cost of reinforcing steel shall be paid for under the contract unit price for Reinforcing Steel (Miscellaneous), LB.

GENERAL NOTES:

1. Use a 1-piece cover, unless the 2-piece cover is called for in the Plans, except at inlets and manholes with sump bottoms. Use the 2-piece cover when the sump depth exceeds 2', unless otherwise noted.
2. Include "Adjustable" on the cover for Type I manhole adjustable frames.
3. For square or rectangular precast drainage structures, use either deformed or smooth WWR meeting the requirements of Specification 931. WWR must be continuous around the box and lapped in accordance with Option 1 or 3 as shown in the Wall Reinforcing Splice Details.
4. Lap splice horizontal steel in the walls of rectangular structures in accordance with Option 1, 2 or 3 as shown in the Wall Reinforcing Splice Details.
5. Welding of splices and laps is permitted. Use AASHTO M259 requirements and restrictions on welds.
6. Rebar straight end embedment of peripheral reinforcement may be used in lieu of ACI standard hooks for top and bottom slabs, except when hooks are specifically called for in the Plans.
7. Precast opening for pipe must be the pipe OD plus 6" (± 2" tolerance). Use mortar to seal the pipe into the opening of such a mix that shrinkage will not cause leakage into or out of the structure. Dry-pack mortar may be used to seal openings less than 2½" wide.

TABLE OF CONTENTS:

Sheet	Description
1	General Notes, Contents, Manhole Top Overview, and Manhole Covers
2	Manhole Frames and Manhole Tops
3	Inlet Locking Grates, Subgrade and Base Temporary Drains, and Pipe to Structure Filter Fabric Wrap
4	Drainage Structure Invert, Sump Bottom, Wall Reinforcing Splice Details, and Typical Slab to Wall Details
5	Precast Option and Equivalent Reinforcement substitution
6	Construction Joints and Minimum Box Riser Segment Dimensions
7	Skewed Pipe in Rectangular Structures
8	Miscellaneous Pipe Connection Details

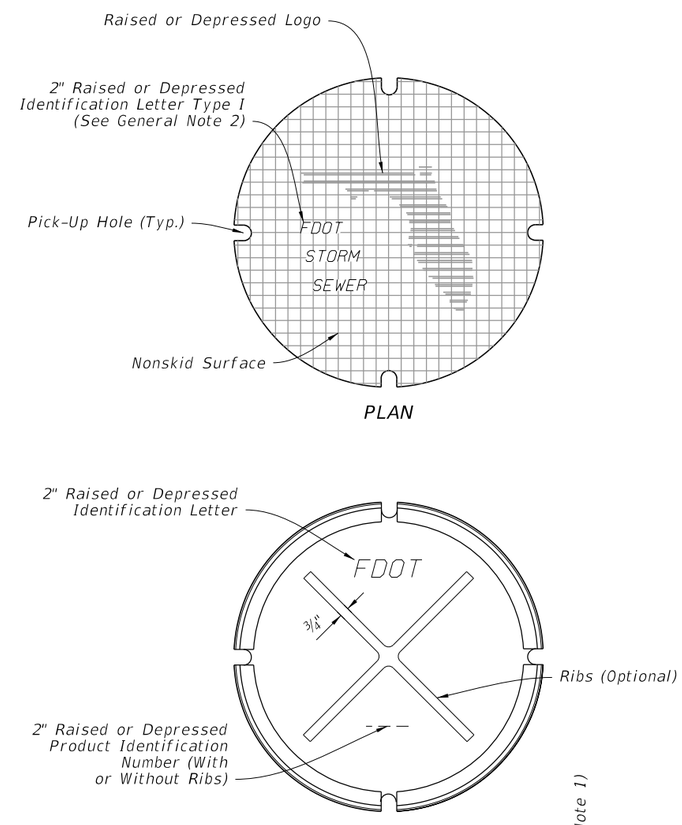

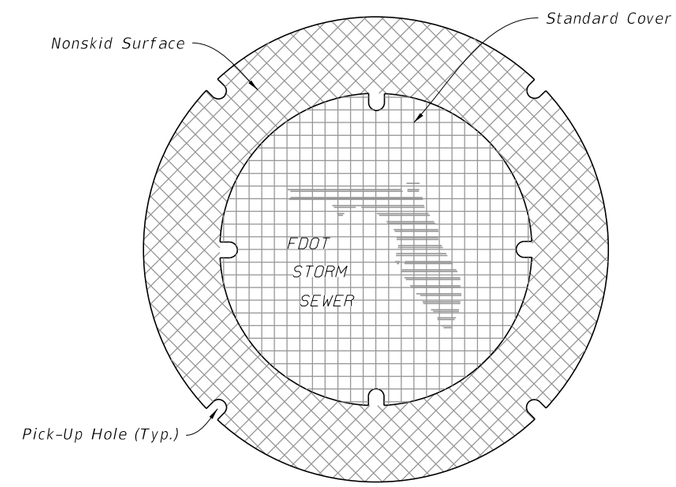

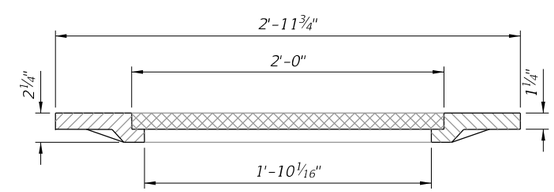

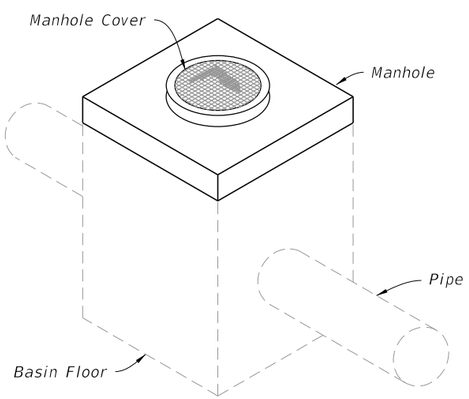

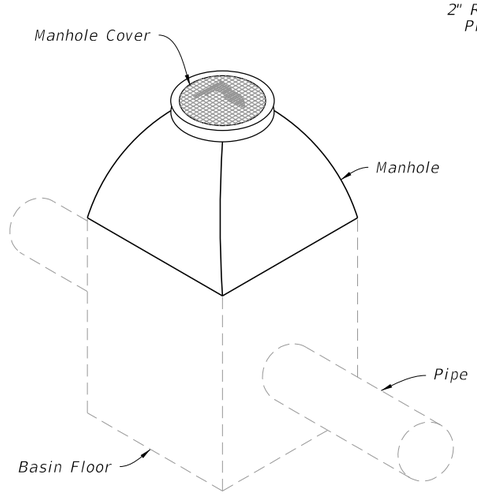

MANHOLE TOPS

MANHOLE COVERS

10/20/2022 8:46:43 AM

LAST REVISION	REVISION	DESCRIPTION:			INDEX	SHEET
11/01/20			FY 2023-24 STANDARD PLANS	SUPPLEMENTARY DETAILS FOR DRAINAGE STRUCTURES	425-001	1 of 8

TABLE 1 WEIGHT OF CASTINGS (lb)						
Frame Type	2'-0" OPENING		3'-0" OPENING			
	Frame	Cover (Std.)	Frame	2-Piece Cover		
				Inside	Outside	Total
I	155	190	220	190	220	410
II	145	190	255	190	220	410
III	90	190	180	190	220	410

NOTE:
Frame Type I in Table 1, includes Adjustable frames.

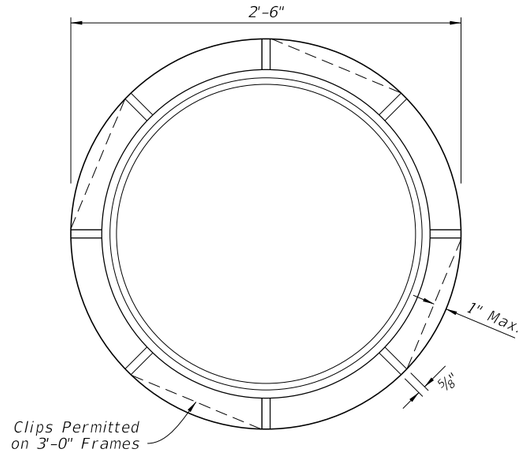

PLAN

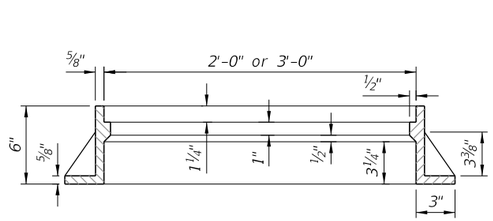

ELEVATION

TYPE I
(For Manholes)

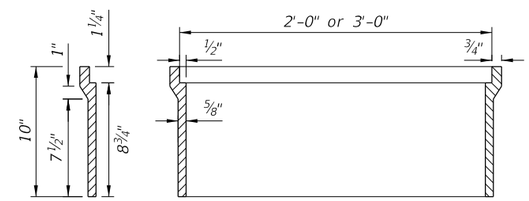

WALL SECTION

ELEVATION

TYPE II
(For Curb Inlets Types 1, 2, 3, & 4)

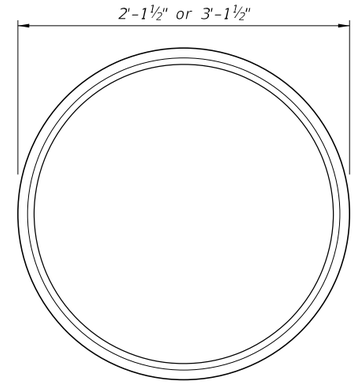

PLAN

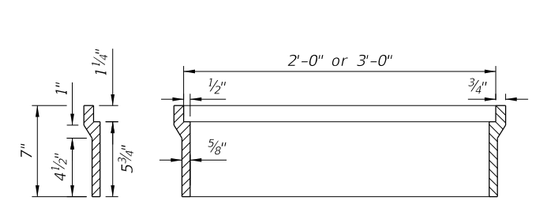

WALL SECTION

ELEVATION

TYPE III
(For Curb Inlets Types 7 & 8)

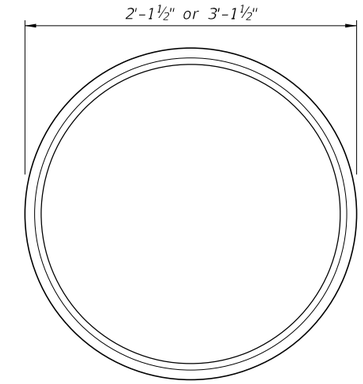

PLAN

MANHOLE FRAMES

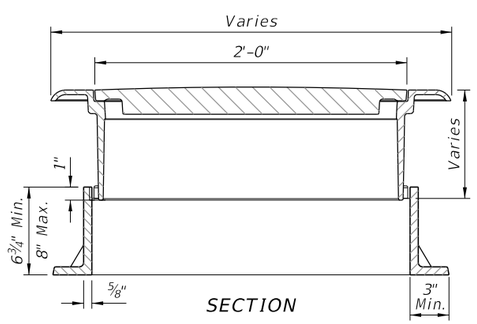

SECTION

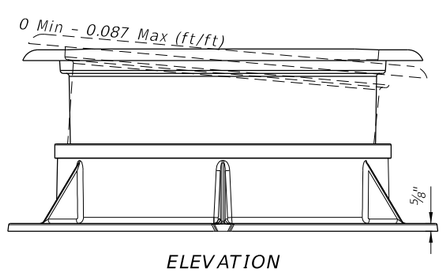

ELEVATION

TYPE I ADJUSTABLE FRAME

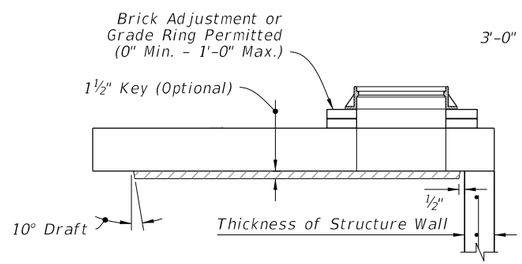

TYPE 7

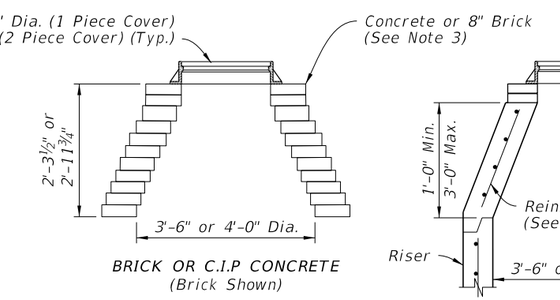

BRICK OR C.I.P CONCRETE
(Brick Shown)

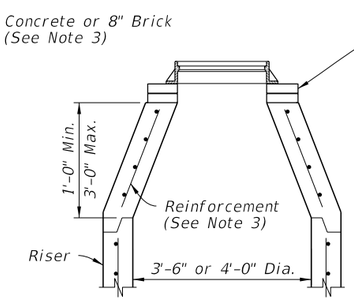

PRECAST CONCENTRIC CONE

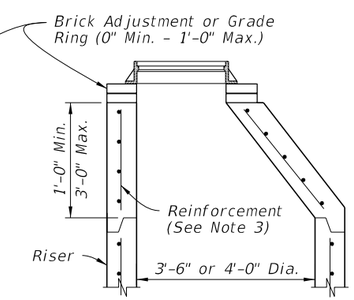

PRECAST ECCENTRIC CONE

TYPE 8

MANHOLE TOPS

NOTES:

1. Use Class II concrete for Manhole top Type 7 slabs.
2. Manhole top Type 7 slabs may be of cast-in-place or precast construction. The optional key is for precast tops and in lieu of dowels. Omit frame and slab openings when top is used over a junction box.
3. Manhole top Type 8 may be of cast-in-place, precast concrete construction, or brick construction. For concrete construction, use the same concrete and steel reinforcement as the supporting wall unit. An eccentric cone may be used.
4. Use construction joint options, as shown on Sheet 6 to secure manhole tops to structures.
5. Frames may be adjusted to a maximum 12" height with brick or precast ASTM C478 grade rings.
6. Manhole top Type 8 may be substituted for a Type 7, if the minimum dimensions are not reduced.
7. Manhole top Type 7 may be substituted for Type 8, if the minimum thickness (h) above pipe opening cannot be maintained with Type 8.

MANHOLE FRAMES AND MANHOLE TOPS

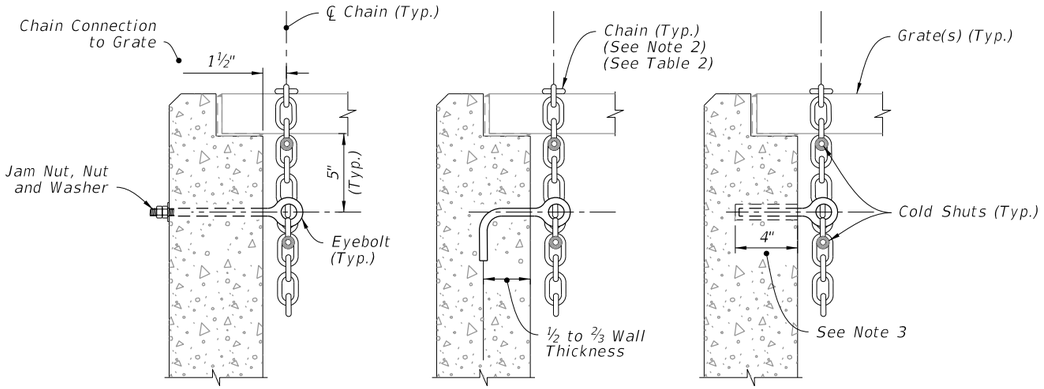

THRU-BOLT

J-TYPE

ADHESIVE BONDED ANCHOR

NOTES:

1. Install either a ½" Ø x 1" Diameter Threaded Straight (Thru-Bolt), a J-Type, or an adhesive Bonded Anchor Eyebolt.
2. Install a 5/16" Chain and 3/16" Cold Shuts. When chaining two grates together provide adequate loop for easy handling.
3. Install adhesive bonded anchor option with a minimum of 4" embedment, and in accordance with Specification 416.

TABLE 2
EYEBOLT AND CHAIN REQUIREMENTS

Index Number	Inlet Type	Eye-Bolts	Length of Chain	Handling & Remarks
425-030	1	1	4'-0"	Slide & Spin
	2	2	2 @ 4'-0"	Slide & Spin
425-031	N/A	1	3'-8"	Slide or Slide & Spin
425-032	N/A	1	4'-0"	Slide & Spin
425-040	S	1	4'-0"	Slide & Spin
425-041	V	1	4'-0"	Slide & Spin
425-050	A	1	3'-0"	Slide
425-051	B	1	5'-0"	Slide & Spin
425-052	C	1	2'-6"	Slide & Spin
	D	1	2'-6"	Slide & Spin
	E	2	2 @ 2'-6"	Slide & Spin
	H	2	2 @ 2'-6"	Flip Ctr. Grate and Slide & Spin Single Free Grate
			1 or 2 @ 1'-6"	Center Grate(s) Chained to One End Grate
425-053	F	1	3'-6"	Flip or Slide & Spin
	G	1	6'-0"	Slide
			2'-0"	Lifting Loop
425-054	J	1	4'-0"	Slide & Spin

LOCKING GRATES TO INLETS

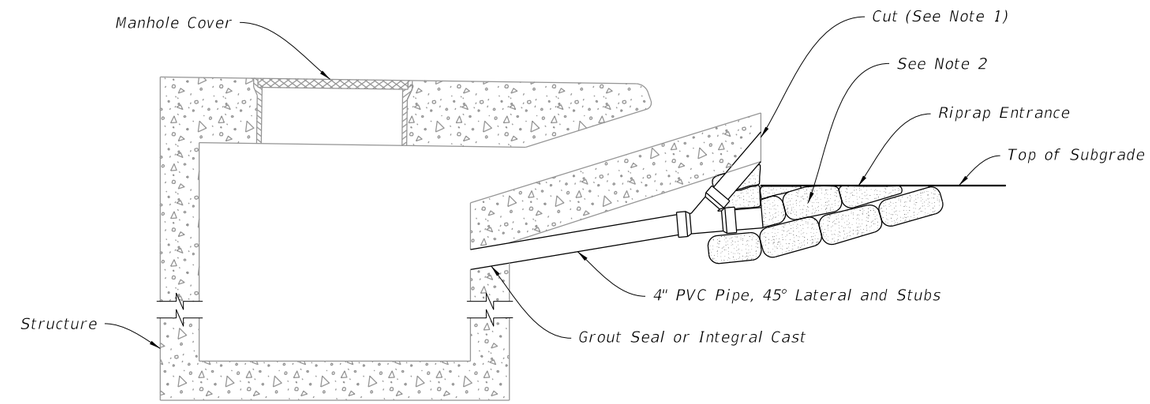

NOTES:

1. Bevel cut upper stub to match forming for apron face. Capping or plugging of upper stub is not required. Remove friable base material at stub opening to permit covering of opening with structural course material.
2. Remove riprap, cement PVC cap on lower stub, and place compacted fill in entrance prior to placing base material.

SUBGRADE AND BASE TEMPORARY DRAINS

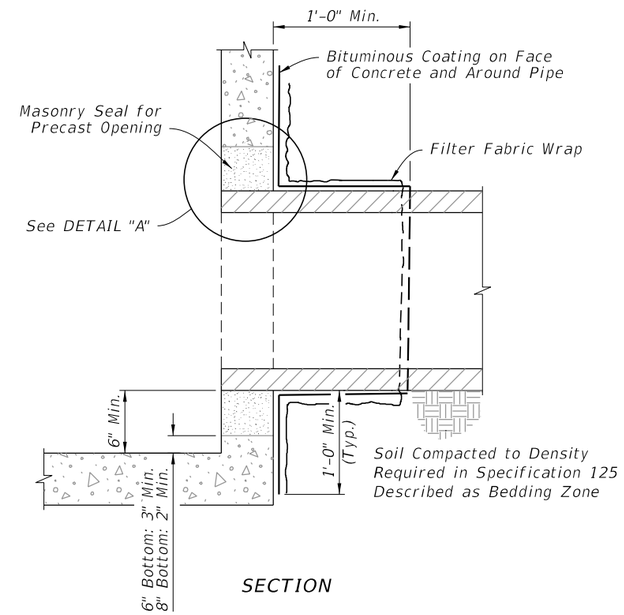

SECTION

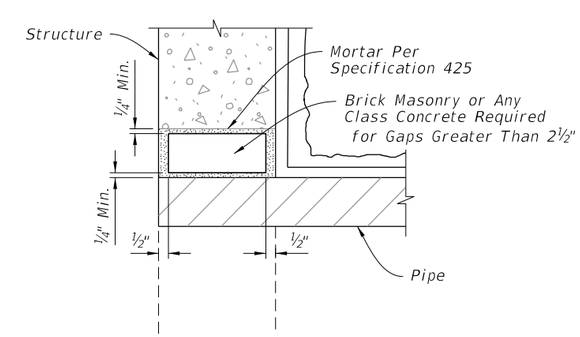

DETAIL "A"

PIPE TO STRUCTURE FILTER FABRIC WRAP

LOCKING GRATES, SUBGRADE AND BASE TEMPORARY DRAINS, AND PIPE TO STRUCTURE FILTER FABRIC WRAP

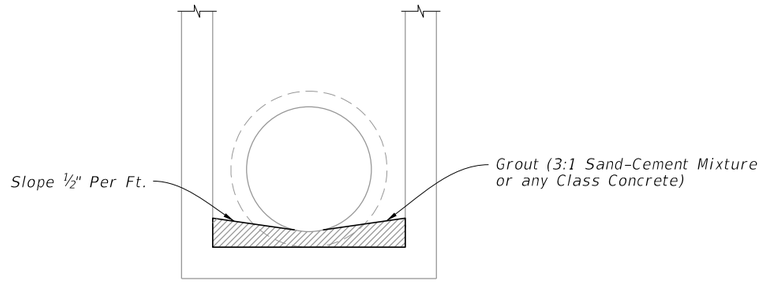

NOTE: For all structures unless excluded by special detail.

DRAINAGE STRUCTURE INVERT

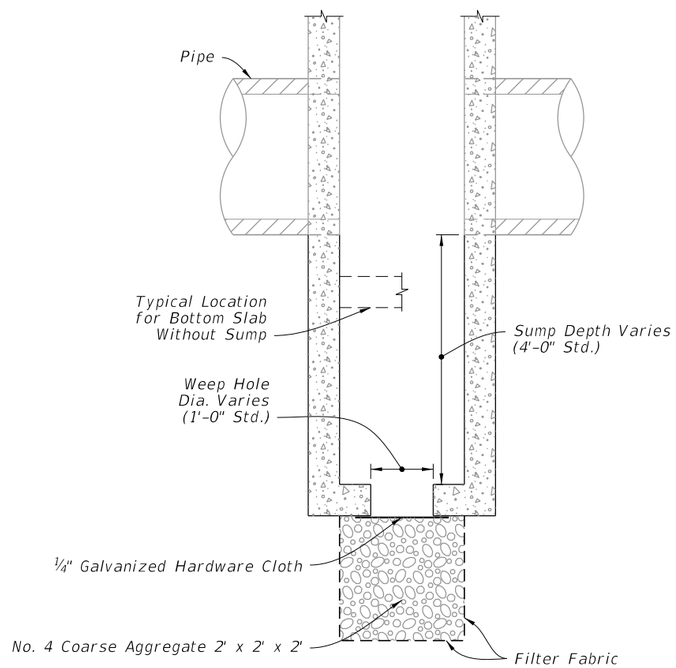

NOTES:

1. Construct sumps in inlets and manholes connecting to French Drains unless excluded in the Plans.
2. Construct sumps only where called for in the Plans at all other locations.
3. Construct weep holes in sump bottom only where called for in the Plans.

SUMP BOTTOM

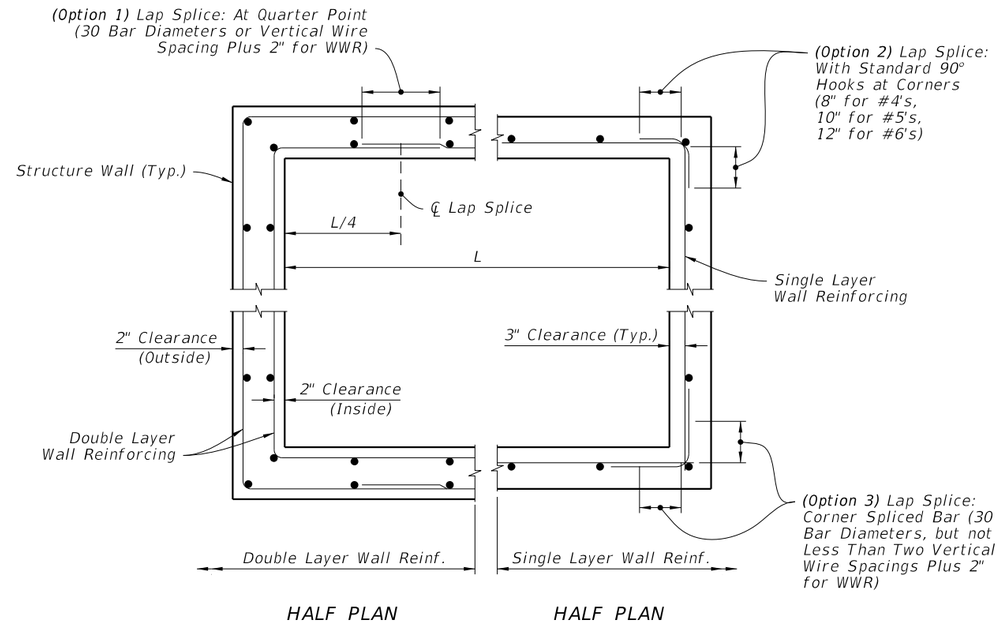

WALL REINFORCING SPLICE DETAILS

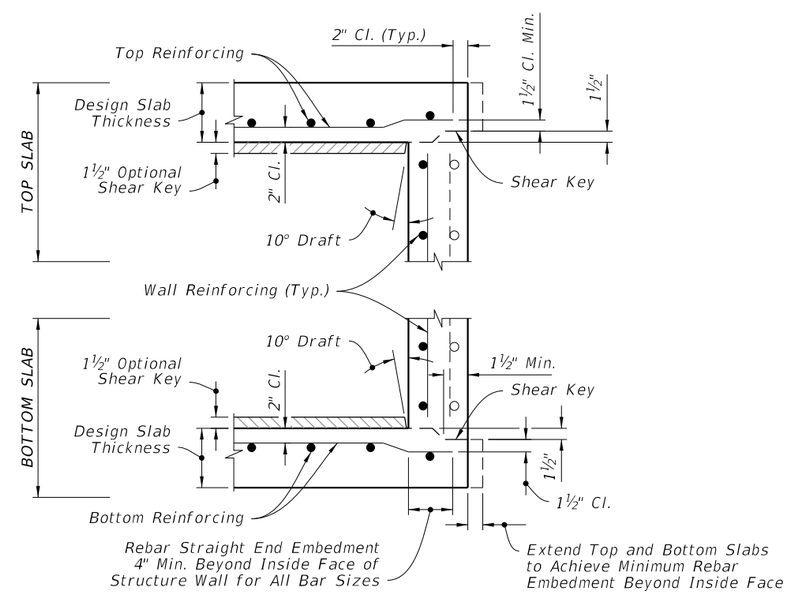

NOTES:

1. See Sheet 6 for optional construction joints.
2. Bend bars as required to maintain cover.

TYPICAL SLAB TO WALL DETAILS
(PRECAST STRUCTURE SHOWN)

DRAINAGE STRUCTURE INVERT, SUMP BOTTOM, WALL REINFORCING SPLICE DETAILS, AND TYPICAL SLAB TO WALL DETAILS

EXAMPLE TABLE OF EQUIVALENT STEEL AREA

SCHEDULE	GRADE 60 REINFORCING BAR		EQUIVALENT GRADE 40 REINFORCING BAR		EQUIVALENT 65 KSI SMOOTH WELDED WIRE REINFORCEMENT		EQUIVALENT 70 KSI DEFORMED WELDED WIRE REINFORCEMENT	
	Bar Size & Spacing	Steel Area (in^2/ft)	Bar Size & Spacing	Steel Area (in^2/ft)	Style Designation	Steel Area (in^2/ft)	Style Designation	Steel Area (in^2/ft)
A	#3 @ 6½" Ctrs. #4 @ 12" Ctrs.	0.20	#3 @ 4½" Ctrs. #4 @ 8" Ctrs. #5 @ 12" Ctrs.	0.30	3"x3"–W4.6xW4.6 4"x4"–W6.2xW6.2 6"x6"–W9.2xW9.2	0.1846	3"x3"–D4.3xD4.3 4"x4"–D5.7xD5.7 6"x6"–D8.6xD8.6	0.1714
B	#3 @ 5½" Ctrs. #4 @ 10" Ctrs.	0.24	#3 @ 3½" Ctrs. #4 @ 6½" Ctrs. #5 @ 10" Ctrs.	0.36	3"x3"–W5.5xW5.5 4"x4"–W7.4xW7.4 6"x6"–W11.1xW11.1	0.2215	3"x3"–D5.1xD5.1 4"x4"–D6.9xD6.9 6"x6"–D10.3xD10.3	0.2057
Special 1	#3 @ 5" Ctrs.. #4 @ 9" Ctrs.	0.267	#3 @ 3" Ctrs. #4 @ 6" Ctrs. #5 @ 9" Ctrs.	0.40	3"x3"–W6.2xW6.2 4"x4"–W8.2xW8.2 6"x6"–W12.3xW12.3	0.2465	3"x3"–D5.7xD5.7 4"x4"–D7.6xD7.6 6"x6"–D11.4xD11.4	0.2289
C	#3 @ 3½" Ctrs. #4 @ 6½" Ctrs. #5 @ 10" Ctrs.	0.37	#4 @ 4" Ctrs. #5 @ 6½" Ctrs. #6 @ 9½" Ctrs.	0.555	3"x3"–W8.5xW8.5 4"x4"–W11.4xW11.4 6"x6"–W17.1xW17.1	0.3415	3"x3"–D7.9xD7.9 4"x4"–D10.6xD10.6 6"x6"–D15.9xD15.9	0.3171
D	#4 @ 4½" Ctrs. #5 @ 7" Ctrs. #6 @ 10" Ctrs.	0.53	#4 @ 3" Ctrs. #5 @ 4½" Ctrs. #6 @ 6½" Ctrs.	0.795	3"x3"–W12.2xW12.2 4"x4"–W16.3xW16.3 6"x6"–W24.5xW24.5	0.4892	3"x3"–D11.4xD11.4 4"x4"–D15.1xD15.1 6"x6"–D22.7xD22.7	0.4543
E	#4 @ 3" Ctrs. #5 @ 5" Ctrs. #6 @ 7" Ctrs.	0.73	#5 @ 3½" Ctrs. #6 @ 4½" Ctrs. #7 @ 6½" Ctrs.	1.095	3"x3"–W16.8xW16.8 4"x4"–W22.5xW22.5 6"x6"–W33.7xW33.7	0.6738	3"x3"–D15.6xD15.6 4"x4"–D20.9xD20.9 6"x6"–D31.3xD31.3	0.6257
F	#5 @ 3½" Ctrs. #6 @ 5" Ctrs. #7 @ 7" Ctrs.	1.06	#6 @ 3" Ctrs. #7 @ 4½" Ctrs. #8 @ 6" Ctrs.	1.59	3"x3"–W24.5xW24.5 4"x4"–W32.6xW32.6 6"x6"–W48.9xW48.9	0.9785	3"x3"–D22.7xD22.7 4"x4"–D30.3xD30.3 6"x6"–D45.4xD45.4	0.9086
Special 2	#5 @ 3" Ctrs. #6 @ 4" Ctrs. #7 @ 5½" Ctrs.	1.24	#7 @ 4" Ctrs. #8 @ 5" Ctrs.	1.86	3"x3"–W28.6xW28.6 4"x4"–W38.2xW38.2 6"x6"–W57.2xW57.2	1.1446	3"x3"–D26.6xD26.6 4"x4"–D35.4xD35.4 6"x6"–D53.1xD53.1	1.0629
G	#6 @ 3½" Ctrs. #7 @ 5" Ctrs.	1.46	#7 @ 3" Ctrs. #8 @ 4" Ctrs.	2.19	3"x3"–W33.7xW33.7 4"x4"–W44.9xW44.9	1.3477	3"x3"–D31.3xD31.3 4"x4"–D41.7xD41.7	1.2514

NOTES:

1. See inlet indexes for optional precast inlet construction details up to depths of 15'.

2. Interior dimensions of an Alt. "B" Bottom may be adjusted to reflect these inlet interior dimensions when precast units are used in conjunction with Alt. "B" Structure Bottoms, Index 425-010.

3. Use concrete meeting the requirements of ASTM C478 or Class IV for precast structures with 6" wall or slab thickness.

4. Reinforcement may be deformed bar reinforcement or welded wire reinforcement. Bar reinforcement other than 60 ksi may be used, however only two grades are recognized: Grade 40 and Grade 60. Smooth welded wire reinforcement will be recognized as having a design strength of 65 ksi and deformed welded wire reinforcement will be recognized as having a design strength of 70 ksi. The area of reinforcement required may be adjusted in accordance with the Equivalent Steel Area Table provided. Use the following equations to determine the steel area and spacing for bars not otherwise specified:

   Grade 40 Steel Area = As40= 60/40 x As60

   Smooth Welded Wire Reinforcement Steel Area = As65= 60/65 x As60

   Deformed Welded Wire Reinforcement Steel Area = As70= 60/70 x As60

   When a reduced area of reinforcement is provided, any maximum bar spacing shown must also be reduced as determined by the following equations, unless otherwise shown:

   Max. Grade 40 Bar Spacing = Grade 60 Bar Spacing

   Max. Smooth Welded Wire Spacing = Grade 60 Bar Spacing x 0.86

   Max. Deformed Welded Wire Spacing = Grade 60 Bar Spacing x 0.74

   When an increased area of reinforcing is provided, the maximum bar spacing may be increased by the squared ration of increased steel area, but not to exceed 12":

   $$\text{Max. Bar Spacing Provided} \leq = \text{Max. Bar Spacing Required} \times \left(\frac{\text{Steel Area Provided}}{\text{Min. Steel Area Required}}\right)^2$$

   Use wire no smaller than than W3.1 or D4.0, or larger and with spacing 8" or less. Use bar reinforcement displaying the minimum yield designation grade mark, or either the number 60 or one (1) grade mark line to be acceptable at the higher value. Use maximum bar spacing no greater than two (2) times the slab thickness with a maximum spacing of 12" or three (3) times the wall thickness, with a maximum spacing of 18" for vertical bars and 12" for horizontal bars. Wires smaller than W3.1 or D4.0 may be used in the walls of ASTM C 478 round structure bottoms and round risers.

5. Fiber-reinforced concrete may be substituted for conventional steel reinforcement in accordance with the Structures Design Guidelines. Submit shop drawings corresponding to an approved fiber-reinforced concrete mix design for approval to the State Drainage Office.

10/20/2022 8:46:46 AM

PRECAST OPTION AND EQUIVALENT REINFORCEMENT SUBSTITUTION

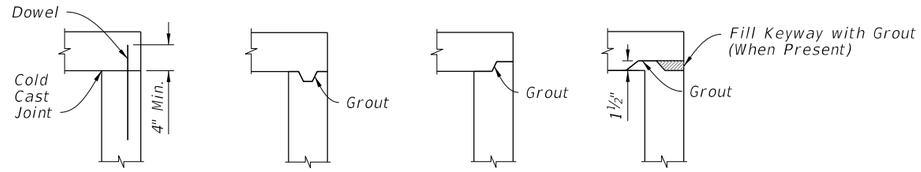

TOP SLABS TO WALL JOINTS

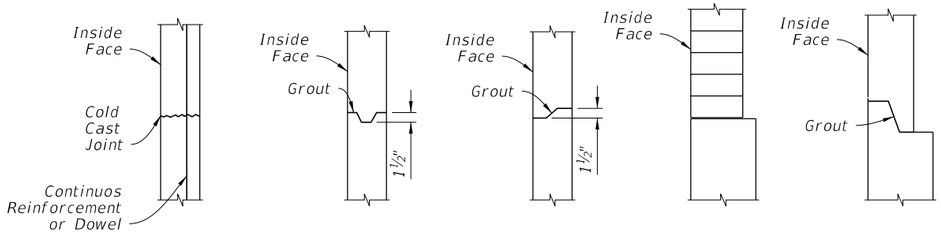

WALL JOINTS

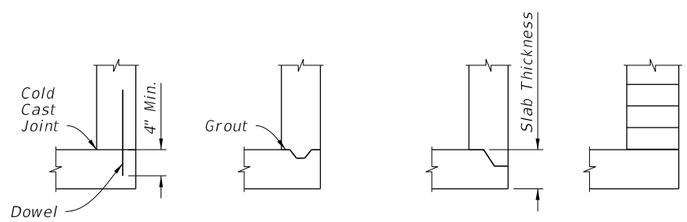

BOTTOM SLAB TO WALL JOINTS

NOTES:

1. One or more types of joints may be used in a single structure, except brick wall structure. Brick wall construction is permitted on circular units only.
2. All grouted joints are to have a maximum thickness of 1".
3. Keyways are to be a minimum of 1½" deep.
4. Joint dowels are to be #4 bars, 12" long with a minimum of 6 bars per joint approximately evenly spaced for circular structures or at maximum 12" spacing for rectangular structures. Bars may be either Adhesive Bonded Dowels in accordance with Specification 416, or placed approximately 6" into fresh concrete leaving the remainder to extend into the secondary cast. Welded wire reinforcement may be substituted for the dowel bar in accordance with the equivalent steel area table on Sheet 5.
5. Minimum cover on dowel reinforcing bars is 2" to outside face of structure.
6. Seal joints between wall segments and between wall segments and top or bottom slabs with preformed plastic gasket material inaccordance with Specification 430 or non-shrink grout in accordance with Specification 934.
7. Insert products approved by the Engineer may be used in lieu of dowel embedment.

CONSTRUCTION JOINT OPTIONS

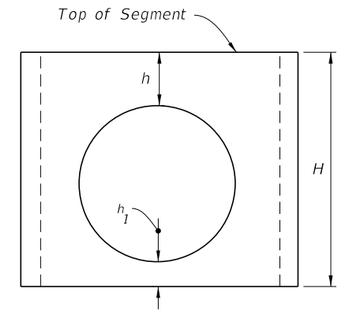

When	Then (Reqd.)
$6" \le h_1 < 0.75H$ (Min.)	$h \ge 0.4H$
$h_1 \ge 0.75H$ (Min.)	$h \ge H$ (Min.)

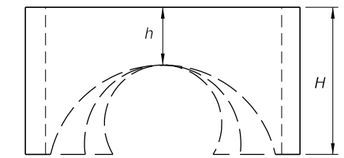

H (Min.) $\le h \ge 0.4H$

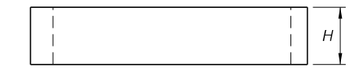

$H \ge H$ Min.

NOTES:

1. Segments may be inverted. Opening for pipe is the pipe OD plus 6" (± 2" tolerance).
2. If h can not be attained, then a top or bottom slab must be attached to the segment as shown below.

TABLE 3 Minimum Value for H	
H (min.)	Box or Riser Diameter
1'-0"	3'-6" & 4'-0"
1'-6"	5'-0" & 6'-0"
2'-0"	>6'-0"

RISER SEGMENTS OTHER THAN DOWEL

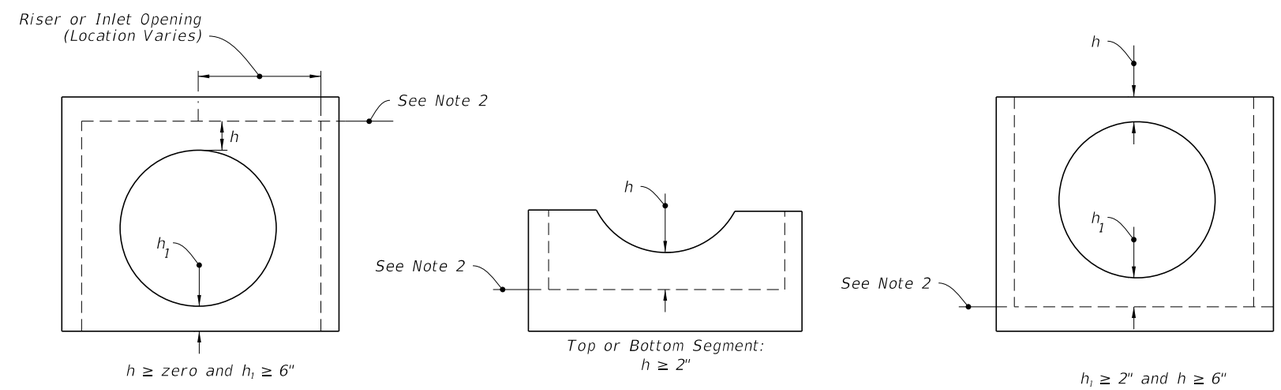

NOTES:

1. h may be less than 6" when approved by the Engineer, but not for inlet segments at finish grade elevation.
2. Dowel construction joint or monolithic cast only.

SEGMENTS FOR SLAB TO WALL DOWEL CONSTRUCTION JOINTS OR MONOLITHIC CAST

MINIMUM BOX AND RISER SEGMENT DIMENSIONS

CONSTRUCTION JOINT OPTIONS AND MINIMUM BOX AND RISER SEGMENT DIMENSIONS

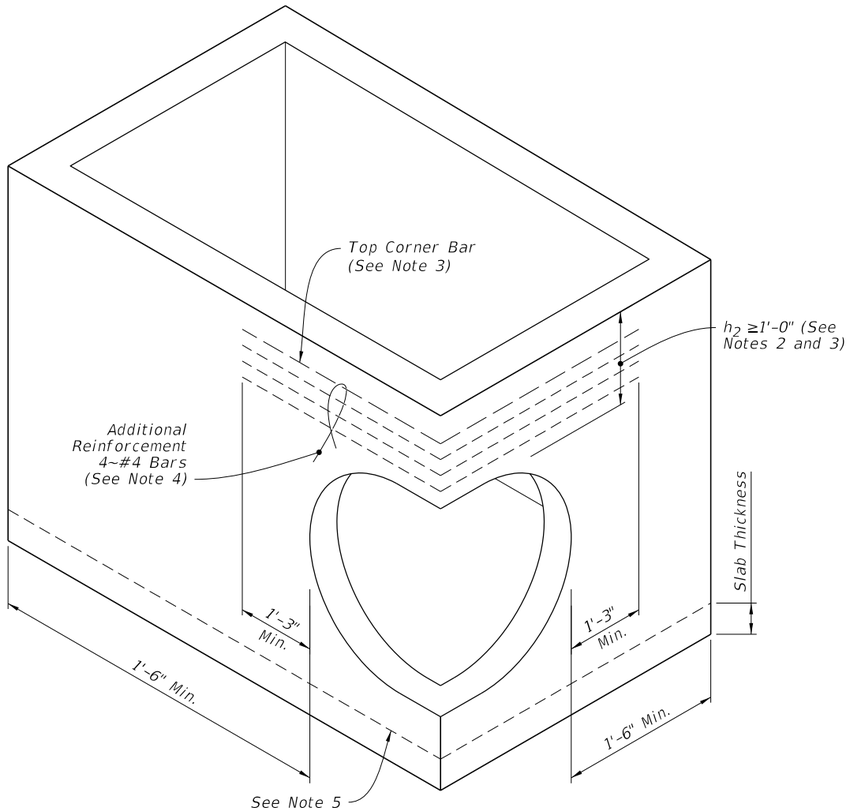

NOTES:

1. Submit Shop Drawings of corner openings for approval by the Engineer.
2. h_2 may be less than 1'-0" when a minimum 1'-0" deep segment, 8" slab or curb inlet is provided above the corner opening.
3. For inlet segments at finish grade elevation, substitute a #8 Bar for the top corner bar when 1'-0" ≤ h_2 < 2'-0".
4. Install bars continuously around corner and evenly spaced. Tie additional reinforcement to the outside of vertical wall reinforcement.
5. Dowel construction joint or monolithically cast wall and slabs.

PIPE OPENING AT CORNER

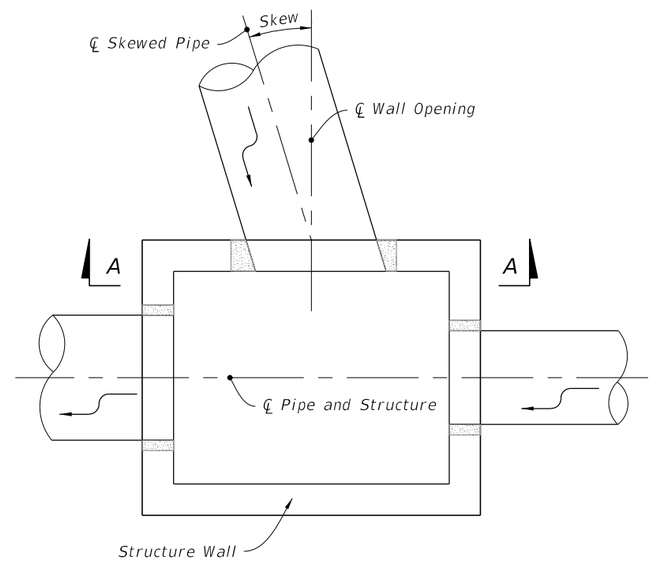

PLAN

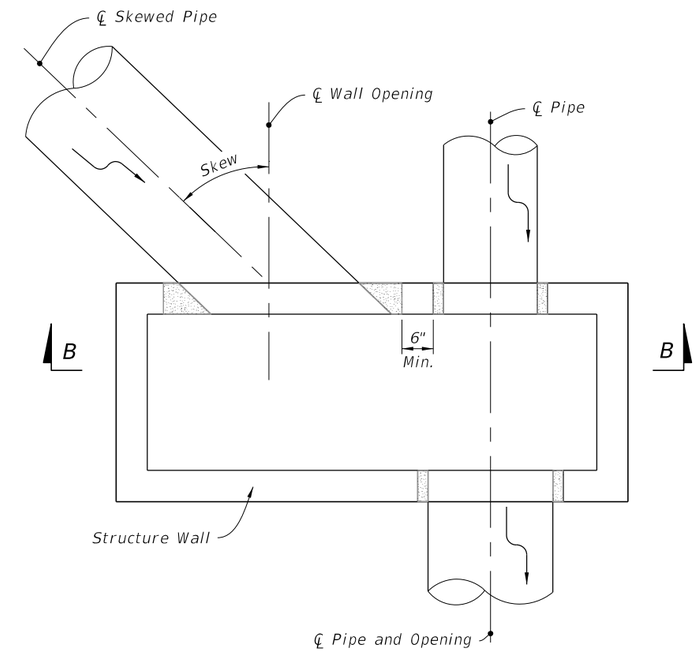

PLAN

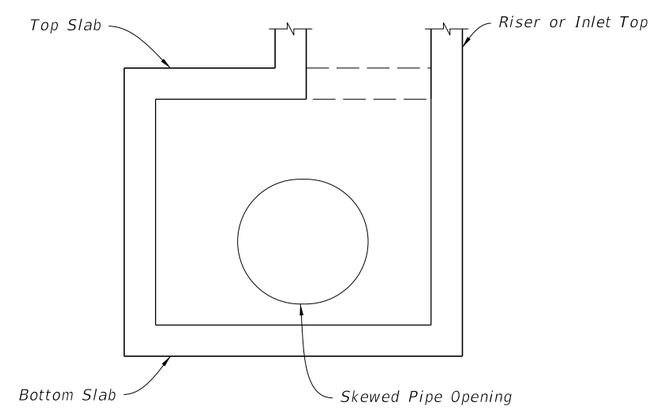

SECTION A-A

SKEWS ≤ 45°
(Not Centered)

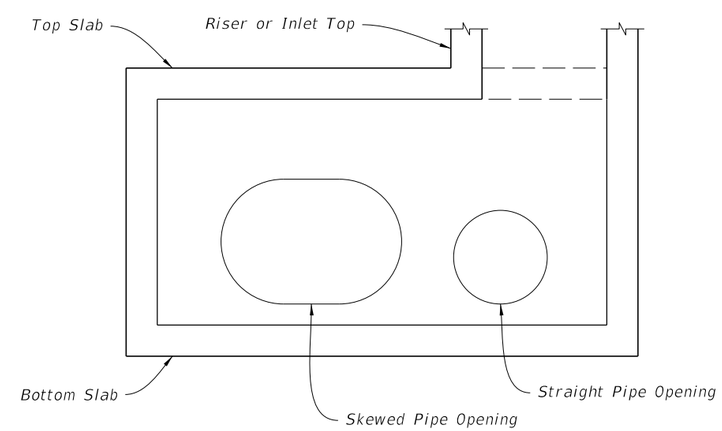

SECTION B-B

SKEWS > 45°
(Not Centered)

SKEWED PIPE IN RECTANGULAR STRUCTURES
(See Table 4 on Sheet 8)

SKEWED PIPE IN RECTANGULAR STRUCTURES

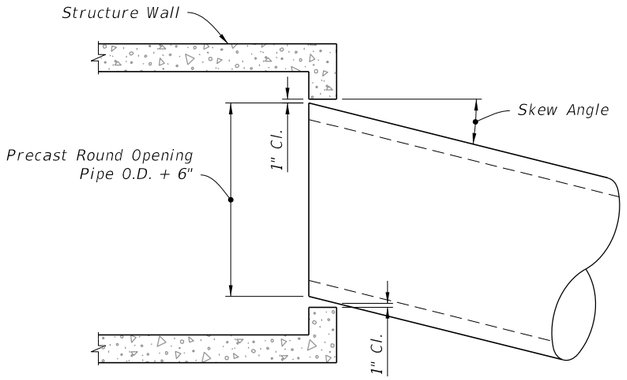

PLAN VIEW

TABLE 4 - MAXIMUM PIPE SKEW FOR PRECAST ROUND OPENINGS													
	WALL THICKNESS	PIPE SIZE											
		18"	24"	30"	36"	42"	48"	54"	60"	66"	72"	78"	84"
MAXIMUM SKEW ANGLE	8"	19°	17°	16°	16°	15°	14°	14°	13°	13°	13°	12°	12°
	6"	21°	20°	18°	17°	17°	16°	15°	15°	14°	14°	13°	13°

NOTE:
These values are based on 2" clearance for precast structures. Larger skews are possible for Cast-In-Place Structures or elliptical pipe openings when approved by the Engineer.

MAXIMUM PIPE SKEW FOR PRECAST ROUND OPENINGS

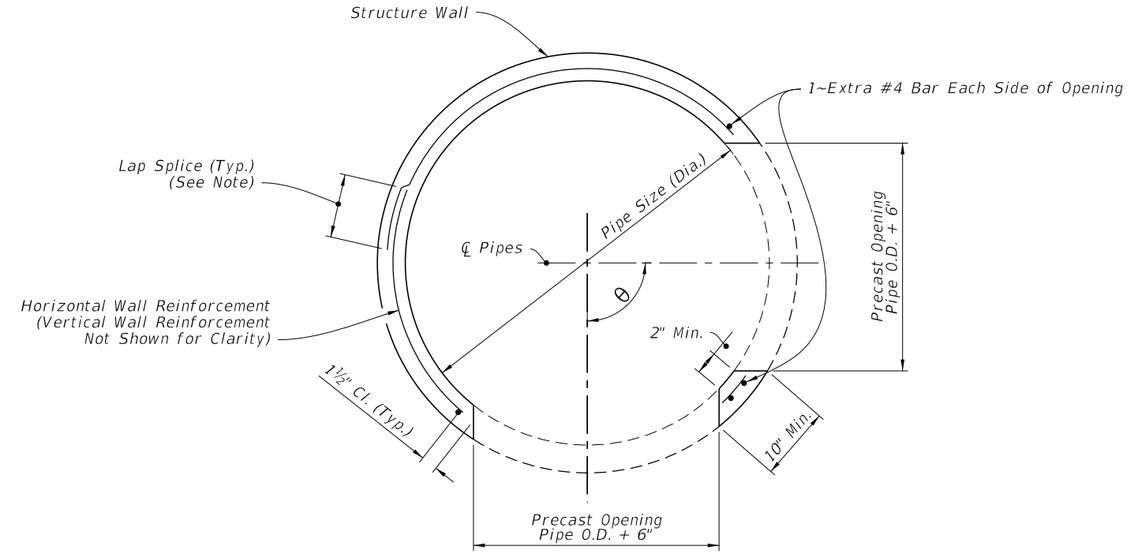

PLAN VIEW

NOTE:
Lap splice: 20 bar diameter for deformed wire or bar, but not less than vertical wire spacing plus 2" for WWR or 40 bar diameters for smooth wire.

MULTIPLE PIPE CONNECTIONS - PRECAST ROUND STRUCTURES

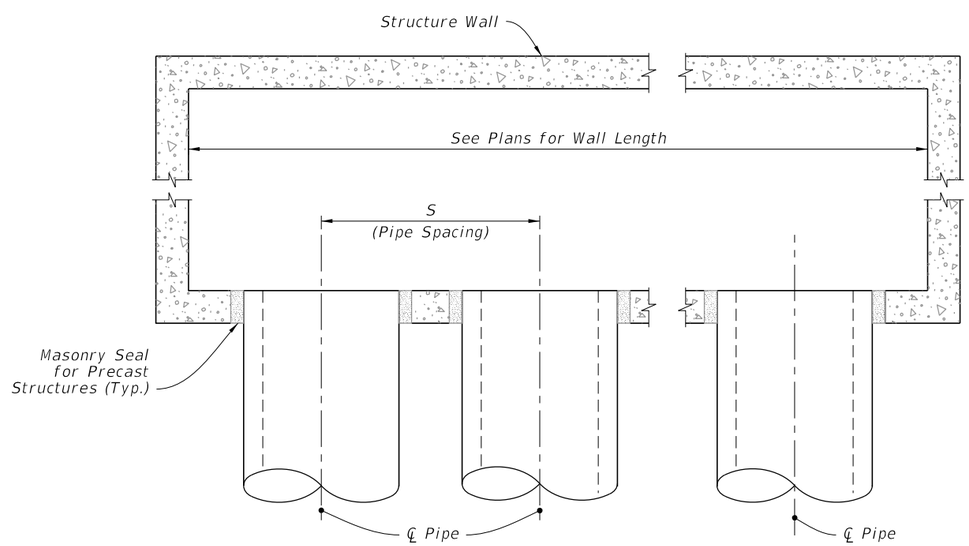

PLAN VIEW

TABLE 5 - MINIMUM SIZES FOR MULTIPLE PARALLEL PIPE CONNECTIONS	
PIPE SIZE	PIPE SPACING (S)
18"	2'-10"
24"	3'-5"
30"	4'-3"
36"	5'-1"
42"	6'-0"
48"	6'-9"
54"	7'-8"
60"	8'-6"
66"	9'-0"
72"	10'-0"
78"	10'-9"
84"	11'-8"

MULTIPLE PARALLEL PIPE CONNECTIONS - RECTANGULAR STRUCTURES

MISCELLANEOUS PIPE CONNECTION DETAILS

GENERAL NOTES:

1. Work this Index with Specification 425 and Index 425-001.

2. Type P standard structure bottoms are 4'-0"diameter and smaller (Alt. A) and 3'-6" square (Alt. B) . Larger standard structure bottoms are designated Type J. Risers are permitted for all structures.

3. Walls of circular structures (Alt. A) constructed in place may be of brick or reinforced concrete. Construct precast and rectangular structures (Alt. B) with reinforced concrete only.

4. Wall thickness and reinforcement are for either reinforced cast-in-place or precast concrete units except that precast circular units may be furnished with walls in accordance with ASTM C478 (See Table 1).

5. Top and bottom slab thickness and reinforcement are for precast and cast-in-place construction. Use Class II concrete, except when Class IV concrete is shown in the Plans.

6. Alt. A or Alt. B structure bottoms may be used in conjunction with curb inlet tops Types 1, 2, 3, 4, 5, 6, 9, and 10, and any manhole or junction box. Alt. B structure bottoms may be used in conjunction with curb inlet Types 7 & 8, or any ditch bottom inlet.

7. Rectangular structures may be rotated as directed by the Engineer in order to facilitate connections between the structure walls and pipes.

8. Use straight embedment reinforcement in top and bottom slabs ,except when ACI hooks are specifically required.

9. Construct corner fillets as shown for rectangular structures used with circular risers and inlet throats, and when used on skew with rectangular risers, inlets, and inlet throats. Construct fillets in the top slab of the Alt. A structure bottoms when used with the Type B risers. Reinforce each fillet with two #5 bars.

10. Units larger than specified standards may be substituted at the contractor's option when these units will not cause or increase the severity of utility conflicts. Furnish such larger units at no additional cost to the Department. Larger Alt. A units cannot replace Alt. B units without approval of the Engineer. This Note applies to this Index only.

REINFORCEMENT NOTES:

1. Locate wall reinforcement in rectangular structures as shown in the WALL REINFORCEMENT SPLICE DETAILS in Index 425-001.

2. Provide a minimum 2"clear cover for all reinforcement unless otherwise noted and except for 3'6"diameter ASTM C478 units.

3. Additional bars used to restrain hole formers for precast structures with grouted pipe connections may be left flush with the hole surface.

4. Cut or bend reinforcement at pipe openings to maintain cover.

5. Remove exposed ends of reinforcing at precast pipe openings and grouted joints to 1" below the concrete surface and seal with a Type F Epoxy meeting the requirements of Specification 926.

6. Equivalent area smooth or deformed welded wire reinforcement may be substituted in accordance with Index 425-001.

TABLE OF CONTENTS:

Sheet	Description
1	General Notes and Contents
2	Dimensional and Reinforcing Details
3	Tables 1, 2, 3, and 4
4	Tables 5 and 6

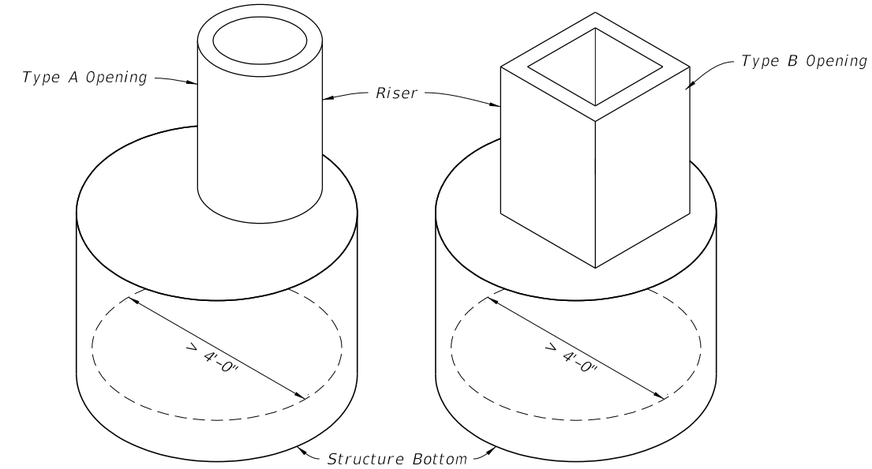

ALTERNATE A

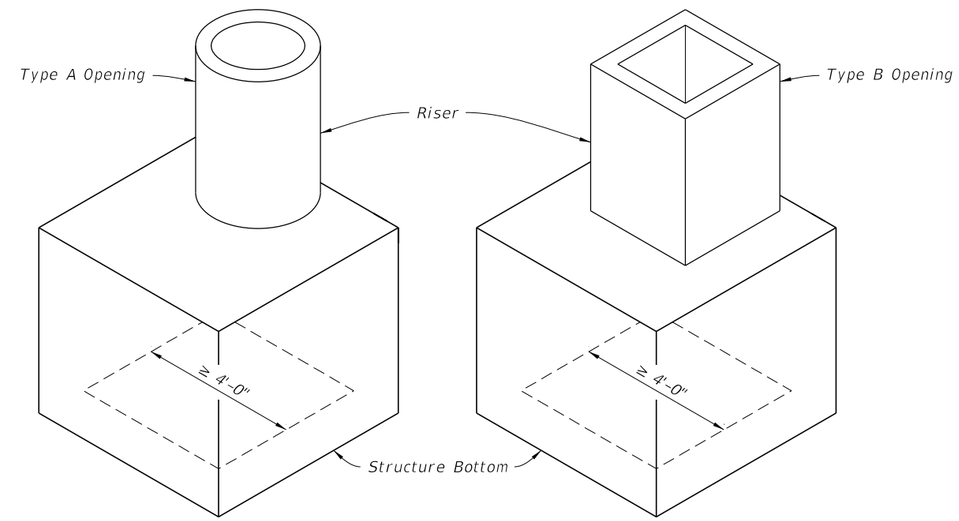

ALTERNATE B

TYPE J

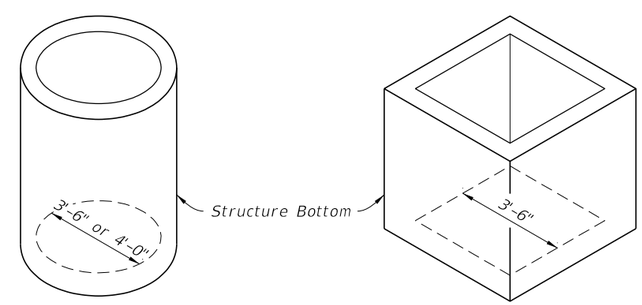

ALTERNATE A ALTERNATE B

TYPE P

LAST REVISION	REVISION	DESCRIPTION:			INDEX	SHEET
11/01/20			FY 2023-24 STANDARD PLANS	STRUCTURE BOTTOMS TYPE J AND P	425-010	1 of 4

ALTERNATE A NOTES:

1. Rotate #4 Bars as required to maintain cover.
2. Construct the top or riser of the structure according the top slab to the "Special Top Slab" details, when the inside diameter of a round structure is not more than 1'-6" larger than the opening in the riser or top slab.
3. Alternate A slab reinforcing not applicable for Type A, B, C, D & E Ditch Bottom Inlets or Type S & V Gutter Inlets. See Indexes 425-040, 425-041, 425-050, 425-051, and 425-052.

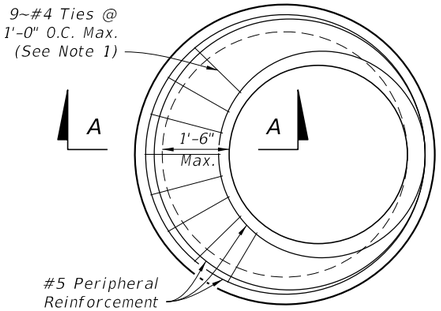

PLAN

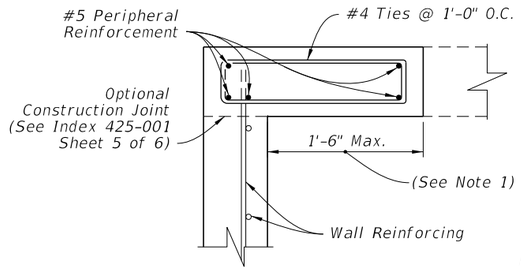

SECTION A-A

SPECIAL TOP SLAB

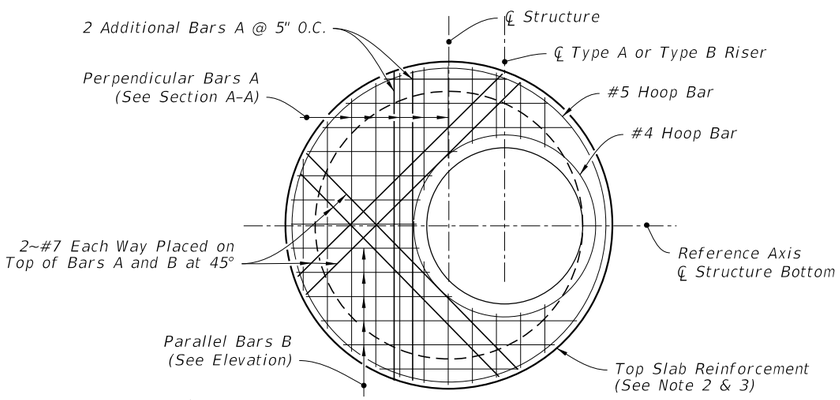

PLAN

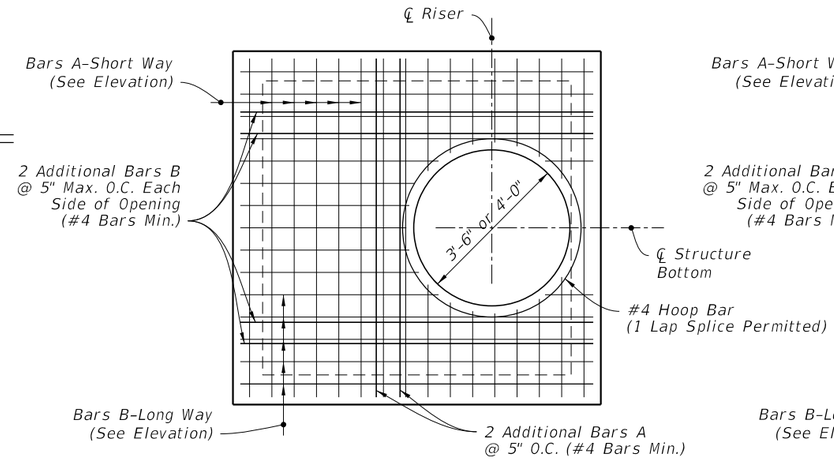

TYPE A - ROUND RISER OPENING

PLAN

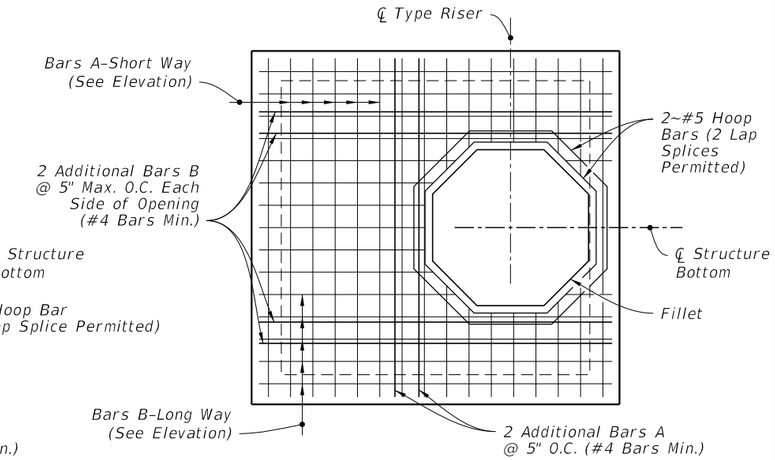

TYPE B - SQUARE RISER OPENING

PLAN

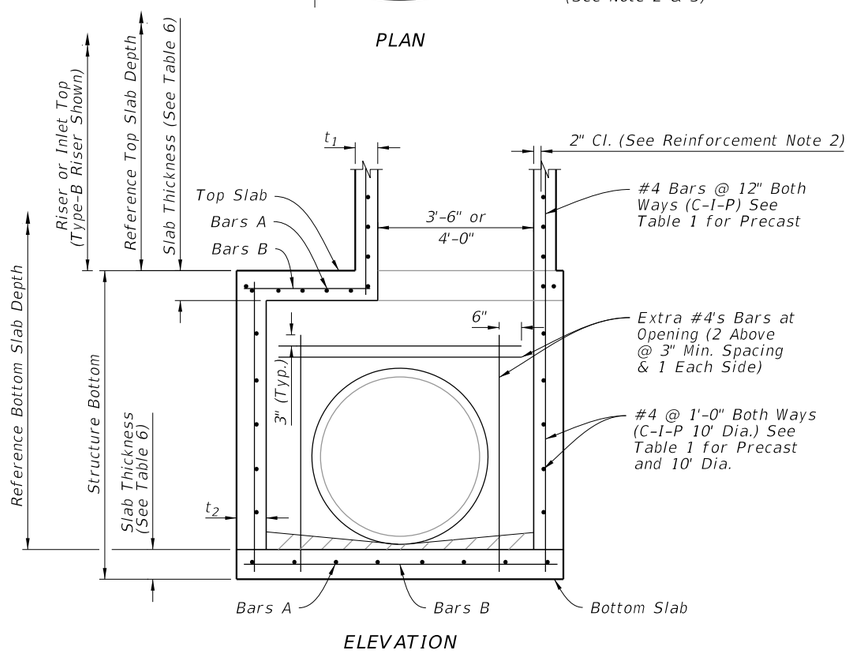

ELEVATION

TYPE J BOTTOM - ALTERNATE A

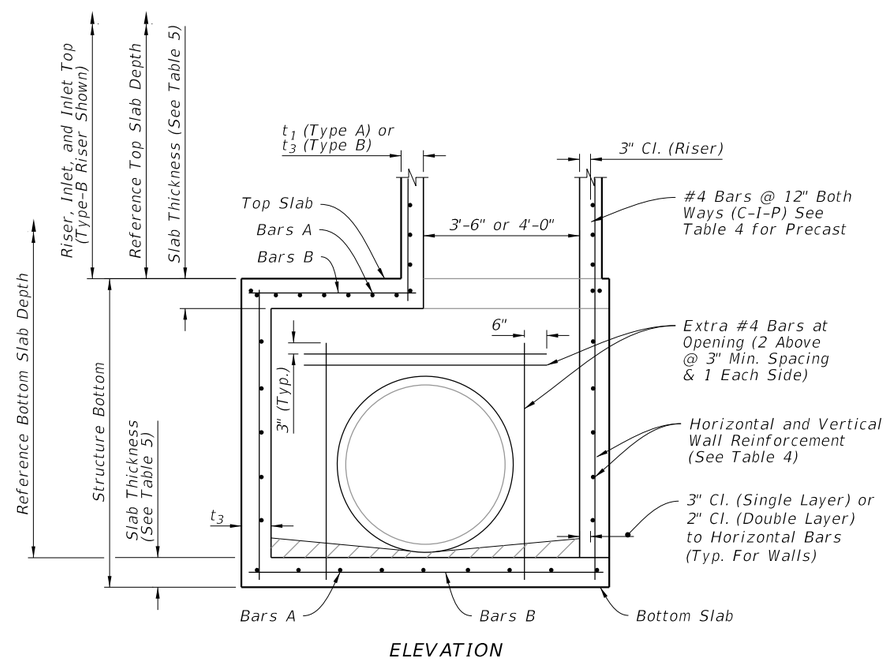

ELEVATION

TYPE J BOTTOM - ALTERNATE B

DIMENSIONAL AND REINFORCING DETAILS

LAST REVISION	REVISION	DESCRIPTION:	FDOT FY 2023-24 STANDARD PLANS	STRUCTURE BOTTOMS TYPE J AND P	INDEX	SHEET
11/01/20					425-010	2 of 4

10/20/2022 8:46:50 AM

TABLE 1 - ALTERNATE A - STRUCTURES

TYPE	STRUCTURE/RISER DIAMETER (ft)	CAST-IN-PLACE ITEMS CLASS II CONCRETE			PRECAST ITEMS				
					CLASS II CONCRETE			ASTM C478	
		t_1 RISER (in.)	t_2 BOTTOM (in.)	A_S (in.²/ft.)	t_1 RISER (in.)	t_2 BOTTOM (in.)	A_S (in.²/ft.)	t_1 or t_2 (in.)	A_2*** (in.²/ft.)
P	3'-6"	6	8	0.20	6	8	0.20	4**	0.105
P	4'-0"	6	8	0.20	6	8	0.20	5**	0.120
J	5'-0"	-	8	0.20	-	8	0.20	6**	0.150
J	6'-0"	-	8	0.20	-	8	0.20	6	0.180
J	7'-0"	-	8	0.20	-	8	0.20	7	0.210
J	8'-0"	-	8	0.20	-	8	0.20	8	0.240
J	10'-0"	-	10	0.40##	-	10	0.40##	10	0.300
J	12'-0"	-	10	0.40##	-	12	0.40##	12	0.360

t_1 and t_2 - Wall Thickness.

A_S - Vertical and horizontal areas of reinforcement.

##Provide 0.20 eq. in.²/ft. at each face, 12" max. bar spacing.

**Modified minimum wall thickness.

***Min. total circumferential reinforcement for continuous steel hoops:

A2 = 0.40 sq. in. for riser section height equal or less than 2'-0" (2 hoop min.)

A_2 = 0.60 sq. in. for riser section height more than 2'-0" up to 4'-0" (3 hoop min.)

Areas of reinforcing for precast items are based on Grade 60 reinforcing.

No reduction in the area of reinforcement is allowed for welded wire fabric in Table 1.

Area of vertical reinforcing may be reduced in accordance with ASTM C478.

TABLE 2 - ALTERNATE B SQUARE AND RECTANGULAR STRUCTURES

TYPE	WALL LENGTH (FT)	MAX. DEPTH (FT)	WALL THICKNESS (t_3)	
			C-I-P (in.)	PRECAST (in.)
P	≤ 3'-6"	40	6 Riser 8 Bottom	6
J	4'-0"	40	8	6
J	5'-0"	22	-	6
J	6'-0"	15	-	6
J	5'-0" to 9'-0"	40	8	8
J	10'-0"	26	8	8
J	10'-0" to 12'-0"	40	10	9
J	16'-0"	35	-	9
J	16'-0"	40	10	10
J	20'-0"	25	-	9
J	20'-0"	30	10	10

See Table 4 for Reinforcing Schedule.

TABLE 3 - REINFORCING SCHEDULE

SCHEDULE	GRADE 60 BARS OR 65 KSI & 70 KSI WELDED WIRE REINFORCING			
	GRADE 60 AREA (in.² /ft)	MAXIMUM SPACING		
		GR 60 BARS (in.)	WWR EQUIV. AREA	
			65 KSI (in.)	70 KSI (in.)
A12	0.20	12	8	8
A6	0.20	6	5	4½
B10	0.24	10	8	7½
B5.5	0.24	5½	5	4
C6.5	0.37	6½	6	5
C3.5	0.37	3½	3	2½
D7	0.53	7	6	5
D4.5	0.53	4½	4	3½
E5	0.73	5	4	4
E3	0.73	3	3	3
F5	1.06	5	4	4
F3.5	1.06	3½	3	3
G5	1.45	5	4	4
G.3.5	1.45	3½	3	3
H4	1.75	4	3	3

TABLE 4 - WALL DESIGNS - RECTANGULAR STRUCTURES

VERTICAL REINFORCING			HORIZONTAL REINFORCING			WALL THICKNESS
WALL DEPTH	SCHEDULE		WALL DEPTH	SCHEDULE		
SIZE: 3'-6" & RISER						
≥1.17' - 40'	A12		≥1.17' < 10'	B10		6"/8"
			10' < 18'	B5.5		6"/8"
			18' < 29'	C6.5		6"/8"
			29' - 40'	C3.5		6"/8"
SIZE: 4'-0"						
≥1.17' - 40'	A12		≥1.17' < 6'	B10		6"/8"
			6' < 10'	B5.5		6"/8"
			10' < 20'	C6.5		6"/8"
			20' < 28'	C3.5		6"/8"
			28' - 40'	D4.5		6"/8"
SIZE: 5'-0"						
≥1.17' - 40'	A12		≥1.17' < 5'	B5.5		6"/8"
			5' < 9'	C6.5		6"/8"
			9' < 15'	C3.5		6"/8"
			15' < 22'	D4.5		6"/8"
			22' - 40'	E3		8"
SIZE: 6'-0"						
≥1.17' < 26'	A12		≥1.17' < 9'	C3.5		6"/8"
			9' < 15'	D4.5		6"/8"
			15' < 26'	E3		8"
	Inside	Outside		Inside	Outside	
26' - 40'	A12	A12	26' - 40'	D7	D7	8"
SIZE: 7'-0"						
	Inside	Outside		Inside	Outside	
≥1.17' < 25'	A12	A12	≥1.17' < 7'	B10	B10	8"
26' - 40'	B10	B10	7' < 10'	B5.5	B5.5	8"
			10' < 20'	C6.5	C6.5	8"
			20' < 30'	D7	D7	8"
			30' - 40'	E5	E5	8"
SIZE: 8'-0"						
	Inside	Outside		Inside	Outside	
≥1.17' < 20'	A12	A12	≥1.17' < 6'	B5.5	B5.5	8"
20' - 40'	C6.5	C6.5	6' < 13'	C6.5	C6.5	8"
			13' < 22'	D7	D7	8"
			22' < 31'	E5	E5	8"
			31' - 40'	F5	F5	8"
SIZE: 9'-0"						
	Inside	Outside		Inside	Outside	
≥1.17' < 12'	A12	A12	≥1.17' < 8'	C6.5	C6.5	8"
12' < 28'	C6.5	C6.5	8' < 15'	D7	D7	8"
28' - 40'	D7	D7	15' < 23'	E5	E5	8"
			23' - 40'	F5	F5	8"
SIZE: 10'-0"						
	Inside	Outside		Inside	Outside	
≥1.17' < 10'	B10	B10	≥1.17' < 10'	D7	D7	8"
10' < 21'	C6.5	C6.5	10' < 17'	E5	E5	8"
21' < 26'	D7	D7	17' < 26'	F5	F5	8"
26' - 40'	C6.5	C6.5	26' - 40'	F5	F5	10"

VERTICAL REINFORCING			HORIZONTAL REINFORCING			WALL THICKNESS
WALL DEPTH	SCHEDULE		WALL DEPTH	SCHEDULE		
SIZE: 10'-0" (Precast Only)						
	Inside	Outside		Inside	Outside	
26' - 40'	D7	D7	26' - 40'	F5	F5	9"
SIZE: 12'-0"						
	Inside	Outside		Inside	Outside	
≥1.17' < 14'	B10	B10	≥1.17' < 10'	C6.5	C6.5	10"
14' < 25'	C6.5	C6.5	10' < 17'	D7	D7	10"
25' - 40'	D7	D7	17' < 24'	E5	E5	10"
			24' - 40'	F5	F5	10"
SIZE: 12'-0" (Precast Only)						
	Inside	Outside		Inside	Outside	
≥1.17' < 12'	B10	B10	≥1.17' < 10'	D7	D7	9"
12' < 24'	C6.5	C6.5	10' < 17'	D4.5	D4.5	9"
24' - 40'	D7	D7	17' < 23'	E5	E5	9"
			23' < 32'	F5	F5	9"
			32' - 40'	G5	G5	9"
SIZE: 16'-0"						
	Inside	Outside		Inside	Outside	
≥1.17' < 11'	C6.5	C6.5	≥1.17' < 13'	D7	D7	10"
11' < 20'	D7	D7	13' < 20'	E5	E5	10"
20' < 28'	E5	E5	20' < 28'	F5	F5	10"
28' - 40'	F5	F5	28' - 40'	G5	G5	10"
SIZE: 16'-0" (Precast Only)						
	Inside	Outside		Inside	Outside	
≥1.17' < 10'	C6.5	C6.5	≥1.17' < 9'	D7	D7	9"
10' < 18'	D7	D7	9' < 13'	D4.5	D4.5	9"
18' < 25'	E5	E5	13' < 19'	E5	E5	9"
25' - 35'	F5	F5	19' < 27'	F5	F5	9"
			27' - 35'	G5	G5	9"
SIZE: 20'-0"						
	Inside	Outside		Inside	Outside	
≥1.17' < 10'	C6.5	C6.5	≥1.17' < 8'	D7	D7	10"
10' < 17'	D7	D7	8' < 12'	E5	E5	10"
17' - 30'	E5	E5	12' < 20'	F5	F5	10"
			20' - 30'	G5	G5	10"
SIZE: 20'-0" (Precast Only)						
	Inside	Outside		Inside	Outside	
≥1.17' < 8'	C6.5	C6.5	≥1.17' < 8'	D4.5	D4.5	9"
8' < 13'	D7	D7	8' < 12'	E5	E5	9"
13' - 25'	E5	E5	12' < 19'	F5	F5	9"
			19' - 25'	G5	G5	9"

TABLE 4 NOTES:

1. Wall depth is measured to the top of the bottom slab for boxes and to the top of the intermediate slab for risers.
2. Wall height is the distance between top of lower slab to bottom of upper slab. Maximum wall height is 12' for wall lengths exceeding 5', or 10' for wall lengths exceeding 12'.
3. Wall lengths exceeding 6'-0" require two layers of reinforcing (See Table 4) with 2" of cover from the horizontal bars to the inside and outside faces for each layer.
4. Wall lengths exceeding the dimensions or depths shown in Table 4, or 12'-0" diameter require a special design.
5. Wall thickness and reinforcing for rectangular structures is based on the longer wall length.

TABLES 1, 2, 3, AND 4

TABLE 5 - SLAB DESIGNS - SQUARE AND RECTANGULAR STRUCTURES

(ALL SLABS 8" THICK EXCEPT AS NOTED - REINFORCING PARALLEL TO SHORT WAY AND LONG WAY)

SHORT-WAY		LONG-WAY	
SLAB DEPTH	SCHEDULE (Bars A)	SLAB DEPTH	SCHEDULE (Bars B)
SIZE: 3'-6" x UNLIMITED			
≥0.5' < 8'	B10	≥0.5' < 24'	B10
8' < 13'	B5.5	24'-40'	B5.5
13' < 31'	C6.5		
31'-40'	D7		
SIZE: 4' x UNLIMITED			
≥0.5' < 7'	B5.5	≥0.5' < 15'	B10
7' < 19'	C6.5	15' < 29'	B5.5
19' < 31'	D7	29'-40'	C6.5
31'-40'	E5		
SIZE: 5' x 5'			
≥0.5' < 3'	C6.5	≥0.5' < 3'	C6.5
3' < 7'	B5.5	3' < 13'	C6.5
7' < 22'	C6.5	13' < 22'	D7
22' < 29'	D7	22' < 29'	D4.5
29'-40'	E5	29'-40'	E5
SIZE: 5' x 6'			
≥0.5' < 12'	C6.5	≥0.5' < 3'	C6.5
12' < 26'	D7	3' < 9'	B5.5
26'-40'	E5	9' < 23'	C3.5
		23' < 35'	D4.5
		35'-40'	E5
SIZE: 5' x 7'			
≥0.5' < 10'	C6.5	≥0.5' < 10'	B5.5
10' < 20'	D7	10' < 31'	C3.5
20' < 34'	E5	31'-40'	D4.5
34'-40'	F5		
SIZE: 5' x 8'			
≥0.5' < 7'	C6.5	≥0.5' < 8'	B10
7' < 13'	D7	8' < 17'	B5.5
13' < 24'	E5	17' < 25'	C6.5
24'-40'	F5	25'-40'	C3.5
SIZE: 5' x 9'			
≥0.5' < 8'	C6.5	≥0.5' < 14'	B10
8' < 14'	D7	14' < 24'	B5.5
14' < 25'	E5	24' < 34'	C6.5
25'-40'	F5	34'-40'	C3.5
SIZE: 5' x UNLIMITED			
≥0.5' < 8'	C6.5	≥0.5' < 14'	B10
8' < 14'	D7	14' < 24'	B5.5
14' < 25'	E5	24' < 34'	C6.5
25'-40'	F5	34'-40'	C3.5

SHORT-WAY		LONG-WAY	
SLAB DEPTH	SCHEDULE (Bars A)	SLAB DEPTH	SCHEDULE (Bars B)
SIZE: 6' x 6'			
≥0.5' < 13'	C6.5	≥0.5' < 10'	C3.5
13' < 23'	D7	10' < 18'	D4.5
23'-40'	E5	18' < 27'	E5
		27' < 33'	E3
		33'-40'	F5
SIZE: 6' x 7'			
≥0.5' < 8'	C6.5	≥0.5' < 8'	C6.5
8' < 16'	D7	8' < 12'	C3.5
16' < 28'	E5	12' < 21'	D4.5
28'-40'	F5	21' < 28'	E5
		28' < 35'	E3
		35'-40'	F5
SIZE: 6' x 8'			
≥0.5' < 6'	C6.5	≥0.5' < 6'	B5.5
6' < 13'	D7	6' < 11'	C6.5
13' < 22'	E5	11' < 17'	C3.5
22' < 35'	F5	17' < 22'	D4.5
35'-40'	G5	22' < 32'	E5
		32'-40'	E3
SIZE: 6' x 9'			
≥0.5' < 8'	D7	≥0.5' < 8'	B5.5
8' < 14'	E5	8' < 14'	C6.5
14' < 24'	F5	14' < 21'	C3.5
24'-34'	G5	21' < 25'	D4.5
		25'-34'	E5
SIZE: 6' x UNLIMITED			
≥0.5' < 8'	D7	≥0.5' < 8'	B5.5
8' < 14'	E5	8' < 14'	C6.5
14' < 24'	F5	14' < 21'	C3.5
24'-34'	G5	21' < 25'	D4.5
		25'-34'	E5
SIZE: 7' x 7'			
≥0.5' < 8'	C6.5	≥0.5' < 4'	C6.5
8' < 15'	D7	4' < 7'	C3.5
15' < 26'	E5	7' < 11'	D4.5
26'-40'	F5	11' < 22'	E3
		22' < 32'	F3.5
		32'-40'	G3.5
SIZE: 7' x 8'			
≥0.5' < 5'	C6.5	≥0.5' < 5'	C6.5
5' < 11'	D7	5' < 8'	C3.5
11' < 19'	E5	8' < 13'	D4.5
19' < 30'	F5	13' < 22'	E3
30'-40'	G5	22' < 30'	F3.5
		30'-40'	G3.5
SIZE: 7' x 9'			
≥0.5' < 9'	D7	≥0.5' < 7'	C6.5
9' < 15'	E5	7' < 10'	C3.5
15' < 25'	F5	10' < 14'	D4.5
25' - 34'	G5	14' < 21'	E5
		21' < 29'	F5
		29'-34'	F3.5

SHORT-WAY		LONG-WAY	
SLAB DEPTH	SCHEDULE (Bars A)	SLAB DEPTH	SCHEDULE (Bars B)
SIZE: 8' x 8'			
≥0.5' < 10'	D7	≥0.5' < 9'	D4.5
10' < 19'	E5	9' < 13'	E5
19'-30'	F5	13' < 18'	F5
		18' < 23'	F3.5
		23'-30'	G3.5
SIZE: 8' x 9'			
≥0.5' < 8'	D7	≥0.5' < 7'	D7
8' < 14'	E5	7' < 9'	D4.5
14' < 23'	F5	9' < 15'	E3
23'-31'	G3.5	15' < 20'	F5
		20' < 23'	F3.5
		23'-31'	G3.5
SIZE: 9' x 9'			
≥0.5' < 8'	D7	≥0.5' < 7'	D4
8' < 14'	E5	7' < 10'	E5
14' < 22'	F5	10' < 17'	F3.5
		17' < 22'	G3.5
SIZE: 9'x9'x10" SLAB THICKNESS			
22' < 36'	F5	22' < 31'	F3.5
36'-40'	G5	31'-40'	G3.5
SIZE: 10'x10'x10" SLAB THICKNESS			
≥0.5' < 7'	C6.5	0.5' < 6'	C6.5
7' < 10'	D7	6' < 9'	D4.5
10' < 18'	E5	9' < 15'	E5
18' < 27'	F5	15' < 22'	F5
27'-32'	G5	22'-32'	G3.5
SIZE: 12'x12'x12" SLAB THICKNESS			
≥0.5' < 10'	D7	≥0.5' < 8'	D7
10' < 16'	E5	8' < 14'	E5
16' < 25'	F5	14' < 22'	F5
25'-35'	G5	22' < 30'	G5
		30'-35'	H4

TABLE 6 - SLAB DESIGNS ROUND STRUCTURES

SLAB DEPTH	SLAB THICKNESS	REINF. (2-WAY) SCHEDULE
SIZE: 3'-6" DIAMETER		
2'-15'	6" Precast	C6.5
0.5' < 30'	8"	A6
30'-40'	8"	B5.5
SIZE: 4'-0" DIAMETER		
≥0.5' < 19'	8"	A6
19' < 30'	8"	B5.5
30'-40'	8"	C6.5
SIZE: 5'-0" DIAMETER		
≥0.5' < 15'	8"	B5.5
15' < 26'	8"	C6.5
26' < 35'	8"	D7
35'-40'	8"	D4.5
SIZE: 6'-0" DIAMETER		
≥0.5' < 9'	8"	B5.5
9' < 15'	8"	C6.5
15' < 22'	8"	C3.5
22' < 30'	8"	D4.5
30'-40'	8"	E5
SIZE: 7'-0" DIAMETER		
≥0.5' < 8'	8"	C3.5
8' < 16'	8"	D4.5
16' < 23'	8"	E5
23' < 27'	8"	E3
27'-40'	8"	F3.5
SIZE: 8'-0" DIAMETER		
≥0.5' < 10'	8"	D4.5
10' < 16'	8"	E5
16' < 19'	8"	E3
19' < 29'	8"	F3.5
29'-40'	10"	F5
SIZE: 10'-0" DIAMETER		
≥0.5' < 12'	10"	D4.5
12' < 20'	10"	E5
20' < 28'	10"	F5
28'-40'	10"	G3.5
SIZE: 12'-0" DIAMETER		
≥0.5' < 8'	10"	D4.5
8' < 13'	10"	E5
13' < 18'	10"	F5
18' < 26'	10"	G3.5
26'-40'	12"	G3.5

SLAB AND WALL DESIGN TABLE NOTES

1. Size is the inside dimension(s) of a structure.
2. Slab reinforcement is appropriate for top, intermediate, and bottom slabs.
3. Bottom Slabs for precast 3'-6" x 3'-6" rectangular structures at 15' depth or less, may be 6" thick.
4. Slab depth is measured from finished grade to top of slab.
5. Reinforcing schedules with larger areas of steel may be substituted for schedules with smaller bar or wire spacing, except that Schedule B10 may not be substituted for Schedule A6. See Index 425-001 for allowable bar spacing adjustments when larger areas of reinforcing are substituted.

TABLES 5 AND 6

GENERAL NOTES:

1. Work this Index with Index 425-001 and Index 425-010.

2. Conform finished grade and slope of the Inlet Tops to the finished cross slope and grade of the adjacent sidewalk and/or border.

3. Provide 1¼" minimum cover for steel in the Inlet Top.

4. Construction of Inlet Tops are either precast or cast-in-place.

5. For precast units, the rear wall and apron may be precast as a separate piece from the top slab. Provide a minimum of 7 ~ #4 dowels, otherwise install in accordance with Index 425-001 "OPTIONAL CONSTRUCTION JOINTS".

6. These inlets are designed for use with standard curb and gutter Type E and Type F.

7. Use only round concrete support posts.

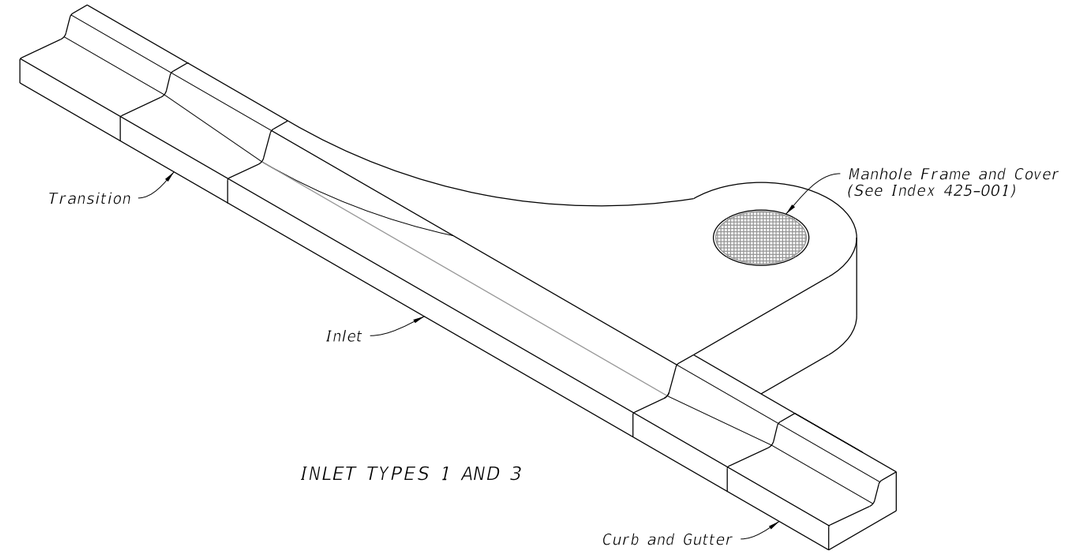

INLET TYPES 1 AND 3

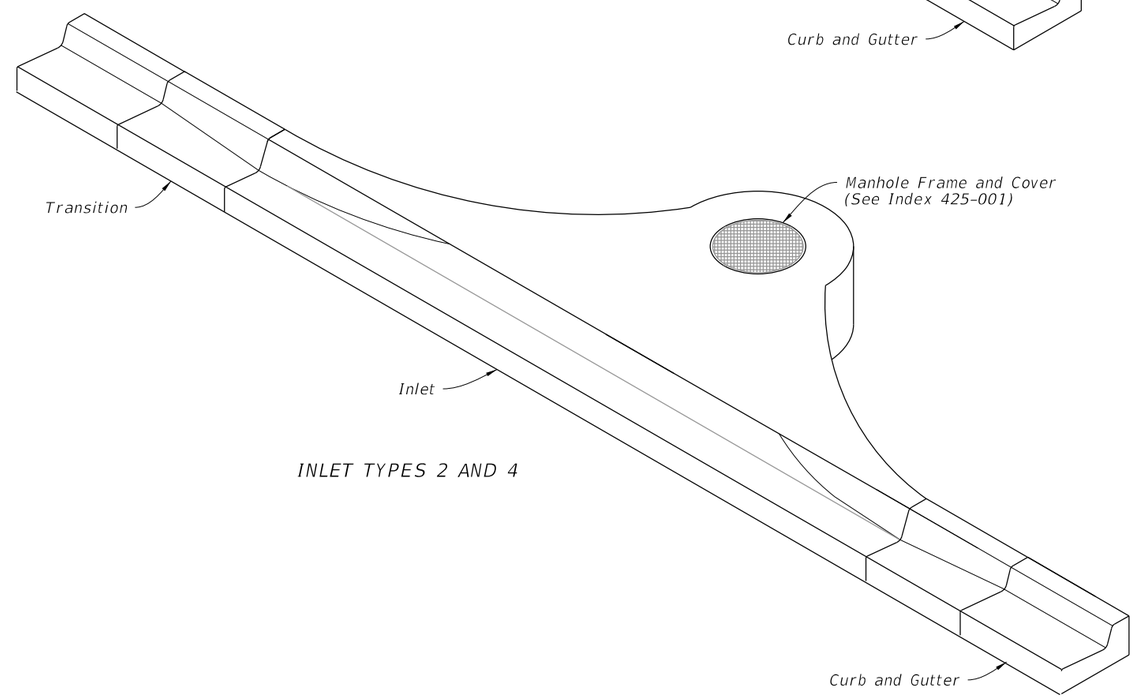

INLET TYPES 2 AND 4

CURB INLET TOPS

TABLE OF CONTENTS:

Sheet	Description
1	General Notes and Contents
2	Top Dimensional and Reinforcing Details
3	Transverse Dimensional and Reinforcing Details

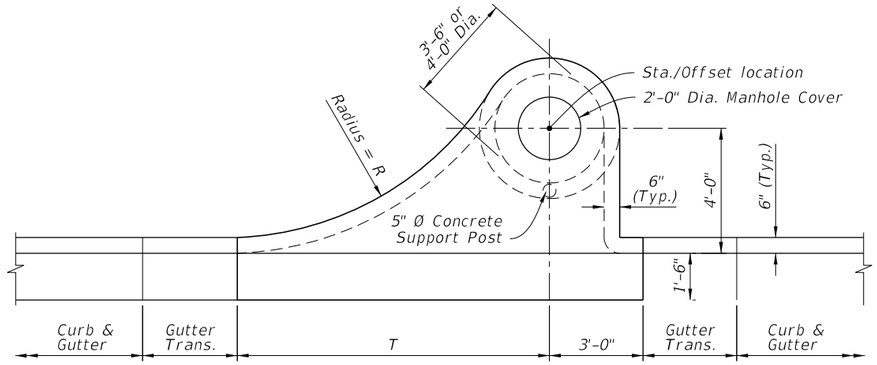

PLAN

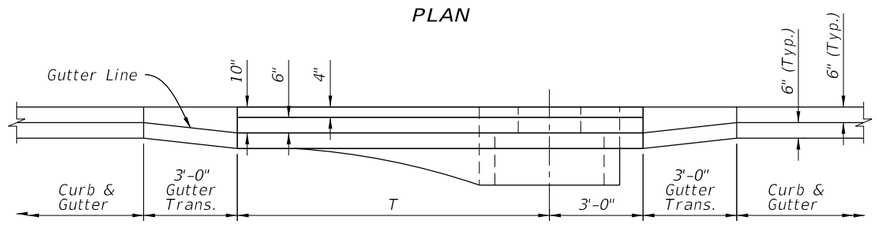

ELEVATION

TYPE 1 AND 3

TABLE 1 INLET DIMENSIONS		
Inlet Type	R	T
1	10'-0"	10'-0"
2	10'-0"	10'-0"
3	6'-0"	6'-0"
4	6'-0"	6'-0"

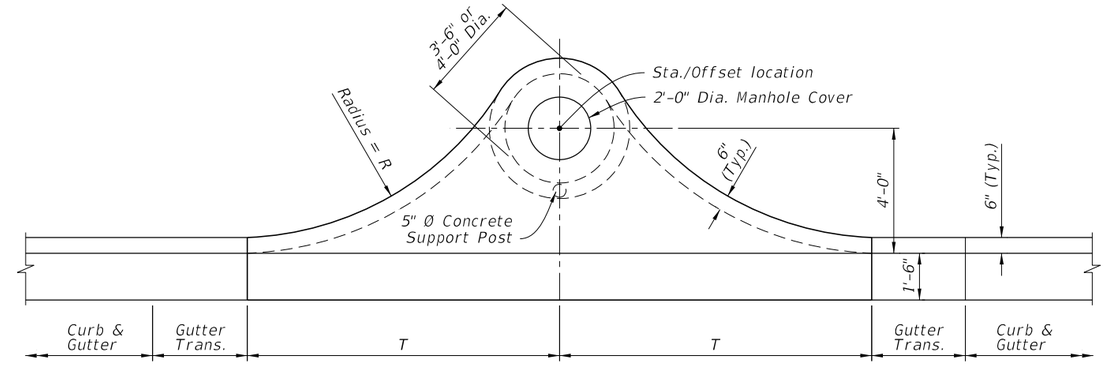

PLAN

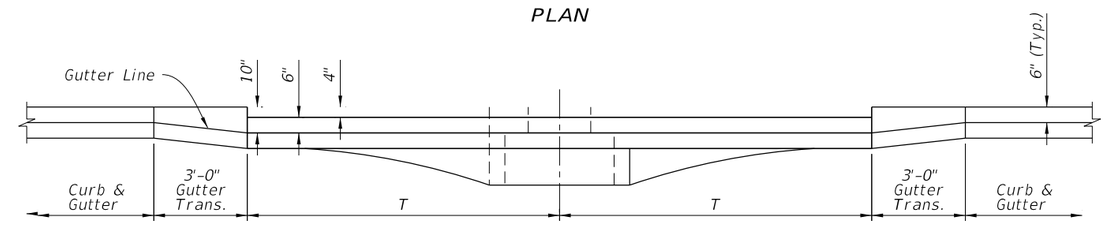

ELEVATION

TYPE 2 AND 4

TOP DIMENSIONAL DETAILS

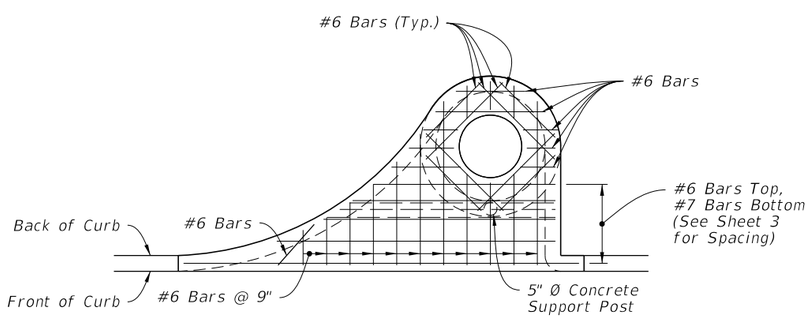

PLAN

TYPE 1 AND 3

NOTE:
For transverse section reinforcement, see Sheet 3.

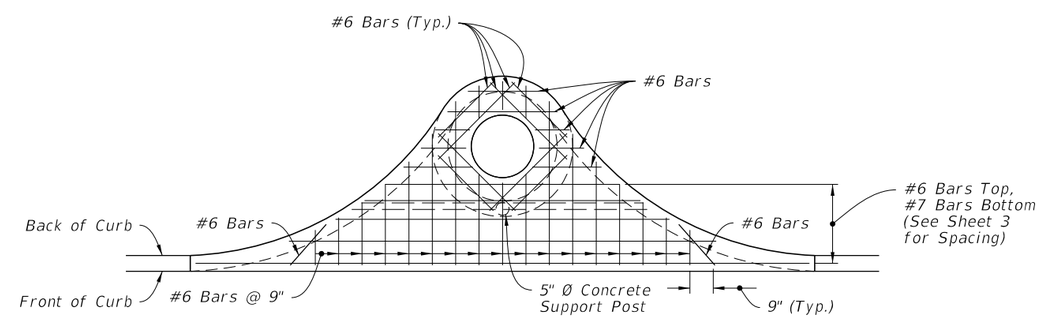

PLAN

TYPE 2 AND 4

TOP REINFORCING DETAILS

TOP DIMENSIONAL AND TOP REINFORCING DETAILS

LAST REVISION	REVISION	DESCRIPTION:			INDEX	SHEET
11/01/20			FY 2023-24 STANDARD PLANS	CURB INLET TOP TYPES 1, 2, 3, AND 4	425-020	2 of 3

10/20/2022 8:46:53 AM

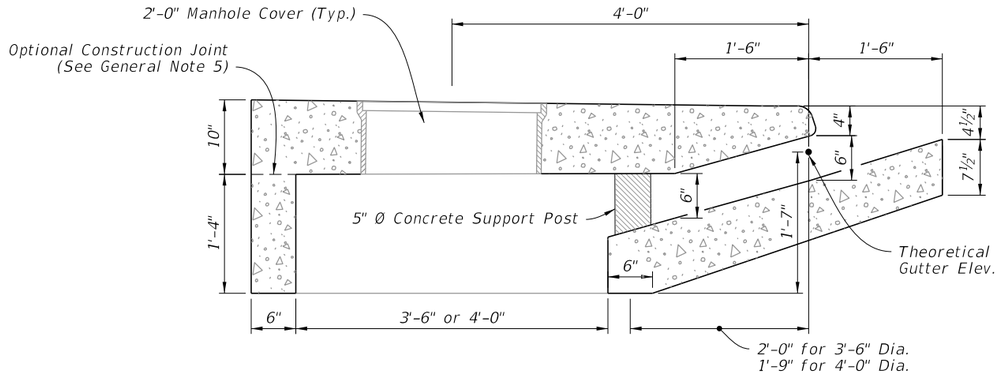

INLET SECTION WITH TYPE F CURB AND GUTTER

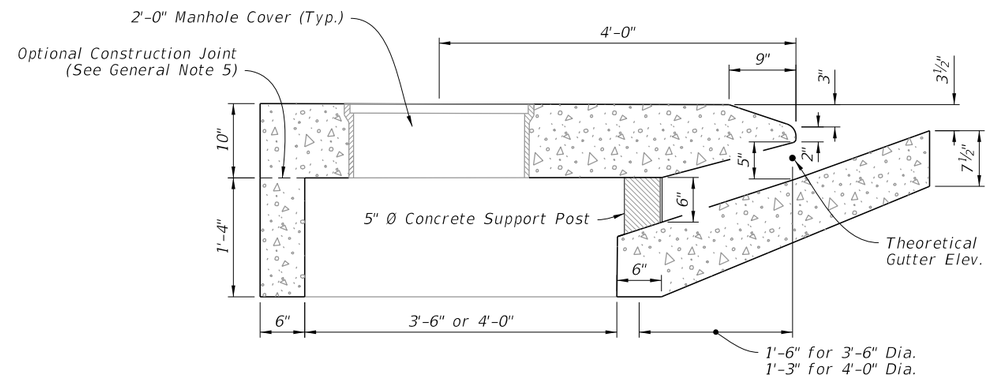

INLET SECTION WITH TYPE E CURB AND GUTTER

TRANSVERSE DIMENSIONAL DETAILS

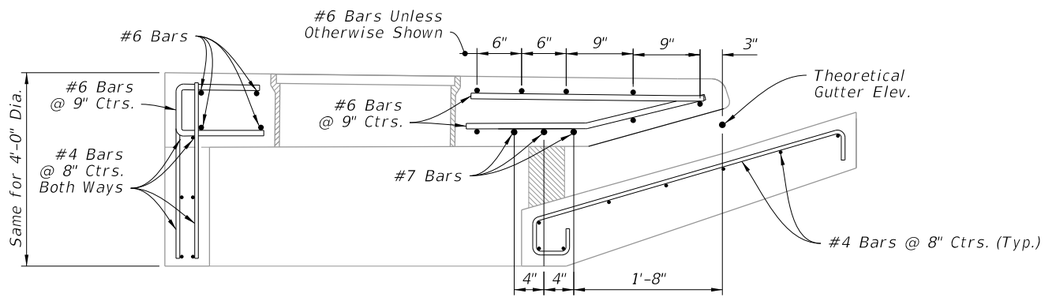

3'-6" DIA. STRUCTURE BOTTOM

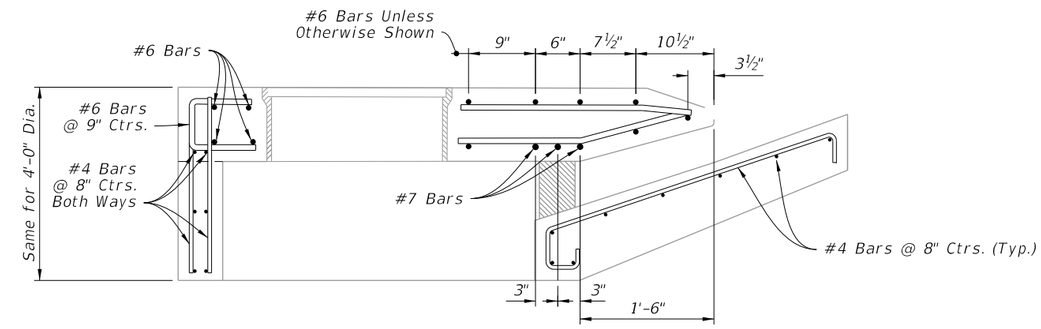

3'-6" DIA. STRUCTURE BOTTOM

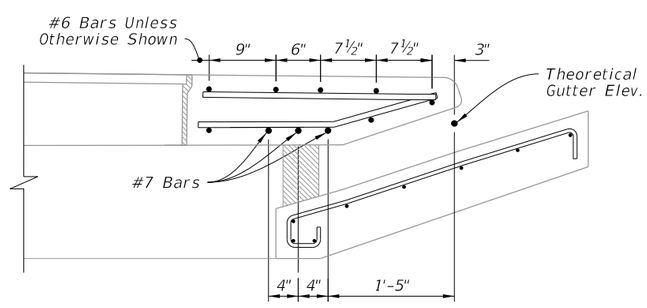

4'-0" DIA. STRUCTURE BOTTOM

INLET SECTION WITH TYPE F CURB AND GUTTER

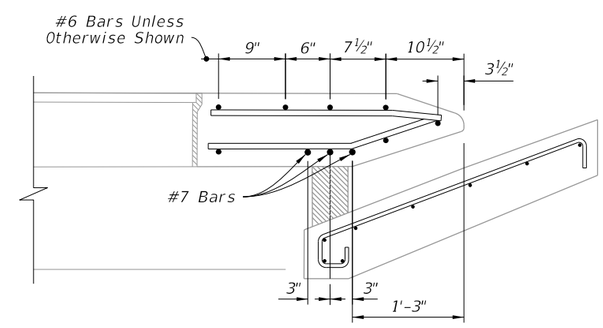

4'-0" DIA. STRUCTURE BOTTOM

INLET SECTION WITH TYPE E CURB AND GUTTER

TRANSVERSE REINFORCING DETAILS

TRANSVERSE DIMENSIONAL AND REINFORCING DETAILS

LAST REVISION	REVISION	DESCRIPTION:			INDEX	SHEET
11/01/20			FY 2023-24 STANDARD PLANS	CURB INLET TOP TYPES 1, 2, 3, AND 4	425-020	3 of 3

10/20/2022 8:46:53 AM

GENERAL NOTES:

1. Work this Index with Index 425-001 and Index 425-010.
2. Conform the finished grade and slope of the inlet tops with the finished cross slope and grade of the proposed sidewalk and/or border.
3. For inlets constructed on a curve, refer to the plans to determine the radius. Bend steel when necessary.
4. Use Grade 60 reinforcing bars with 1¼" minimum cover unless otherwise shown, see Sheet 6 for equivalent area Welded Wire Reinforcement details.
5. Inlet tops may be either cast-in-place or precast concrete. Conform precast units to the dimensions shown or in accordance with approved shop drawings.
6. Corner fillets are required at inlet opening for precast units or C-I-P units used in conjunction with circular inlet bottoms or skewed rectangular inlet boxes. Finish top of fillets flush with drain throat bottom and match slope.
7. For Type E curb and gutter, transition the shape of the curb over the gutter transition length to match the face of the inlet (Type Ft).
8. Meet the requirements of ASTM A36/A36M with steel used for frames and grates.
9. Use either cast iron grates or steel grates.

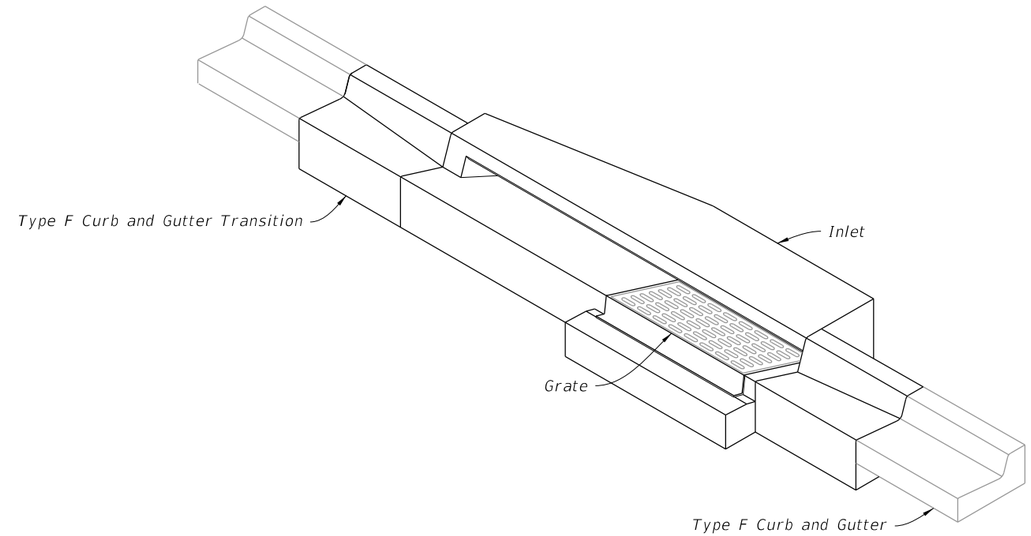

INLET TYPE 5
(Type F Curb and Gutter Shown)

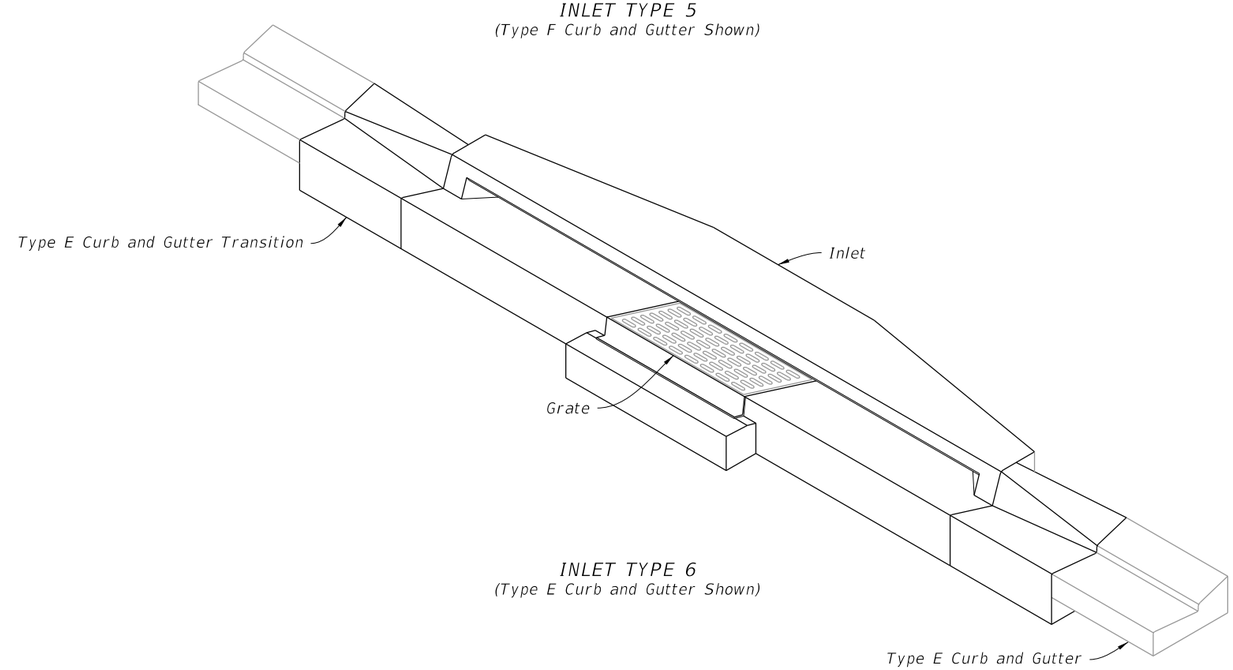

INLET TYPE 6
(Type E Curb and Gutter Shown)

TABLE OF CONTENTS:

Sheet	Description
1	General Notes and Contents
2	Type 5 and 6 Dimensional Details
3	Type 5 and 6 Reinforcing and Bar Bending Details
4	Precast Dimensional and Reinforcing Details
5	Cast-In-Place Dimensional and Reinforcing Details
6	Alternate Welded Wire Reinforcing (WWR) Details
7	Grate, Anchor, and Grouting Details

CURB INLETS TOPS

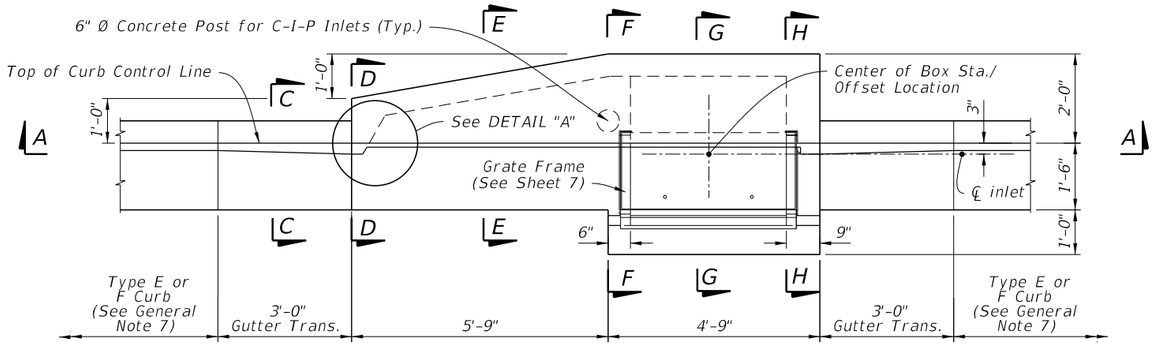

PLAN

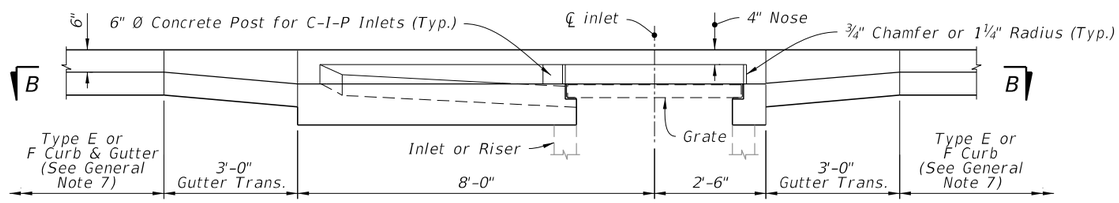

ELEVATION

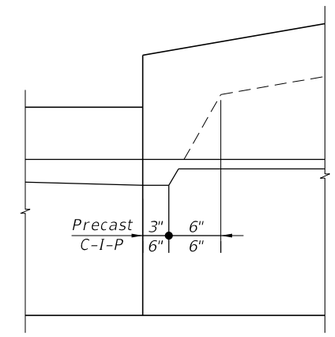

DETAIL "A"

TYPE 5 DIMENSIONAL DETAILS

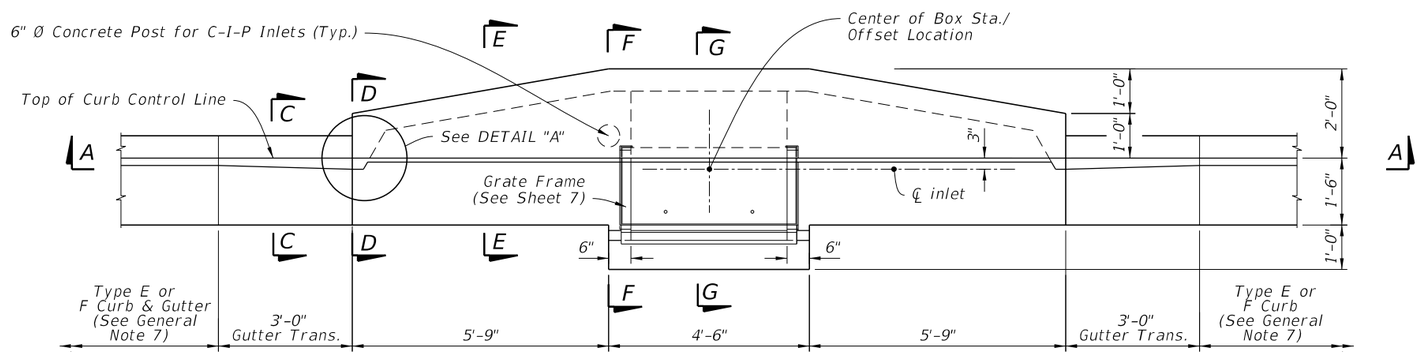

PLAN

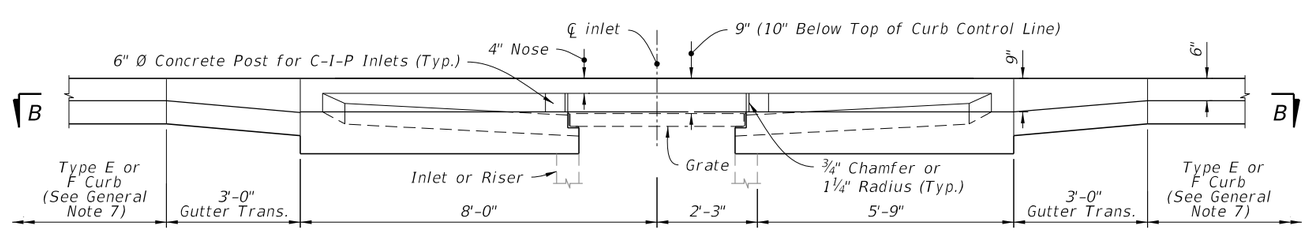

ELEVATION

TYPE 6 DIMENSIONAL DETAILS

TYPE 5 AND 6 DIMENSIONAL DETAILS

LAST REVISION	REVISION	DESCRIPTION:			INDEX	SHEET
11/01/20			FY 2023-24 STANDARD PLANS	CURB INLET TOP TYPES 5 AND 6	425-021	2 of 7

10/20/2022 8:46:54 AM

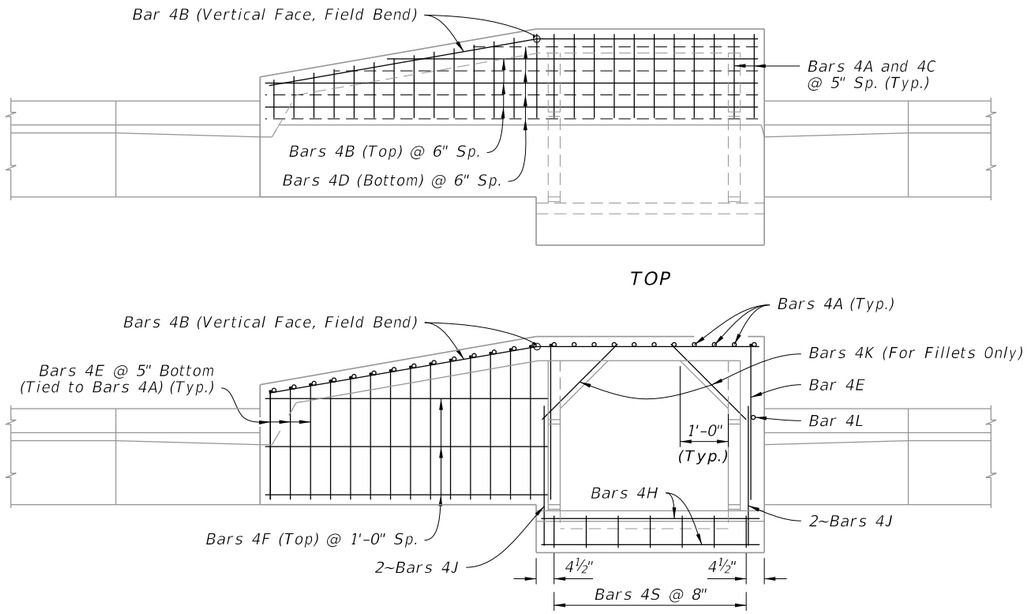

TYPE 5 REINFORCING DETAILS

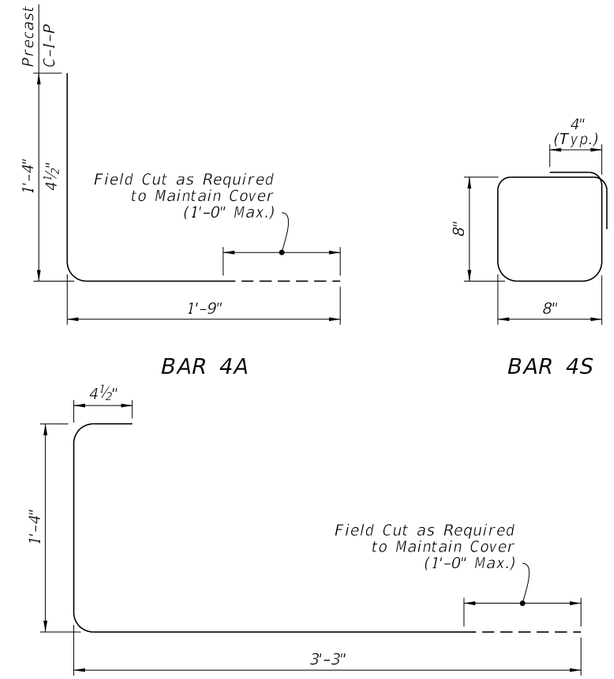

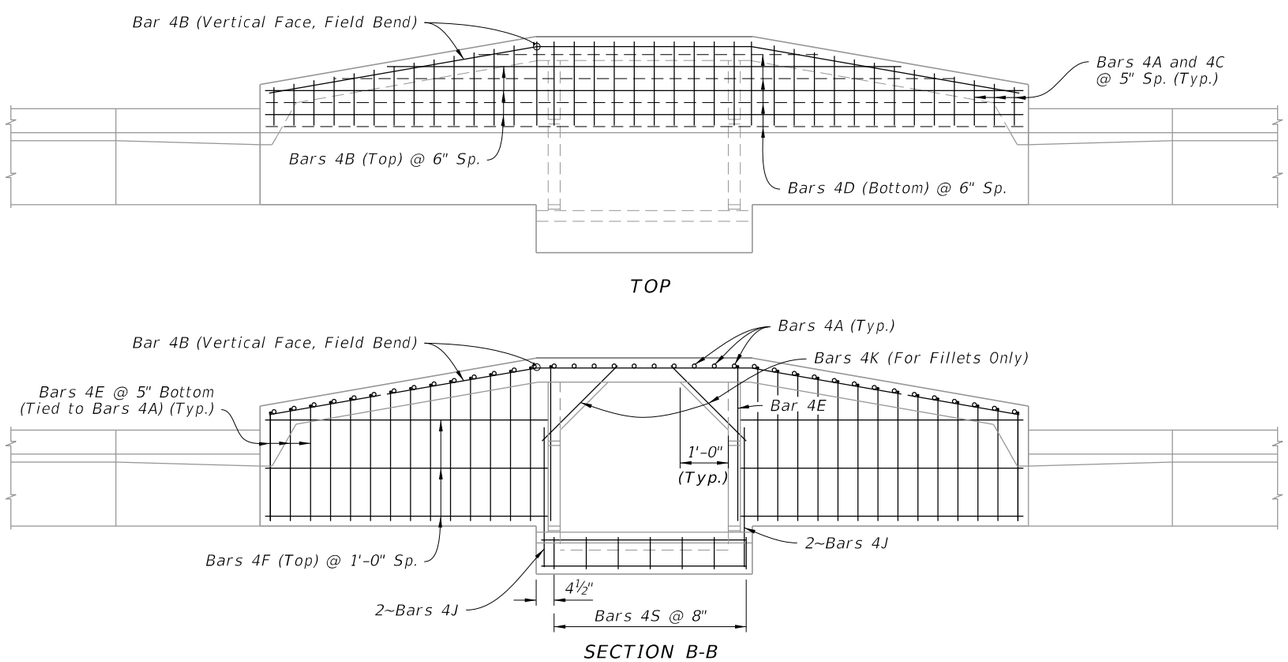

TYPE 6 REINFORCING DETAILS

BILL OF REINFORCING STEEL					
MARK	SIZE	TYPE 5 INLET		TYPE 6 INLET	
		NO.	LENGTH	NO.	LENGTH
A (Precast)	4	25	3'-1"	38	3'-1"
A (C-I-P)	4	25	2'-1½"	38	2'-1½"
B	4	6	10'-3"	6	15'-9"
C	4	25	11" to 1'-11"	38	11" to 1'-11"
D	4	4	10'-3"	4	15'-9"
E	4	16	4'-11½"	30	4'-11½"
F	4	3	6'-0"	6	6'-0"
H	4	4	4'-6"	4	4'-6"
J	4	4	3'-0"	4	3'-0"
K (Fillet)	4	2	2'-3"	2	2'-3"
L (Precast)	4	1	1'-4"	0	---
L (C-I-P)	4	10	1'-4"	9	1'-4"
S	4	7	3'-2"	7	3'-2"

NOTES:

1. All bar dimensions in the bending diagrams are out to out.
2. Bars 4A and 4E may be combined into a single bar.
3. Welded Wire Reinforcement consists of smooth or deformed wire meeting the requirements of Specification 931.

TYPE 5 AND 6 REINFORCING AND BAR BENDING DETAILS

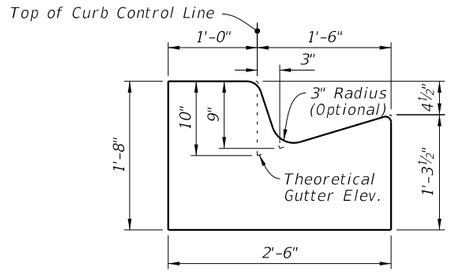

SECTION D-D

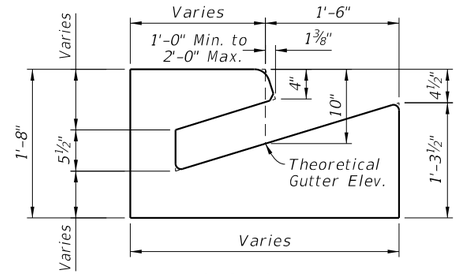

SECTION E-E

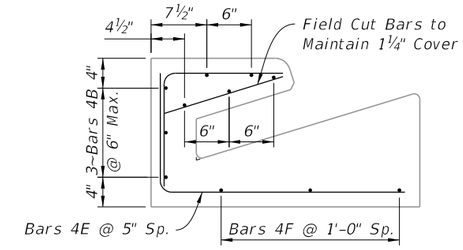

SECTION E-E

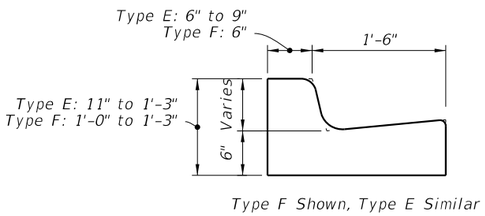

SECTION C-C

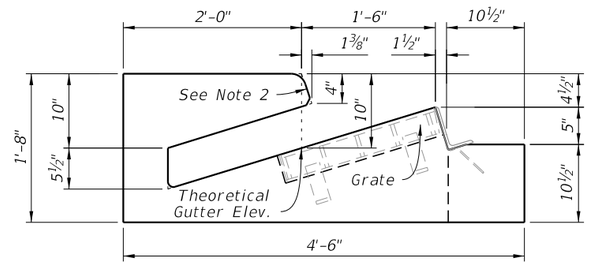

SECTION F-F

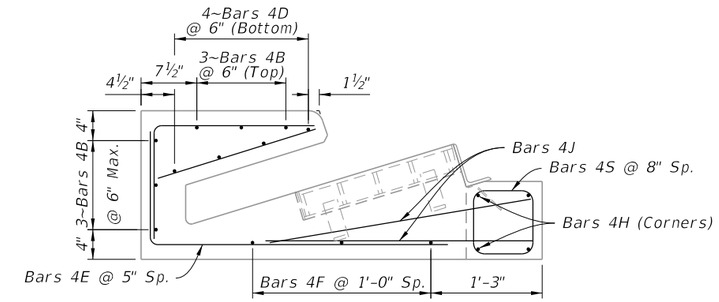

SECTION F-F

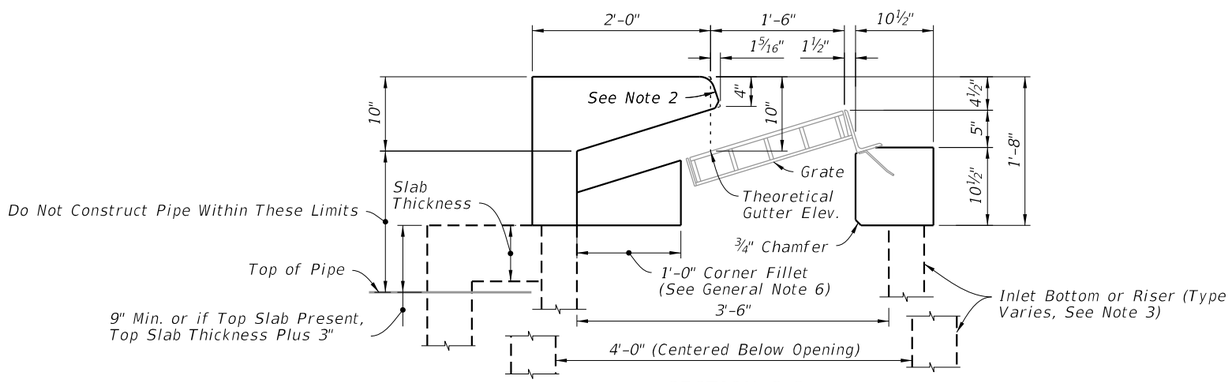

SECTION G-G

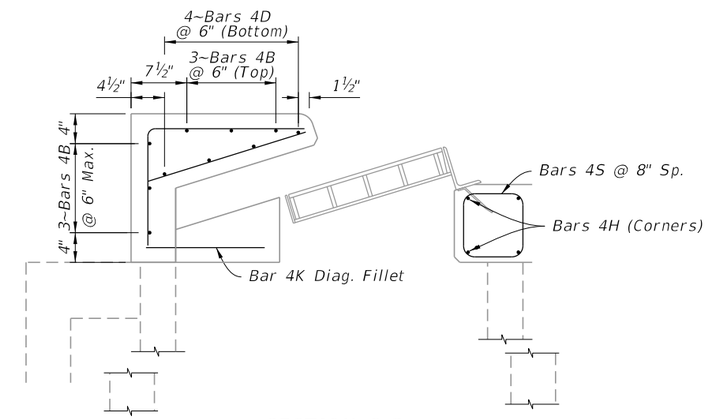

SECTION G-G

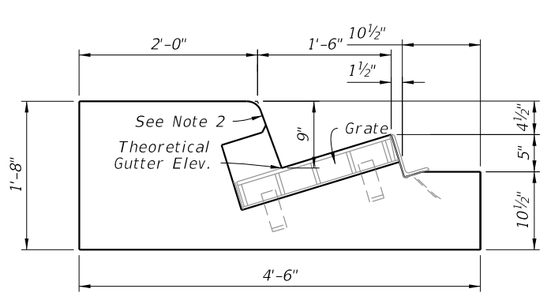

SECTION H-H

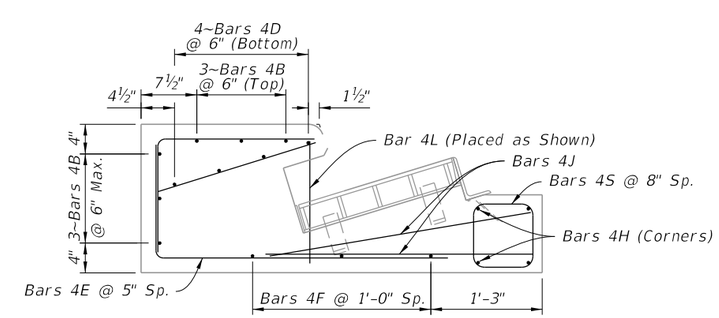

SECTION H-H

NOTES:

1. For location of Sections D-D thru H-H see Sheet 2.
2. Match slope of adjacent curb with 2" top radius and ¾" bottom chamfer of 1¼" radius.
3. See Plans for bottom and riser type.

DIMENSIONAL DETAILS

REINFORCING DETAILS

PRECAST DIMENSIONAL AND REINFORCING DETAILS

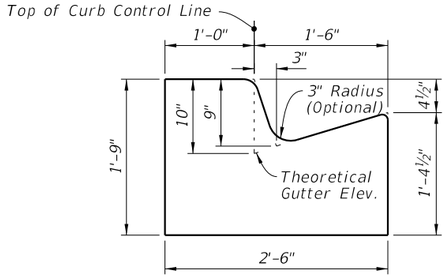

OPTION A

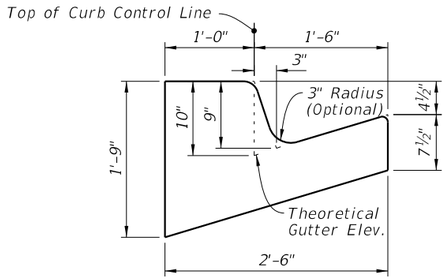

OPTION B

SECTION D-D

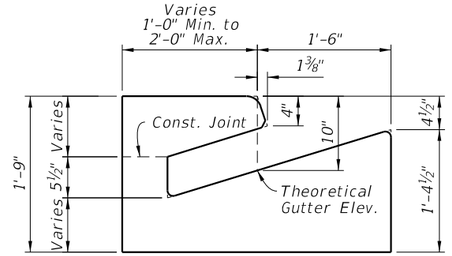

OPTION A

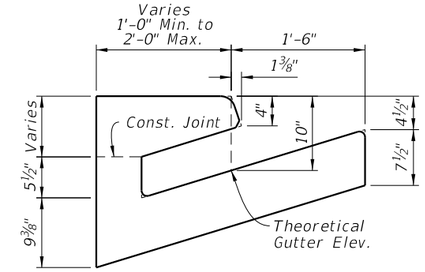

OPTION B

SECTION E-E

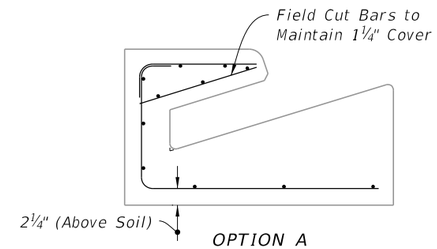

OPTION A

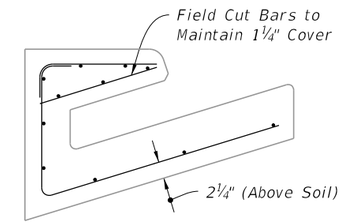

OPTION B

SECTION E-E

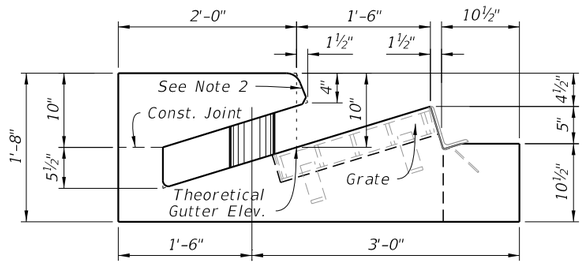

SECTION F-F

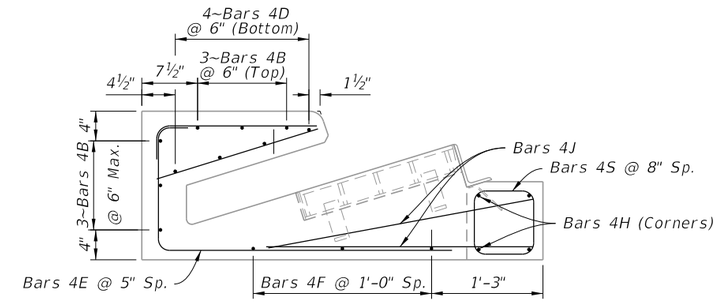

SECTION F-F

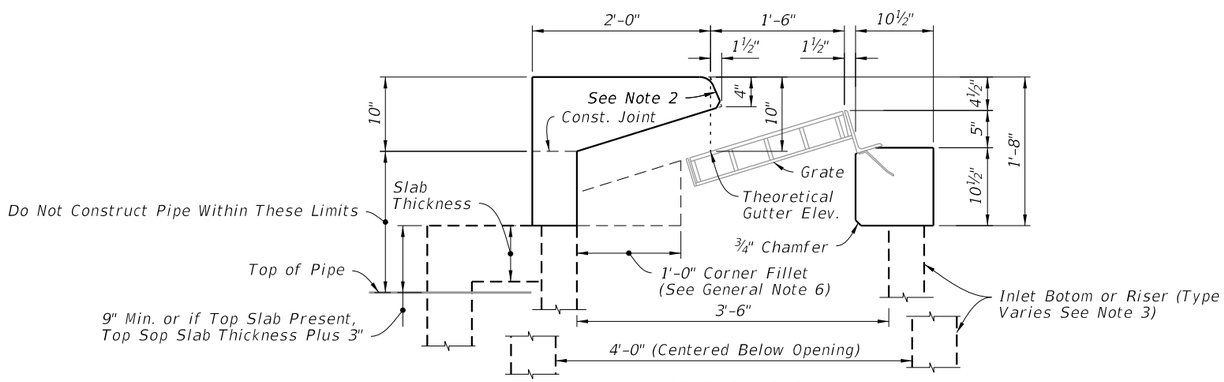

SECTION G-G

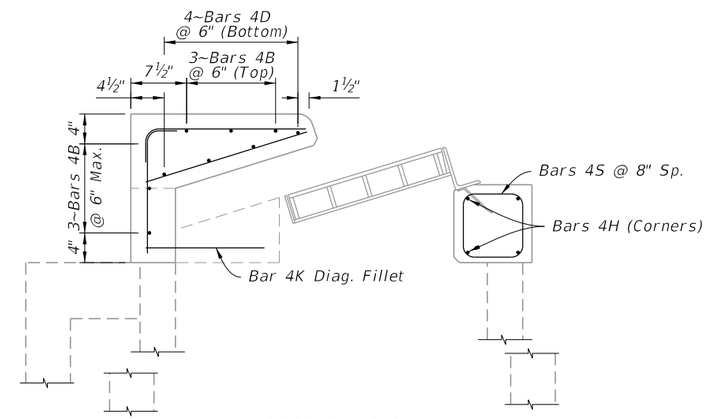

SECTION G-G

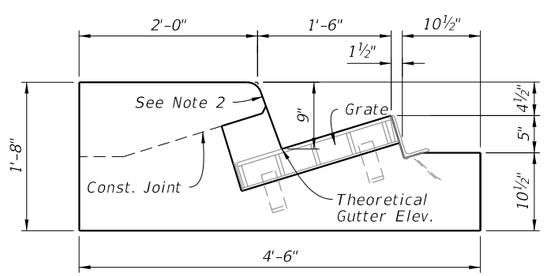

SECTION H-H

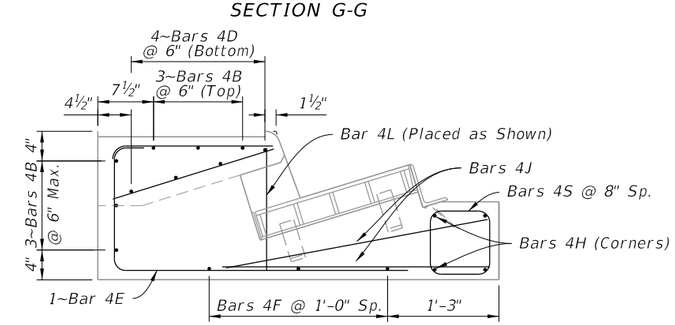

SECTION H-H

NOTES:

1. For location of Sections D-D thru H-H see Sheet 2.
2. Match slope of adjacent curb with 2" top radius and ¾" bottom chamfer of 1¼" radius.
3. See Plans for bottom and riser type.

DIMENSIONAL DETAILS

REINFORCING DETAILS

CAST-IN-PLACE DIMENSIONAL AND REINFORCING DETAILS

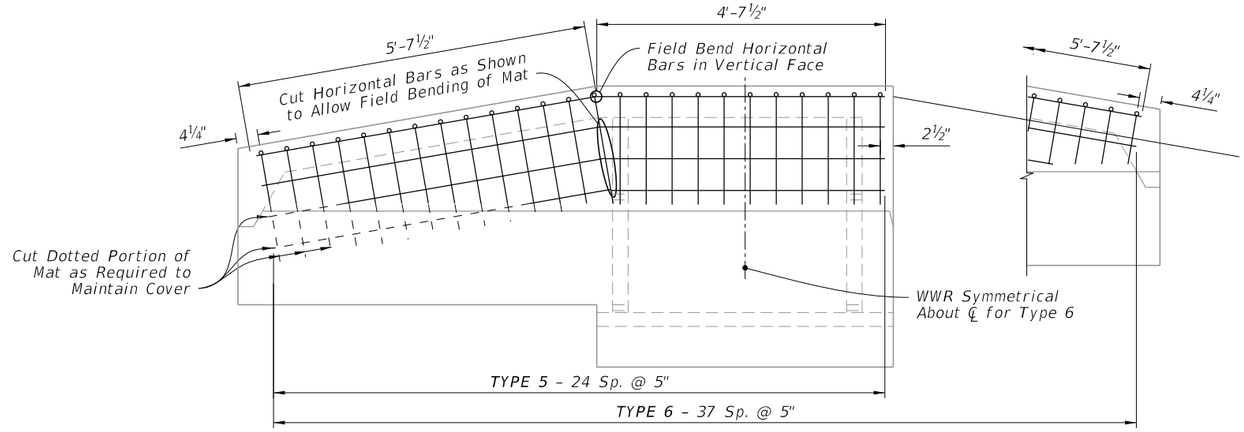

PIECE - 1 PLACEMENT SCHEMATIC

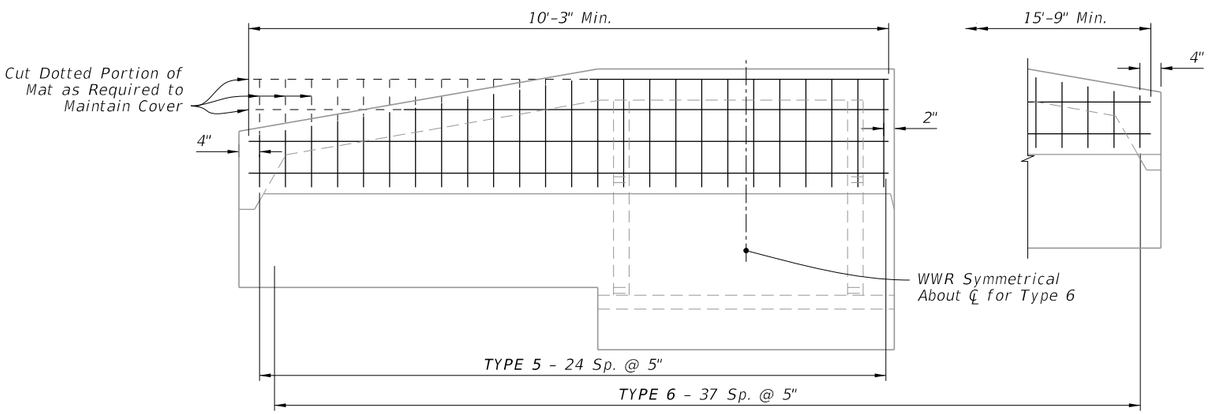

PIECE - 2 PLACEMENT SCHEMATIC

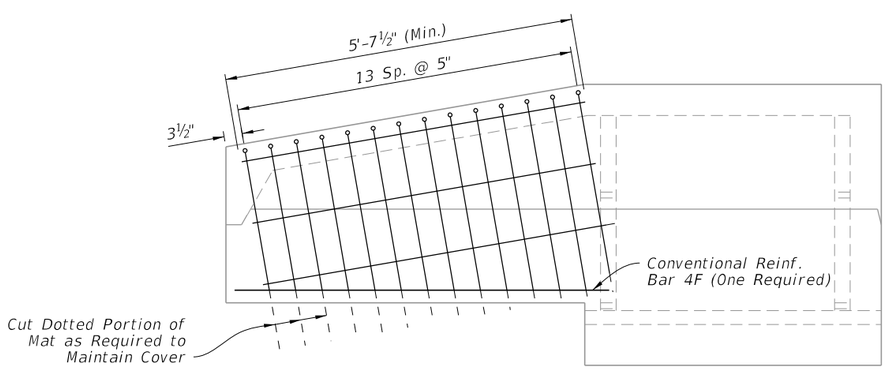

PIECE - 3 PLACEMENT SCHEMATIC

WWR REINFORCING DETAILS

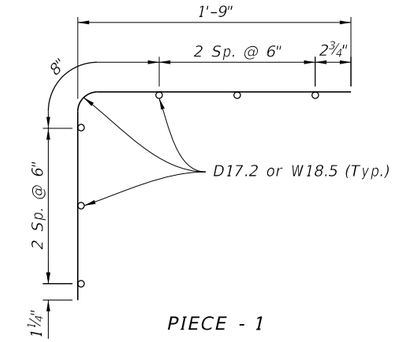

PIECE - 1

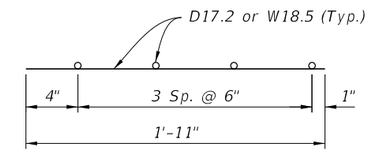

PIECE - 2

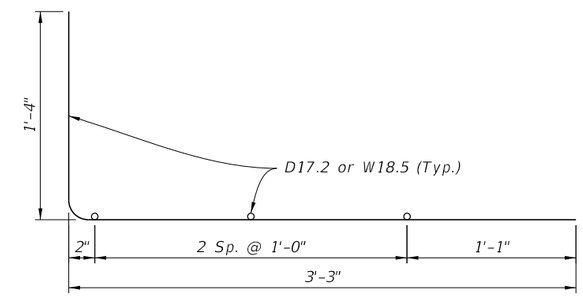

PIECE - 3

WELDED WIRE REINFORCING DETAILS

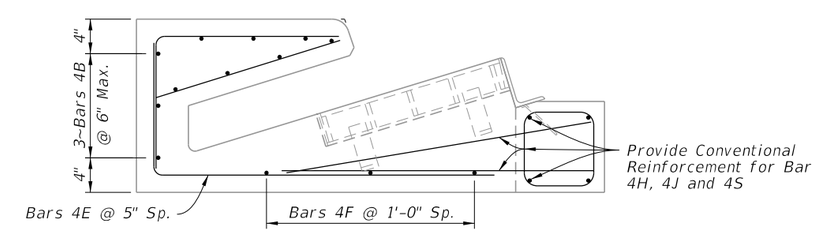

TYPICAL SECTION

NOTES:

1. All bar dimensions in the bending diagrams are out to out.
2. Welded Wire Reinforcement consists of Smooth or Deformed wire meeting the requirements of Specification 931.

ALTERNATE WELDED WIRE REINFORCING (WWR) DETAILS

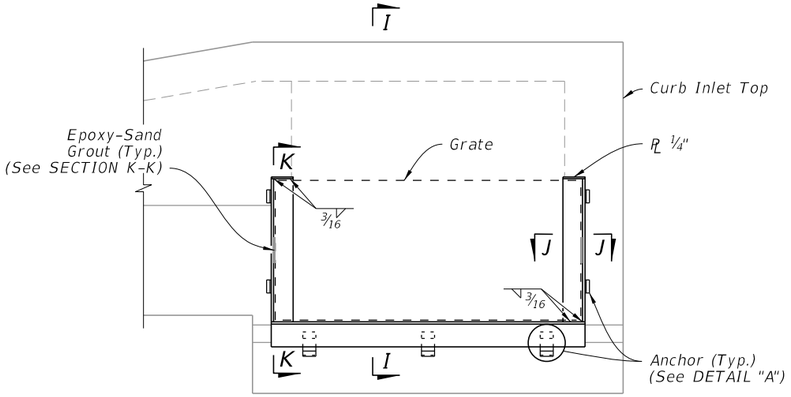

FRAME DETAIL

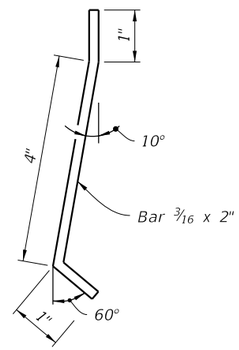

ANCHOR

DETAIL "A"

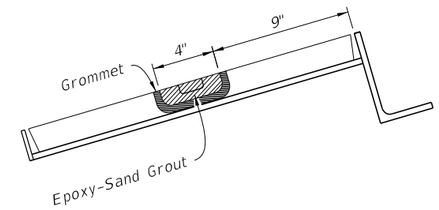

CAST IRON GRATE GROUTING DETAILS

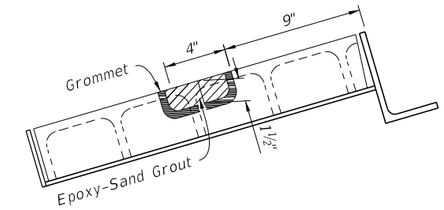

STEEL GRATE GROUTING DETAILS

SECTION K-K

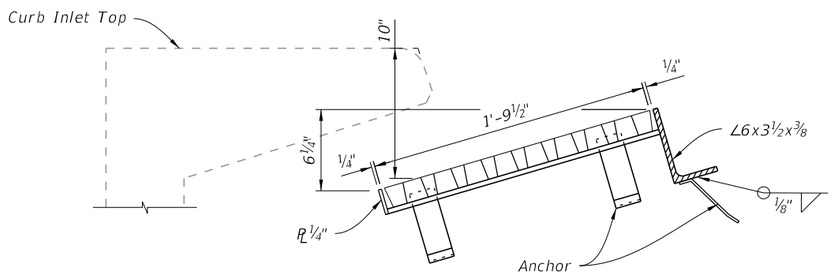

SECTION I-I

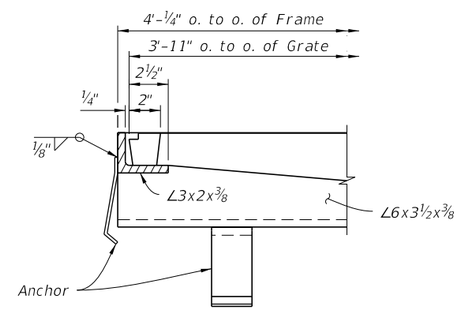

SECTION J-J

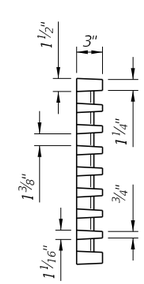

SECTION M-M

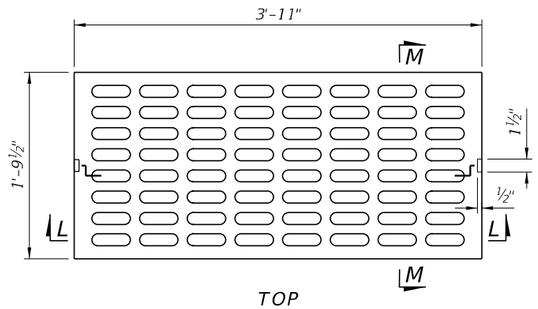

TOP

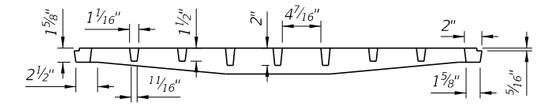

SECTION L-L

CAST IRON GRATE

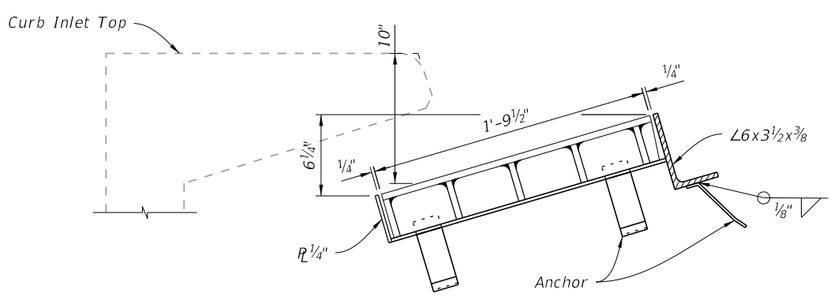

SECTION I-I

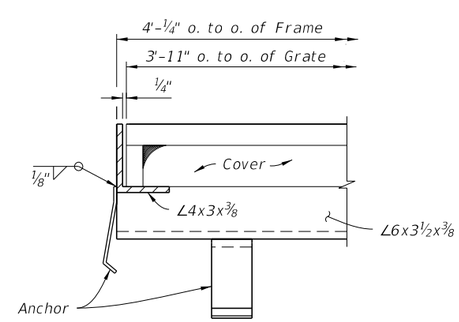

SECTION J-J

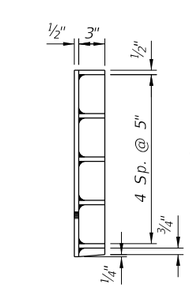

SECTION O-O

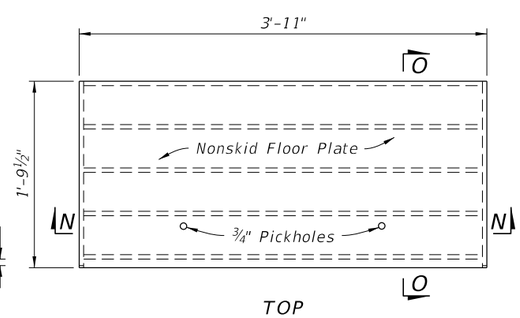

TOP

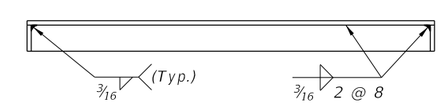

SECTION N-N

STEEL GRATE

GRATE, ANCHOR, AND GROUTING DETAILS

LAST REVISION	REVISION	DESCRIPTION:			INDEX	SHEET
11/01/20			FY 2023-24 STANDARD PLANS	CURB INLET TOP TYPES 5 AND 6	425-021	7 of 7

10/20/2022 8:46:58 AM

GENERAL NOTES:

1. Work this Index with Index 425-001 and Index 425-010.

2. Use Grade 60 reinforcing bars with 2" minimum cover unless otherwise shown. See Index 425-001 for equivalent area of welded wire fabric. Cut or bend bars out of way of pipe when necessary. Bars to clear pipe by 1½".

3. Recommended maximum pipe sizes are 24" longitudinal and 30" transverse. For larger pipe, inlets with Alt. B bottoms, Index 425-010 is recommended.

4. All dimensions are for both precast and cast-in-place inlets unless otherwise shown.

TABLE OF CONTENTS:

Sheet	Description
1	General Notes and Contents
2	Dimensional and Reinforcing Details

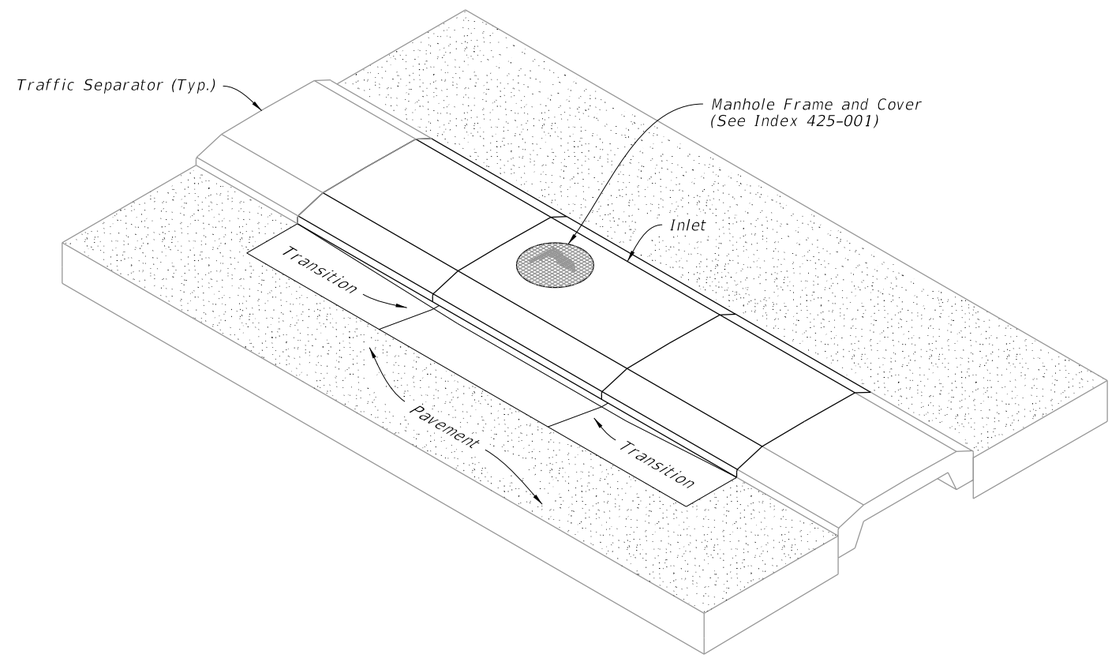

CURB INLET TYPE 7
(Bottom Not Shown)

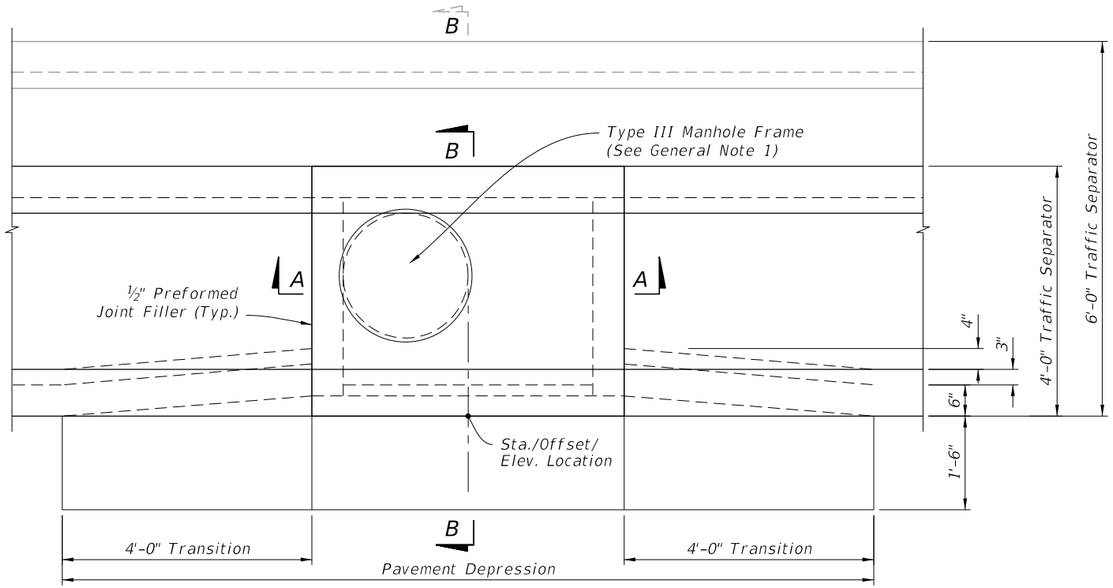

PLAN

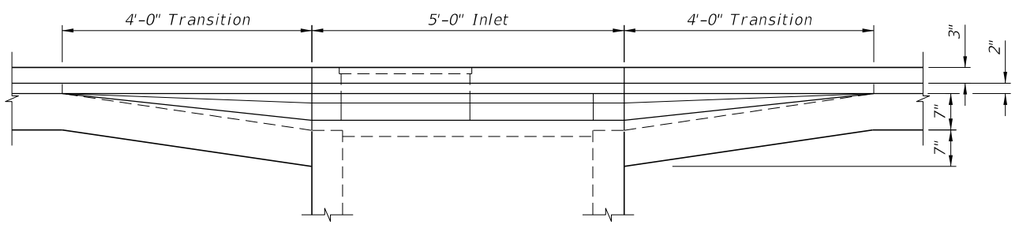

FRONT ELEVATION

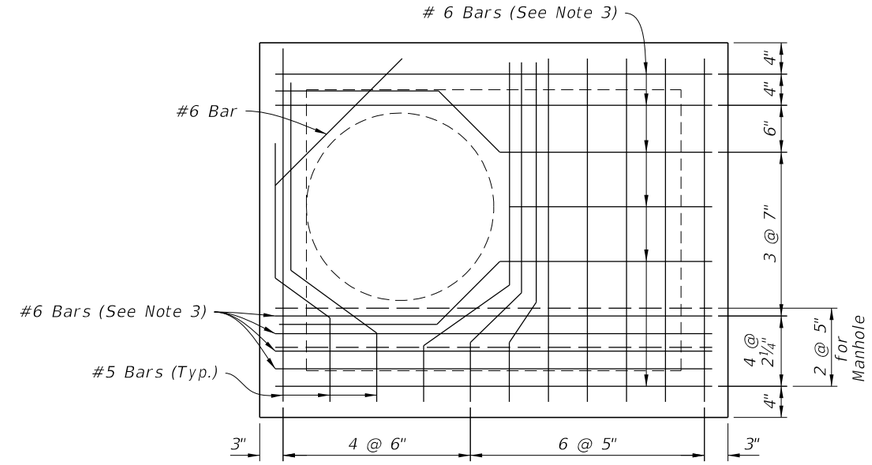

DETAIL "A"

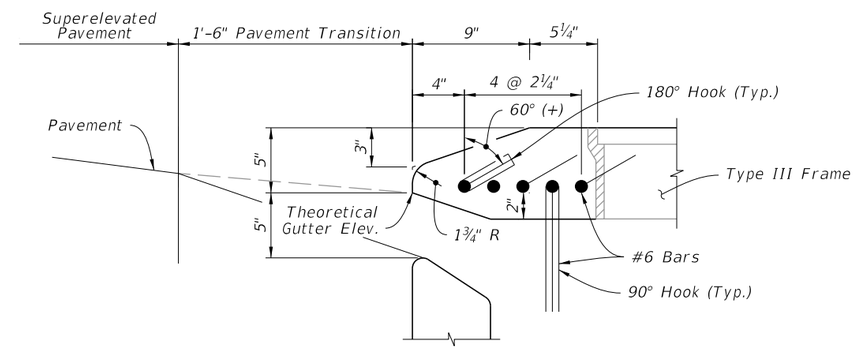

DETAIL "B"

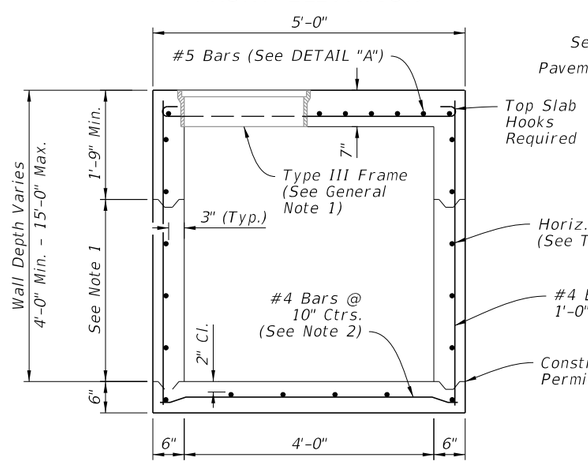

SECTION A-A

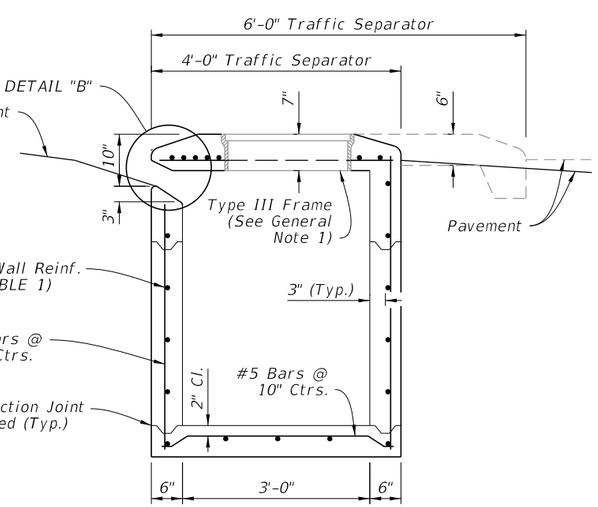

SECTION B-B

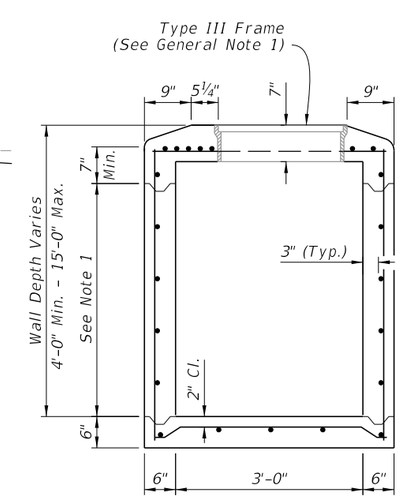

MANHOLE MODIFICATION

NOTES:

1. Construction joints permitted between these limits. See Index 425-001 for minimum dimensions.
2. For bottom slab rebar embedment options, see optional construction joints, Index 425-001.
3. ACI standard hooks required each end of straight bars and right end of bent bars: 180° hooks, canted 60°(+), on odd bars; 90° hooks, down, on even bars numbered from throat side.

TABLE 1 - HORIZONTAL WALL REINFORCING SCHEDULE

WALL DEPTH	SCHEDULE	AREA (in.²/ft.)	MAX. SPACING	
			BARS	WWR
0' - 6'	A12	0.20	12"	8"
6' - 10'	A6	0.20	6"	5"
10' - 13'	A4	0.20	4"	3"
10' - 15'	B5.5	0.24	5½"	5"

DIMENSIONAL AND REINFORCING DETAILS

GENERAL NOTES:

1. Work this Index with Index 425-001 and Index 425-010.

2. Use Grade 60 reinforcing bars with 2" minimum cover unless otherwise shown. See Index 425-001 for equivalent area of welded wire fabric. Cut or bend bars out of way of pipe when necessary. Bars to clear pipe by 1½".

3. Recommended maximum pipe sizes are 24" longitudinal and 30" transverse. For larger pipe, inlets with Alt. B bottoms, Index 425-010 is recommended.

4. All dimensions are for both precast and cast-in-place inlets unless otherwise shown.

TABLE OF CONTENTS:

Sheet	Description
1	General Notes and Contents
2	Dimensional and Reinforcing Details

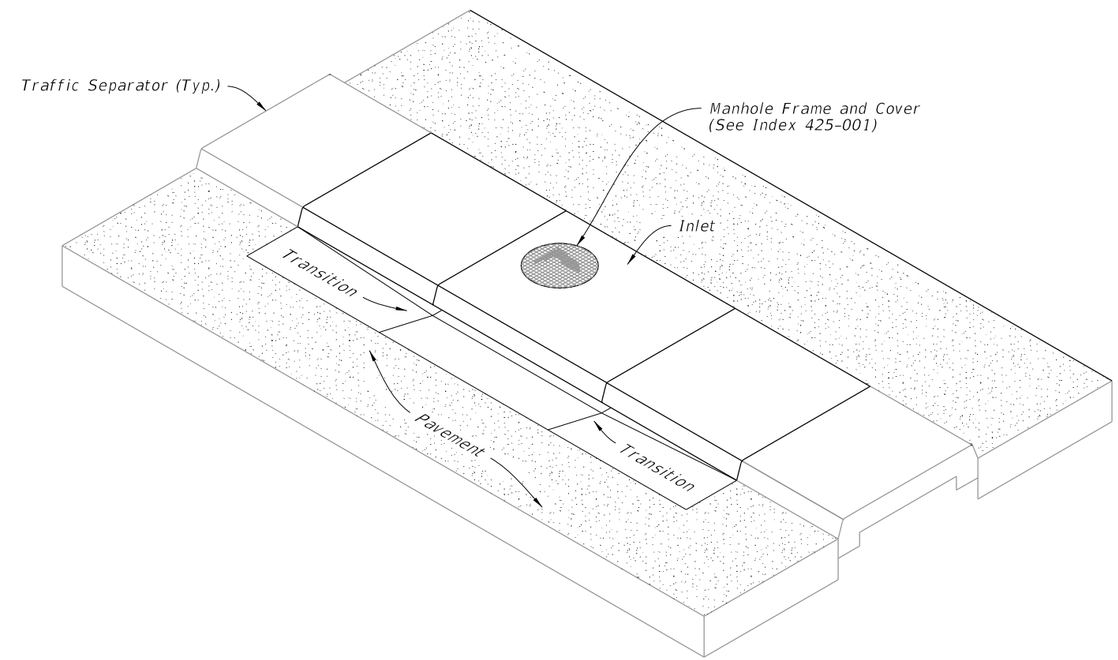

CURB INLET TYPE 8
(Bottom Not Shown)

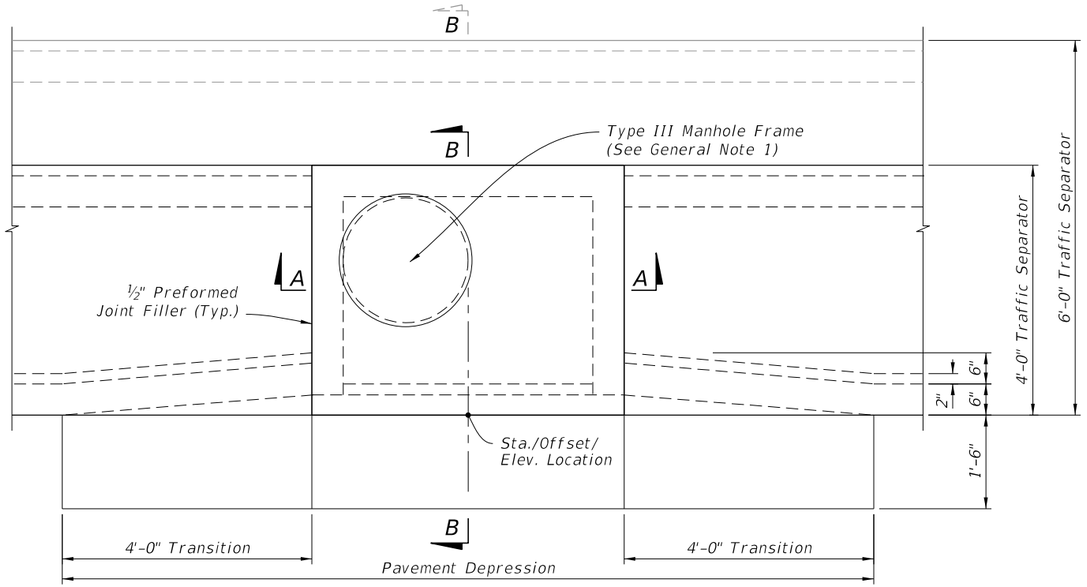

PLAN

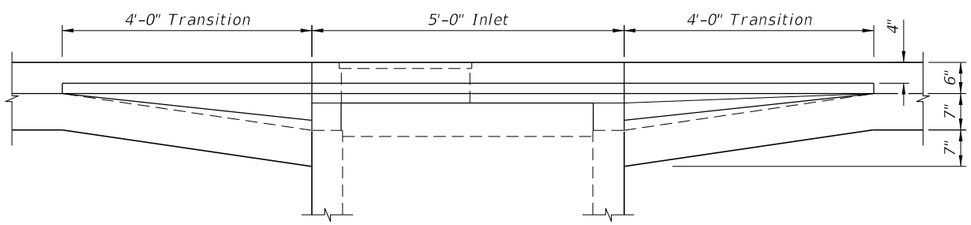

FRONT ELEVATION

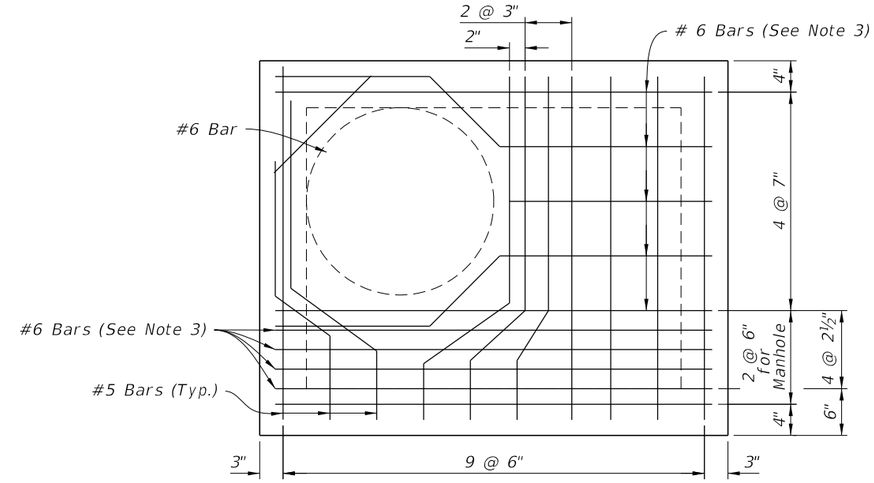

DETAIL "A"

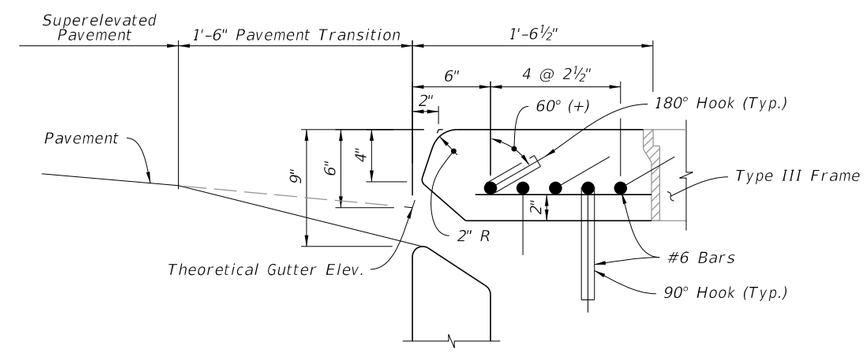

DETAIL "B"

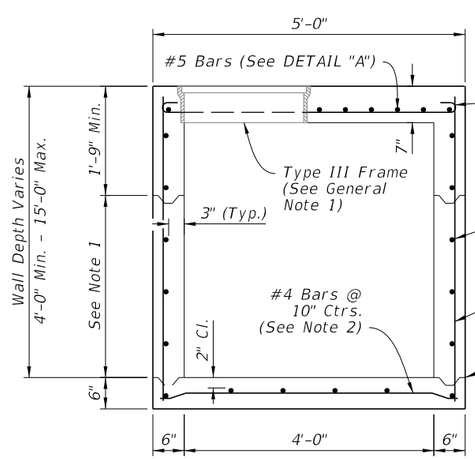

SECTION A-A

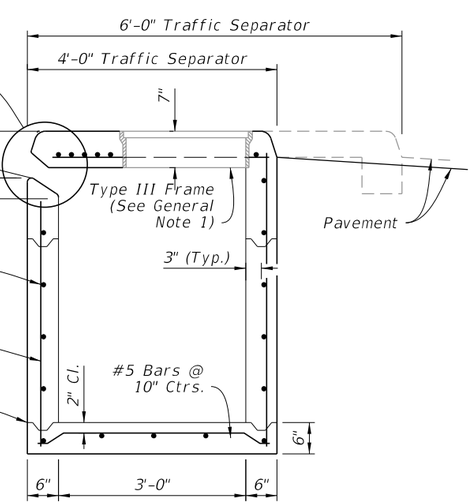

SECTION B-B

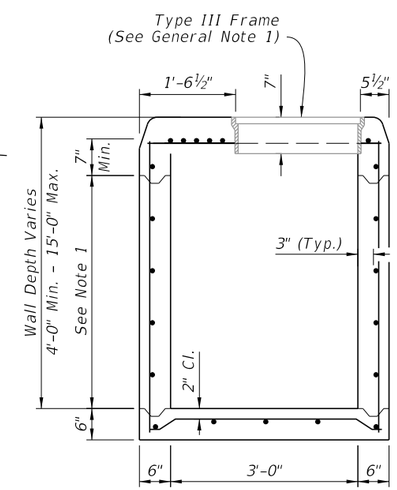

MANHOLE MODIFICATION

NOTES:

1. Construction joints permitted between these limits. See Index 425-001 for minimum dimensions.
2. For bottom slab rebar embedment options, see optional construction joints, Index 425-001.
3. ACI standard hooks required each end of straight bars and right end of bent bars: 180° hooks, canted 60°(+), on odd bars; 90° hooks, down, on even bars numbered from throat side.

TABLE 1 - HORIZONTAL WALL REINFORCING SCHEDULE

WALL DEPTH	SCHEDULE	AREA (in.²/ft.)	MAX. SPACING	
			BARS	WWR
0' - 6'	A12	0.20	12"	8"
6' - 10'	A6	0.20	6"	5"
10' - 13'	A4	0.20	4"	3"
10' - 15'	B5.5	0.24	5½"	5"

DIMENSIONAL AND REINFORCING DETAILS

10/20/2022 8:47:01 AM

LAST REVISION	REVISION	DESCRIPTION:			INDEX	SHEET
10/01/20			FY 2023-24 STANDARD PLANS	CURB INLET TYPE 8	425-023	2 of 2

GENERAL NOTES:

1. Work this Index with Index 425-001 and Index 425-010.

2. Orient grate with vanes directed toward predominant flow.

3. Provide 1¼" minimum cover for steel in slab tops unless otherwise shown. Tops may be either cast-in-place or precast concrete.

4. Place top slab openings such that 2 edges of inlet frame will be located directly above bottom wall or riser wall for Alternate B applications..

5. When used on a structure with dimensions larger than those detailed on Sheet 3 and risers are not applied, construct the top slab using Index 425-010 with the slab opening adjusted to 24"x36". The "Special Top Slab" on Index 425-010 is not permitted.

6. Frame may be adjusted with one to six courses of brick.

7. Vaned grates with approximately equal openings that satisfy AASHTO HL-93 loading are permitted. Provide reversible (right or left) grates.

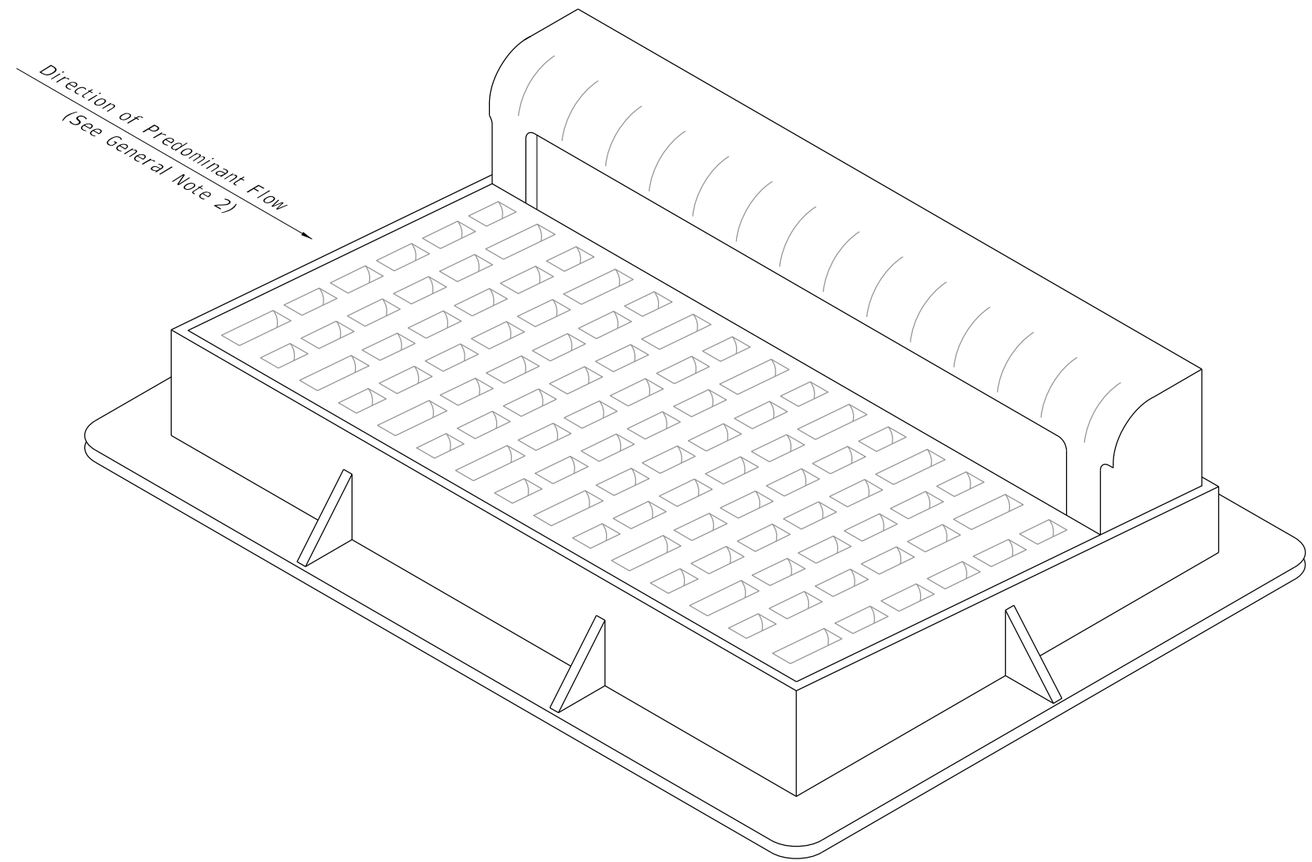

CURB INLET TOP TYPE 9

TABLE OF CONTENTS:

Sheet	Description
1	General Notes and Contents
2	Frame and Grate Details
3	Top Slab Details

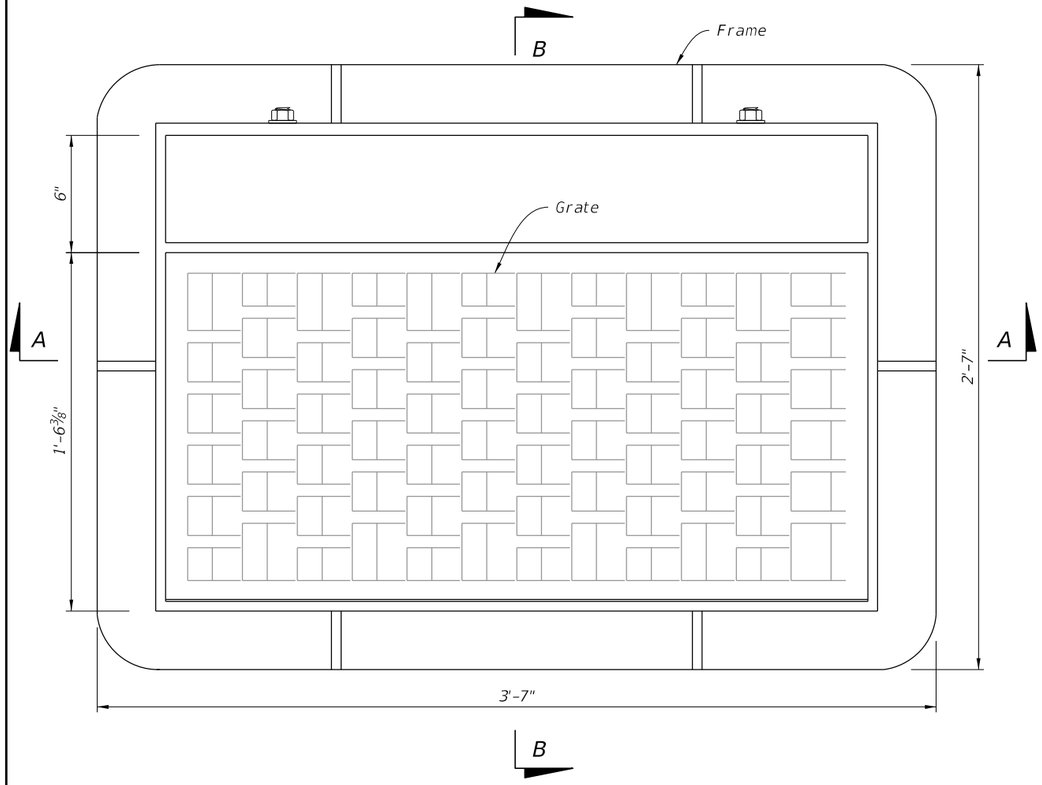

PLAN

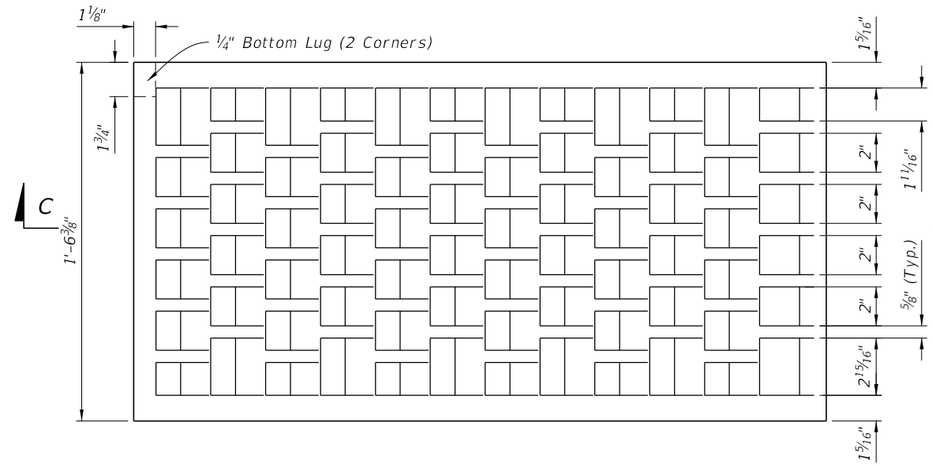

PLAN

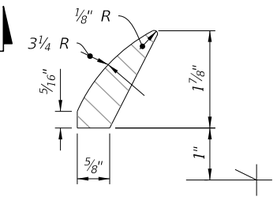

DETAIL "A"

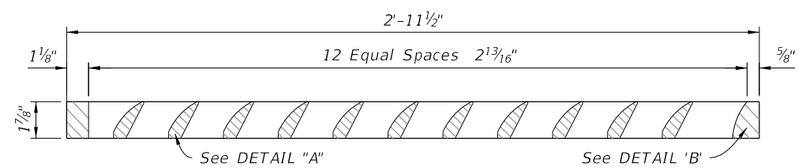

SECTON C-C

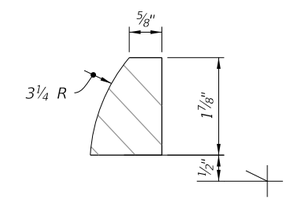

DETAIL "B"

GRATE DETAILS

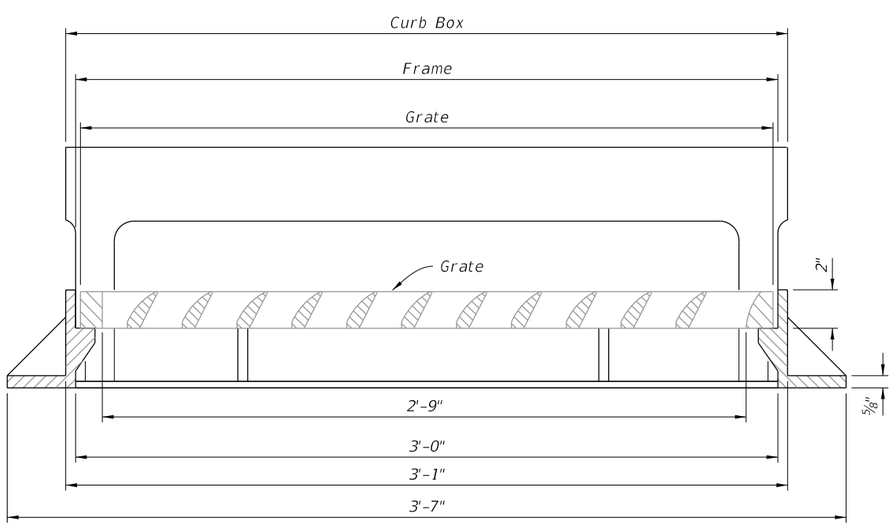

SECTION A-A

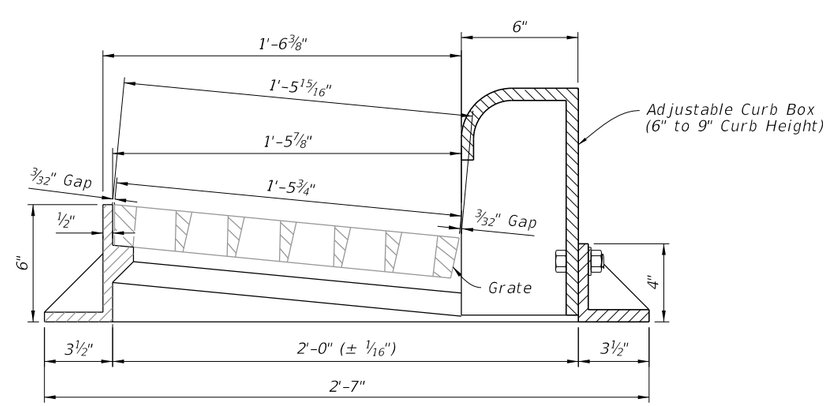

SECTION B-B

FRAME AND GRATE DETAILS

FRAME AND GRATE DETAILS

10/20/2022 8:47:02 AM

LAST REVISION	REVISION	DESCRIPTION:			INDEX	SHEET
10/01/20			FY 2023-24 STANDARD PLANS	CURB INLET TYPE 9	425-024	2 of 3

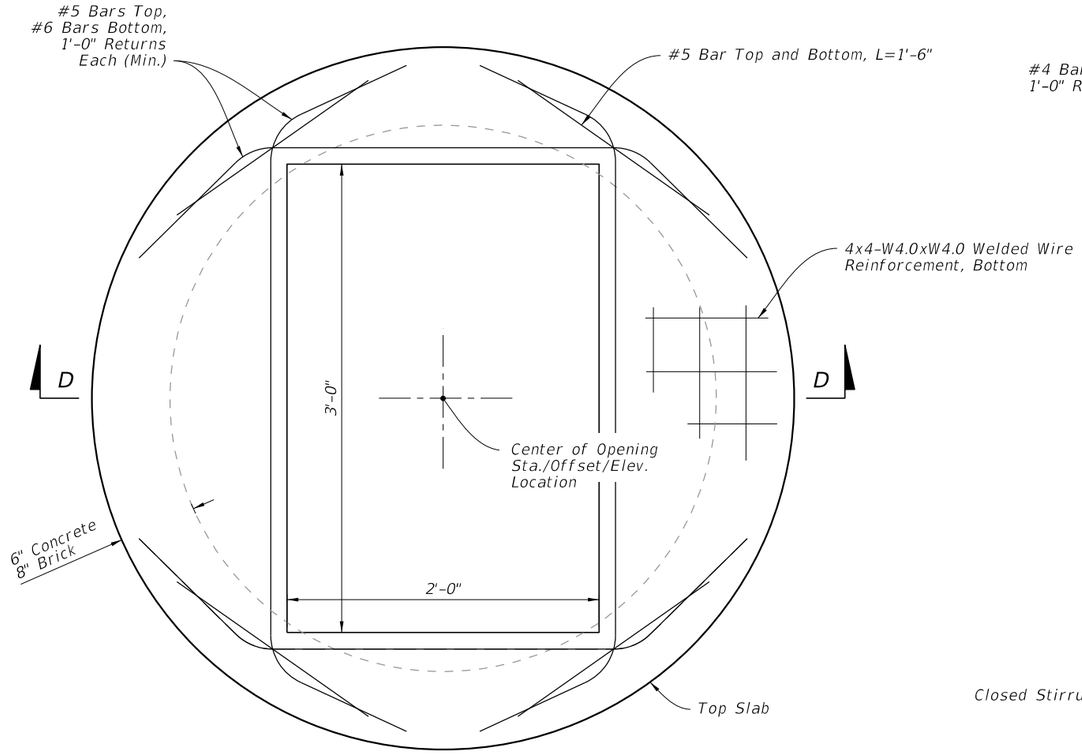

PLAN

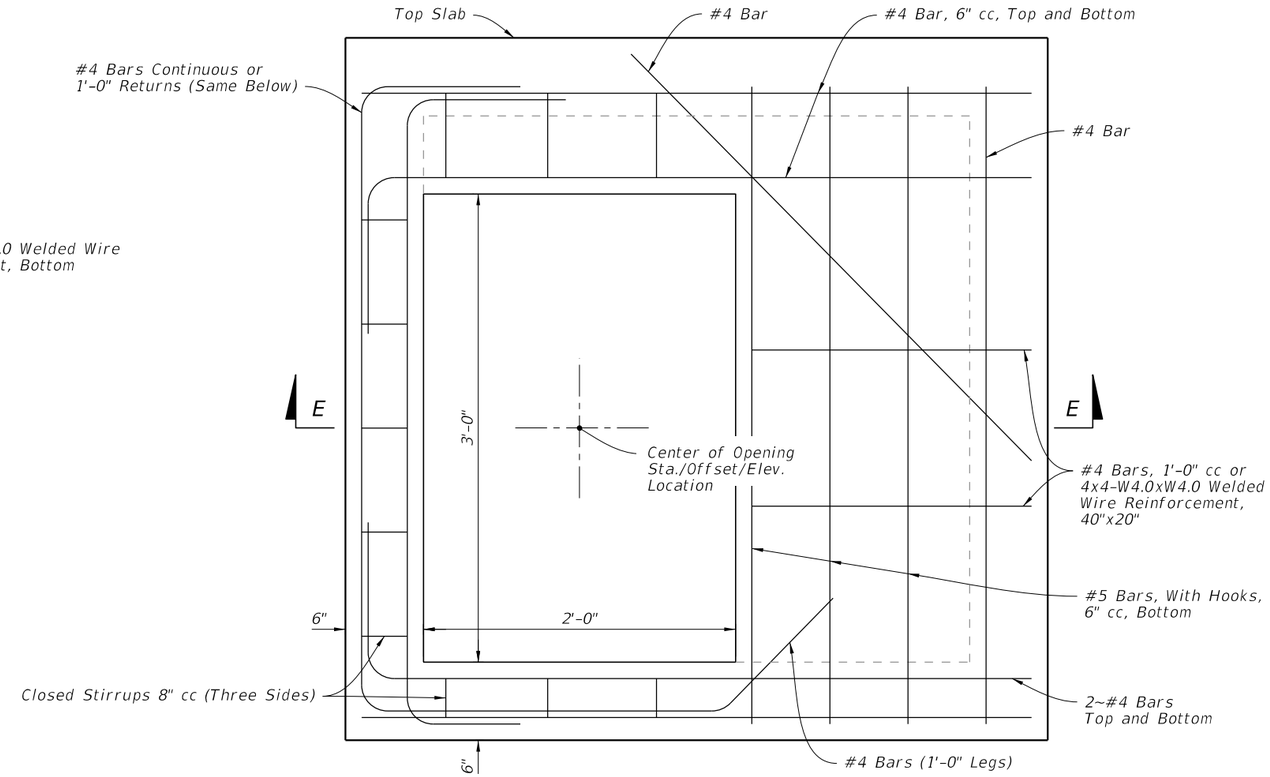

PLAN

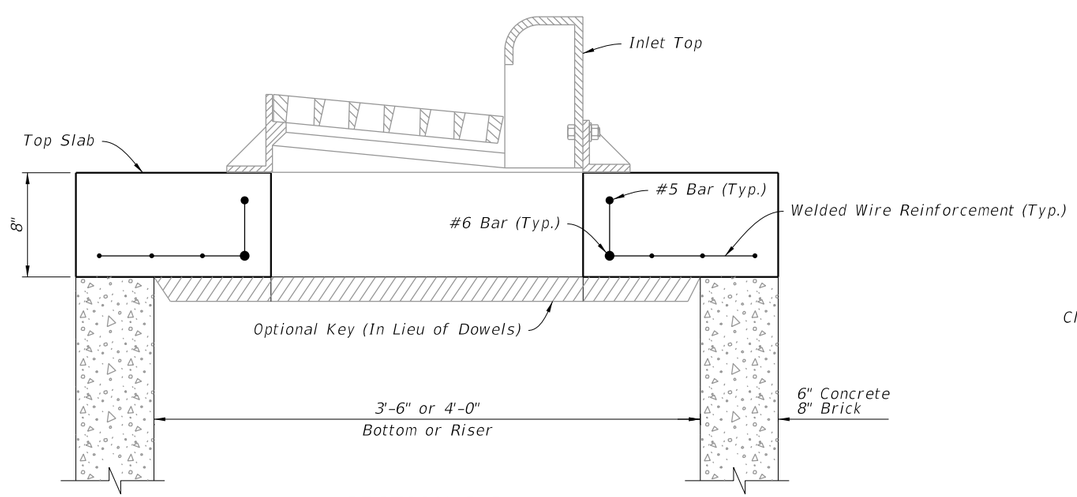

SECTION D-D

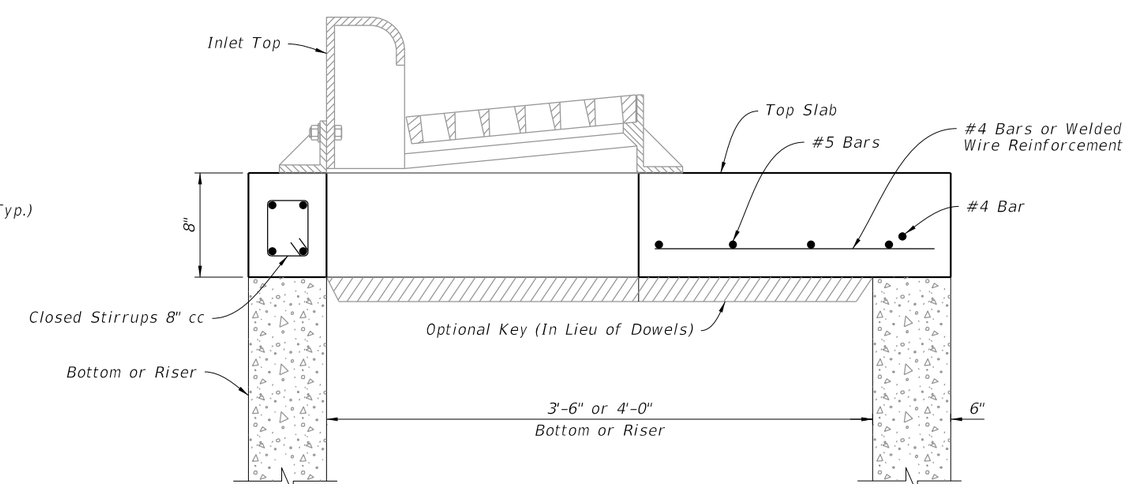

SECTION E-E

TOP SLAB DETAILS

LAST REVISION	REVISION	DESCRIPTION:			INDEX	SHEET
10/01/20			FY 2023-24 STANDARD PLANS	CURB INLET TYPE 9	425-024	3 of 3

10/20/2022 8:47:03 AM

GENERAL NOTES:

1. Work this Index with Index 425-001 and Index 425-010.

2. Orient grate with vanes directed toward predominant flow.

3. Provide 1¼" minimum cover for steel in slab tops unless otherwise shown. Tops may be either cast-in-place or precast concrete.

4. Place top slab openings such that 2 edges of inlet frame will be located directly above bottom or riser walls, for Alternate B applications.

5. When used on a structure with dimensions larger than those detailed on Sheet 3 and risers are not applied, Construct the top slab using Index 425-010 with the slab opening adjusted to 22"x24". The "Special Top Slab" on Index 425-010 is not permitted.

6. Frame may be adjusted with one to six courses of brick.

7. Vaned grates with approximately equal openings that satisfy AASHTO HL-93 loading are permitted. Provide reversible (right or left) grates.

TABLE OF CONTENTS:

Sheet	Description
1	General Notes and Contents
2	Frame and Grate Details
3	Top Slab Details

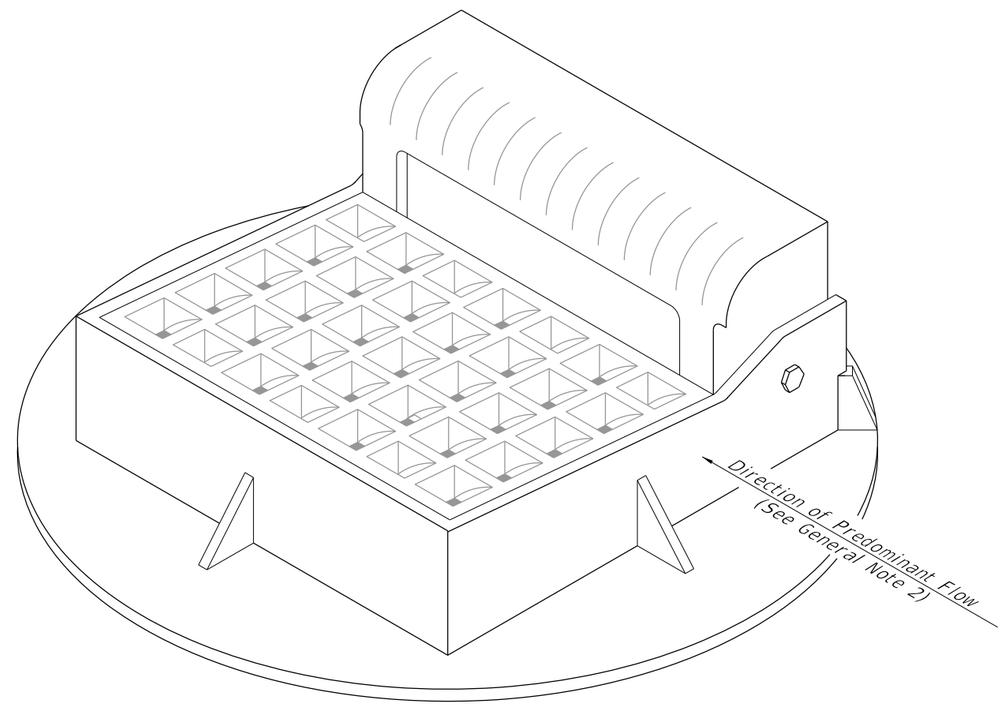

CURB INLET TOP TYPE 10

10/20/2022 8:47:03 AM

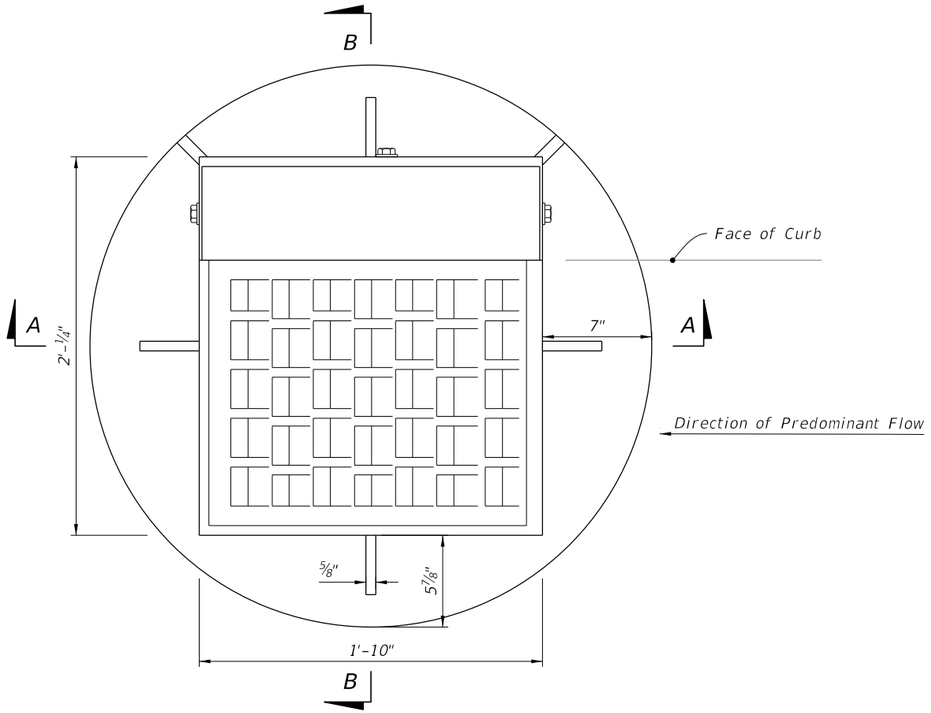

PLAN

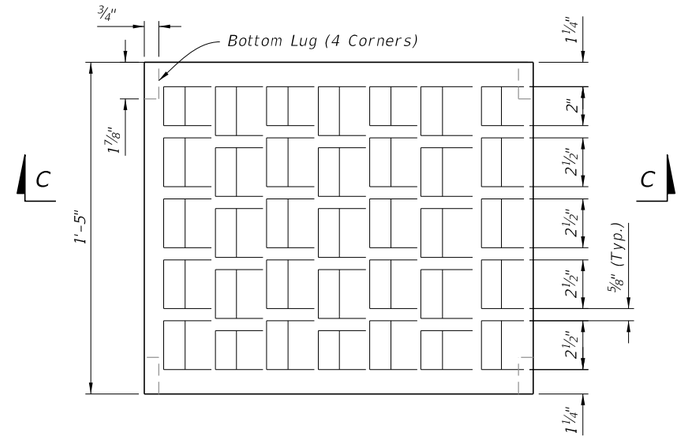

PLAN

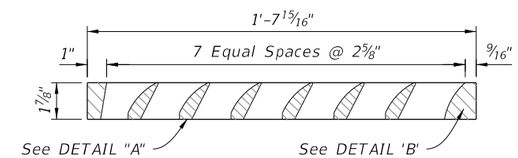

SECTON C-C

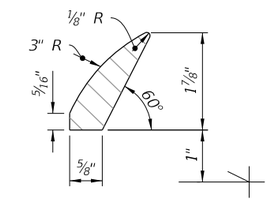

DETAIL "A"

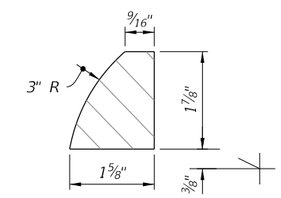

DETAIL "B"

GRATE DETAILS

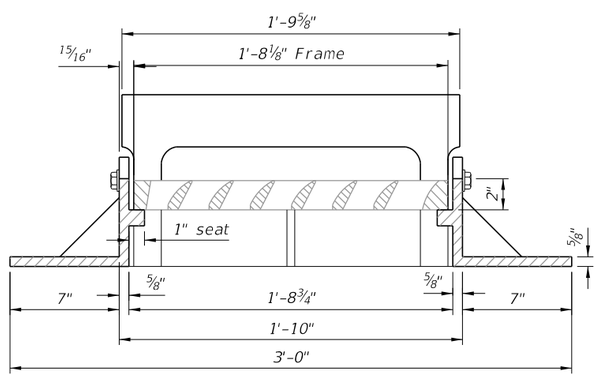

SECTION A-A

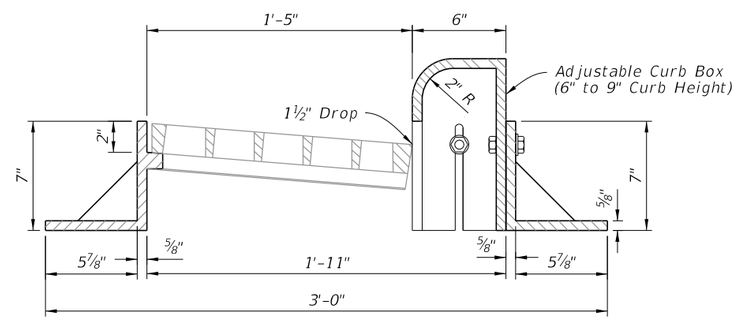

SECTION B-B

FRAME AND GRATE DETAILS

FRAME AND GRATE DETAILS

LAST REVISION	REVISION	DESCRIPTION:			INDEX	SHEET
10/01/20			FY 2023-24 STANDARD PLANS	CURB INLET TYPE 10	425-025	2 of 3

10/20/2022 8:47:04 AM

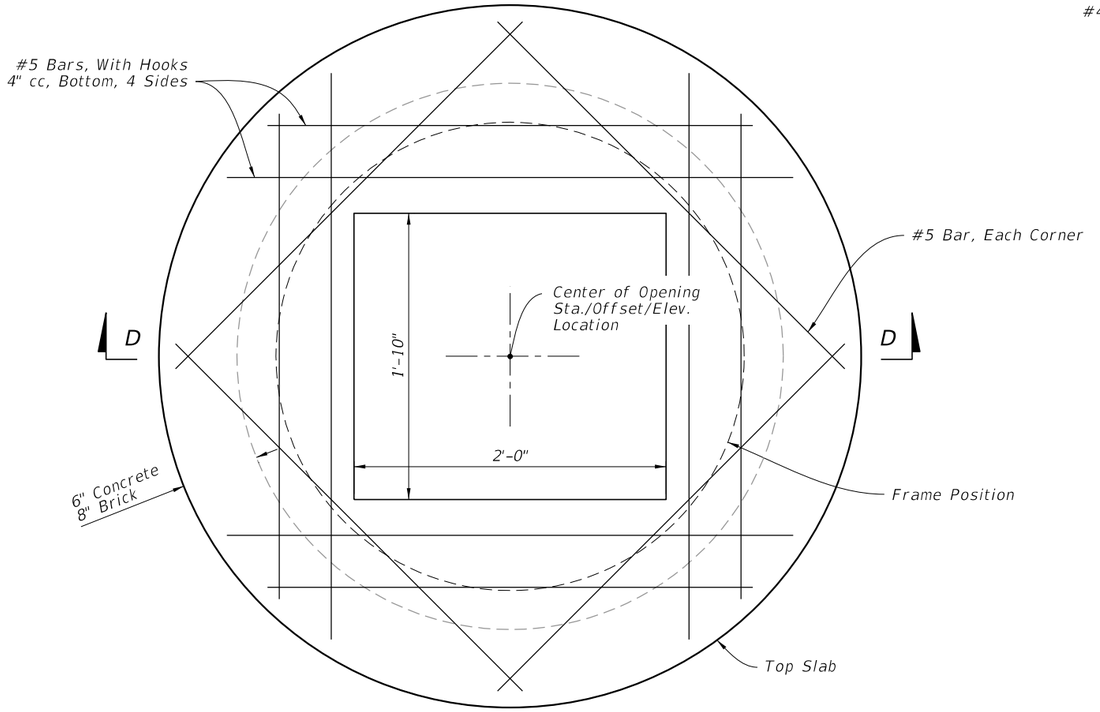

PLAN

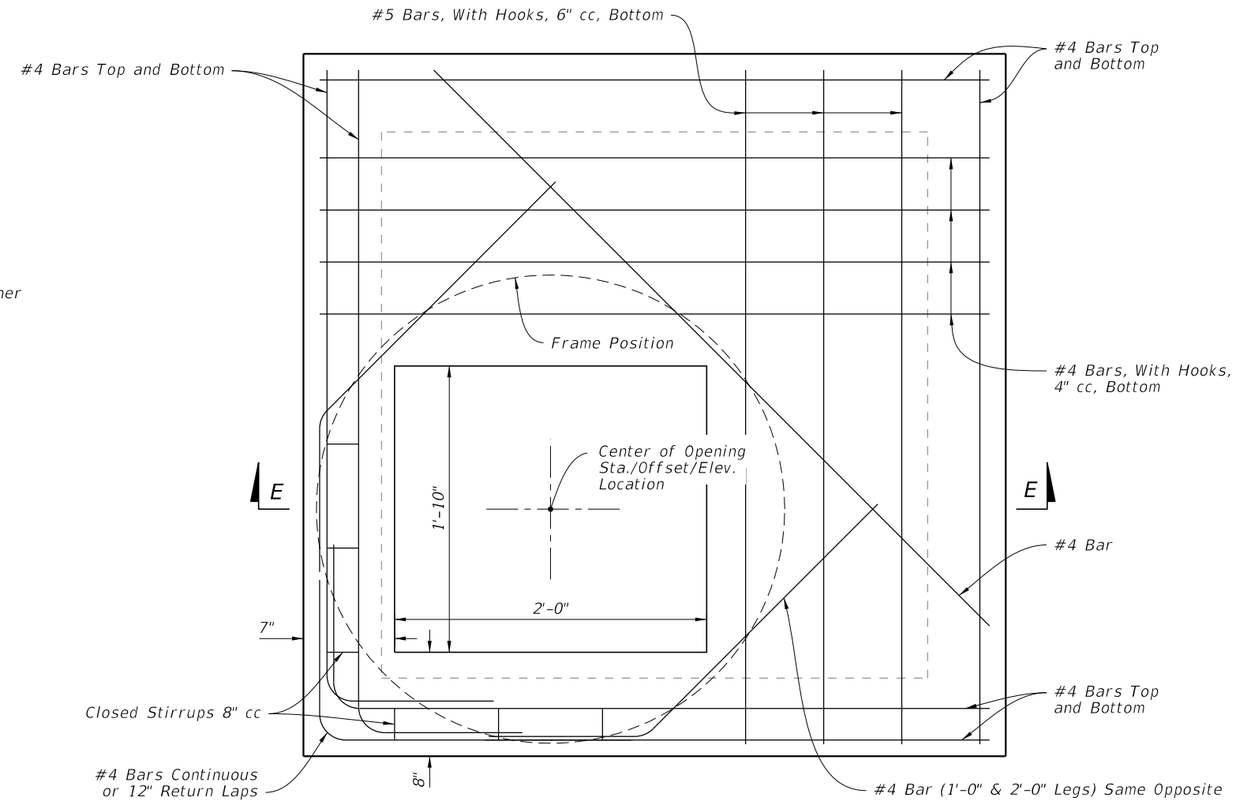

PLAN

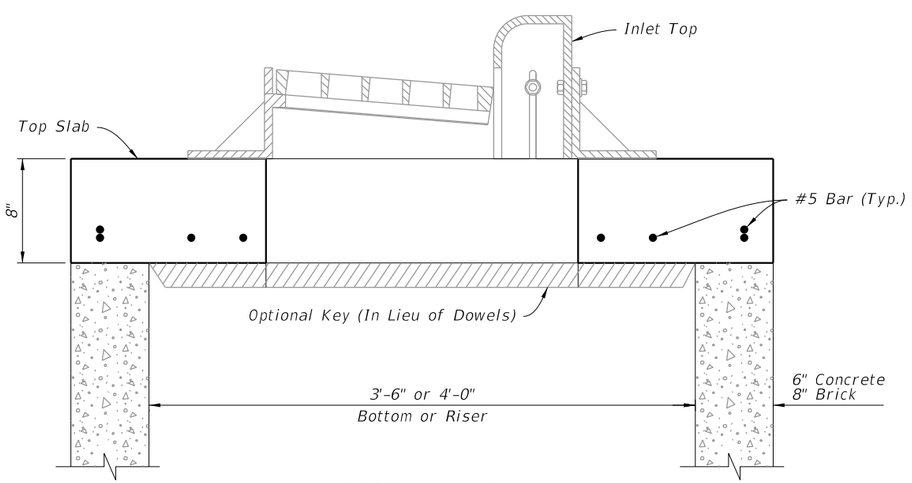

SECTION D-D

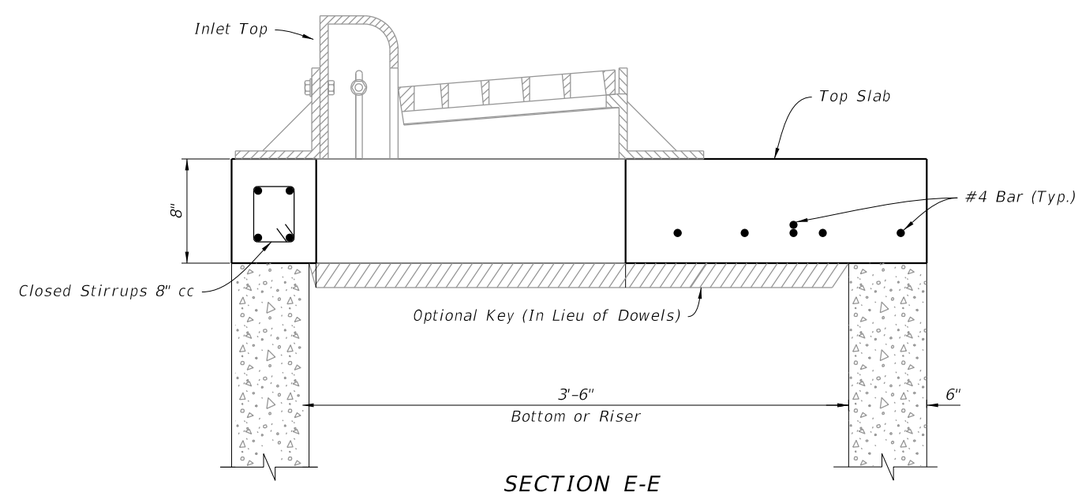

SECTION E-E

TOP SLAB DETAILS

LAST REVISION	REVISION	DESCRIPTION:			INDEX	SHEET
10/01/20			FY 2023-24 STANDARD PLANS	CURB INLET TYPE 10	425-025	3 of 3

10/20/2022 8:47:05 AM

GENERAL NOTES:

1. Work this Index with Index 425-001 and Index 425-010.

2. Where called for in the Plans, use this inlet in conjunction with Median Barrier per Index 521-001.

3. Inlet Descriptions:
   Type 1: Inlet on one side of Median Barrier
   Type 2: Inlet on both sides of Median Barrier

4. See Index 425-040 for grate details. Use the parallel bar grate unless reticuline grate is called for in the Plans.

5. Chamfer all edges to ¾" or tool to ¼" radius.

6. Use Grade 60 #4 bars for inlet wall reinforcing. Position horizontal wall reinforcing 3" from the inside face unless otherwise shown. Equivalent areas of welded wire per Index 425-001 are permitted.

7. Use Grade 60 #4 or #5 bars for barrier reinforcing as required to match the stirrups and longitudinal steel of the adjacent Median Barrier per Index 521-001. Provide 2" or 2 ½"reinforcing steel cover to match the adjacent barrier reinforcing cover unless otherwise shown. Match the stirrup spacing of the adjacent barrier. Run longitudinal steel bars over the full length of the Concrete Barrier Transition and run continuously with the longitudinal steel of the adjacent barriers. Use lap splices as required.

8. Dimensions are for both precast and cast-in-place inlets unless otherwise noted.

9. Install one layer of ASTM D6380 Class S, Type III organic felt bond breaker between inlet and barrier, including footings.

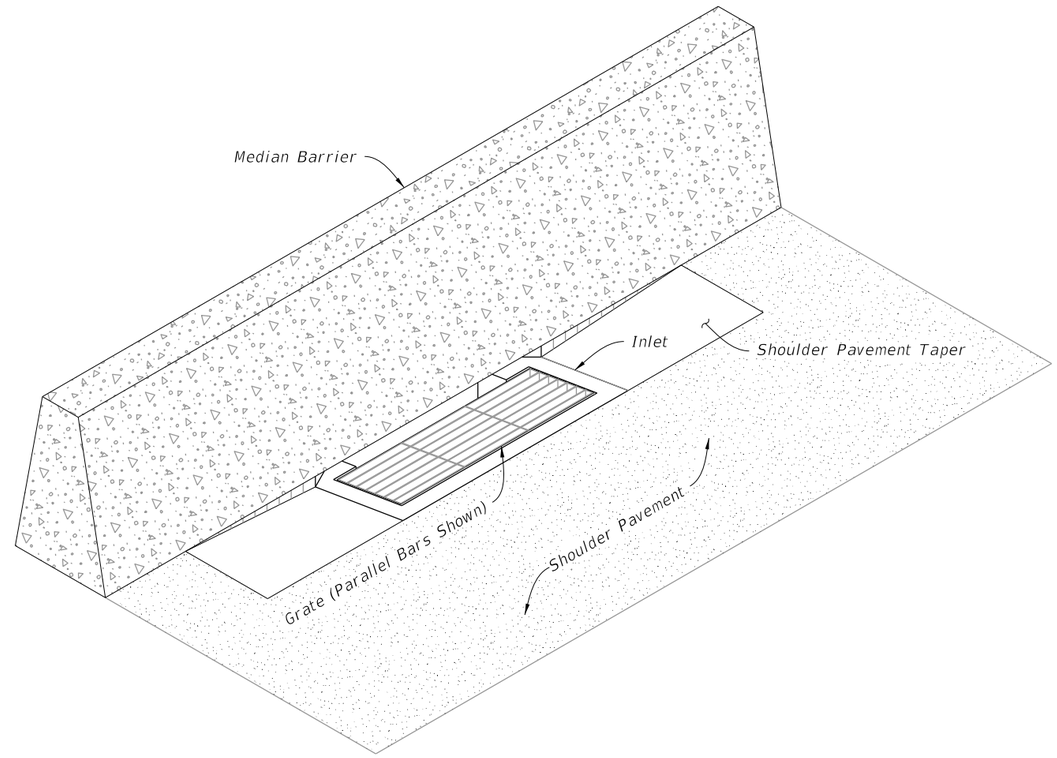

MEDIAN BARRIER INLET
(Type 1 Shown, Type 2 Similar)

TABLE OF CONTENTS:

Sheet	Description
1	General Notes and Contents
2	Type 1 and 2 Dimensional and Reinforcing Details
3	Type 1 Collar Dimensional and Reinforcing Details
4	Type 2 Collar Dimensional and Reinforceing Details

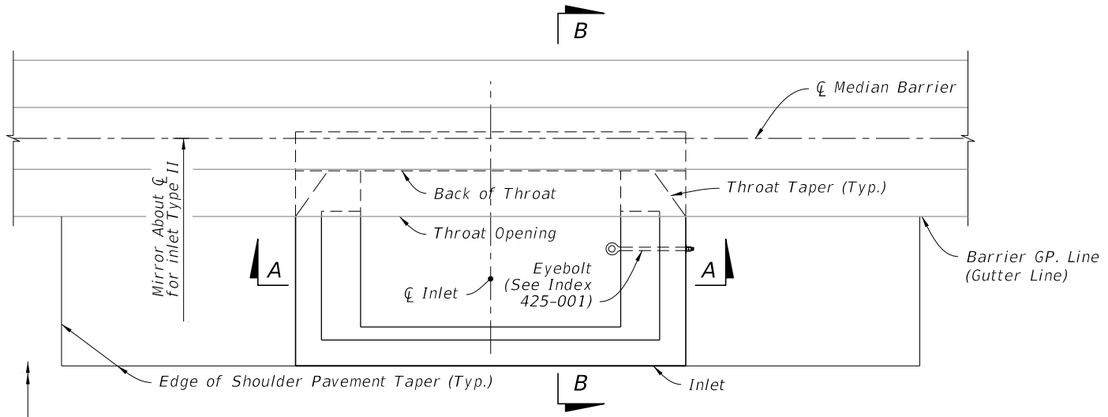

PLAN

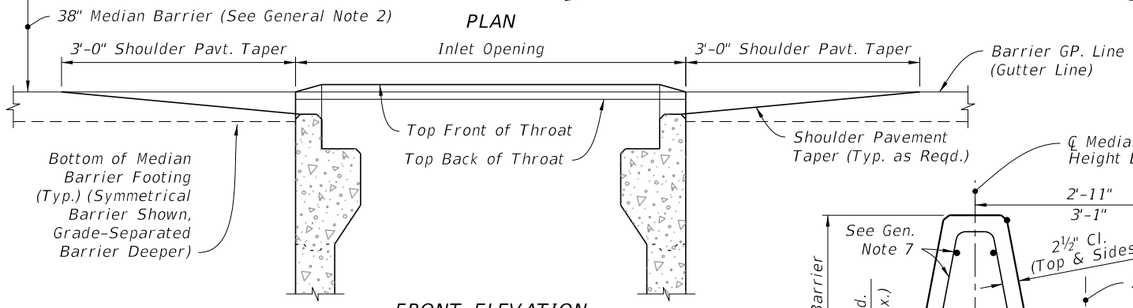

FRONT ELEVATION

TABLE 1: HORIZONTAL WALL REINFORCING SCHEDULE				
WALL DEPTH	SCHEDULE	AREA (in.²/ft.)	MAX. SPACING	
			BARS	WWF
0'-3'	A12	0.20	12"	8"
3'-6'	A6	0.20	6"	5"
6'-9'	B5.5	0.24	5½"	5"
9'-15'	C6.5	0.37	6½"	6"

NOTES:

1. Precast shown, cast-in-place (C-I-P) similar.
2. Construction joints permitted between these limits. See Index 425-001 for minimum dimensions.
3. Plan view and Section AA is similar to Type I Inlet.
4. Alternate B Structure Bottom or Special Only when called for inthe Plans.

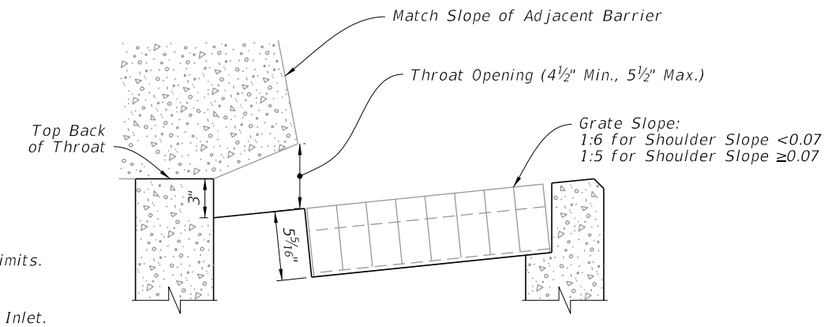

DETAIL "A"

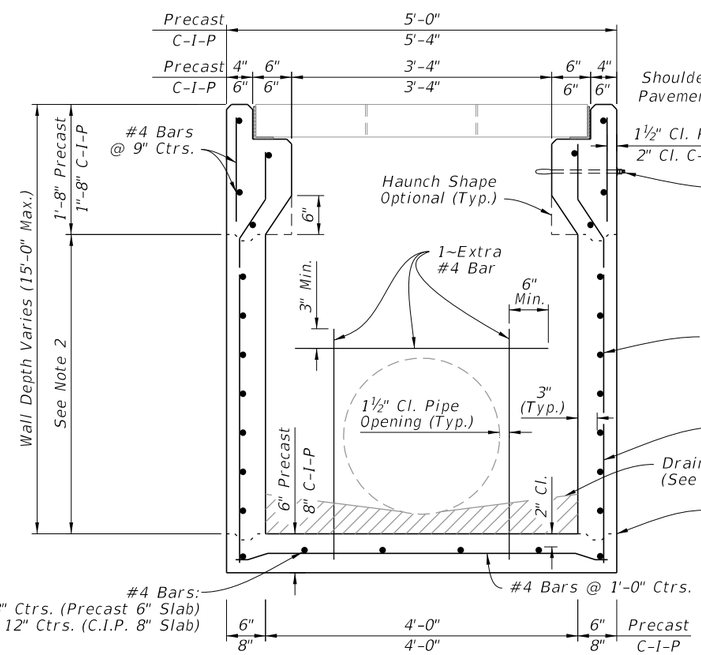

SECTION A-A
(Both Type I and Type II, Pipe Opening Shown)

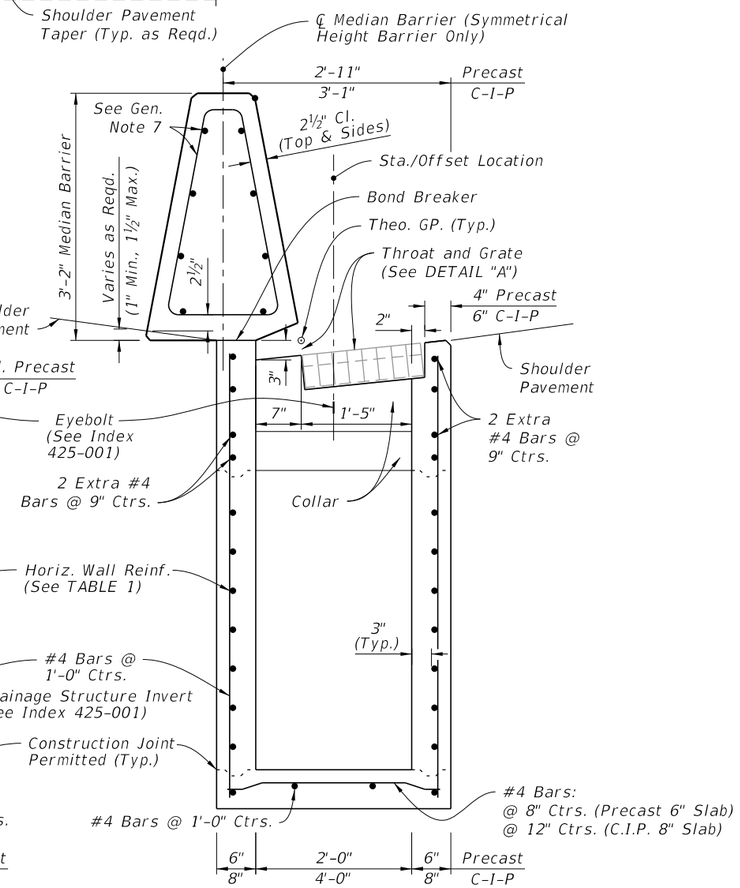

SECTION B-B
(Type I, Pipe Opening Not Shown)

TYPE 1 INLET

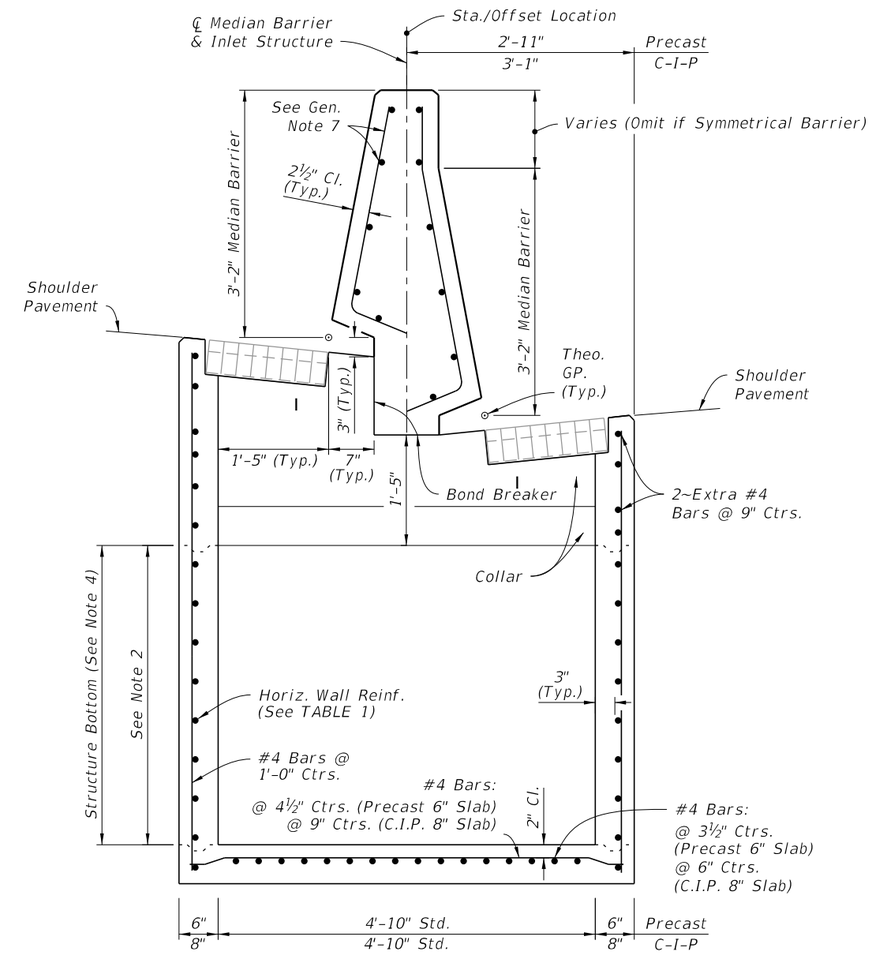

SECTION B-B
(See Note 3)

TYPE 2 INLET

TYPE 1 AND 2 DIMENSIONAL AND REINFORCING DETAILS

LAST REVISION	REVISION	DESCRIPTION:			INDEX	SHEET
10/01/20			FY 2023-24 STANDARD PLANS	MEDIAN BARRIER INLET TYPES 1 AND 2	425-030	2 of 4

10/20/2022 8:47:06 AM

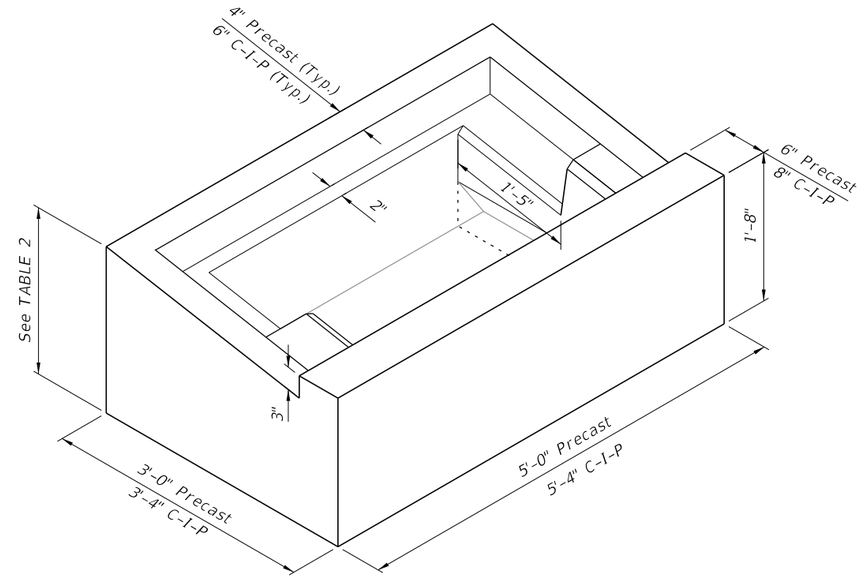

ISOMETRIC VIEW
(Grate Not Shown)

TABLE 2: COLLAR DIMENSIONS		
GRATE SLOPE	PRECAST	C-I-P
1:5	1'-11"	1'-11⅜"
1:6	1'-10"	1'-10⅜"

NOTE:

Precast shown, cast in place (C-I-P) similar.

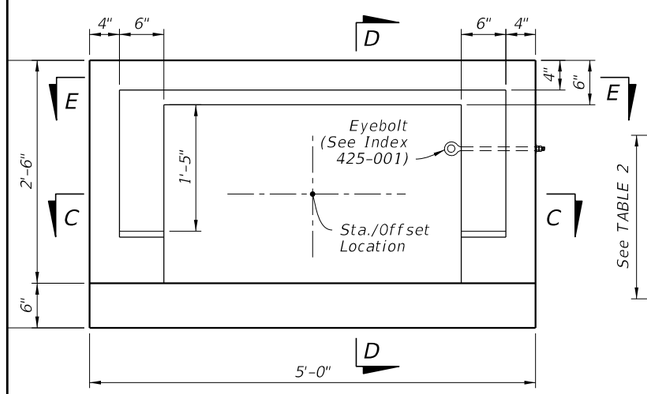

PLAN

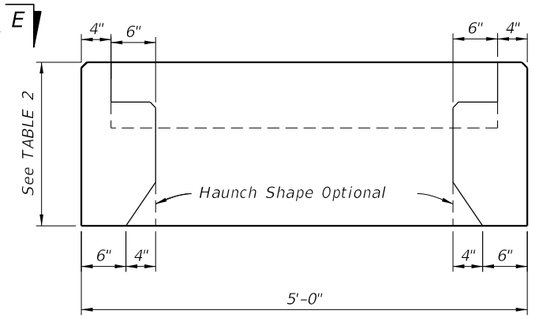

VIEW E-E

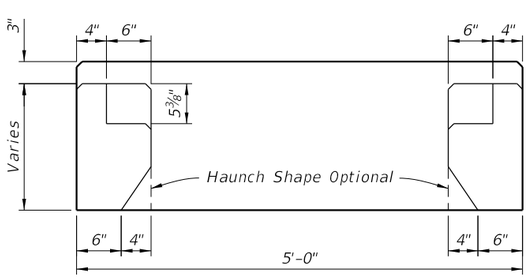

SECTION C-C

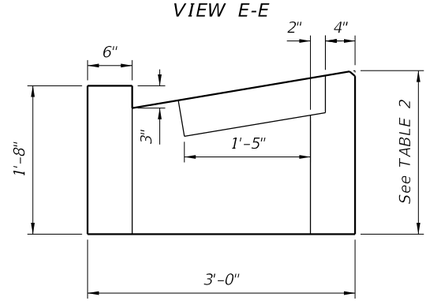

SECTION D-D

DIMENSIONAL DETAILS

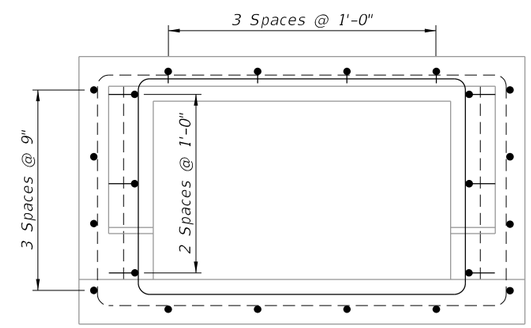

PLAN

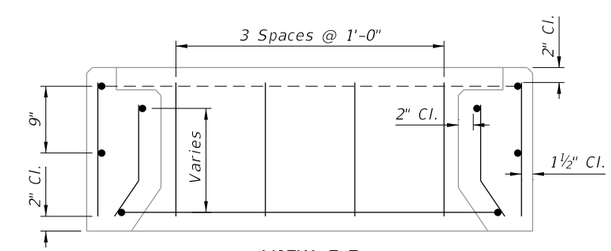

VIEW E-E

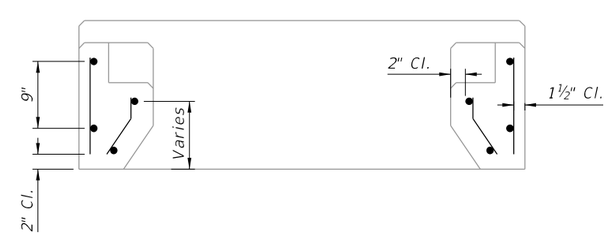

SECTION C-C

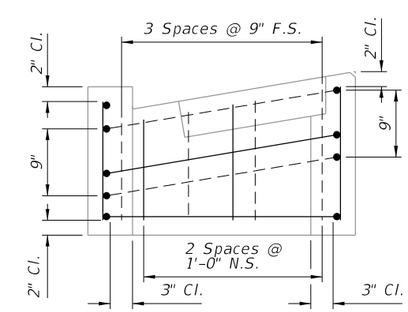

SECTION D-D

REINFORCING DETAILS

TYPE 1 COLLAR DIMENSIONAL AND REINFORCING DETAILS

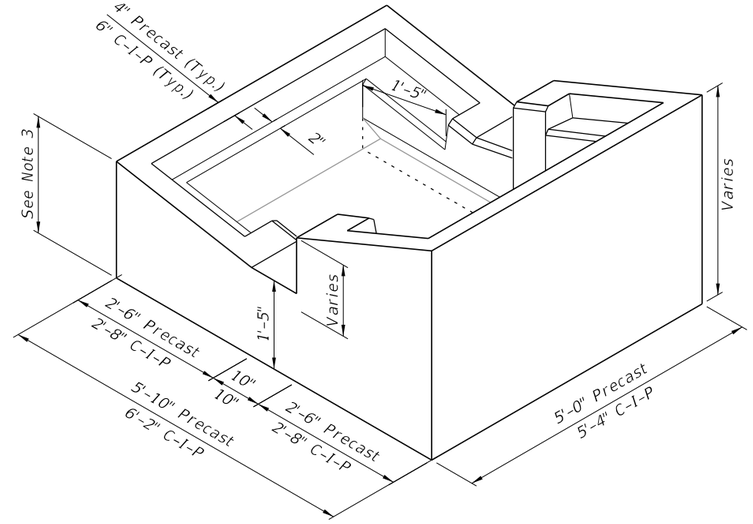

ISOMETRIC VIEW
(Grate Not Shown)

NOTES:

1. Precast shown, cast in place (C-I-P) similar.
2. Place bars at a maximum of 1'-0".
3. See TABLE 2 on Sheet 3.

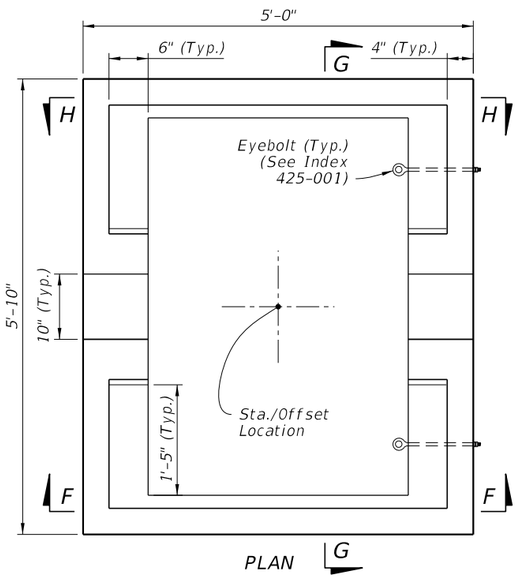

PLAN

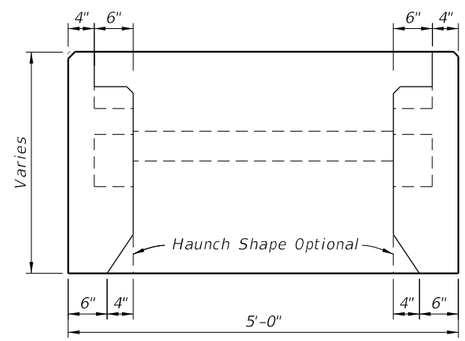

VIEW H-H

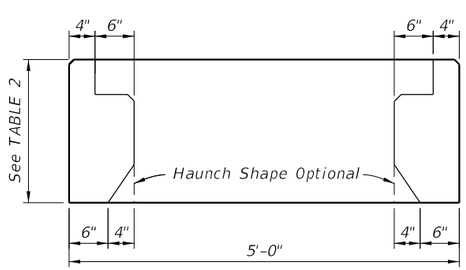

SECTION F-F

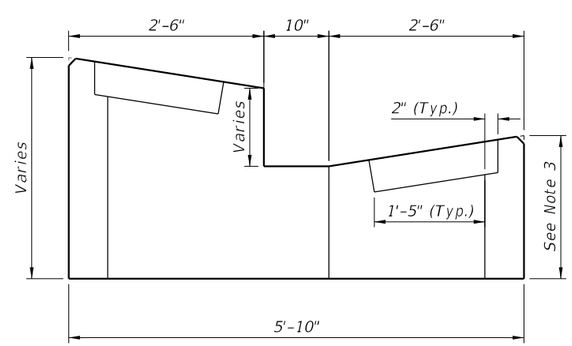

SECTION G-G

DIMENSIONAL DETAILS

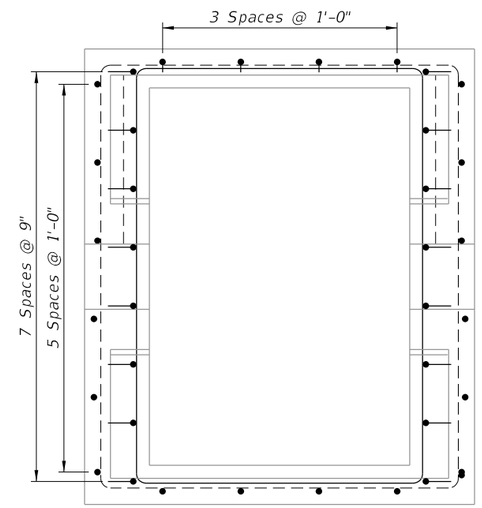

PLAN

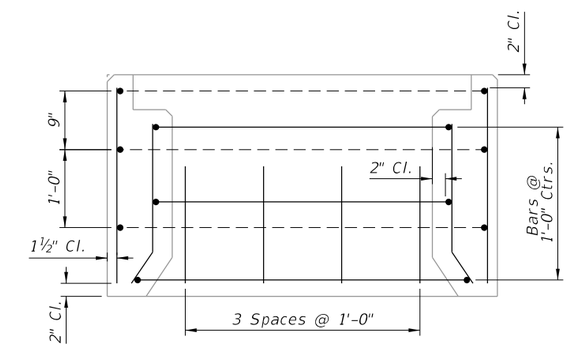

VIEW H-H

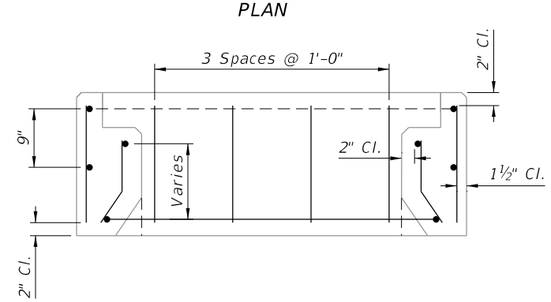

SECTION F-F

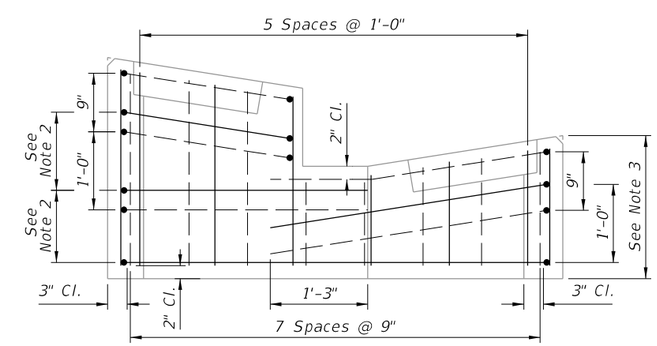

SECTION G-G

REINFORCING DETAILS

TYPE 2 COLLAR DIMENSIONAL AND REINFORCING DETAILS

LAST REVISION	REVISION	DESCRIPTION:			INDEX	SHEET
10/01/20			FY 2023-24 STANDARD PLANS	MEDIAN BARRIER INLET TYPES 1 AND 2	425-030	4 of 4

10/20/2022 8:47:08 AM

GENERAL NOTES:

1. Work this Index with Index 425-001 and Index 425-010.

2. When called for in the Plans, use this inlet in conjunction with median or shoulder barrier per Index 521-001 or a barrier with junction slab and wall coping per Index 521-610.

3. Reinforce the upper 2'-3" of the inlet in accordance with sections CC, DD, and EE regardless of construction method.

4. Chamfer exposed edges and corners to ¾" or tool to ¼" radius.

5. Field installation of a roller bar will not be permitted. Adjust tolerance during fabrication or casting, or, match grate to structure prior to galvanizing.

6. Use Grade 60, #4 bars for reinforcing steel. See Index 425-001 for equivalent area of welded wire fabric.

7. Dimensions are for both precast and cast-in-place inlets unless otherwise noted.

8. Anchor bolts: Use either ASTM A307 hex head bolts cast-in-place, or ASTM A36 or F1554 (Grade 36) galvanized fully threaded rod, adhesive bonded anchors installed in accordance with Specification 416. Rods must be a minimum of 6" long with 4" minimum embedment with one ASTM 194 or A563 heavy hex head nut and one ASTM F436 flat washer each. Hot-dip galvanize anchor bolts, nuts, and washers.

9. Reduce Cross Slope: Use a flatter cross slope as required to match adjacent grading per the Plans. Reduce vertical dimensions and bar spacing as needed to maintain concrete cover as shown.

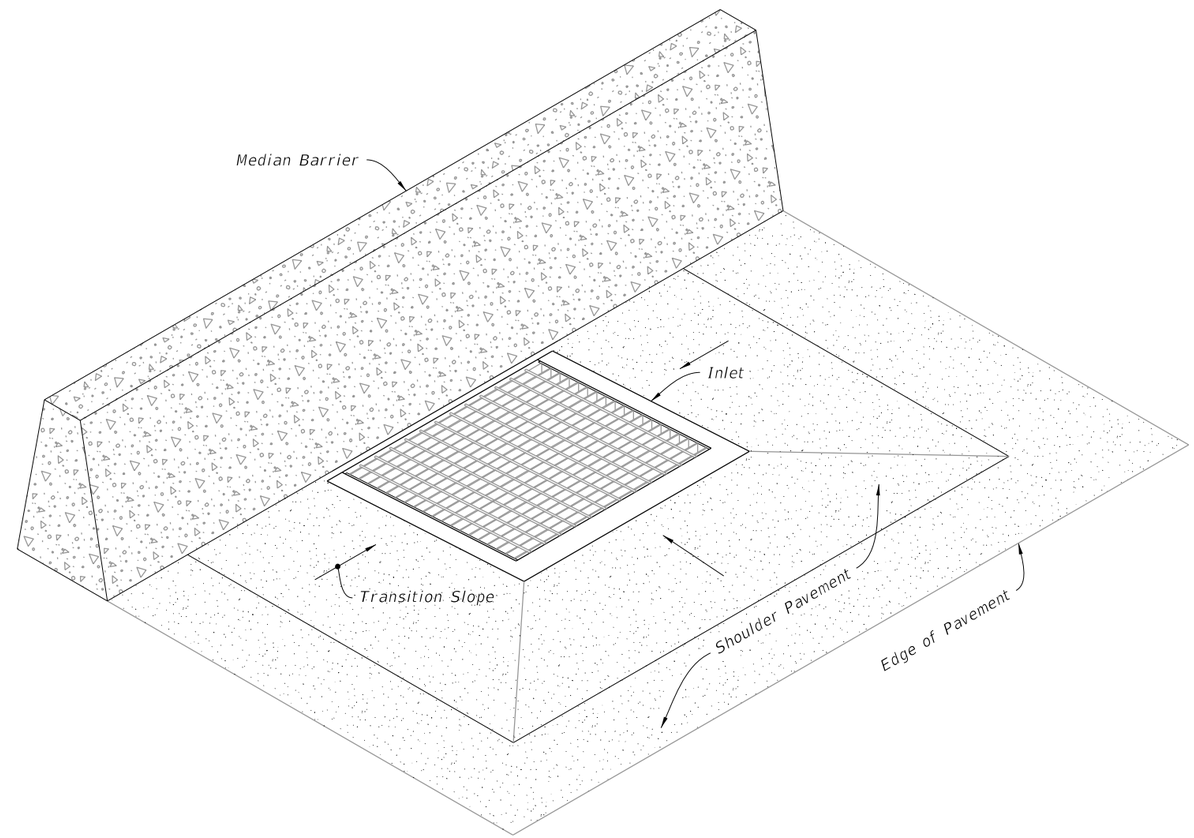

ADJACENT BARRIER INLET
(Shoulder Barrier Similar)

TABLE OF CONTENTS:

Sheet	Description
1	General Notes and Contents
2	Dimensional, Reinforcing, and Steel Grate Details
3	Inlet Collar Dimensional, Reinforcing, and Backwall Plate Details
4	Shoulder Pavement Wrap, Barrier Type Examples, and Structure Bottoms

NOTES:

1. See Sections E-E, F-F, and G-G on Sheet 3 for reinforcing details.
2. Construction joints permitted between these limits. See Index 425-001 for minimum dimensions.
3. Field Installation: When clearance (C) exceeds ⅝" weld a one-piece round bar (roller bar) to the end of the cross bars and end band angles to reduce the clearance ($\bar{C}$) to ⅝" or less. After welding the bar, clean bar and damaged grate coating and coat with a coal tar pitch varnish.

TABLE 1: HORIZONTAL WALL REINFORCING SCHEDULE

WALL DEPTH	SCHEDULE	AREA (in.²/ft.)	MAX. SPACING BARS	MAX. SPACING WWR
0'-5'	A12	0.20	12"	8"
5'-10'	A6	0.20	6"	5"
10'-15'	A4	0.20	4"	3"
10'-15'	B5.5	0.24	5½"	5"

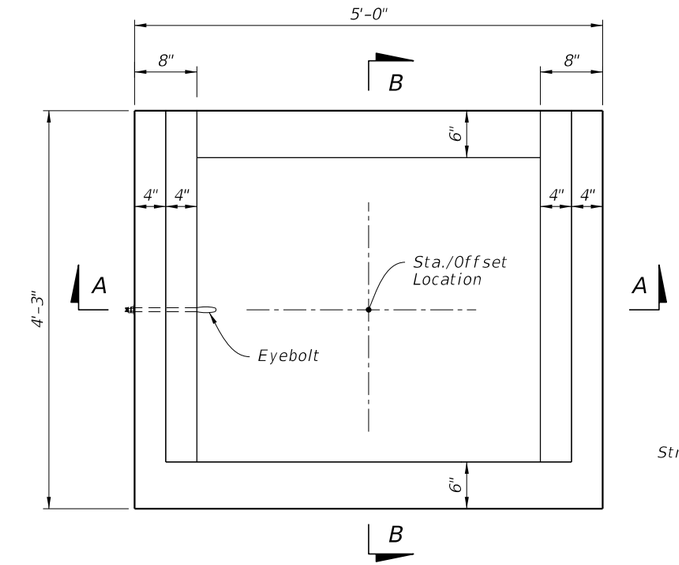

PLAN

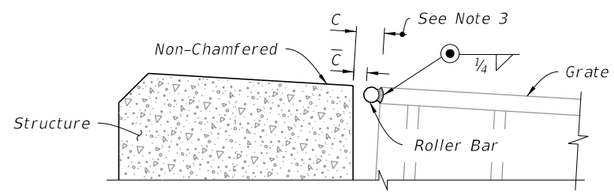

DETAIL "A"

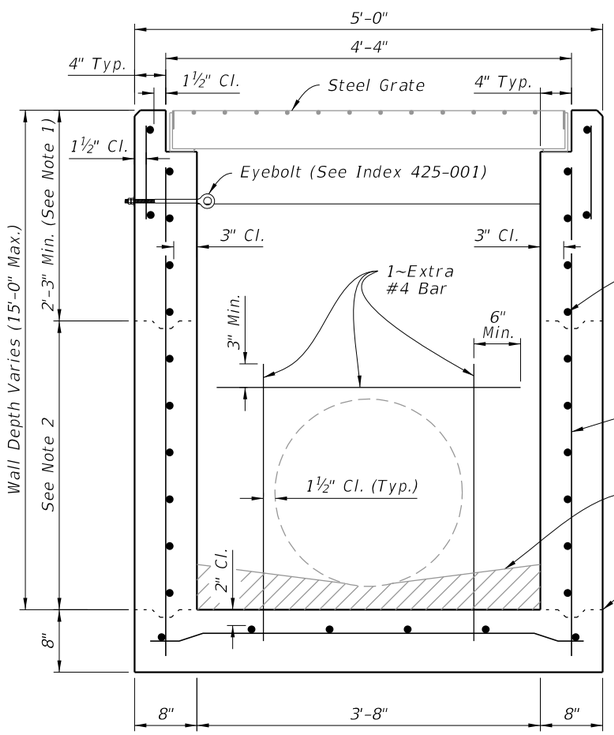

SECTION A-A
(Pipe Opening Shown)

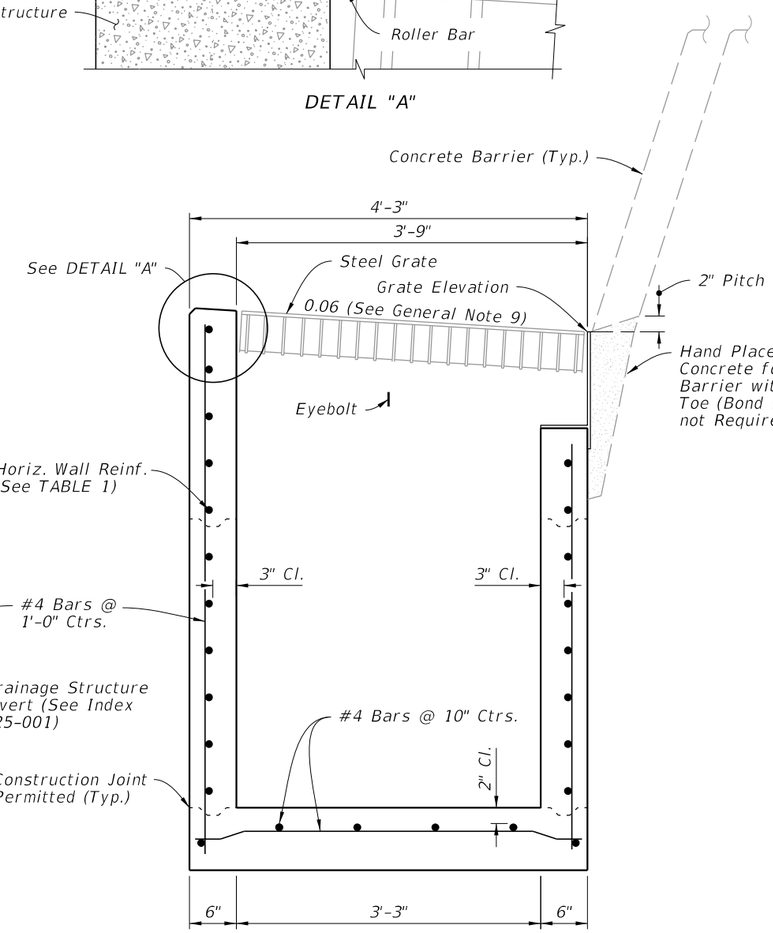

SECTION B-B
(Pipe Opening Not Shown)

DIMENSIONAL AND REINFORCEMENT

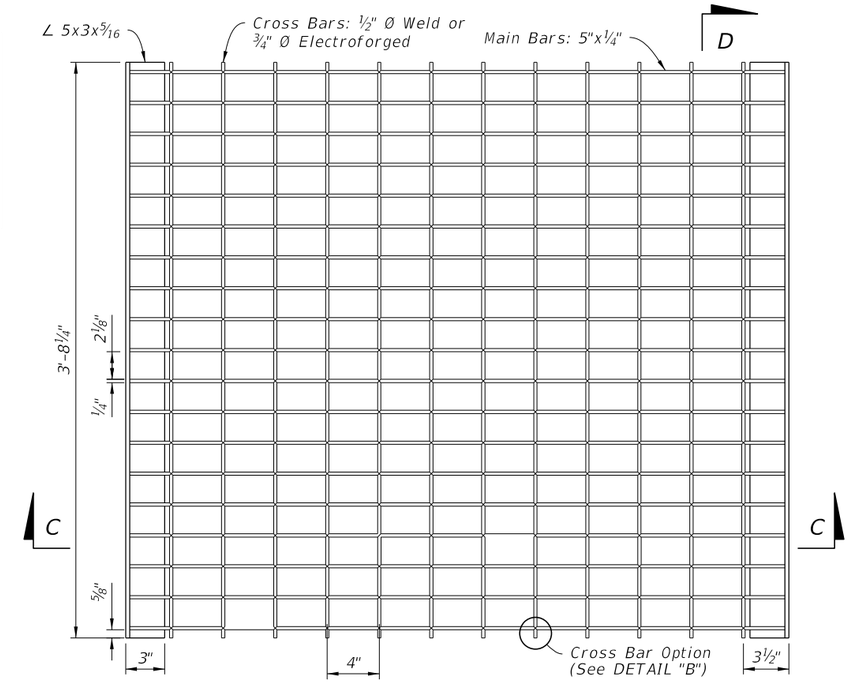

PLAN

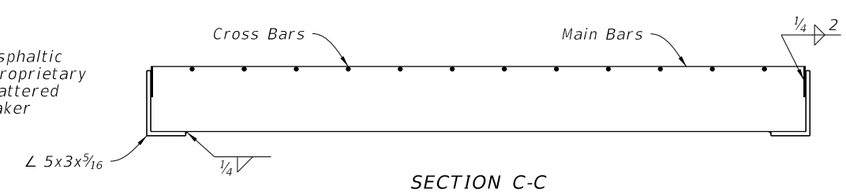

SECTION C-C

SECTION D-D

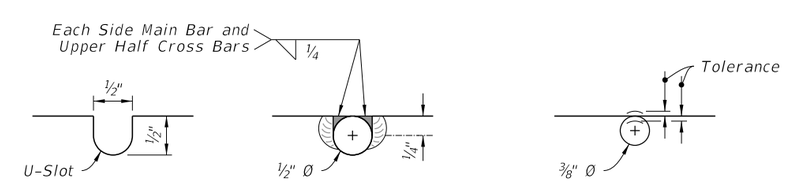

WELDED

ELECTROFORGED

DETAIL "B"

STEEL GRATE

DIMENSIONAL, REINFORCING, AND STEEL GRATE DETAILS

LAST REVISION	REVISION	DESCRIPTION:	FY 2023-24 STANDARD PLANS	ADJACENT BARRIER INLET	INDEX	SHEET
10/01/20					425-031	2 of 4

10/20/2022 8:47:10 AM

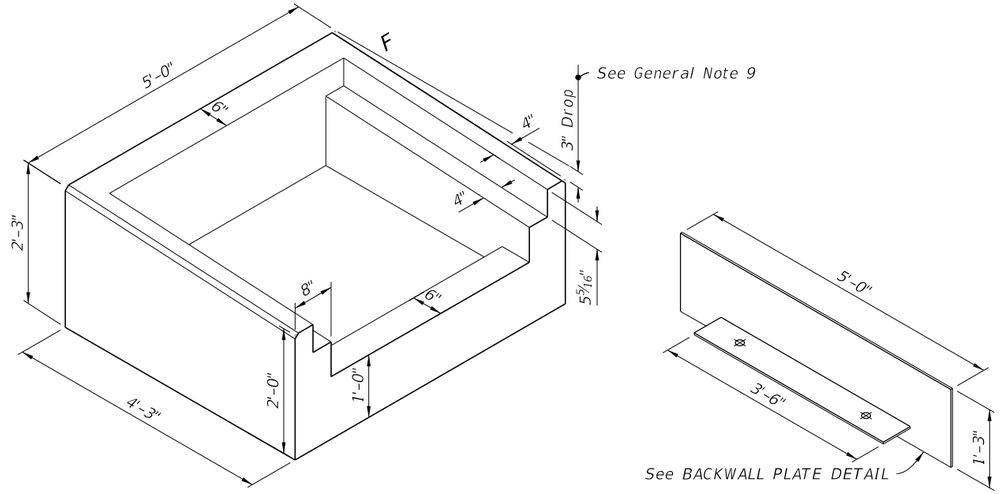

INLET COLLAR

BACKWALL PLATE

ISOMETRIC VIEW

(Grate Not Shown)

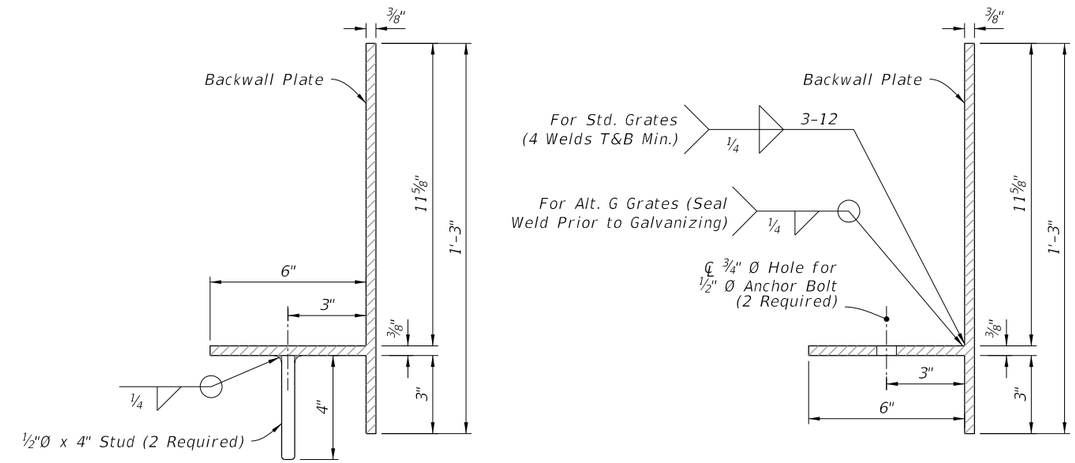

GROUT STUD

ANCHOR BOLT

BACKWALL PLATE DETAIL

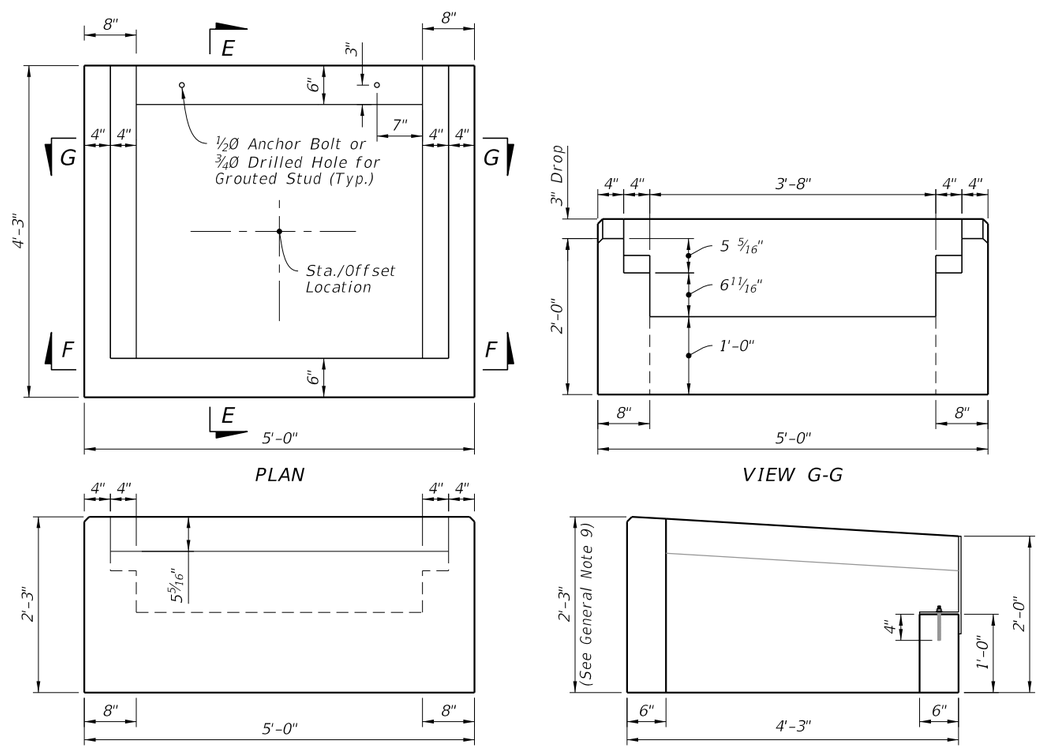

PLAN

VIEW G-G

SECTION F-F

SECTION E-E

DIMENSIONAL DETAILS

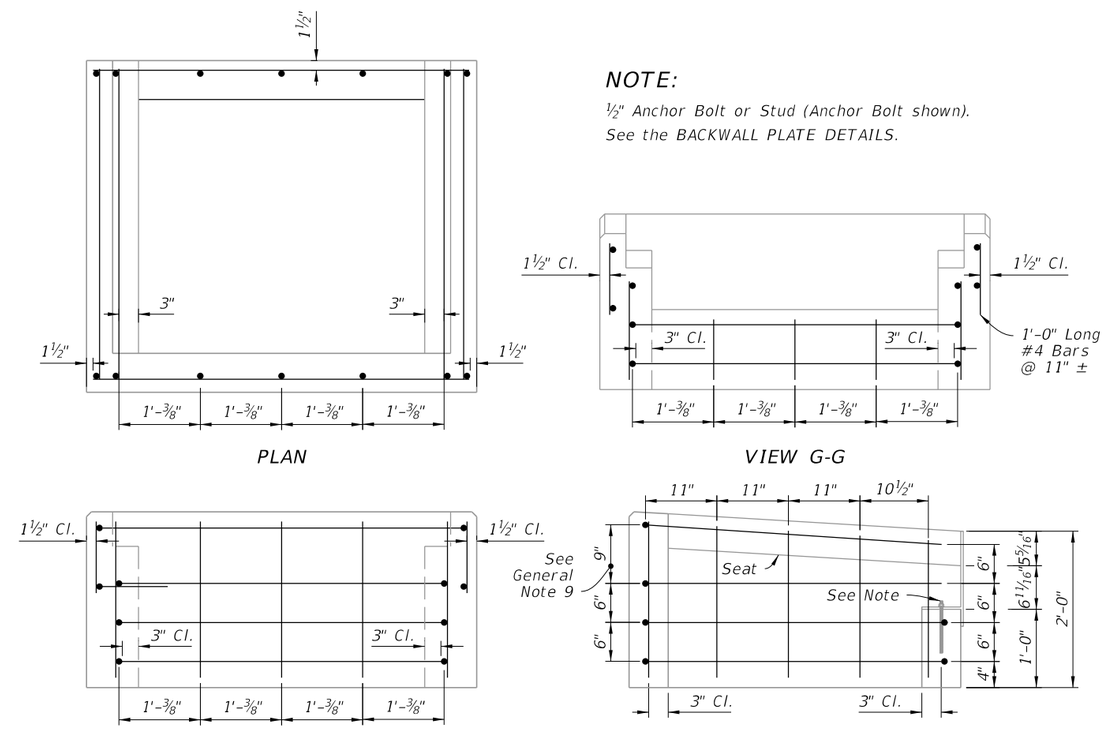

PLAN

VIEW G-G

SECTION F-F

SECTION E-E

REINFORCING DETAILS

NOTE:

1/2" Anchor Bolt or Stud (Anchor Bolt shown).
See the BACKWALL PLATE DETAILS.

INLET COLLAR DIMENSIONAL, REINFORCING, AND BACKWALL PLATE DETAILS

10/20/2022 8:47:11 AM

LAST REVISION	REVISION	DESCRIPTION:			INDEX	SHEET
10/01/20			FY 2023-24 STANDARD PLANS	ADJACENT BARRIER INLET	425-031	3 of 4

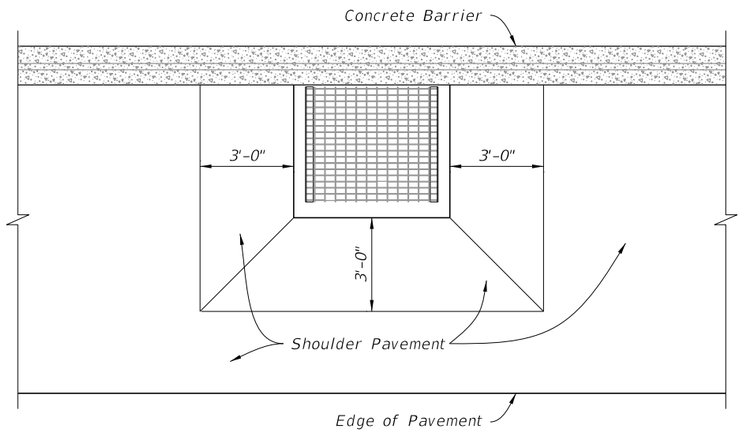

LOW SIDE SUPERELEVATION

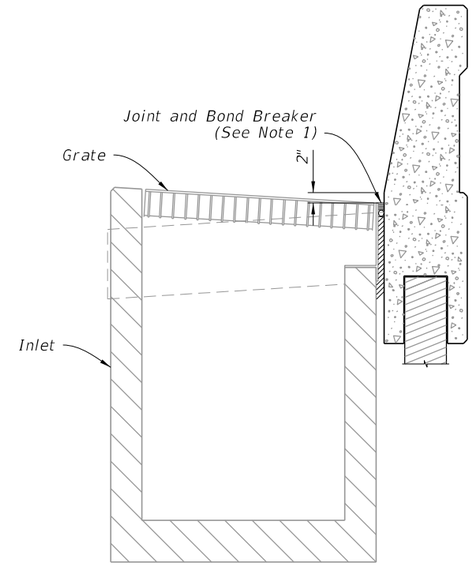

JUNCTION SLAB AND WALL COPING

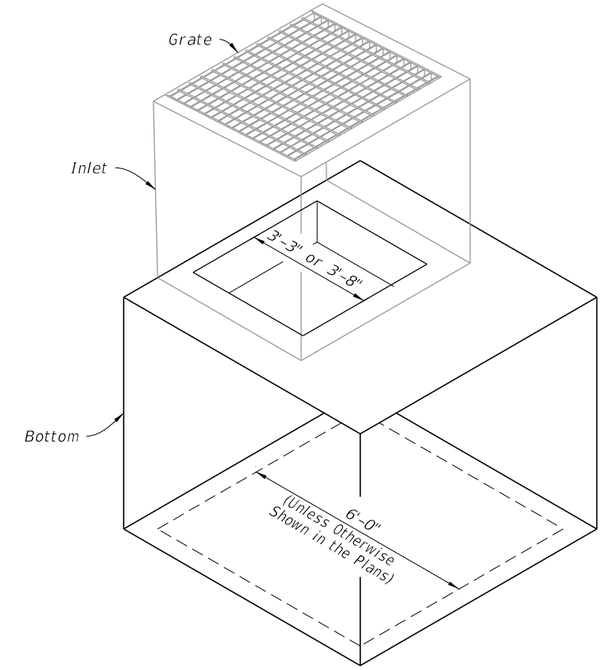

ALTERNATE B STRUCTURE BOTTOM

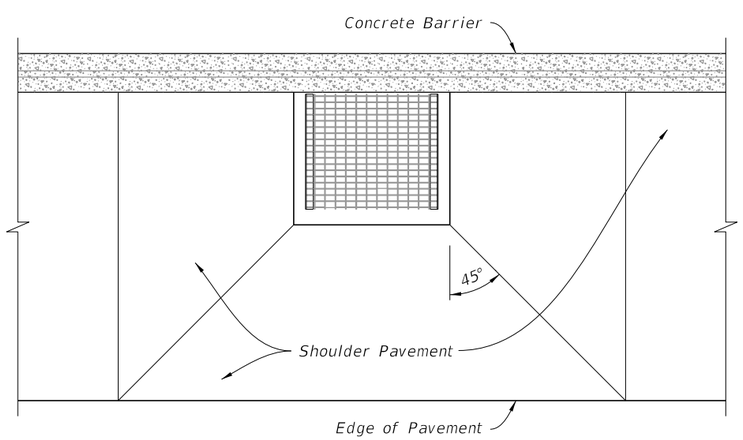

HIGH SIDE TRANSITION

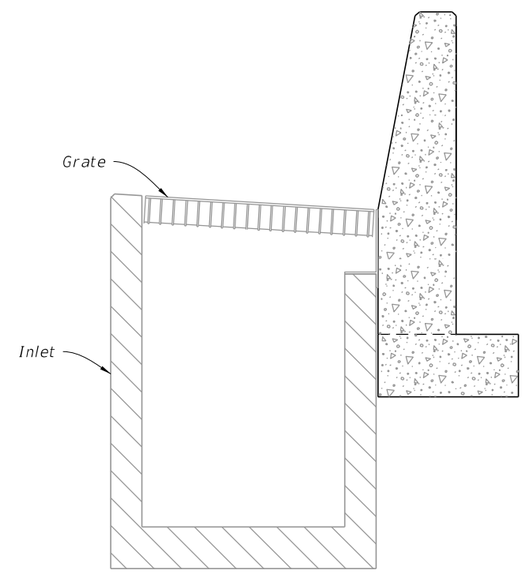

STEM AND FOOTING

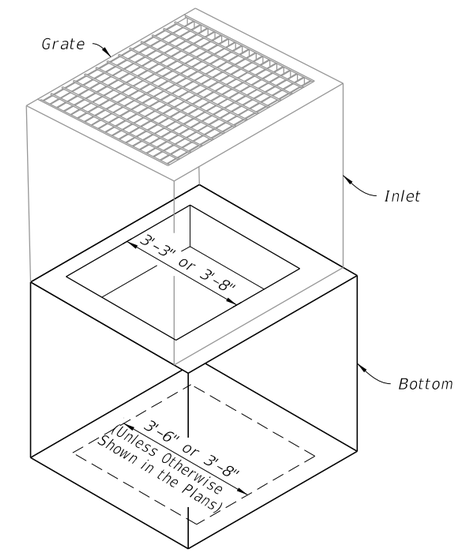

ALTERNATE B STRUCTURE BOTTOM

NOTE: Alt. B Structure Bottom Only. See Index 425-010

SUPERELEVATION SHOULDER PAVEMENT WRAP

BARRIER TYPE EXAMPLES

INLET WITH STRUCTURE BOTTOM

SHOULDER PAVEMENT WRAP, BARRIER TYPE EXAMPLES, AND STRUCTURE BOTTOMS

10/20/2022 8:47:12 AM

LAST REVISION	REVISION	DESCRIPTION:			INDEX	SHEET
10/01/20			FY 2023-24 STANDARD PLANS	ADJACENT BARRIER INLET	425-031	4 of 4

GENERAL NOTES:

1. Work this Index with Index 425-001 and Index 425-010.

2. Where called for in the Plans, use this inlet in conjunction with Curb and Gutter Barrier per Index 521-001. Construct Barrier segments shown herein in accordance with requirements of Index 521-001, including connections to adjacent barrier segments using the Doweled Joint.

3. Reinforcing shown is grade 60 steel bars. For the equivalent area of welded wire reinforcement for the inlet, see Index 425-001. Reinforcing shall have 2" minimum cover unless otherwise shown. Trim or bend bars to provide 1½" clearance around pipe openings.

   For Bar Bending Details of Bars 5V2 & 5U4, see Index 521-001. For all others, see Sheet 2.

4. Apply a ¾" chamfer or ¼" radius to all exposed concrete edges.

5. Grates may be fabricated with reticuline bars or with either ½"∅ welded or ⅜"∅ electroforged cross bars and bearing bars as detailed on Sheet 3.

6. All dimensions are for both precast and cast in place (C-I-P) inlets unless otherwise indicated.

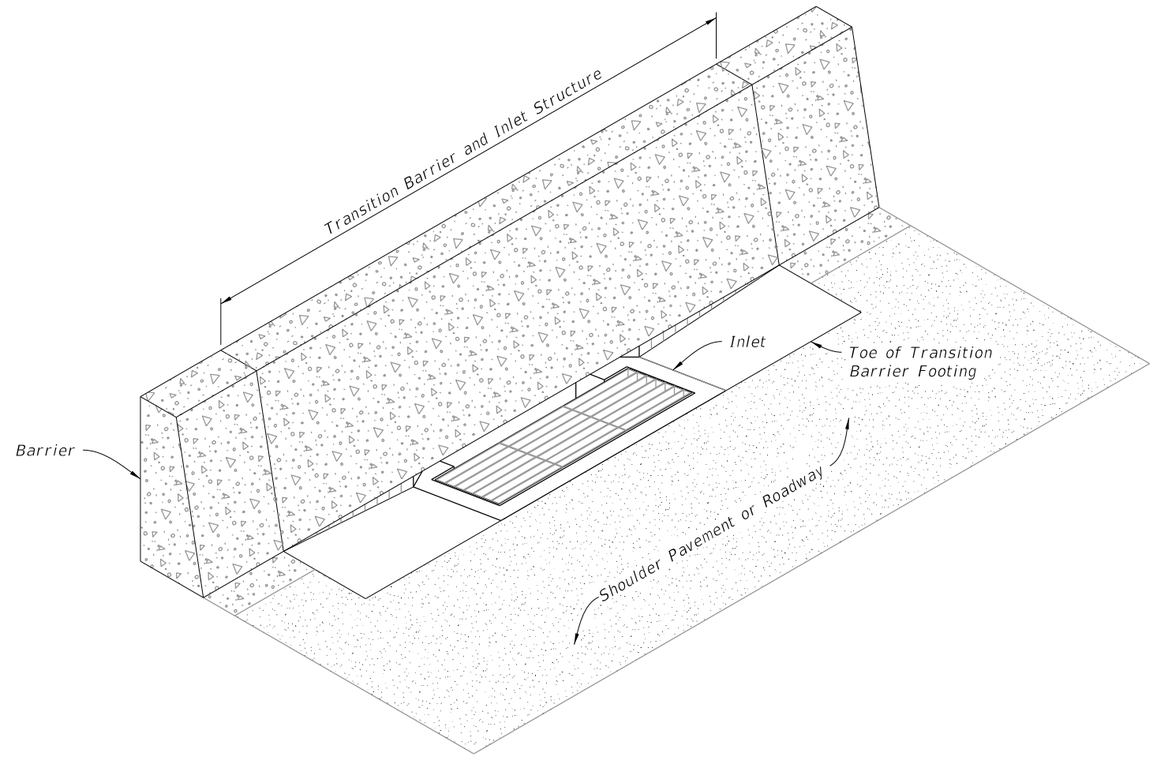

CURB AND GUTTER BARRIER INLET

TABLE OF CONTENTS:

Sheet	Description
1	General Notes and Contents
2	Dimensional, Reinforcing, and Bar Bending
3	Transitional Dimensional, Reinforcing, and Grate Details
4	Inlet Top Dimensional and Reinforcing Details

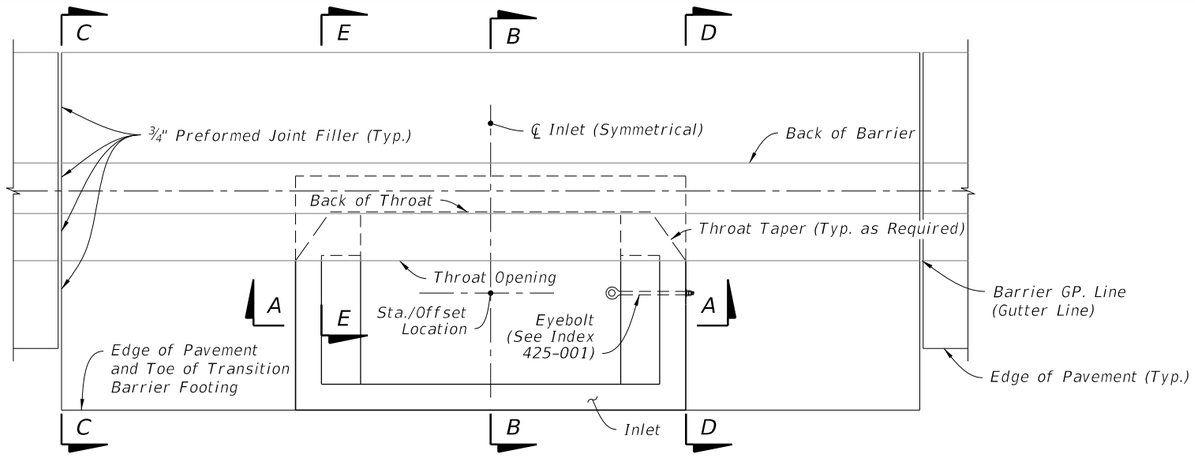

PLAN

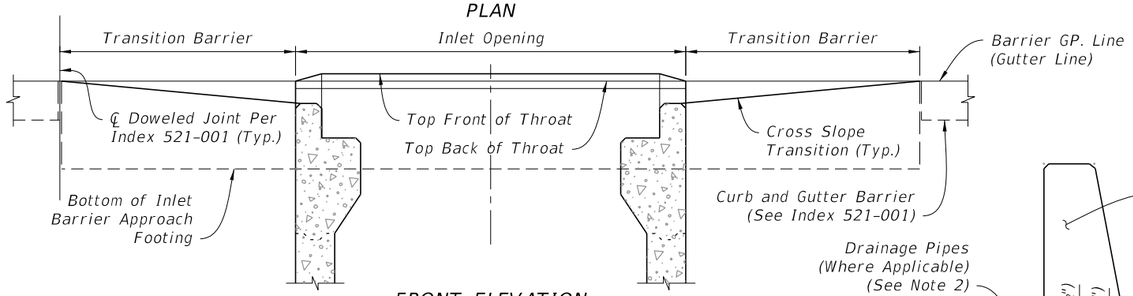

FRONT ELEVATION

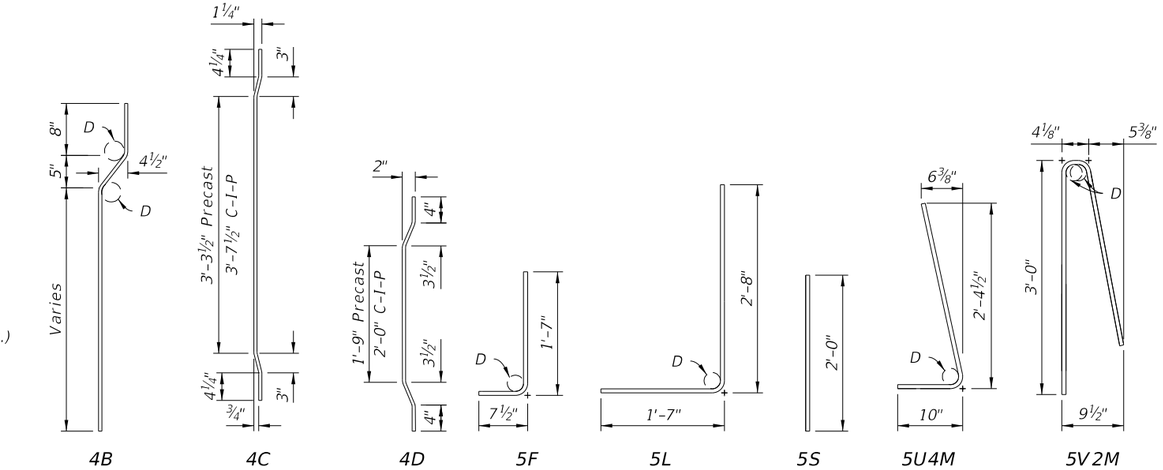

BAR BENDING DIAGRAMS

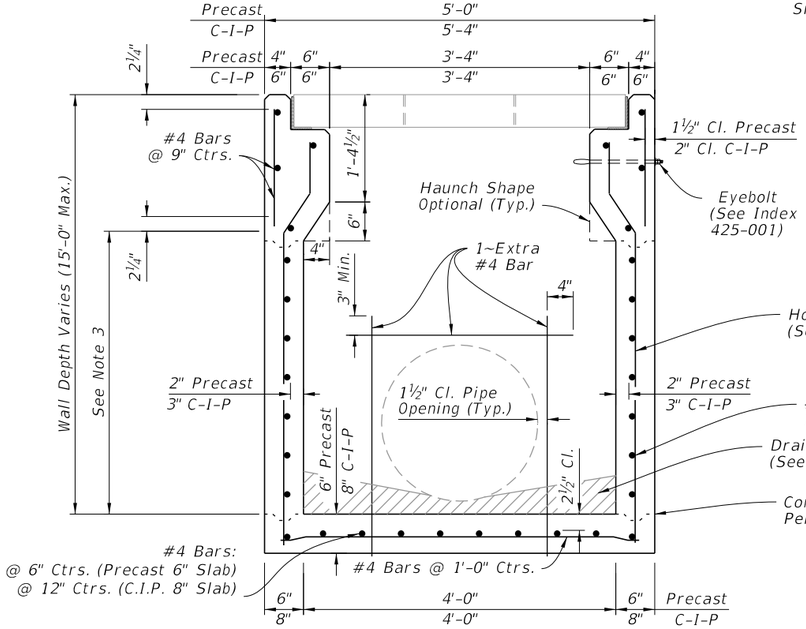

SECTION A-A
(Pipe Opening Shown)

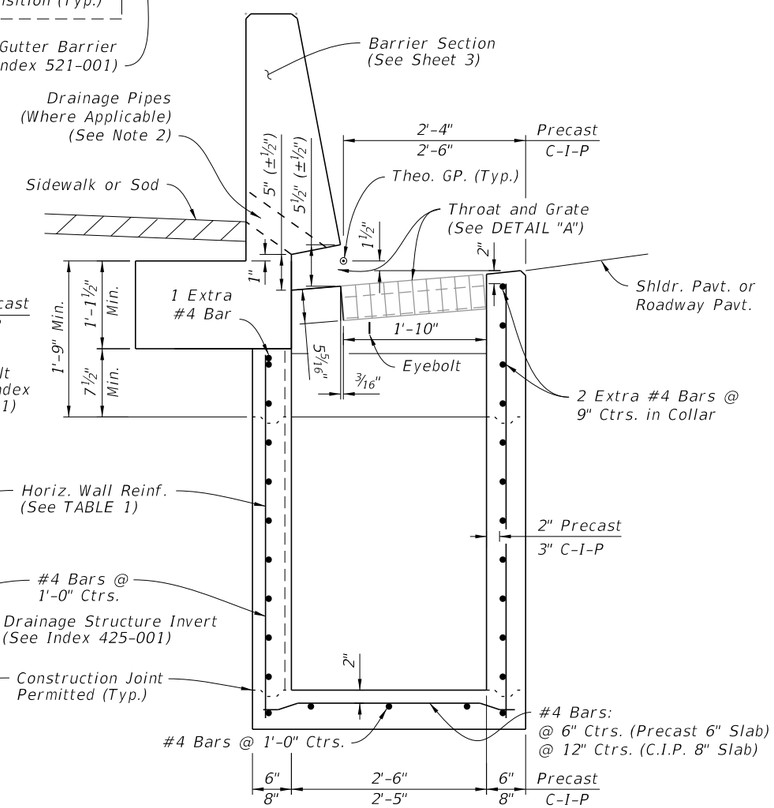

SECTION B-B
(Pipe Opening Not Shown)

DIMENSIONAL AND REINFORCING

TABLE 1: HORIZONTAL WALL REINFORCING SCHEDULE				
WALL DEPTH		SCHEDULE	AREA (in.²/ft.)	MAX. SPACING
Precast	C-I-P			BARS / WWR
0'-3'	0'-4'	A12	0.20	12" / 8"
3'-6'	4'-9'	A6	0.20	6" / 5"
6'-10'	9'-15'	B5.5	0.24	5½" / 5"
10'-15'	-	C6.5	0.37	6½" / 6"

NOTES:

1. For Bar Bending Diagrams of Bars 5V2 & 5U4, See Index 521-001. Bars 5V2M, 5U4M, & 5S may be field cut from Bars 5V2 & 5U4.
2. Install PVC Drainage Pipes at the inlet centerline when the inlet is located in a sag curve or when drainage pipes are called for in the plans. Install a quantity of 3 ~ 3½"⌀ (I.D.) NPS Schedule 40 Pipes longitudinally spaced at 8", with the center pipe as near to the inlet centerline as practical without conflicting with the steel reinforcing.
3. Construction joints permitted between these limits. See Index 425-001 for minimum dimensions.

DIMENSIONAL, REINFORCING AND BAR BENDING

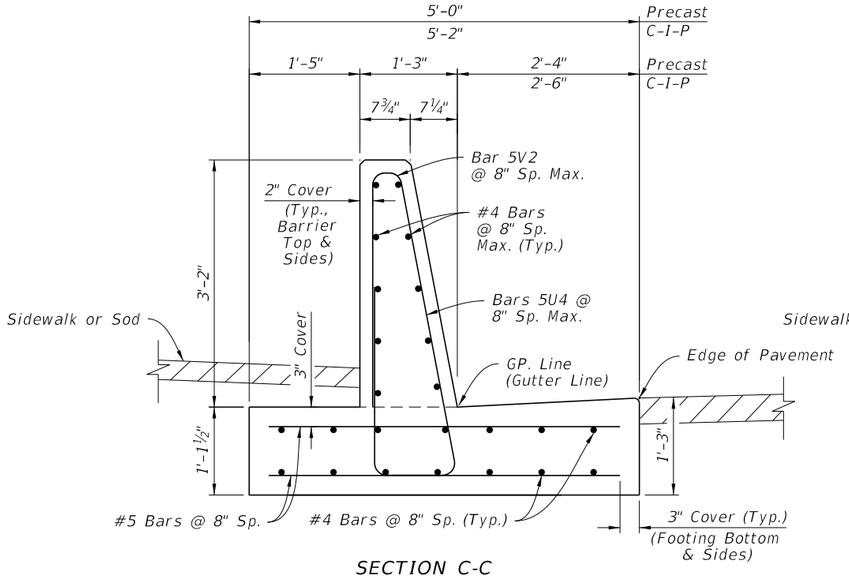

SECTION C-C
TRANSITION BARRIER BEGIN CROSS-SLOPE TRANSITION
(Align With Curb And Gutter Barrier, See Index 521-001)

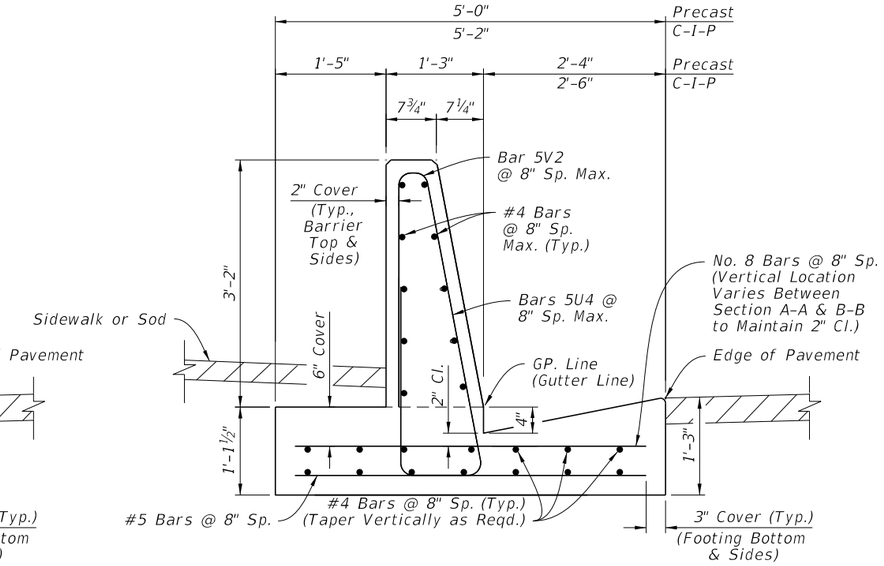

SECTION D-D
TRANSITION BARRIER END CROSS-SLOPE TRANSITION
(Align With Inlet Structure)

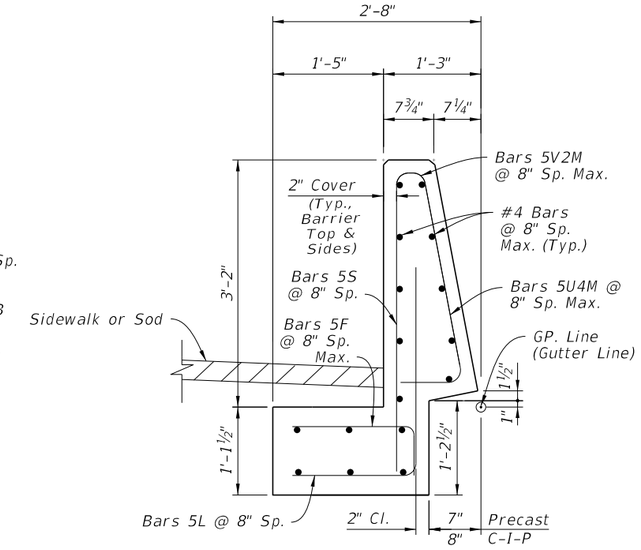

SECTION E-E
BARRIER OVER INLET STRUCTURE
(Throat Fully Transitioned)

TRANSITIONAL DIMENSIONAL AND REINFORCING

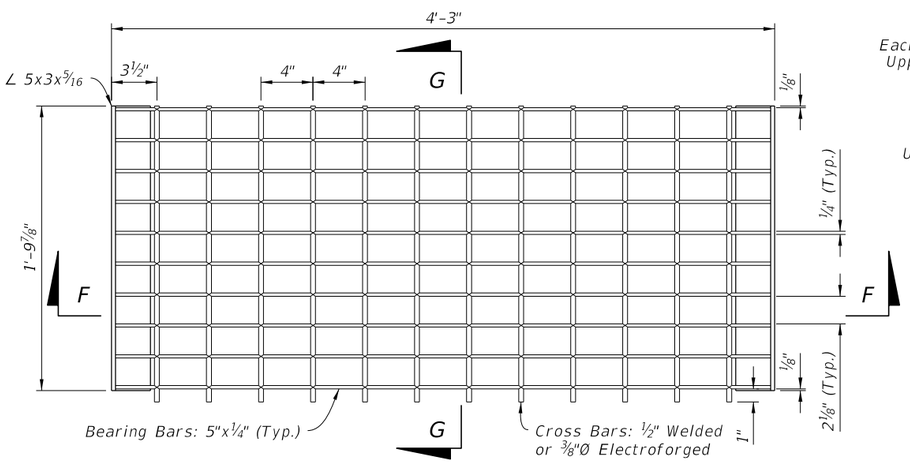

PLAN

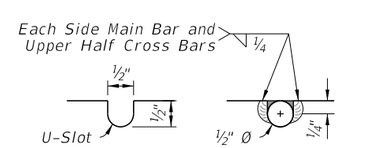

WELDED

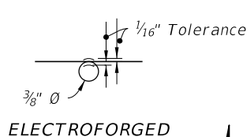

ELECTROFORGED

DETAIL "B"

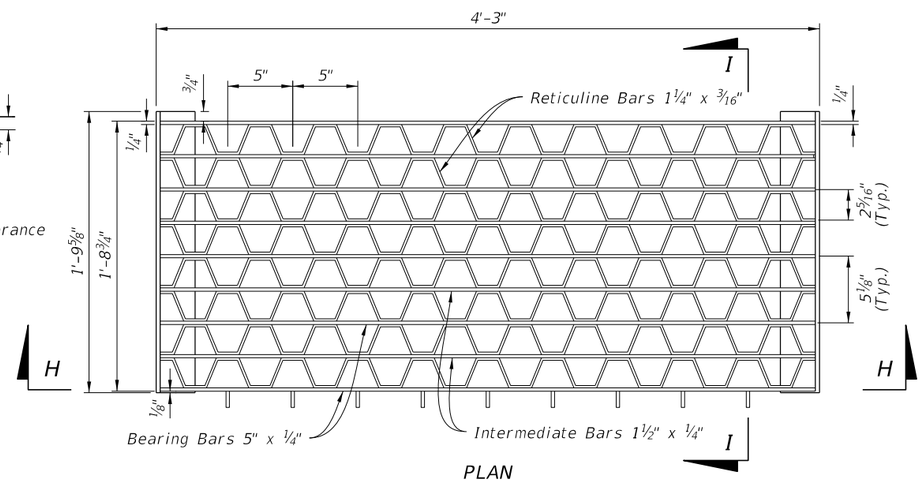

PLAN

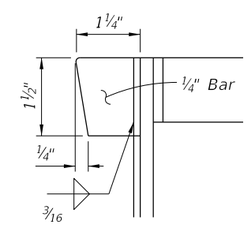

STUB BAR

DETAIL "C"

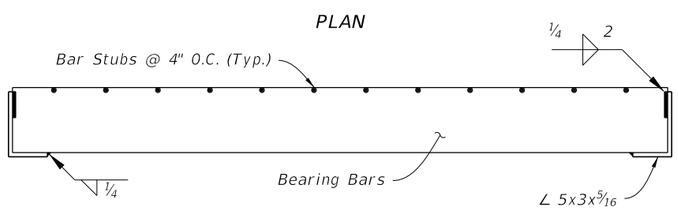

SECTION F-F

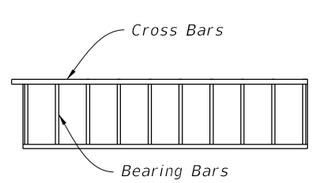

SECTION G-G

CROSS BAR GRATE

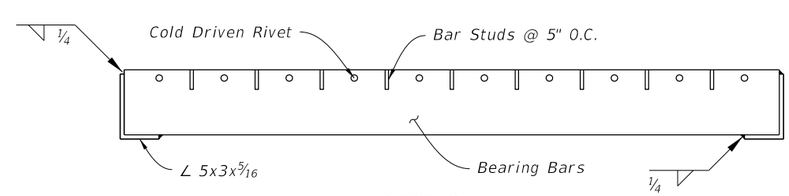

SECTION H-H

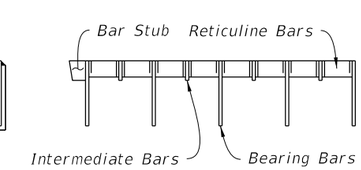

SECTION I-I

RETICULINE GRATE

TRANSITIONAL DIMENSIONAL, REINFORCING AND GRATE DETAILS

LAST REVISION	REVISION	DESCRIPTION:			INDEX	SHEET
10/01/20			FY 2023-24 STANDARD PLANS	CURB AND GUTTER BARRIER INLET	425-032	3 of 4

12/13/2022 8:13:51 AM

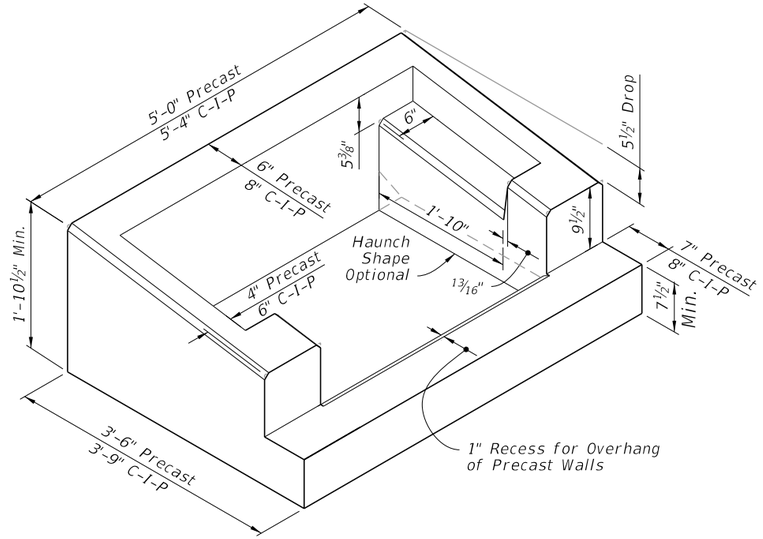

INLET COLLAR

ISOMETRIC VIEW

(Grate Not Shown)

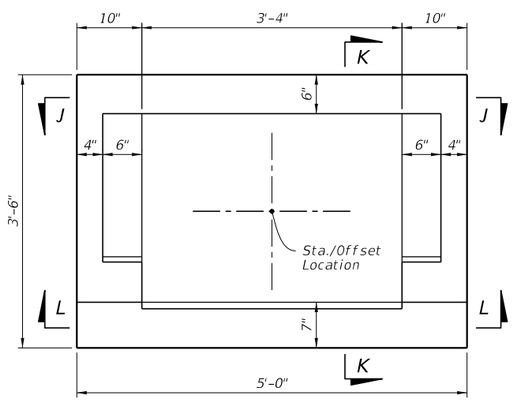

PLAN

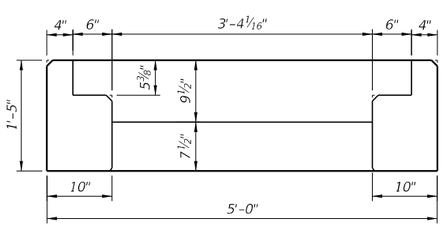

SECTION L-L

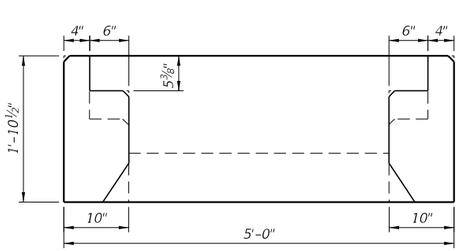

SECTION J-J

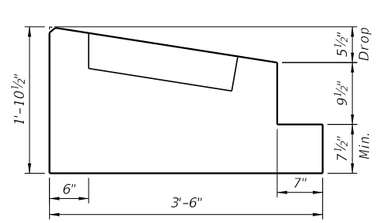

SECTION K-K

DIMENSIONAL DETAILS

(Precast Shown, C-I-P Similar)

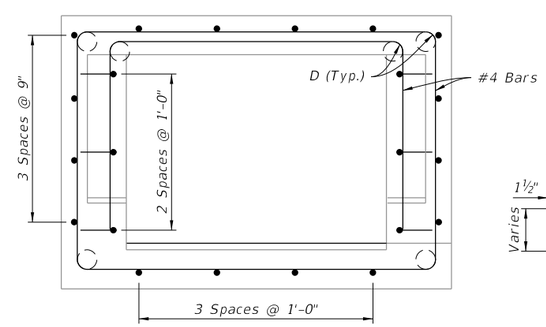

PLAN

NOTE:
See BAR BENDING DIAGRAMS on Sheet 3
for additional information on Bar 4B.

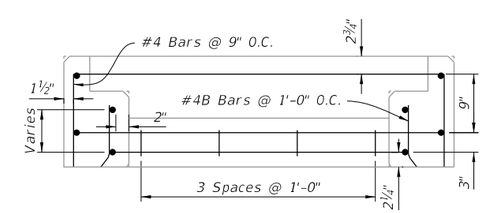

SECTION L-L

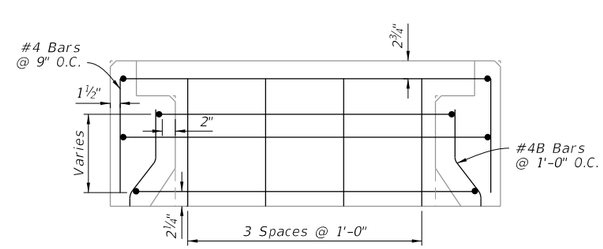

SECTION J-J

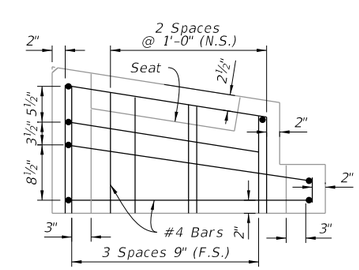

SECTION K-K

REINFORCING DETAILS

(Precast Shown, C-I-P Similar)

INLET TOP DIMENSIONAL AND REINFORCING DETAILS

LAST REVISION	REVISION	DESCRIPTION:			INDEX	SHEET
10/01/20			FY 2023-24 STANDARD PLANS	CURB AND GUTTER BARRIER INLET	425-032	4 of 4

10/20/2022 8:47:15 AM

GENERAL NOTES:

1. Work this Index with Index 425-001 and Index 425-010.

2. Use Grade 60 reinforcing bars with 2" minimum cover unless otherwise noted. See Index 425-001 for equivalent area of welded wire fabric. Cut or bend bars to provide 1½" minimum clearance around pipe.

3. Chamfer all exposed edges and corners ¾" or tool to ¼" radius.

4. Dimensions are for both precast and cast-in-place inlets unless otherwise noted.

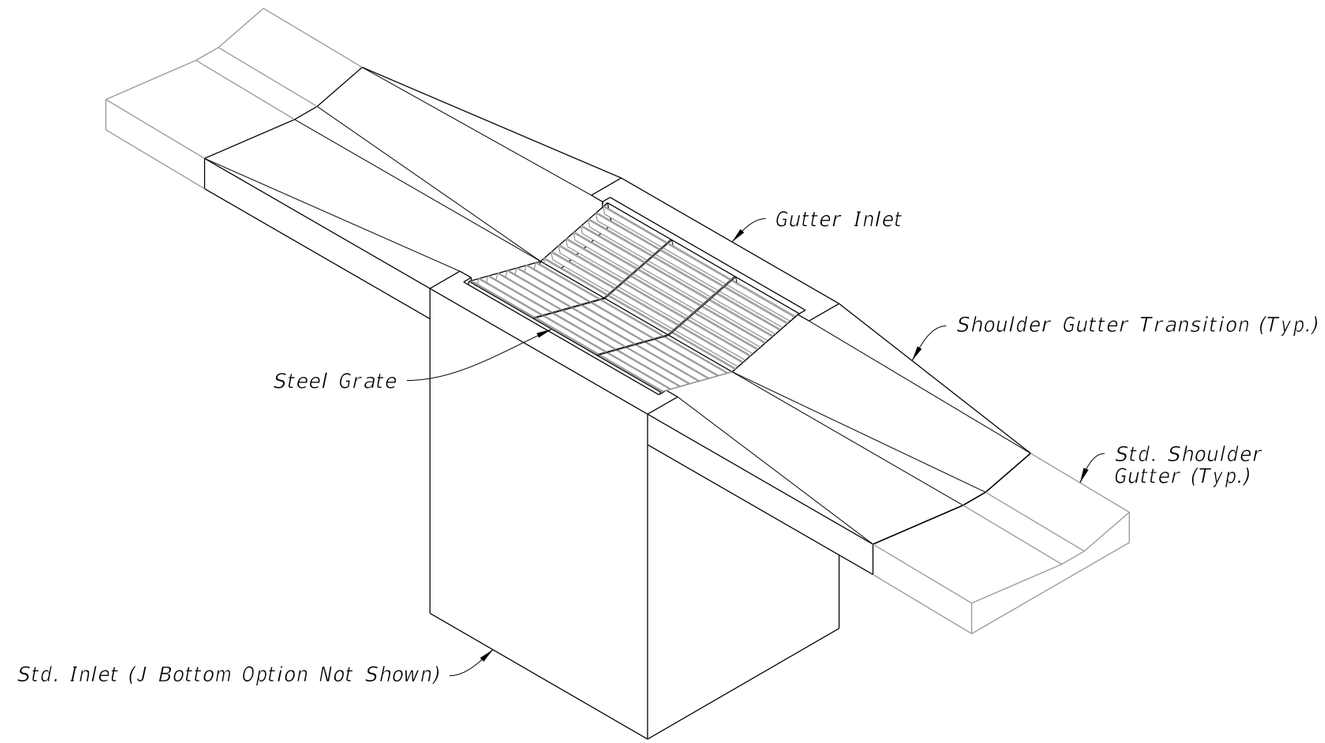

TABLE OF CONTENTS:

Sheet	Description
1	General Notes and Contents
2	Dimensional and Reinforcing Details
3	Transition and Apron Details
4	Steel Grate Details
5	Alternate A Structure Bottom - Top Slab Details

GUTTER INLET TYPE S

(Pipe Opening Not Shown)

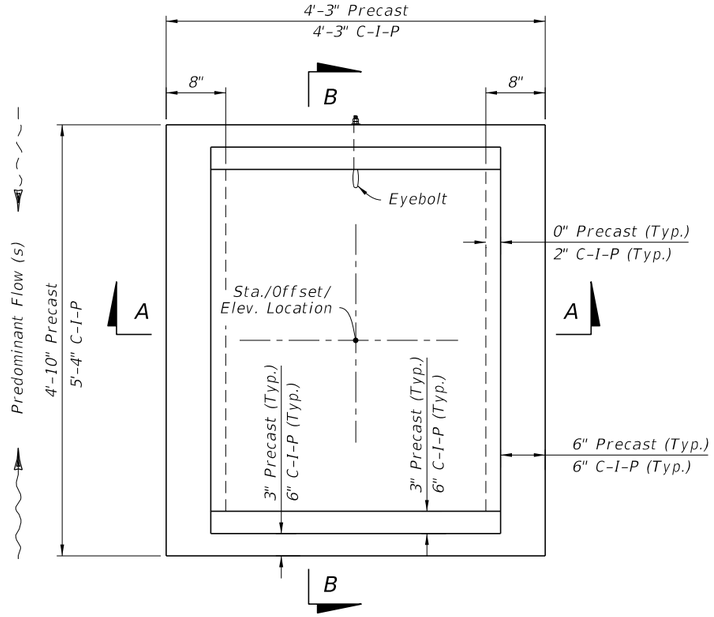

PLAN

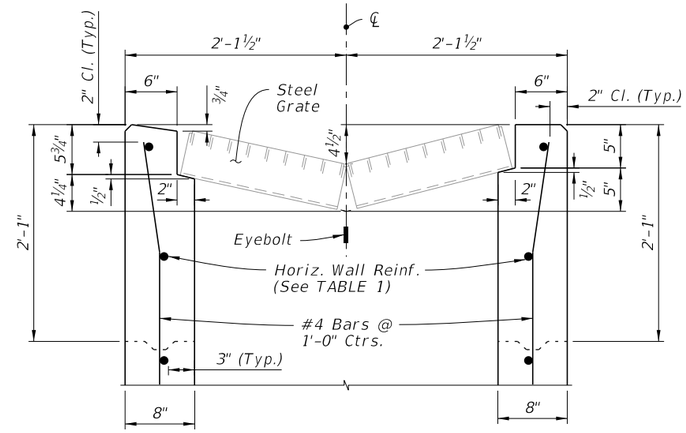

DETAIL "A"

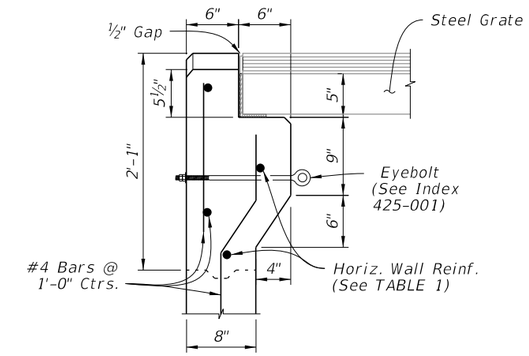

DETAIL "B"

CAST-IN-PLACE OPTION

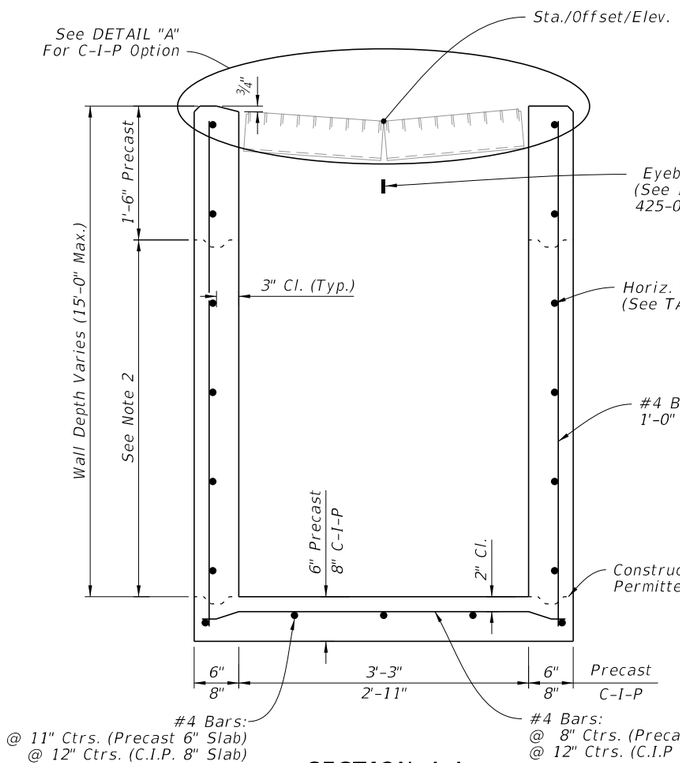

SECTION A-A
(Pipe Opening Not Shown)

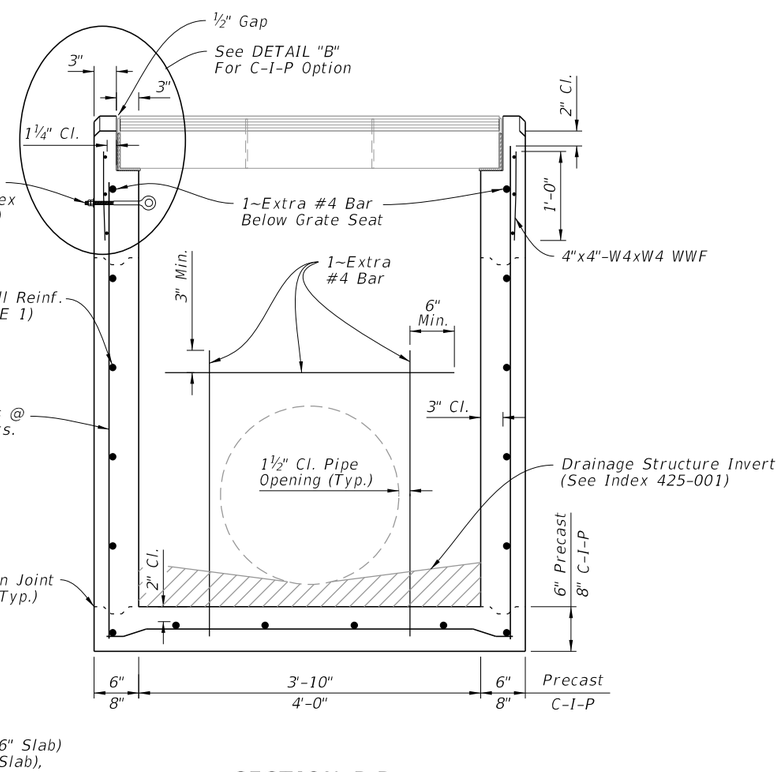

SECTION B-B
(Pipe Opening Shown)

TABLE 1 HORIZONTAL WALL REINFORCING SCHEDULE				
WALL DEPTH	SCHEDULE	AREA (in.²/ft.)	MAX. SPACING	
			BARS	WWR
0' - 5'	A12	0.20	12"	8"
5' - 9'	A6	0.20	6"	5"
9' - 12'	A4	0.24	4"	3"
9' - 15'	B5.5	0.24	5½"	5"

NOTES:

1. Concrete Apron/Transition not shown.
2. Construction joints permitted between these limits. See Index 425-001 for minimum dimensions.

DIMENSIONAL AND REINFORCING DETAILS

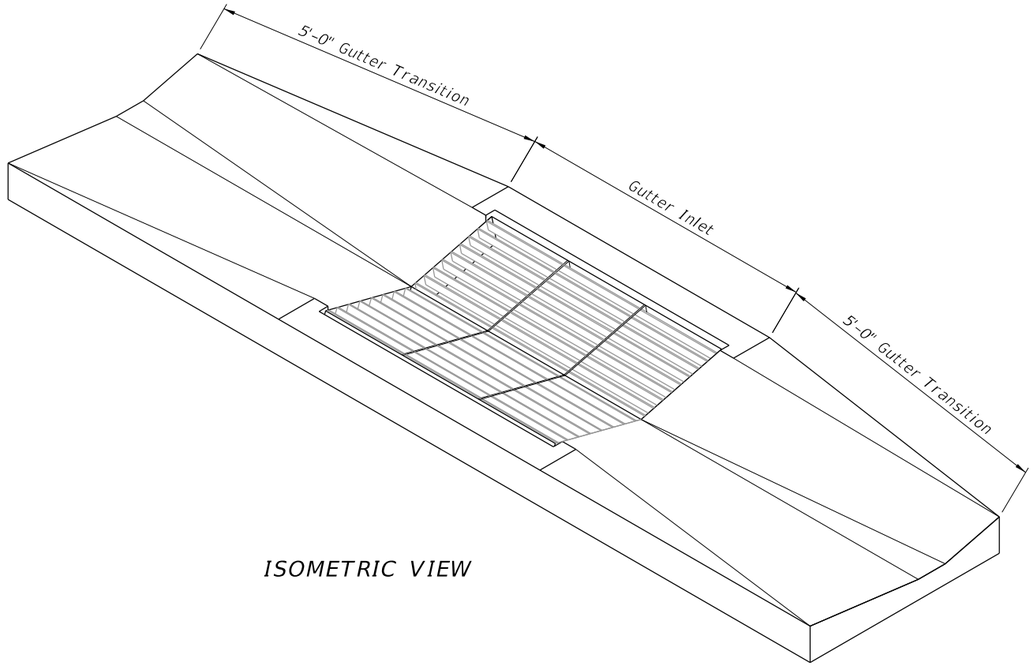

ISOMETRIC VIEW

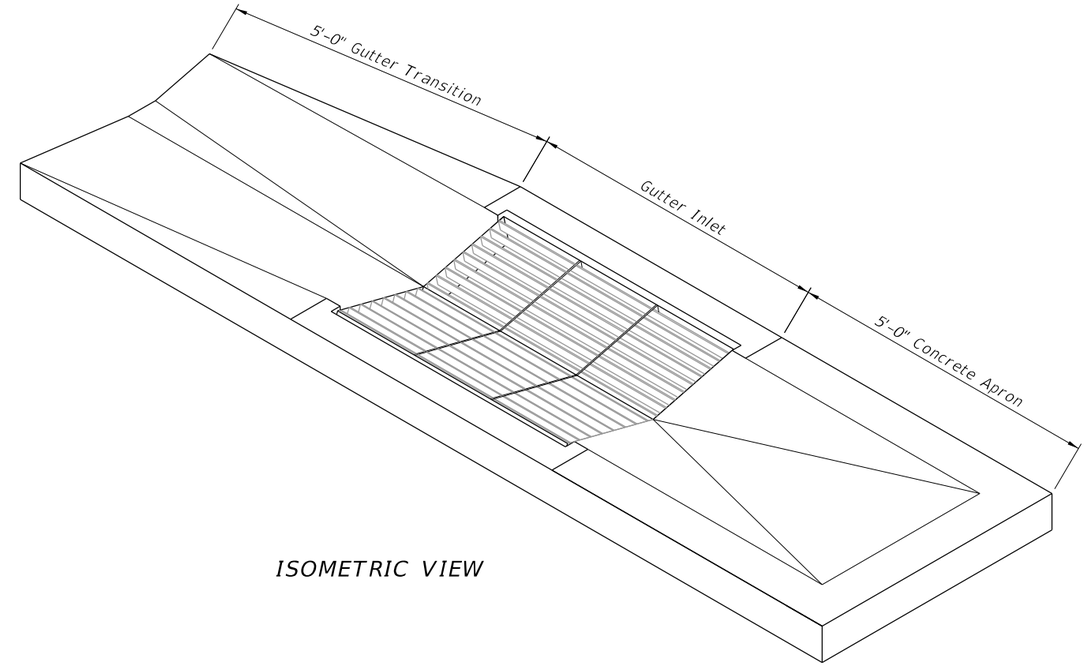

ISOMETRIC VIEW

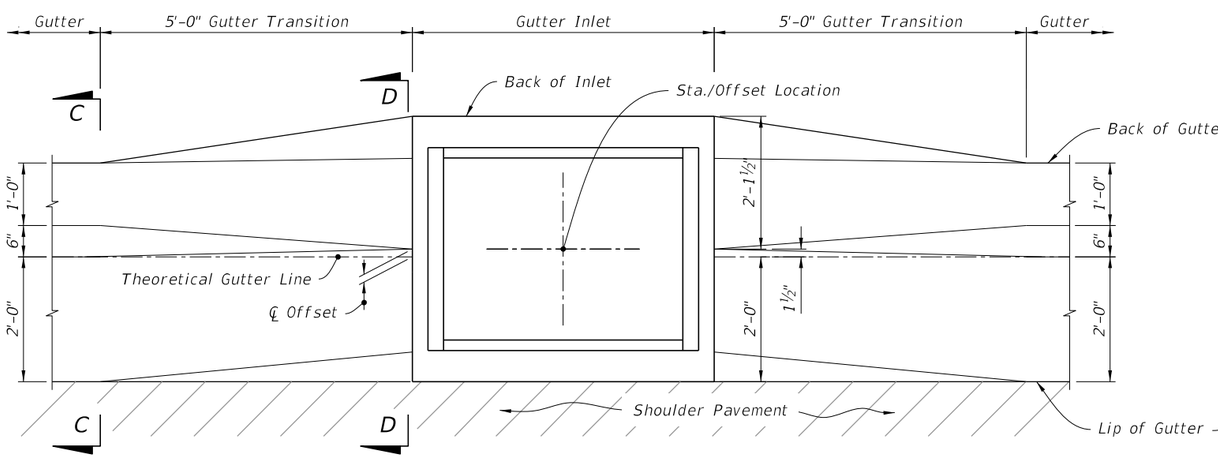

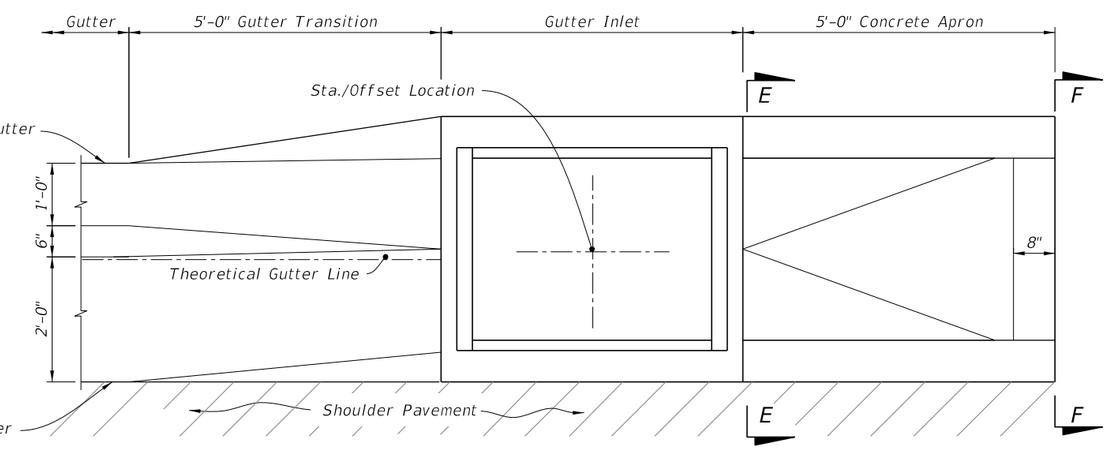

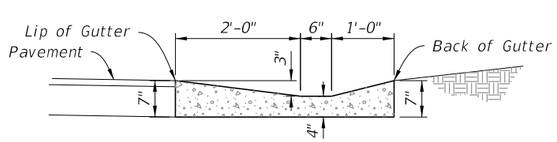

SECTION C-C

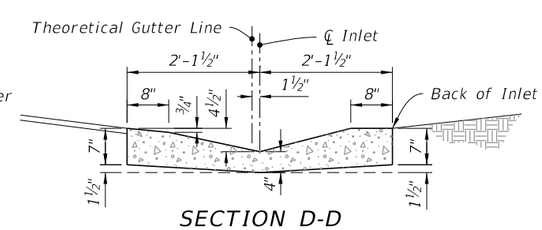

SECTION D-D

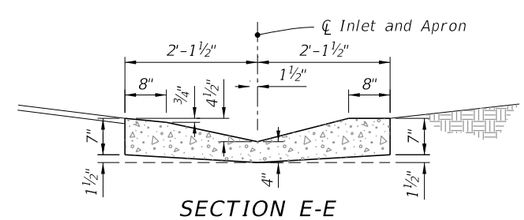

SECTION E-E

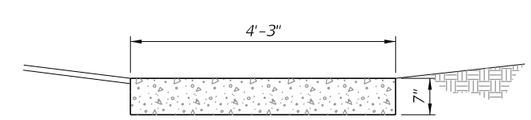

SECTION F-F

SHOULDER GUTTER TRANSITION

APRON AT TERMINAL INLETS

TRANSITION AND APRON DETAILS

10/20/2022 8:47:18 AM

LAST REVISION	REVISION	DESCRIPTION:			INDEX	SHEET
10/01/20			FY 2023-24 STANDARD PLANS	GUTTER INLET TYPE S	425-040	3 of 5

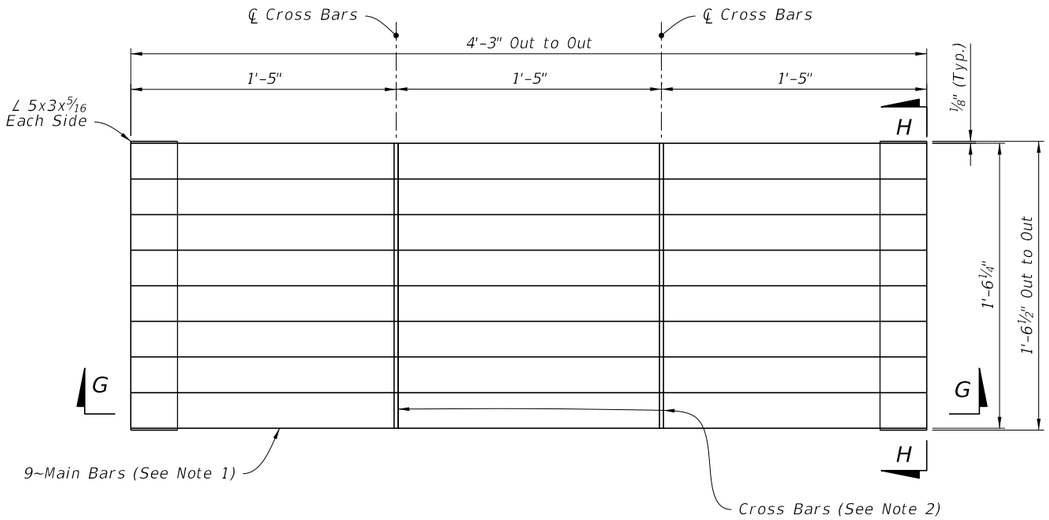

PLAN

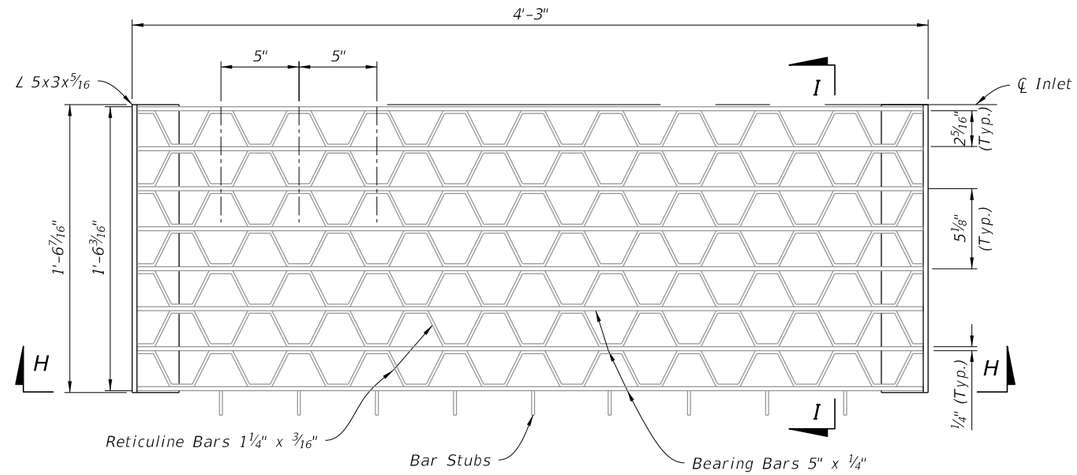

PLAN

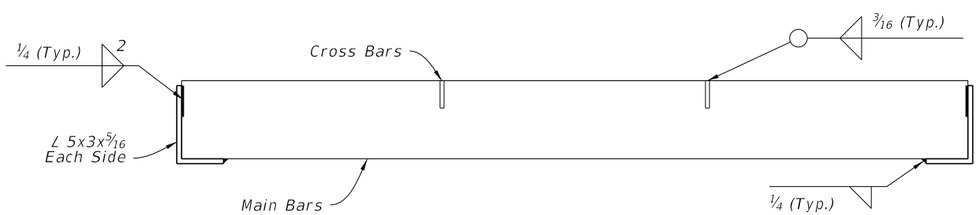

SECTION G-G

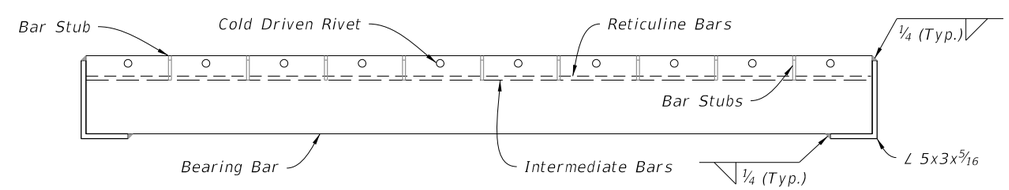

SECTION H-H

NOTES:

1. Main Bars are 5"x1/4", notched for Cross Bars, and spaced equally apart.
2. Cross Bars are 1 3/4"x1/4" and continuously welded at Main Bar Notches.
3. Main Bars and Cross Bars are flush on top.

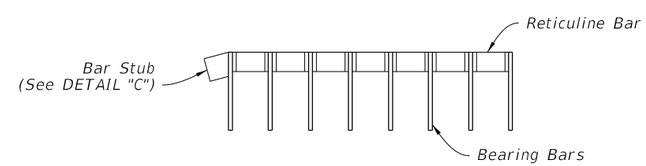

SECTION I-I

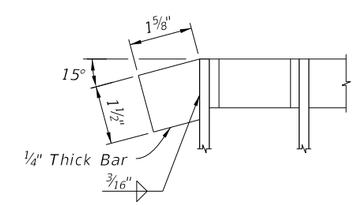

DETAIL "C"

PARALLEL BARS

RETICULINE BARS

STEEL GRATE DETAILS

LAST REVISION	REVISION	DESCRIPTION:			INDEX	SHEET
10/01/20			FY 2023-24 STANDARD PLANS	GUTTER INLET TYPE S	425-040	4 of 5

10/20/2022 8:47:18 AM

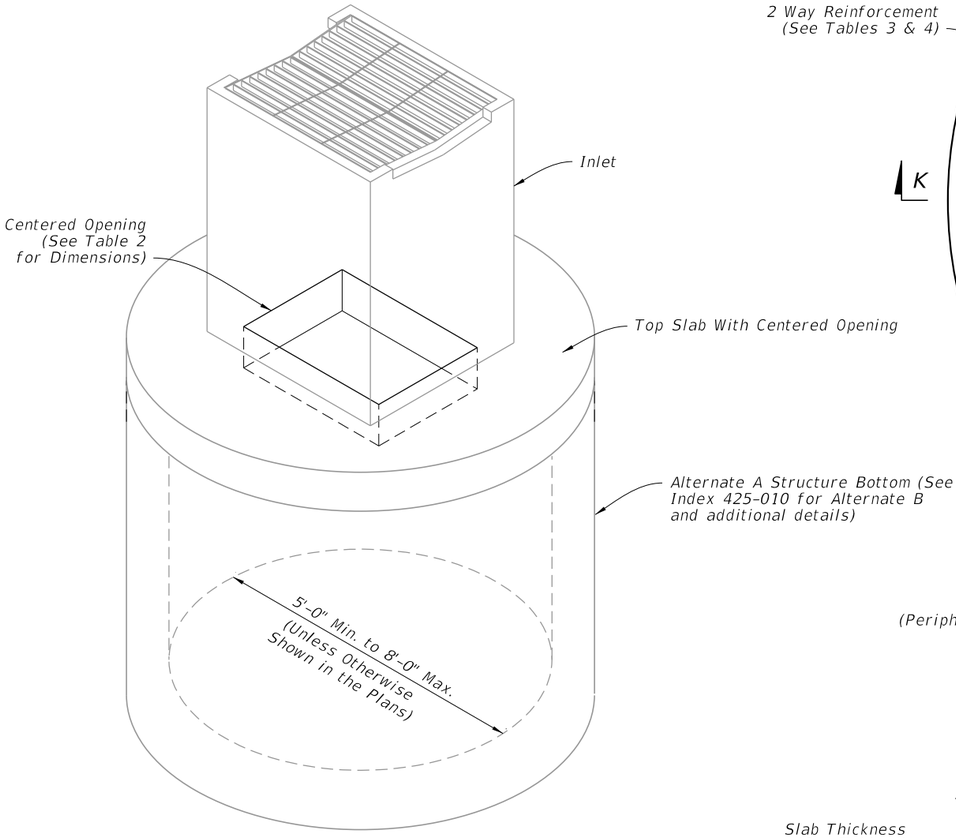

ISOMETRIC VIEW

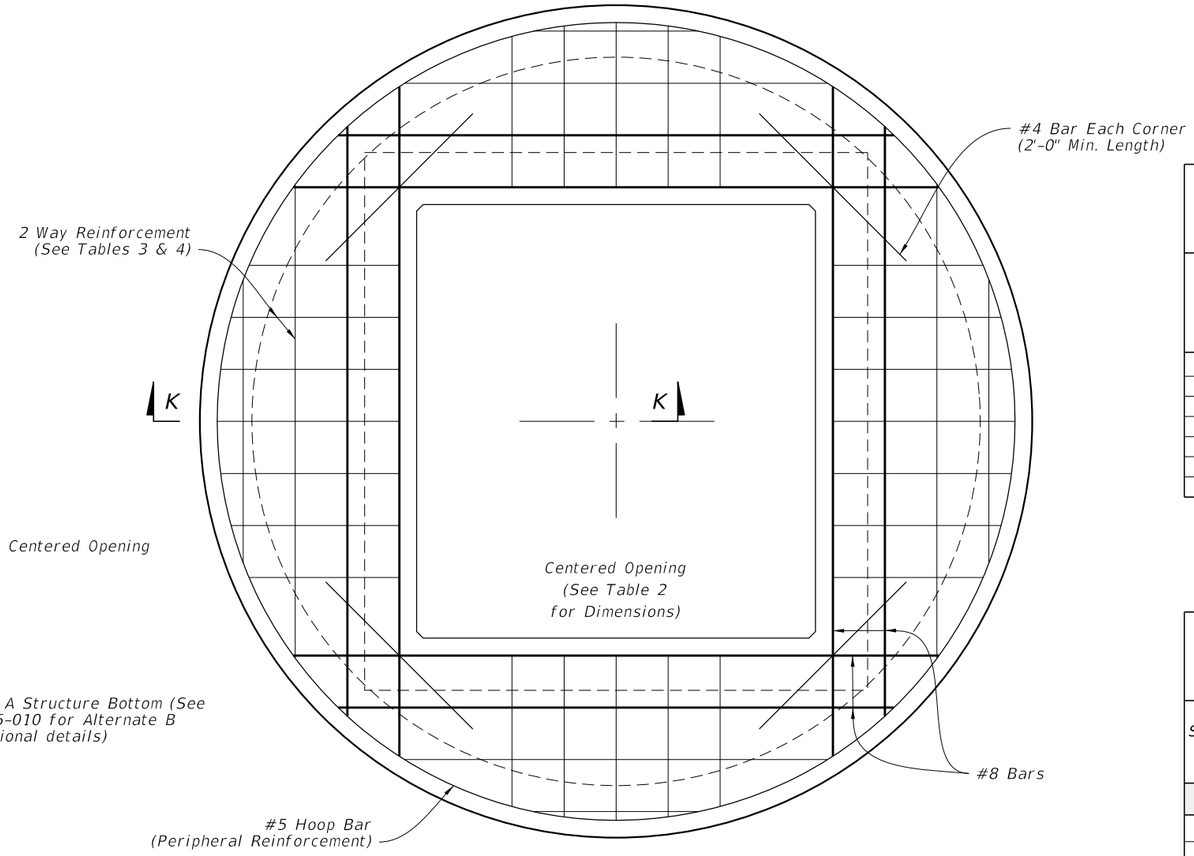

PLAN

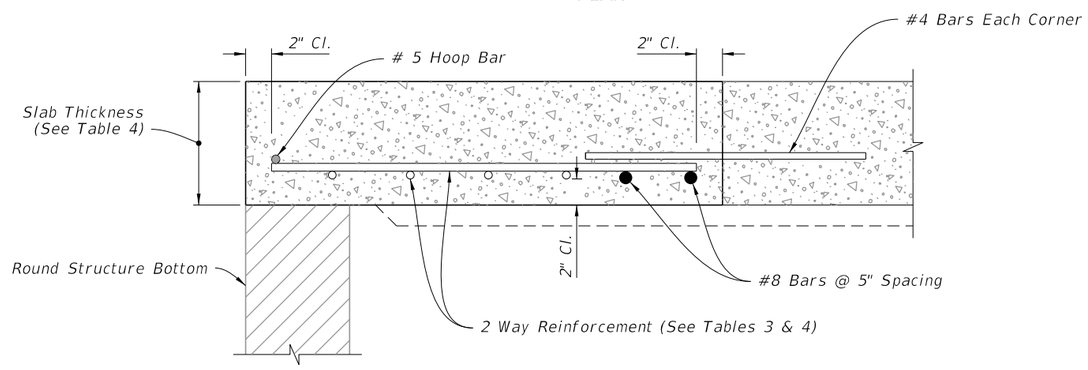

SECTION K-K

TOP SLAB REINFORCEMENT DETAILS

TABLE 3 TOP SLAB REINFORCING SCHEDULE	
SCHEDULE	GRADE 60 (BAR) OR 65 KSI & 70 KSI (WIRE FABRIC) In.²/ft.
A	0.20
B	0.24
C	0.37
D	0.53
E	0.73
F	1.06
G	1.45

TABLE 4 TOP SLAB WITH CENTERED OPENING		
STRUCTURE DEPTH	SLAB THICKNESS	REINFORCING (2 WAY) SCHEDULE
SIZE: 5'-0"		
≥0.5'<30'	9½"	C
30'<40'	9½"	D
SIZE: 6'-0"		
≥0.5'<8'	9½"	B
8'<18'	9½"	C
18'<30'	9½"	D
30'<37'	9½"	E
37'-40'	9½"	G
SIZE: 8'-0"		
≥0.5'<9'	11½"	C
9'<15'	11½"	D
15'<23'	11½"	E
23'<33'	11½"	E
33'-40'	11½"	G

TABLE 2 TOP SLAB OPENING		
DIAMETER	OPENING SIZE	
	Min.	Max.
5'-0" to 8'-0"	2'-11" x 4'-0"	3'-3" x 3'-10"

ALTERNATE A STRUCTURE BOTTOM - TOP SLAB DETAILS

GENERAL NOTES:

1. Work this Index with Index 425-001 and Index 425-010.

2. All reinforcing is Grade 60 bars with 2" min. cover unless otherwise noted. See Index 425-001 for equivalent area of welded wire fabric. Cut or bend bars out of way of pipe to clear pipe 1½".

3. Chamfer all exposed edges and corners ¾" or tool to ¼" radius.

4. Dimensions are for both precast and cast-in-place inlets unless otherwise noted.

TABLE OF CONTENTS:

Sheet	Description
1	General Notes and Contents
2	Dimensional and Reinforcing Details
3	Steel Grate Details
4	Alternate A Structure Bottom - Top Slab Details

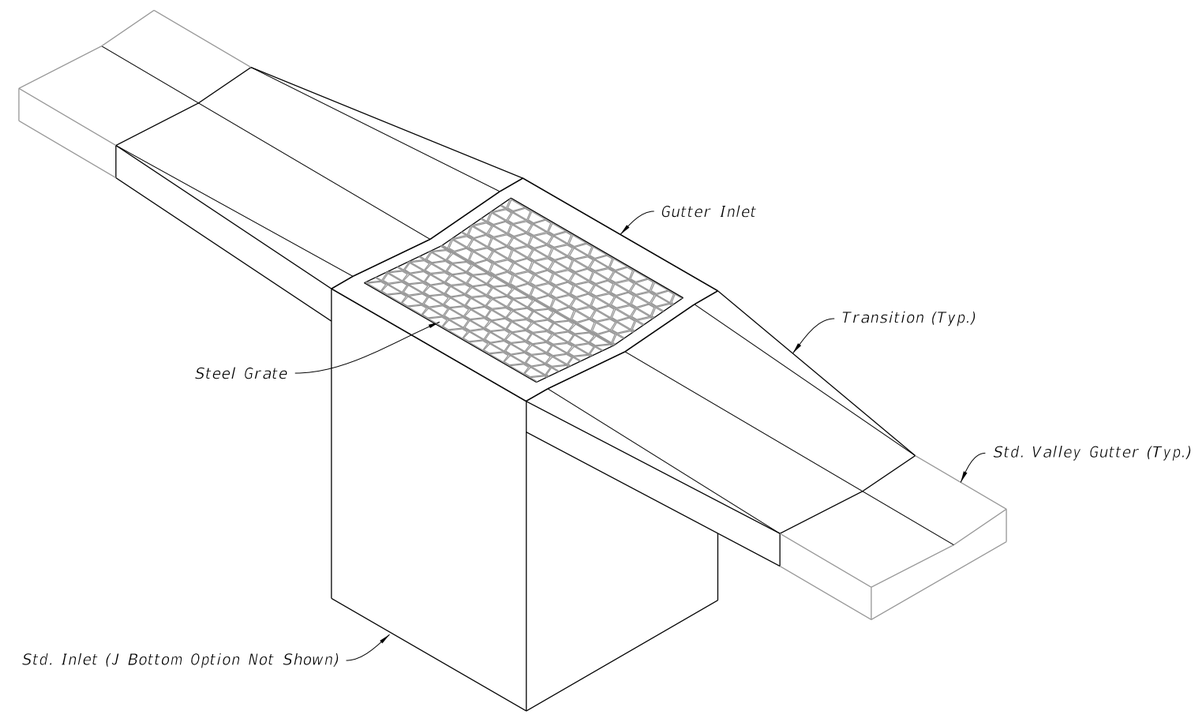

GUTTER INLET TYPE V

(Pipe Opening Not Shown)

10/20/2022 8:47:20 AM

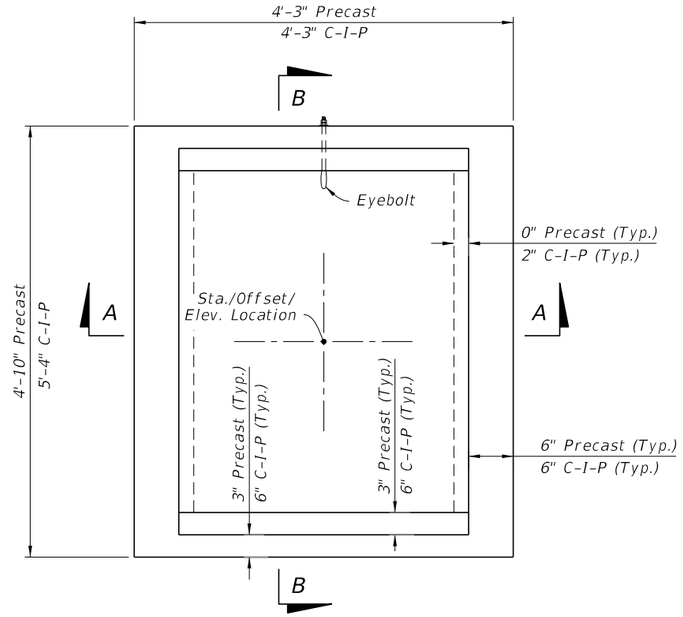

PLAN

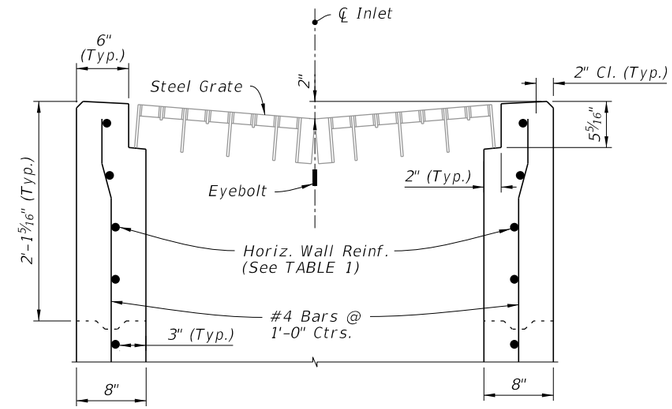

DETAIL "A"

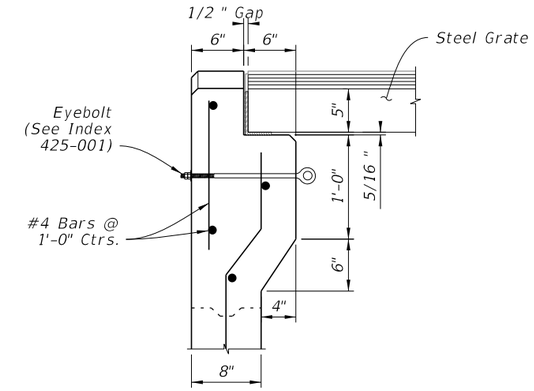

DETAIL "B"

CAST-IN-PLACE OPTION

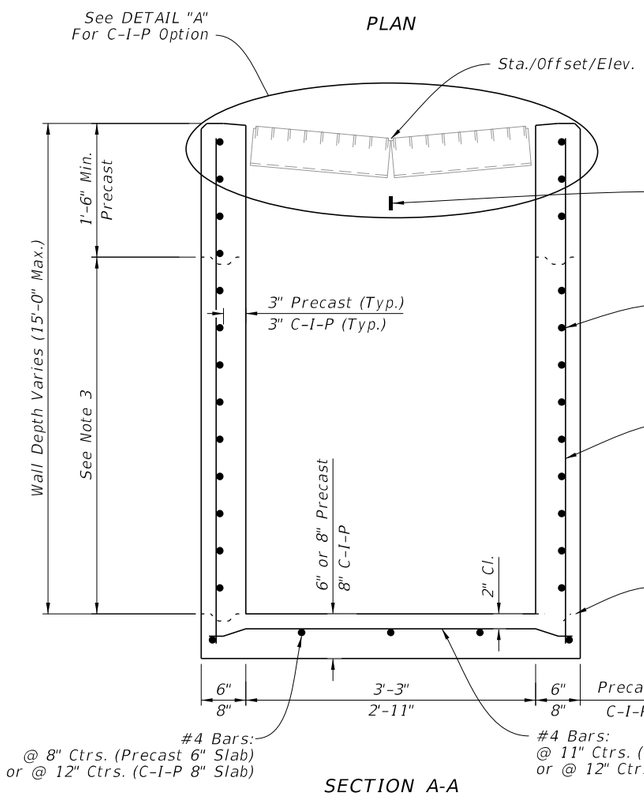

SECTION A-A
(Pipe Opening Not Shown)

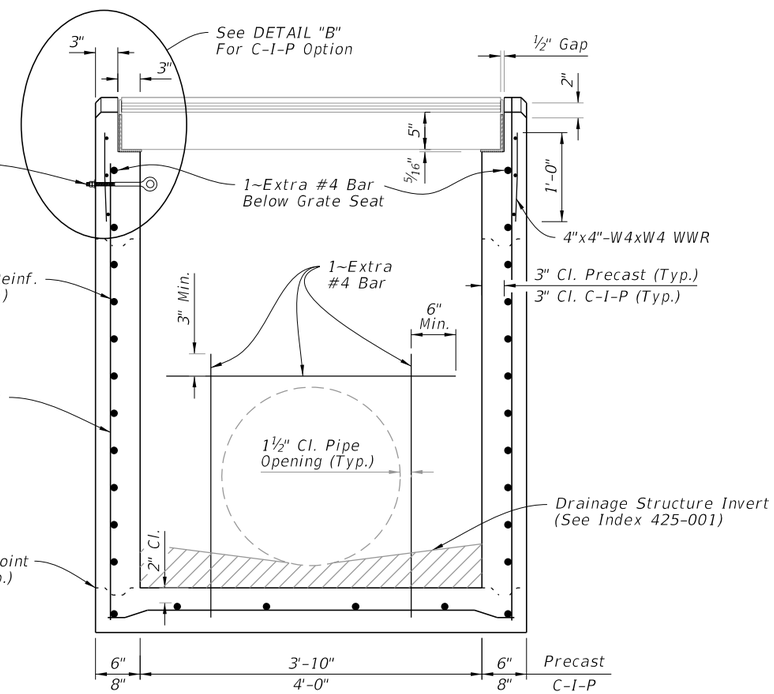

SECTION B-B
(Pipe Opening Shown)

DIMENSIONAL AND REINFORCING DETAILS

TABLE 1
HORIZONTAL WALL REINFORCING SCHEDULE

WALL DEPTH	SCHEDULE	AREA (in.²/ft.)	MAX. SPACING	
			BARS	WWR
0' - 5'	A12	0.20	12"	8"
5' - 9'	A6	0.20	6"	5"
9' - 12'	A4	0.20	4"	3"
9' - 15'	B5.5	0.24	5½"	5"

NOTES:

1. Plan View: Grate, Concrete Ditch Pavement, and Sod not shown on structure detail.
2. Precast Shown, Cast-In-Place (C-I-P) similar.
3. Construction joints permitted between these limits. See Index 425-001 for minimum dimensions.

DIMENSIONAL AND REINFORCING DETAILS

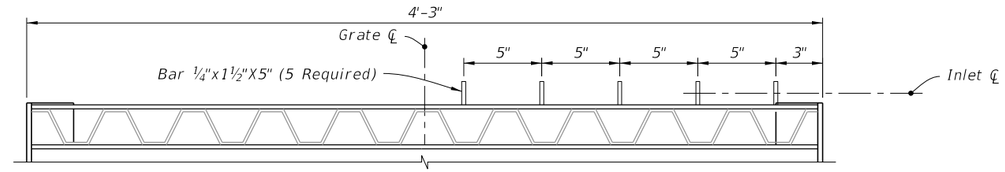

OPTIONAL BAR SPACING

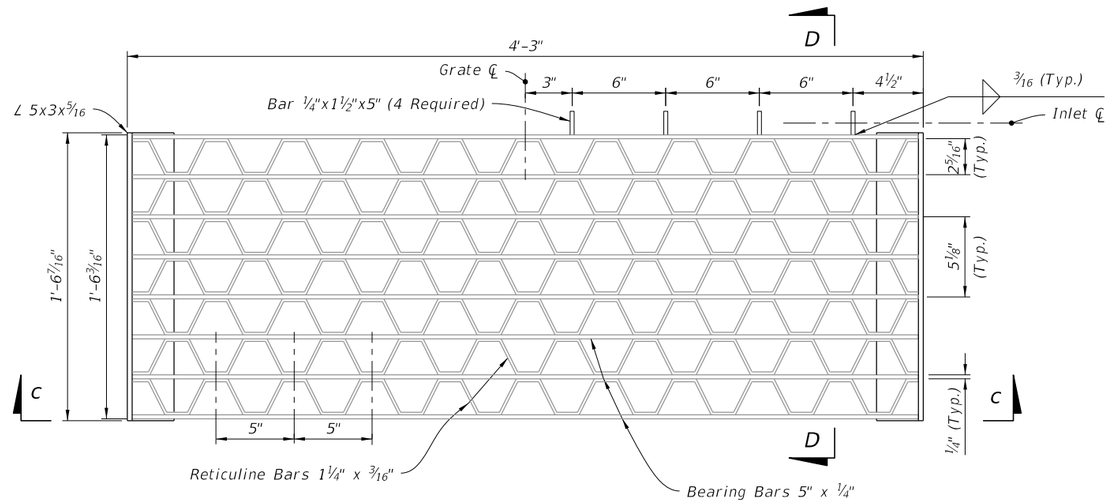

PLAN

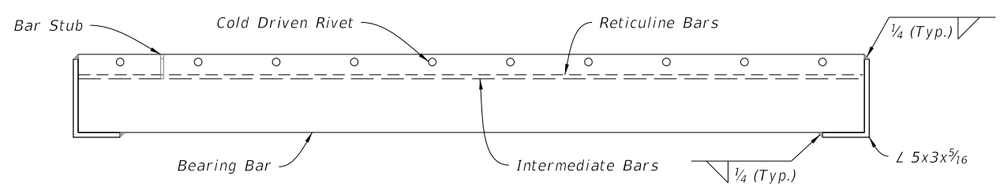

SECTION C-C

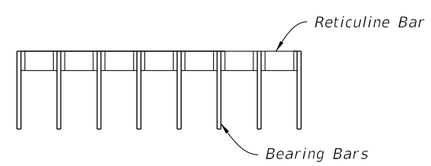

SECTION D-D

RETICULINE GRATE DETAIL

(Two Grates Required per Inlet)

STEEL GRATE DETAILS

LAST REVISION	REVISION	DESCRIPTION:			INDEX	SHEET
10/01/20			FY 2023-24 STANDARD PLANS	GUTTER INLET TYPE V	425-041	3 of 4

10/20/2022 8:47:22 AM

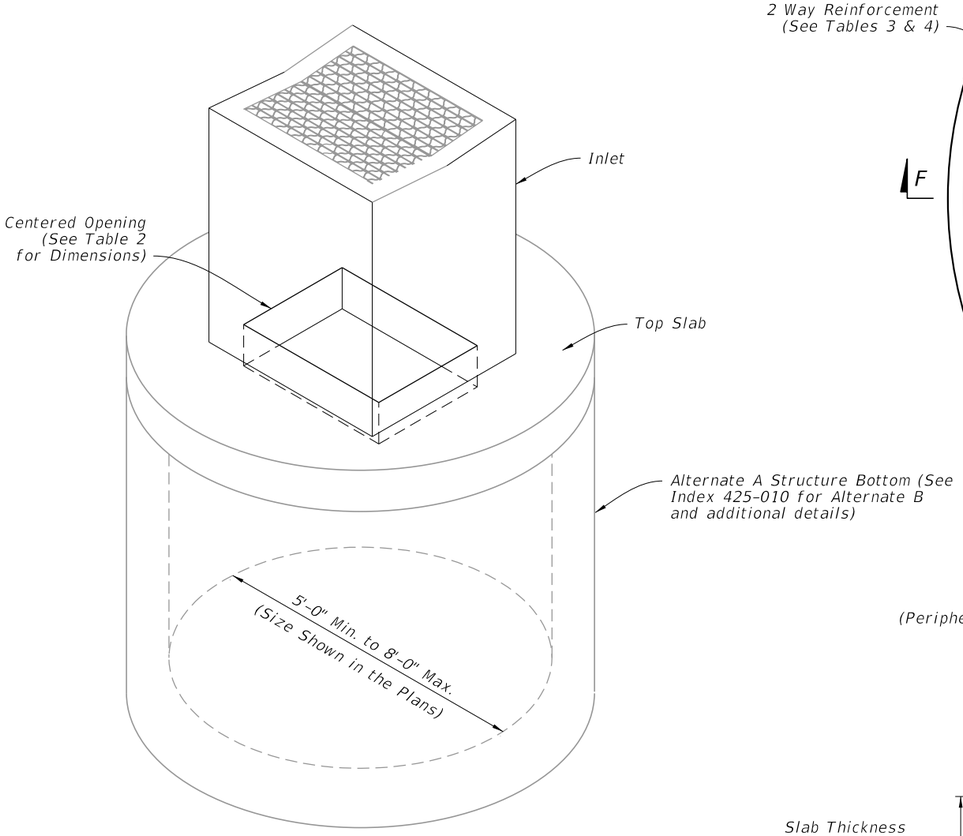

ISOMETRIC VIEW

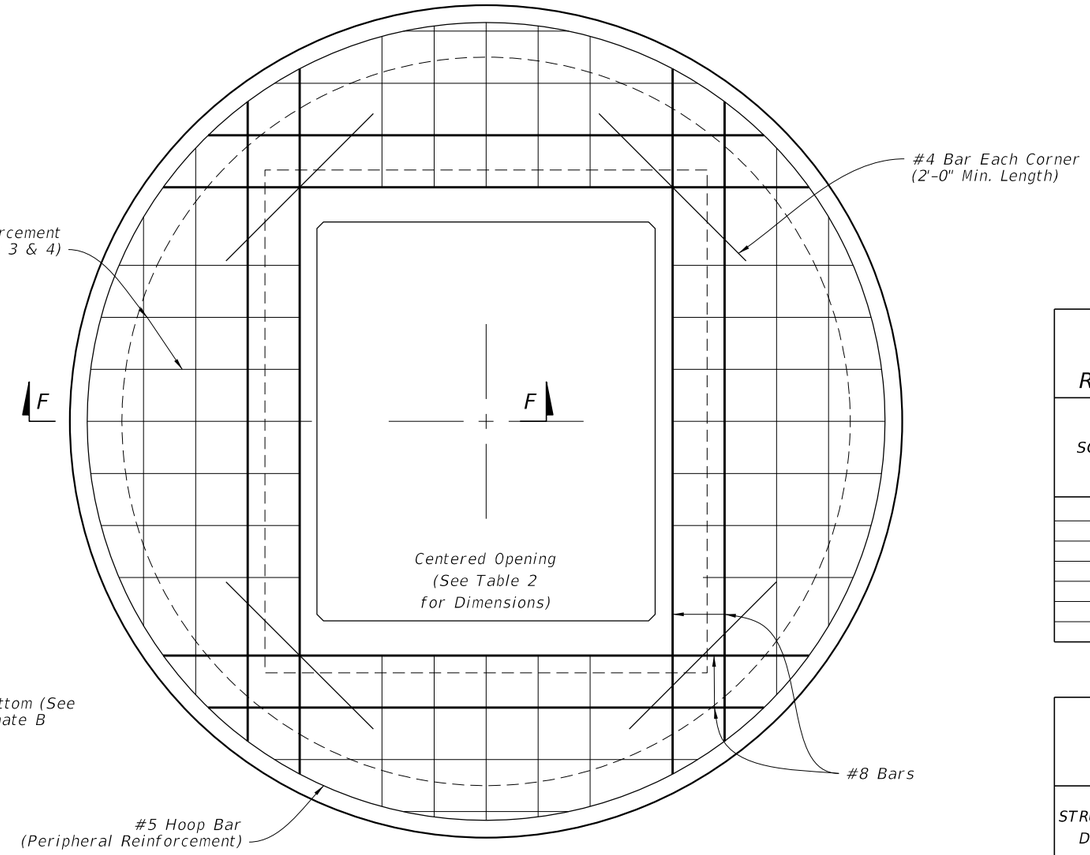

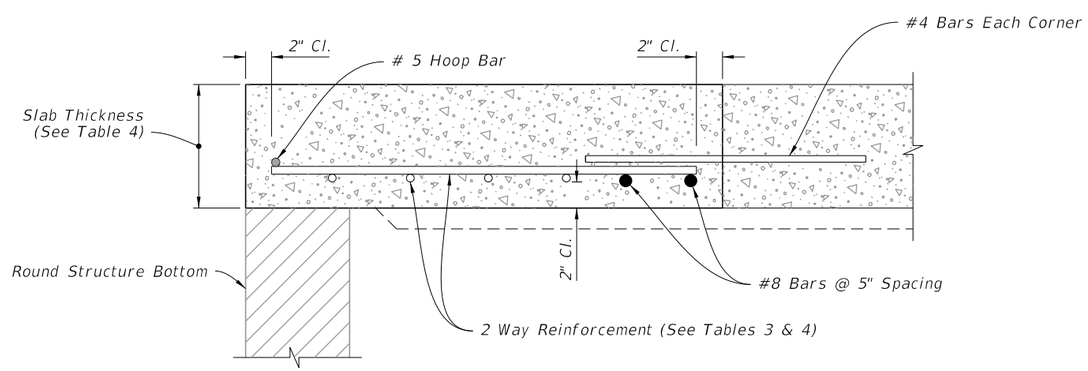

SECTION F-F

TOP SLAB REINFORCEMENT DETAILS

TABLE 2 TOP SLAB OPENING		
DIAMETER	OPENING SIZE	
	Min.	Max.
5'-0" to 8'-0"	2'-11" x 4'-0"	3'-3" x 3'-10"

TABLE 3 TOP SLAB REINFORCING SCHEDULE	
SCHEDULE	GRADE 60 (BAR) OR 65 KSI & 70 KSI (WIRE FABRIC) In.²/ft.
A	0.20
B	0.24
C	0.37
D	0.53
E	0.73
F	1.06
G	1.45

TABLE 4 TOP SLAB WITH CENTERED OPENING		
STRUCTURE DEPTH	SLAB THICKNESS	REINFORCING (2 WAY) SCHEDULE
SIZE: 5'-0"		
≥0.5'<30'	9½"	C
30'<40'	9½"	D
SIZE: 6'-0"		
0.5'<8'	9½"	B
8'<18'	9½"	C
18'<30'	9½"	D
30'<37'	9½"	E
37'-40'	9½"	G
SIZE: 8'-0"		
≥0.5'<9'	11½"	C
9'<15'	11½"	D
15'<23'	11½"	E
23'<33'	11½"	E
33'-40'	11½"	G

ALTERNATE A STRUCTURE BOTTOM - TOP SLAB DETAILS

GENERAL NOTES:

1. Work this Index with Index 425-001 and Index 425-010.

2. All reinforcing is Grade 60 bars with 2" minimum cover unless otherwise noted. Cut or bend bars out of way of pipe to clear pipe by 1½". See Index 425-001 for equivalent area of welded wire fabric.

2. Chamfer all exposed edges and corners ¾" or tooled to ¼" radius.

4. All dimensions are for both precast and cast-in-place inlets unless otherwise noted.

5. Quantities are for informational and estimating purposes only.

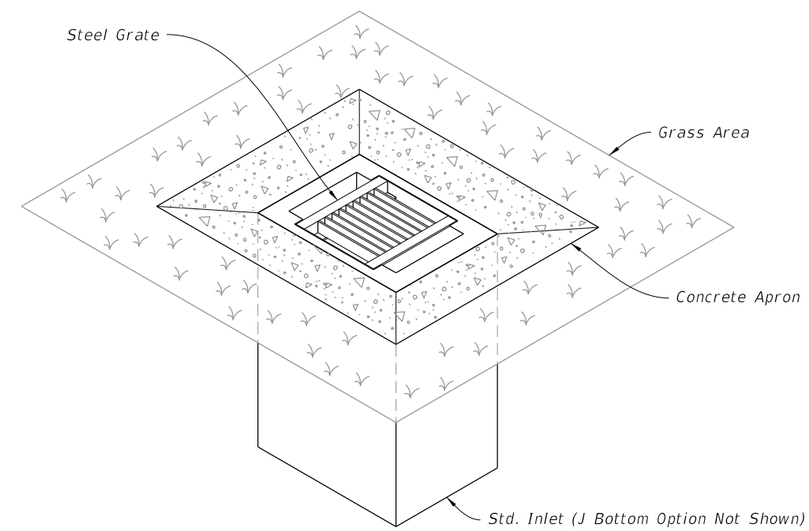

DITCH BOTTOM INLET TYPE A

(Pipe Opening Not Shown)

TABLE OF CONTENTS:

Sheet	Description
1	General Notes and Contents
2	Dimensional, Reinforcing, and Steel Grate Details
3	Concrete Apron and Sodded Area Details
4	Alternate A Structure Bottom - Top Slab Details

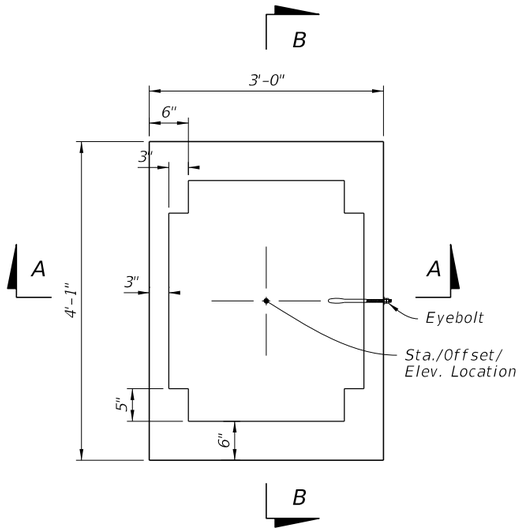

PLAN

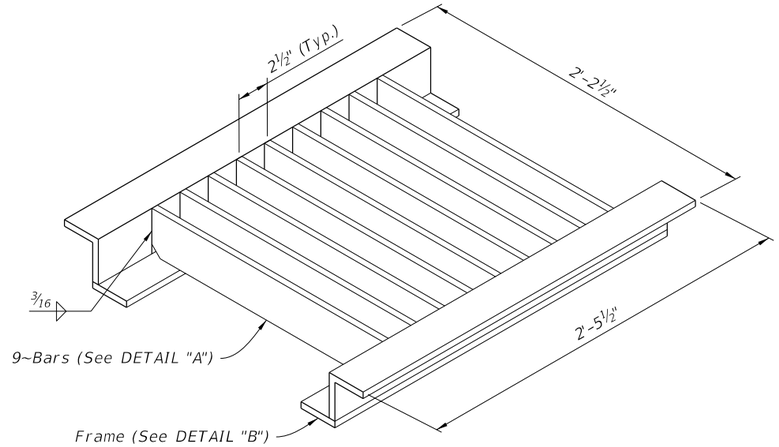

ISOMETRIC VIEW

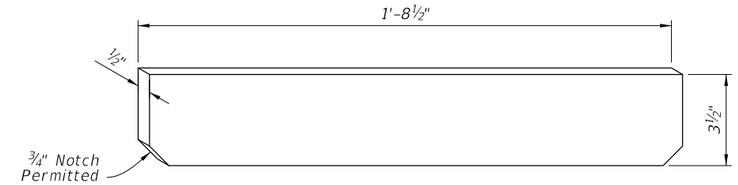

DETAIL "A"

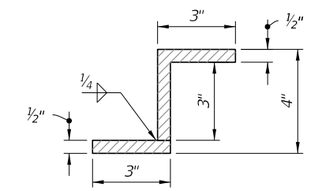

DETAIL "B"

STEEL GRATE DETAILS

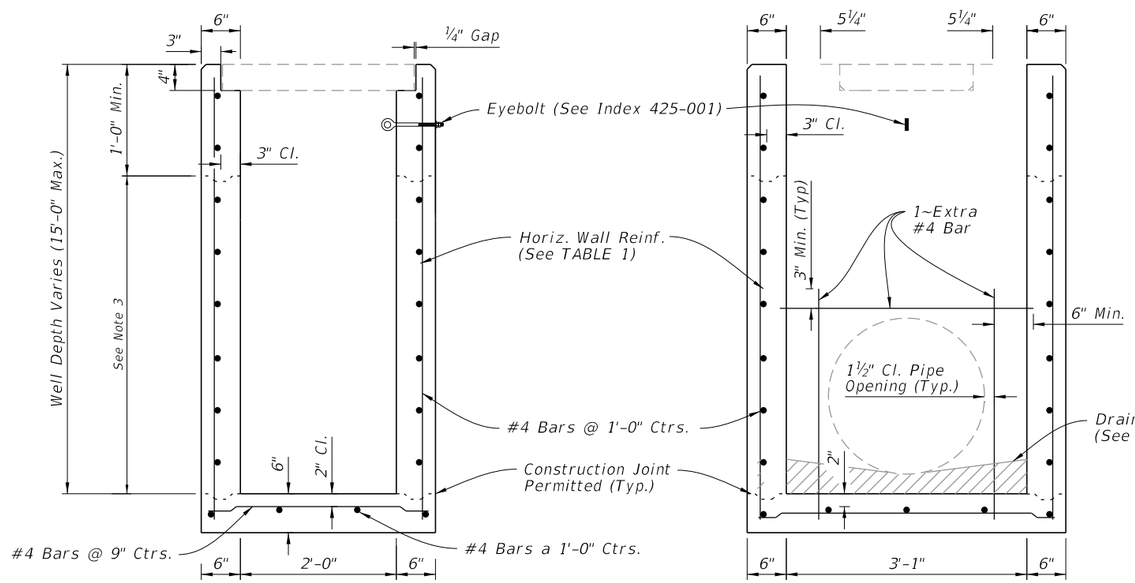

SECTION A-A
(Pipe Opening Not Shown)

SECTION B-B
(Pipe Opening Shown)

DIMENSIONAL AND REINFORCING DETAILS

TABLE 1 HORIZONTAL WALL REINFORCING SCHEDULE				
WALL DEPTH	SCHEDULE	AREA (in.²/ft.)	MAX. SPACING	
			BARS	WWR
0' - 10'	A12	0.20	12"	8"
10' - 15'	A6	0.20	6"	5"

NOTES:

1. Plan View: The Steel Grate, Concrete Apron, and Sod are not shown.
2. See Sheet 3 for Concrete Apron and Sodded Area details.
3. Construction joints permitted between these limits. See Index 425-001 for minimum dimensions.

DIMENSIONAL, REINFORCING, AND STEEL GRATE DETAILS

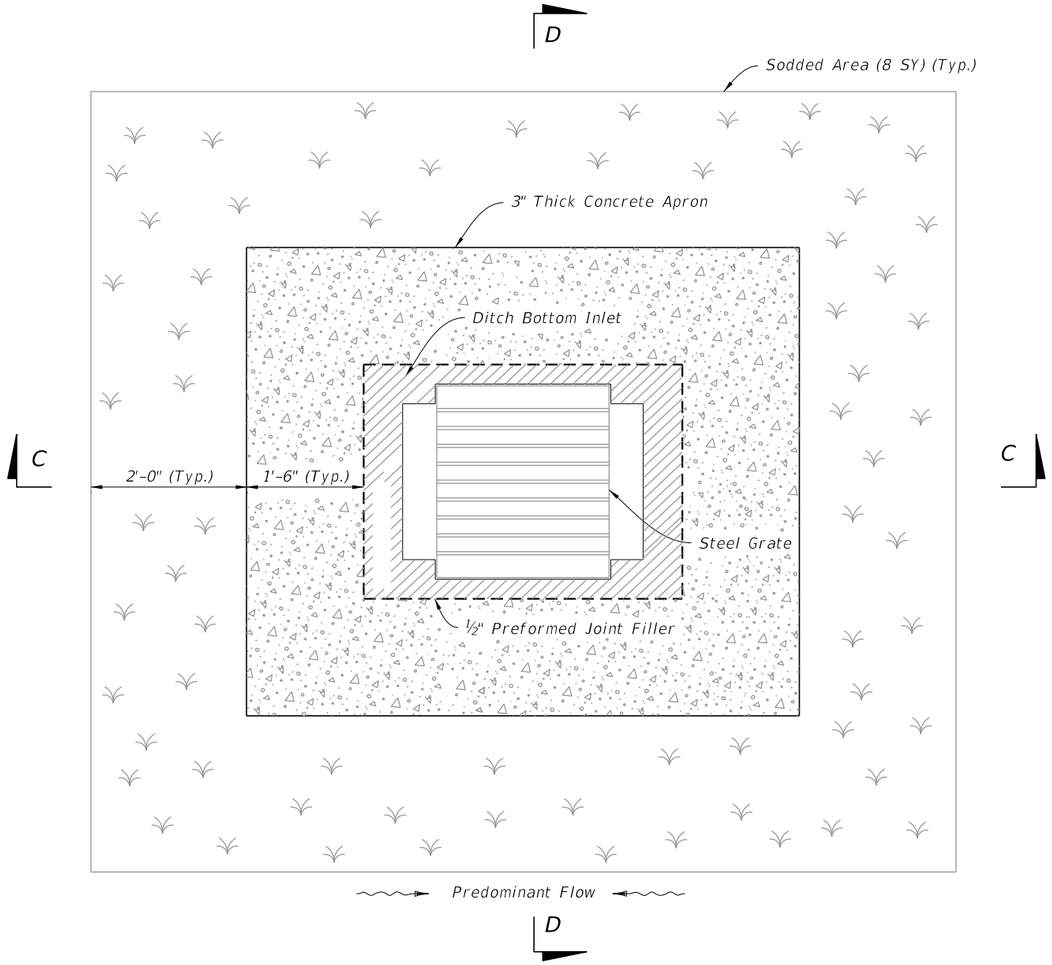

PLAN

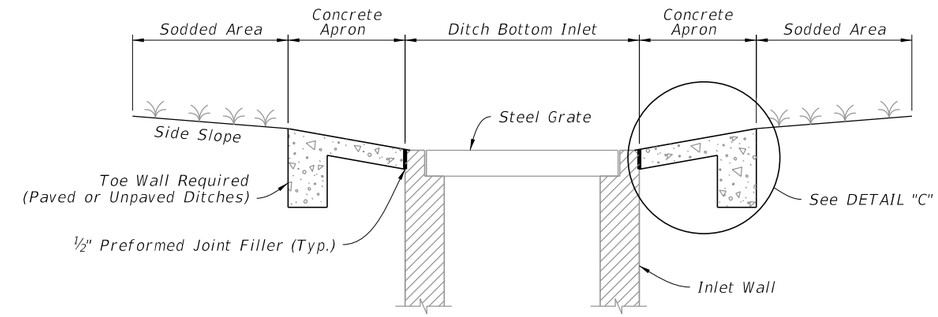

SECTION D-D

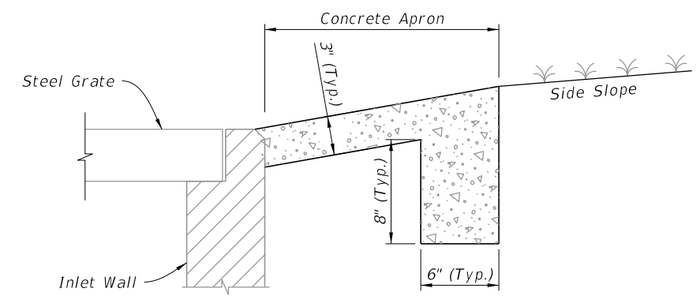

DETAIL "C"

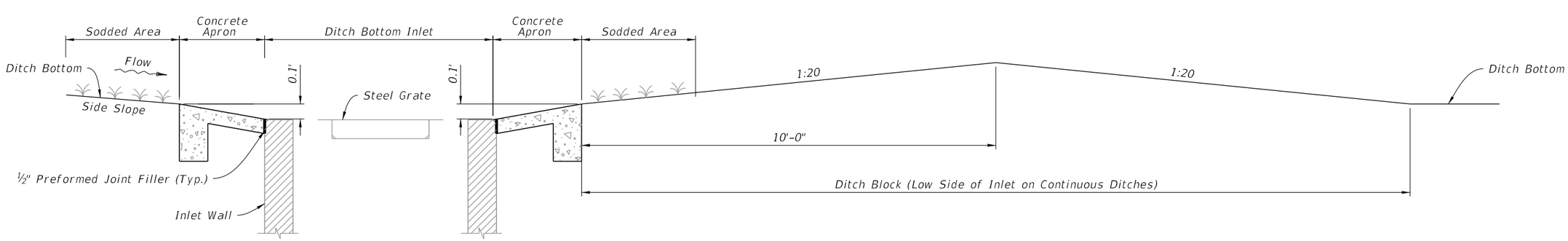

SECTION C-C AND DITCH BLOCK DETAIL

CONCRETE APRON AND SODDED AREA DETAILS

LAST REVISION	REVISION	DESCRIPTION:			INDEX	SHEET
10/01/20			FY 2023-24 STANDARD PLANS	DITCH BOTTOM INLET TYPE A	425-050	3 of 4

10/20/2022 8:47:25 AM

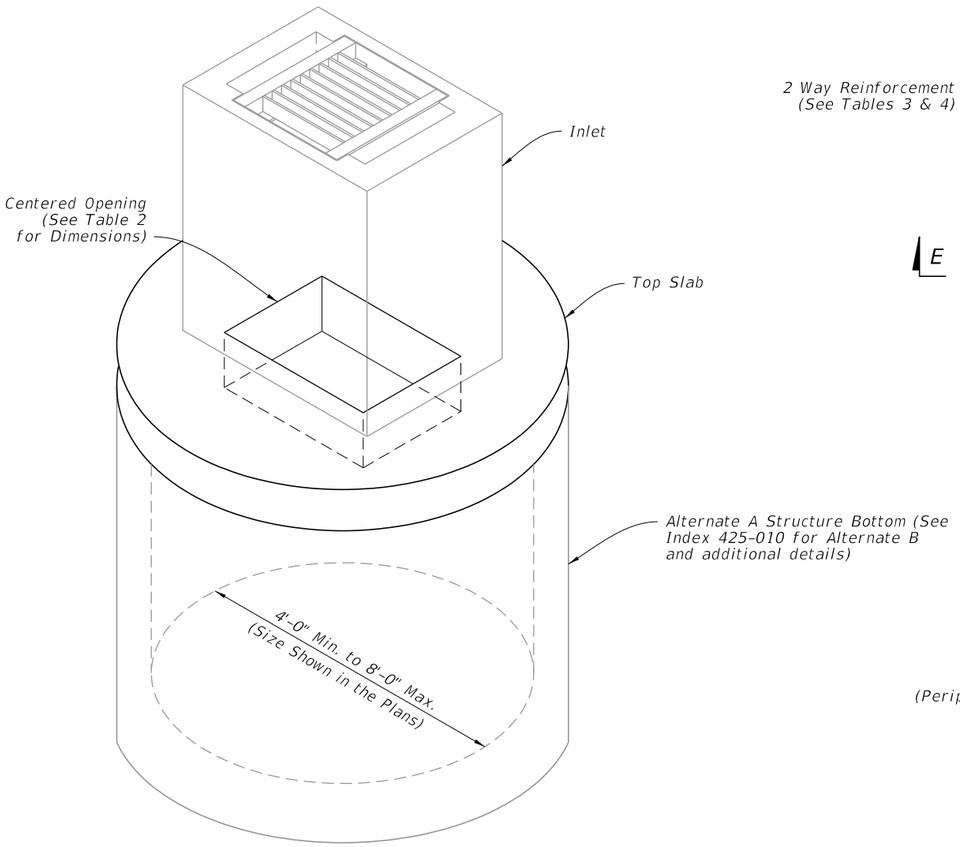

ISOMETRIC VIEW

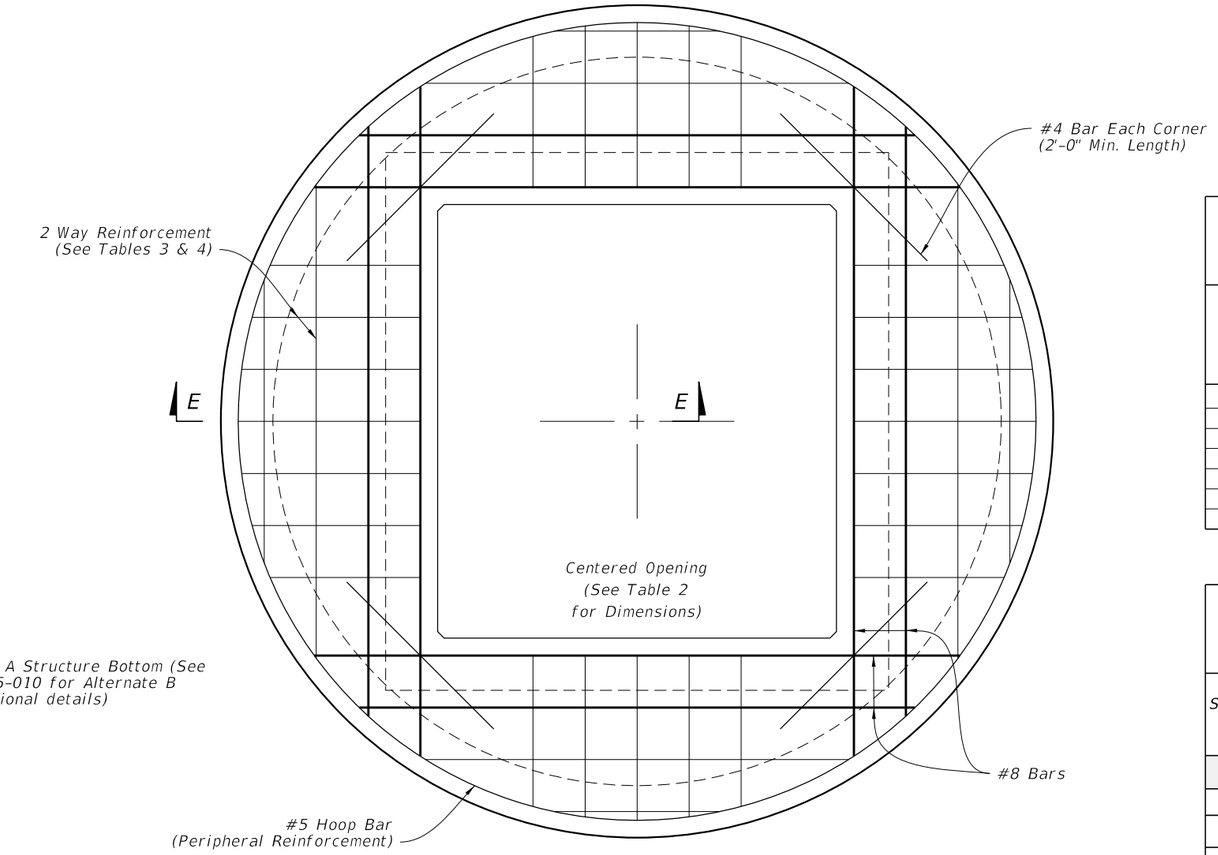

PLAN

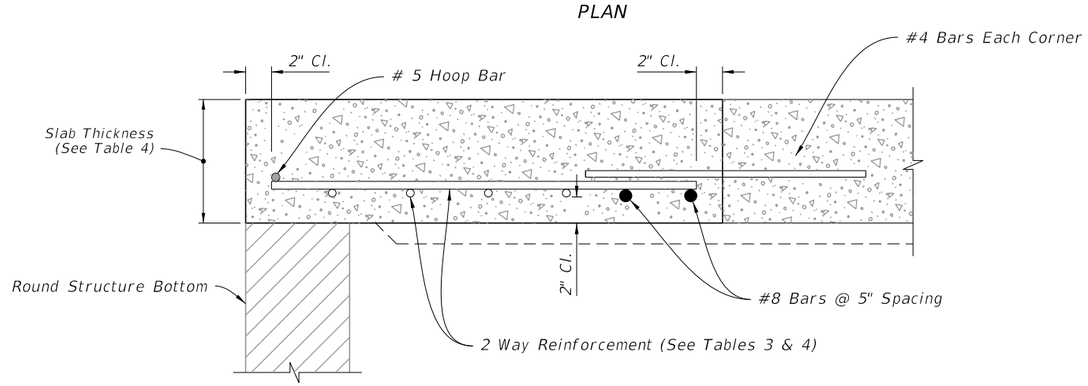

SECTION E-E

TOP SLAB REINFORCEMENT DETAILS

TABLE 2
TOP SLAB OPENING

BOTTOM STRUCTURE DIAMETER	OPENING SIZE	
	Min.	Max.
4'-0" to 8'-0"	2'-0" x 3'-1"	--

TABLE 3
TOP SLAB
REINFORCING SCHEDULE

SCHEDULE	GRADE 60 (BAR) OR 65 KSI & 70 KSI (WIRE FABRIC) In.²/ft.
A	0.20
B	0.24
C	0.37
D	0.53
E	0.73
F	1.06
G	1.45

TABLE 4
TOP SLAB WITH
CENTERED OPENING

STRUCTURE DEPTH	SLAB THICKNESS	REINFORCING (2 WAY) SCHEDULE
SIZE: 4'-0"		
≥0.5'-40'	9½"	C
SIZE: 5'-0"		
≥0.5'<30'	9½"	C
30'-40'	9½"	D
SIZE: 6'-0"		
0.5'<8'	9½"	B
8'<18'	9½"	C
18'<30'	9½"	D
30'<37'	9½"	E
37'-40'	9½"	G
SIZE: 8'-0"		
≥0.5'<9'	11½"	C
9'<15'	11½"	D
15'<23'	11½"	E
23'<33'	11½"	E
33'-40'	11½"	G

10/20/2022 8:47:26 AM

ALTERNATE A STRUCTURE BOTTOM - TOP SLAB DETAILS

GENERAL NOTES:

1. Work this Index with Index 425-001 and Index 425-010.

2. All reinforcing is Grade 60 bars with 2" minimum cover unless otherwise noted. See Index 425-001 for equivalent area of welded wire fabric. Bars to be cut or bent for min. 1½" clearance around pipe.

3. Chamfer all exposed edges and corners ¾" or tooled to ¼" radius.

4. Dimensions are for both precast and cast-in-place inlets unless otherwise noted.

5. Quantities are for informational and estimating purposes only.

TABLE OF CONTENTS:

Sheet	Description
1	General Notes and Contents
2	Dimensional, Reinforcing, and Grate Details
3	Traversable Top Details
4	Concrete Apron and Sodded Area Details
5	Alternate A Structure Bottom - Top Slab Details

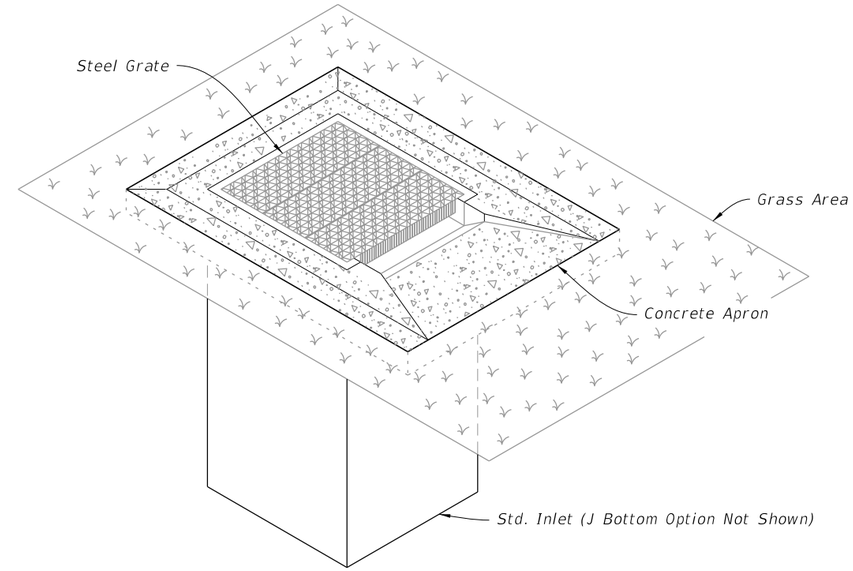

SINGLE SLOT INLET
(Pipe Connection Not Shown)

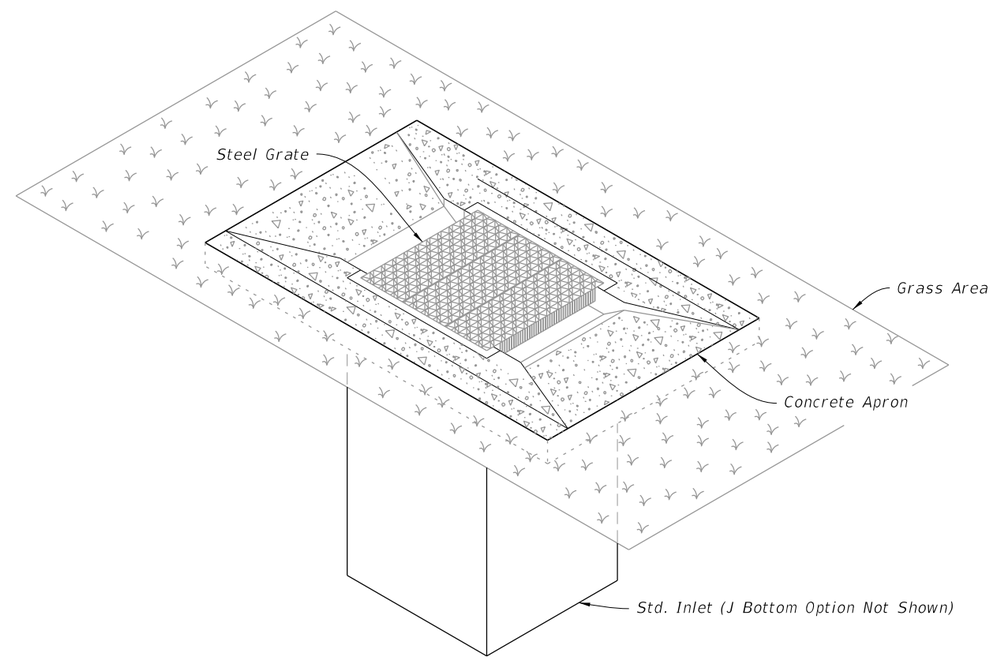

DOUBLE SLOT INLET
(Pipe Connection Not Shown)

10/20/2022 8:47:27 AM

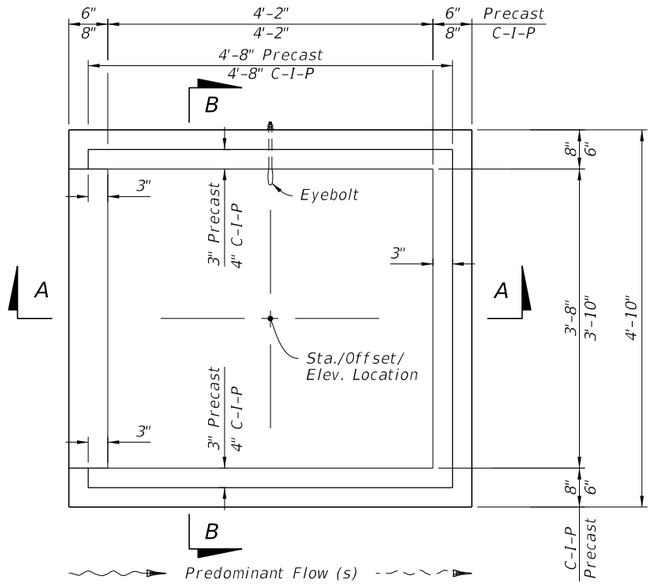

PLAN

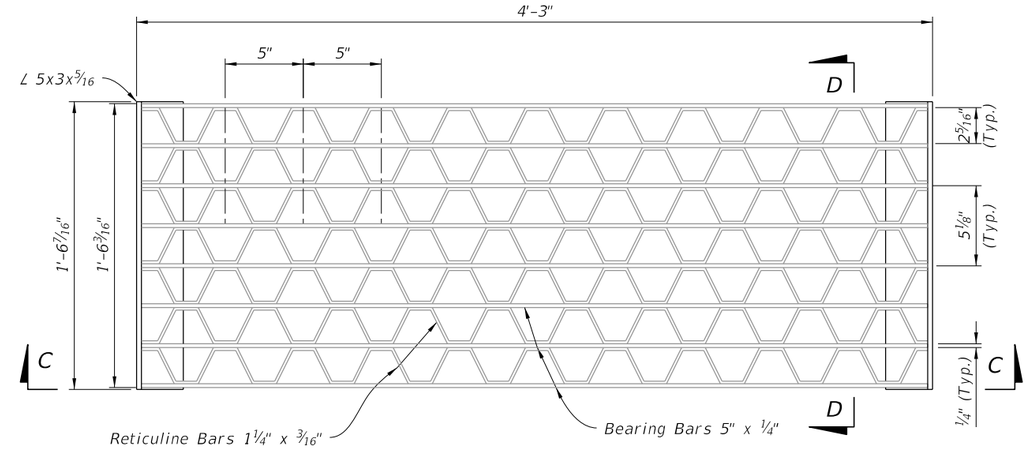

PLAN

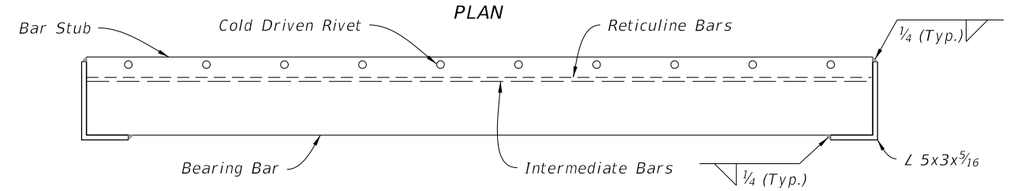

SECTION C-C

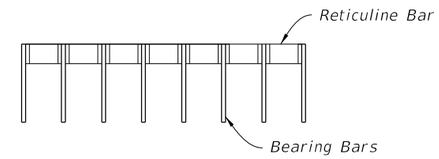

SECTION D-D

STEEL GRATE DETAILS

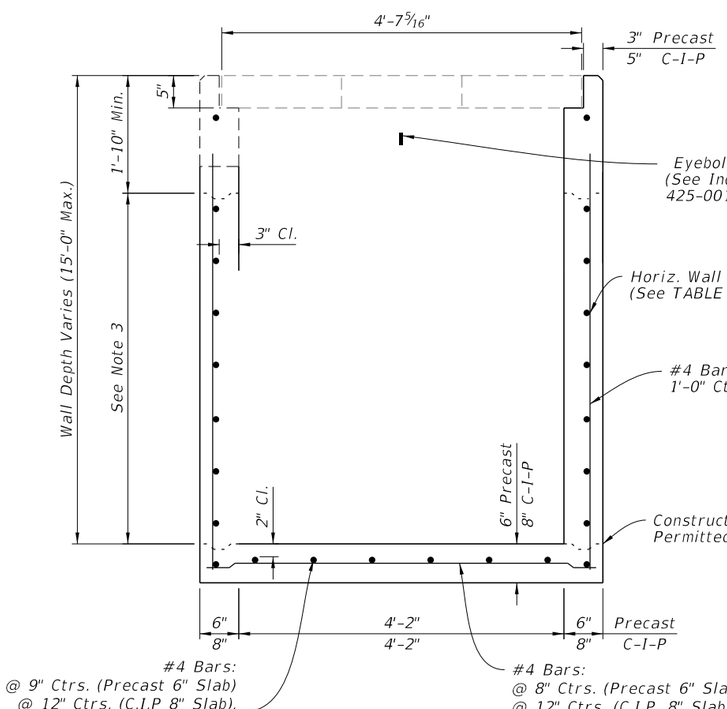

SECTION A-A
(Pipe Opening Not Shown)

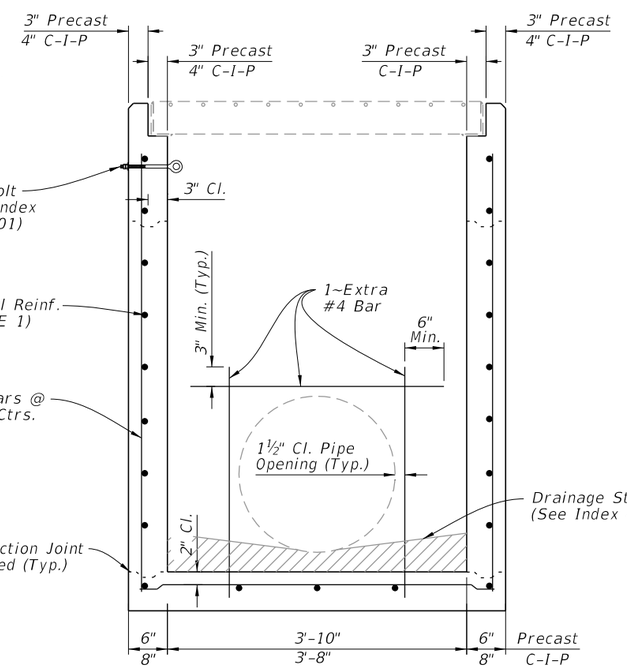

SECTION B-B
(Pipe Opening Shown)

DIMENSIONAL AND REINFORCING DETAILS

TABLE 1
HORIZONTAL WALL REINFORCING SCHEDULE

WALL DEPTH	SCHEDULE	AREA (in.²/ft.)	MAX. SPACING	
			BARS	WWR
0' - 5'	A12	0.200	12"	8"
5' - 9'	A6	0.200	6"	5"
9' - 13'	B5.5	0.240	5 1/2"	5"
13'-15'	Special	0.267	5"	4"

NOTES:

1. Plan View; grate, apron, slots and sod not shown.
2. See Sheet 3 for apron and traversable slot details.
3. Construction joints permitted between these limits. See Index 425-001 for minimum dimensions.

DIMENSIONAL, REINFORCING, AND GRATE DETAILS

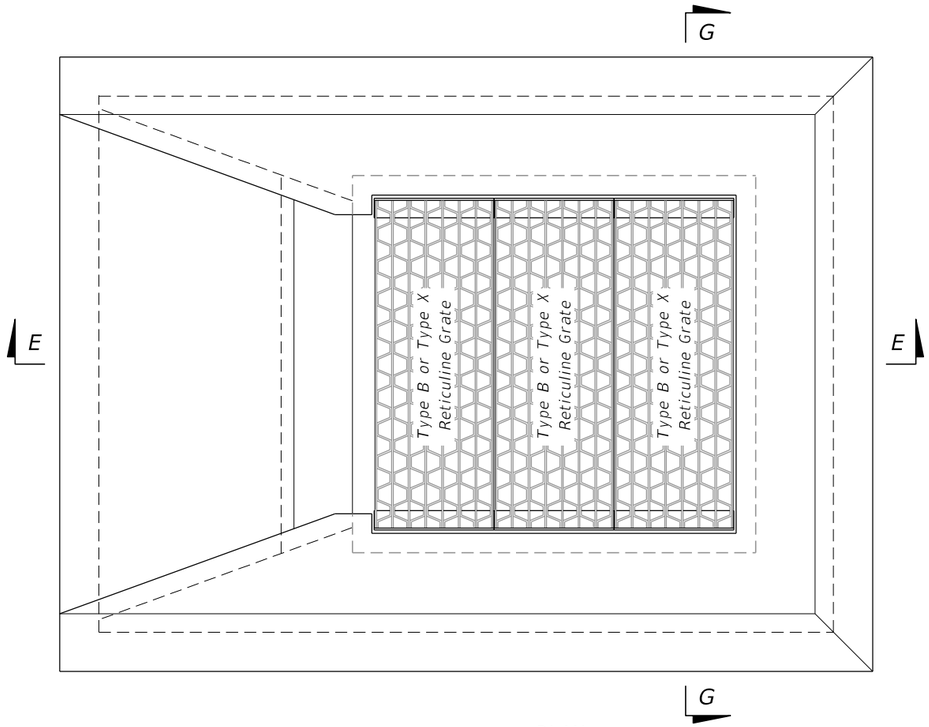

PLAN

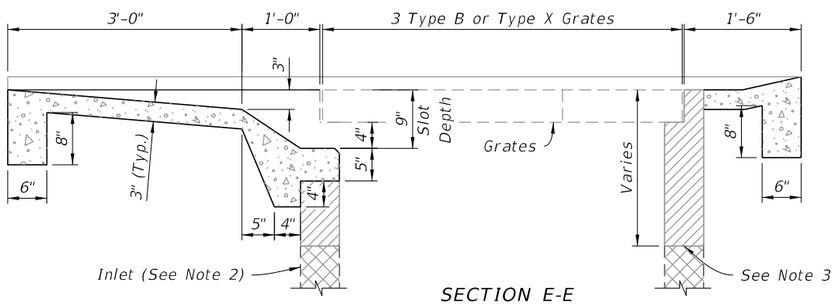

SECTION E-E

SINGLE SLOT

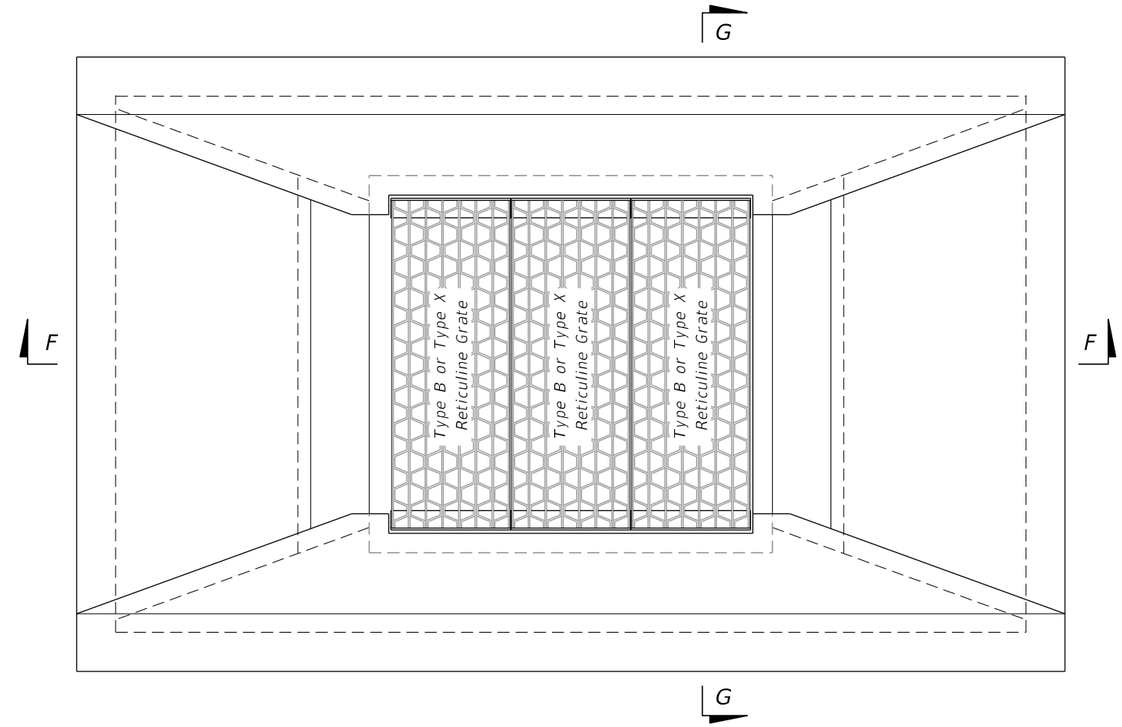

PLAN

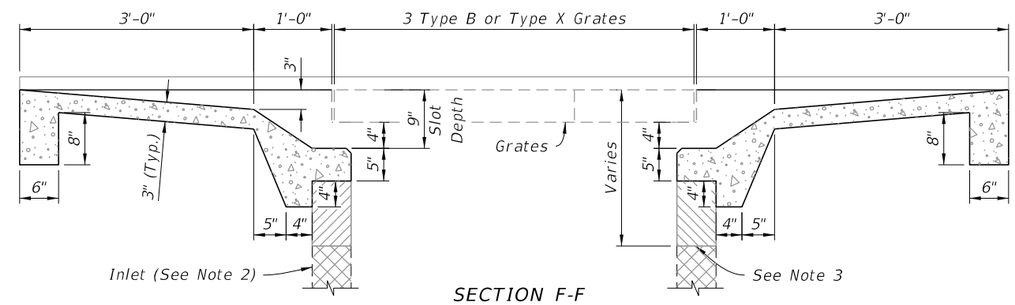

SECTION F-F

DOUBLE SLOT

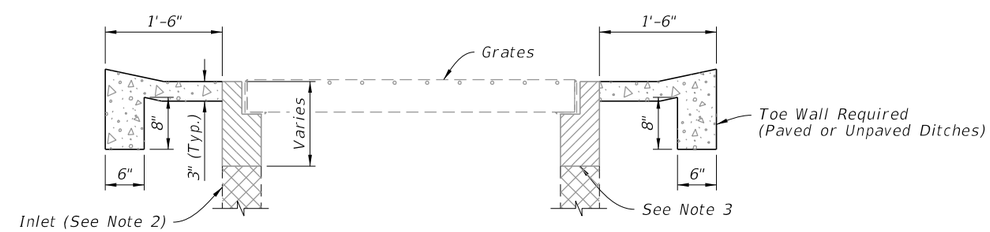

SECTION G-G

NOTES:

1. These traversable tops are for new or existing Type B Inlets and for conversion of existing Type X Inlets.

2. Inlet box (line type indicates existing box to facilitate depiction of partial construction on existing inlets)

3. On new boxes the traversable top may be cast as a monolithic unit or cast in segments, and the location of this line may be lower to facilitate handling and placement; however, the slot depth is to remain at 9 inches. See Index 425-001 for top to wall connection. For converting to traversable tops on existing inlets remove concrete to this line and expose the existing reinforcement. Reshape or splice in reinforcement to penetrate the rim and returns of the grate seat, and bend the reinforcement into the slot shelf to extend into the abutting throat pavement.

4. See Sheet 2 for Precast and C-I-P dimensions.

TRAVERSABLE TOP DETAILS

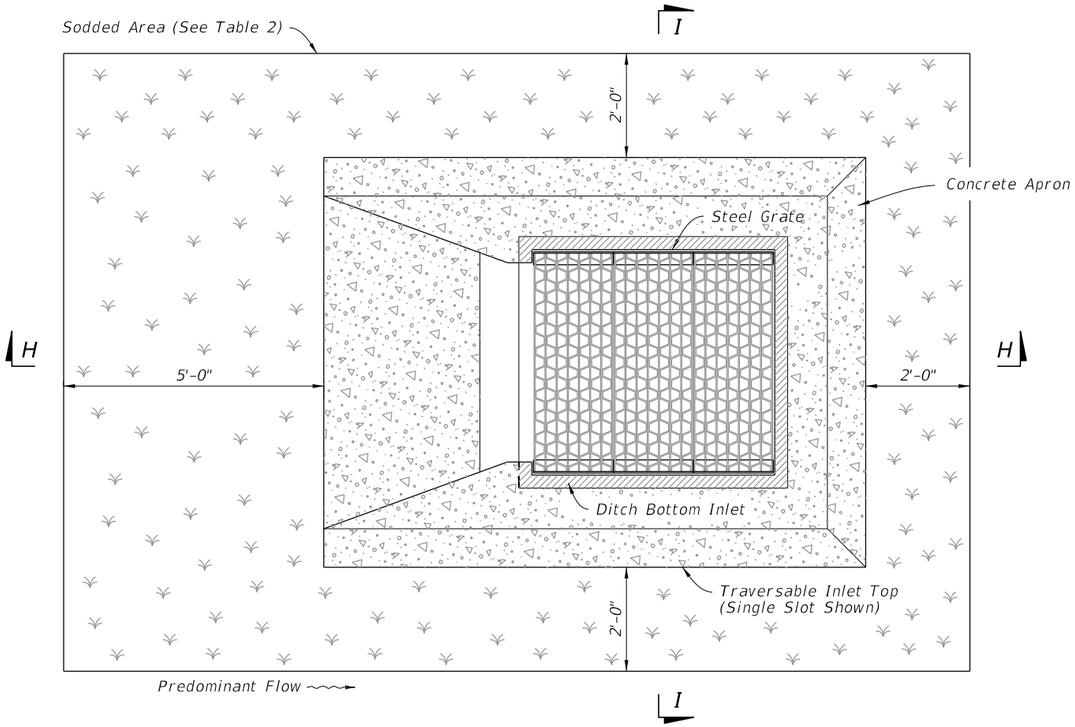

PLAN

TABLE 2 ESTIMATED QUANTITIES			
SLOT TYPE	Concrete Apron		SOD
	SY	CY	SY
Single	6.2	0.9	14
Double	8.1	1.1	19

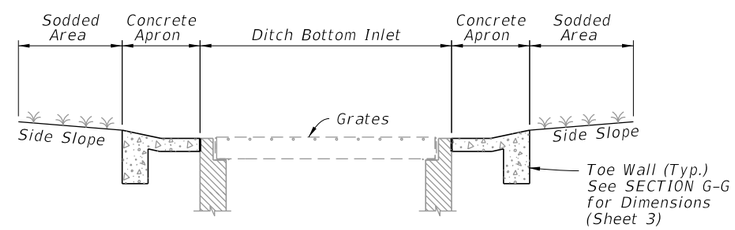

SECTION I-I

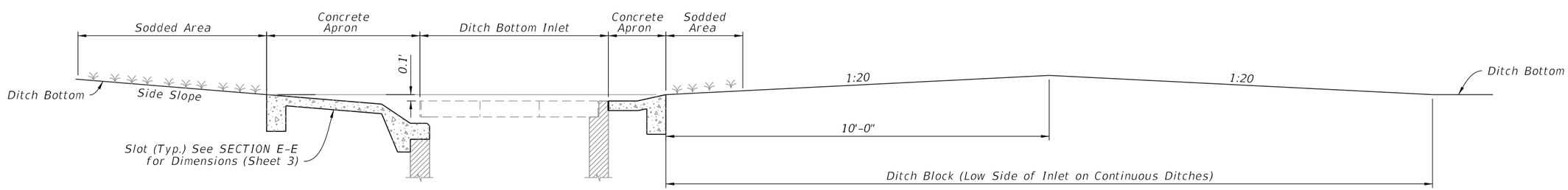

SECTION H-H AND DITCH BLOCK

CONCRETE APRON AND SODDED AREA DETAILS

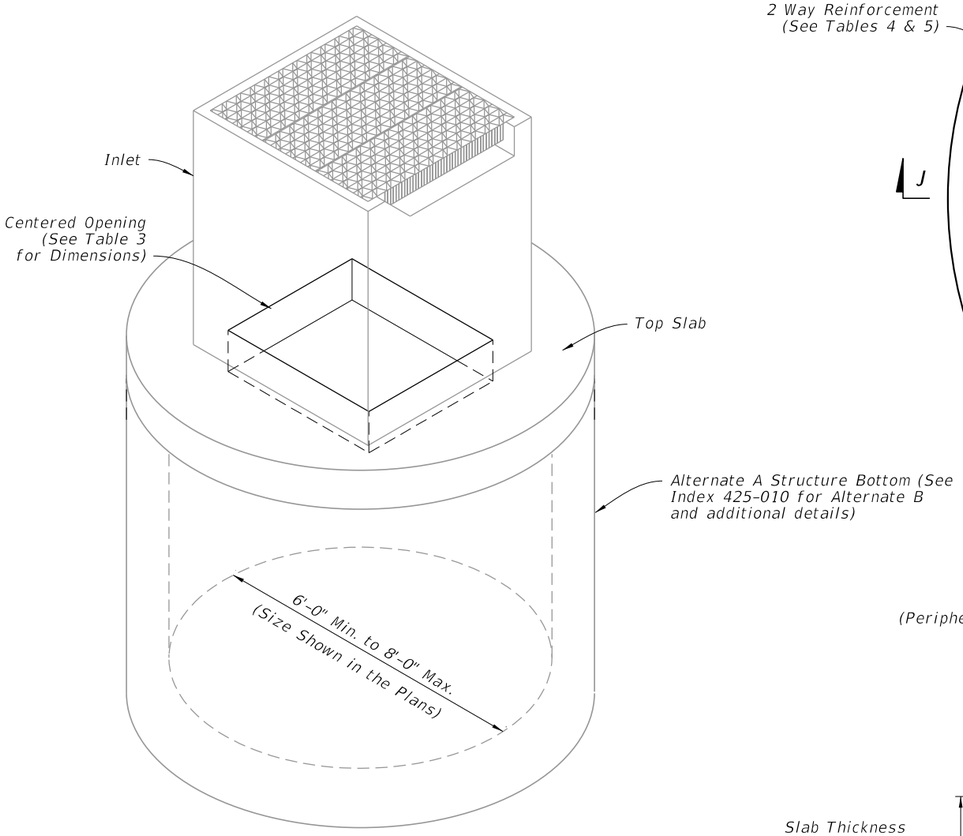

ISOMETRIC VIEW

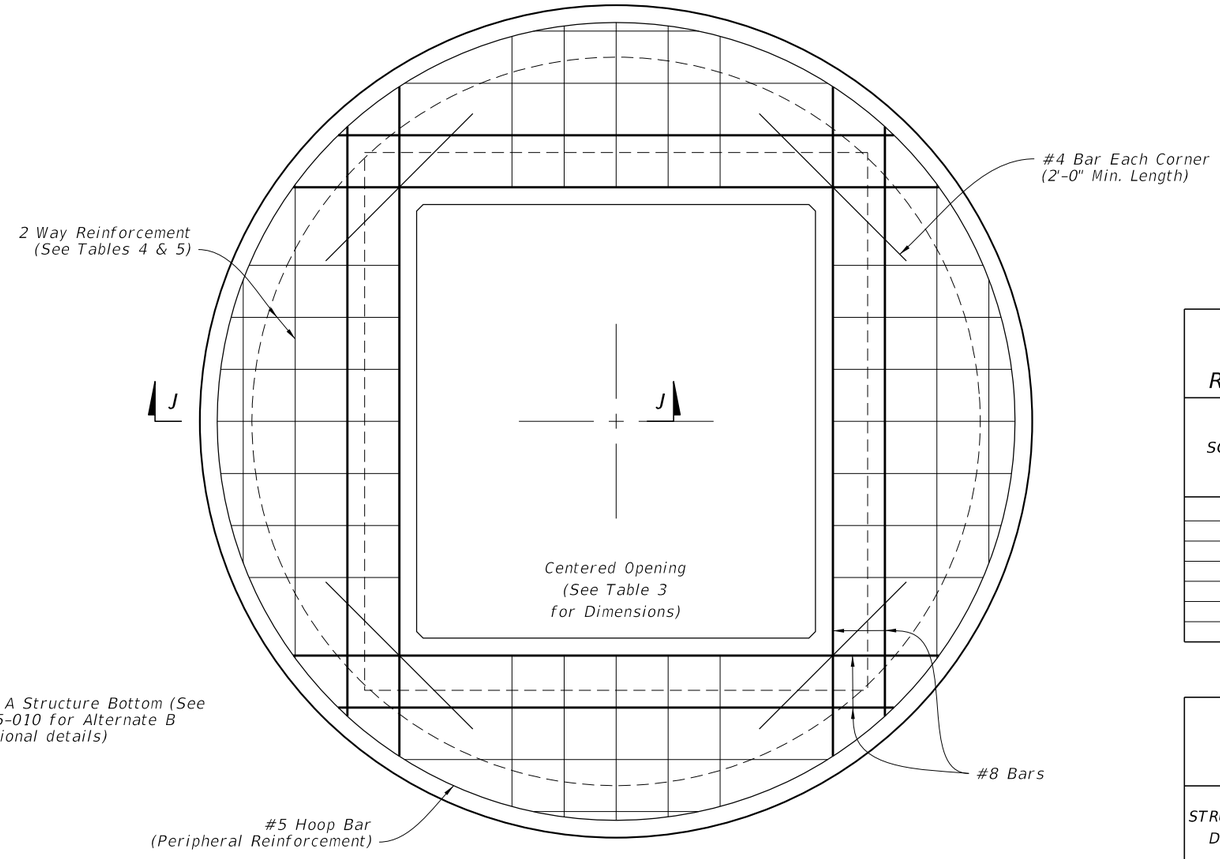

PLAN

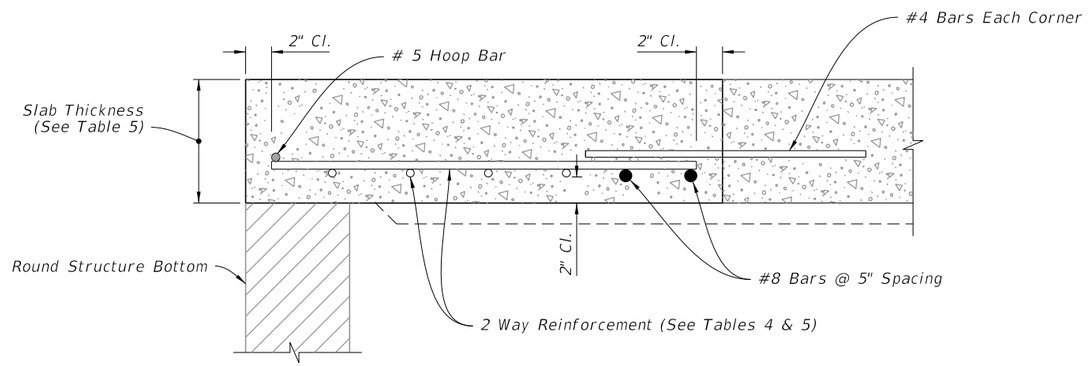

SECTION J-J

TOP SLAB REINFORCMENT DETAILS

TABLE 3 TOP SLAB OPENING		
DIAMETER	OPENING SIZE	
	Min.	Max.
6'-0" to 8'-0"	3'-8" x 4'-2"	3'-10" x 4'-2"

TABLE 4 TOP SLAB REINFORCING SCHEDULE	
SCHEDULE	GRADE 60 (BAR) OR 65 KSI & 70 KSI (WIRE FABRIC) In.²/ft.
A	0.20
B	0.24
C	0.37
D	0.53
E	0.73
F	1.06
G	1.45

TABLE 5 TOP SLAB WITH CENTERED OPENING		
STRUCTURE DEPTH	SLAB THICKNESS	REINFORCING (2 WAY) SCHEDULE
SIZE: 6'-0"		
0.5'<8'	9½"	B
8'<18'	9½"	C
18'<30'	9½"	D
30'<37'	9½"	E
37'-40'	9½"	G
SIZE: 8'-0"		
≥0.5'<9'	11½"	C
9'<15'	11½"	D
15'<23'	11½"	E
23'<33'	11½"	E
33'-40'	11½"	G

ALTERNATE A STRUCTURE BOTTOM - TOP SLAB DETAILS

GENERAL NOTES:

1. Work this Index with Index 425-001 and Index 425-010.
2. Chamfer all exposed edges and corners ¾" chamfer or tooled to ¼" radius.
3. All reinforcing is Grade 60 bars with 2" minimum. cover unless otherwise noted. Cut or bend bars for 1½" clearance around pipe opening. Provide one additional #4 bar above and at each side of pipe opening.
4. Use Concrete Apron on inlets without slots and inlets with non-traversable slots only when called for in the Plans.
5. Quantities are for informational and estimating purposes only.

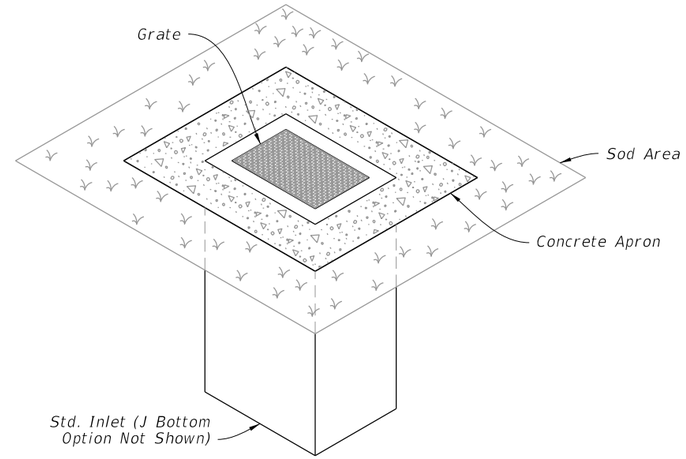

DITCH BOTTOM INLET TYPE C
TRAVERSABLE
(Without Slot - Type D, E, and H Similar, Pipe Connection Not Shown)

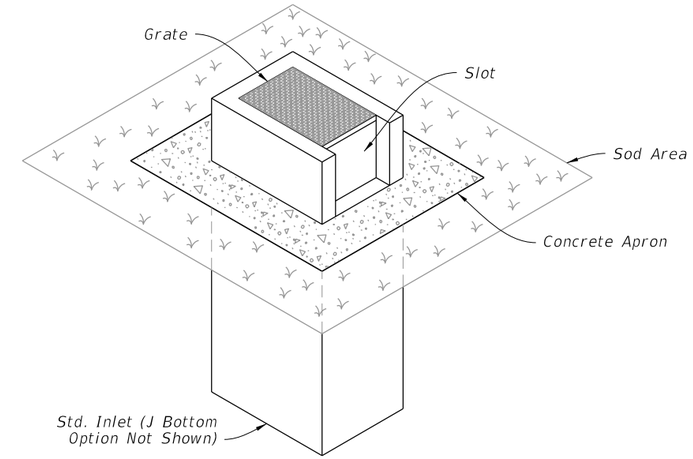

DITCH BOTTOM INLET TYPE C
NON-TRAVERSABLE
(Slot > 7" Shown - Type D, E, and H Similar, Pipe Connection Not Shown)

TABLE OF CONTENTS:

Sheet	Description
1	General Notes and Contents
2	Type C - Dimensional, Reinforcing, and Grate Details
3	Type D - Dimensional, Reinforcing, and Grate Details
4	Type E - Dimensional, Reinforcing, and Grate Details
5	Type H (2 & 3 Grate) - Dimensional, Reinforcing, and Steel Grate Details
6	Type H (4 Grate) - Dimensional, Reinforcing, and Steel Grate Details
7	Cast Iron Grate Details
8	Non-Traversable Inlet Details
9	Traversable Inlet Without Slot Details
10	Traversable Inlet With Slot Details
11	Case 1 - Add Traversable Slots to Existing Inlets
12	Case 2 - Add Traversable Slots (Partial) to Existing Inlets
13	Case 3 - Add Traversable Slots (Partial) to Existing Inlets and Ditch Block
14	Alternate A Structure Bottom - Top Slab Details

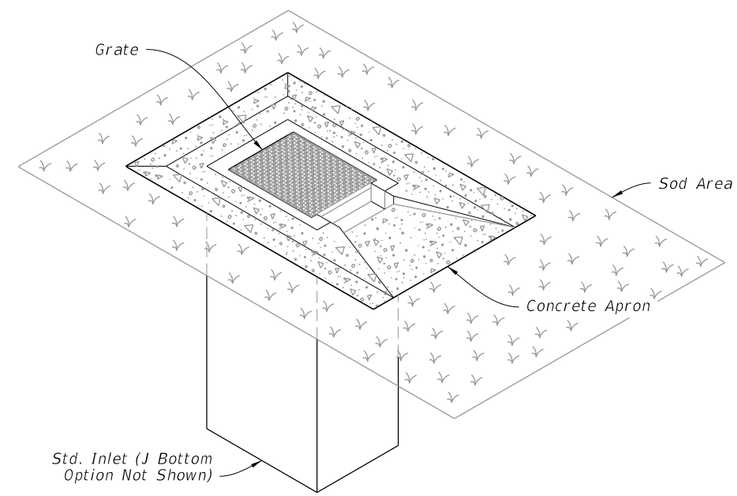

DITCH BOTTOM INLET TYPE C
TRAVERSABLE
(Single Slot < 7" Shown, Double Slot, Type D, and E Similar, Pipe Connection Not Shown)

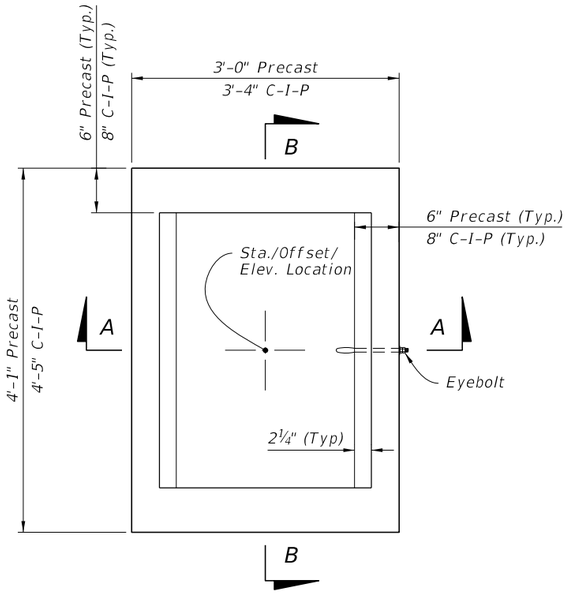

PLAN

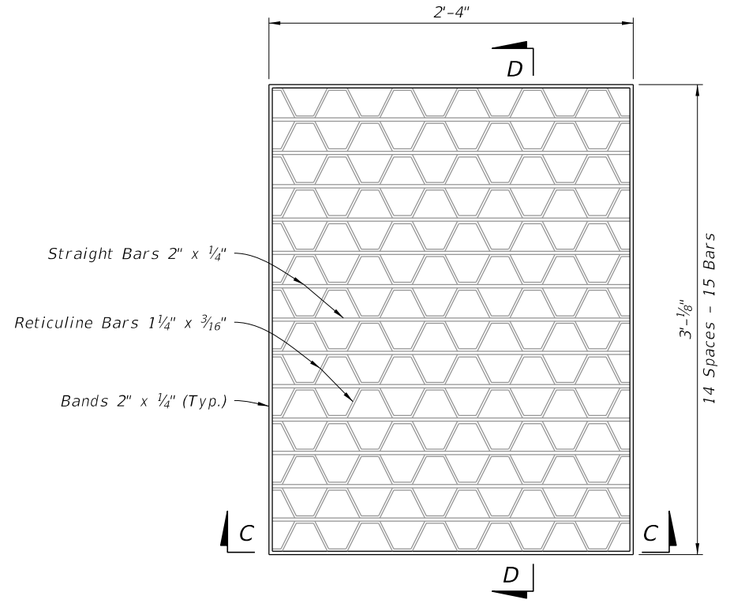

SECTION C-C

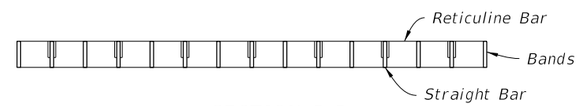

SECTION D-D

STEEL GRATE DETAIL

(Approx. 104 Lbs. - See Sheet 7 For Cast Iron Grates)

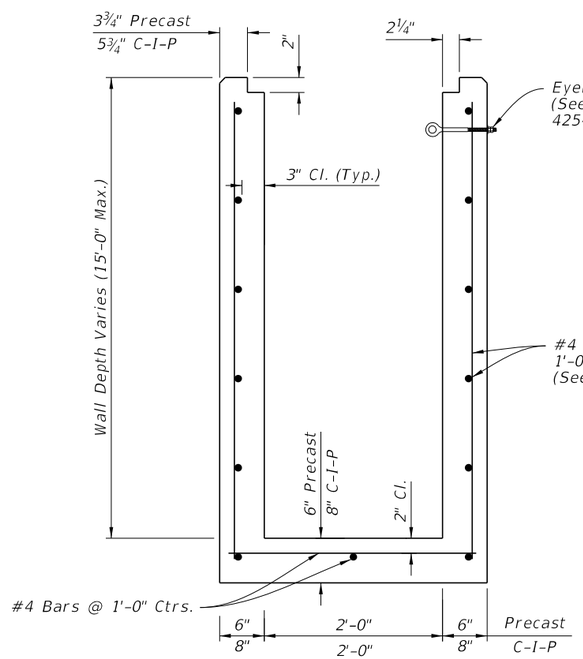

SECTION A-A
(Pipe Opening Not Shown)

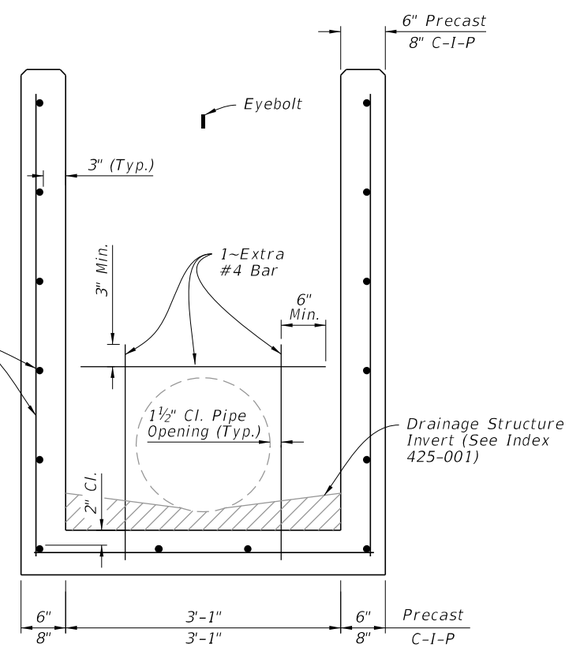

SECTION B-B
(Pipe Opening Shown)

TABLE 1 HORIZONTAL WALL REINFORCING SCHEDULE				
WALL DEPTH	SCHEDULE	AREA (in.²/ft.)	MAX. SPACING	
			BARS	WWF
0' - 15'	A12	0.20	12"	8"

NOTES:

1. Grate, Concrete Apron, and Sod not shown on structure detail.
2. See Sheet 8, 9, and 10 for Concrete Apron and Sodded Area details.

DIMENSIONAL AND REINFORCING DETAILS

TYPE C - DIMENSIONAL, REINFORCING, AND STEEL GRATE DETAILS

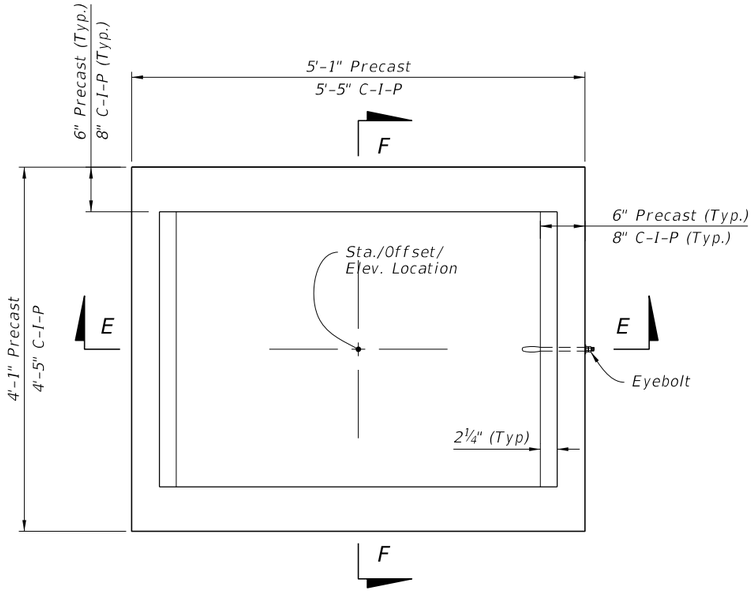

PLAN

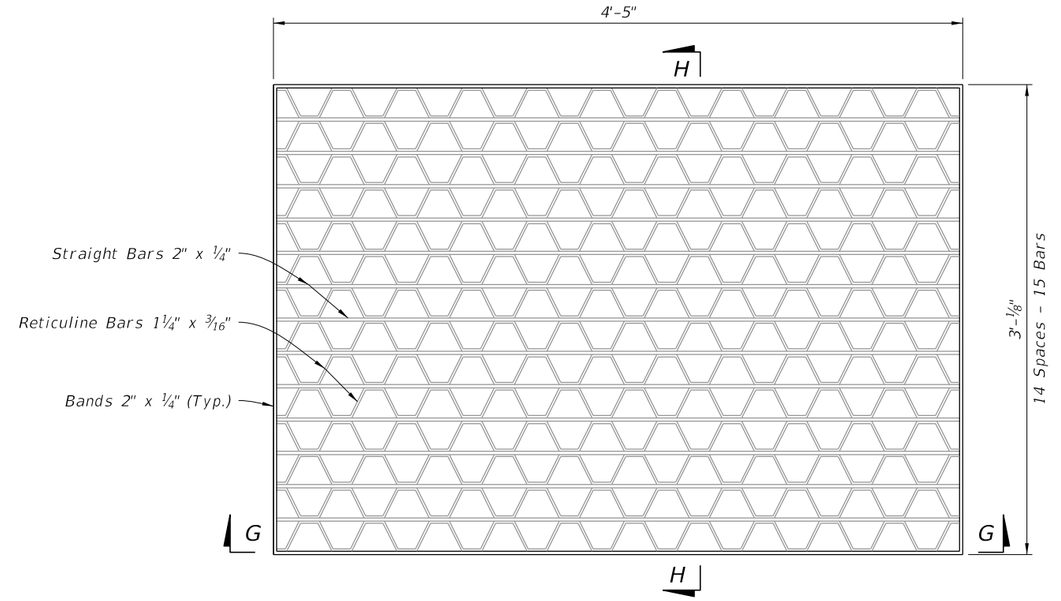

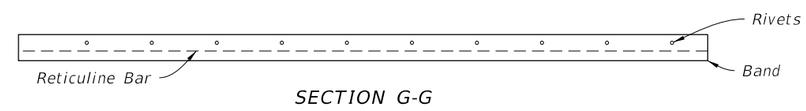

SECTION G-G

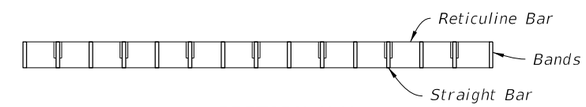

SECTION H-H

STEEL GRATE DETAIL

(Approx. 190 lbs. - See Sheet 7 For Cast Iron Grates)

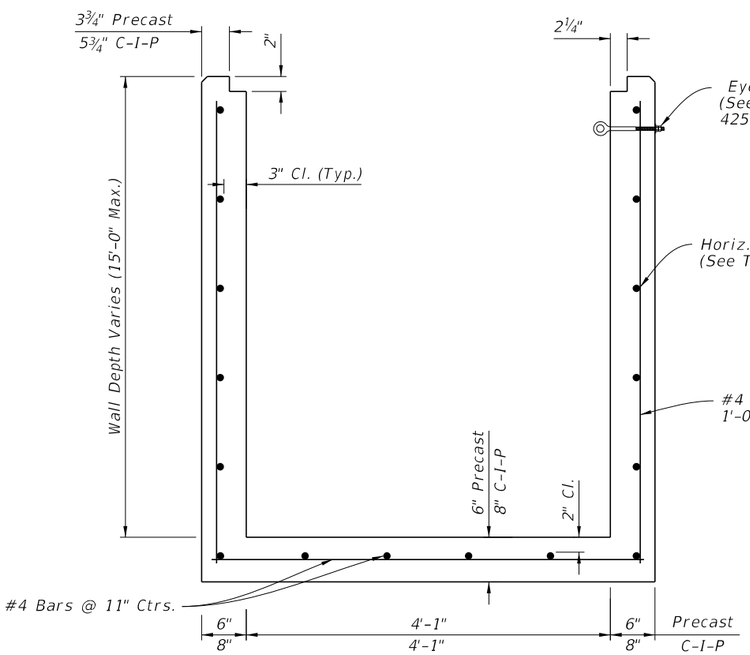

SECTION E-E

(Pipe Opening Not Shown)

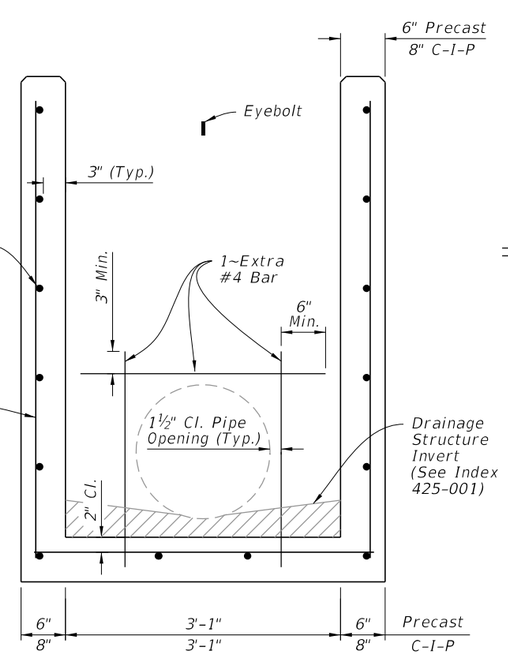

SECTION F-F

(Pipe Opening Shown)

TABLE 2
HORIZONTAL WALL REINFORCING SCHEDULE

WALL DEPTH	SCHEDULE	AREA (in.²/ft.)	MAX. SPACING	
			BARS	WWR
0' - 6'	A12	0.20	12"	8"
6' - 10'	A6	0.20	6"	5"
10' - 13'	A4	0.20	4"	3"
10' - 15'	B5.5	0.24	5½"	5"

NOTES:

1. Grate, Concrete Apron, and Sod not shown on structure details.
2. See Sheet 8, 9, and 10 for Concrete Apron and Sodded Area details.
3. Cast Iron Grate is not permitted on inlet Type D.

DIMENSIONAL AND REINFORCING DETAILS

TYPE D - DIMENSIONAL, REINFORCING, AND STEEL GRATE DETAILS

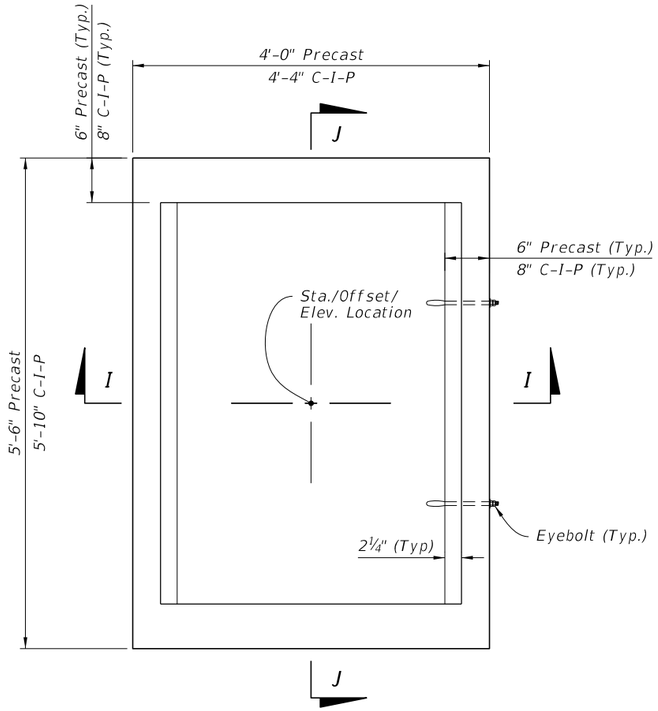

PLAN

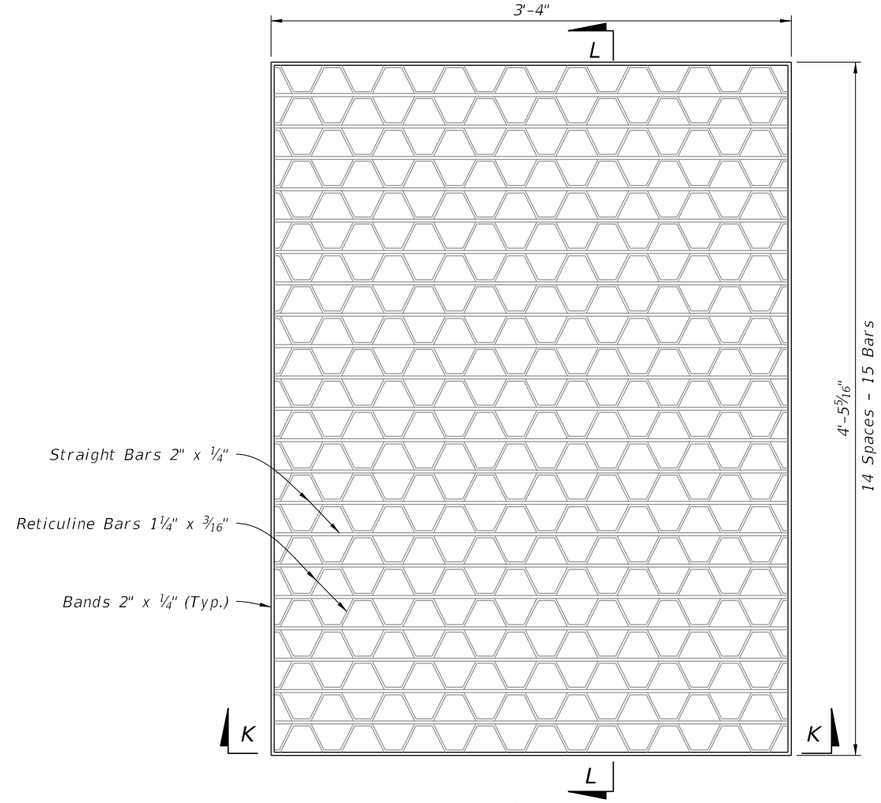

PLAN

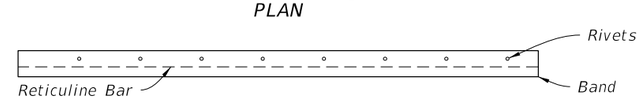

SECTION K-K

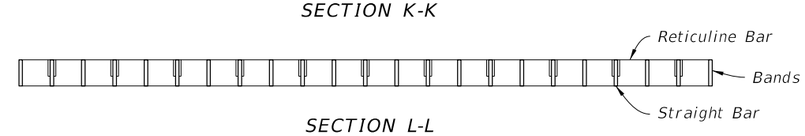

SECTION L-L

STEEL GRATE DETAIL

(Approx. 215 lbs. - See Sheet 7 For Cast Iron Grates)

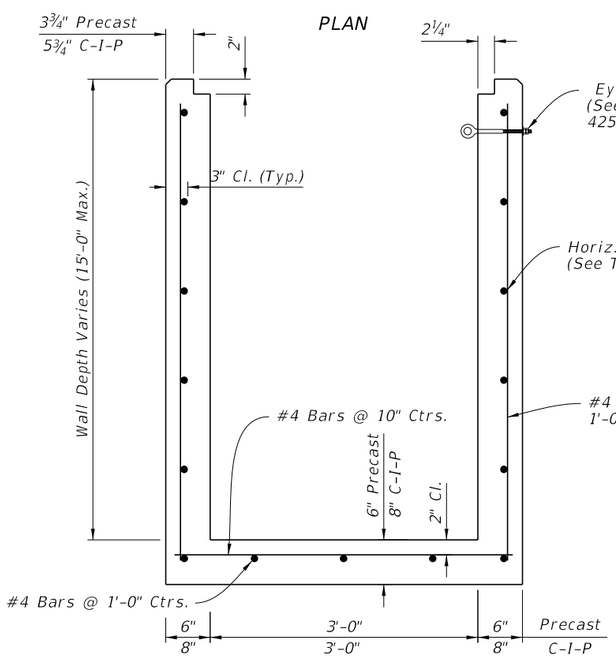

SECTION I-I

(Pipe Opening Not Shown)

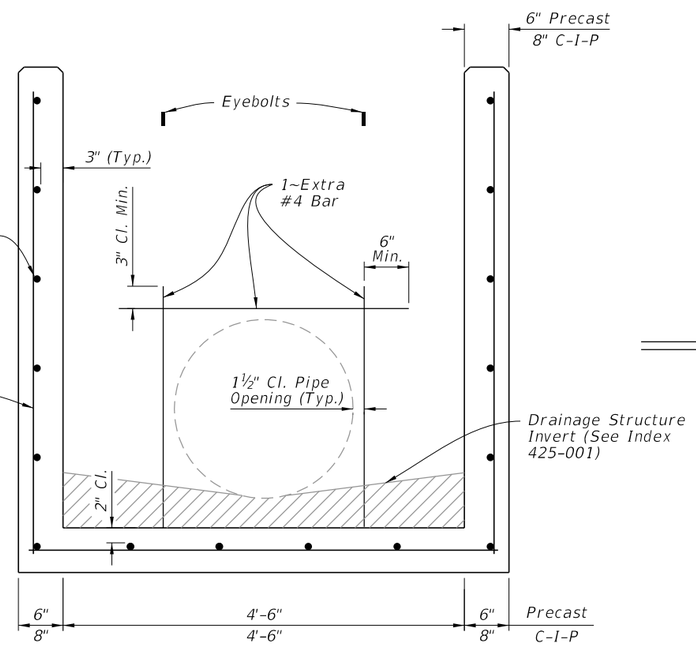

SECTION J-J

(Pipe Opening Shown)

DIMENSIONAL AND REINFORCING DETAILS

TABLE 3
HORIZONTAL WALL REINFORCING SCHEDULE

WALL DEPTH	SCHEDULE	AREA (in.²/ft.)	MAX. SPACING	
			BARS	WWR
0' - 5'	A12	0.20	12"	8"
0' - 7.5'	A6	0.20	6"	5"
7.5' - 10'	B5.5	0.24	5½"	5"
10' - 15'	C6.5	0.37	6½"	6"

NOTES:

1. Grate, Concrete Apron, and Sod not shown on structure detail.
2. See Sheet 8, 9, and 10 for Concrete Apron and Sodded Area details.

TYPE E - DIMENSIONAL, REINFORCING, AND STEEL GRATE DETAILS

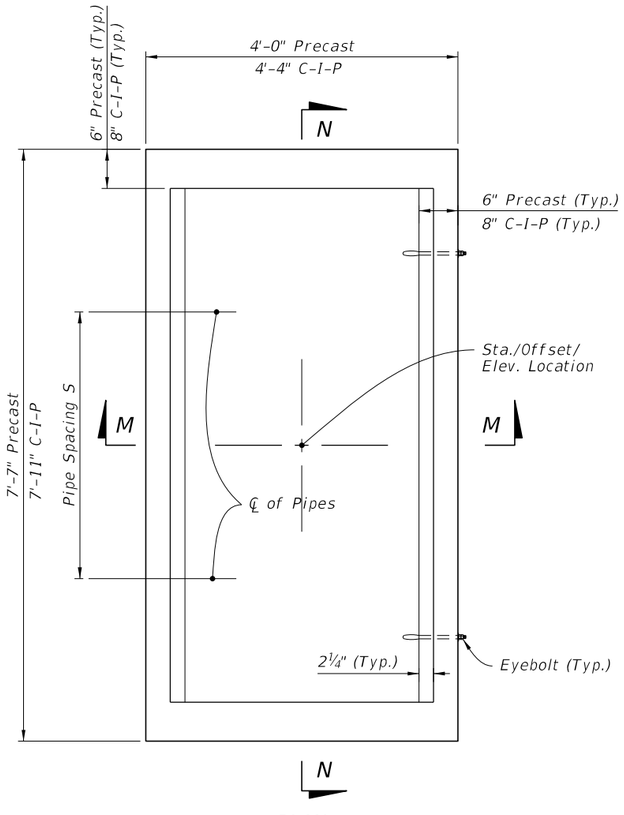

PLAN

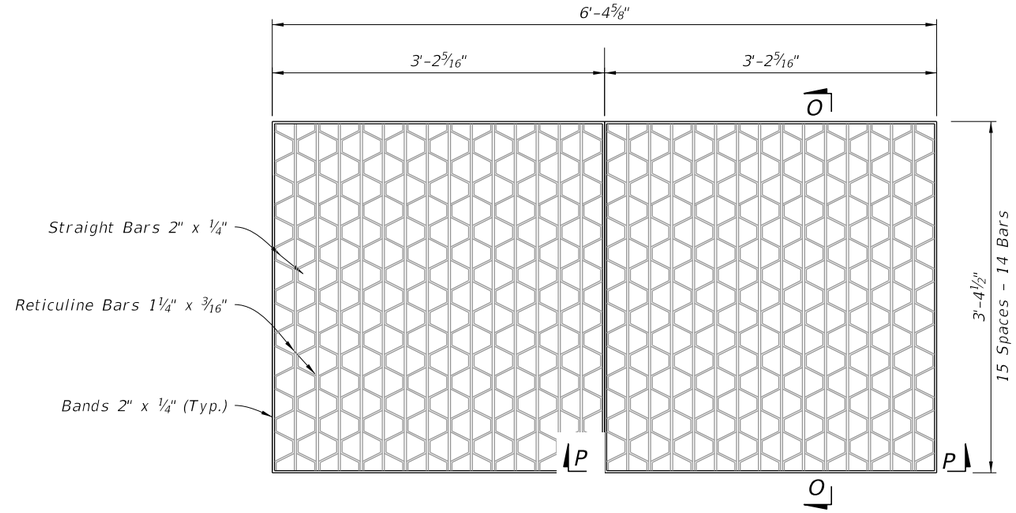

PLAN

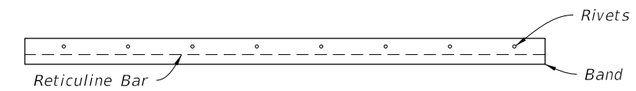

SECTION O-O

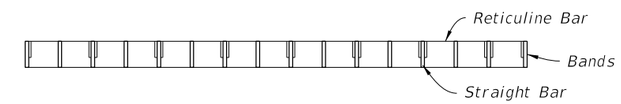

SECTION P-P

STEEL GRATE DETAIL

(2-Grates Shown, Approx. 310 lbs. - See Sheet 7 For Cast Iron, 3-Grates)

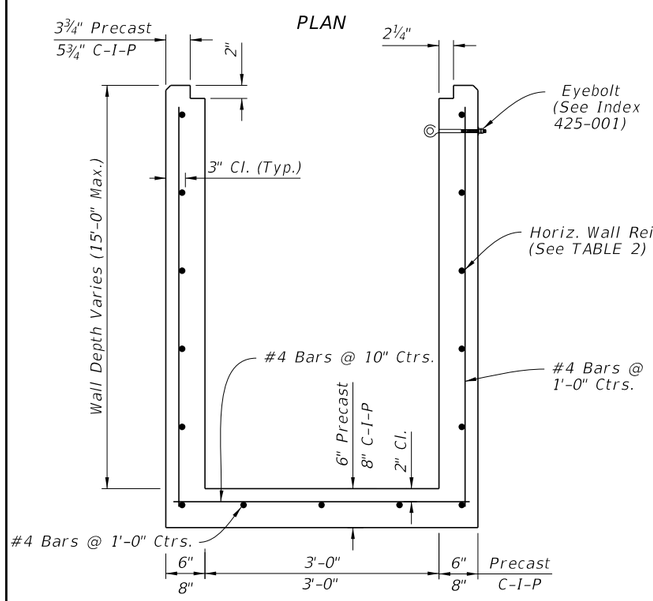

SECTION M-M

(Pipe Opening Not Shown)

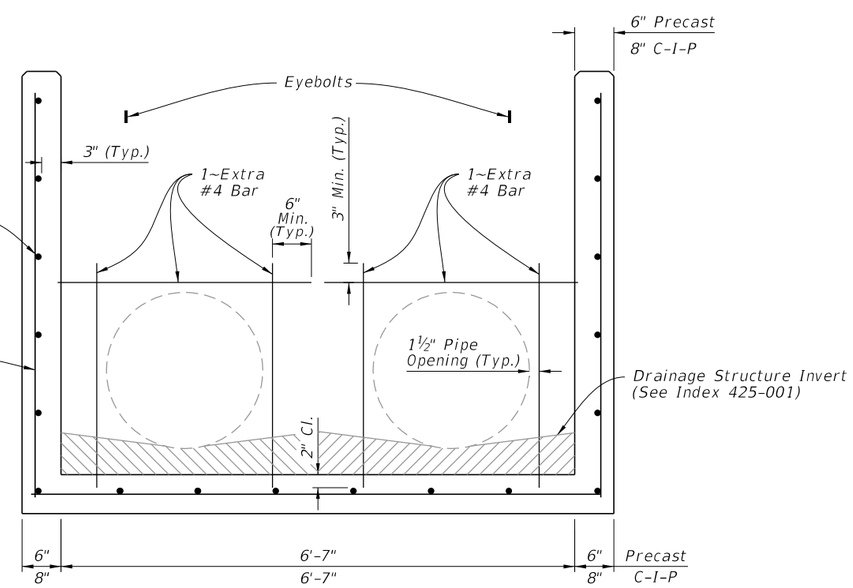

SECTION N-N

(Pipe Opening Shown)

TABLE 4 HORIZONTAL WALL REINFORCING SCHEDULE				
WALL DEPTH	SCHEDULE	AREA (in.²/ft.)	MAX. SPACING	
			BARS	WWR
0' - 5'	B5.5	0.24	5½"	5"
5'-7'	C6.5	0.37	6½"	6"
7' - 15'	D4.5	0.53	4½"	4"

NOTES:

1. Grate, Concrete Apron, and Sod not shown on structure details.
2. See Sheet 8, 9, and 10 for Concrete Apron and Sodded Area details.
3. Pipe Spacing S = 3'-5"

DIMENSIONAL AND REINFORCING DETAILS

TYPE H (2 & 3 GRATE) - DIMENSIONAL, REINFORCING, AND STEEL GRATE DETAILS

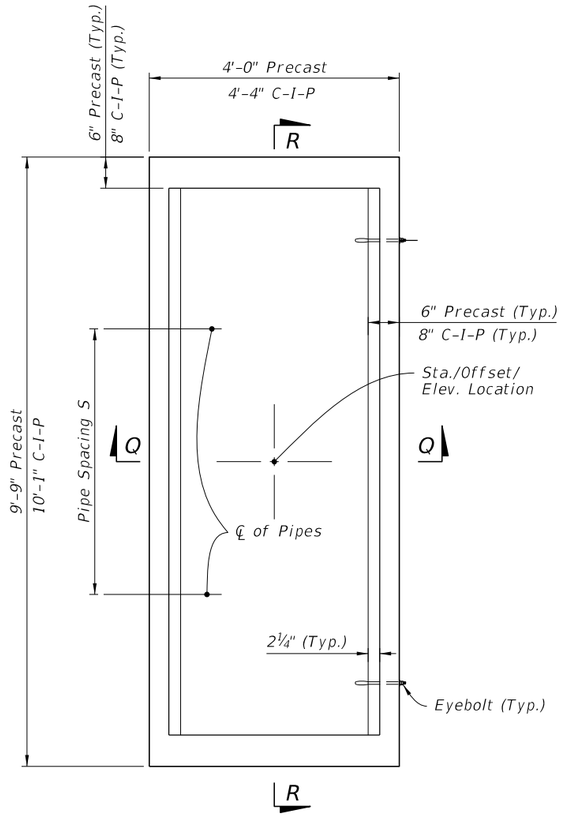

PLAN

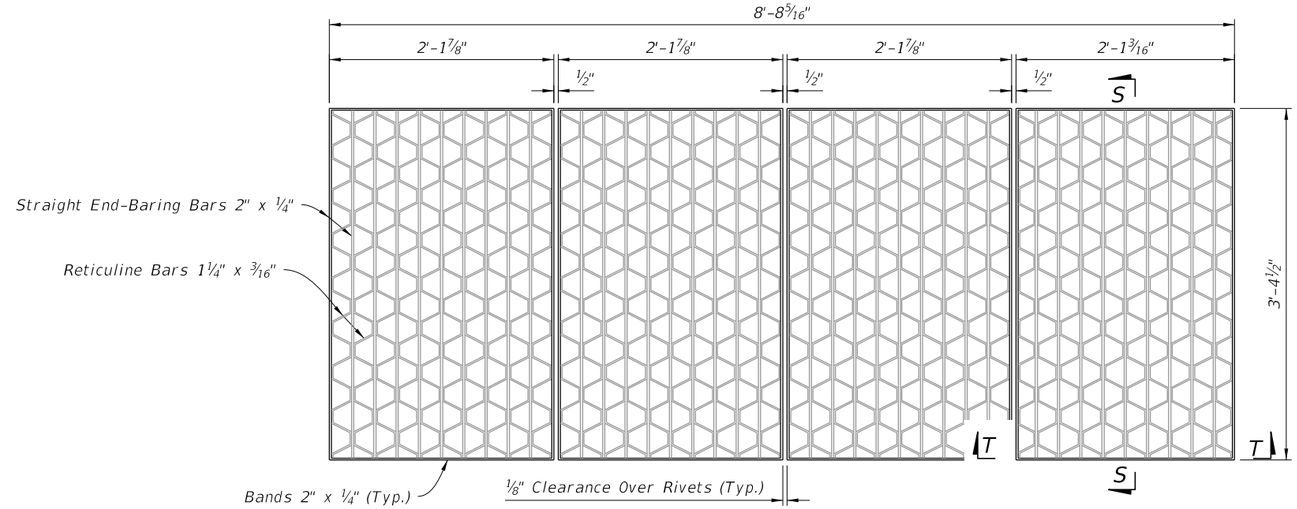

PLAN

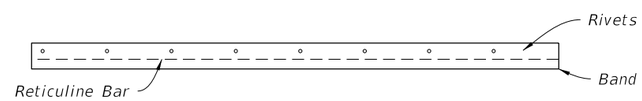

SECTION S-S

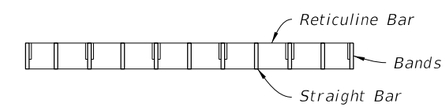

SECTION T-T

STEEL GRATE DETAIL

(Approx. 388 lbs. - See Sheet 7 For Cast Iron Grates)

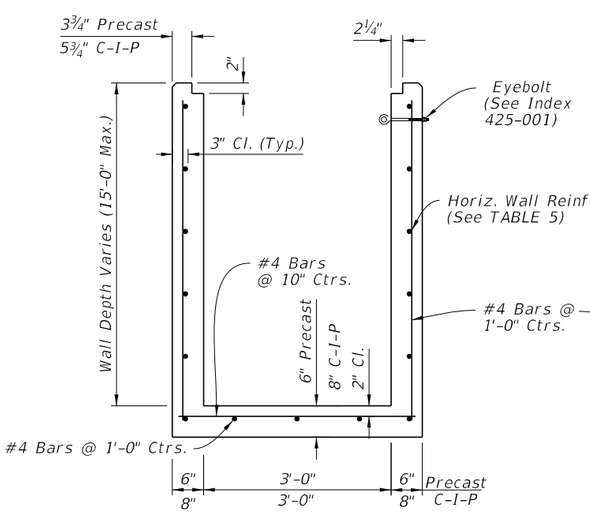

SECTION Q-Q

(Pipe Opening Not Shown)

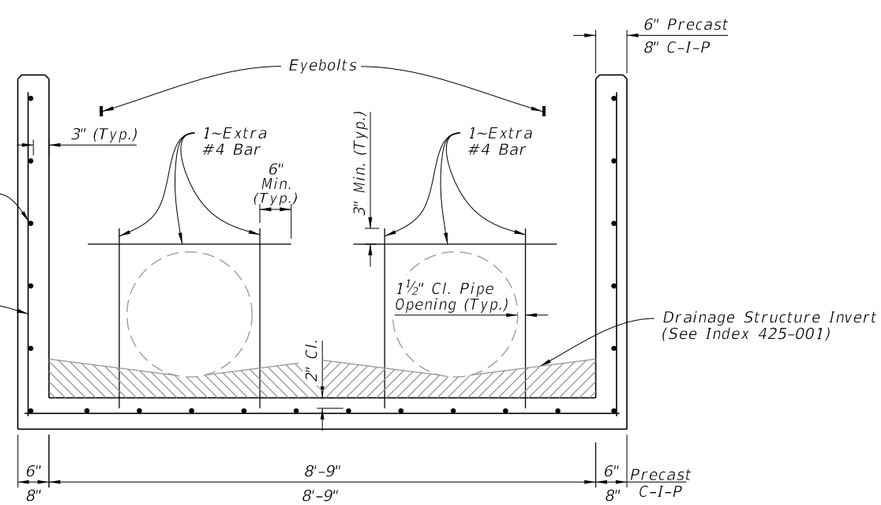

SECTION R-R

(Pipe Opening Shown)

TABLE 5 HORIZONTAL WALL REINFORCING SCHEDULE				
WALL DEPTH	SCHEDULE	AREA (in.²/ft.)	MAX. SPACING	
			BARS	WWR
0' - 5'	C3.5	0.37	3½"	3"
5'-10'	D4.5	0.53	4½"	4"

NOTES:

1. Grate, Concrete Apron, and Sod not shown on structure details.
2. See Sheet 8, 9, and 10 for Concrete Apron and Sodded Area details.
3. Pipe Spacing S = 4'-3"

DIMENSIONAL AND REINFORCING DETAILS

TYPE H (4 GRATE) - DIMENSIONAL, REINFORCEMENT, AND STEEL GRATE DETAILS

NOTES:

1. Steel Grates are required on inlets with traversable slots and on Inlets where bicycle traffic is anticipated.
2. Cast Iron Grates are not permitted on Inlet Type D.

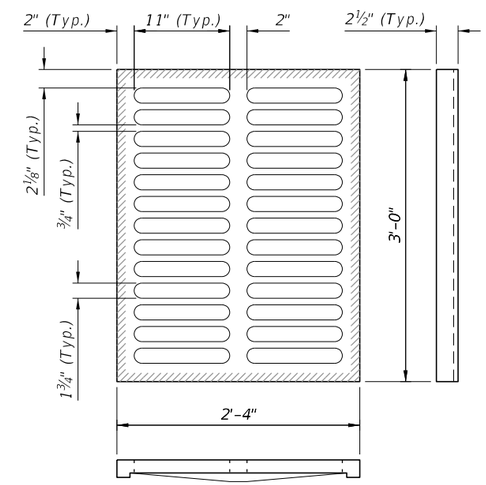

TYPE C
Approx. 235 lbs.

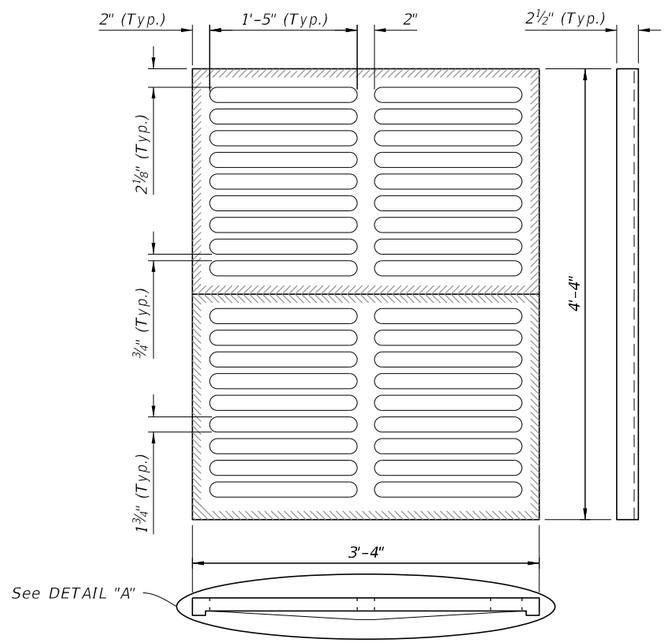

TYPE E
Approx. 465 lbs.

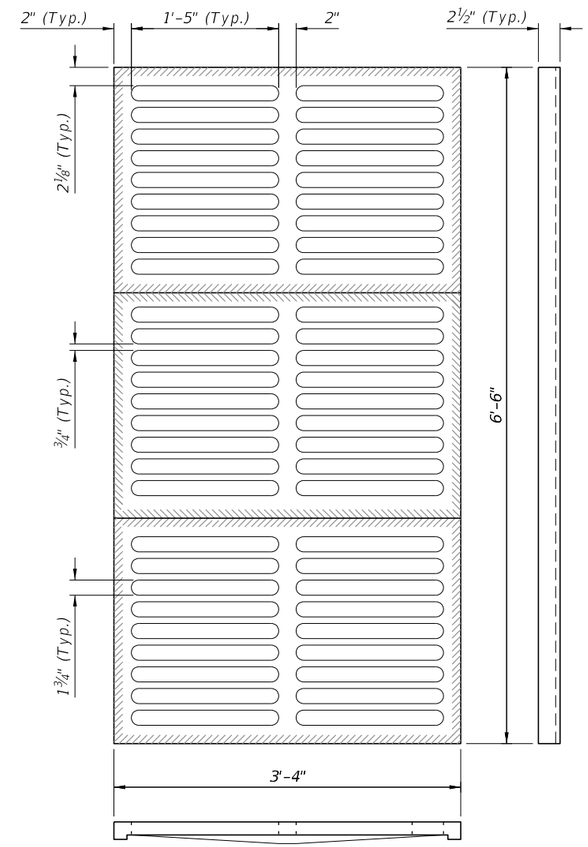

TYPE H
(3-Grate Inlet)
Approx. 725 lbs.

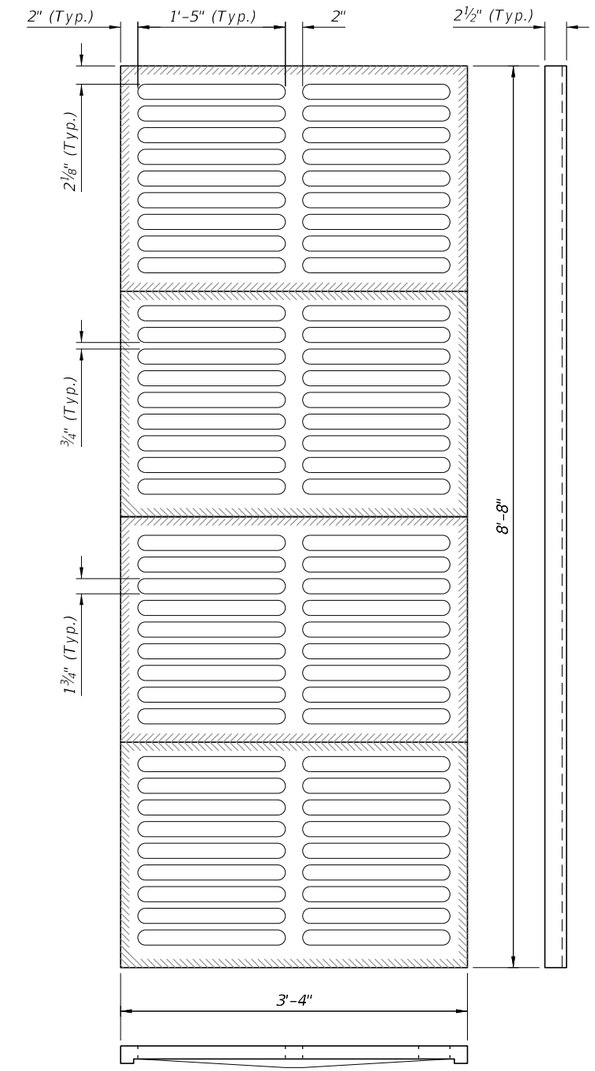

TYPE H
(4-Grate Inlet)
Approx. 967 lbs.

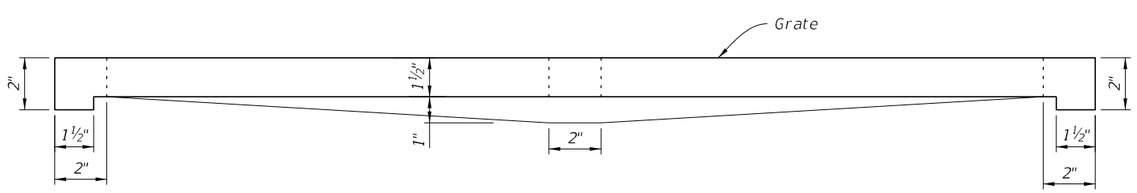

DETAIL "A"
(Typical Section)

CAST IRON GRATE DETAILS

LAST REVISION	REVISION	DESCRIPTION:				
10/01/20			FY 2023-24 STANDARD PLANS	DITCH BOTTOM INLET TYPES C, D, E, AND H	INDEX 425-052	SHEET 7 of 14

10/20/2022 8:47:36 AM

TABLE 6 SOD ONLY QUANTITIES	
Inlet Type	Sod SY
C	6
D	6
E	7
H	8

TABLE 7 SOD AND CONCRETE APRON QUANTITIES		
Inlet Type	Sod SY	Conc. CY
C	8	0.30
D	9	0.36
E	9	0.37
H	11	0.45

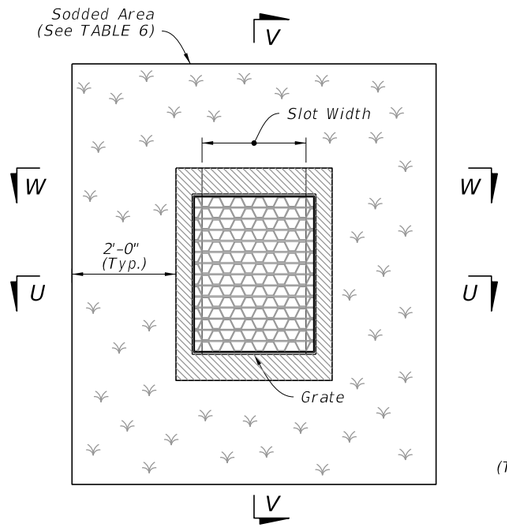

PLAN

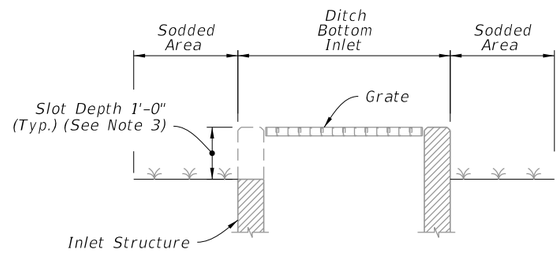

SECTION V-V

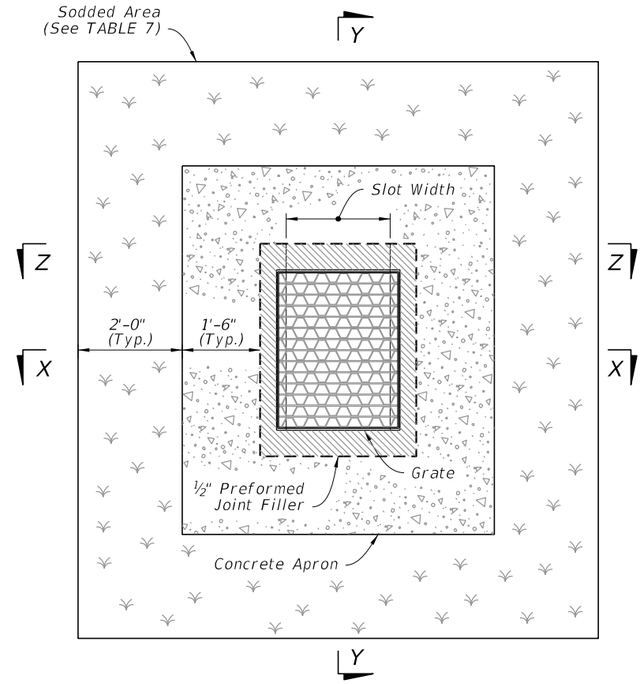

PLAN

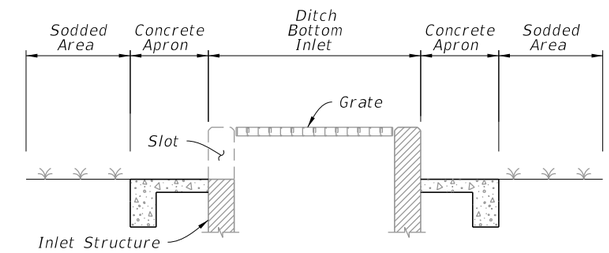

SECTION Y-Y

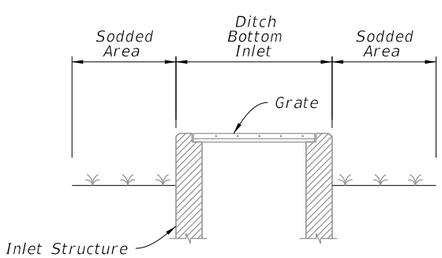

SECTION U-U

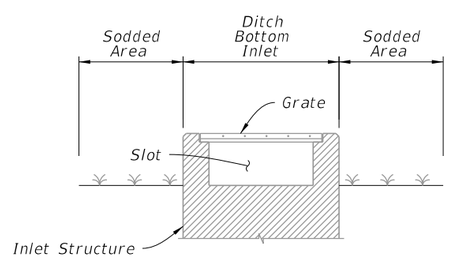

SECTION W-W

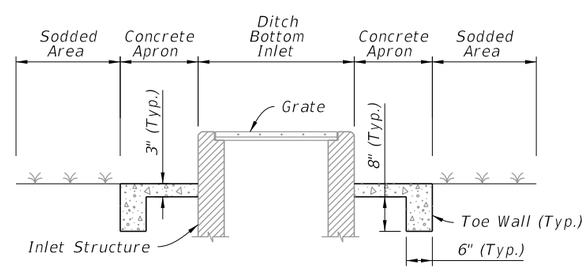

SECTION X-X

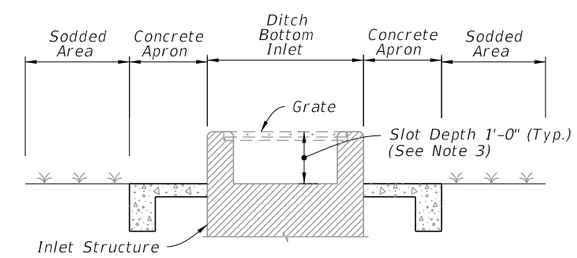

SECTION Z-Z

SODDING ONLY

(Slot Shown, Non-Slot Similar)

SODDING AND PAVEMENT

(Slot Shown, Non-Slot Similar)

NOTES:

1. Concrete Apron installed only where called for in the Plans.
2. Sod always required.
3. Slots are not permitted on sides with grate seats.

NON-TRAVERSABLE INLET DETAILS

LAST REVISION	REVISION	DESCRIPTION:	FY 2023-24 STANDARD PLANS	DITCH BOTTOM INLET TYPES C, D, E, AND H	INDEX	SHEET
10/01/20					425-052	8 of 14

10/20/2022 8:47:37 AM

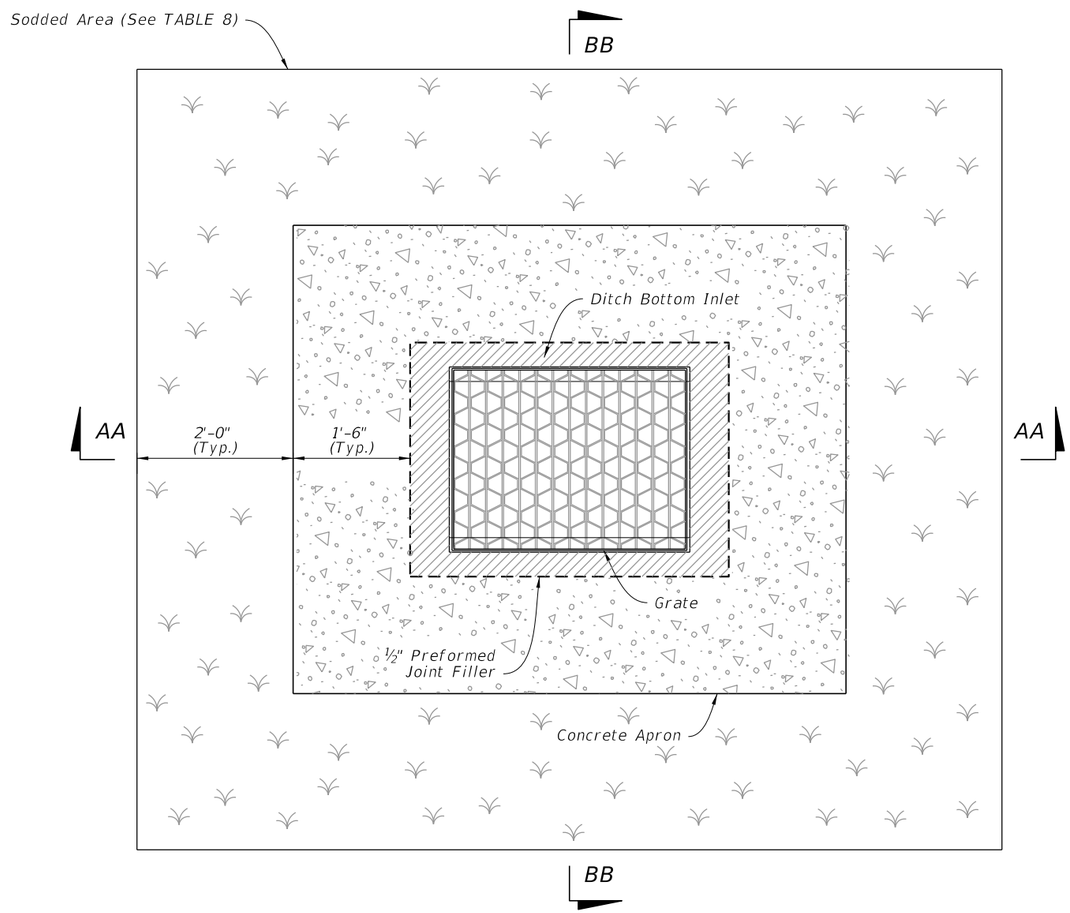

TABLE 8 CONCRETE APRON AND SOD QUANTITIES		
SOD AND PAVEMENT		
Inlet Type	Sod SY	Conc. CY
C	8	0.30
D	9	0.36
E	9	0.37
H	11	0.45

NOTES:

1. Concrete Apron to be installed only where called for in the Plans.
2. Sod always required.

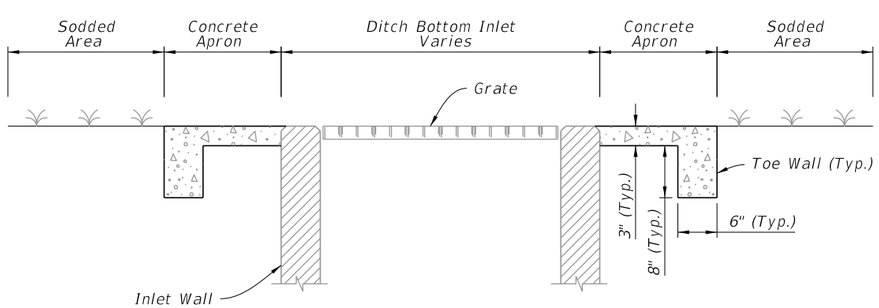

SECTION AA-AA

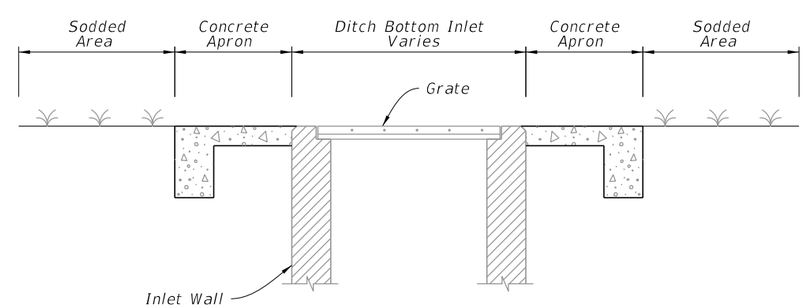

SECTION BB-BB

TRAVERSABLE INLET WITHOUT SLOT DETAILS

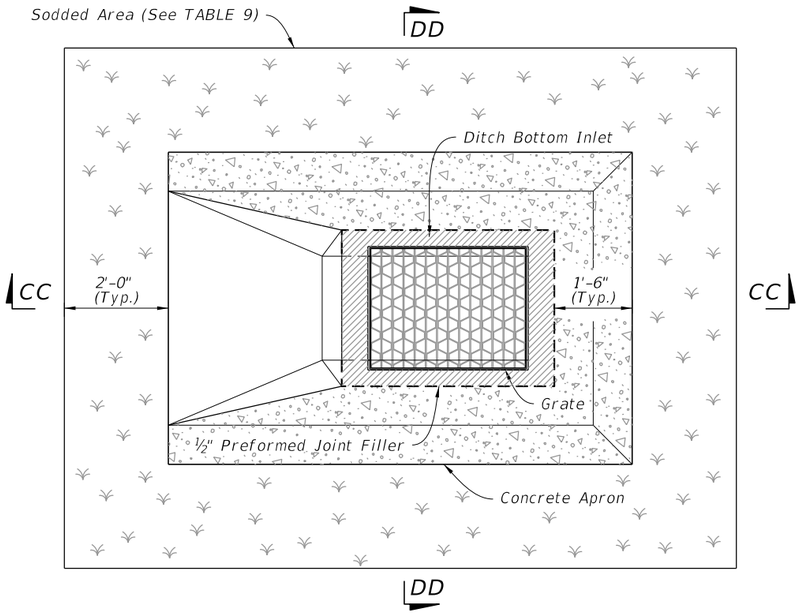

TABLE 9 CONCRETE APRON AND SOD QUANTITIES		
SINGLE SLOT		
Inlet Type	Sod SY	Conc. CY
C	12	0.77
D	14	0.91
E	14	0.91
H	--	--

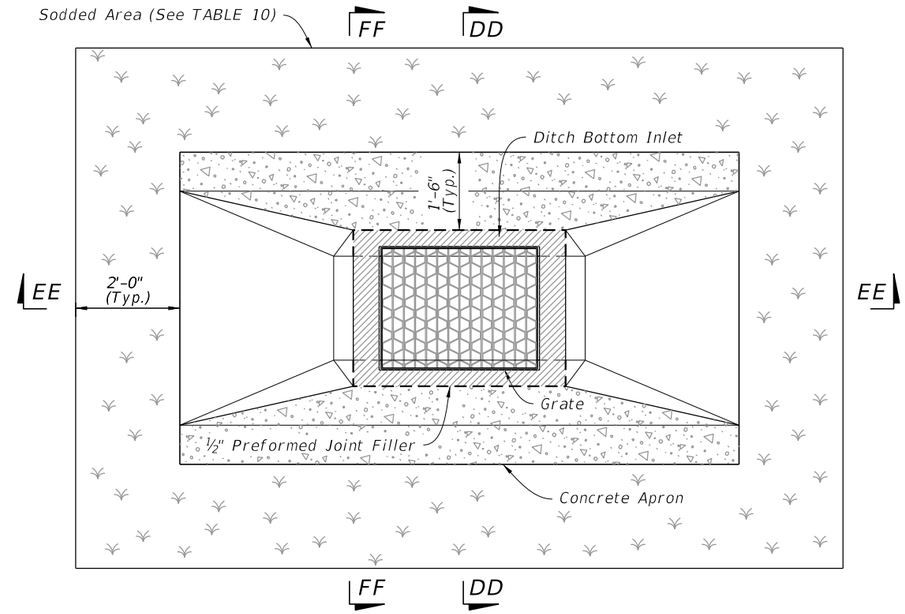

TABLE 10 CONCRETE APRON AND SOD QUANTITIES		
SLOT		
Inlet Type	Sod SY	Conc. CY
C	16	0.93
D	19	1.10
E	18	1.08
H	--	--

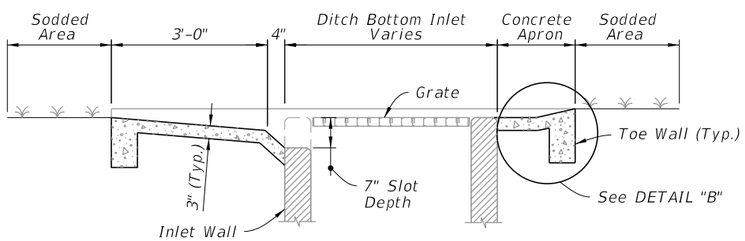

SECTION CC-CC

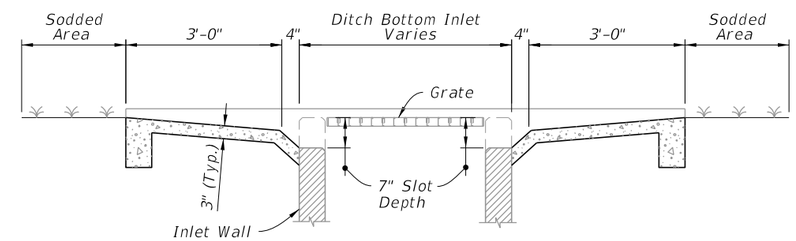

SECTION EE-EE

SINGLE SLOT

DOUBLE SLOT

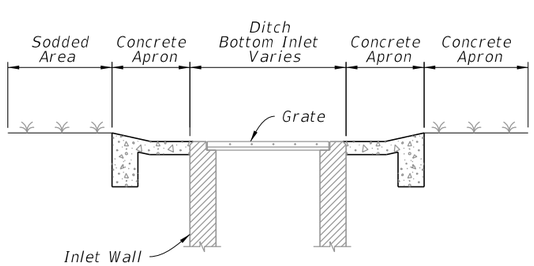

SECTION DD-DD

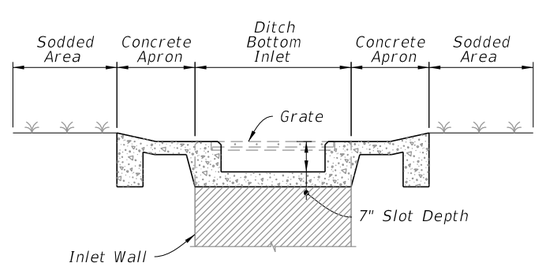

SECTION FF-FF

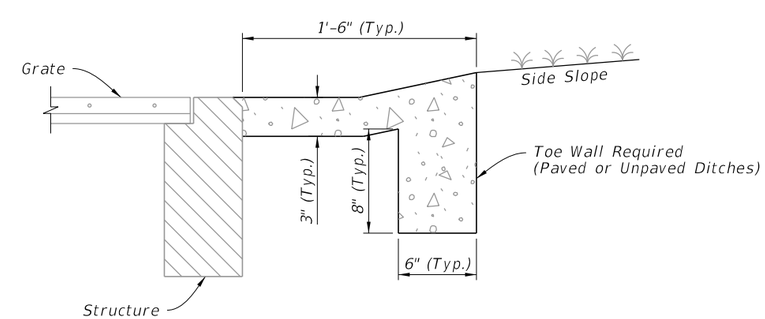

DETAIL "B"

NOTE:

Sod always required.

TRAVERSABLE INLET WITH SLOT DETAILS

LAST REVISION	REVISION	DESCRIPTION:	FY 2023-24 STANDARD PLANS	DITCH BOTTOM INLET TYPES C, D, E, AND H	INDEX	SHEET
10/01/20					425-052	10 of 14

10/20/2022 8:47:39 AM

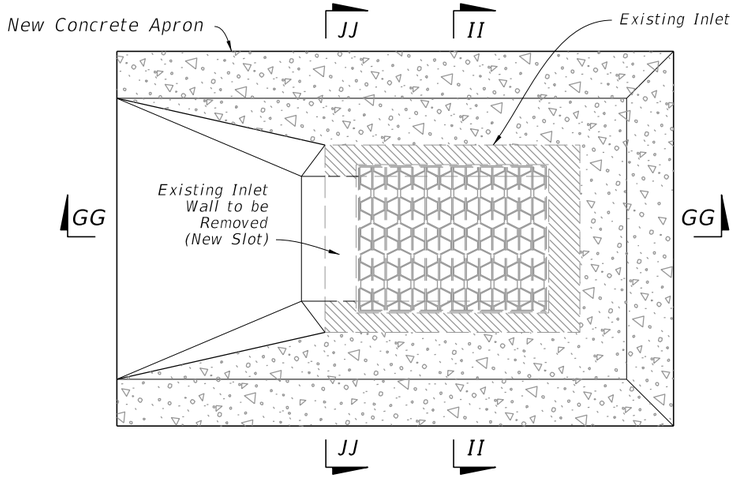

PLAN

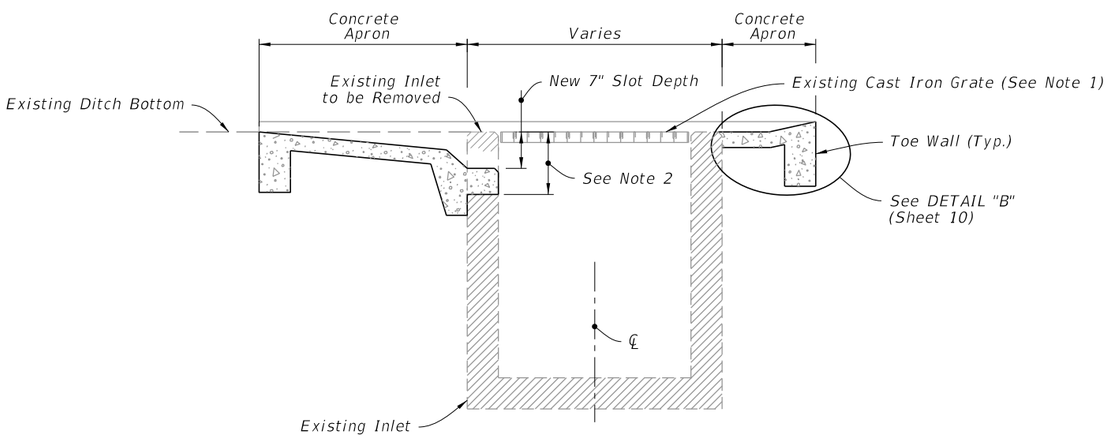

SECTION GG-GG

WITHOUT SLOT

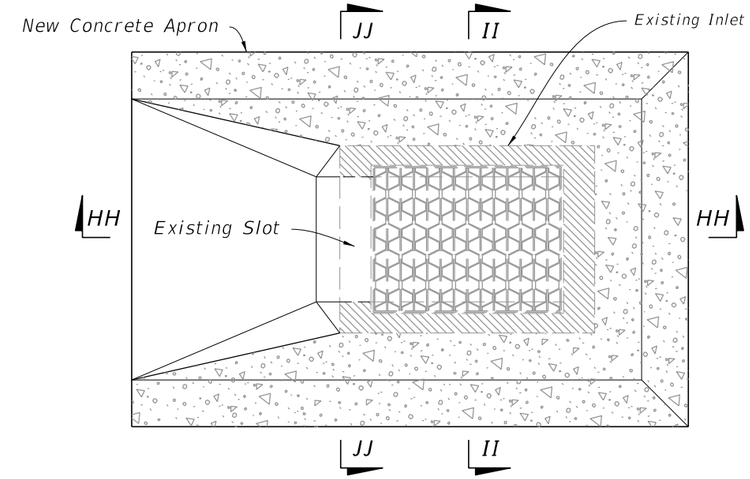

PLAN

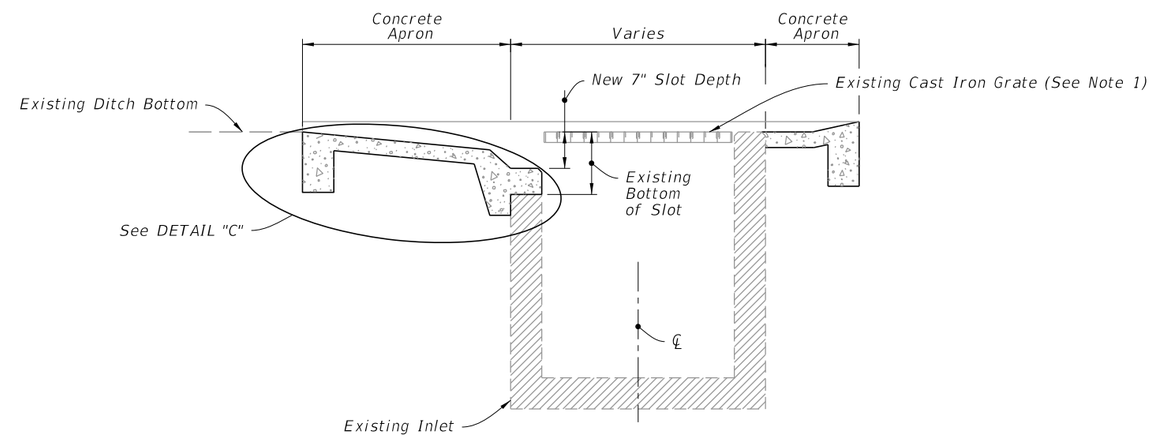

SECTION HH-HH

WITH SLOT

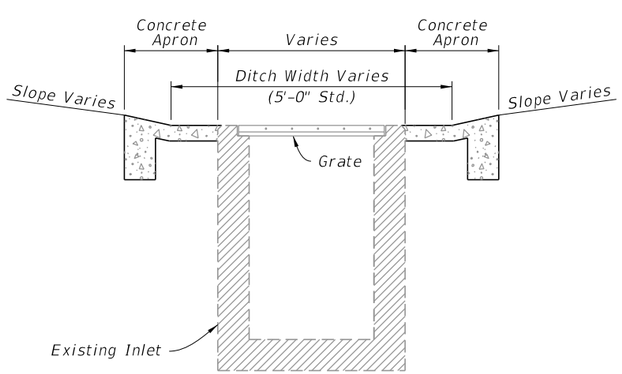

SECTION II-II

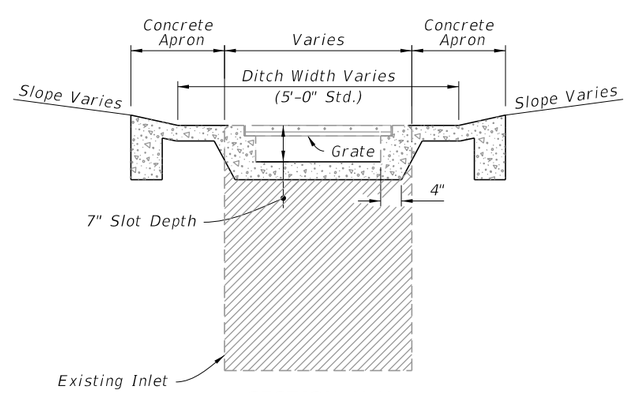

SECTION JJ-JJ

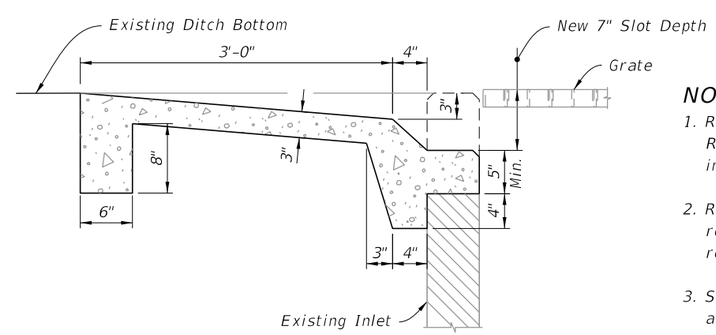

DETAIL "C"

NOTES:

1. Replace existing cast iron grate with steel grate. Replace existing steel grate when called for in the plans or as directed by the Engineer.
2. Remove existing wall to this line (exposed rebar in pavement zone may be either removed or embedded)
3. Single Slot shown, Double Slots symmetrical about the Inlet centerline.

CASE 1 - ADD TRAVERSABLE SLOTS TO EXISTING INLETS

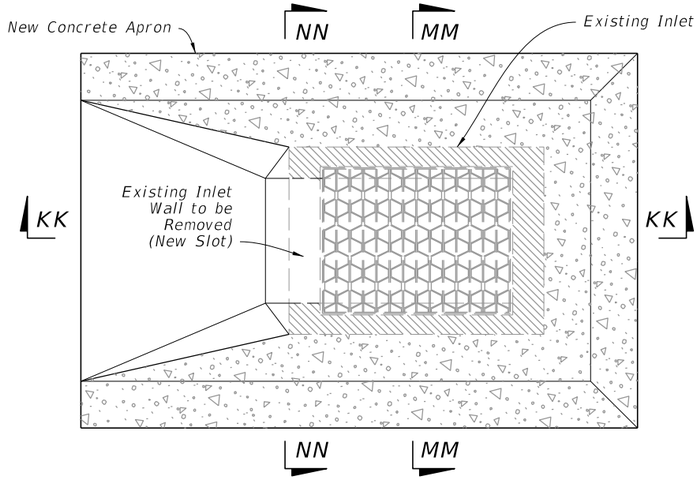

PLAN

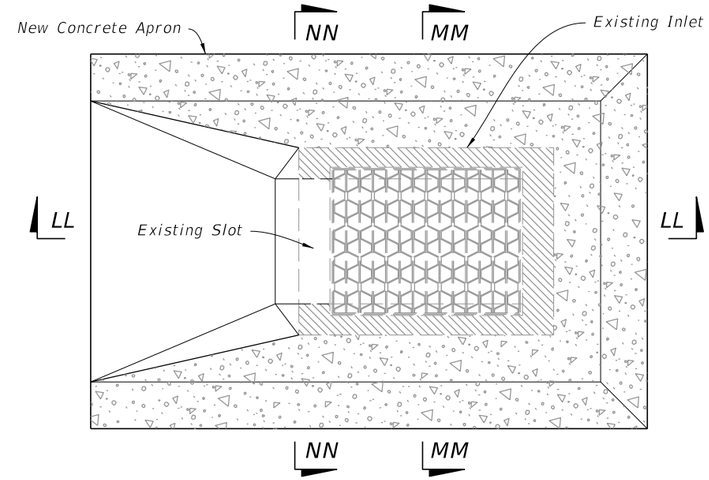

PLAN

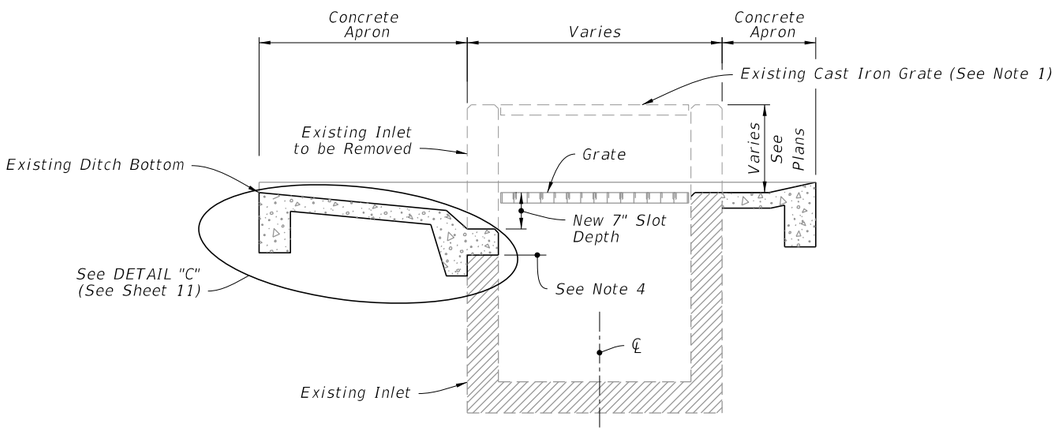

SECTION KK-KK

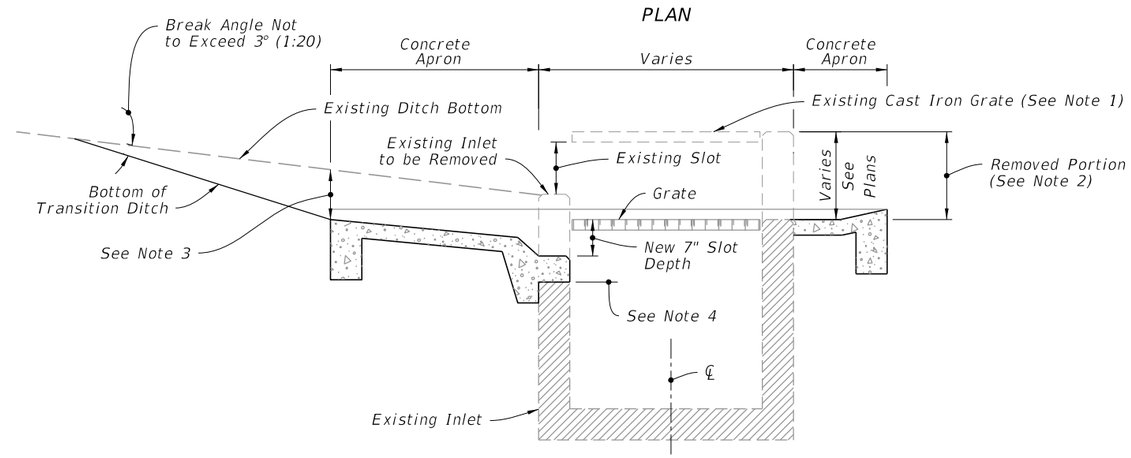

SECTION LL-LL

WITHOUT SLOT

WITH SLOT

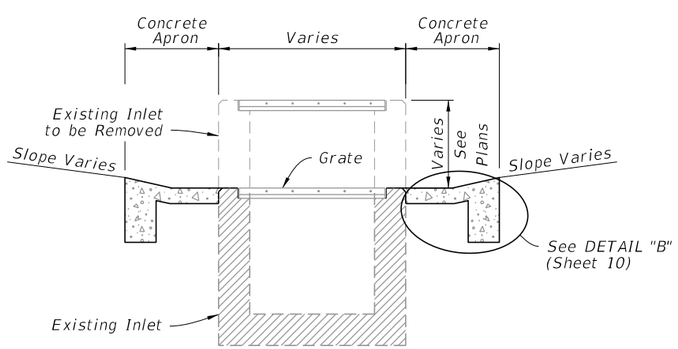

SECTION MM-MM

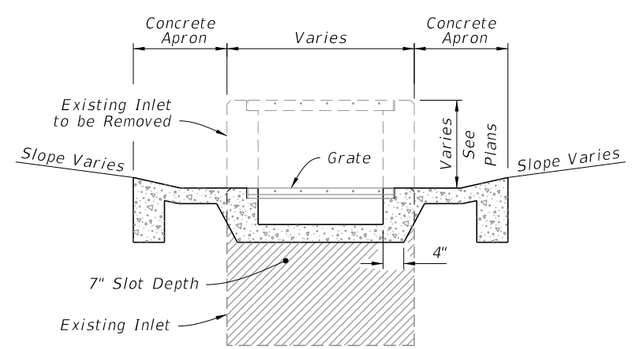

SECTION NN-NN

NOTES:

1. Existing cast iron grate to be replaced with steel grate. Existing steel reticuline grate to be replaced when called for in the Plans or as directed by the Engineer.
2. Remove this portion of box and construct new, concrete ditch pavement, seats and slot (s) (slots if required).
3. These points can be the same or nearly the same where ditch grades are flat.
4. Remove exist. wall to this line (exposed rebar in pavt. zone may be either removed or embedded).
5. Single Slot shown, Double Slots symmetrical about the Inlet centerline.

CASE 2 - ADD TRAVERSABLE SLOTS (PARTIAL) TO EXISTING INLETS

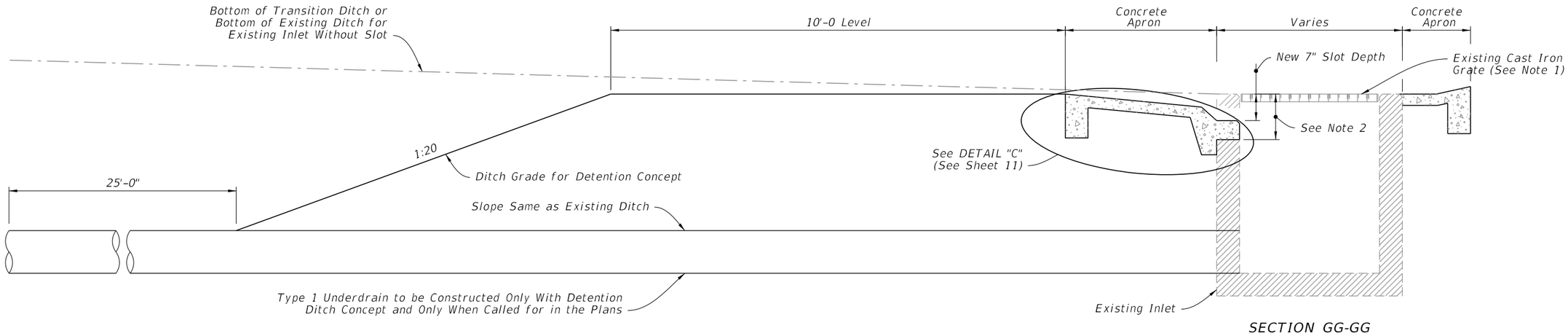

SECTION GG-GG

WITHOUT SLOT

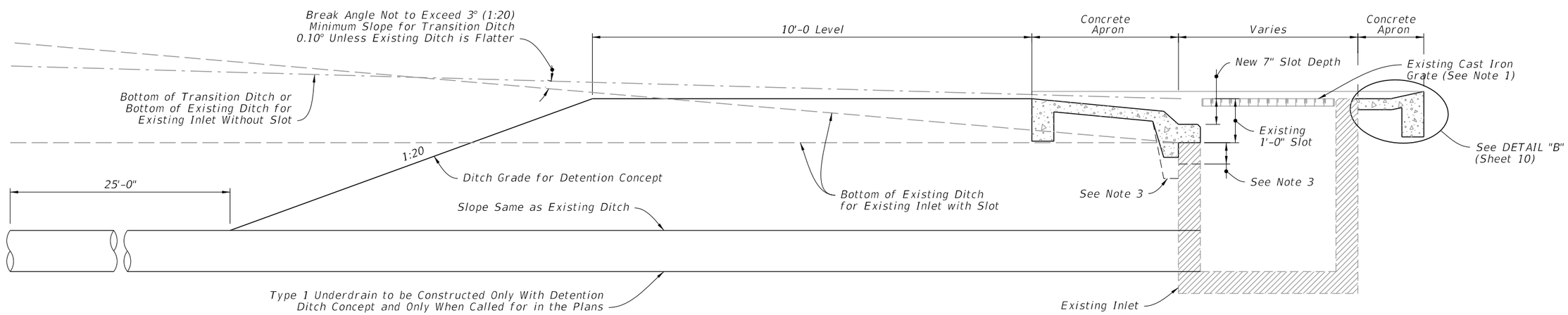

SECTION HH-HH

WITH SLOT

NOTES:

1. Existing cast iron grate to be replaced with steel grate. Existing steel reticuline grate to be replaced when called for in the Plans or as directed by the Engineer.
2. Remove existing wall to this line (exposed rebar in pavement zone may be either removed or embedded)
3. Install extra apron when existing slot exceeds 12" in depth.
4. Inlet details (With or Without Slots) similar to details on Sheet 11.

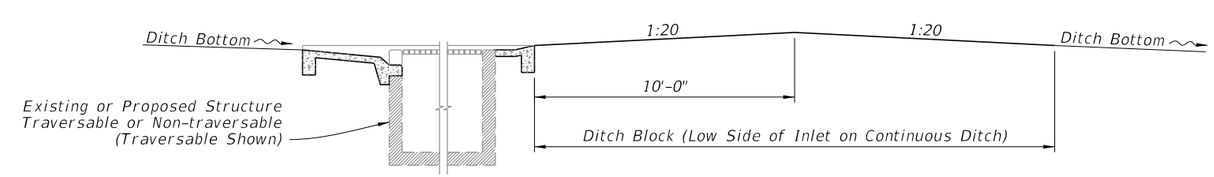

DITCH BLOCK FOR INLETS WITH OR WITHOUT SLOTS

CASE 3 - ADD TRAVERSABLE SLOTS (PARTIAL) TO EXISTING INLETS AND DITCH BLOCK

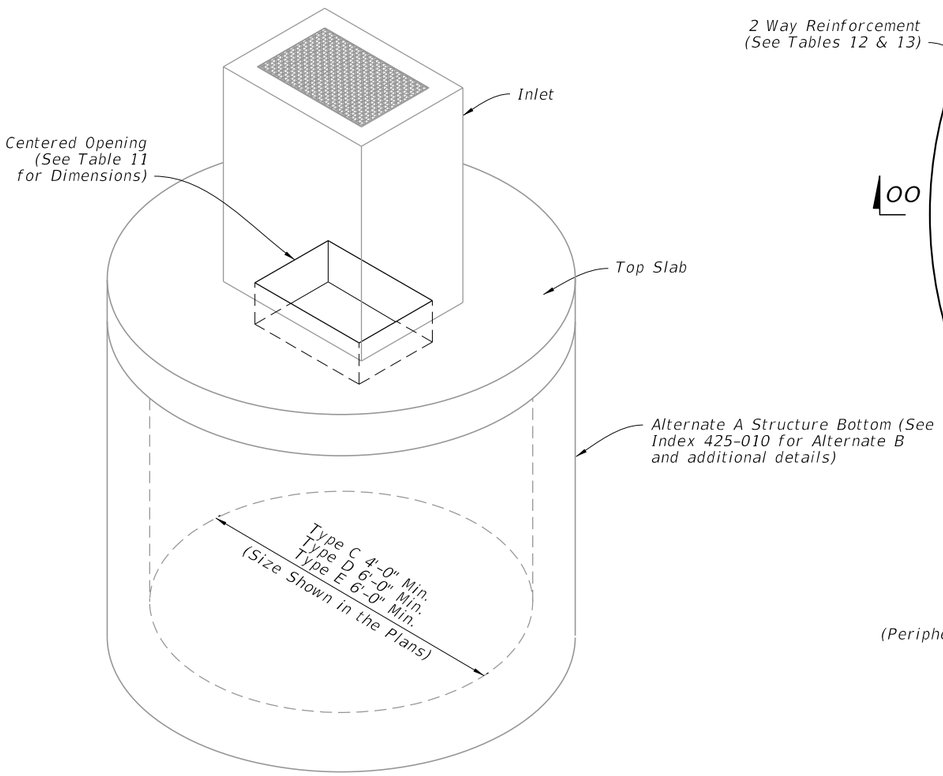

ISOMETRIC VIEW

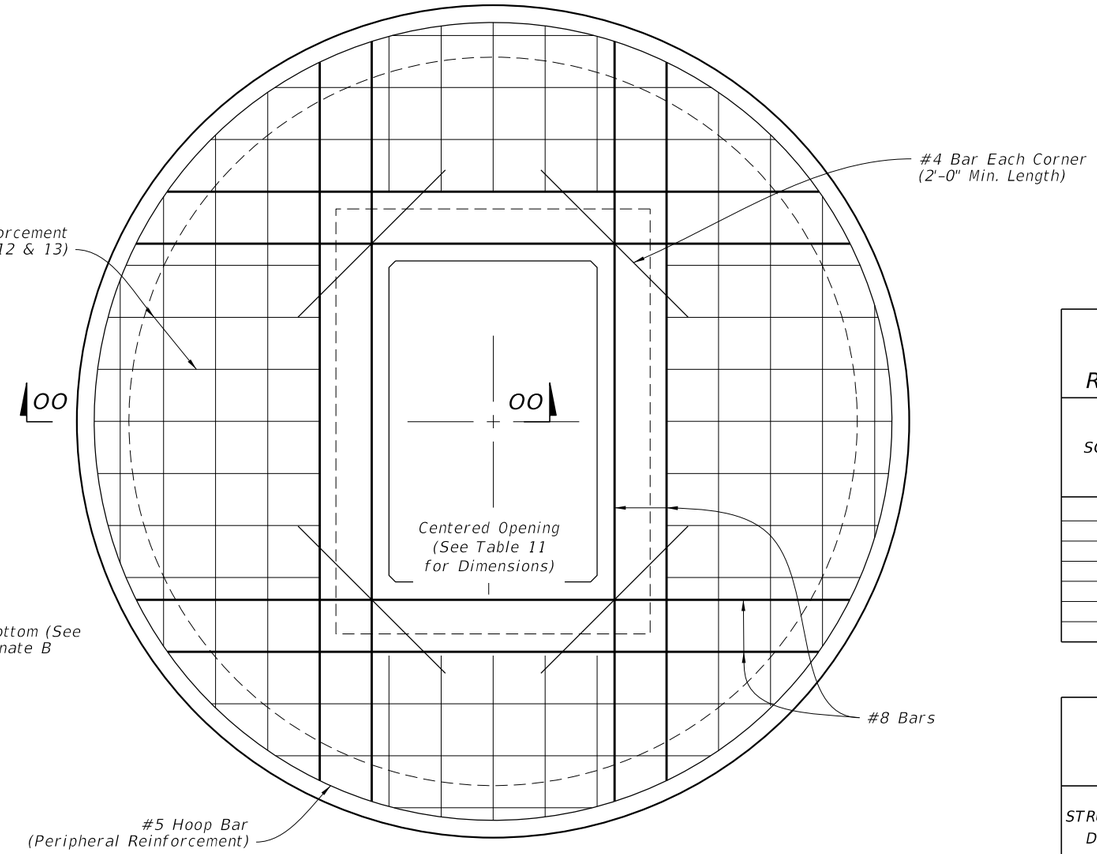

PLAN

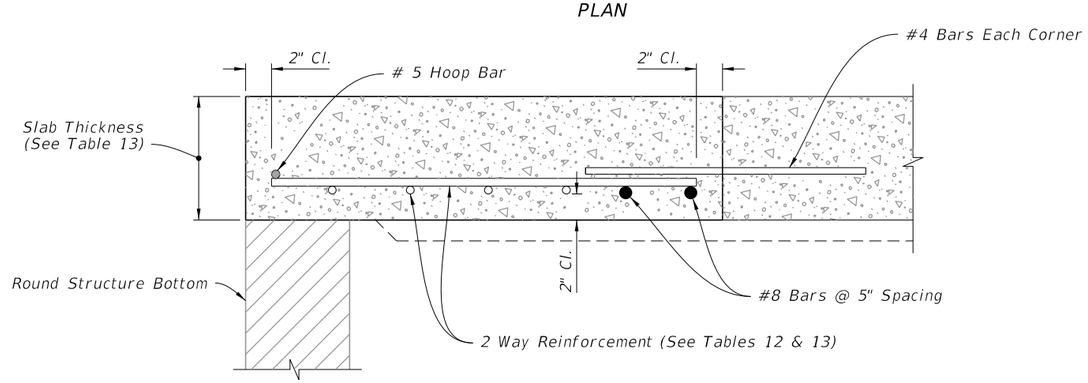

SECTION OO-OO

TOP SLAB REINFORCEMENT DETAILS

TABLE 11
TOP SLAB OPENINGS

DIAMETER	OPENING SIZE	
	Min.	Max.
4'-0"	2'-0" x 3'-1"	2'-0" x 3'-1"
5'-0"	2'-0" x 3'-1"	3'-1" x 4'-1"
6'-0"	2'-0" x 3'-1"	3'-0" x 4'-6"
8'-0"	2'-0" x 3'-1"	3'-0" x 4'-6"

TABLE 12
TOP SLAB
REINFORCING SCHEDULE

SCHEDULE	GRADE 60 (BAR) OR 65 KSI & 70 KSI (WIRE REINFORCING) In.²/ft.
A	0.20
B	0.24
C	0.37
D	0.53
E	0.73
F	1.06
G	1.45

TABLE 13
TOP SLAB WITH
CENTERED OPENING

STRUCTURE DEPTH	SLAB THICKNESS	REINFORCING (2 WAY) SCHEDULE
SIZE: 4'-0"		
≥0.5'<40'	9½"	B
SIZE: 5'-0"		
≥0.5'<30'	9½"	C
30'-40'	9½"	D
SIZE: 6'-0"		
≥0.5'<8'	9½"	B
8'<18'	9½"	C
18'<30'	9½"	D
30'<37'	9½"	E
37'-40'	9½"	G
SIZE: 8'-0"		
≥0.5'<9'	11½"	C
9'<15'	11½"	D
15'<23'	11½"	E
23'<33'	11½"	E
33'-40'	11½"	G

ALTERNATE A STRUCTURE BOTTOM - TOP SLAB DETAILS

GENERAL NOTES:

1. Work this Index with Index 425-001 and Index 425-010.

2. When inlet is placed in areas subject to bicycle traffic, install filler bar when clearance or gap is greater than 5/8" as shown in Index 425-031.

3. These inlets may be used with Alternate B structure bottoms, Index 425-010.

4. Chamfer all exposed edges and corners 3/4" chamfer or tooled to 1/4" radius.

5. See Index for supplemental details.

6. Reinforcing bars are Grade 60 with 2" minimum cover unless otherwise noted. Cut or bend bars to provide 1 1/2" clearance around pipe opening. Provide one additional #4 bar above and at each side of pipe opening as shown.

7. Dimensions are for both precast and cast-in-place inlets unless otherwise noted.

8. Quantities are for informational and estimating purposes only.

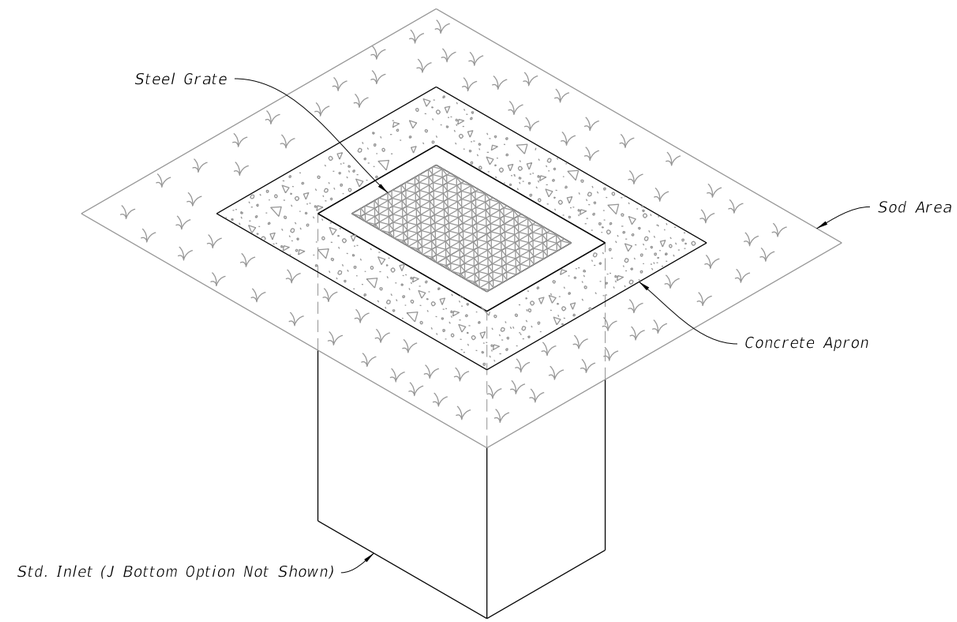

DITCH BOTTOM INLET TYPE F

(Type G Similar, Pipe Connection Not Shown)

TABLE OF CONTENTS:

Sheet	Description
1	General Notes and Contents
2	Type F - Dimensional, Reinforcing, and Grate Details
3	Type G - Dimensional, Reinforcing, and Grate Details
4	Concrete Apron and Sodded Area Details

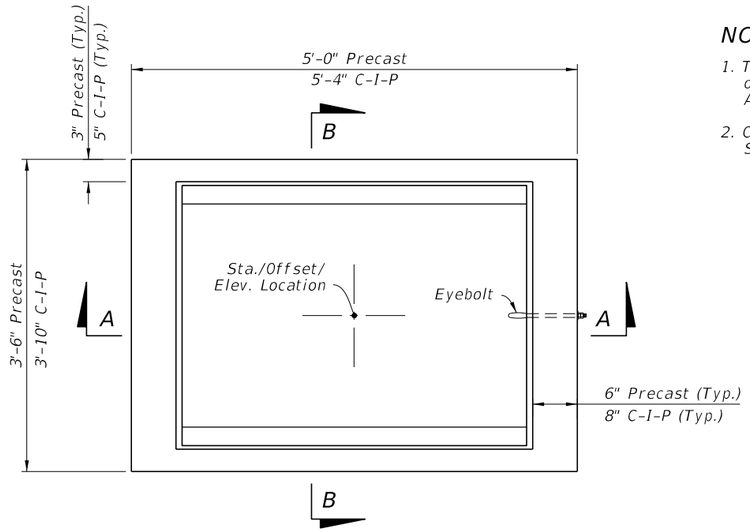

PLAN

NOTES:

1. The Grate, Concrete Apron, and Sod not shown on Inlet PLAN view. See Sheet 4 for Concrete Apron and Sodded Area details.
2. Construction joints permitted between these limits. See Index 425-001 for minimum dimensions.

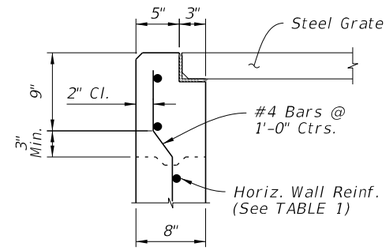

C-I-P DETAIL

DETAIL "A"

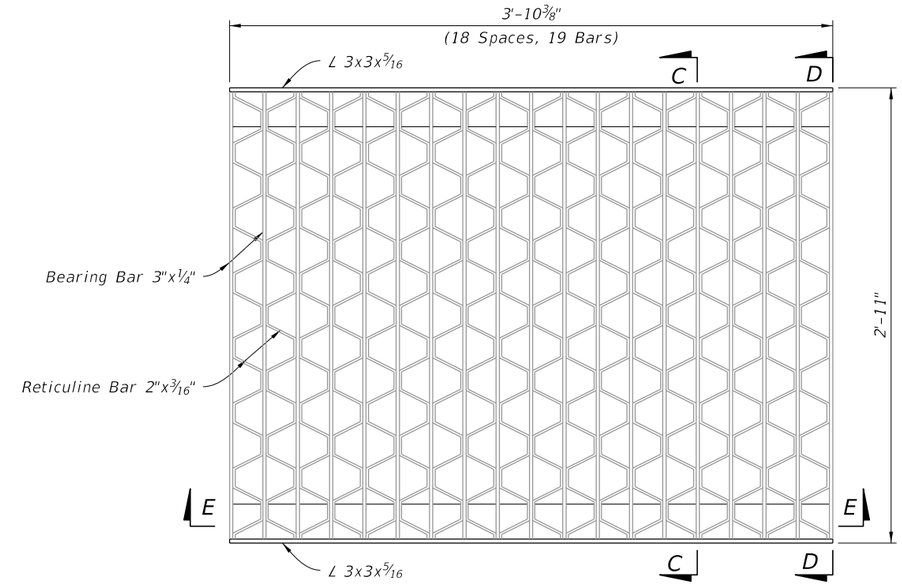

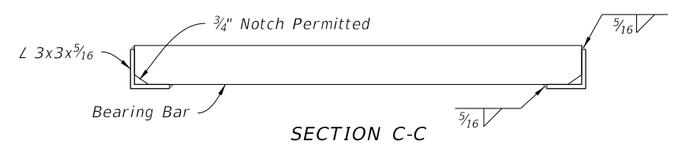

SECTION C-C

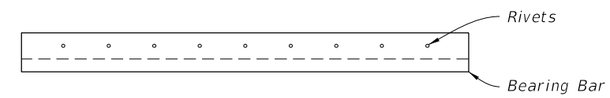

SECTION D-D

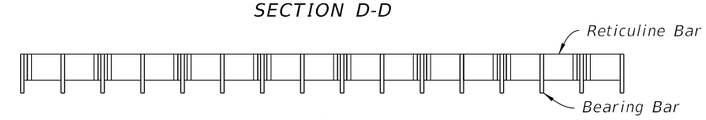

SECTION E-E

STEEL GRATE DETAIL

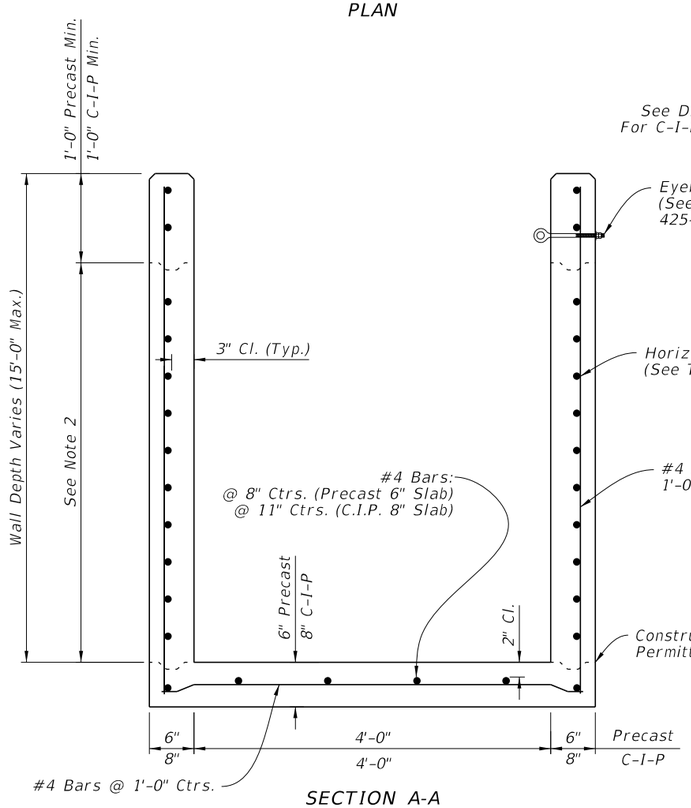

SECTION A-A
(Pipe Opening Not Shown)

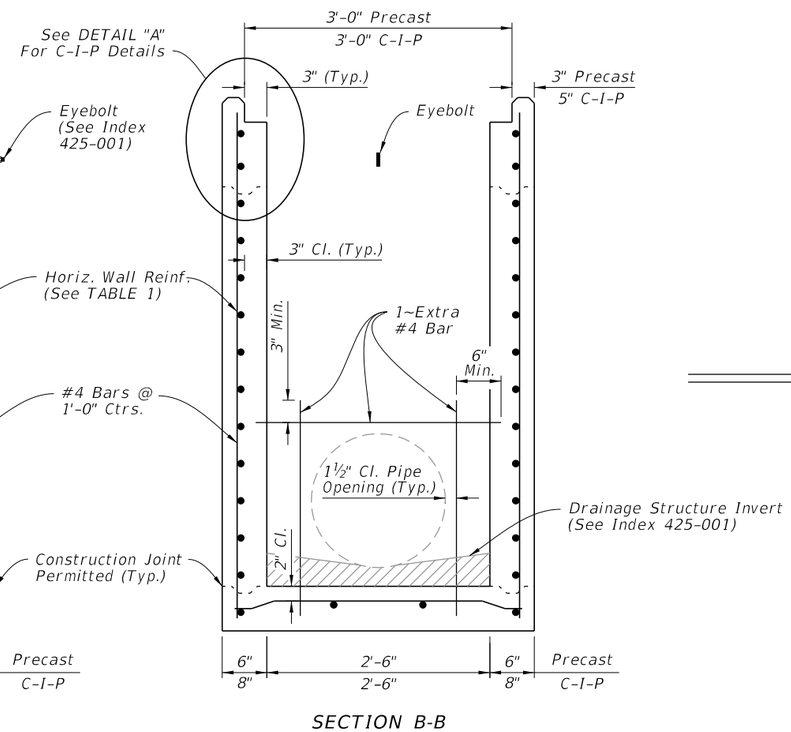

SECTION B-B
(Pipe Opening Shown)

DIMENSIONAL AND REINFORCING DETAILS

TABLE 1
HORIZONTAL WALL REINFORCING SCHEDULE

WALL DEPTH	SCHEDULE	AREA (in.²/ft.)	MAX. SPACING	
			BARS	WWR
0' - 4'	A12	0.200	12"	8"
4' - 7'	A6	0.200	6"	5"
7' - 12'	B5.5	0.240	5½"	5"
12' - 15'	Special 1	0.267	5"	4"

TYPE F - DIMENSIONAL, REINFORCING, AND GRATE DETAILS

NOTES:

1. Grate, Concrete Apron, and Sod not shown in Plan view
2. See Sheet 4 for Concrete Apron and Sodded Area details.
3. Construction joints permitted between these limits. See Index 425-001 for minimum dimensions.

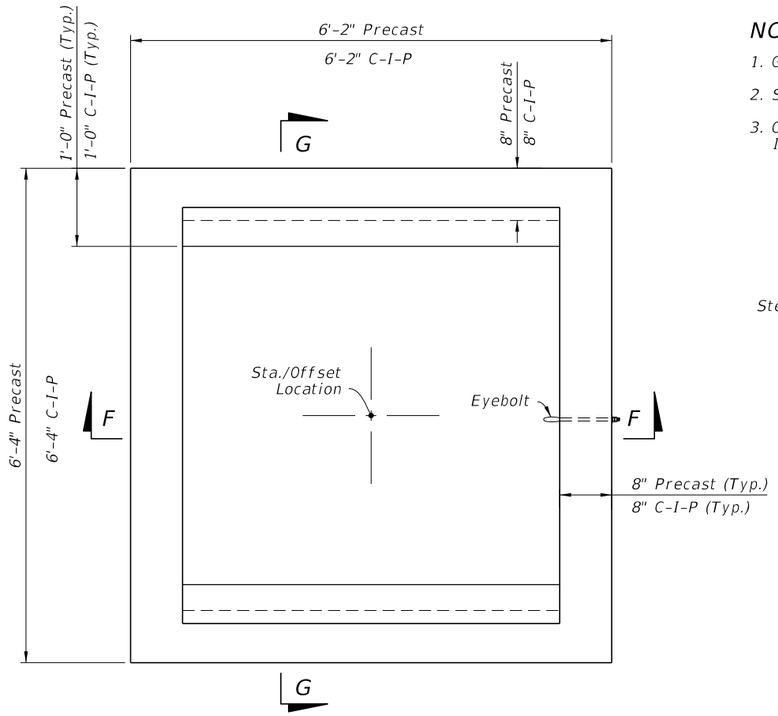

PLAN

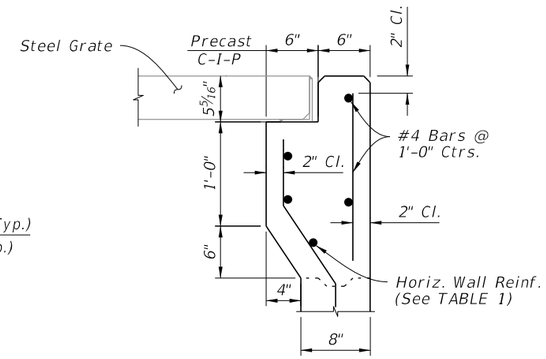

DETAIL "A"

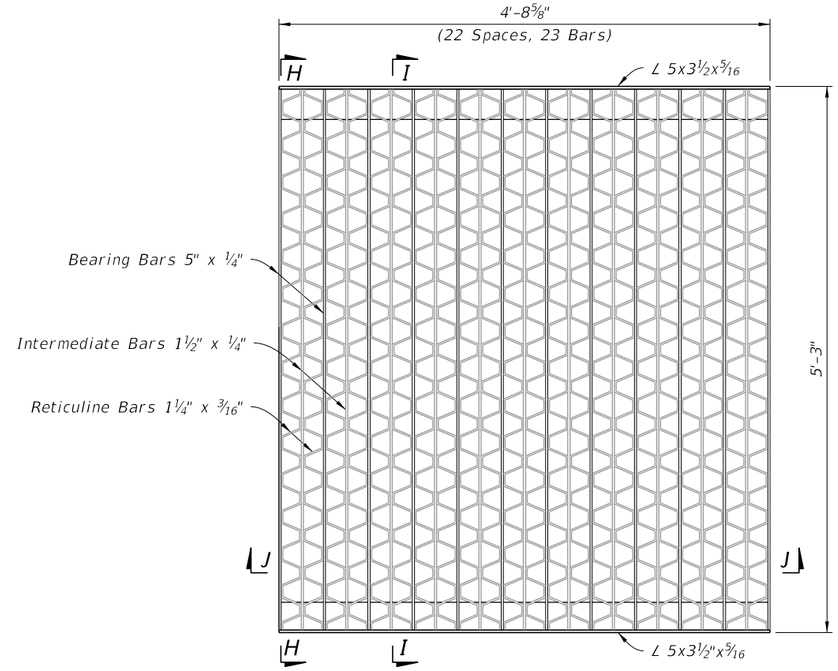

PLAN

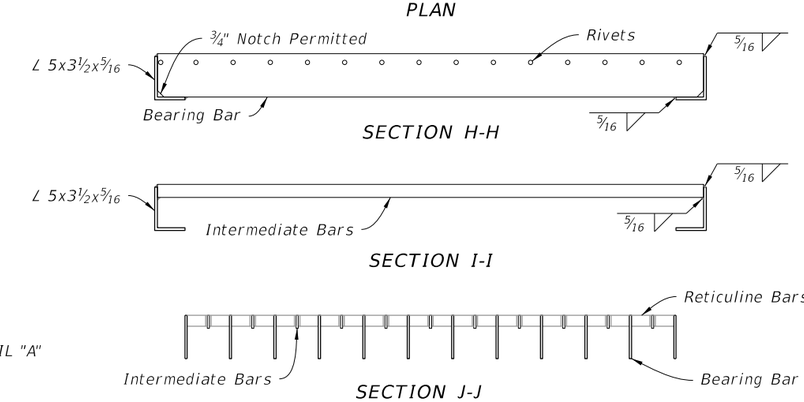

STEEL GRATE DETAIL

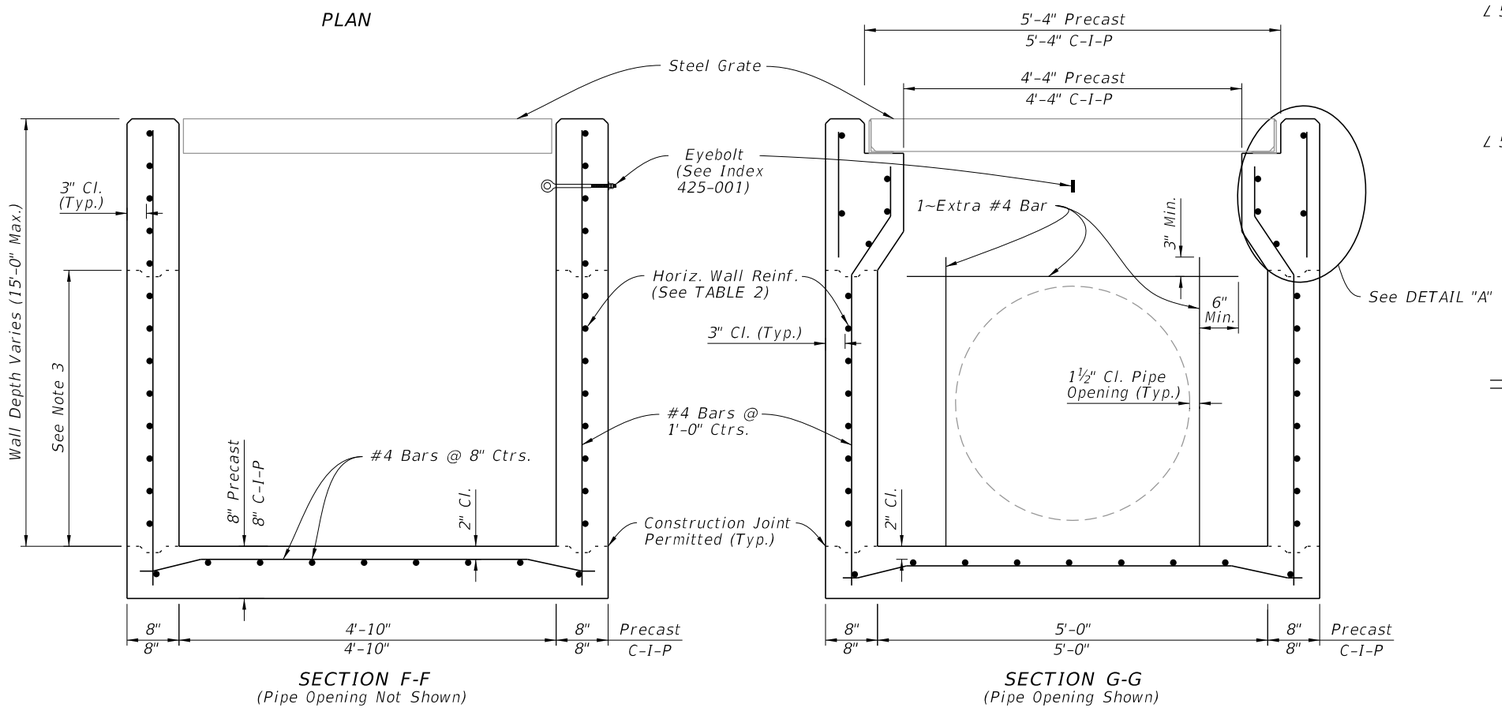

SECTION F-F
(Pipe Opening Not Shown)

SECTION G-G
(Pipe Opening Shown)

DIMENSIONAL AND REINFORCING DETAILS

TABLE 2
HORIZONTAL WALL REINFORCING SCHEDULE

WALL DEPTH	SCHEDULE	AREA (in.²/ft.)	MAX. SPACING	
			BARS	WWR
0' - 3'	A12	0.20	12"	8"
3' - 7'	A6	0.20	6"	5"
7' - 10'	B5.5	0.24	5 1/2"	5"
10' - 15'	C6.5	0.37	6 1/2"	6"

TYPE G - DIMENSIONAL, REINFORCING, AND GRATE DETAILS

TABLE 3 CONCRETE APRON AND SOD QUANTITIES			
INLET	CONCRETE (CY)	SOD W/CONCRETE (SY)	SOD ONLY (SY)
F	0.43	10	6
G	0.34	9	7

NOTES:

1. Concrete Apron to be installed only where called for in the Plans.
2. Sod always required.

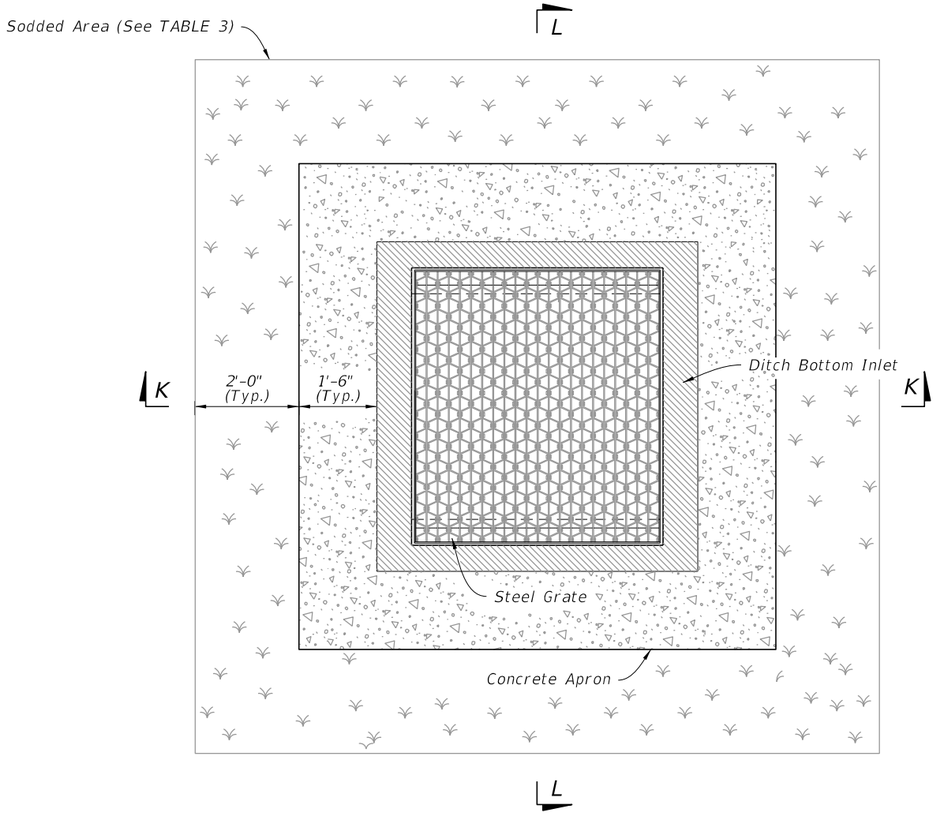

PLAN

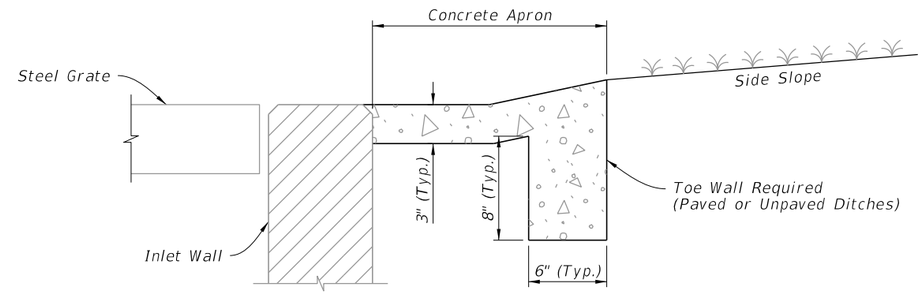

DETAIL "A"

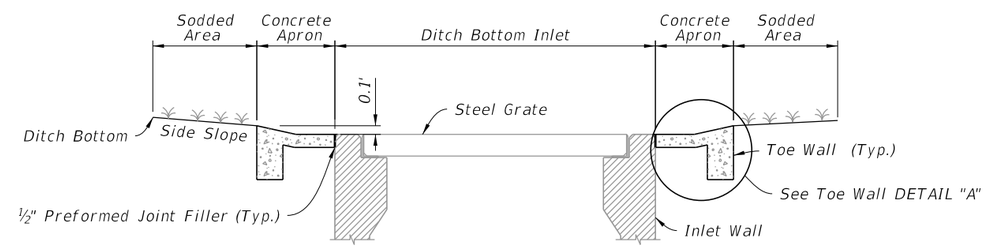

SECTION L-L

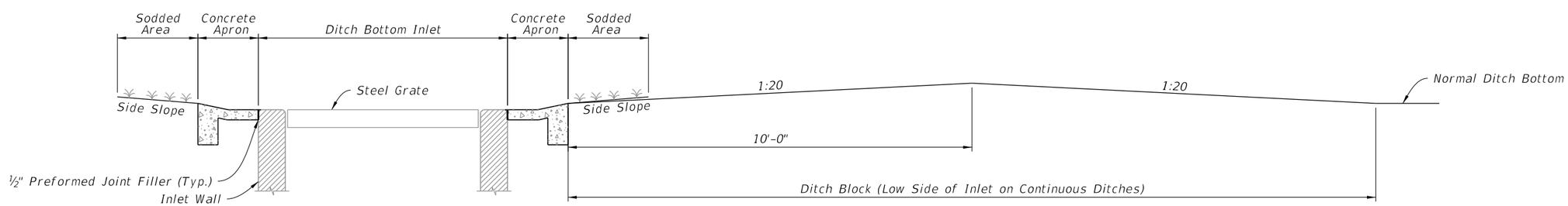

SECTION K-K AND DITCH BLOCK DETAIL

CONCRETE APRON AND SODDED AREA DETAILS

LAST REVISION	REVISION	DESCRIPTION:			INDEX	SHEET
10/01/20			FY 2023-24 STANDARD PLANS	DITCH BOTTOM INLET TYPES F AND G	425-053	4 of 4

10/20/2022 8:47:45 AM

GENERAL NOTES:

1. Work this Index with Index 425-001 and Index 425-010.

2. Reinforcing bars are Grade 60 bars with 2" minimum cover unless otherwise noted. See Index 425-001 for equivalent area of welded wire fabric. Cut or bend bars out of way of pipe when necessary; bars to clear pipe by 1½".

3. Chamfer all exposed edges and corners ¾" or tooled to ¼" radius.

4. Dimensions are for both precast and cast-in-place inlets unless otherwise noted.

5. Quantities are for informational and estimating purposes only.

TABLE OF CONTENTS:

Sheet	Description
1	General Notes and Contents
2	Dimensional and Reinforcing Details
3	Grate, Concrete Apron, and Sodded Area Details
4	Alternate A Structure Bottom - Top Slab Details

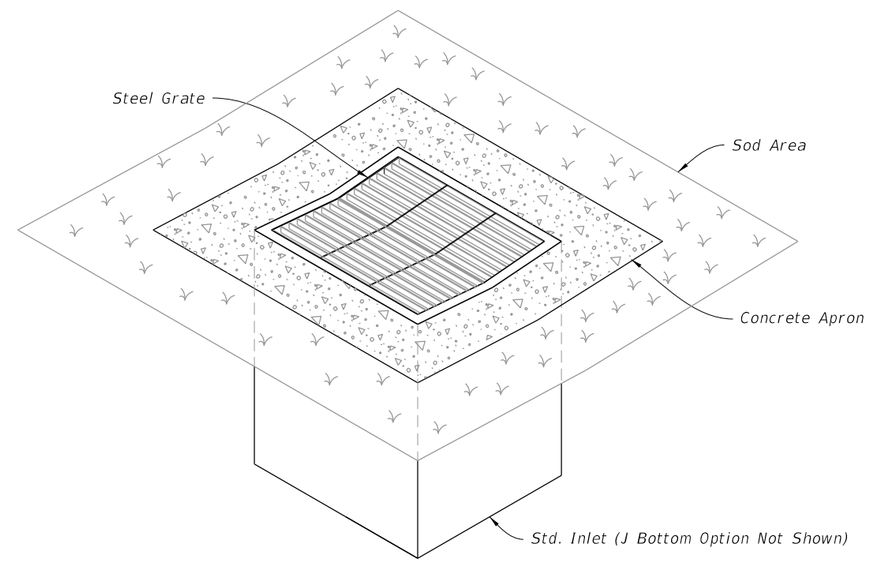

DITCH BOTTOM INLET TYPE J
(Pipe Connection Not Shown)

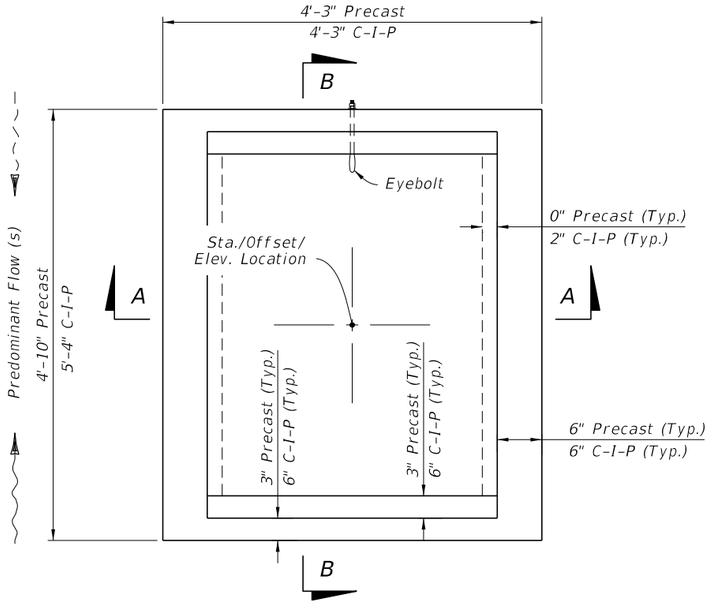

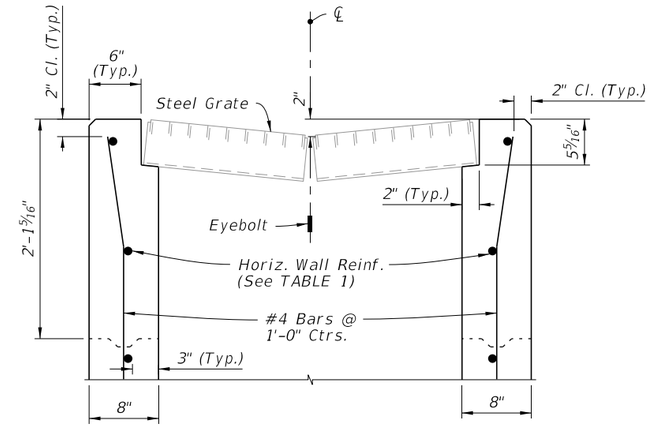

DETAIL "A"

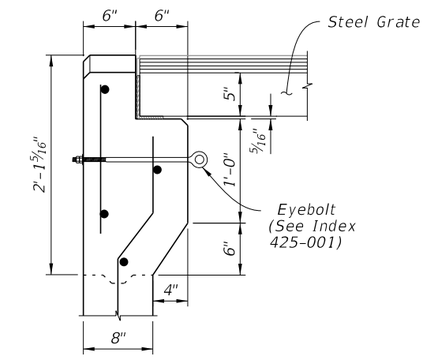

DETAIL "B"

CAST-IN-PLACE OPTION

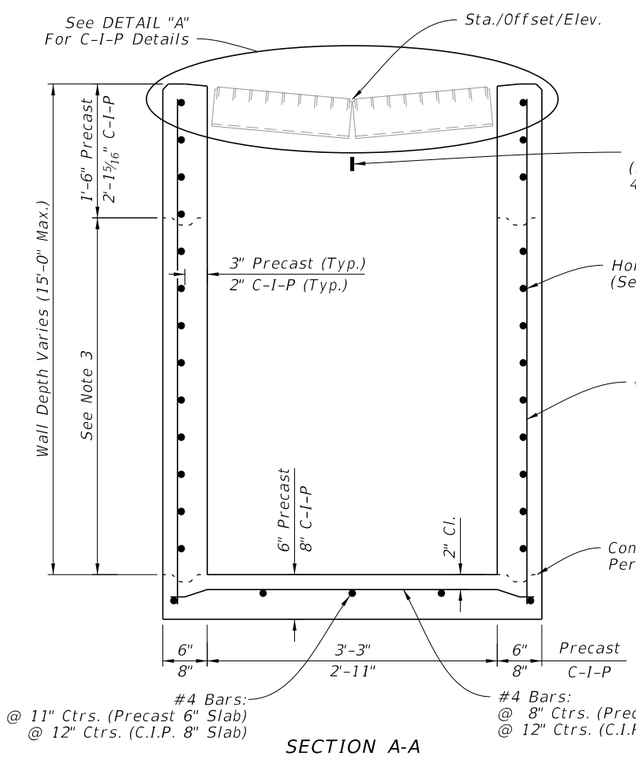

SECTION A-A

(Pipe Opening Not Shown)

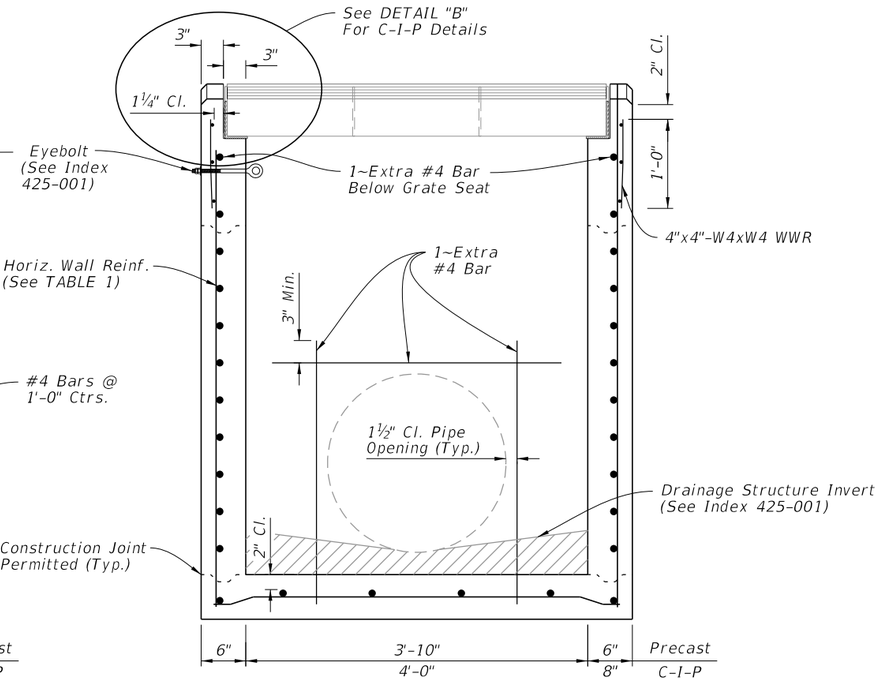

SECTION B-B

(Pipe Opening Shown)

TABLE 1
HORIZONTAL WALL REINFORCING SCHEDULE

WALL DEPTH	SCHEDULE	AREA ($in.^2/ft.$)	MAX. SPACING	
			BARS	WWR
0' - 4'	A12	0.20	12"	8"
4' - 9'	A6	0.20	6"	5"
9' - 12'	A4	0.24	4"	3"
9' - 15'	B5.5	0.24	5 1/2"	5"

NOTES:

1. Grate, Concrete Apron, and Sod not shown in Plan View.
2. See Sheet 3 for Concrete Apron and Sodded Area details.
3. Construction joints permitted between these limits. See Index 425-001 for minimum dimensions.

DIMENSIONAL AND REINFORCING DETAILS

DIMENSIONAL AND REINFORCING DETAILS

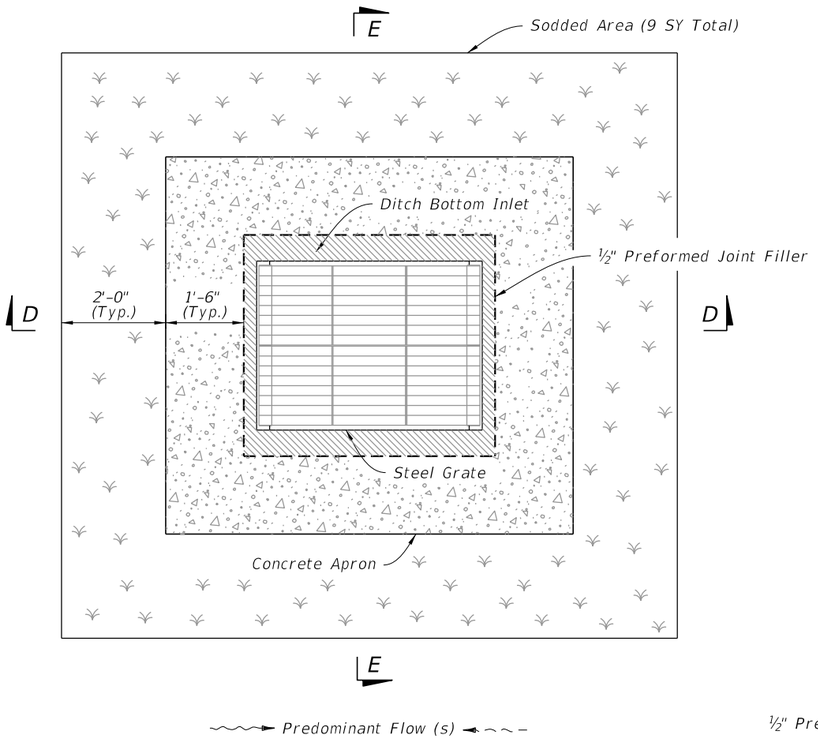

PLAN

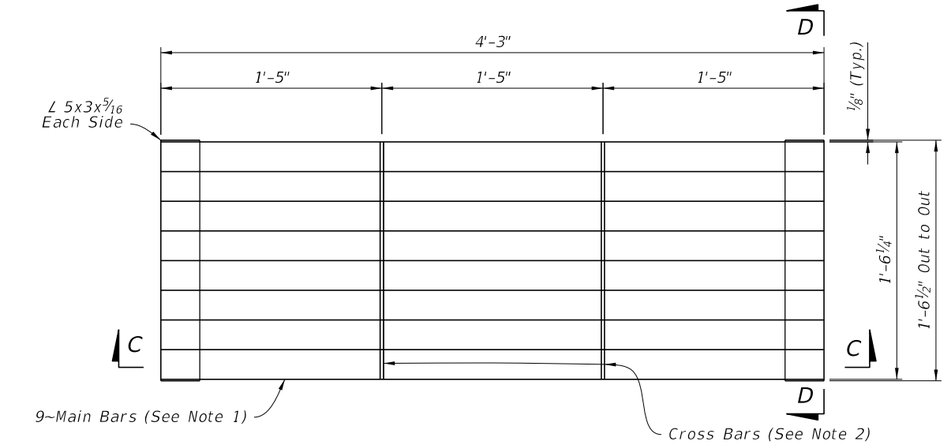

PLAN

NOTES:

1. Main Bars are 5"x¼" and are notched for Cross Bars.
2. Cross Bars are 1¾"x¼" and continuously welded at Main Bar Notches.
3. Main Bars and Cross Bars are flush on top.

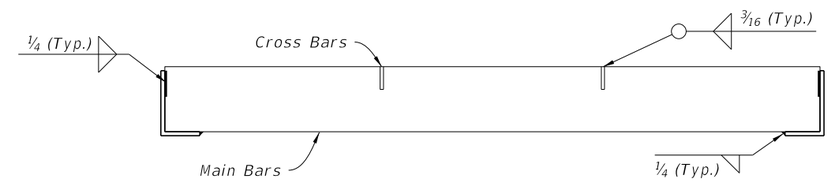

SECTION C-C

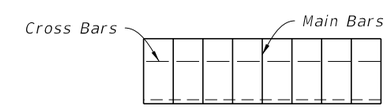

SECTION D-D

STEEL GRATE DETAIL

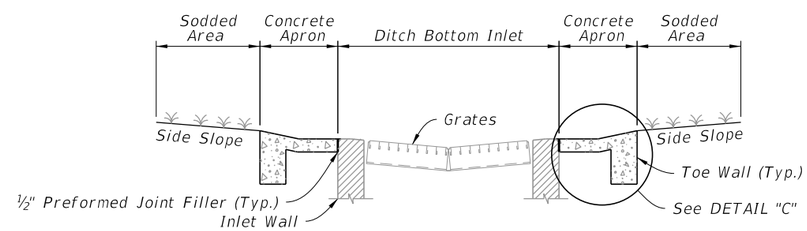

SECTION E-E

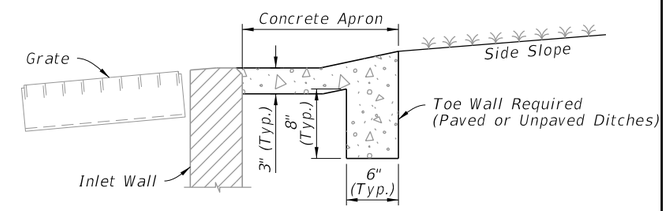

DETAIL "C"

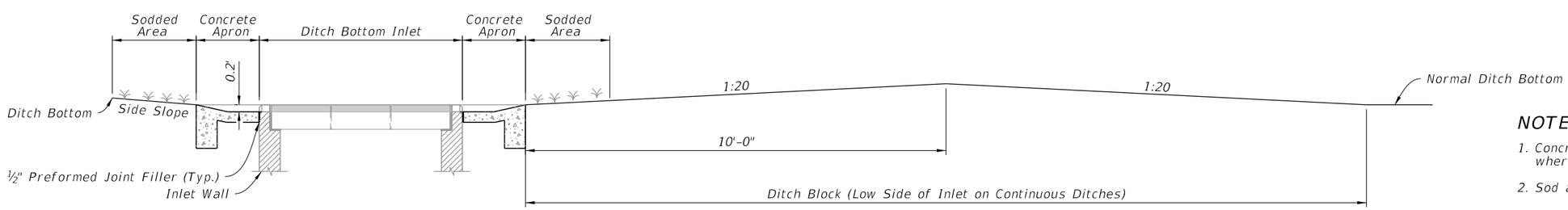

SECTION D-D AND DITCH BLOCK DETAILS

NOTES:

1. Concrete Apron to be installed only where called for in the Plans.
2. Sod always required.

CONCRETE APRON AND SODDED AREA DETAILS

GRATE, CONCRETE APRON, AND SODDED AREA DETAILS

LAST REVISION	REVISION	DESCRIPTION:			INDEX	SHEET
10/01/20			FY 2023-24 STANDARD PLANS	DITCH BOTTOM INLET TYPE J	425-054	3 of 4

10/20/2022 8:47:48 AM

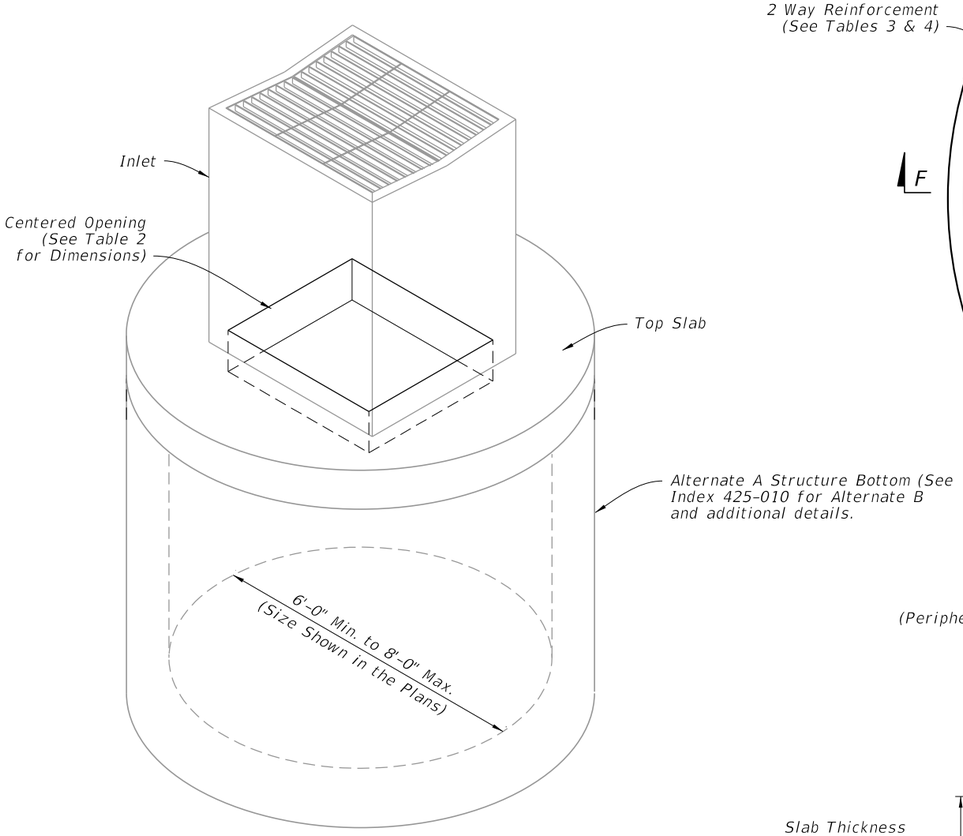

ISOMETRIC VIEW

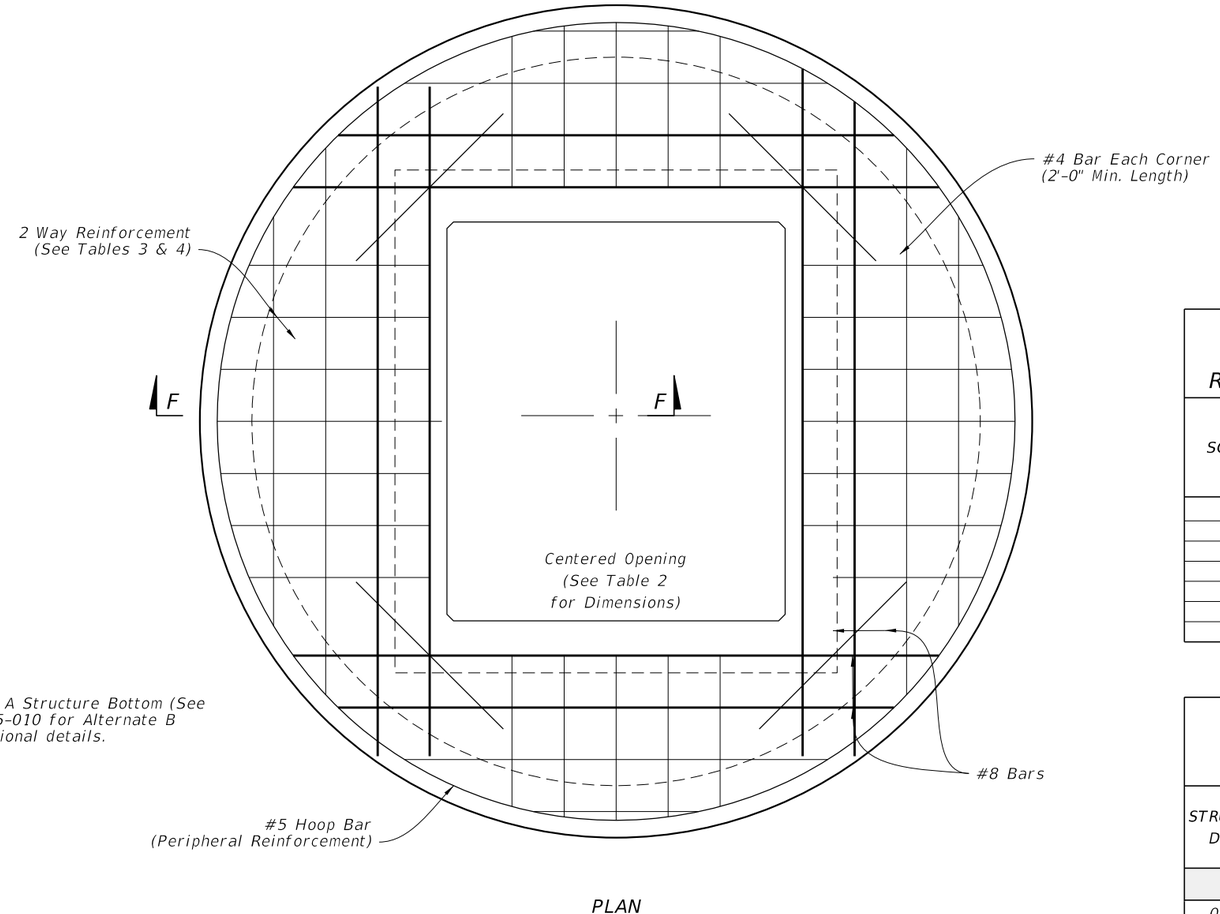

PLAN

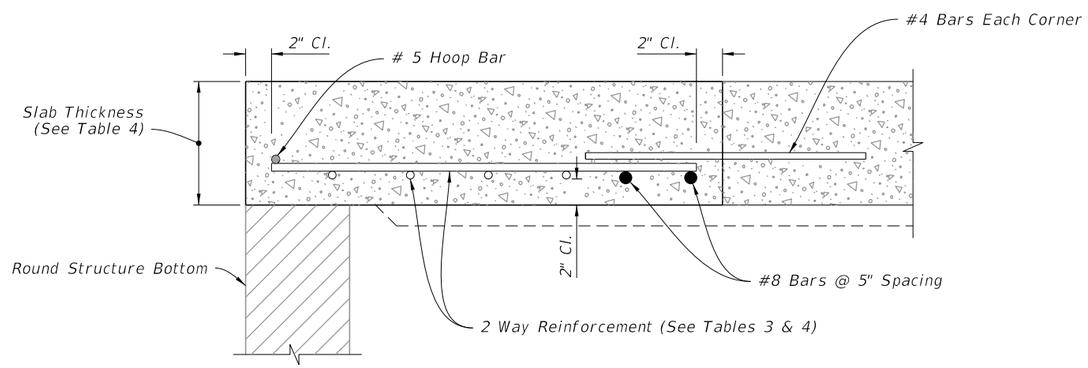

SECTION F-F

TOP SLAB REINFORCEMENT DETAILS

TABLE 3 TOP SLAB REINFORCING SCHEDULE	
SCHEDULE	GRADE 60 (BAR) OR 65 KSI & 70 KSI (WIRE REINFORCING) In.²/ft.
A	0.20
B	0.24
C	0.37
D	0.53
E	0.73
F	1.06
G	1.45

TABLE 4 TOP SLAB WITH CENTERED OPENING		
STRUCTURE DEPTH	SLAB THICKNESS	REINFORCING (2 WAY) SCHEDULE
SIZE: 6'-0"		
0.5'<8'	9½"	B
8'<18'	9½"	C
18'<30'	9½"	D
30'<37'	9½"	E
37'-40'	9½"	G
SIZE: 8'-0"		
≥0.5'<9'	11½"	C
9'<15'	11½"	D
15'<23'	11½"	E
23'<33'	11½"	E
33'-40'	11½"	G

TABLE 2 TOP SLAB OPENING		
BOTTOM STRUCTURE DIAMETER	OPENING SIZE	
	Min.	Max.
6'-0" to 8'-0"	3'-8" x 4'-2"	3'-10" x 4'-2"

ALTERNATE A STRUCTURE BOTTOM - TOP SLAB DETAILS

GENERAL NOTES:

1. Work this Index with Index 425-001 and Index 550-002.

2. Chamfer all exposed edges and corners ¾" or tooled to ¼" radius.

3. Use Class II concrete for inlet and anti-vortex wall.

4. Use Grade 60 reinforcing bars with 2" minimum cover unless otherwise noted. See Index 425-001 for equivalent area of welded wire reinforcing (WWR). Cut or bend bars for 1 ½" clearance around pipe opening. Bend top and corner bars to clear anchor holes.

5. Channel section C 3x6 at 14" max. bar spacing may be used as an alternate for the C 4x5.4 channel at 15" bar spacing.

6. Channels and bars for grate are ASTM A242/A242M, A572/A572M or A588/A588M, Grade 50 steel, and galvanized in accordance with Specification 975.

7. Use Fence Type B for fence enclosure (Index 550-002). Install all posts in concrete. A minimum of 10 posts required. Use 3" nominal diameter posts for corner and approach side posts.

8. Anchor Bolts are ASTM F1554 Grade 36 fully threaded headless bolts, installed in accordance with Specifications 416 and 937. Nuts are ASTM A563 or A194 and washers are ASTM F436 or Type A plain washers. Galvanize all nuts, bolts and washers.

9. Quantities are for informational and estimating purposes only.

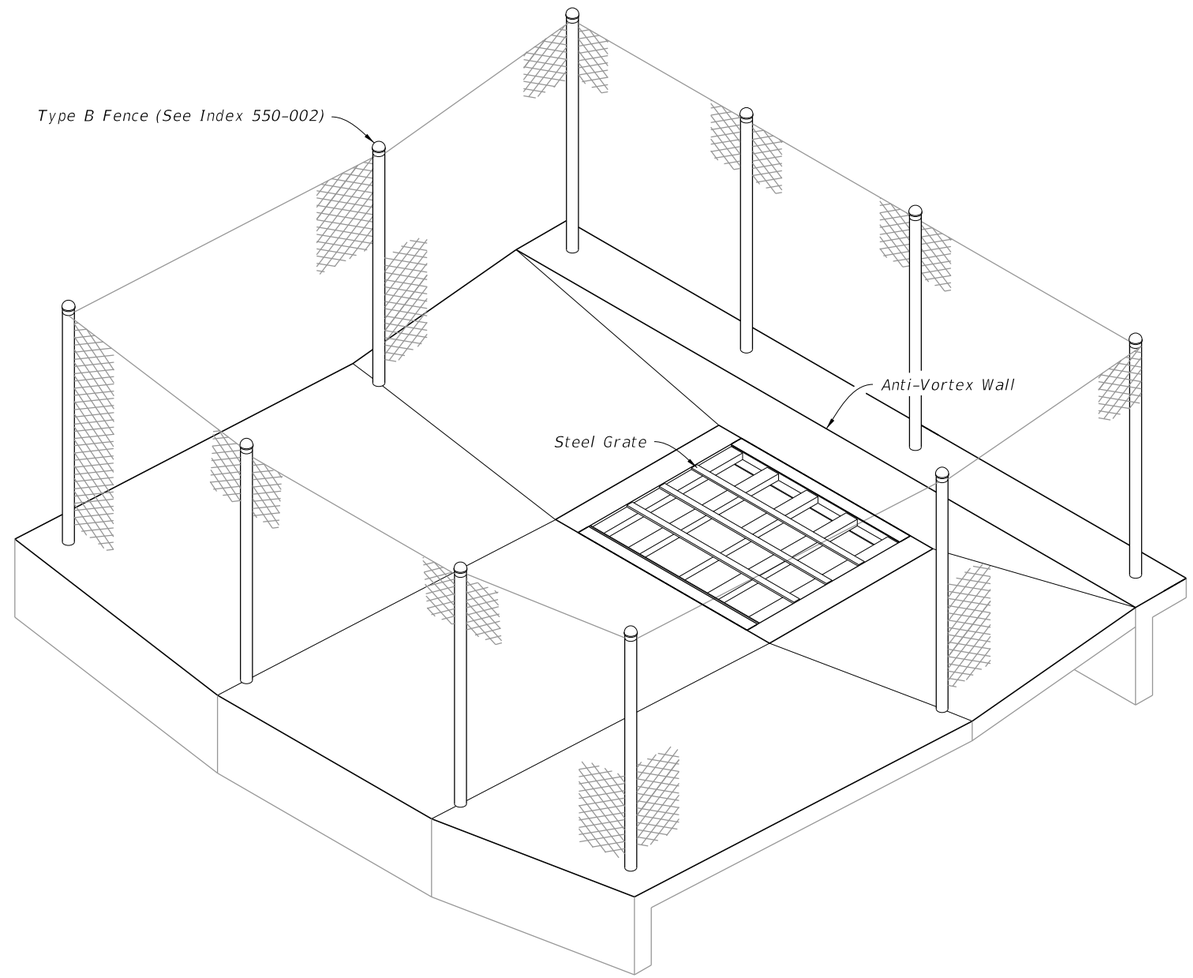

INLET FENCE ENCLOSURE

TABLE OF CONTENTS:

Sheet	Description
1	General Notes and Contents
2	Inlet Lengths (L) Less Than or Equal to 9'
3	Inlet Lengths (L) Greater Than or Equal to 9'
4	Steel Grate Details

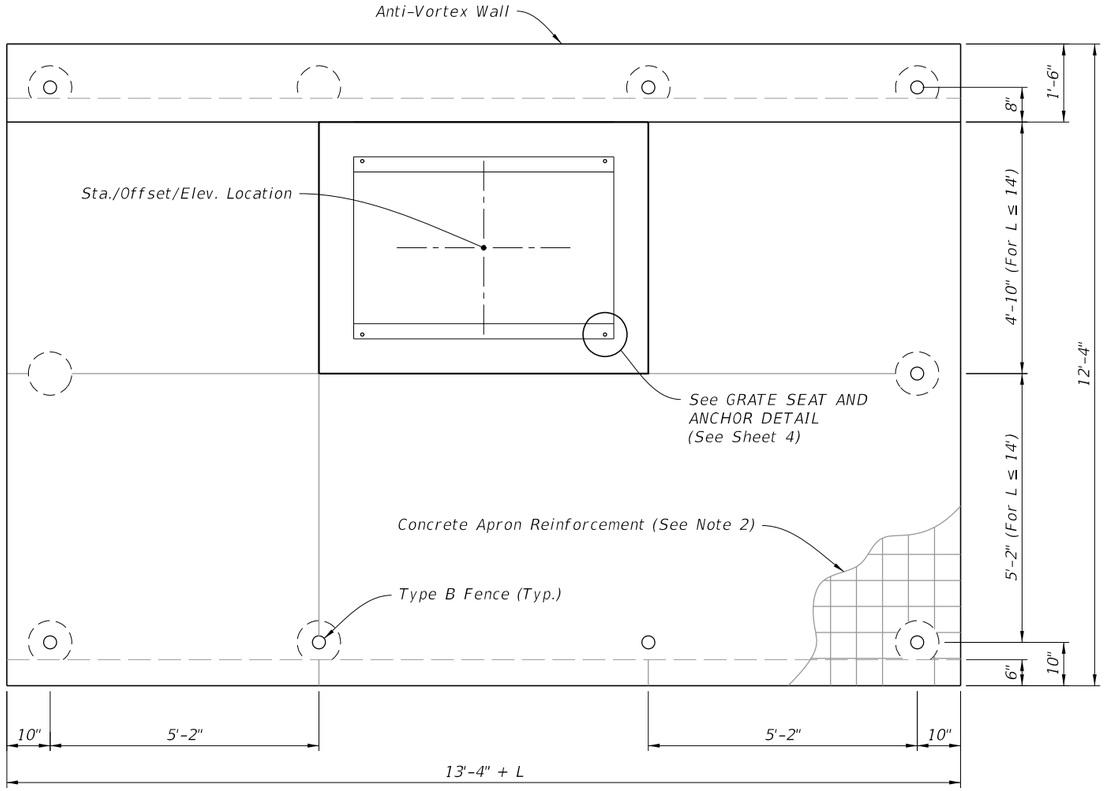

PLAN

TABLE 1 SINGLE LAYER REINFORCING Horizontal Wall Reinforcing Schedules				
WALL DEPTH	SCH.	AREA (in^2/ft)	MAX. SPACING BARS	MAX. SPACING WWR
SIZE: L = 5'-0"				
0'-5'	A12	0.20	12"	8"
5'-8'	A6	0.20	6"	5"
8'-15'	B5.5	0.24	5½"	5"
SIZE: L = 6'-0"				
0'-4'	A12	0.20	12"	8"
4'-6'	B5.5	0.24	5½"	5"
6'-9'	C6.5	0.37	6½"	6"
9'-15'	C3.5	0.37	3½"	3"
SIZE: L = 7'-0"				
0'-4'	B5.5	0.24	5½"	5"
4'-7'	C6.5	0.37	6½"	6"
7'-15'	D4.5	0.53	4½"	4"
SIZE: L = 8'-0"				
0'-3'	B5.5	0.24	5½"	5"
3'-5'	C6.5	0.37	6½"	6"
5'-9'	D4.5	0.53	4½"	4"
9'-15'	E5	0.73	5"	4"
SIZE: L = 9'-0"				
0'-4'	C6.5	0.37	6½"	6"
4'-7'	D4.5	0.53	4½"	4"
7'-15'	E3	0.73	3"	3"

NOTES:

1. See Plans for Inlet length (L).
2. Use 6"x6" 10/10 welded wire reinforcing.
3. Grate not shown.
4. Pipe opening not shown.

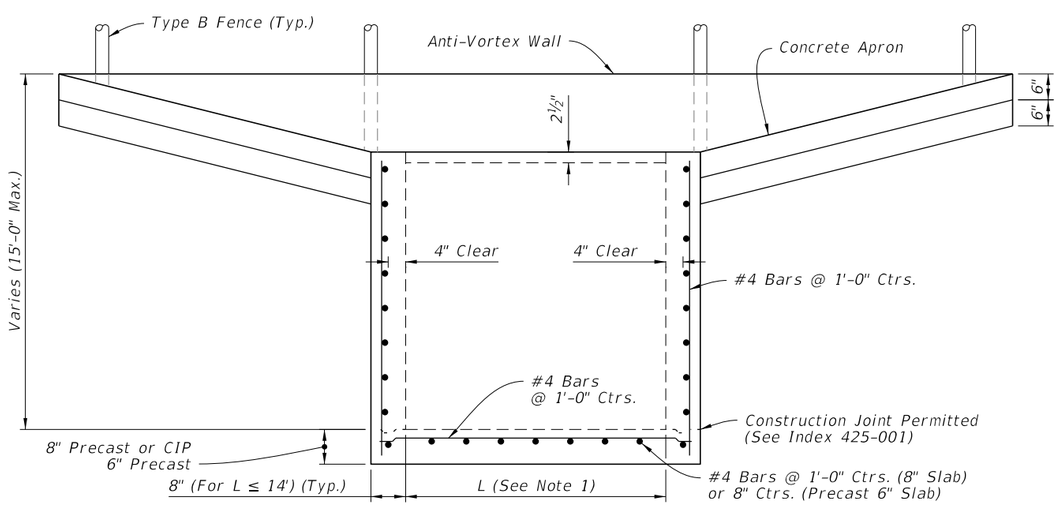

(See Note 4)

FRONT ELEVATION

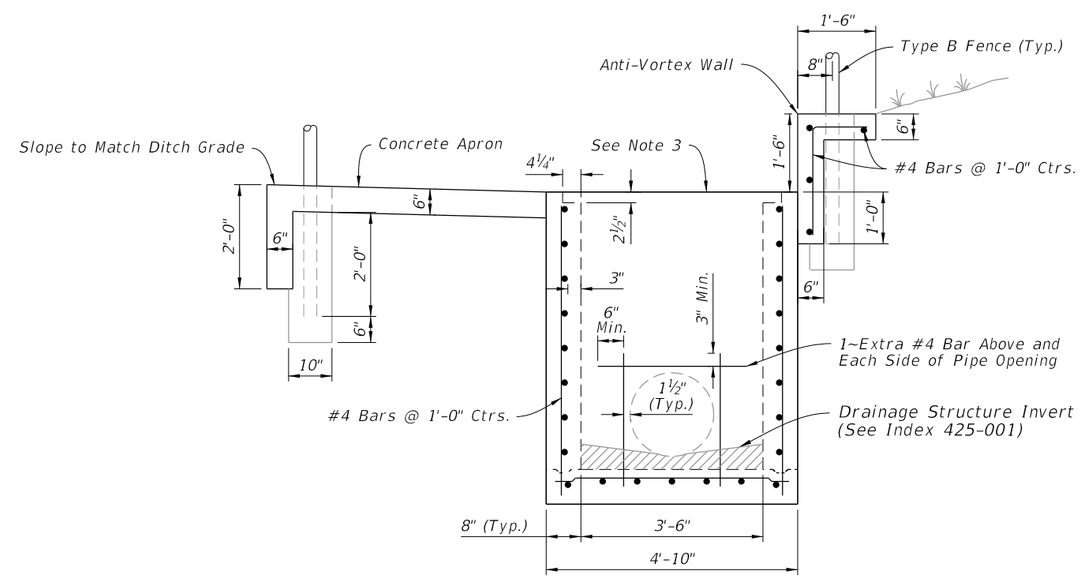

SIDE ELEVATION

INLET LENGTHS (L) LESS THAN OR EQUAL TO 9'

LAST REVISION	REVISION	DESCRIPTION:	FY 2023-24 STANDARD PLANS	DITCH BOTTOM INLET TYPE K	INDEX	SHEET
10/01/20					425-055	2 of 4

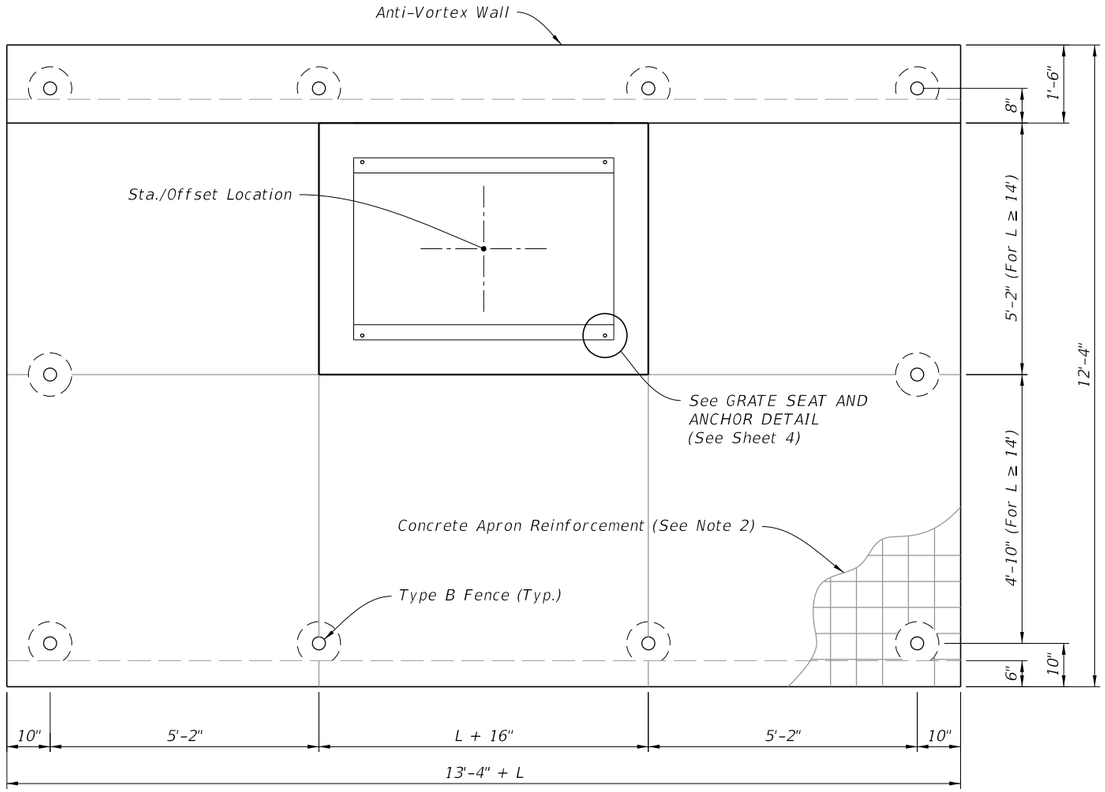

PLAN

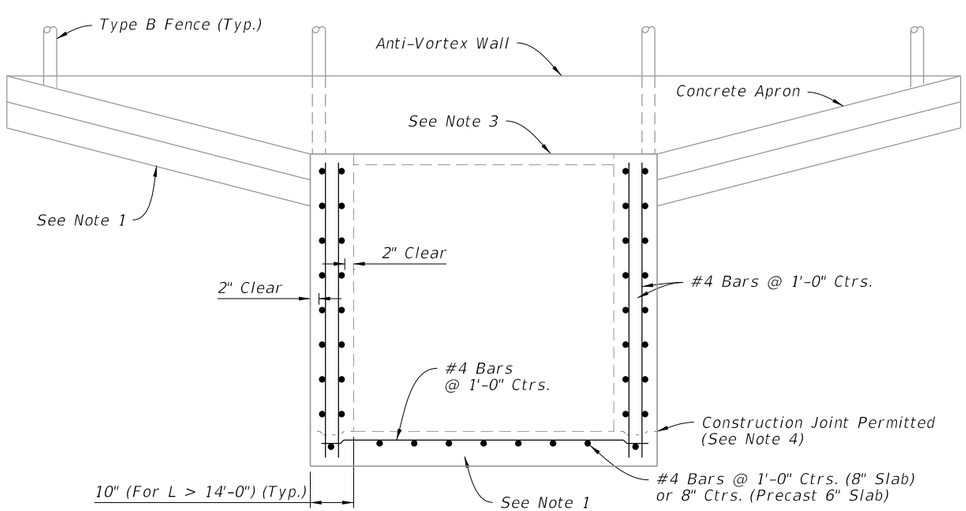

(See Note 5)

FRONT ELEVATION

TABLE 2
DOUBLE LAYER REINFORCING
Horizontal Wall Reinforcing Schedules

WALL DEPTH	SCH.	AREA (in^2/ft)	MAX. SPACING	
			BARS	WWR
SIZE: L = 9'-0"				
0'-4'	A12	0.20	12"	8"
4'-6'	A6	0.20	6"	5"
6'-8'	B5.5	0.24	5½"	5"
8'-15'	C6.5	0.37	6½"	6"
SIZE: L = 10'-0"				
0'-3'	A12	0.20	12"	8"
3'-5'	A6	0.20	6"	5"
5'-8'	C6.5	0.37	6½"	6"
8'-15'	C3.5	0.37	3½"	3"
SIZE: L = 12'-0"				
0'-4'	B5.5	0.24	5½"	5"
4'-6'	C6.5	0.37	6½"	6"
6'-15'	D4.5	0.53	4½"	4"
SIZE: L = 14'-0"				
0'-4'	C6.5	0.37	6½"	6"
4'-7'	D4.5	0.53	4½"	4"
7'-15'	E5	0.73	5"	4"
SIZE: L = 16'-0" x 10" WALL THICK				
0'-4'	C6.5	0.37	6½"	6"
4'-8'	D4.5	0.53	4½	4"
8'-15'	E5	0.73	5"	4"
SIZE: L = 18'-0" x 10" WALL THICK				
0'-3'	C6.5	0.37	6½"	6"
3'-5'	D4.5	0.53	4½"	4"
5'-8'	E5	0.73	5"	4"
8'-15'	F5	1.06	5"	4"

NOTE:

1. See Sheet 2 for dimension details.
2. Use 6"x6" 10/10 welded wire reinforcing.
3. Grate not shown.
4. See Index 425-001 for construction joint details.
5. Pipe Opening not shown.

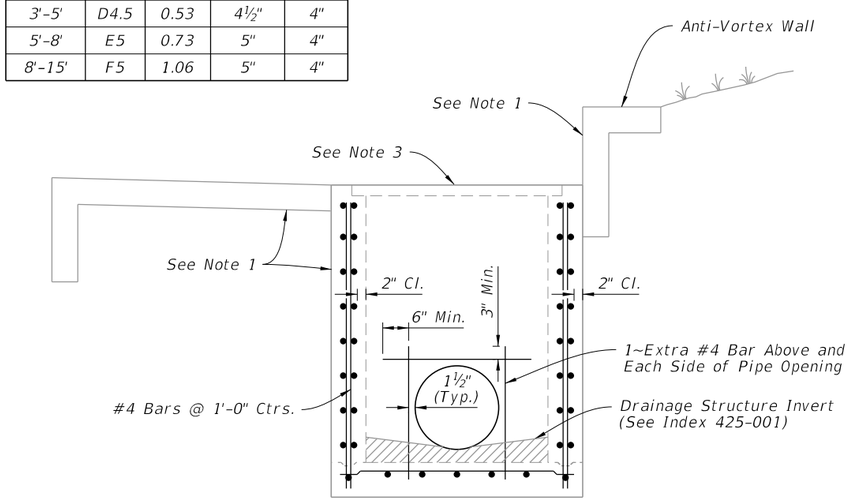

SIDE ELEVATION

INLET LENGTHS (L) GREATER THAN OR EQUAL TO 9'

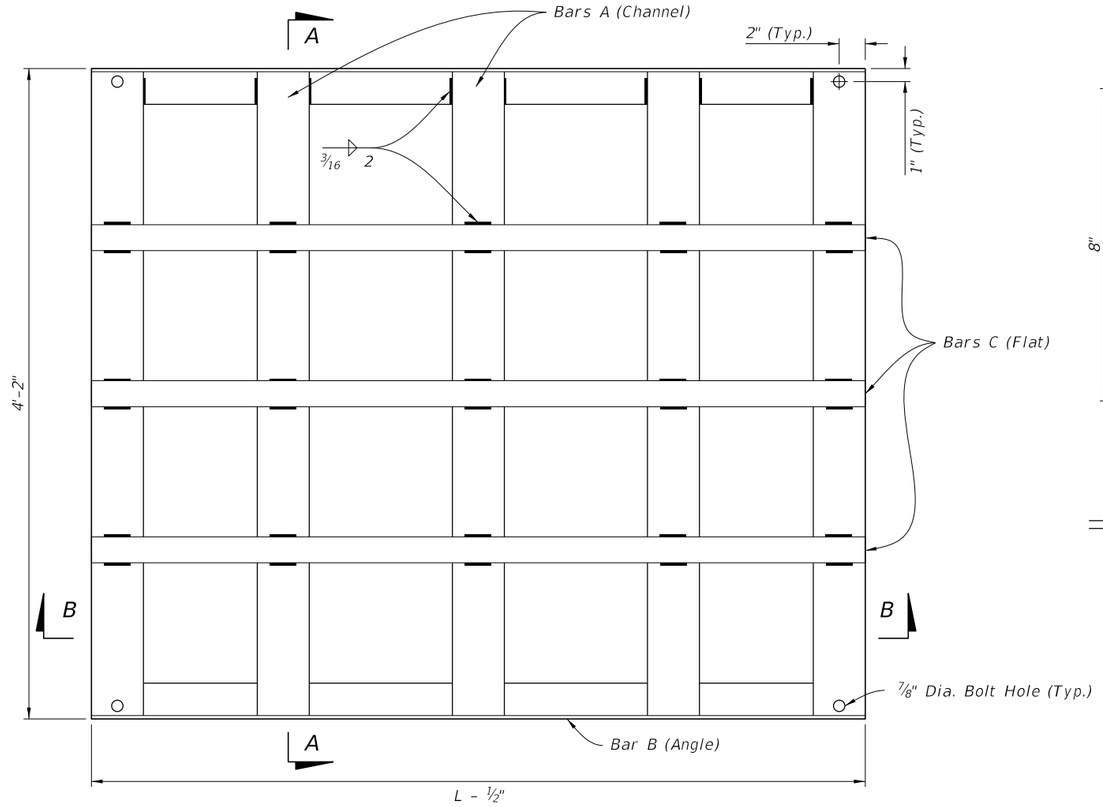

PLAN

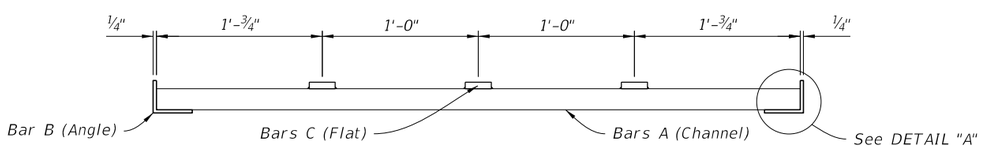

SECTION A-A

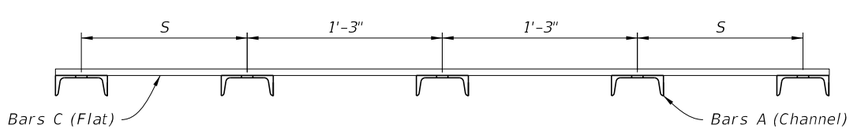

SECTION B-B

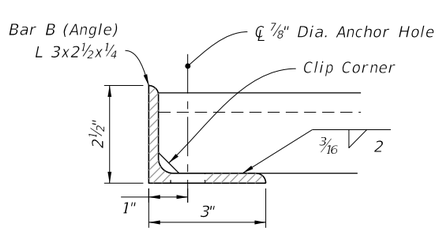

DETAIL "A"

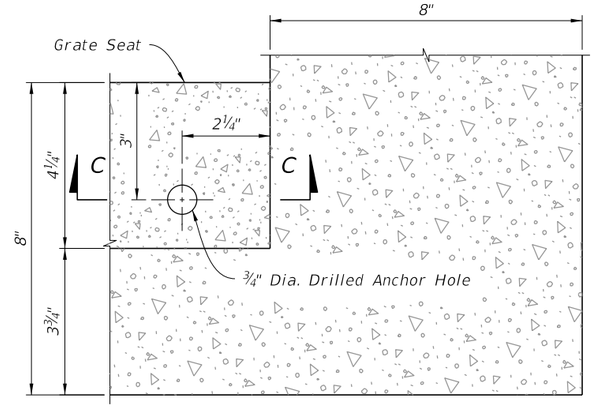

PLAN

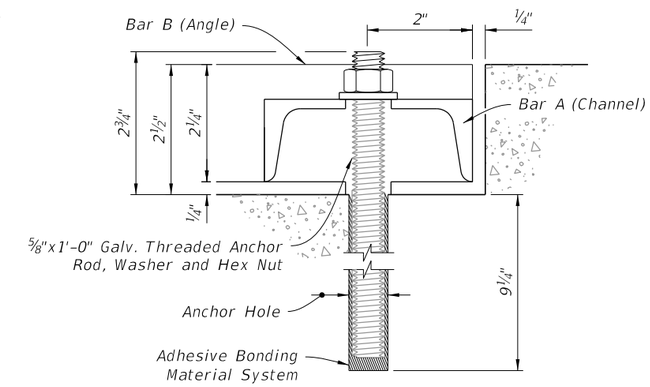

SECTION C-C

GRATE SEAT AND ANCHOR DETAILS

TABLE 3
GRATE QUANTITIES

PIPE SIZE	L See Note 1	S	BILL OF STEEL			STEEL WEIGHT		
			BAR	No. REQD.	LENGTH	CHANNEL 4"x 5.4 lb	ANGLE 3"x 2 1/2"x 1/4" (4.5 lb/ft)	FLAT 2" x 1/2" (3.4 lb/ft)
30"&36"	5'-0"	12 3/4"	A	5	4'-1 1/2"	111	45	51
			B	2	4'-11 1/2"			
			C	3	4'-11 1/2"			
42"&48"	6'-0"	11 1/4"	A	6	4'-1 1/2"	134	54	61
			B	2	5'-11 1/2"			
			C	3	5'-11 1/2"			
54"&60"	7'-0"	9 3/4"	A	7	4'-1 1/2"	156	63	71
			B	2	6'-11 1/2"			
			C	3	6'-11 1/2"			
66"&72"	8'-0"	8 1/4"	A	8	4'-1 1/2"	178	72	81
			B	2	7'-11 1/2"			
			C	3	7'-11 1/2"			
84"	9'-0"	14 1/4"	A	8	4'-1 1/2"	178	81	91
			B	2	8'-11 1/2"			
			C	3	8'-11 1/2"			
SPECIAL	10'-0"	12 3/4"	A	9	4'-1 1/2"	201	90	102
			B	2	9'-11 1/2"			
			C	3	9'-11 1/2"			
SPECIAL	12'-0"	9 3/4"	A	11	4'-1 1/2"	245	108	122
			B	2	11'-11 1/2"			
			C	3	11'-11 1/2"			
SPECIAL	14'-0"	14 1/4"	A	12	4'-1 1/2"	267	126	142
			B	2	13'-11 1/2"			
			C	3	13'-11 1/2"			
SPECIAL	16'-0"	11 1/4"	A	14	4'-1 1/2"	312	144	163
			B	2	15'-11 1/2"			
			C	3	15'-11 1/2"			
SPECIAL	18'-0"	8 1/4"	A	16	4'-1 1/2"	356	162	183
			B	2	17'-11 1/2"			
			C	3	17'-11 1/2"			

NOTES:

1. See Sheet 2 for dimension "L" location.
2. See Section B-B for dimension "S" location.

STEEL GRATE DETAILS

GENERAL NOTES:

1. Work this Index with Index 425-052.

2. Quantities are for informational and estimating purposes only.

TABLE OF CONTENTS:

Sheet	Description
1	General Notes and Contents
2	Inlet Type C (Modified)
3	Special Concrete Endwall
4	Shallow Ditches and Yard Drains

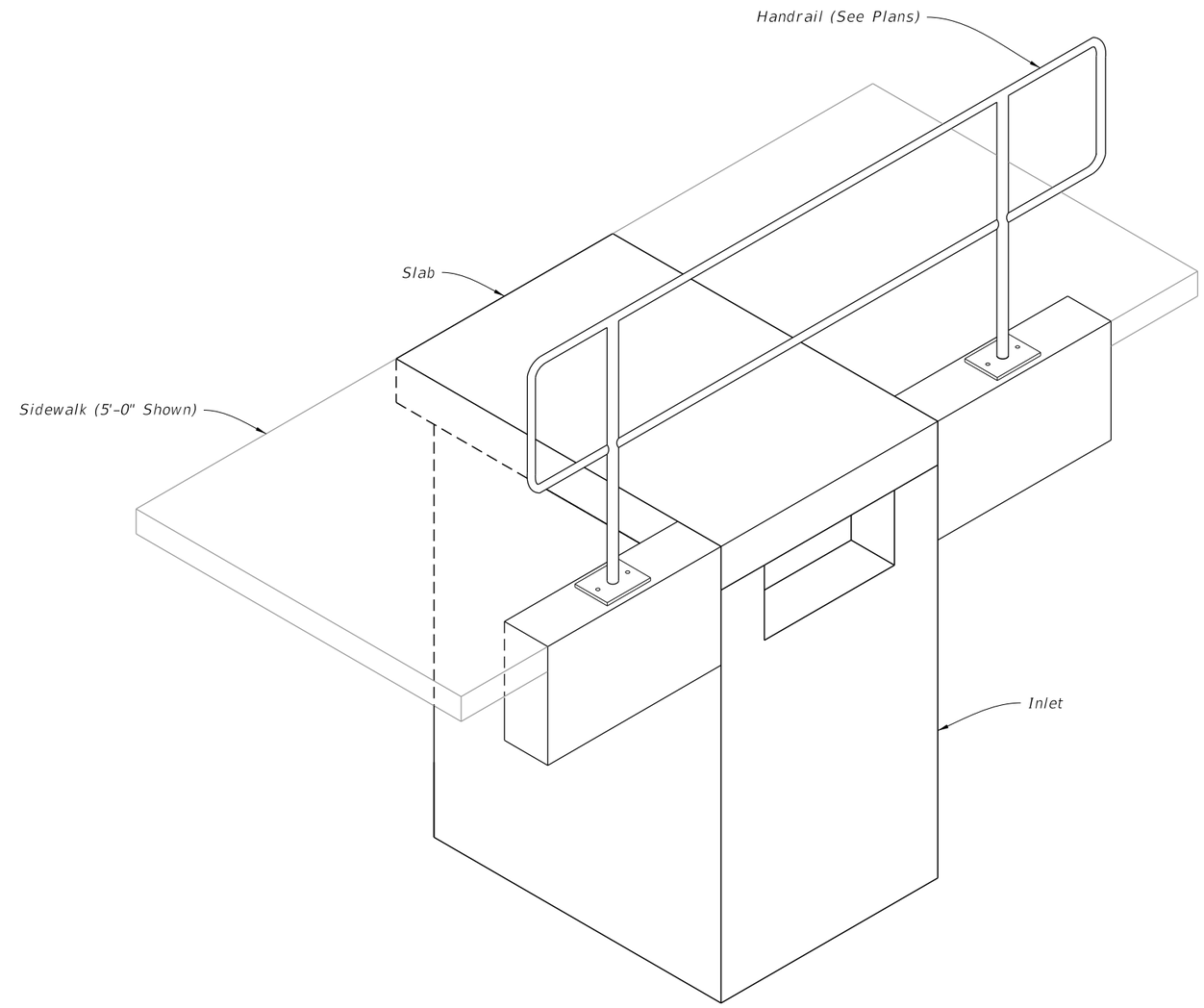

TYPE C (MODIFIED) INLET

(Pipe Connection Not Shown)

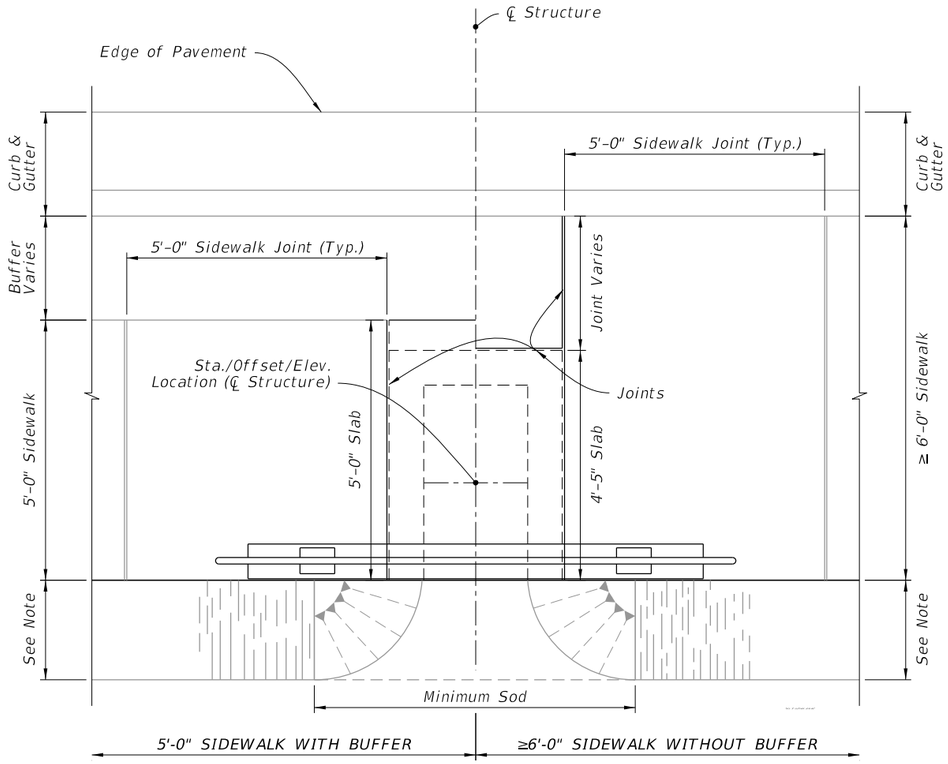

PLAN

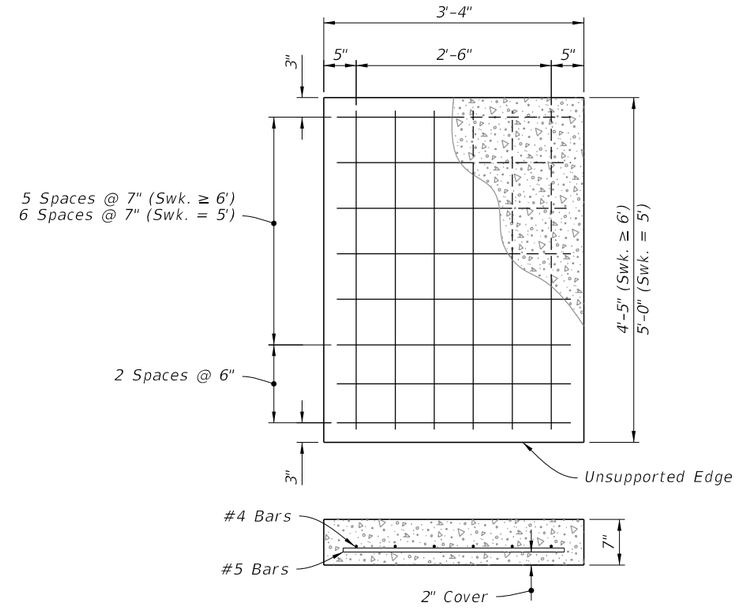

SLAB REINFORCEMENT

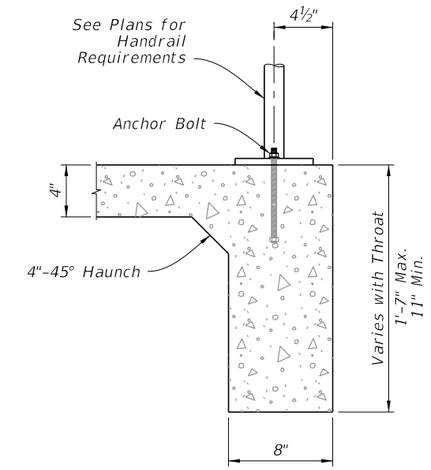

SECTION B-B

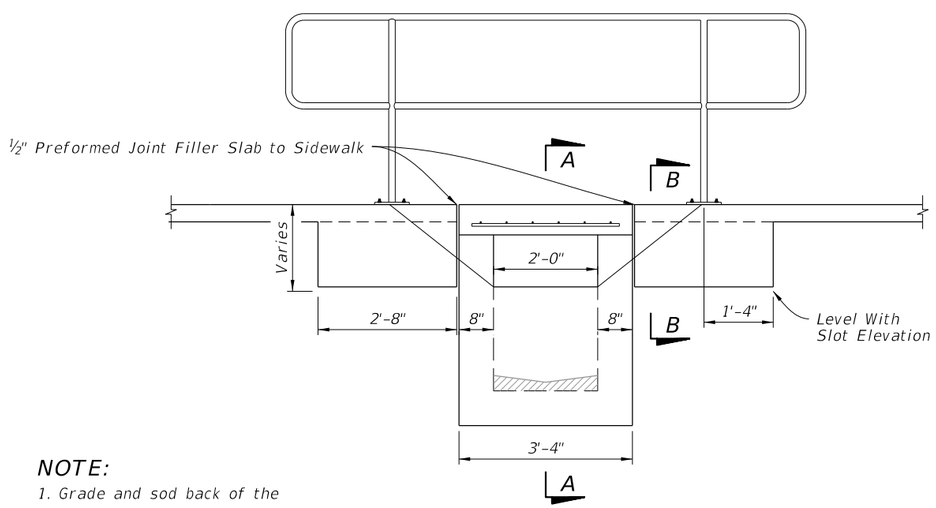

ELEVATION

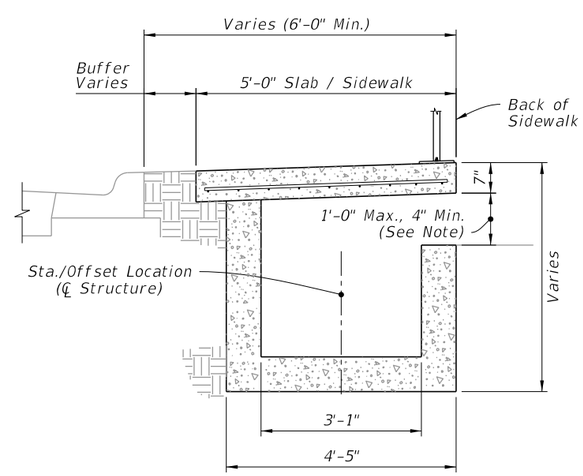

5'-0" SIDEWALK WITH BUFFER

SECTION A-A

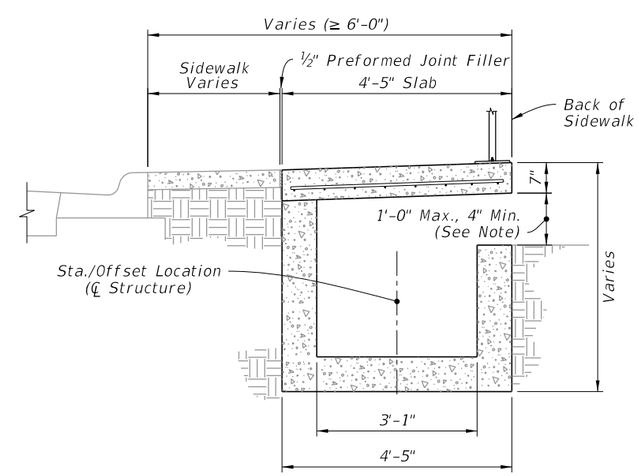

≥6'-0" SIDEWALK WITHOUT BUFFER

SECTION A-A

NOTE:

1. Grade and sod back of the sidewalk as directed by the Engineer.
2. Pipe connection not shown.

TYPE C INLET (MODIFIED)

LAST REVISION	REVISION	DESCRIPTION:			INDEX	SHEET
10/01/20			FY 2023-24 STANDARD PLANS	BACK OF SIDEWALK DRAINAGE	425-060	2 of 4

10/20/2022 8:48:20 AM

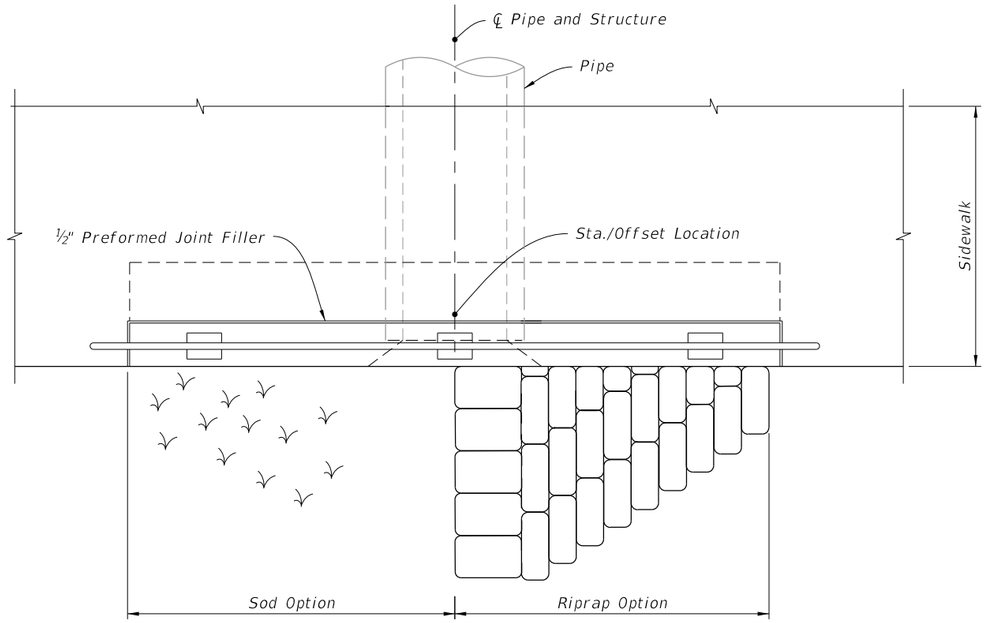

PLAN

NOTES:

1. Grading back of sidewalk as directed in the Plans.
2. Concrete quantities shown are for maximum wall heights and for information only.
3. Riprap quantities are for informational and estimating purposes only.

TABLE - 1			
Pipe Size Dia. (in)	C	Concrete Class II (CY)	Sand-Cement Riprap (CY)
15	4'-9"	2.3	1.1
18	5'-3"	2.6	1.3
24	6'-3"	3.3	1.8

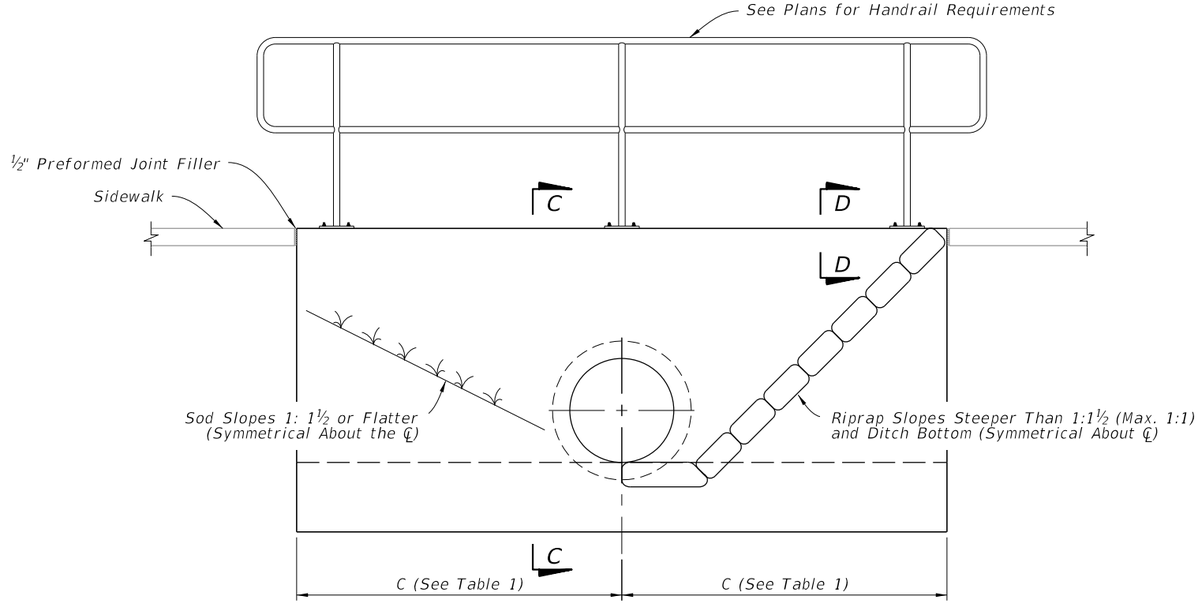

ELEVATION

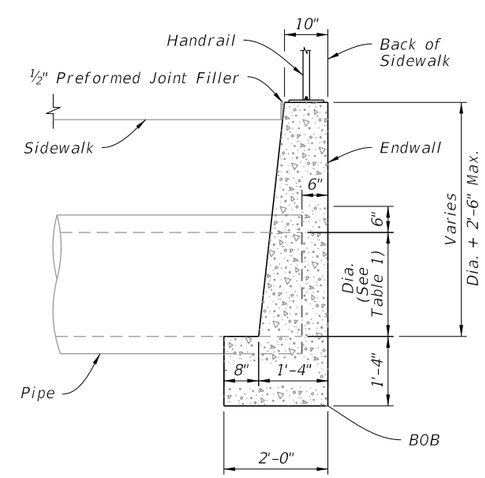

SECTION C-C

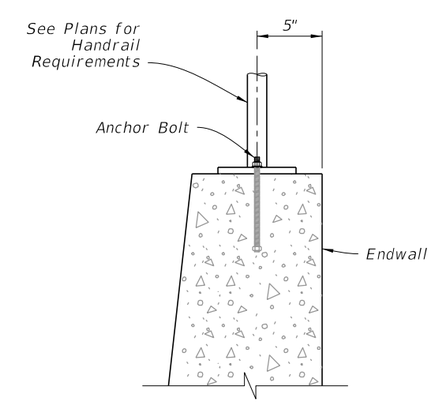

SECTION D-D

SPECIAL CONCRETE ENDWALL

NOTES:

1. Construct at locations as directed by the Engineer.

2. Use either cast iron pipe or PVC rigid conduit, U.L. listed for direct sunlight exposure, Schedule 40.

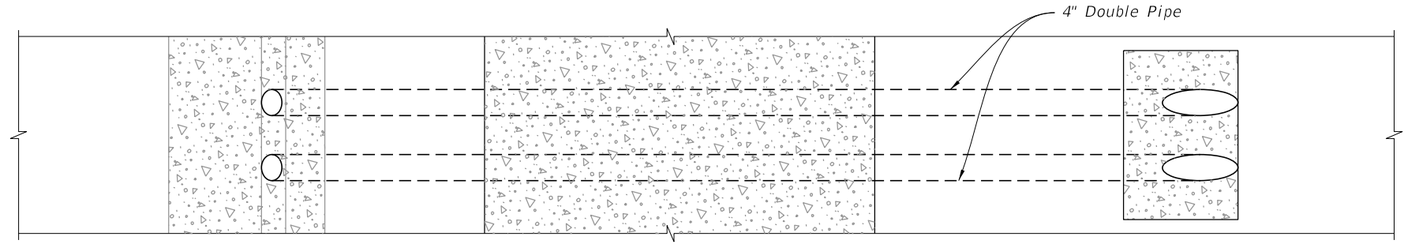

PLAN

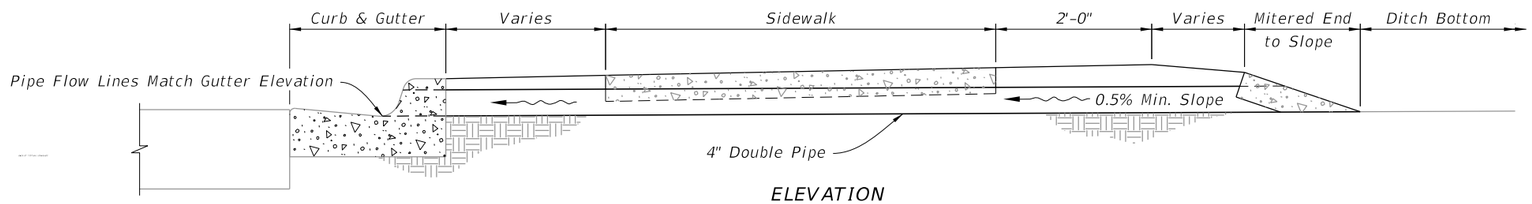

ELEVATION

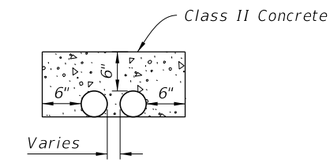

INLET VIEW

SHALLOW DITCHES

NOTES:

1. Tee will be either concrete or PVC, 15"x15"x12".

2. Grate will have diameter of 14¼", 2½" thick, minimum 45 square inches flow area, and be light duty cast iron in accordance Specification 962.

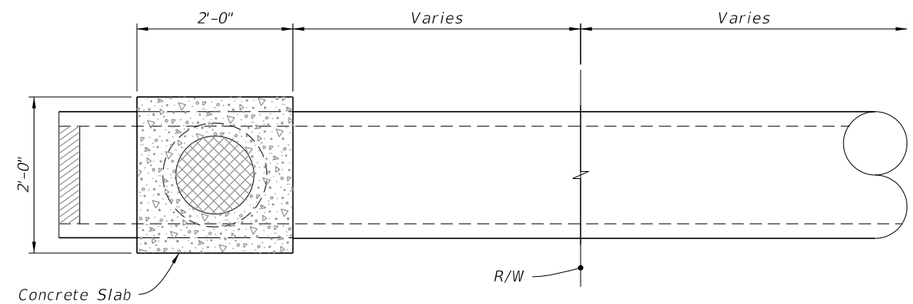

PLAN

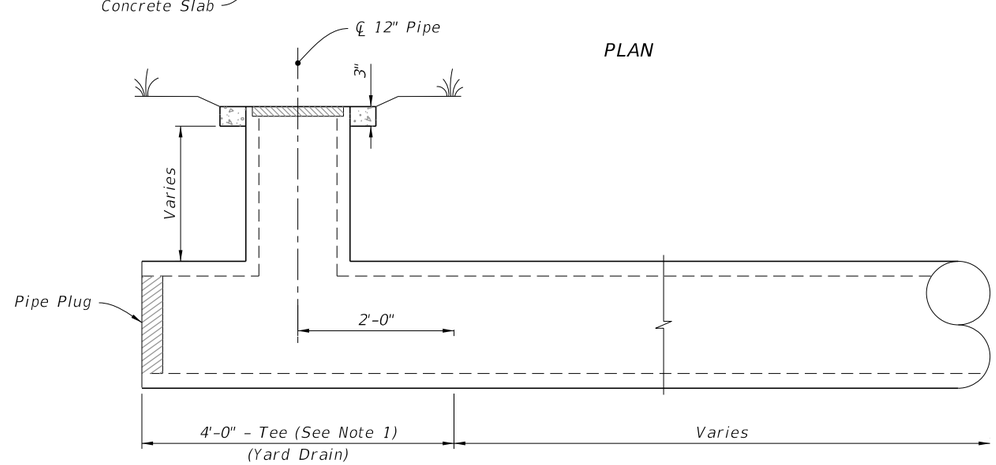

ELEVATION

YARD DRAINS

SHALLOW DITCHES AND YARD DRAINS

LAST REVISION	REVISION	DESCRIPTION:				
10/01/21			FY 2023-24 STANDARD PLANS	BACK OF SIDEWALK DRAINAGE	INDEX 425-060	SHEET 4 of 4

10/20/2022 8:48:23 AM

GENERAL NOTES:

1. The finished grade and slope of the inlet top are to conform with the finished cross slope and grade of the proposed sidewalk and/or border.

2. When inlets are to be constructed on a curve, refer to the plans to determine the radius. Bend steel when necessary.

3. Inlets can be either cast-in-place or precast concrete. Chamfer all exposed edges ¾".

4. All reinforcement is ASTM A615/A615M Grade 60 steel, either smooth or deformed with a 2" minimum cover, unless otherwise shown. Equivalent area grade 40 steel or 65 ksi welded wire fabric may be substituted.

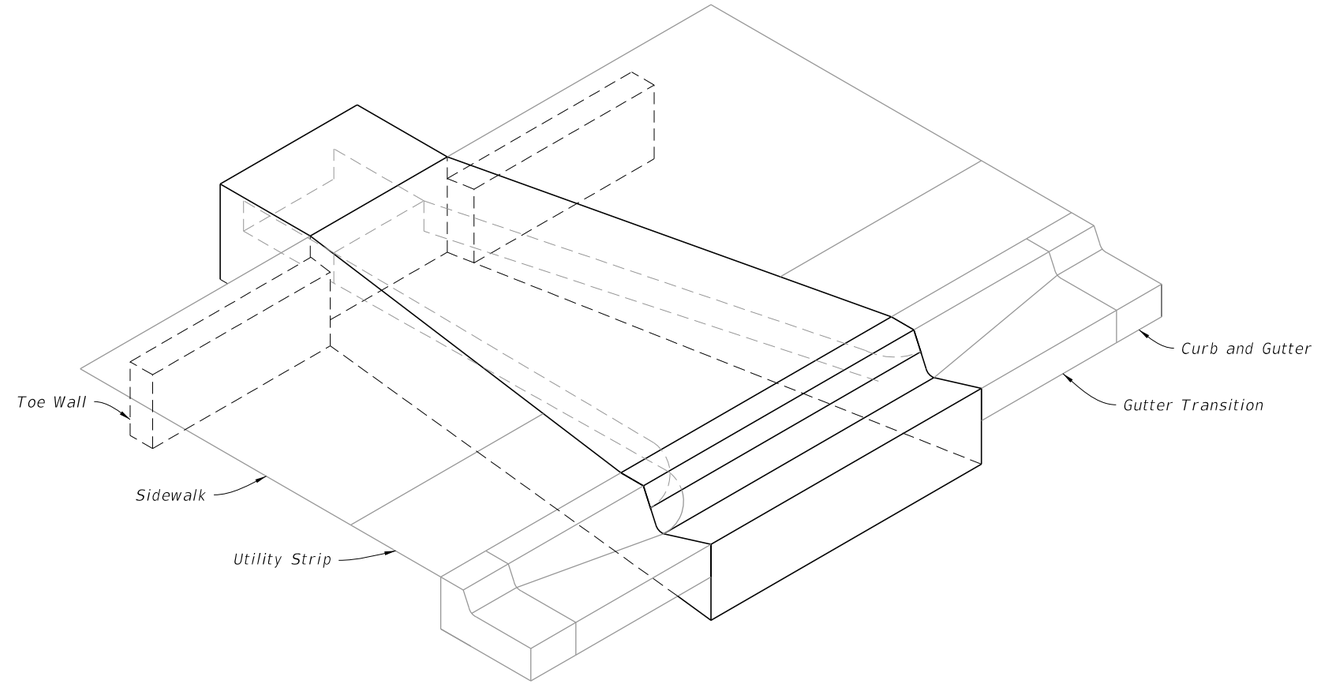

TYPE I CLOSED FLUME INLET WITH SIDEWALK

Single Barrel Flume Shown

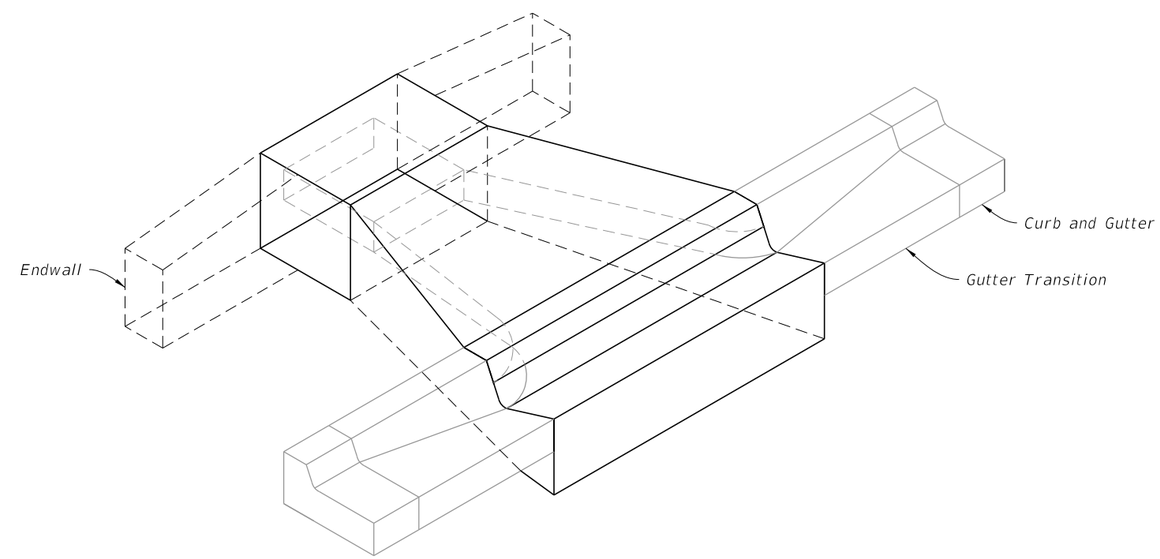

TYPE II CLOSED FLUME INLET WITHOUT SIDEWALK

Single Barrel Flume Shown

TABLE OF CONTENTS:

Sheet	Description
1	General Notes and Contents
2	Type-I Dimensional Details
3	Reinforcice Details
4	Type-II Dimensional Details
5	Multiple Barrel Flumes

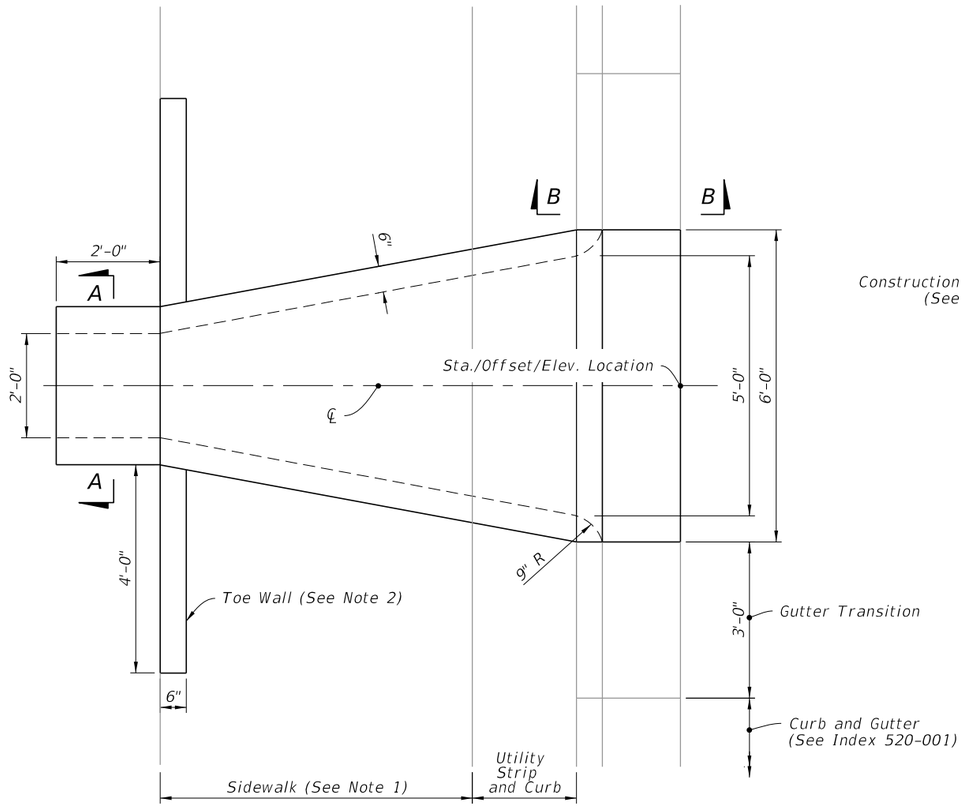

PLAN

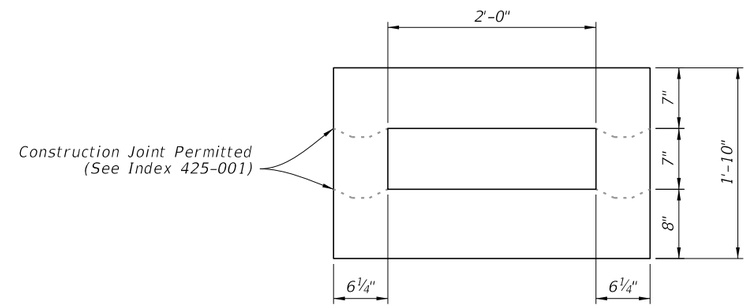

SECTION A-A

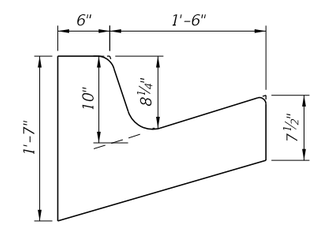

SECTION B-B

NOTES:

1. Use sloped section with sidewalk applications only.
2. Use Toe Walls with Sidewalk application only. For Endwall without Sidewalk see DETAILS on Sheet 4.
3. Slope to match adjacent curb with 2" top radius and 1¼" bottom radius.
4. See Sheet 5 for multiple barrel flumes span variation.

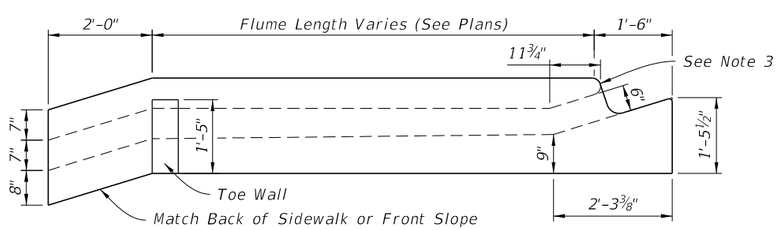

SIDE ELEVATION

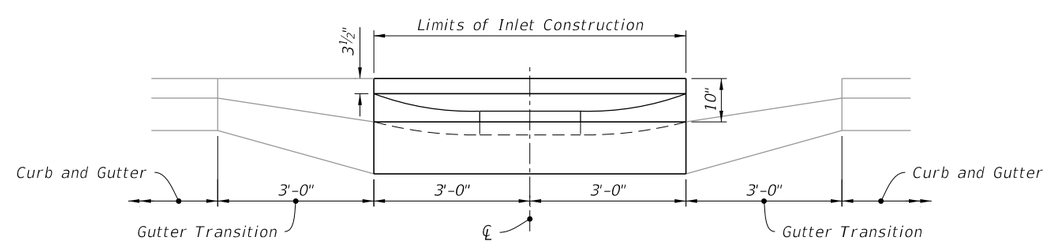

FRONT ELEVATION

TYPE-I DIMENSIONAL DETAILS

LAST REVISION	REVISION	DESCRIPTION:			INDEX	SHEET
10/01/21			FY 2023-24 STANDARD PLANS	CLOSED FLUME INLET	425-061	2 of 5

10/20/2022 8:48:24 AM

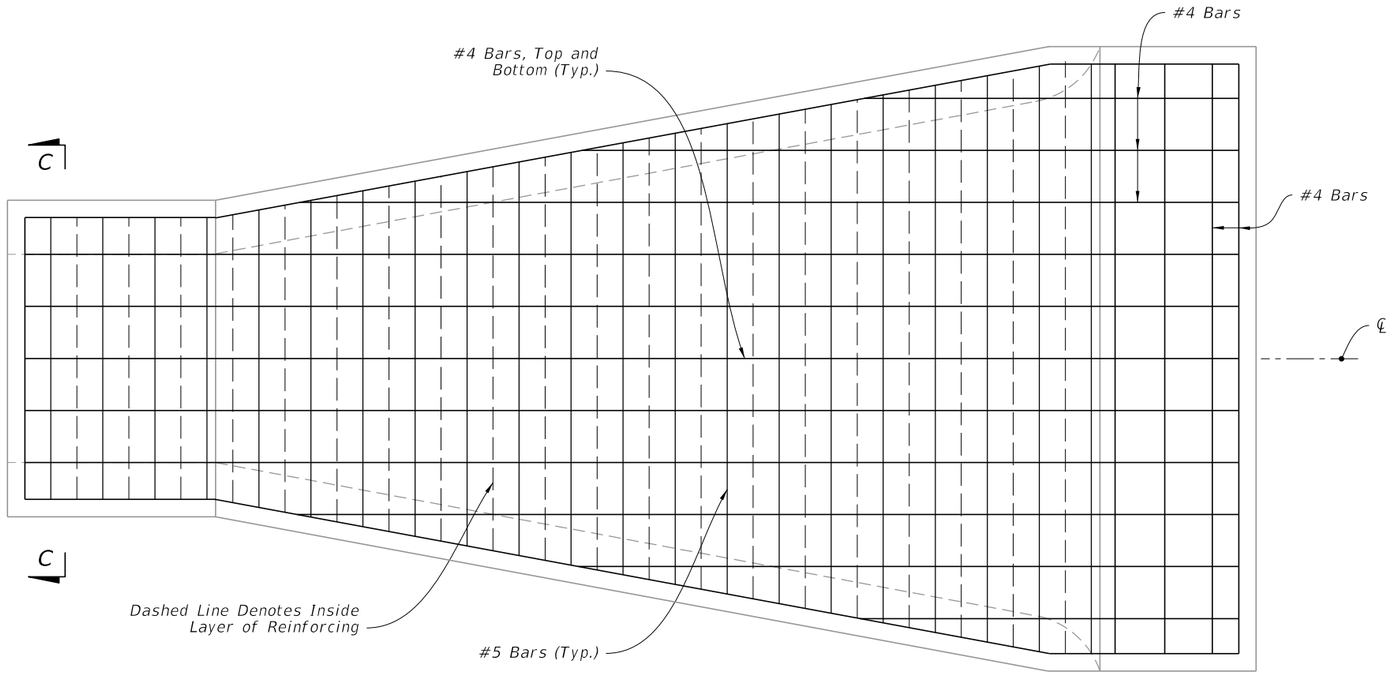

PLAN

NOTE:
Type I Closed Flume Inlet shown, Type II Closed Flume Inlet Similar.

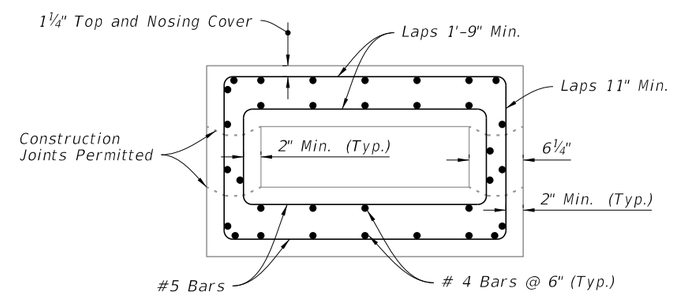

SECTION C-C

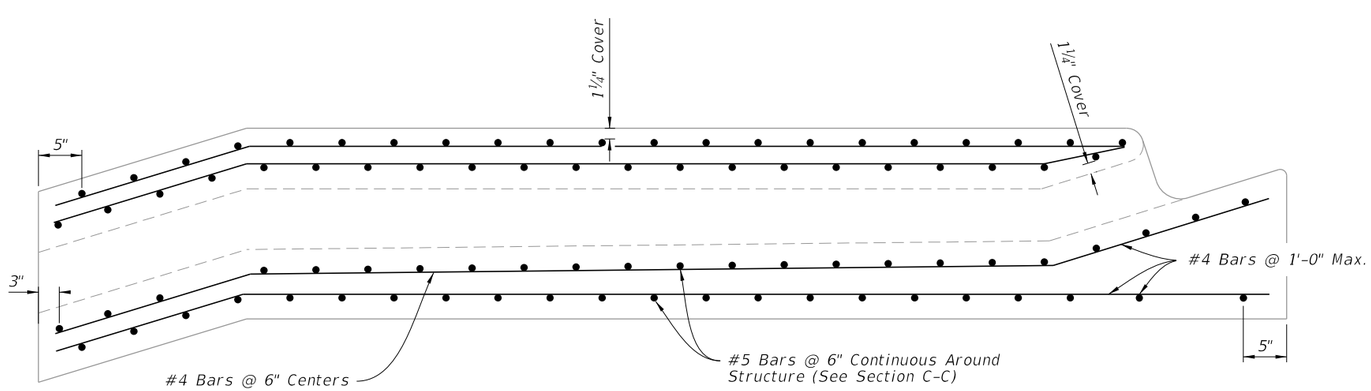

SIDE ELEVATION

REINFORCING DETAILS

LAST REVISION	REVISION	DESCRIPTION:				
10/01/20			FDOT FY 2023-24 STANDARD PLANS	CLOSED FLUME INLET	INDEX 425-061	SHEET 3 of 5

10/20/2022 8:48:25 AM

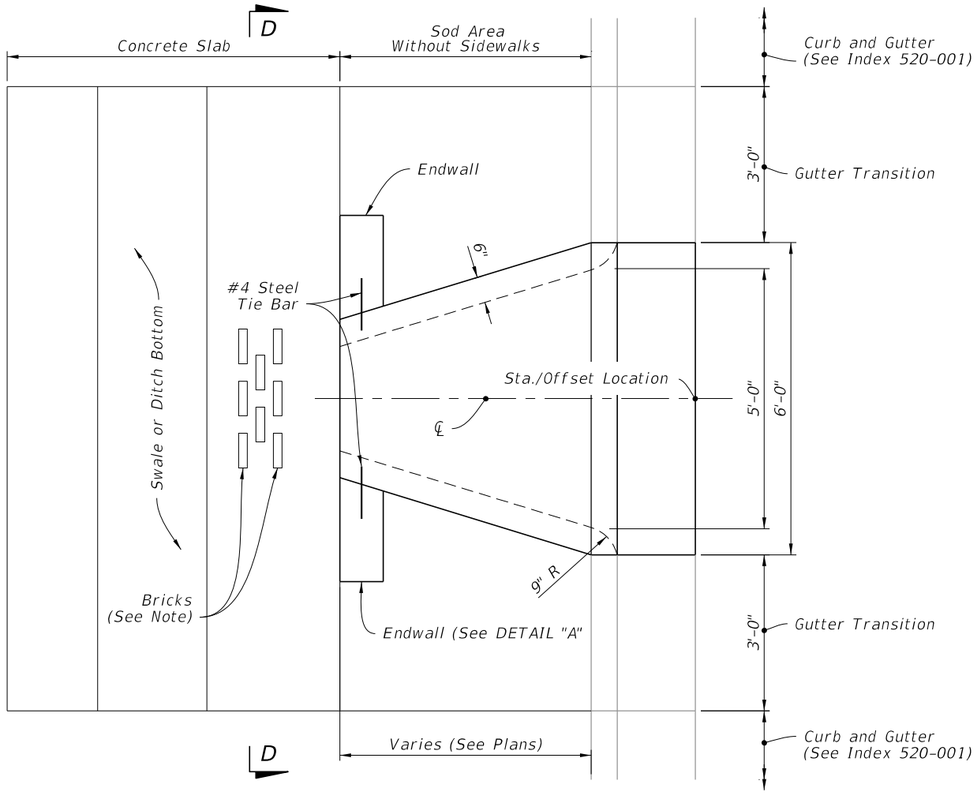

PLAN

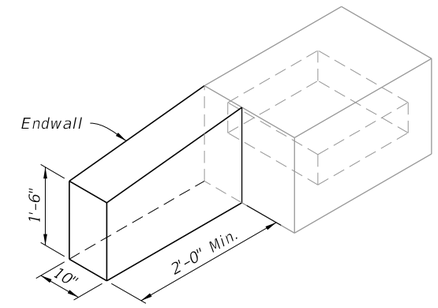

DETAIL "A"

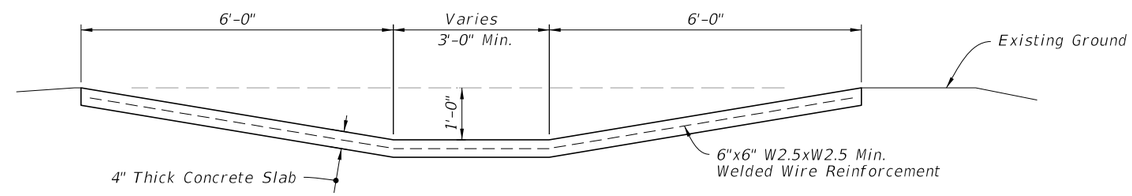

SECTION D-D

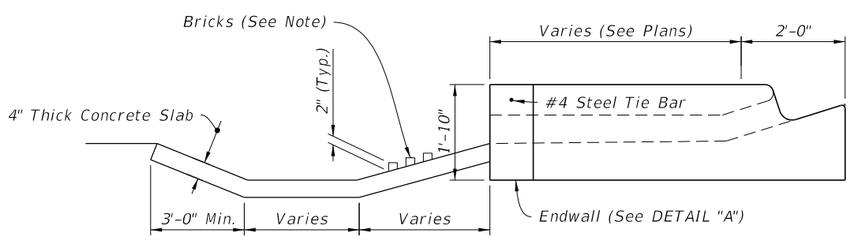

SIDE ELEVATION

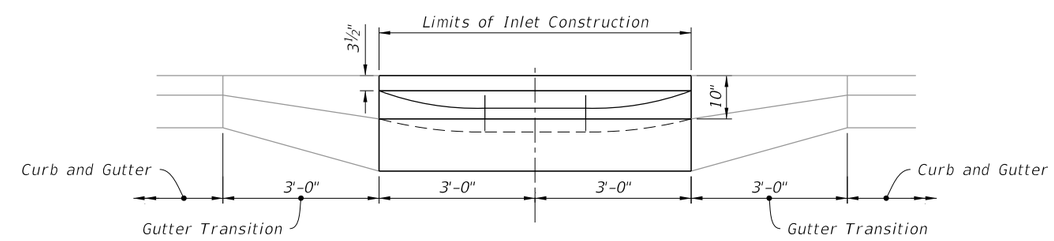

FRONT ELEVATION

NOTE:
When called for in the Plans, install bricks to dissipate energy.

TYPE II DIMENSIONAL DETAILS

LAST REVISION	REVISION	DESCRIPTION:	FY 2023-24 STANDARD PLANS	CLOSED FLUME INLET	INDEX	SHEET
10/01/20					425-061	4 of 5

10/20/2022 8:48:26 AM

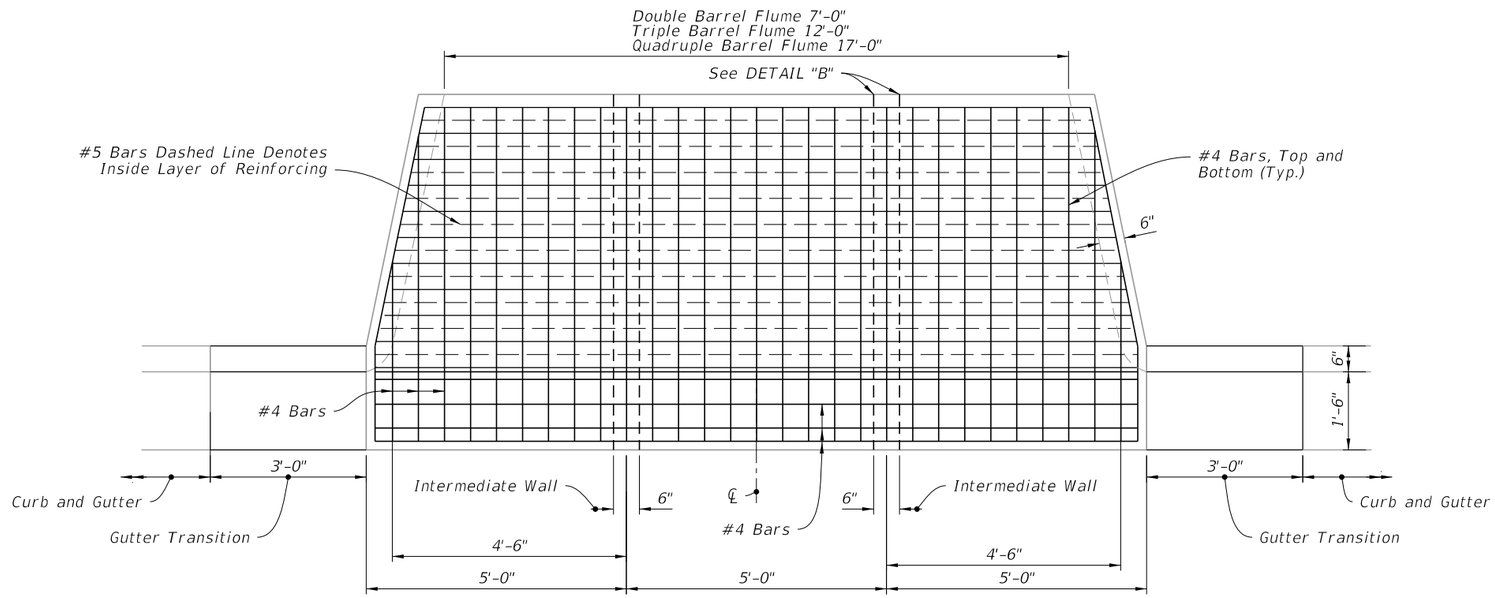

PLAN

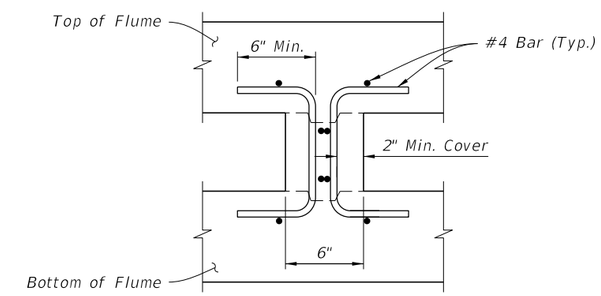

Intermediate Wall Reinforcing
DETAIL "B"

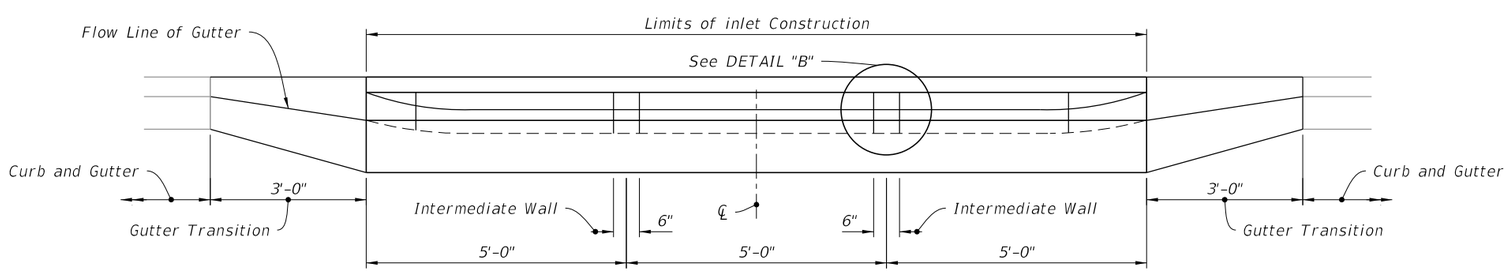

FRONT ELEVATION

NOTE:
Triple barrel flume shown, double and quadruple similar.

10/20/2022 8:48:27 AM

MULTIPLE BARREL FLUMES

LAST REVISION	REVISION	DESCRIPTION:	FY 2023-24 STANDARD PLANS	CLOSED FLUME INLET	INDEX	SHEET
10/01/20					425-061	5 of 5

GENERAL NOTES:

1. The side panels are dimensionally symmetric, and may be used on either side of the structure.

2. Two (2) skimmers may be installed on a single structure provided they are constructed on opposite ends.

3. The width of the front panel (dimension W) is equal to the same as the outside dimension across the front of the structure.

4. Hot dip galvanize the front panel, side panels, and flat bars after fabrication.

5. The location of the reinforcing steel in these structures must conform to the Index 425-052 to avoid conflict with the expansion anchors used to attach the skimmer.

6. Use grates on the inlets unless otherwise specified in the Plans.

7. A skimmer consists of two (2) side panels, one front panel, two (2) flat bars, and accessory hardware.

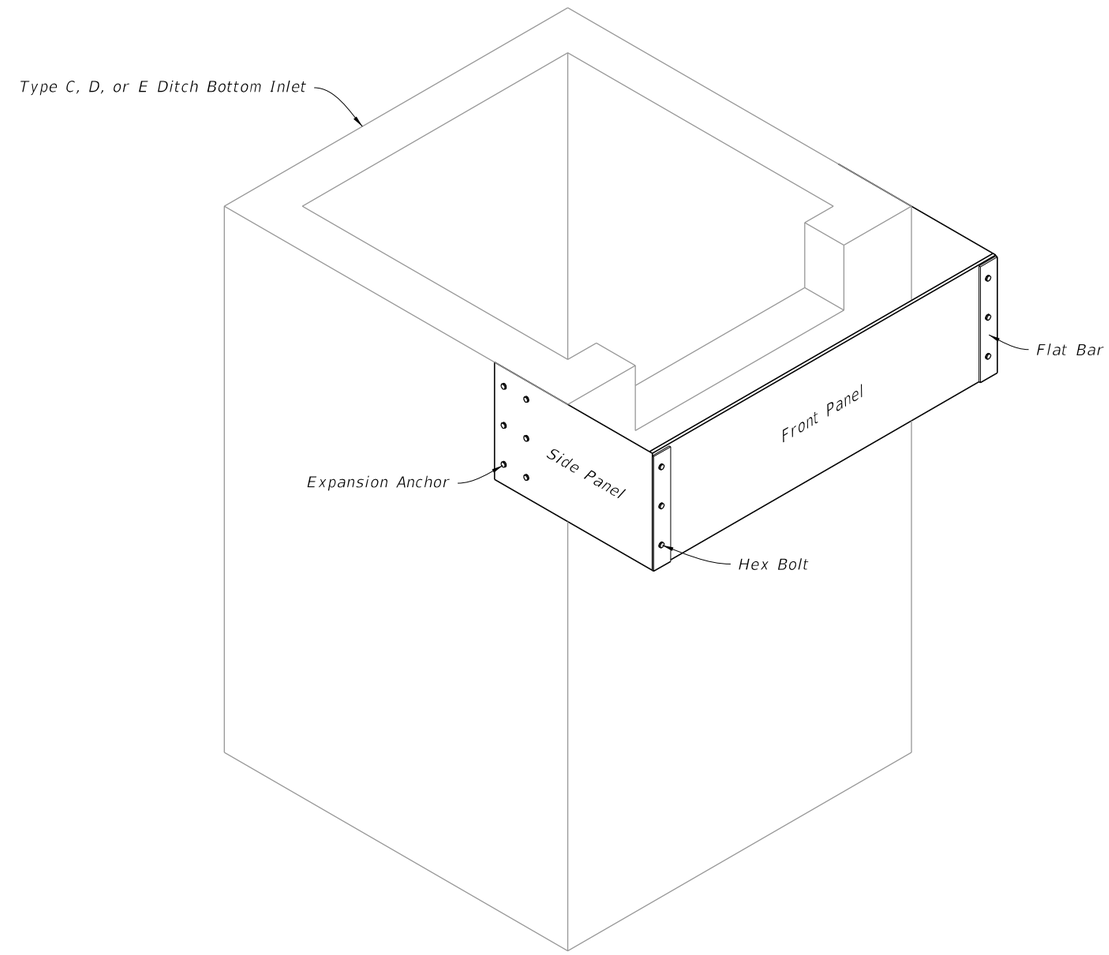

SKIMMER

TABLE OF CONTENTS:

Sheet	Description
1	General Notes and Contents
2	Panel and Flat Bar Details
3	Installation Details

DIMENSIONS				
Skimmer Height as Specified in the Plans				Bolt Spacing
H (in.)	D (in.)	E (in.)	L (in.)	S (in.)
12	3 3/16	3	28	3
14	3 3/16	3	28	4
16	3 3/16	3	28	5
18	3 3/16	3	28	6
20	4 3/16	4	31	6
22	4 3/16	4	31	7
24	4 3/16	4	31	8
26	4 3/16	4	31	9
28	4 3/16	4	31	10
30	5 3/16	5	31	10
32	5 3/16	5	31	11
34	5 3/16	5	31	12
36	6 3/16	6	31	12
38	6 3/16	6	31	13
40	6 3/16	6	31	14

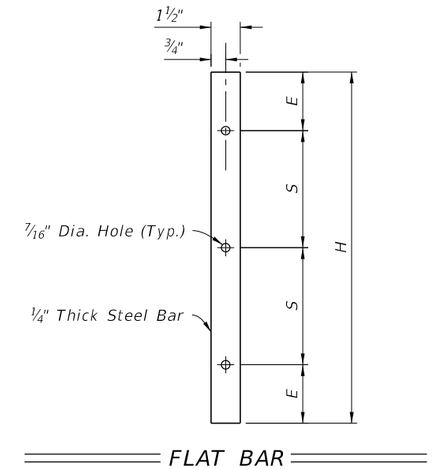

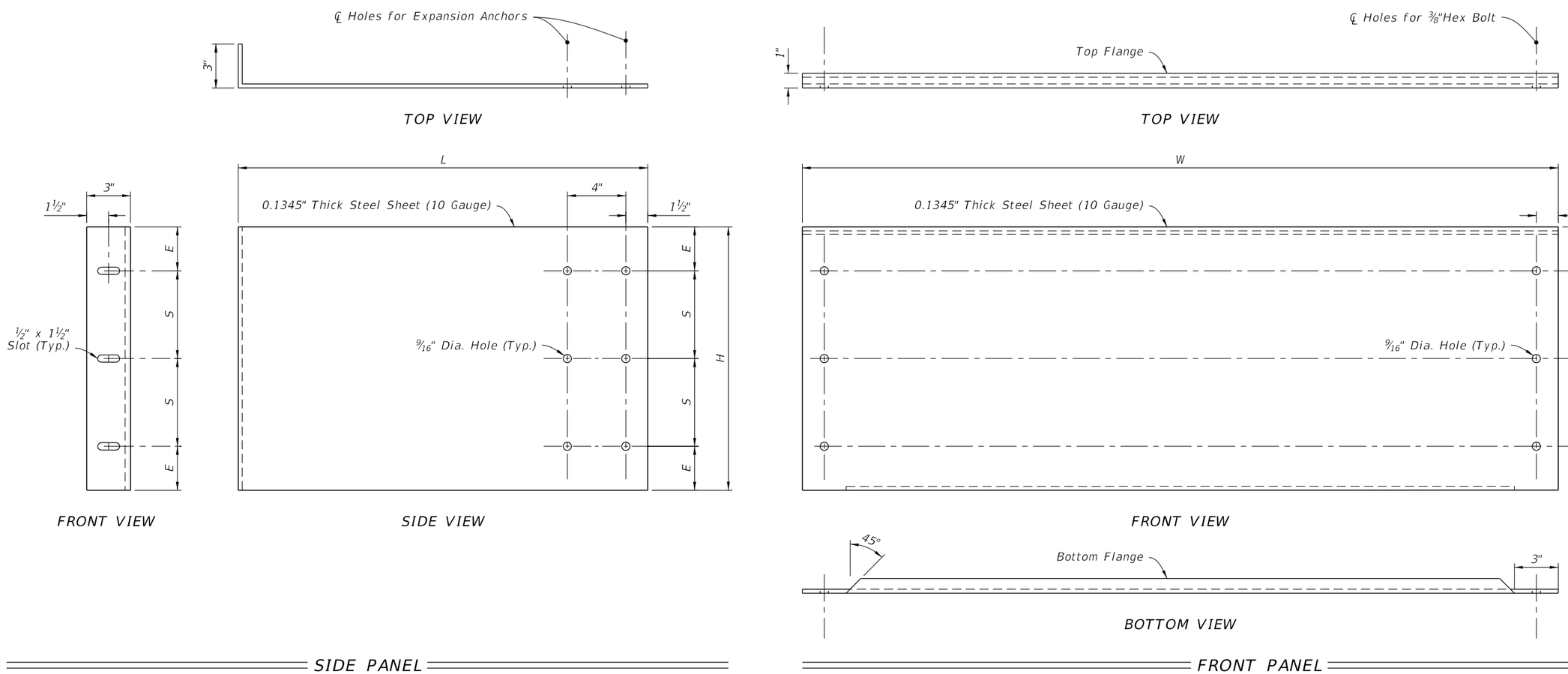

PANEL AND FLAT BAR DETAILS

LAST REVISION	REVISION	DESCRIPTION:			INDEX	SHEET
10/01/20			FY 2023-24 STANDARD PLANS	SKIMMER FOR OUTLET CONTROL STRUCTURES	425-070	2 of 3

10/20/2022 8:48:29 AM

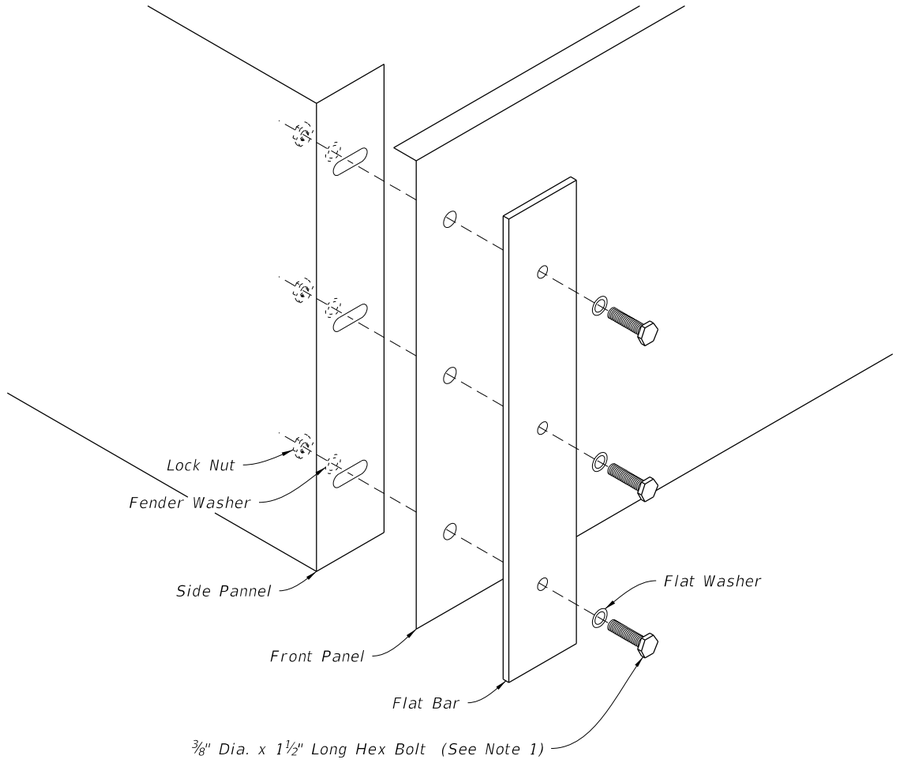

DETAIL "A"

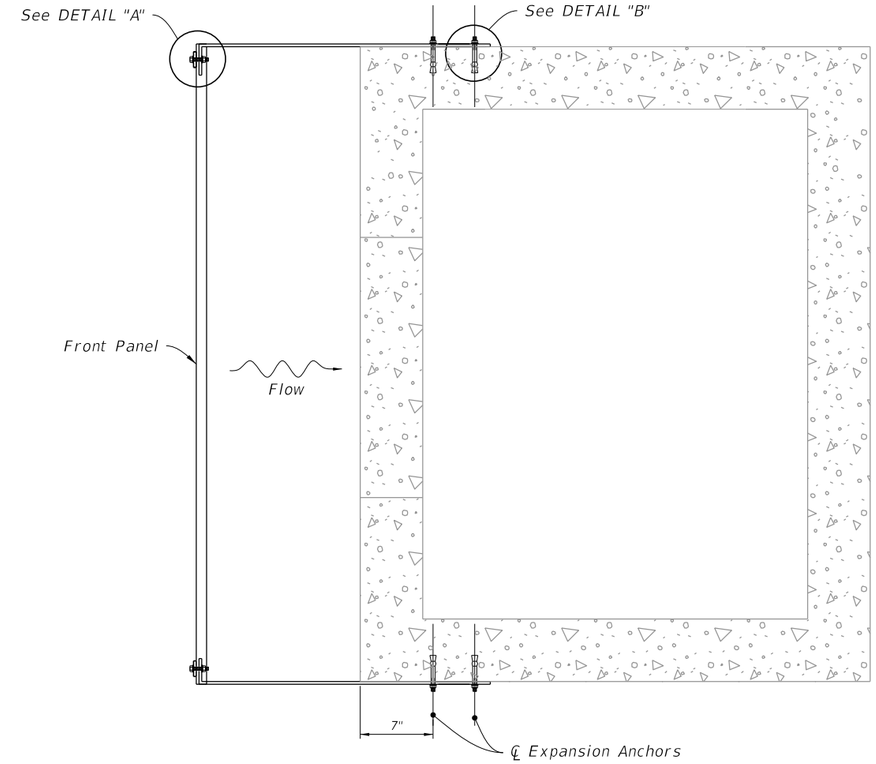

PLAN

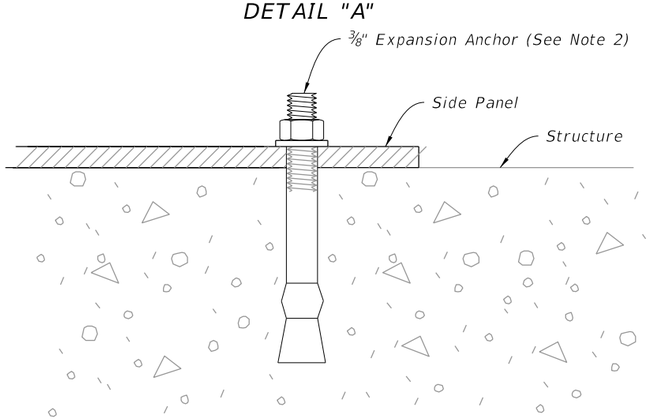

DETAIL "B"

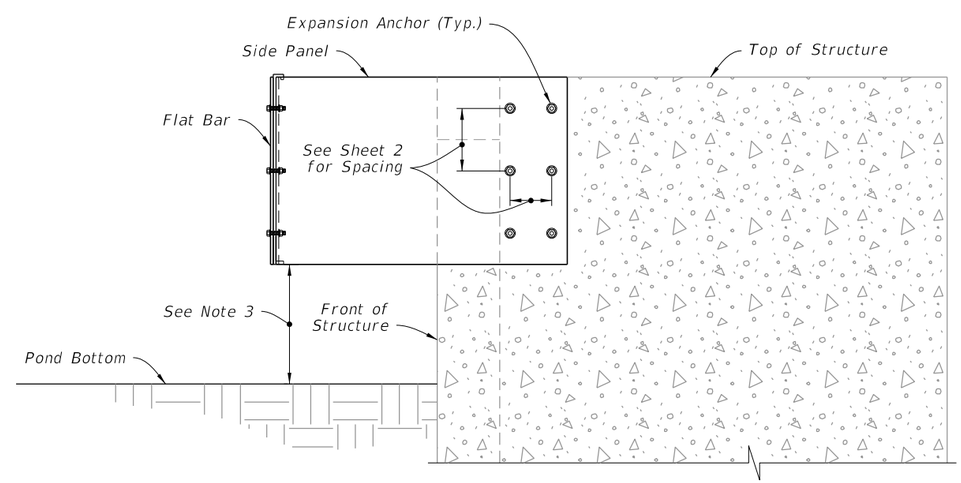

SIDE ELEVATION

NOTES:

1. Hex Bolt, Flat Washer, Fender Washer, And Lock Nut, all Stainless Steel. (6 Required Per Skimmer)
2. Install a stainless steel stud type expansion anchor with nut and washer. Embedment depth = 2½". Anchors to be installed according to the manufacturer's recommendations (12 required per skimmer).
3. Install the skimmer so that the distance between the pond bottom at the structure and the skimmer is not less than 1 foot.

INSTALLATION DETAILS

LAST REVISION	REVISION	DESCRIPTION:			INDEX	SHEET
10/01/20			FDOT FY 2023-24 STANDARD PLANS	SKIMMER FOR OUTLET CONTROL STRUCTURES	425-070	3 of 3

10/20/2022 8:48:30 AM

GENERAL NOTES:

1. Work with Index 425-001 and Index 425-010.

2. Use Class II Concrete.

3. Maximum opening for pipe shall be the pipe OD plus 6". Mortar used to seal the pipe into the opening will be of such mix that shrinkage will not cause leakage into or out of the structure.

4. If a conflict with a potable water supply line is discovered during construction, submit the following to Florida Department of Environmental Protection (FDEP) District Administrator For Drinking Water prior to constructing conflict structure:

   a. Plans Revision(s)
   b. Justification describing inordinate cost and practical avoidance
   c. Upon request, Utility Agency Owner (UAO) supporting documentation for cost of relocation or adjustment

   Potable water supply lines passing through a drainage structure must be in compliance with Chapter 62-555.314(3) F.A.C. This Index and rule citation provide accepted methods for addressing conflicts when they cannot be reasonably avoided.

   Website for District FDEP Drinking Water Contacts:
   https://floridadep.gov/water/source-drinking-water/content/organization-drinking-water-program

TABLE OF CONTENTS:

Sheet	Description
1	General Notes and Contents
2	Utility Conflict Condition I and II Details

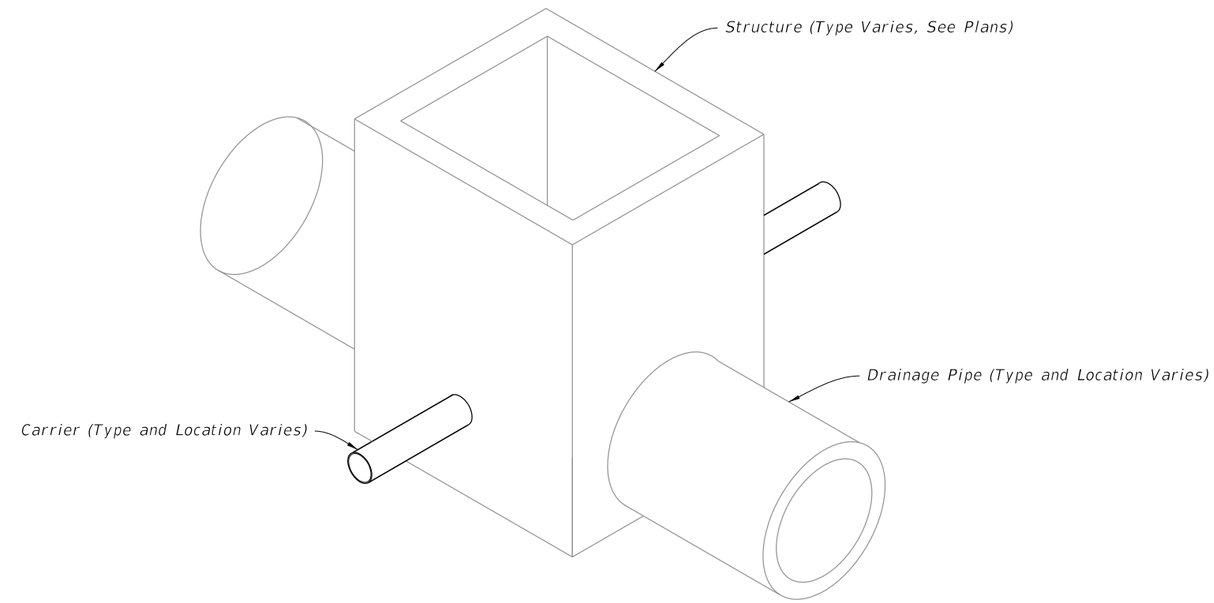

UTILITY CONFLICT
(Condition I Shown, Condition II Similar)

10/20/2022 8:48:30 AM

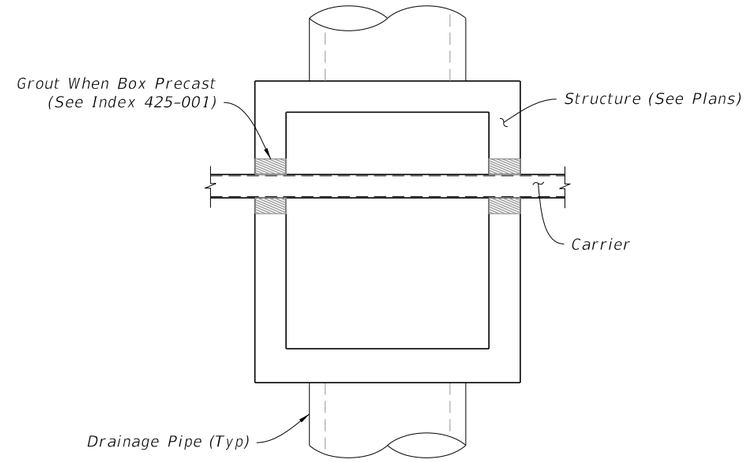

PLAN

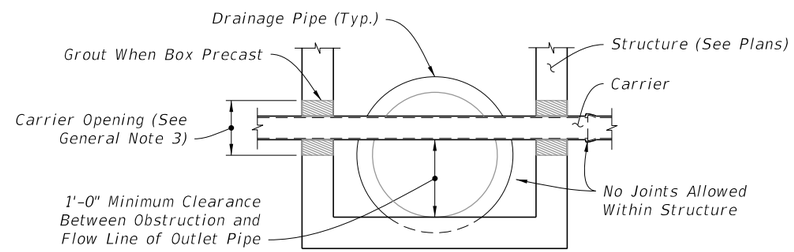

FRONT ELEVATION

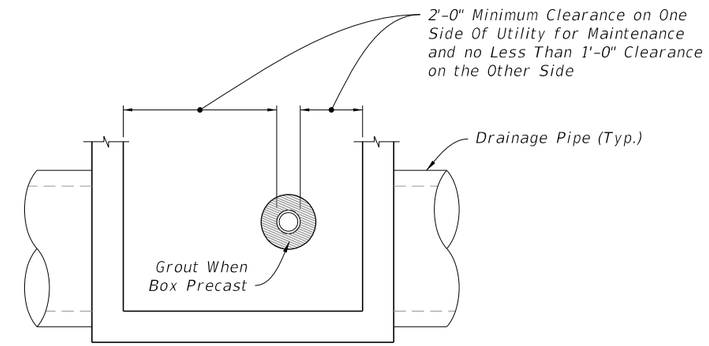

SIDE ELEVATION

UTILITY CONFLICT CONDITION I

(Nonpressure or Nonfluid Carrier Installations)

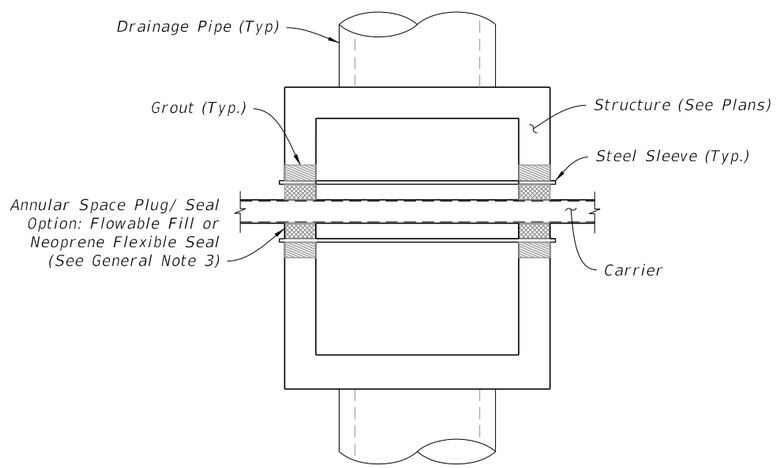

PLAN

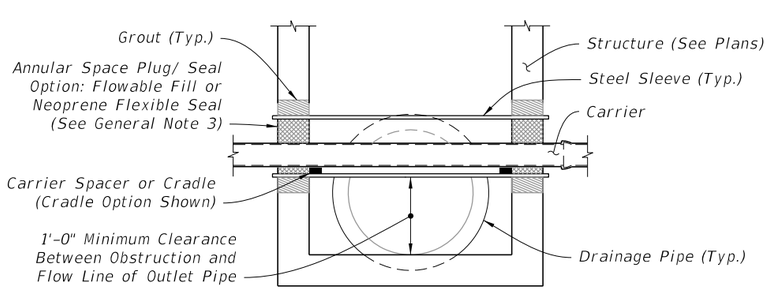

FRONT ELEVATION

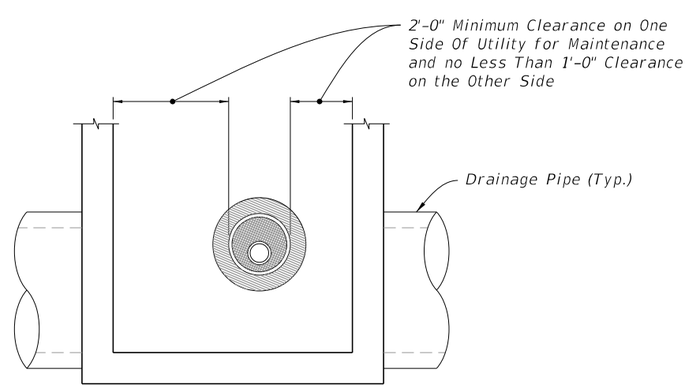

SIDE ELEVATION

UTILITY CONFLICT CONDITION II

(Pressure or Fluid Carrier Installations)

UTILITY CONFLICT CONDITION I AND II DETAILS

LAST REVISION	REVISION	DESCRIPTION:			INDEX	SHEET
10/01/20			FY 2023-24 STANDARD PLANS	UTILITY CONFLICT THRU DRAINAGE STRUCTURES	425-080	2 of 2

10/20/2022 8:48:31 AM

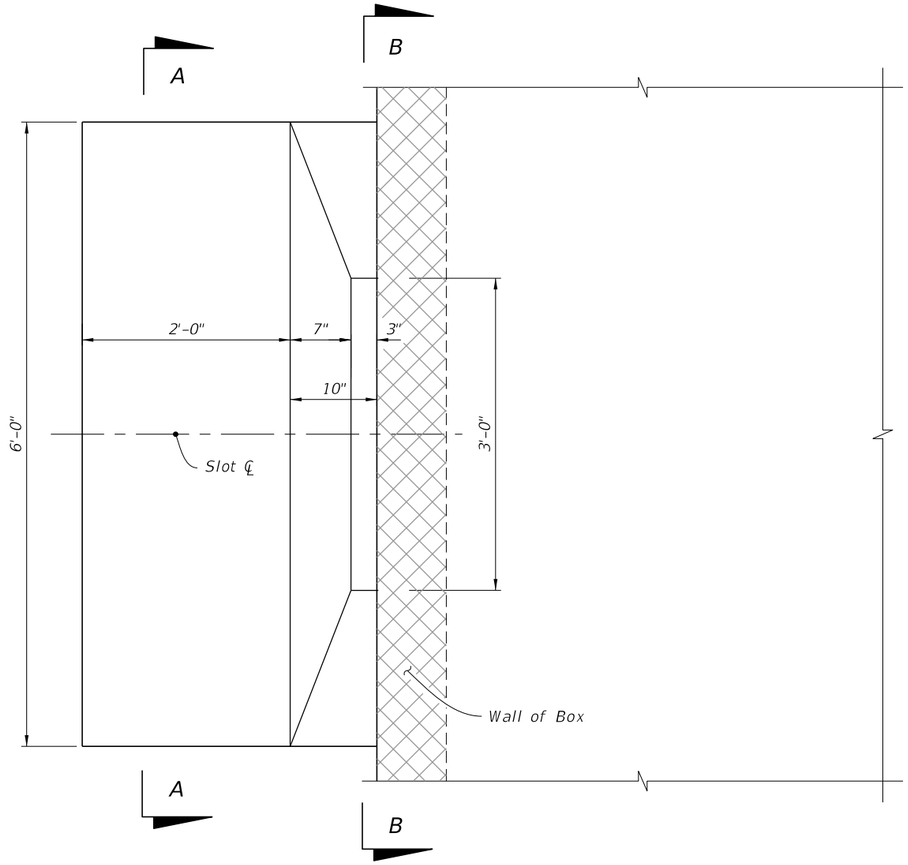

PLAN

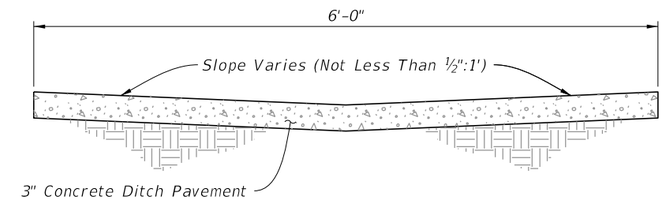

SECTION AA

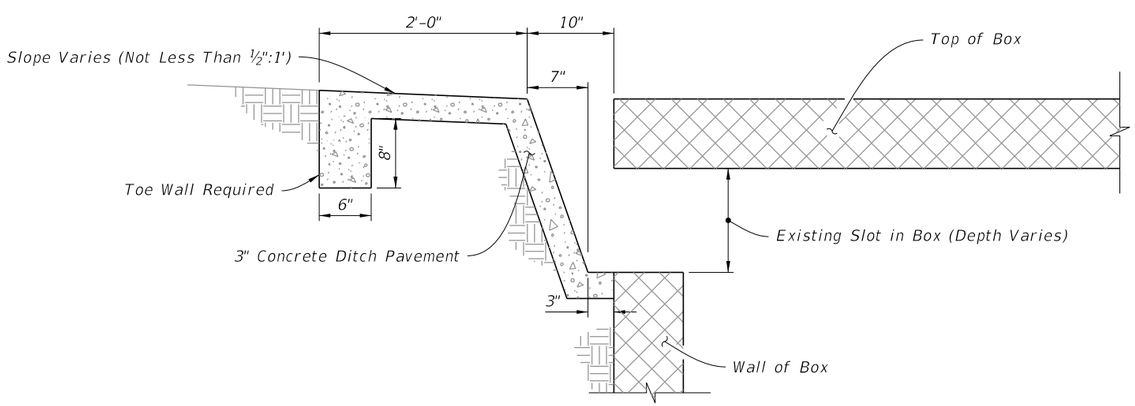

ELEVATION

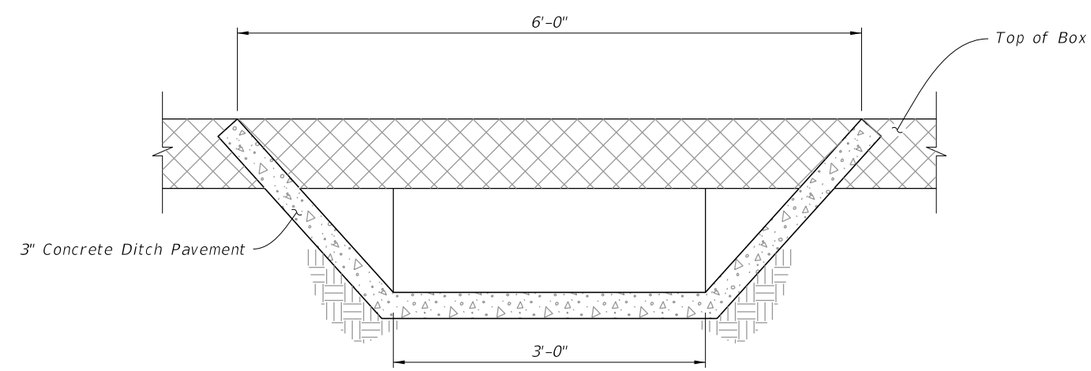

SECTION BB

INLET IN BOX CULVERT

8:48:32 AM

10/20/2022

LAST REVISION	REVISION	DESCRIPTION:			INDEX	SHEET
10/01/20			FY 2023-24 STANDARD PLANS	SAFETY MODIFICATION FOR INLETS IN BOX CULVERTS	425-090	1 of 1

NOTES:

1. Fill or excavate variable slopes during normal grading operations.
2. Minimum distance as required to comply with safety criteria.
3. Use Larger Value Of Either:
   L=10xH (No Maximum)
   L=10xDitch Offset (Maximum L=100')
4. Slope to normal slope if possible. Slope not to be steeper than 1:2. See side elevation (extended) below if 1:2 slope must go beyond toe of normal slope.
5. 1:2 slope if necessary to go beyond normal toe of slope and maintain ditch width by moving out back slope.

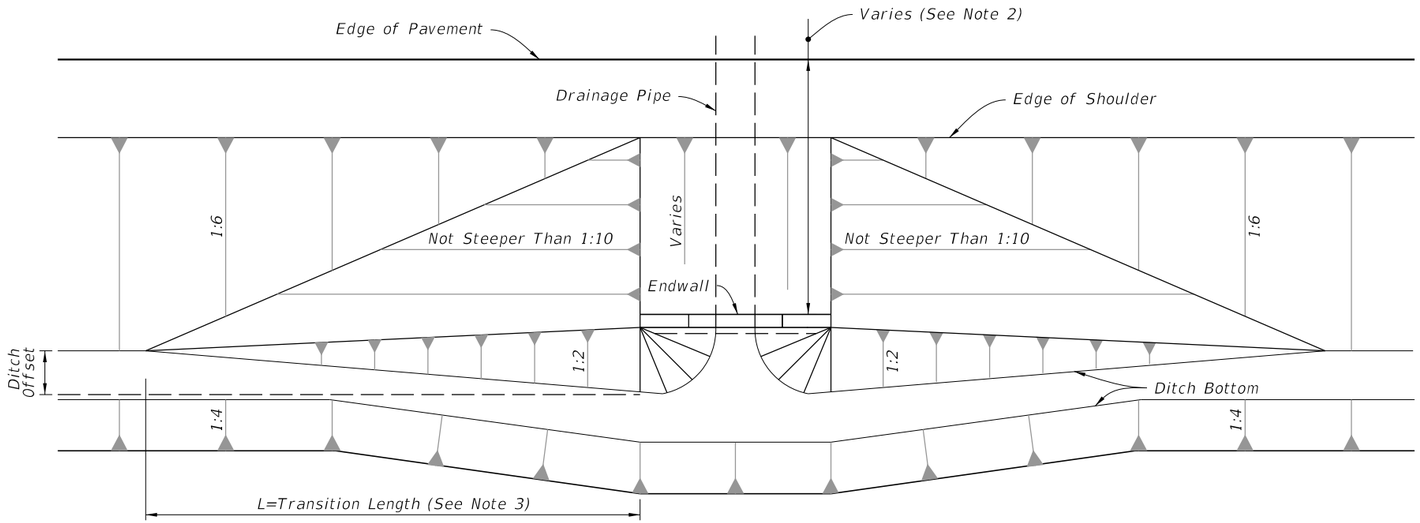

PLAN

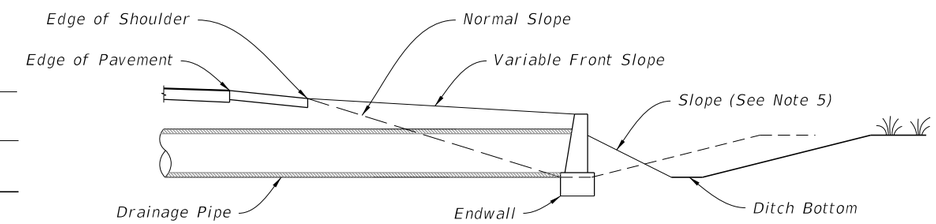

SIDE ELEVATION (EXTENDED)

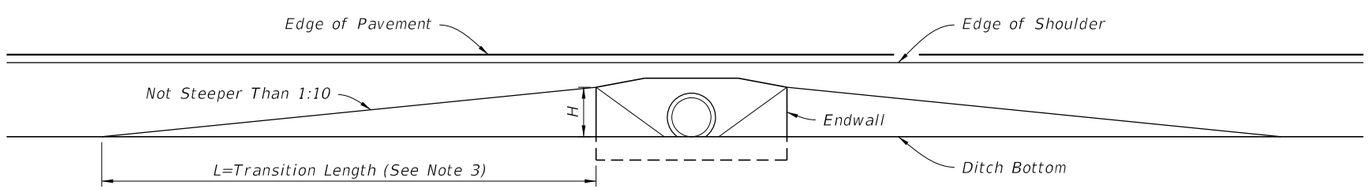

END ELEVATION

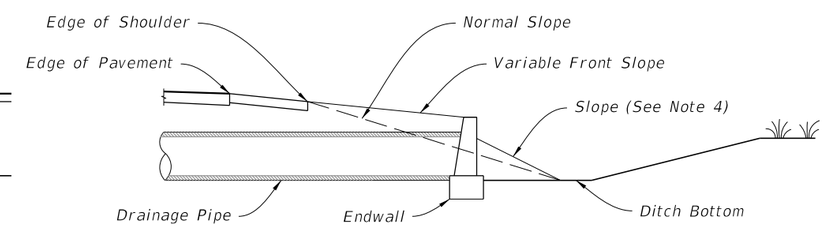

SIDE ELEVATION (TYPICAL)

FRONT SLOPES AT DRAINAGE STRUCTURES

TABLE OF CONTENTS:

Sheet	Description
1	Limits of Variable Front Slopes at Drainage Structures
2	Round and Elliptical Concrete Pipe Joint
3	Filter Fabric Jacket, Concrete Jacket, and Pipe Plug
4	Concrete Collars
5	Single Pipe End Guard
6	Double Pipe End Guard
7	Retaining Wall Concrete Gutter and Drains

LIMITS OF VARIABLE FRONT SLOPES AT DRAINAGE STRUCTURES

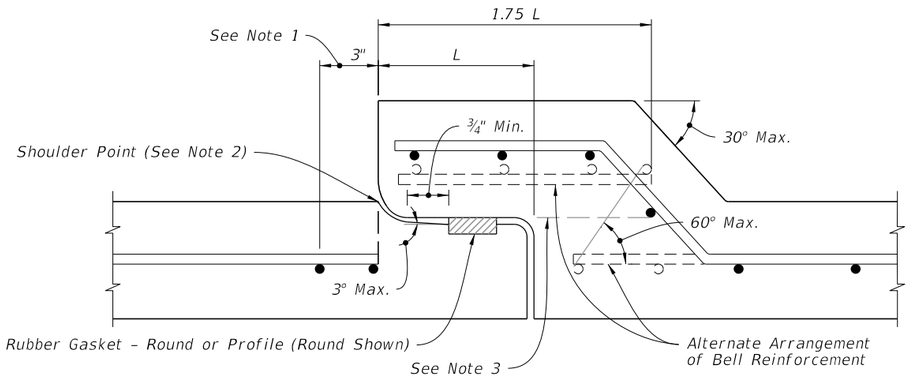

TABLE 1 SCHEDULE OF BELL REINFORCEMENT Classes II,III,IV,V; Wall A,B,C		
Nominal Pipe Diameter	Design Bell Reinforcement	Maximum Reinforcement Under Tolerance
	in^2 per foot	in^2 per foot
15"	0.07	0.010
18"	0.07	0.010
24"	0.09	0.010
30"	0.12	0.010
36"	0.14	0.010
42"	0.16	0.010
48"	0.19	0.011
54"	0.21	0.012
60"	0.23	0.0135
66"	0.26	0.015
72"	0.28	0.0165
78"	0.30	0.018
84"	0.33	0.0195
90"	0.35	0.021
96"	0.37	0.0225
102"	0.40	0.024
108"	0.42	0.0255

NOTES:

1. Allowable Tolerance for the last full wrap of reinforcing when using single elliptical cage.
2. Extend the last full wrap of reinforcing to the shoulder point and meet ASTM C-76 requirements.
3. All circumferential steel located above this line and within the 1.75 L is defined as bell reinforcement.

ROUND CONCRETE PIPE JOINT DETAIL

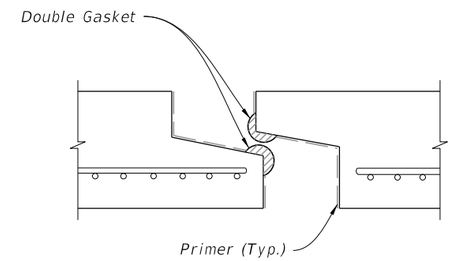

PREFORMED PLASTIC JOINT

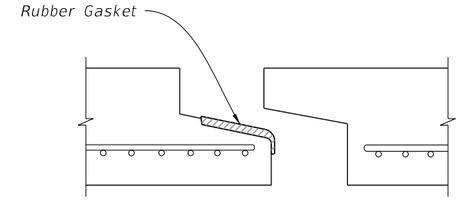

PROFILE RUBBER GASKET

NOTES:

1. Filter Fabric Jacket is required on both type of joints.
2. Details shown before pull-up.

ELLIPTICAL CONCRETE PIPE JOINT DETAIL

ROUND AND ELLIPTICAL CONCRETE PIPE JOINT

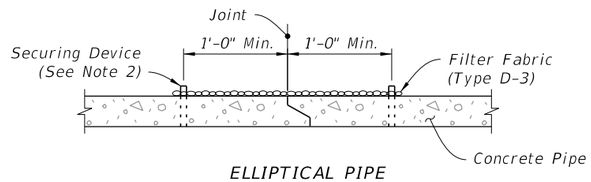

ELLIPTICAL PIPE
(Tongue & Groove Shown)

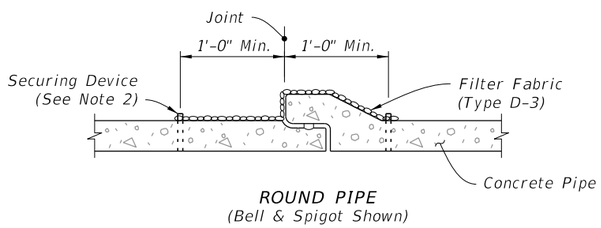

ROUND PIPE
(Bell & Spigot Shown)

SECTION VIEW

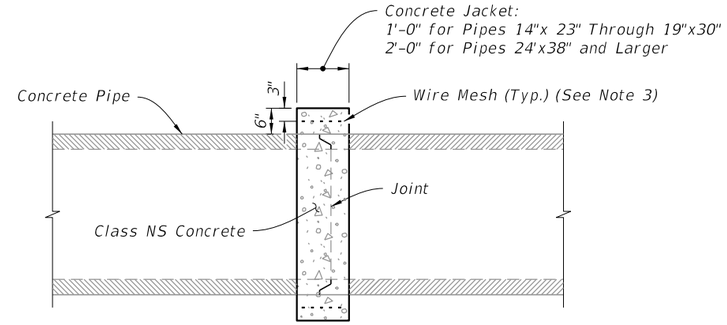

ELLIPTICAL PIPE

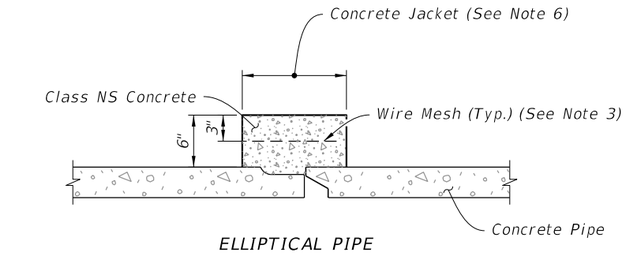

ELLIPTICAL PIPE
(Tongue & Groove Shown)

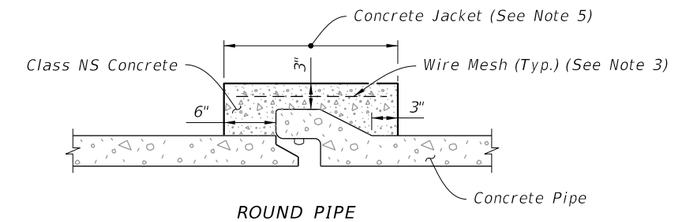

ROUND PIPE
(Bell & Spigot Shown)

DISSIMILAR JOINTS

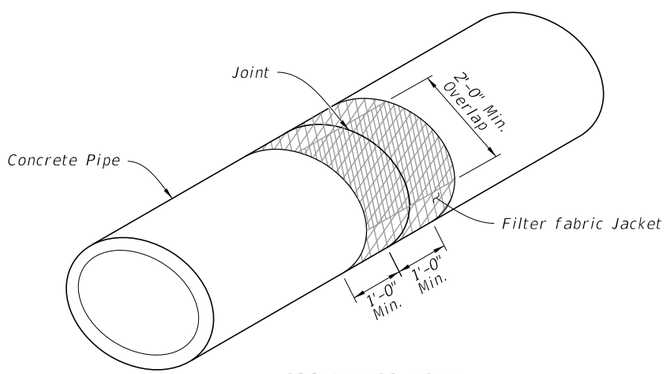

ISOMETRIC VIEW

FILTER FABRIC JACKET

(For All Pipe Types - Concrete Elliptical Pipe Shown)

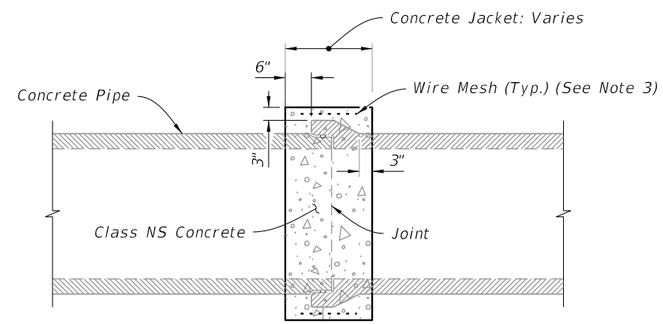

ROUND PIPE

SIMILAR TYPES
(Only When Called For In The Plans)

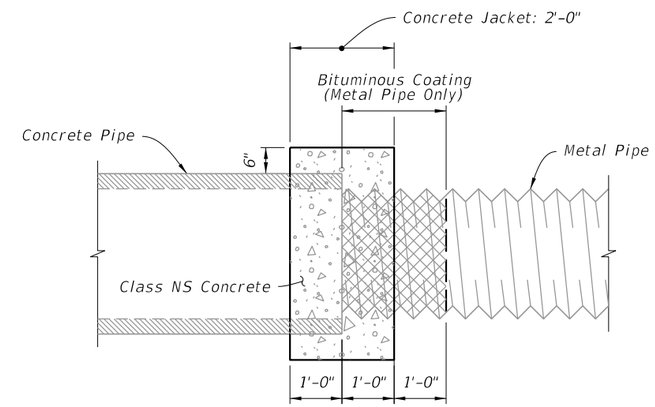

CONCRETE AND METAL PIPE SHOWN
(Others Similar)

DISSIMILAR TYPES

CONCRETE JACKET

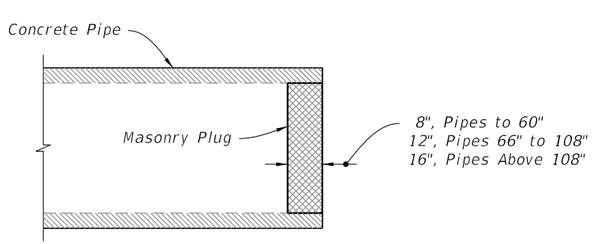

PIPE PLUG

NOTES:

1. Alternate connection must be approved by the Engineer.
2. Install securing device in accordance with Specification 985.
3. Any wire mesh arrangement which provides 0.126 square inches of steel area per linear foot both ways may be used, provided the wires are spaced a minimum of 2" and/or a maximum of 6" on centers.
4. Do not use a concrete jacket to join dissimilar metal pipes.
5. 12" for pipes 15" through 24"; 24" for pipes 30" and larger.
6. 12" for pipes 14" x 23" through 19" x 30"; 24" for pipes 24" x 38" and larger.

FILTER FABRIC JACKET, CONCRETE JACKET, AND PIPE PLUG

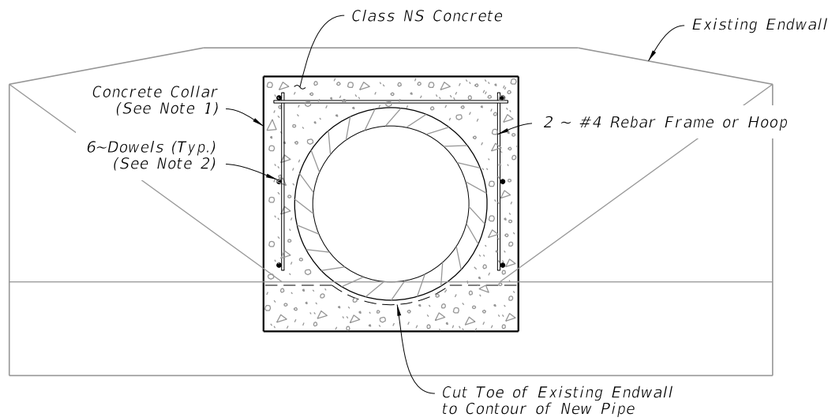

END ELEVATION

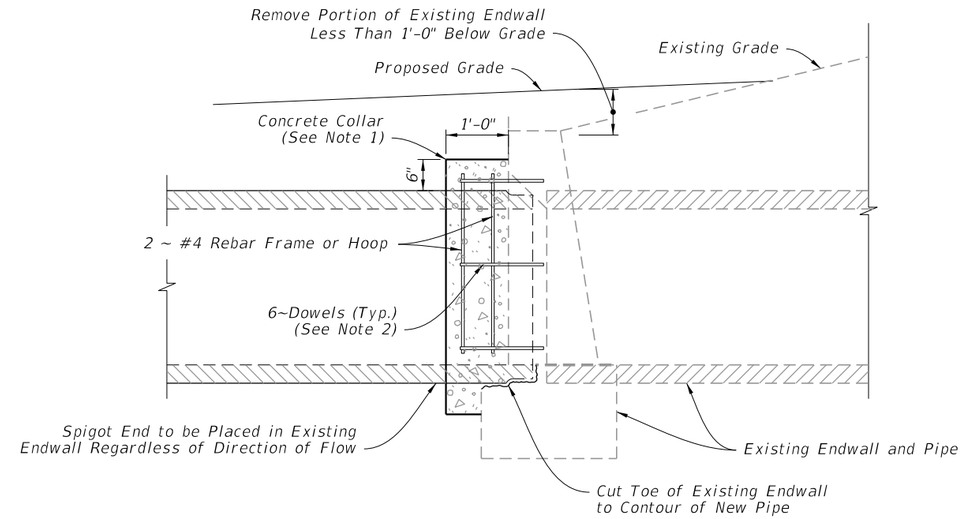

SIDE ELEVATION

EXTENSION OF EXISTING PIPE CULVERTS

NOTES:

1. The collar may be formed by any method approved by the Engineer.
2. Install ½"x16" dowels in adhesive bond material.

10/20/2022 8:48:35 AM

CONCRETE COLLARS

LAST REVISION	REVISION	DESCRIPTION:			INDEX	SHEET
10/01/20			FY 2023-24 STANDARD PLANS	MISCELLANEOUS DRAINAGE DETAILS	430-001	4 of 7

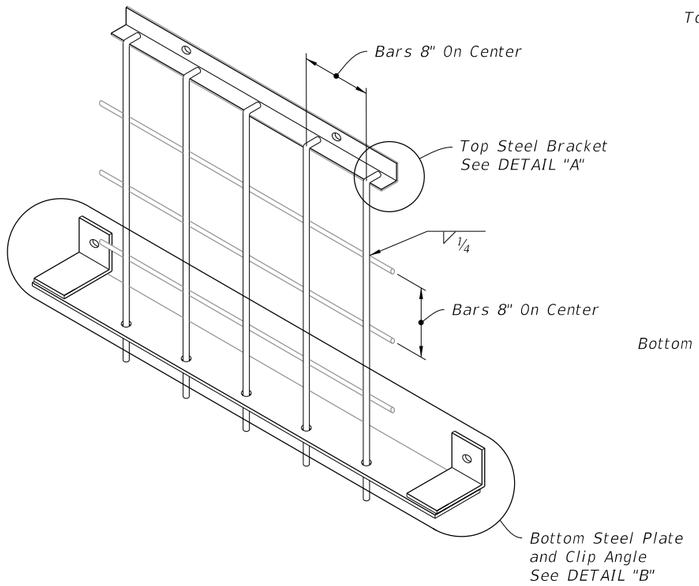

ISOMETRIC VIEW

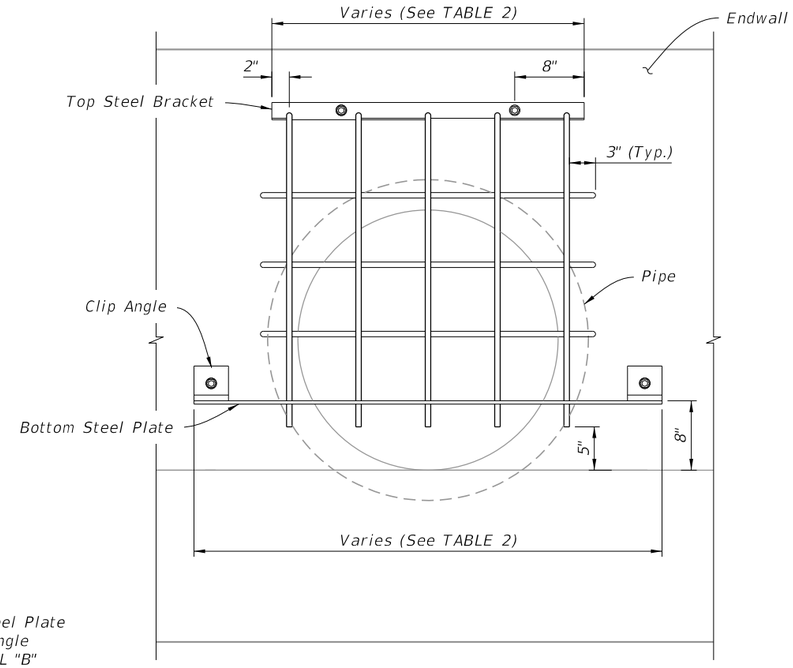

END ELEVATION

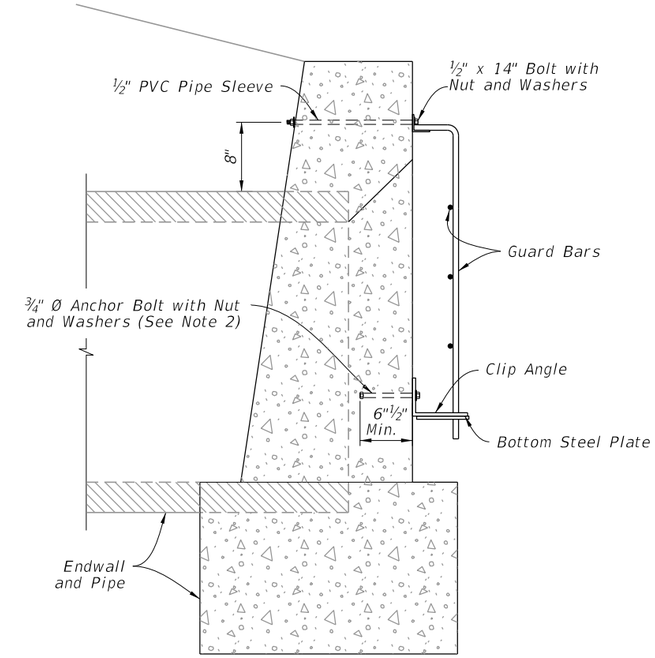

SIDE ELEVATION

SINGLE GUARD
(30" Pipe Shown)

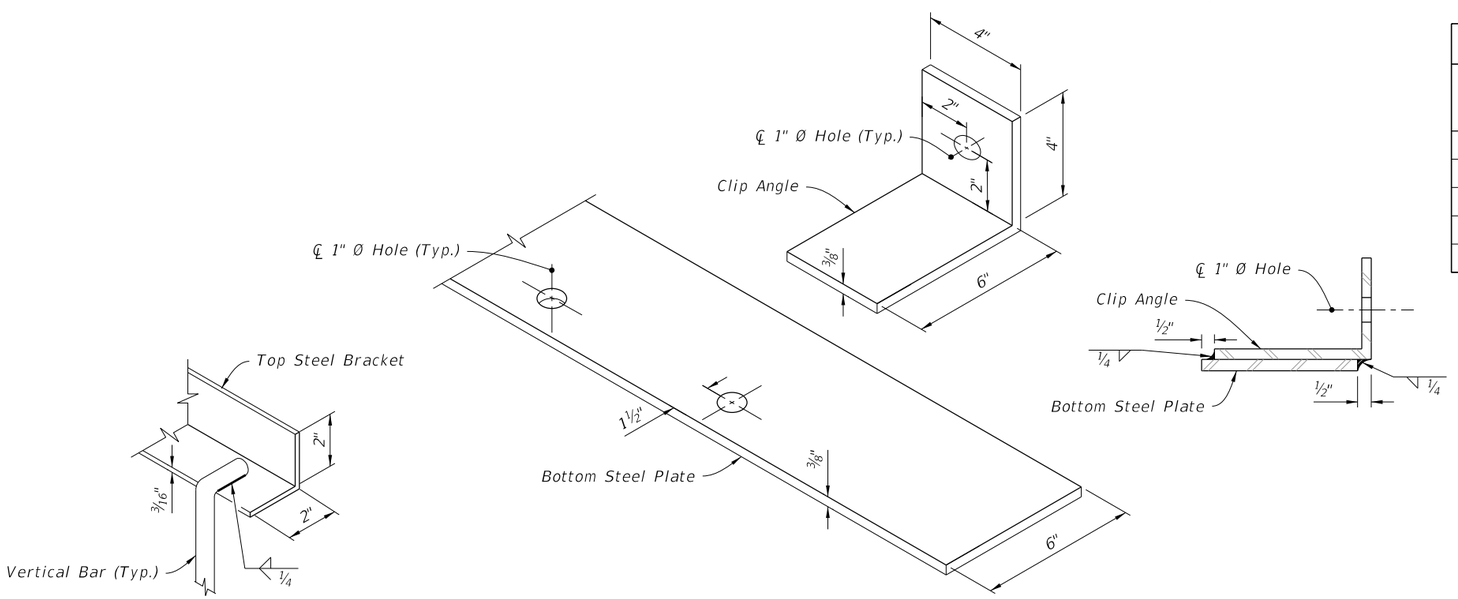

DETAIL "A"

DETAIL "B"

TABLE 2 - SINGLE GUARD								
Pipe Dia. (in)	Top Steel Bracket	Bottom Steel Plate	Number of Holes	Number of Vert. Bars	Vertical Bars Size	Number of Horiz. Bars	Horizontal Bars Size	Weight lbs.
18	2'-4"	3'-6"	4	4	1/2"	1	1/2"	48
24	3'-0"	4'-0"	5	5	1/2"	2	1/2"	58
30	3'-0"	4'-6"	5	5	5/8"	3	5/8"	74
36	3'-8"	5'-0"	6	6	5/8"	4	5/8"	90
42	4'-4"	5'-6"	7	7	5/8"	5	5/8"	111

NOTES:

1. Construct guards only at locations specifically called for in Plans.
2. Anchor Bolts (Galvanized): Use C-I-P Hex Head bolts or fully threaded adhesive anchors, installed in accordance with Specification 416.

SINGLE PIPE END GUARD

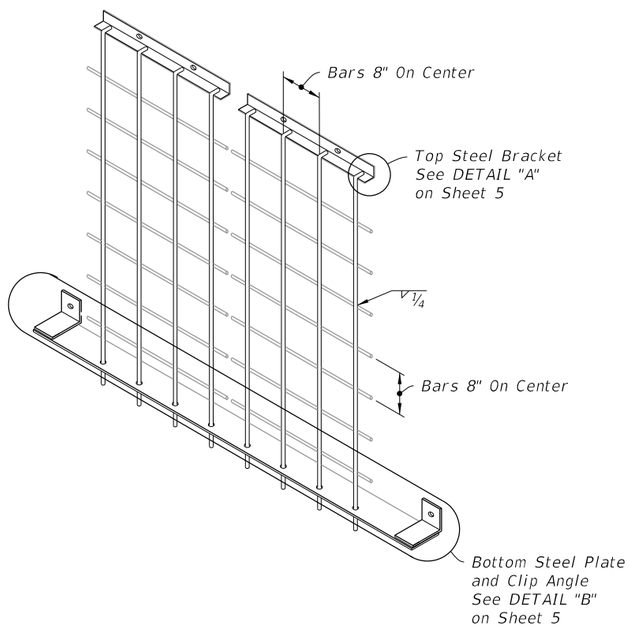

ISOMETRIC VIEW

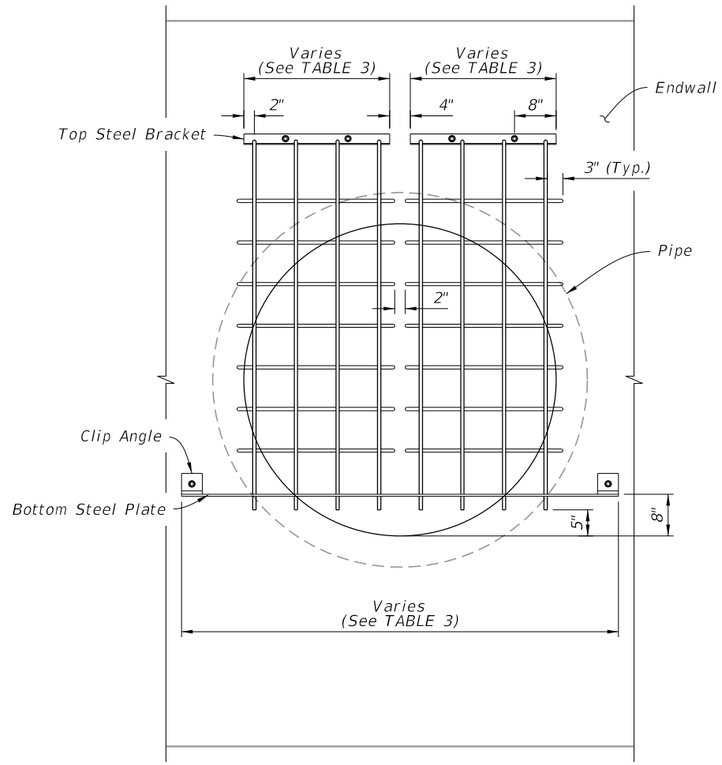

END ELEVATION

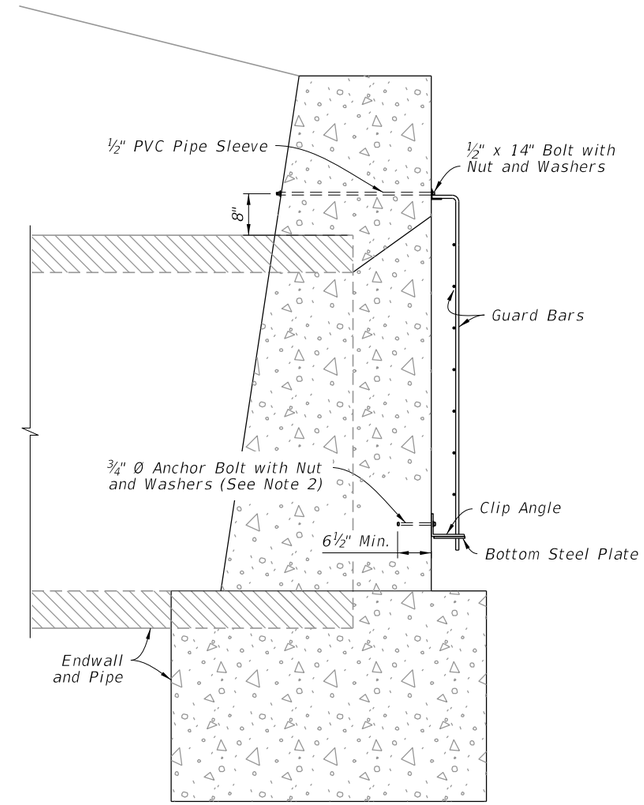

SIDE ELEVATION

DOUBLE GUARD
(60" Pipe Shown)

NOTES:

1. Construct guards only at locations specifically called for in Plans.

2. Anchor Bolts (Galvanized): Use C-I-P Hex Head bolts or fully threaded adhesive anchors, installed in accordance with Specification 416.

TABLE 3 - DOUBLE GUARD

Pipe Dia. (in)	Top Steel Bracket Grate 1	Top Steel Bracket Grate 2	Bottom Steel Plate	Number of Total Holes	Number of Vert. Bars Grate 1	Number of Vert. Bars Grate 2	Vertical Bars Size	Number of Horiz. Bars (each grate)	Horizontal Bars Size	Weight lbs.
48	2'-4"	2'-4"	6'-0"	8	4	4	5/8"	5	5/8"	127
54	2'-4"	2'-4"	6'-6"	8	4	4	3/4"	6	5/8"	157
60	2'-4"	2'-4"	7'-0"	8	4	4	3/4"	7	5/8"	172

10/20/2022 8:48:36 AM

DOUBLE PIPE END GUARD

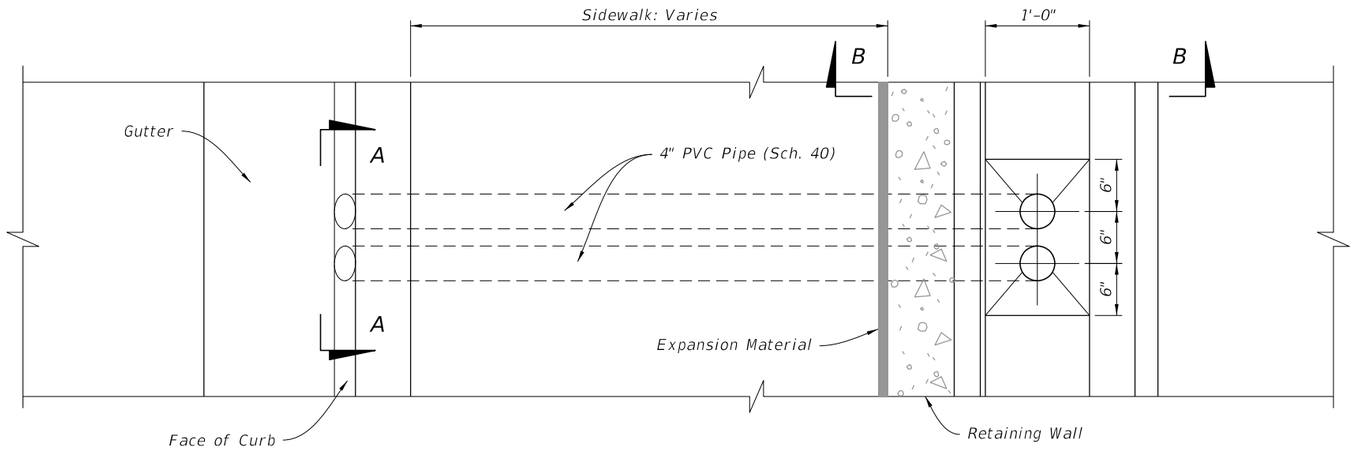

PLAN

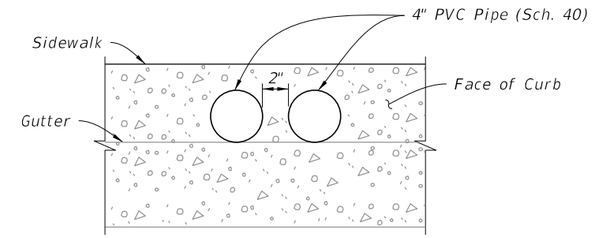

SECTION A-A

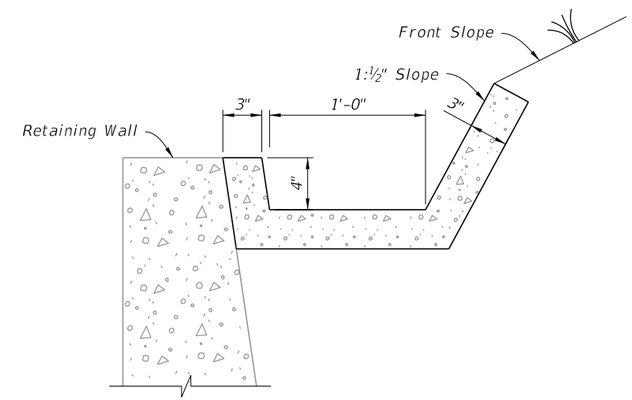

SECTION B-B

Note:
Grade Sidewalk slope toward gutter. Match PVC pipe slope under sidewalk with sidewalk slope.

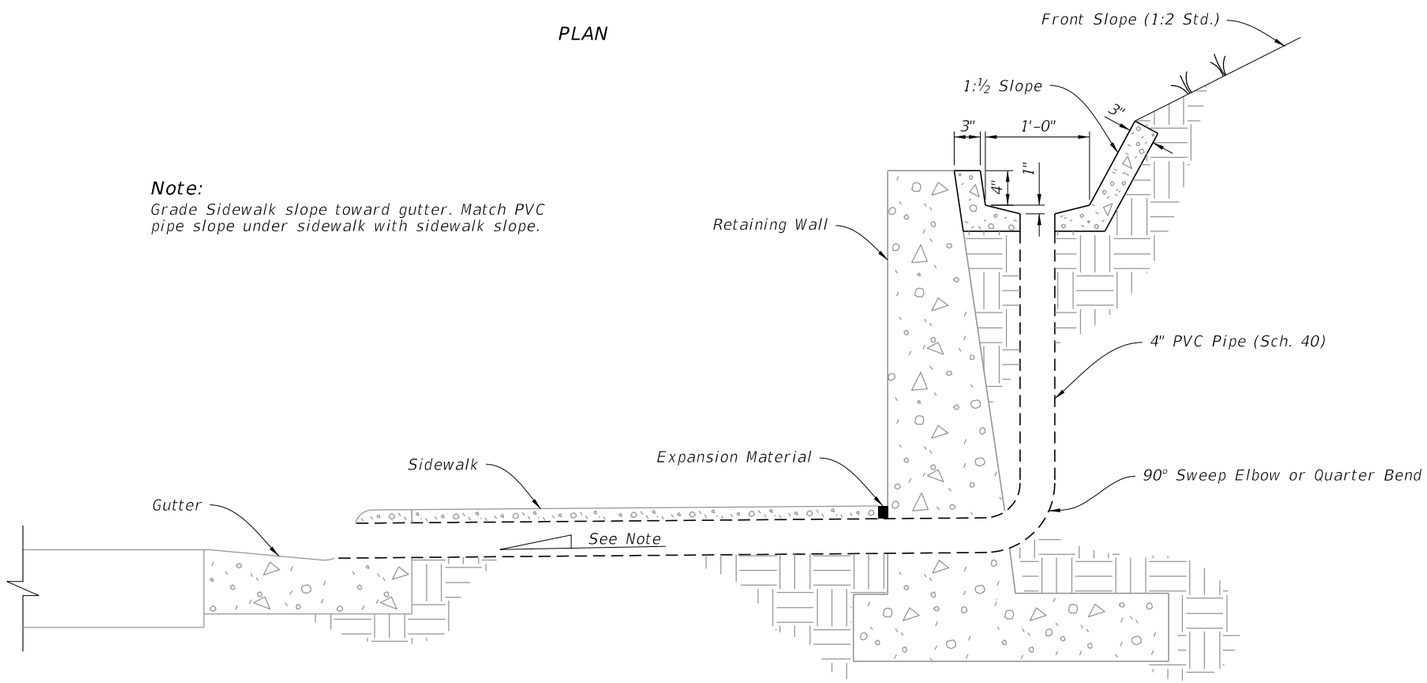

ELEVATION

GUTTER AND DRAINS

RETAINING WALL CONCRETE GUTTER AND DRAINS

LAST REVISION	REVISION	DESCRIPTION:			INDEX	SHEET
10/01/20			FDOT FY 2023-24 STANDARD PLANS	MISCELLANEOUS DRAINAGE DETAILS	430-001	7 of 7

10/20/2022 8:48:37 AM

GENERAL NOTES:

1. Use Class II concrete.

2. Reinforcing steel: All bars are size #4. Spacings shown are center to center. Laps to be 1'-5" minimum. Cover is 2" except as noted. Square welded wire fabric (two cages max.) having an equivalent cross sectional area (0.20 sq. in.) may be substituted for bar reinforcement.

3. Endwall may be cast in place or precast concrete. Construct precast units to dimensions shown, or as shown in approved shop drawings. Use Index 425-001 for opening and grouting details.

4. Quantities shown are for estimating purposes only.

TABLE OF CONTENTS:

Sheet	Description
1	General Notes and Contents
2	Dimensional and Reinforcing Details
3	Type 1 and Type 2 Grate Details

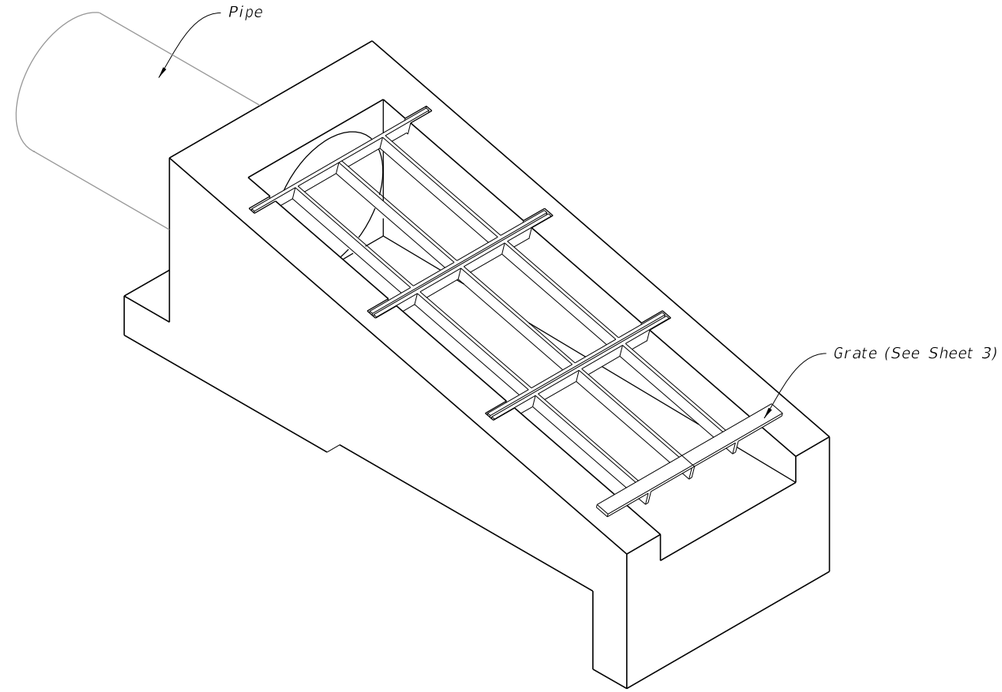

U-TYPE CONCRETE ENDWALLS 15" TO 30" PIPES WITH GRATES
(24" Pipe Shown)

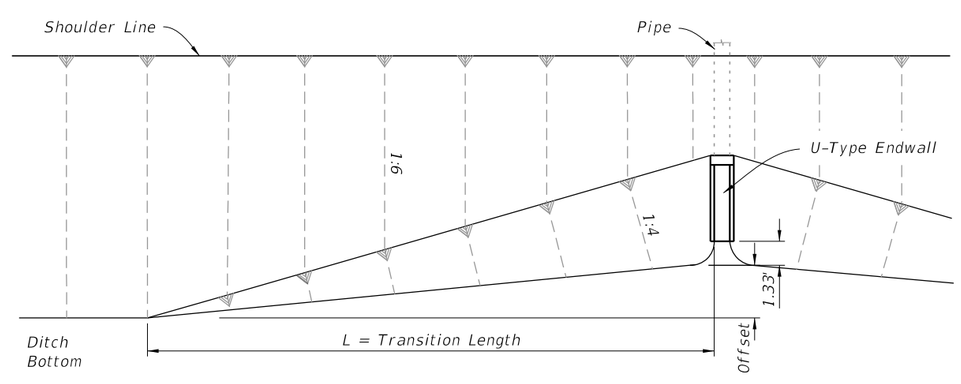

TABLE 1
SLOPE TRANSITIONS

	Pipe Dia.	Offset (Ft.)	L (Ft.)
Slope 1:4	15"	4.2	42
	18"	4.8	48
	24"	5.8	58
	30"	6.9	69

FRONT SLOPE TRANSITION AT ENDWALL

10/20/2022 8:48:38 AM

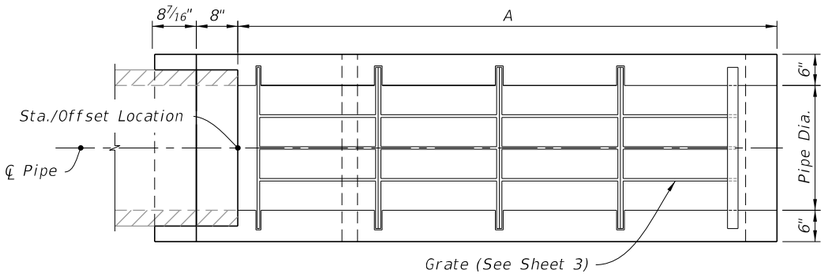

PLAN

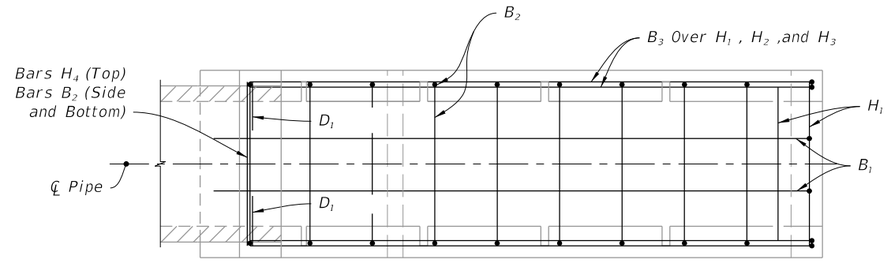

PLAN

LEGEND:

H = Horizontal Bars

V = Vertical Bars

B = Bent Bars

D = Dowels or Diagonal Bars

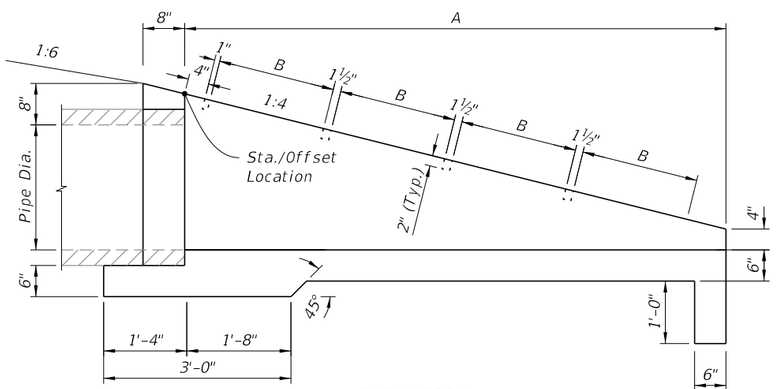

ELEVATION

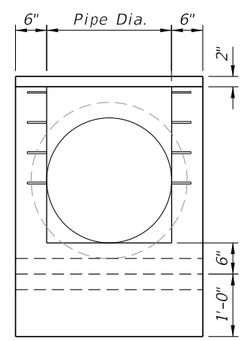

END VIEW

DIMENSIONAL DETAIL

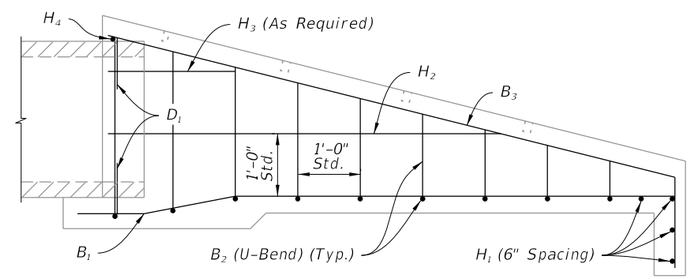

ELEVATION

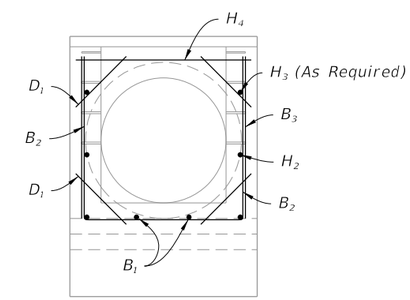

END VIEW

REINFORCING DETAIL

TABLE 2
DIMENSIONS AND QUANTITIES

	Pipe Dia.	A (Ft.)	B (Ft)	Class II Conc. (CY)	Reinf. Steel (lbs.)
Slope 1:4	15"	5.67	2.38	0.85	56
	18"	6.67	1.875	1.01	73
	24"	8.67	1.875	1.65	97
	30"	10.67	1.875	2.33	129

10/20/2022 8:48:38 AM

DIMENSIONAL AND REINFORCING DETAILS

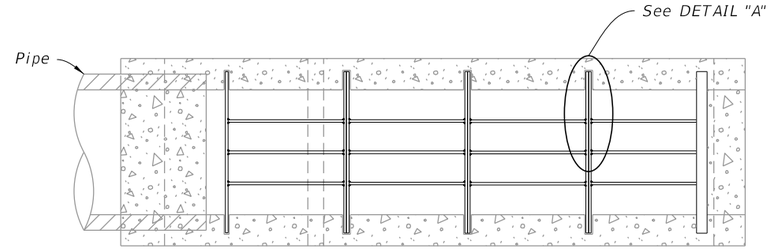

PLAN

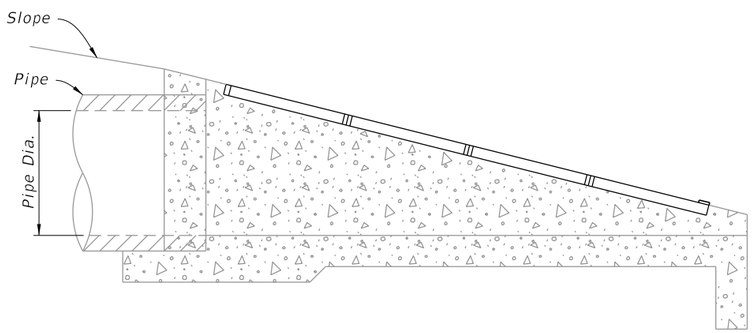

ELEVATION

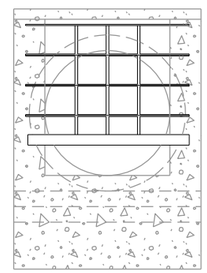

END VIEW

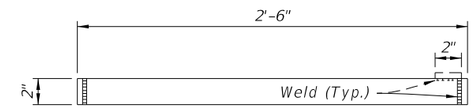

SIDE VIEW

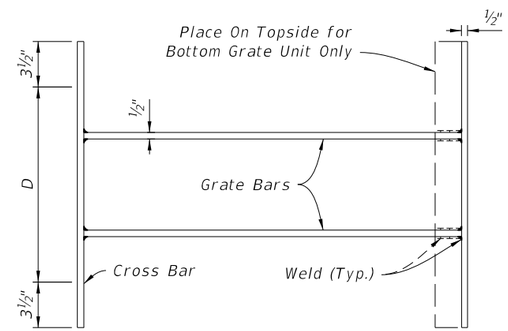

TOP VIEW

TYPE 1

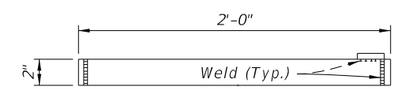

SIDE VIEW

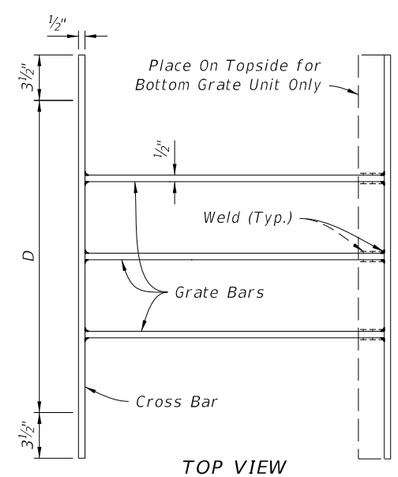

TOP VIEW

TYPE 2

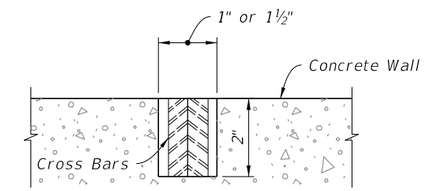

SECTION A-A

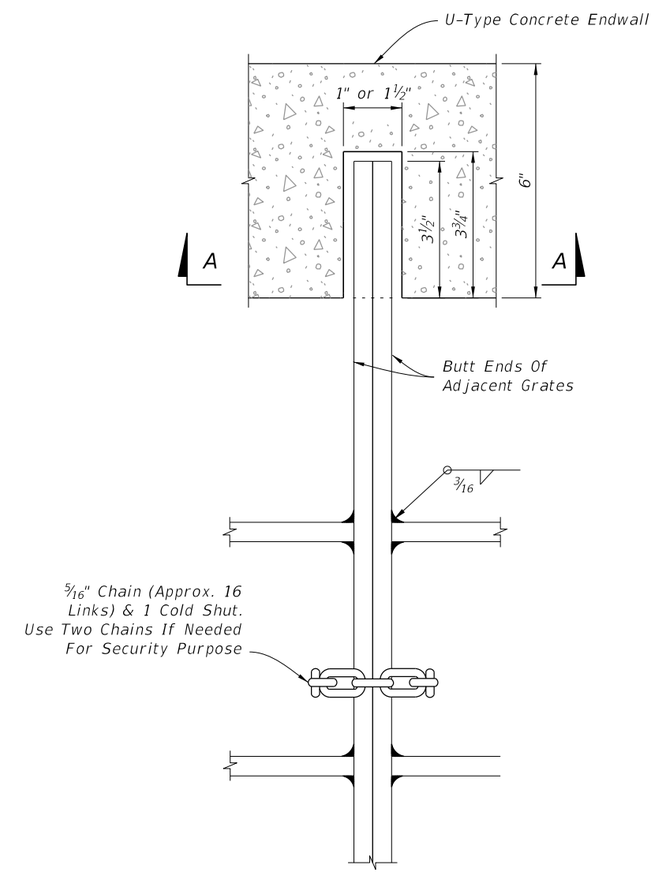

GRATE, SEAT, WELD & CHAIN DETAIL

NOTES:

1. Install grate bars evenly spaced across dimension D.

2. All bars and grate bars are ½" x 2".

TABLE 3
NUMBER OF GRATE BARS AND GRATES REQUIRED

Pipe Dia. D	Grate Bars Reqd.		Grate Wt. (lbs.)	Grate Reqd.		Total Grate Wt. (lbs.)
	Type No. 1	Type No. 2		Type No. 1	Type No. 2	
15"	2	0	28.93	2	0	57.86
18"	0	3	33.69	0	3	101.08
24"	0	4	43.63	0	4	174.52
30"	0	5	53.55	0	5	267.75

TYPE 1 AND TYPE 2 GRATE DETAILS

DETAIL "A"

TYPE 1 AND TYPE 2 GRATE DETAILS

GENERAL NOTES:

1. Use Class II concrete.
2. Construct Baffles only when called for in Plans.
3. See Sheet 5 when steel grating is required on endwall.
4. All reinforcing #4 bars with 2" clearance except as noted.
5. Channel section C 3x6 may be substituted for C 4x5.4 channel.
6. Endwall may be cast in place or precast concrete. Construct precast units to dimensions shown, or as shown in approved shop drawings. Submit requests for shop drawing approvals to the Engineer. Use Index 425-001 for opening and grouting details.
7. Quantities shown are for estimating purposes only.

TABLE OF CONTENTS:

Sheet	Description
1	General Notes and Contents
2	Endwalls for 1:2 Slopes With Baffles
3	Endwalls for 1:2 Slopes Without Baffles and Bending Bar Diagram
4	Endwalls for 1:3, 1:4, and 1:6 Slopes
5	Steel Grate Option

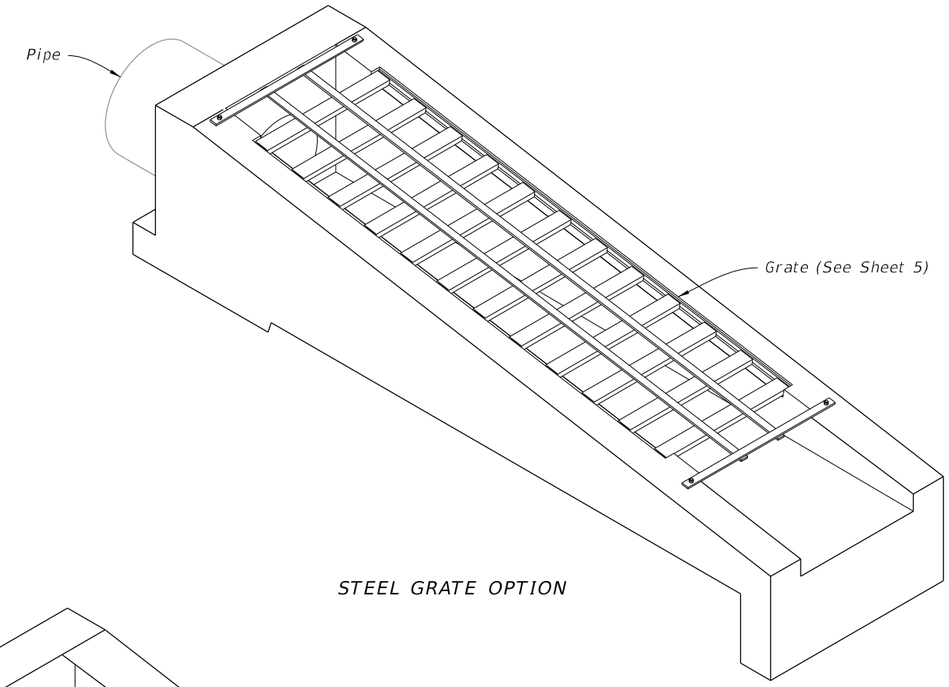

STEEL GRATE OPTION

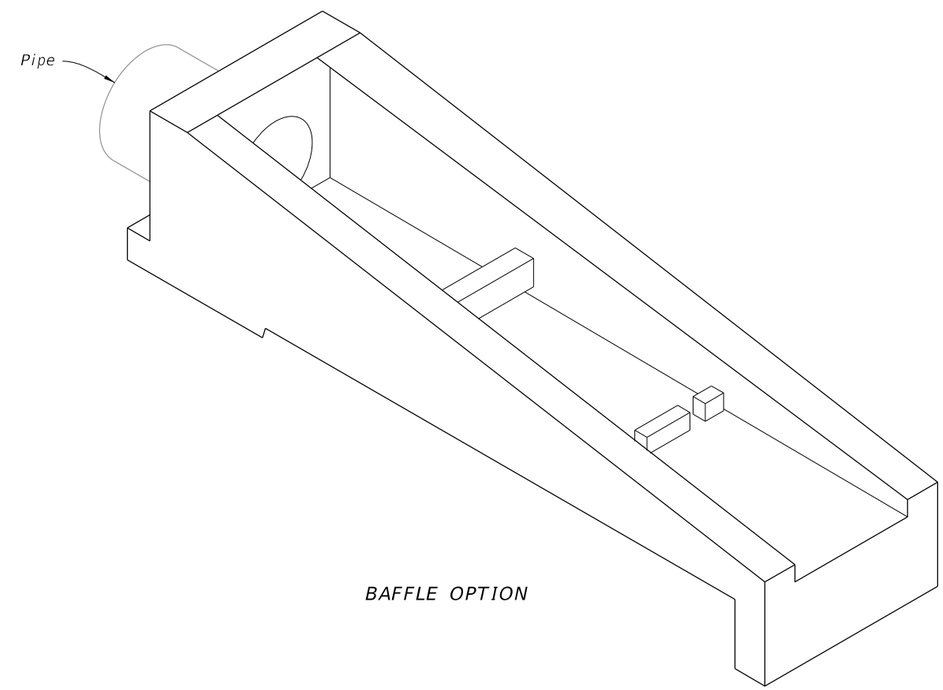

BAFFLE OPTION

U-TYPE CONCRETE ENDWALLS

10/20/2022 8:48:40 AM

LAST REVISION	REVISION	DESCRIPTION:				INDEX	SHEET
11/01/21			FDOT	FY 2023-24 STANDARD PLANS	U-TYPE CONCRETE ENDWALLS BAFFLES AND GRATE OPTIONAL 15" TO 30" PIPE	430-011	1 of 5

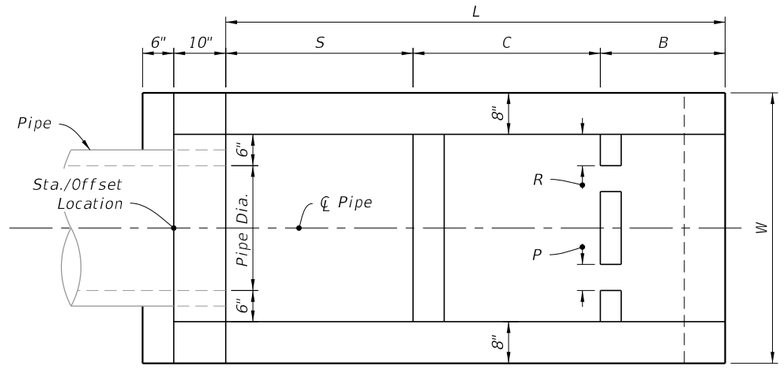

PLAN

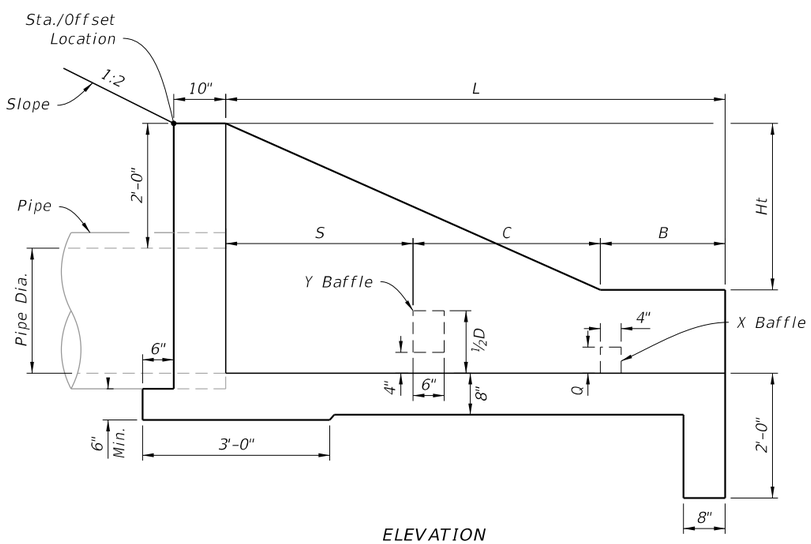

ELEVATION

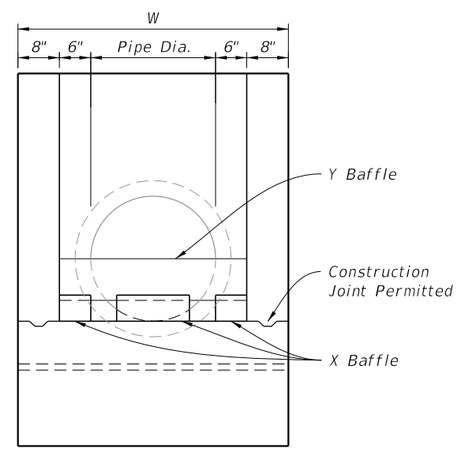

FRONT VIEW

DIMENSIONAL DETAILS

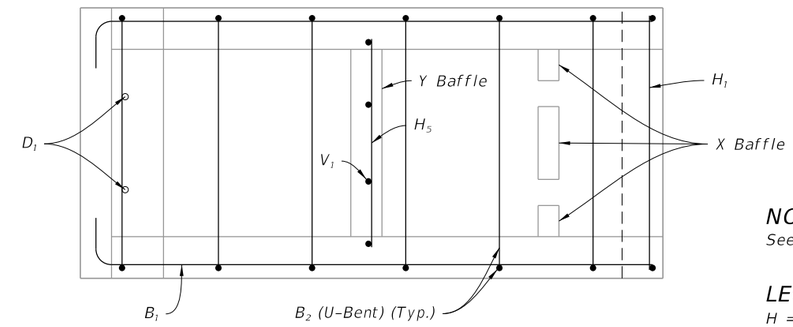

PLAN

NOTE:
See Sheet 3 for Bar Bending Diagram.

LEGEND:
H = Horizontal Bars
V = Vertical Bars
B = Bent Bars
D = Dowels or Diagonal Bars

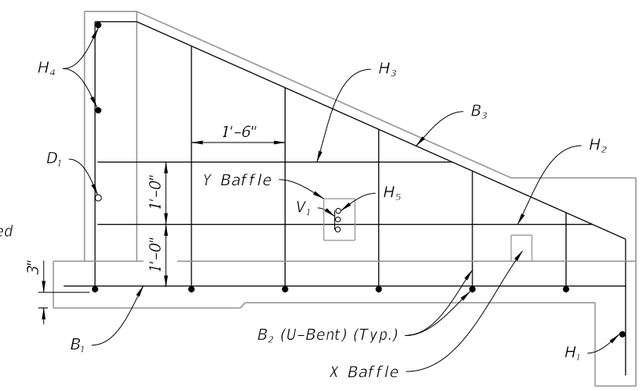

ELEVATION

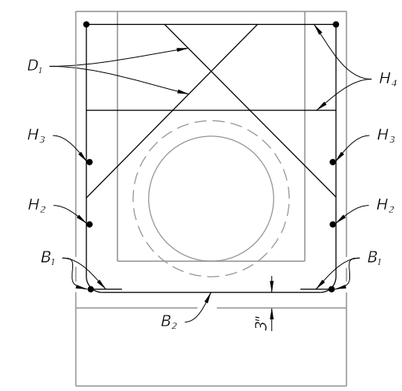

BACK VIEW

REINFORCING DETAILS

TABLE-1
DIMENSIONS AND QUANTITIES FOR ONE U-ENDWALL

Pipe		L	Ht	W	S	B	C	X Baffle			Y Baffle Reinf. Steel		Class II Conc. Cu. Yd.	Reinf. Steel lbs.
Dia.	Area Sq. Ft.							P	Q	R	Bars V_1	Bars H_5		
15"	1.23	5'-9"	2'-3½"	3'-7"	2'-3"	1'-3"	2'-3"	4"	4"	4"	2 #4	1 #4	1.61	72
18"	1.77	6'-6"	2'-5"	3'-10"	2'-6"	1'-6"	2'-6"	4"	4"	5"	3 #4	2 #4	1.89	86
24"	3.14	8'-0"	2'-8"	4'-4"	3'-0"	2'-0"	3'-0"	5"	5"	6"	4 #4	3 #4	2.52	108
30"	4.91	9'-6"	2'-11"	4'-10"	3'-6"	2'-6"	3'-6"	5"	5"	7"	4 #4	4 #4	3.34	131

ENDWALLS FOR 1:2 SLOPES WITH BAFFLES

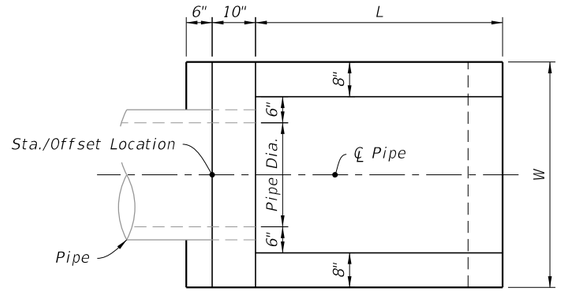

PLAN

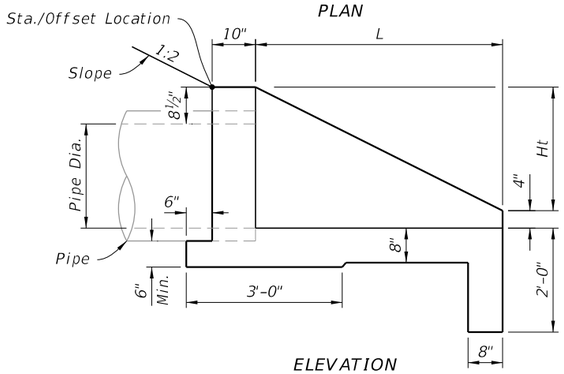

ELEVATION

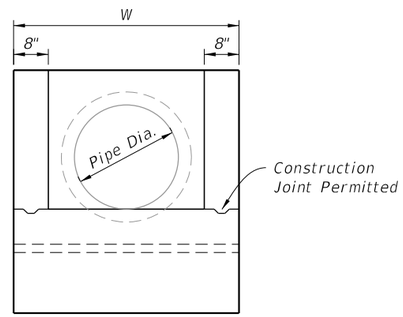

FRONT VIEW

DIMENSIONAL DETAILS

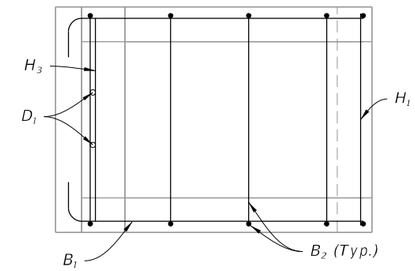

PLAN

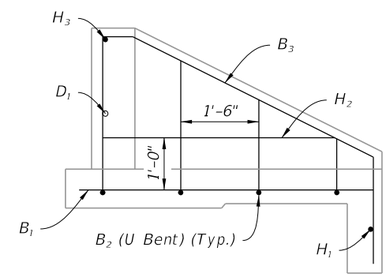

SIDE VIEW

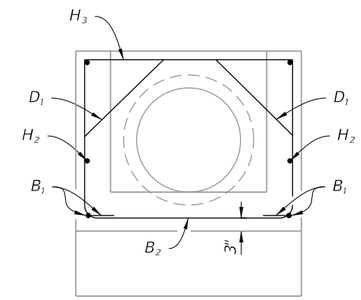

BACKWALL SECTION

REINFORCING DETAILS

LEGEND:

H = Horizontal Bars

V = Vertical Bars

B = Bent Bars

D = Dowels or Diagonal Bars

TABLE-2

DIMENSIONS AND QUANTITIES FOR ONE U-ENDWALL

Pipe		L	Ht	W	Class II Conc. Cu. Yd.	Reinf. Steel lbs.
Dia.	Area Sq. Ft.					
15"	1.23	3'-3"	1'-7½"	3'-7"	0.89	39
18"	1.77	3'-9"	1'-10½"	3'-10"	1.05	43
24"	3.14	4'-9"	2'-4½"	4'-4"	1.40	55
30"	4.91	5'-9"	2'-10½"	4'-10"	1.88	64

ENDWALL WITHOUT BAFFLES

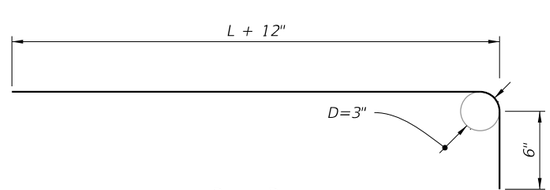

Bars B_1

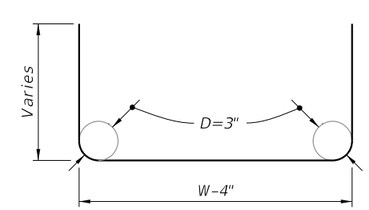

Bars B_2

BENDING DIAGRAM

ENDWALLS FOR 1:2 SLOPES WITHOUT BAFFLES AND BAR BENDING DIAGRAM

NOTE:

1. Reinforcing similar to Sheets 2 and 3.
2. See Sheet 3 for Bar Bending Diagram.

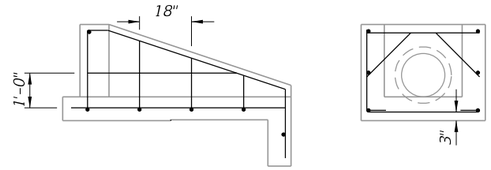

15" AND 18" PIPE

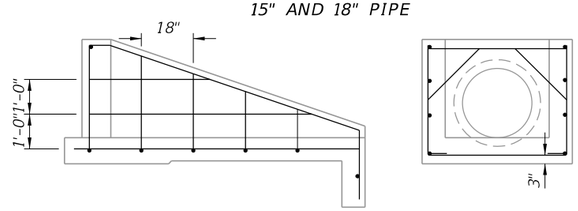

24" AND 30" PIPE

1:3 SLOPES

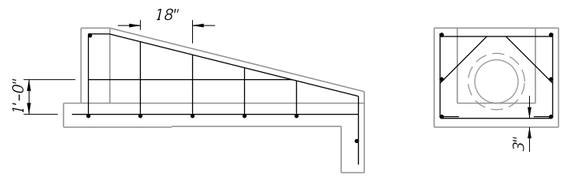

15" AND 18" PIPE

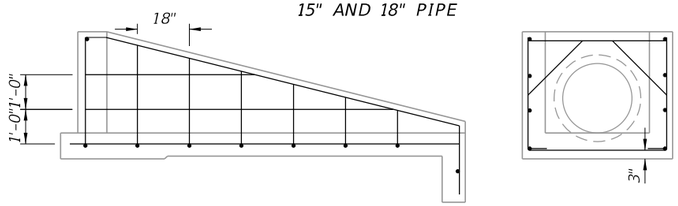

24" AND 30" PIPE

1:4 SLOPES

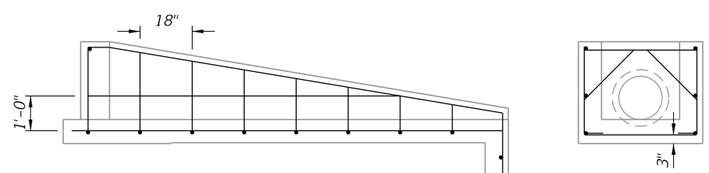

15" AND 18" PIPE

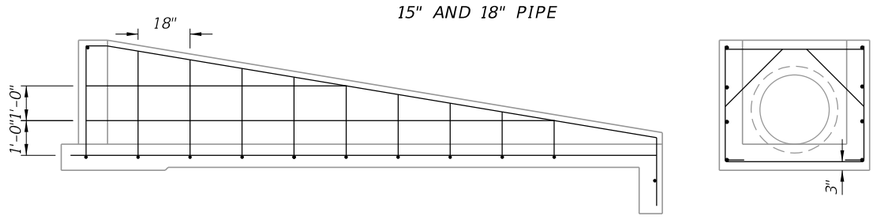

24" AND 30" PIPE

1:6 SLOPES

REINFORCING DETAILS

(Side Views And Backwall Sections Shown)

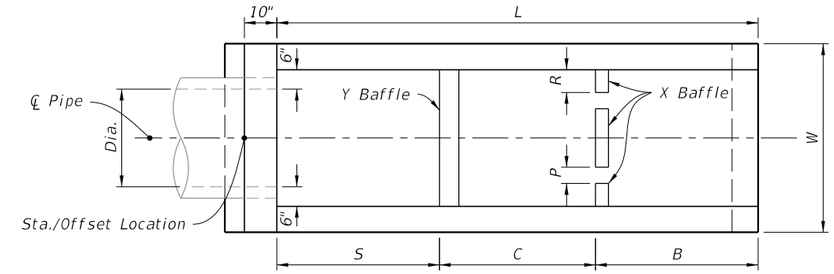

PLAN

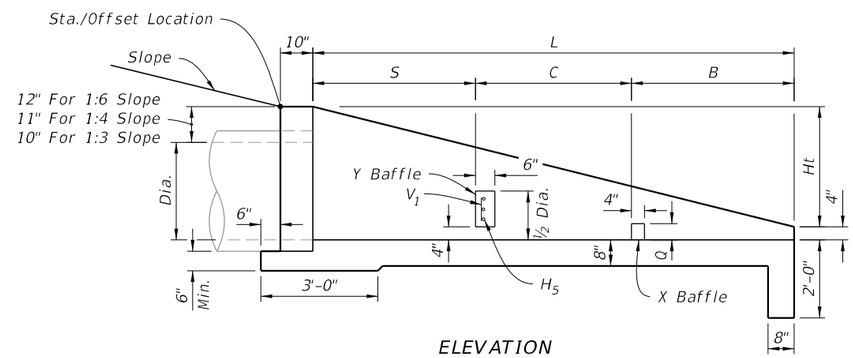

ELEVATION

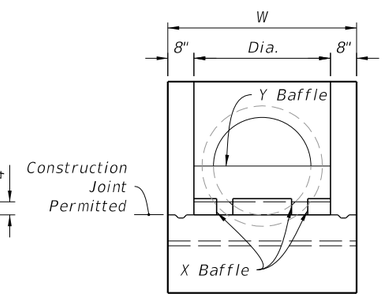

END VIEW

DIMENSIONAL DETAILS

TABLE-3

DIMENSIONS AND QUANTITIES FOR BAFFLES

Pipe Dia.	X Baffle			Y Baffle Reinf. Steel		Class II Concrete Cu. Yd.	Reinf. Steel lbs.
	P Width	Q Height	R Length	Bar V_1	Bar H_5		
15"	4"	4"	4"	2- #4	1- #4	0.10	4
18"	4"	4"	5"	3- #4	2- #4		8
24"	5"	5"	6"	4- #4	3- #4		12
30"	5"	5"	7"	4- #4	4- #4		16

TABLE-4

DIMENSIONS AND QUANTITIES FOR ONE U-ENDWALL

Rate Of Slope	Pipe		L	Ht	W	Baffle Locations (When Required)			Class II Concrete Cu. Yd.	Reinf. Steel lbs.
	Dia.	Area (Sq. Ft.)				S	B	C		
1 : 3	15"	1.23	5'-3"	1'-9"	3'-7"	1'-9"	1'-9"	1'-9"	1.19	51
	18"	1.77	6'-0"	2'-0"	3'-10"	2'-0"	2'-0"	2'-0"	1.42	56
	24"	3.14	7'-6"	2'-6"	4'-4"	2'-6"	2'-6"	2'-6"	1.94	77
	30"	4.91	9'-0"	3'-0"	4'-10"	3'-0"	3'-0"	3'-0"	2.54	96
1 : 4	15"	1.23	7'-4"	1'-10"	3'-7"	2'-6"	2'-6"	2'-4"	1.54	64
	18"	1.77	8'-4"	2'-1"	3'-10"	2'-10"	2'-10"	2'-8"	1.84	71
	24"	3.14	10'-4"	2'-7"	4'-4"	3'-6"	3'-6"	3'-4"	2.53	92
	30"	4.91	12'-4"	3'-1"	4'-10"	4'-2"	4'-2"	4'-0"	3.34	124
1 : 6	15"	1.23	11'-6"	1'-11"	3'-7"	3'-10"	3'-10"	3'-10"	2.19	89
	18"	1.77	13'-0"	2'-2"	3'-10"	4'-4"	4'-4"	4'-4"	2.63	103
	24"	3.14	16'-0"	2'-8"	4'-4"	5'-4"	5'-4"	5'-4"	3.59	143
	30"	4.91	19'-0"	3'-2"	4'-10"	6'-4"	6'-4"	6'-4"	4.81	180

ENDWALLS WITH AND WITHOUT BAFFLES FOR 1:3, 1:4, AND 1:6 SLOPES

TABLE-5
TABLE OF DIMENSIONS AND QUANTITIES FOR ONE GRATE

Rate of Slope	Size Dia.	G	2 Each Bars @ 3.4 lb/ft			(X) Channels @ 5.4 lb/ft			2 Angles @ 3.62 lb/ft		Total Weight (lb)
			L	W-4"	lbs	(X)	F	lbs	P	lb	
1:3	15"	2' -8½"	4'-3"	3'-3"	51	3	2' -6⅞"	42	2'-4"	17	110
	18"	2' -11½"	5'-3"	3'-6"	60	4	2' -9⅞"	61	3'-4"	24	145
	24"	3' -5½"	6'-3"	4'-0"	70	5	3' -3⅞"	90	4'-4"	31	191
	30"	3' -11½"	8'-3"	4'-6"	87	7	3' -9⅞"	145	6'-4"	46	278
1:4	15"	2' -8½"	6'-3"	3'-3"	65	5	2' -6⅞"	70	4'-4"	32	167
	18"	2' -11½"	7'-3"	3'-6"	73	6	2' -9⅞"	92	5'-4"	39	204
	24"	3' -5½"	9'-3"	4'-0"	90	8	3' -3⅞"	144	7'-4"	53	287
	30"	3' -11½"	11'-3"	4'-6"	107	10	3' -9⅞"	206	9'-4"	68	381
1:6	15"	2' -8½"	9'-3"	3'-3"	85	8	2' -6⅞"	111	7'-4"	53	249
	18"	2' -11½"	10'-3"	3'-6"	94	9	2' -9⅞"	137	8'-4"	62	292
	24"	3' -5½"	13'-3"	4'-0"	117	12	3' -3⅞"	215	11'-4"	82	414
	30"	3' -11½"	16'-3"	4'-6"	141	15	3' -9⅞"	310	14'-4"	104	555

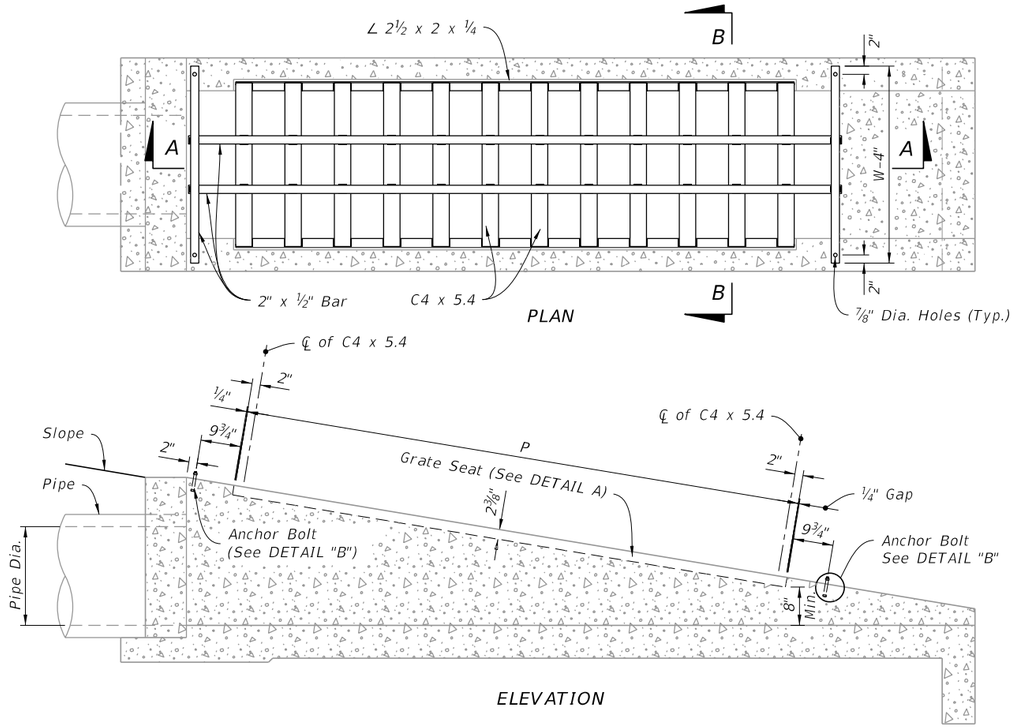

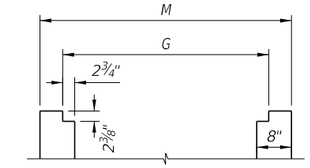

Grate Seat

DETAIL "A"

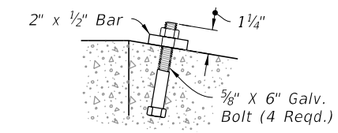

Anchor Bolt Detail
DETAIL "B"

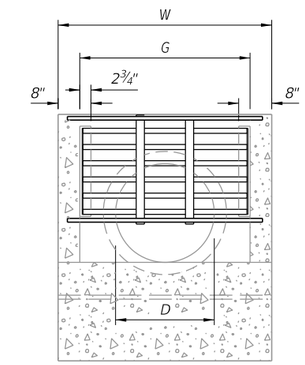

END VIEW

STEEL GRATE MOUNTING

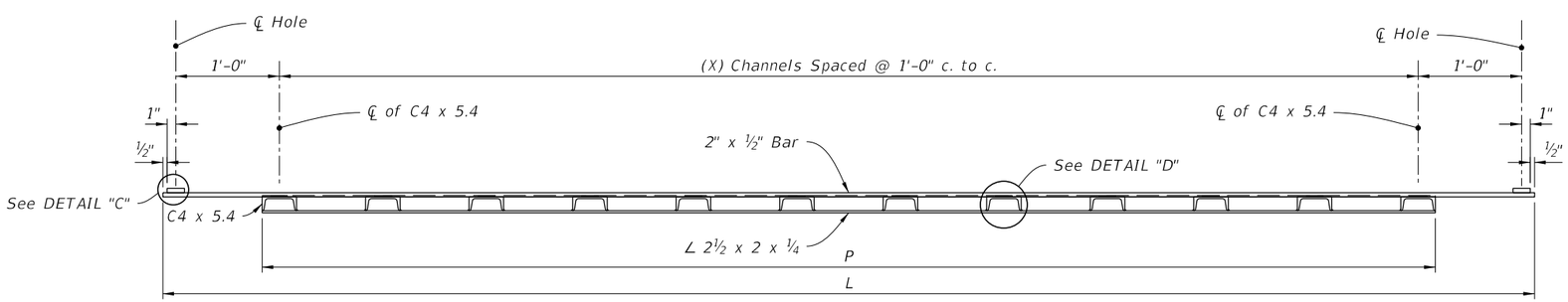

SECTION A-A

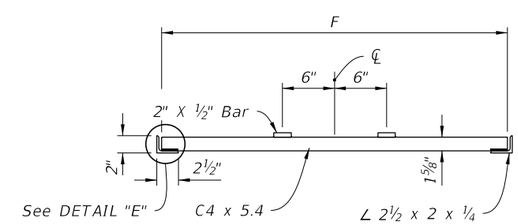

SECTION B-B

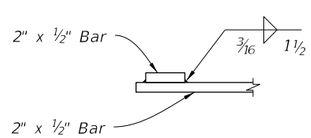

Bar to Bar Weld
DETAIL "C"

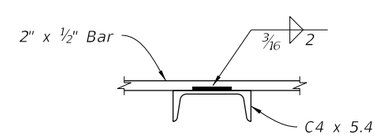

Bar to Channel Weld
DETAIL "D"

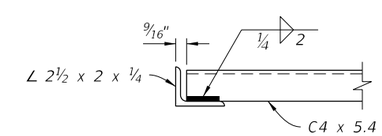

Channel to Angle Weld
DETAIL "E"

STEEL GRATE DETAILS

STEEL GRATE OPTION

GENERAL NOTES:

1. Use Class II concrete.
2. Chamfer all exposed edges ¾".
3. See Index 550-002 for details of Type B fencing.
4. Quantities shown are for estimating purposes only.

TABLE OF CONTENTS:

Sheet	Description
1	General Notes and Contents
2	Dimensional Details
3	Reinforcing Details and Bending Diagram

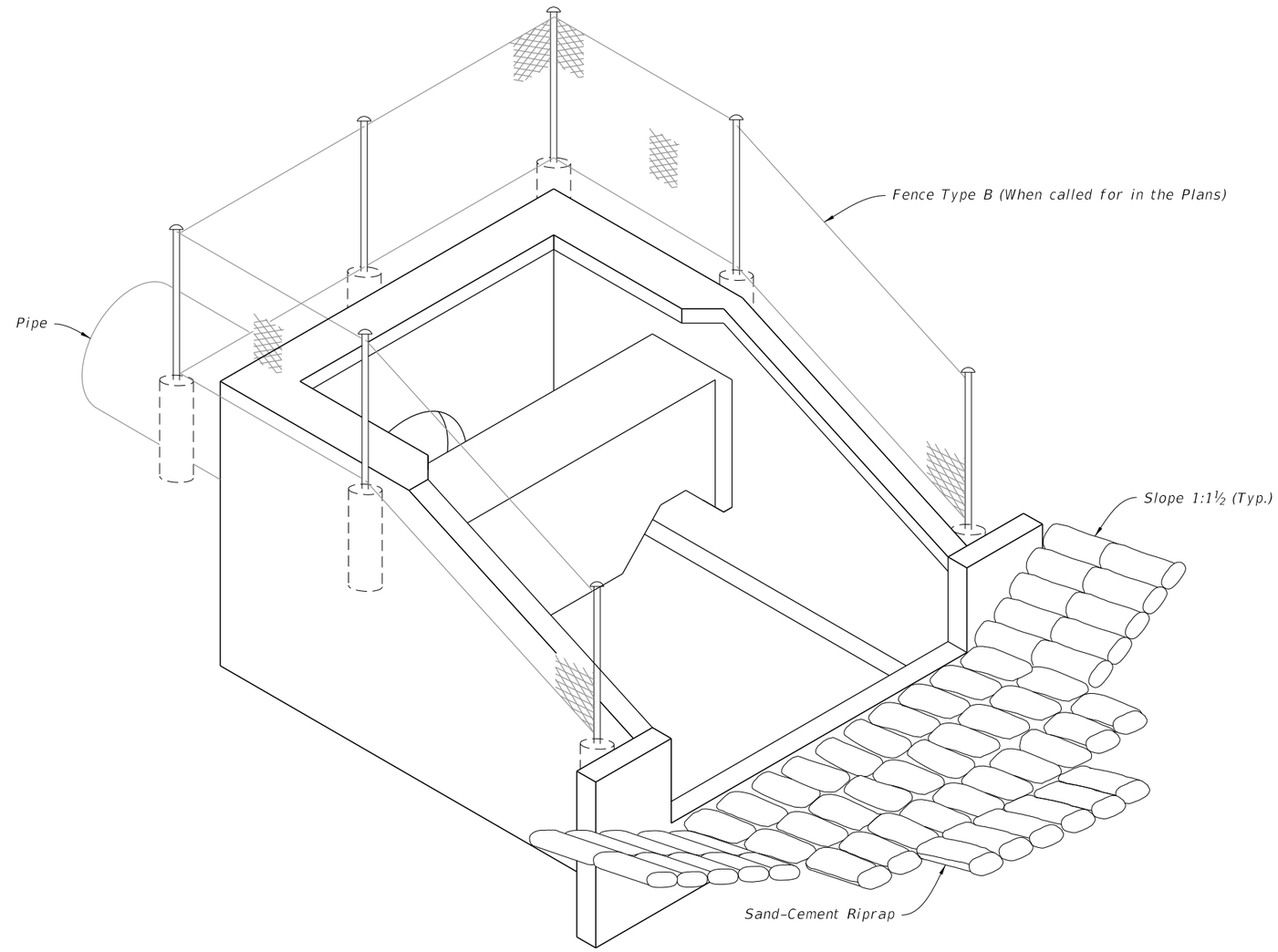

U-TYPE CONCRETE ENDWALLS

10/20/2022 8:48:43 AM

LAST REVISION	REVISION	DESCRIPTION:				
11/01/21			FY 2023-24 STANDARD PLANS	U-TYPE CONCRETE ENDWALLS ENERGY DISSIPATOR 30" TO 72" PIPE	INDEX 430-012	SHEET 1 of 3

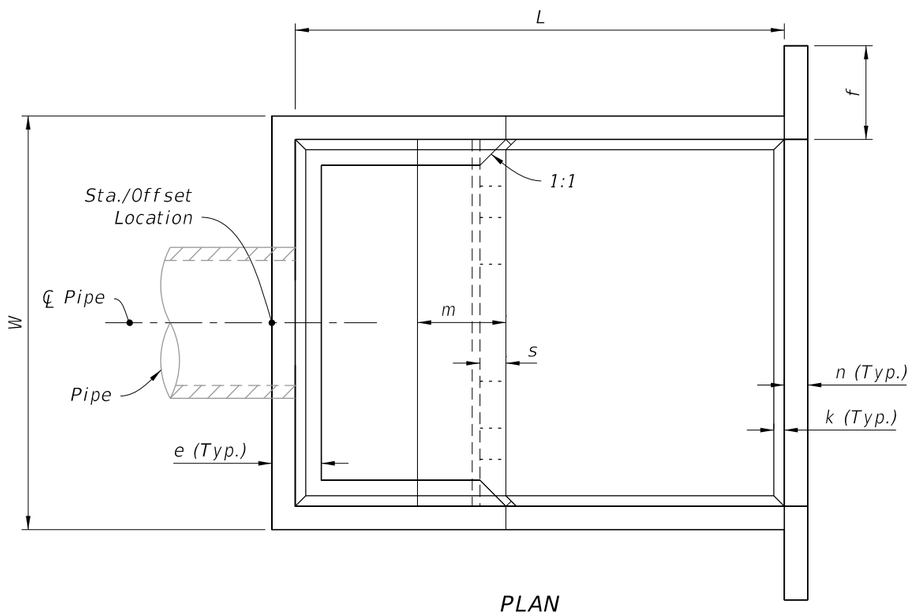

PLAN

Pipe		DIMENSION TABLE																Concrete (CY)	Reinf. Steel (lb)	Sand-Cement Riprap (Nom.) (CY)
Dia.	Area (SF)	Feet - Inches											Inches							
		W	Ht	L	a	b	c	d	e	f	g	m	n	p	s	t	k			
30"	4.91	9-0	6-3	10-8	4-7	6-1	3-4	1-4	1-2	2-6	3-0	1-11	6	6½	7	7	3	6.72	736	10.6
36"	7.07	10-5	7-3	12-4	5-3	7-1	3-10	1-7	1-3	3-0	3-6	2-3	7	7½	8	8	3	10.34	1,072	13.6
42"	9.62	11-10	8-0	14-0	6-0	8-0	4-5	1-9	1-6	3-0	3-11	2-6	8	8½	9	8	4	14.82	1,429	17.5
48"	12.57	13-3	9-0	15-8	6-9	8-11	4-11	2-0	1-7	3-0	4-5	2-10	9	9½	10	8	4	20.36	2,000	22.1
54"	15.90	14-8	9-9	17-4	7-4	10-0	5-5	2-2	1-10	3-0	4-11	3-0	10	10½	10	8	4	27.19	2,659	27.2
60"	13.63	16-1	10-9	19-0	8-0	11-0	5-11	2-5	1-11	3-0	5-4	3-4	11	11½	11	8	6	34.49	3,552	32.5
66"	23.76	17-3	11-6	20-6	8-8	11-10	6-5	2-7	2-1	3-0	5-9	3-7	12	12½	12	8	6	42.82	4,472	38.3
72"	28.27	18-6	12-3	22-0	9-3	12-9	6-11	2-9	2-3	3-0	6-2	3-9	12	12½	12	8	6	50.68	5,426	44.5

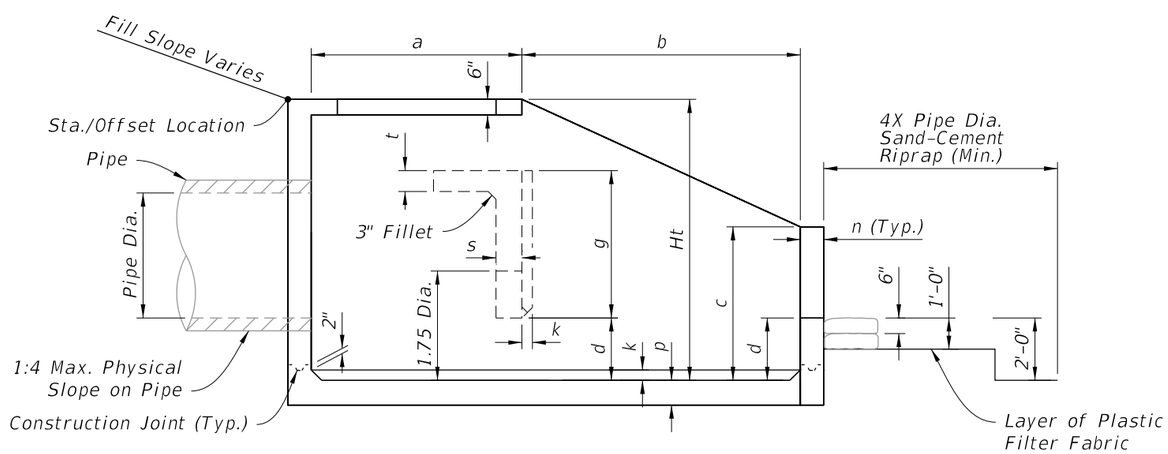

ELEVATION

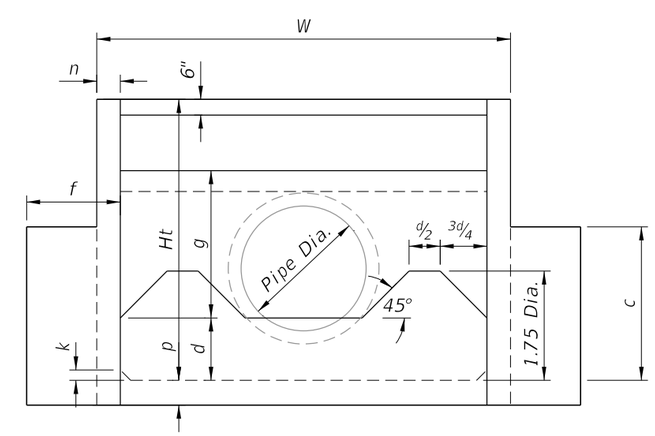

FRONT VIEW

DIMENSIONAL DETAILS

DIMENSIONAL DETAILS

LAST REVISION	REVISION	DESCRIPTION:					
11/01/19			FY 2023-24 STANDARD PLANS	U-TYPE CONCRETE ENDWALLS ENERGY DISSIPATOR 30" TO 72" PIPE	INDEX 430-012	SHEET 2 of 3

10/20/2022 8:48:44 AM

NOTES:

1. All bar dimensions are measured out to out.
2. All Bars are size #4 unless otherwise noted.
3. Install reinforcing steel with a minimum of 2" cover.
4. Bars B6 and B7 (N.S. and F.S.) equivalent in size to B_5 (cut and bend as required)
5. Bars V_1, V_2, V_3, V_4, V_5, H_1, H_2, H_3, H_4, and H_5 are straight bars.

LEGEND:

H = Horizontal Bars
V = Vertical Bars
B = Bent Bars
D = Dowels or Diagonal Bars

BENT BARS TABLE

Pipe	B_1		B_2		B_3		B_4		B_5		B_{10}	
	Size (No.)	Spacing (Ft.-In.)	Size (No.)	Spacing (Ft.-In.)	Size (No.)	Spacing (Ft.-In.)	Size (No.)	Spacing (Ft.-In.)	Size (No.)	Spacing (Ft.-In.)	Size (No.)	Spacing (Ft.-In.)
30"	4	0-9½	4	1-6	5	0-11	4	0-9½	5	0-5½	4	0-9½
36"	5	1-0	4	1-6	5	0-10	5	1-0	5	0-5	5	1-0
42"	5	0-11	4	1-6	6	1-1	5	0-11	6	0-6½	5	0-11
48"	5	0-9½	4	1-0	6	1-0	5	0-9½	6	0-6	5	0-9½
54"	5	0-8½	4	0-10	7	1-1	5	0-8½	7	0-6½	5	0-8½
60"	6	0-10	5	1-1	7	1-0	6	0-10	7	0-6	6	0-10
66"	6	0-8½	5	0-11½	7	0-11	6	0-8½	7	0-5½	6	0-8½
72"	6	0-7½	5	0-10	7	0-10	6	0-7½	7	0-5	6	0-7½

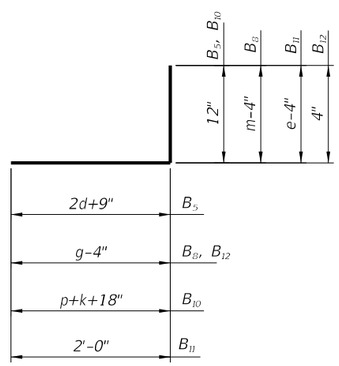

BARS B_5 B_8 B_{10} B_{11} B_{12}

BAR B_4

BENDING DIAGRAM

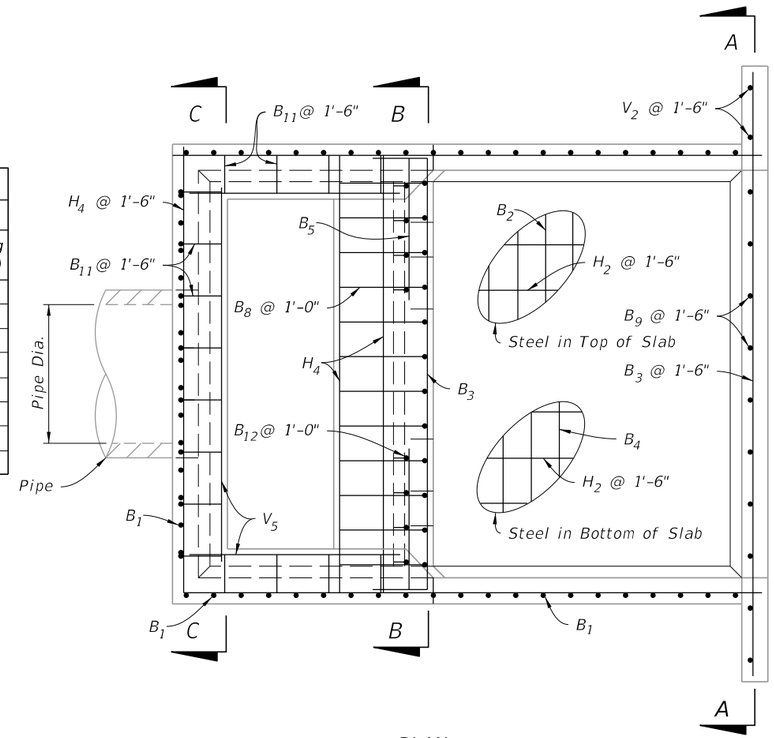

PLAN

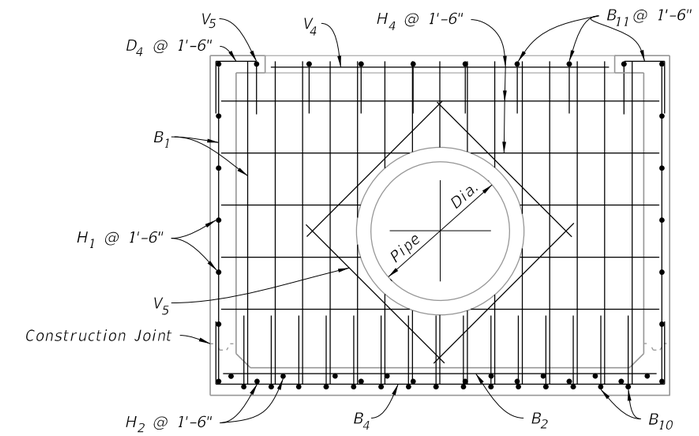

SECTION C-C

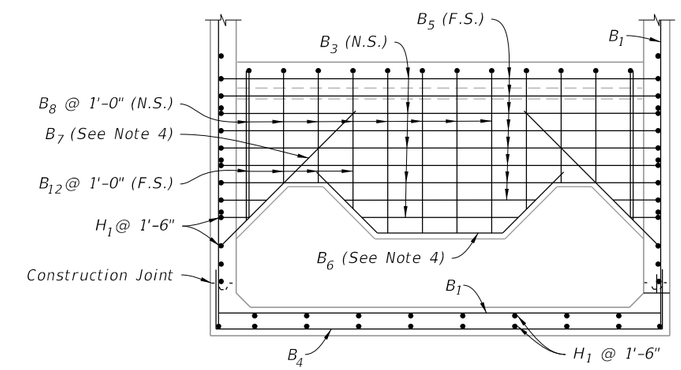

SECTION B-B

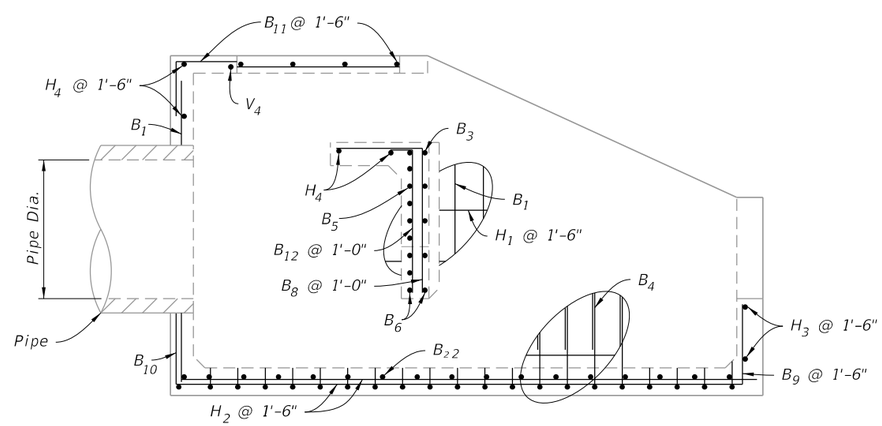

ELEVATION

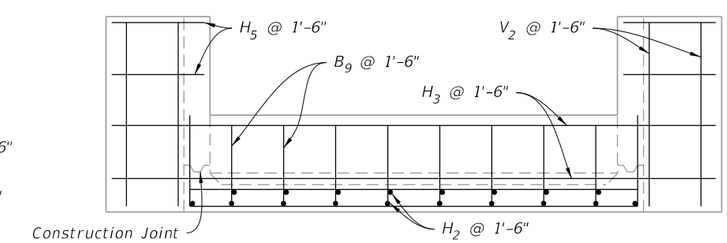

SECTION A-A

REINFORCING DETAILS

REINFORCING DETAILS AND BENDING DIAGRAM

LAST REVISION	REVISION	DESCRIPTION:			INDEX	SHEET
11/01/19			FY 2023-24 STANDARD PLANS	U-TYPE CONCRETE ENDWALLS ENERGY DISSIPATOR 30" TO 72" PIPE	430-012	3 of 3

10/20/2022 8:48:45 AM

GENERAL NOTES:

1. Provide flared end sections meeting the requirements of ASTM C76 with the exception that dimensions and reinforcement meet the criteria in the table on sheet 2. Circumferential reinforcement may consist of either one cage or two cages of steel. Use concrete compressive strength of 4000 psi.

2. Connections between the flared end section and the pipe culvert may be any of the following types unless otherwise shown on the plans.

   a. Joints meeting the requirements of Section 449 of the Standard Specifications (O-Ring Gasket). Flared end section joint dimensions and tolerances shall be identical or compatible to those used in the pipe culvert joint. When pipe culvert and flared end section manufacturers are different, the manufacturer of the flared end sections must certify the compatibility of joint designs.

   b. Joints sealed with preformed plastic gaskets. Use gaskets that meet the requirements Specification 942-2 of the Standard Specifications and the minimum sizes for gaskets as specified for equivalent sizes of elliptical pipe.

   c. Reinforced concrete jackets, as detailed on sheet 2. When non-coated corrugated metal pipe is called for in the Plans, use bituminous coated pipe in the jacketed area as specified on Index 430-001. Construct concrete jacket as specified in Index 430-001.

3. Cast Toe Walls in place using Class II Concrete.

4. On skewed pipe culverts place the flared end sections in line with the pipe culvert. Warp the side slopes as required to fit the flared end sections.

5. Quantities shown are for estimating purposes only.

TABLE OF CONTENTS:

Sheet	Description
1	General Notes and Contents
2	Straight Flare, Optional Shape Details, and Reinforced Concrete Jacket Detail

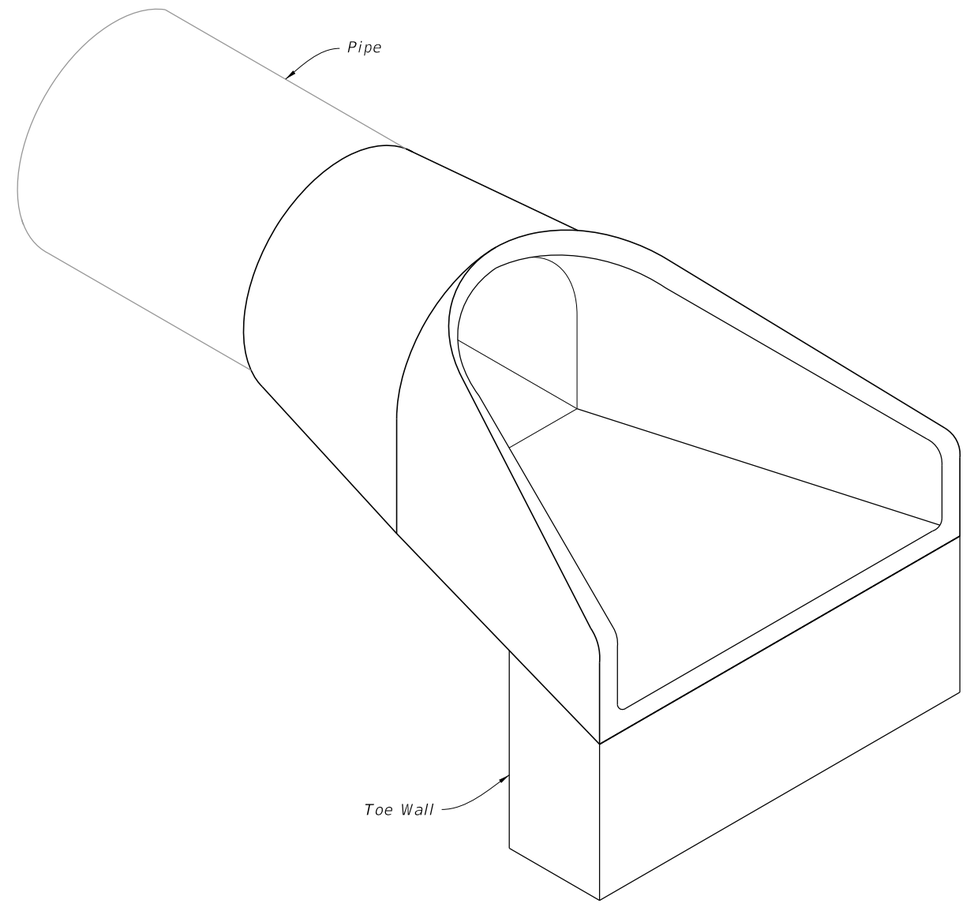

FLARED END SECTION

Pipe Dia.	T	Reinf. sq. in. Per Foot	Bell or Spigot	A	B	C	D	E	P	R 1	R 2	FLAT	h	Toe Wall Class II Conc. (CY.)
12"	2"	0.07	1½"	4"	2'-0"	4'-0⅞"	6'-0⅞"	2'-0"	19 15/16"	10⅛"	9"	3½"	12"	.06
15"	2¼"	0.07	2"	6"	2'-3"	3'-10"	6'-1"	2'-6"	24 5/16"	12½"	11"	3½"	12"	.07
18"	2½"	0.07	2½"	9"	2'-3"	3'-10"	6'-1"	3'-0"	29"	15½"	12"	4"	15"	.11
21"	2¾"	0.07	2¼"	9"	2'-11"	3'-2"	6'-1"	3'-6"	31⅝"	16⅛"	13"	4"	15"	.12
24"	3"	0.07	2½"	9½"	3'-7½"	2'-6"	6'-1½"	4'-0"	33 3/16"	16 13/16"	14"	4½"	18"	.17
27"	3¼"	0.148	2½"	10½"	4'-0"	2'-1½"	6'-1½"	4'-6"	36"	18 9/16"	14½"	4½"	18"	.19
30"	3½"	0.148	3"	1'-0"	4'-6"	1'-7¾"	6'-1¾"	5'-0"	37"	18½"	15"	5"	21"	.24
36"	4"	0.148	3½"	1'-3"	5'-3"	2'-10¾"	8'-1¾"	6'-0"	47 13/16"	24 5/16"	20"	5½"	21"	.29
42"	4½"	0.148	3¾"	1'-9"	5'-3"	2'-11"	8'-2"	6'-6"	53⅞"	27½"	22"	5½"	24"	.36
48"	5"	0.148	4¼"	2'-0"	6'-0"	2'-2"	8'-2"	7'-0"	56½"	28½"	22"	5¾"	24"	.39
54"	5½"	0.174	4¾"	2'-3"	5'-5"	2'-11"	8'-4"	7'-6"	65½"	33⅛"	24"	6¼"	24"	.42
60"	6"	0.174	5"	2'-6"	5'-0"	3'-3"	8'-3"	8'-0"	72½"	36 11/16"	24"	6¾"	24"	.44
66"	6½"	0.174	5½"	2'-0"	6'-6"	1'-9"	8'-3"	8'-6"	72"	36⅛"	24"	7¼"	24"	.47
72"	7"	0.174	6"	2'-0"	6'-6"	1'-9"	8'-3"	9'-0"	77 13/16"	38 15/16"	24"	7¾"	24"	.50

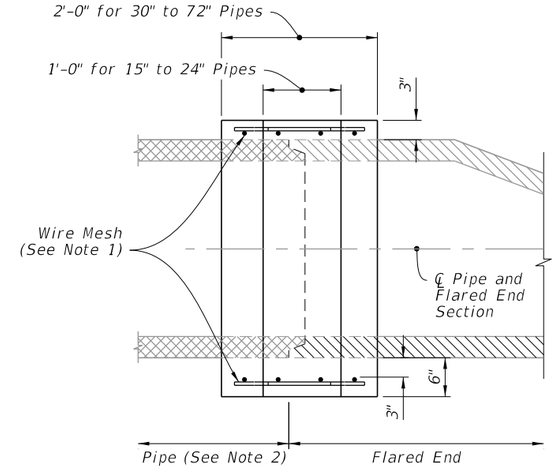

SECTION E-E

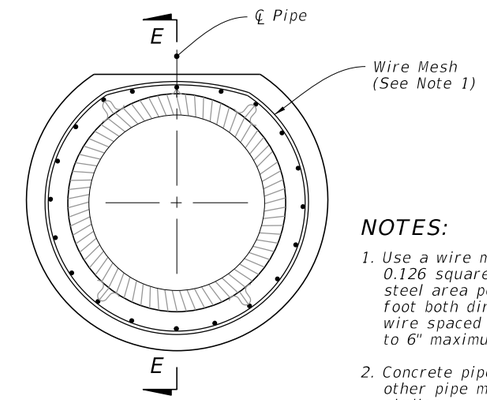

END VIEW

NOTES:

1. Use a wire mesh with 0.126 square inches of steel area per linear foot both directions. Use wire spaced 2" minimum to 6" maximum on centers.
2. Concrete pipe shown, other pipe material similar.

REINFORCED CONCRETE JACKET DETAIL

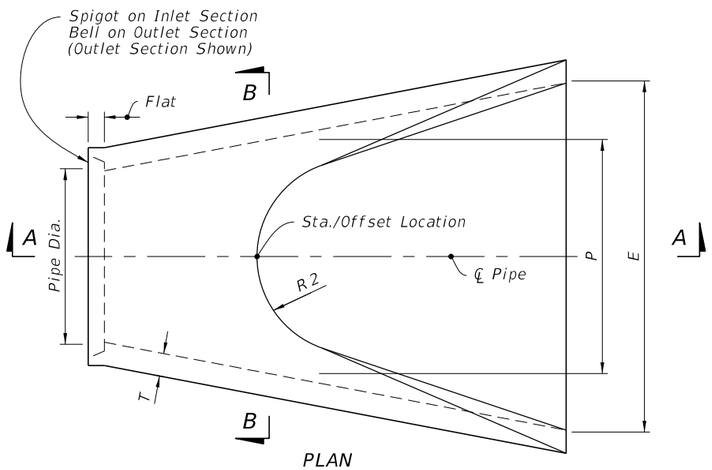

PLAN

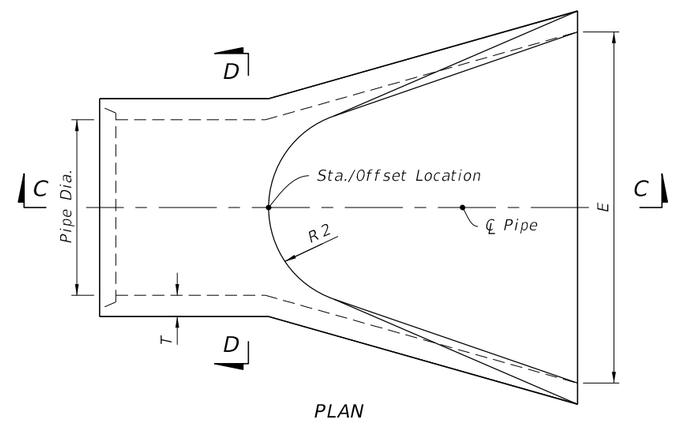

PLAN

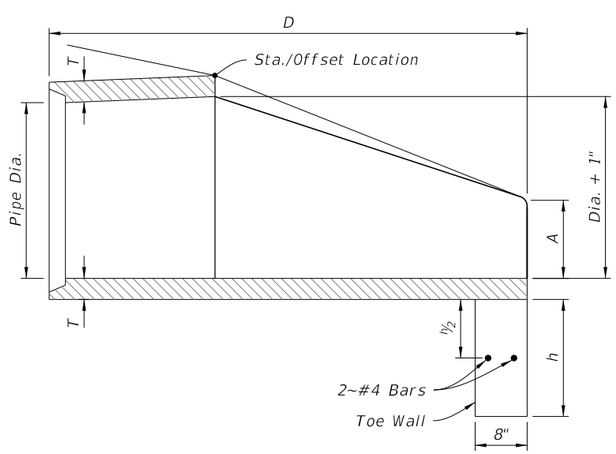

SECTION A-A

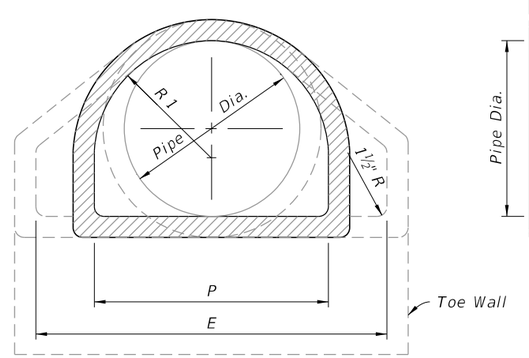

SECTION B-B

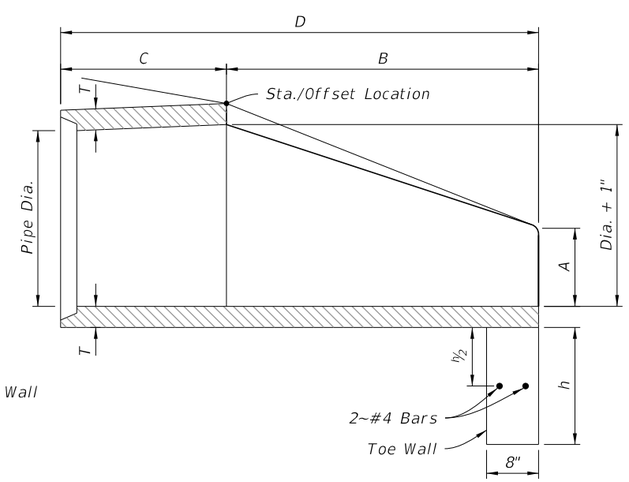

SECTION C-C

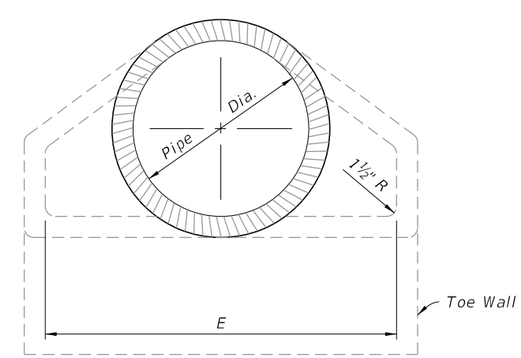

SECTION D-D

STRAIGHT FLARE

OPTIONAL SHAPE

8:48:46 AM

10/20/2022

LAST REVISION	REVISION	DESCRIPTION:			INDEX	SHEET
11/01/21			FY 2023-24 STANDARD PLANS	FLARED END SECTION	430-020	2 of 2

GENERAL NOTES:

1. Unless otherwise designated in the plans, concrete pipe mitered end sections may be used with any type of cross drain pipe; corrugated steel pipe mitered end sections may be used with any type of cross drain pipe except aluminum pipe; and, corrugated aluminum mitered end sections may be used with any type of cross drain pipe except steel pipe. When bituminous coated metal pipe is specified for cross drain pipe, construct the mitered end sections with like pipe or concrete pipe. When the mitered end section pipe is dissimilar to the cross drain pipe, construct a concrete jacket in accordance with Index 430-001.

2. Use either corrugated metal or concrete mitered end sections for corrugated polyethylene pipe (HDPE), polyvinyl-chloride pipe (PVC), steel reinforced polyethylene pipe (SRPE), and polypropylene pipe (PP). When used in conjunction with corrugated mitered end sections, make connection using either a formed metal band specifically designated to join HDPE, PVC, SRPE, or PP pipe, with metal pipe. When used in conjunction with a concrete mitered end sections, construct concrete jacket in accordance with Index 430-001.

3. Class NS concrete cast-in-place reinforced slabs are required for all sizes of cross drain pipes. Construct slabs at 5½" thick, unless 3" thickness is called for in the Plans.

4. Select lengths of concrete pipe that avoid excessive connections in the assembly of the mitered end section.

5. Repair corrugated metal pipe galvanizing that is damaged during beveling and perforating.

6. When existing multiple cross drain pipes are spaced other than the dimensions shown in this Index, have nonparallel axes, or non-uniform sections, either construct the mitered end sections separately as single pipe or collectively as multiple pipe end sections as directed by the Engineer.

7. Saddle Slope:
   - 1:4 Miter - Slope to ℄ of pipe for round pipes less than or equal to 18" diameter and 1:1 for round pipes greater than or equal to 24" diameter.
     Slope to the major axis for elliptical pipes 24"x38" or smaller and 1:2 for pipes 29"x45" or larger.
     Slope to the span line for pipe arch 28"x20" or smaller and 1:2 for pipe arch 35"x24" or larger.
   - 1:2 Miter - Slope to ℄ of pipe for round pipes less than or equal to 18"diameter and 1:2 for round pipes greater than or equal to 24" diameter.
     Slope to the major axis for elliptical pipes 29"x45" or smaller and 1:1 for pipes 34"x53" or larger.
     Slope 1:1 for all pipe arch sizes.

8. Quantities shown are for estimating purposes only.

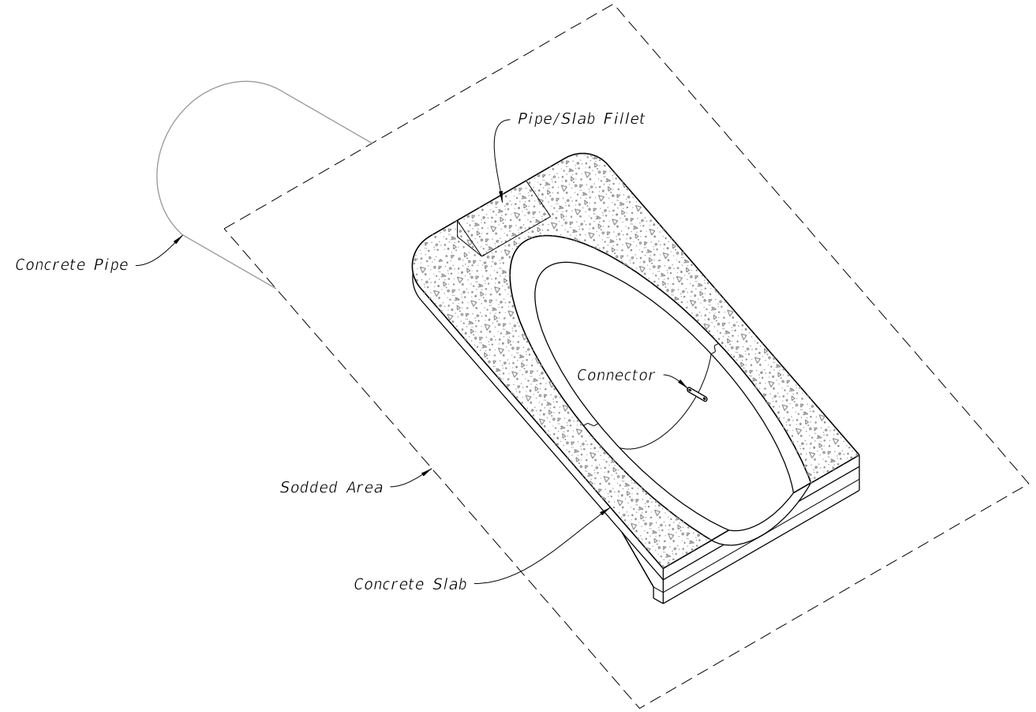

CROSS DRAIN MITERED END SECTION
(Concrete Pipe Shown, Corrugated Metal Pipe Similar)

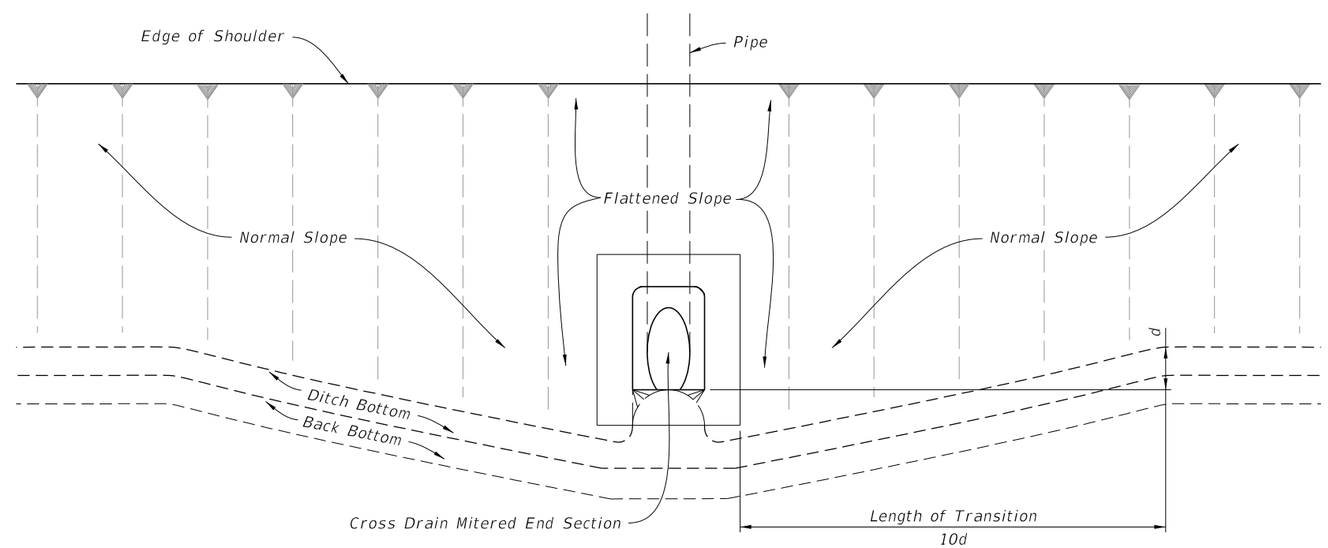

SLOPE AND DITCH TRANSITIONS

TABLE OF CONTENTS:

Sheet	Description
1	General Notes and Contents
2	Single and Multiple Concrete Pipe
3	Concrete Pipe Dimensions and Quantities
4	Single and Multiple Corrugated Metal Pipe
5	Corrugated Metal Pipe Dimensions and Quantities
6	Concrete Pipe Connections and Corrugated Metal Pipe (CMP) Anchor Detail

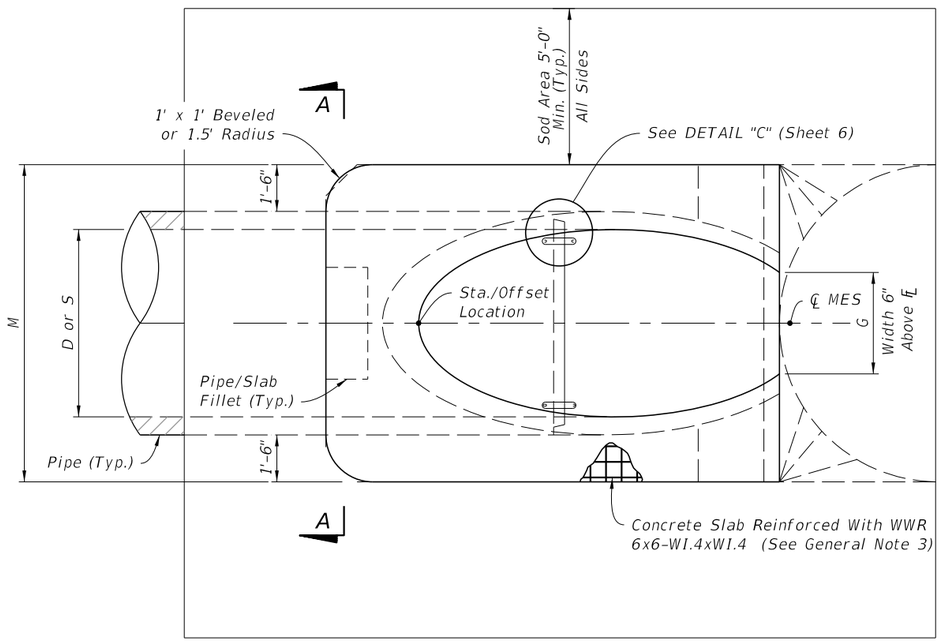

PLAN - SINGLE PIPE

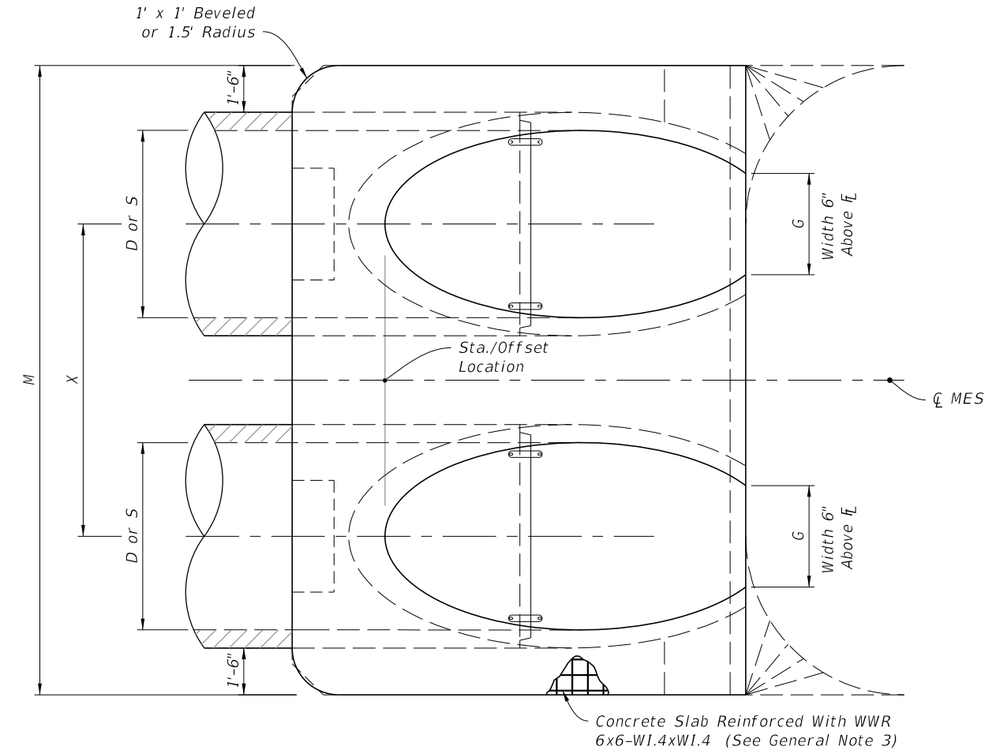

PLAN - MULTIPLE PIPE

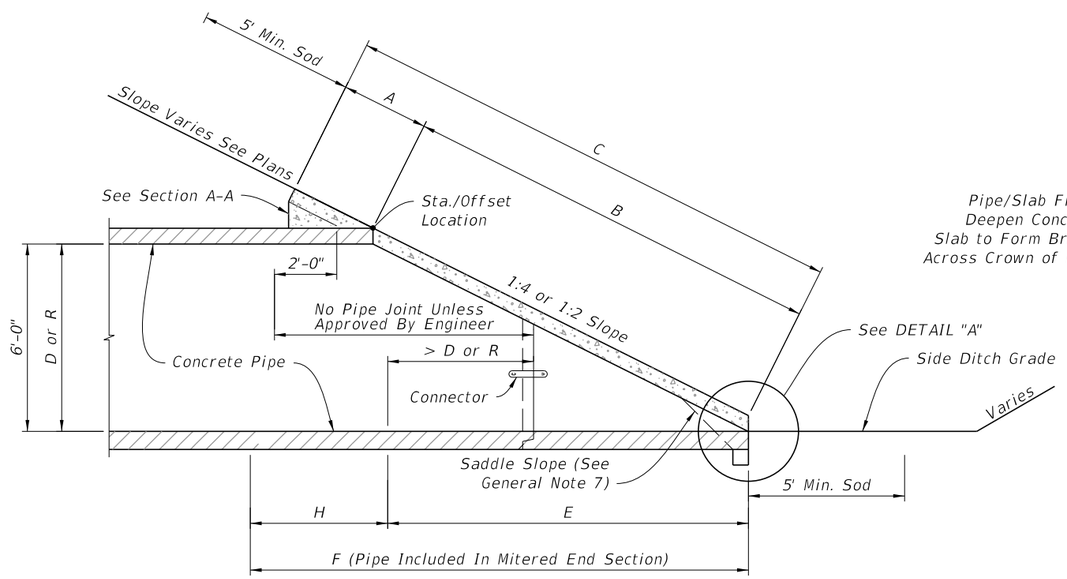

ELEVATION

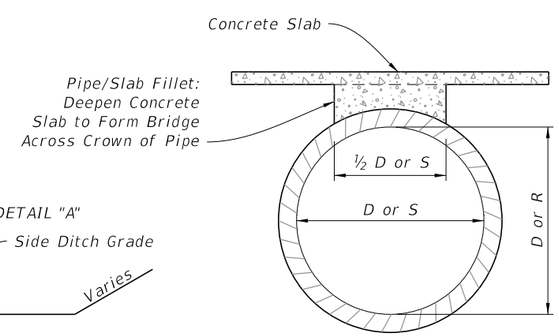

SECTION A-A
(Pipe/Slab Fillet)

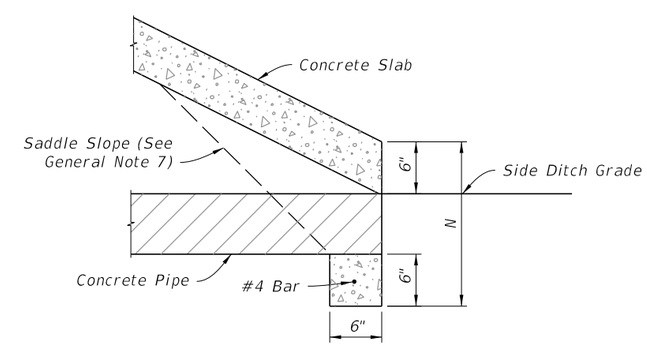

DETAIL "A"

ROUND CONCRETE PIPE
(Elliptical Pipe Similar)

NOTE: See Table 1 on Sheet 3 for Dimensions and Quantities.

SINGLE AND MULTIPLE CONCRETE PIPE

LAST REVISION	REVISION	DESCRIPTION:			INDEX	SHEET
11/01/19			FY 2023-24 STANDARD PLANS	CROSS DRAIN MITERED END SECTION	430-021	2 of 6

10/20/2022 8:48:48 AM

TABLE 1

SINGLE AND MULTIPLE CONCRETE PIPE DIMENSIONS AND QUANTITIES

		Dia. D	Rise R	Span S	X	A	B	C	E	F	G	H	M Single Pipe	M Double Pipe	M Triple Pipe	M Quad. Pipe	N	5½" CONC. SLAB (CY) (See General Note 3) Single Pipe	5½" Double Pipe	5½" Triple Pipe	5½" Quad. Pipe	3" CONC. SLAB (CY) (See General Note 3) Single Pipe	3" Double Pipe	3" Triple Pipe	3" Quad. Pipe	SODDING (SY) Single Pipe	SODDING Double Pipe	SODDING Triple Pipe	SODDING Quad. Pipe
Round Concrete Pipe	1:2 Slope	15"	—	—	2'-7"	1.92'	2.18'	4.10'	2.06'	5'	1.22'	2.9'	4.63'	7.21'	9.79'	12.37'	1.19'	0.38	0.58	0.77	0.96	0.27	0.41	0.54	0.67	21	24	27	30
		18"	—	—	2'-10"	1.97'	2.74'	4.71'	2.56'	6'	1.41'	3.4'	4.92'	7.75'	10.58'	13.42'	1.21'	0.44	0.65	0.87	1.09	0.31	0.45	0.60	0.75	22	25	28	31
		24"	—	—	3'-5"	2.06'	3.85'	5.91'	3.56'	7'	1.73'	3.4'	5.50'	8.92'	12.33'	15.75'	1.25'	0.54	0.83	1.12	1.42	0.39	0.59	0.79	1.00	24	28	32	35
		30"	—	—	4'-3"	2.15'	4.95'	7.10'	4.56'	8'	2.00'	3.4'	6.08'	10.33'	14.58'	18.83'	1.29'	0.66	1.09	1.50	1.91	0.46	0.76	1.04	1.32	26	31	35	40
		36"	—	—	5'-1"	2.25'	6.08'	8.33'	5.56'	9'	2.24'	3.4'	6.67'	11.75'	16.83'	21.92'	1.33'	0.81	1.38	1.95	2.51	0.55	0.94	1.33	1.71	28	34	39	45
		42"	—	—	6'-0"	2.34'	7.21'	9.55'	6.56'	10'	2.45'	3.4'	7.25'	13.25'	19.25'	25.25'	1.38'	0.97	1.70	2.45	3.19	0.66	1.15	1.66	2.15	30	37	43	50
		48"	—	—	6'-9"	2.43'	8.33'	10.76'	7.56'	11'	2.65'	3.4'	7.83'	14.58'	21.33'	28.08'	1.42'	1.13	2.04	2.93	3.84	0.76	1.37	1.96	2.57	32	39	47	54
		54"	—	—	7'-8"	2.52'	9.44'	11.96'	8.56'	12'	2.83'	3.4'	8.42'	16.08'	23.75'	31.42'	1.46'	1.31	2.44	3.58	4.72	0.87	1.62	2.38	3.14	34	42	51	59
		60"	—	—	8'-6"	2.62'	10.56'	13.18'	9.56'	14'	3.00'	4.4'	9.00'	17.50'	26.00'	34.50'	1.50'	1.51	2.89	4.28	5.68	0.99	1.90	2.81	3.73	36	45	55	64
		66"	—	—	9'-2"	2.71'	11.68'	14.39'	10.56'	15'	3.18'	4.4'	9.58'	18.75'	27.92'	37.08'	1.54'	1.68	3.25	4.84	6.43	1.11	2.15	3.21	4.27	38	48	58	68
		72"	—	—	10'-0"	2.80'	12.80'	15.60'	11.56'	16'	3.30'	4.4'	10.16'	20.16'	30.16'	40.16'	1.58'	1.89	3.74	5.59	7.45	1.24	2.46	3.68	4.90	40	51	62	73
	1:4 Slope	15"	—	—	2'-7"	2.27'	4.09'	6.36'	4.03'	8'	1.22'	4.0'	4.63'	7.21'	9.79'	12.37'	1.19'	0.57	0.87	1.15	1.44	0.40	0.61	0.80	1.00	23	26	29	32
		18"	—	—	2'-10"	2.36'	5.12'	7.48'	5.03'	9'	1.41'	4.0'	4.92'	7.75'	10.58'	13.42'	1.21'	0.66	0.99	1.31	1.65	0.47	0.69	0.91	1.14	25	28	31	35
		24"	—	—	3'-5"	2.53'	7.18' △	9.71'	7.03' △	11'	1.73'	4.0'	5.50'	8.92'	12.33'	15.75'	1.25'	0.85	1.30	1.75	2.20	0.60	0.90	1.21	1.52	28	32	36	40
		30"	—	—	4'-3"	2.70'	9.25'	11.95'	9.03'	13'	2.00'	4.0'	6.08'	10.33'	14.58'	18.83'	1.29'	1.10	1.74	2.39	3.05	0.76	1.19	1.63	2.07	31	36	41	46
		36"	—	—	5'-1"	2.87'	11.31' ◇	14.18'	11.03' ◇	15'	2.24'	4.0'	6.67'	11.75'	16.83'	21.92'	1.33'	1.32	2.21	3.08	3.96	0.89	1.48	2.05	2.63	34	40	46	52
		42"	—	—	6'-0"	3.05'	13.37'	16.42'	13.03'	17'	2.45'	4.0'	7.25'	13.25'	19.25'	25.25'	1.38'	1.58	2.76	3.91	5.09	1.05	1.82	2.57	3.34	38	44	51	58
		48"	—	—	6'-9"	3.22'	15.43'	18.65'	15.03'	19'	2.65'	4.0'	7.83'	14.58'	21.33'	28.08'	1.42'	1.85	3.30	4.73	6.17	1.21	2.15	3.07	4.00	41	48	56	63
		54"	—	—	7'-8"	3.39'	17.49'	20.88'	17.03'	21'	2.83'	4.0'	8.42'	16.08'	23.75'	31.42'	1.46'	2.14	3.95	5.77	7.58	1.39	2.55	3.72	4.88	44	52	61	69
		60"	—	—	8'-6"	3.56'	19.55'	23.11'	19.03'	23'	3.00'	4.0'	9.00'	17.50'	26.00'	34.50'	1.50'	2.45	4.66	6.87	9.07	1.59	3.02	4.44	5.86	47	56	66	75
		66"	—	—	9'-2"	3.73'	21.62'	25.35'	21.03'	25'	3.18'	4.0'	9.58'	18.75'	27.92'	37.08'	1.54'	2.88	5.54	8.18	10.84	1.91	3.66	5.40	7.15	49	59	69	80
		72"	—	—	10'-0"	3.91'	23.68'	27.59'	23.03'	27'	3.30'	4.0'	10.16'	20.16'	30.16'	40.16'	1.58'	3.54	6.61	9.87	13.13	2.12	4.18	6.24	8.30	52	63	74	85
Elliptical Concrete Pipe	1:2 Slope	—	12"	18"	2'-10"	1.97'	1.62'	3.59'	1.56'	4'	1.50'	2.4'	4.92'	7.75'	10.58'	13.42'	1.21'	0.30	0.49	0.67	0.85	0.19	0.33	0.45	0.57	21	24	27	30
		—	14"	23"	3'-4"	2.01'	1.99'	4.00'	1.89'	5'	1.90'	3.1'	5.38'	8.71'	12.04'	15.38'	1.23'	0.37	0.59	0.81	1.02	0.25	0.40	0.55	0.69	22	26	29	33
		—	19"	30"	4'-0"	2.11'	2.92'	5.03'	2.73'	6'	2.37'	3.3'	6.04'	10.04'	14.04'	18.04'	1.27'	0.50	0.80	1.09	1.39	0.34	0.55	0.75	0.95	24	28	33	37
		—	24"	38"	5'-0"	2.20'	3.85'	6.05'	3.56'	7'	2.85'	3.4'	6.79'	11.79'	16.79'	21.79'	1.31'	0.62	1.03	1.45	1.86	0.43	0.71	1.00	1.28	26	31	37	42
		—	29"	45"	5'-11"	2.34'	4.79'	7.13'	4.39'	8'	3.19'	3.6'	7.50'	13.42'	19.33'	25.25'	1.38'	0.75	1.30	1.84	2.39	0.52	0.90	1.27	1.65	28	34	41	47
		—	34"	53"	7'-0"	2.43'	5.72'	8.15'	5.23'	9'	3.57'	3.8'	8.25'	15.25'	22.25'	29.25'	1.42'	0.90	1.61	2.32	3.03	0.62	1.11	1.60	2.09	30	37	45	53
		—	38"	60"	7'-10"	2.52'	6.46'	8.98'	5.89'	9'	3.95'	3.1'	8.92'	16.75'	24.58'	32.42'	1.46'	1.03	1.89	2.74	3.60	0.70	1.29	1.87	2.46	31	40	49	57
		—	43"	68"	8'-11"	2.62'	7.39'	10.01'	6.73'	10'	4.28'	3.3'	9.67'	18.58'	27.50'	36.42'	1.50'	1.19	2.26	3.33	4.40	0.81	1.54	2.26	2.99	33	43	53	63
		—	48"	76"	9'-11"	2.71'	8.33'	11.04'	7.56'	11'	4.59'	3.4'	10.42'	20.33'	30.25'	40.17'	1.54'	1.38	2.65	3.93	5.21	0.93	1.79	2.66	3.53	35	46	57	68
		—	53"	83"	10'-8"	2.80'	9.26'	12.06'	8.39'	12'	4.77'	3.6'	11.08'	21.75'	32.42'	43.08'	1.58'	1.55	3.03	4.50	5.96	1.04	2.04	3.03	4.02	37	49	61	73
		—	58"	91"	11'-8"	2.90'	10.19'	13.09'	9.23'	13'	5.01'	3.8'	11.83'	23.50'	35.17'	46.83'	1.63'	1.75	3.47	5.20	6.93	1.17	2.33	3.49	4.66	39	52	65	78
	1:4 Slope	—	12"	18"	2'-10"	2.36'	3.06'	5.42'	3.03'	5'	1.50'	2.0'	4.92'	7.75'	10.58'	13.42'	1.21'	0.45	0.68	0.92	1.14	0.30	0.45	0.61	0.76	23	26	29	32
		—	14"	23"	3'-4"	2.44'	3.75'	6.19'	3.70'	6'	1.90'	2.3'	5.38'	8.71'	12.04'	15.38'	1.23'	0.53	0.83	1.13	1.42	0.36	0.56	0.76	0.95	24	28	32	35
		—	19"	30"	4'-0"	2.62'	5.47'	8.09'	5.36'	8'	2.37'	2.6'	6.04'	10.04'	14.04'	18.04'	1.27'	0.74	1.15	1.57	1.98	0.51	0.79	1.08	1.36	27	32	36	40
		—	24"	38"	5'-0"	2.79'	7.18'	9.97'	7.03'	10'	2.85'	3.0'	6.79'	11.79'	16.79'	21.79'	1.31'	0.97	1.57	2.19	2.81	0.68	1.10	1.53	1.96	30	36	41	47
		—	29"	45"	5'-11"	3.05'	8.90'	11.95'	8.70'	12'	3.19'	3.3'	7.50'	13.42'	19.33'	25.25'	1.38'	1.22	2.07	2.92	3.77	0.86	1.45	2.04	2.63	33	40	46	53
		—	34"	53"	7'-0"	3.22'	10.62'	13.84'	10.36'	13'	3.57'	2.6'	8.25'	15.25'	22.25'	29.25'	1.42'	1.48	2.62	3.77	4.92	1.02	1.81	2.60	3.39	36	44	52	59
		—	38"	60"	7'-10"	3.39'	11.99'	15.38'	11.70'	15'	3.95'	3.3'	8.92'	16.75'	24.58'	32.42'	1.46'	1.72	3.12	4.53	5.92	1.18	2.14	3.10	4.05	38	47	56	65
		—	43"	68"	8'-11"	3.56'	13.71'	17.27'	13.36'	17'	4.28'	3.6'	9.67'	18.58'	27.50'	36.42'	1.50'	2.02	3.78	5.56	7.32	1.38	2.58	3.79	4.99	41	51	61	71
		—	48"	76"	9'-11"	3.73'	15.43'	19.16'	15.03'	19'	4.59'	4.0'	10.42'	20.33'	30.25'	40.17'	1.54'	2.34	4.49	6.64	8.79	1.59	3.05	4.51	5.97	44	55	66	77
		—	53"	83"	10'-8"	3.91'	17.15'	21.06'	16.70'	20'	4.77'	3.3'	11.08'	21.75'	32.42'	43.08'	1.58'	2.66	5.17	7.66	10.16	1.80	3.50	5.19	6.88	47	59	71	83
		—	58"	91"	11'-8"	4.08'	18.87'	22.95'	18.36'	22'	5.01'	3.6'	11.83'	23.50'	35.17'	46.83'	1.63'	3.02	5.98	8.95	11.90	2.04	4.04	6.05	8.05	50	63	76	89

B	E	
△ 6.42'	△ 6.25'	Dimensions permitted to allow use of 8' standard pipe lengths.
◇ 10.40'	◇ 10.10'	Dimensions permitted to allow use of 12' standard pipe lengths.

10/20/2022 8:48:49 AM

CONCRETE PIPE DIMENSIONS AND QUANTITIES

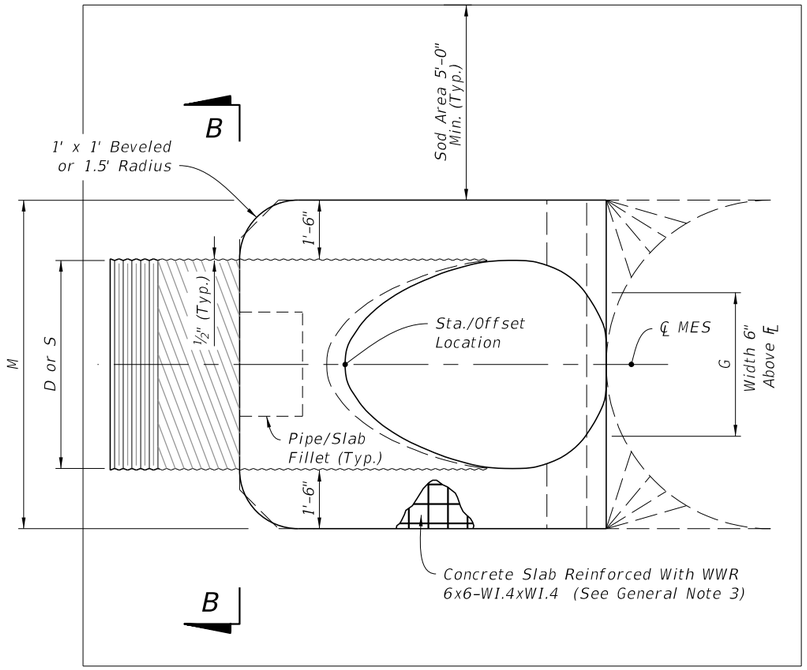

PLAN - SINGLE PIPE

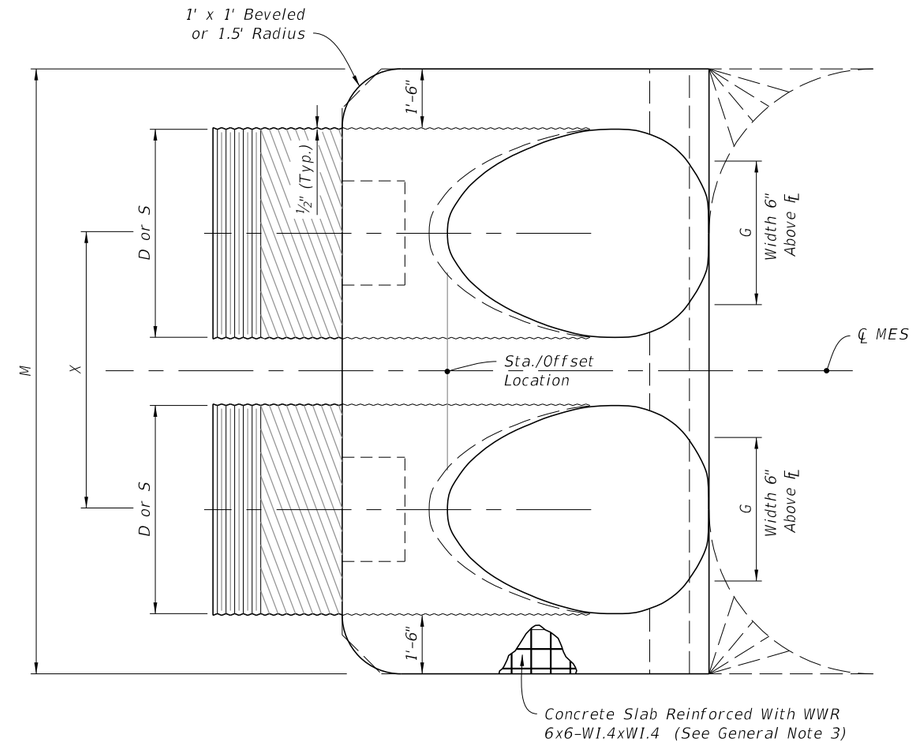

PLAN - MULTIPLE PIPE

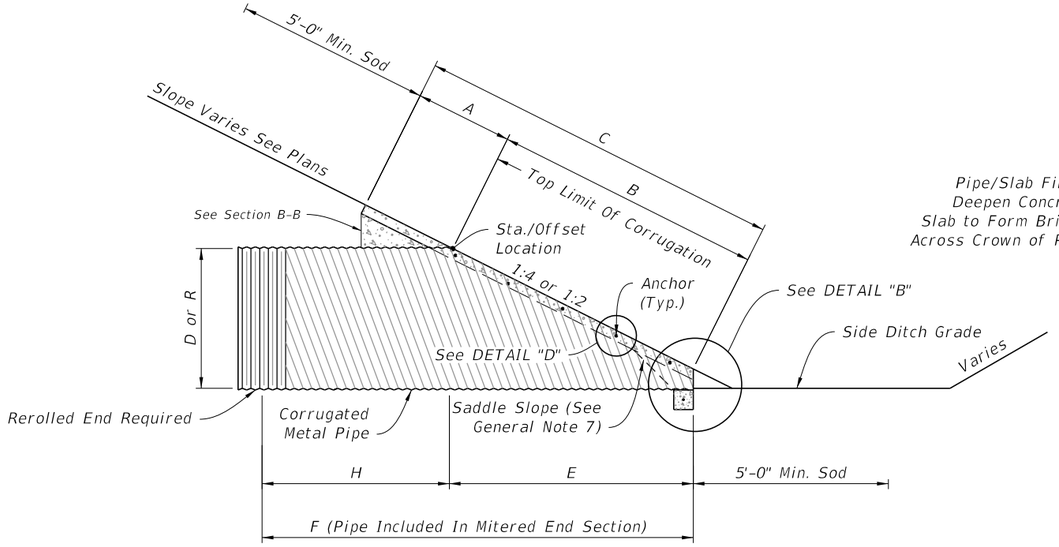

ELEVATION

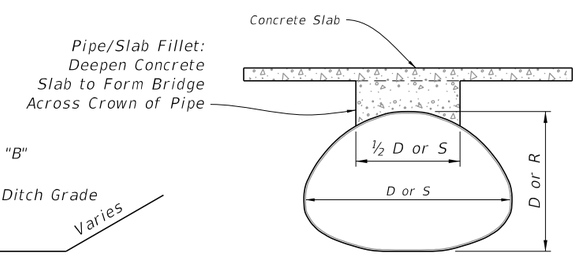

SECTION B-B
(Pipe/Slab Fillet)

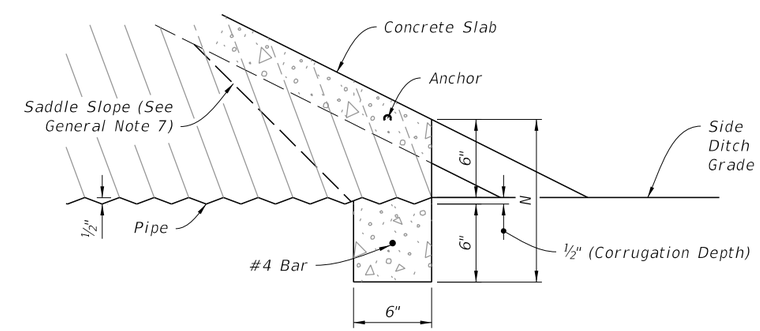

DETAIL "B"

ARCHED CORRUGATED METAL PIPE
(Round Pipe Similar)

NOTE: See Table 2 on Sheet 5 for Dimensions and Quantities.

SIMGLE AND MULTIPLE CORRUGATED METAL PIPE

LAST REVISION	REVISION	DESCRIPTION:				
11/01/19			FY 2023-24 STANDARD PLANS	CROSS DRAIN MITERED END SECTION	INDEX 430-021	SHEET 4 of 6

10/20/2022 8:48:50 AM

TABLE 2

SINGLE AND MULTIPLE CORRUGATED METAL PIPE DIMENSIONS AND QUANTITIES

		Dia. D	Span S	Rise R	X	A	B	C	E	F	G	H	M				N	5½" CONC. SLAB (CY) (See General Note 3)				3" CONC. SLAB (CY) (See General Note 3)				SODDING (SY)			
													Single Pipe	Double Pipe	Triple Pipe	Quad. Pipe		Single Pipe	Double Pipe	Triple Pipe	Quad. Pipe	Single Pipe	Double Pipe	Triple Pipe	Quad. Pipe	Single Pipe	Double Pipe	Triple Pipe	Quad. Pipe
Round Corrugated Metal Pipe	1:2 Slope	15"	—	—	2'-7"	2.5'	1.68'	4.18'	1.5'	5.0'	1.23'	3.5'	4.33'	6.92'	9.50'	12.08'	1.04'	0.35	0.54	0.74	0.94	0.24	0.37	0.51	0.64	21	24	27	29
		18"	—	—	2'-10"	2.5'	2.24'	4.74'	2.0'	6.0'	1.41'	4.0'	4.58'	7.42'	10.25'	13.08'	1.04'	0.38	0.62	0.87	1.12	0.26	0.43	0.61	0.78	22	25	28	31
		24"	—	—	3'-5"	2.5'	3.35'	5.85'	3.0'	7.0'	1.73'	4.0'	5.08'	8.50'	11.92'	15.33'	1.04'	0.47	0.76	1.05	1.34	0.32	0.52	0.72	0.91	23	27	31	35
		30"	—	—	4'-3"	2.5'	4.47'	6.97'	4.0'	8.0'	2.00'	4.0'	5.58'	9.83'	14.08'	18.33'	1.04'	0.57	0.96	1.37	1.77	0.38	0.64	0.91	1.18	25	30	35	39
		36"	—	—	5'-1"	2.5'	5.59'	8.09'	5.0'	9.0'	2.24'	4.0'	6.08'	11.17'	16.25'	21.33'	1.04'	0.67	1.19	1.72	2.26	0.44	0.78	1.13	1.48	27	33	38	44
		42"	—	—	6'-0"	2.5'	6.71'	9.21'	6.0'	10.0'	2.45'	4.0'	6.58'	12.58'	18.58'	24.58'	1.04'	0.78	1.48	2.17	2.87	0.51	0.96	1.41	1.87	29	36	42	49
		48"	—	—	6'-9"	2.5'	7.83'	10.33'	7.0'	11.0'	2.65'	4.0'	7.08'	13.83'	20.58'	27.33'	1.04'	0.89	1.71	2.54	3.36	0.57	1.09	1.63	2.15	31	38	46	53
		54"	—	—	7'-8"	2.5'	8.94'	11.44'	8.0'	12.0'	2.83'	4.0'	7.58'	15.25'	22.92'	30.58'	1.04'	1.02	2.06	3.10	4.14	0.65	1.32	1.99	2.66	33	41	50	58
		60"	—	—	8'-6"	2.5'	10.06'	12.56'	9.0'	13.0'	3.00'	4.0'	8.08'	16.58'	25.08'	33.58'	1.04'	1.14	2.38	3.63	4.89	0.71	1.49	2.28	3.07	34	44	53	63
	1:4 Slope	15"	—	—	2'-7"	2.5'	3.09'	5.59'	3.0'	7.0'	1.23'	4.0'	4.33'	6.92'	9.50'	12.08'	1.04'	0.44	0.68	0.91	1.15	0.31	0.47	0.63	0.79	22	25	28	31
		18"	—	—	2'-10"	2.5'	4.12'	6.62'	4.0'	8.0'	1.41'	4.0'	4.58'	7.42'	10.25'	13.08'	1.04'	0.49	0.77	1.03	1.31	0.34	0.53	0.71	0.90	24	27	30	33
		24"	—	—	3'-5"	2.5'	6.18'	8.68'	6.0'	10.0'	1.73'	4.0'	5.08'	8.50'	11.92'	15.33'	1.04'	0.65	1.09	1.38	1.77	0.44	0.69	0.92	1.18	27	30	34	38
		30"	—	—	4'-3"	2.5'	8.25'	10.75'	8.0'	12.0'	2.00'	4.0'	5.58'	9.83'	14.08'	18.33'	1.04'	0.81	1.34	1.90	2.44	0.53	0.88	1.25	1.60	29	34	39	44
		36"	—	—	5'-1"	2.5'	10.31'	12.81'	10.0'	14.0'	2.24'	4.0'	6.08'	11.17'	16.25'	21.33'	1.04'	0.97	1.68	2.41	3.14	0.62	1.07	1.53	2.00	32	38	44	49
		42"	—	—	6'-0"	2.5'	12.37'	14.87'	12.0'	16.0'	2.45'	4.0'	6.58'	12.58'	18.58'	24.58'	1.04'	1.13	2.08	3.06	4.02	0.71	1.30	1.92	2.52	35	42	48	55
		48"	—	—	6'-9"	2.5'	14.43'	16.93'	14.0'	18.0'	2.65'	4.0'	7.08'	13.83'	20.58'	27.33'	1.04'	1.29	2.49	3.69	4.88	0.80	1.54	2.29	3.02	38	46	53	60
		54"	—	—	7'-8"	2.5'	16.49'	18.99'	16.0'	20.0'	2.83'	4.0'	7.58'	15.25'	22.92'	30.58'	1.04'	1.48	2.98	4.47	5.98	0.91	1.83	2.74	3.67	41	49	58	66
		60"	—	—	8'-6"	2.5'	18.55'	21.05'	18.0'	22.0'	3.00'	4.0'	8.08'	16.58'	25.08'	33.58'	1.04'	1.66	3.49	5.31	7.13	1.02	2.15	3.27	4.39	44	53	63	72
Corrugated Metal Pipe Arch	1:2 Slope	—	17"	13"	2"-6"	2.5'	1.30'	3.80'	1.17'	4'	1.39'	2.8'	4.50'	7.00'	9.50'	12.00'	1.04'	0.41	0.61	0.81	1.02	0.33	0.49	0.65	0.81	21	23	26	29
		—	21"	15"	2'-10"	2.5'	1.68'	4.17'	1.50'	5'	1.76'	3.5'	4.83'	7.67'	10.50'	13.33'	1.04'	0.43	0.66	0.88	1.10	0.33	0.50	0.67	0.83	22	25	28	31
		—	28"	20"	3'-5"	2.5'	2.61'	5.11'	2.33'	6'	2.22'	3.7'	5.42'	8.83'	12.25'	15.67'	1.04'	0.51	0.78	1.06	1.33	0.37	0.56	0.76	0.95	23	27	30	34
		—	35"	24"	4'-0"	2.5'	3.35'	5.85'	3.00'	7'	2.55'	4.0'	6.00'	10.00'	14.00'	18.00'	1.04'	0.57	0.90	1.22	1.55	0.40	0.62	0.84	1.07	24	29	33	38
		—	42"	29"	4'-9"	2.5'	4.29'	6.79'	3.83'	8'	2.97'	4.2'	6.58'	11.33'	16.08'	20.83'	1.04'	0.64	1.04	1.46	1.87	0.43	0.70	0.98	1.25	26	31	37	42
		—	49"	33"	5'-6"	2.5'	5.03'	7.53'	4.50'	9'	3.34'	4.5'	7.17'	12.67'	18.17'	23.67'	1.04'	0.73	1.23	1.72	2.22	0.49	0.82	1.15	1.48	28	34	40	46
		—	57"	38"	6'-4"	2.5'	5.96'	8.46'	5.33'	10'	3.65'	4.7'	7.83'	14.17'	20.50'	26.83'	1.04'	0.83	1.44	2.04	2.64	0.55	0.95	1.35	1.75	29	36	44	51
		—	64"	43"	7'-1"	2.5'	6.89'	9.39'	6.17'	11'	3.89'	4.8'	8.42'	15.50'	22.58'	29.67'	1.04'	0.95	1.67	2.39	3.11	0.62	1.10	1.57	2.05	31	39	47	55
		—	71"	47"	7'-10"	2.5'	7.64'	10.14'	6.83'	12'	4.14'	5.2'	9.00'	16.83'	24.67'	32.50'	1.04'	1.05	1.89	2.74	3.57	0.69	1.24	1.80	2.35	33	41	50	59
	1:4 Slope	—	17"	13"	2'-6"	2.5'	2.41'	4.91'	2.33'	7'	1.39'	4.7'	4.50'	7.00'	9.50'	12.00'	1.04'	0.48	0.71	0.95	1.18	0.38	0.56	0.74	0.92	22	25	27	30
		—	21"	15"	2'-10"	2.5'	3.09'	5.59'	3.00'	8'	1.76	5.0'	4.83'	7.67'	10.50'	13.33'	1.04'	0.52	0.80	1.09	1.31	0.39	0.59	0.80	0.95	23	26	29	32
		—	28"	20"	3'-5"	2.5'	4.81'	7.31'	4.67'	9'	2.22'	4.3'	5.42'	8.83'	12.25'	15.67'	1.04'	0.61	0.92	1.27	1.59	0.43	0.64	0.88	1.10	25	29	33	37
		—	35"	24"	4'-0"	2.5'	6.18'	8.68'	6.00'	11'	2.55'	5.0'	6.00'	10.00'	14.00'	18.00'	1.04'	0.73	1.14	1.55	1.97	0.49	0.77	1.05	1.33	28	32	37	41
		—	42"	29"	4'-9"	2.5'	7.90'	10.40'	7.67'	12'	2.97'	4.3'	6.58'	11.33'	16.08'	20.83'	1.04'	0.87	1.39	1.92	2.45	0.57	0.92	1.27	1.62	30	35	41	46
		—	49"	33"	5'-6"	2.5'	9.28'	11.78'	9.00'	14'	3.34'	5.0'	7.17'	12.67'	18.17'	23.67'	1.04'	1.00	1.66	2.30	2.96	0.65	1.08	1.50	1.93	32	38	45	51
		—	57"	38"	6'-4"	2.5'	11.00'	13.50'	10.67'	16'	3.65'	5.3'	7.83'	14.17'	20.50'	26.83'	1.04'	1.18	2.00	2.82	3.64	0.76	1.30	1.83	2.37	35	42	49	56
		—	64"	43"	7'-1"	2.5'	12.71'	15.21'	12.33'	17'	3.89'	4.7'	8.42'	15.50'	22.58'	29.67'	1.04'	1.36	2.39	3.38	4.38	0.87	1.55	2.18	2.83	38	45	53	61
		—	71"	47"	7'-10"	2.5'	14.09'	16.59'	13.67'	19'	4.14'	5.3'	9.00'	16.83'	24.67'	32.50'	1.04'	1.50	2.65	3.81	4.97	0.95	1.68	2.43	3.17	40	48	57	66

CORRUGATED METAL PIPE DIMENSIONS AND QUANTITIES

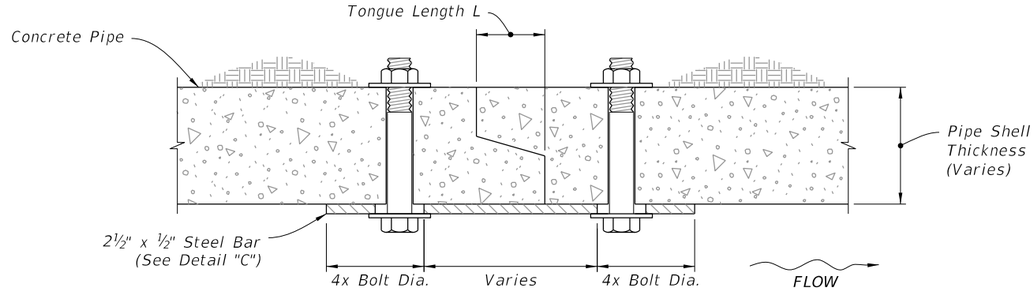

TONGUE AND GROOVE CONNECTOR DETAIL

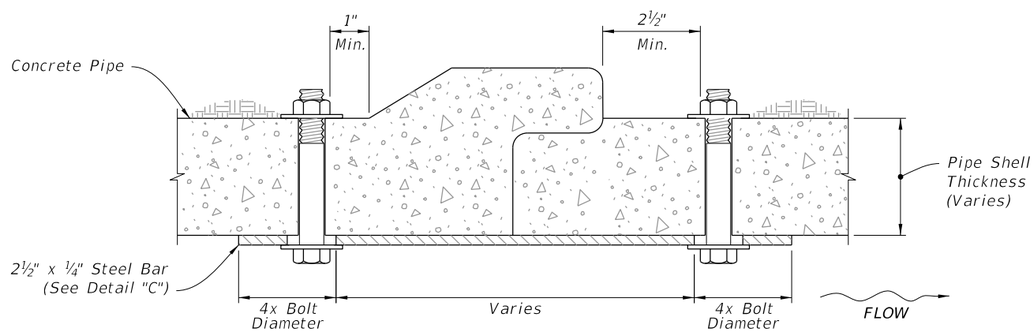

BELL AND SPIGOT CONNECTOR DETAIL

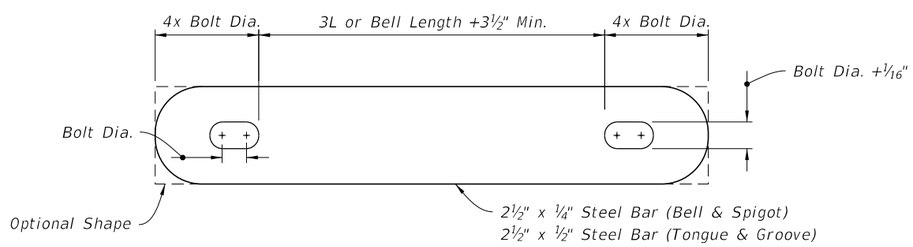

STEEL BAR

NOTES:

1. Use galvanized steel for all bars, bolts, nuts, and washers.
2. Two connectors required per joint, located 60° right and left of bottom center of pipe.
3. Bolt holes in pipe shell are to be drilled.

Bolt Dia.	Pipe Dia.
⅜"	15" to 36"
⅝"	42" to 72"

CONCRETE PIPE CONNECTION DETAIL

DETAIL "C"

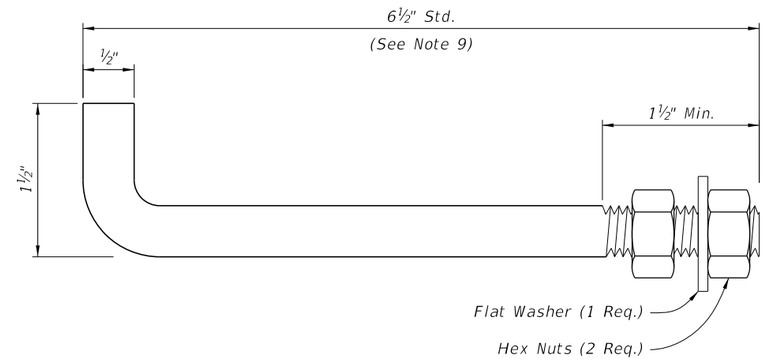

NOTES:

1. Anchors required for CMP only.
2. Use galvanized steel for all anchors, nuts, and washers.
3. Bend anchor where required to center in concrete slab.
4. Repair damaged surfaces after bending.
5. Space anchors a distance equal to four (4) corrugations.
6. Place the anchors in the outside crest of corrugation.
7. Place flat washers on inside wall of pipe.
8. Drill or punch holes in the mitered end pipe; burning not permitted.
9. A 6" x ½" bolt substitution is permitted.

CORRUGATED METAL PIPE (CMP) ANCHOR DETAIL

DETAIL "D"

CONCRETE PIPE CONNECTION AND CORRUGATED PIPE ANCHOR DETAILS

GENERAL NOTES:

1. Unless otherwise designated in the plans, concrete pipe mitered end sections may be used with any type of side drain pipe; corrugated steel pipe mitered end sections may be used with any type of side drain pipe except aluminum pipe; and, corrugated aluminum mitered end sections may be used with any type of side drain pipe except steel pipe. When bituminous coated metal pipe is specified for side drain pipe, construct the mitered end sections with like pipe or concrete pipe. When the mitered end section pipe is dissimilar to the side drain pipe, construct a concrete jacket in accordance with Index 430-001.

2. Use either corrugated metal or concrete mitered end sections for corrugated polyethylene pipe (HDPE), polyvinyl-chloride pipe (PVC), steel reinforced polyethylene pipe (SRPE), and polypropylene pipe (PP). When used in conjunction with corrugated mitered end sections, make connection using either a formed metal band specifically designated to join HDPE, PVC, SRPE, or PVC pipe. When used in conjunction with a concrete mitered end sections, construct concrete jacket in accordance with Index 430-001.

3. Use class NS concrete cast-in-place reinforced slabs for all cross drain pipes.

4. Select lengths of concrete pipe that avoid excessive connections in the assembly of the mitered end section.

5. Repair corrugated metal pipe galvanizing that is damaged during beveling and perforating.

6. When existing multiple side drain pipes are spaced other than the dimensions shown in this Index, have nonparallel axes, or non-uniform sections, either construct the mitered end sections separately as single pipe or collectively as multiple pipe end sections as directed by the Engineer.

7. Saddle Slope:
   - 1:4 Miter - Slope to ℄ of pipe for round pipes less than or equal to 18" diameter and 1:1 for round pipes greater than or equal to 24" diameter.
     Slope to the major axis for elliptical pipes 24"x38" or smaller and 1:2 for pipes 29"x45" or larger.
     Slope to the span line for pipe arch 28"x20" or smaller and 1:2 for pipe arch 35"x24" or larger.
   - 1:2 Miter - Slope to ℄ of pipe for round pipes less than or equal to 18"diameter and 1:2 for round pipes greater than or equal to 24" diameter.
     Slope to the major axis for elliptical pipes 29"x45" or smaller and 1:1 for pipes 34"x53" or larger.
     Slope 1:1 for all pipe arch sizes.

8. Quantities shown are for estimating purposes only.

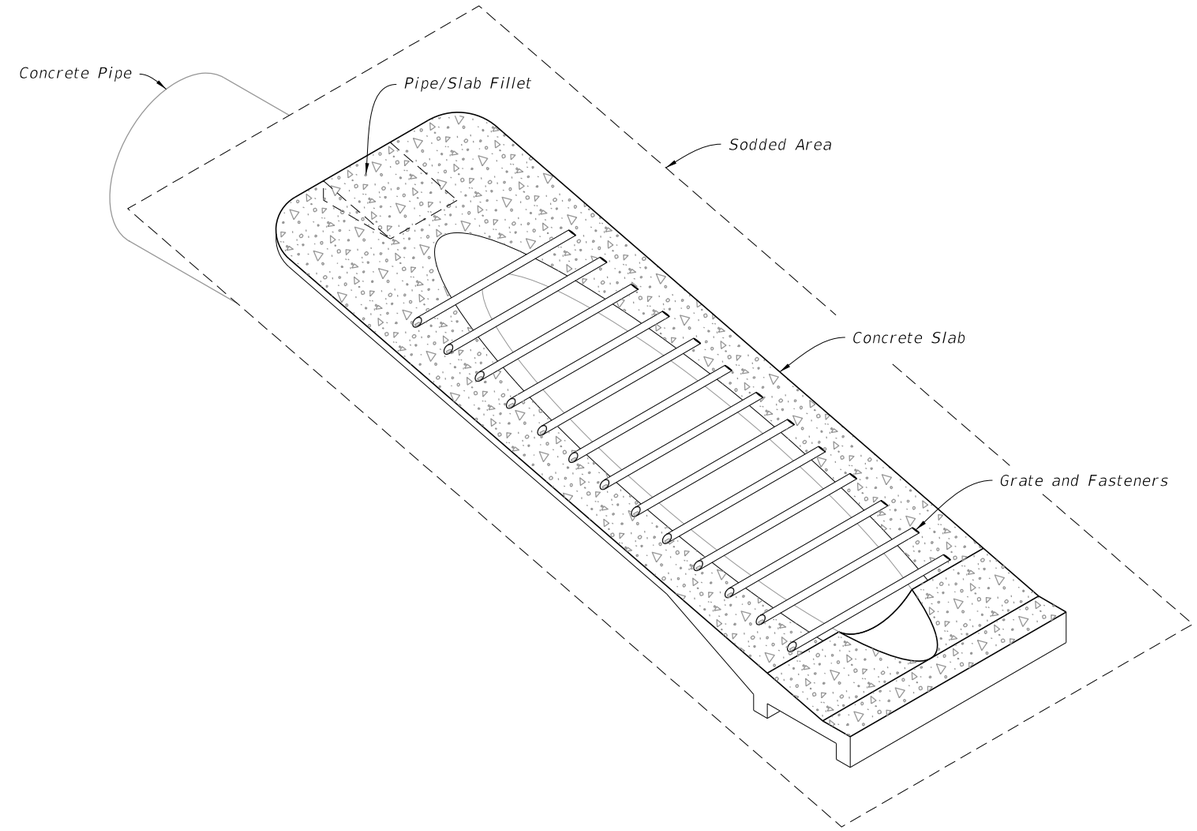

SIDEDRAIN MITERED END SECTION
(Concrete Pipe Shown, Corrugated Metal Pipe Similar)

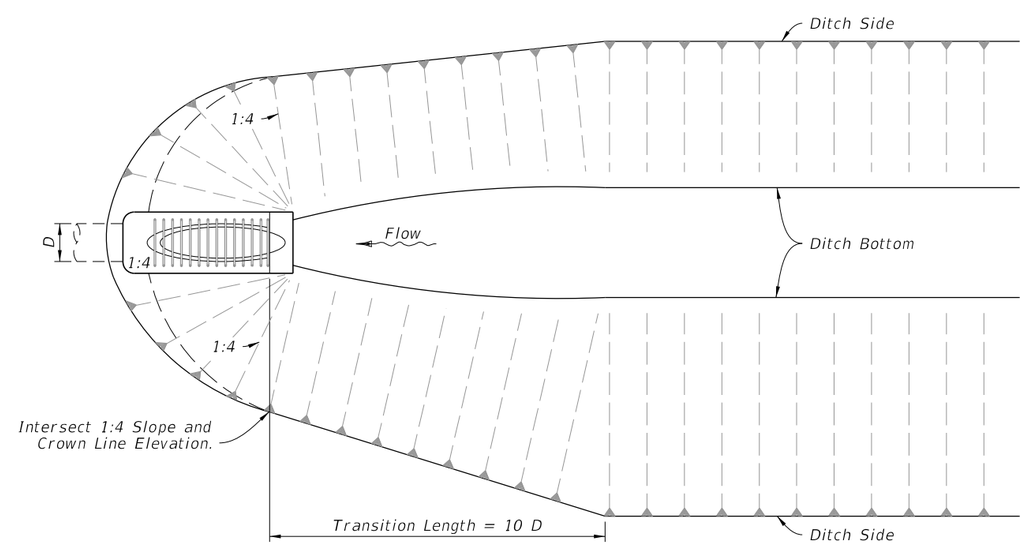

DITCH TRANSITION

TABLE OF CONTENTS:

Sheet	Description
1	General Notes and Contents
2	Single and Multiple Concrete Pipe
3	Concrete Pipe Dimensions and Quantities and Permissible Pavement Modifications
4	Single and Multiple Corrugated Metal Pipe
5	Corrugated Metal Dimensions and Quantities
6	Concrete Pipe Connection and Corrugated Metal Pipe Anchor Details
7	Fastener Unit and Grate Details

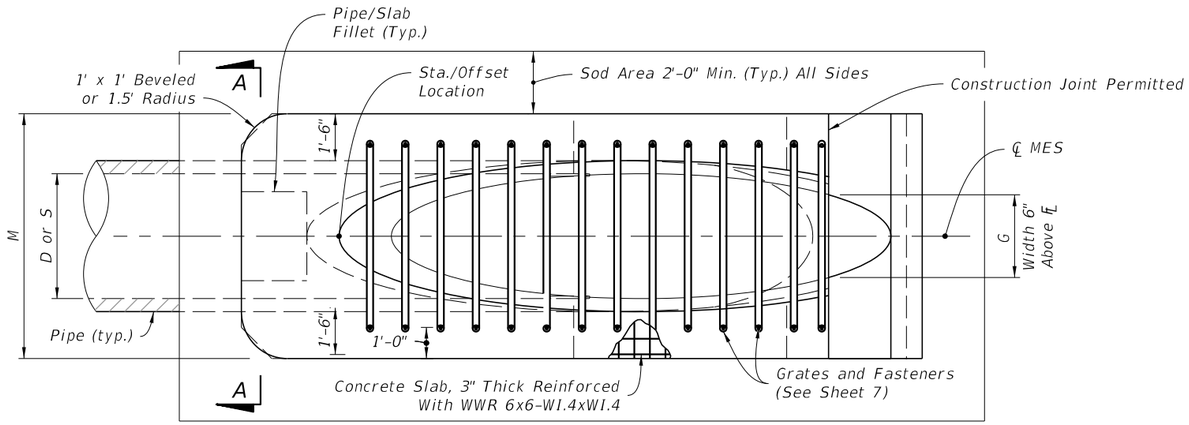

PLAN - SINGLE PIPE

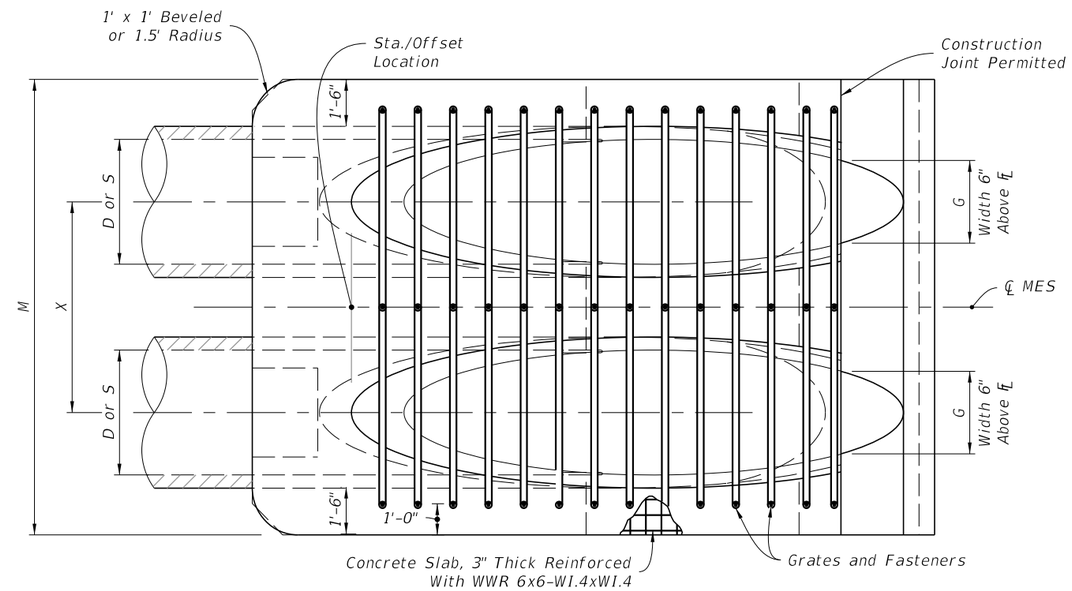

PLAN - MULTIPLE PIPE

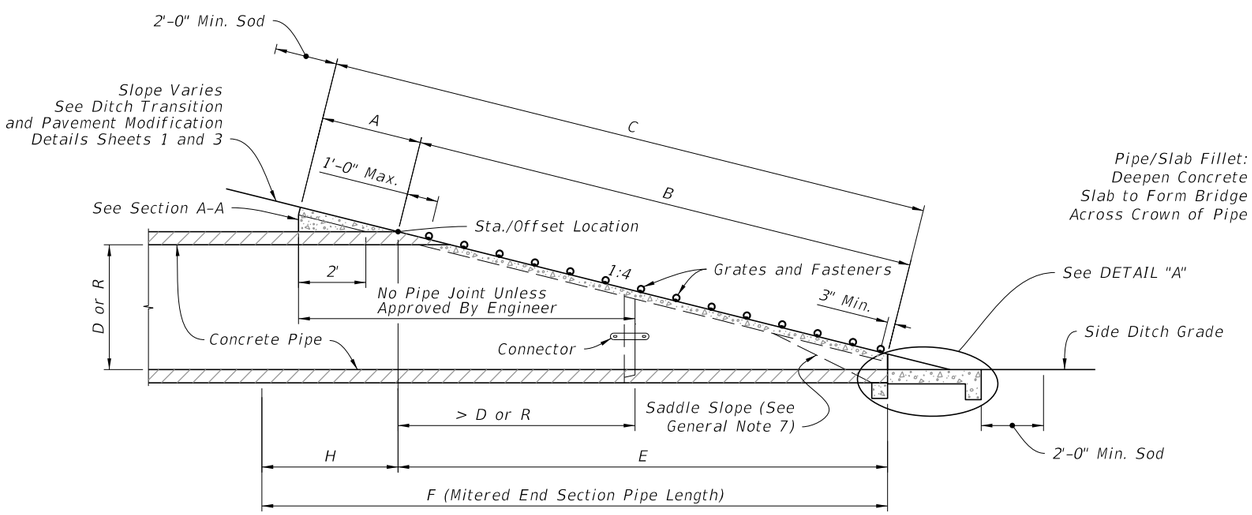

ELEVATION

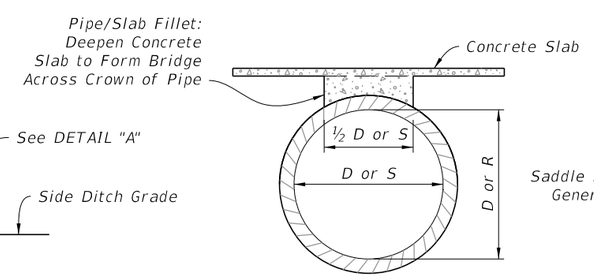

SECTION A-A
(Pipe/Slab Fillet)

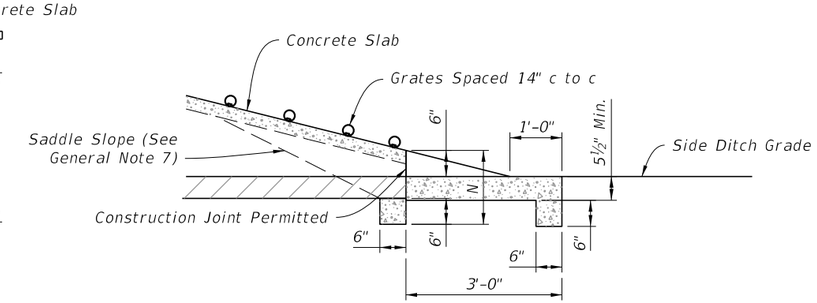

DETAIL "A"

ROUND CONCRETE PIPE
(Elliptical Pipe Similar)

SINGLE AND MULTIPLE CONCRETE PIPE

LAST REVISION	REVISION	DESCRIPTION:			INDEX	SHEET
11/01/18			FY 2023-24 STANDARD PLANS	SIDE DRAIN MITERED END SECTION	430-022	2 of 7

10/20/2022 8:48:53 AM

SINGLE AND MULTIPLE CONCRETE PIPE DIMENSIONS AND QUANTITIES

Pipe	Dia. D	Rise R	Span S	X	A	B	C	E	F	G	H	M				N	GRATE SIZES		3" CONC. SLAB (CY)				SODDING (SY)			
												Single Pipe	Double Pipe	Triple Pipe	Quad. Pipe		STANDARD WEIGHT PIPE	EXTRA STRONG PIPE	Single Pipe	Double Pipe	Triple Pipe	Quad. Pipe	Single Pipe	Double Pipe	Triple Pipe	Quad. Pipe
Round Concrete	15"	—	—	2'-7"	2.27'	4.09'	6.36'	4.03'	8'	1.22'	4.0'	4.63'	7.21'	9.79'	12.37'	1.19'			0.76	1.16	1.54	1.94	8	10	11	12
	18"	—	—	2'-10"	2.36'	5.12'	7.48'	5.03'	9'	1.41'	4.0'	4.92'	7.75'	10.58'	13.42'	1.21'			0.85	1.28	1.71	2.17	9	10	12	13
	24"	—	—	3'-5"	2.53'	7.18'△	9.71'	7.03' △	11'	1.73'	4.0'	5.50'	8.92'	12.33'	15.75'	1.25'			1.02	1.58	2.15	2.75	10	12	13	15
	30"	—	—	4'-3"	2.70'	9.25'	11.95'	9.03'	13'	2.00'	4.0'	6.08'	10.33'	14.58'	18.83'	1.29'	2½"	3"	1.23	1.98	2.74	3.50	12	14	15	17
	36"	—	—	5'-1"	2.87'	11.31'◇	14.18'	11.03' ◇	15'	2.24'	4.0'	6.67'	11.75'	16.83'	21.92'	1.33'	2½"	3"	1.40	2.38	3.33	4.24	13	15	17	20
	42"	—	—	6'-0"	3.05'	13.37'	16.42'	13.03'	17'	2.45'	4.0'	7.25'	13.25'	19.25'	25.25'	1.38'	2½"	3½"	1.60	2.83	4.04	5.26	14	17	19	22
	48"	—	—	6'-9"	3.22'	15.43'	18.65'	15.03'	19'	2.65'	4.0'	7.83'	14.58'	21.33'	28.08'	1.42'	2½"	3½"	1.81	3.26	4.70	6.14	15	18	21	24
	54"	—	—	7'-8"	3.39'	17.49'	20.88'	17.03'	21'	2.83'	4.0'	8.42'	16.08'	23.75'	31.42'	1.46'	3"	4"	2.03	3.78	5.54	7.28	17	20	23	27
	60"	—	—	8'-6"	3.56'	19.55'	23.11'	19.03'	23'	3.00'	4.0'	9.00'	17.50'	26.00'	34.50'	1.50'	3"	4"	2.28	4.36	6.43	8.50	18	22	25	29
Elliptical Concrete	—	12"	18"	2'-10"	2.36'	3.06'	5.42'	3.03'	5'	1.50'	2.0'	4.92'	7.75'	10.58'	13.42'	1.21'			0.68	1.04	1.41	1.77	8	9	11	12
	—	14"	23"	3'-4"	2.44'	3.75'	6.19'	3.70'	6'	1.90'	2.3'	5.38'	8.71'	12.04'	15.38'	1.23'			0.76	1.19	1.63	2.05	9	10	12	13
	—	19"	30"	4'-0"	2.62'	5.47'	8.09'	5.36'	8'	2.37'	2.6'	6.04'	10.04'	14.04'	18.04'	1.27'	2½"	3"	0.95	1.52	2.09	2.65	10	12	13	15
	—	24"	38"	5'-0"	2.79'	7.18'	9.97'	7.03'	10'	2.85'	3.0'	6.79'	11.79'	16.79'	21.79'	1.31'	2½"	3"	1.18	1.95	2.74	3.53	11	13	15	18
	—	29"	45"	5'-11"	3.05'	8.90'	11.95'	8.70'	12'	3.19'	3.3'	7.50'	13.42'	19.33'	25.25'	1.38'	2½"	3½"	1.41	2.42	3.44	4.45	12	15	18	20
	—	34"	53"	7'-0"	3.22'	10.62'	13.84'	10.36'	13'	3.57'	2.6'	8.25'	15.25'	22.25'	29.25'	1.42'	3"	3½"	1.63	2.92	4.22	5.52	13	17	20	23
	—	38"	60"	7'-10"	3.39'	11.99'	15.38'	11.70'	15'	3.95'	3.3'	8.92'	16.75'	24.58'	32.42'	1.46'	3"	4"	1.83	3.36	4.89	6.41	14	18	21	25
	—	43"	68"	8'-11"	3.56'	13.71'	17.27'	13.36'	17'	4.28'	3.6'	9.67'	18.58'	27.50'	36.42'	1.50'	3"	4"	2.09	3.95	5.80	7.65	16	20	23	27
	—	48"	76"	9'-11"	3.73'	15.43'	19.16'	15.03'	19'	4.59'	4.0'	10.42'	20.33'	30.25'	40.17'	1.54'	3"	HSS 5"x5/16"	2.37	4.54	6.73	8.92	17	21	26	30
	—	53"	83"	10'-8"	3.91'	17.15'	21.06'	16.70'	20'	4.77'	3.3'	11.08'	21.75'	32.42'	43.08'	1.58'	3"	HSS 5"x5/16"	2.61	5.09	7.56	10.03	18	23	27	32
	—	58"	91"	11'-8"	4.08'	18.87'	22.95'	18.36'	22'	5.01'	3.6'	11.83'	23.50'	35.17'	46.83'	1.63'	3½"	HSS 5"x3/8"	2.91	5.77	8.64	11.50	19	24	29	35

△6.42' △6.25' Dimensions permitted to allow use of 8' standard pipe lengths.

◇10.40' ◇10.10' Dimensions permitted to allow use of 12' standard pipe lengths.

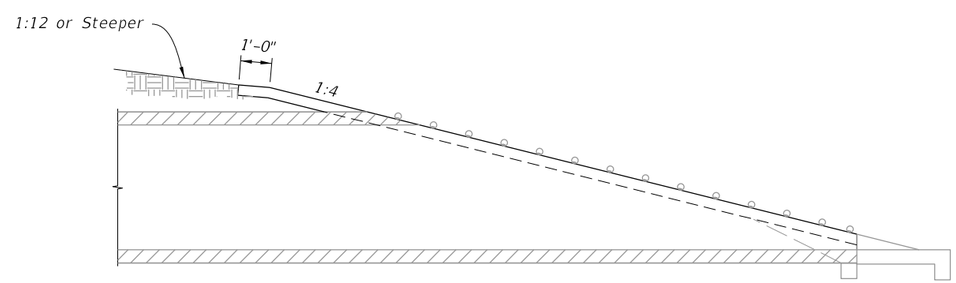

PERMISSIBLE PAVEMENT MODIFICATION

CONCRETE PIPE DIMENSIONS AND QUANTITIES AND PERMISSIBLE PAVEMENT MODIFICATION

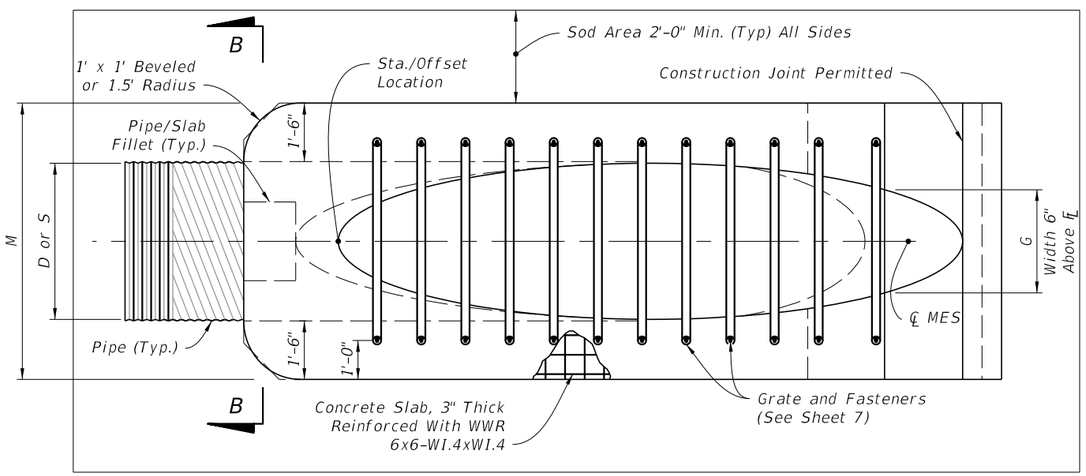

PLAN - SINGLE PIPE

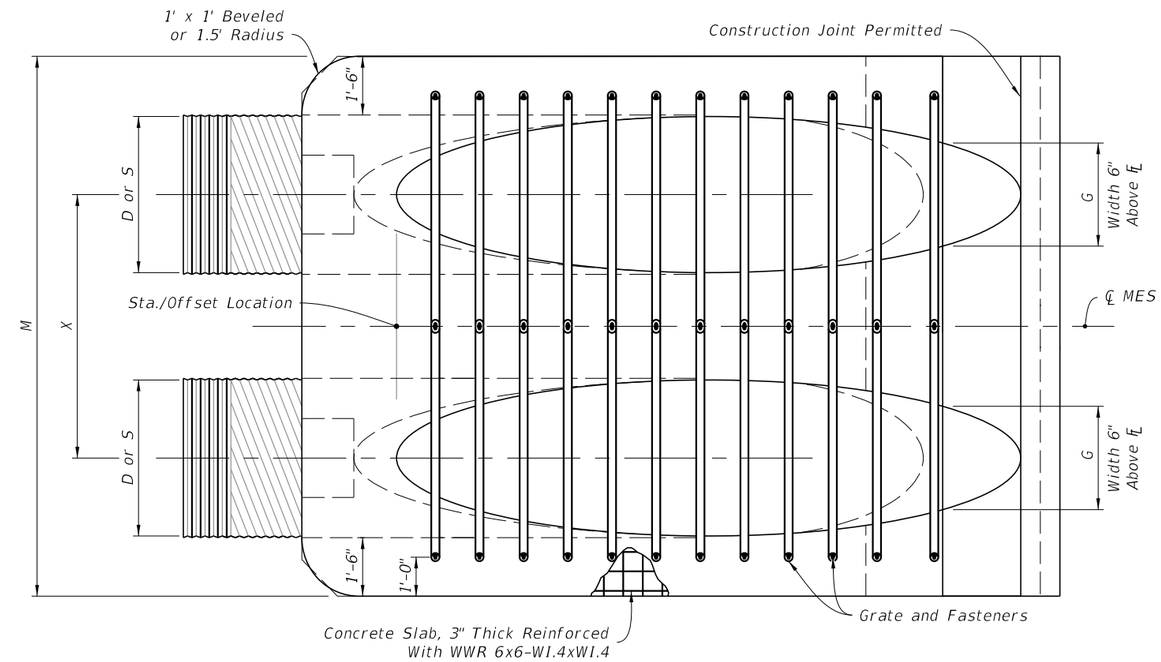

PLAN - MULTIPLE PIPE

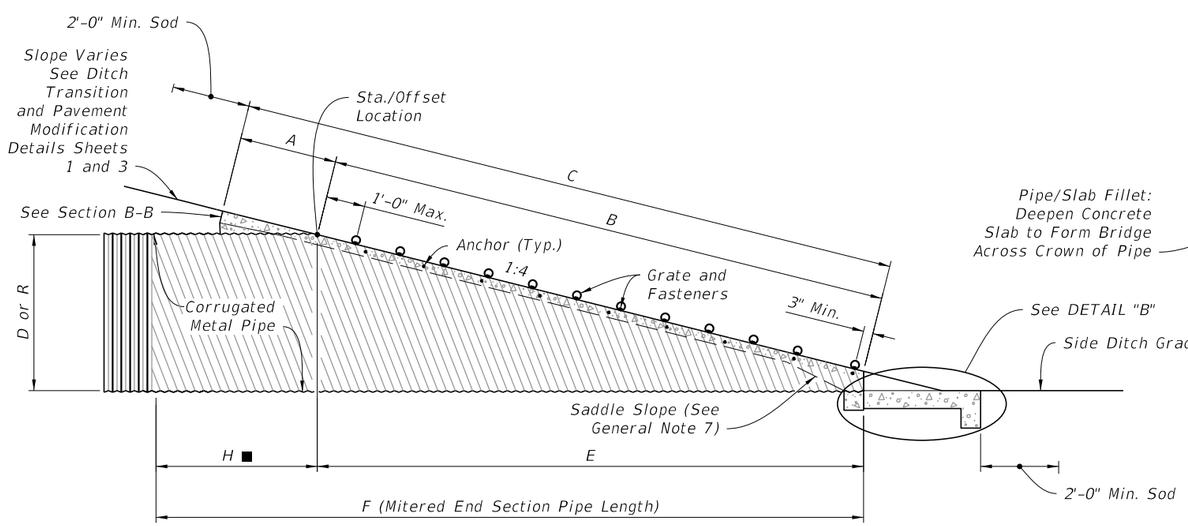

ELEVATION

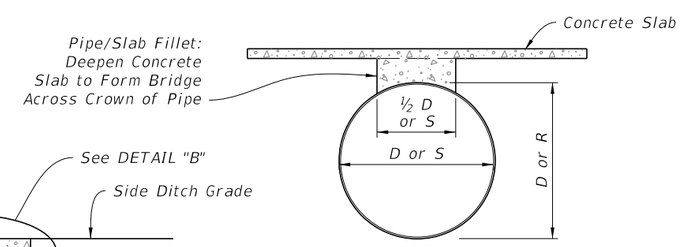

SECTION B-B
(Pipe/Slab Fillet)

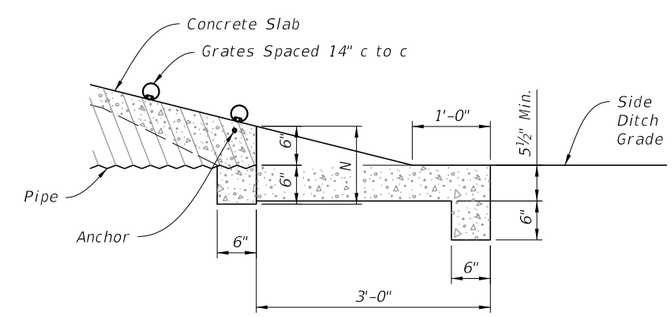

DETAIL "B"

ROUND CORRUGATED PIPE
(Arched Pipe Similar)

SINGLE AND MULTIPLE CORRUGATED METAL PIPE

LAST REVISION	REVISION	DESCRIPTION:			INDEX	SHEET
11/01/19			FY 2023-24 STANDARD PLANS	SIDE DRAIN MITERED END SECTION	430-022	4 of 7

10/20/2022 8:48:55 AM

SINGLE AND MULTIPLE CORRUGATED METAL PIPE DIMENSIONS AND QUANTITIES

Pipe	Dia. D	Span S	Rise R	X	A	B	C	E	F	G	H	M				N	GRATE SIZES		3" CONC. SLAB (CY)				SODDING (SY)			
												Single Pipe	Double Pipe	Triple Pipe	Quad. Pipe		STANDARD WEIGHT PIPE	EXTRA STRONG PIPE	Single Pipe	Double Pipe	Triple Pipe	Quad. Pipe	Single Pipe	Double Pipe	Triple Pipe	Quad. Pipe
Round Corrugated Metal Pipe	8"	—	—	2'-0"	2.5'	0.72'	3.22'	0.7'	4.0'	0.58'	3.3'	3.75'	5.75'	7.75'	9.75'	1.04'			0.52	0.90	1.22	1.54	7	8	8	9
	10"	—	—	2'-2"	2.5'	1.34'	3.84'	1.3'	5.0'	0.81'	3.7'	3.92'	6.08'	8.25'	10.41'	1.04'			0.64	0.99	1.34	1.70	7	8	9	10
	12"	—	—	2'-4"	2.5'	2.06'	4.56'	2.0'	6.0'	1.00'	4.0'	4.08'	6.42'	8.75'	11.08'	1.04'			0.68	1.09	1.48	1.88	7	8	10	11
	15"	—	—	2'-7"	2.5'	3.09'	5.59'	3.0'	7.0'	1.23'	4.0'	4.33'	6.92'	9.50'	12.08'	1.04'			0.64	1.00	1.35	1.71	8	9	10	11
	18"	—	—	2'-10"	2.5'	4.12'	6.62'	4.0'	8.0'	1.41'	4.0'	4.58'	7.42'	10.25'	13.08'	1.04'			0.69	1.09	1.49	1.89	9	10	11	12
	24"	—	—	3'-5"	2.5'	6.18'	8.68'	6.0'	10.0'	1.73'	4.0'	5.08'	8.50'	11.92'	15.33'	1.04'			0.83	1.34	1.82	2.34	10	11	13	14
	30"	—	—	4'-3"	2.5'	8.25'	10.75'	8.0'	12.0'	2.00'	4.0'	5.58'	9.83'	14.08'	18.33'	1.04'	2½"	3"	0.96	1.63	2.32	2.99	11	13	15	17
	36"	—	—	5'-1"	2.5'	10.31'	12.81'	10.0'	14.0'	2.24'	4.0'	6.08'	11.17'	16.25'	21.33'	1.04'	2½"	3"	1.08	1.92	2.77	3.62	12	14	17	19
	42"	—	—	6'-0"	2.5'	12.37'	14.87'	12.0'	16.0'	2.45'	4.0'	6.58'	12.58'	18.58'	24.58'	1.04'	2½"	3½"	1.20	2.26	3.34	4.61	13	16	18	21
	48"	—	—	6'-9"	2.5'	14.43'	16.93'	14.0'	18.0'	2.65'	4.0'	7.08'	13.83'	20.58'	27.33'	1.04'	2½"	3½"	1.60	3.11	4.62	6.12	14	17	20	23
	54"	—	—	7'-8"	2.5'	16.49'	18.99'	16.0'	20.0'	2.83'	4.0'	7.58'	15.25'	22.92'	30.58'	1.04'	3"	4"	1.76	3.56	5.34	7.14	15	19	22	26
	60"	—	—	8'-6"	2.5'	18.55'	21.05'	18.0'	22.0'	3.00'	4.0'	8.08'	16.58'	25.08'	33.58'	1.04'	3"	4"	1.94	4.03	6.12	8.20	17	20	24	28
Corrugated Metal Pipe - Arch	—	17"	13"	2'-6"	2.5'	2.41'	4.91'	2.33'	7'	1.39'	4.7'	4.50'	7.00'	9.50'	12.00'	1.04'			0.62	0.95	1.27	1.60	8	9	10	11
	—	21"	15"	2'-10"	2.5'	3.09'	5.59'	3.00'	8'	1.76'	5.0'	4.83'	7.67'	10.50'	13.33'	1.04'			0.69	1.06	1.44	1.77	8	9	11	12
	—	28"	20"	3'-5"	2.5'	4.81'	7.31'	4.67'	9'	2.22'	4.3'	5.42'	8.83'	12.25'	15.67'	1.04'			0.81	1.26	1.73	2.19	9	11	12	14
	—	35"	24"	4'-0"	2.5'	6.18'	8.68'	6.00'	11'	2.55'	5.0'	6.00'	10.00'	14.00'	18.00'	1.04'	2½"	3"	0.94	1.51	2.09	2.66	10	12	14	15
	—	42"	29"	4'-9"	2.5'	7.90'	10.40'	7.67'	12'	2.97'	4.3'	6.58'	11.33'	16.08'	20.83'	1.04'	2½"	3½"	1.06	1.76	2.46	3.16	11	13	15	17
	—	49"	33"	5'-6"	2.5'	9.28'	11.78'	9.00'	14'	3.34'	5.0'	7.17'	12.67'	18.17'	23.67'	1.04'	2½"	3½"	1.19	2.02	2.84	3.68	12	14	17	19
	—	57"	38"	6'-4"	2.5'	11.00'	13.50'	10.67'	16'	3.65'	5.3'	7.83'	14.17'	20.50'	26.83'	1.04'	3"	4"	1.35	2.35	3.35	4.36	13	16	19	22
	—	64"	43"	7'-1"	2.5'	12.71'	15.21'	12.33'	17'	3.89'	4.7'	8.42'	15.50'	22.58'	29.67'	1.04'	3"	4"	1.50	2.70	3.86	5.03	14	17	20	24
	—	71"	47"	7'-10"	2.5'	14.09'	16.59'	13.67'	19'	4.14'	5.3'	9.00'	16.83'	24.67'	32.50'	1.04'	3"	4"	1.62	2.94	4.27	5.59	15	18	22	25

CORRUGATED METAL PIPE DIMENSIONS AND QUANTITIES

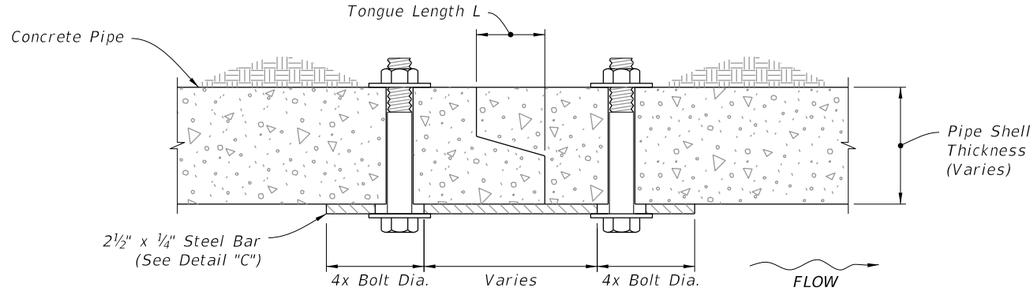

TONGUE AND GROOVE CONNECTOR DETAIL

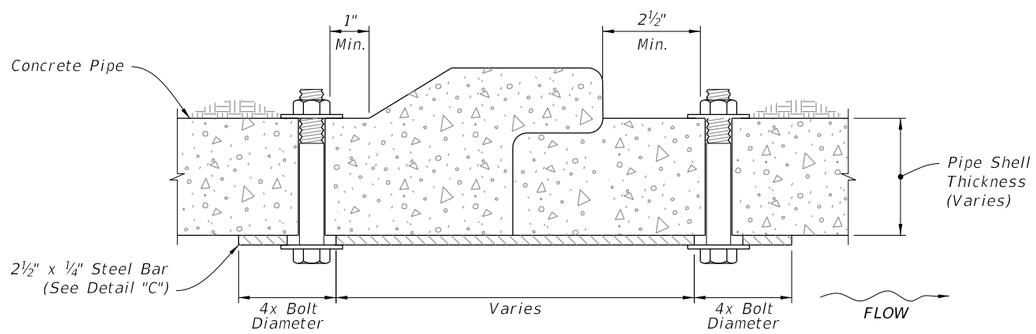

BELL AND SPIGOT CONNECTOR DETAIL

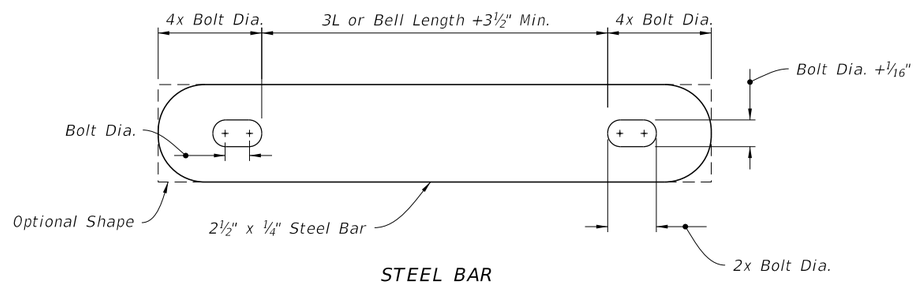

STEEL BAR

NOTES:

1. Use galvanized steel for all bars, bolts, nuts, and washers.
2. Two connectors required per joint, located 60° right and left of bottom center of pipe.
3. Bolt holes in pipe shell are to be drilled.

Bolt Dia.	Pipe Dia.
⅜"	15" to 36"
⅝"	42" to 72"

CONCRETE PIPE CONNECTION DETAIL

DETAIL "C"

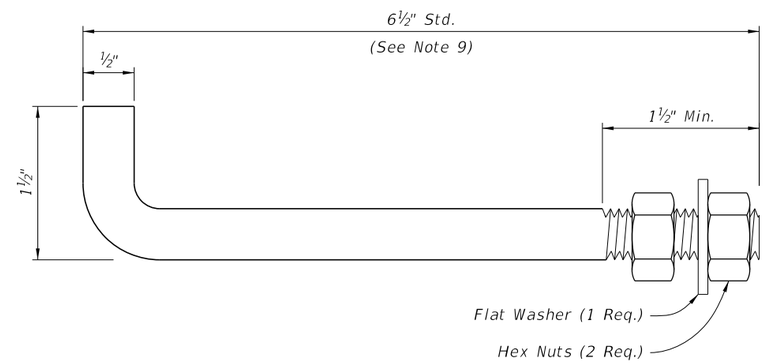

NOTES:

1. Anchors required for CMP only.
2. Use galvanized steel for all anchors, nuts, and washers.
3. Bend anchor where required to center in concrete slab.
4. Repair damaged surfaces after bending.
5. Space anchors a distance equal to four (4) corrugations.
6. Place the anchors in the outside crest of corrugation.
7. Place flat washers on inside wall of pipe.
8. Drill or punch holes in the mitered end pipe; burning not permitted.
9. A 6" x ½" bolt substitution is permitted.

CORRUGATED METAL PIPE (CMP) ANCHOR DETAIL

DETAIL "D"

CONCRETE PIPE CONNECTION AND CORRUGATED PIPE ANCHOR DETAILS

NOTES:

1. 5/8" x 3" bolts are standard for all grate fasteners, except when the contractor elects to use the slotted upper holes for the intermediate fasteners on multiple drain pipes, which will require bolt lengths in the Special Bolt Length Table.
2. 5/8" galvanized bolt hex head bolt shown; either hex head or square head bolt may be used. Use only hex nuts.
3. Make the specified weld when the fabricated unit is subject to hazardous hauls and repeated handling. Tack welds are permitted for local or job site fabrication. Galvanizing over welded surface not required.
4. Omit on trailing downstream ends on divided roadways.
5. Use grates on all round pipes 30" or greater, Pipe arches 35" x 24" or greater, and elliptical pipe 19" x 30" or greater, unless excluded in the Plans. Use grates on smaller pipes only when called for in the Plans.

CONCRETE PIPE

ROUND PIPE					ELLIPTICAL PIPE				
Pipe Dia.	s	n	L	La	Drain Size	s	n	L	La
*15"	3	4	4'-0"	4'-11"	*12"x18"	2	3	2'-10"	3'-9"
*18"	4	5	5'-2"	6'-1"	*14"x23"	3	4	4'-0'	4'-11"
*24"	6	7	7'-6"	8'-5"	19"x30"	4	5	5'-2"	6'-1"
30"	7	8	8'-8"	9'-7"	24"x38"	5	6	6'-4"	7'-3"
36"	9	10	11'-0"	11'-11"	29"x45"	7	8	8'-8"	9'-7"
42"	11	12	13'-4"	14'-3"	34"x53"	8	9	9'-10"	0'-9"
48"	13	14	15'-8"	16'-7"	38"x60"	10	11	12'-2"	13'-1"
54"	14	15	16'-10"	17'-9"	43"x68"	11	12	13'-4"	14'-3"
60"	16	17	19'-2"	20'-1"	48"x76"	13	14	15'-8"	16'-7"
					53"x83"	14	15	16'-10"	17'-9"
					58"x91"	15	16	18'-0"	18'-11"

CORRUGATED METAL PIPE

ROUND PIPE					ARCHED PIPE				
Pipe Dia.	s	n	L	La	Drain Size	s	n	L	La
*15"	2	3	2'-10"	3'-9"	*17"x13"	1	2	1'-8"	2'-7"
*18"	3	4	4'-0"	4'-11"	*21"x15"	2	3	2'-10"	3'-9"
*24"	5	6	6'-4"	7'-3"	*28"x20"	4	5	5'-2"	6'-1"
30"	7	8	8'-8"	9'-7"	35"x24"	5	6	6'-4"	7'-3"
36"	8	9	9'-10"	10'-9"	42"x29"	6	7	7'-6"	8'-5"
42"	10	11	12'-2"	13'-1"	49"x33"	7	8	8'-8"	9'-7"
48"	12	13	14'-6"	15'-5"	57"x38"	9	10	11'-0"	11'-11"
54"	14	15	16'-10"	17'-9"	64"x43"	10	11	12'-2"	13'-1"
60"	15	16	18'-0"	18'-11"	71"x47"	12	13	14'-6"	15'-5"

* See Note 5

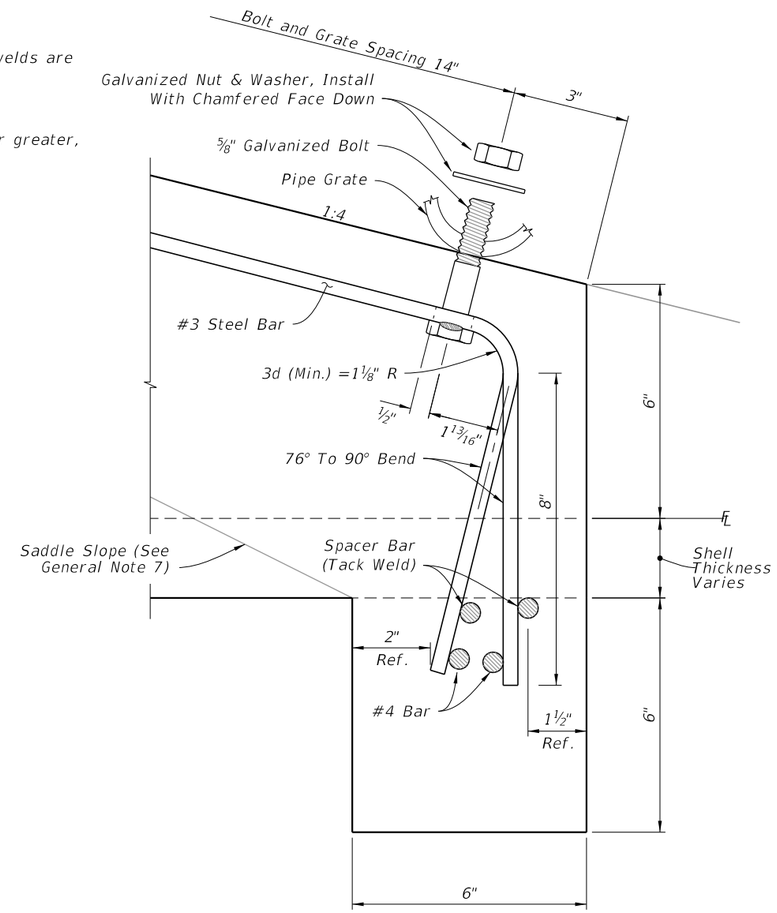

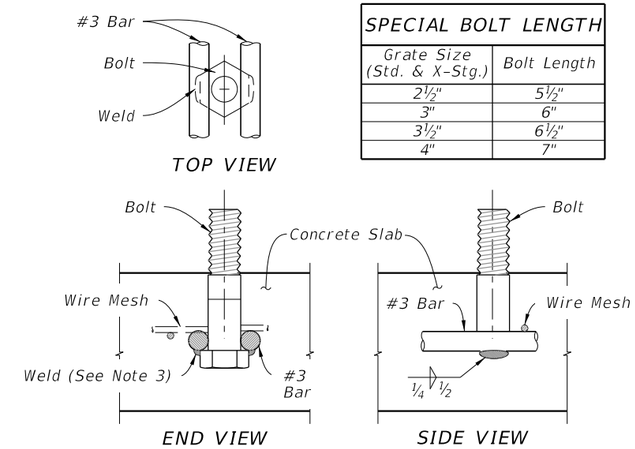

SPECIAL BOLT LENGTH

Grate Size (Std. & X-Stg.)	Bolt Length
2 1/2"	5 1/2"
3"	6"
3 1/2"	6 1/2"
4"	7"

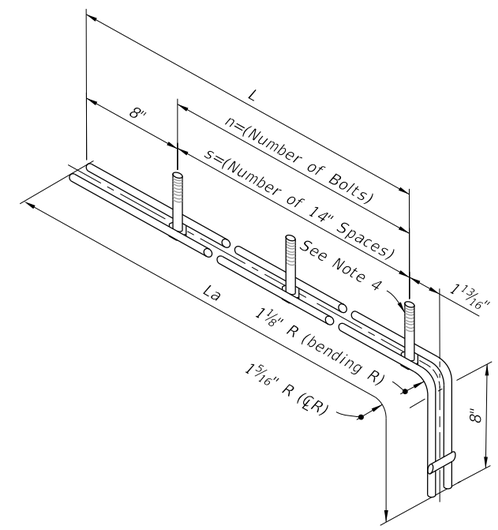

MULTIPLE FASTENER UNIT DETAIL
(For Single and Multiple Pipes)

NOTE:

1. Install intermediate slot and fastener for multiple drain pipes only.

Options for top opening:
a. 4" of 6" mill head cut, 1" deep
b. 2" diameter drilled hole
c. 11/16" x 2" slot

Bottom opening: 11/16" x 2" slot.

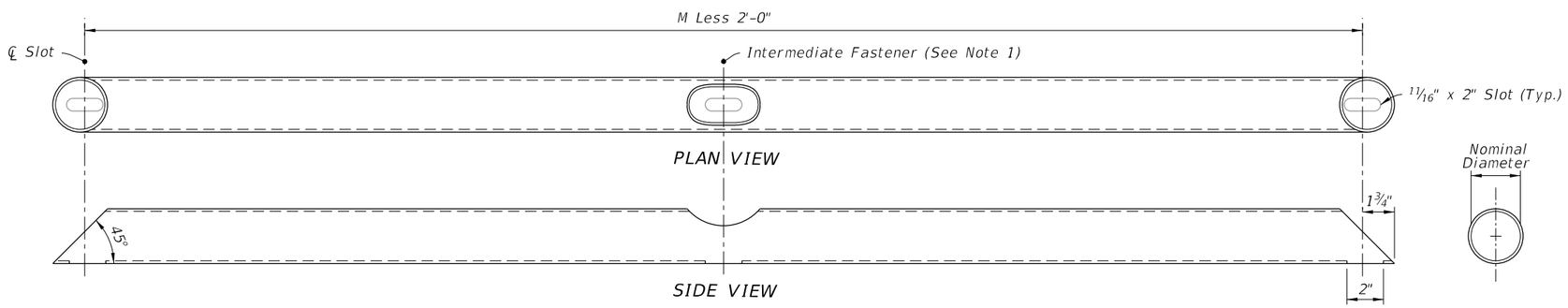

GRATE DETAIL
(For Single and Multiple Pipes)

FASTENER UNIT AND GRATE DETAILS

LAST REVISION	REVISION	DESCRIPTION:					
11/01/20			FDOT	FY 2023-24 STANDARD PLANS	SIDE DRAIN MITERED END SECTION	INDEX 430-022	SHEET 7 of 7

12/13/2022 8:16:31 AM

GENERAL NOTES:

1. Use Class II concrete.

2. Reinforcing steel is either Grade 40 or 60.

3. Endwalls may be cast in place or precast concrete. (Additional reinforcement necessary for handling precast units will be determined by the Contractor or the supplier).

4. Chamfer all exposed edges and corners to ¾".

5. Endwall dimensions, locations and positions are for round and elliptical concrete pipe and for round and pipe-arch corrugated metal pipe. Round concrete pipe shown.

6. On outfall ditches with side slopes flatter than 1:1.5 provide 20' transitions from the endwall to the flatter side slopes, right of way permitting.

7. Construct front slope and ditch transitions in accordance with Index 430-001.

8. Quantities shown are for estimating purposes only.

TABLE OF CONTENTS:

Sheet	Description
1	General Notes and Contents
2	Concrete Endwall Details
3	Concrete and Metal Pipe Tables
4	Spacing For Multiple Pipes

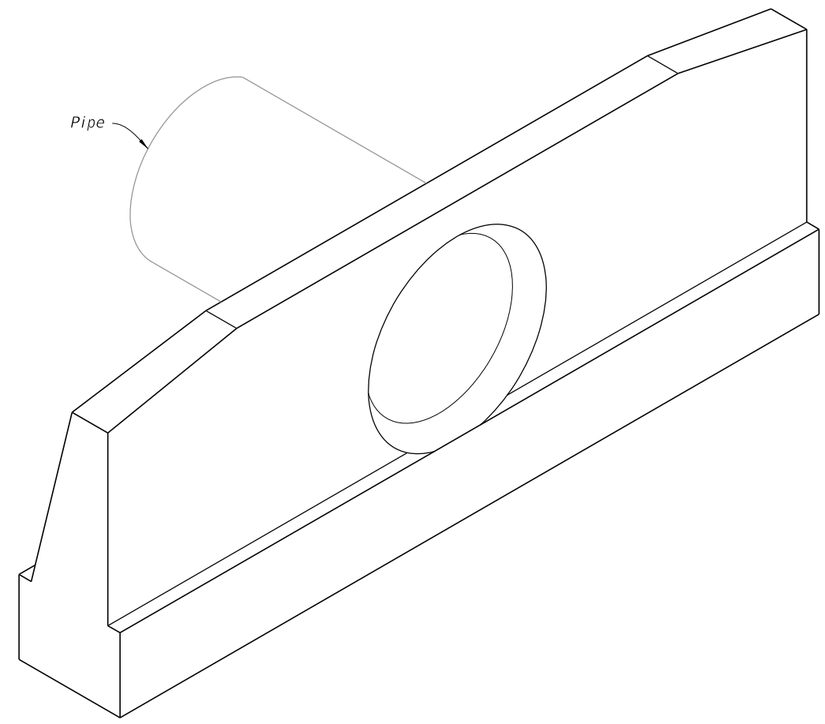

STRAIGHT CONCRETE ENDWALL

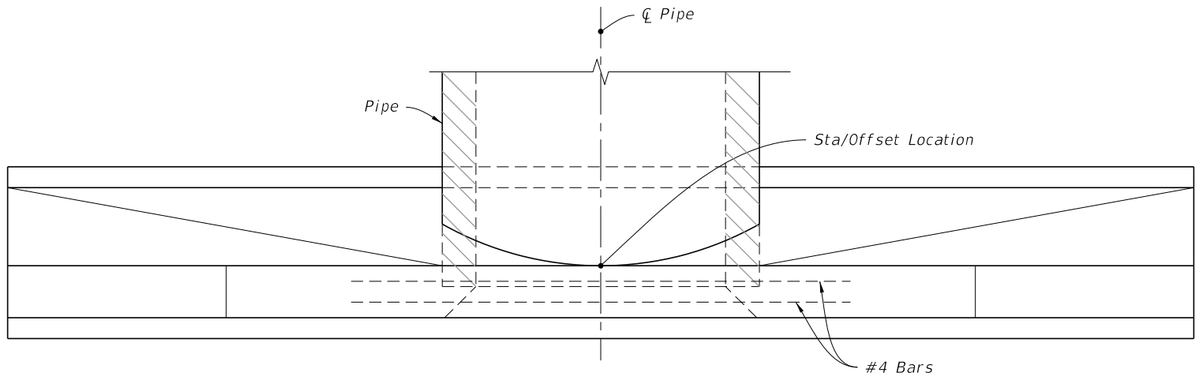

PLAN

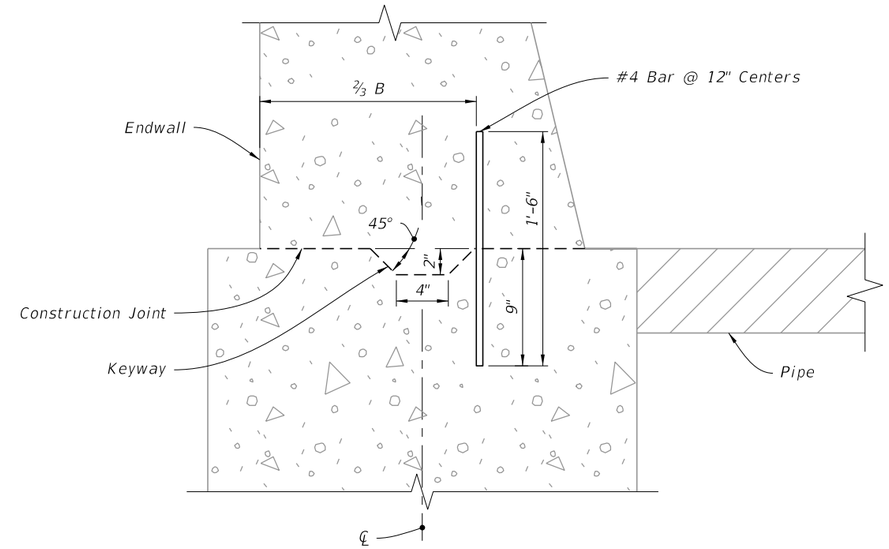

NOTE: Keyway and Dowels are required for optional construction joint.

DETAIL "A"

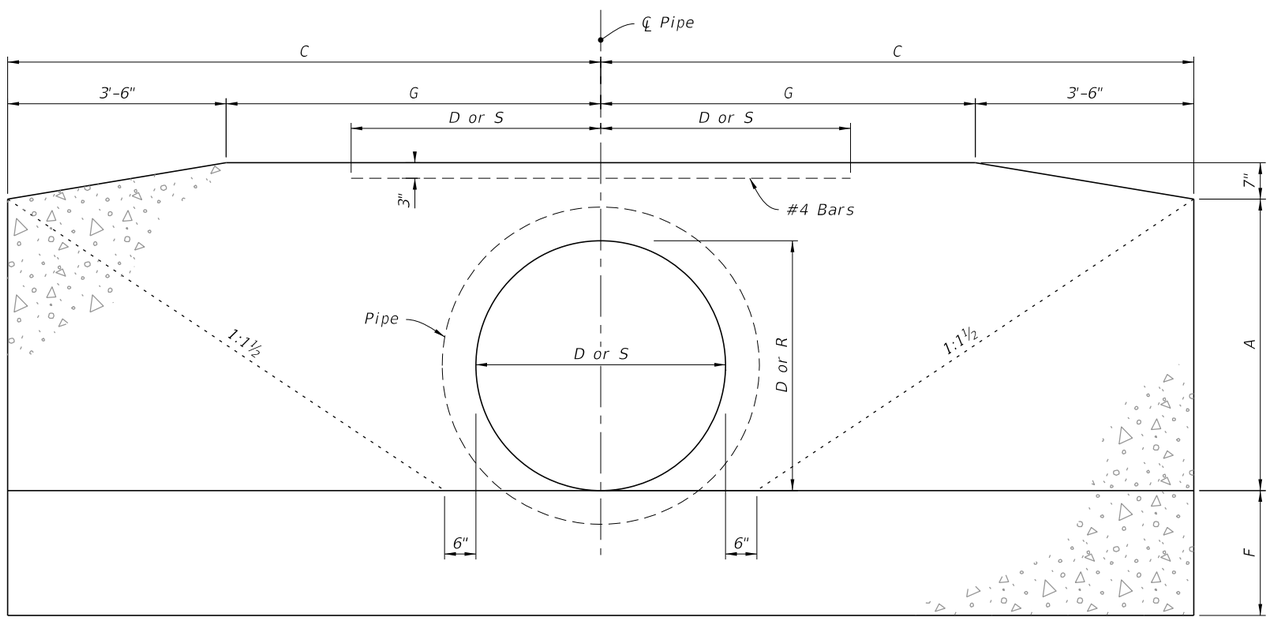

FRONT ELEVATION

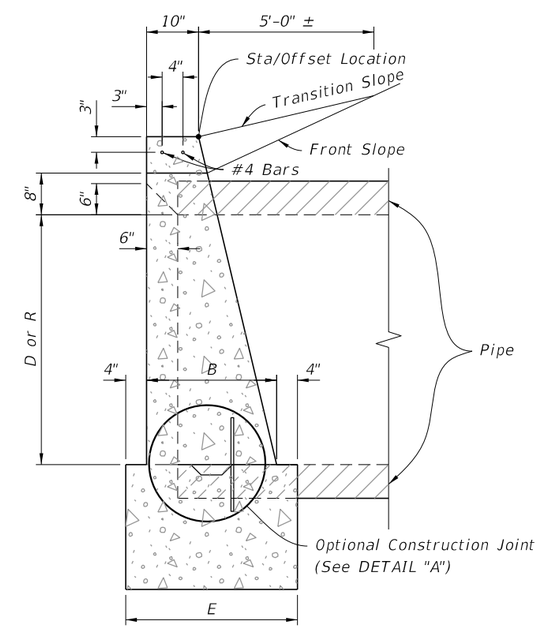

SIDE ELEVATION

10/20/2022 8:48:59 AM

CONCRETE ENDWALL DETAILS

LAST REVISION	REVISION	DESCRIPTION:			INDEX	SHEET
11/01/19			FY 2023-24 STANDARD PLANS	STRAIGHT CONCRETE ENDWALLS SINGLE AND MULTIPLE PIPE	430-030	2 of 4

ROUND CONCRETE AND CORRUGATED METAL PIPE

Pipe	Dia. D	Opening Area (SF) Number Of Pipes 1	2	3	4	Dimensions A	B	C	E	F	G	Y	X 0°	15°	30°	45°	Class II Concrete (CY) Number Of Pipe And Skew Angle Of Pipe (α) Single 0°	Double 0°	15°	30°	45°	Triple 0°	15°	30°	45°	Quadruple 0°	15°	30°	45°	Dia. D
Concrete	15"	1.23	2.46	3.69	4.92	1'-11"	1'-2"	4'-0"	1'-10"	1'-2"	0'-6"	2'-7"	2'-7"	2'-8"	3'-0"	3'-8"	1.23	1.59	1.60	1.65	1.74	1.94	1.96	2.05	2.23	2.30	2.34	2.47	2.74	15"
	18"	1.77	3.54	5.31	7.08	2'-2"	1'-3"	4'-6"	1'-11"	1'-3"	1'-0"	2'-10"	2'-10"	2'-11"	3'-3"	4'-0"	1.56	1.99	2.01	2.06	2.17	2.43	2.46	2.56	2.79	2.86	2.91	3.06	3.40	18"
	21"	2.41	4.82	7.23	9.64	2'-5"	1'-4"	5'-0"	2'-0"	1'-4"	1'-6"	3'-2"	3'-2"	3'-3"	3'-8"	4'-6"	1.97													21"
	24"	3.14	6.28	9.42	12.56	2'-8"	1'-4"	5'-6"	2'-0"	1'-4"	2'-0"	3'-5"	3'-5"	3'-6"	3'-11"	4'-10"	2.24	2.82	2.84	2.91	3.06	3.39	3.43	3.57	3.87	3.97	4.03	4.24	4.69	24"
	27"	3.98	7.96	11.94	15.92	2'-11"	1'-5"	6'-0"	2'-1"	1'-5"	2'-6"	3'-10"	3'-10"	4'-0"	4'-5"	5'-5"	2.73													27"
	30"	4.91	9.82	14.73	19.64	3'-2"	1'-6"	6'-6"	2'-2"	1'-6"	3'-0"	4'-3"	4'-3"	4'-5"	4'-11"	6'-0"	3.26	4.13	4.16	4.26	4.49	4.98	5.04	5.25	5.69	5.84	5.93	6.24	6.91	30"
	36"	7.07	14.14	21.21	28.28	3'-8"	1'-8"	7'-6"	2'-4"	1'-8"	4'-0"	5'-1"	5'-1"	5'-3"	5'-10"	7'-2"	4.53	5.73	5.77	5.92	6.23	6.92	7.00	7.29	7.91	8.13	8.26	8.69	9.62	36"
	42"	9.62	19.24	28.86	38.48	4'-2"	1'-10"	8'-6"	2'-6"	2'-0"	5'-0"	6'-0"	6'-0"	6'-3"	6'-11"	8'-6"	6.33	8.11	8.17	8.39	8.85	9.90	10.02	10.45	11.38	11.68	11.87	12.51	13.89	42"
	48"	12.57	25.14	37.71	50.28	4'-8"	2'-1"	9'-6"	2'-9"	2'-0"	6'-0"	6'-9"	6'-9"	7'-0"	7'-10"	9'-7"	8.15	10.40	10.48	10.75	11.33	12.64	12.80	13.34	14.50	14.89	15.13	15.93	17.68	48"
	54"	15.90	31.80	47.70	63.60	5'-2"	2'-6"	10'-6"	3'-2"	2'-3"	7'-0"	7'-8"	7'-8"	7'-11"	8'-10"	10'-10"	11.71	15.23	15.35	15.78	16.69	18.77	19.02	19.86	21.69	22.29	22.66	23.93	26.67	54"
Corrugated Metal	15"	1.23	2.46	3.69	4.92	1'-11"	1'-2"	4'-0"	1'-10"	1'-2"	0'-6"	2'-7"	2'-7"	2'-8"	3'-0"	3'-8"	1.24	1.62	1.63	1.68	1.78	1.99	2.02	2.11	2.30	2.37	2.41	2.75	2.84	15"
	18"	1.77	3.54	5.31	7.08	2'-2"	1'-3"	4'-6"	1'-11"	1'-3"	1'-0"	2'-10"	2'-10"	2'-11"	3'-3"	4'-0"	1.59	2.04	2.06	2.11	2.23	2.51	2.54	2.65	2.89	2.96	3.01	3.17	3.53	18"
	21"	2.41	4.82	7.23	9.64	2'-5"	1'-4"	5'-0"	2'-0"	1'-4"	1'-6"	3'-2"	3'-2"	3'-3"	3'-8"	4'-6"														21"
	24"	3.14	6.28	9.42	12.56	2'-8"	1'-4"	5'-6"	2'-0"	1'-4"	2'-0"	3'-5"	3'-5"	3'-6"	3'-11"	4'-10"	2.29	2.91	2.93	3.01	3.17	3.52	3.56	3.71	4.03	4.14	4.20	4.43	4.91	24"
	27"	3.98	7.96	11.94	15.92	2'-11"	1'-5"	6'-0"	2'-1"	1'-5"	2'-6"	3'-10"	3'-10"	4'-0"	4'-5"	5'-5"														27"
	30"	4.91	9.82	14.73	19.64	3'-2"	1'-6"	6'-6"	2'-2"	1'-6"	3'-0"	4'-3"	4'-3"	4'-5"	4'-11"	6'-0"	3.34	4.28	4.31	4.43	4.67	5.20	5.27	5.49	5.97	6.13	6.23	6.56	7.29	30"
	36"	7.07	14.14	21.21	28.28	3'-8"	1'-8"	7'-6"	2'-4"	1'-8"	4'-0"	5'-1"	5'-1"	5'-3"	5'-10"	7'-2"	4.64	5.95	6.00	6.15	6.49	7.25	7.34	7.65	8.33	8.57	8.71	9.18	10.20	36"
	42"	9.62	19.24	28.86	38.48	4'-2"	1'-10"	8'-6"	2'-6"	2'-0"	5'-0"	6'-0"	6'-0"	6'-3"	6'-11"	8'-6"	6.49	8.43	8.50	8.73	9.23	10.38	10.52	10.98	11.99	12.32	12.52	13.22	14.73	42"
	48"	12.57	25.14	37.71	50.28	4'-8"	2'-1"	9'-6"	2'-9"	2'-0"	6'-0"	6'-9"	6'-9"	7'-0"	7'-10"	9'-7"	8.38	10.85	10.94	11.23	11.87	13.34	13.51	14.11	15.39	15.82	16.08	16.97	18.90	48"
	54"	15.90	31.80	47.70	63.60	5'-2"	2'-6"	10'-6"	3'-2"	2'-3"	7'-0"	7'-8"	7'-8"	7'-11"	8'-10"	10'-10"	11.77	15.35	15.48	15.90	16.83	18.93	19.18	20.04	21.89	22.51	22.89	24.17	26.96	54"

ELLIPTICAL CONCRETE AND CORRUGATED METAL PIPE ARCH

Pipe	Rise R	Span S	Opening Area (SF) Number Of Pipes 1	2	3	4	Dimensions A	B	C	E	F	G	Y	X 0°	15°	30°	45°	Class II Concrete (CY) Number Of Pipe And Skew Angle Of Pipe (α) Single 0°	Double 0°	15°	30°	45°	Triple 0°	15°	30°	45°	Quadruple 0°	15°	30°	45°	Rise R	Span S	Approx. Equiv. Round
Concrete	12"	18"	1.3	2.6	3.9	5.2	1'-8"	1'-2"	3'-9"	1'-10"	1'-2"	0'-3"	2'-10"	2'-10"	2'-11"	3'-3"	4'-0"	1.09	1.45	1.46	1.51	1.60	1.80	1.82	1.91	2.09	2.16	2.20	2.33	2.60	12"	18"	15"
	14"	23"	1.8	3.6	5.4	7.2	1'-10"	1'-3"	4'-2½"	1'-11"	1'-3"	8½"	3'-5"	3'-5"	3'-6"	3'-11"	4'-10"	1.36	1.82	1.84	1.89	2.01	2.29	2.32	2.43	2.68	2.75	2.80	2.97	3.33	14"	23"	18"
	19"	30"	3.3	6.6	9.9	13.2	2'-3"	1'-4"	5'-1½"	2'-0"	1'-4"	1'-7½"	4'-2"	4'-2"	4'-4"	4'-10"	5'-11"	1.89	2.55	2.57	2.65	2.82	3.22	3.27	3.43	3.77	3.88	3.95	4.19	4.70	19"	30"	24"
	24"	38"	5.1	10.2	15.3	20.4	2'-8"	1'-5"	6'-3"	2'-1"	1'-5"	2'-9"	5'-2"	5'-2"	5'-4"	6'-0"	7'-4"	2.64	3.55	3.58	3.69	3.93	4.48	4.54	4.77	5.24	5.39	5.49	5.82	6.53	24"	38"	30"
	29"	45"	7.4	14.8	22.2	29.6	3'-1"	1'-6"	7'-0"	2'-2"	1'-6"	3'-6"	6'-0"	6'-0"	6'-3"	6'-11"	8'-6"	3.32	4.48	4.52	4.66	4.96	5.64	5.72	6.00	6.60	6.80	6.92	7.34	8.24	29"	45"	36"
	34"	53"	10.2	20.4	30.6	40.8	3'-6"	1'-7"	7'-11½"	2'-3"	1'-7"	4'-5½"	7'-1"	7'-1"	7'-4"	8'-2"	10'-0"	4.24	5.76	5.81	6.00	6.39	7.29	7.40	7.76	8.55	8.81	8.97	9.52	10.70	34"	53"	42"
	38"	60"	12.9	25.8	38.7	51.6	3'-10"	1'-8"	8'-9"	2'-4"	1'-8"	5'-3"	7'-11"	7'-11"	8'-2"	9'-2"	11'-2"	5.22	7.16	7.23	7.46	7.96	9.10	9.24	9.70	10.71	11.05	11.25	11.95	13.46	38"	60"	48"
	43"	68"	16.6	33.2	49.8	66.4	4'-3"	1'-10"	9'-8½"	2'-6"	1'-10"	6'-2½"	8'-10"	8'-10"	9'-2"	10'-2"	12'-6"	6.63	9.01	9.09	9.38	10.00	11.39	11.56	12.13	13.36	13.77	14.02	14.88	16.73	43"	68"	54"
	48"	76"	20.5	41.0	61.5	82.0	4'-8"	2'-1"	10'-8"	2'-9"	2'-0"	7'-2"	9'-9"	9'-9"	10'-1"	11'-3"	13'-9"	8.66	11.74	11.85	12.22	13.02	14.82	15.04	15.77	17.37	17.91	18.23	19.34	21.74	48"	76"	60"
	53"	83"	24.8	49.6	74.4	99.2	5'-1"	2'-6"	11'-7"	3'-2"	2'-6"	8'-1"	10'-7"	10'-7"	10'-11"	12'-3"	15'-0"	12.50	16.98	16.98	17.67	18.83	21.47	21.78	22.86	25.18	25.97	26.44	28.06	31.55	53"	83"	66"
	58"	91"	29.5	59.0	88.5	118.0	5'-6"	2'-10"	12'-6½"	3'-6"	2'-10"	9'-0½"	11'-4"	11'-4"	11'-9"	13'-1"	16'-0"	16.46	22.26	22.46	23.16	24.66	28.05	28.46	29.85	32.85	33.85	34.46	36.55	41.05	58"	91"	72"
Corrugated Metal	13"	17"	1.1	2.2	3.3	4.4	1'-9"	1'-2"	3'-10"	1'-10"	1'-2"	0'-4"	2'-6"	2'-6"	2'-7"	2'-11"	3'-6"	1.16	1.47	1.48	1.52	1.60	1.78	1.80	1.88	2.04	2.09	2.12	2.23	2.48	13"	17"	15"
	15"	21"	1.6	3.2	4.8	6.4	1'-11"	1'-2"	4'-3"	1'-10"	1'-2"	0'-9"	2'-10"	2'-10"	2'-11"	3'-3"	4'-0"	1.33	1.69	1.70	1.75	1.84	2.04	2.06	2.15	2.33	2.40	2.44	2.57	2.84	15"	21"	18"
	20"	28"	2.8	5.6	8.4	11.2	2'-4"	1'-3"	5'-2"	1'-11"	1'-3"	1'-8"	3'-5"	3'-5"	3'-6"	3'-11"	4'-10"	1.78	2.31	2.33	2.39	2.53	2.83	2.87	2.99	3.26	3.36	3.42	3.60	4.01	20"	28"	24"
	24"	35"	4.3	8.6	12.9	17.2	2'-8"	1'-4"	5'-11½"	2'-0"	1'-4"	2'-5½"	4'-0"	4'-0"	4'-2"	4'-7"	5'-8"	2.34	3.03	3.05	3.14	3.32	3.72	3.77	3.93	4.29	4.40	4.47	4.72	5.25	24"	35"	30"
	29"	42"	5.9	11.8	17.7	23.6	3'-1"	1'-5"	6'-10½"	2'-1"	1'-5"	3'-4½"	4'-9"	4'-9"	4'-11"	5'-6"	6'-9"	3.13	4.06	4.09	4.20	4.45	4.99	5.06	5.28	5.76	5.93	6.03	6.36	7.09	29"	42"	36"
	33"	49"	8.4	16.8	25.2	33.6	3'-5"	1'-6"	7'-8"	2'-2"	1'-6"	4'-2"	5'-6"	5'-6"	5'-8"	6'-4"	7'-9"	3.83	5.00	5.04	5.18	5.48	6.16	6.24	6.52	7.12	7.32	7.44	7.86	8.76	33"	49"	42"
	38"	57"	10.6	21.2	31.8	42.4	3'-10"	1'-7"	8'-7½"	2'-3"	1'-7"	5'-1½"	6'-4"	6'-4"	6'-7"	7'-4"	8'-11"	4.87	6.31	6.36	6.53	6.91	7.74	7.84	8.18	8.93	9.18	9.33	9.85	10.96	38"	57"	48"
	43"	64"	13.2	26.4	39.6	52.8	4'-3"	1'-8"	9'-6½"	2'-4"	1'-8"	6'-0½"	7'-1"	7'-1"	7'-4"	8'-2"	10'-0"	5.88	7.64	7.70	7.91	8.37	9.40	9.52	9.94	10.86	11.15	11.33	11.97	13.33	43"	64"	54"
	47"	71"	16.9	33.8	50.7	67.6	4'-7"	1'-10"	10'-4"	2'-6"	2'-0"	6'-10"	7'-10"	7'-10"	8'-1"	9'-1"	11'-1"	7.80	10.15	10.23	10.51	11.12	12.49	12.65	13.22	14.43	14.85	15.10	15.94	17.77	47"	71"	60"

NOTES:

1. Dimension X is calculated as: X = S*SEC α.

2. Select tabular quantities using skew values as follows:

End Skew to Pipe	Use Tabulated Value
0° to 5°	0°
6° to 15°	15°
16° to 30°	30°
31° or Over	45°

CONCRETE AND METAL PIPE TABLES

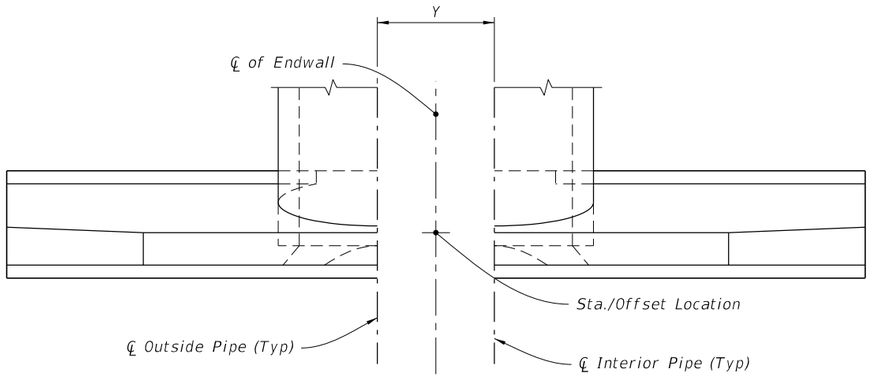

PLAN

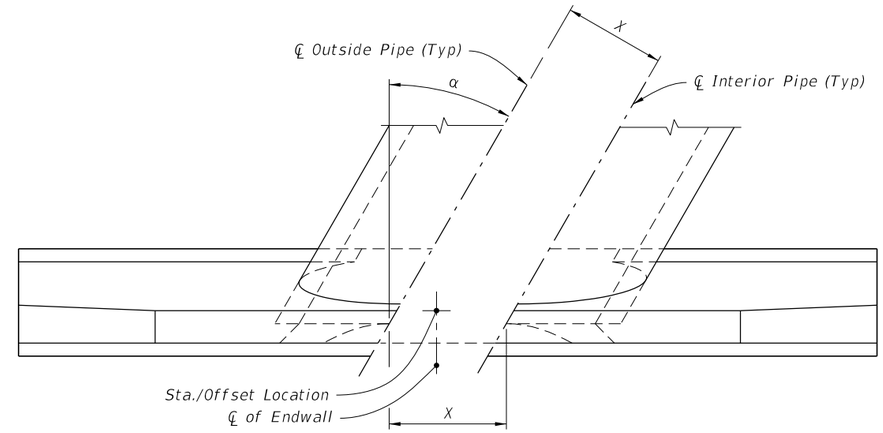

PLAN

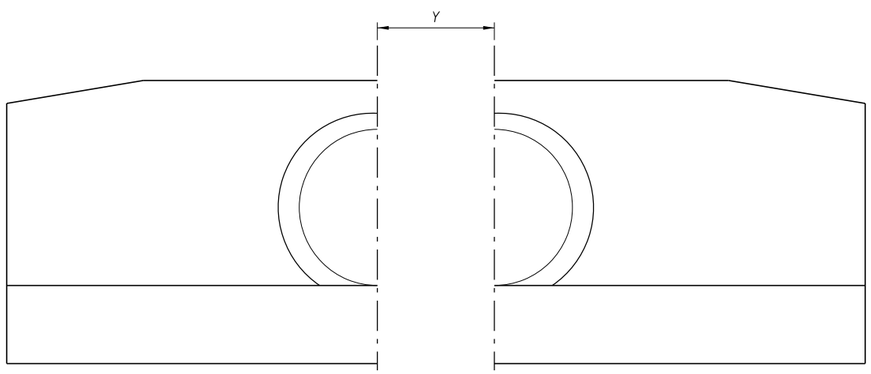

FRONT ELEVATION

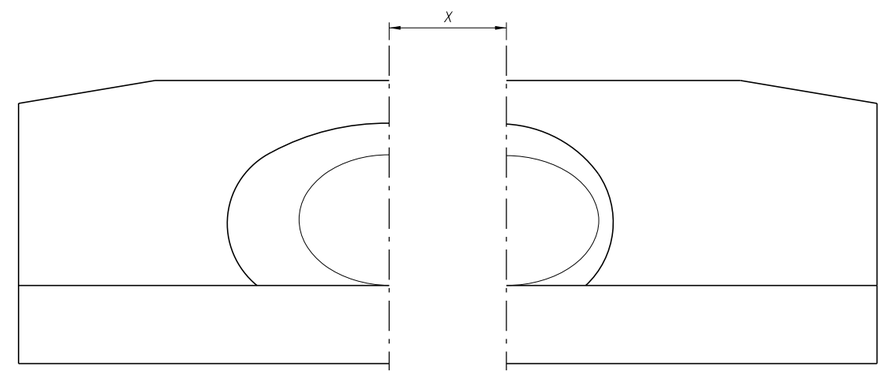

FRONT ELEVATION

NORMAL PIPE

SKEWED PIPE

(Multiple Pipe Shown, Single Pipe Similar)

LEGEND:

α Pipe Skew Angle
S Center to Center between pipes
X Center to Center along front of Headwall

SPACING FOR MULTIPLE PIPES

LAST REVISION	REVISION	DESCRIPTION:	FY 2023-24 STANDARD PLANS	STRAIGHT CONCRETE ENDWALLS SINGLE AND MULTIPLE PIPE	INDEX	SHEET
11/01/19					430-030	4 of 4

10/20/2022 8:49:00 AM

GENERAL NOTES:

1. Use Class II concrete.

2. Reinforcing steel is either Grade 40 or 60.

3. Endwalls may be cast in place or precast concrete. The Contractor or the Supplier will determine the additional reinforcement necessary for handling precast units.

4. Chamfer all exposed edges and corners ¾" unless otherwise shown.

5. Quantities shown are for estimating purposes only.

TABLE OF CONTENTS:

Sheet	Description
1	General Notes and Contents
2	Single 60" Pipe Endwall Details
3	Double 60" Pipe Endwall Details

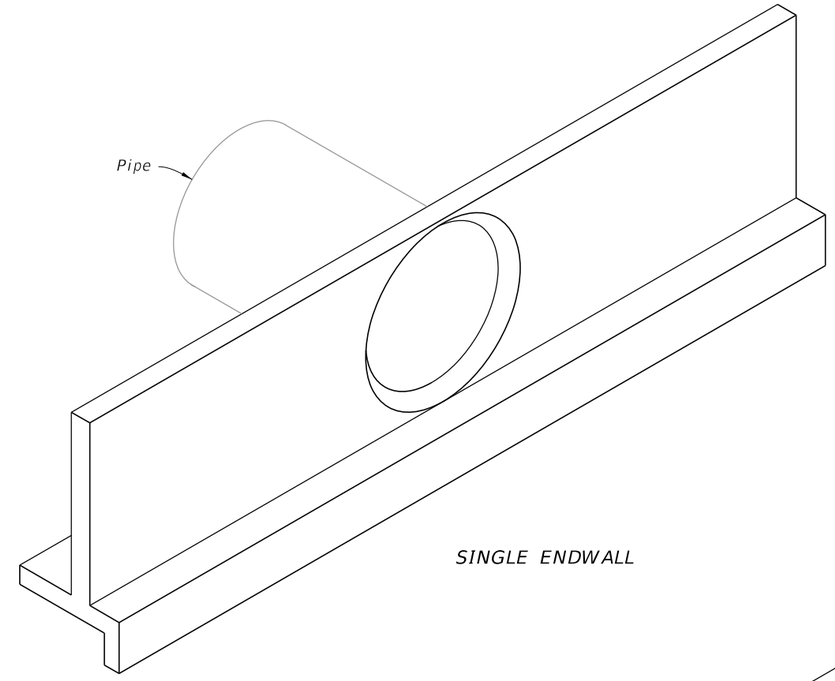

SINGLE ENDWALL

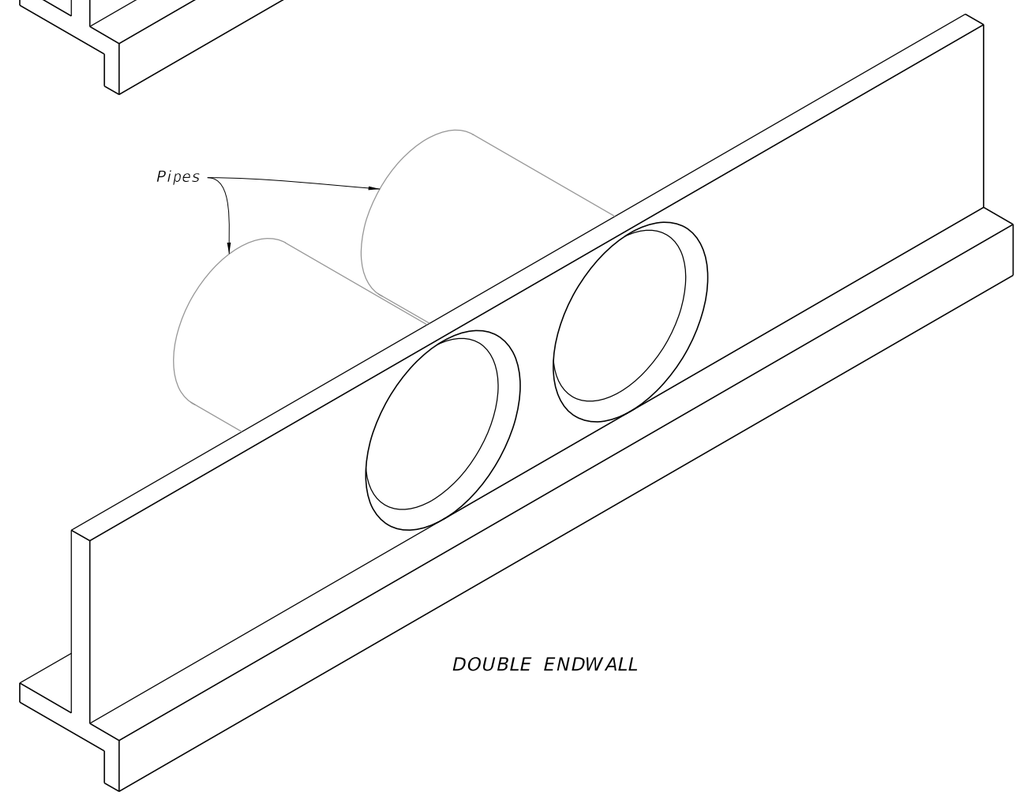

DOUBLE ENDWALL

STRAIGHT CONCRETE ENDWALLS 60" PIPE

10/20/2022 8:49:01 AM

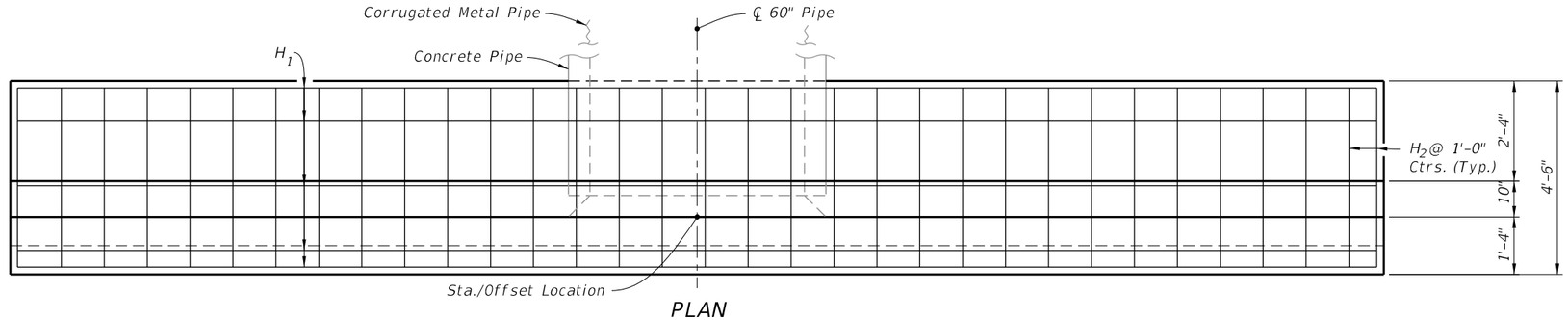

PLAN
(Showing Bars In Footing)

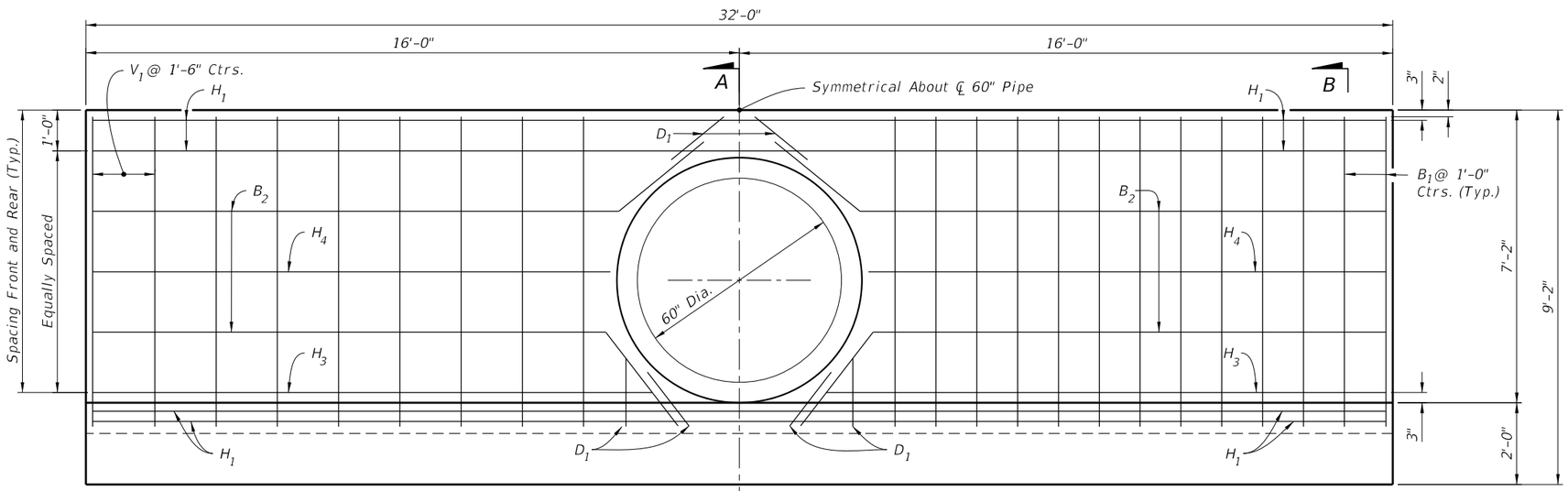

HALF ELEVATION
(Showing Bars in Front Face of Wall)

A

HALF ELEVATION
(Showing Bars in Back Face of Wall)

B

NOTES:

1. 2" clearance on all reinforcement, unless otherwise shown.
2. Cut and bend B_2 and B_3 Bars as shown.
3. All bar dimensions are out to out.

LEGEND:

H = Horizontal Bars B = Bent Bars

V = Vertical Bars D = Dowels or Diagonal Bars

SINGLE 60" PIPE ESTIMATED QUANTITIES

ITEM	UNIT	RCP	CMP
Class II Concrete	Cu. Yd.	11.3	11.4
Reinforcing Steel	Lb.	695	695

BILL OF REINFORCING STEEL

MARK	SIZE	NO. REQD.	LENGTH
H_1	4	9	31'-8"
H_2	4	32	4'-2"
H_3	4	4	13'-9"
H_4	4	4	12'-4"
V_1	4	18	7'-6"
B_1	4	26	9'-4"
B_2	4	4	31'-8"
D_1	4	8	1'-8"

BAR B_1
BENDING DIAGRAM

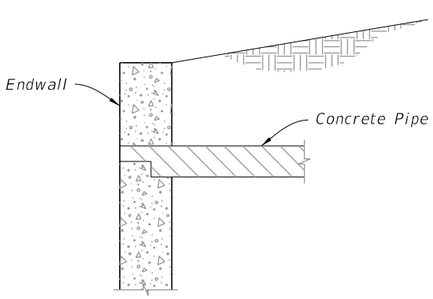

DETAIL "A"
(Concrete Pipe Optional Entrance)

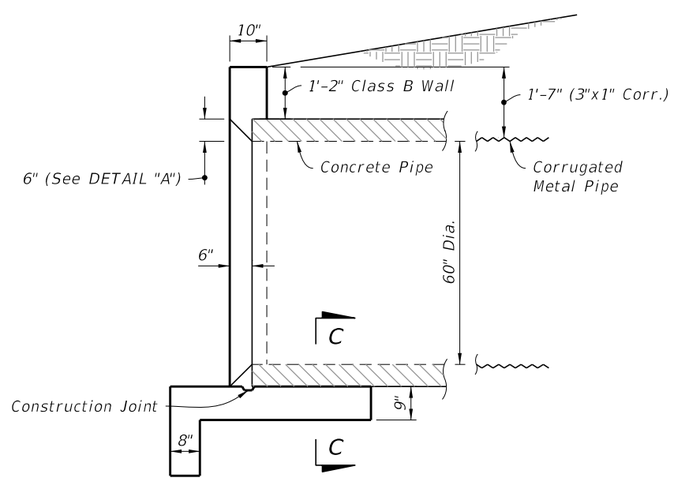

SECTION A-A
(Rebar Not Shown)

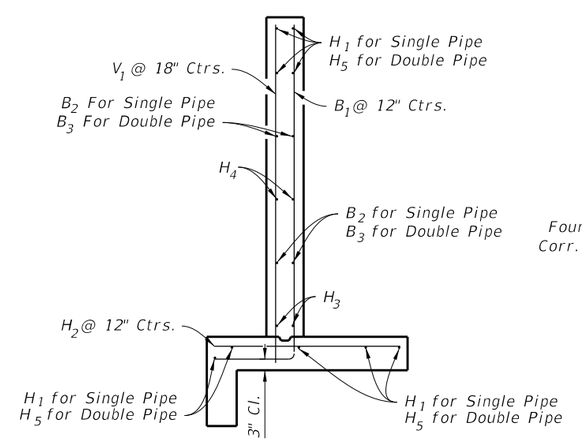

SECTION B-B
(Typical Section)

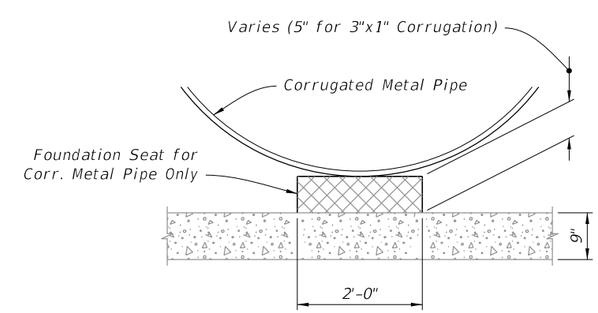

SECTION C-C

SINGLE 60" PIPE ENDWALL DETAILS

LAST REVISION	REVISION	DESCRIPTION:			INDEX	SHEET
11/01/19			FY 2023-24 STANDARD PLANS	STRAIGHT CONCRETE ENDWALLS SINGLE AND DOUBLE 60" PIPE	430-031	2 of 3

10/20/2022 8:49:01 AM

NOTES:

1. 2" clearance on all reinforcement, unless otherwise shown.
2. Cut and bend B_3 Bars as shown.
3. All bar dimensions are out to out.

LEGEND:

H = Horizontal Bars

V = Vertical Bars

B = Bent Bars

D = Dowels or Diagonal Bars

DOUBLE 60" PIPE ESTIMATED QUANTITIES

ITEM	UNIT	RCP	CMP
Class II Concrete	Cu. Yd.	13.7	13.8
Reinforcing Steel	Lb.	824	824

BILL OF REINFORCING STEEL

MARK	SIZE	NO. REQD.	LENGTH
H_2	4	41	4'-2"
H_3	4	4	13'-9"
H_5	4	9	40'-2"
H_6	4	4	12'-6"
H_7	4	2	2'-2"
V_1	4	20	7'-6"
B_1	4	29	9'-4"
B_3	4	8	15'-0"
B_4	4	4	6'-0"
D_1	4	16	1'-8"

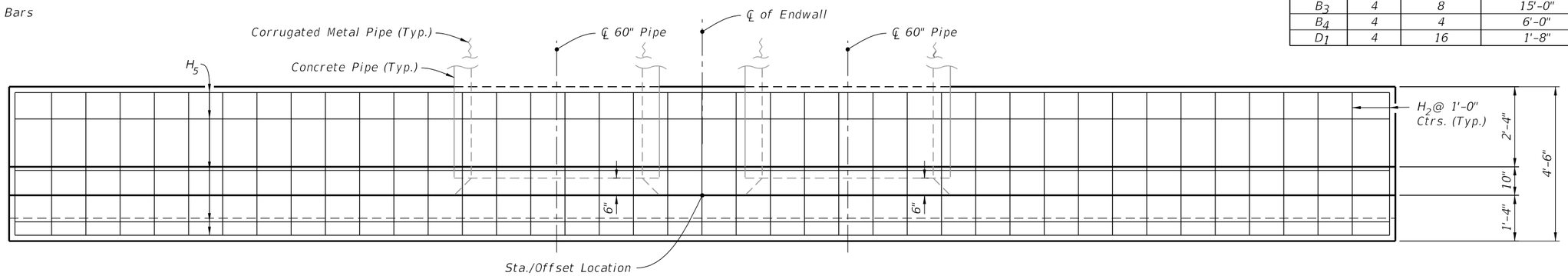

PLAN
(Showing Bars In Footing)

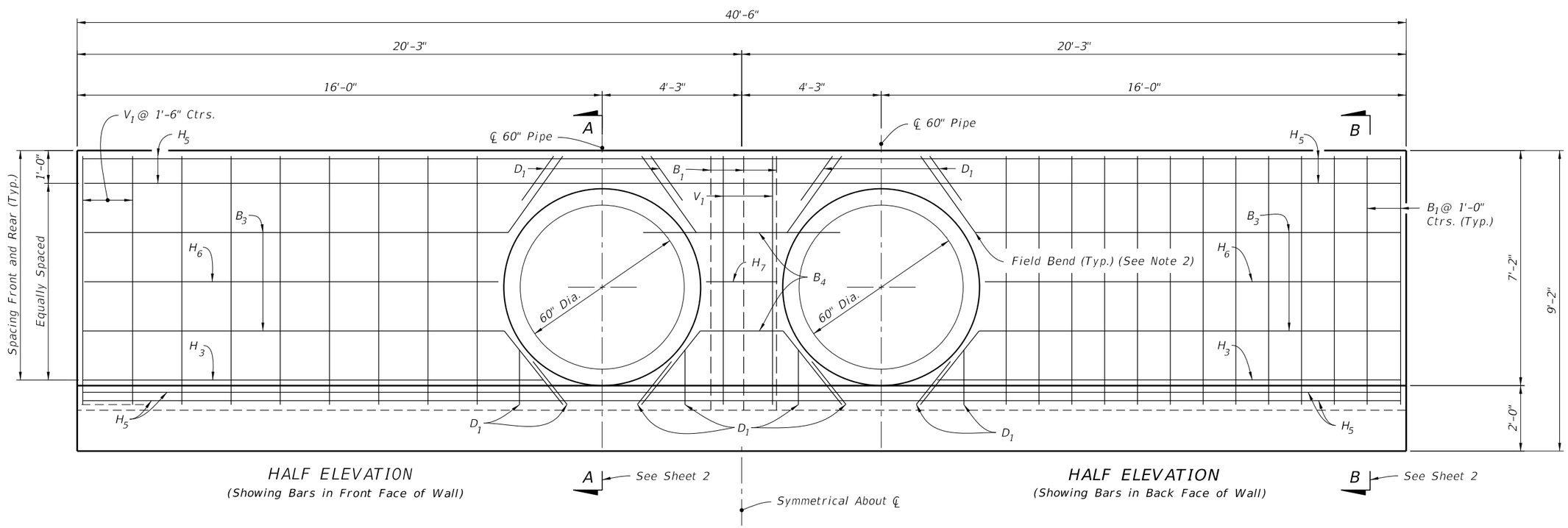

HALF ELEVATION
(Showing Bars in Front Face of Wall)

HALF ELEVATION
(Showing Bars in Back Face of Wall)

DOUBLE 60" PIPE ENDWALL DETAILS

LAST REVISION	REVISION	DESCRIPTION:			INDEX	SHEET
11/01/19			FY 2023-24 STANDARD PLANS	STRAIGHT CONCRETE ENDWALLS SINGLE AND DOUBLE 60" PIPE	430-031	3 of 3

10/20/2022 8:49:02 AM

GENERAL NOTES:

1. Use Class II concrete.

2. Reinforcing steel is either Grade 40 or 60.

3. Endwalls may be cast in place or precast concrete. The Contractor or the Supplier will determine the additional reinforcement necessary for handling precast units.

4. Chamfer all exposed edges and corners ¾" unless otherwise shown.

5. Quantities shown are for estimating purposes only.

TABLE OF CONTENTS:

Sheet	Description
1	General Notes and Contents
2	Single 66" Pipe Endwall Details
3	Double 66" Pipe Endwall Details

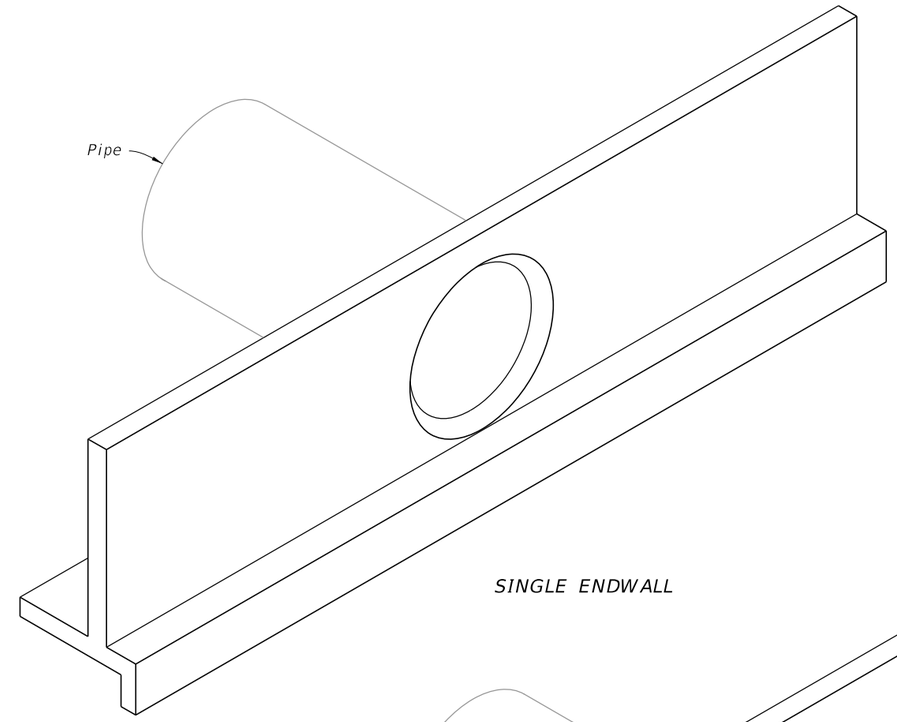

SINGLE ENDWALL

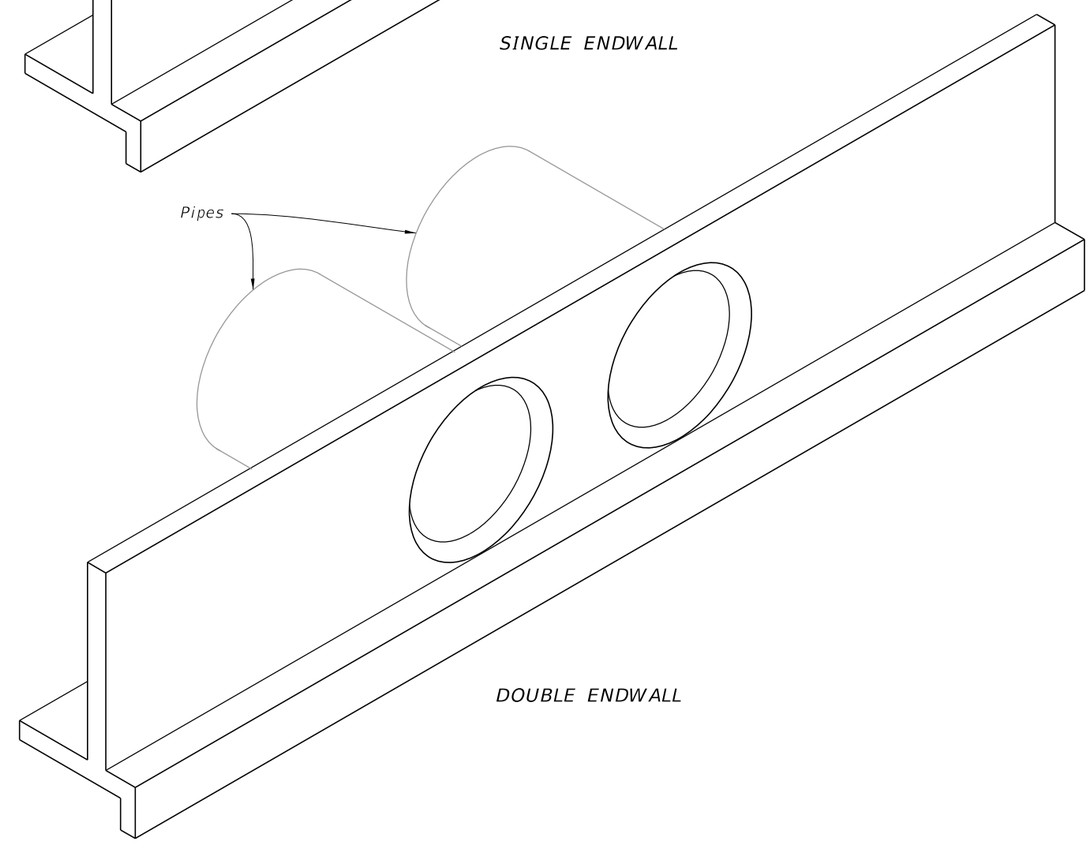

DOUBLE ENDWALL

STRAIGHT CONCRETE ENDWALLS 66" PIPE

10/20/2022 8:49:03 AM

LAST REVISION	REVISION	DESCRIPTION:			INDEX	SHEET
11/01/19			FY 2023-24 STANDARD PLANS	STRAIGHT CONCRETE ENDWALLS SINGLE AND DOUBLE 66" PIPE	430-032	1 of 3

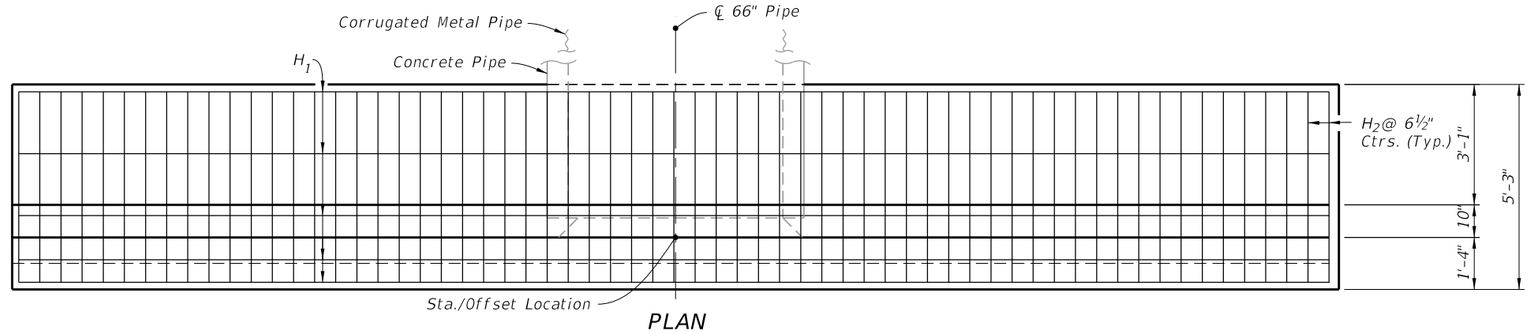

PLAN
(Showing Bars In Footing)

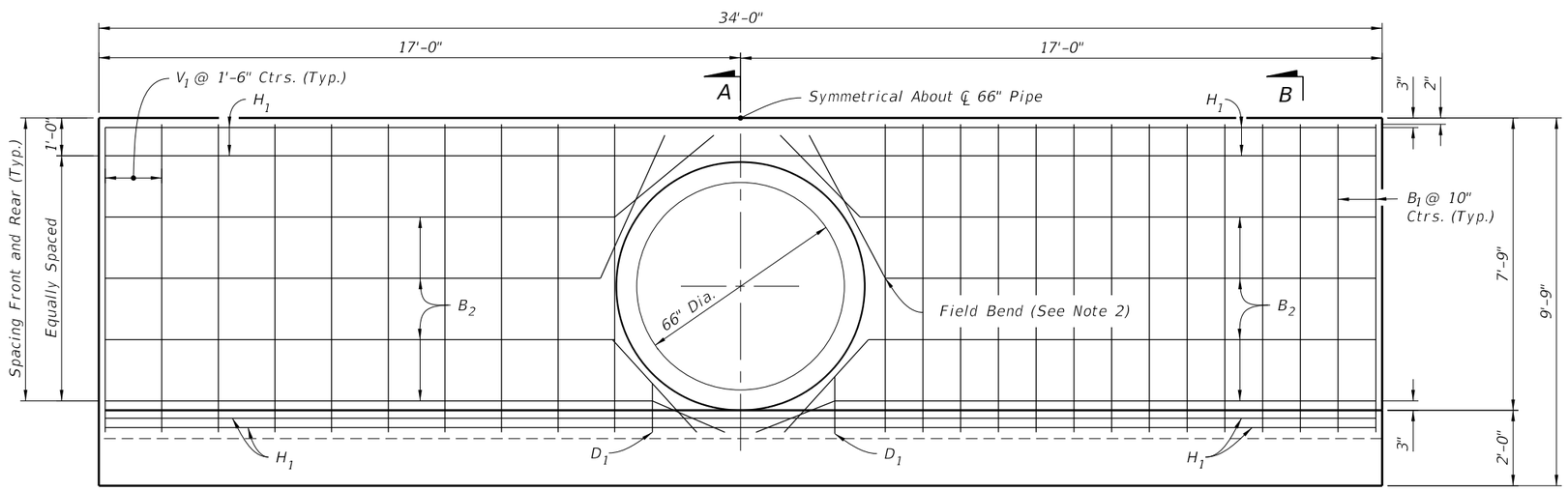

HALF ELEVATION
(Showing Bars in Front Face of Wall)

A

HALF ELEVATION
(Showing Bars in Back Face of Wall)

B

NOTES:

1. 2" clearance on all reinforcement, unless otherwise shown.
2. Cut and bend B_2 Bars as shown.
3. All bar dimensions are out to out.

LEGEND:

H = Horizontal Bars B = Bent Bars

V = Vertical Bars D = Dowels or Diagonal Bars

SINGLE 66" PIPE ENDWALL ESTIMATED QUANTITIES

ITEM	UNIT	RCP	CMP
Class II Concrete	Cu. Yd.	13.2	13.3
Reinforcing Steel	Lb.	1,170	1,170

BILL OF REINFORCING STEEL

MARK	SIZE	NO. REQD.	LENGTH
H_1	4	9	33'-8"
H_2	5	63	4'-11"
V_1	4	20	8'-1"
B_1	5	34	9'-11"
B_2	4	8	33'-8"
D_1	4	4	1'-8"

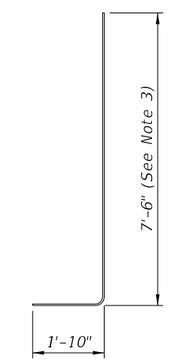

BAR B_1
BENDING DIAGRAM

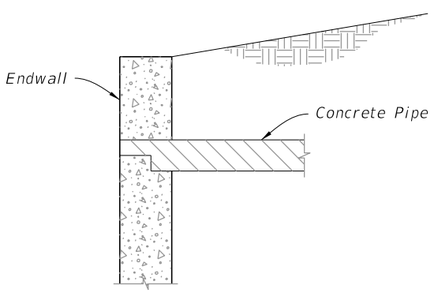

DETAIL "A"
(Concrete Pipe Optional Entrance)

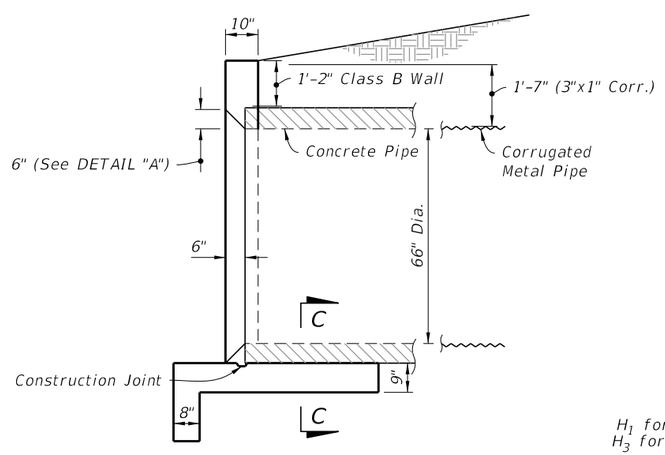

SECTION A-A
(Rebar Not Shown)

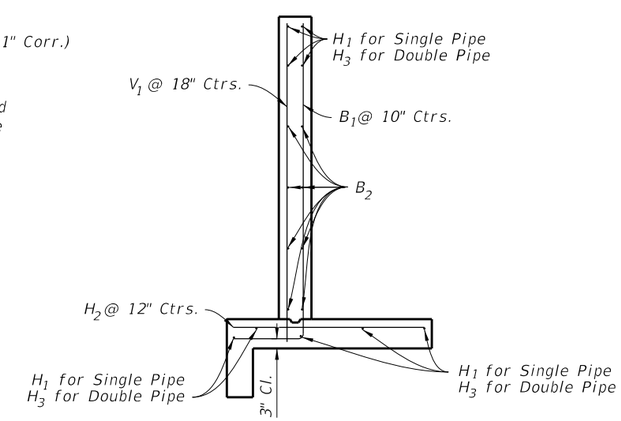

SECTION B-B
(Typical Section)

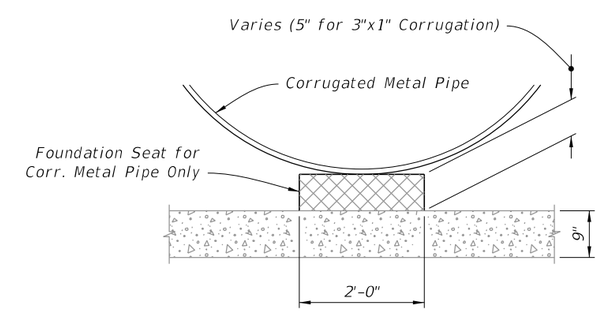

SECTION C-C

SINGLE 66" PIPE ENDWALL DETAILS

LAST REVISION	REVISION	DESCRIPTION:			INDEX	SHEET
11/01/19			FY 2023-24 STANDARD PLANS	STRAIGHT CONCRETE ENDWALLS SINGLE AND DOUBLE 66" PIPE	430-032	2 of 3

10/20/2022 8:49:03 AM

NOTES:

1. 2" clearance on all reinforcement, unless otherwise shown.
2. Cut and bend B_3 Bars as shown.
3. All bar dimensions are out to out.

LEGEND:

H = Horizontal Bars

V = Vertical Bars

B = Bent Bars

D = Dowels or Diagonal Bars

DOUBLE 66" PIPE ENDWALL ESTIMATED QUANTITIES

ITEM	UNIT	RCP	CMP
Class II Concrete	Cu. Yd.	16.0	16.2
Reinforcing Steel	Lb.	1,406	1,406

BILL OF REINFORCING STEEL

MARK	SIZE	NO. REQD.	LENGTH
H_2	5	80	4'-11"
H_3	4	9	42'-8"
V_1	4	22	8'-1"
B_1	5	37	9'-11"
B_3	4	8	42'-8"
D_1	4	8	1'-8"

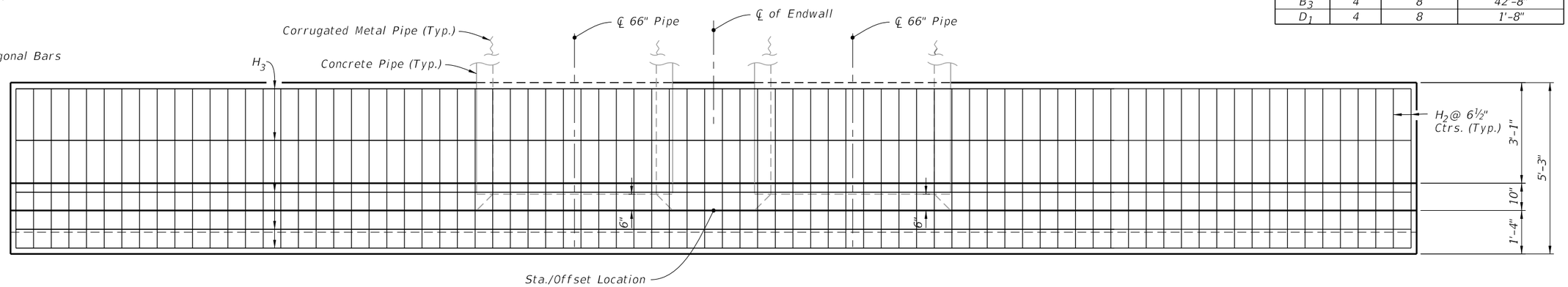

PLAN
(Showing Bars In Footing)

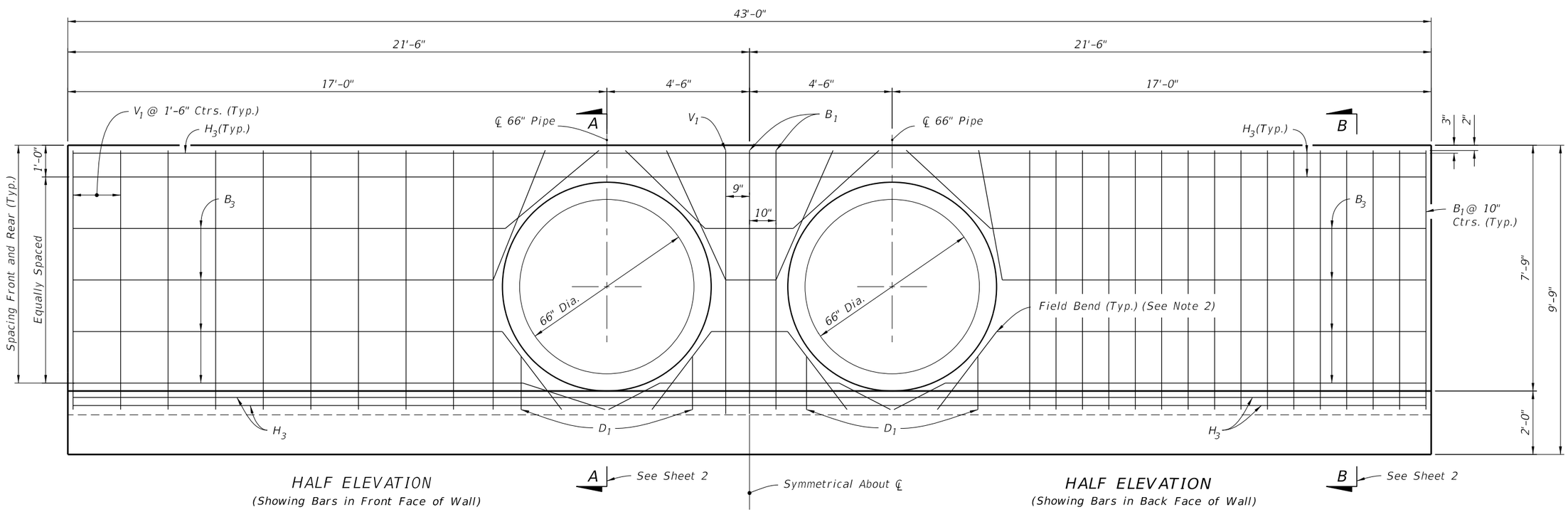

HALF ELEVATION
(Showing Bars in Front Face of Wall)

HALF ELEVATION
(Showing Bars in Back Face of Wall)

10/20/2022 8:49:04 AM

DOUBLE 66" PIPE ENDWALL DETAILS

LAST REVISION	REVISION	DESCRIPTION:			INDEX	SHEET
11/01/19			FY 2023-24 STANDARD PLANS	STRAIGHT CONCRETE ENDWALLS SINGLE AND DOUBLE 66" PIPE	430-032	3 of 3

GENERAL NOTES:

1. Use Class II concrete.
2. Reinforcing steel is either Grade 40 or 60.
3. Endwalls may be cast in place or precast concrete. The Contractor or the Supplier will determine the additional reinforcement necessary for handling precast units.
4. Chamfer all exposed edges and corners ¾" unless otherwise shown.
5. Quantities shown are for estimating purposes only.

TABLE OF CONTENTS:

Sheet	Description
1	General Notes and Contents
2	Single 72" Pipe Endwall Details
3	Double 72" Pipe Endwall Details

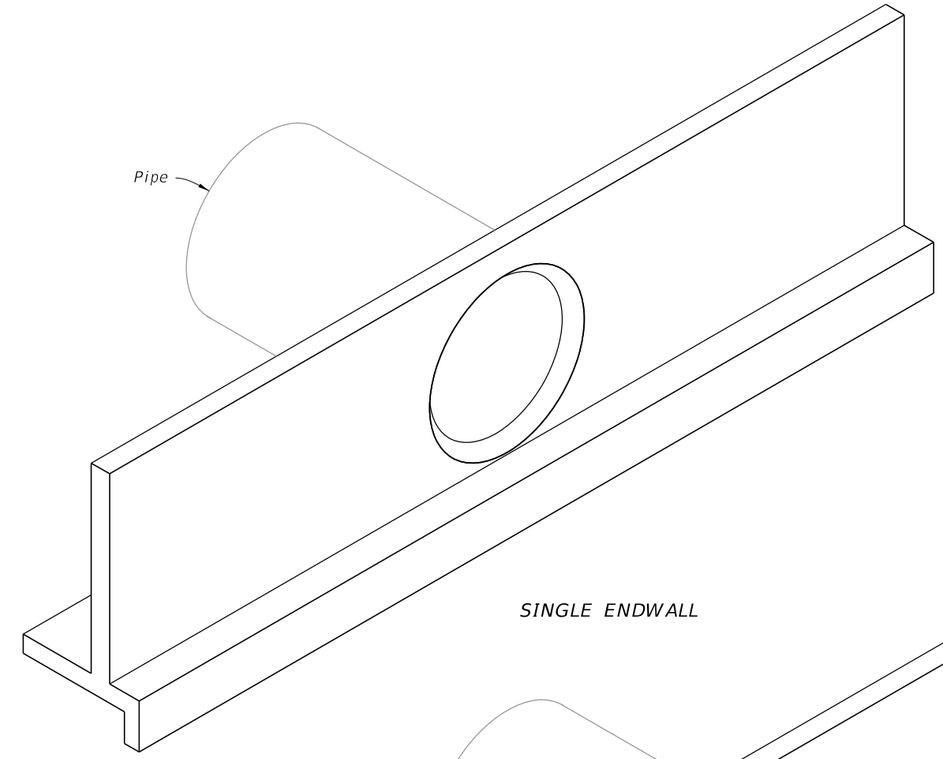

SINGLE ENDWALL

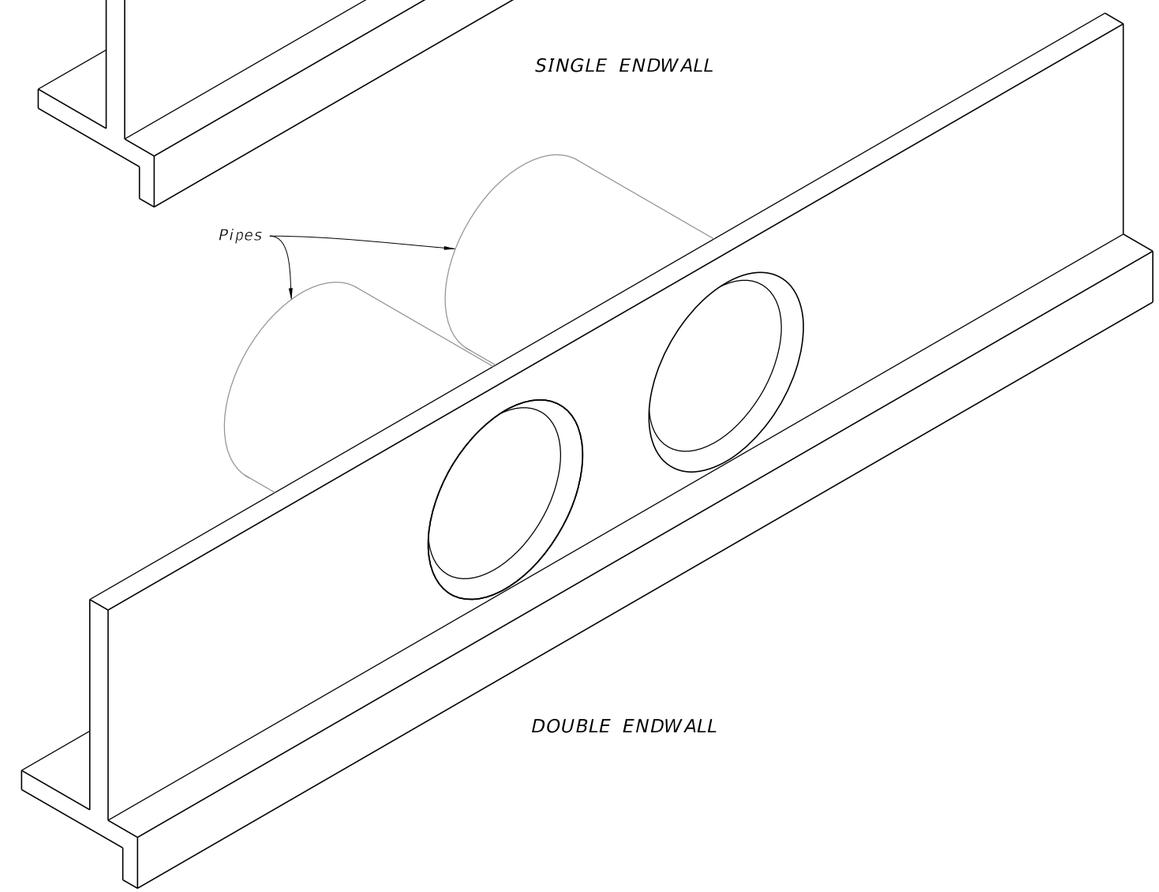

DOUBLE ENDWALL

STRAIGHT CONCRETE ENDWALLS 72" PIPE

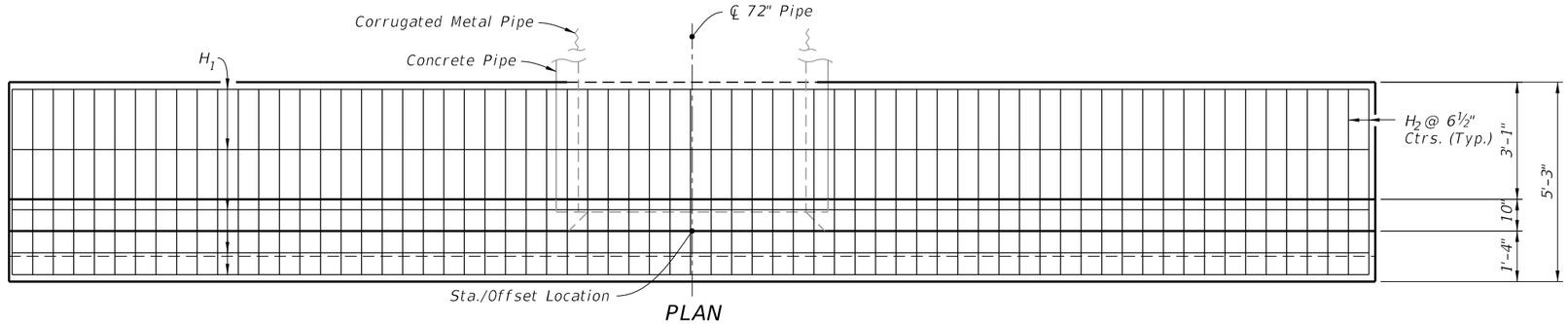

PLAN
(Showing Bars In Footing)

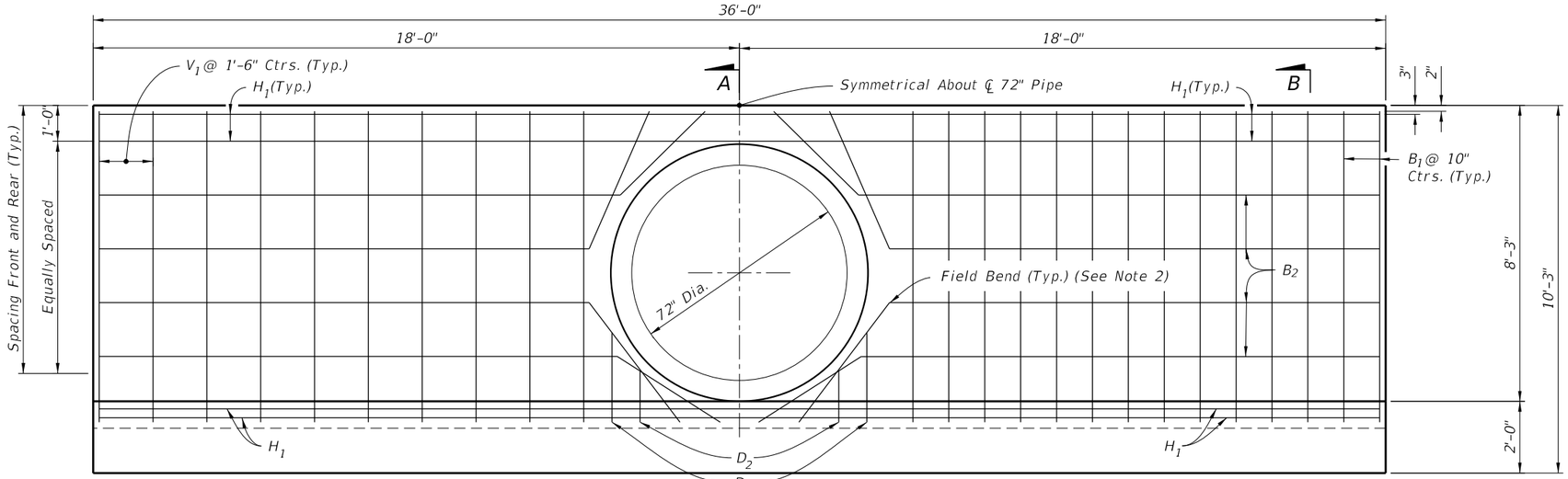

HALF ELEVATION
(Showing Bars in Front Face of Wall)

A

HALF ELEVATION
(Showing Bars in Back Face of Wall)

B

NOTES:

1. 2" clearance on all reinforcement, unless otherwise shown.
2. Cut and bend B_2 Bars as shown.
3. All bar dimensions are out to out.

LEGEND:

H = Horizontal Bars B = Bent Bars

V = Vertical Bars D = Dowels or Diagonal Bars

SINGLE 72" PIPE ENDWALL ESTIMATED QUANTITIES

ITEM	UNIT	RCP	CMP
Class II Concrete	Cu. Yd.	14.4	14.5
Reinforcing Steel	Lb.	1249	1249

BILL OF REINFORCING STEEL

MARK	SIZE	NO. REQD.	LENGTH
H_1	4	9	35'-8"
H_2	5	68	4'-11"
V_1	4	20	8'-7"
B_1	5	34	10'-5"
B_2	4	8	35'-8"
D_1	4	4	2'-6"
D_2	4	4	1'-6"

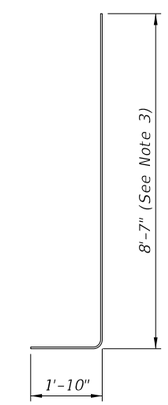

BAR B_1
BENDING DIAGRAM

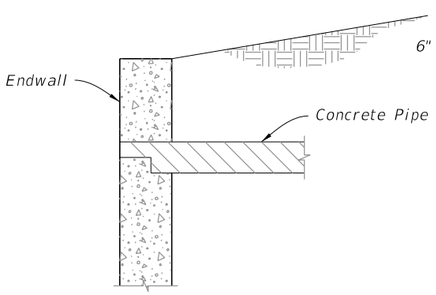

DETAIL "A"
(Concrete Pipe Optional Entrance)

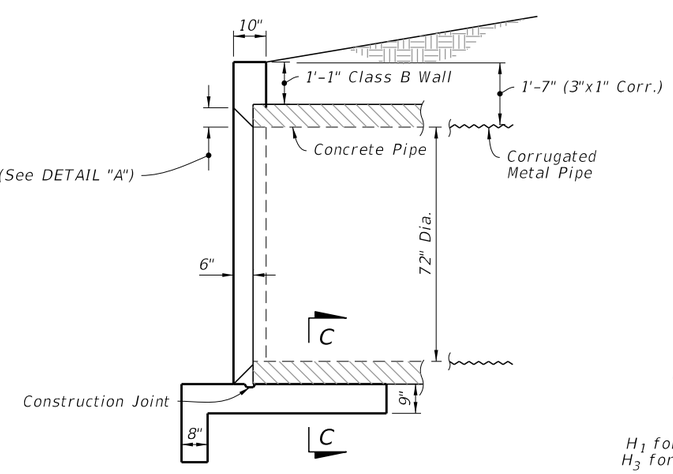

SECTION A-A
(Rebar Not Shown)

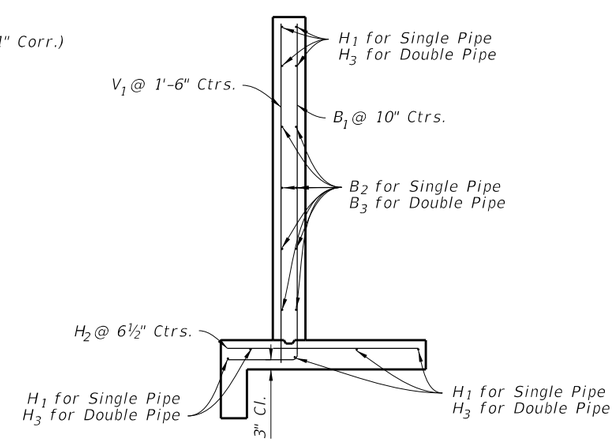

SECTION B-B
(Typical Section)

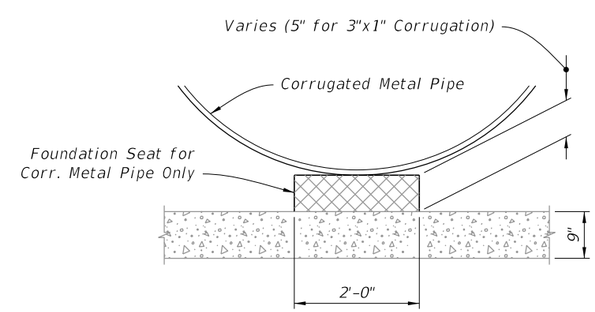

SECTION C-C

SINGLE 72" PIPE ENDWALL DETAILS

10/20/2022 8:49:06 AM

LAST REVISION	REVISION	DESCRIPTION:	FY 2023-24 STANDARD PLANS	STRAIGHT CONCRETE ENDWALLS SINGLE AND DOUBLE 72" PIPE	INDEX	SHEET
11/01/19					430-033	2 of 3

NOTES:

1. 2" clearance on all reinforcement, unless otherwise shown.
2. Cut and bend B_3 Bars as shown.
3. All bar dimensions are out to out.

LEGEND:

H = Horizontal Bars

V = Vertical Bars

B = Bent Bars

D = Dowels or Diagonal Bars

DOUBLE 72" PIPE ENDWALL ESTIMATED QUANTITIES

ITEM	UNIT	RCP	CMP
Class II Concrete	Cu. Yd.	17.5	17.8
Reinforcing Steel	Lb.	1519	1519

BILL OF REINFORCING STEEL

MARK	SIZE	NO. REQD.	LENGTH
H_2	5	85	4'-11"
H_3	4	9	45'-8"
V_1	4	23	8'-7"
B_1	5	38	10'-5"
B_3	4	8	45'-8"
D_1	4	8	2'-6"
D_2	4	8	1'-6"

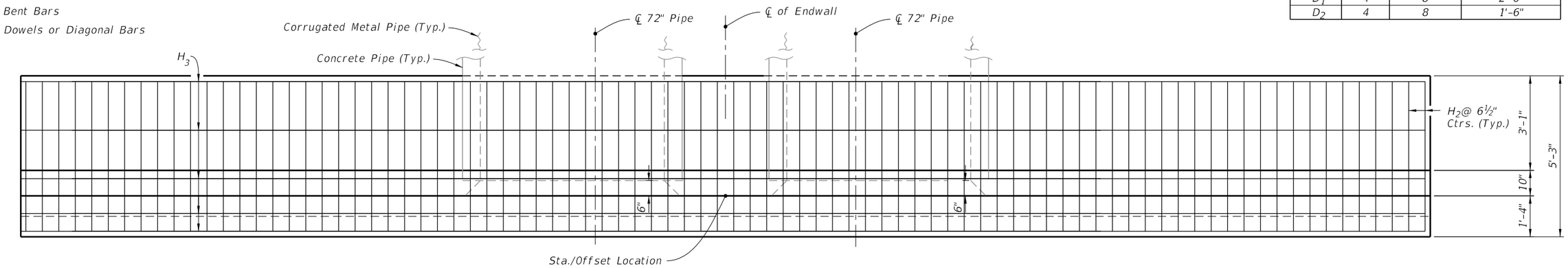

PLAN
(Showing Bars In Footing)

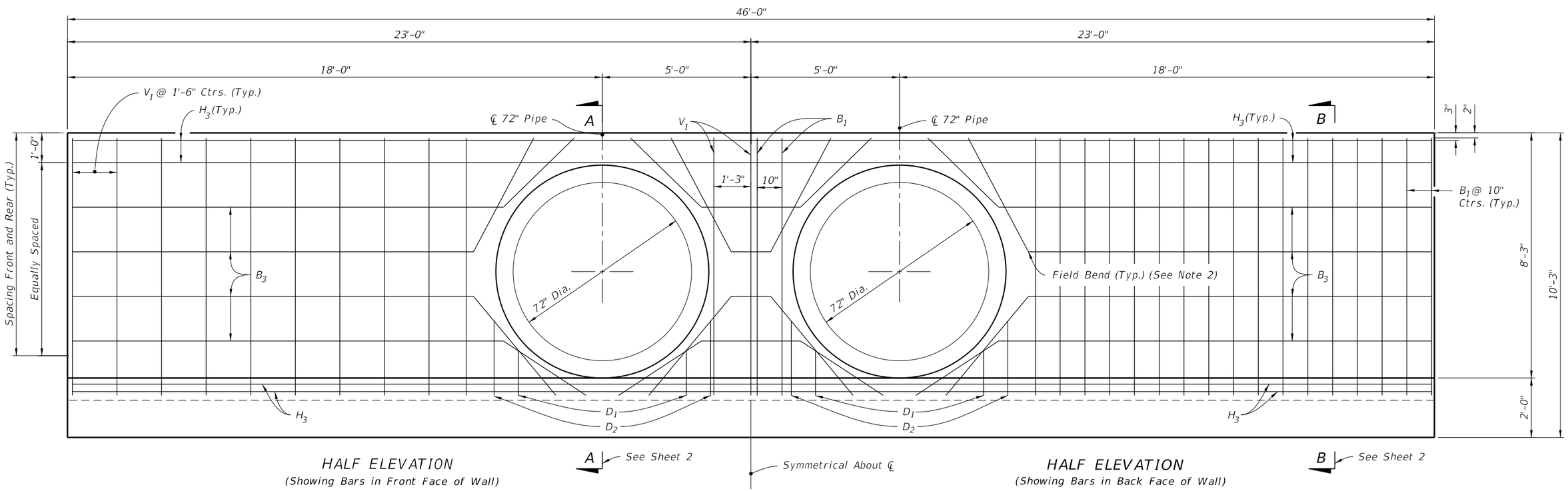

HALF ELEVATION
(Showing Bars in Front Face of Wall)

HALF ELEVATION
(Showing Bars in Back Face of Wall)

DOUBLE 72" PIPE ENDWALL DETAILS

LAST REVISION	REVISION	DESCRIPTION:	FY 2023-24 STANDARD PLANS	STRAIGHT CONCRETE ENDWALLS SINGLE AND DOUBLE 72" PIPE	INDEX	SHEET
11/01/19					430-033	3 of 3

10/20/2022 8:49:06 AM

GENERAL NOTES:

1. Use Class II concrete.

2. Reinforcing steel is either Grade 40 or 60.

3. Endwalls may be cast in place or precast concrete. The Contractor or the Supplier will determine the additional reinforcement necessary for handling precast units.

4. Chamfer all exposed edges and corners ¾" unless otherwise shown.

5. Quantities shown are for estimating purposes only.

TABLE OF CONTENTS:

Sheet	Description
1	General Notes and Contents
2	Single 84" Pipe Endwall Details

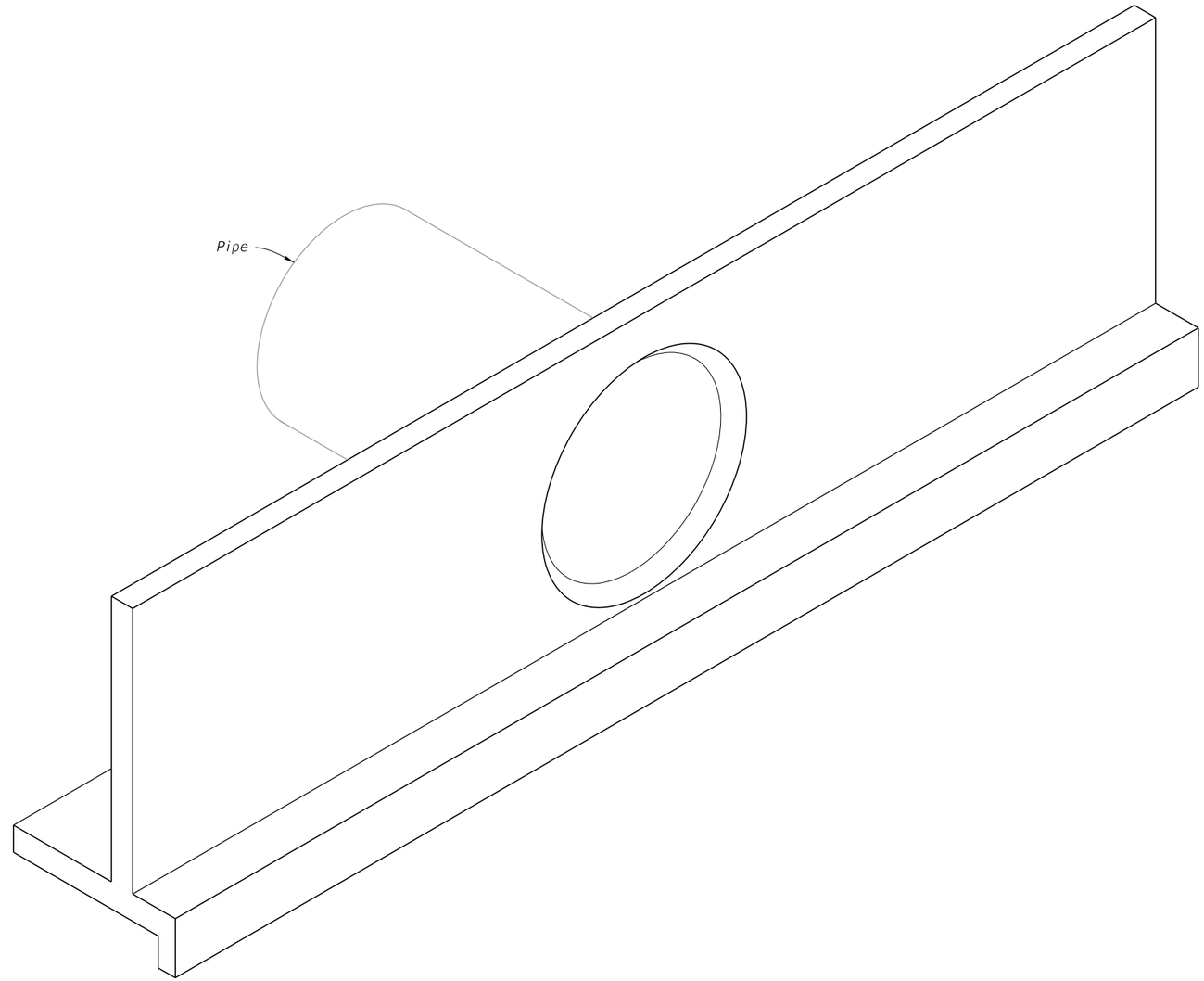

STRAIGHT CONCRETE ENDWALL SINGLE 84" PIPE

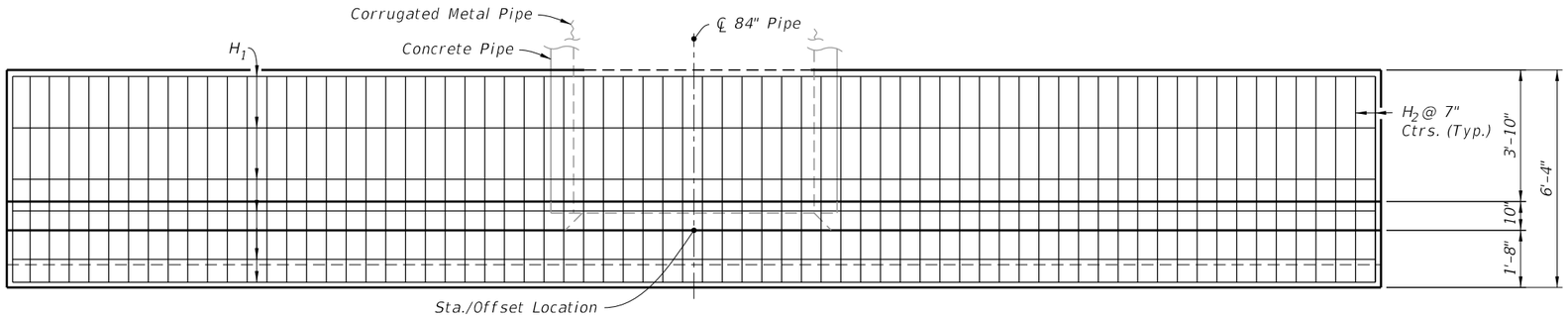

PLAN
(Showing Bars In Footing)

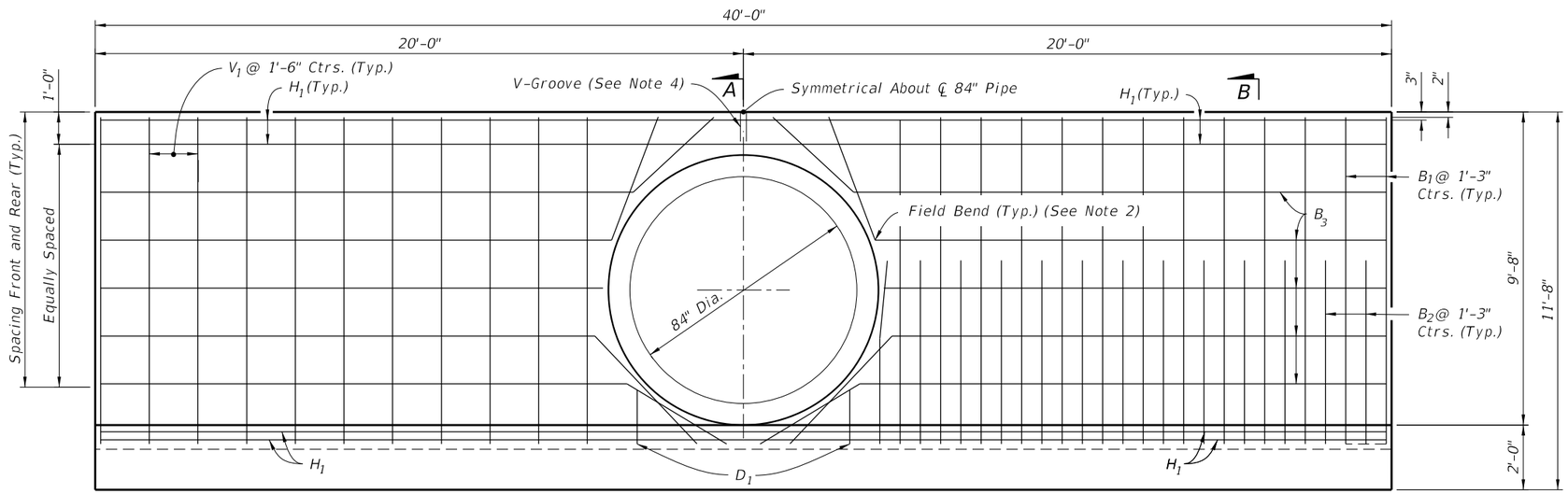

HALF ELEVATION
(Showing Bars in Front Face of Wall)
A

HALF ELEVATION
(Showing Bars in Back Face of Wall)
B

NOTES:

1. 2" clearance on all reinforcement, unless otherwise shown.
2. Cut and/or bend B_3 Bars as shown.
3. All bar dimensions are out to out.
4. Install a ¾" V-Groove at the top, front and back.

SINGLE 84" PIPE ENDWALL ESTIMATED QUANTITIES

ITEM	UNIT	RCP	CMP
Class II Concrete	Cu. Yd.	20.0	20.2
Reinforcing Steel	Lb.	2,095	2,095

BILL OF REINFORCING STEEL

MARK	SIZE	NO. REQD.	LENGTH
H_1	4	6	39'-8"
H_2	6	69	6'-0"
V_1	4	22	10'-2"
B_1	6	26	12'-4"
B_2	6	26	7'-10"
B_3	4	14	39'-8"
D_1	4	4	2'-0"

LEGEND:

H = Horizontal Bars
V = Vertical Bars
B = Bent Bars
D = Dowels or Diagonal Bars

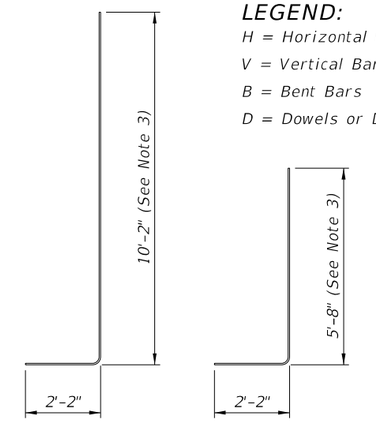

BAR B_1 BAR B_2
BENDING DIAGRAM

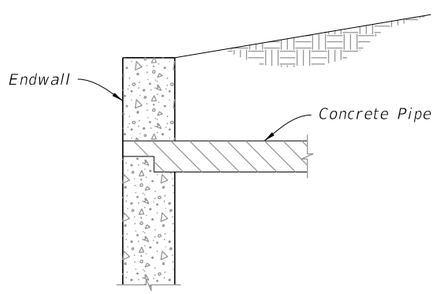

DETAIL "A"
(Concrete Pipe Optional Entrance)

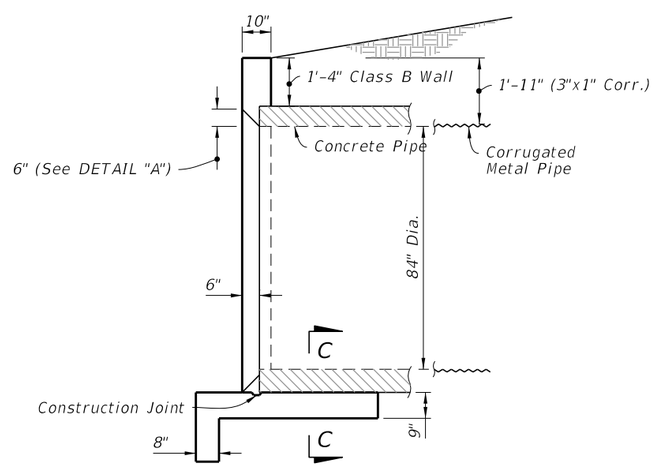

SECTION A-A
(Rebar Not Shown)

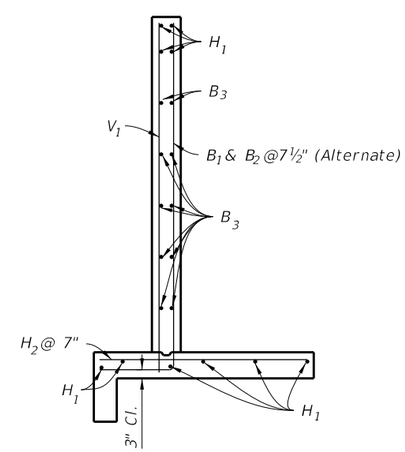

SECTION B-B
(Typical Section)

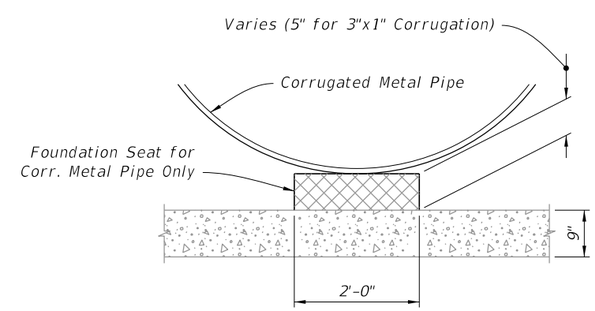

SECTION C-C

SINGLE 84" PIPE ENDWALL DETAILS

10/20/2022 8:49:08 AM

LAST REVISION	REVISION	DESCRIPTION:			INDEX	SHEET
11/01/19			FY 2023-24 STANDARD PLANS	STRAIGHT CONCRETE ENDWALLS SINGLE 84" PIPE	430-034	2 of 2

GENERAL NOTES:

1. Use Class II concrete.
2. Chamfer all exposed edges and corners ¾" unless otherwise shown.
3. Quantities shown are for estimating purposes only.

TABLE OF CONTENTS:

Sheet	Description
1	General Notes and Contents
2	U-Type and 45° Endwalls

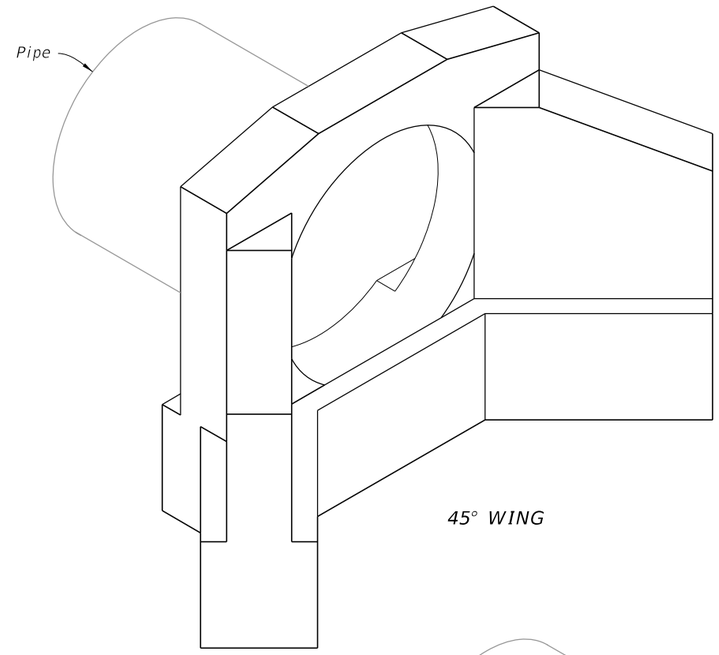

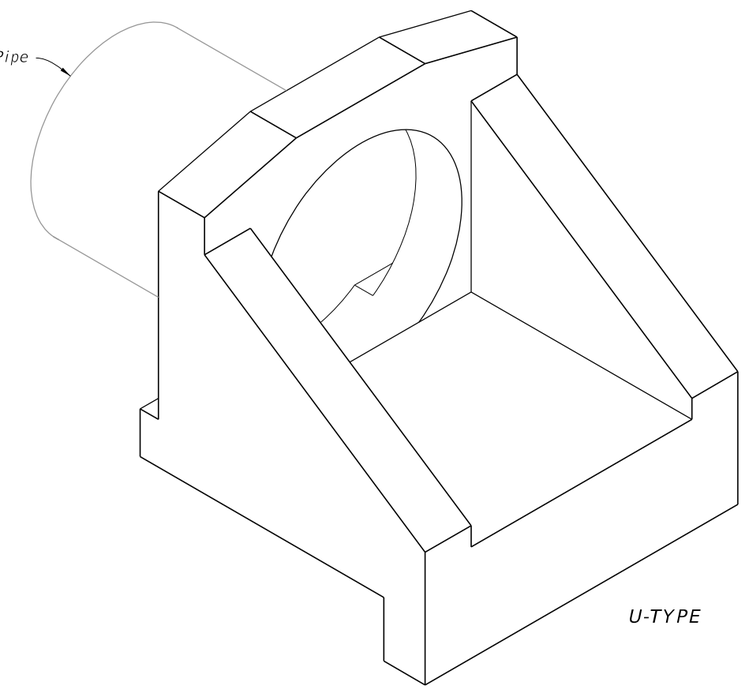

WINGED CONCRETE ENDWALLS

10/20/2022 8:49:09 AM

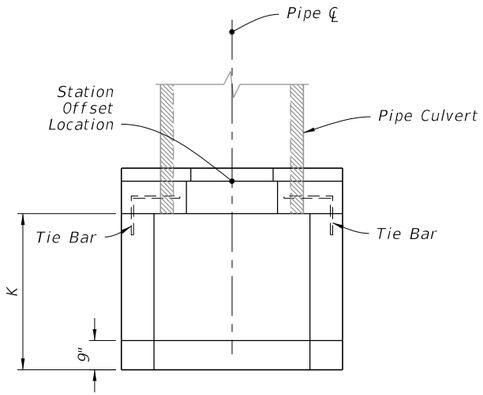

PLAN

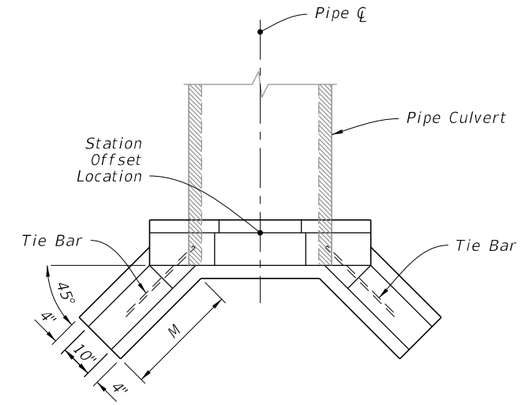

PLAN

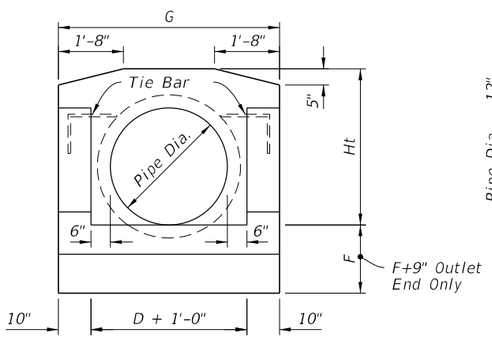

FRONT ELEVATION

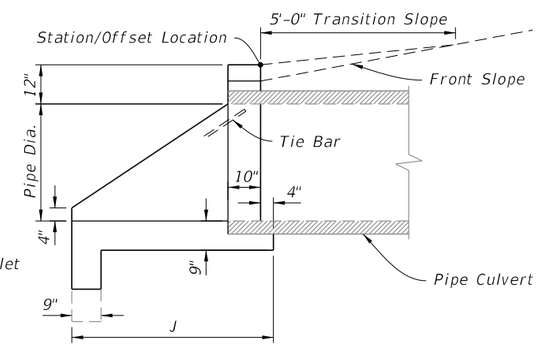

SIDE ELEVATION

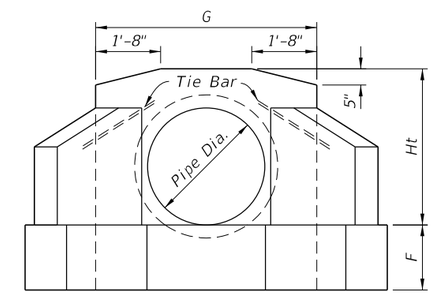

FRONT ELEVATION

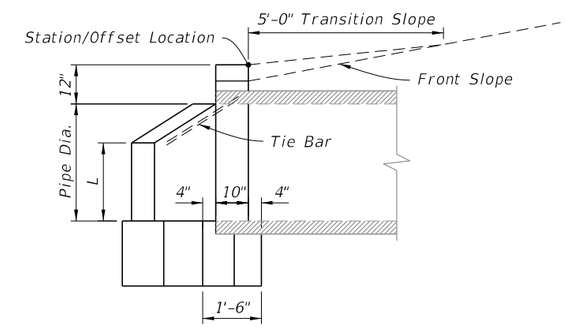

SIDE ELEVATION

DIMENSIONS AND ESTIMATED QUANTITIES PIPE CULVERT ENDWALLS WITH U-TYPE WINGS													
DIMENSIONS							QUANTITIES IN ONE ENDWALL						
Pipe		Wall			Footing		Concrete, Class II, Total (CY)						Steel Tie Bars
							RCP		CMP		CIP		
Dia. D	Area (ft²)	G	Ht	K	F	J	Inlet	Outlet	Inlet	Outlet	Inlet	Outlet	
15"	1.2	3'-11"	2'-3"	1'-5"	1'-3"	2'-7"	0.59	0.67	0.62	0.70	0.61	0.70	none
18"	1.8	4'-2"	2'-6"	1'-9"	1'-3"	2'-11"	0.70	0.79	0.74	0.82	0.74	0.82	none
24"	3.1	4'-8"	3'-0"	2'-6"	1'-6"	3'-8"	1.01	1.11	1.06	1.16	1.06	1.16	2-#6 Bars x 2'-0"
30"	4.9	5'-2"	3'-6"	3'-3"	1'-6"	4'-5"	1.33	1.44	1.41	1.51	1.40	1.51	2-#6 Bars x 2'-0"
36"	7.1	5'-8"	4'-0"	4'-0"	1'-9"	5'-2"	1.73	1.85	1.84	1.96	1.82	1.94	2-#6 Bars x 2'-6"
42"	9.6	6'-2"	4'-6"	4'-9"	2'-0"	5'-11"	2.19	2.32	2.32	2.45			2-#6 Bars x 2'-6"
48"	12.6	6'-8"	5'-0"	5'-6"	2'-0"	6'-8"	2.64	2.78	2.81	2.95			2-#6 Bars x 3'-0"

ENDWALL WITH U-TYPE WINGS

DIMENSIONS AND ESTIMATED QUANTITIES PIPE CULVERT ENDWALLS WITH 45° WINGS										
DIMENSIONS							QUANTITIES IN ONE ENDWALL			
Pipe		Wall				Footing	Concrete, Class II Total (CY)			Steel Tie Bars
Dia. D	Area (ft²)	Ht	G	L	M	F	RCP	CMP	CIP	
15"	1.2	2'-3"	3'-7"	1'-0"	1'-3"	1'-3"	0.56	0.59	0.59	none
18"	1.8	2'-6"	3'-10"	1'-2"	1'-7"	1'-3"	0.74	0.77	0.77	none
24"	3.1	3'-0"	4'-4"	1'-5"	2'-1"	1'-4"	1.01	1.06	1.06	2 -#6 Bars x 2'-0"
30"	4.9	3'-6"	4'-10"	1'-9"	2'-5"	1'-6"	1.32	1.40	1.39	2 -#6 Bars x 2'-0"
36"	7.1	4'-0"	5'-4"	2'-0"	2'-11"	1'-8"	1.72	1.83	1.82	2 -#6 Bars x 2'-6"
42"	9.6	4'-6"	5'-10"	2'-3"	3'-6"	2'-0"	2.34	2.47		2 -#6 Bars x 2'-6"
48"	12.6	5'-0"	6'-4"	2'-6"	4'-0"	2'-0"	2.74	2.90		2 -#6 Bars x 2'-6"

ENDWALL WITH 45° WINGS

U-TYPE AND 45° ENDWALLS

GENERAL NOTES:

1. Use Class II Concrete.

2. Channel section C3 x 6.0 may be substituted for the C4 x 5.4 channel.

3. All steel reinforcing bars are #4 with 2" cover except as noted. Spacing shown are center to center. Lap bars 1'-5" minimum. Welded wire fabric (two cages max.) with an equivalent cross section area (0.20 sq. in.) may be substituted for bar reinforcement.

4. Drill 1¼" holes 8" deep with a rotary drill in existing endwall for dowel bars. Thoroughly clean holes prior to installing Adhesive-Bonded Dowels.

5. Quantities shown are for estimating purposes only.

6. For supplemental details, see Index 425-001.

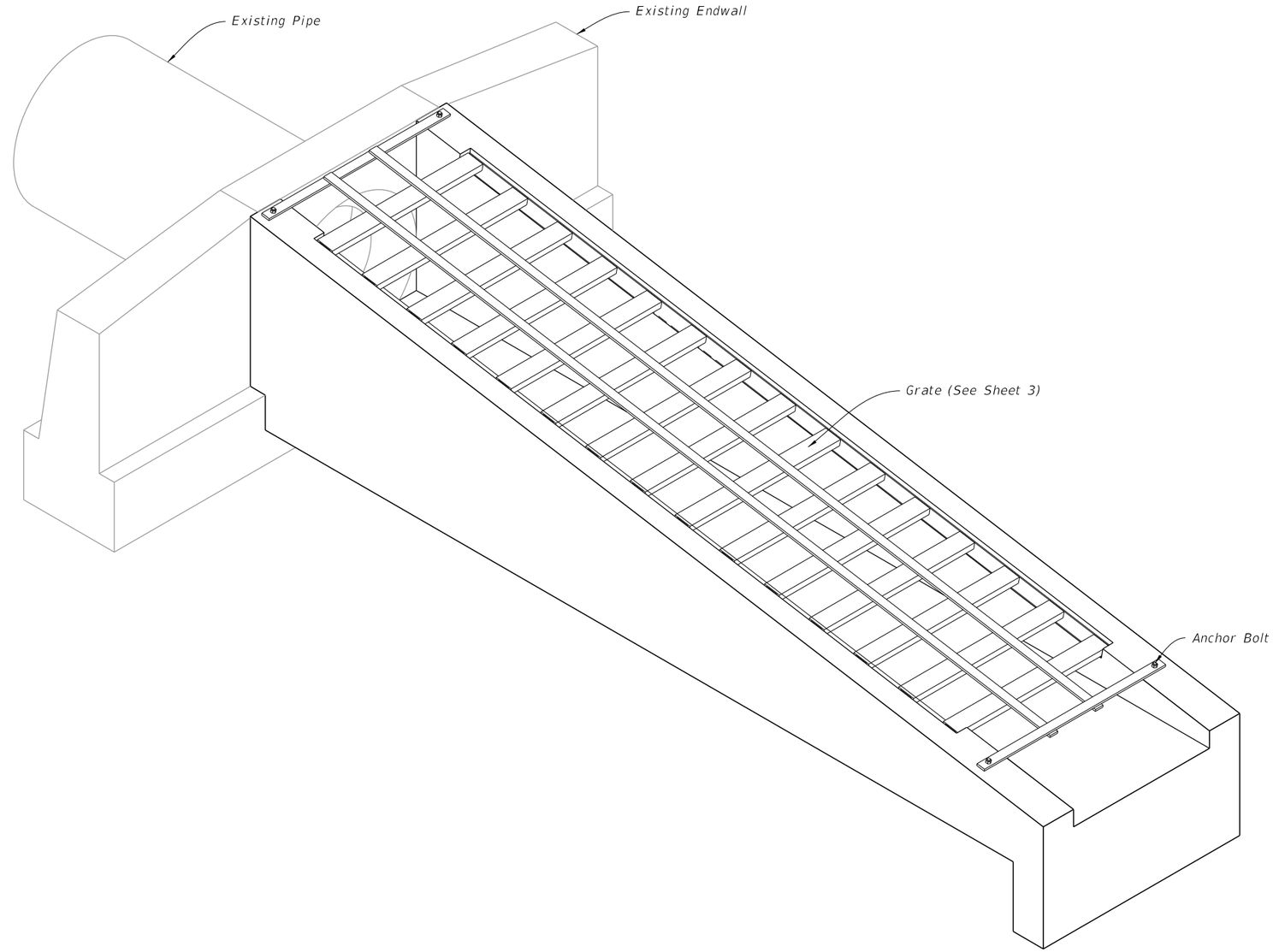

SAFETY MODIFICATIONS

TABLE OF CONTENTS:

Sheet	Description
1	General Notes and Contents
2	Endwalls for 1:4 and 1:6 Slopes
3	Steel Grate

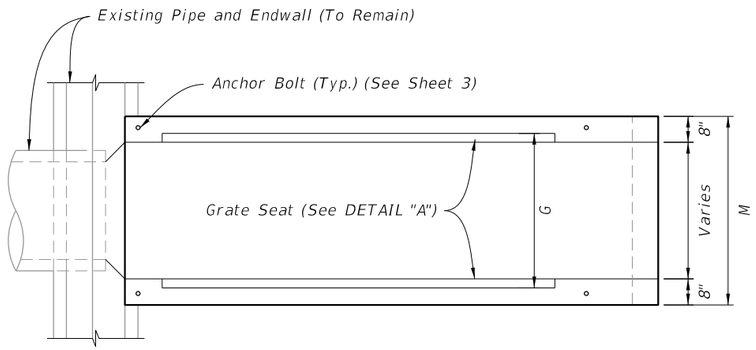

PLAN

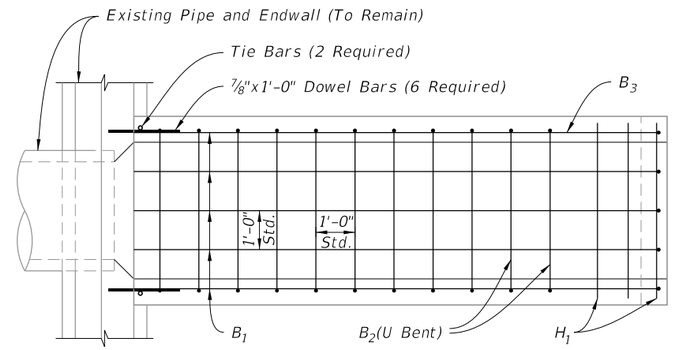

PLAN

LEGEND:

H = Horizontal Bars

B = Bent Bars

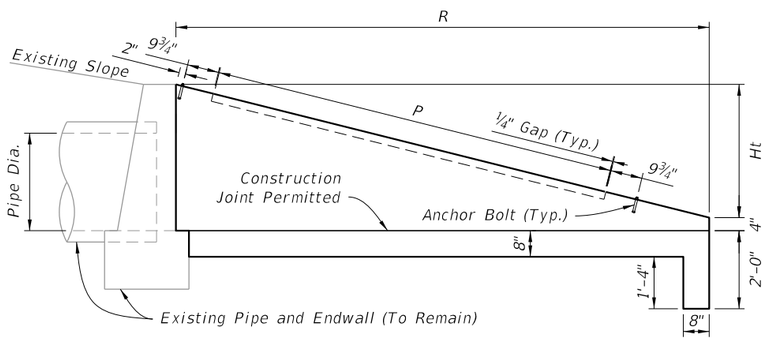

ELEVATION

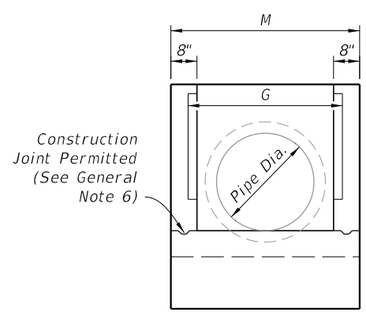

END VIEW

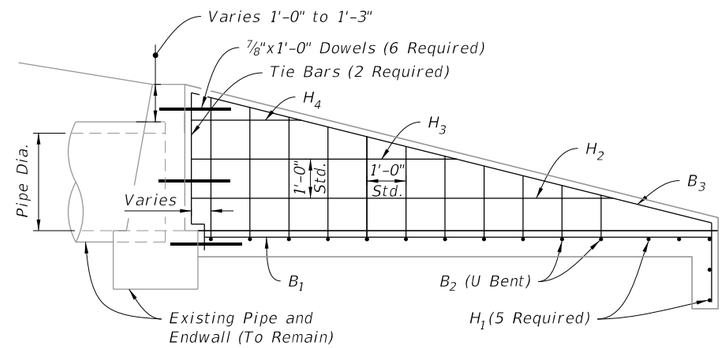

ELEVATION

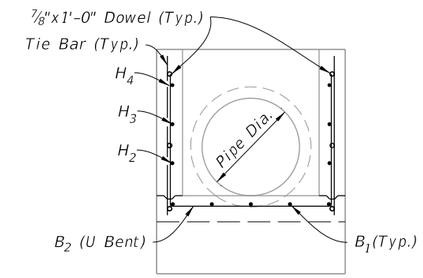

BACK VIEW

DIMENSIONAL DETAILS

REINFORCING DETAILS

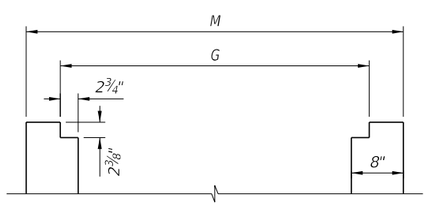

GRATE SEAT

DETAIL "A"

TABLE 1
U-ENDWALL DIMENSIONS AND QUANTITIES

Slope	Pipe Dia.	G	M	Ht	R	P	Class II Concrete-CY	Reinforcing Steel-lbs.	Sod SY
1:6	15"	2'-8½"	3'-7"	2'-2"	13'-0"	9'-4"	2.12	167	23
	18"	2'-11½"	3'-10"	2'-5"	14'-6"	11'-4"	2.53	173	25
	24"	3'-5½"	4'-4"	2'-11"	17'-6"	14'-4"	3.48	238	29
	30"	3'-11½"	4'-10"	3'-5"	20'-6"	17'-4"	4.57	315	32
1:4	15"	2'-8½"	3'-7"	2'-2"	8'-8"	5'-4"	1.44	120	19
	18"	2'-11½"	3'-10"	2'-5"	9'-8"	6'-4"	1.72	130	20
	24"	3'-5½"	4'-4"	2'-11"	11'-8"	8'-4"	2.36	167	22
	30"	3'-11½"	4'-10"	3'-5"	13'-8"	10'-4"	3.09	225	25

ENDWALLS FOR 1:4 AND 1:6 SLOPES

TABLE 2 GRATE DIMENSIONS AND QUANTITIES									
Slope	Pipe Dia.	Channels @ 5.4 Lbs./LF			Bars @ 3.4 lbs/LF (2 ea.)			Angles @ 3.2 Lbs./LF	
		Quantity	F	lbs.	L	M-4"	lbs.	P	lbs.
1:6	15"	10	2'-6⅞"	139	11'-3"	3'-3"	99	9'-4"	60
	18"	12	2'-9⅞"	183	13'-3"	3'-6"	114	11'-4"	73
	24"	15	3'-3⅞"	269	16'-3"	4'-0"	138	14'-4"	92
	30"	18	3'-9⅞"	372	19'-3"	4'-6"	162	17'-4"	111
1:4	15"	6	2'-6⅞"	83	7'-3"	3'-3"	71	5'-4"	34
	18"	7	2'-9⅞"	107	8'-3"	3'-6"	80	6'-4"	41
	24"	9	3'-3⅞"	161	10'-3"	4'-0"	97	8'-4"	53
	30"	11	3'-9⅞"	227	12'-3"	4'-6"	114	10'-4"	66

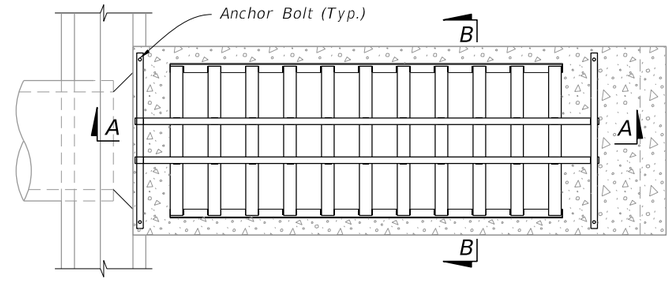

PLAN

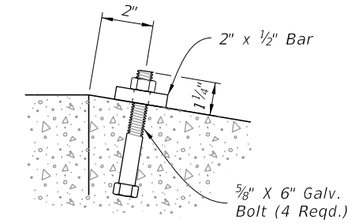

Anchor Bolt Detail
DETAIL "B"

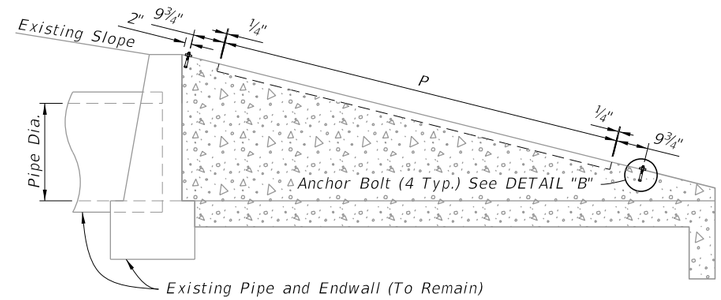

ELEVATION

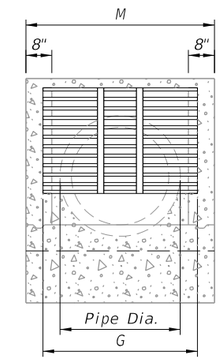

END VIEW

STEEL GRATE MOUNTING

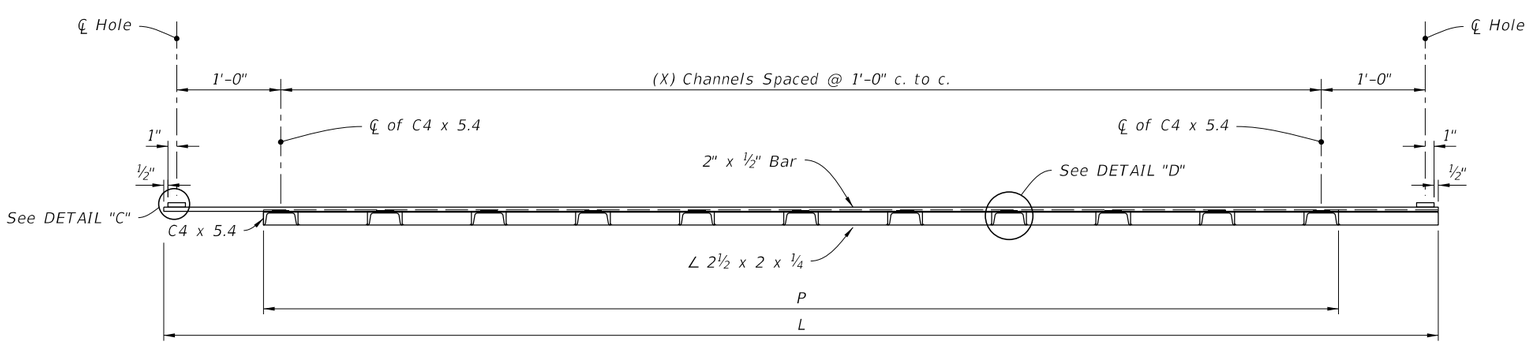

SECTION A-A

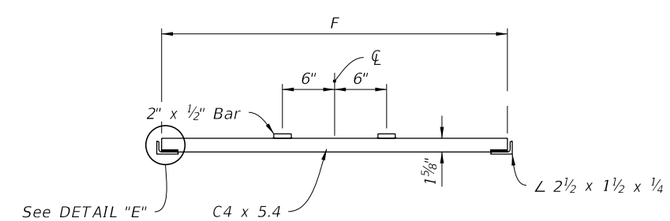

SECTION B-B

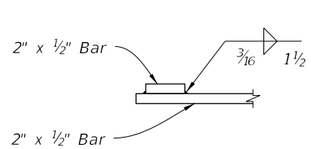

Bar to Bar Weld
DETAIL "C"

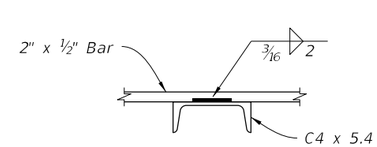

Bar to Channel Weld
DETAIL "D"

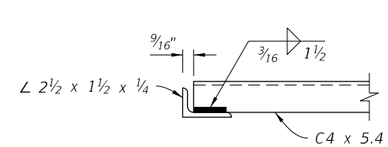

Channel to Angle Weld
DETAIL "E"

STEEL GRATE DETAILS

STEEL GRATE

LAST REVISION	REVISION	DESCRIPTION:			INDEX	SHEET
11/01/19			FY 2023-24 STANDARD PLANS	SAFETY MODIFICATIONS FOR ENDWALLS	430-090	3 of 3

10/20/2022 8:49:12 AM

GENERAL NOTES:

1. Install outlet pipes and preformed channel inverts with a slope of 0.6% or steeper toward the outlet regardless of the surface slope, unless shown different in the Plans.

2. Stub trench drain directly into drainage structures or install outlet pipes to connect trench drain to drainage structures.

3. Provide a cleanout port compatible with the manufactured system for Type I drains at the upstream end and at intervals of 50 feet maximum. Provide a cleanout port with an opening of 6" to 10" wide (transverse to the trench drain length) and 18" to 24" long. Form curbs or separators around the cleanout when cleanouts are placed adjacent to raised curb or separator. Install the cleanout with a removable load resistant cover or grate.

4. Excavate trench to allow for a minimum of 6" of concrete to be placed under and alongside the trench drain channel system. Install concrete backfill in accordance with Specification 347. Install concrete backfill extending a minimum of 6" past the end of the drain opening at the end of all Type I or II units.

5. Install transverse bars spaced 4" to 6" on center for Type I Trench Drain.

TABLE OF CONTENTS:

Sheet	Description
1	General Notes and Contents
2	Type I - Nonremovable Grate
3	Type II - Removable Grate

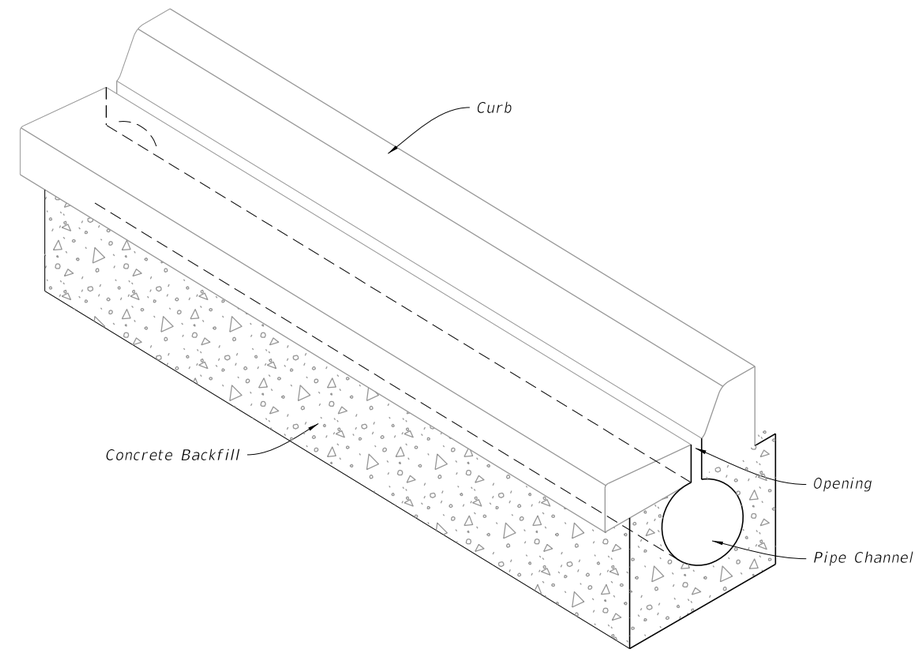

TRENCH DRAIN ASSEMBLY

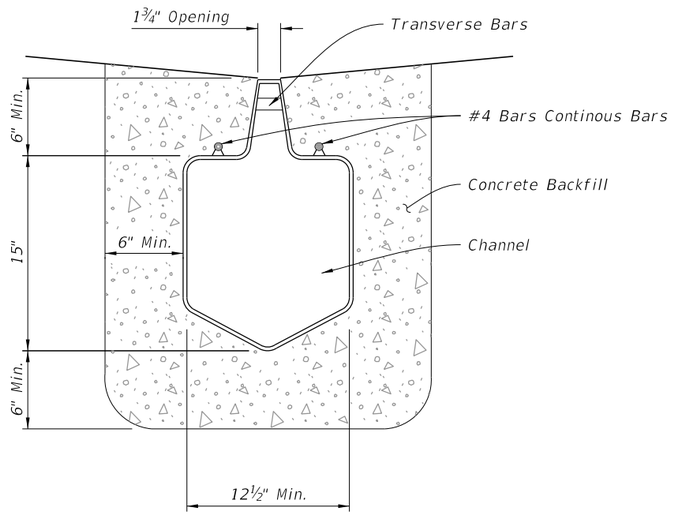

PREFORMED POLYETHYLENE CHANNEL

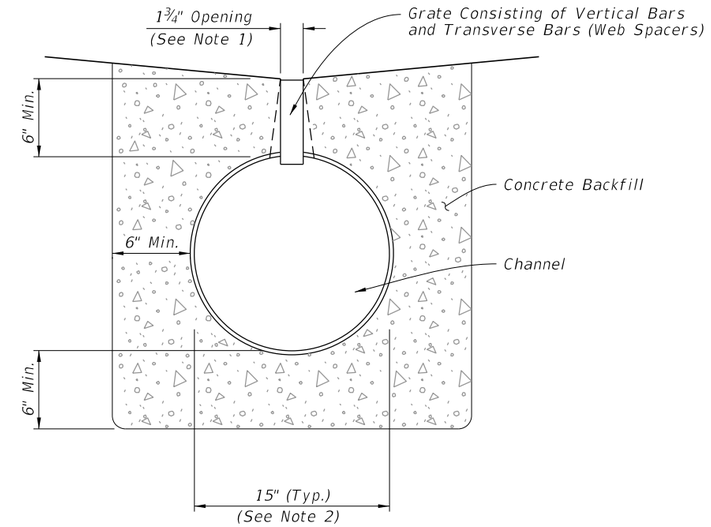

ROUND PIPE CHANNEL

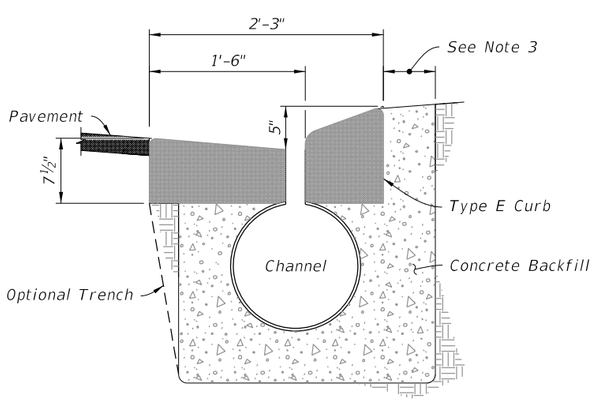

WITHIN TYPE E CURB

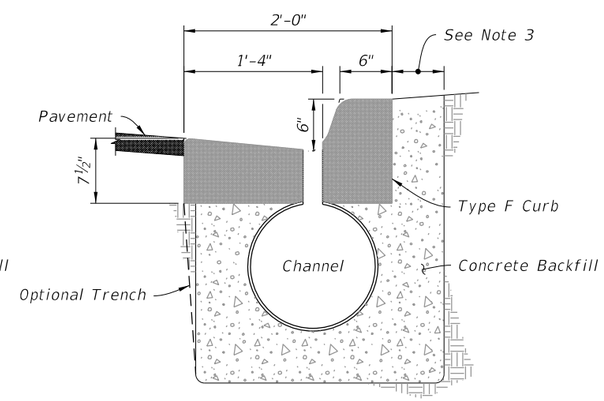

WITHIN TYPE F CURB

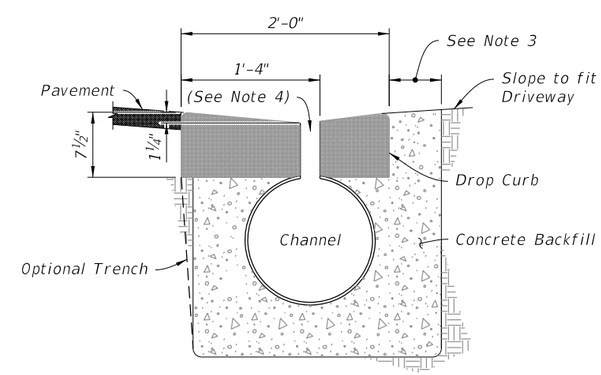

WITHIN DROP CURB

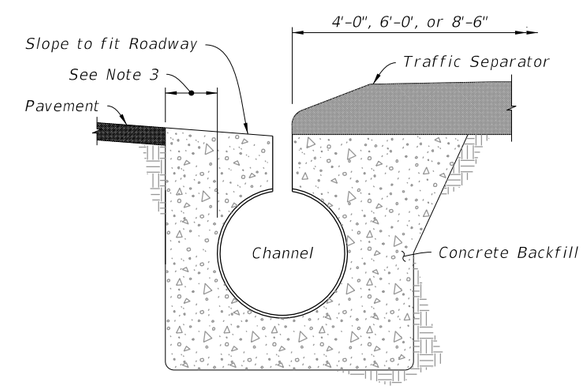

ADJACENT TO TRAFFIC SEPARATOR

TYPICAL LOCATIONS

(Round Channel Shown, Preformed Polyethylene Similar)

NOTES:

1. Opening for fixed height grates. Opening at the pipe can be 3".
2. The Round Pipe Channel is 15" in diameter, unless otherwise shown in the Plans.
3. Provide a minimum 6" concrete on this side of the drain.
4. Install grates on preformed polyethylene channel at driveways.

TYPE I - NONREMOVABLE GRATE

LAST REVISION	REVISION	DESCRIPTION:	FY 2023-24 STANDARD PLANS	TRENCH DRAIN	INDEX	SHEET
11/01/19					436-001	2 of 3

10/20/2022 8:49:13 AM

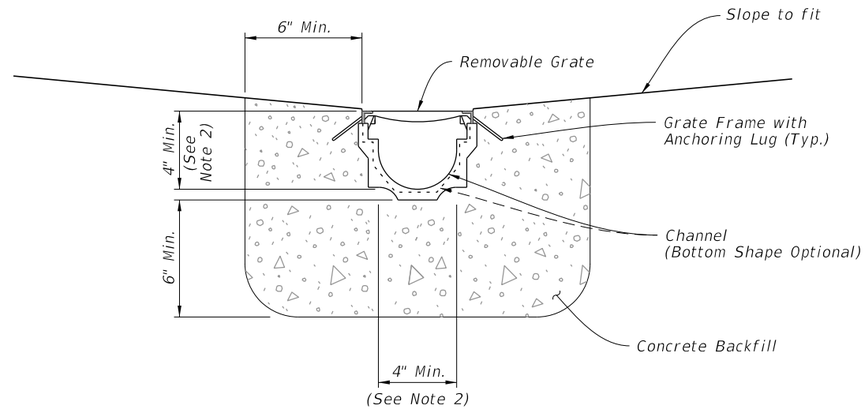

PREFORMED CHANNEL WITH REMOVABLE GRATE

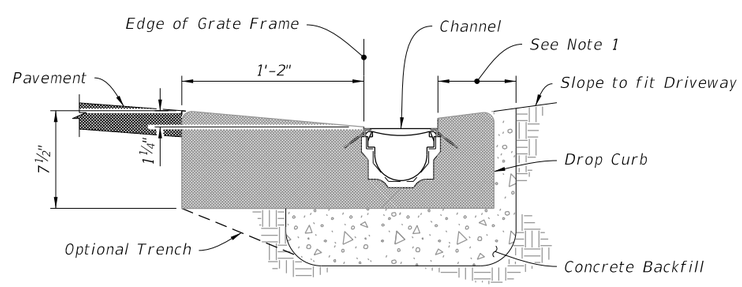

WITHIN DROP CURB

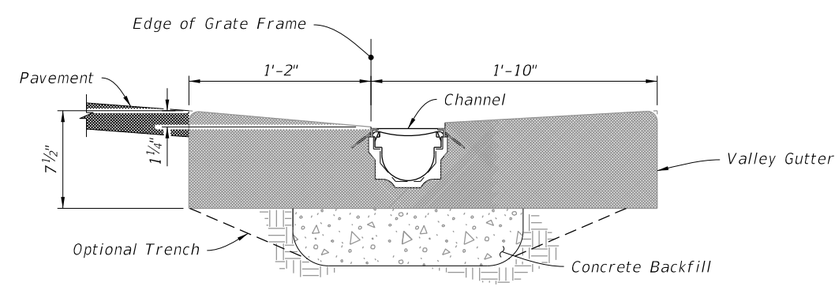

WITHIN VALLEY GUTTER

TYPICAL LOCATIONS

NOTES:

1. Provide minimum 6" of concrete on this side of the drain.
2. 4" Minimum unless otherwise shown in Plans.

TYPE II - REMOVABLE GRATE

LAST REVISION	REVISION	DESCRIPTION:				INDEX	SHEET
11/01/19			FDOT	FY 2023-24 STANDARD PLANS	TRENCH DRAIN	436-001	3 of 3

GENERAL NOTES:

1. Install underdrain pipe that is either 4" smooth or 5" corrugated tubing unless otherwise shown in the Plans. The size to be furnished will be based on the nominal internal diameter of a pipe with a smooth interior wall. Except when prohibited by the Plans, the special provisions or this standard, pipe with a corrugated interior wall may be provided based on the following size equivalency.

   4" smooth interior equivalent to 5" corrugated interior
   5" smooth interior equivalent to 6" corrugated interior
   6" smooth interior equivalent to 8" corrugated interior
   8" smooth interior equivalent to 10" corrugated interior

2. Fine aggregate is quartz sand meeting the requirements of Specifications 902-4.

3. Coarse aggregate is gravel or stone meeting the requirements of Specification 901-2 or 901-3. The gradation is in accordance with Specifications 901, Grades 4, 467, 5, 56 or 57 stone unless otherwise shown restricted in the Plans.

4. Install Underdrain Type I, II, III and V in accordance with Specification 440.

5. Install filter fabric Type D-3 in accordance with Specifications 985. The internal filter fabric of Type V underdrain has a permittivity of 0.7 /sec. and an AOS of #40 sieve.

6. When Type I is used, use a filter fabric sock in accordance with Specification 948.

7. See Index 120-002 for the standard location of Type I, II, and III underdrain. The location of Type V underdrain and nonstandard locations of Type I, II, and III underdrain will be as detailed in the plans.

8. Install filter fabric joints with a overlap a minimum of 1'. Install the internal filter fabric of Type V underdrain with an overlap into the coarse aggregate or the fine aggregate a minimum of 1'.

9. Use nonperforated pipes for underdrain outlet and make all bends using 1/8 (45 deg.) elbows. Construct 90 deg. bends with two 1/8 elbows separated by at least 1' of straight pipe. Outlet pipes stubbed into inlets or other drainage structures must be a minimum 6" above the structure flow line. Install concrete aprons, hardware cloth, and sod for outlet pipes discharging to grassed areas as shown in Index 446-001 for Edgedrain Outlets.

TABLE OF CONTENTS:

Sheet	Description
1	General Notes and Contents
2	Type I, II, and III Underdrains
3	Type Va, Vb, and Cleanout

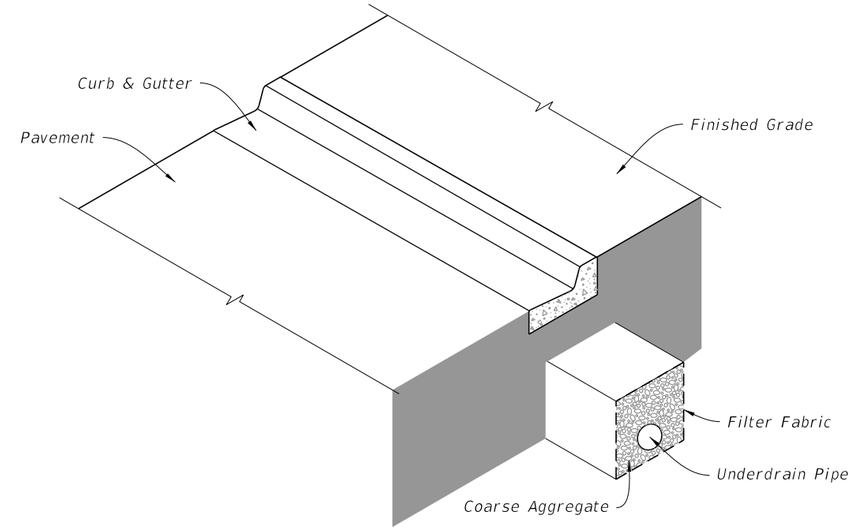

UNDERDRAIN TYPE I, II, AND III ASSEMBLY
(Type II Shown, Others Similar)

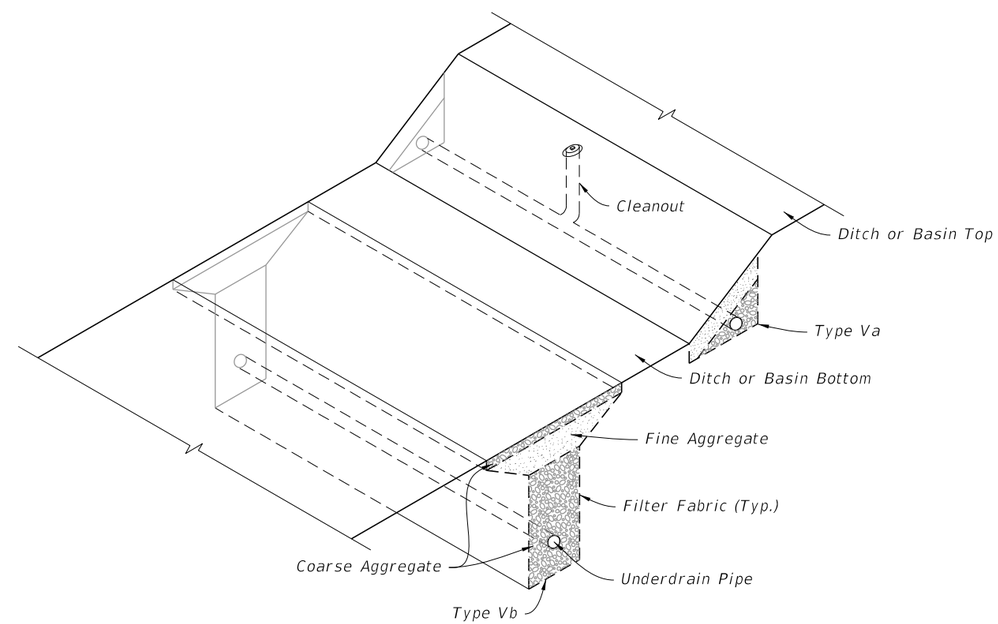

UNDERDRAIN TYPE Va AND Vb ASSEMBLY

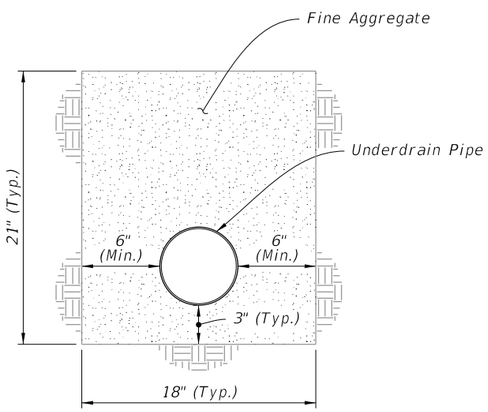

TYPE I

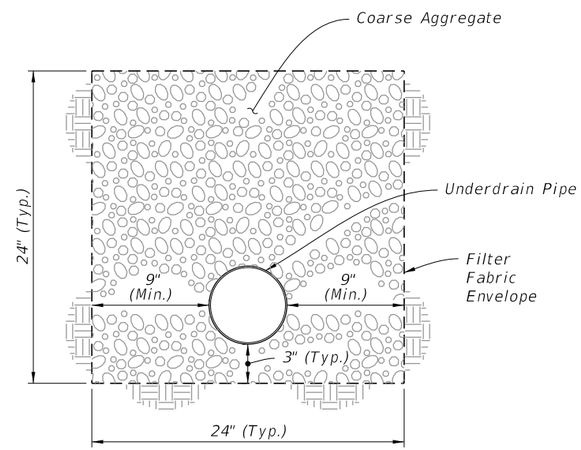

TYPE II

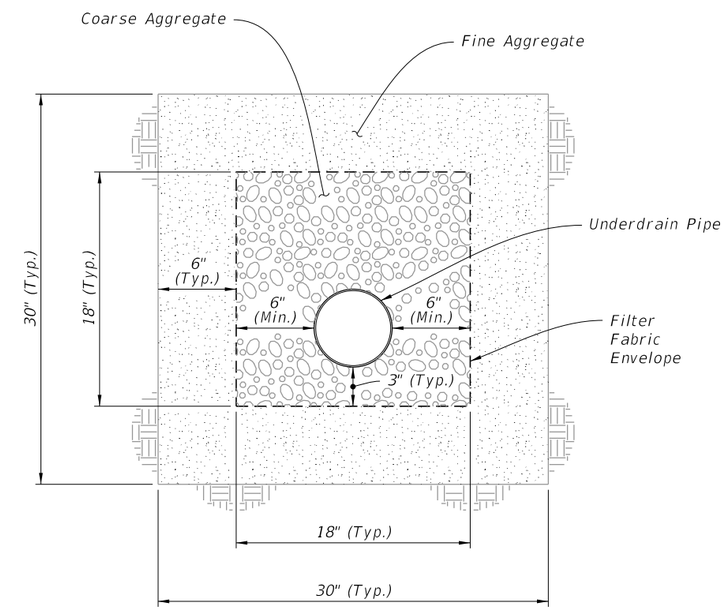

TYPE III

TYPE I, II, AND III

LAST REVISION	REVISION	DESCRIPTION:				INDEX	SHEET
11/01/19			FDOT	FY 2023-24 STANDARD PLANS	UNDERDRAIN	440-001	2 of 3

10/20/2022 8:49:16 AM

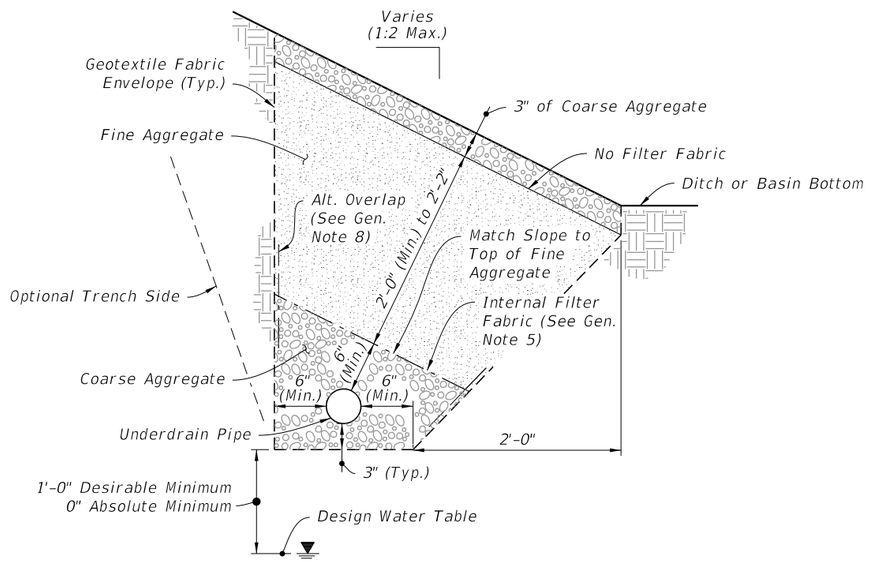

LOWER LIMITS

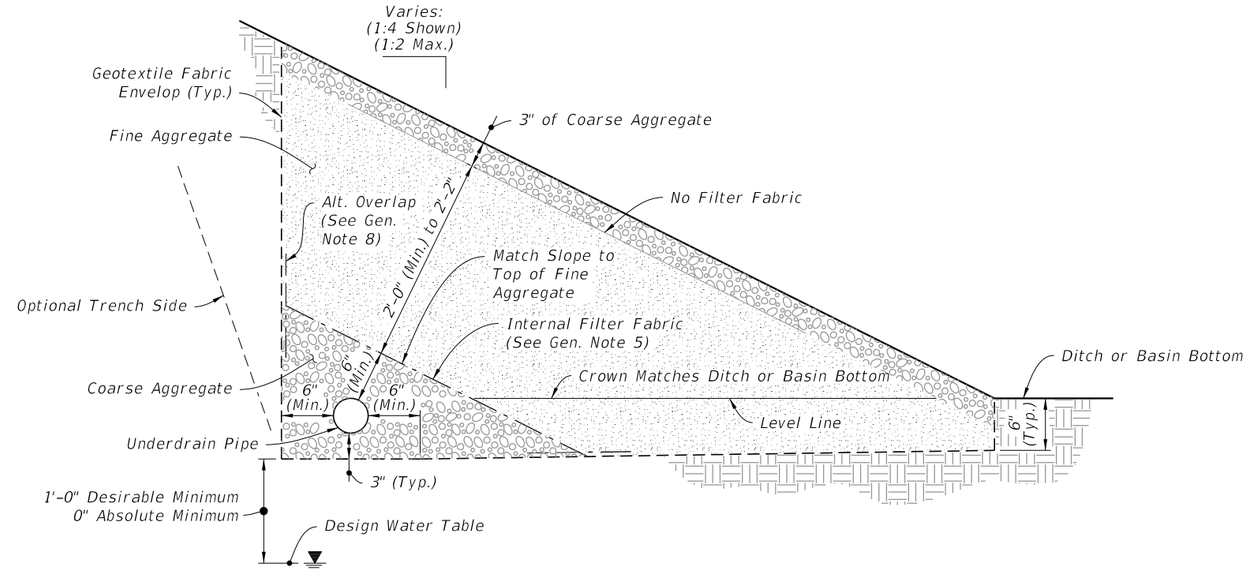

UPPER LIMITS

TYPE Va

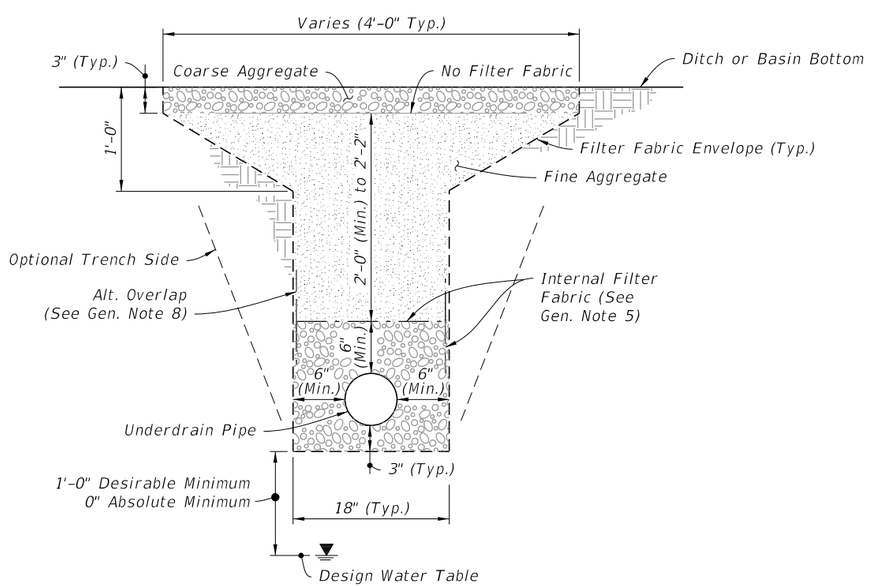

TYPE Vb

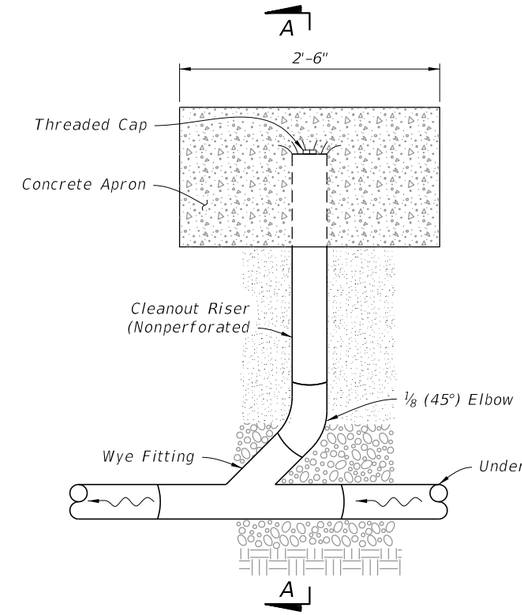

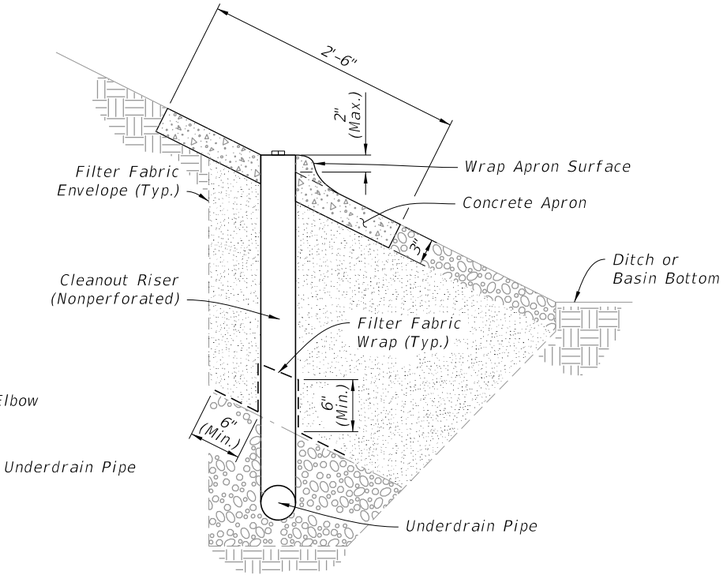

SECTION A-A

TYPE V CLEANOUT

TYPE Va, Vb, AND CLEANOUT

10/20/2022 8:49:17 AM

LAST REVISION	REVISION	DESCRIPTION:			INDEX	SHEET
11/01/19			FY 2023-24 STANDARD PLANS	UNDERDRAIN	440-001	3 of 3

GENERAL NOTES:

1. Install light duty cast iron cover and frame in accordance with Specification 962.

2. Use Class II concrete. Use No. 3 bars (Grade 60) on 8" centers both ways, sides and bottom.

3. Furnish covers with pick holes. Do not use fitted lifts or handles.

4. Manhole Type P Alternate A, Index 425-010, Type I Frame and Cover, Index 425-001, may be used in lieu of the box detailed in this Index.

TABLE OF CONTENTS:

Sheet	Description
1	General Notes and Contents
2	Typical Inspection Box Installation
3	Typical Urban, Slope, and Top Adjustment Installations

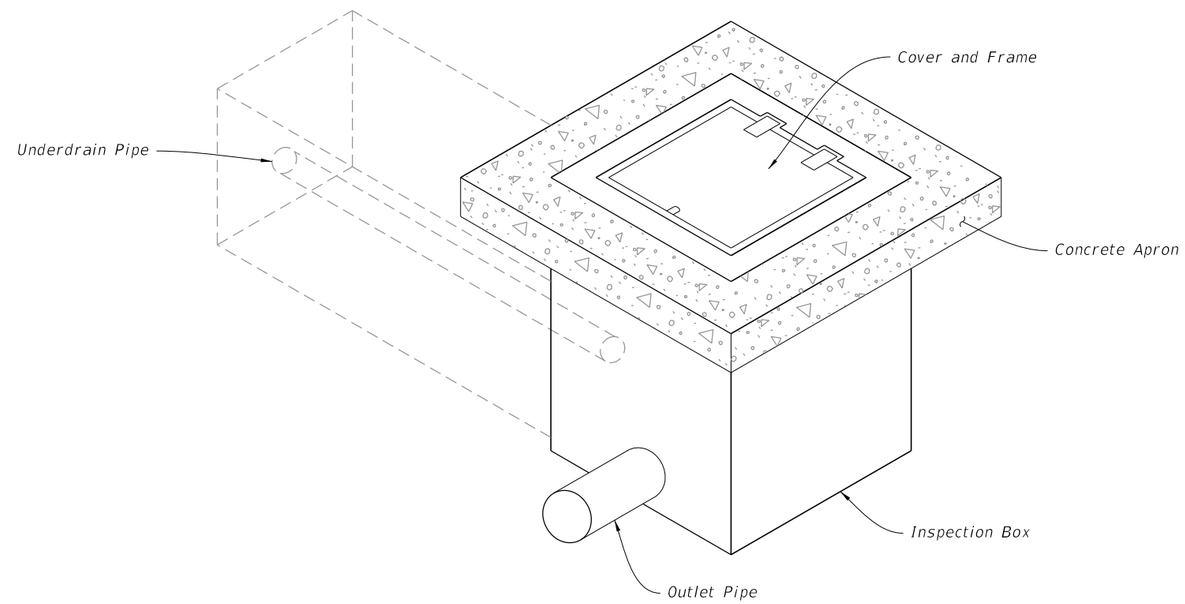

UNDERDRAIN INSPECTION BOX ASSEMBLY

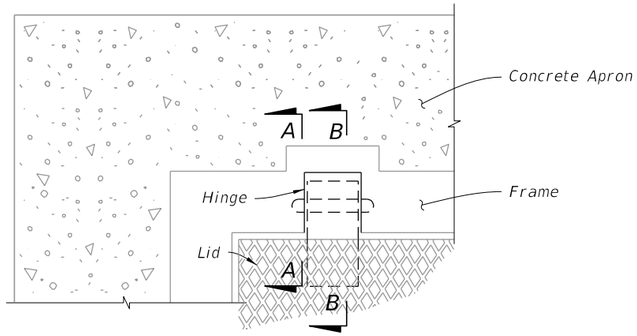

PLAN VIEW

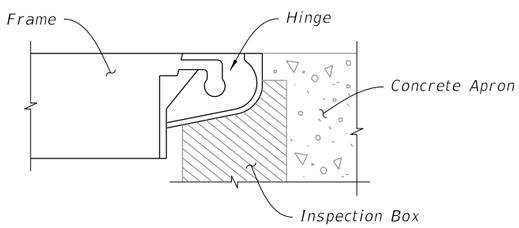

SECTION A-A
(Frame)

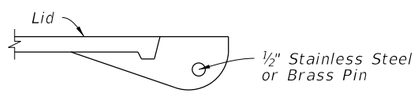

SECTION B-B
(Lid)

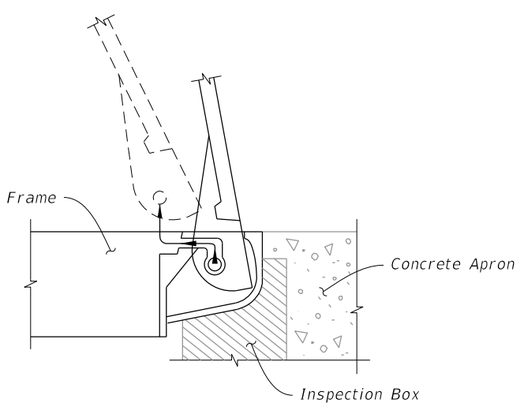

COVER REMOVAL

HINGE DETAIL

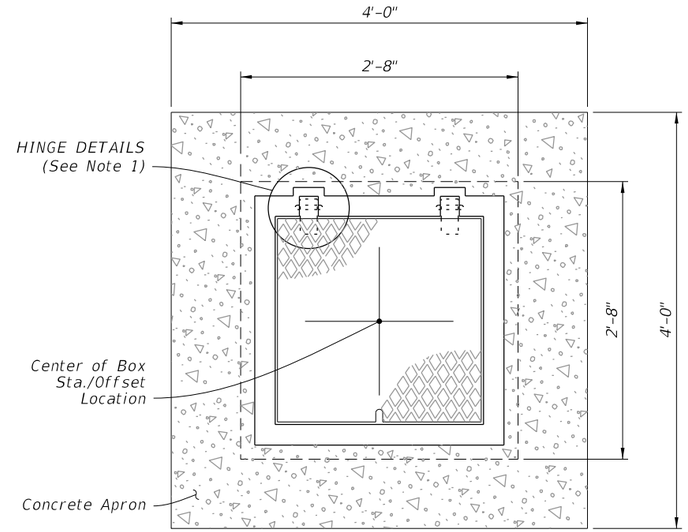

PLAN

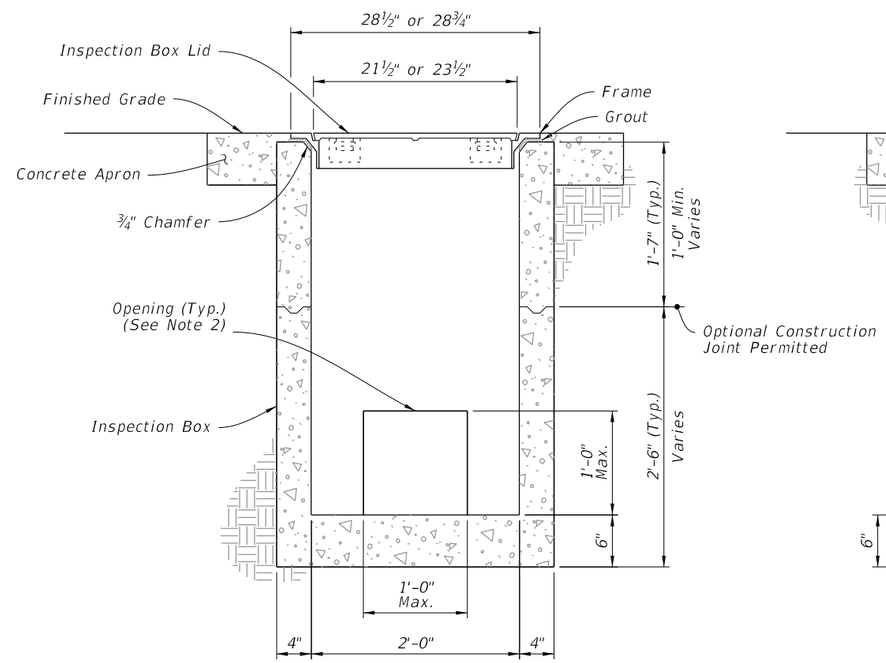

ELEVATION
(FRONT VIEW)

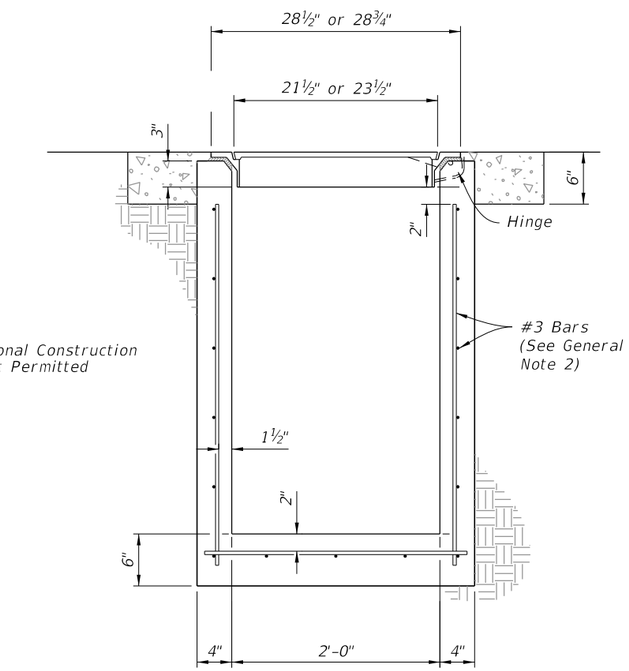

ELEVATION
(SIDE VIEW)

INSPECTION BOX DETAILS

NOTES:

1. Cast or field cut 2 ~ 4" wide slots for hinges. Grout around hinge covers.
2. One or more sides may have an opening, see Plans for required openings. Grout around opening to seal between underdrain pipe and inspection box.

TYPICAL INSPECTION BOX INSTALLATION

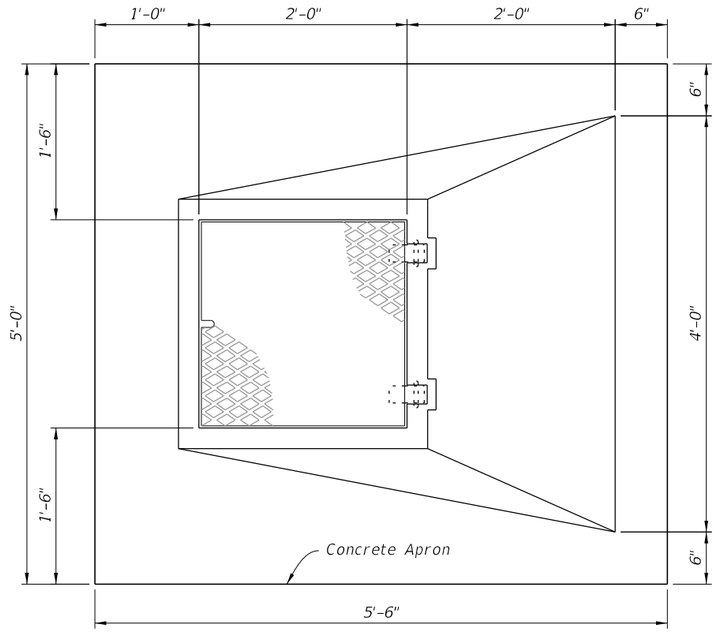

PLAN

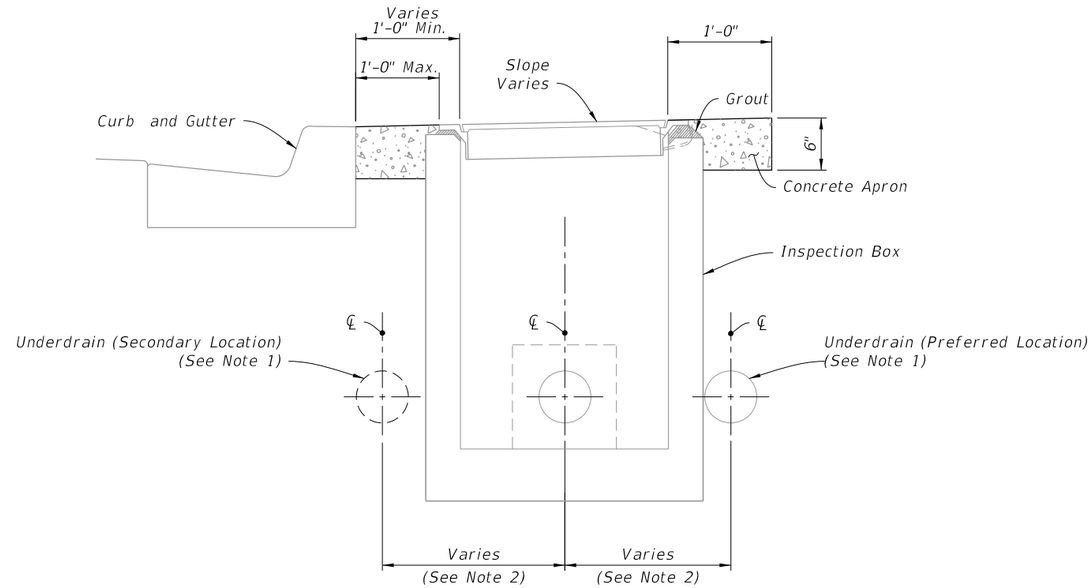

TYPICAL URBAN INSTALLATION

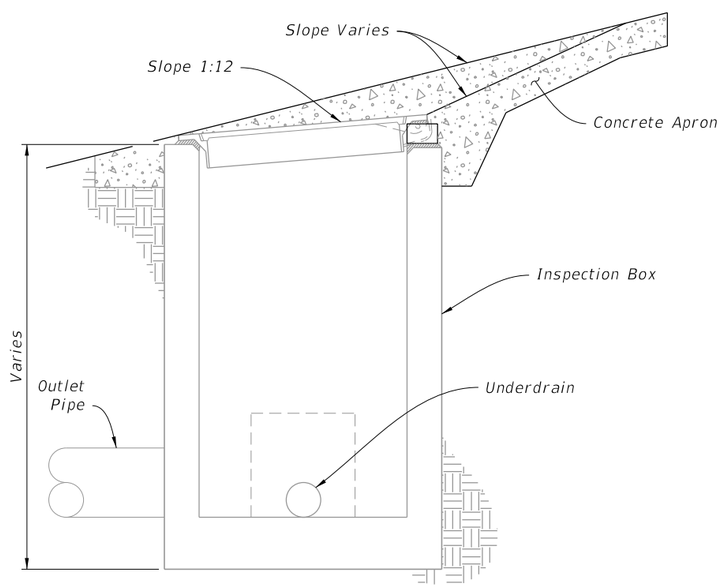

ELEVATION
(SIDE VIEW)

INSTALLATION ON SLOPE

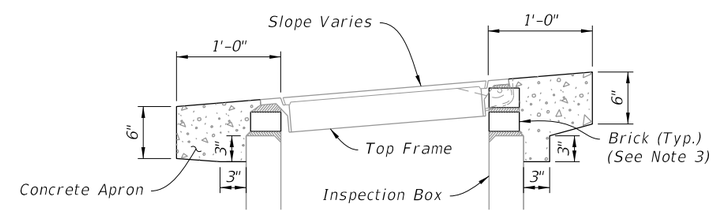

TOP ADJUSTMENT

NOTES:

1. See Index 120-002 for Underdrain placement.
2. Curve the Underdrain to connect to the Inspection Box.
3. A maximum of 2 adjustment courses of brick is permitted.

TYPICAL URBAN, SLOPE, AND TOP ADJUSTMENT INSTALLATIONS

GENERAL NOTES:

1. Place concrete pipe with the slots positioned on sides.
2. Alignment joints are standard (gaskets not required). Recorrugation of metal pipe ends not required.
3. Install Type D-3 filter fabric in accordance with Specification 985. Lap all filter fabric joints a minimum of one (1) foot.
4. Construct the standard cross section unless other section(s) described or detailed in the plans.
5. See Index 430-001 for supplemental details.
6. Take the necessary precautions to prevent contamination of the trench with sand, silt and foreign materials.

TABLE OF CONTENTS:

Sheet	Description
1	General Notes and Contents
2	French Drain System
3	Concrete Slotted Pipe Options

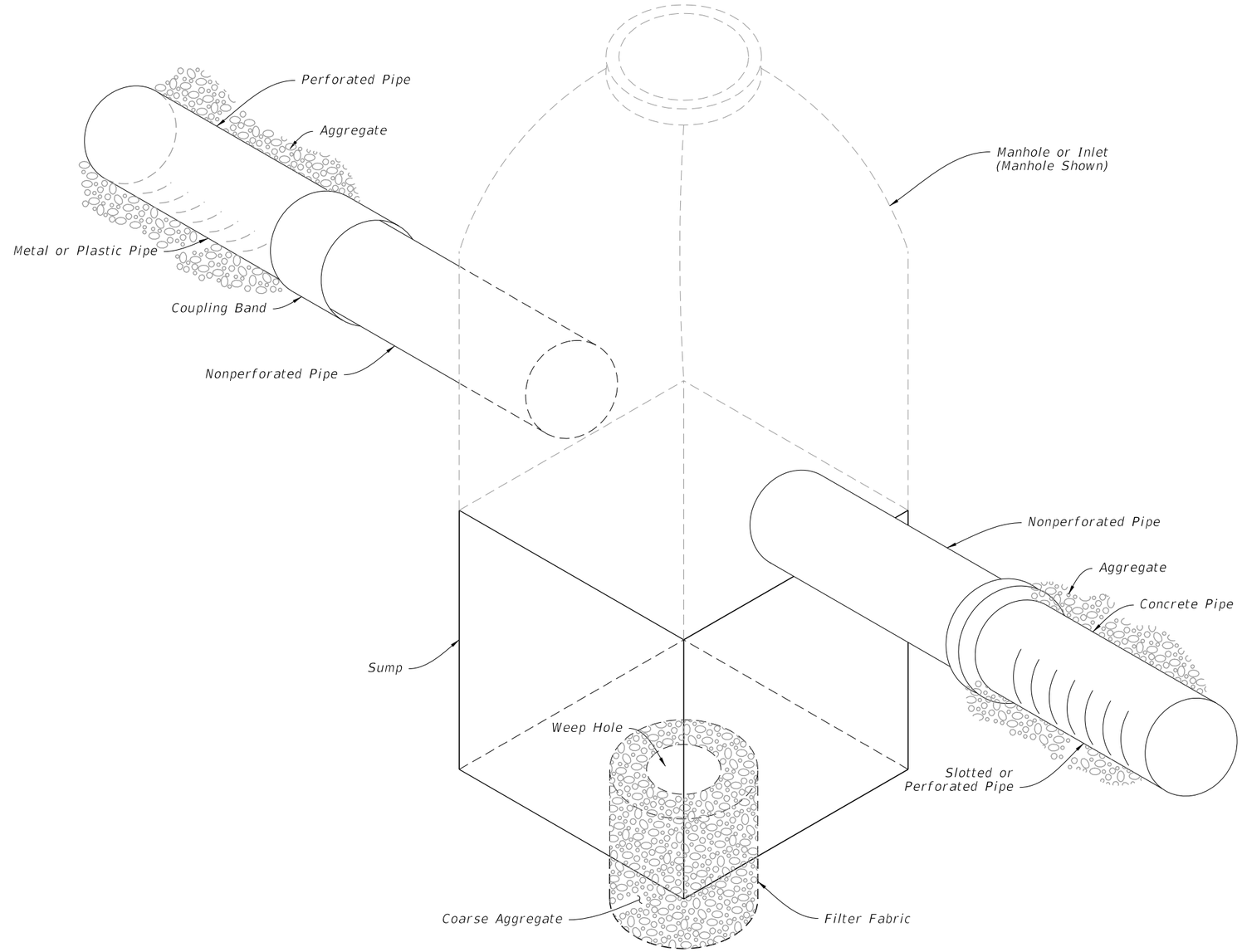

FRENCH DRAIN ASSEMBLY

NOTES:

1. Construct sumps unless excluded in the Plans.
2. For additional sump bottom information see Index 425-001.
3. Construct weep holes only where called for in the Plans.
4. Only cast and ductile iron sanitary sewer, or cast iron, ductile and steel water mains will be allowed to pass directly through french drain (without sleeve).
5. Use only steel, cast or ductile iron sleeves.
6. No slots or perforations.

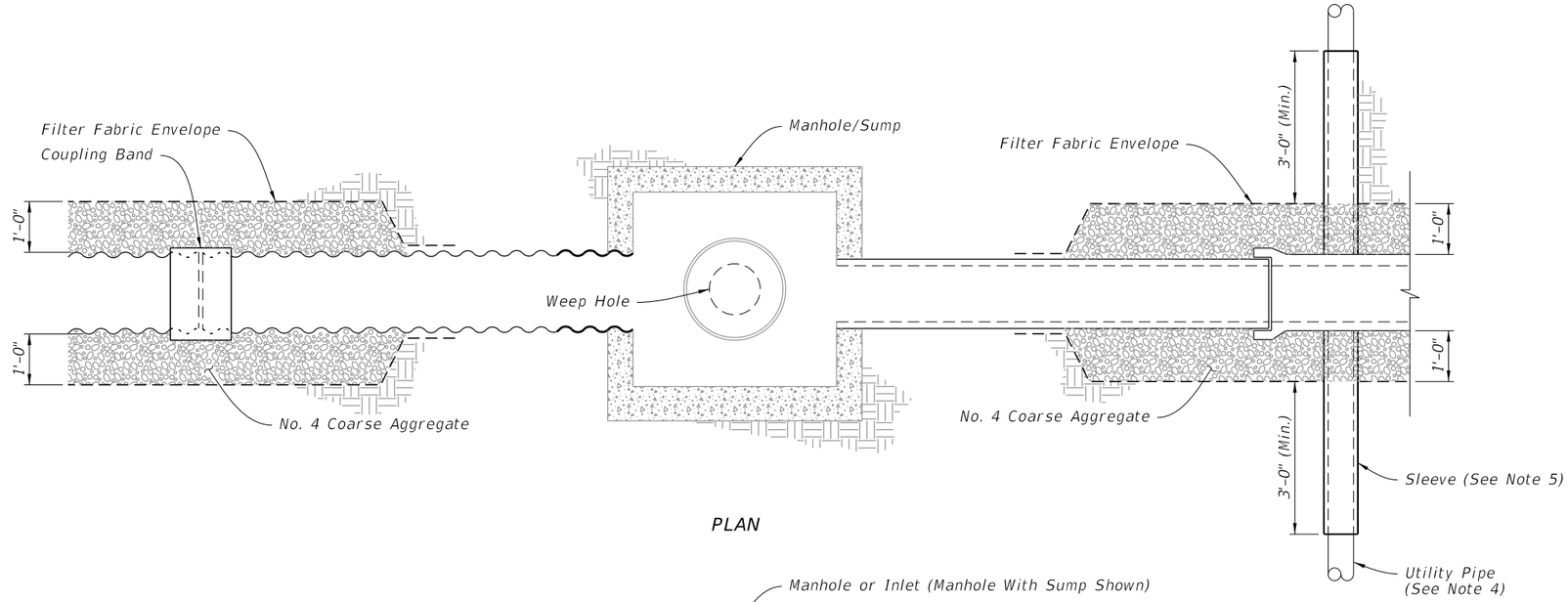

PLAN

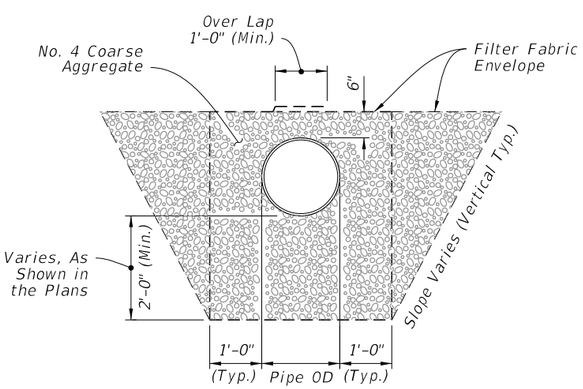

SECTION A-A

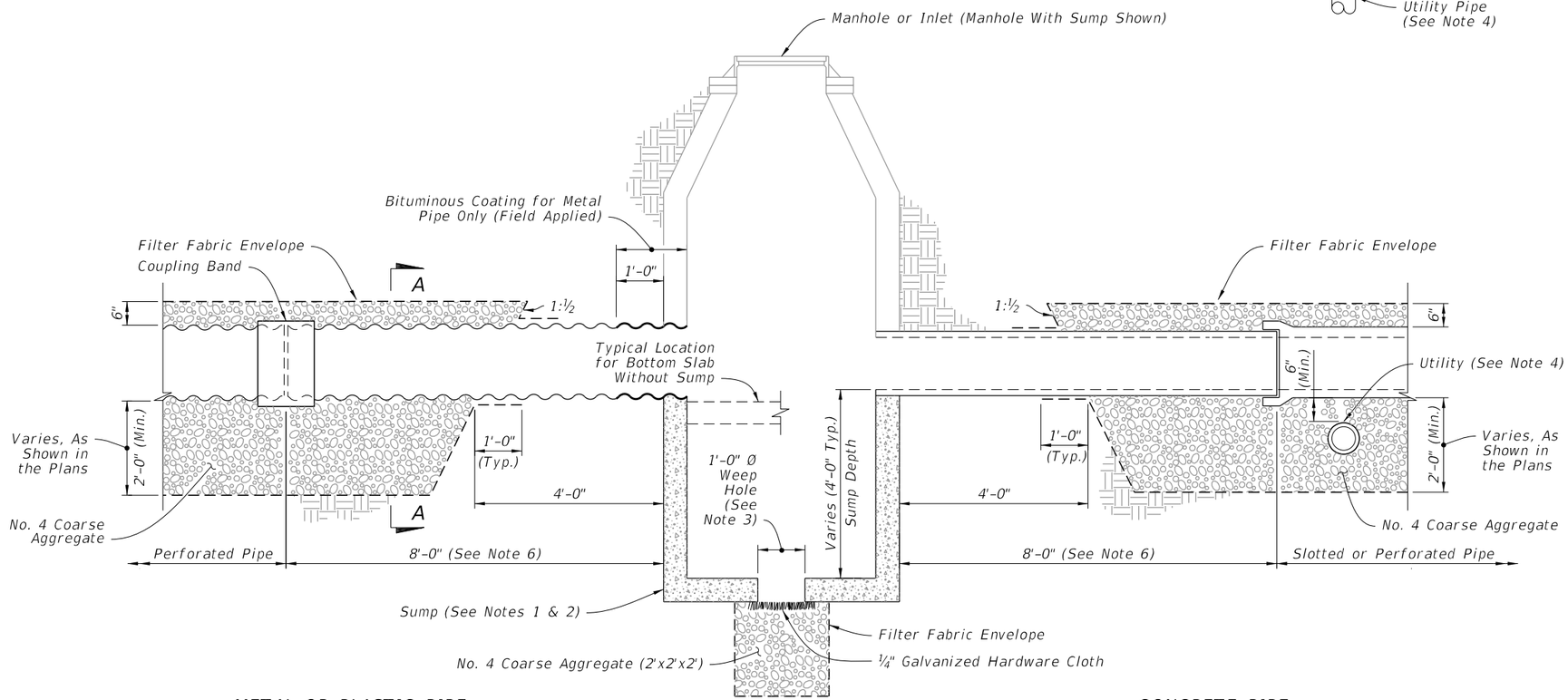

ELEVATION

FRENCH DRAIN
(Round Pipe Shown)

FRENCH DRAIN SYSTEM

LAST REVISION	REVISION	DESCRIPTION:	FY 2023-24 STANDARD PLANS	FRENCH DRAIN	INDEX	SHEET
11/01/19					443-001	2 of 3

10/20/2022 8:49:21 AM

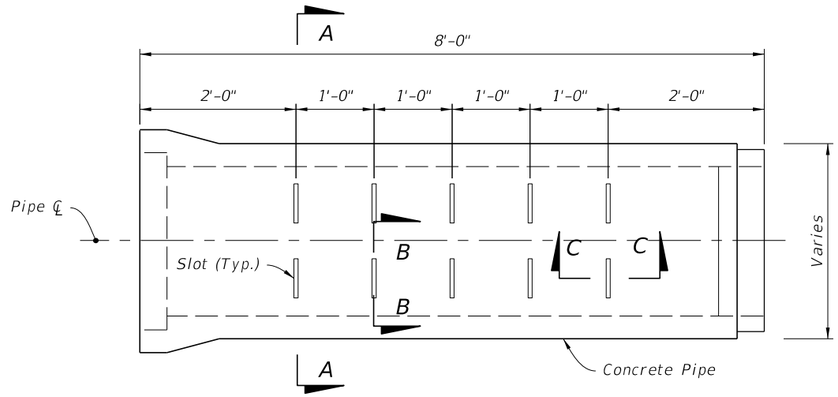

SIDE VIEW

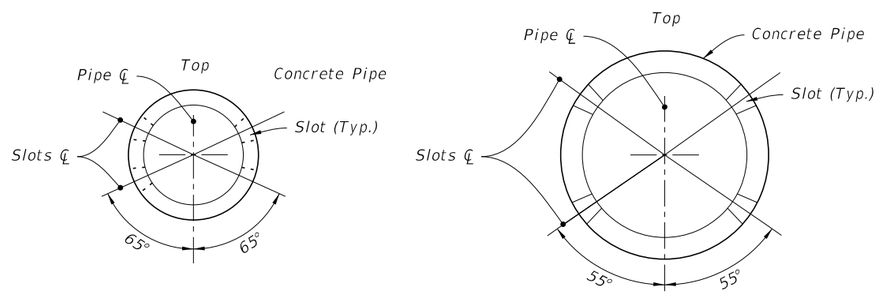

15" to 30" 36" to 72"

SECTION A-A

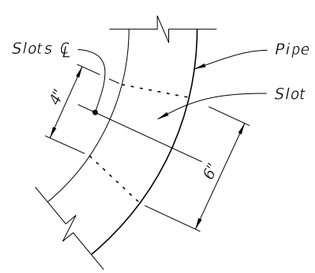

SECTION B-B

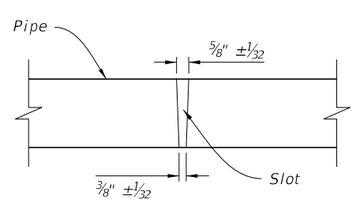

SECTION C-C

OPTION A - ROUND PIPE

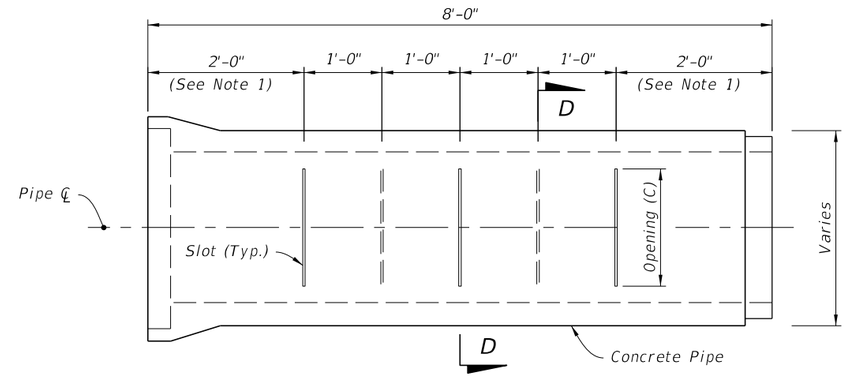

SIDE VIEW

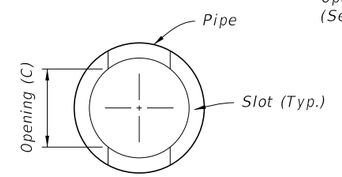

ROUND PIPE

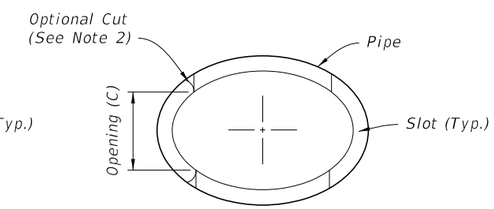

ELLIPTICAL PIPE

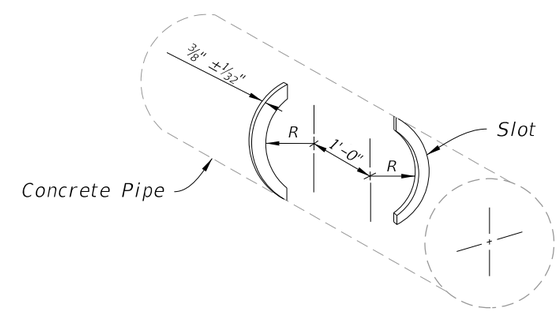

ISOMETRIC VIEW
(Round Pipe Shown)

SECTION D-D

OPTION B - ROUND OR ELLIPTICAL PIPE

NOTES:

1. 2'-0" for 8'-0" joints of pipe; 2'-6" for 12'-0" joints of pipe
2. A curved cut is acceptable provided the control dimension is maintained.

ROUND PIPE		
Pipe Size	Slot Cut Opening (C)	
	Min.	Max.
15"	12"	14"
18"	12"	14"
24"	16"	18"
30"	16"	18"
36"	22"	24"
42"	22"	24"
48"	22"	24"
54"	24"	26"
60"	24"	26"
66"	24"	26"
72"	24"	26"

ELLIPTICAL PIPE		
Pipe Size	Slot Cut Opening (C)	
	Min.	Max.
14"x23"	10"	12"
19"x30"	14"	16"
24"x38"	14"	16"
29"x45"	20"	22"
34"x53"	20"	22"
38"x60"	20"	22"

CONCRETE SLOTTED PIPE OPTIONS

GENERAL NOTES:

1. The French Drain Skimmer is a hooded cover, mounted over an outlet in a catchbasin, that prevents oil and floating debris from exiting the basin.

2. Place neoprene gasket material between the skimmer and the catchbasin at all points of contact. Trim the gasket to extend 1/2 inch beyond the joint on all sides.

3. Provide skimmer baffle, cleanout pipe and angles constructed of either galvanized steel, aluminum, polyvinyl chloride, polyethylene, fiberglass or acrylonitrite butadiene styrene. Provide hot-dip galvanized steel components, unless stainless.

4. Use Mounting hardware, hinges and latches made of stainless steel. Loss prevention device can use either stainless steel chain or riveted nylon strap.

5. Provide skimmer bodies (baffles) and cleanout pipe meeting Specification 943 for steel, 945 for aluminum or 948 for plastics.

6. Work this Index in accordance with Specification 425.

TABLE OF CONTENTS:

Sheet	Description
1	General Notes and Contents
2	Type I Skimmers
3	Type II Skimmers

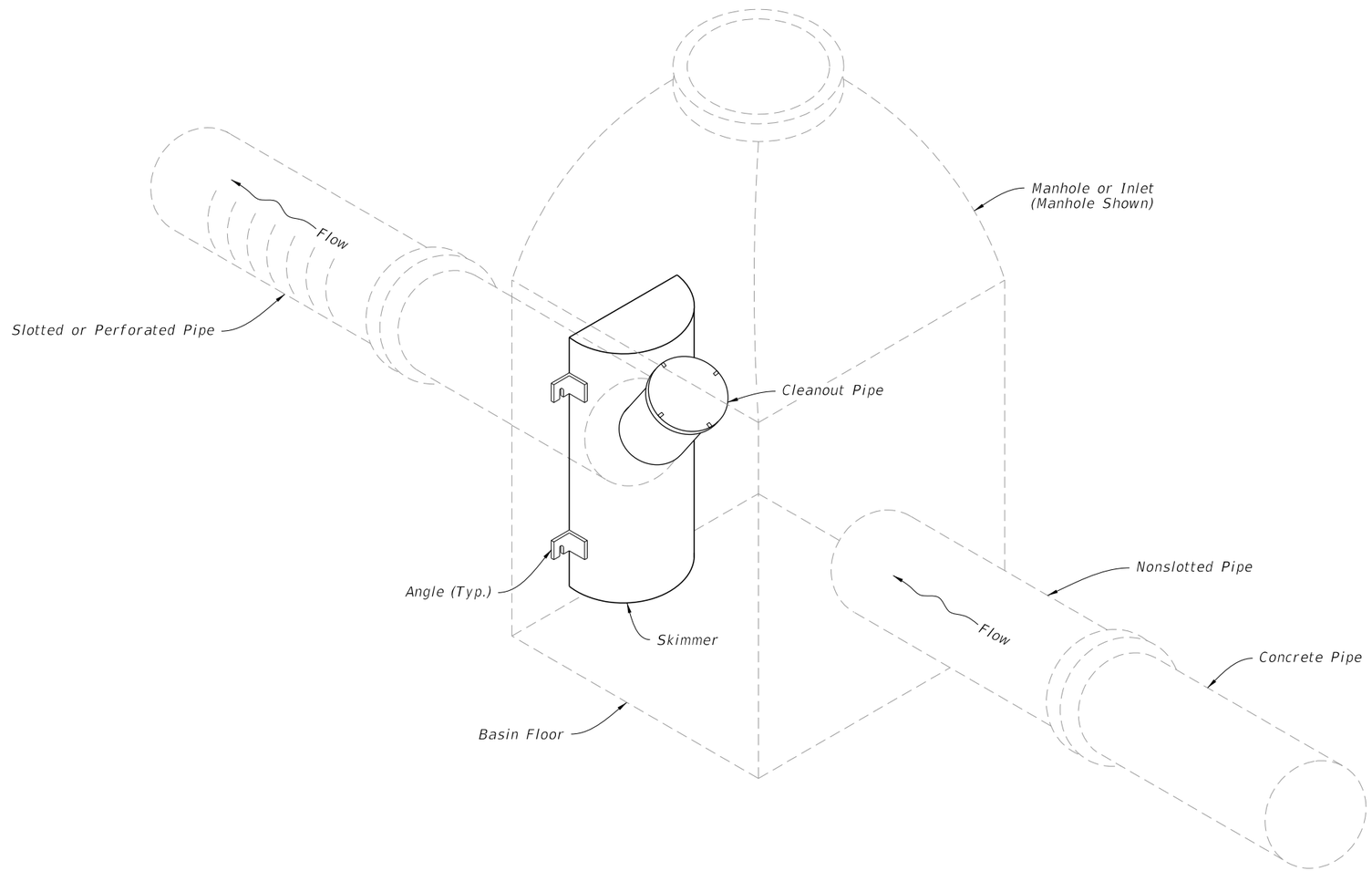

SKIMMER FOR FRENCH DRAIN OUTLETS ASSEMBLY

10/20/2022 8:49:23 AM

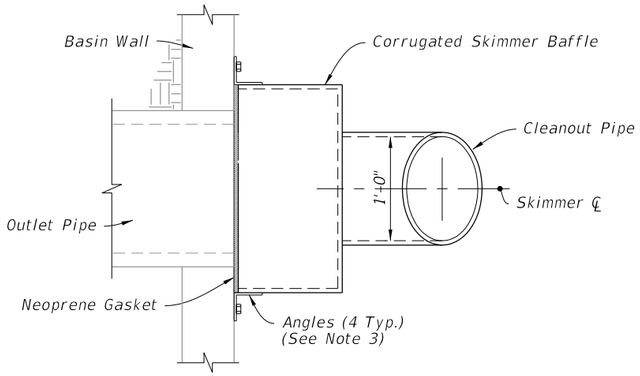

PLAN

NOTES:

1. Conform the backs of skimmers to the shape of the basin walls on which they are mounted.
2. "R" is the radii required for curved back skimmers. Applies to both skimmer types. See Plans.
3. Weld Angles at all points of contact with skimmer.

DIMENSION TABLE			
OUTLET PIPE	A	B	C
18"	12"	42"	24"
24"	15"	48"	30"
30"	18"	54"	36"
36"	21"	60"	42"

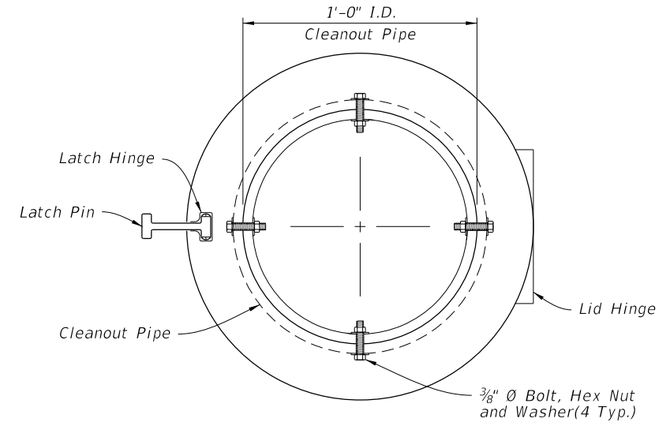

PLAN

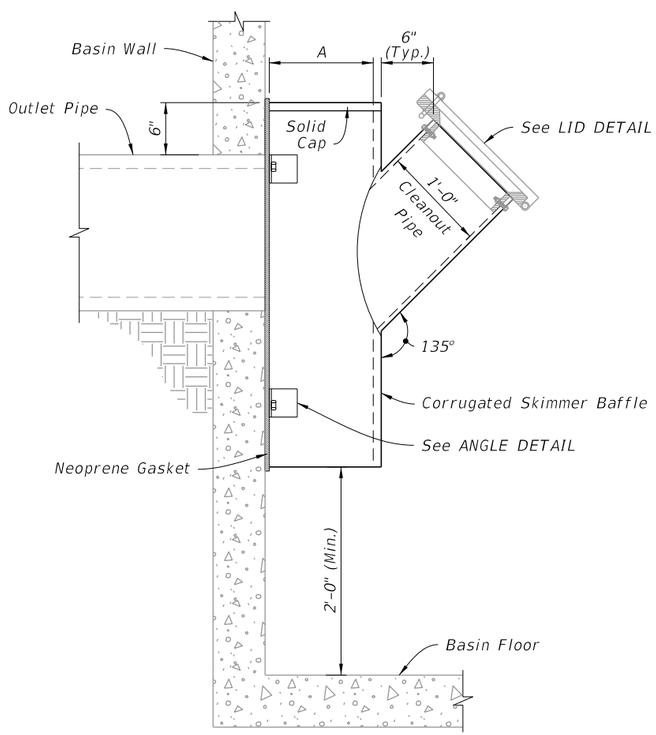

SIDE ELEVATION

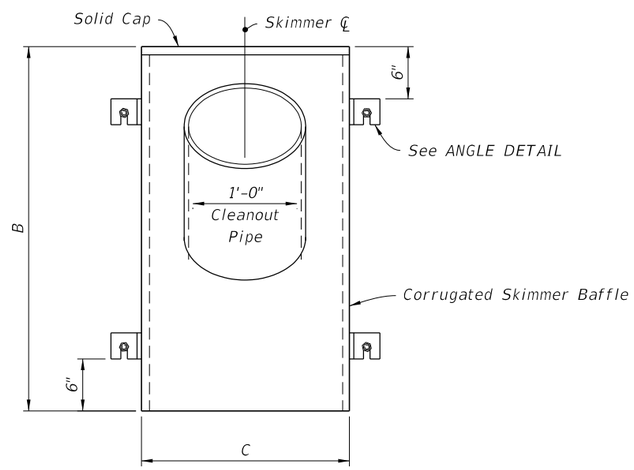

FRONT ELEVATION

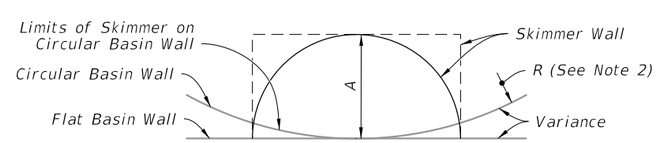

SCHEMATIC VIEW

TYPE I DETAILS

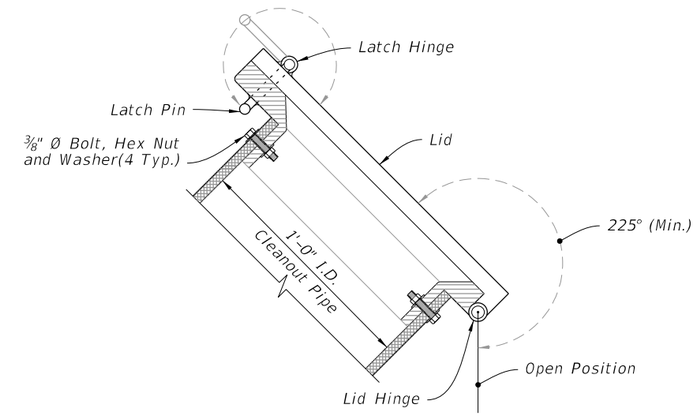

SIDE ELEVATION

LID DETAIL

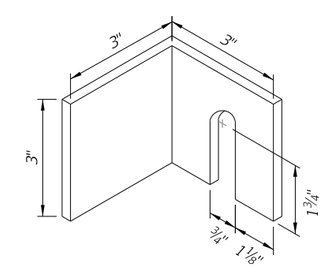

ANGLE DETAIL

TYPE I SKIMMERS

LAST REVISION	REVISION	DESCRIPTION:			INDEX	SHEET
11/01/19			FY 2023-24 STANDARD PLANS	SKIMMERS FOR FRENCH DRAIN OUTLETS	443-002	2 of 3

10/20/2022 8:49:24 AM

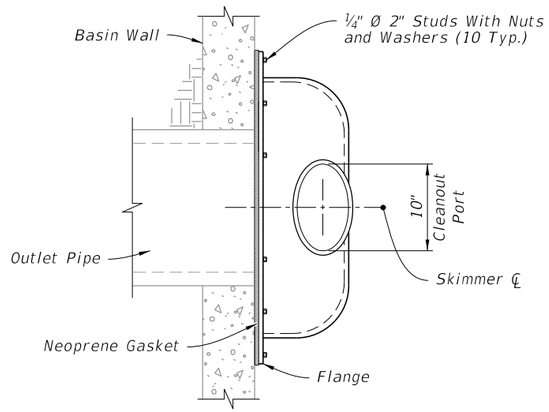

PLAN

NOTE:

Install a gasket for the cleanout with either a threaded screw-in lid or a lid secured by four stainless steel quick-release latches.

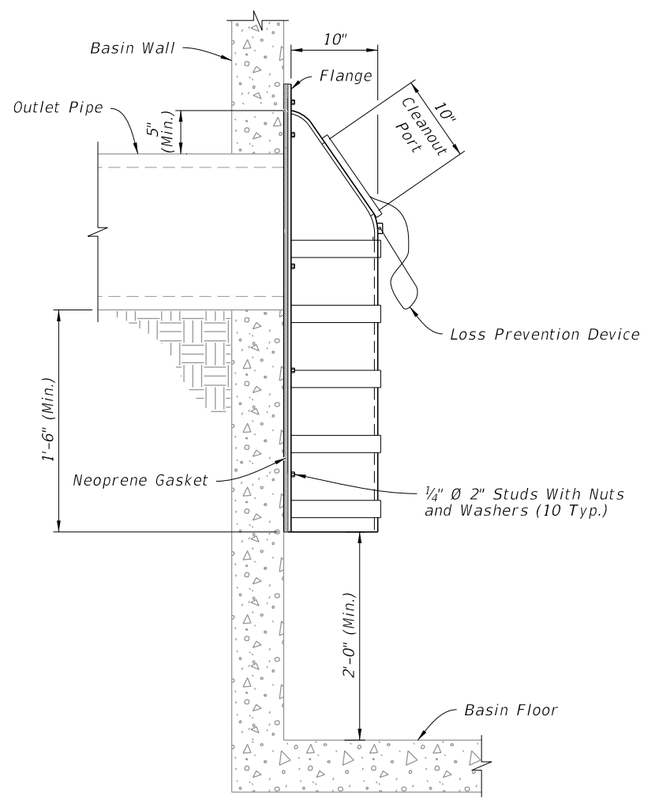

SIDE ELEVATION

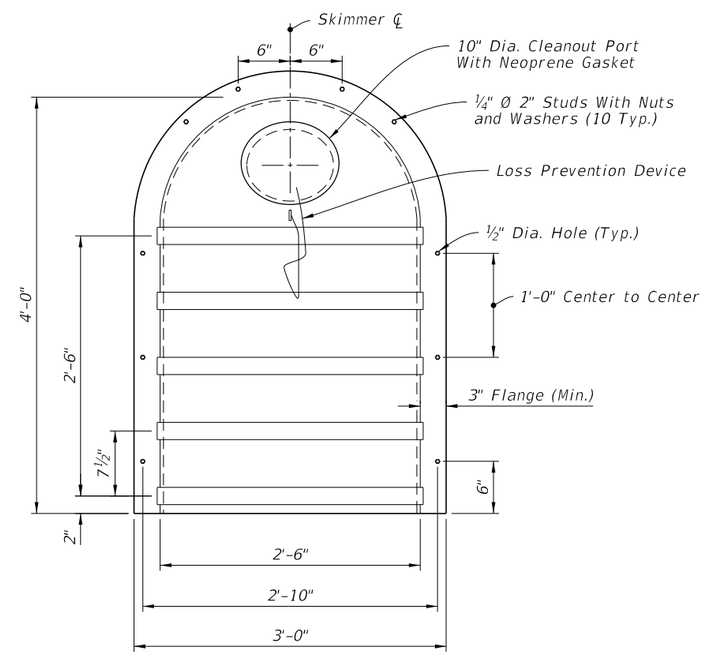

FRONT ELEVATION

TYPE II DETAILS

TYPE II SKIMMERS

LAST REVISION	REVISION	DESCRIPTION:			INDEX	SHEET
11/01/19			FY 2023-24 STANDARD PLANS	SKIMMERS FOR FRENCH DRAIN OUTLETS	443-002	3 of 3

10/20/2022 8:49:25 AM

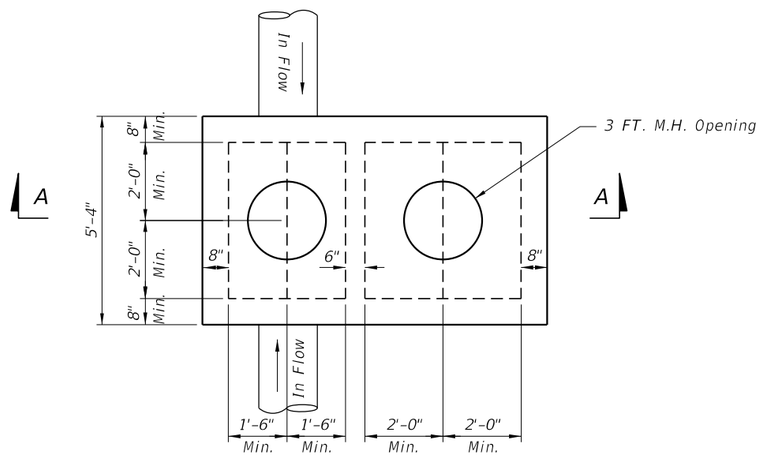

TOP SLAB PLAN

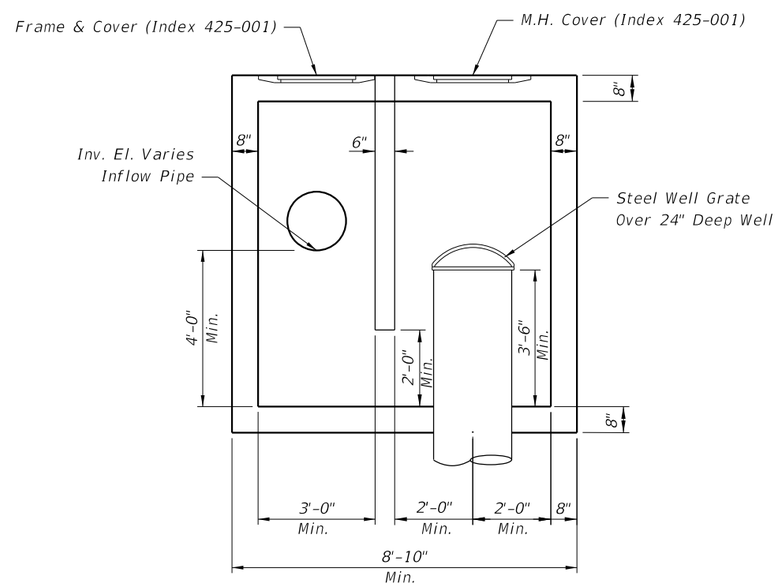

SECTION A-A

STRUCTURE WITH NO OUTFLOW

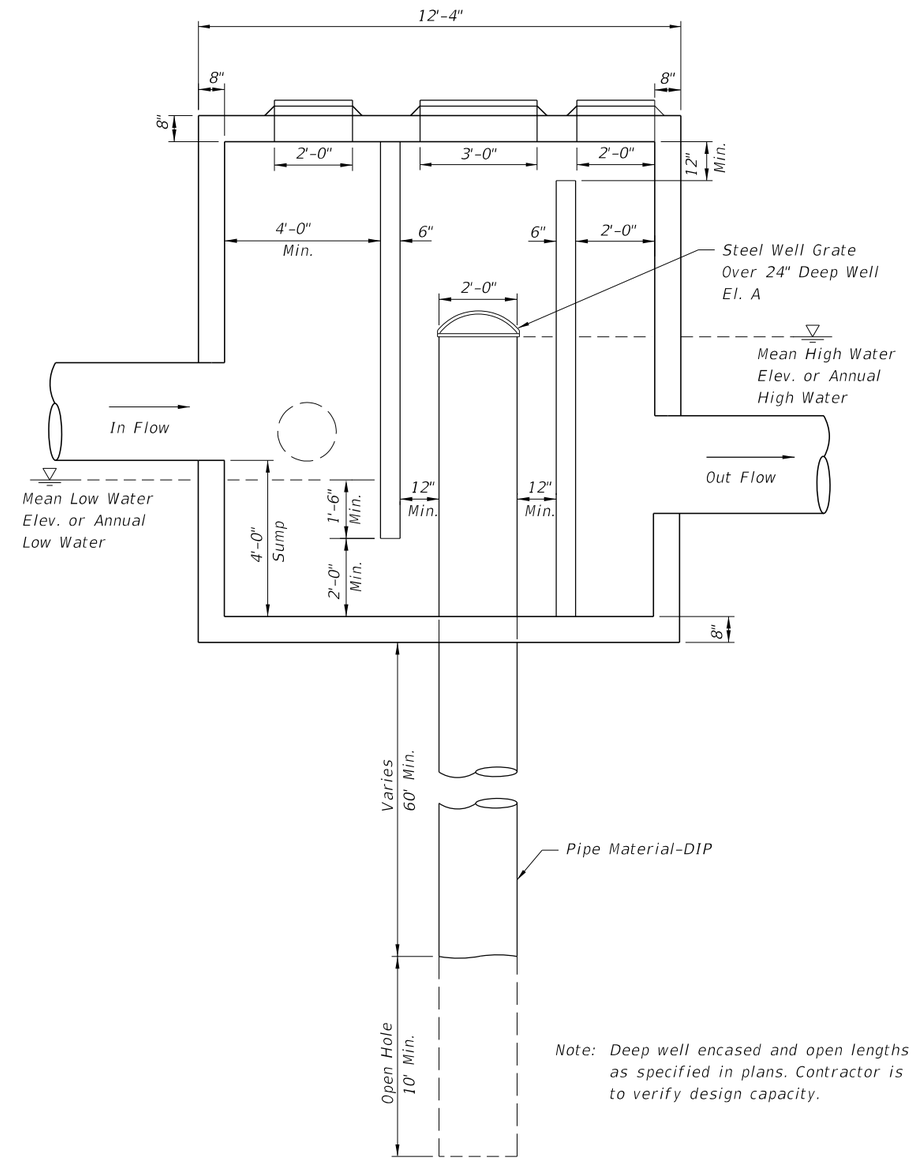

Note: Deep well encased and open lengths as specified in plans. Contractor is to verify design capacity.

SPECIAL MANHOLE STRUCTURE DETAIL WITH OUTFALL

24" STEEL WELL GRATE

Heavy duty "bee hive" grate

Openings: 1-½" maximum

Total Opening: 1.7 sq ft minimum

For 24" well, outer diameter = 29"

Steel well grate to be installed over 24" deep well.

Steel grate to be hot dipped galvanized after fabrication, see Specification Section 962.

DESIGN NOTES:

1. Depth of Casing Varies, 60' min.
2. Depth of Open Hole, 10'-20'.
3. Actual Size Of The Inflow And Outflow Chambers Will Be Determined By The Size Of The Pipes (Refer To Table 3 Of Index 425-010). The Width Of The Box Shall Be Constant Based On The Largest Pipe. The Length Is To Be Adjusted Based On Size and Orientation Of The Pipes.

10/20/2022 8:49:25 AM

LAST REVISION	REVISION	DESCRIPTION:			INDEX	SHEET
11/01/17			FY 2023-24 STANDARD PLANS	DEEP WELL INJECTION BOX	444-T01	1 of 1

GENERAL NOTES:

1. Do not leave trench greater than 2' in depth overnight. Barricade trenches at all times.

2. Construct concrete pavement subdrainage adjacent to the low edge of the roadway pavement and under travel lanes, auxiliary pavement and shoulders, as called for in the plans. Extend the concrete pavement subdrainage 50' beyond and begin 50' before the flat point (100' overlap) when the low edge shifts between outside and inside edges of pavement . Place concrete pavement subdrainage on the low side of ramps for crossroad terminals.

3. Install concrete pavement subdrainage on a grade parallel with the edge of pavement profile, except on profiles flatter than one-tenth percent (0.10%) install the concrete pavement subdrainage on a minimum grade of one-tenth percent (0.10%).

4. Remove adhering base material and soil from the vertical face of the concrete immediately prior to placing the filter fabric.

5. Submit a procedure for holding the filter fabric in position on the vertical face of the trench for approval by the Engineer prior to placing draincrete.

6. Cap the upper end of each separate run of the concrete pavement subdrainage pipe.

7. Install outlet pipes at 500' maximum intervals. Use elbows or 1/8 bends to connect the outlet pipe to the concrete pavement subdrain pipe. Use elbows or bends of the same material as the outlet pipe.

   Stub outlet pipes into existing inlets or into existing ditch pavements at an elevation 6" above the inlet flowline or ditch bottom when directed by the Engineer. Concrete apron and bordering sod are not required for stubbed outlets, but replacement sodding will be required at trenches for pipes stubbed into paved ditches.

   Install a single outlet apron for separate outlet pipes of concrete pavement subdrainage from opposite directions in sag vertical curves.

   Install backfill consisting of cohesive soils around outlet pipes.

8. Replace existing paved shoulder removed for the construction of outlet pipes with Type SP asphaltic concrete at the rate of 500 LB per SY.

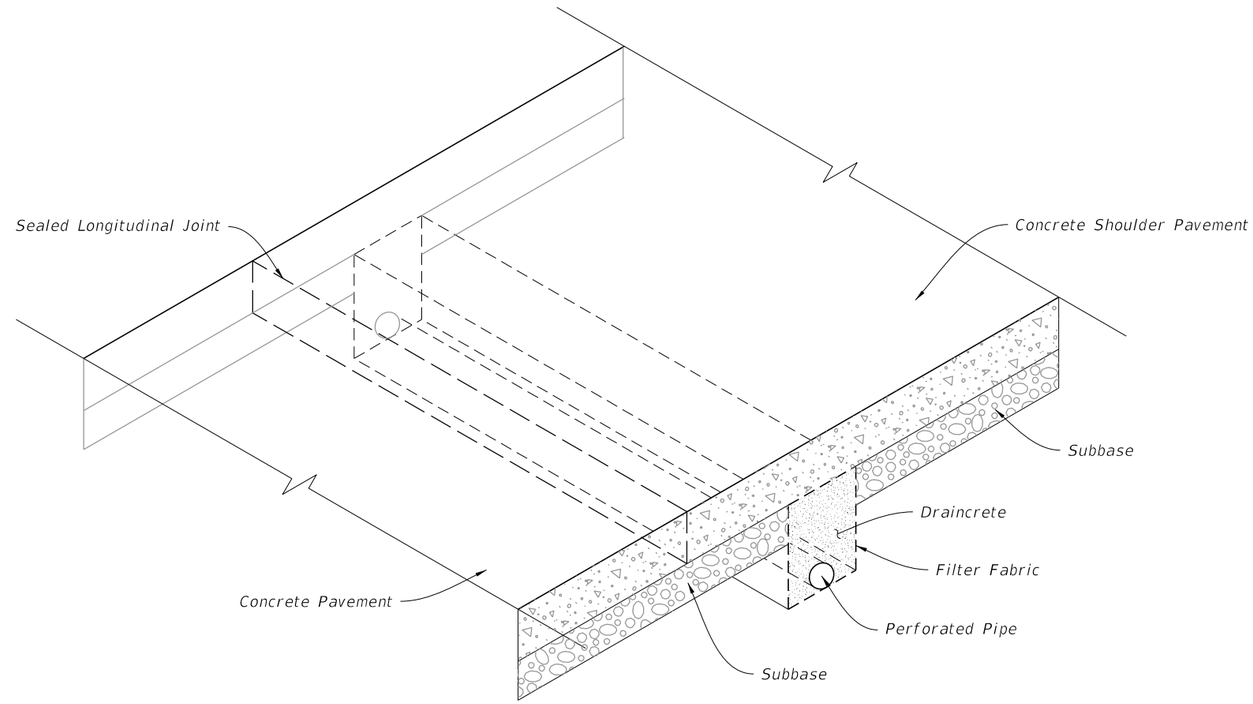

DRAINCRETE SUBDRAINAGE

TABLE OF CONTENTS:

Sheet	Description
1	General Notes and Contents
2	Edgedrain and Outlet
3	New Construction
4	Rehabilitation

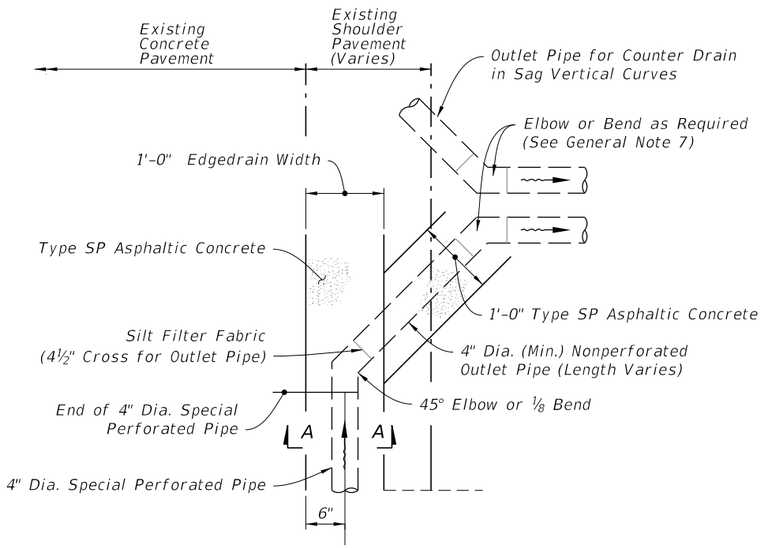

PLAN

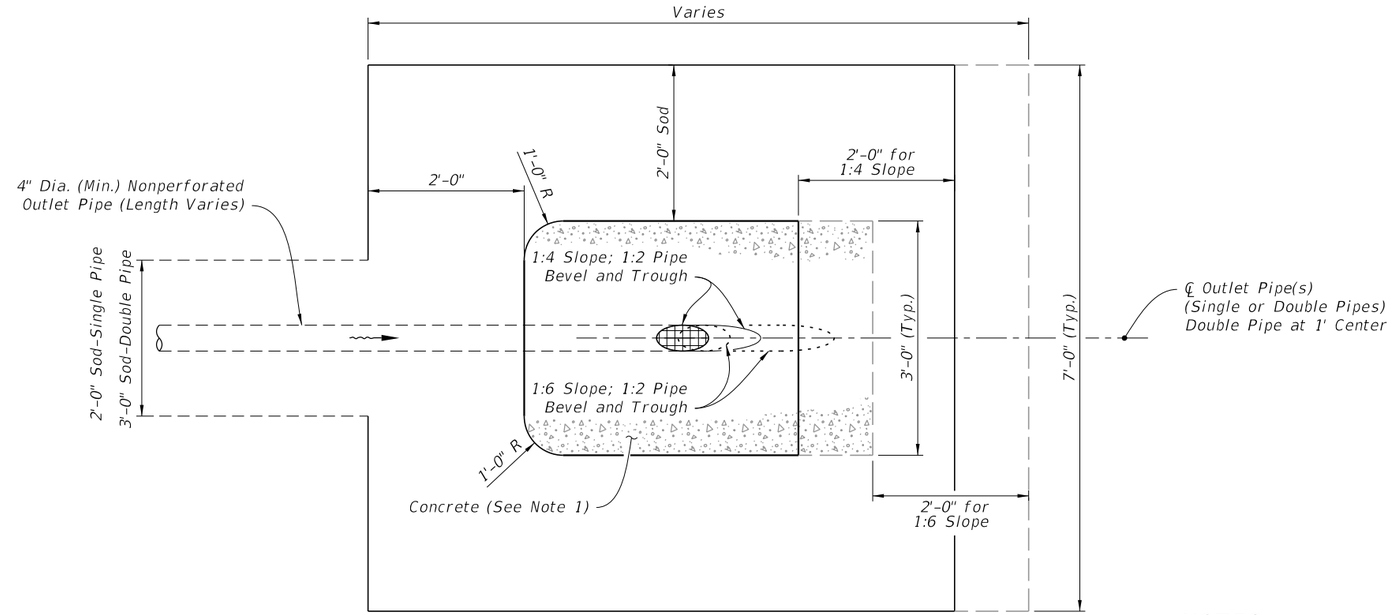

PLAN

NOTES:

1. Install 6" thick Class NS concrete, 0.19 cubic yard for 1:4 slopes and 0.25 cubic yard for 1:6 slopes.

2. Install perimeter sod, 4.7 square feet for 1:4 slopes and 5.5 square feet for 1:6 Slopes.

3. 1.75' std. for grassed ditches; 0.5' std. for paved ditches [less is acceptable to provide minimum 0.1% outlet pipe slope]

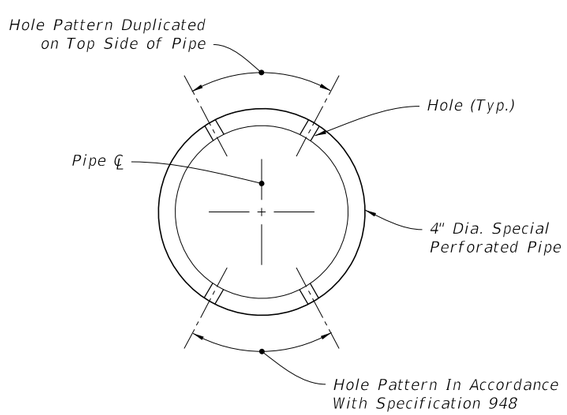

SECTION A-A

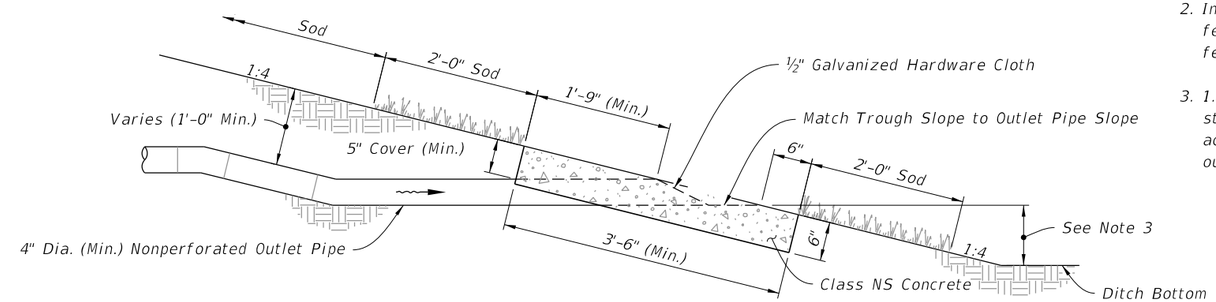

1:4 SLOPE

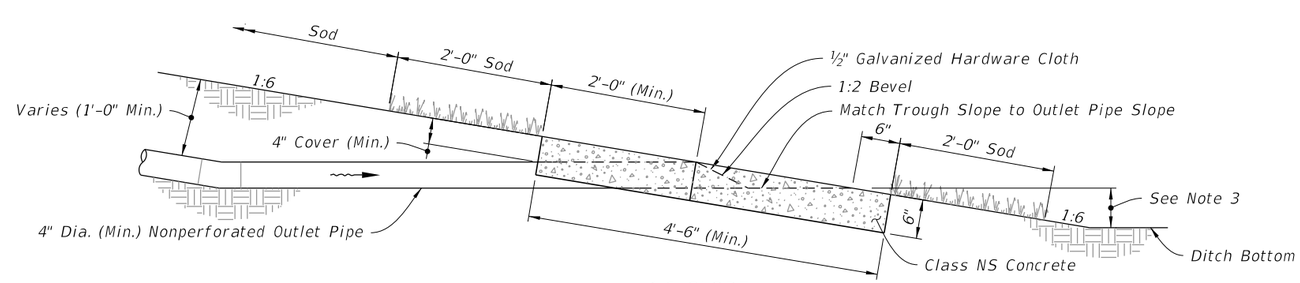

1:6 SLOPE

ELEVATIONS

EDGEDRAIN OUTLET

LAST REVISION	REVISION	DESCRIPTION:				
11/01/19			FY 2023-24 STANDARD PLANS	CONCRETE PAVEMENT SUBDRAINAGE	INDEX 446-001	SHEET 2 of 4

10/20/2022 8:49:27 AM

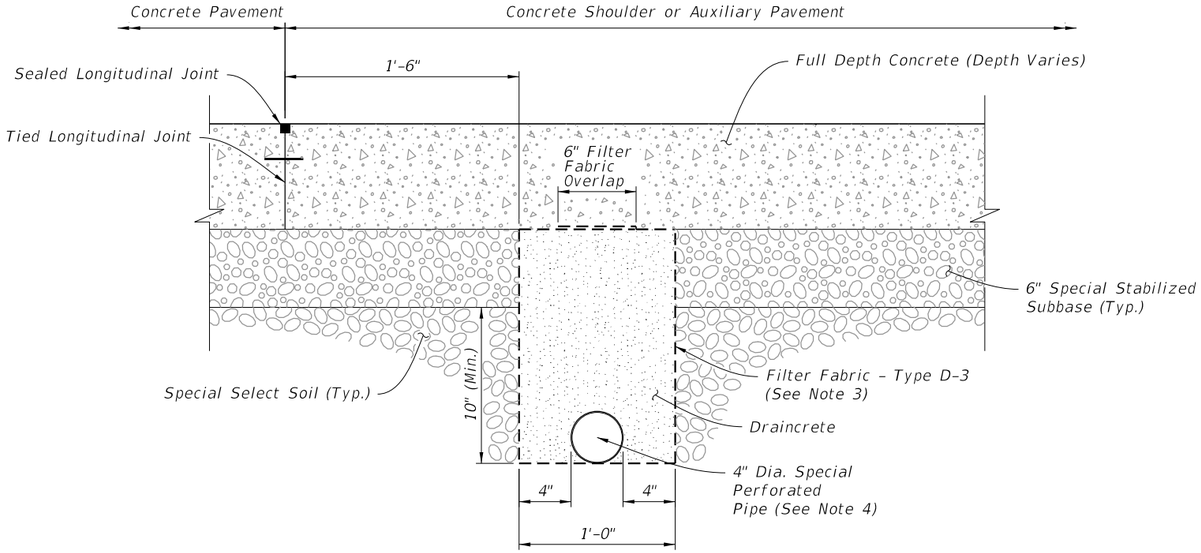

SPECIAL SELECT SOIL BASE

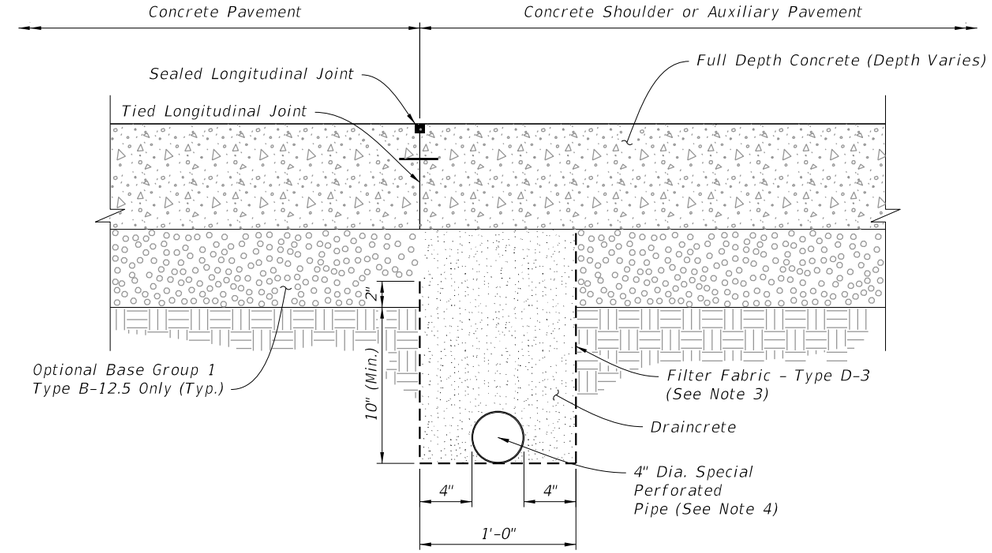

ASPHALT BASE

CONCRETE SHOULDERS AND AUXILIARY PAVEMENT

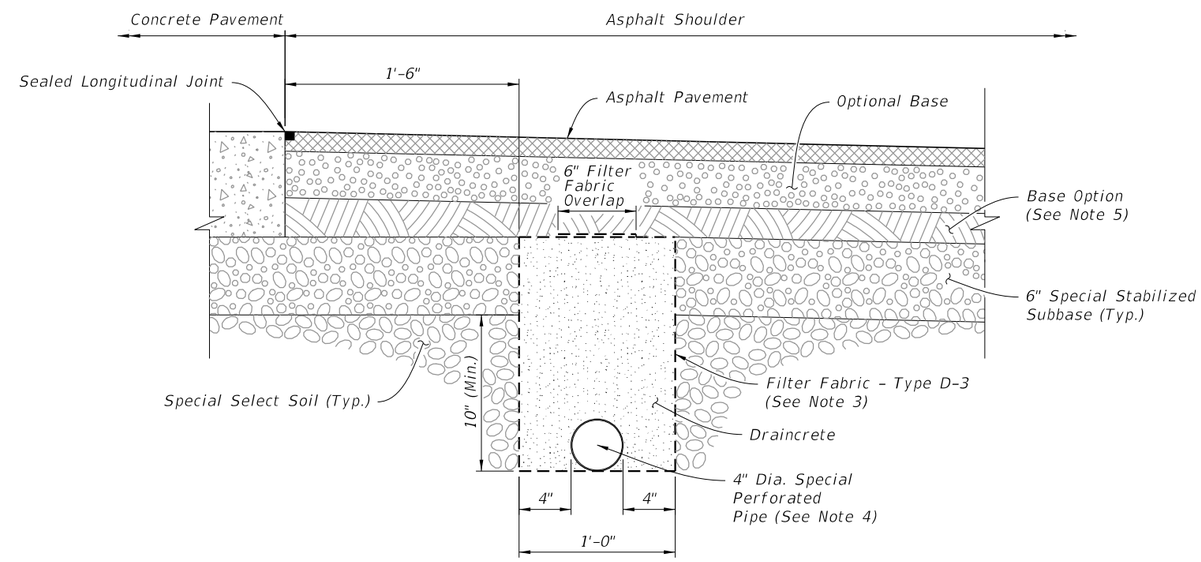

SPECIAL SELECT SOIL BASE

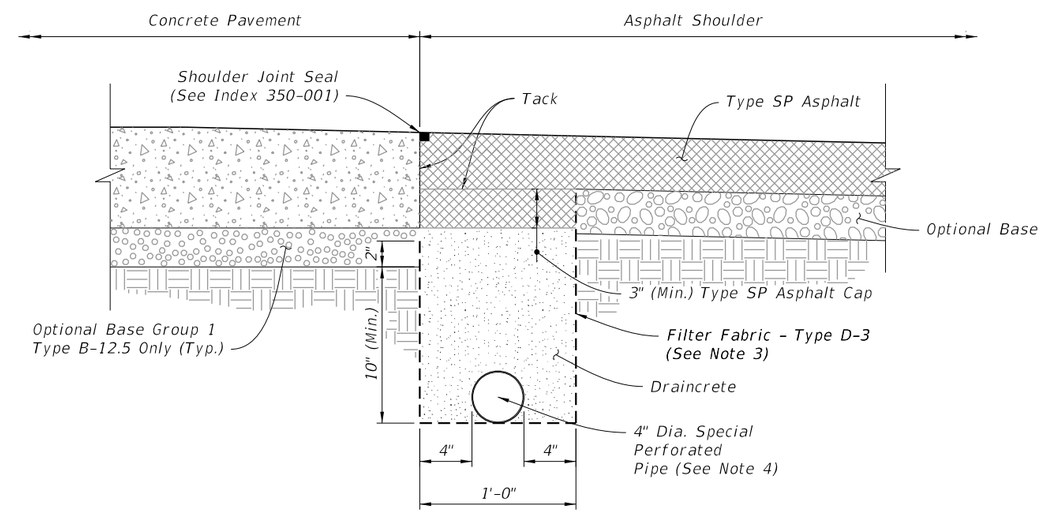

ASPHALT BASE

ASPHALT SHOULDERS

NOTES:

1. The edgedrain sections for DRAINCRETE SUBDRAINAGE are applicable to pavement construction identified as RIGID PAVEMENT on Index 120-001.
2. Confine the construction of draincrete edgedrain to an area in which the entire operation can be carried out in five (5) work days, unless another construction period is called for in the plans, with sufficient time allowed for the draincrete to set before placement of pavement.
3. Install the filter fabric in accordance with Specification 514.
4. Install only noncorrugated or smooth lined corrugated pipe.
5. At the Contractor's option this area may be constructed of Optional Base material (Specification 285) or special stabilized subbase.

NEW CONSTRUCTION

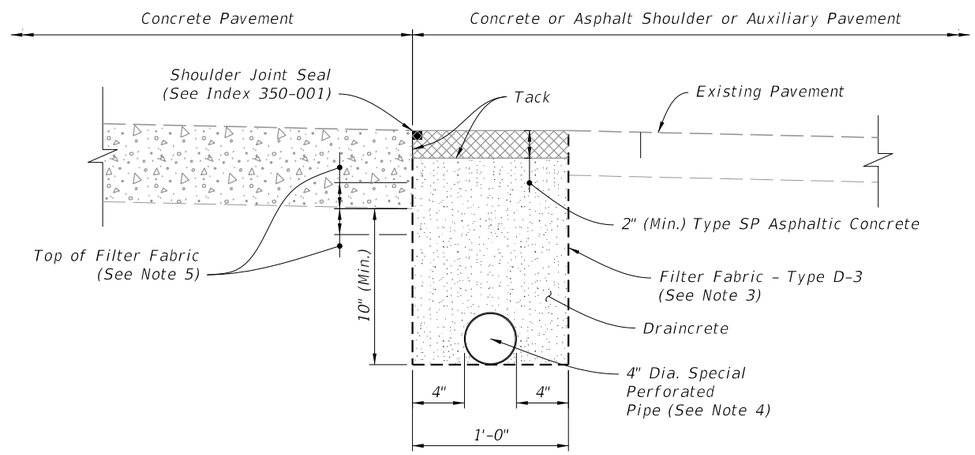

EXISTING SHOULDERS

NOTES:

1. The edgedrain sections for DRAINCRETE SUBDRAINAGE are applicable to pavement construction identified as RIGID PAVEMENT on Index 120-001.
2. Confine the construction of draincrete edgedrain to an area in which the entire operation can be carried out in five (5) work days, unless another construction period is called for in the plans, with sufficient time allowed for the draincrete to set before placement of pavement.
3. Install the filter fabric in accordance with Specification 514.
4. Install only noncorrugated or smooth lined corrugated pipe.
5. Install Filter Fabric 2" below bottom of pavement for cement stabilized, soil cement and econocrete subbases and 2" above bottom of pavement for other subbases.

CROSS REFERENCES:
For Dimensions L and X see Sheet Pile Wall Data Table in Structures Plans.

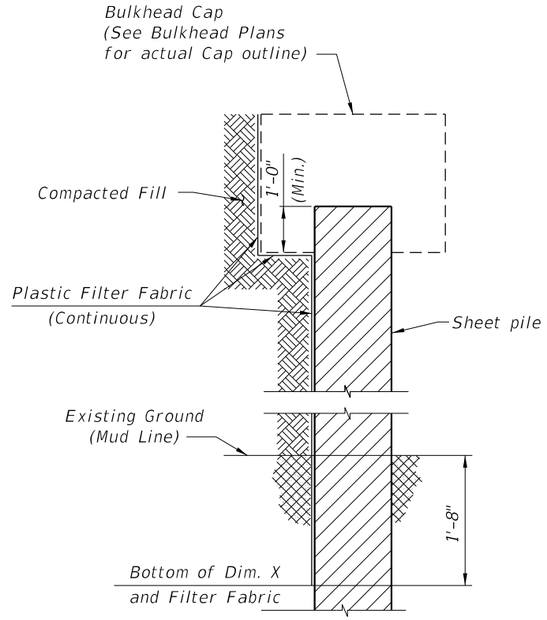

SECTION THRU BULKHEAD

(Showing Plastic Filter Fabric)

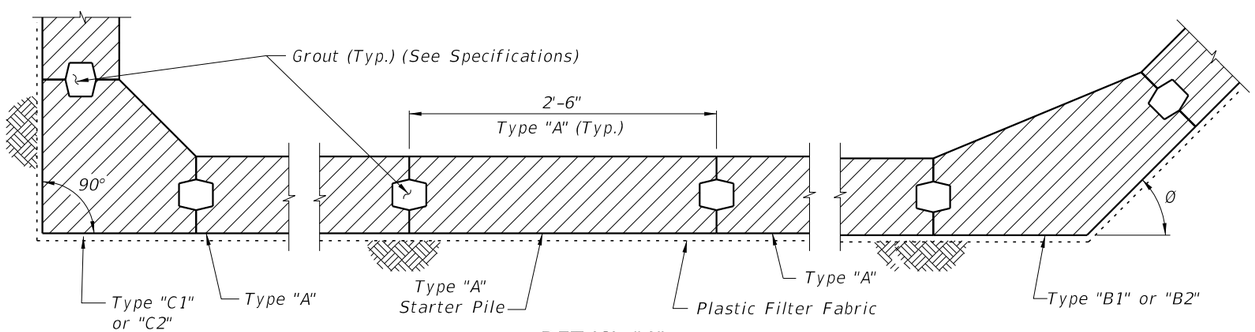

DETAIL "A"

(Cap and Anchoring System Not Shown)
(Section Taken Above Dimension X)

NOTE: Detail "A" shows a Part-Plan View of an assumed bulkhead.
See Bulkhead plans for actual Plan View.

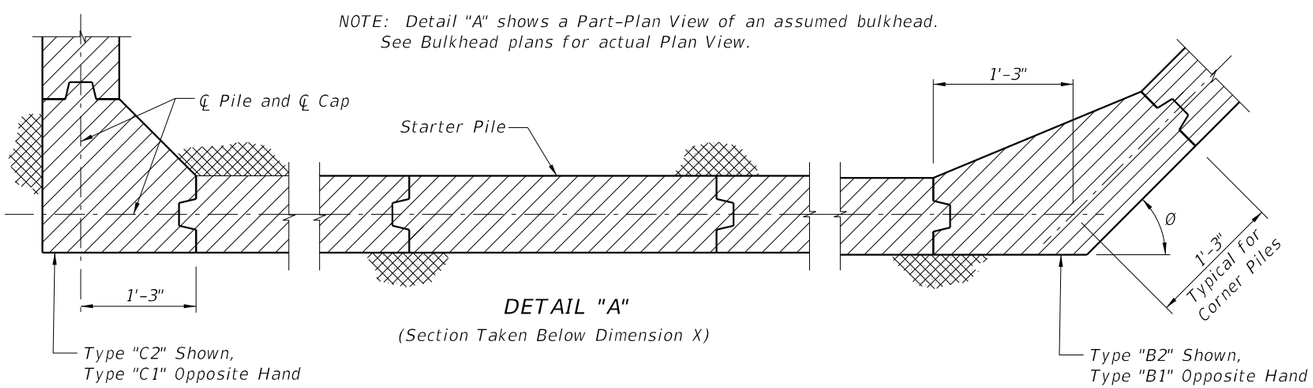

DETAIL "A"

(Section Taken Below Dimension X)

SHEET PILE DESIGN CRITERIA AND NOTES

DESCRIPTION:
This Index includes details for five types of piles with two thicknesses.
Types "B1", "B2", "C1" and "C2" piles (corner piles) are of reinforced concrete construction, and Type "A" is of prestressed concrete construction. The piles shall be manufactured, cured and installed in accordance with the requirements of the contract documents.

MATERIALS: (for materials not listed refer to the Specifications)
CONCRETE
Class: V for slightly and moderately aggressive environments
V with Highly Reactive Pozzolans for extremely aggressive environments
Unit weight: 150 pcf
Modulus of Elasticity: Based on the use of Florida limerock concrete

REINFORCING STEEL
ASTM A615 Grade 60

PRESTRESSING STEEL
ASTM A416 Grade 270 (Low-Relaxation Strand)

DESIGN PARAMETERS:
Type "A"
Concrete Compressive Strength at release of prestressing: 4000 psi minimum
Uniform compression after prestressing losses: 1000 psi minimum
Pick-up, Storage and Transportation: 0.0 psi tension with 1.5 times pile self weight
Types "B1", "B2", "C1" & "C2"
Pick-up, Storage and Transportation: Minimum compressive strength $f'ci \geq 4000$ psi required.

ENVIRONMENT:
The pile designs are applicable to all Environments.

PLASTIC FILTER FABRIC:
The plastic filter fabric shall extend to the bottom of the "X" dimension.

PILE PICK-UP AND HANDLING:
Type "A"
Pick-up of pile may be either a single point pick-up or a two point pick-up as shown below.
Types "B1", "B2", "C1" & "C2"
Two point pick-up for lifting out of forms & two point support for storage & transportation.
Single point pick-up for installation only.

PILE FIT-UP:
The 2'-6" Sheet Pile dimension is nominal. This dimension may be shortened by the Manufacturer up to ½" to allow for Sheet Pile fit-up in its final position. Minimum Sheet Pile width is 2'-5½". No changes shall be made to the tongues or grooves.

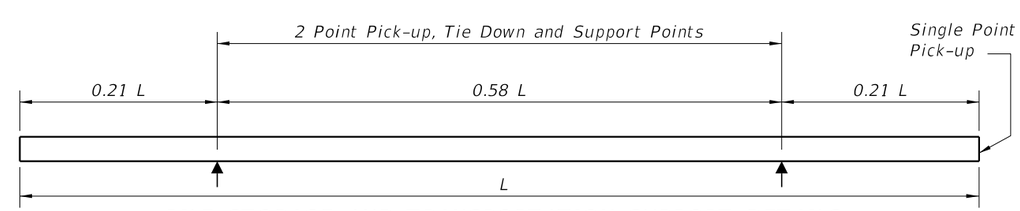

PILE STORAGE AND TRANSPORTATION SUPPORT DETAILS

NOTES AND DETAILS

10/20/2022 8:49:29 AM

LAST REVISION	REVISION	DESCRIPTION:			INDEX	SHEET
11/01/22			FY 2023-24 STANDARD PLANS	PRECAST CONCRETE SHEET PILE WALL (CONVENTIONAL)	455-400	1 of 4

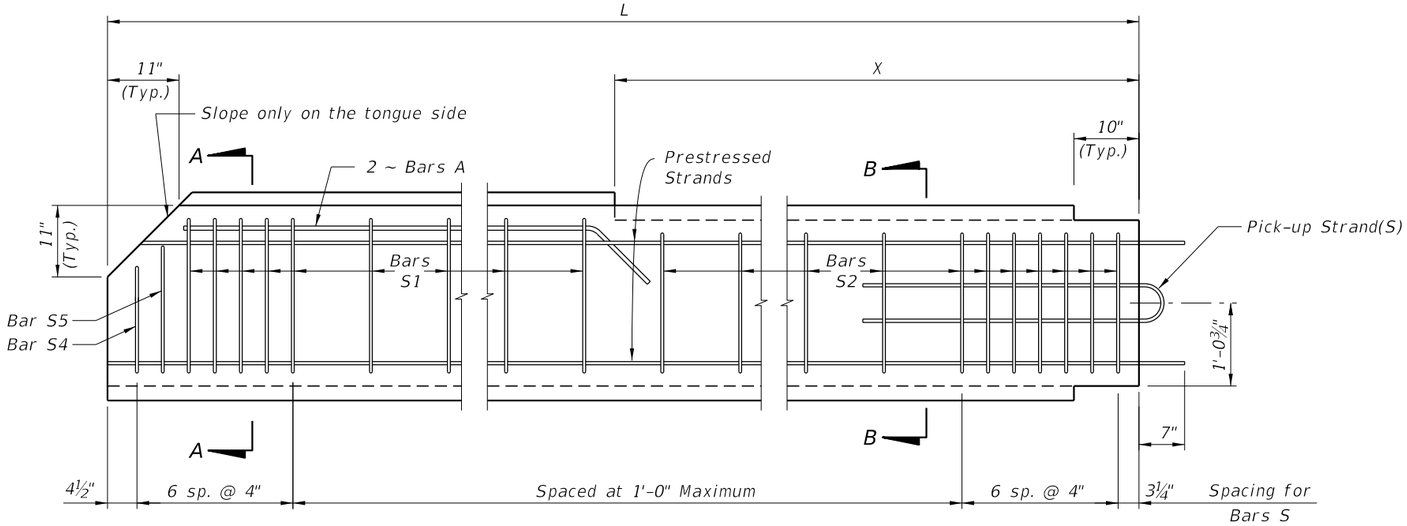

TYPICAL PILE

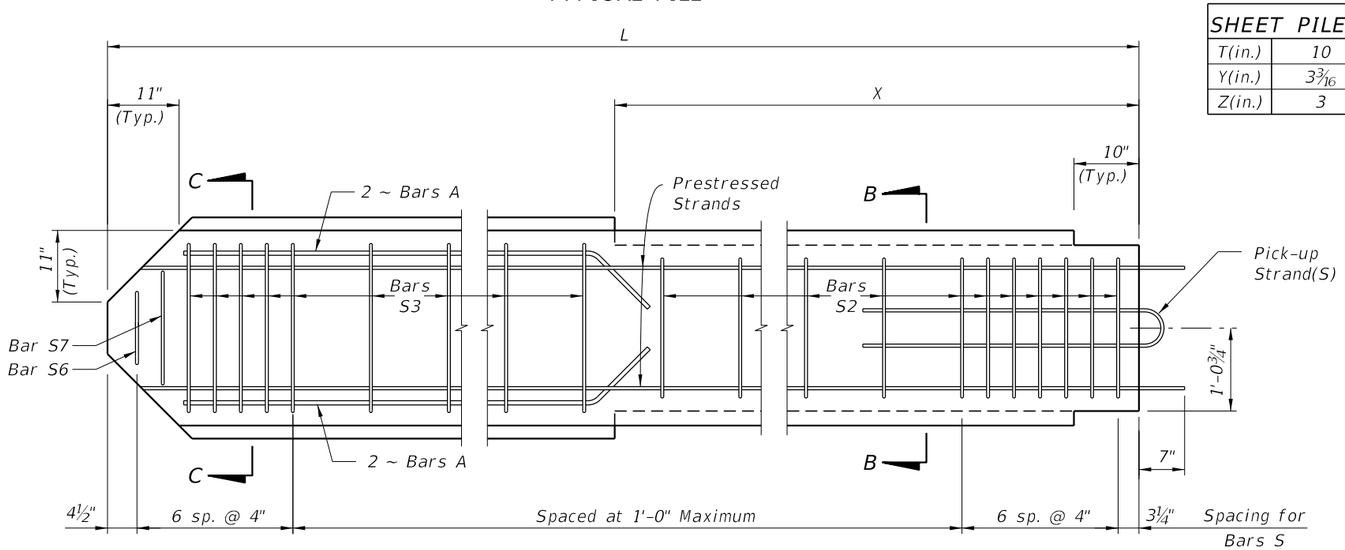

STARTER PILE

SHEET PILE DIMENSIONS		
T(in.)	10	12
Y(in.)	3 3/16	4 3/16
Z(in.)	3	4

WALL THICKNESS	STRAND DIA. (in.)	MAXIMUM L	n	D (in.)	TOTAL # OF STRANDS	INITIAL (JACKING) FORCE (Kip)
T=10 in.	0.5	28'-0"	6	3¼	14	31
	0.6	27'-0"	4	5	10	44
T=12 in.	0.5	31'-0"	7	2⅞	16	31
	0.6	30'-0"	5	4	12	44

BAR BENDING DIAGRAMS

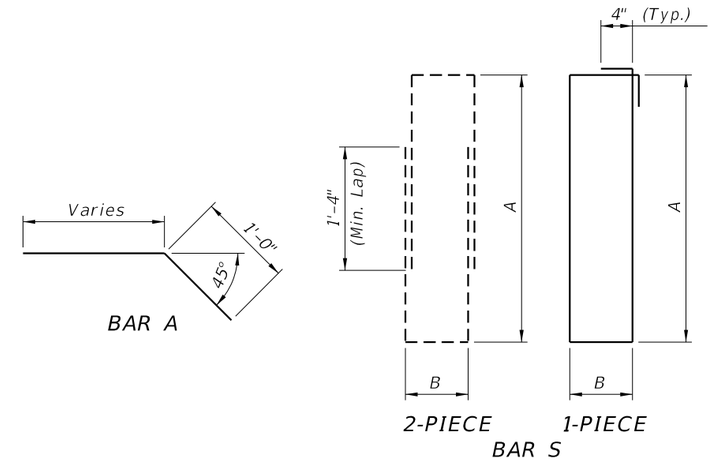

DIMENSION A	
S1	1'-11¾"
S2	1'-9½"
S3	2'-2"
S4	1'-6¾"
S5	1'-10¾"
S6	11"
S7	1'-7¼"

DIMENSION B	
T=10 in.	4"
T=12 in.	6"

NOTES:
1. Intermediate Prestress Strands not shown in Elevations and Sections.
2. All bar dimensions are out-to-out.
3. Bars A are #5 and Bars S are #4.
4. At the Contractor's option Bars S may be fabricated as a two piece bar as shown in the Bar Bending Diagram.
5. The Contractor may use Deformed Welded Wire Reinforcement meeting the requirements of Specification Section 931 in lieu of Bars A and Bars S if the wire size and spacing provide the same area of reinforcing steel per foot as the Bars shown.
6. For Dimensions L and X see Sheet Pile Data Table in Structures Plans.

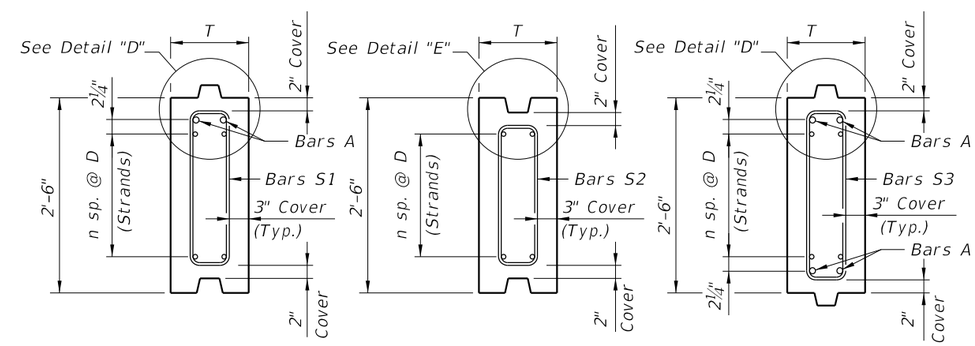

SECTION A-A SECTION B-B SECTION C-C

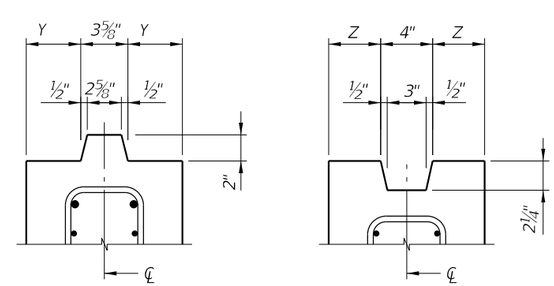

DETAIL "D" (Typical Tongue)

DETAIL "E" (Typical Groove)

TYPE "A" STANDARD SECTION

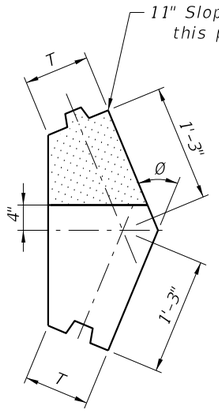

VIEW C-C

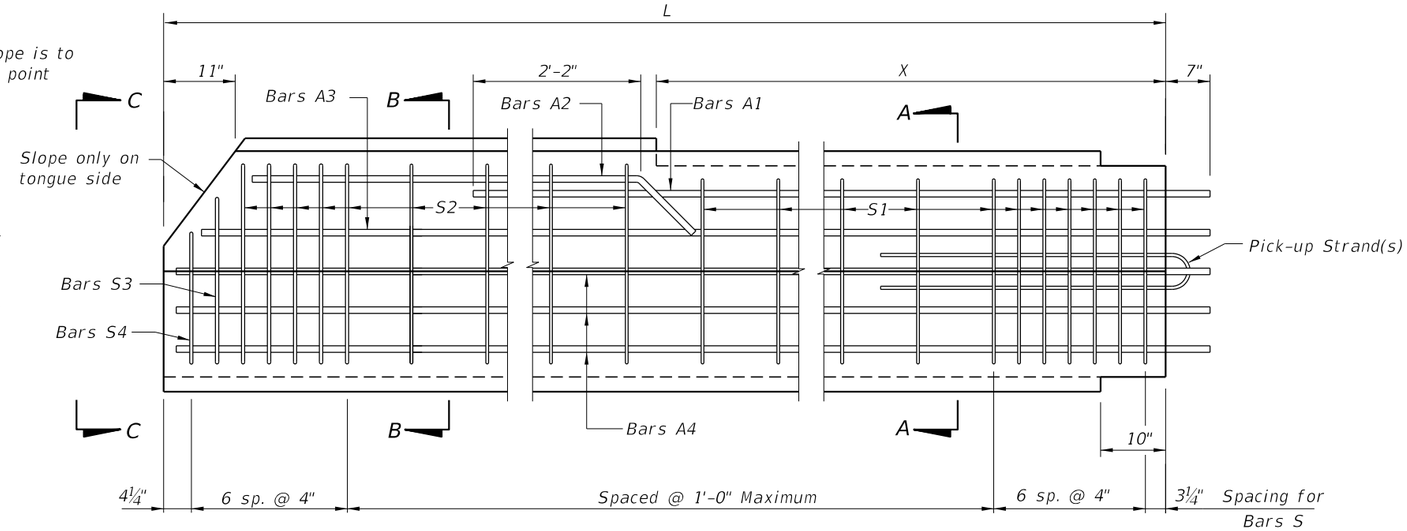

ELEVATION
(TYPE "B1" PILE SHOWN, TYPE "B2" PILE OPPOSITE HAND)

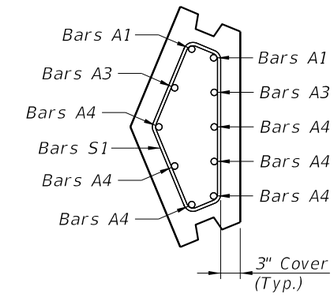

SECTION A-A

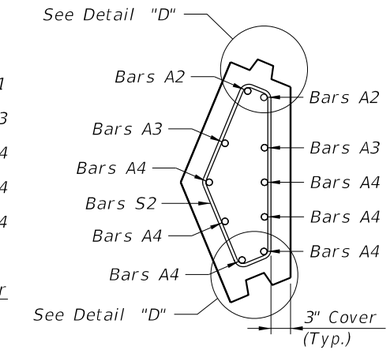

SECTION B-B

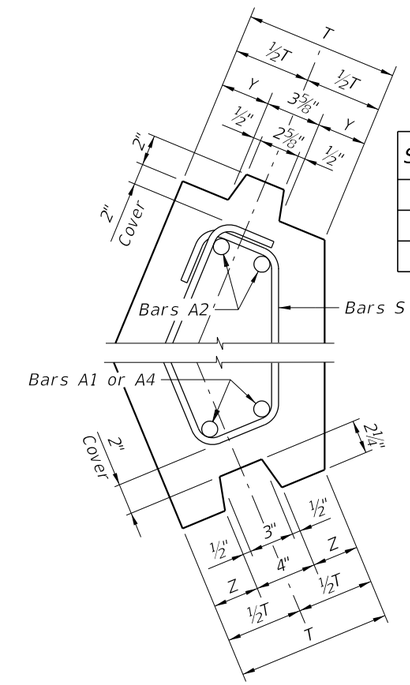

SHEET PILE DIMENSIONS		
T (in.)	10	12
Y (in.)	3 3/16	4 3/16
Z (in.)	3	4

DETAIL "D"
(TYPE "B1" PILE SHOWN, TYPE "B2" PILE OPPOSITE HAND)

BAR BENDING DIAGRAMS

STIRRUP DIMENSIONS (T = 10")

Ø	BAR MARK	R1	R2	R3	R4	R5	R6	R7	R8
30°	S1	11¼"	9¾"	1'-6½"	2½"	5"	4¾"	5½"	4¼"
	S2	1'-1½"	9¾"	1'-8¾"	2½"	4½"	5½"	5¾"	4¼"
	S3	11¼"	8"	1'-6"	1¼"	5"	4½"	4½"	5"
	S4	11¼"	4¼"	1'-1¾"	1¾"	5"	3¾"	2½"	6¼"
45°	S1	11½"	8"	1'-4"	4"	5½"	6½"	8"	4"
	S2	1'-1¾"	8"	1'-5¾"	4"	4½"	7½"	8"	4"
	S3	11½"	6¾"	1'-4"	2¼"	5½"	6¾"	6¾"	5½"
	S4	11½"	3½"	1'-0"	3"	5½"	5"	3½"	7"
60°	S1	1'-0"	6"	1'-0¾"	5¼"	6"	7¼"	10¼"	3"
	S2	1'-2"	6"	1'-2¾"	5¼"	4¾"	8¾"	10½"	3"
	S3	1'-0"	4¾"	1'-1½"	3¼"	6"	8"	8¾"	5¼"
	S4	1'-0"	2½"	10"	4½"	6"	5¾"	4"	7½"

STIRRUP DIMENSIONS (T = 12")

Ø	BAR MARK	R1	R2	R3	R4	R5	R6	R7	R8
30°	S1	11½"	10"	1'-6"	3½"	7"	4¾"	5¾"	6"
	S2	1'-1¾"	10"	1'-8¼"	3½"	6½"	5¼"	5¾"	6"
	S3	11½"	8¼"	1'-5¾"	2"	7"	4¾"	4½"	7¼"
	S4	11½"	4"	1'-1¼"	2¼"	7"	3¾"	2½"	8¼"
45°	S1	1'-0"	8½"	1'-3¼"	5¼"	7½"	6¼"	8½"	5¼"
	S2	1'-2¼"	8½"	1'-5½"	5¼"	6½"	7¼"	8½"	5¼"
	S3	1'-0"	7"	1'-4"	3"	7½"	6¾"	7"	7¼"
	S4	1'-0"	3½"	11¾"	3¾"	7½"	5"	3½"	9"
60°	S1	1'-0½"	6¼"	11¾"	7"	8"	6¾"	10¾"	4"
	S2	1'-2¾"	6¼"	1'-2"	7"	6¾"	8"	10¾"	4"
	S3	1'-0½"	5"	1'-1½"	4"	8"	8"	9"	7"
	S4	1'-0½"	2½"	9½"	5½"	8"	5½"	4¼"	9¼"

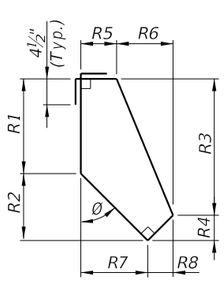

1 - PIECE

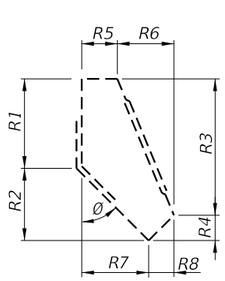

2 - PIECE

BARS S1 & S2

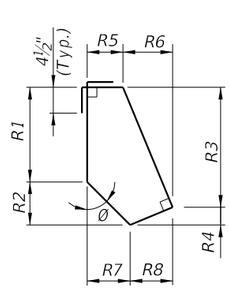

BARS S3 & S4

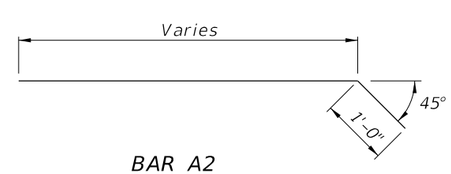

BAR A2

NOTES:
1. This drawing includes details for precast concrete corner piles for 10" and 12" thick sheet pile systems. The details apply equally to both thicknesses.
2. The bar configurations shown in Sections A-A and B-B shall be used for Ø angles between 15° and 75°. For Ø angles not shown, the reinforcing bar dimensions may be interpolated or extrapolated from the stirrup dimensions shown.
3. All bar dimensions are out-to-out.
4. Bars A are #8 and Bars S are #4.
5. Values for Stirrup Dimensions are shown for Ø equal to 30°, 45° & 60° only.
6. At the Contractor's option Bars S may be fabricated as a 2 piece bar with a minimum lap length of 1'-4", as shown in Bar Bending Diagrams.
7. If Type "B1" or "B2" pile is used as a Starter Pile show tongue on both sides of pile from Dim. X down. Show dimensions for Bars S2, S3 & S4 in shop drawings.
8. If tongue must be on the opposite side from that shown all dimensions and Bars A, S2, S3 and S4 will be the same but opposite hand.
9. For Dimensions L, X and Angle Ø, see Sheet Pile Data Table in Structures Plans.

TYPE "B1" AND "B2" - VARIABLE ANGLE CORNER PILE

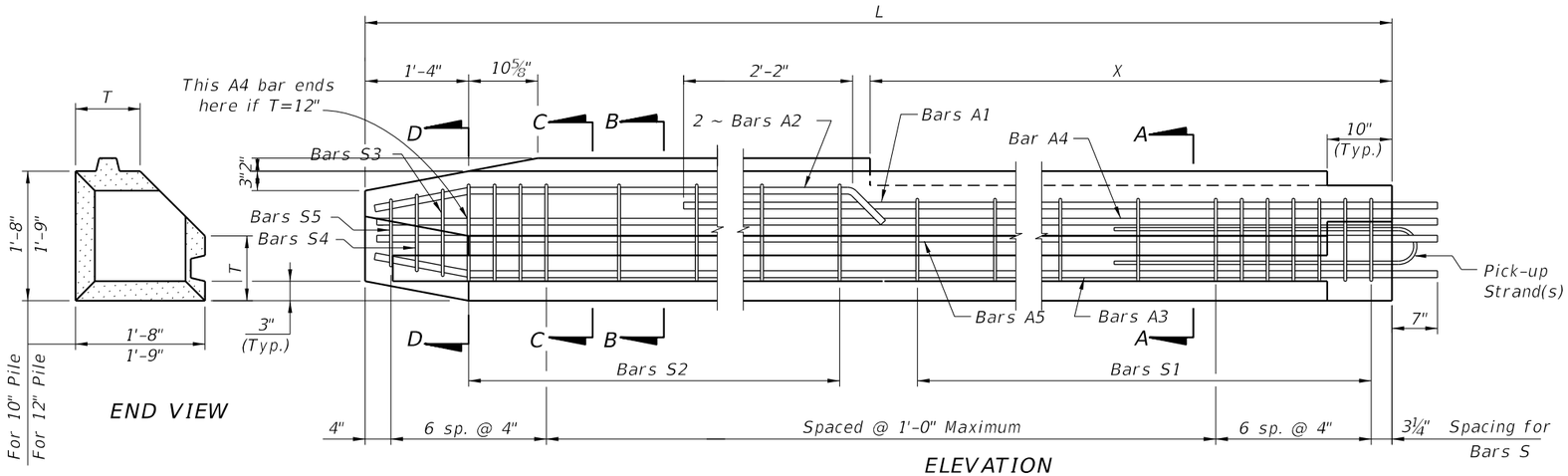

ELEVATION
(TYPE "C1" PILE SHOWN, TYPE "C2" PILE OPPOSITE HAND)

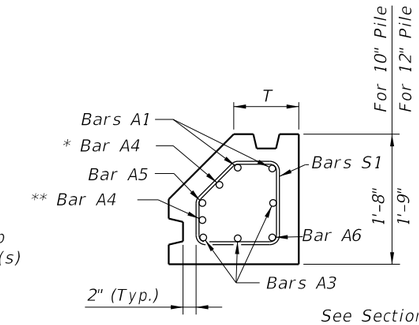

SECTION A-A

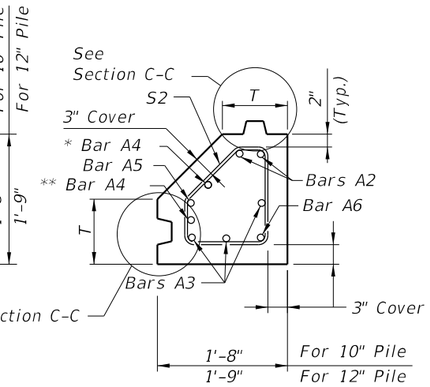

SECTION B-B

* This Bar A4 shall be 1'-2" shorter than other A4 bars for T = 12".

** This Bar A4 (not shown in elevation) is included only if T = 12".

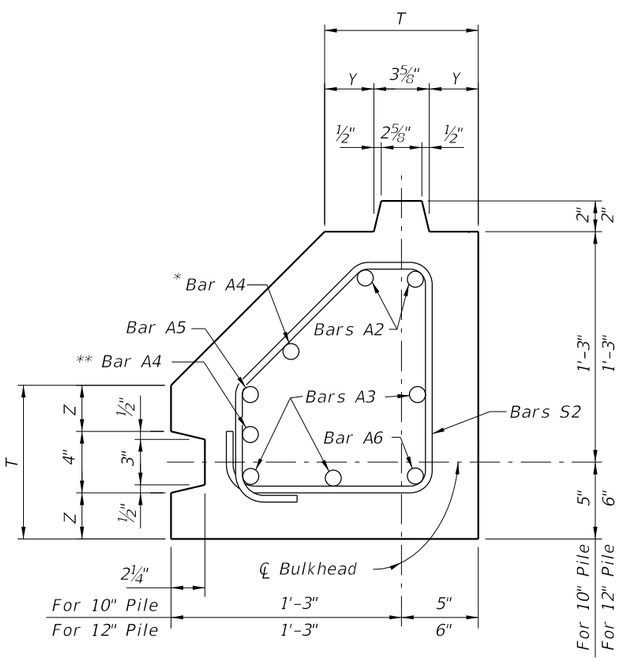

SECTION C-C (T=10" or 12")

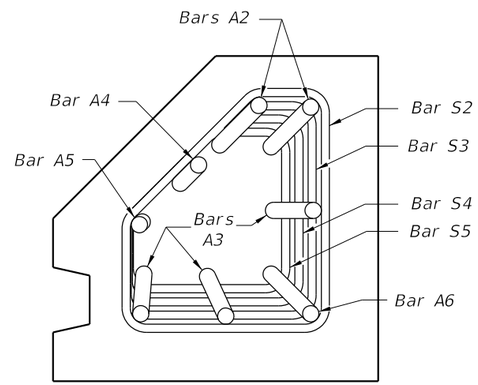

SECTION D-D (T=10")

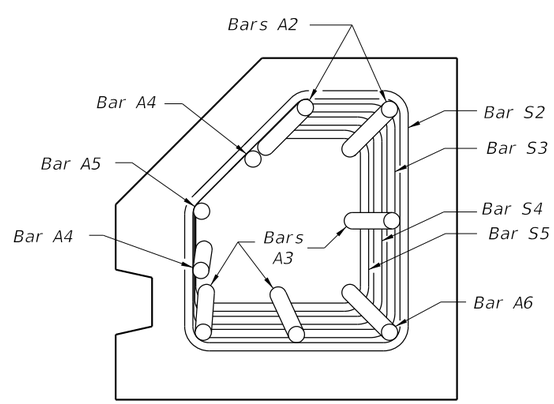

SECTION D-D (T=12")

STIRRUP DIMENSIONS					
θ	T (in.)	BAR MARK	R1	R2	R3
90°	10	S1	7"	5¾"	7"
		S2	7"	8"	4¾"
		S3	6¼"	7¼"	4¾"
		S4	5½"	6½"	4¾"
		S5	4¾"	5¾"	4¾"
	12	S1	9"	4¾"	9"
		S2	9"	7"	6¾"
		S3	8¼"	6¼"	6¾"
		S4	7½"	5½"	6¾"
		S5	6¾"	4¾"	6¾"

SHEET PILE DIMENSIONS		
T (in.)	10	12
Y (in.)	3 3/16	4 3/16
Z (in.)	3	4

BAR BENDING DIAGRAMS

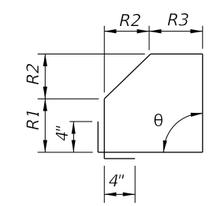

STIRRUPS S

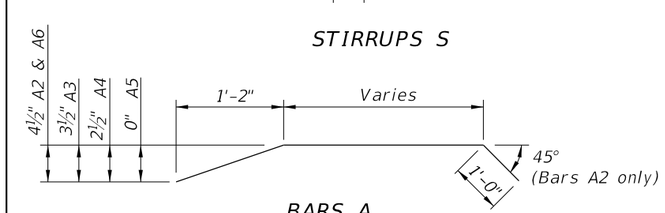

BARS A

Note: All Bar dimensions are out-to-out.

NOTES:
1. All bar dimensions are out-to-out.
2. Bars A are #8 and Bars S are #4.
3. This drawing includes information for precast Corner Piles for 10" and 12" thick Sheet Pile systems. The details apply to both thicknesses but the bar configurations change slightly according to the thickness values used.
4. If Type "C1" or "C2" pile is used as a Starter Pile show tongue on both sides of pile from Dim. X down. Show dimensions for Bars S2, S3, S4 & S5 in shop drawings.
5. If tongue must be on opposite side (Groove Side) from that shown, all dimensions and reinforcement shall follow the corresponding Tongue or Groove side.
6. For Dimensions L and X see Sheet Pile Data Table in Structures Plans.

TYPE "C1" AND "C2" - RIGHT ANGLE CORNER PILE

CROSS REFERENCES:
For Dimensions L and X see Sheet Pile Wall Data Table in Structures Plans.

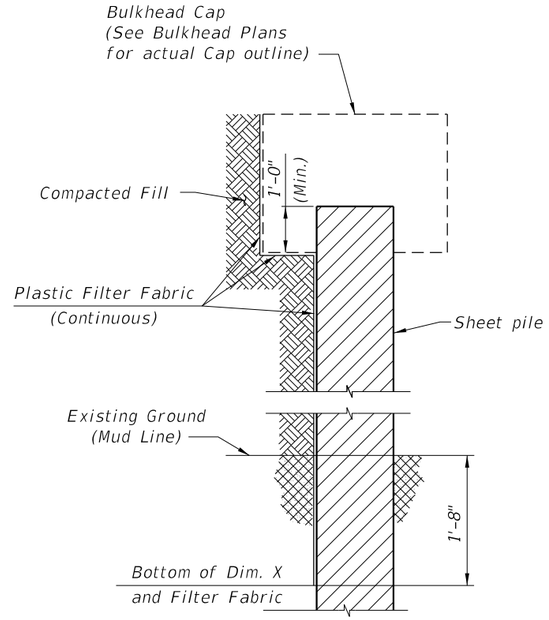

SECTION THRU BULKHEAD
(Showing Plastic Filter Fabric)

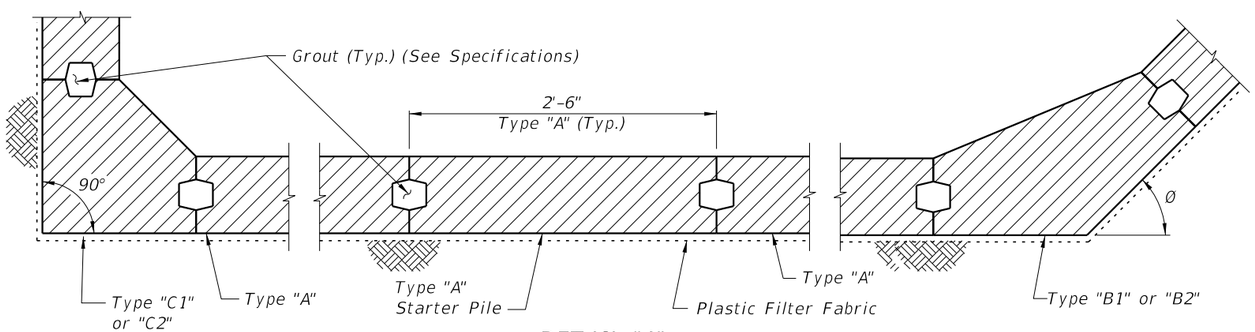

DETAIL "A"
(Cap and Anchoring System Not Shown)
(Section Taken Above Dimension X)

NOTE: Detail "A" shows a Part-Plan View of an assumed bulkhead.
See Bulkhead plans for actual Plan View.

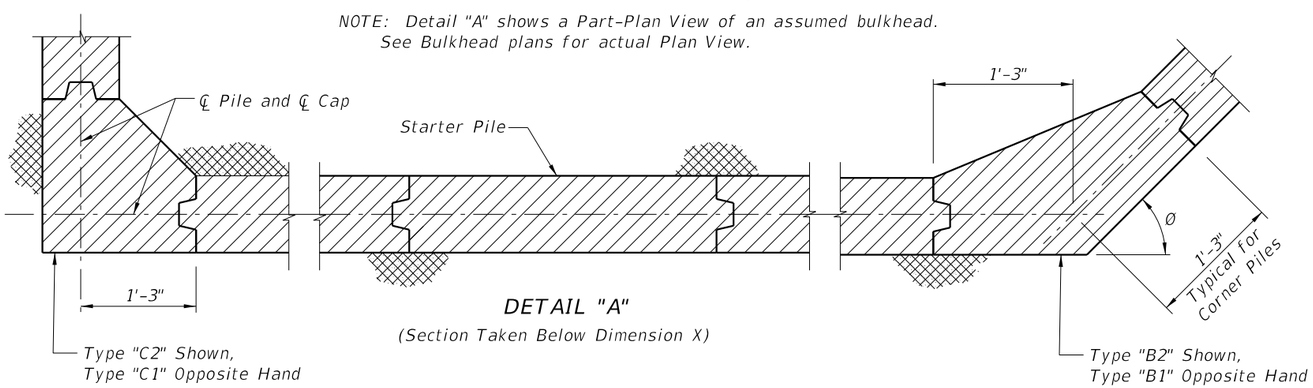

DETAIL "A"
(Section Taken Below Dimension X)

SHEET PILE DESIGN CRITERIA AND NOTES

DESCRIPTION:
This Index includes details for six types of piles with two thicknesses.
Type "A" is prestressed concrete construction with CFRP or HSSS strands.
Types "B1", "B2", "C1" and "C2" piles (corner piles) are reinforced concrete construction.
Manufacture, cure and install Sheet Piles in accordance with the requirements of the contract documents.

MATERIALS: (for materials not listed refer to the Specifications)
CONCRETE
Class: V
Unit weight: 145 pcf
Modulus of Elasticity: Based on the use of Florida limerock aggregate concrete

REINFORCING BARS
Glass Fiber Reinforced Polymer (GFRP) bars meeting the requirements of Specification Section 932.

PRESTRESSING STRAND
Stainless Steel: Prestressing steel shall be seven-wire HSSS, Grade 240 strand, meeting the requirements of Specification Section 933.
Carbon FRP: Prestressing strand shall be CFRP strand, meeting the requirements of Specification Section 933.

DESIGN PARAMETERS:
Type "A"
Concrete Compressive Strength at release of prestressing: 4000 psi minimum
Uniform compression after prestressing losses: 700 psi minimum
Pick-up, Storage and Transportation: 450 psi tension with 1.5 times pile self weight for single-point pick-up at $f'c \geq 6000$ psi

Types "B1", "B2", "C1" & "C2"
Pick-up, Storage and Transportation: Minimum compressive strength $f'ci \geq 4000$ psi required for two-point pick-up; $f'c \geq 6000$ psi for single-point pick-up.

PLASTIC FILTER FABRIC:
The plastic filter fabric shall extend to the bottom of the "X" dimension.

PILE PICK-UP AND HANDLING:
Two-point pick-up for lifting out of forms & two-point support for storage & transportation.
Single-point pick-up for installation only.

PILE FIT-UP:
The 2'-6" Sheet Pile dimension is nominal. This dimension may be shortened by the Manufacturer up to ½" to allow for Sheet Pile fit-up in its final position. Minimum Sheet Pile width is 2'-5½". No changes shall be made to the tongues or grooves.

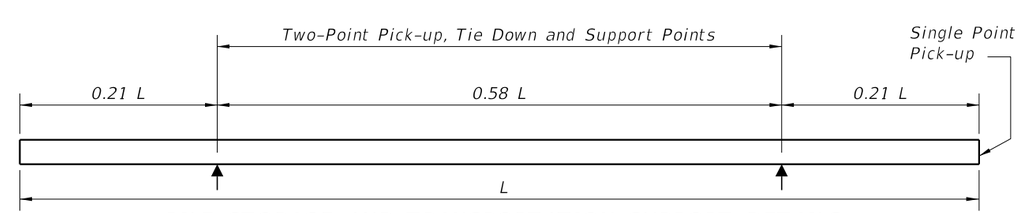

PILE STORAGE AND TRANSPORTATION SUPPORT DETAILS

NOTES AND DETAILS

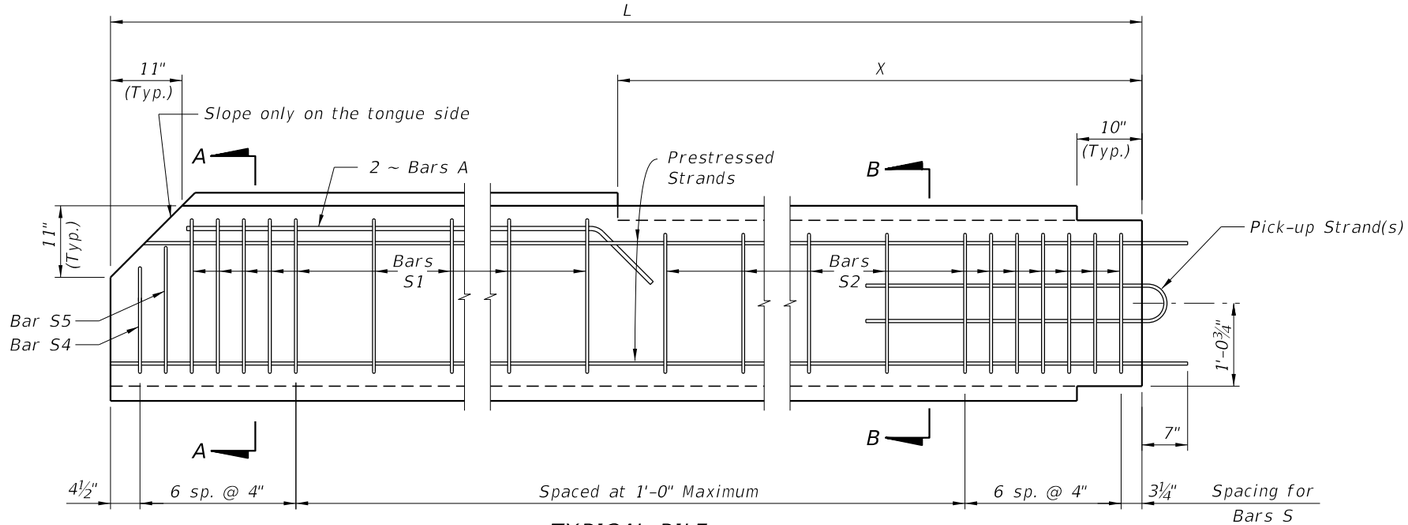

TYPICAL PILE

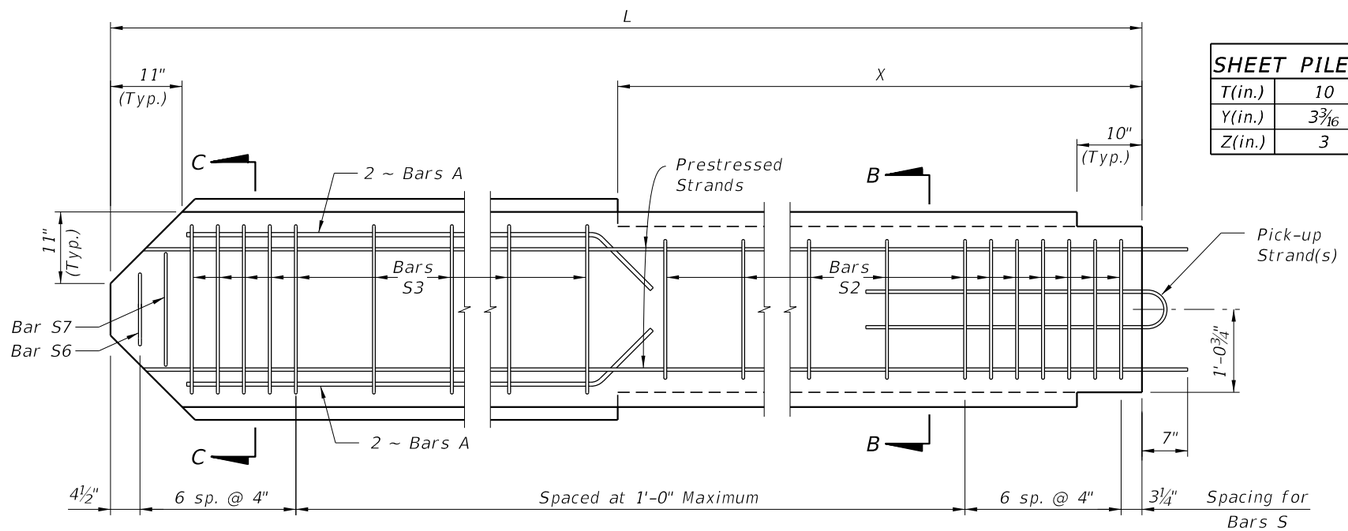

STARTER PILE

SHEET PILE DIMENSIONS		
T(in.)	10	12
Y(in.)	3 3/16	4 3/16
Z(in.)	3	4

BAR BENDING DIAGRAMS

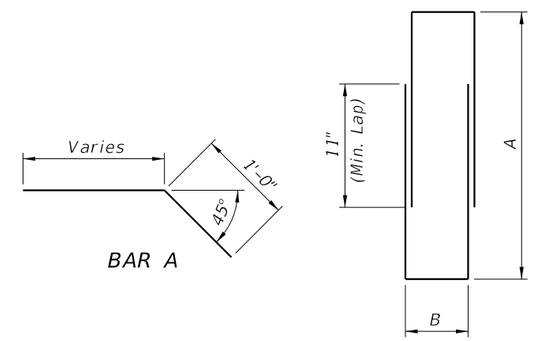

BAR S (2-PIECE)
(See Note 4)

DIMENSION A	
S1	1'-11¾"
S2	1'-9½"
S3	2'-2"
S4	1'-5¼"
S5	1'-9¼"
S6	1'-1"
S7	1'-9"

DIMENSION B	
T=10 in.	4"
T=12 in.	6"

NOTES:
1. Intermediate Prestress Strands not shown in Elevations and Sections.
2. All bar dimensions are out-to-out.
3. Bars A are GFRP #5
4. Bars S are GFRP #4 and may be a single closed bar (hoop) with equivalent area and tensile strength.
5. For Dimensions L and X see Sheet Pile Data Table in Structures Plans.

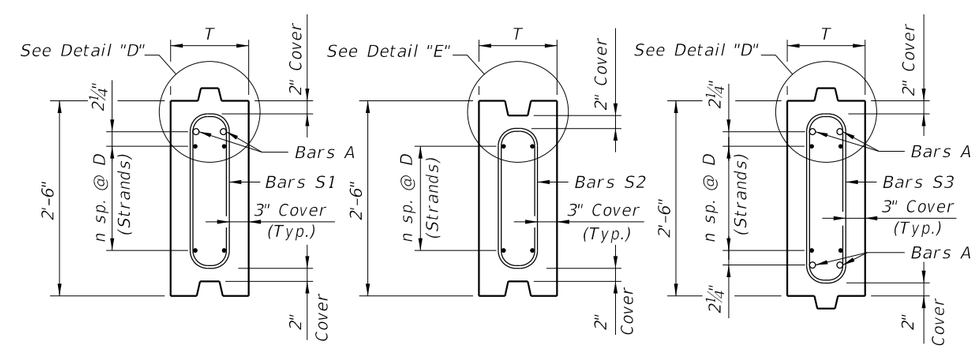

SECTION A-A SECTION B-B SECTION C-C

Strand Material	Wall Thickness	STRAND DIA. (in.)	MAXIMUM L *	n	D (in.)	TOTAL # OF STRANDS	Initial (Jacking) FORCE (Kip)
CFRP Strand	T=10 in.	0.49 (12.5mm)	26'-0"	4	4	10	28.7
		0.5 (12.7mm)	27'-0"	3	5¼ (2)	8	41.3
		0.6 (15.2mm)	27'-0"	3	5¼ (2)	8	42.7
	T=12 in.	0.49 (12.5mm)	31'-0"	5	3¼ (1)	12	28.7
		0.5 (12.7mm)	31'-0"	3	5¼ (2)	8	41.3
		0.6 (15.2mm)	31'-0"	3	5¼ (2)	8	42.7
HSSS Strand	T=10 in.	0.5 (12.7mm)	27'-0"	5	3¼ (1)	12	25.7
		0.6 (15.2mm)	26'-0"	3	5¼ (2)	8	36.5
	T=12 in.	0.5 (12.7mm)	32'-0"	6	2¾ (3)	14	25.7
		0.6 (15.2mm)	32'-0"	4	4	10	36.5

Alternate symmetrical strand patterns:
(1) 4 sp. @ 2" & 1 sp. @ 8"
(2) 2 sp. @ 4" & 1 sp. @ 8"
(3) 4 sp. @ 2" & 2 sp. @ 4"

* Based on lifting using single point pick-up.

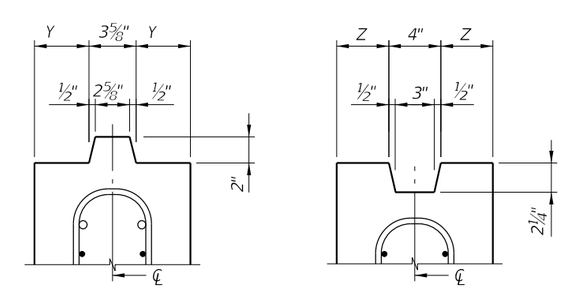

DETAIL "D" (Typical Tongue)
DETAIL "E" (Typical Groove)

TYPE "A" STANDARD SECTION

10/20/2022 8:49:34 AM

LAST REVISION	REVISION	DESCRIPTION:			INDEX	SHEET
11/01/22			FY 2023-24 STANDARD PLANS	PRECAST CONCRETE SHEET PILE WALL (CFRP/GFRP & HSSS/GFRP)	455-440	2 of 2

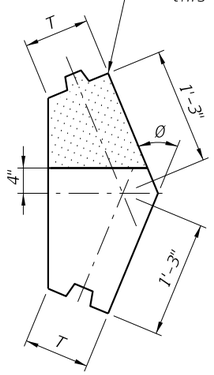

VIEW C-C

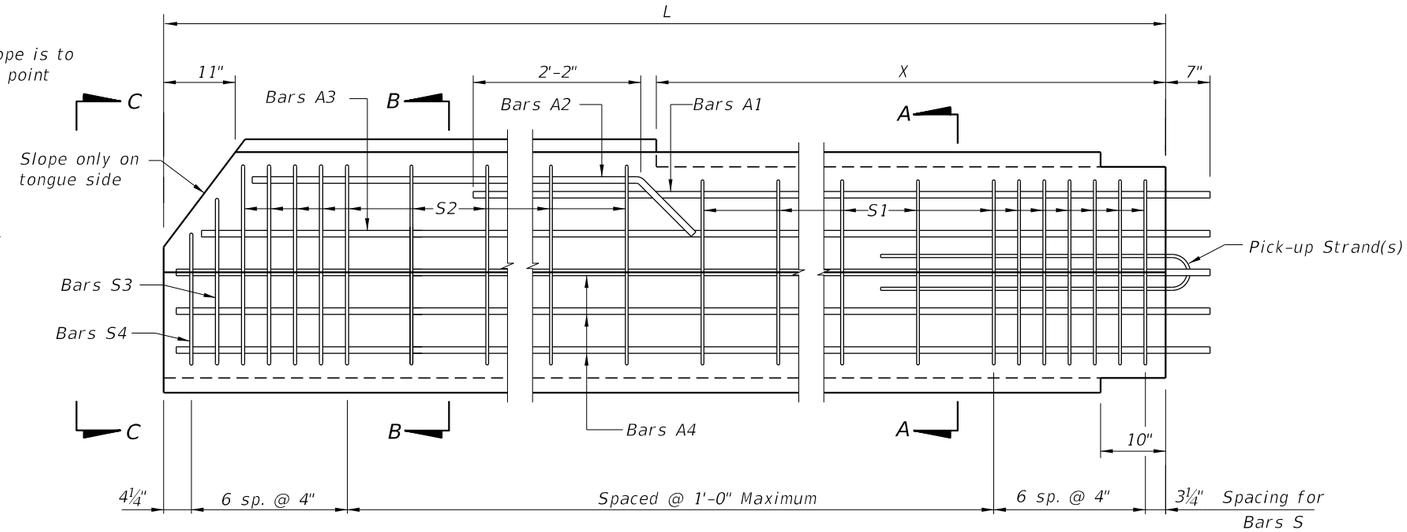

ELEVATION
(TYPE "B1" PILE SHOWN, TYPE "B2" PILE OPPOSITE HAND)

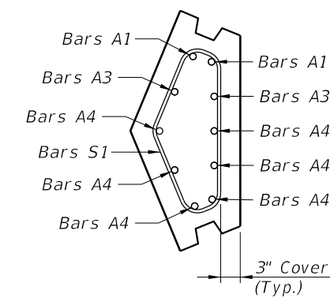

SECTION A-A

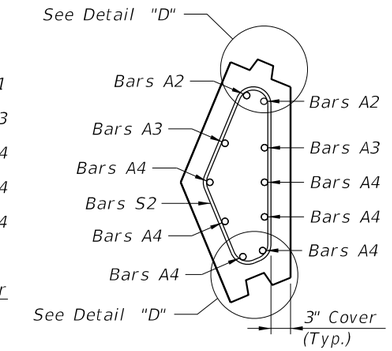

SECTION B-B

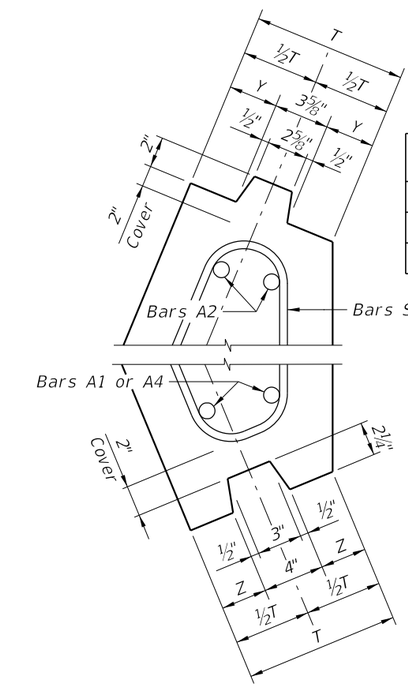

DETAIL "D"
(TYPE "B1" PILE SHOWN, TYPE "B2" PILE OPPOSITE HAND)

SHEET PILE DIMENSIONS		
T (in.)	10	12
Y (in.)	3 3/16	4 3/16
Z (in.)	3	4

BAR BENDING DIAGRAMS

STIRRUP DIMENSIONS (T = 10")

Ø	BAR MARK	R1	R2	R3	R4	R5	R6	R7	R8
30°	S1	11¼"	9¾"	1'-6½"	2½"	5"	4¾"	5½"	4¼"
	S2	1'-1½"	9¾"	1'-8¾"	2½"	4½"	5½"	5¾"	4¼"
	S3	11¼"	8"	1'-6"	1¼"	5"	4½"	4½"	5"
	S4	11¼"	4¼"	1'-1¾"	1¾"	5"	3¾"	2½"	6¼"
45°	S1	11½"	8"	1'-4"	4"	5½"	6½"	8"	4"
	S2	1'-1¾"	8"	1'-5¾"	4"	4½"	7½"	8"	4"
	S3	11½"	6¾"	1'-4"	2¼"	5½"	6¾"	6¾"	5½"
	S4	11½"	3½"	1'-0"	3"	5½"	5"	3½"	7"
60°	S1	1'-0"	6"	1'-0¾"	5¼"	6"	7¼"	10¼"	3"
	S2	1'-2"	6"	1'-2¾"	5¼"	4¾"	8¾"	10½"	3"
	S3	1'-0"	4¾"	1'-1½"	3¼"	6"	8"	8¾"	5¼"
	S4	1'-0"	2½"	10"	4½"	6"	5¾"	4"	7½"

STIRRUP DIMENSIONS (T = 12")

Ø	BAR MARK	R1	R2	R3	R4	R5	R6	R7	R8
30°	S1	11½"	10"	1'-6"	3½"	7"	4¾"	5¾"	6"
	S2	1'-1¾"	10"	1'-8¼"	3½"	6½"	5¼"	5¾"	6"
	S3	11½"	8¼"	1'-5¾"	2"	7"	4¾"	4½"	7¼"
	S4	11½"	4"	1'-1¼"	2¼"	7"	3¾"	2½"	8¼"
45°	S1	1'-0"	8½"	1'-3¼"	5¼"	7½"	6¼"	8½"	5¼"
	S2	1'-2¼"	8½"	1'-5½"	5¼"	6½"	7¼"	8½"	5¼"
	S3	1'-0"	7"	1'-4"	3"	7½"	6¾"	7"	7¼"
	S4	1'-0"	3½"	11¾"	3¾"	7½"	5"	3½"	9"
60°	S1	1'-0½"	6¼"	11¾"	7"	8"	6¾"	10¾"	4"
	S2	1'-2¾"	6¼"	1'-2"	7"	6¾"	8"	10¾"	4"
	S3	1'-0½"	5"	1'-1½"	4"	8"	8"	9"	7"
	S4	1'-0½"	2½"	9½"	5½"	8"	5½"	4¼"	9¼"

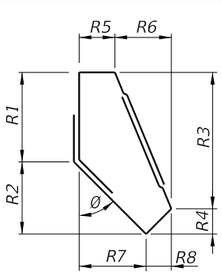

BARS S1 & S2
(2 - PIECE)

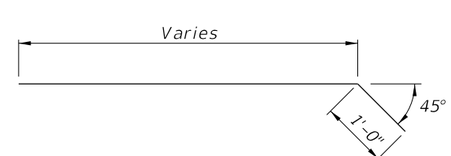

BAR A2

NOTES:
1. This drawing includes details for precast concrete corner piles for 10" and 12" thick sheet pile systems. The details apply equally to both thicknesses.
2. The bar configurations shown in Sections A-A and B-B shall be used for Ø angles between 15° and 75°. For Ø angles not shown, the reinforcing bar dimensions may be interpolated or extrapolated from the stirrup dimensions shown.
3. All bar dimensions are out-to-out.
4. Bars A are GFRP #8 and Bars S are GFRP #4.
5. Values for Stirrup Dimensions are shown for Ø equal to 30°, 45° & 60° only.
6. Bars S are fabricated as a 2 piece stirrup with a minimum lap length of 8", as shown in Bar Bending Diagrams, or a single closed bar (hoop) when approved by the Engineer.
7. If Type "B1" or "B2" pile is used as a Starter Pile show tongue on both sides of pile from Dim. X down. Show dimensions for Bars S2, S3 & S4 in shop drawings.
8. If tongue must be on the opposite side from that shown all dimensions and Bars A, S2, S3 and S4 will be the same but opposite hand.
9. For Dimensions L, X and Angle Ø, see Sheet Pile Data Table in Structures Plans.

TYPE "B1" AND "B2" - VARIABLE ANGLE CORNER PILE

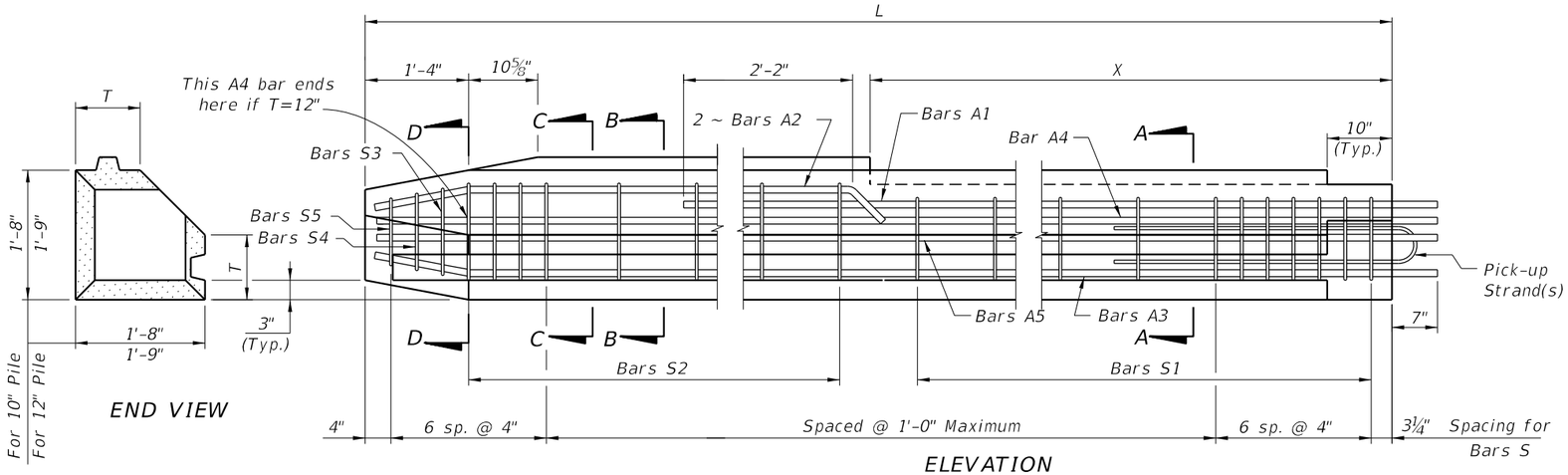

END VIEW

ELEVATION
(TYPE "C1" PILE SHOWN, TYPE "C2" PILE OPPOSITE HAND)

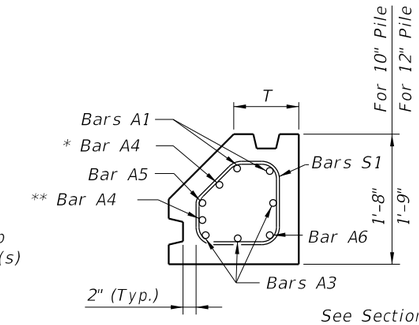

SECTION A-A

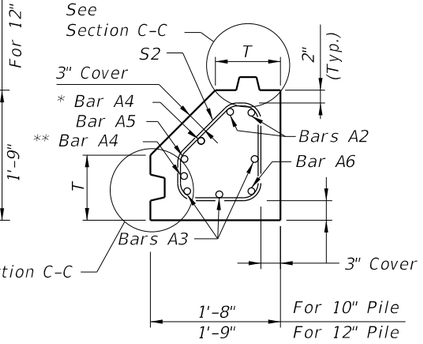

SECTION B-B

* This Bar A4 shall be 1'-2" shorter than other A4 bars for T = 12".

** This Bar A4 (not shown in elevation) is included only if T = 12".

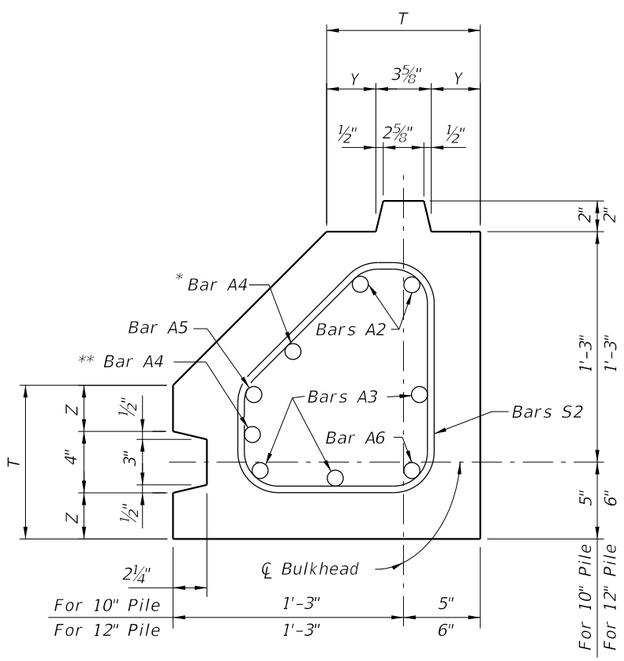

SECTION C-C (T=10" or 12")

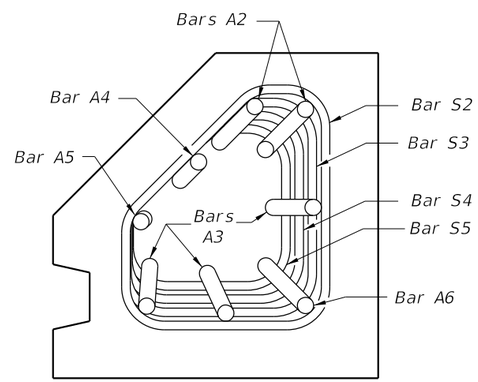

SECTION D-D (T=10")

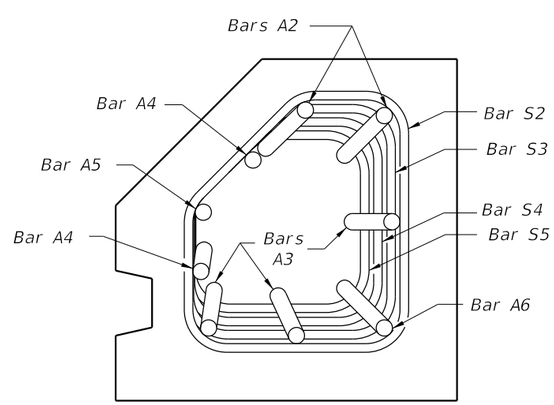

SECTION D-D (T=12")

STIRRUP DIMENSIONS					
θ	T (in.)	BAR MARK	R1	R2	R3
90°	10	S1	7"	5¾"	7"
		S2	7"	8"	4¾"
		S3	6¼"	7¼"	4¾"
		S4	5½"	6½"	4¾"
		S5	4¾"	5¾"	4¾"
	12	S1	9"	4¾"	9"
		S2	9"	7"	6¾"
		S3	8¼"	6¼"	6¾"
		S4	7½"	5½"	6¾"
		S5	6¾"	4¾"	6¾"

SHEET PILE DIMENSIONS		
T (in.)	10	12
Y (in.)	3 3/16	4 3/16
Z (in.)	3	4

BAR BENDING DIAGRAMS

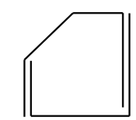

STIRRUPS S
(2 - Piece)

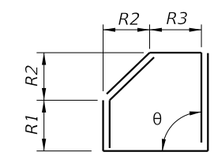

STIRRUPS S
(3 - Piece)

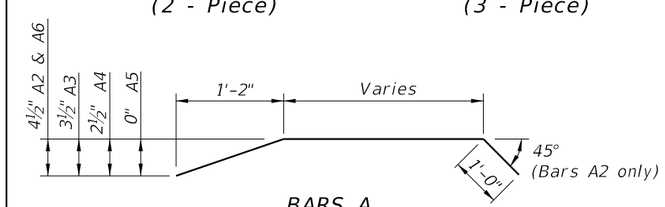

BARS A

Note: All Bar dimensions are out-to-out.

NOTES:
1. All bar dimensions are out-to-out.
2. Bars A are GFRP #8 and Bars S are GFRP #4.
3. This drawing includes information for precast Corner Piles for 10" and 12" thick Sheet Pile systems. The details apply to both thicknesses but the bar configurations change slightly according to the thickness values used.
4. If Type "C1" or "C2" pile is used as a Starter Pile show tongue on both sides of pile from Dim. X down. Show dimensions for Bars S2, S3, S4 & S5 in shop drawings.
5. At the Contractor's option Bars S may be fabricated as a 2 piece or 3 piece bar with a minimum lap length of 8", as shown in Bar Bending Diagrams, or as a single closed bar (hoop) when approved by the Engineer.
6. If tongue must be on opposite side (Groove Side) from that shown, all dimensions and reinforcement shall follow the corresponding Tongue or Groove side.
7. For Dimensions L and X see Sheet Pile Data Table in Structures Plans.

TYPE "C1" AND "C2" - RIGHT ANGLE CORNER PILE

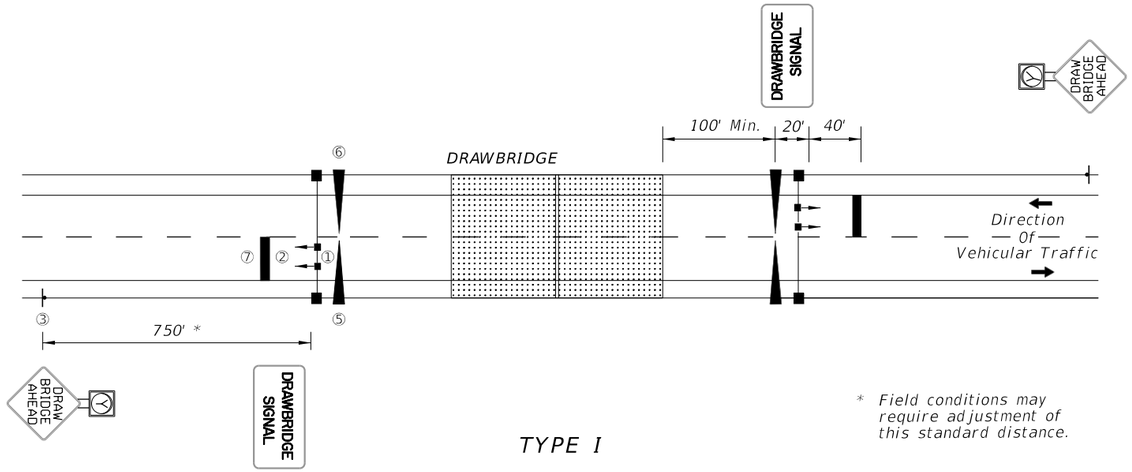

* Field conditions may require adjustment of this standard distance.

TYPE I

TO BE USED WHERE BRIDGE OPERATORS ARE FULL TIME OR A DAILY BASIS.

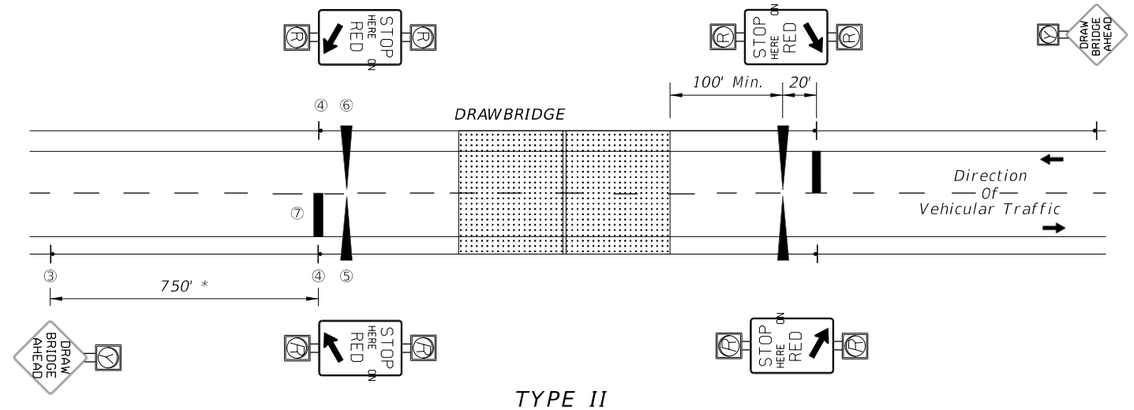

TYPE II

TO BE USED WHERE TYPE I IS NOT APPLICABLE (USUALLY WHEN THE BRIDGE OPERATOR IS "ON CALL").

TYPICAL BRIDGE MOUNTS

NOTES:

1. A bypass switch shall be installed to override each timing interval in case of a malfunction.
2. "STOP HERE ON RED" is omitted in Type I operation and "TRAFFIC SIGNALS" are omitted in Type II operation.
3. The time between beginning of flashing yellow on "Drawbridge Ahead" sign and the clearance of traffic signal to red, or beginning of flashing red should not be less than the travel time of a passenger car, from the sign location to the stop line, traveling at the 85 percentile approach speed.
4. Beginning of operation of drawbridge gates shall not be less than 15 seconds after steady red or 20 seconds after flashing red (Actual time may be determined by the bridge tender.)
5. Time of gate lowering and raising is dependent upon gate type.
6. Time of bridge opening is determined by the bridge tender.
7. Each gate shall be operated by a separate switch.
8. On each approach (Type II), all four red signals shall be on the same two circuit flashers, with the two top signals on one circuit, and the two bottom signals on the alternately flashing circuit.
9. A Drawbridge Ahead sign is required for both types of signal operation, However a flashing beacon shall be added to the sign when physical conditions prevent a driver traveling at the 85% approach speed from having continuous view of at least one signal indication for approximately 10 seconds.
10. Requirements on gate installation are contained in the "Manual on Uniform Traffic Control Devices" Section 4J.
11. "In accordance with Traffic Engineering Manual (Topic Number 750-000-005) Section 2.1, SLIPPERY WHEN WET SIGNS shall be placed in advance of all MOVABLE and NONMOVABLE STEEL DECK BRIDGES."

W8-5
SLIPPERY WHEN WET SIGN
See Note 11

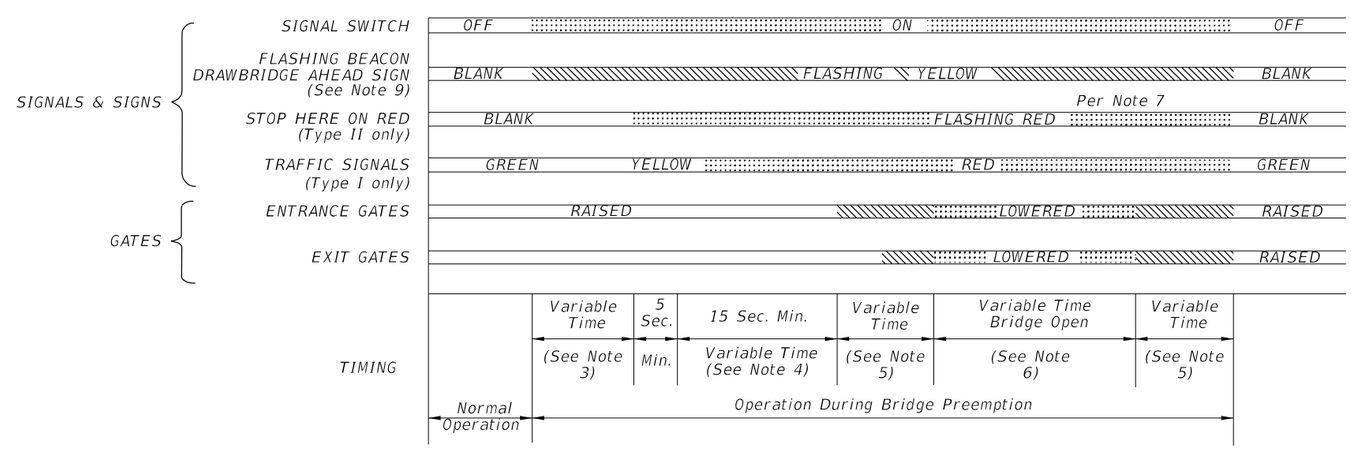

SEQUENCE CHART

LEGEND:

① TRAFFIC SIGNALS } Mast Arm Mounted (Off Bridge)

② DRAWBRIDGE SIGN } Monotube Support Mounted (On Bridge)

③ DRAWBRIDGE AHEAD SIGN WITH YELLOW FLASHING BEACON } Ground Mounted

④ STOP HERE ON RED SIGN WITH RED FLASHING BEACONS } Ground Mounted

⑤ ENTRANCE GATE

⑥ EXIT GATE

⑦ 24" THERMOPLASTIC STOP BAR

10/20/2022 8:49:37 AM

LAST REVISION	REVISION	DESCRIPTION:			INDEX	SHEET
11/01/22			FY 2023-24 STANDARD PLANS	TRAFFIC CONTROL DEVICES FOR MOVABLE SPAN BRIDGE SIGNALS	508-T01	1 of 3

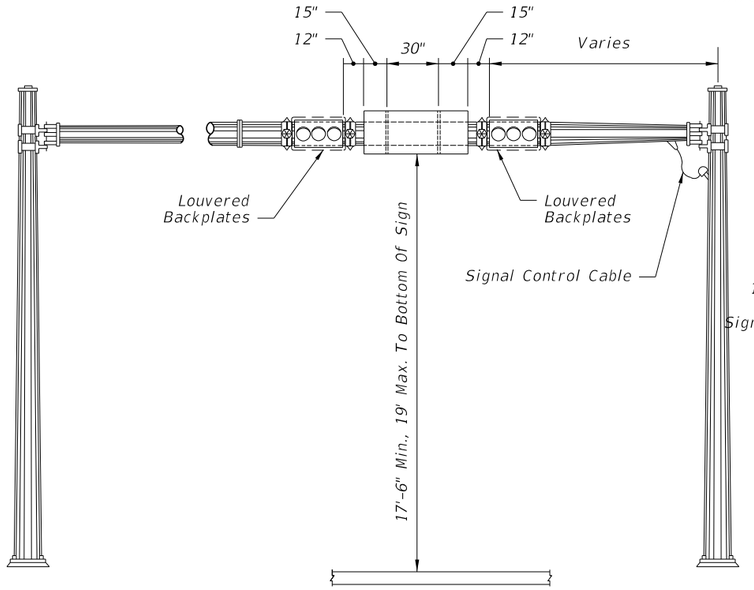

FIGURE - A

MONOTUBE SUPPORT MOUNTING

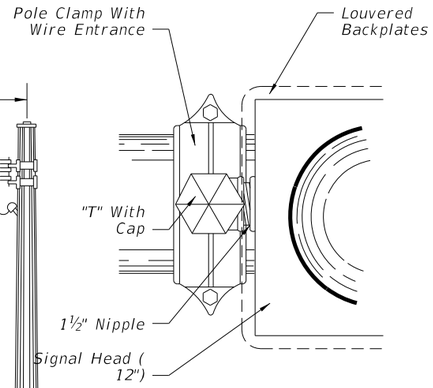

FIGURE - C

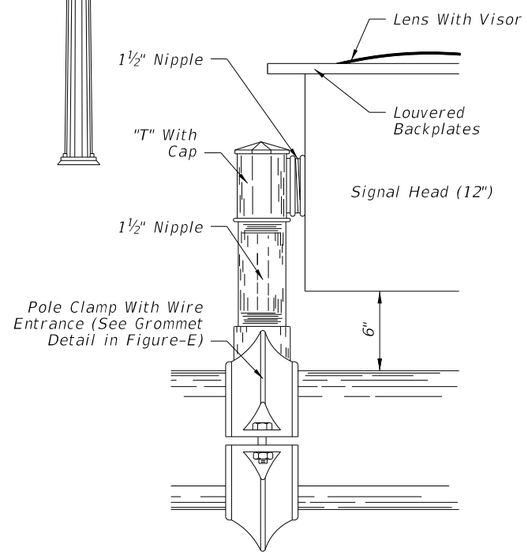

FIGURE - D

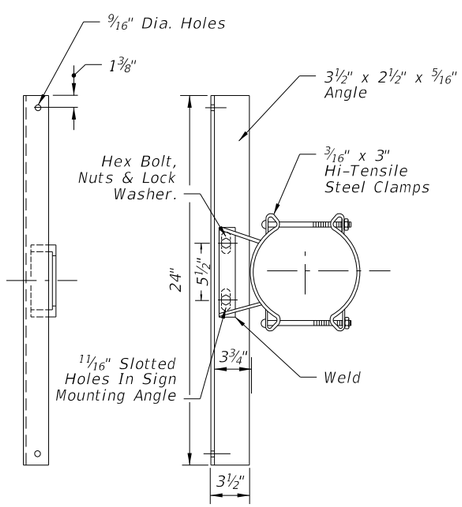

FIGURE - B

SIGN PANEL MOUNTING ASSEMBLY

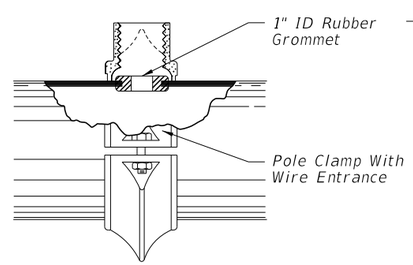

FIGURE - E

SIGNAL HEAD MOUNTING ASSEMBLY

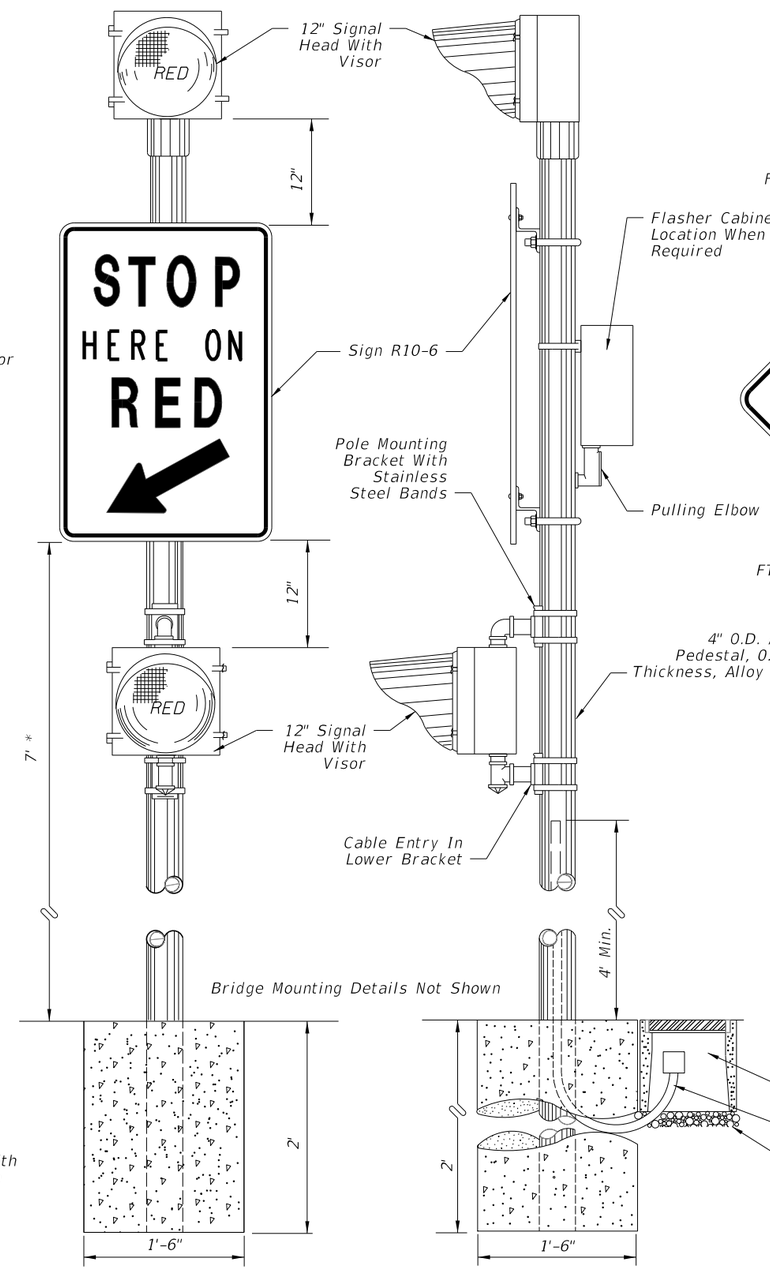

FIGURE - F

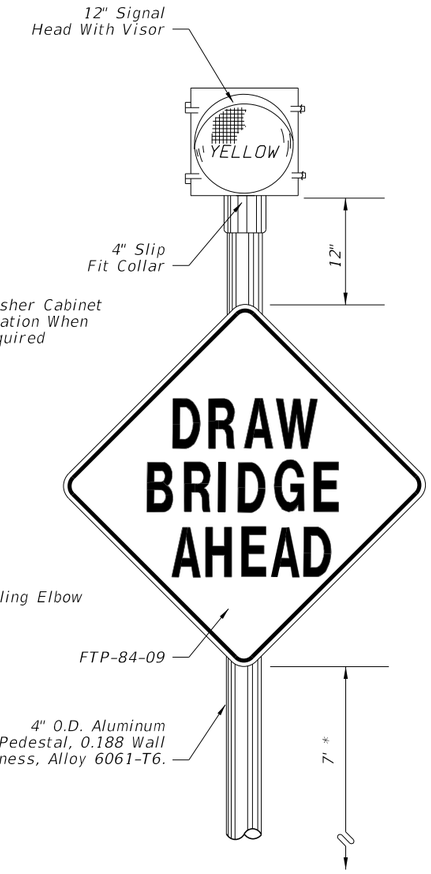

FIGURE - G

* Measured from the bottom of the sign to the near edge of the pavement. Horizontal distance between edge of the pavement and inside edge of sign will vary with condition at job site.

10/20/2022 8:49:38 AM

LAST REVISION	REVISION	DESCRIPTION:				
11/01/17			FY 2023-24 STANDARD PLANS	TRAFFIC CONTROL DEVICES FOR MOVABLE SPAN BRIDGE SIGNALS	INDEX 508-T01	SHEET 2 of 3

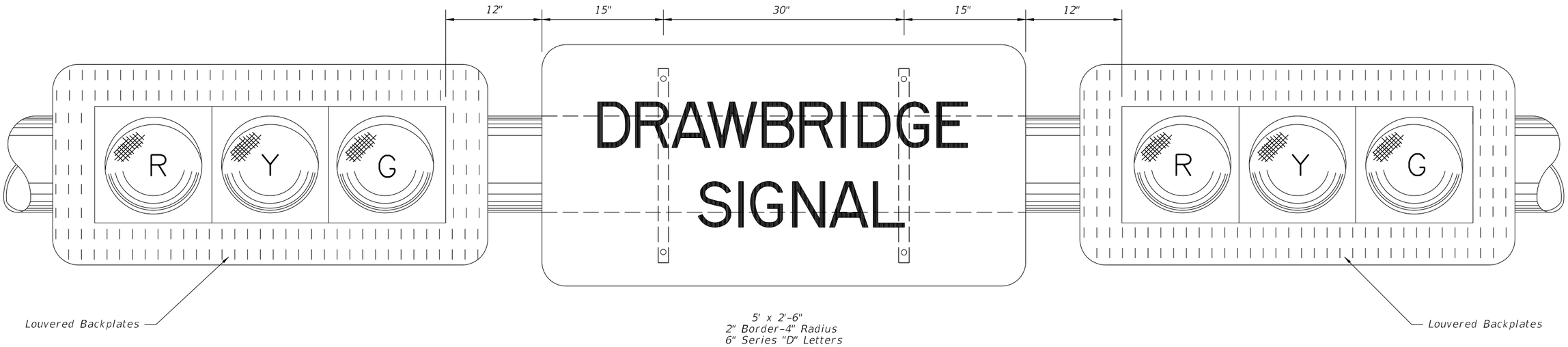

BLACK OPAQUE LEGEND AND BORDER ON REFLECTORIZED YELLOW BACKGROUND
TO BE USED WITH TYPE I OPERATION, AS SHOWN ON PREVIOUS SHEET
MONOTUBE SUPPORT MOUNTING

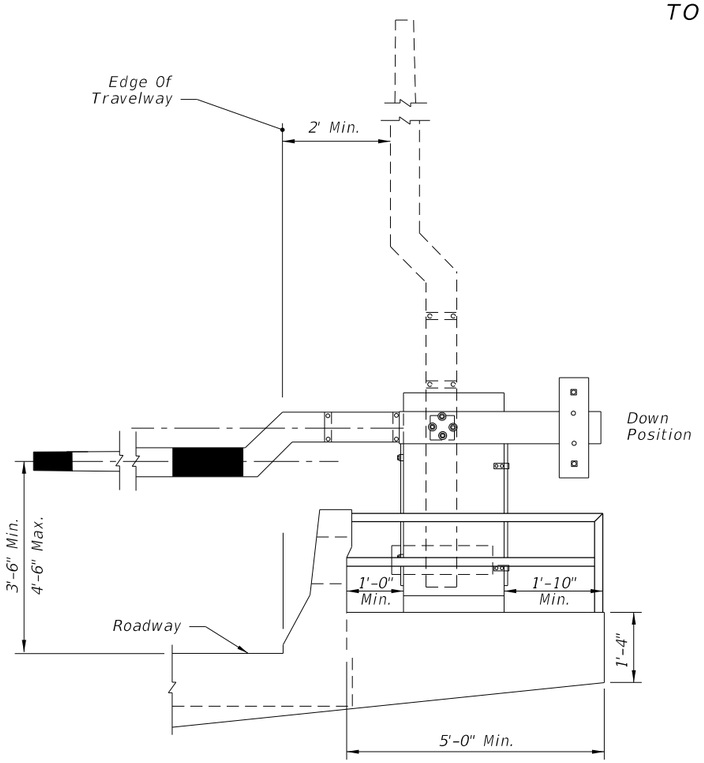

GATE & ARM DETAIL

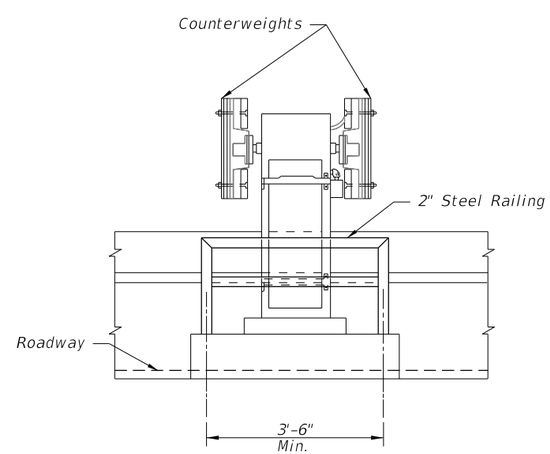

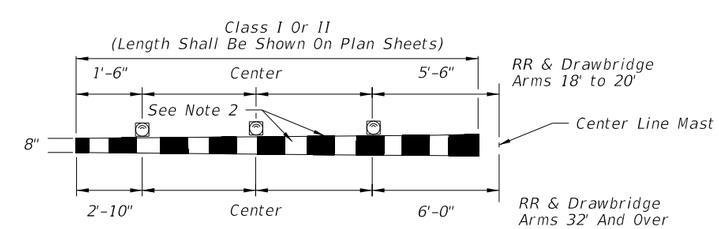

NOTES:

1. 12 volt flashing red lights shall be mounted on gate arm and shall operate in the flashing mode only when gate arm is in the lower position or in the process of being lowered. The number of lights shall vary accordingly to length of the gate arm.
2. Alternating 16" pattern of fully reflectorized red and white stripes.

TYPICAL LAMP PLACEMENT

10/20/2022 8:49:39 AM

LAST REVISION	REVISION	DESCRIPTION:			INDEX	SHEET
11/01/17			FY 2023-24 STANDARD PLANS	TRAFFIC CONTROL DEVICES FOR MOVABLE SPAN BRIDGE SIGNALS	508-T01	3 of 3

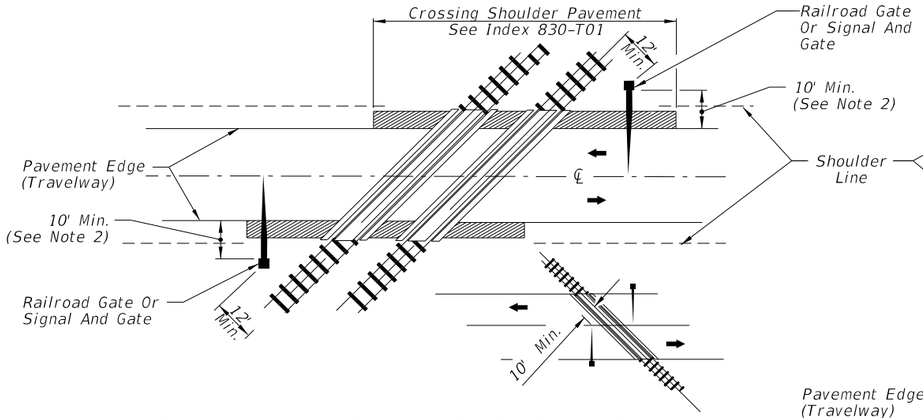

SIGNAL PLACEMENT AT RAILROAD CROSSING

(2 - LANE DESIGN)

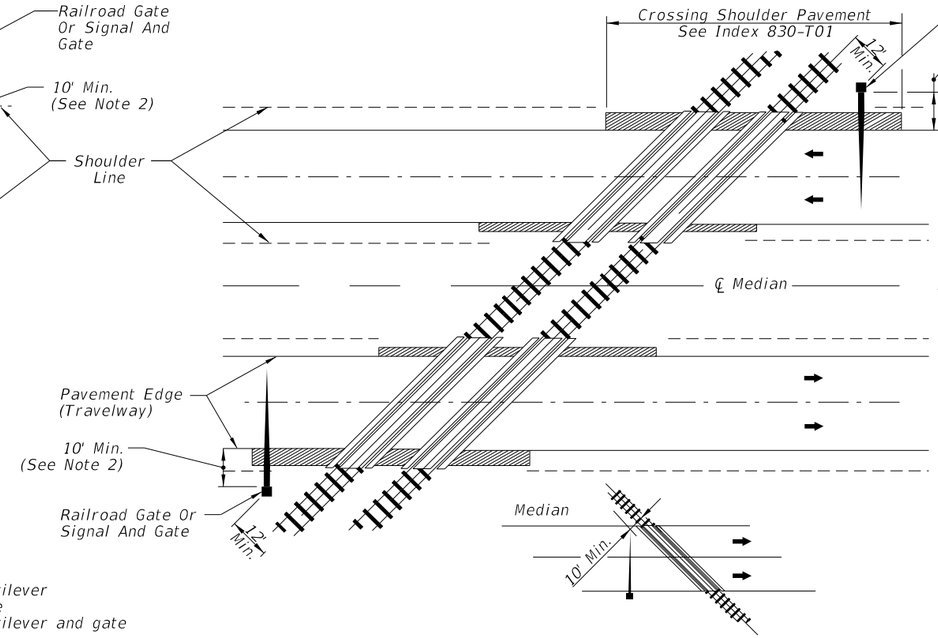

SIGNAL PLACEMENT AT RAILROAD CROSSING

(4 - LANE DESIGN)

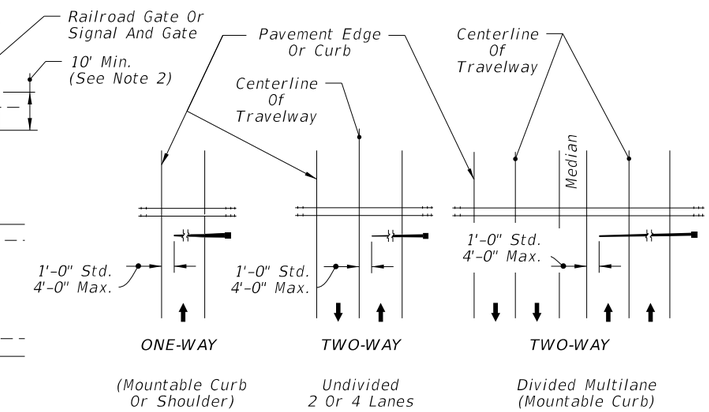

NOTE: Arrows denote direction of travel not pavement markings.

FIGURE 1

GENERAL NOTES:

1. No guardrail is proposed for signals; however, some form of impact attenuation device may be specified for certain locations.
2. Advance flasher to be installed when and if called for in Plans or Specifications.
3. Top of foundation shall be no higher than 4" above finished shoulder grade.
4. Type of traffic control device
   - I Flashing warning devices
   - II Flashing warning devices with cantilever
   - III Flashing warning devices with gate
   - IV Flashing warning devices with cantilever and gate
   - V Gate
5. Class of traffic control devices (Not Shown)
   - I 2 Quadrant flashing warning devices-one track
   - II 2 Quadrant flashing warning devices-multiple tracks
   - III 2 Quadrant flashing warning devices and gates-one track
   - IV 2 Quadrant flashing warning devices and gates-multiple tracks
   - V 3-4 Quadrant flashing warning devices and gates-one track
   - VI 2-4 Quadrant flashing warning devices and gates-multiple tracks

NOTE:

1. Two separate foundations may be required (one for signals, one for gate), depending on type of equipment used.
2. When 10' is deemed impractical the control device can be located as close as 2' from the edge of a paved shoulder but not less than 6' from the edge of the near traffic lane.

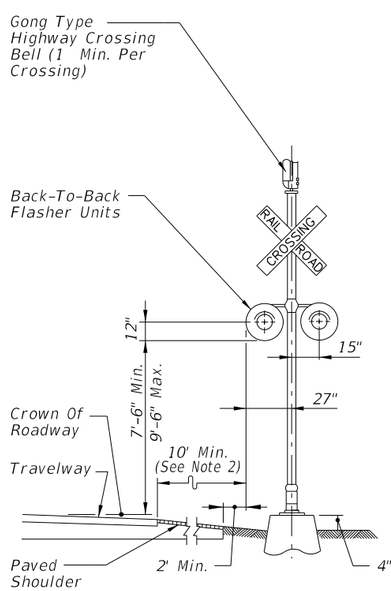

TYPE I

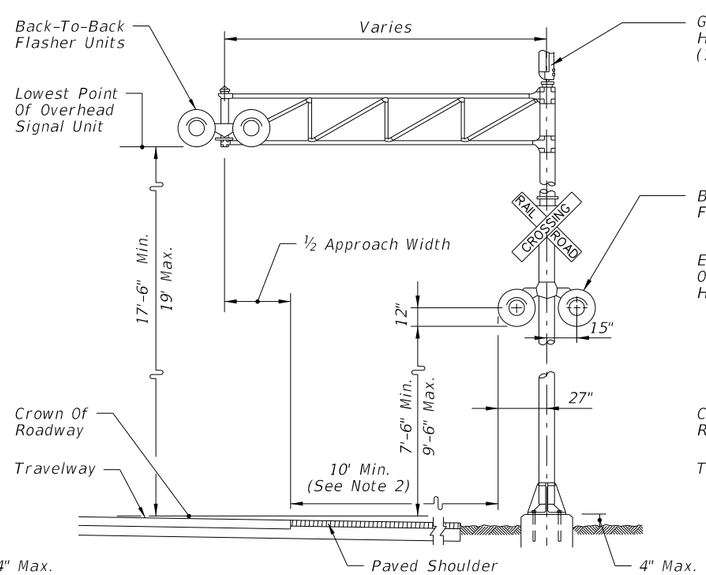

TYPE II

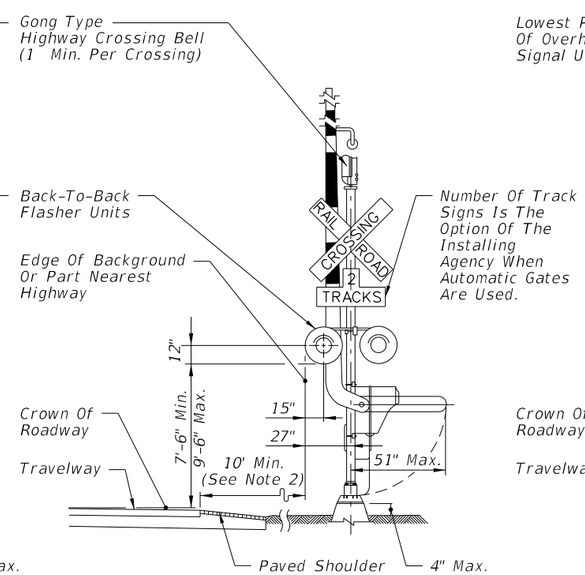

TYPE III AND TYPE V

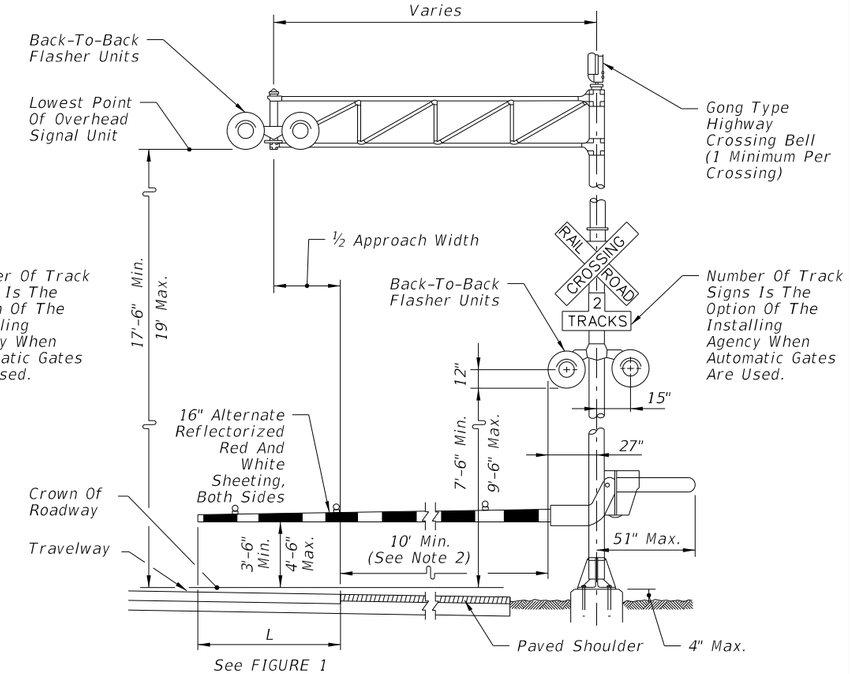

TYPE IV AND TYPE VI

TRAFFIC CONTROL DEVICES FOR FLUSH SHOULDER ROADWAY

LAST REVISION	REVISION	DESCRIPTION:			INDEX	SHEET
02/05/21			FY 2023-24 STANDARD PLANS	RAILROAD GRADE CROSSING TRAFFIC CONTROL DEVICES	509-070	1 of 3

10/20/2022 8:49:40 AM

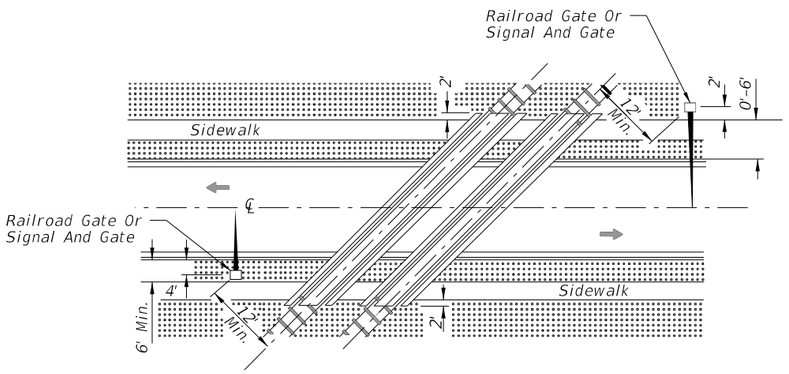

ACUTE ANGLE (AND RIGHT ANGLE)

SIGNAL PLACEMENT AT RAILROAD CROSSING

(2 LANES, CURB & GUTTER)

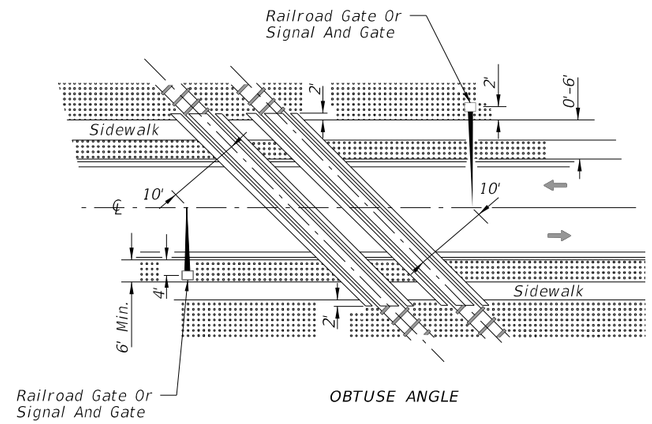

OBTUSE ANGLE

SIGNAL PLACEMENT AT RAILROAD CROSSING

(2 LANES, CURB & GUTTER)

NOTES:

1. The location of flashing warning devices and stop lines shall be established based on future (or present) installation of gate with appropriate track clearances.
2. Where plans call for railroad traffic control devices to be installed in curbed medians, the minimum median width shall be 12'-6".
3. Location of railroad traffic control device is based on the distance available between face of curb & sidewalk. 0' to 6' – Locate device outside sidewalk. Over 6' – Locate device between face of curb and sidewalk.
4. Stop line to be perpendicular to edge of roadway, approx. 15' from nearest rail; or 8' from and parallel to gate when present.
5. When a cantilevered-arm flashing warning device is used, the minimum vertical clearance shall be 17'-6" from above the Crown of Roadway to the Lowest Point of the Overhead Signal Unit.

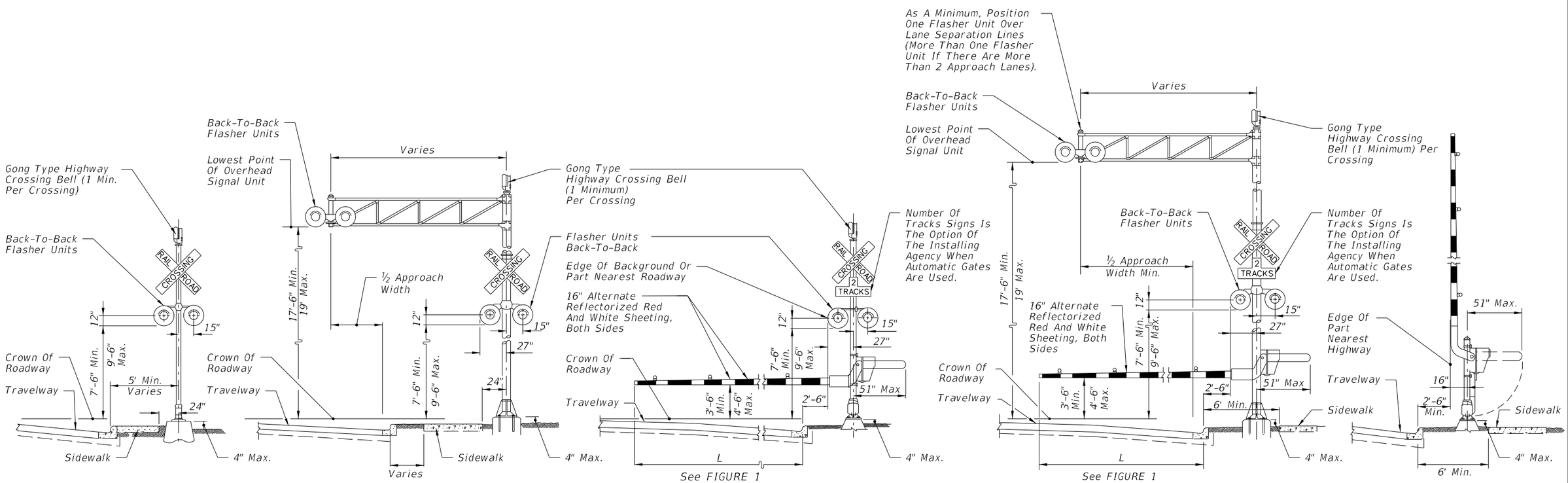

TRAFFIC CONTROL DEVICES FOR CURBED ROADWAY

10/20/2022 8:50:08 AM

LAST REVISION	REVISION	DESCRIPTION:				
02/05/21			FY 2023-24 STANDARD PLANS	RAILROAD GRADE CROSSING TRAFFIC CONTROL DEVICES	INDEX 509-070	SHEET 2 of 3

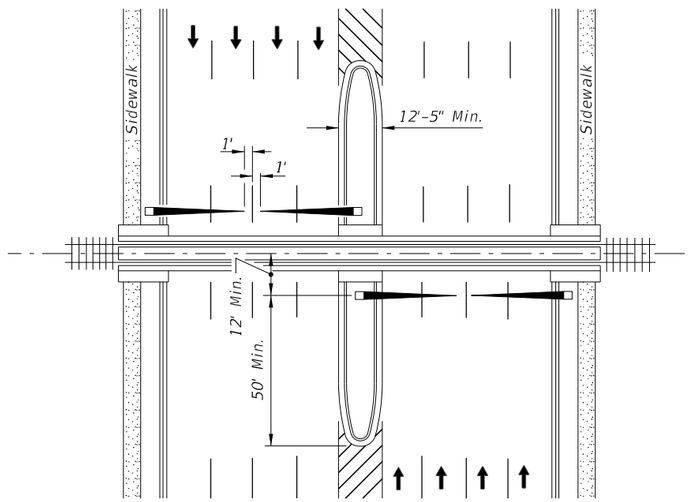

PLAN

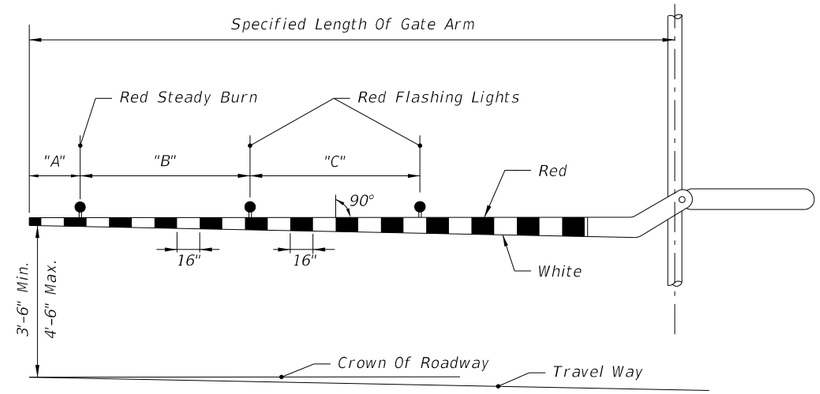

GATE ARM DETAIL

RAILROAD GATE ARM LIGHT SPACING			
Specified Length Of Gate Arm	Dimension "A"	Dimension "B"	Dimension "C"
14 Ft.	6"	36"	5'
15 Ft.	18"	36"	5'
16-17 Ft.	24"	36"	5'
18-19 Ft.	28"	41"	5'
20-23 Ft.	28"	4'	5'
24-28 Ft.	28"	5'	5'
29-31 Ft.	36"	6'	6'
32-34 Ft.	36"	7'	7'
35-37 Ft.	36"	9'	9'
38 And Over	36"	10'	10'

NOTE:

For additional information see the "Manual On Uniform Traffic Control Devices", Part 8; The "Traffic Control Handbook" , Part VIII; and AASHTO "A Policy On Geometric Design Of Streets And Highways".

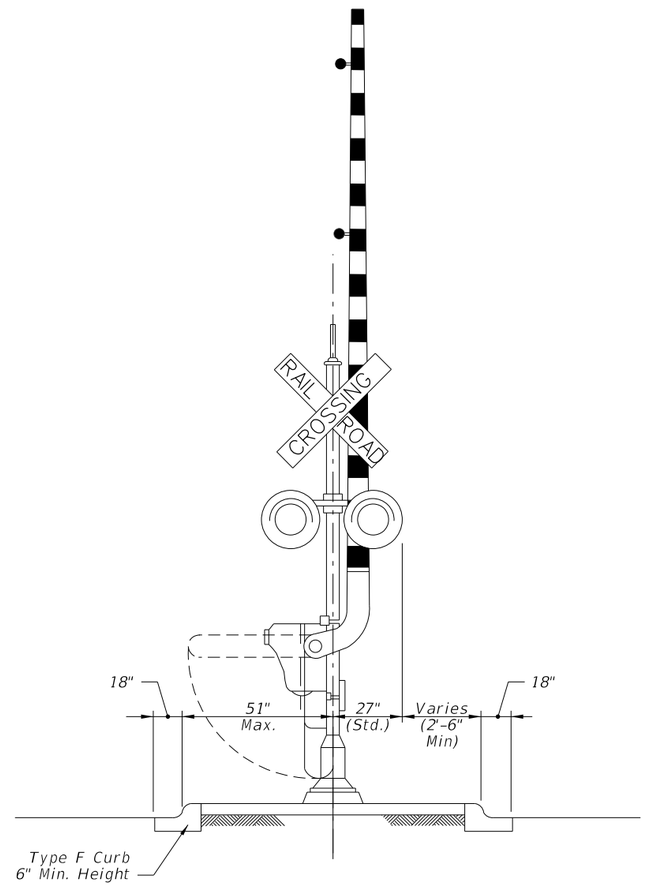

MEDIAN SECTION AT SIGNAL GATES

MEDIAN SIGNAL GATES FOR MULTILANE UNDIVIDED URBAN SECTIONS

(Three or More Driving Lanes in one Direction, 45 mph or less)

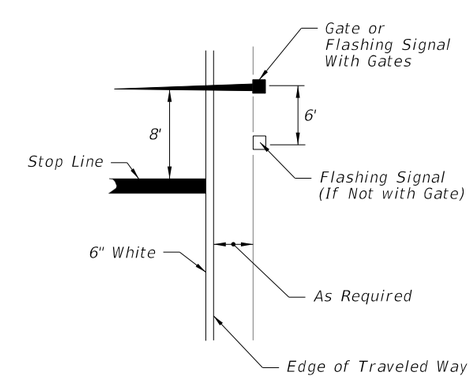

RELATIVE LOCATION OF CROSSING TRAFFIC CONTROL DEVICES

10/20/2022 8:50:09 AM

LAST REVISION	REVISION	DESCRIPTION:			INDEX	SHEET
02/05/21			FY 2023-24 STANDARD PLANS	RAILROAD GRADE CROSSING TRAFFIC CONTROL DEVICES	509-070	3 of 3

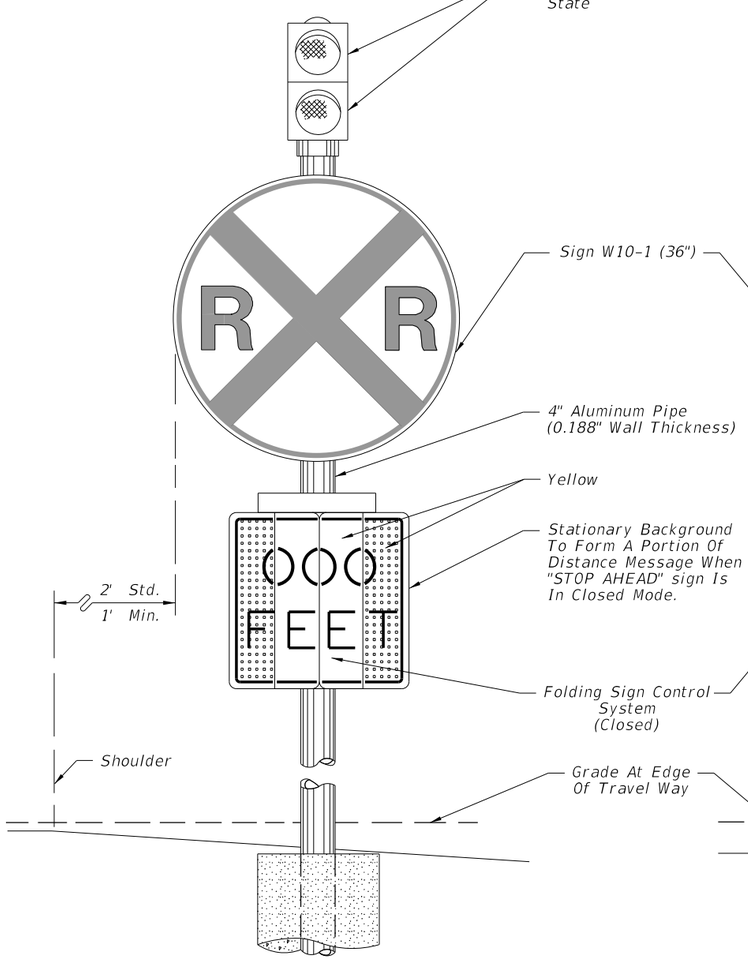

FRONT VIEW

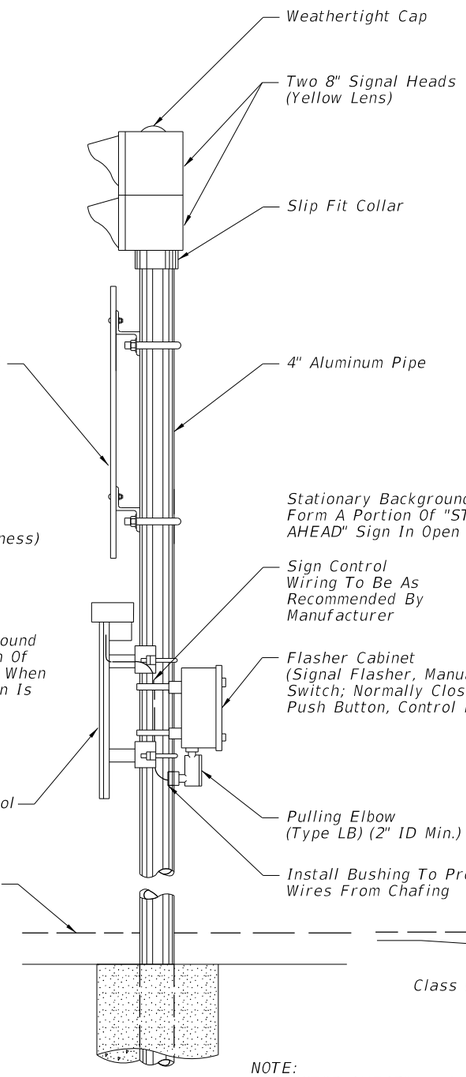

SIDE VIEW

NOTE:
1. "STOP AHEAD" is standard and preferred sign message.

Another message may be approved when appropriate for specific situations.

PASSIVE STATE
(TRAIN CIRCUIT NOT ACTUATED)

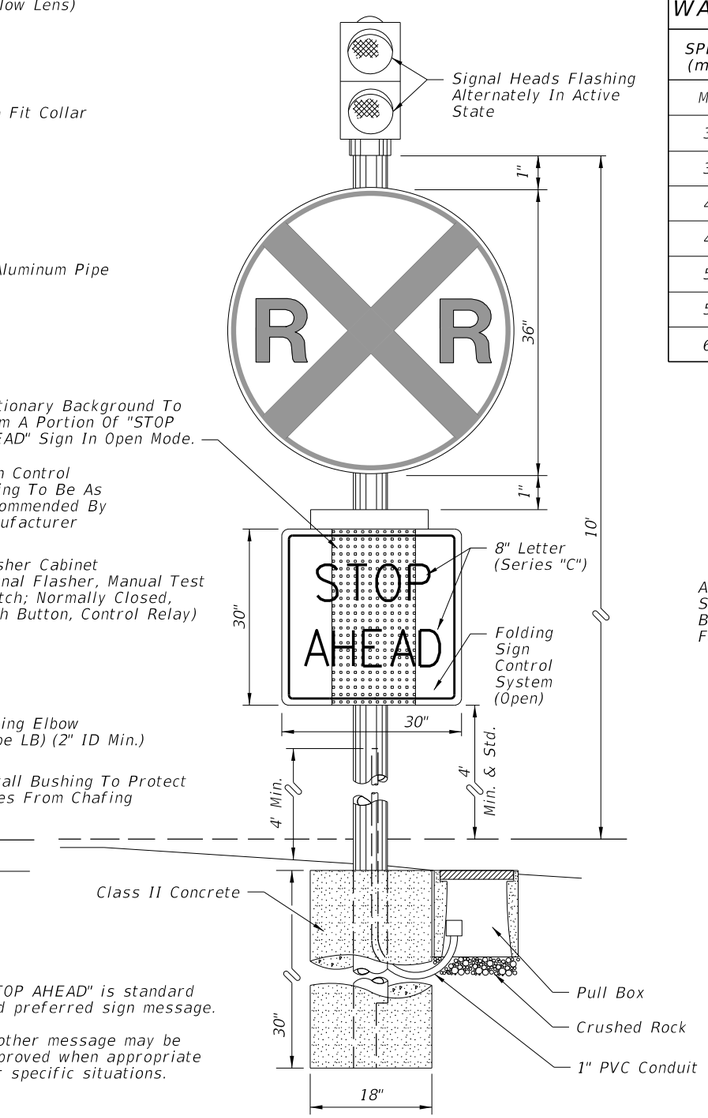

FRONT VIEW

ACTIVE STATE
(TRAIN CIRCUIT ACTUATED)

The Distance Is Measured Along Right Edge Of Pavement From RR Stop Bar To Sign Advance Warning Sign.

LOCATION OF THE ADVANCE WARNING SIGN	
SPEED (mph)	DISTANCE (ft)
Min.	50
30	100
35	100
40	125
45	175
50	250
55	325
60	400

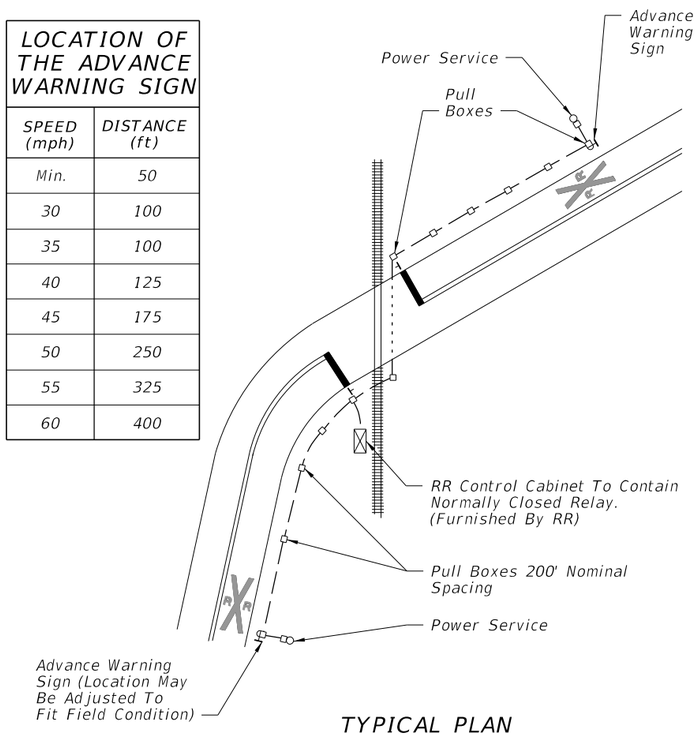

TYPICAL PLAN

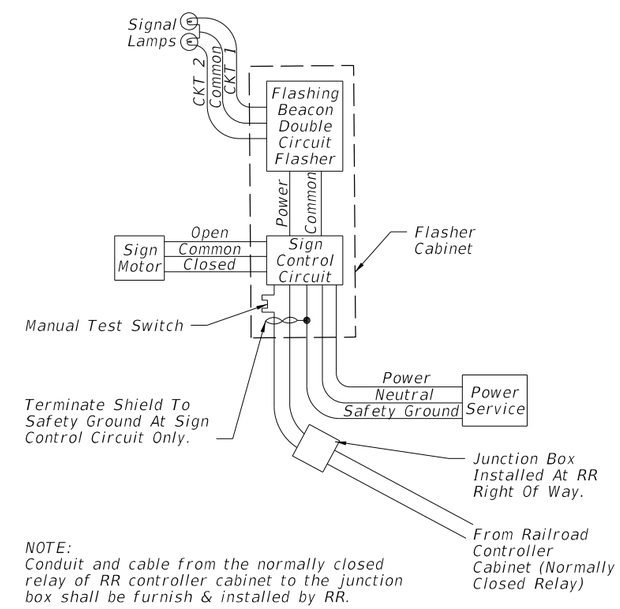

NOTE:
Conduit and cable from the normally closed relay of RR controller cabinet to the junction box shall be furnish & installed by RR.

FUNCTIONAL BLOCK DIAGRAM

10/20/2022 8:50:10 AM

LAST REVISION	REVISION	DESCRIPTION:			INDEX	SHEET
11/01/21			FDOT FY 2023-24 STANDARD PLANS	ADVANCE WARNING FOR R/R CROSSING	509-100	1 of 1

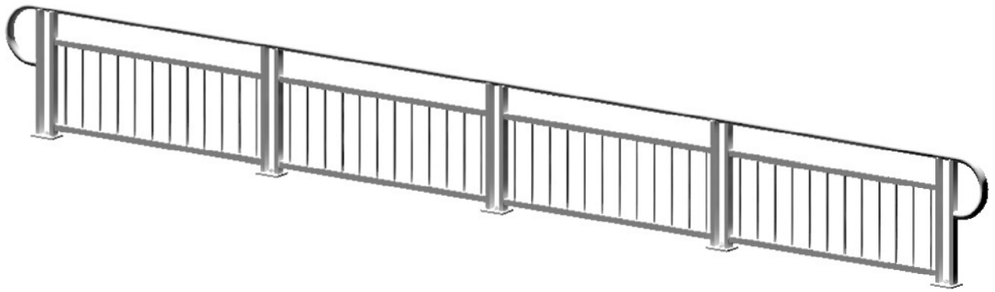

3D VIEW OF RAILING WITH TYPE 1 - PICKET INFILL PANEL
(42" Height shown, 48" Height Similar)

TABLE 1 - RAILING MEMBERS			
MEMBER	DESIGNATION	OUTSIDE DIMENSION	WALL THICKNESS
Post "A"	HSS 2½ x 1½ x⅛	2.50" x 1.50"	0.125"
Post "B"	HSS 2½ x 1½ x3⁄16	2.50" x 1.50"	0.188"
Top Rail	2½" NPS (Sch. 10)	2.875"	0.120"
	HSS 3.000 x 0.120	3.000"	0.120"
End Hoops	2½" NPS (Sch. 10)	2.875"	0.120"
	HSS 3.000 x 0.120	3.000"	0.120"
Top Rail Joint/Splice Sleeves	HSS 2.500 x 0.125	2.500"	0.125"
Intermediate & Bottom Rail	HSS 2 x 2 x 3⁄16	2.00" x 2.00"	0.188" (1)
Int. & Bottom Rail Post Connection Sleeve	HSS 1.500 x 0.125	1.500"	0.125" (1)
Handrail Joint/Splice Sleeves	1" NPS (Sch. 40)	1.315"	0.133"
	HSS 1.500 x 0.125	1.500"	0.125"
Handrails	1½" NPS (Sch. 40)	1.900"	0.145"
Handrail Support Bar	¾" Ø Round Bar	0.750"	N/A
Pickets (Type 1 Infill Panel)	¾" Ø Round Bar	0.750"	N/A
Infill Panel Members (Types 2 – 5)	Varies (See Details)	Varies	Varies

TABLE 1 NOTES:

(1) 0.125" wall thickness permitted for rails with post spacings less than 5'-8", except that Post Connection Sleeve must be 1¼" NPS (Sch. 40).

NOTES

Notes:

1. Shop Drawings are required; see Specification Section 515
2. For bridge mounted railings work this Index with Index 515-051 Bridge Bicycle/Pedestrian Railing
3. Materials:
   - A. Pipe Rails and Pickets: ASTM A500 Grade B, C or D, or ASTM A53 Grade B for standard weight pipe (Schedule 40) and ASTM A36 for bars.
   - B. Structural Tube: ASTM A500 Grade A, B, C, or D or ASTM A501
   - C. Steel Plate: ASTM A36 or ASTM A709 Grade 36
   - D. U-Channels and filler plates: ASTM A36 or ASTM A1011 (Grade 36).
   - E. Stainless steel (SS) screws: Type 316 or 18-8 Alloy
   - F. Galvanized Steel Fasteners: coated in accordance with Specification Section 962.
     - a. Hex Head Bolts: ASTM A 307
       - 1. ⅞" diameter single bolt option, Grade 36
       - 2. 7⁄16" four bolt option, Grade 55
     - b. Adhesive Anchors: ASTM F1554 fully threaded rods, Grade 55
     - c. Hex Nuts: ASTM A563
     - d. Flat Washers: ASTM F436
     - e. Plate Washers: ASTM A36 or ASTM A706 Grade 36.
   - G. Shims: ASTM B209 Alloy 6061
   - H. Bearing Pads: ⅛" Plain, Fabric Reinforced or Fabric Laminated pads that meet the requirements of Specification Section 932 for Ancillary Structures.
4. Fabricate pickets and vertical panel elements parallel to the posts; except Type 2, 3 and 5 panel infills may be fabricated parallel to the longitudinal grade. Maintain a maximum clear opening of 5⅞" for standard installations and 3⅞" when a 4" sphere requirement is indicated in the Data Tables.
5. Maximum spacing between expansion joints is 40'-0". Locate an Expansion Joint between the posts on either side of the Deck Expansion Joint.
6. Field splices are similar to the Expansion Joint Detail and may be approved by the Engineer to facilitate handling; but the top rail must be continuous across a minimum of two posts.
7. For intermediate and bottom horizontal rails, the screwed joints shown may be substituted with alternate joints shown in detail "K".
8. Make corners and changes in tangential longitudinal alignment with a 9" bend radius or terminate adjoining sections with mitered end sections when handrails are not required.
9. For changes in tangential longitudinal alignment greater than 45°, position posts a maximum of 2'-0" each side of the corner but not at the corner apex.
10. For curved longitudinal alignments, shop bend the top and bottom rails and handrails to match the alignment radius.
11. Handrails are required and must be continuous at landings for:
    - A. Grades Steeper than 5%,
    - B. Three or more steps
12. Installation: Cutting of reinforcing steel is permitted for post installed anchors.

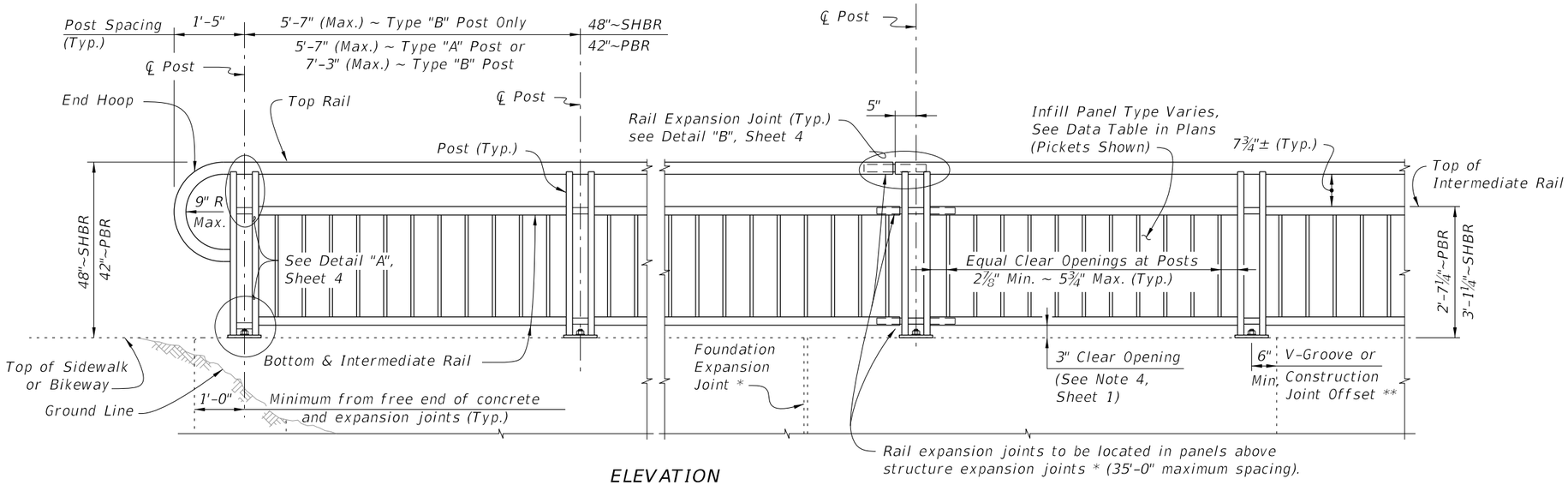

ELEVATION
(Showing Outside Face of Railing with Type "A" Posts)

TYPICAL RAILING DETAILS & RAILINGS ON GRADES 0% TO 5%

(Type 1 - Picket Railing Shown, Other Types Similar)

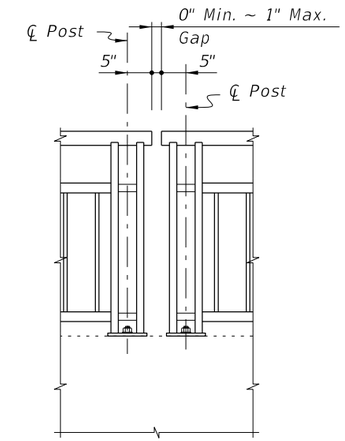

Note: Non-continuous corners are permitted when handrails are not required.

EXPANDED ELEVATION AT CORNERS

DETAIL FOR NON-CONTINUOUS RAILING AT CORNERS

NOTES:
* Keyed construction joints in Index 400-011 Gravity Wall are not considered to be expansion joints.
** Contraction joints (Tooled or Saw Cut) in sidewalks do not require a 6" minimum offset.

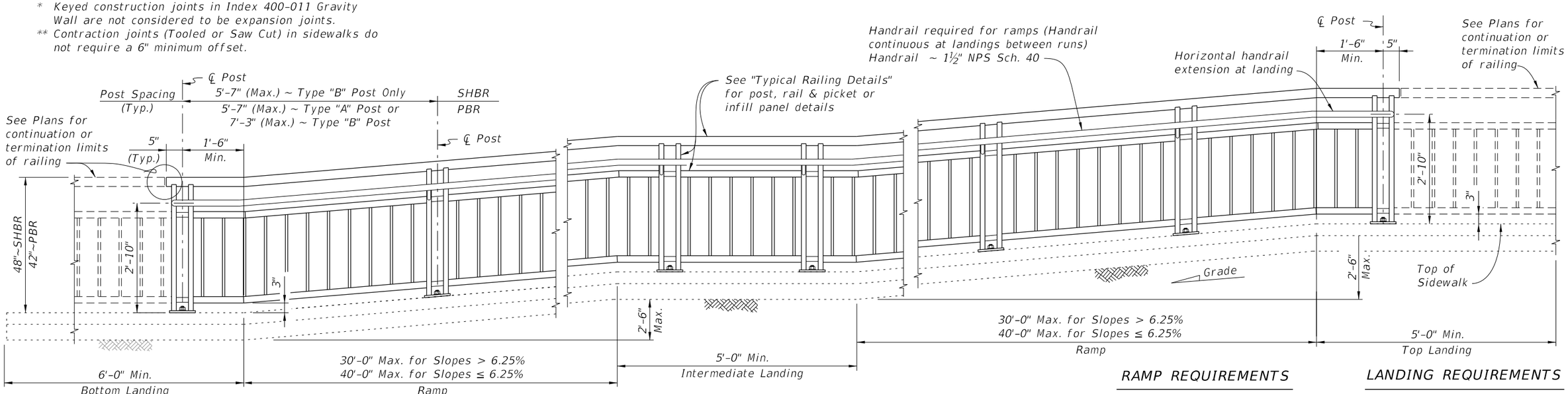

RAMP REQUIREMENTS

For slopes greater than 5%:
Max. ramp slope = 8.33%
Max. ramp cross-slope = 2.0%

LANDING REQUIREMENTS

Max. landing slope = 2%
Max. landing cross-slope = 2%

ELEVATION
(Showing Inside Face of Railing with Type "A" Posts)

RAILINGS ON GRADES STEEPER THAN 5%

(Type 1 - Picket Railing Shown, Other Types Similar)

10/20/2022 8:50:13 AM

LAST REVISION	REVISION	DESCRIPTION:			INDEX	SHEET
11/01/16			FY 2023-24 STANDARD PLANS	PEDESTRIAN/BICYCLE RAILING (STEEL)	515-052	2 of 8

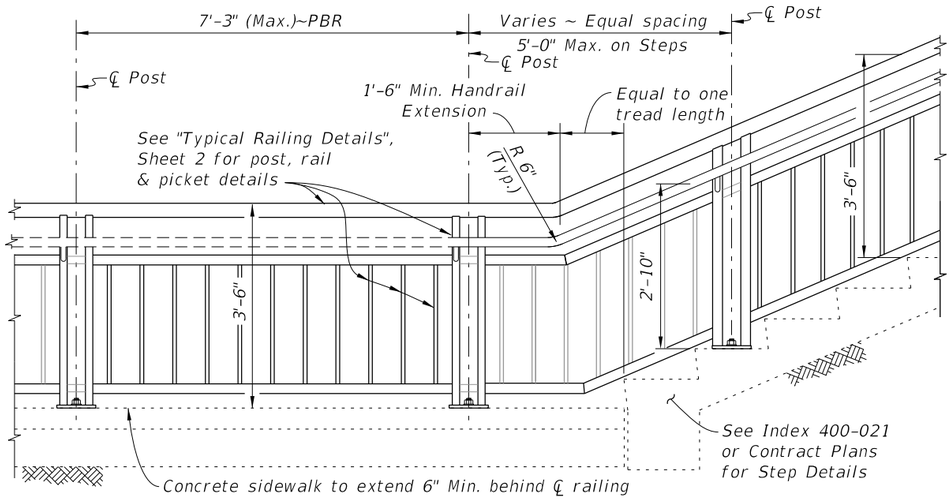

RAILING CONTINUATION BEYOND STEPS OR STAIRS
(Bottom shown, Top similar)

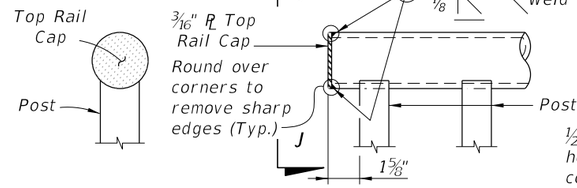

VIEW J-J

DETAIL "J" - ELEVATION VIEW
TOP RAIL TERMINATION

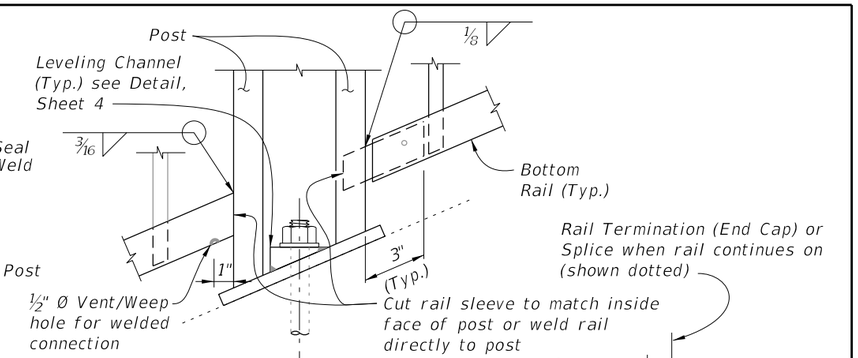

DETAIL "K" - ELEVATION VIEW
BOTTOM RAIL CONNECTION
(Intermediate Rail Similar)

RAIL TERMINATION DETAILS

DETAIL "L" - PLAN VIEW
HANDRAIL TERMINATION

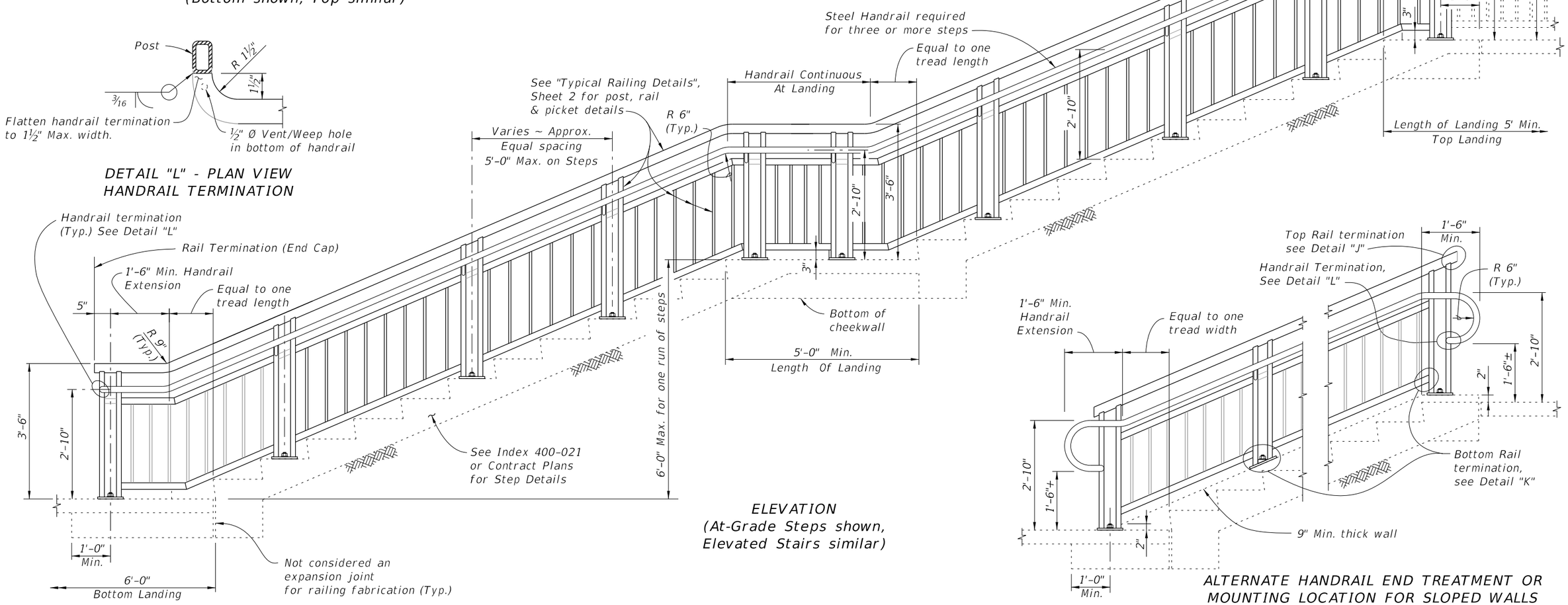

ELEVATION
(At-Grade Steps shown,
Elevated Stairs similar)

ALTERNATE HANDRAIL END TREATMENT OR
MOUNTING LOCATION FOR SLOPED WALLS

RAILINGS ON STEPS & STAIRS

12/13/2022 8:18:01 AM

LAST REVISION	REVISION	DESCRIPTION:			INDEX	SHEET
11/01/16			FY 2023-24 STANDARD PLANS	PEDESTRIAN/BICYCLE RAILING (STEEL)	515-052	3 of 8

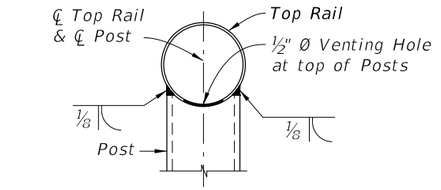

SECTION A-A
(Top Rail Connection)

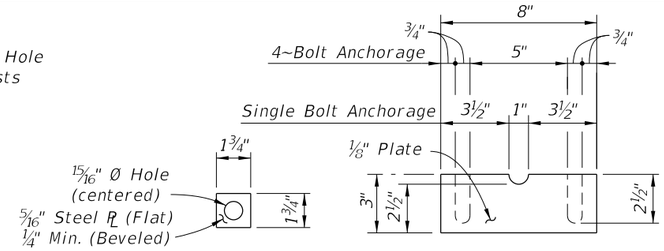

PLATE WASHER DETAIL

SHIM PLATE DETAIL

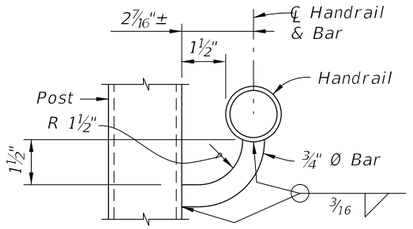

SECTION B-B
(Handrail Connection)

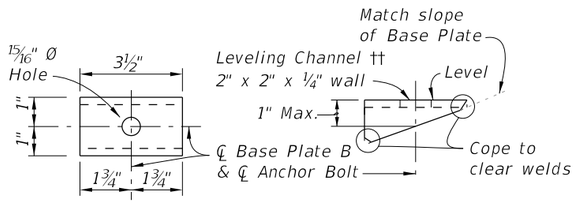

TOP VIEW

SIDE VIEW

LEVELING CHANNEL DETAIL

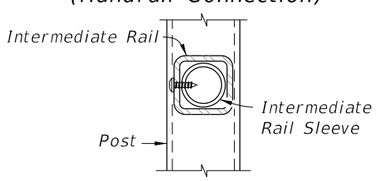

SECTION C-C
(Intermediate Rail Connection)

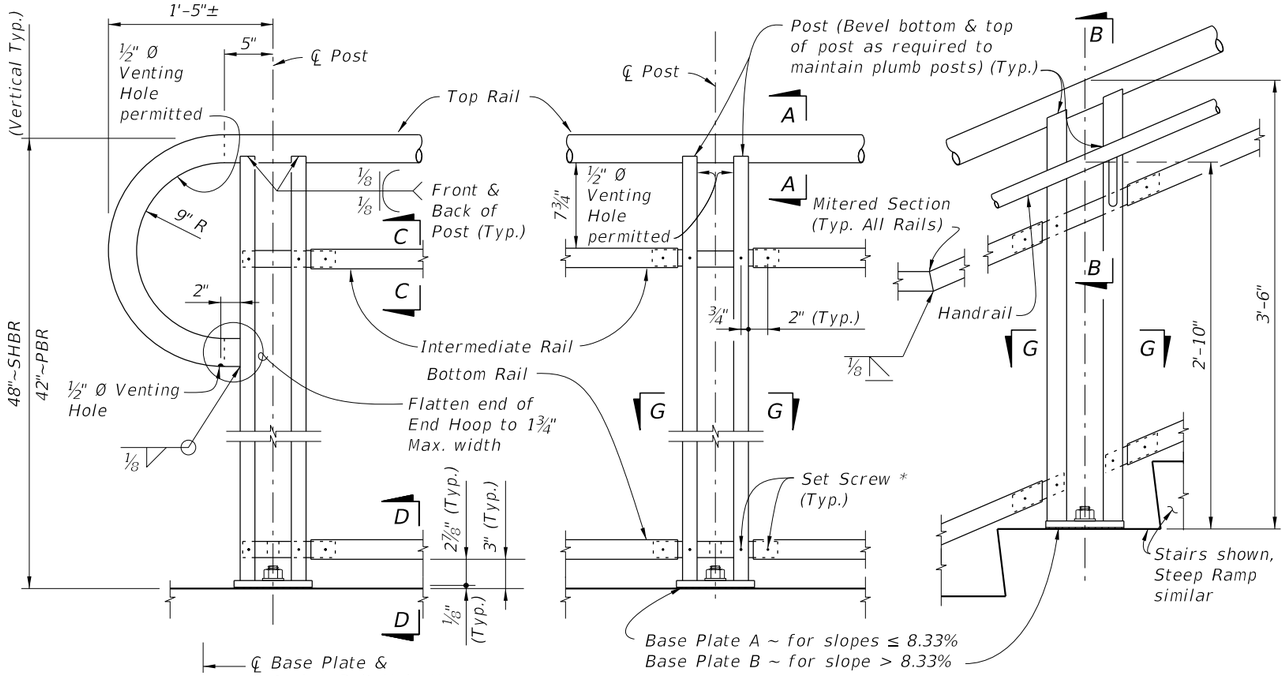

DETAIL "A" - RAIL CONNECTIONS
(Pickets/Panels and 4~Bolt Anchorage
Not Shown for Clarity)

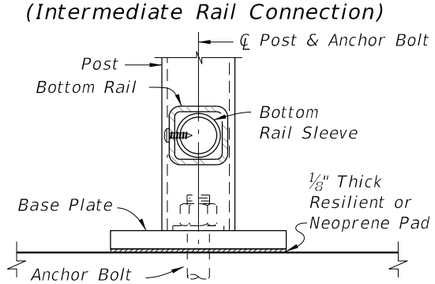

SECTION D-D
(Bottom Rail Connection -
Single Anchor Bolt Shown)

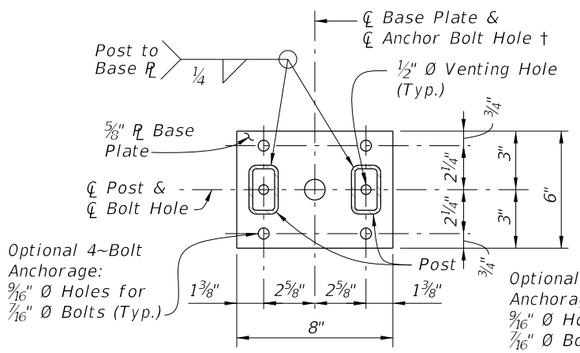

BASE PLATE A

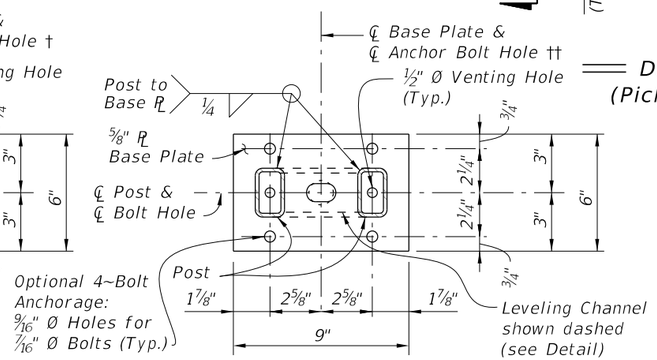

BASE PLATE B

SECTION G-G - BASE PLATE DETAILS

NOTES:

† Base Plate A (Ramps – Bolts normal) use 1 1/16" Ø Holes for Single Anchor Bolts with Flat Washers for slopes ≤ 8.33%.

†† Base Plate B (Stairs – Bolts plumb) use 1¼" Ø Holes for Single Anchor Bolts with Beveled Plate and Washers for slopes > 8.33% to ≤ 15%; use 15/16" x 1½" Slotted Holes with Leveling Channel for slopes > 15%.

* ¼" Ø x ¾" Pan Head Stainless Steel (Type 316 or 18-8 Alloy) Set Screws. Screws must be set flush against the outside face of rails & posts and underside of handrails. ½" Ø plug welds may be substituted for the Set Screws. Do not provide Set Screws for Rails at free end of Expansion Joints.

** Embedded length may be 4" for plug welded connection.

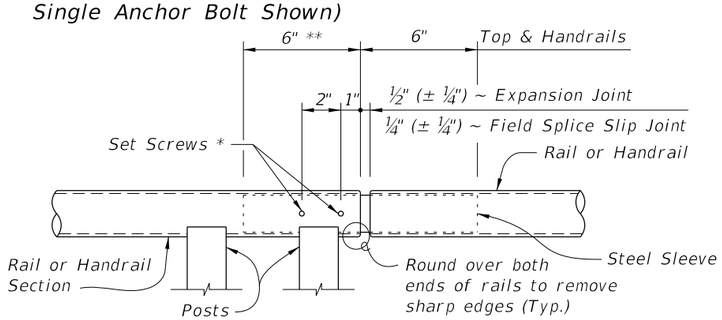

ROUND RAILS - TOP RAIL OR HANDRAIL
(Top Rail at Expansion Joint Shown)

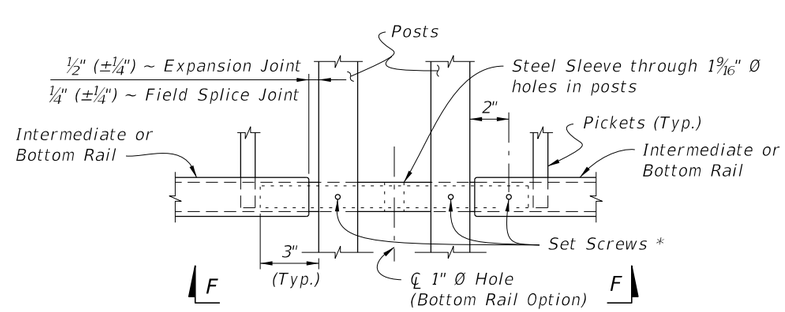

SQUARE RAILS - INTERMEDIATE OR BOTTOM RAIL
(Bottom Rail at Expansion Joint Shown)

DETAIL "B" - EXPANSION JOINT (FIELD SPLICE SLIP JOINT SIMILAR)

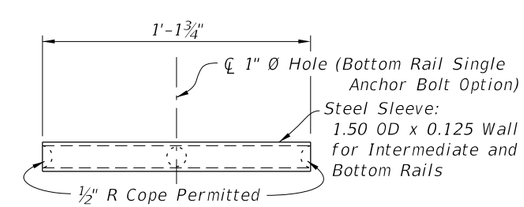

VIEW F-F
INTERMEDIATE OR BOTTOM RAIL -
STEEL SLEEVE DETAIL (Bottom Side Shown)

CROSS REFERENCE:

For location of Details "B", See Sheet 2.

10/20/2022 8:50:15 AM

LAST REVISION	REVISION	DESCRIPTION:			INDEX	SHEET
11/01/16			FY 2023-24 STANDARD PLANS	PEDESTRIAN/BICYCLE RAILING (STEEL)	515-052	4 of 8

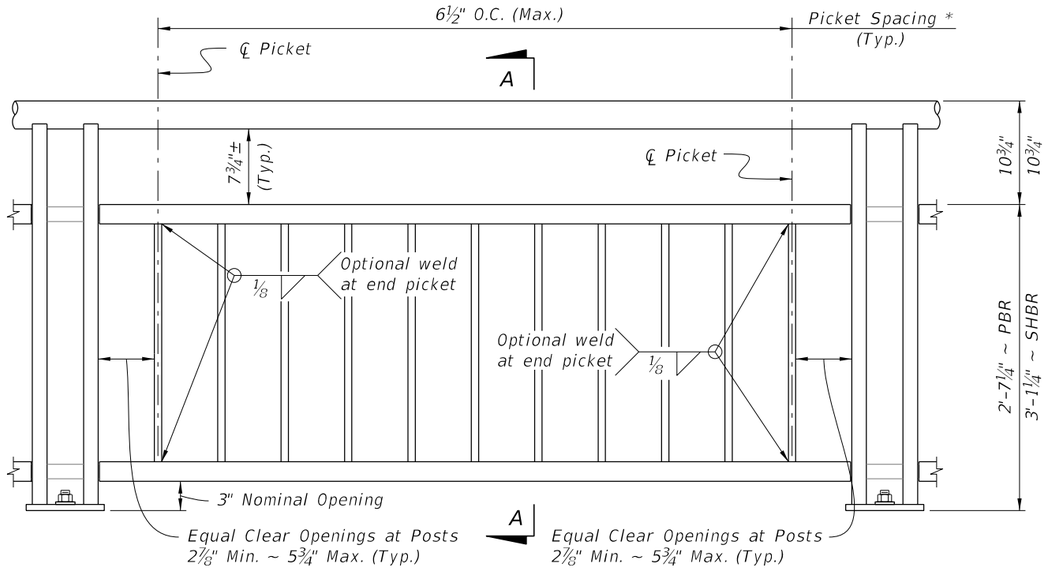

TYPE 1 - PICKET INFILL PANEL

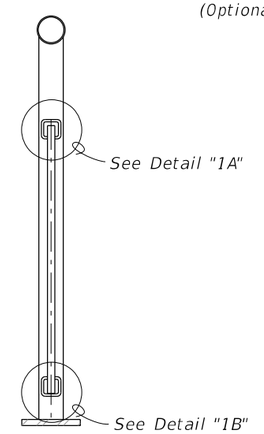

SECTION A-A

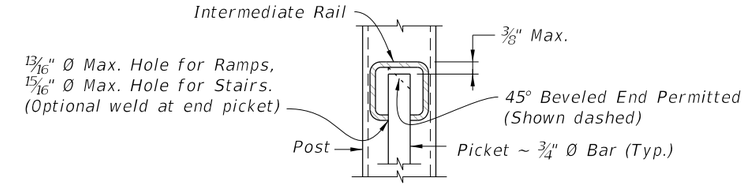

DETAIL "1A"
(Top of Picket Connection)

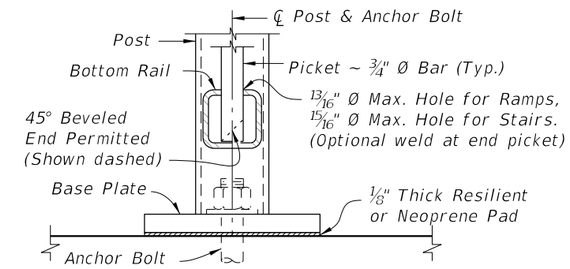

DETAIL "1B"
(Bottom of Picket Connection)

PICKET NOTES:
* Picket Spacing of 6½" centers is based on a ¾" Ø Bar for standard applications.
When shown in the Contract Plans a 4½" picket spacing may be required. See Note 4 (Sheet 1).

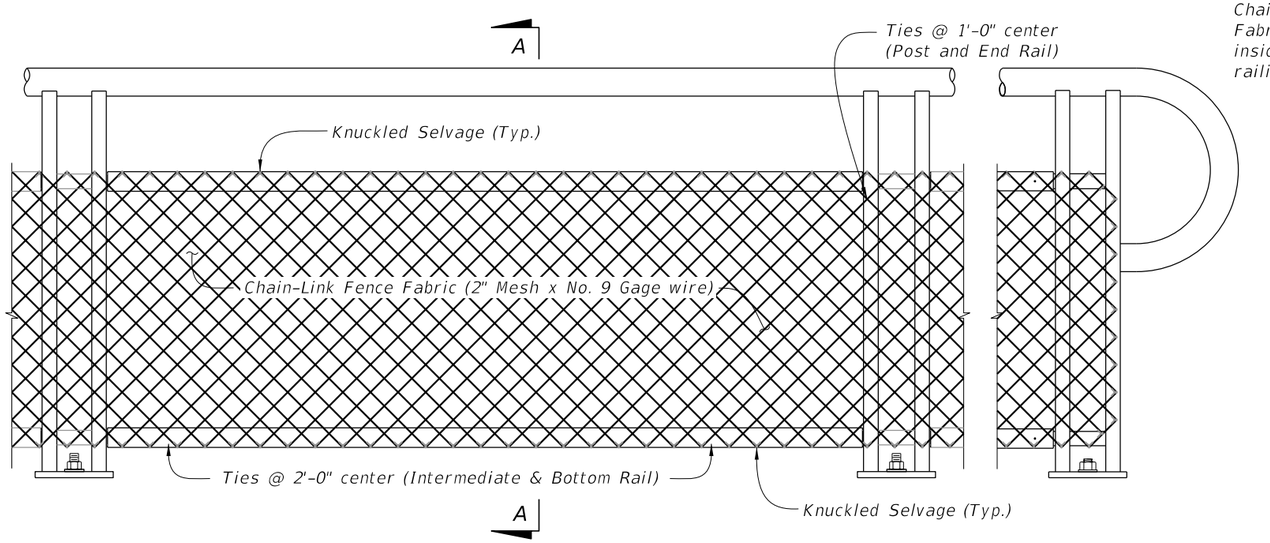

TYPE 2 - CHAIN-LINK (Continuous Infill Panel)

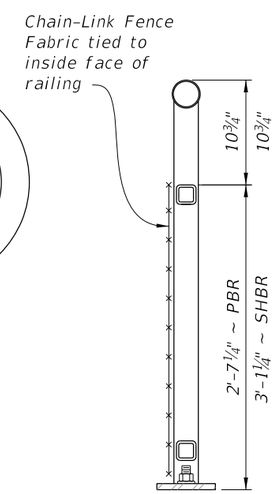

SECTION A-A

TABLE 2 - CHAIN-LINK PANEL COMPONENT MATERIALS		
COMPONENT	ASTM	COMPONENT INFORMATION
Chain-Link Fence Fabric (2" mesh with knuckled top and bottom selvage)	A 392	Zinc-Coated Steel - No. 9 gage (coated wire diameter), Class 2 Coating
	A 491	Aluminum-Coated Steel - No. 9 gage (coated wire diameter)
	F 668	Polyvinyl Chloride (PVC) Coated Steel - No. 9 gage Zinc-Coated Wire (metallic-coated core wire diameter) ~ See Plans for specified color of PVC.
Tie Wires	F 626	Zinc-Coated Steel Wire - No. 9 gage with coating to match Chain-Link Fence Fabric.
Tension Bars	F 626	3⁄16" (Min. thickness) x ¾" (Min. width) x 2'-3' (Min. height) Steel Bars
Miscellaneous Fence Components	F 626	Zinc-Coated Steel

CHAIN-LINK PANEL NOTE:
Chain-Link Fence Fabric shall be continuous along limits of railing. Splicing of Chain-Link panels using Tension Bars at 20'-0" minimum increments is permitted.

NOTES:
1. See Plans for Infill Panel option required.

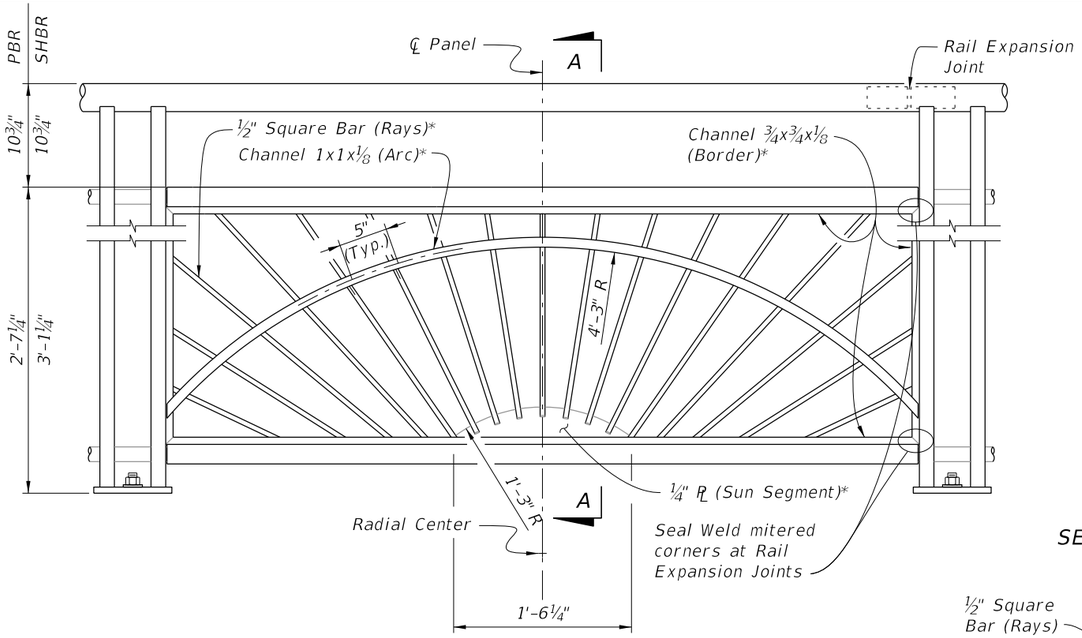

TYPE 3 - SUNSHINE INFILL PANEL

* Arc, Rays and Sun Segment may be formed in a single panel from ½" steel plate pattern cut with laser or plasma CNC, welded to a 1x1x⅛ Angle Border or the ¾x¾x⅛ Channel Border shown.

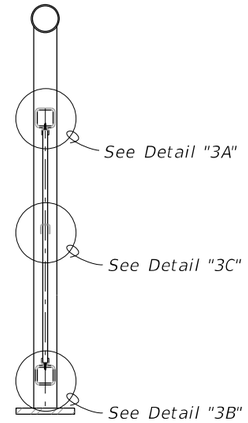

SECTION A-A

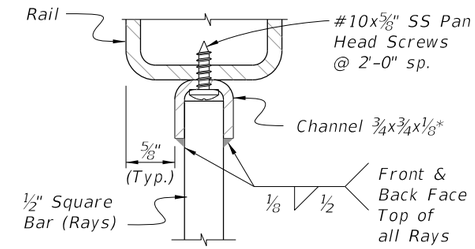

DETAIL "3A"
INTERMEDIATE RAIL/RAY CONNECTION

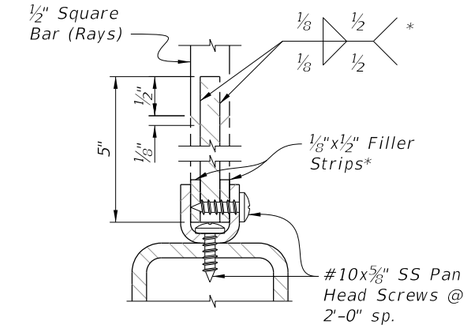

DETAIL "3B"
BOTTOM RAIL/RAY CONNECTION

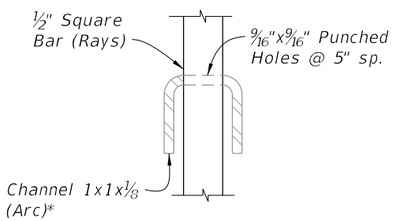

DETAIL "3C"
RAY/ARC CONNECTION

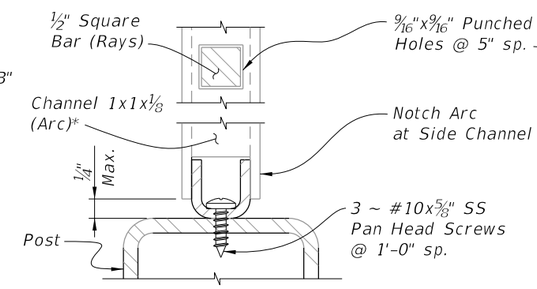

DETAIL "3D"
ARC/POST CONNECTION
(Continuous Top Rail)

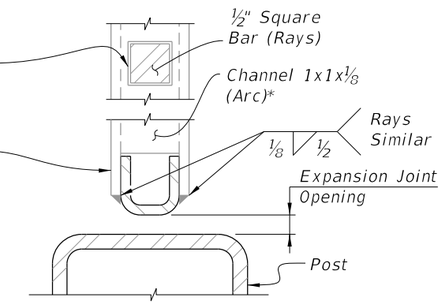

DETAIL "3E"
PANEL END CONNECTION
AT POST WITH EXPANSION JOINT

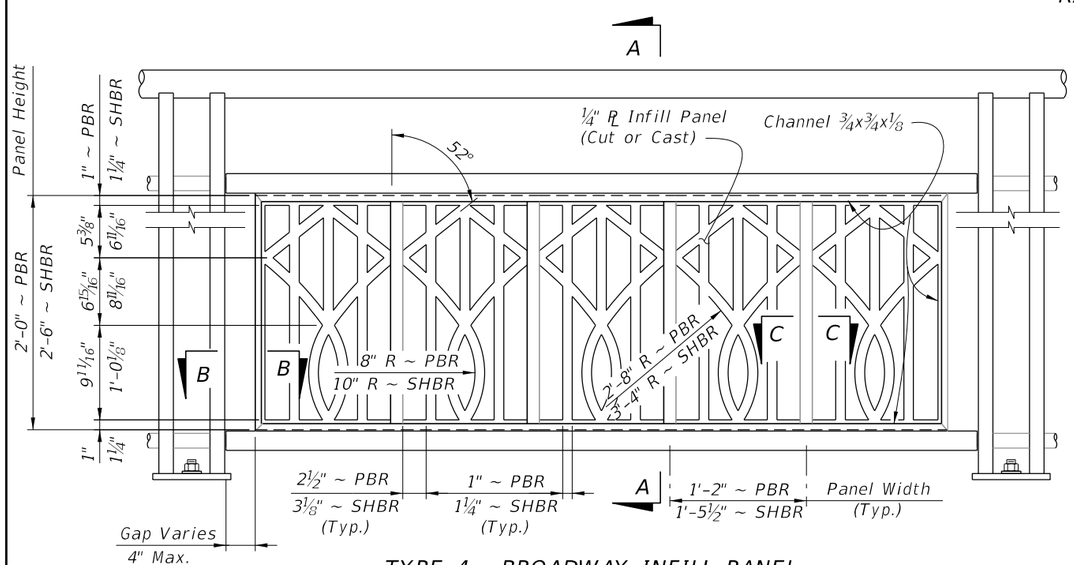

TYPE 4 - BROADWAY INFILL PANEL

NOTE:
See Plans for Infill Panel Option required.

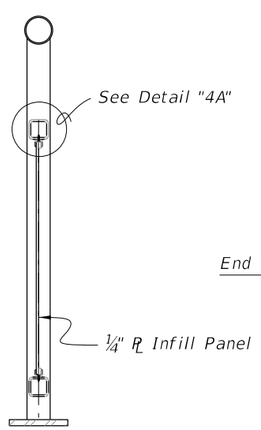

SECTION A-A

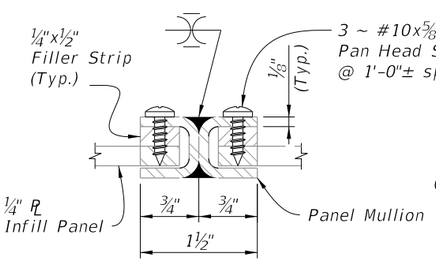

SECTION C-C
PANEL/SPLICE CONNECTION

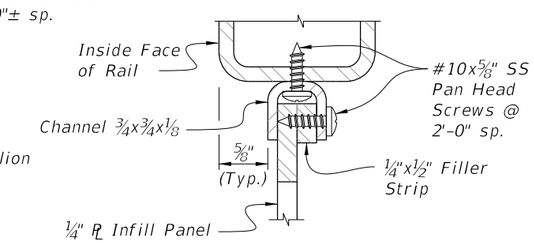

DETAIL "4A"
PANEL/RAIL CONNECTION
(Top Shown, Bottom Similar)

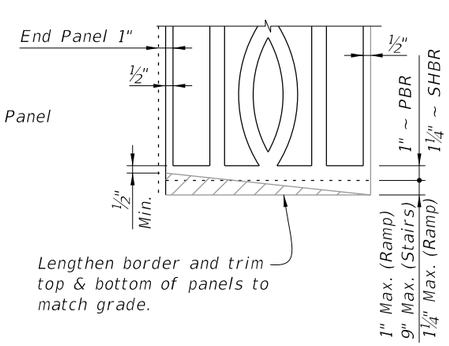

PANEL ADJUSTMENT FOR RAILINGS
ON GRADES

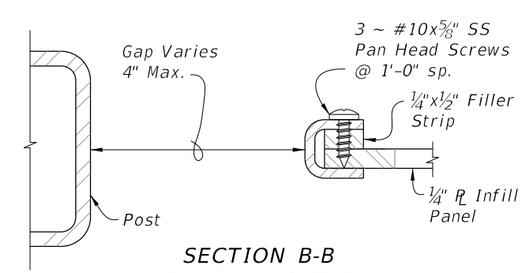

SECTION B-B
PANEL END CAP

8:50:17 AM
10/20/2022

LAST REVISION	REVISION	DESCRIPTION:			INDEX	SHEET
11/01/16			FY 2023-24 STANDARD PLANS	PEDESTRIAN/BICYCLE RAILING (STEEL)	515-052	6 of 8

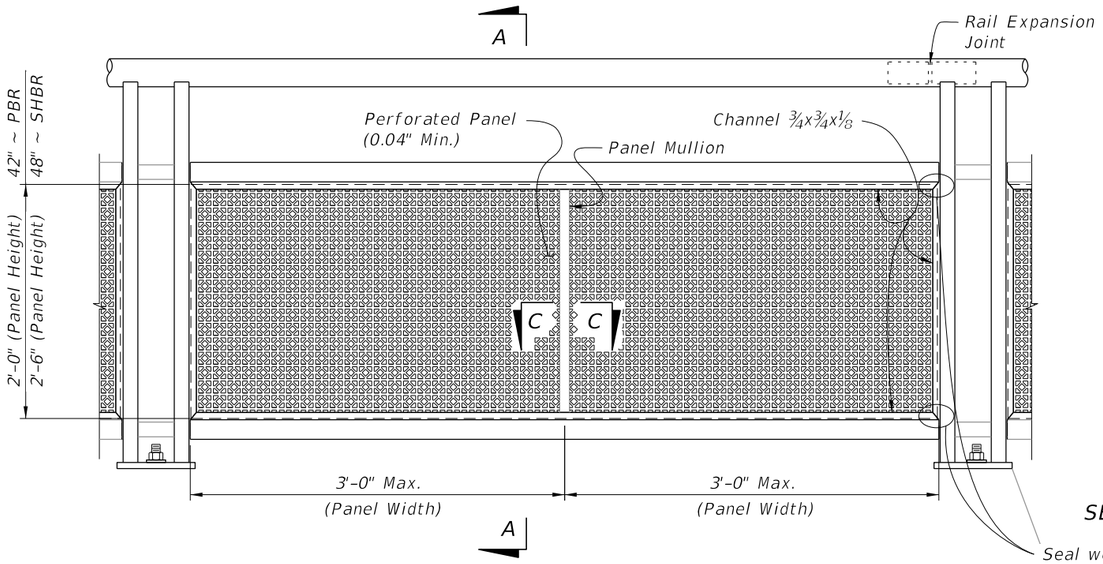

TYPE 5 - PERFORATED INFILL PANEL

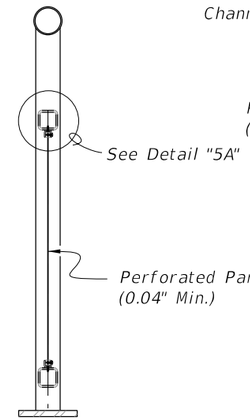

SECTION A-A

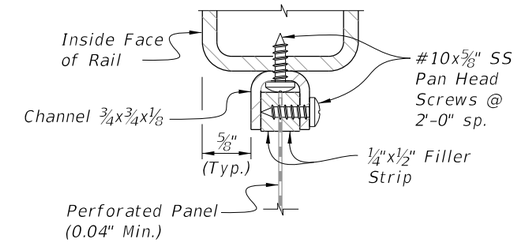

DETAIL "5A"
PANEL/RAIL CONNECTION
(Top Shown, Bottom Similar)

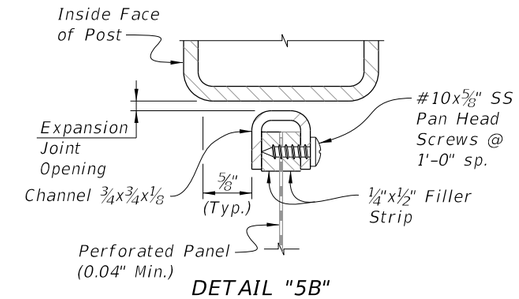

DETAIL "5B"
PANEL END CONNECTION
(Expansion Joint Shown, Sides Similar)

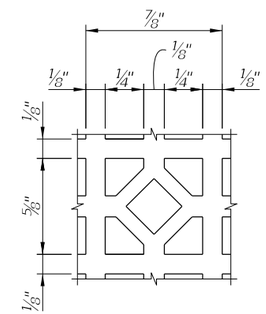

REPEATING PATTERN DETAIL
FOR PERFORATED PANEL

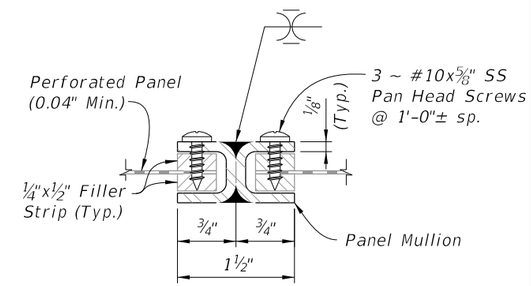

SECTION C-C
PANEL/SPLICE CONNECTION

NOTES:

1. See Plans for Infill Panel Type required.

10/20/2022 8:50:17 AM

LAST REVISION	REVISION	DESCRIPTION:				INDEX	SHEET
11/01/16			FDOT	FY 2023-24 STANDARD PLANS	PEDESTRIAN/BICYCLE RAILING (STEEL)	515-052	7 of 8

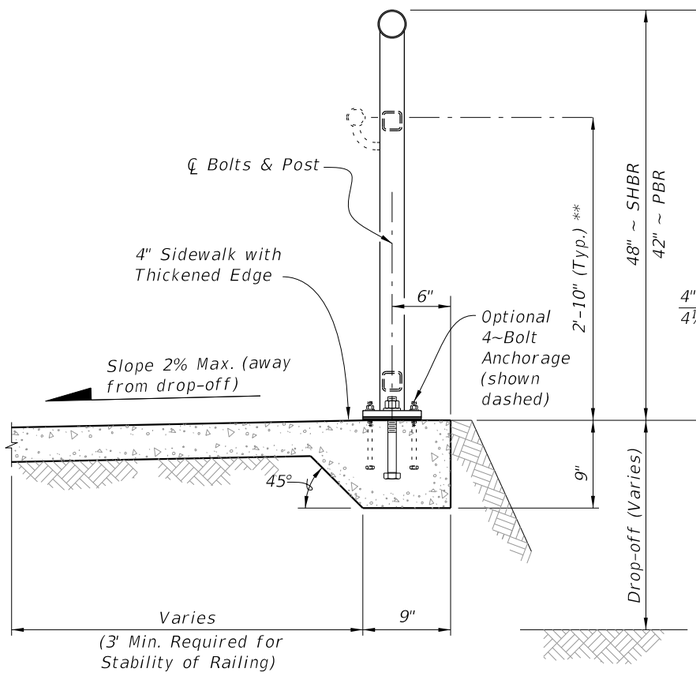

TYPICAL SECTION ON CONCRETE SIDEWALK
(Case I)

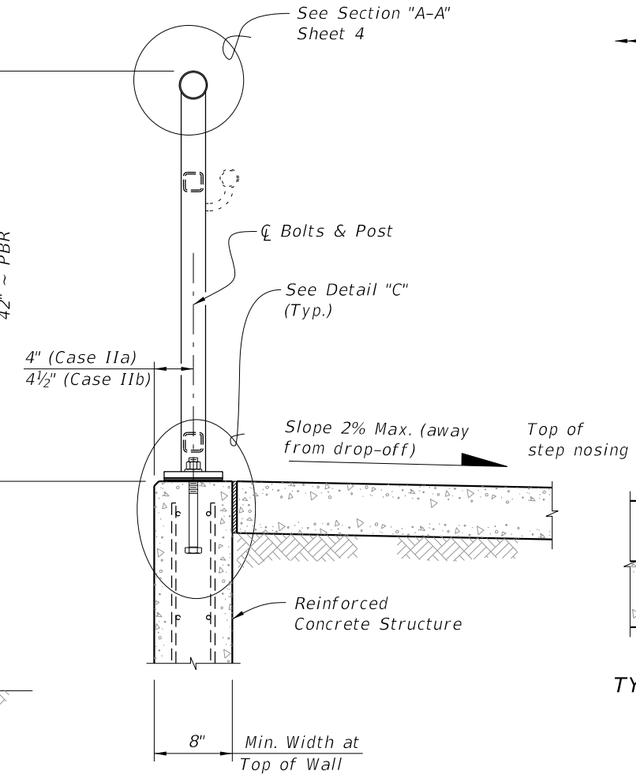

TYPICAL SECTION ON RETAINING WALL
(Case II)

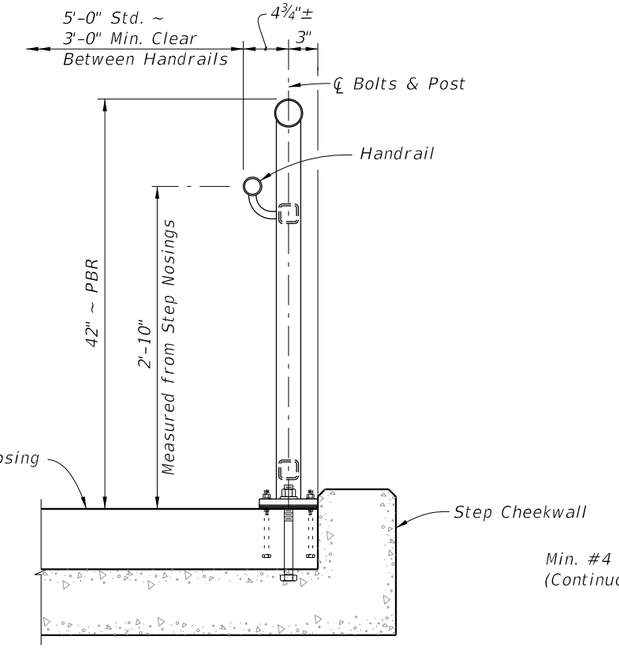

TYPICAL SECTION ON STEPS & STAIRS
(Case III)

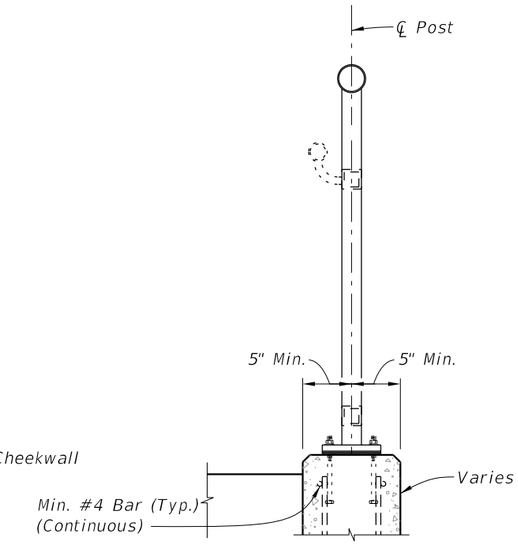

TYPICAL SECTION FOR 4~BOLT ANCHORAGE
(Case IV)

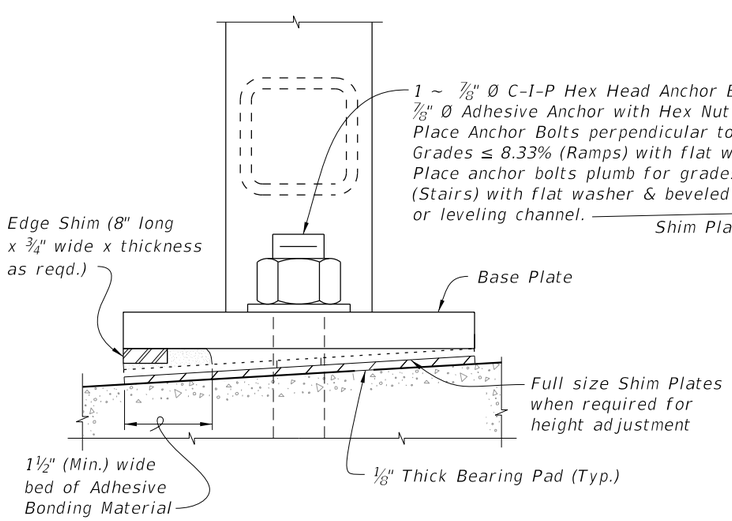

DETAIL "D" (OPTIONAL SHIMMING DETAIL
FOR CROSS SLOPE CORRECTION)
(Used in lieu of Beveled Shim Plates)

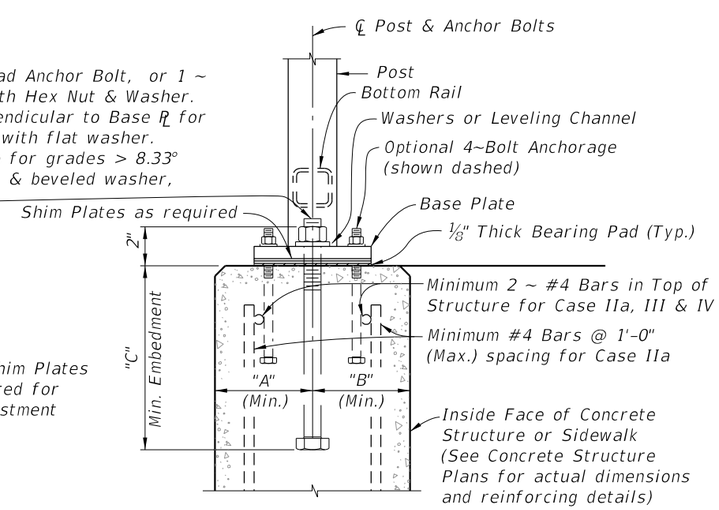

DETAIL "C"
(Cast-In-Place Anchor Bolts shown,
Adhesive Anchors similar)

ANCHOR BOLT TABLE							
CASE	STRUCTURE TYPE	DIMENSIONS			ANCHOR LENGTH		ANCHOR SIZE
		A Edge Dist.	B Edge Dist.	C Embedment	C-I-P Hex Head Bolt	Adhesive Anchor	
I	Unreinforced Concrete	6"	1'-2"	6"	7½"	8"	⅞" Ø
IIa	Reinforced Concrete	4"	4"	9"	10½"	11"	⅞" Ø
IIb	Gravity Wall Index 400-011	4½"	3½" @ top	9"	10½"	11"	⅞" Ø
III	Step Cheekwall	4½"	4½"	9"	10½"	11"	⅞" Ø
IV	Varies	5"	5"	5"	6½"	7"	7/16" Ø

** When required; measured from top of sidewalk.

3D VIEW OF RAILING WITH TYPE 1 - PICKET INFILL PANEL
(42" Height shown, 48" Height Similar)

TABLE 1 - RAILING MEMBERS

MEMBER	ALLOY(1)	DESIGNATION	OUTSIDE DIMENSION	WALL THICKNESS
Posts (Type "A" & "B")	6061-T6	RT 2x2x0.250	2.00" x 2.00"	0.250"
Posts (Type "C")	6061-T6	Extrusion 1½x2½x0.125	1.50" x 2.50"	0.125"
Top Plate (Type "C")	6061-T6	Extrusion (See Details)	2¾" x 7"	Varies
Top Rail	6061-T6	2½" NPS (Sch. 10)	2.875"	0.120"
		3" Round Top Cap Rail	3.000"	0.125"
End Hoops	6063-T5	2½" NPS (Sch. 10)	2.875"	0.120"
		3.00 OD x 0.125 Wall	3.000"	0.125"
Top Rail Joint/Splice Sleeves	6063-T5	2.50 OD x 0.125 Wall	2.500"	0.125"
		Top Cap Rail Inner Sleeve	2.800"	0.090"
Intermediate & Bottom Rail	6061-T6	RT 2x2x0.250	2.00" x 2.00"	0.250"(2)
Int. & Bottom Rail Post Connection Sleeve	6063-T5	1.50 OD x 0.125 Wall(3)	1.500"	0.125"
Handrail Joint/Splice Sleeves	6063-T5	1" NPS (Sch. 40)	1.315"	0.133"
	6063-T5	1.50 OD x 0.125 Wall	1.500"	0.125"
Handrails	6061-T6	1½" NPS (Sch. 40)	1.900"	0.145"
Handrail Support Bar	6061-T6	¾" Ø Round Bar	0.750"	N/A
Pickets (Type 1 Infill Panel)	6061-T6	¾" Ø Round Bar	0.750"	N/A
Infill Panel Members (Types 2 - 5)	6063-T5	Varies (See Details)	Varies	Varies

TABLE 1 NOTES:
(1) Alloy 6061-T6 or 6063-T52 & T6 may be substituted for Alloy 6063-T5.
(2) 0.188" wall thickness permitted for rails with post spacings less than 5'-9".
(3) 1" NPS (Sch. 40) non-slit rail sleeves may be substituted when welded connection Detail "K" is utilized.

NOTES

1. Shop Drawings are required, see Specification Section 515.
2. For bridge mounted railings, work this Index with Index 515-061 Bridge Bicycle/Pedestrian Railing (Aluminum)
3. Materials:
   A. Structural Extrusions, Tube, Pipe and Bars: Table 1 and ASTM B221 or ASTM B429
      a. Top, bottom and intermediate rail corner bends with maximum 4'-0" post spacing may be Alloy 6063-T6
   B. Base Plates and Rail Caps: ASTM B209 Alloy 6061-T6
   C. Perforated panels (Type 5) Alloy 3003-H14
   D. Stainless steel (SS) screws: Type 316 or 18-8 Alloy
   E. Aluminum screws: Alloy 2024-T4 or 7075-T73
   F. Galvanized Steel Fasteners: coated in accordance with Specification Section 962.
      a. Hex Head Bolts: ASTM A 307
         1. ⅞" diameter single bolt option, Grade 36
         2. 7/16" diameter four bolt option, Grade 55
      b. Adhesive Anchors: ASTM F1554 fully threaded rods, Grade 55
      c. Hex Nuts: ASTM A563
      d. Flat Washers: ASTM F436
      e. Plate Washers: ASTM A36 or ASTM A706 Grade 36.
   G. Shims: ASTM B209 Alloy 6061 or 6063
   H. Bearing Pads: Provide ⅛" thick Plain, Fabric Reinforced or Fabric Laminated Bearing Pads meeting the requirements of Specification Section 932 for Ancillary Structures.
4. Fabricate pickets and vertical panel elements parallel to the posts; except Type 2, 3 and 5 panel infills may be fabricated parallel to the longitudinal grade. Maintain a maximum clear opening of 5⅞" for standard installations and 3⅞" when a 4" sphere requirement is indicated in the Data Tables.
5. Locate railing expansion Joints between the posts on either side of the deck expansion joint. Maximum spacing between expansion joints is 35'-0".
6. Field splices are similar to the Expansion Joint Detail and may be approved by the Engineer to facilitate handling; but the top rail must be continuous across a minimum of two posts.
7. For intermediate and bottom horizontal rails, the screwed joints shown may be substituted with alternate joints shown in detail "K" for Post Type "A" & "B".
8. Make corners and changes in tangential longitudinal alignment with a 9" bend radius or terminate adjoining sections with mitered end sections when handrails are not required.
9. For changes in tangential longitudinal alignment greater than 45°, position posts a maximum of 2'-0" each side of the corner but not at the corner apex.
10. For curved longitudinal alignments, shop bend the top and bottom rails and handrails to match the alignment radius.
11. Handrails are required and must be continuous at landings for:
    A. Grades Steeper than 5%,
    B. Three or more steps
12. Installation: Cutting of reinforcing steel is permitted for post installed anchors.

CROSS REFERENCES:
Detail "A", Sheet 4
Detail "B", Sheet 4
Detail "K", Sheet 3

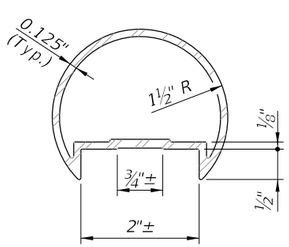

3" ROUND TOP CAP RAIL

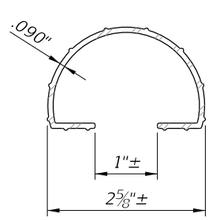

TOP CAP RAIL INNER SPLICE SLEEVE

ALTERNATE TOP RAIL SECTION

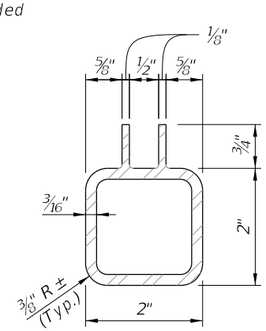

ALTERNATIVE BOTTOM & INTERMEDIATE RAIL SECTION FOR TYPE 3, 4 & 5 RAILINGS

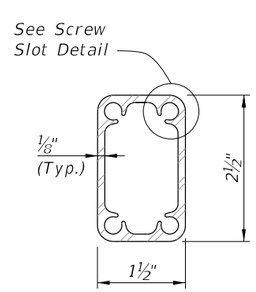

POST TYPE "C" SCREW SLOT SECTION

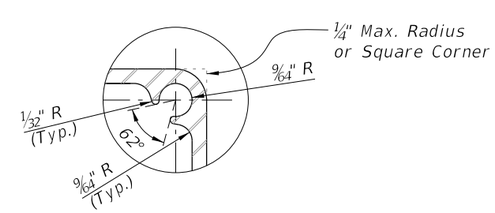

SCREW SLOT DETAIL

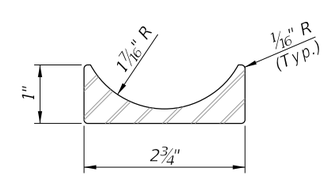

OPTIONAL TOP PLATE EXTRUSION SECTION (POST TYPE "C")

10/20/2022 8:50:20 AM

LAST REVISION	REVISION	DESCRIPTION:			INDEX	SHEET
11/01/18			FY 2023-24 STANDARD PLANS	PEDESTRIAN/BICYCLE RAILING (ALUMINUM)	515-062	1 of 9

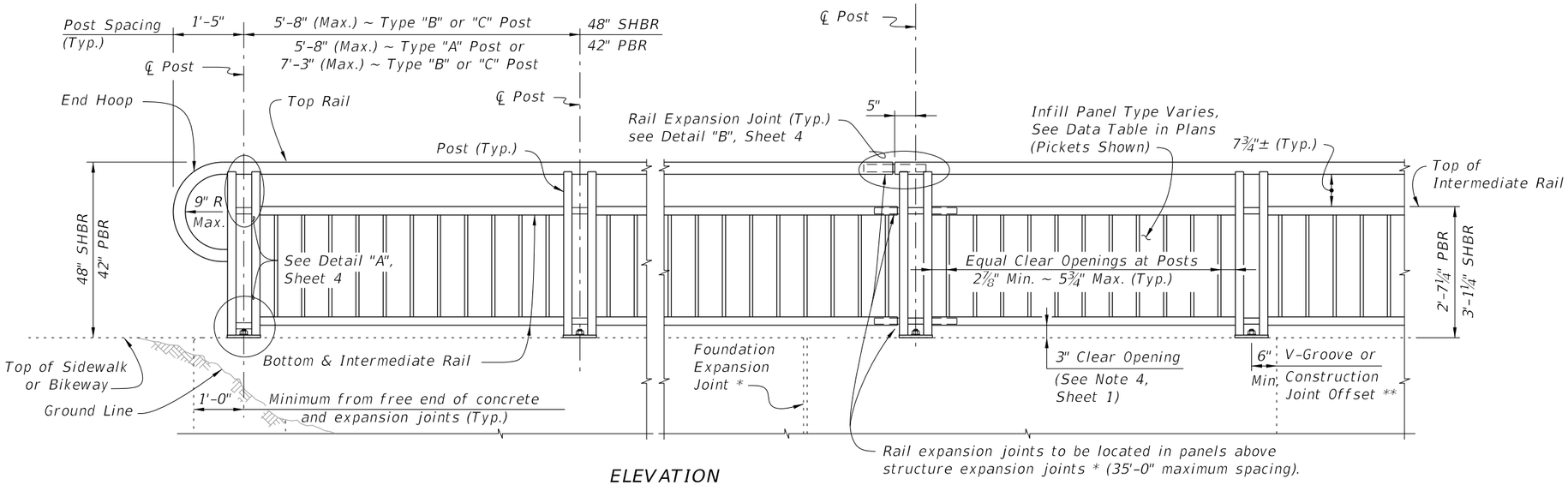

ELEVATION
(Showing Outside Face of Railing with Type "A" Posts)

TYPICAL RAILING DETAILS & RAILINGS ON GRADES 0% TO 5%

(Type 1 - Picket Railing Shown, Other Types Similar)

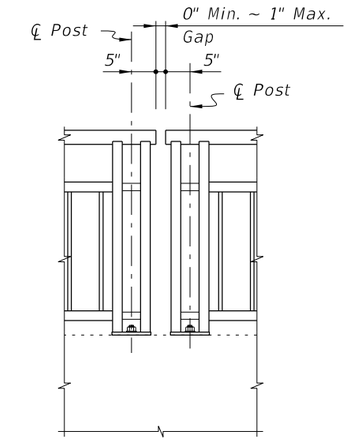

Note: Non-continuous corners are permitted when handrails are not required.

EXPANDED ELEVATION AT CORNERS

DETAIL FOR NON-CONTINUOUS RAILING AT CORNERS

NOTES:
* Keyed construction joints in Index 400-011 Gravity Wall are not considered to be expansion joints.
** Contraction joints (Tooled or Saw Cut) in sidewalks do not require a 6" minimum offset.

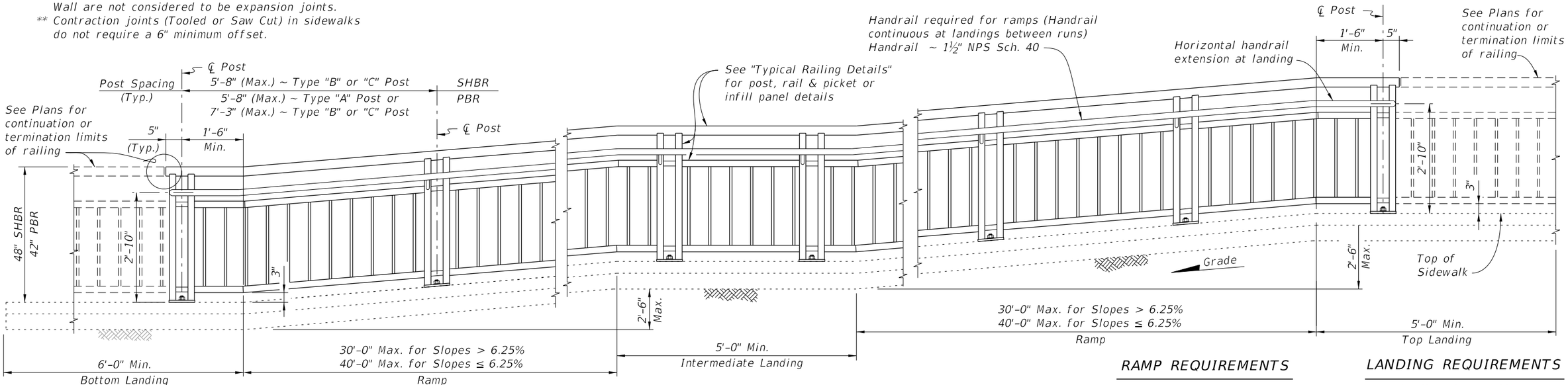

RAMP REQUIREMENTS

For slopes greater than 5%:
Max. ramp slope = 8.33%
Max. ramp cross-slope = 2.0%

LANDING REQUIREMENTS

Max. landing slope = 2%
Max. landing cross-slope = 2%

ELEVATION
(Showing Inside Face of Railing with Type "A" Posts)

RAILINGS ON GRADES STEEPER THAN 5%

(Type 1 - Picket Railing Shown, Other Types Similar)

10/20/2022 8:50:21 AM

LAST REVISION	REVISION	DESCRIPTION:			INDEX	SHEET
11/01/15			FY 2023-24 STANDARD PLANS	PEDESTRIAN/BICYCLE RAILING (ALUMINUM)	515-062	2 of 9

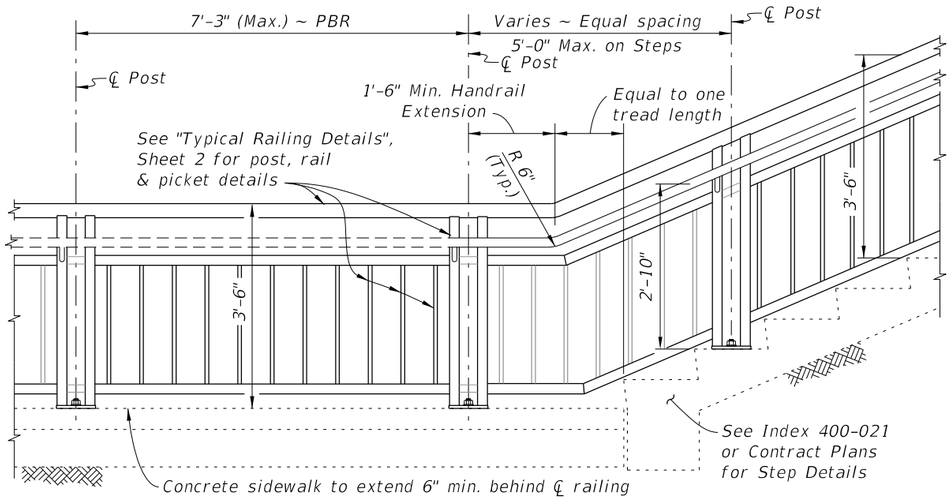

RAILING CONTINUATION BEYOND STEPS OR STAIRS
(Bottom shown, Top similar)

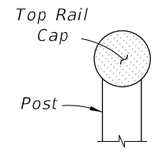

VIEW J-J

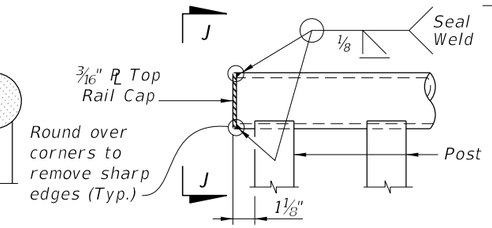

DETAIL "J" - ELEVATION VIEW
TOP RAIL TERMINATION

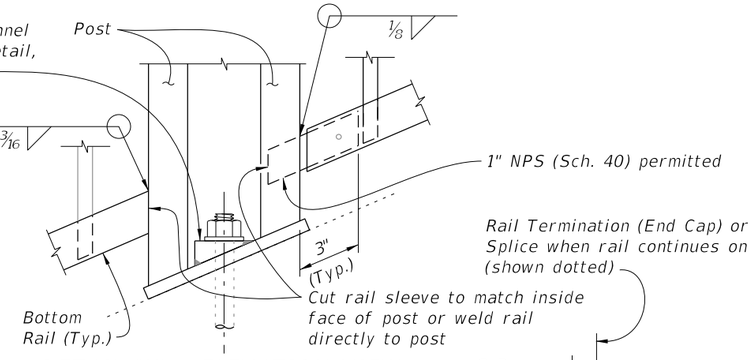

DETAIL "K" - ELEVATION VIEW
BOTTOM RAIL CONNECTION
(Intermediate Rail Similar)

RAIL TERMINATION DETAILS

DETAIL "L" - PLAN VIEW
HANDRAIL TERMINATION

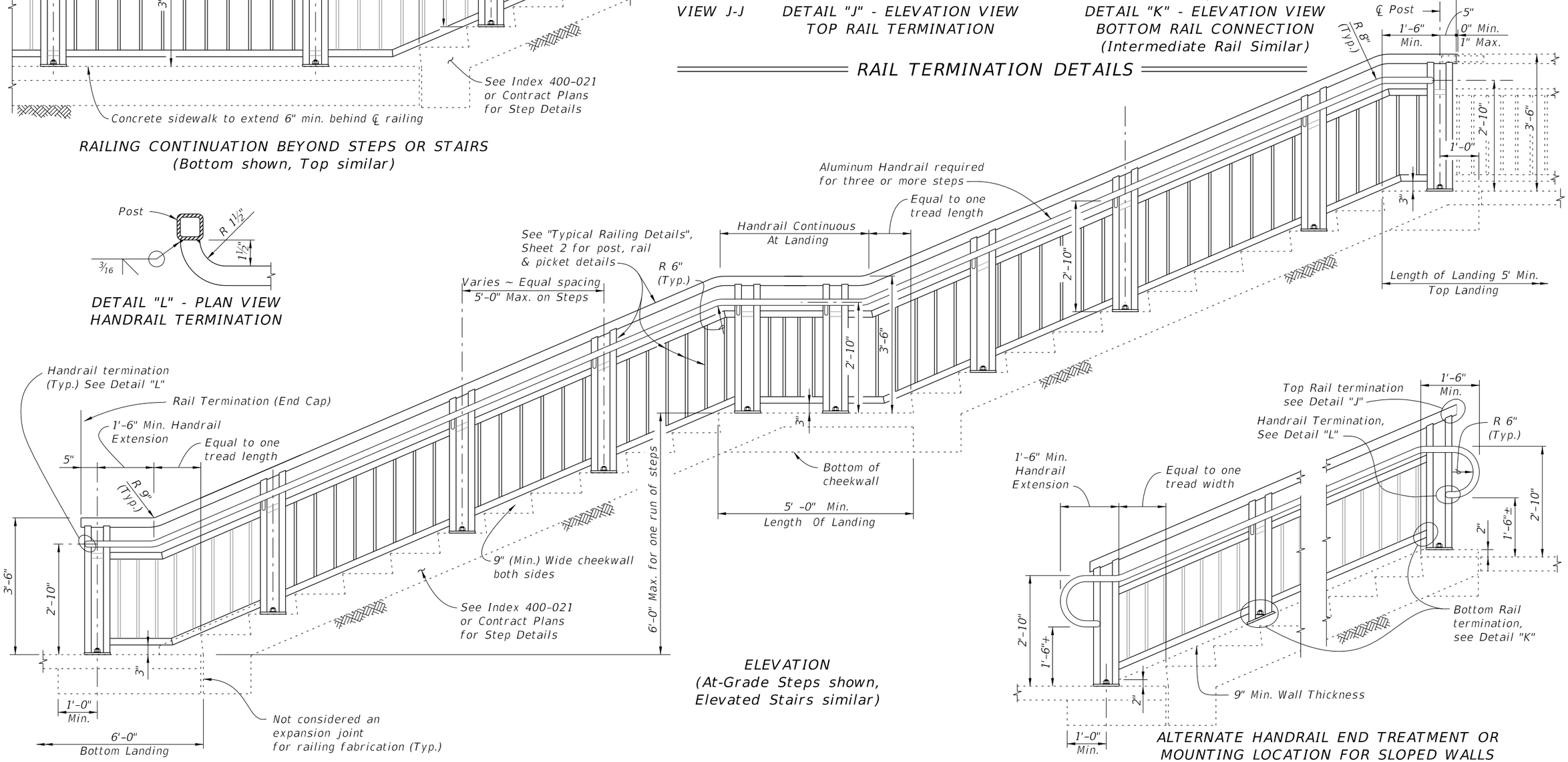

ELEVATION
(At-Grade Steps shown,
Elevated Stairs similar)

ALTERNATE HANDRAIL END TREATMENT OR
MOUNTING LOCATION FOR SLOPED WALLS

RAILINGS ON STEPS & STAIRS

10/20/2022 8:50:22 AM

LAST REVISION	REVISION	DESCRIPTION:			INDEX	SHEET
11/01/16			FY 2023-24 STANDARD PLANS	PEDESTRIAN/BICYCLE RAILING (ALUMINUM)	515-062	3 of 9

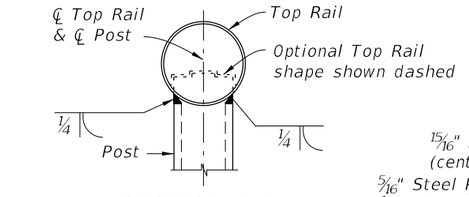

SECTION A-A
(Top Rail Connection)

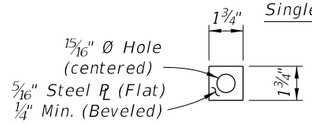

PLATE WASHER
DETAIL

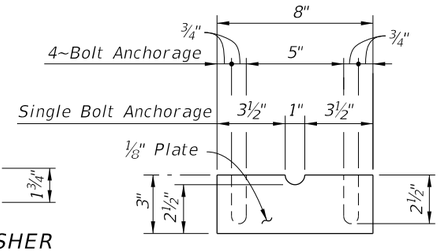

SHIM PLATE DETAIL

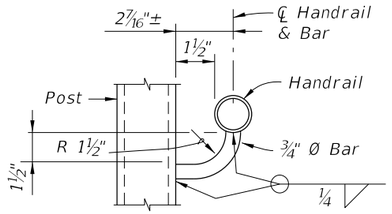

SECTION B-B
(Handrail Connection)

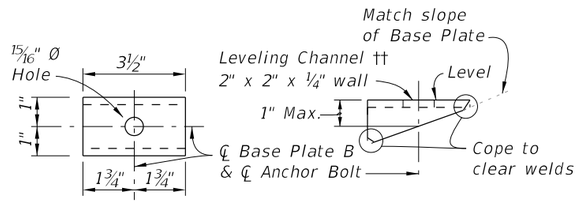

TOP VIEW

SIDE VIEW

LEVELING CHANNEL DETAIL

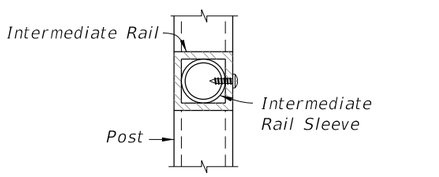

SECTION C-C
(Intermediate Rail Connection)

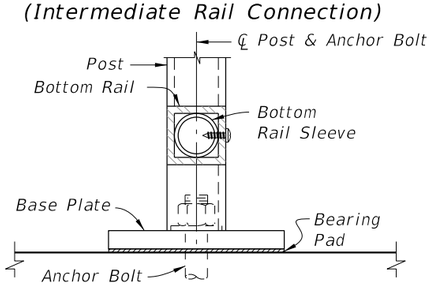

SECTION D-D
(Bottom Rail Connection -
Single Anchor Bolt Shown)

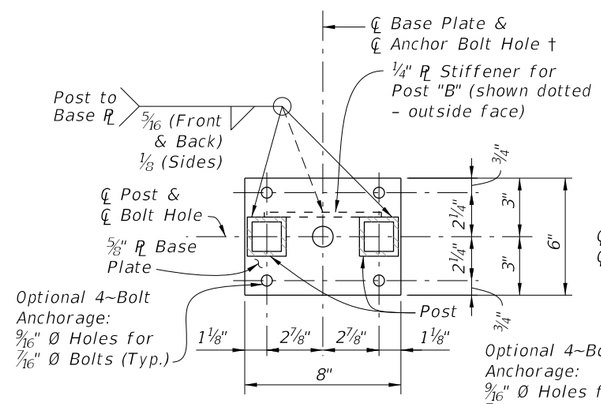

BASE PLATE A

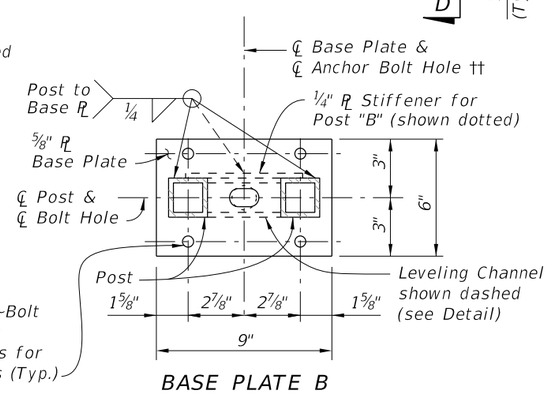

BASE PLATE B

SECTION G-G - BASE PLATE DETAILS

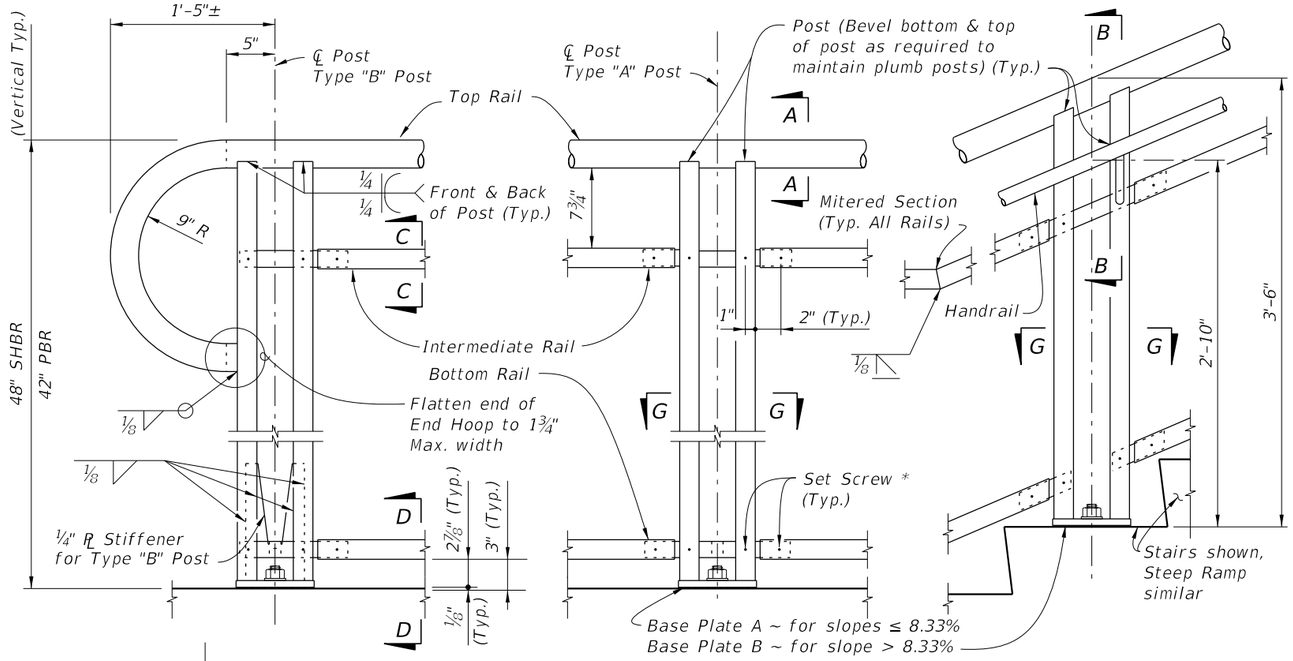

DETAIL "A" - RAIL CONNECTIONS
(Showing Inside Face of Railing)
(Pickets/Panels and 4~Bolt Anchorage Not Shown for Clarity)

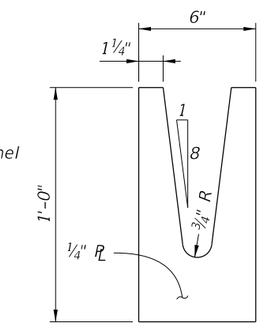

POST "B" STIFFENER
DETAIL

NOTES:

† Base Plate A (Ramps - Bolts normal) use 1 1⁄16" Ø Holes for Single Anchor Bolts with Flat Washers for slopes ≤ 8.33%.

†† Base Plate B (Stairs - Bolts plumb) use 1¼" Ø Holes for Single Anchor Bolts with Beveled Plate and Washers for slopes > 8.33% to ≤ 15%; use 15⁄16" x 1½" Slotted Holes with Leveling Channel for slopes > 15%.

* ¼" Ø x ¾" Pan Head Aluminum or Stainless Steel Set Screws. Screws must be set flush against the outside face of rails & posts and underside of handrails. A single tack weld (½" max. length) at top of the sleeve for each post may be substituted for the Set Screws. Do not provide Set Screws for Rails at free end of Expansion Joints.

** Embedded length may be 4" for plug welded connection.

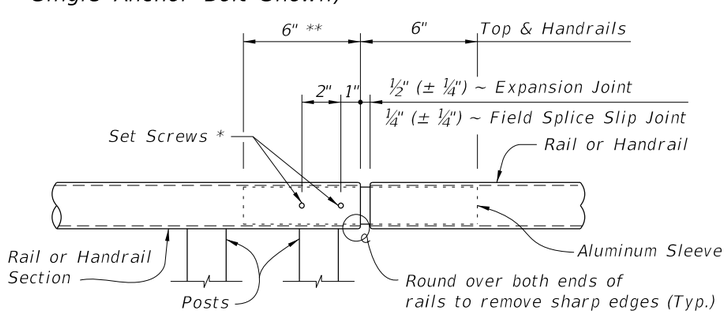

ROUND RAILS - TOP RAIL OR HANDRAIL
(Top Rail at Expansion Joint Shown)

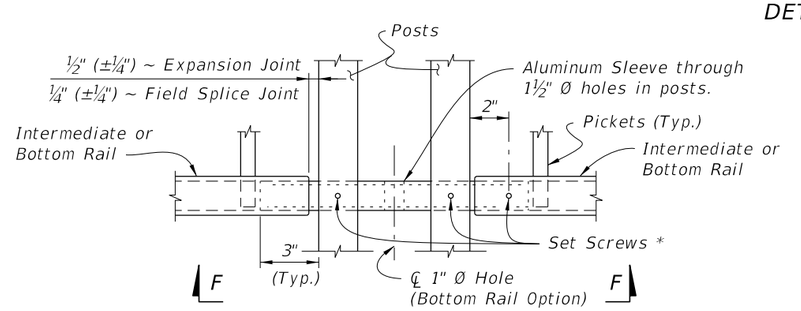

SQUARE RAILS - INTERMEDIATE OR BOTTOM RAIL
(Bottom Rail Shown at Expansion Joint Shown)

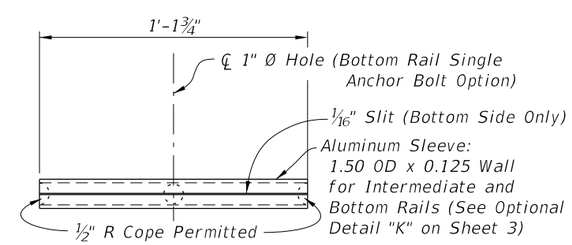

VIEW F-F
INTERMEDIATE OR BOTTOM RAIL -
ALUMINUM SLEEVE DETAIL (Bottom Side Shown)

DETAIL "B" - EXPANSION JOINT (FIELD SPLICE SLIP JOINT SIMILAR)

CROSS REFERENCE:

For location of Details "B", See Sheet 2.

10/20/2022 8:50:23 AM

LAST REVISION	REVISION	DESCRIPTION:			INDEX	SHEET
11/01/16			FY 2023-24 STANDARD PLANS	PEDESTRIAN/BICYCLE RAILING (ALUMINUM)	515-062	4 of 9

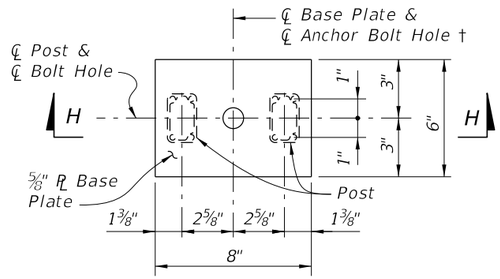

BASE PLATE A

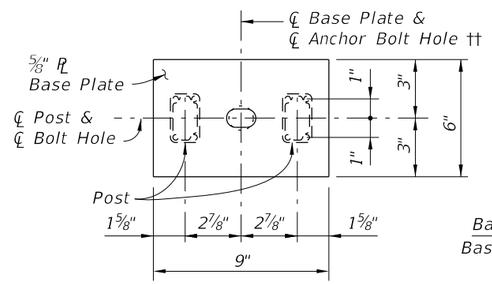

BASE PLATE B

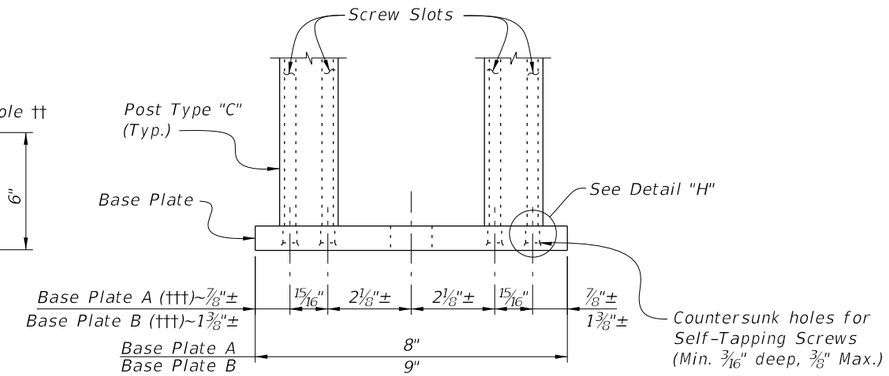

SECTION H-H
(Screws Not Shown for Clarity)

BASE PLATE DETAILS FOR TYPE "C" POST

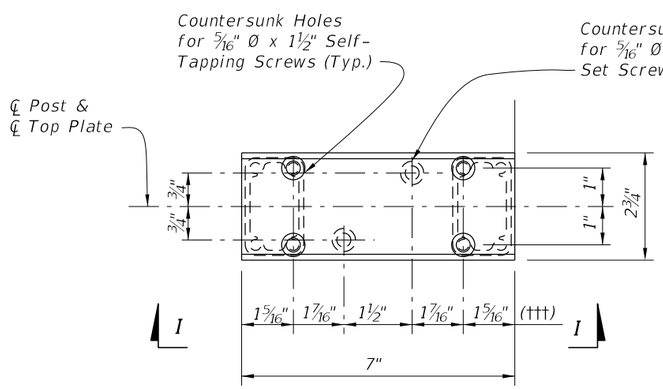

PLAN

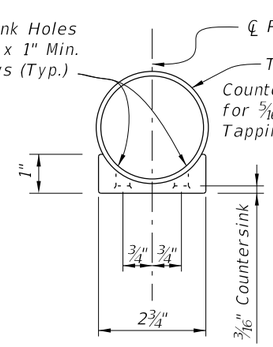

SECTION "I-1"

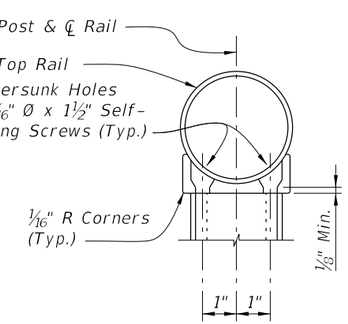

SECTION "I-2"

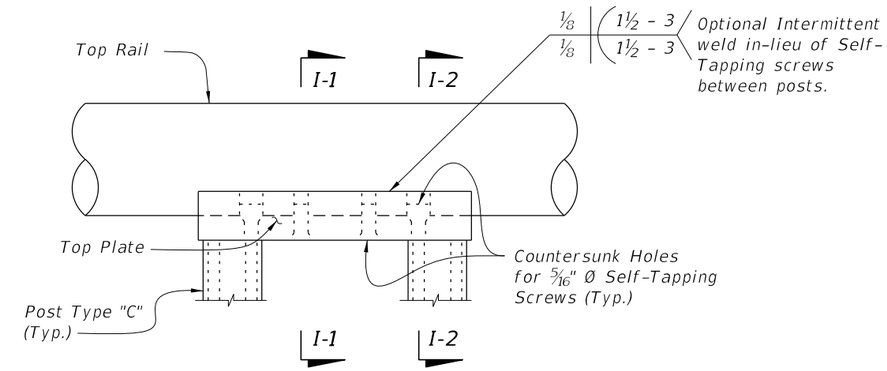

VIEW "I"

TOP PLATE DETAILS FOR TYPE "C" POST
(Screws Not Shown For Clarity)

Notes:

† See Sheet 4 for Notes.

†† See Sheet 4 for Notes.

††† Length varies for beveled posts on grades. Holes must be drilled plumb to align with screw slot.

12/13/2022 8:30:17 AM

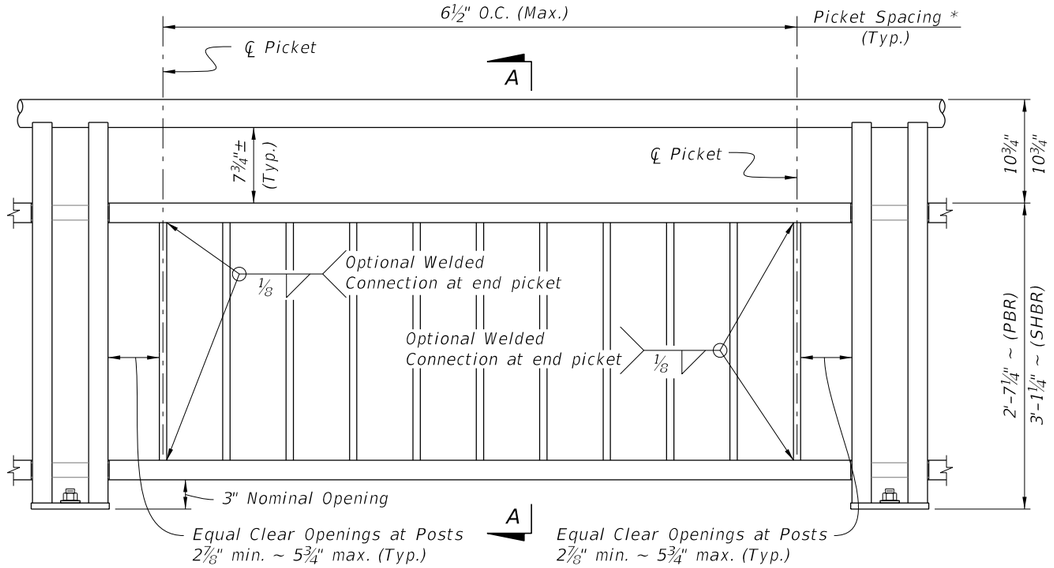

TYPE 1 - PICKET INFILL PANEL

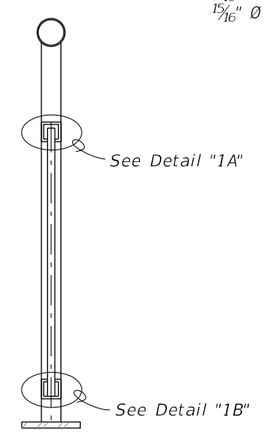

SECTION A-A

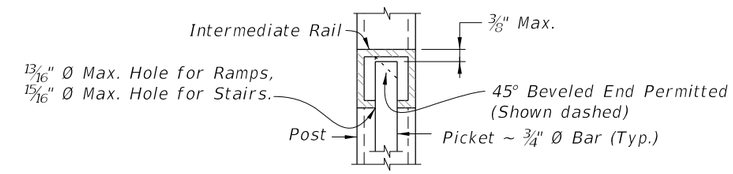

DETAIL "1A"
(Top of Picket Connection)

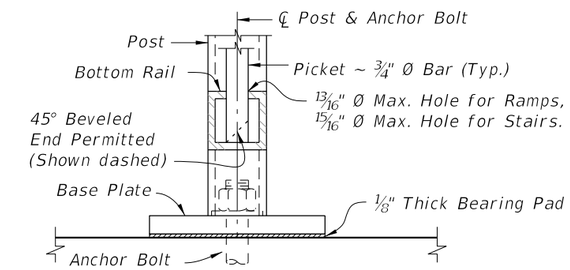

DETAIL "1B"
(Bottom of Picket Connection)

PICKET NOTES:

* Picket Spacing of 6½" centers is based on a ¾" Ø Bar for standard applications. When shown in the Contract Plans a 4½" picket spacing may be required. See Note 4 (Sheet 1).

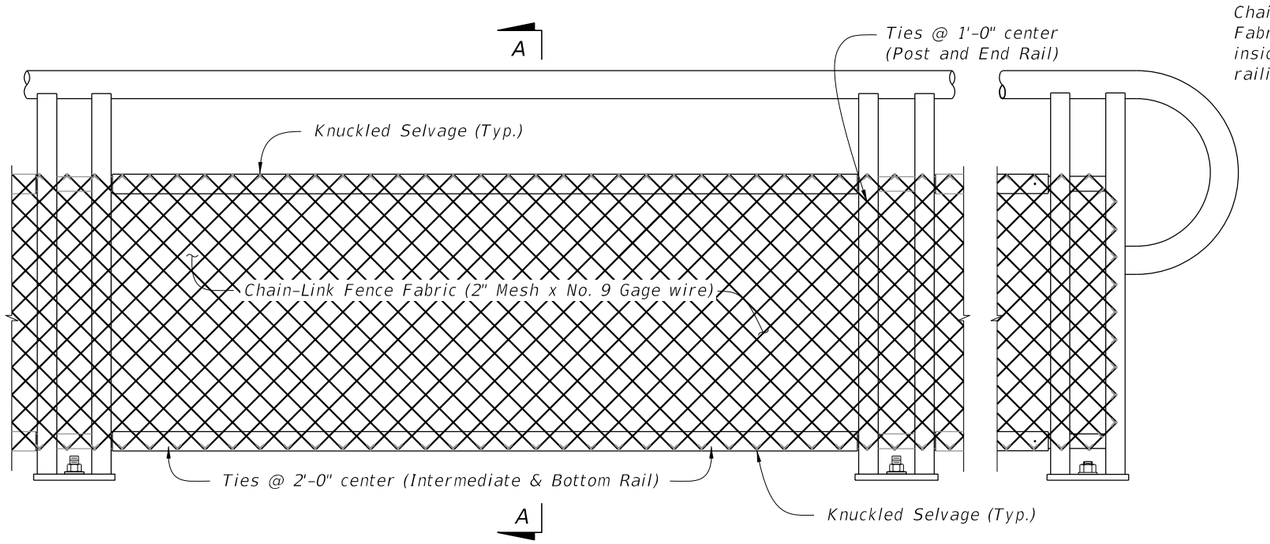

TYPE 2 - CHAIN-LINK (Continuous Infill Panel)

NOTE:
See Plans for Infill Panel option required.

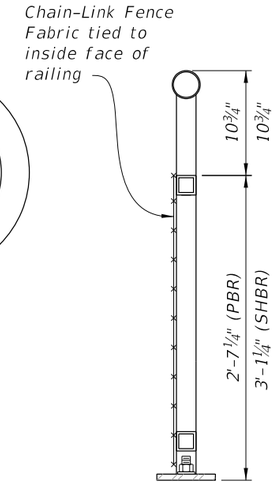

SECTION A-A

TABLE 2 - CHAIN-LINK PANEL COMPONENT MATERIALS		
COMPONENT	ASTM	COMPONENT INFORMATION
Chain-Link Fence Fabric (2" mesh with knuckled top and bottom selvage)	A392	Zinc-Coated Steel – No. 9 gage (coated wire diameter), Class 2 Coating
	A491	Aluminum-Coated Steel – No. 9 gage (coated wire diameter)
	F668	Polyvinyl Chloride (PVC) Coated Steel – No. 9 gage Zinc-Coated Wire (metallic-coated core wire diameter) ~ See Plans for specified color of PVC.
Tie Wires	F626	Zinc-Coated Steel Wire – No. 9 gage with coating to match Chain-Link Fence Fabric.
Tension Bars	F626	3⁄16" (min. thickness) x ¾" (min. width) x 2'-3' (min. height) Steel Bars
Miscellaneous Fence Components	F626	Zinc-Coated Steel

CHAIN-LINK PANEL NOTE:
Chain-Link Fence Fabric shall be continuous along limits of railing. Splicing of Chain-Link panels using Tension Bars at 20'-0" minimum increments is permitted.

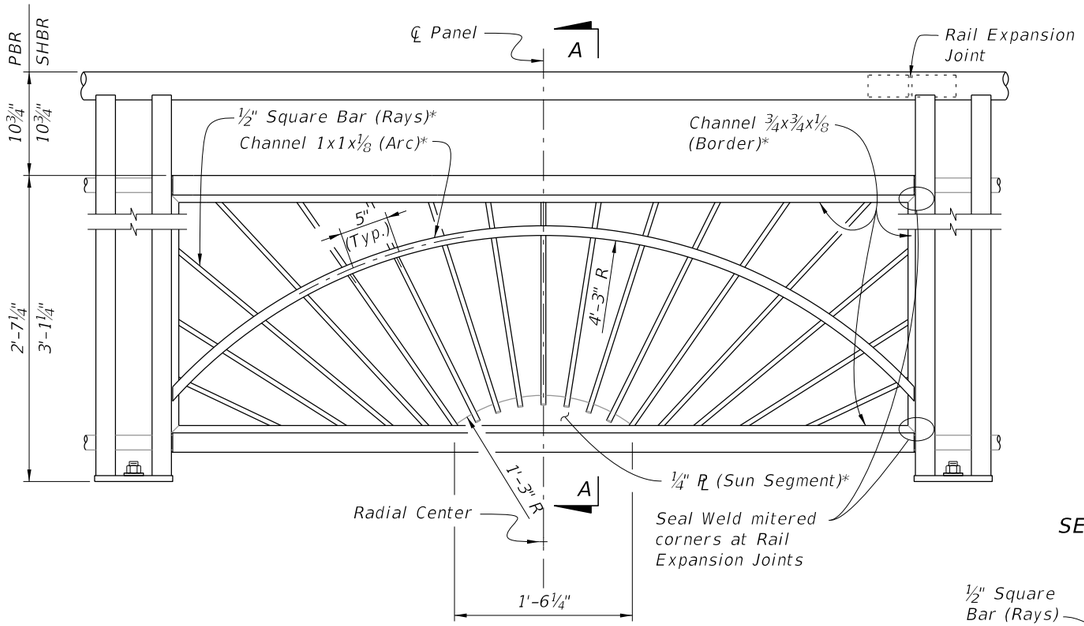

TYPE 3 - SUNSHINE INFILL PANEL

* Arc, Rays and Sun Segment may be formed in a single panel from ½" plate (ASTM B209 Alloy 6061-T6 or T651) pattern cut with laser or plasma CNC, welded to a 1x1x⅛ Angle Border or the ¾x¾x⅛ Channel Border shown.

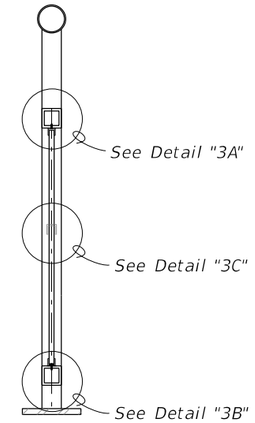

SECTION A-A

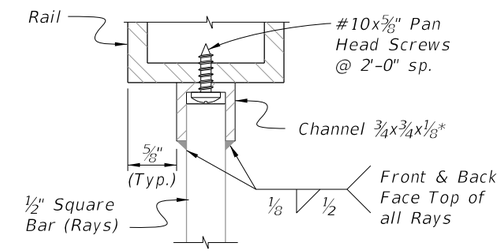

DETAIL "3A"
INTERMEDIATE RAIL/RAY CONNECTION

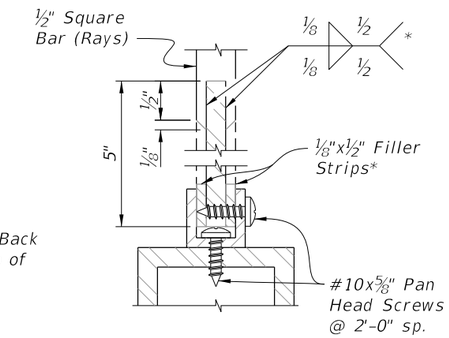

DETAIL "3B"
BOTTOM RAIL/RAY CONNECTION

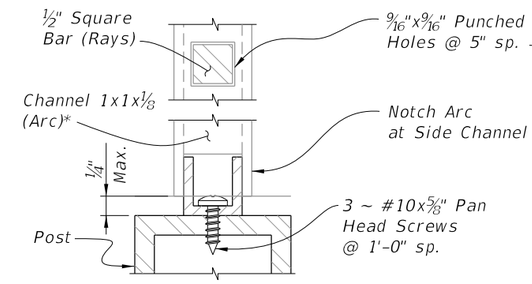

DETAIL "3D"
ARC/POST CONNECTION
(Continuous Top Rail)

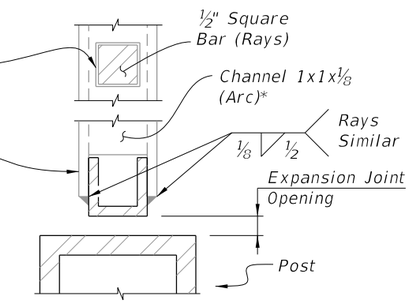

DETAIL "3E"
PANEL END CONNECTION
AT POST WITH EXPANSION JOINT

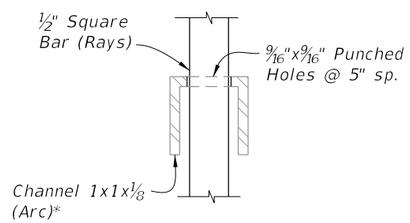

DETAIL "3C"
RAY/ARC CONNECTION

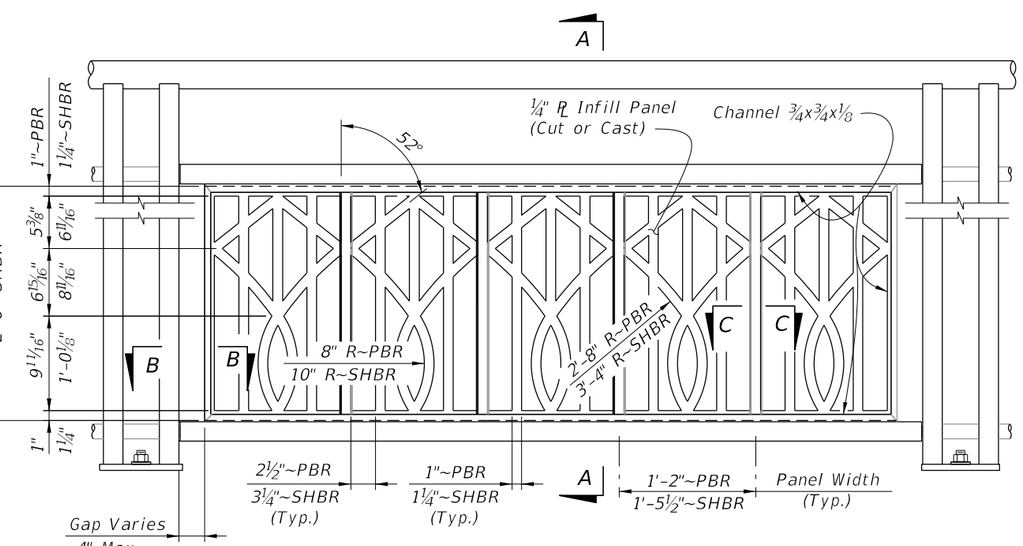

TYPE 4 - BROADWAY INFILL PANEL

NOTE:
See Plans for Infill Panel Option required.

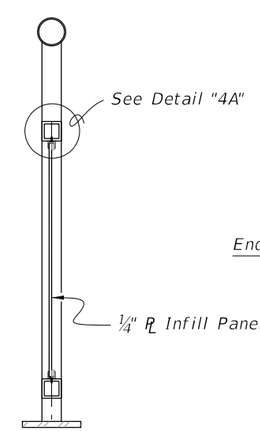

SECTION A-A

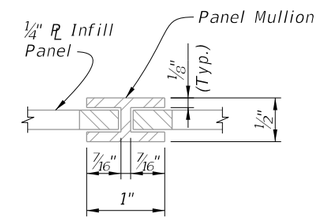

SECTION C-C
PANEL/SPLICE CONNECTION

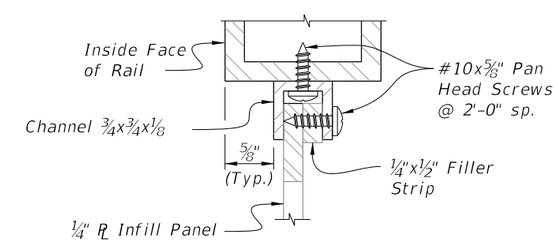

DETAIL "4A"
PANEL/RAIL CONNECTION
(Top Shown, Bottom Similar)

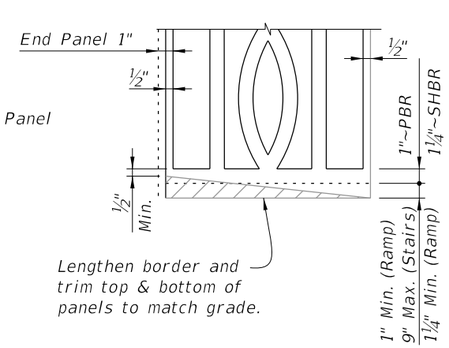

PANEL ADJUSTMENT FOR RAILINGS
ON GRADES

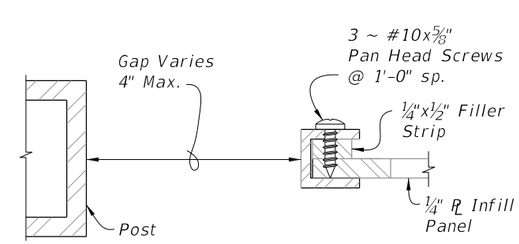

SECTION B-B
PANEL END CAP

LAST REVISION	REVISION	DESCRIPTION:			INDEX	SHEET
11/01/16			FY 2023-24 STANDARD PLANS	PEDESTRIAN/BICYCLE RAILING (ALUMINUM)	515-062	7 of 9

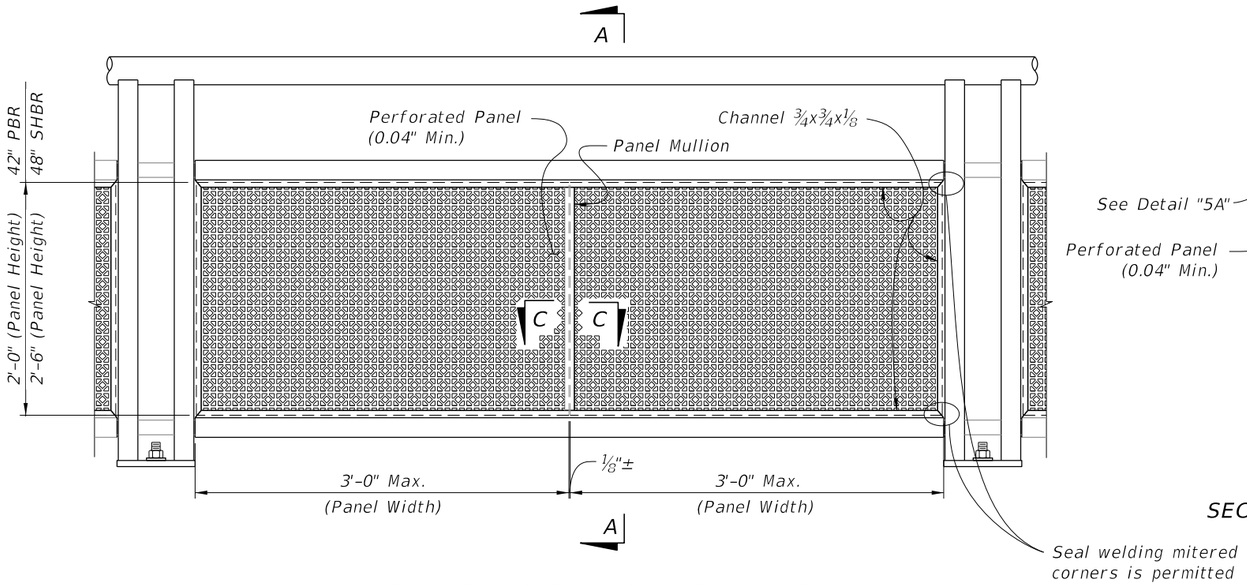

TYPE 5 - PERFORATED INFILL PANEL

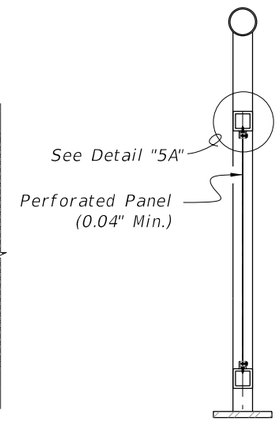

SECTION A-A

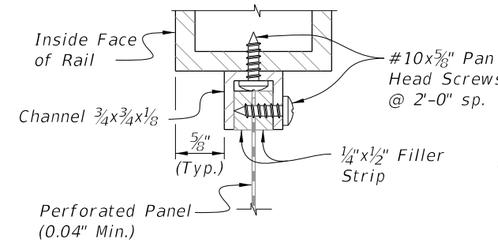

DETAIL "5A"
PANEL/RAIL CONNECTION
(Top Shown, Bottom Similar)

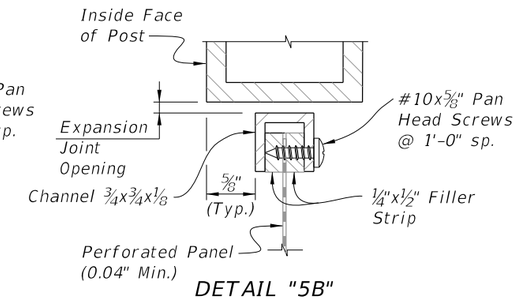

DETAIL "5B"
PANEL END CONNECTION
(Expansion Joint Shown, Sides Similar)

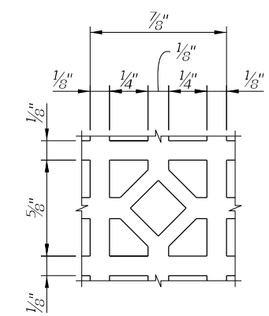

REPEATING PATTERN DETAIL
FOR PERFORATED PANEL

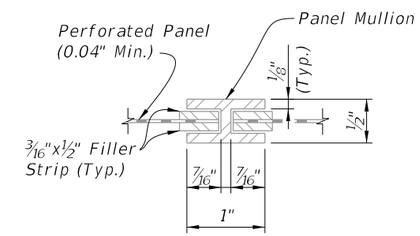

SECTION C-C
PANEL/SPLICE CONNECTION

10/20/2022 8:50:27 AM

LAST REVISION	REVISION	DESCRIPTION:			INDEX	SHEET
11/01/16			FY 2023-24 STANDARD PLANS	PEDESTRIAN/BICYCLE RAILING (ALUMINUM)	515-062	8 of 9

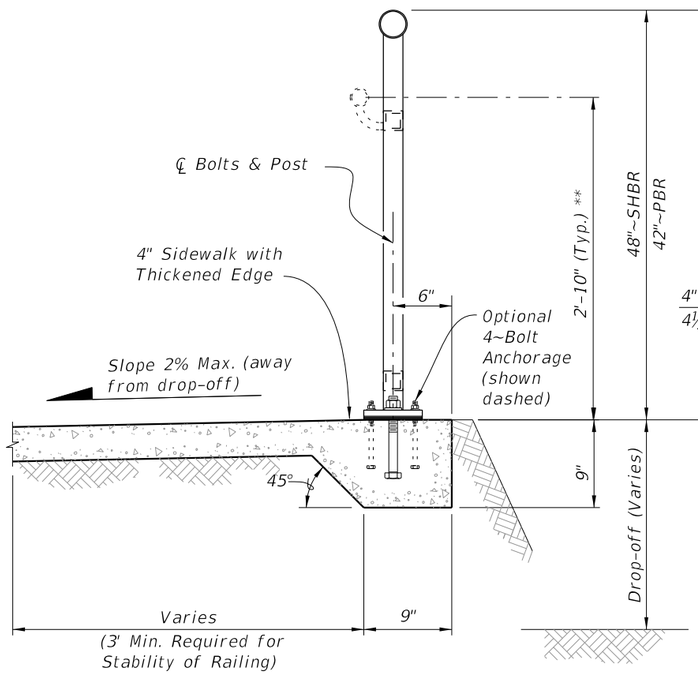

TYPICAL SECTION ON CONCRETE SIDEWALK
(Case I)

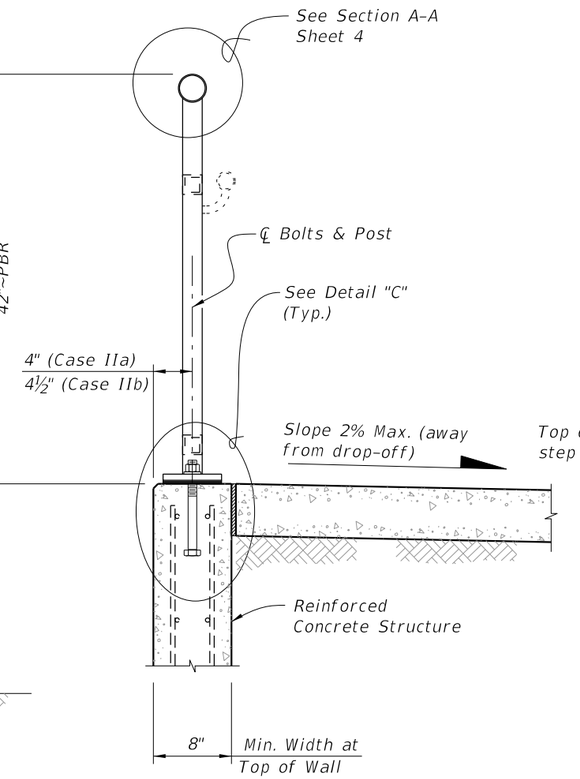

TYPICAL SECTION ON RETAINING WALL
(Case II)

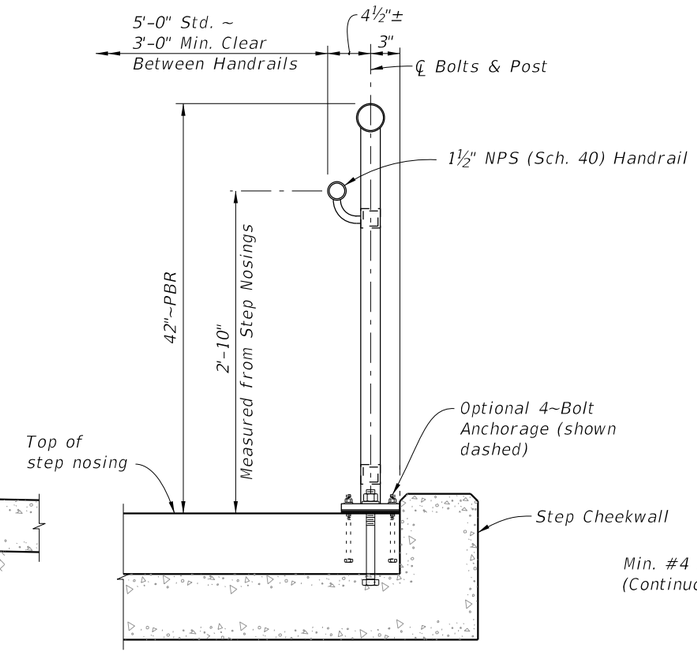

TYPICAL SECTION ON STEPS & STAIRS
(Case III)

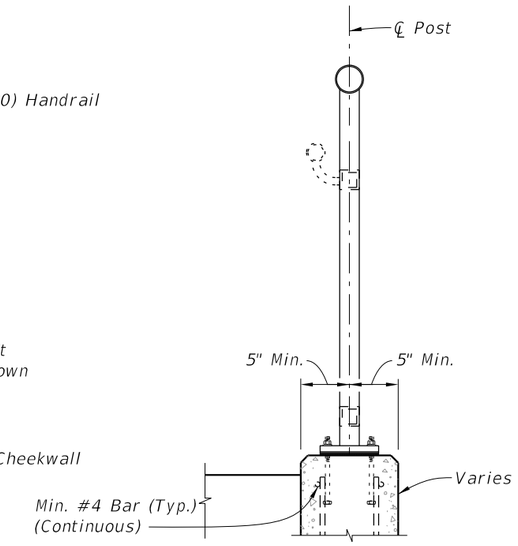

TYPICAL SECTION FOR 4~BOLT ANCHORAGE
(Case IV)

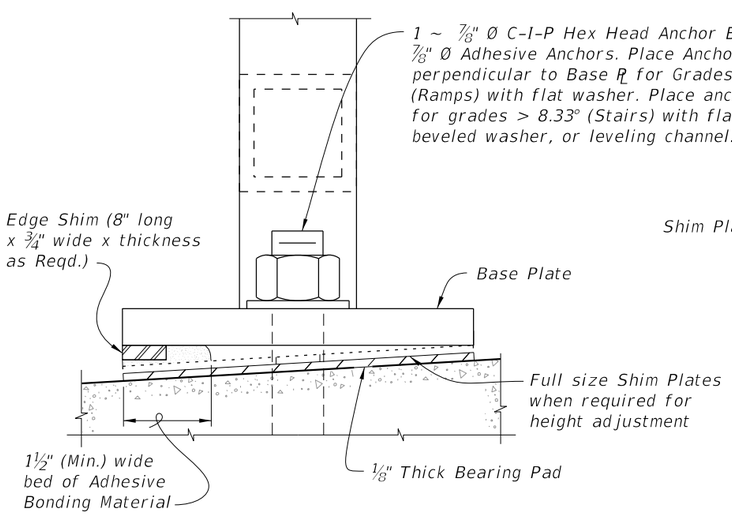

DETAIL "D" (OPTIONAL SHIMMING DETAIL
FOR CROSS SLOPE CORRECTION)
(Used in lieu of Beveled Shim Plates)

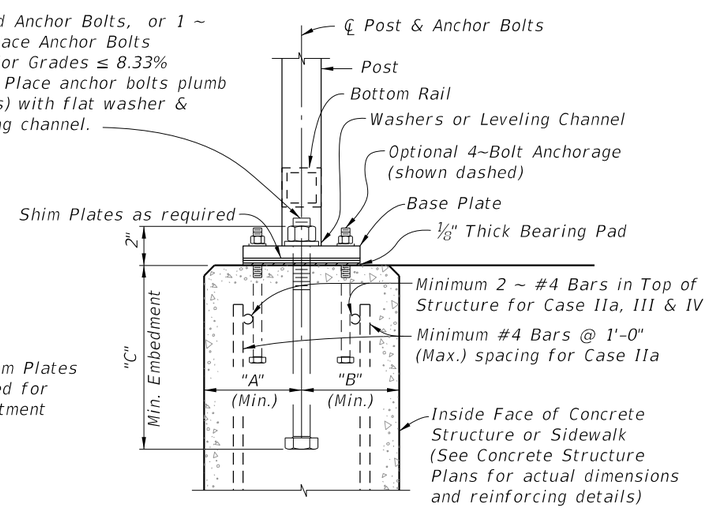

DETAIL "C"
(Cast-In-Place Anchor Bolts shown,
Adhesive Anchors similar)

ANCHOR BOLT TABLE							
CASE	STRUCTURE TYPE	DIMENSIONS			ANCHOR LENGTH		ANCHOR SIZE
		"A" Edge Dist.	"B" Edge Dist.	"C" Embedment	C.I.P Hex Head Bolt	Adhesive Anchor	
I	Unreinforced Concrete	6"	1'-2"	6"	7½"	8"	⅞" Ø
IIa	Reinforced Concrete	4"	4"	9"	10½"	11"	⅞" Ø
IIb	Gravity Wall Index 400-011	4½"	3½" @ top	9"	10½"	11"	⅞" Ø
III	Step Cheekwall	4½"	4½"	9"	10½"	11"	⅞" Ø
IV	Varies	5"	5"	5"	6½"	7"	7/16" Ø

** When required; measured from top of sidewalk (Typ.)

NOTES:

1. Shop Drawings are required.

2. Work with Specification 515.

3. Materials:

   A. Pan Head Set Screws: Aluminum Alloy 2024-74 or 7075-T73 or Stainless Steel (SS) Type 316 or 18-8 Alloy.

   B. Base Plates and Cap Plates: ASTM B209, Alloy 6061-T6

   C. Structural Pipe Tube and Bars: ASTM B221 or ASTM B429, Alloy 6061-T6

   D. End Rails 90° bends and corner bends with a maximum 4 foot spacing: Alloy 6063-T5 is permitted.

RAILING MEMBER DIMENSIONS TABLE			
MEMBER	DESIGNATION	OUTSIDE DIMENSION	WALL THICKNESS
Posts	2" NPS (Sch. 40)	2.375"	0.154"
Rails	2" NPS (Sch. 40)	2.375"	0.154"
Rail Joint/Splice Sleeves	1½" NPS (Sch. 40)	1.900"	0.145"
Handrails Joint/Splice Sleeves	1" NPS (Sch. 40) 1.50 ODx0.125 Wall	1.315" 1.500"	0.133" 0.125"
Handrails	1½" NPS (Sch. 40)	1.900"	0.145"
Handrail Support Bar	1" Ø Round Bar	1.000"	N/A

   E. Galvanized Steel Fasteners:
      a. Hex Head Bolts: ASTM A 307 Type 1 or ASTM F1554 Grade 36
      b. Adhesive Anchors: ASTM F1554 Grade 36 fully threaded rods
      c. Hex Nuts: ASTM A563
      d. Flat Washers: ASTM F436

   F. Aluminum Shims: ASTM B209, Alloy 6061

   G. Bearing Pads: Plain, Fabric Reinforced, or Fabric Laminated meeting requirements of Specifications 515 & 932.

4. Fabrication:

   A. Place expansion joints at a maximum of 30'-0"spacing
   B. Field splices are similar to the expansion joint detail and may be approved by the Engineer to facilitate handling; but top rail must be continuous across a minimum of two posts.
   C. Continuity field splice (Detail "E"); only use to make the railing continuous for unforeseen field adjustments
   D. Corners and changes in tangential longitudinal alignment may be made continuous with a 9" bend radius or terminated at adjoining sections with a standard end hoop when handrails are not required.
   E. For curved longitudinal alignments, shop bend top and bottom rails and handrails to match the alignment radius.
   F. For changes in tangential longitudinal alignment greater than 45°, position posts a maximum of 2'-0" each side of the corner, not at the corner apex.

5. Handrails are required and must be continuous at landings for:

   A. Grades Steeper than 5%
   B. Three or more steps

6. Cutting of reinforcing steel is permitted for post installed anchor bolts.

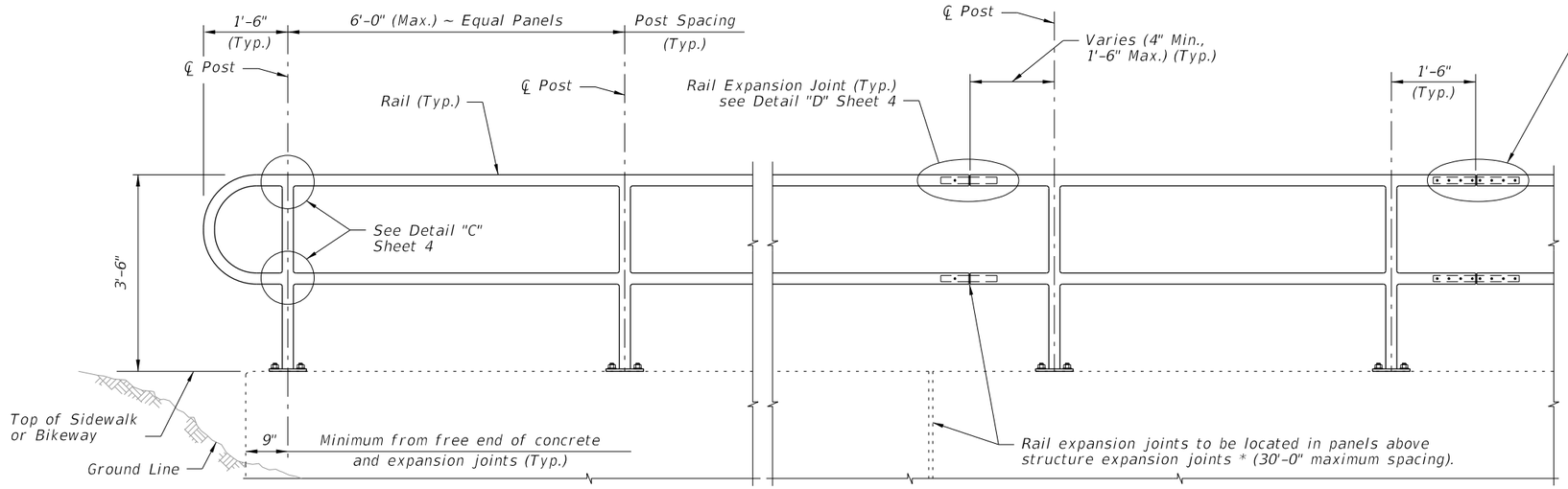

ELEVATION

NOTES:
NPS = Nominal Pipe Size

STRUCTURES EXPANSION JOINTS NOTE:
* Keyed construction joints in Index 400-011 Gravity Wall are not considered to be expansion joints.

CROSS REFERENCE:
For Details "C", "D" and "E", see Sheet 4.

TYPICAL RAILING DETAILS & RAILINGS ON GRADES 0% TO 5%

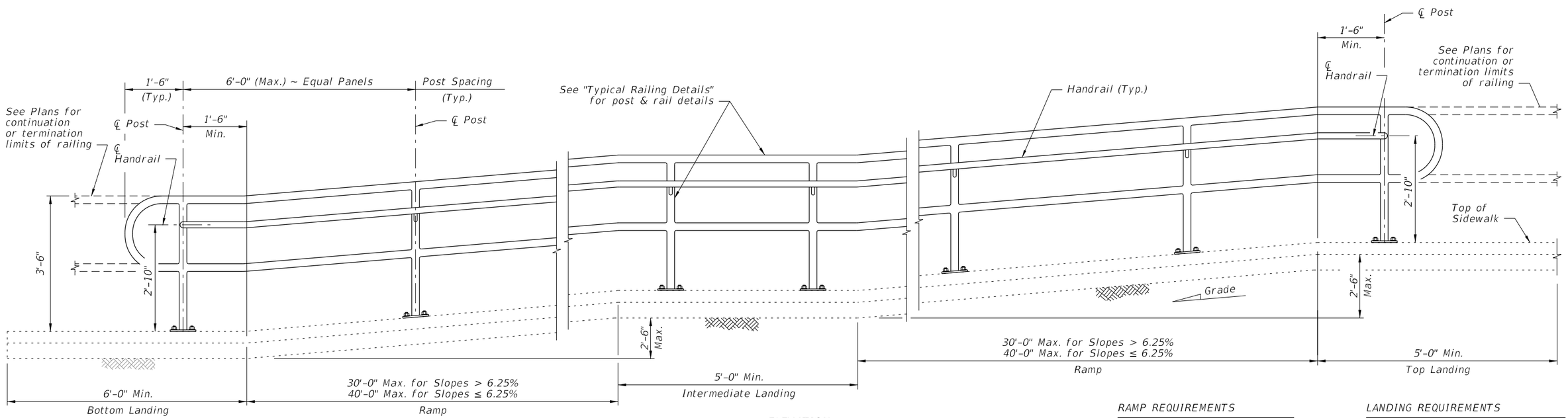

ELEVATION
(Showing Inside Face of Railing)

RAMP REQUIREMENTS

For slopes greater than 5%:
Max. ramp slope = 8.33%
Max. ramp cross-slope = 2.0%

LANDING REQUIREMENTS

Max. landing slope = 2%
Max. landing cross-slope = 2%

RAILINGS ON GRADES STEEPER THAN 5% TO 8.33%

10/20/2022 8:50:30 AM

LAST REVISION	REVISION	DESCRIPTION:			INDEX	SHEET
11/01/17			FY 2023-24 STANDARD PLANS	PIPE GUIDERAIL (ALUMINUM)	515-070	2 of 5

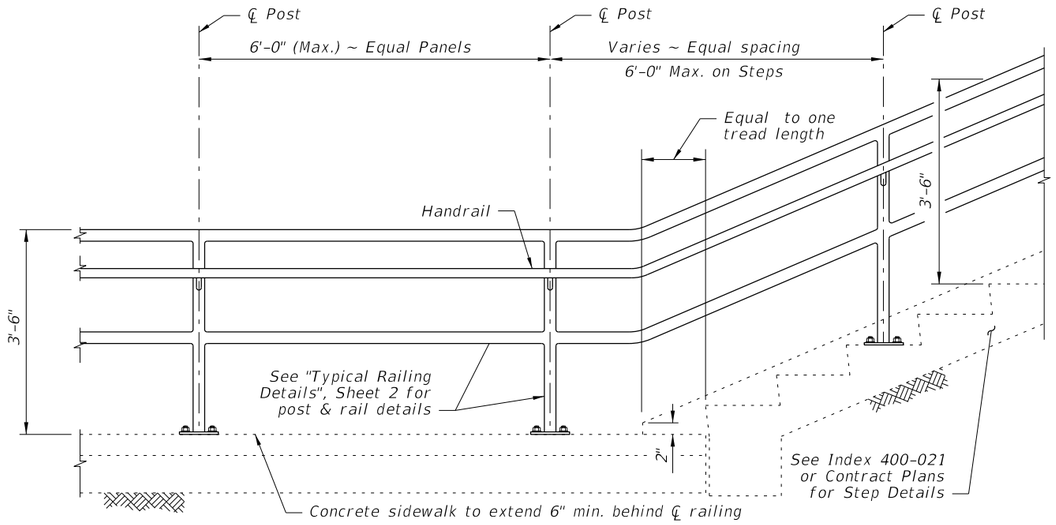

RAILING CONTINUATION BEYOND STEPS
(Bottom shown, Top similar)

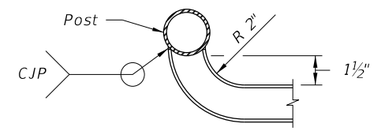

DETAIL "A" - PLAN VIEW
HANDRAIL TERMINATION

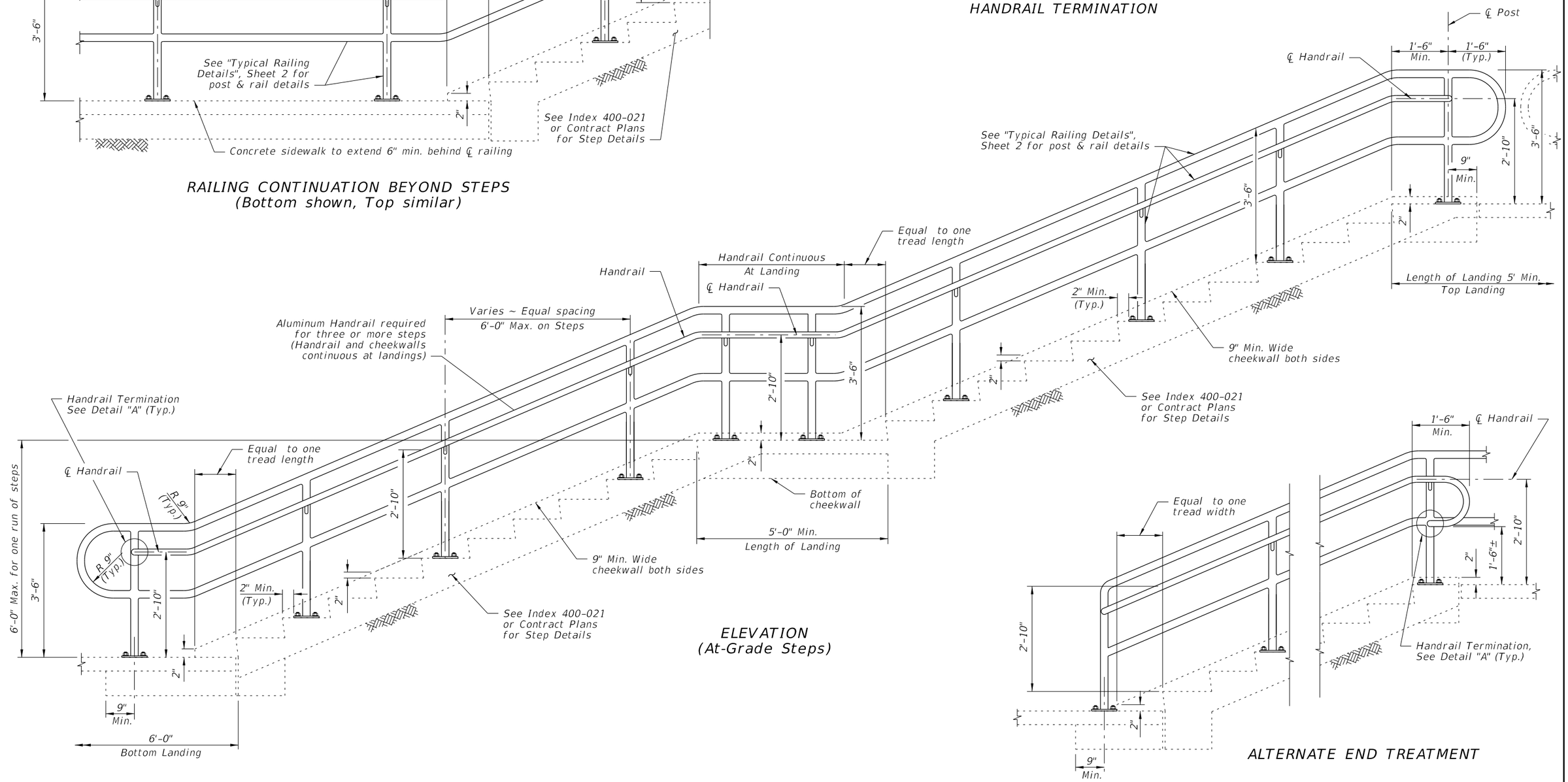

ELEVATION
(At-Grade Steps)

ALTERNATE END TREATMENT

GUIDERAIL ON STEPS & STAIRS

LAST REVISION	REVISION	DESCRIPTION:			INDEX	SHEET
11/01/17			FY 2023-24 STANDARD PLANS	PIPE GUIDERAIL (ALUMINUM)	515-070	3 of 5

10/20/2022 8:50:31 AM

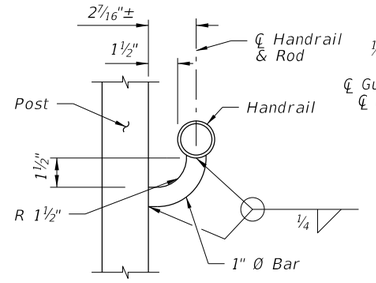

SECTION B-B
(Handrail Connection)

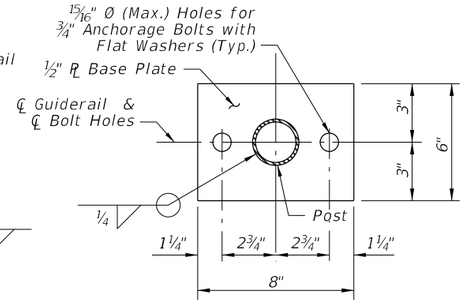

SECTION C-C
BASE PLATE DETAIL
(2~Bolt Anchorage)

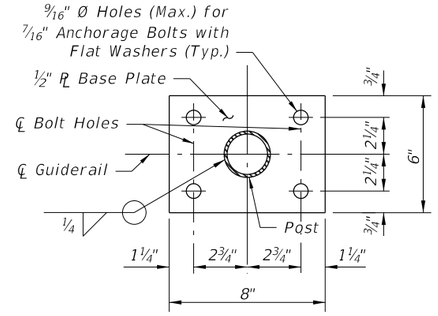

SECTION C-C
BASE PLATE DETAIL
(4~Bolt Anchorage)

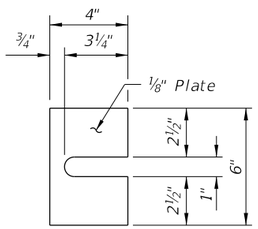

SHIM PLATE DETAIL
(2~Bolt Anchorage)

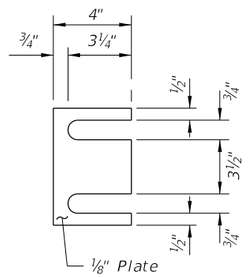

SHIM PLATE DETAIL
(4~Bolt Anchorage)

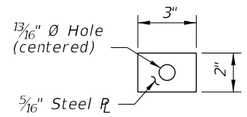

PLATE WASHER
DETAIL

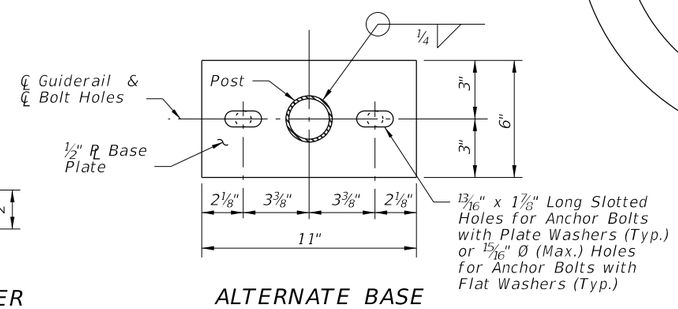

ALTERNATE BASE
PLATE DETAIL
(Recommended for Steep Slopes)

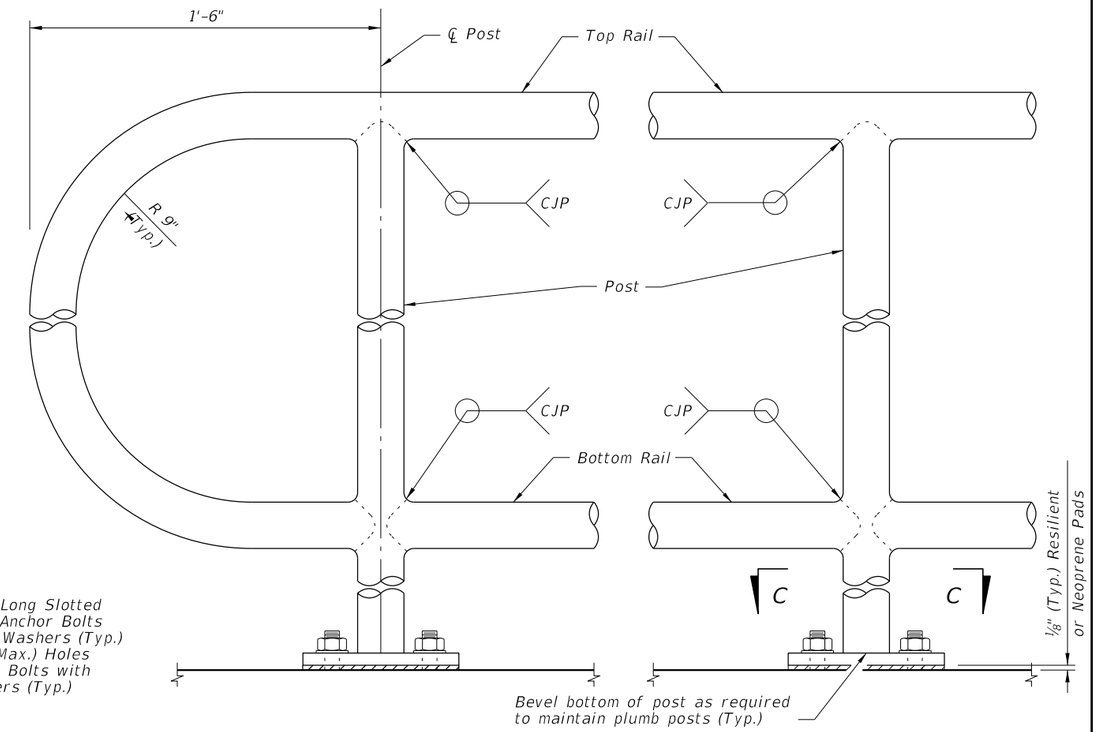

DETAIL "C" - RAIL CONNECTIONS
(Handrail and 4~Bolt Anchorage Not Shown)

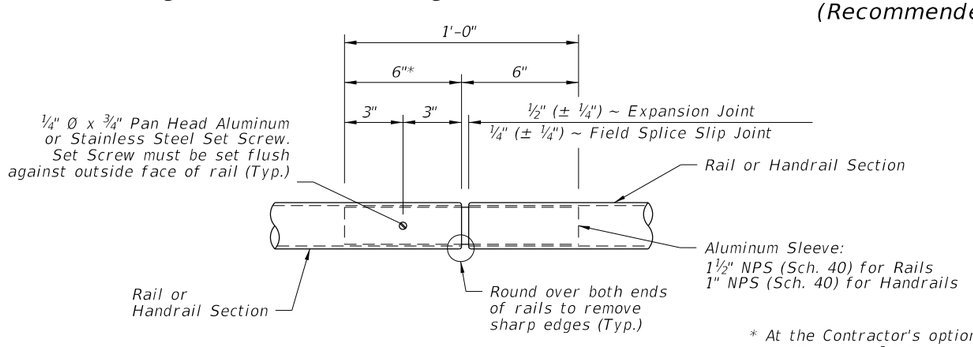

DETAIL "D" - EXPANSION JOINT
(FIELD SPLICE SLIP JOINT SIMILAR)

* At the Contractor's option, embedded length may be 4" when a 3/4" Ø plug weld is substituted for the 1/4" Ø set screw.

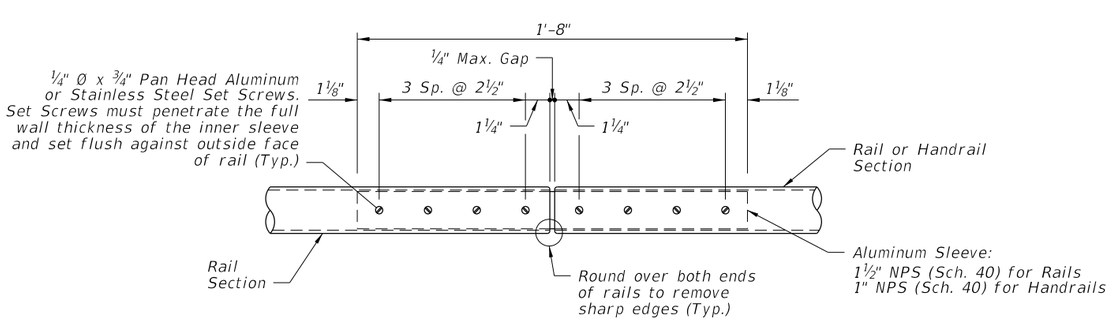

DETAIL "E" - CONTINUITY
FIELD SPLICE

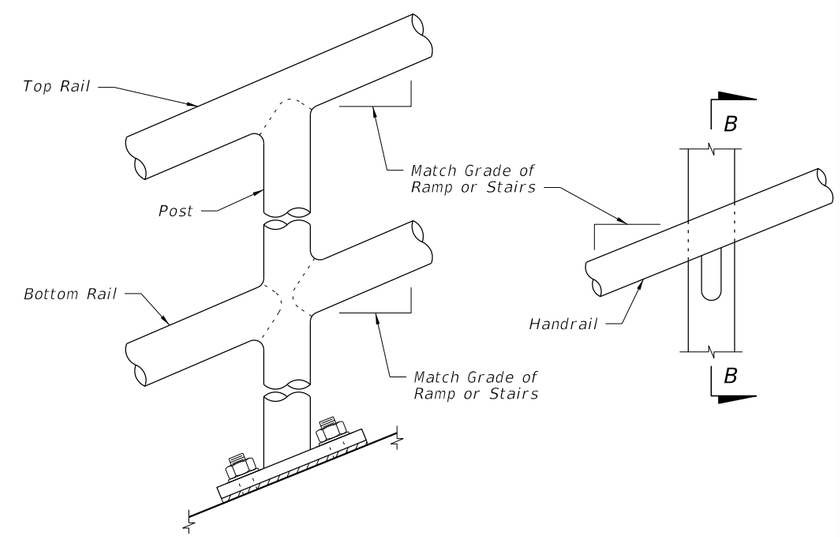

DETAIL "B" - RAIL AND HANDRAIL
(Showing Sloped Condition for Ramps with 2~Bolt Anchorage)

CROSS REFERENCE:
For locations of Details "C", "D" and "E", see Sheet 2.

10/20/2022 8:50:31 AM

LAST REVISION	REVISION	DESCRIPTION:			INDEX	SHEET
11/01/17			FY 2023-24 STANDARD PLANS	PIPE GUIDERAIL (ALUMINUM)	515-070	4 of 5

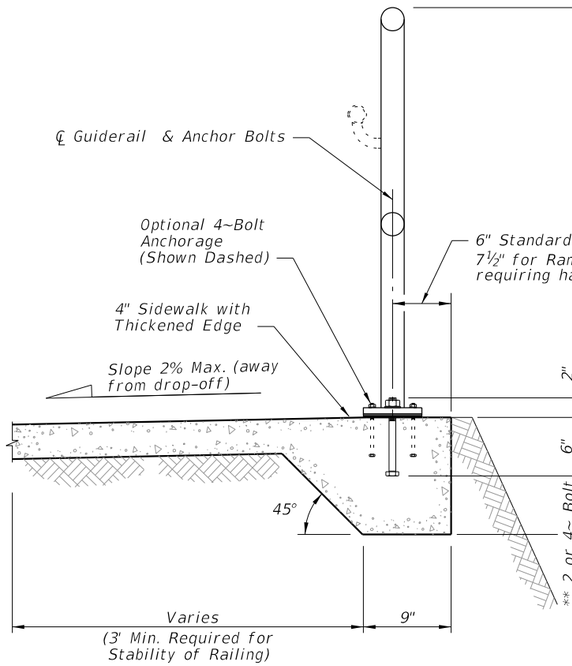

TYPICAL SECTION ON CONCRETE SIDEWALK

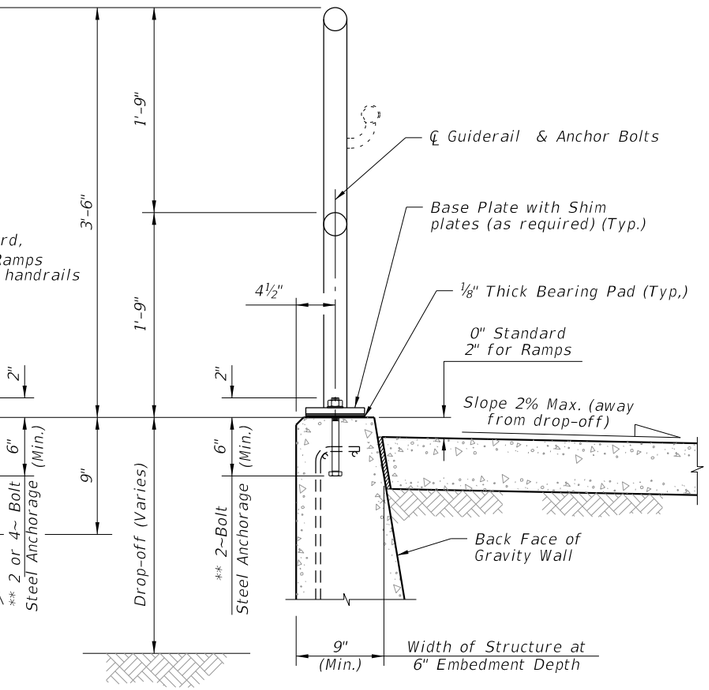

TYPICAL SECTION ON GRAVITY WALL
(Other Retaining Walls Similar)

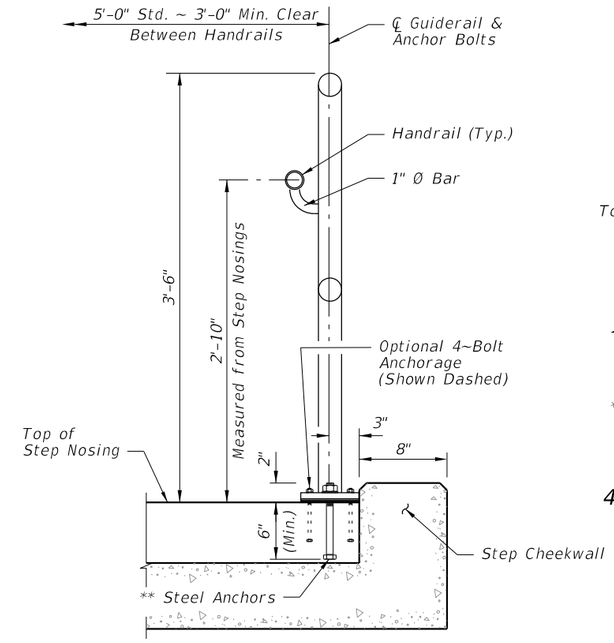

TYPICAL SECTION ON
STEPS & STAIRS

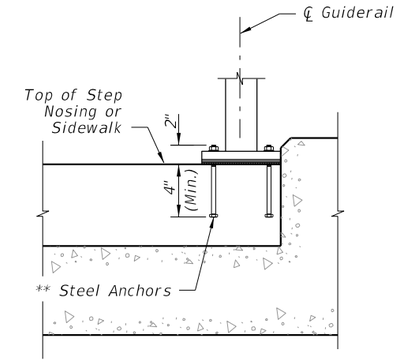

4~BOLT ANCHORAGE DETAIL

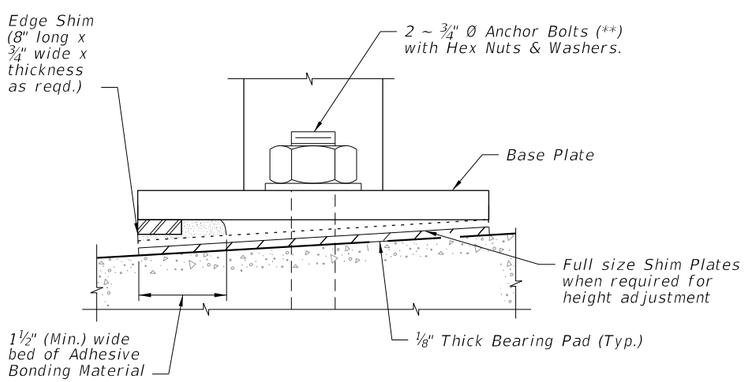

DETAIL "F" (OPTIONAL SHIMMING DETAIL
FOR CROSS SLOPE CORRECTION)
(Used in lieu of Beveled Shim Plates)

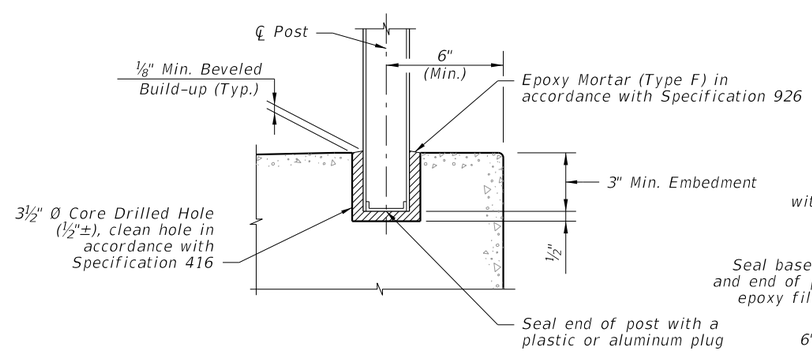

SIDEWALK ANCHORAGE DETAIL
OPTION 1

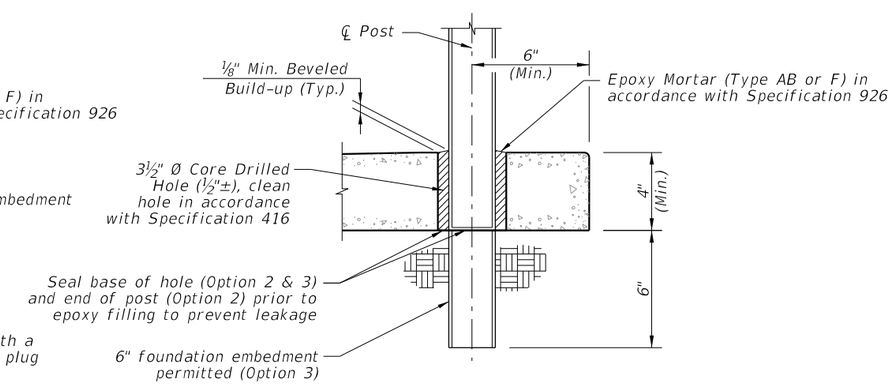

SIDEWALK ANCHORAGE DETAIL
OPTION 2 & 3

NOTES:
** 2 ~ ¾" Ø x 8" or 4 ~ 7/16" Ø x 6" Steel Anchors: Galvanized Steel Bolts (As Shown) (C-I-P); Galvanized U-Bolts Permitted (C-I-P); Galvanized Adhesive Anchors Permitted

*** The minimum embedment for Adhesive Anchors is 6" for 2~Bolt Anchorage or 4" for 4~Bolt Anchorage.

10/20/2022 8:50:32 AM

LAST REVISION	REVISION	DESCRIPTION:			INDEX	SHEET
11/01/20			FY 2023-24 STANDARD PLANS	PIPE GUIDERAIL (ALUMINUM)	515-070	5 of 5

NOTES:

1. Shop Drawings are required, refer to Specification 515.

2. Materials:

A. Pan Head Set Screws: Stainless Steel (SS) Type 316 or 18-8 Alloy.
B. Base Plates and Cap Plates: ASTM A36 or ASTM A709 Grade 36
C. Pipe Rails and Posts: ASTM A53 Grade B for standard weight pipe and ASTM A500 Grade B, C or D or ASTM A501 for Structural Tube.

Handrail Support Bars: ASTM A36

RAILING MEMBER DIMENSIONS TABLE			
MEMBER	DESIGNATION	OUTSIDE DIMENSION	WALL THICKNESS
Posts	2" NPS (Sch. 40)	2.375"	0.154"
Rails	2" NPS (Sch. 40)	2.375"	0.154"
Rail Joint/Splice Sleeves	1½" NPS (Sch. 40)	1.900"	0.145"
Handrails Joint/Splice Sleeves	1" NPS (Sch. 40) HSS1.500x0.125	1.315" 1.500"	0.133" 0.125"
Handrails	1½" NPS (Sch. 40)	1.900"	0.145"
Handrail Support Bar	1" Ø Round Bar	1.000"	N/A

D. Galvanized Steel Fasteners:
a. Hex Head Bolts: ASTM A307 Type 1 or ASTM F1554 Grade 36
b. Adhesive Anchors: ASTM F1554 Grade 36 fully threaded rods
c. Hex Nuts: ASTM A563
d. Flat Washers: ASTM F436
E. Aluminum Shims: ASTM B209, Alloy 6061
F. Bearing Pads: Plain, Fabric Reinforced, or Fabric Laminated meeting requirements of Specifications 515 and 932.

3. Fabrication:

A. Place expansion joints at a maximum of 30'-0"spacing.
B. Field splices are similar to the expansion joint detail and may be approved by the Engineer to facilitate handling; but top rail must be continuous across a minimum of two posts.
C. Continuity field splice (Detail "E") only use to make the railing continuous for unforeseen field adjustments
D. Corners and changes in tangential longitudinal alignment may be made continuous with a 9"bend radius or terminated at adjoining sections with a standard end hoop when handrails are not required.
E. For curved longitudinal alignments, shop bend the top and bottom rails and handrails to match the alignment radius.
F. For changes in tangential longitudinal alignment greater than 45°, positioned posts a maximum of 2'-0" each side of the corner, not at the corner apex.

4. Handrails are required and must be continuous at landings for:

A. Grades Steeper than 5%,
B. Three or more steps

5. Cutting of reinforcing steel is permitted for adhesive anchor bolt installations.

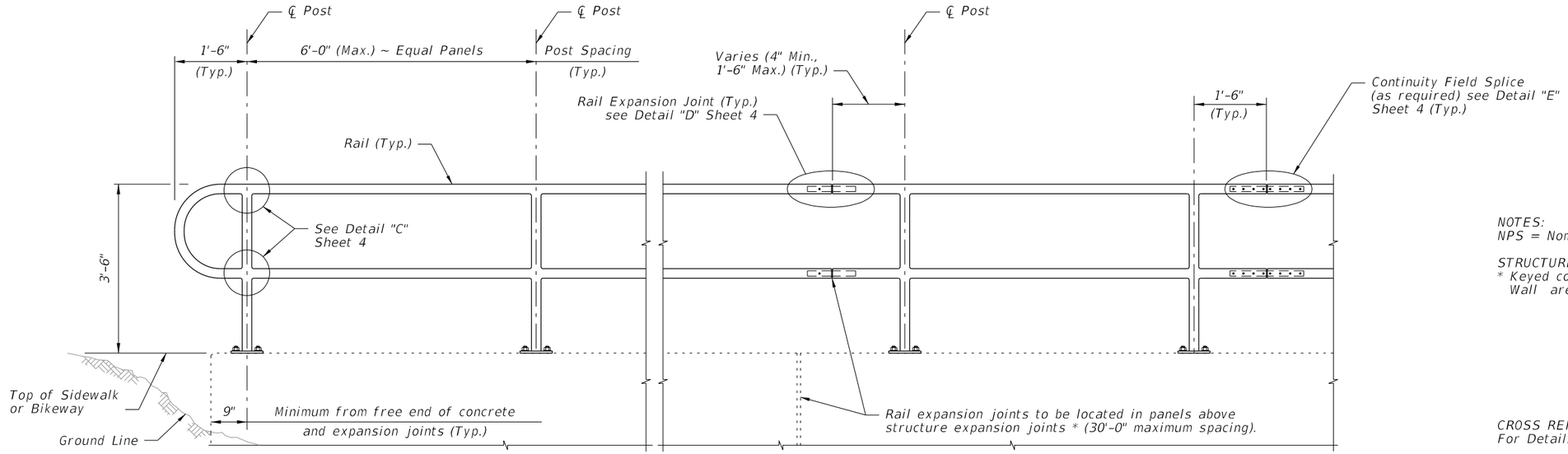

ELEVATION

NOTES:
NPS = Nominal Pipe Size

STRUCTURES EXPANSION JOINTS NOTE:
* Keyed construction joints in Index 400-011 Gravity Wall are not considered to be expansion joints.

CROSS REFERENCE:
For Details "C", "D" and "E", see Sheet 4.

TYPICAL RAILING DETAILS & RAILINGS ON GRADES 0% TO 5%

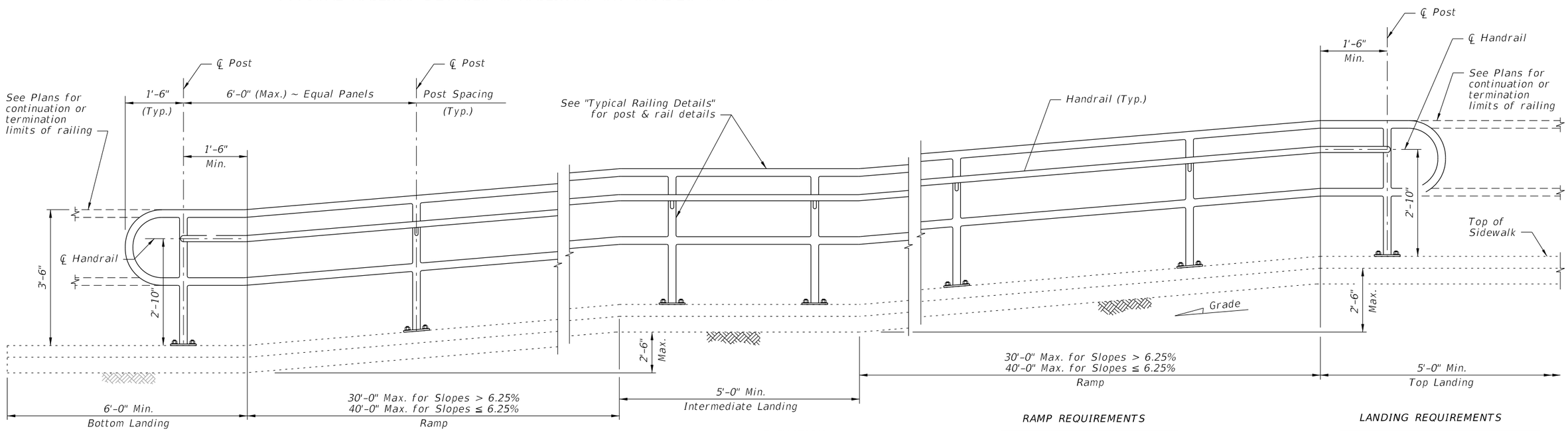

ELEVATION
(Showing Inside Face of Railing)

RAMP REQUIREMENTS

For slopes greater than 5%:
Max. ramp slope = 8.33%
Max. ramp cross-slope = 2.0%

LANDING REQUIREMENTS

Max. landing slope = 2%
Max. landing cross-slope = 2%

RAILINGS ON GRADES STEEPER THAN 5% TO 8.33%

10/20/2022 8:50:34 AM

LAST REVISION	REVISION	DESCRIPTION:			INDEX	SHEET
11/01/17			FY 2023-24 STANDARD PLANS	PIPE GUIDERAIL (STEEL)	515-080	2 of 5

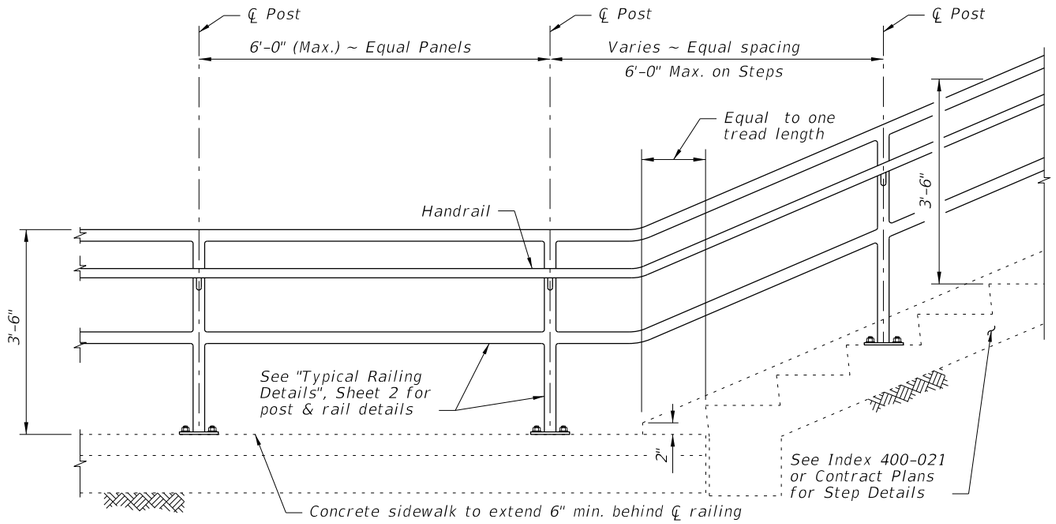

RAILING CONTINUATION BEYOND STEPS
(Bottom shown, Top similar)

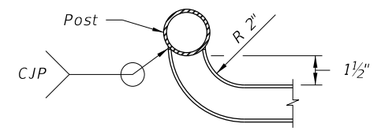

DETAIL "A" - PLAN VIEW
HANDRAIL TERMINATION

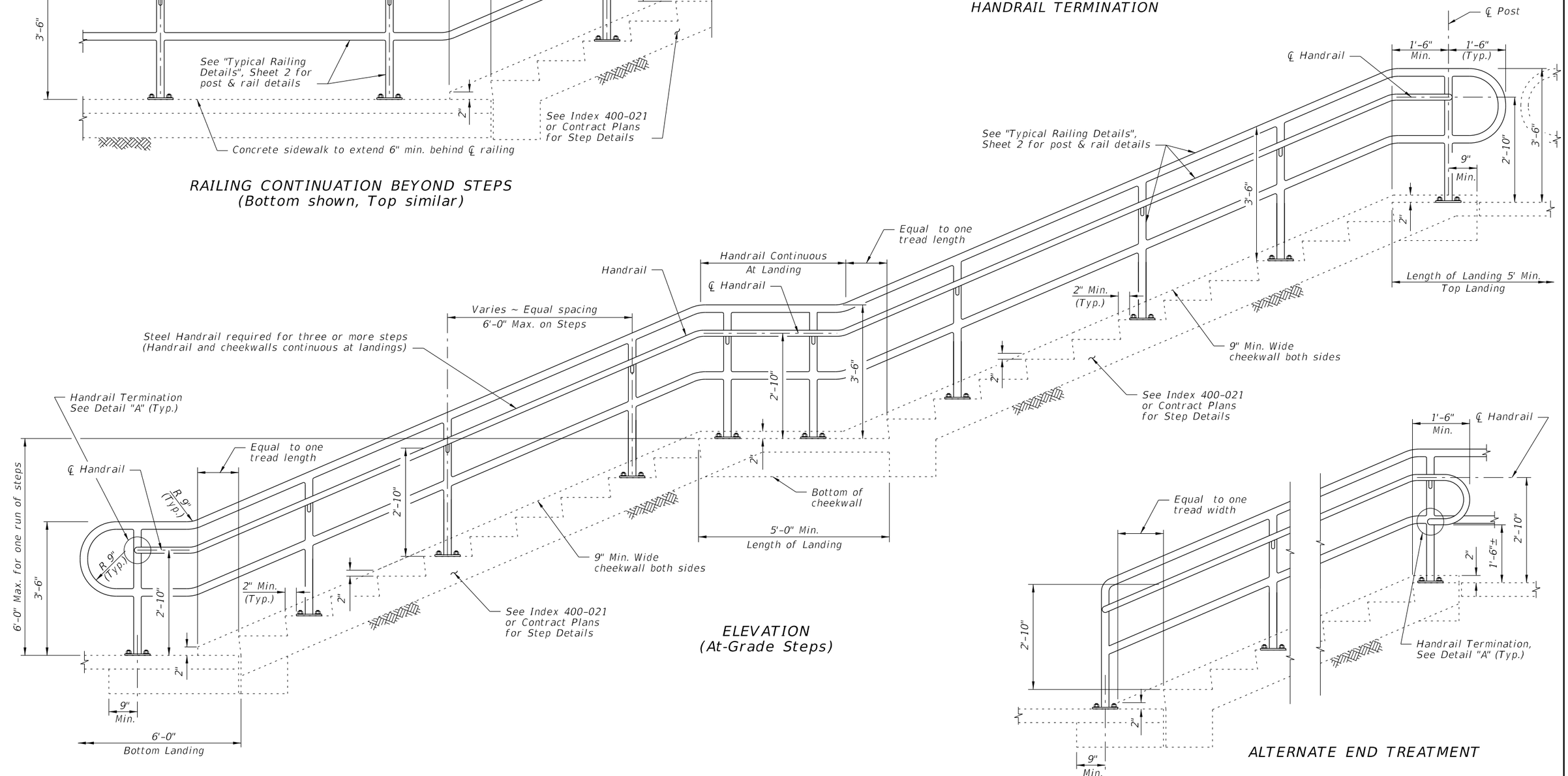

ELEVATION
(At-Grade Steps)

ALTERNATE END TREATMENT

GUIDERAIL ON STEPS & STAIRS

10/20/2022 8:50:34 AM

LAST REVISION	REVISION	DESCRIPTION:			INDEX	SHEET
11/01/17			FY 2023-24 STANDARD PLANS	PIPE GUIDERAIL (STEEL)	515-080	3 of 5

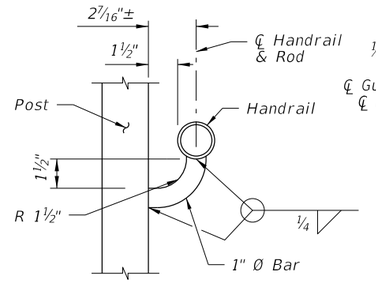

SECTION B-B
(Handrail Connection)

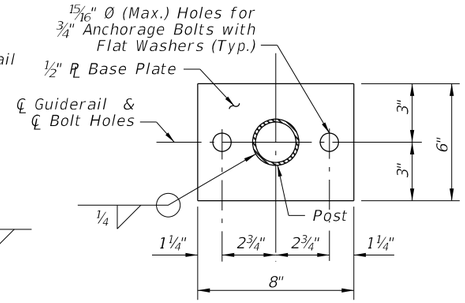

SECTION C-C
BASE PLATE DETAIL
(2~Bolt Anchorage)

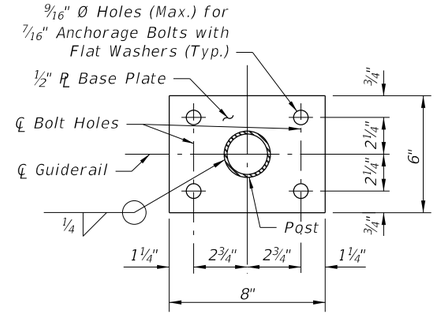

SECTION C-C
BASE PLATE DETAIL
(4~Bolt Anchorage)

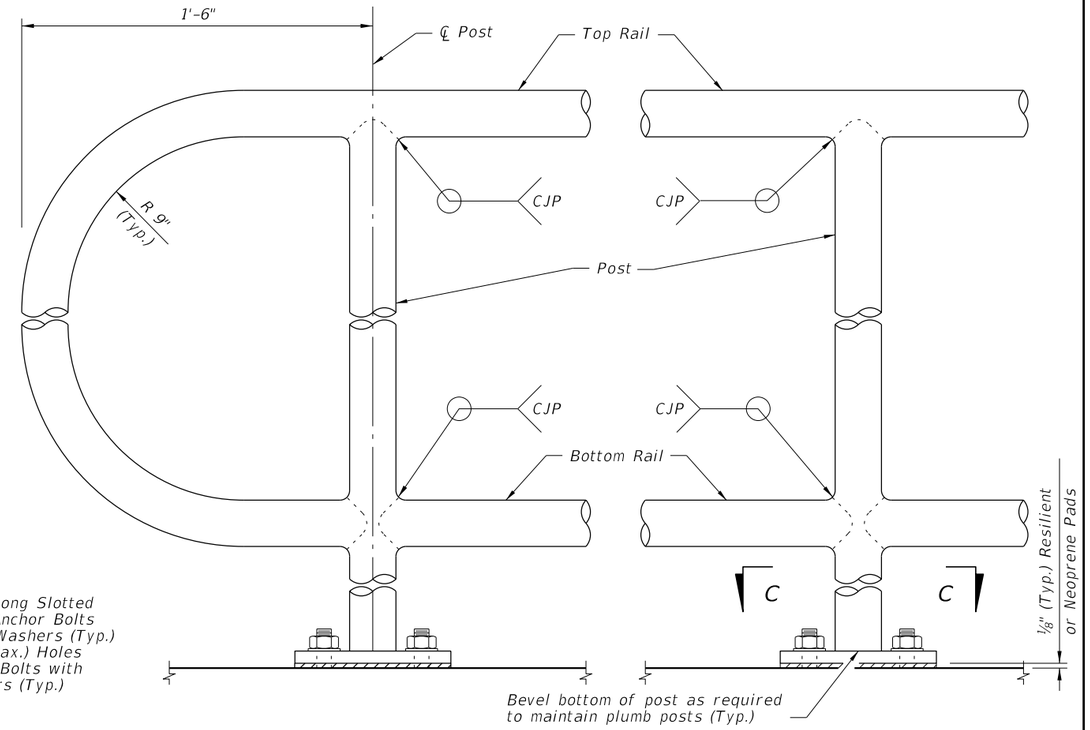

DETAIL "C" - RAIL CONNECTIONS
(Handrail and 4~Bolt Anchorage Not Shown)

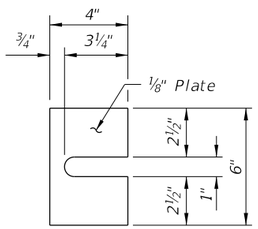

SHIM PLATE DETAIL
(2~Bolt Anchorage)

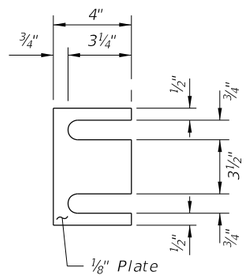

SHIM PLATE DETAIL
(4~Bolt Anchorage)

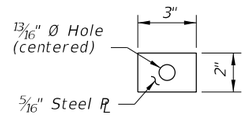

PLATE WASHER
DETAIL

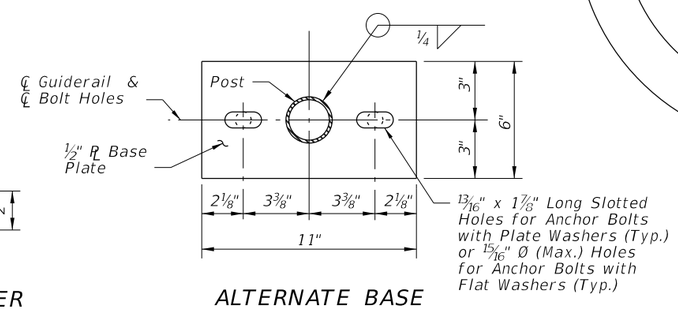

ALTERNATE BASE
PLATE DETAIL
(Recommended for Steep Slopes)

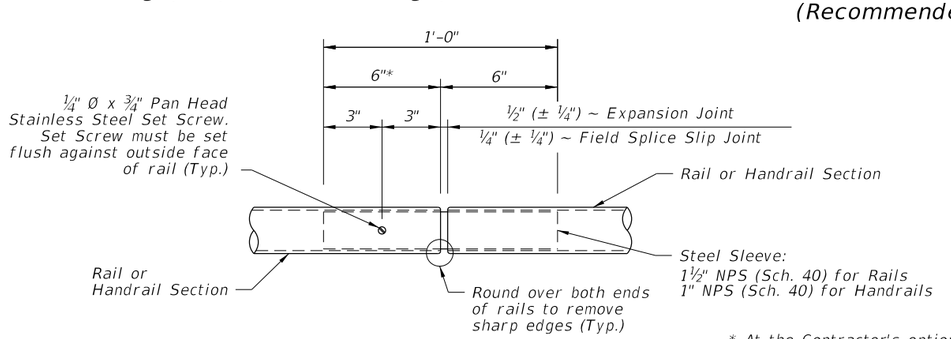

* At the Contractor's option, embedded length may be 4" when a 3/4" Ø plug weld is substituted for the 1/4" Ø set screw.

DETAIL "D" - EXPANSION JOINT
(FIELD SPLICE SLIP JOINT SIMILAR)

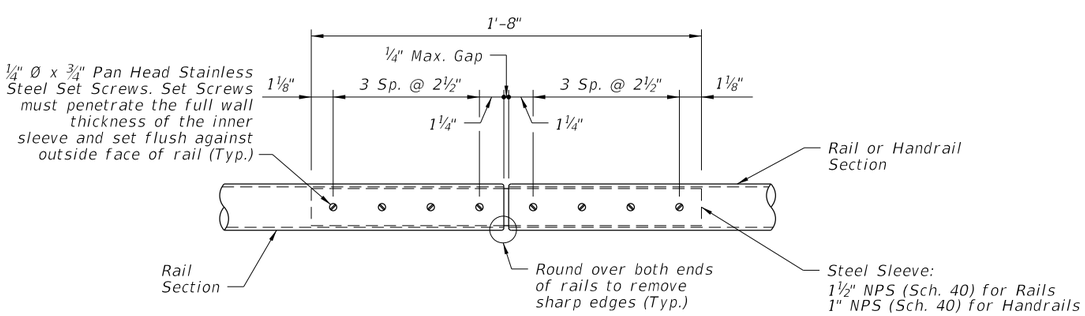

DETAIL "E" - CONTINUITY
FIELD SPLICE

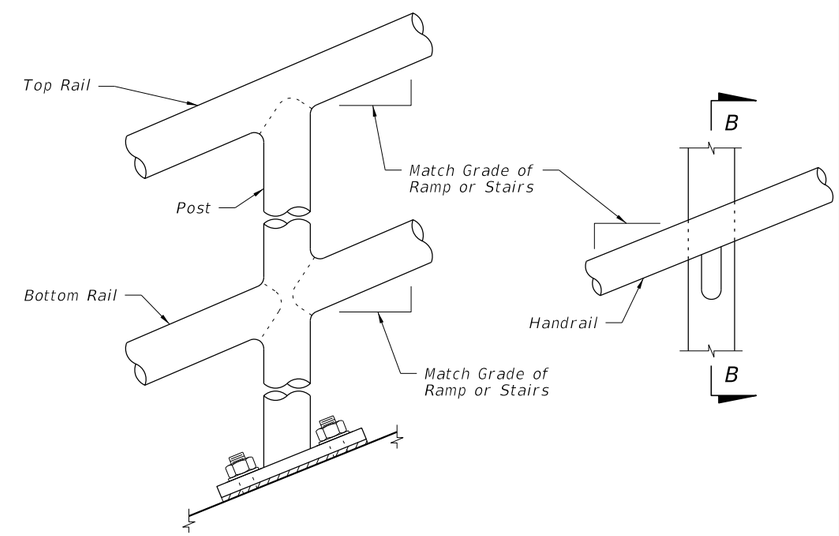

DETAIL "B" - RAIL AND HANDRAIL
(Showing Sloped Condition for Ramps with 2~Bolt Anchorage)

CROSS REFERENCE:
For locations of Details "C", "D" and "E", see Sheet 2.

10/20/2022 8:50:35 AM

LAST REVISION	REVISION	DESCRIPTION:			INDEX	SHEET
11/01/17			FY 2023-24 STANDARD PLANS	PIPE GUIDERAIL (STEEL)	515-080	4 of 5

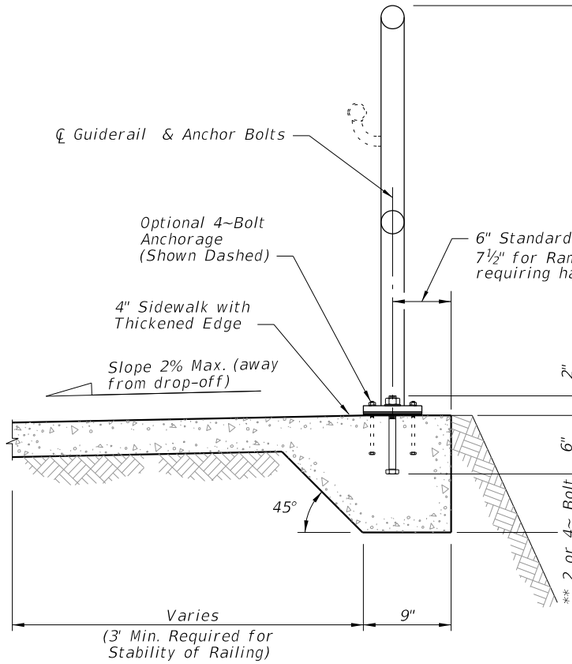

TYPICAL SECTION ON CONCRETE SIDEWALK

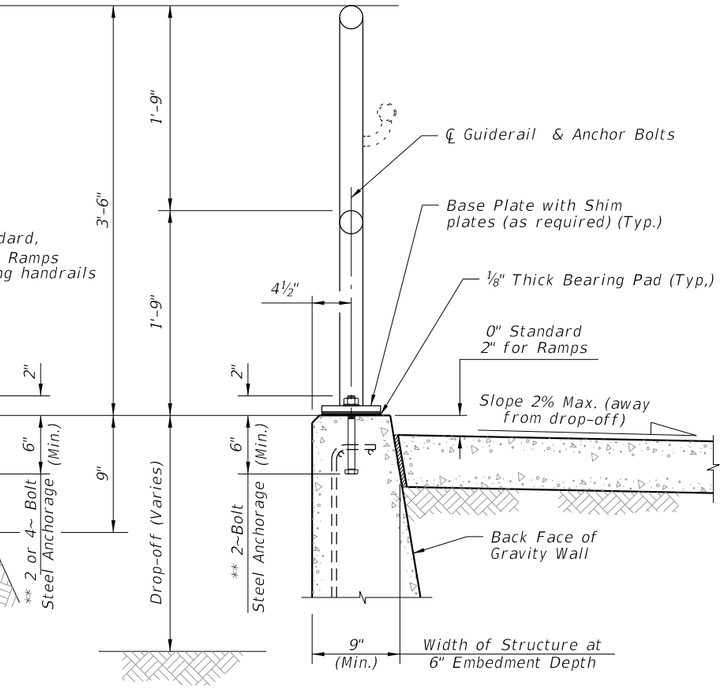

TYPICAL SECTION ON GRAVITY WALL
(Other Retaining Walls Similar)

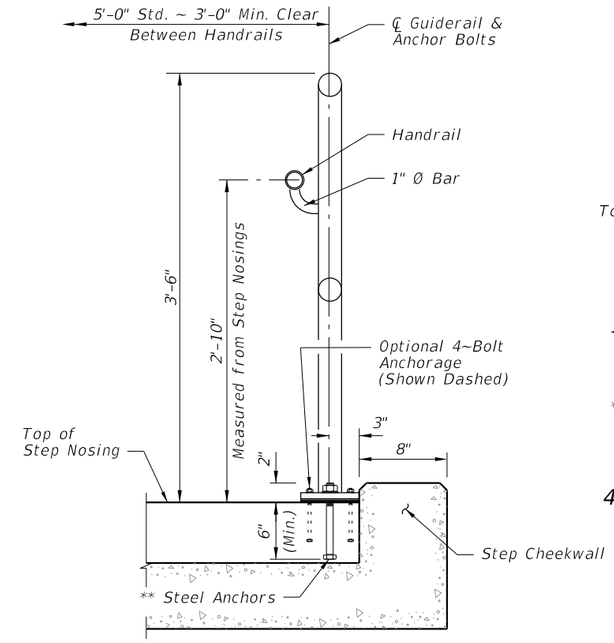

TYPICAL SECTION ON
STEPS & STAIRS

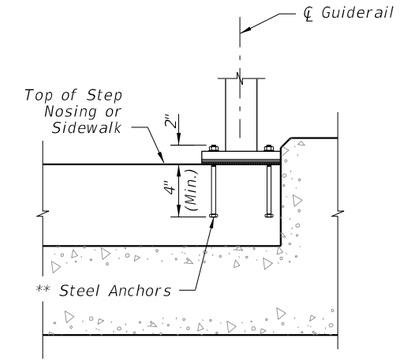

4~BOLT ANCHORAGE DETAIL

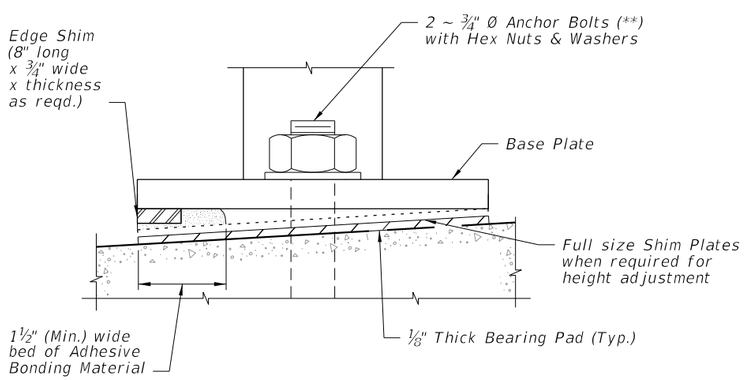

DETAIL "F" (OPTIONAL SHIMMING DETAIL
FOR CROSS SLOPE CORRECTION)
(Used in lieu of Beveled Shim Plates)

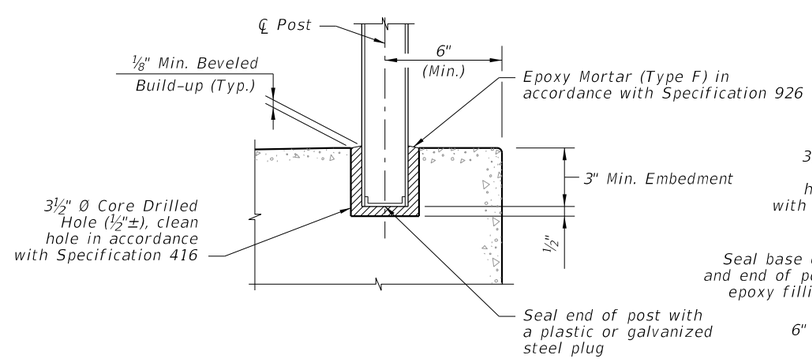

OPTIONAL SIDEWALK ANCHORAGE DETAIL

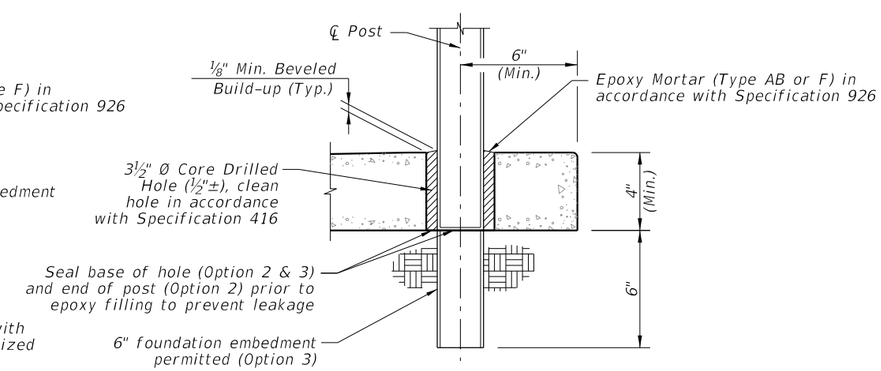

SIDEWALK ANCHORAGE DETAIL
OPTION 2 & 3

NOTES:
**2 ~ ¾" Ø x 8" or 4 ~ 7/16" Ø x 6" Steel Anchors:
Galvanized Steel Bolts (As Shown) (C-I-P); Galvanized U-Bolts Permitted (C-I-P); Galvanized Adhesive Anchors Permitted (***); Expansion Anchors Not Permitted.

*** The minimum embedment for adhesive anchors is 6" for 2~Bolt Anchorage or 4" for 4~Bolt Anchorage.

10/20/2022 8:50:36 AM

LAST REVISION	REVISION	DESCRIPTION:			INDEX	SHEET
11/01/20			FY 2023-24 STANDARD PLANS	PIPE GUIDERAIL (STEEL)	515-080	5 of 5

GENERAL NOTES:

1. For curb, gutter and curb & gutter provide ⅛" – ¼" contraction joints at 10' centers (max.). Contraction joints adjacent to concrete pavement on tangents and flat curves are to match the pavement joints, with intermediate joints not to exceed 10' centers.

2. Locate expansion joints for curb, gutter and curb & gutter in accordance with Specification 520.

TABLE OF CONTENTS:

Sheet	Description
1	General Notes and Contents
2	Concrete Curb and Gutter
3	Curb and Gutter Joints and Endings, Concrete Bumper Guard, and Asphaltic Concrete Curb

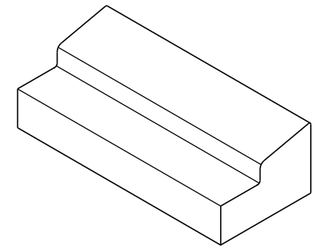

TYPE A

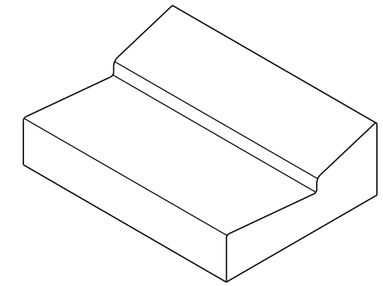

TYPE E

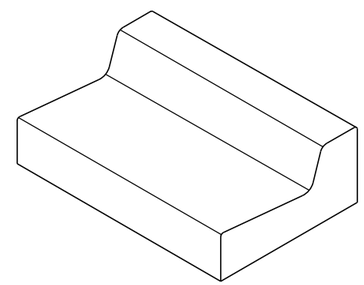

TYPE F

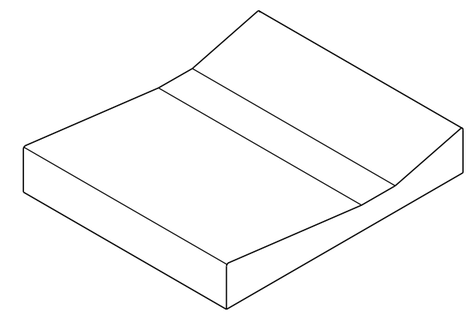

SHOULDER GUTTER

TYPE A, TYPE E, TYPE F, AND SHOULDER GUTTER
(Other Types Similar)

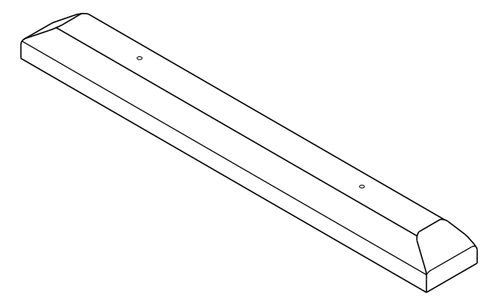

CONCRETE BUMPER GUARD

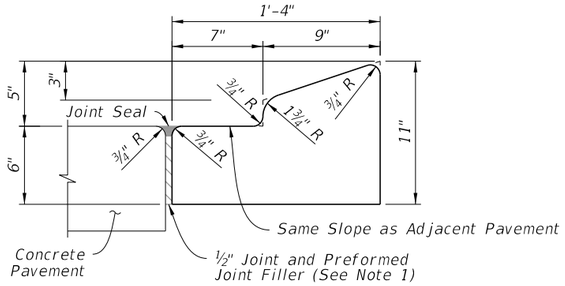

NOTE: For use adjacent to concrete or flexible pavement, concrete shown (See Note 4).

TYPE A

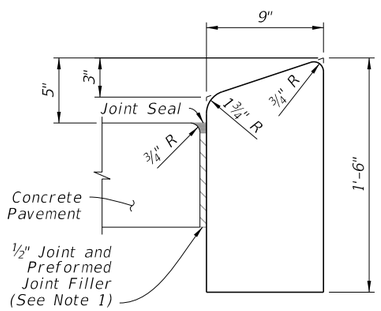

NOTE: For use adjacent to concrete or flexible pavement, concrete shown.

TYPE B

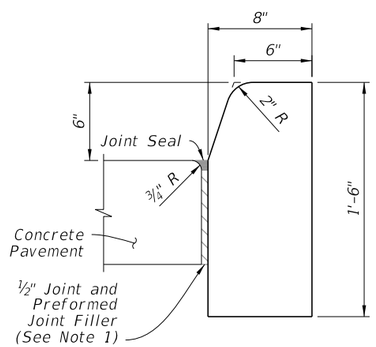

NOTE: For use adjacent to concrete or flexible pavement, concrete shown.

TYPE D

NOTES:

1. For Type A, Type B, and Type D Curb: Expansion joint, preformed joint filler and joint seal are required between curbs and concrete pavement only, see Sheet 3.
2. For Type E, Type F, Drop Curb, and Valley Gutter: When used on high side of roadways, match the cross slope of the gutter to the cross slope of the adjacent pavement. The thickness of the lip is 6", unless otherwise shown on Plans.
3. For Type RA, rotate entire section so that gutter cross slope matches slope of adjacent circulating roadway pavement.
4. For details depicting usage of Type A Curb adjacent to flexible pavement see Sheet 3.

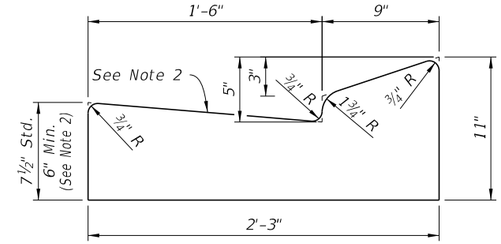

TYPE E

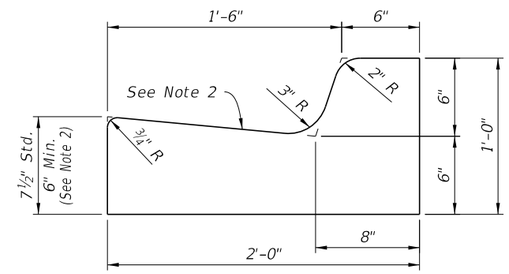

TYPE F

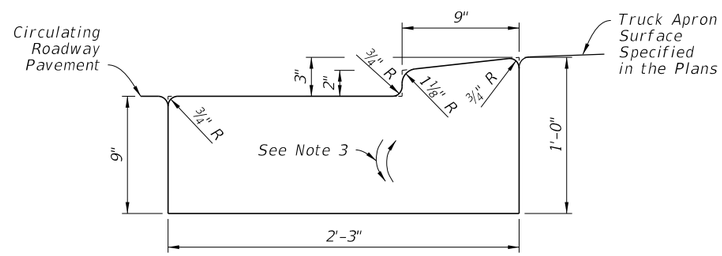

NOTE: Traffic Bearing Sections for use in Roundabout Central Island Construction.

TYPE RA

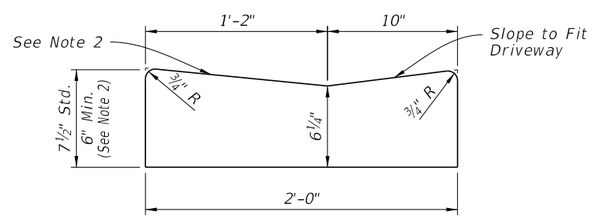

DROP CURB

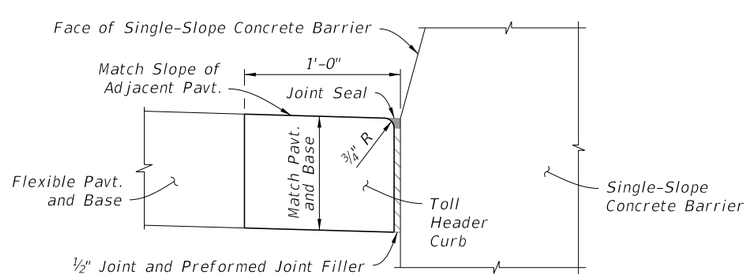

NOTE: See the toll site details for conduit requirements.

TOLL HEADER CURB

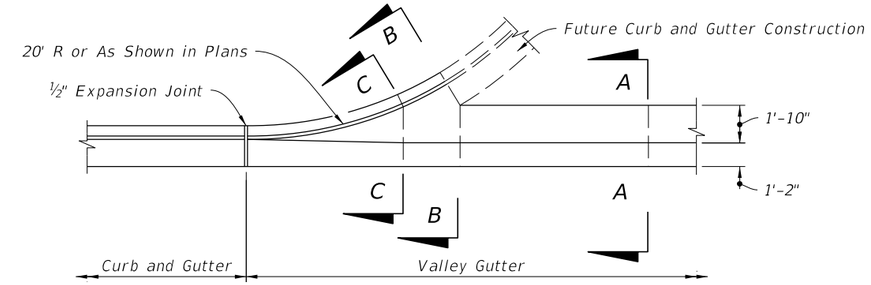

PLAN VIEW

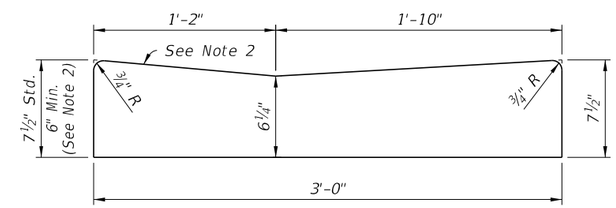

SECTION A-A

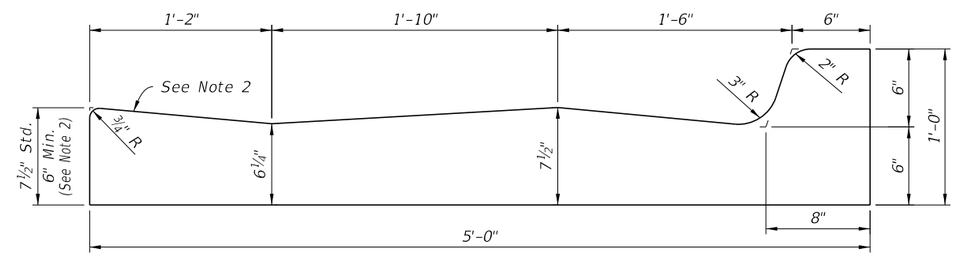

SECTION B-B

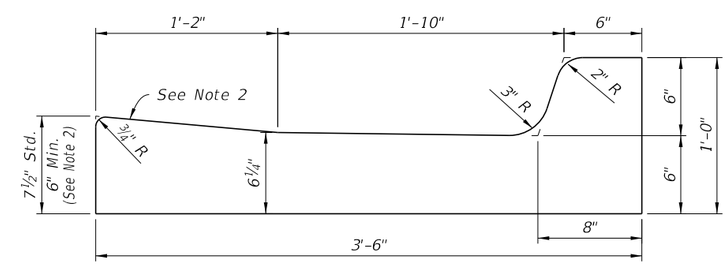

SECTION C-C

VALLEY GUTTER

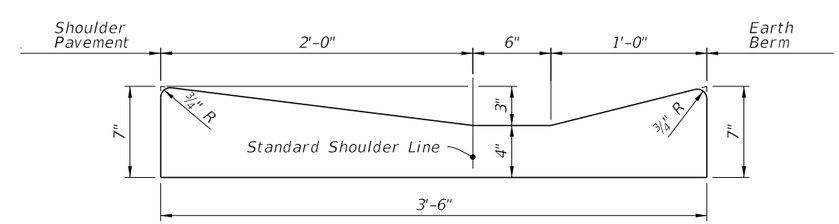

SHOULDER GUTTER

CONCRETE CURB AND GUTTER

LAST REVISION	REVISION	DESCRIPTION:			INDEX	SHEET
11/01/21			FY 2023-24 STANDARD PLANS	CURB AND GUTTER	520-001	2 of 3

10/20/2022 8:50:37 AM

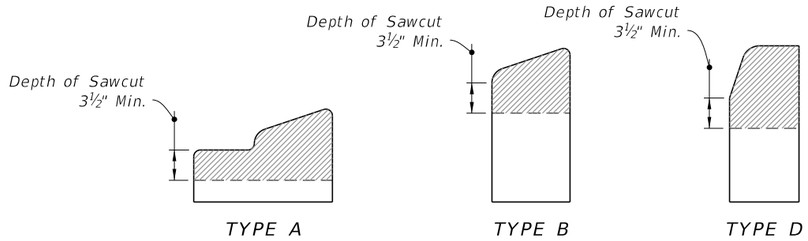

CONTRACTION JOINTS IN CURB

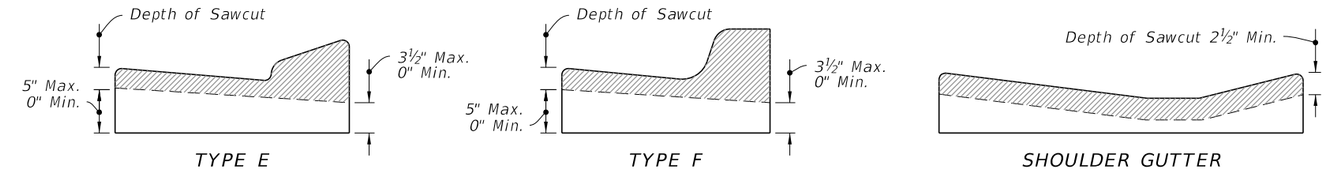

NOTE: Sawcuts should be avoided within valley gutter and within curb and gutter endings.

CONTRACTION JOINTS IN CURB & GUTTER

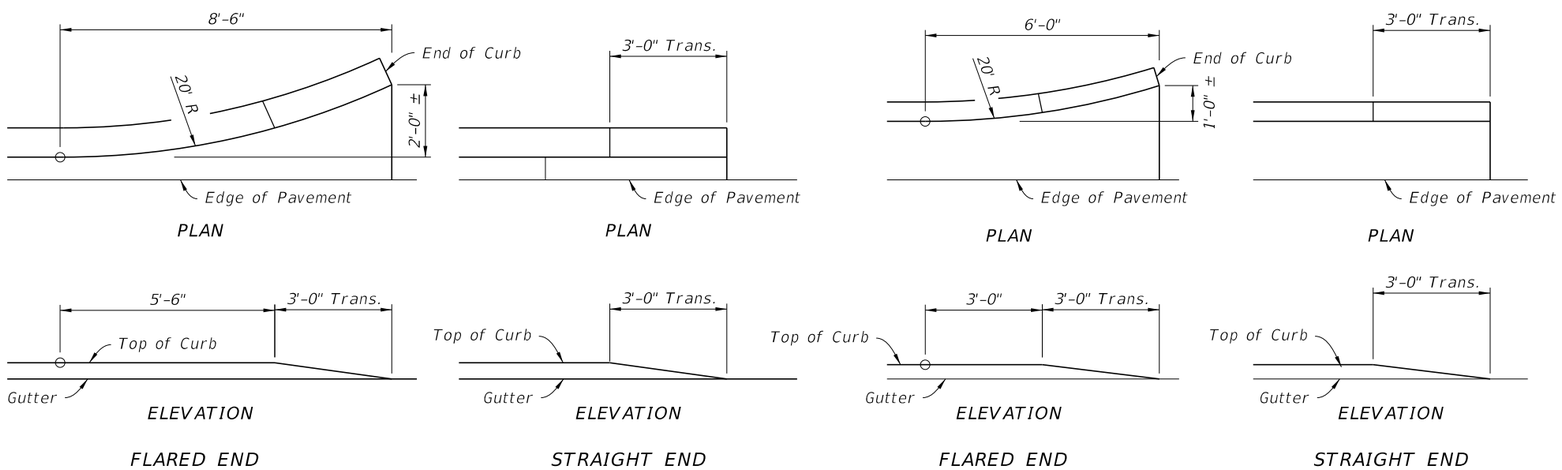

CURB TYPE A

CURB AND GUTTER TYPE E AND TYPE F

NOTE: Ends of Type B and D Curb transition from full to zero heights in 3 ft.

CURB AND CURB & GUTTER ENDINGS

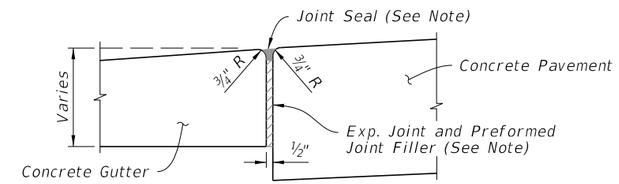

NOTE: Joint Seal application applies to both high and low sides of pavement, low side shown.

EXPANSION JOINT BETWEEN GUTTER AND CONCRETE PAVEMENT

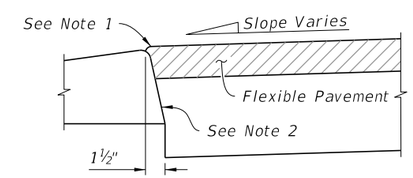

NOTES:

1. Surface on Low Side of Pavement to be ¼" Above Lip of Gutter. Surface on High Side to be Flush With Lip of Curb or Curb & Gutter.
2. Applies to both high and low sides of pavement, low side shown. Applies to shoulder gutter only where adjoining traffic lanes.

CURB AND GUTTER AND TYPE A CURB ADJACENT TO FLEXIBLE PAVEMENT

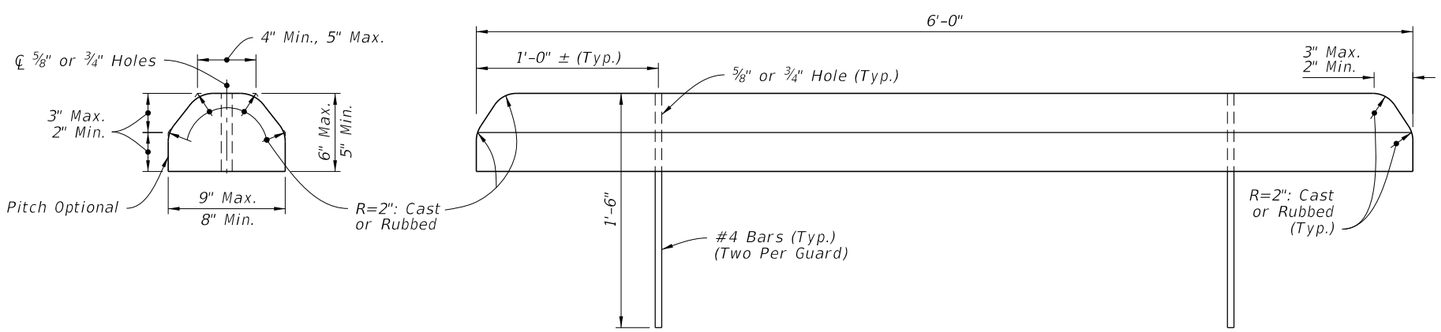

CONCRETE BUMPER GUARD

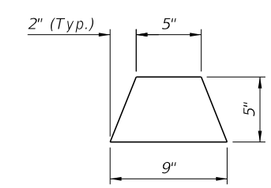

ASPHALTIC CONCRETE CURB

CURB AND GUTTER JOINTS AND ENDINGS, CONCRETE BUMPER GUARD, AND ASPHALTIC CONCRETE CURB

LAST REVISION	REVISION	DESCRIPTION:			INDEX	SHEET
11/01/21			FY 2023-24 STANDARD PLANS	CURB AND GUTTER	520-001	3 of 3

10/20/2022 8:50:38 AM

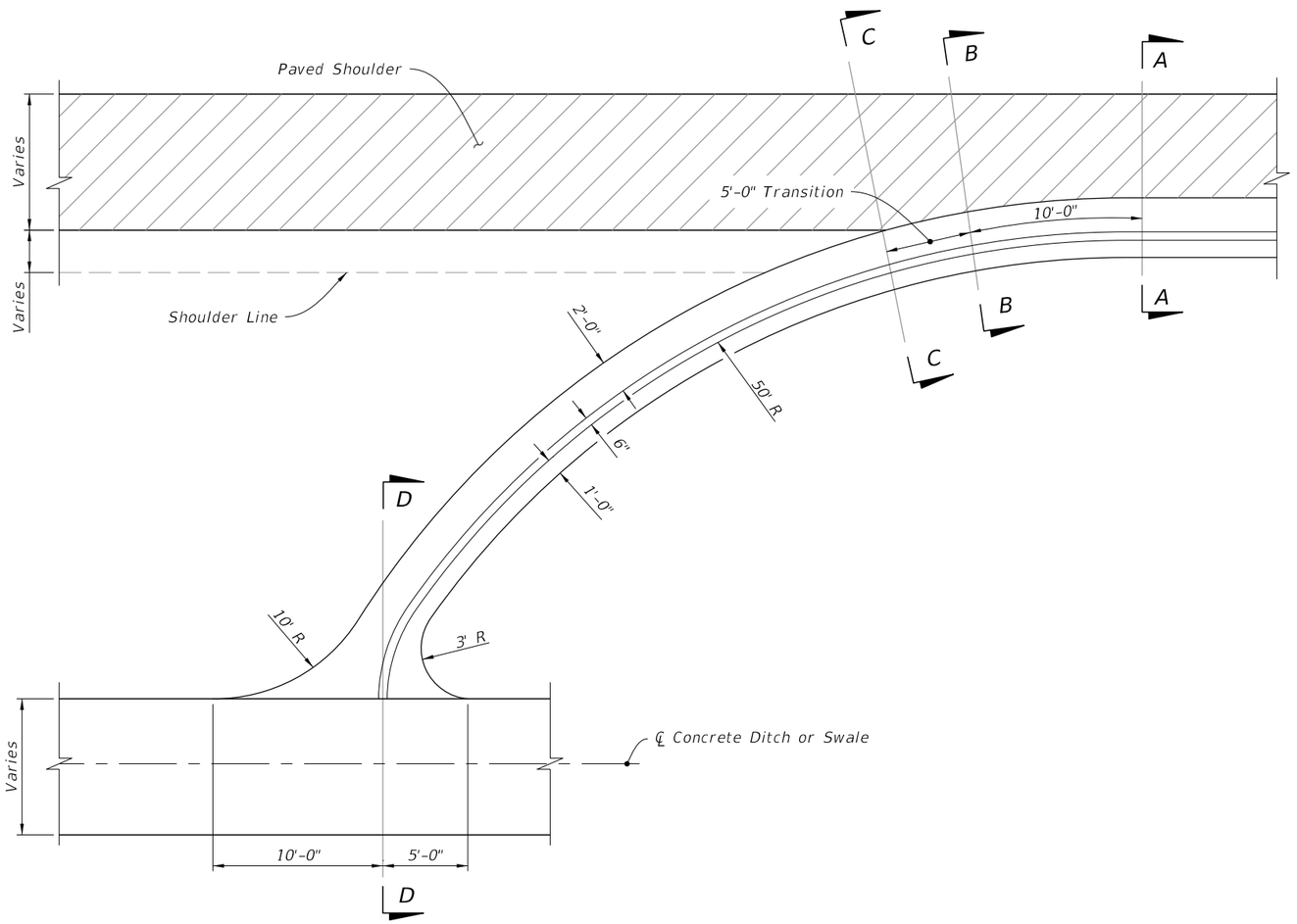

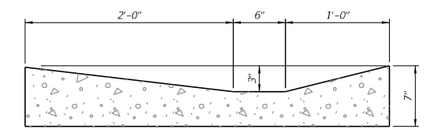

SECTION AA

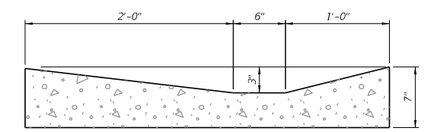

SECTION BB

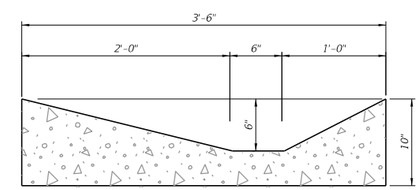

SECTION CC

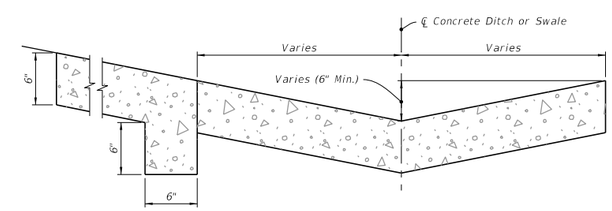

SECTION DD

CONCRETE SPILLWAY AT END OF SHOULDER GUTTER DETAILS

10/20/2022 8:50:39 AM

LAST REVISION	REVISION	DESCRIPTION:			INDEX	SHEET
11/01/21			FY 2023-24 STANDARD PLANS	CONCRETE SHOULDER GUTTER SPILLWAY	520-005	1 of 1

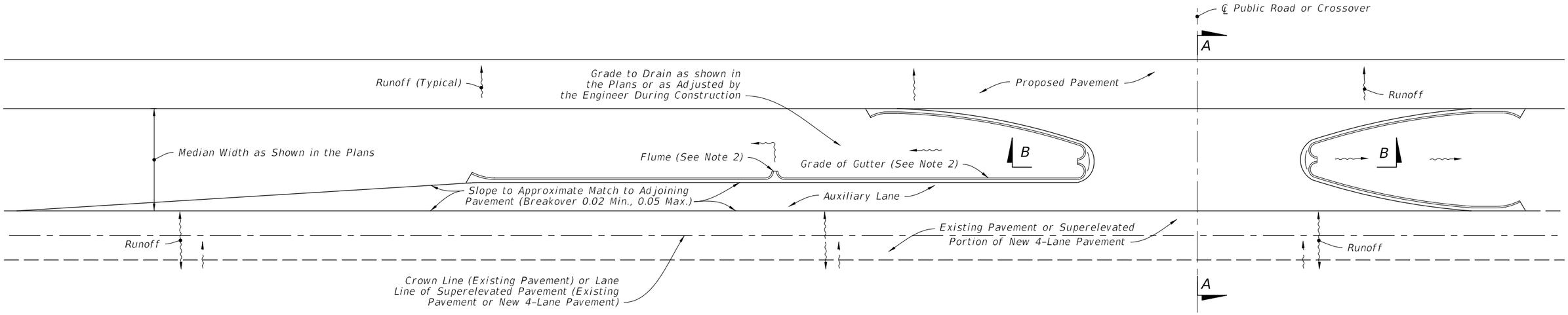

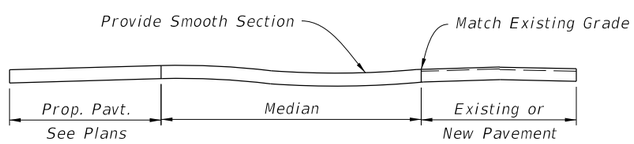

SECTION A-A

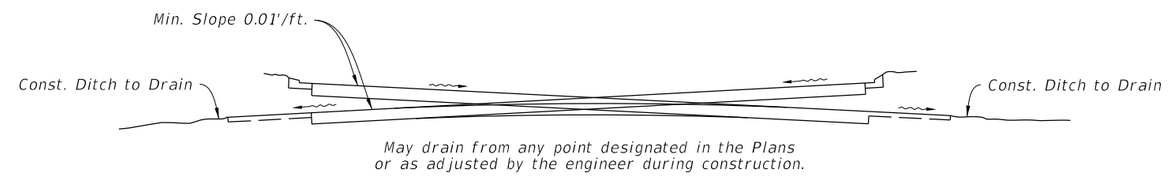

SECTION B-B

MEDIAN OPENING DETAIL

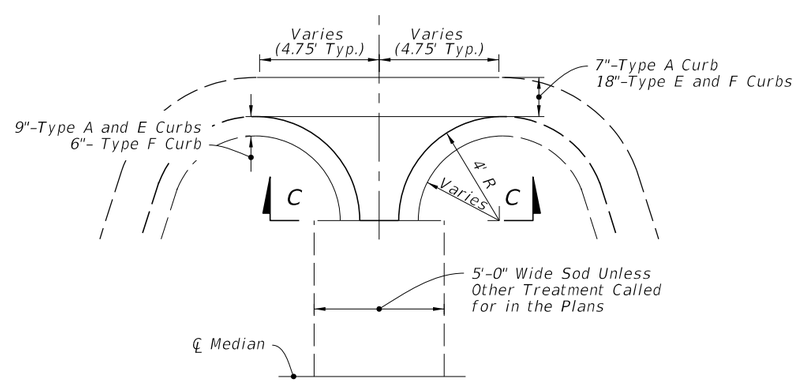

PLAN VIEW

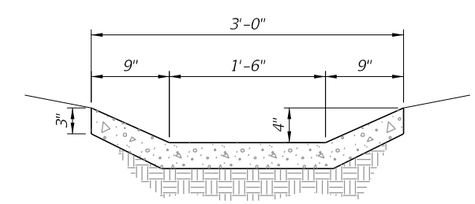

SECTION CC

FLUME DETAIL

NOTES:

1. These details are to apply to projects which provide for the conversion of 2-lane sections to 4-lane divided highway sections and for superelevated sections of new 4-lane divided highways. Layout above is illustration only.

2. See Plans for flume length and location and grade of gutter. Flume locations may be adjusted by the Engineer during construction. If necessary to provide minimum gutter grade, warp surface of the median pavement within limits of the median curb or curb and gutter.

10/20/2022 8:50:39 AM

LAST REVISION	REVISION	DESCRIPTION:			INDEX	SHEET
11/01/21			FY 2023-24 STANDARD PLANS	MEDIAN OPENING FLUME	520-010	1 of 1

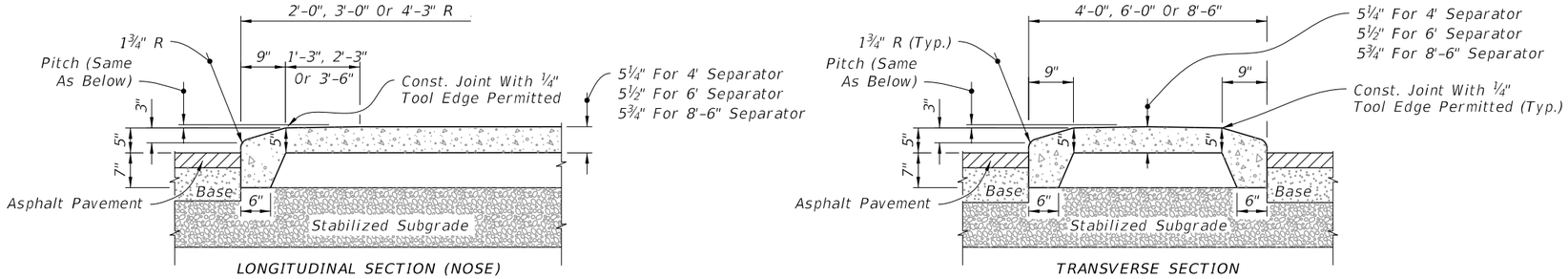

OPTION I

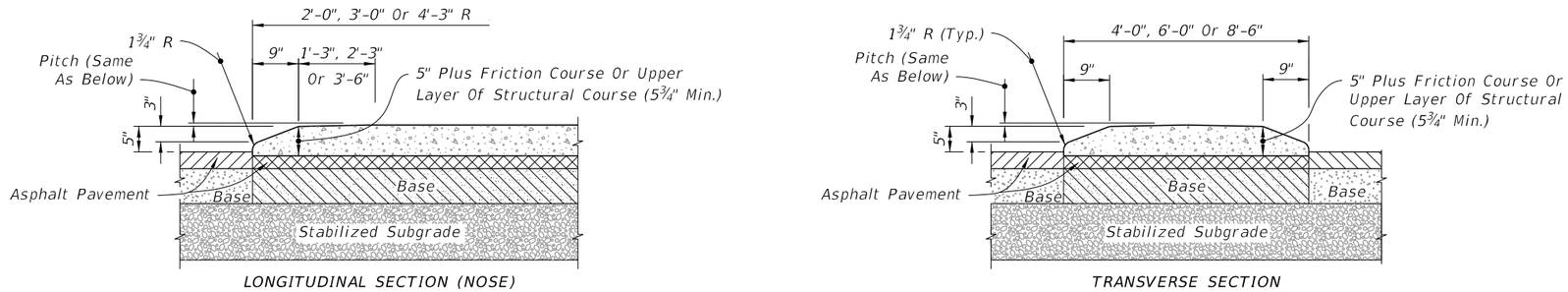

OPTION II

TYPE I - CONCRETE TRAFFIC SEPARATOR

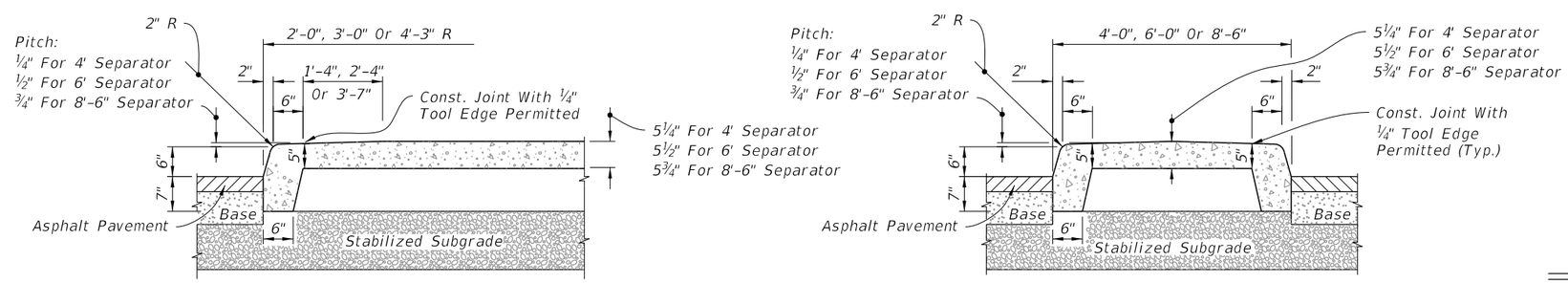

OPTION I

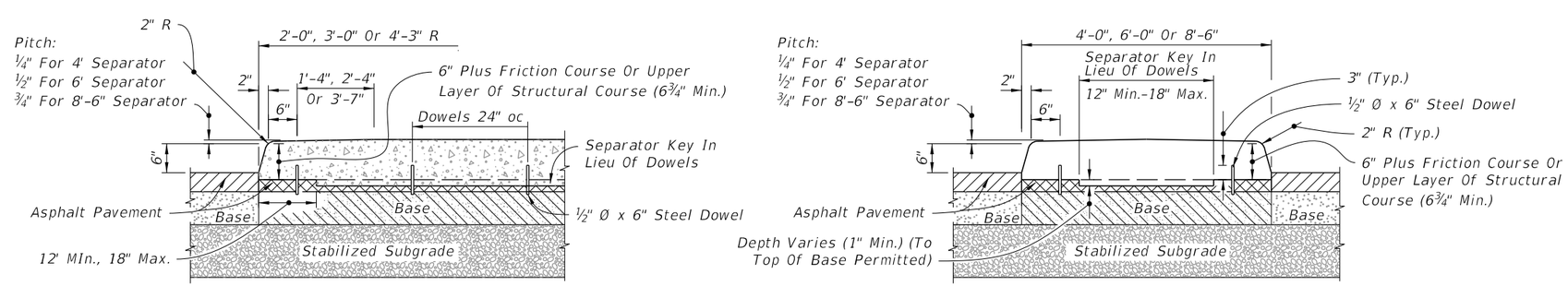

OPTION II

TYPE IV - CONCRETE TRAFFIC SEPARATOR

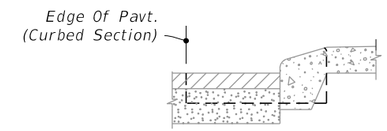

TYPE E

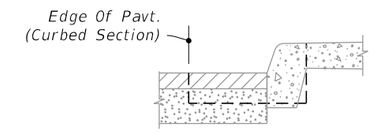

TYPE F

CURB AND GUTTER

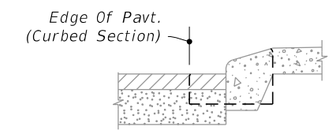

TYPE A

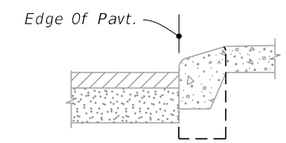

TYPE B

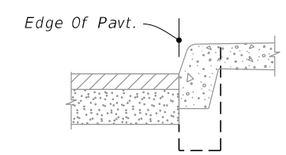

TYPE D

CURB

MEDIAN CURB AND TRAFFIC SEPARATOR JUNCTURE DETAILS

(Option I Separator Shown, For Curb Details see Index 520-001)

NOTES:

1. Separators Type I and IV are to be used with flexible pavement. Separators Types II and V are to be used with rigid pavement.
2. Either Option I or Option II may be used for Types I and IV separators except when a specific option is called for in the Plans.
3. For all separators provide ⅛"- ¼" contraction joints at 10' centers (max.). Contraction joints adjacent to concrete pavement on tangents and flat curves to match the pavement joints, with intermediate joints not to exceed 10' center.

ROADWAY INSTALLATIONS - FLEXIBLE PAVEMENT

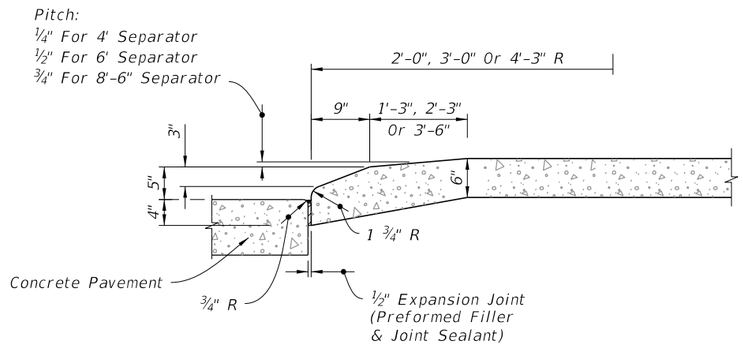

LONGITUDINAL SECTION (NOSE)

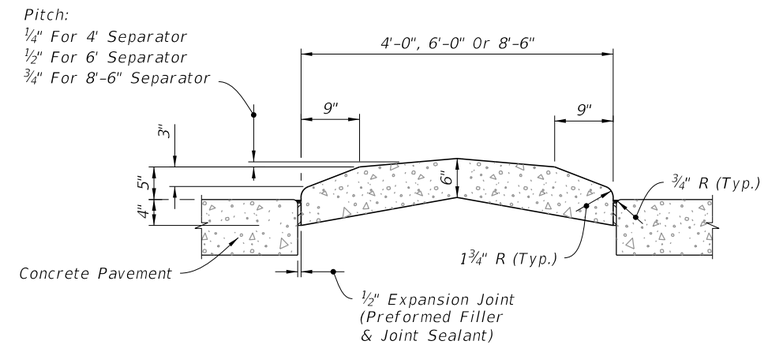

TRANSVERSE SECTION

TYPE II - CONCRETE TRAFFIC SEPARATOR

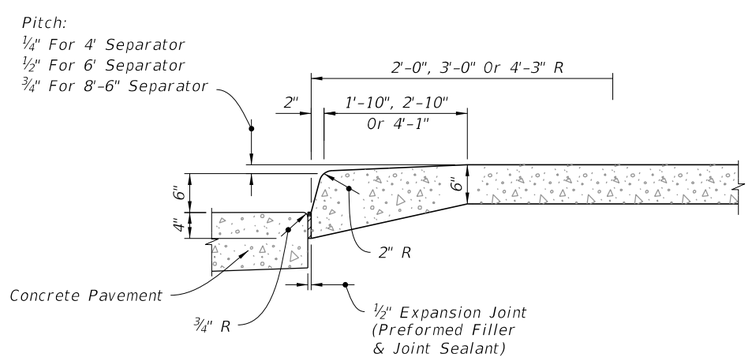

LONGITUDINAL SECTION (NOSE)

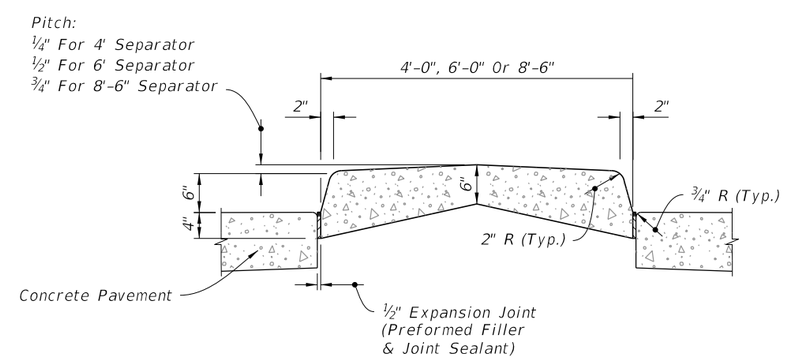

TRANSVERSE SECTION

TYPE V - CONCRETE TRAFFIC SEPARATOR

ROADWAY INSTALLATIONS - RIGID PAVEMENT

LAST REVISION	REVISION	DESCRIPTION:			INDEX	SHEET
11/01/17			FY 2023-24 STANDARD PLANS	TRAFFIC SEPARATORS	520-020	2 of 5

10/20/2022 8:50:41 AM

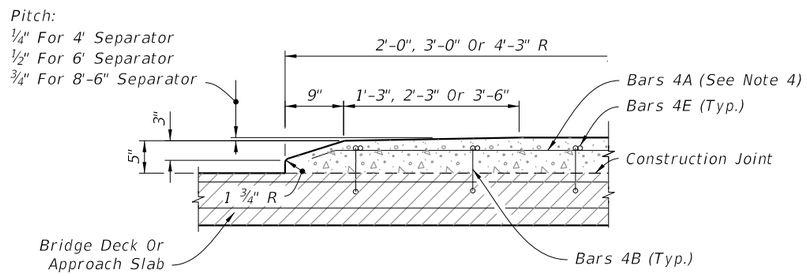

LONGITUDINAL SECTION (NOSE)

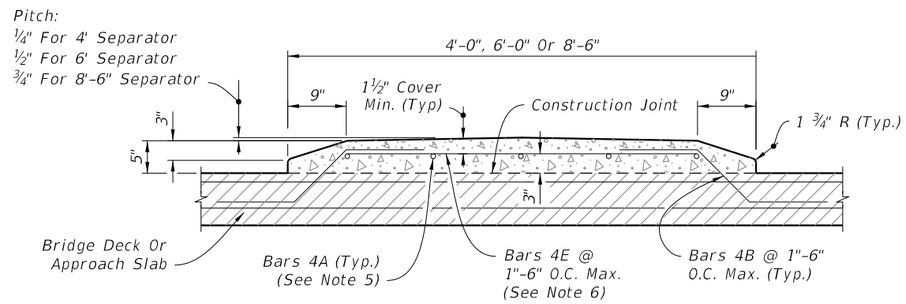

TRANSVERSE SECTION

OPTION I

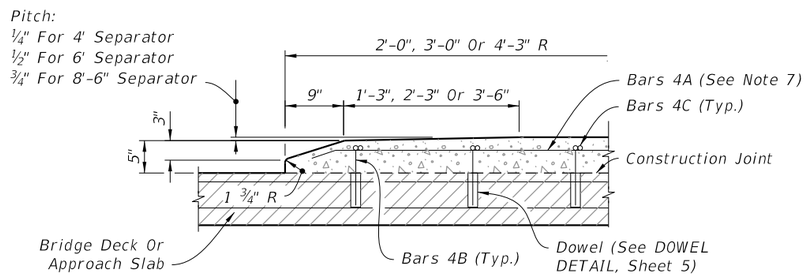

LONGITUDINAL SECTION (NOSE)

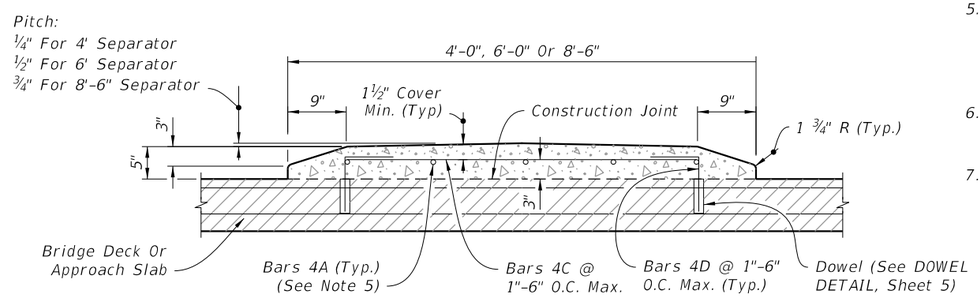

TRANSVERSE SECTION

OPTION II

NOTES:

1. Traffic Separator transverse reinforcement adjacent to deck expansion joints shall be field adjusted to maintain clearance and spacing. Bars shall be field cut as shown, bars may be rotated to maintain clearance.

2. Traffic Separator ends at deck expansion joints shall follow the deck joint limits. Drainage joints and b" V-Grooves shall be placed perpendicular or radial to the ℄ of the Traffic Separator. See Structures Plans, Superstructure and Approach Slab Sheets for details.

3. See Structures Plans, Superstructure Sheets for actual dimensions and joint orientation.

4. Option II is not permitted on bridge decks with prestressing steel.

5. Bar Spacing:
   4'-0" @ 3 equal spaces (continuous)
   6'-0" @ 5 equal spaces (continuous)
   8'-6" @ 7 equal spaces (continuous)

6. At the Contractor's option, a one piece bar my be substituted for Bars 4B and 4E.

7. Field bend and cut rebar as required to maintain cover.

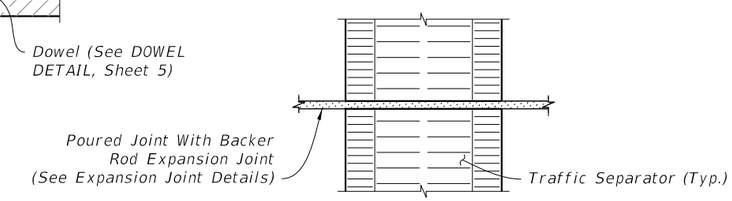

REINFORCING STEEL

(Bridge Deck SHown, Approach Slab Similar)

DETAIL AT POURED JOINT WITH BACKER ROD EXPANSION JOINTS

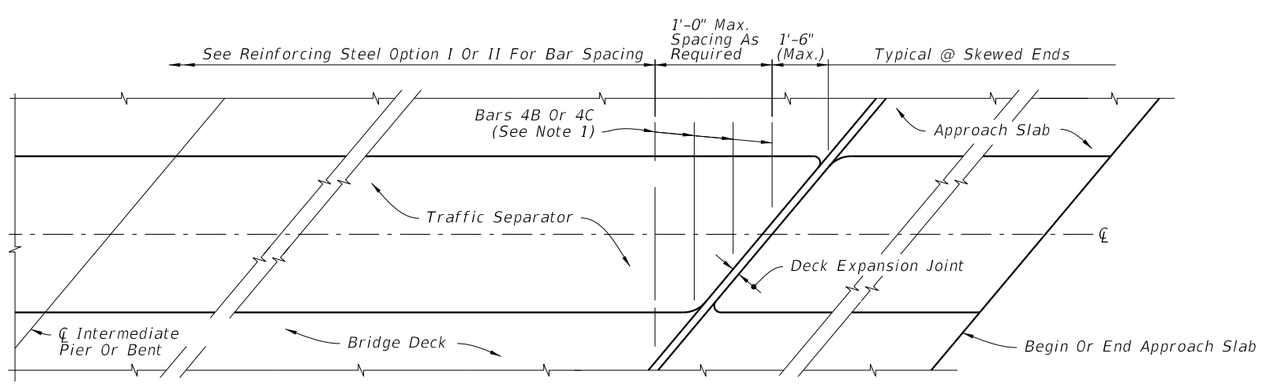

SKEWED BRIDGE DECK AND APPROACH SLAB WITH TRAFFIC SEPARATOR

(Deck Expansion Joint at Begin or End Bridge Shown, Expansion Joint at ℄ Pier or Intermediate Bents Similar)

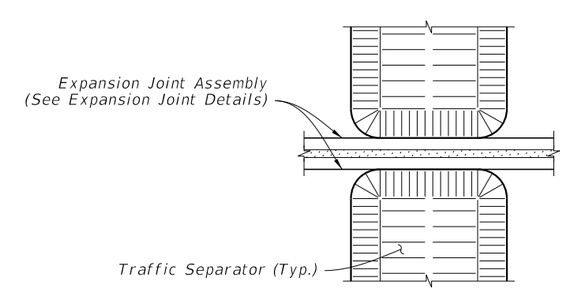

DETAIL AT EXPANSION JOINTS

(Strip Seal Shown, Other Armored Joint Types Similar)

10/20/2022 8:50:42 AM

BRIDGE INSTALLATIONS - TYPE "E" CURB

LAST REVISION	REVISION	DESCRIPTION:			INDEX	SHEET
11/01/17			FY 2023-24 STANDARD PLANS	TRAFFIC SEPARATORS	520-020	3 of 5

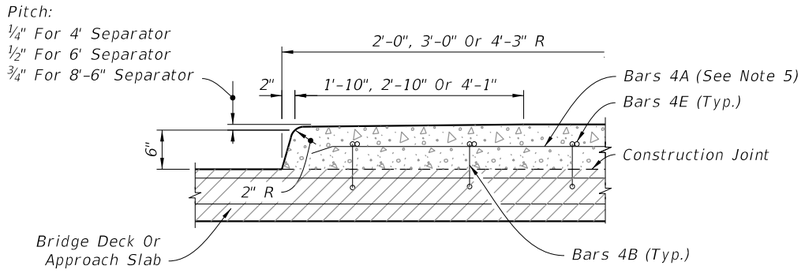

LONGITUDINAL SECTION (NOSE)

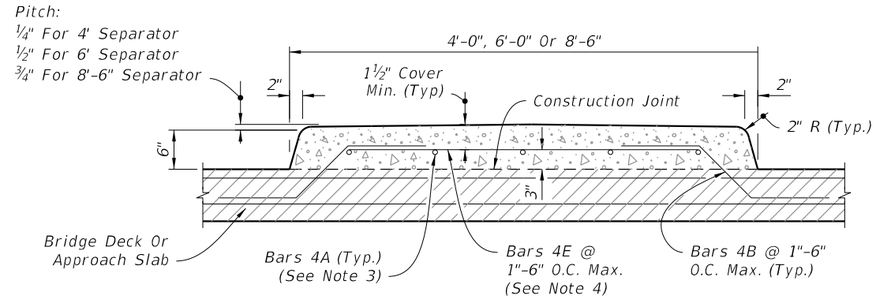

TRANSVERSE SECTION

OPTION I

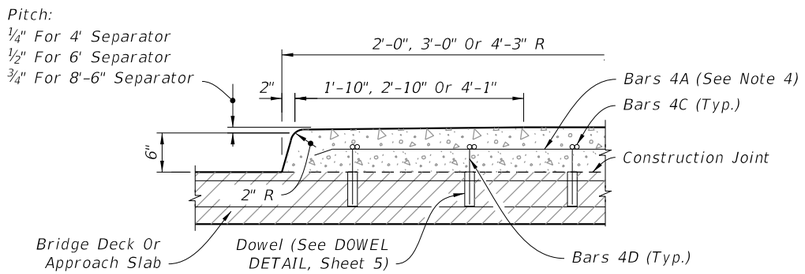

LONGITUDINAL SECTION (NOSE)

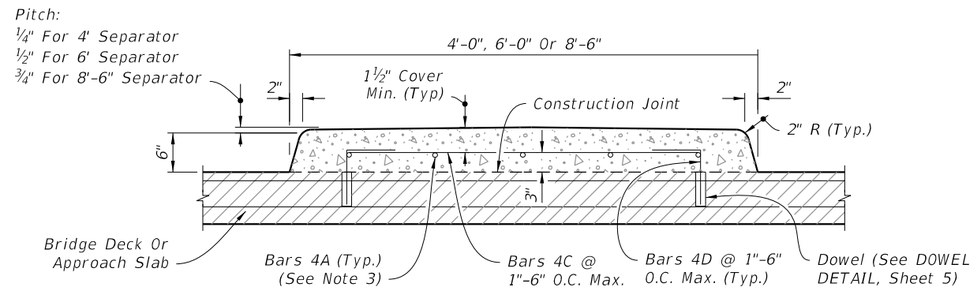

TRANSVERSE SECTION

OPTION II

NOTES:

1. Treatment of separators on straight bridges shown. For additional notes and treatment of separators on skewed bridges, see Sheet 2.
2. Option II is not permitted on bridge decks with prestressing steel.
3. Bar Spacing:
   4'-0" @ 3 equal spaces (continuous)
   6'-0" @ 5 equal spaces (continuous)
   8'-6" @ 7 equal spaces (continuous)
4. At the Contractor's option, a one piece bar my be substituted for Bars 4B and 4E.
5. Field bend and cut rebar as required to maintain cover.

REINFORCING STEEL

(Bridge Deck Shown, Approach Slab Similar)

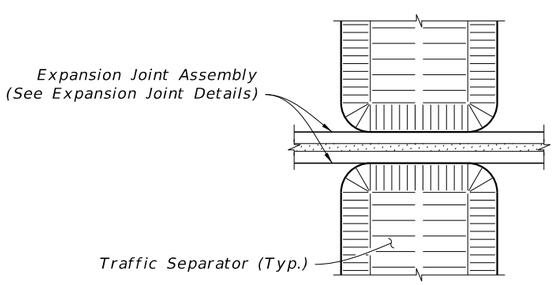

DETAIL AT EXPANSION JOINTS

(Strip Seal Shown, Other Armored Joint Types Similar)

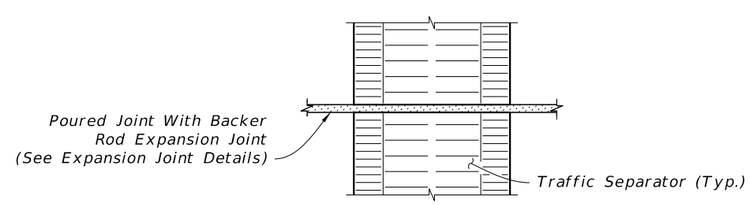

DETAIL AT POURED JOINT WITH BACKER ROD EXPANSION JOINTS

BRIDGE INSTALLATIONS - TYPE "F" CURB

LAST REVISION	REVISION	DESCRIPTION:			INDEX	SHEET
11/01/17			FY 2023-24 STANDARD PLANS	TRAFFIC SEPARATORS	520-020	4 of 5

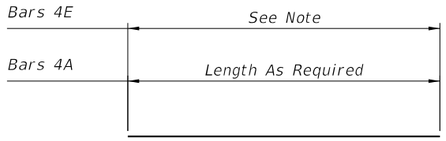

Bars 4A & 4E

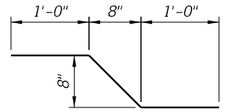

Bar 4B

NOTE:
Length of Bars 4E is 2'-5" for 4'-0" Separator.
Length of Bars 4E is 4'-5" for 6'-0" Separator.
Length of Bars 4E is 6'-11" for 8'-6" Separator.

OPTION I

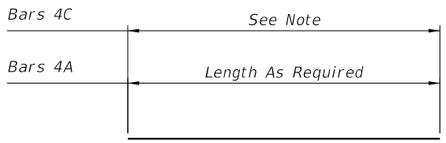

Bars 4A & 4C

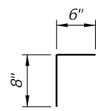

Bar 4D

NOTE:
Length of Bars 4C is 2'-4½" for 4'-0" Separator.
Length of Bars 4C is 4'-4½" for 6'-0" Separator.
Length of Bars 4C is 6'-10½" for 8'-6" Separator.

OPTION II

REINFORCING STEEL NOTES:

1. All dimensions are out to out.
2. The 8" vertical dimension shown for Bars 4B and 4D are based on a slab 8½" thick or greater without a wearing surface. If slab thickness is less than 8½", decrease this dimension by an amount equal to the difference in thickness. If a wearing surface is to be provided, increase this dimension by an amount equal to the wearing surface thickness.

CONVENTIONAL REINFORCING STEEL BENDING DIAGRAMS

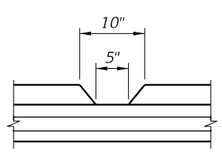

See Structures Plans, Superstructure Sheets for location(s) of drainage joints. Locations for drainage joints shall be limited to the constant width section of separator.

DRAINAGE JOINT DETAIL
(For 5" Opening Or Less)

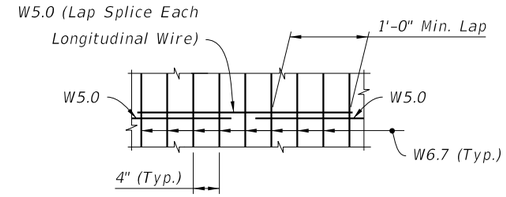

SPLICE DETAIL
(Between WWR 3 x 4 - W5.0 x W6.7 Sections)

OPTION A: Use Welded Wire Reinforcement 3 x 4 - W5.0 x W6.7 as required by plans in place of Bars 4A, 4B and 4E. Bend the Welded Wire Reinforcement to the dimensions of Bar 4B shown in the Bending Diagram for Reinforcing Steel Option I.

OPTION B: Use Welded Wire Reinforcement 3 x 4 - W5.0 x W6.7 as required by plans in place of Bars 4A and 4C shown in Reinforcing Steel Option II.

NOTE: Welded Wire Reinforcement to consist of smooth wire meeting the requirements of Specification 931.

ALTERNATE REINFORCING STEEL DETAILS
(Welded Wire Reinforcement)

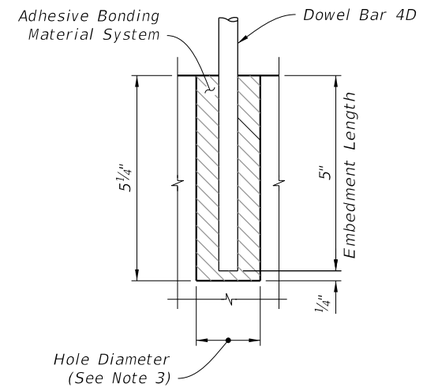

DOWEL NOTES:
1. Shift Dowel Holes to clear if existing reinforcement is encountered.
2. Provide and install an adhesive bonding material system in accordance with Specifications 416 and 937.
3. The dowel hole diameter is to meet adhesive bonding material system manufacturer's requirements.

DOWEL DETAIL

ESTIMATED TRAFFIC SEPARATOR QUANTITIES:

CONCRETE:
CONSTANT WIDTH OF SEPARATOR:

	TYPE "E"		TYPE "F"
4'-0"	Width = 0.056 CY per Ft.	-	0.072 CY per Ft.
6'-0"	Width = 0.089 CY per Ft.	-	0.112 CY per Ft.
8'-6"	Width = 0.132 CY per Ft.	-	0.164 CY per Ft.

NOSE:

	TYPE "E"		TYPE "F"
4'-0"	Width = 0.080 CY	-	0.109 CY
6'-0"	Width = 0.193 CY	-	0.257 CY
8'-6"	Width = 0.403 CY	-	0.536 CY

REINFORCING STEEL:
(All quantities are based on an 8½" slab.)

OPTION I:
4'-0" Width - 6.37 Lbs. per Ft.
6'-0" Width - 8.60 Lbs. per Ft.
8'-6" Width - 11.05 Lbs. per Ft.

OPTION II:
4'-0" Width - 4.77 Lbs. per Ft.
6'-0" Width - 7.00 Lbs. per Ft.
8'-6" Width - 9.45 Lbs. per Ft.

BRIDGE INSTALLATIONS - TYPE "E" AND "F" CURB

SHEET	CONTENTS
1	Index Contents; General Notes
2	Median Barrier
3	Median Barrier - Reinforcing Details
4	Median Barrier - Sloped End Treatment
5	Median Barrier - Grade Separated
6	Median Barrier - 56" Height Section for Barrier-Mounted Sign Support Shielding - Symmetrical
7	Median Barrier - 56" Height Section for Barrier-Mounted Sign Support Shielding - Asymmetrical
8	Median Barrier - 56" Height Section for Barrier-Mounted Dual Sign Support Shielding - Min. Width
9	Median Barrier - 38" Height Split Section for Stand-Alone Sign Support Shielding
10	Median Barrier - 44" Height Split Section for Pier Shielding
11	Median Barrier - 44" Height Split Section for Pier Shielding - Details
12	Median Barrier - Connection to F-Shape
13	Shoulder Barrier
14	Shoulder Barrier - Reinforcing Details
15	Shoulder Barrier - Section Options
16	Shoulder Barrier - Section Options (Continued), Drainage Slot Option
17	Shoulder Barrier - 38" Height Rear-Flush Section for Reduced Setback Pier Shielding (Low-Speed)
18	Shoulder Barrier - 44" Height Rear-Flush Section for Reduced Setback Pier Shielding
19	Shoulder Barrier - Connection to F-Shape
20	Curb and Gutter Barrier
21	Curb and Gutter Barrier - Reinforcing Details
22	Curb and Gutter Barrier - Sloped End Treatment
23	Wall Shielding Barrier - 38" Height Section - Approach and Trailing Transition
24	Wall Shielding Barrier - 38" Height Section - Guardrail Connection
25	Wall Shielding Barrier - 56" Height Section for Barrier-Mounted Sign Support Shielding
26	Reinforcing Bar Bending Diagrams

GENERAL NOTES:

1. BARRIER CONCRETE: Use Class II concrete for all barriers constructed in slightly aggressive environments, and use Class IV Concrete for all barriers constructed in moderately or extremely aggressive environments. On all exposed surfaces, apply a General Surface Finish in accordance with Specification 400.

2. STEEL BAR REINFORCEMENT: Where required to maintain continuity, provide lap splices of at least 18 inches for No. 4 bars and 20 inches for No. 5 bars, unless otherwise shown herein (including shorter splices as provided by the default bar bending diagrams).

   The default reinforcing details shown herein, including bar shapes and lap splice positions, are intended to show required steel locations and provide for a constructible design. However, with the approval of the Engineer, alternate steel configurations may be used in the same locations shown herein, given that the equivalent strength reinforcing is provided and the cover, maximum spacing, and continuity requirements are maintained.

3. OPTIONAL WELDED WIRE REINFORCEMENT: With the approval of the Engineer, steel welded wire reinforcement in accordance with Specification 415 may be substituted for the steel bars shown herein. Place the welded wire in the same locations specified for the steel bars, and maintain the equivalent strength, cover, maximum spacing, and continuity requirements.

GENERAL NOTES (CONTINUED):

4. TOP FACE LONGITUDINAL REINFORCEMENT: Unless otherwise specified, the longitudinal reinforcement shown closest to the top face of the barrier has a maximum cover of 4½", measured from the top face of the barrier.

5. MINIMUM BARRIER LENGTH: Unless otherwise shown in the Plans, the minimum Concrete Barrier length is 40 feet.

6. CONSTRUCTION JOINTS: Install Construction Joints only as needed for discontinuous concrete casting or cold joints. Maintain continuity of steel reinforcement across Construction Joints. Construction Joints are classified herein as Transverse Joints or Longitudinal Joints.

   Transverse Joints are permitted at 20-foot or greater intervals along the barrier. For Tall Grade-Separated Sections, see Sheet 5 for additional Transverse Joint requirements.

   Longitudinal Joints are only permitted where indicated in the following details and notes, with a vertical position tolerance of ± 1½" from the locations shown.

7. DOWELED JOINTS: As shown in the Dowel Details on Sheets 2 & 13, install ¾" Doweled Joints for Concrete Barrier connections to Wall Coping Barriers, Pier Protection Barriers, and Traffic Railings. Doweled Joints are also required for expansion mitigation in Median Barrier as defined per Sheets 2 & 5. Doweled Joints are not permitted within Grade-Separated Median Barrier.

8. CRACK CONTROL V-GROOVES: At 20-foot intervals, place ⅜" depth V-grooves that run vertically and/or transversely in the front, top, and back faces of barriers. The V-grooves can be either molded or scored while the concrete is still plastic.

9. SUBGRADE: Compact the top layer of subgrade with Type B Stabilization, LBR 40 (12 in.).

10. FOOTING BOTTOM CONCRETE COVER: At the bottom of barrier footings shown throughout this Index, up to 2 inches of additional concrete cover is permitted beyond what is shown herein to accommodate soil grade irregularities.

11. FINISH GRADE ELEVATION: At the barrier face location, the finish grade pavement has a vertical position tolerance of ± ½" from the nominal locations shown herein, relative to the barrier elevation. Maintain visually smooth and even pavement at the barrier face, per the approval of the Engineer.

12. DRAINAGE INLETS: Where called for in the Plans, install corresponding inlets per Indexes 425-030 thru 425-032.

13. LIGHT POLE MOUNTING: Where called for in the Plans, install aluminum light poles per Index 715-002.

14. OPAQUE VISUAL BARRIER: Where called for in the Plans, install Opaque Visual Barrier per Index 521-010.

15. BARRIER END MARKERS: For all free ends of concrete barriers that are not shielded with an end treatment or connection to another barrier or traffic railing type, install a Type 3 Object Marker on the end face per Specification 705.

16. BARRIER DELINEATORS: Install Barrier Delineators in accordance with Specification 705. For median barriers, mount the delineator on the top of the barrier, at the centerline of barrier, with reflective sheeting facing traffic on both approaches. For shoulder barriers and split sections, mount the delineators on the top of the barrier, with the roadway side of the delineator located 2" from the front face of the barrier and the reflective sheeting facing traffic of the nearest approach.

17. TOLL SITES: Where called for in the Plans, substitute the steel reinforcing bars shown herein with GFRP reinforcing bars of the same size. Construct GFRP reinforcing bars in accordance with Specification 932, and use a maximum 4½" inner diameter for bar bends. Alternative bar bending details and shapes may be used so long as the final location of the reinforcing is unchanged and the bars are either continuous or fully spliced at the side and bottom barrier locations. Where required to fit pull boxes while maintaining bar spacing and concrete cover, trim GFRP bars as defined in the Plans.

   At toll site locations, the use of Median Barriers on outside shoulders is permitted where called for in the Plans. Shoulder Pavement shown herein may be substituted with material for an alternate usage where defined in the Plans.

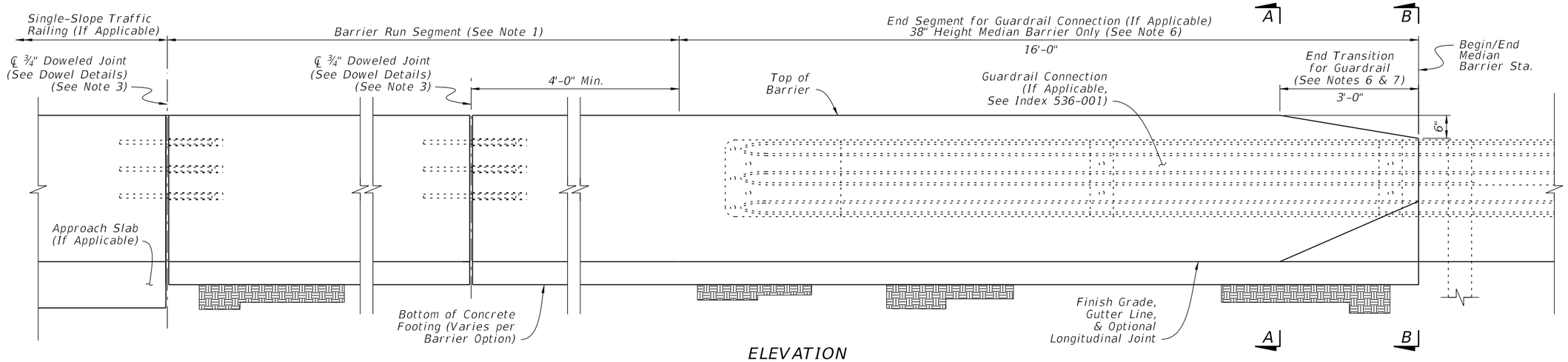

ELEVATION

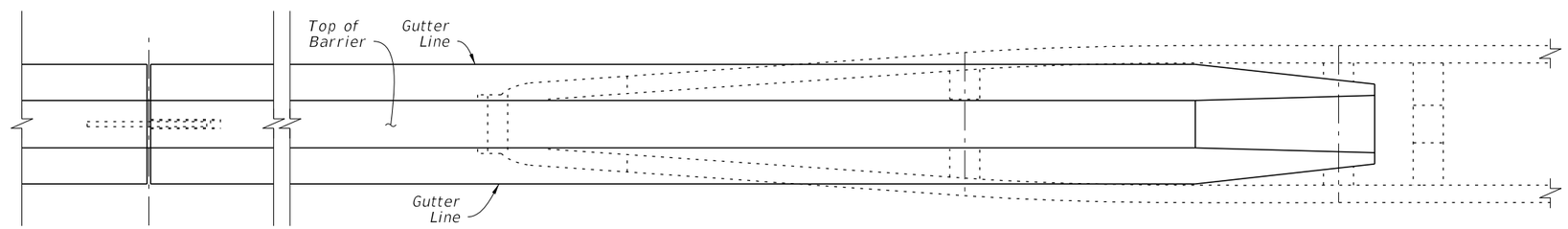

PLAN

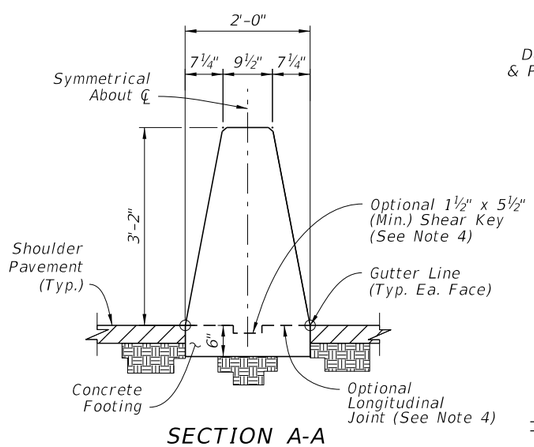

SECTION A-A
38" HEIGHT MEDIAN BARRIER
(See Sheet 3 for Steel Reinforcing Details)

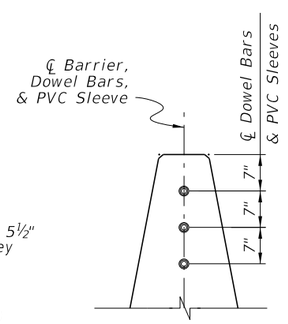

SECTION
DOWEL PLACEMENT

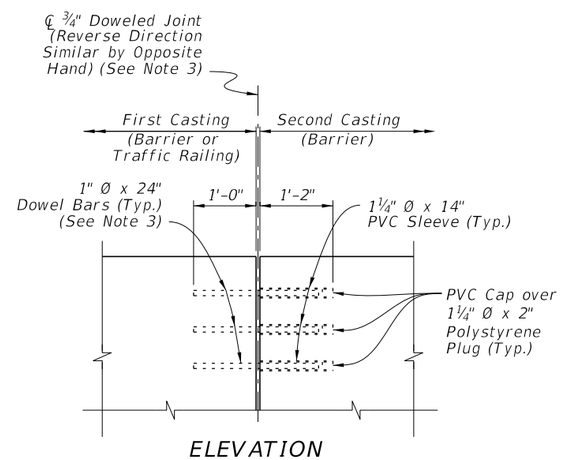

ELEVATION
DOWEL BAR & PVC
CONNECTION

DOWEL DETAILS

MEDIAN BARRIER NOTES:

1. BARRIER RUN SEGMENT: Within the Barrier Run Segment, either the 38" Height Median Barrier or the differing Median Barrier sections shown throughout the Index may be placed as required per the Plans.

2. SECTION VIEWS: For additional Views A-A and B-B, see Sheet 3.

3. DOWELED JOINTS: See the General Notes on Sheet 1 for usage of joint types. Place Doweled Joints at 100-foot maximum intervals. Place steel reinforcing with a longitudinal 3" cover adjacent to the joint face(s) in the barrier. Use ASTM A36 smooth round bars with hot-dip galvanization.

   For the dowel connection into the first casting, the dowel may be cast-in-place for new concrete or placed into a 1⅛"∅ x 13"(± ½") drilled hole for cured concrete. For drilled holes larger than 1⅛"∅, secure the dowel with adhesive in accordance with Specification 416. No load testing is required.

   For the dowel connection into the second casting, use a 1¼" NPS Schedule 80 PVC pipe with a sealed cap, cast-in-place as shown.

4. OPTIONAL LONGITUDINAL JOINT: When a longitudinal joint is placed above the footing, use the Optional 1½" x 5½" Shear Key shown. As a substitute for the Shear Key, the concrete footing's top surface may be raked to provide additional shear friction. Rake the fresh concrete surface so that about half of the surface area consists of approximately ¼" depth longitudinal grooves, distributed evenly and approved by the Engineer.

5. MINOR GRADE SEPARATIONS: Where called for in the Plans, the nominal shoulder pavement surface elevation may be placed up to 2" below the location shown herein on one side of the barrier. For barriers with shallow embedments shown on Sheets 6 thru 9, extend the barrier's concrete lower across its entire section such that the barrier's concrete bottom remains embedded at least 1" below the lowered pavement surface.

6. GUARDRAIL CONNECTIONS: Connect Guardrail using the Transition Connections to Rigid Barrier per Index 536-001 in conjunction with the 16'-0" End Segment for Guardrail shown herein.

7. CRASH CUSHION CONNECTIONS: Connect Crash Cushions per Index 544-001 in conjunction with the 3'-0" End Transition for Guardrail as shown herein.

8. FREE ENDS: When the barrier end does not terminate with a Traffic Railing Connection, Guardrail Connection, Crash Cushion Connection, or Sloped End Treatment as called for in the Plans, terminate in accordance with the Free End Reinforcing detail on Sheet 3.

MEDIAN BARRIER

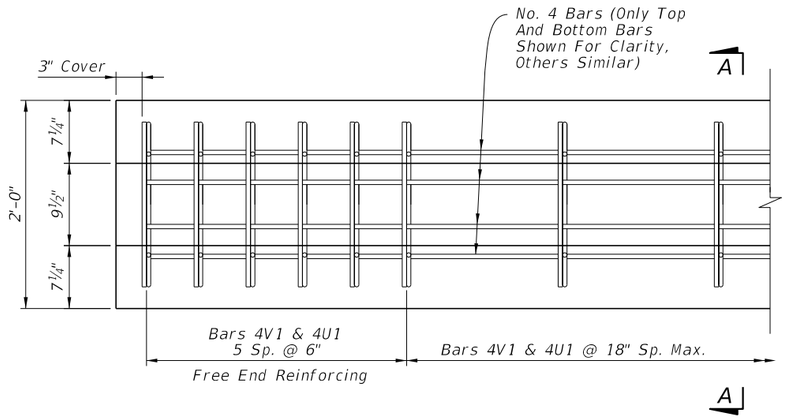

PLAN VIEW - 38" HEIGHT MEDIAN BARRIER
FREE END REINFORCING (See Note 3)

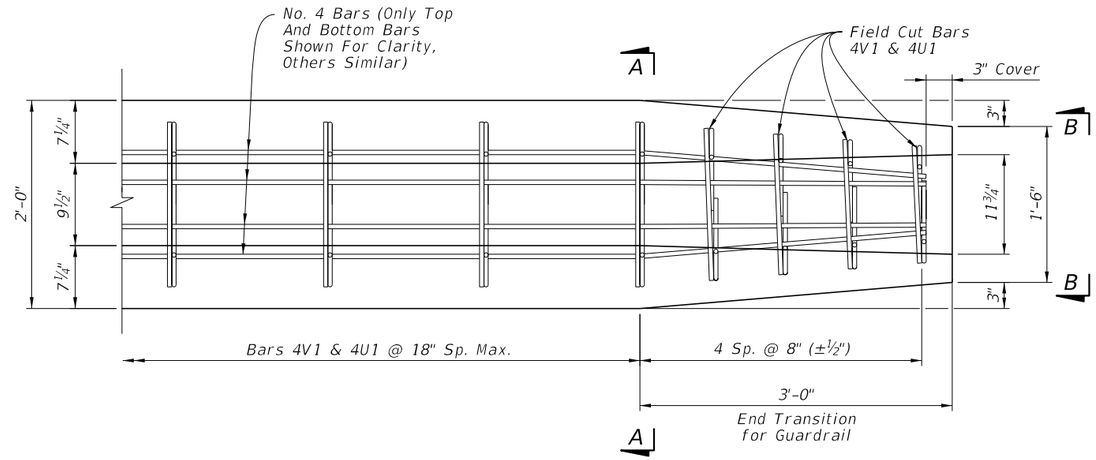

PLAN VIEW - END SEGMENT FOR
GUARDRAIL CONNECTION (See Note 3)

NOTES:

1. GENERAL: Work with the Plan and Elevation Views on Sheet 2.

2. BAR BENDING DIAGRAMS: For additional information on Bars 4V1 and 4U1, see the details on Sheet 26.

3. PLAN VIEWS: Only top and bottom longitudinal reinforcing is shown for clarity. For all longitudinal steel locations, see the section views.

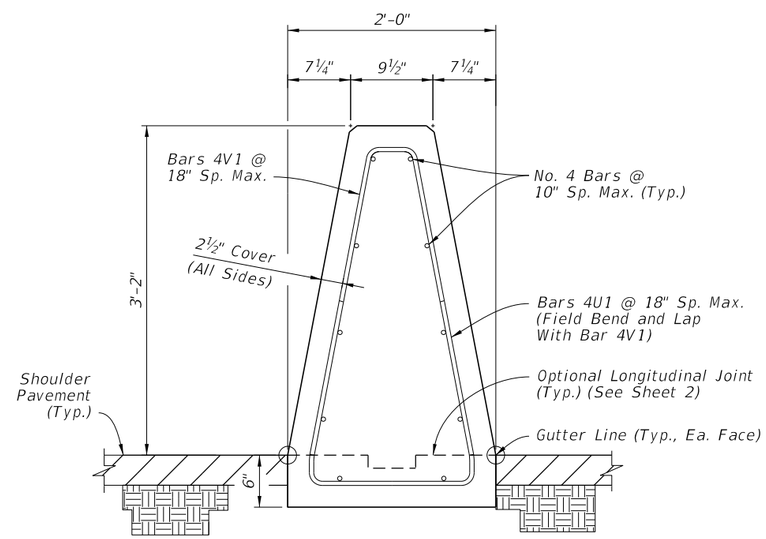

SECTION A-A
38" HEIGHT
MEDIAN BARRIER

Concrete Qty. = 0.20 CY/FT
Steel Qty. = 11.8 LB/FT

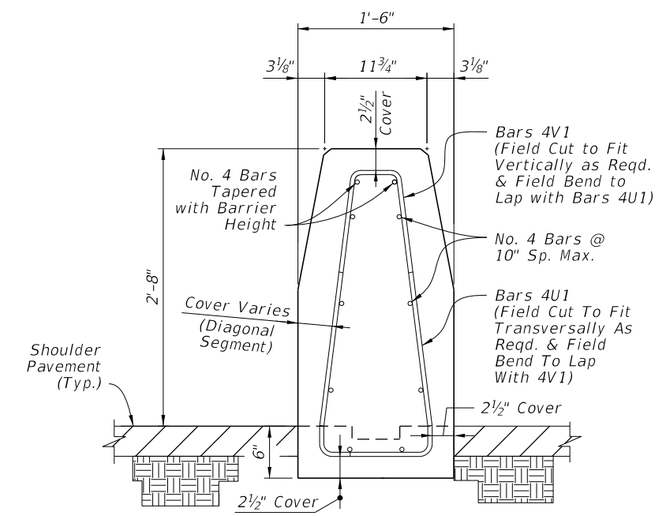

VIEW B-B
REDUCED SECTION
OF END TRANSITION
FOR GUARDRAIL
(End of Barrier)

MEDIAN BARRIER - REINFORCING DETAILS

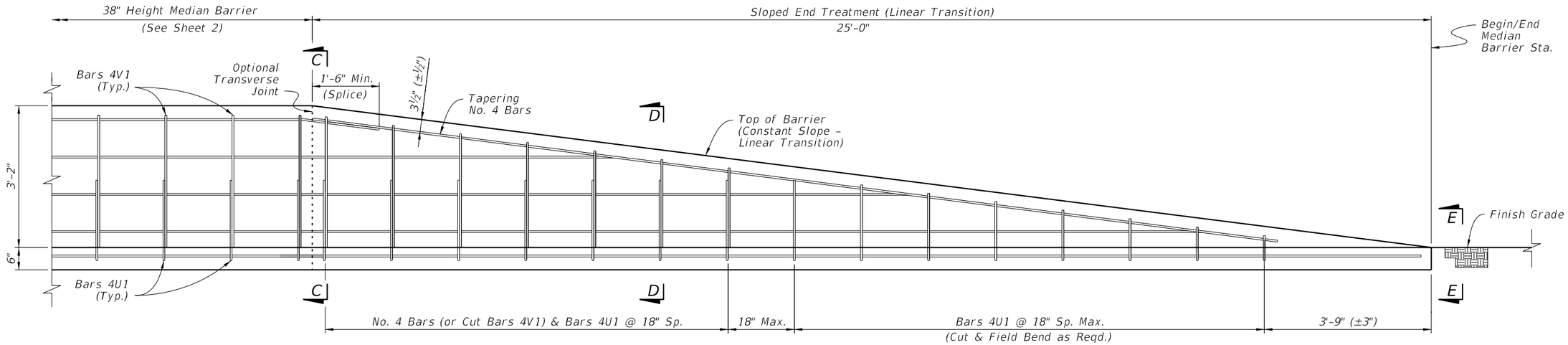

ELEVATION - SLOPED END TREATMENT

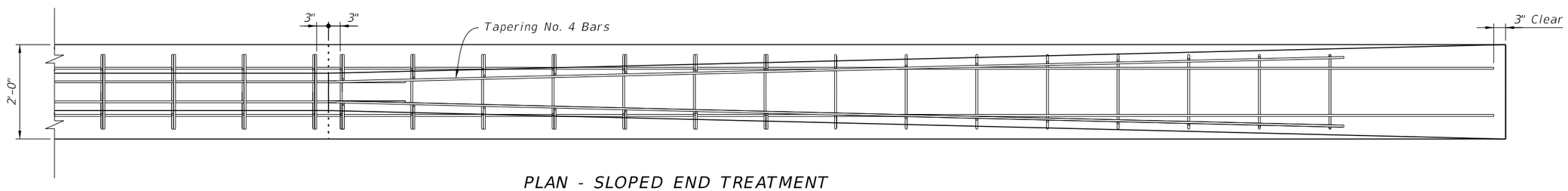

PLAN - SLOPED END TREATMENT
(Only Top & Bottom Longitudinal Bars Shown for Clarity,
See Section Views for All Longitudinal Steel Locations)

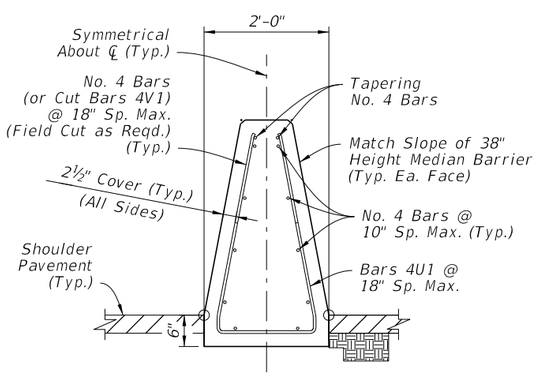

SECTION C-C
BEGIN TRANSITION
REINFORCING
(Height Varies Linearly
per Elevation View)

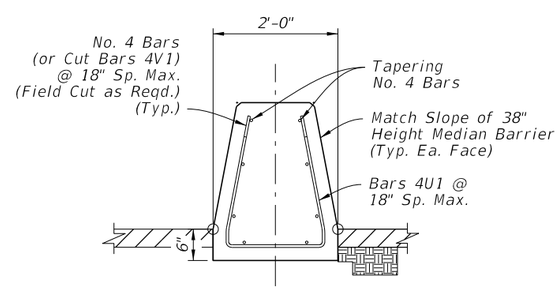

SECTION D-D
INTERMEDIATE TRANSITION
REINFORCING
(Height Varies Linearly
per Elevation View)

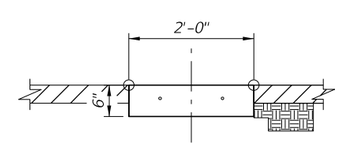

VIEW E-E
END TRANSITION

NOTES:

1. GENERAL: Install Sloped End Treatment only where called for in the plans.
2. JOINTS: Construction or Doweled Joints are not permitted within the Sloped End Treatment segment.

MEDIAN BARRIER - SLOPED END TREATMENT

LAST REVISION	REVISION	DESCRIPTION:	FY 2023-24 STANDARD PLANS	CONCRETE BARRIER	INDEX	SHEET
11/01/18					521-001	4 of 26

10/20/2022 8:50:48 AM

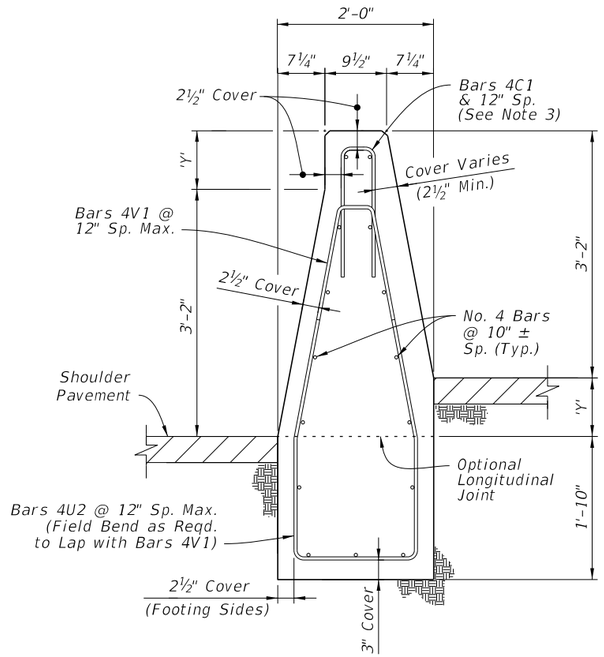

SHORT GRADE-SEPARATED
SECTION FOR Y ≤ 9"

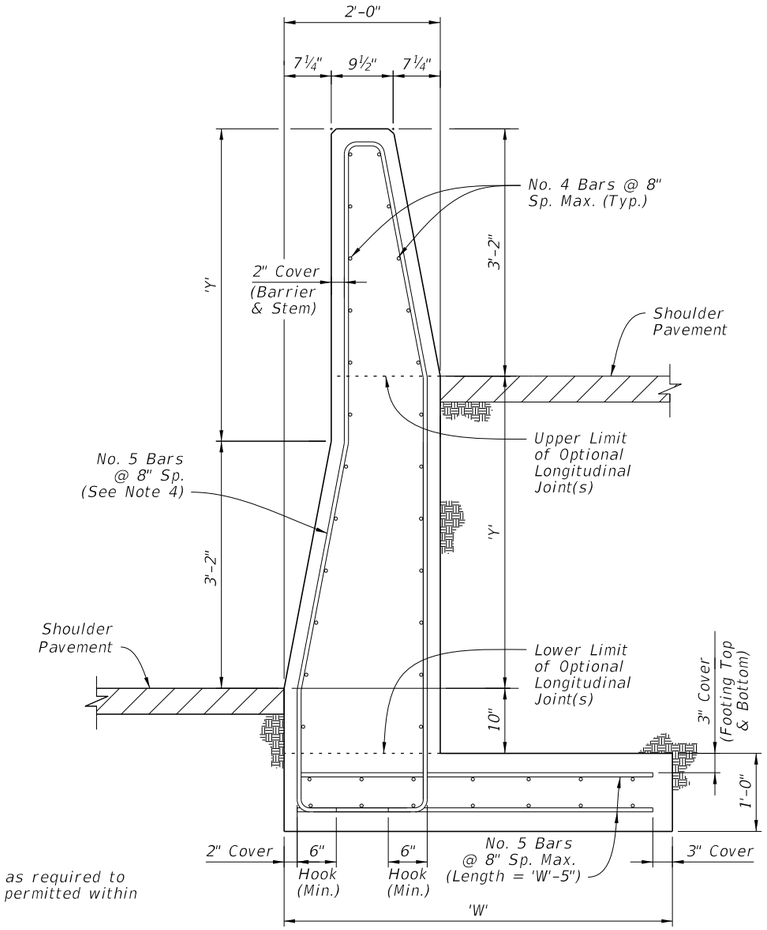

TALL GRADE-SEPARATED
HEEL FOOTING SECTION
FOR Y ≤ 4'-0"

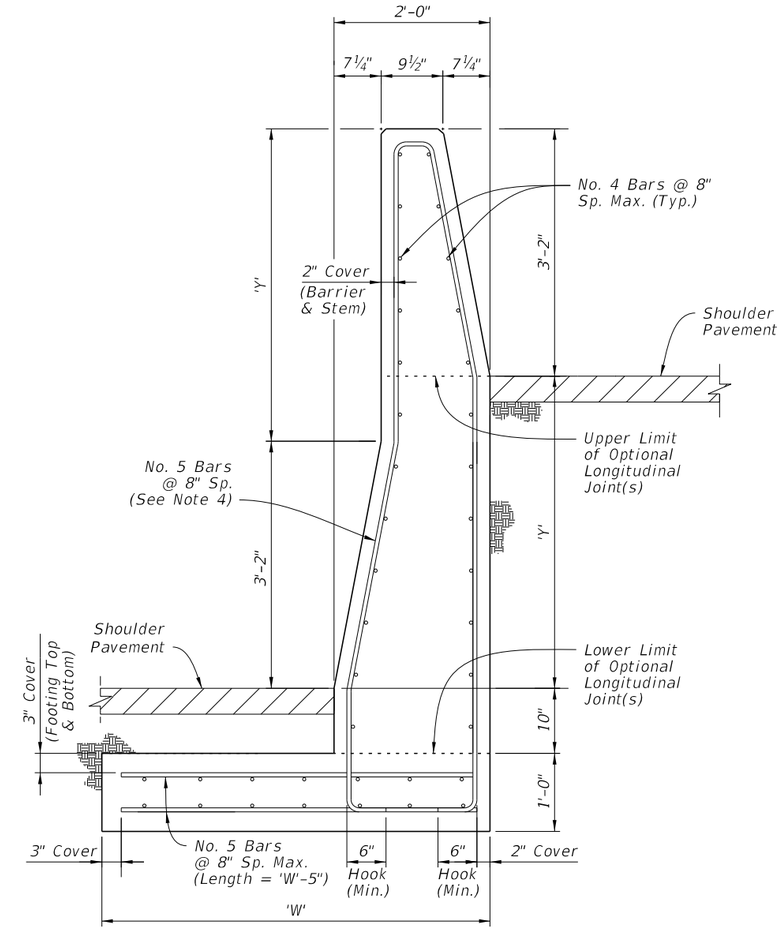

TALL GRADE-SEPARATED
TOE FOOTING SECTION
FOR Y ≤ 4'-0"

NOTES:

1. GENERAL: Install the Grade-Separated sections where shown in the Plans and as required to accommodate vertical offsets in pavement of Height Y. Doweled Joints are not permitted within Grade-Separated sections.

2. CONNECTIONS BETWEEN DIFFERENT SECTIONS: Connect Short Grade-Separated sections and Tall Grade-Separated sections using a continuous pour or Transverse Joint, where longitudinal steel that aligns within the adjacent section is maintained continuously between sections or has a full lap splice with the adjacent section's longitudinal steel. Connect Short Grade-Separated sections and 38" Height Median Barrier sections of Sheet 2 using a ¾" Doweled Joint.

3. SHORT GRADE-SEPARATED SECTIONS: Bars 4C1 and the two uppermost longitudinal bars may be omitted for segments where Y < 2".

4. TALL GRADE-SEPARATED SECTIONS: For the vertical and transverse steel reinforcement shown in the Tall Grade-Separated Sections, bar bending diagrams are not provided due to varying section dimensions and Longitudinal Joint locations. Use any combination of spliced reinforcing steel to position the reinforcement with the same cover, spacing, continuity, and equivalent strength shown herein, as approved by the Engineer.

   Longitudinal Joints are permitted between the vertical limits shown, and must remain level and at a consistent height per each continuous casting of concrete. Longitudinal Joints may change elevations at Transverse Joint locations. Field bending of bars is permitted at Longitudinal Joint locations.

   Transverse Joints between Tall Grade-Separated Sections do not require continuous steel across the joint if the following conditions are met:

   i. The barrier length on both sides is at least 40 feet, where each segment has continuous steel reinforcement.
   ii. The barrier's vertical steel spacing is reduced to 4" O.C. for a total of 12 spaces on both sides of the joint.

   Grade separation Heights of Y ≤ 9" are permitted on a limited basis using the Tall Grade-Separated section; this is to accommodate cases where maintaining the spread footing through lower height segments is more practical than changing to the Short Grade-Separated section.

TALL GRADE-SEPARATED SECTIONS
DIMENSION TABLE

Max. Height, Y	1'-0"	1'-6"	2'-0"	2'-6"	3'-0"	3'-6"	4'-0"
Footing Width, W	3'-3"	3'-6"	3'-9"	4'-0"	4'-3"	4'-6"	4'-6"

MEDIAN BARRIER - GRADE-SEPARATED

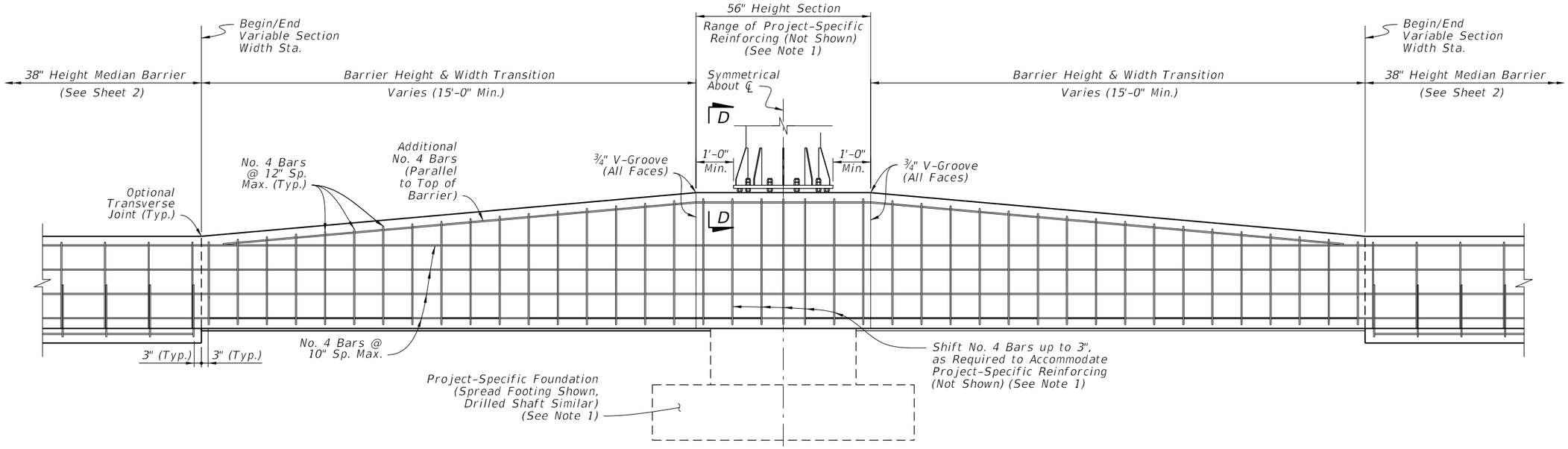

ELEVATION

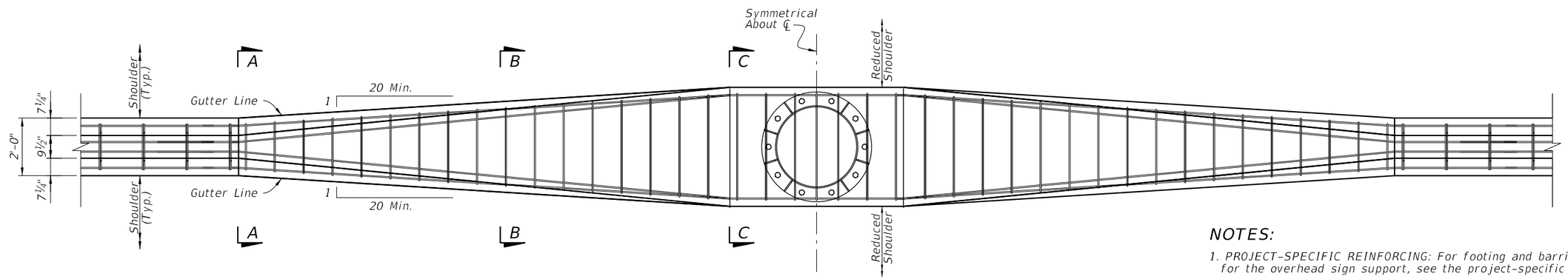

PLAN
(See Note 4)

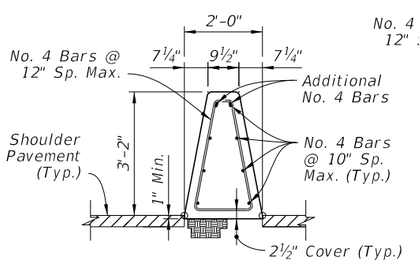

SECTION A-A
BEGIN TRANSITION

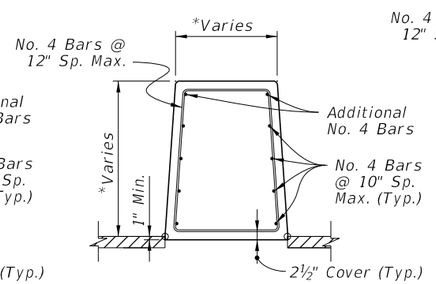

SECTION B-B
*Dimension Varies Linearly Between Section A-A and C-C

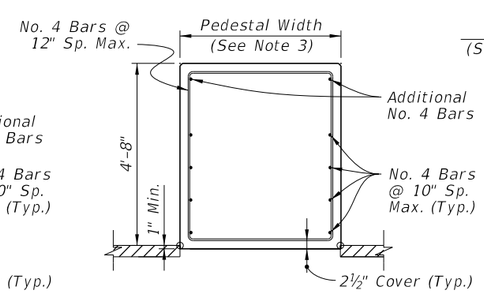

SECTION C-C
END TRANSITION
(56" Height Section)

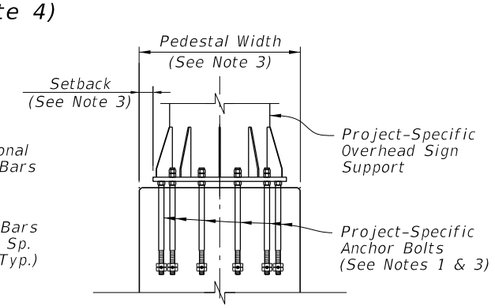

SECTION D-D
(Reinforcing Steel Not Shown for Clarity)

NOTES:

1. PROJECT-SPECIFIC REINFORCING: For footing and barrier reinforcing required for the overhead sign support, see the project-specific design in the Plans.

2. BARRIER REINFORCING: Maintain the 38" Height Median Barrier's longitudinal steel reinforcing continuously through the barrier height transition and pedestal. Provide the Additional No. 4 Bars and taper as required to maintain a 4½" maximum cover from the top of the barrier.

   For the vertical and transverse reinforcement requirements shown in Sections A-A through C-C, bar bending diagrams are not provided due to varying section dimensions. Use any combination of spliced reinforcing steel to position the reinforcement with the same cover, spacing, continuity, and equivalent strength shown herein, as approved by the Engineer.

3. PROJECT-SPECIFIC PEDESTAL WIDTH & SETBACK: The pedestal width is governed by the size requirements of the overhead sign support, as detailed in the Plans. Likewise, the setback distance from the sign support base to the barrier face is governed by the anchor bolt cover requirements, as defined per the Plans. The minimum pedestal width is 2'-0", where a complete removal of the gutter line taper is permitted.

4. PLAN VIEW: Only top and bottom longitudinal reinforcing is shown for clarity. For all longitudinal reinforcing locations, see the Section Views.

MEDIAN BARRIER - 56" HEIGHT SECTION FOR BARRIER-MOUNTED SIGN SUPPORT SHIELDING - SYMMETRICAL

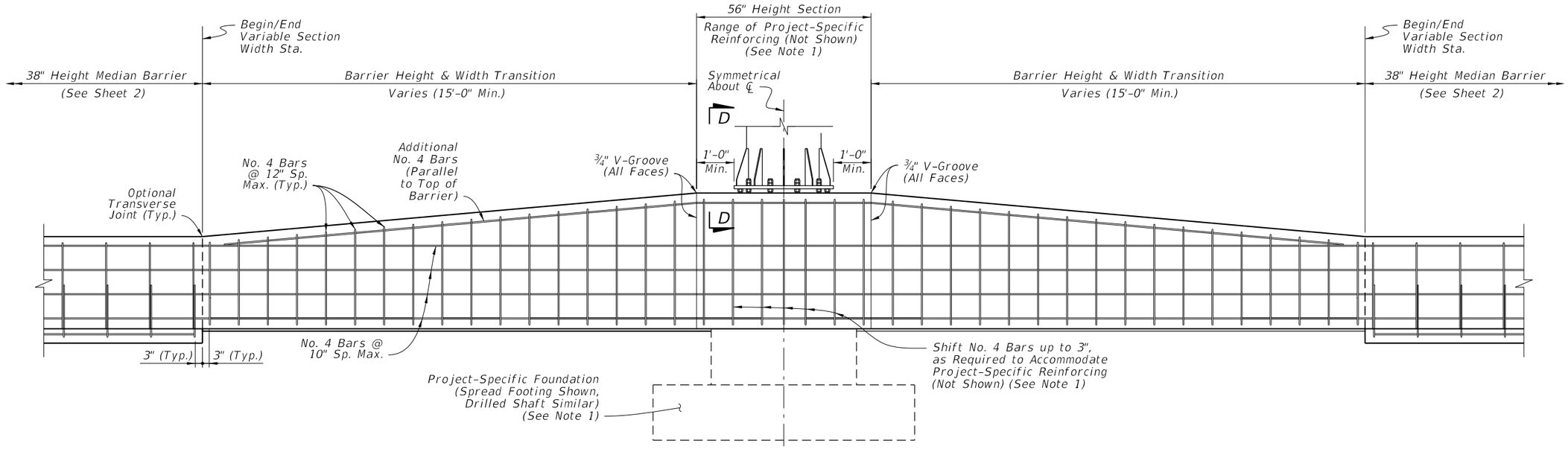

ELEVATION

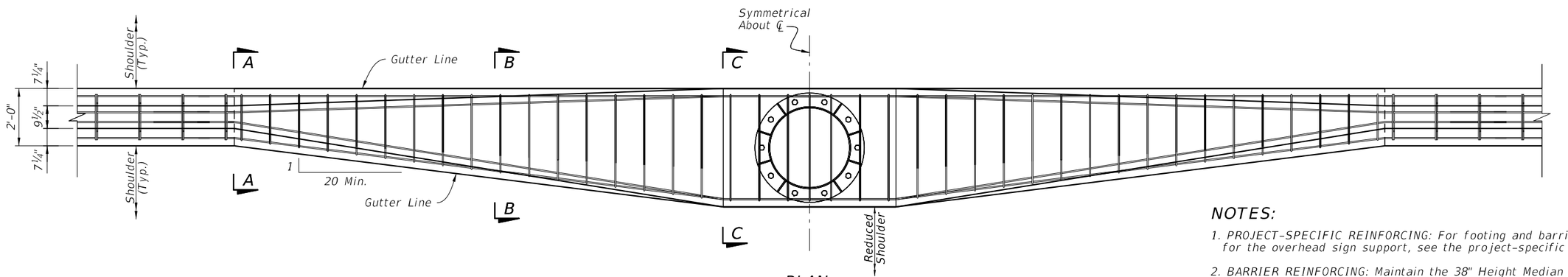

PLAN
(See Note 4)

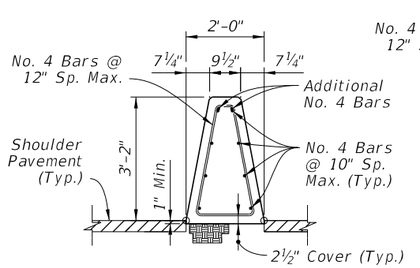

SECTION A-A
BEGIN TRANSITION

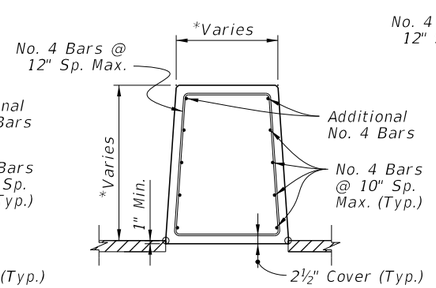

SECTION B-B
*Dimension Varies Linearly Between Section A-A and C-C

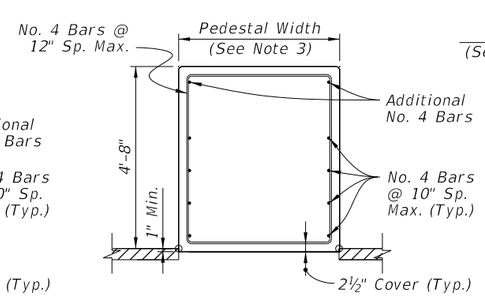

SECTION C-C
END TRANSITION
(56" Height Section)

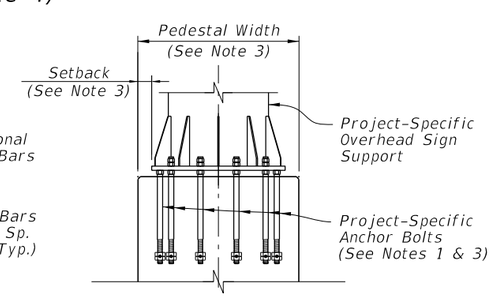

SECTION D-D
(Reinforcing Steel Not Shown for Clarity)

NOTES:

1. PROJECT-SPECIFIC REINFORCING: For footing and barrier reinforcing required for the overhead sign support, see the project-specific design in the Plans.

2. BARRIER REINFORCING: Maintain the 38" Height Median Barrier's longitudinal steel reinforcing continuously through the barrier height transition and pedestal. Provide the Additional No. 4 Bars and taper as required to maintain a 4½" maximum cover from the top of the barrier.

   For the vertical and transverse reinforcement requirements shown in Sections A-A through C-C, bar bending diagrams are not provided due to varying section dimensions. Use any combination of spliced reinforcing steel to position the reinforcement with the same cover, spacing, continuity, and equivalent strength shown herein, as approved by the Engineer.

3. PROJECT-SPECIFIC PEDESTAL WIDTH & SETBACK: The pedestal width is governed by the size requirements of the overhead sign support, as detailed in the Plans. Likewise, the setback distance from the sign support base to the barrier face is governed by the anchor bolt cover requirements, as defined per the Plans. The minimum pedestal width is 2'-0", where a complete removal of the gutter line taper is permitted.

4. PLAN VIEW: Only top and bottom longitudinal reinforcing is shown for clarity. For all longitudinal reinforcing locations, see the Section Views.

MEDIAN BARRIER - 56" HEIGHT SECTION FOR BARRIER-MOUNTED SIGN SUPPORT SHIELDING - ASYMMETRICAL

10/20/2022 8:50:50 AM

LAST REVISION	REVISION	DESCRIPTION:			INDEX	SHEET
11/01/18			FY 2023-24 STANDARD PLANS	CONCRETE BARRIER	521-001	7 of 26

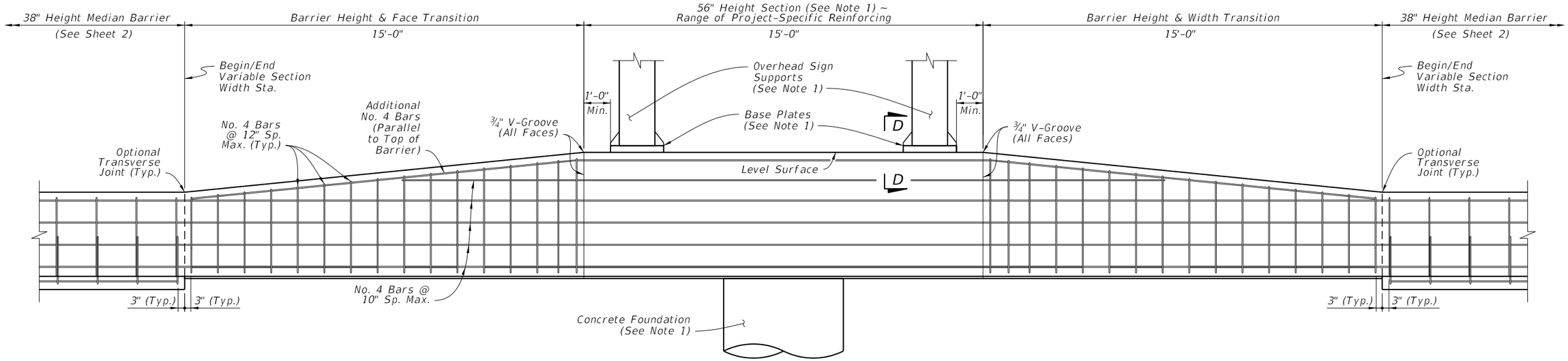

ELEVATION

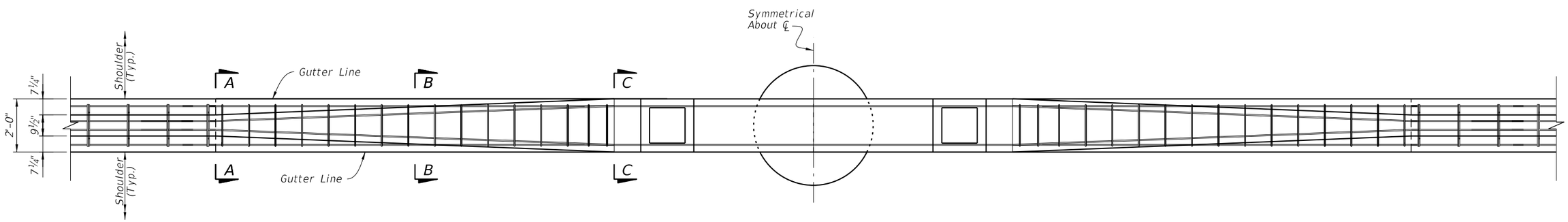

PLAN
(See Note 3)

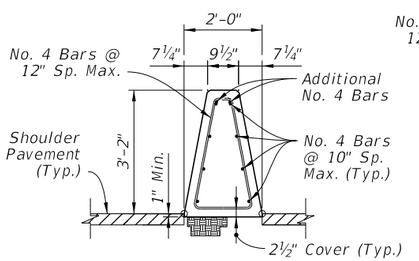

SECTION A-A
BEGIN TRANSITION

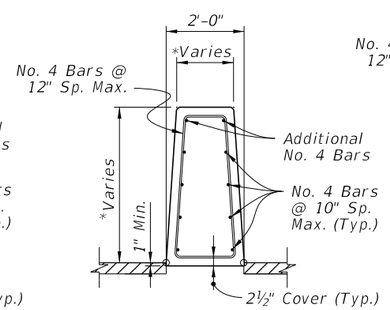

SECTION B-B
*Dimension Varies Linearly Between Section A-A and C-C

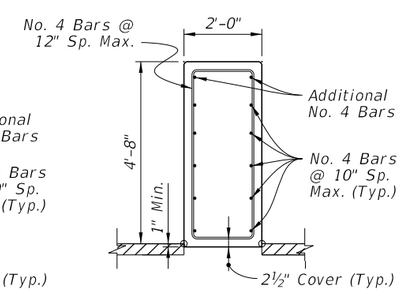

SECTION C-C
END TRANSITION
(56" Height Section)

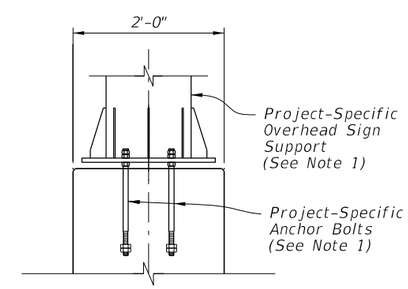

SECTION D-D
(Reinforcing Steel Not Shown for Clarity)

NOTES:

1. PROJECT-SPECIFIC DESIGN: For the base plate, anchor bolts, foundation design, and additional reinforcing required for the barrier, see the project-specific design in the Plans.

2. BARRIER REINFORCING: Maintain the 38" Height Median Barrier's longitudinal steel reinforcing continuously through the barrier height transition and pedestal. Provide the Additional No. 4 Bars and taper as required to maintain a 4½" maximum cover from the top of the barrier.

   For the vertical and transverse reinforcement requirements shown in Sections A-A through C-C, bar bending diagrams are not provided due to varying section dimensions. Use any combination of spliced reinforcing steel to position the reinforcement with the same cover, spacing, continuity, and equivalent strength shown herein, as approved by the Engineer.

3. PLAN VIEW: Only top and bottom longitudinal reinforcing is shown for clarity. For all longitudinal reinforcing locations, see the Section Views.

MEDIAN BARRIER - 56" HEIGHT SECTION FOR BARRIER-MOUNTED DUAL SIGN SUPPORT SHIELDING - MINIMUM WIDTH

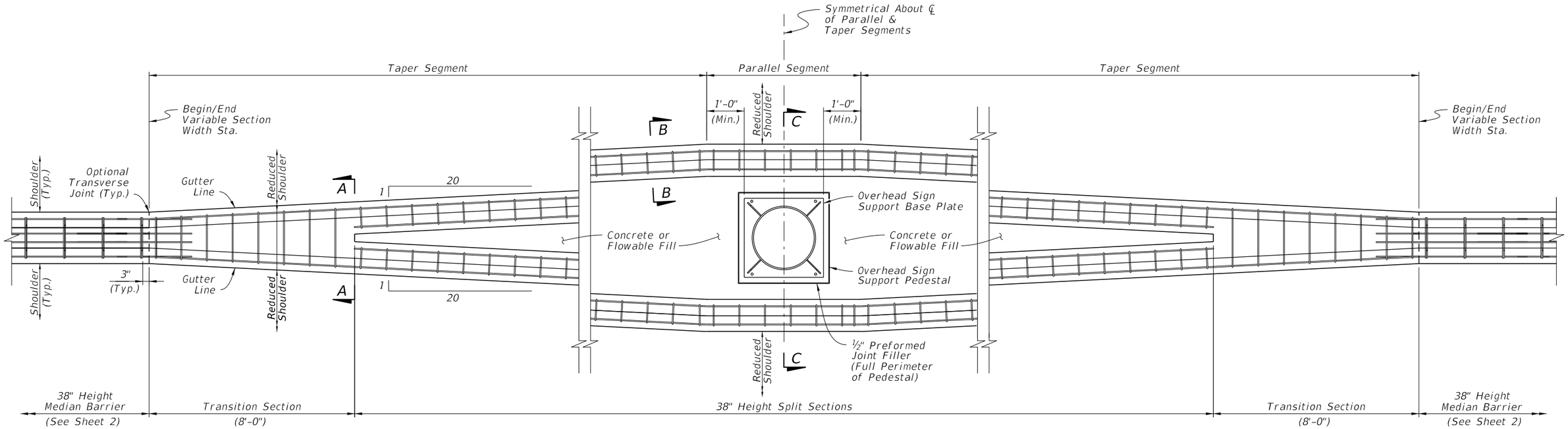

PLAN
(See Note 3)

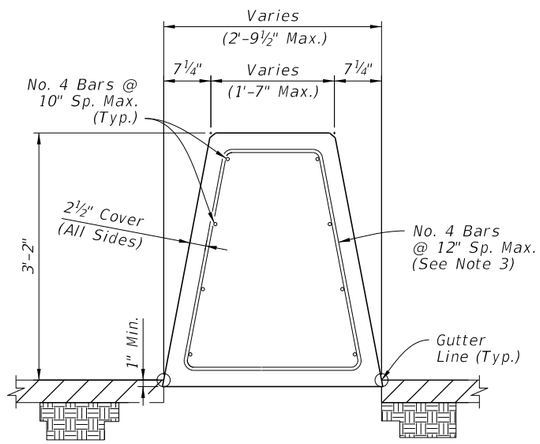

SECTION A-A
TRANSITION SECTION
(AT BEGIN
SPLIT SECTIONS)

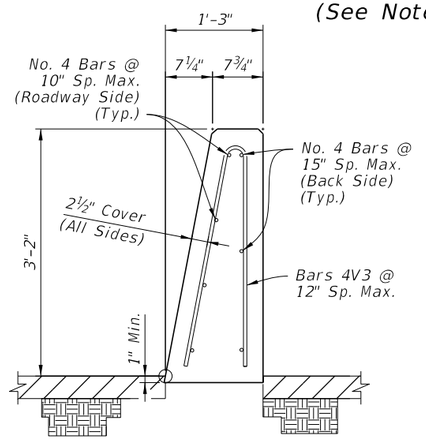

SECTION B-B
38" HEIGHT SPLIT SECTION
(OPPOSITE SIDE SIMILAR
BY OPPOSITE HAND)

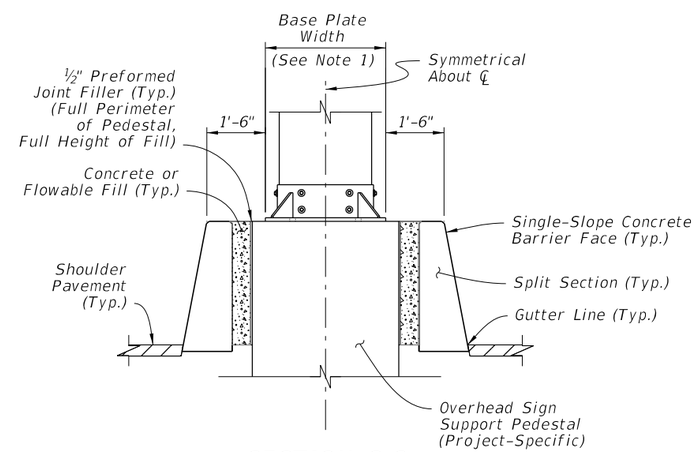

SECTION C-C

NOTES:

1. OVERHEAD SIGN SUPPORT: The overhead sign support shown is an example only; see the Plans for the project-specific dimensions and requirements. The overall length and width of the barrier's taper and parallel segments is governed by the overhead sign support dimensions as defined in the Plans.

2. MULTIPLE SIGN SUPPORTS: The parallel segment may be lengthened to accommodate multiple sign supports, with the approach and trailing tapers located 1 foot, measured longitudinally, upstream and downstream from the first and last sign support bases, respectively.

3. PLAN VIEW: Only outermost longitudinal reinforcing is shown for clarity. For all longitudinal reinforcing locations, see the Section Views.

4. STIRRUP BARS: For the vertical and transverse reinforcement requirements shown in Sections A-A, bar bending diagrams are not provided due to varying section dimensions. Use any combination of spliced reinforcing steel to position the reinforcement with the same cover, spacing, continuity, and equivalent strength shown herein, as approved by the Engineer.

5. CONCRETE OR FLOWABLE FILL: Use Class NS Concrete in accordance with Specification 347 or Non-Excavatable Flowable Fill in accordance with Specification 121.

MEDIAN BARRIER - 38" HEIGHT SPLIT SECTION FOR STAND-ALONE SIGN SUPPORT SHIELDING

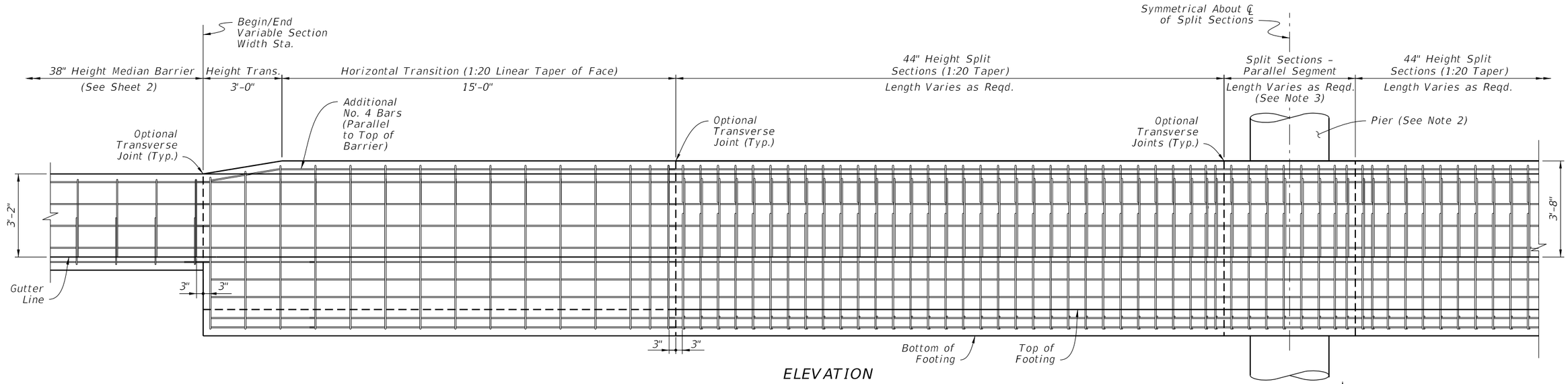

ELEVATION

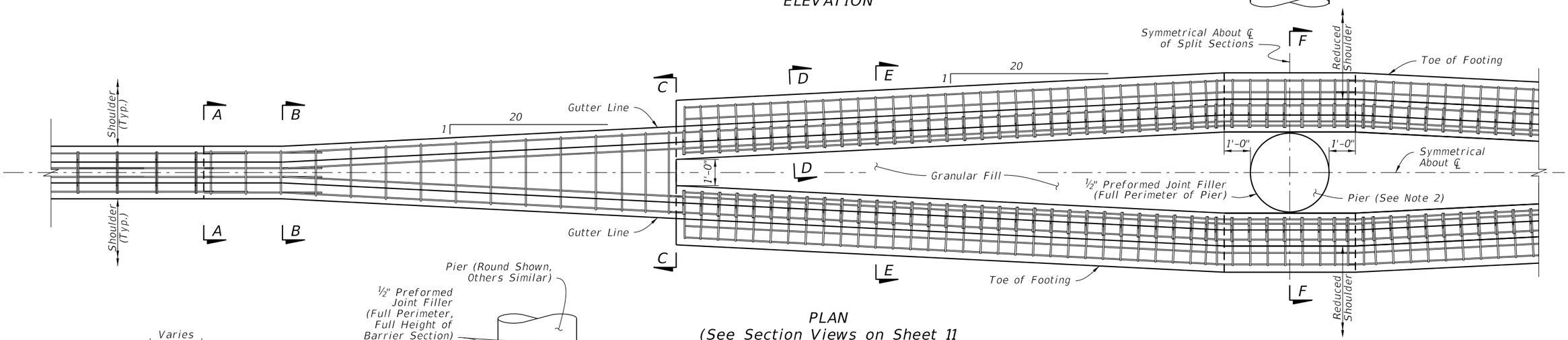

PLAN
(See Section Views on Sheet 11
for All Longitudinal Steel Locations)

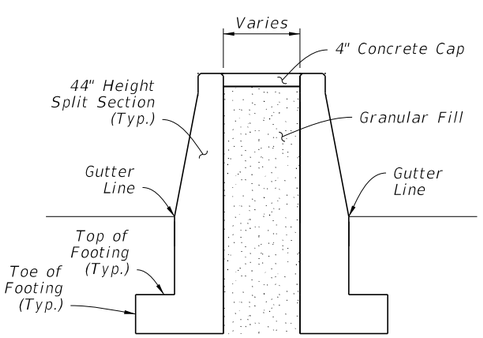

SECTION E-E
SPLIT SECTIONS

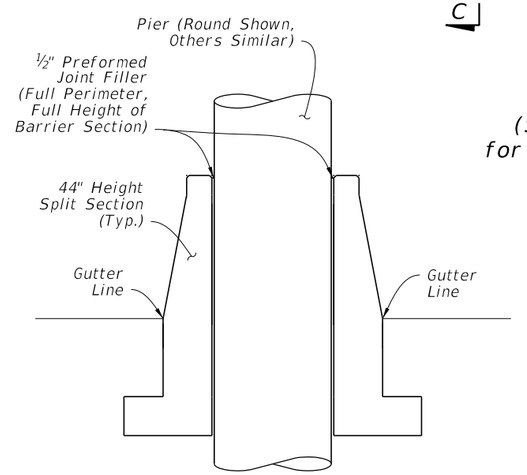

SECTION F-F
SPLIT SECTIONS AT PIER

NOTES:

1. SECTION VIEWS: See Sheet 11 for Section Views A-A through D-D and corresponding reinforcing steel details.
2. PIER: The round pier shown is an example only, and project-specific pier shapes may vary. For actual dimensions and requirements, see the Plans. The overall length and width of the split barrier system is governed by the project-specific pier dimensions, as defined in the Plans.
3. MULTIPLE PIERS: The parallel segment may be lengthened to accommodate multiple consecutive piers, with the approach and trailing tapers located 1 foot, measured longitudinally, upstream and downstream from the first and last piers, respectively.

MEDIAN BARRIER - 44" HEIGHT SPLIT SECTION FOR PIER SHIELDING

10/20/2022 8:50:53 AM

LAST REVISION	REVISION	DESCRIPTION:			INDEX	SHEET
11/01/18			FY 2023-24 STANDARD PLANS	CONCRETE BARRIER	521-001	10 of 26

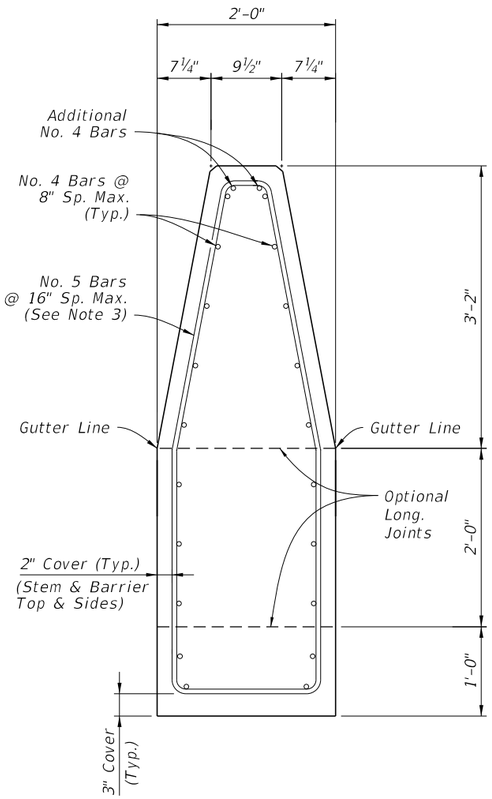

SECTION A-A
BEGIN HEIGHT TRANSITION
(show spliced bars)

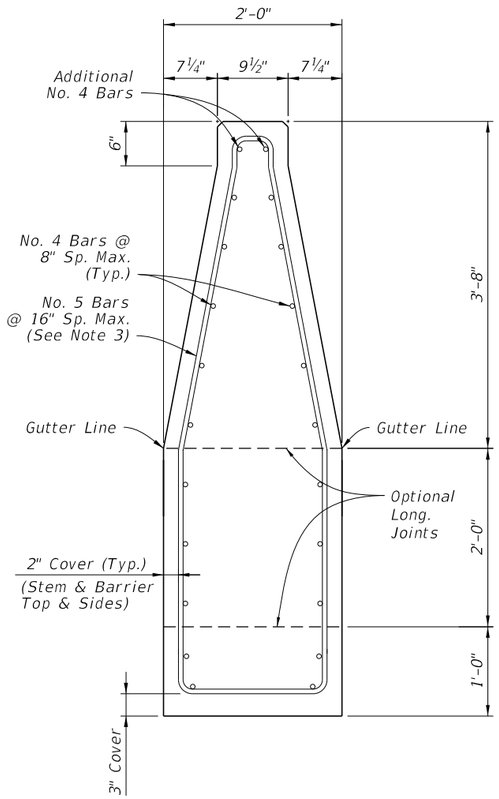

SECTION B-B
END HEIGHT TRANSITION
BEGIN WIDTH TRANSITION

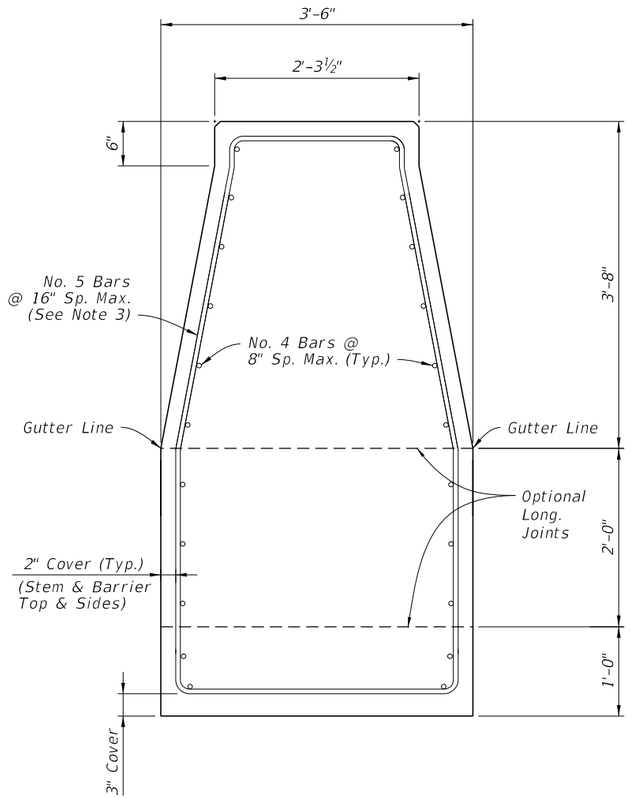

SECTION C-C
END WIDTH TRANSITION
BEGIN SPLIT SECTIONS

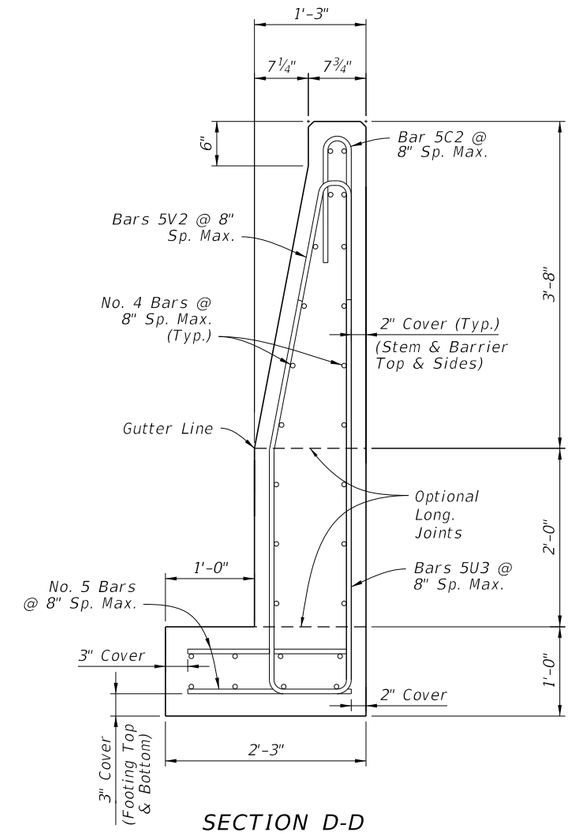

SECTION D-D
44" HEIGHT SPLIT SECTION
(Opposite Side of Median
Similar by Opposite Hand)

Concrete Qty. = 0.30 CY/FT
Steel Qty. = 52.6 LB/FT

NOTES:

1. GENERAL: Work with the Plan and Elevation views on Sheet 10.
2. LONGITUDINAL REINFORCING CONTINUITY: Maintain all longitudinal steel reinforcing shown in Section C-C continuously into Section D-D (spliced where required). The additional longitudinal reinforcing shown in Section D-D does not require continuity into Section C-C, and it starts 3" from the construction joint or edge of concrete per the details on Sheet 10.
3. STIRRUP BARS: For the vertical and transverse reinforcement requirement shown, bar bending diagrams are not provided due to varying section dimensions. Use any combination of spliced reinforcing steel to position the reinforcement with the same cover, spacing, continuity, and equivalent strength shown herein, as approved by the Engineer.

MEDIAN BARRIER - 44" HEIGHT
SPLIT SECTION FOR PIER SHIELDING - DETAILS

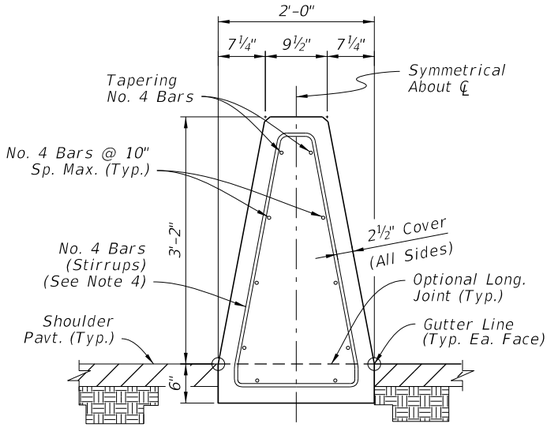

SECTION A-A
BEGIN TRANSITION - OPTION 'A'
MATCH SINGLE-SLOPE
38" HEIGHT MEDIAN BARRIER

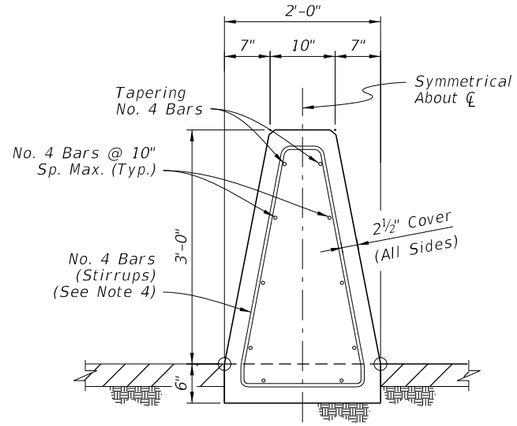

SECTION A-A
BEGIN TRANSITION - OPTION 'B'
MATCH SINGLE-SLOPE
36" HEIGHT TRAFFIC RAILING
(Bridge Applications)

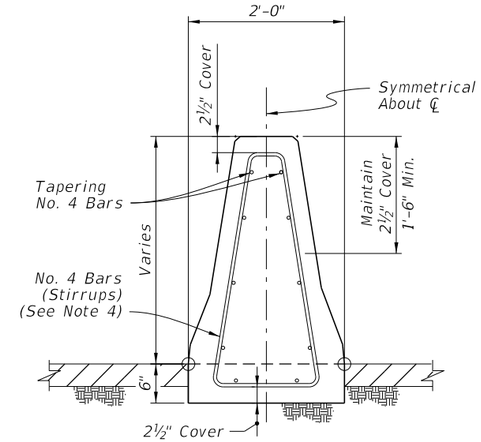

SECTION B-B
INTERMEDIATE SECTION
OF LINEAR TRANSITION

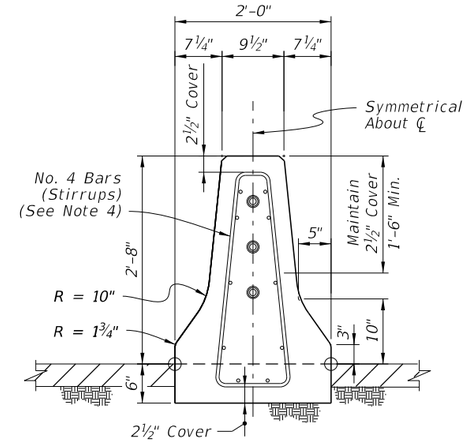

SECTION C-C
END TRANSITION
MATCH 32" HEIGHT
F-SHAPE SECTION

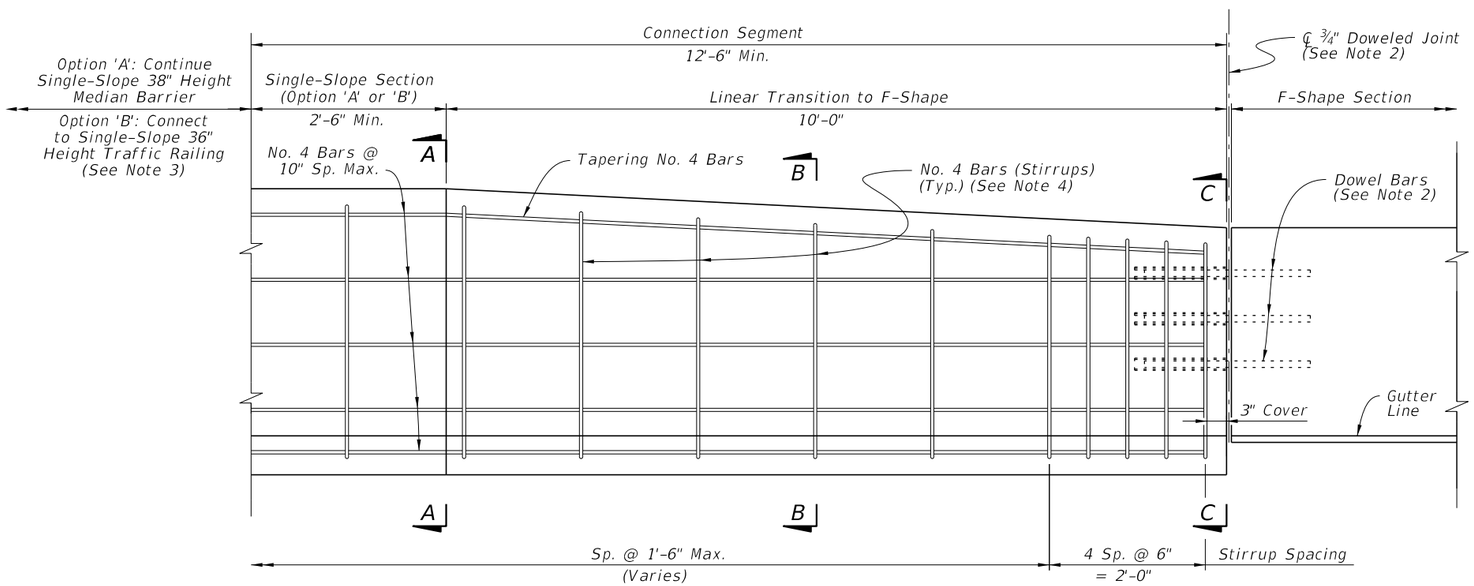

ELEVATION
(Reverse Direction Similar
by Opposite Hand)

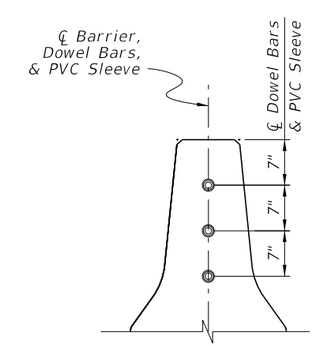

SECTION - F-SHAPE
DOWEL PLACEMENT
(See Note 2)

NOTES:

1. GENERAL: Construct the Connection Segment as required per the Plans to connect existing F-Shape sections to Single-Slope Median Barrier or Traffic Railing sections. Construct Option 'A' or 'B' as required to match the heights of the connecting sections.
2. DOWELED JOINT: Install Dowel Bars per the Dowel Details on Sheet 2.
3. TRAFFIC RAILING CONNECTION: For the Option 'B' connection, use a Doweled Joint per Sheet 2 and the additional Free End Reinforcing with reduced bar spacing per Sheet 3.
4. STIRRUP BARS: For the vertical and transverse reinforcement requirements shown, bar bending diagrams are not provided due to varying section dimensions. Use any combination of spliced reinforcing steel to position the reinforcement with the same cover, spacing, continuity, and equivalent strength shown herein, as approved by the Engineer.

MEDIAN BARRIER - CONNECTION TO F-SHAPE

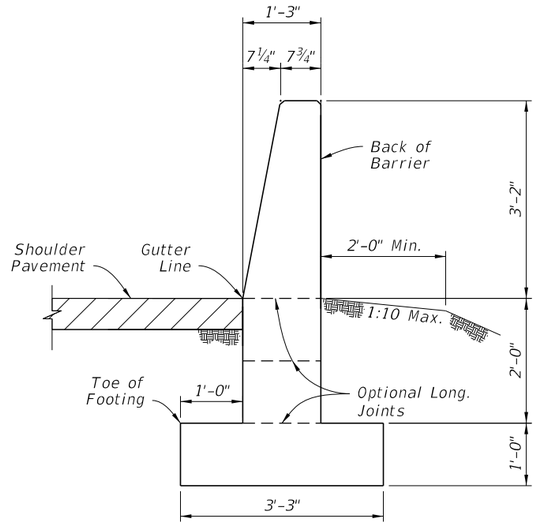

SECTION A-A
38" HEIGHT SHOULDER BARRIER
(See Sheet 14 for
Reinforcing Steel Details)

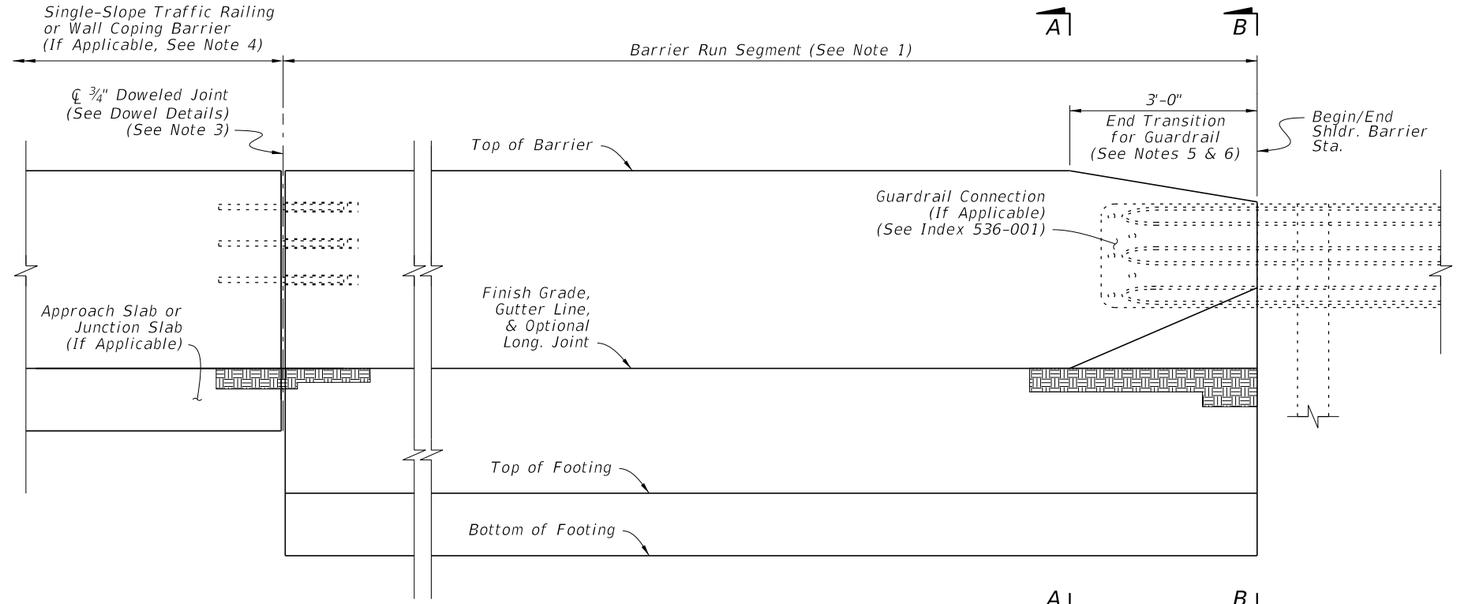

ELEVATION

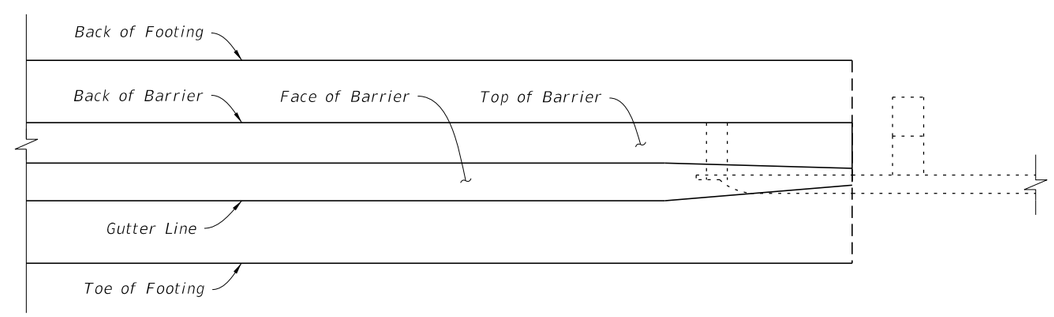

PLAN

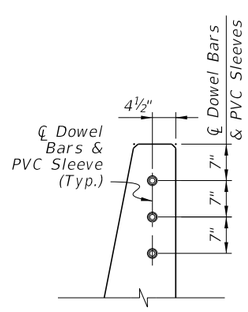

SECTION
DOWEL PLACEMENT

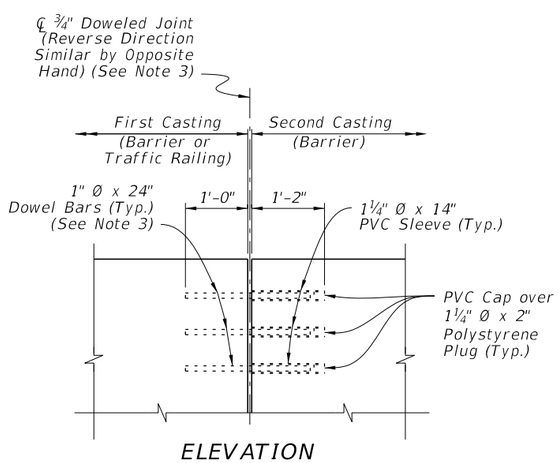

ELEVATION
DOWEL BAR & PVC
CONNECTION

DOWEL DETAILS

SHOULDER BARRIER NOTES:

1. BARRIER RUN SEGMENT: Either the 38" Height Shoulder Barrier or the differing Shoulder Barrier sections shown throughout the Index may be placed within this segment as required per the Plans.
2. SECTION VIEWS: For additional Views A-A and B-B, see Sheet 14.
3. DOWELED JOINTS: See the General Notes on Sheet 1 for usage of joint types. Place steel reinforcing with a longitudinal 3" cover adjacent to the joint face in the barrier. Use ASTM A36 smooth round bars with hot-dip galvanization.

   For the dowel connection into the first casting, the dowel may be cast-in-place for new concrete or placed into a 1⅛"∅ x 13"(± ½") drilled hole for cured concrete. For drilled holes larger than 1⅛"∅, secure the dowel with adhesive in accordance with Specification 416. No load testing is required.

   For the dowel connection into the second casting, use a 1¼" NPS Schedule 80 PVC pipe with a sealed cap, cast-in-place as shown.
4. TRAFFIC RAILING CONNECTIONS: Align the barrier and Traffic Railing faces and connect with the ¾" Doweled Joint.
5. GUARDRAIL CONNECTIONS: Connect Guardrail using the Transition Connections to Rigid Barrier per Index 536-001.
6. CRASH CUSHION CONNECTIONS: Connect Crash Cushions per Index 544-001 in conjunction with the 3'-0" End Transition for Guardrail as shown herein.
7. FREE ENDS: When the barrier end does not terminate with a Traffic Railing Connection, Guardrail Connection, or Crash Cushion Connection as called for in the Plans, terminate in accordance with the Free End Reinforcing Note on Sheet 14.

SHOULDER BARRIER

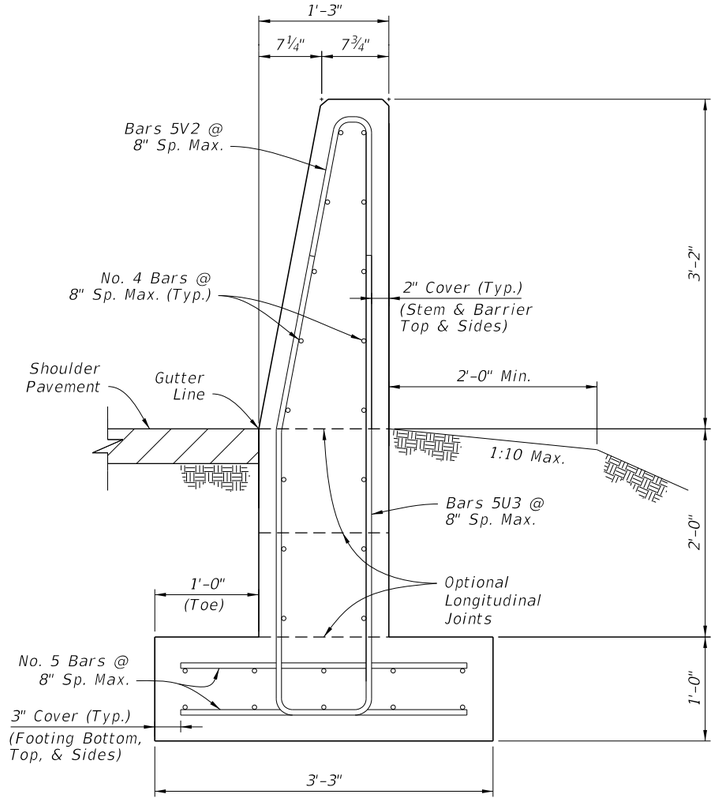

SECTION A-A
38" HEIGHT SHOULDER BARRIER

Concrete Qty. = 0.32 CY/FT
Steel Qty. = 50.9 LB/FT

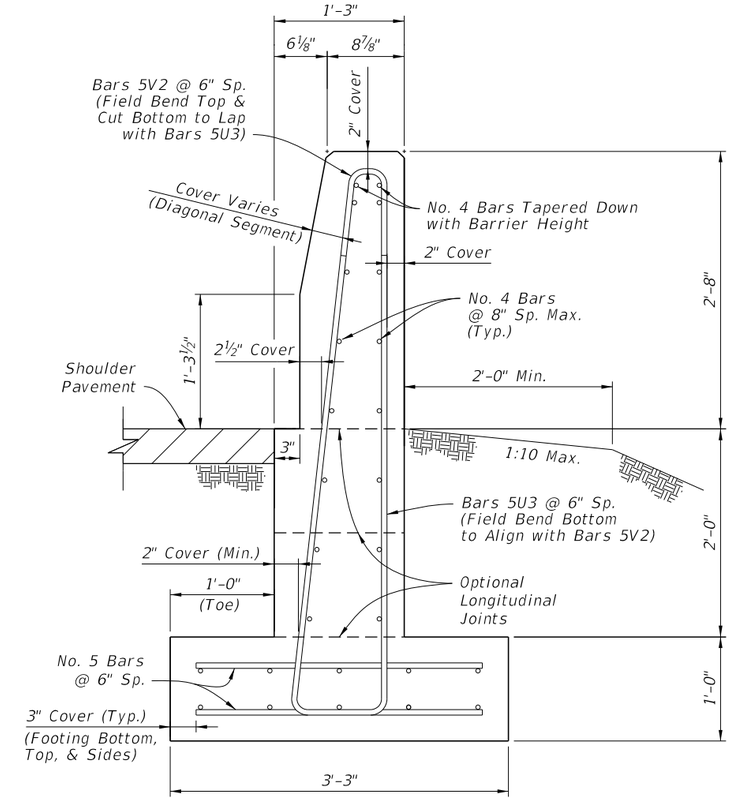

VIEW B-B
REDUCED SECTION OF
END TRANSITION
FOR GUARDRAIL
(End of Barrier)

NOTES:

1. GENERAL: Work with the Plan and Elevation Views on Sheet 13. The Section Option footings shown on Sheet 15 may be substituted where called for in the Plans.

2. FREE END REINFORCING: Where shown in the Plans, terminate the 38" Height Barrier section with a transverse vertical end face. Reduce the spacing of Bars 5V2 and 5U3 to 6" for 5 Spaces, placed with 3" cover from the barrier's end face.

3. BAR BENDING DIAGRAMS: For additional details for bars 5V2 and 5U3, see the Bar Bending Diagrams on Sheet 26.

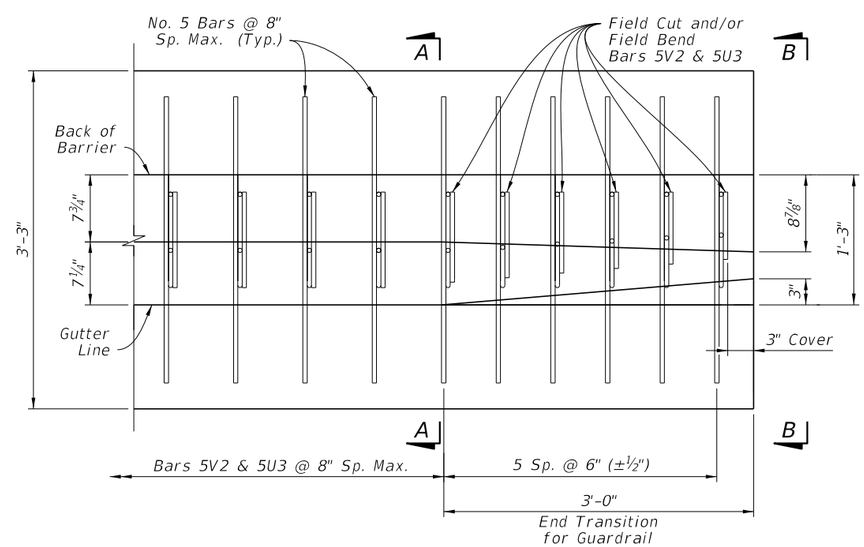

PLAN VIEW - END SEGMENT FOR GUARDRAIL CONNECTION
(Longitudinal Steel Not Shown for Clarity)

SHOULDER BARRIER - REINFORCING DETAILS

LAST REVISION	REVISION	DESCRIPTION:			INDEX	SHEET
11/01/18			FY 2023-24 STANDARD PLANS	CONCRETE BARRIER	521-001	14 of 26

10/20/2022 8:50:56 AM

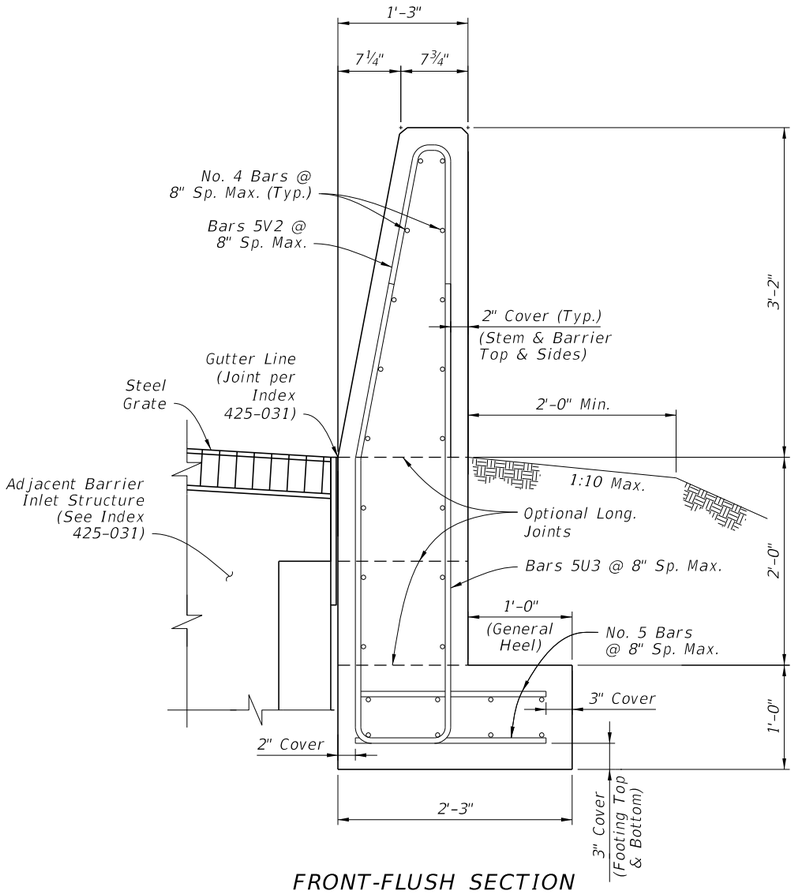

FRONT-FLUSH SECTION
(Where Required For Barrier Inlet Locations)

Concrete Qty. = 0.29 CY/FT
Steel Qty. = 46.6 LB/FT

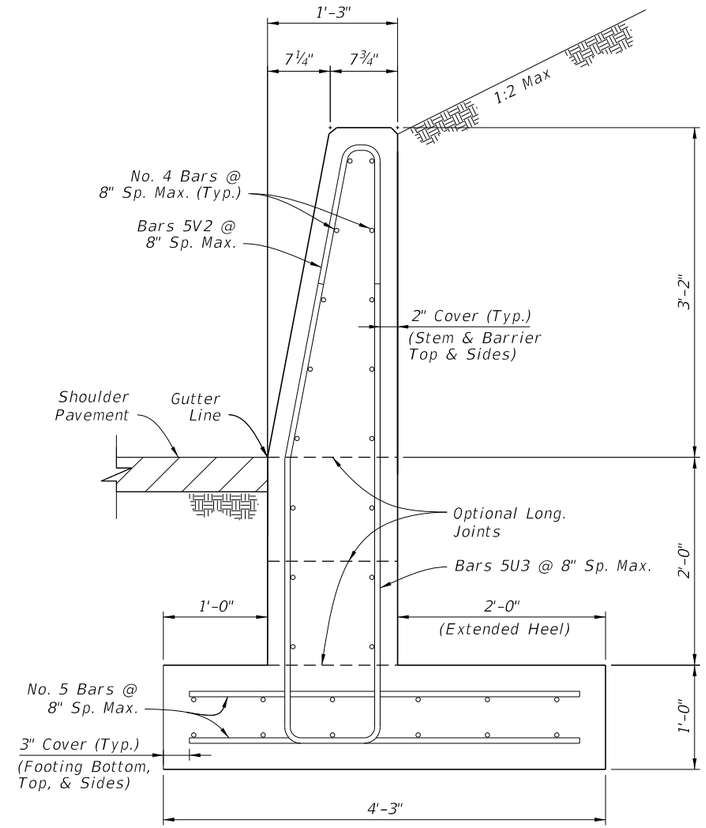

RETAINING SECTION

Concrete Qty. = 0.36 CY/FT
Steel Qty. = 55.3 LB/FT

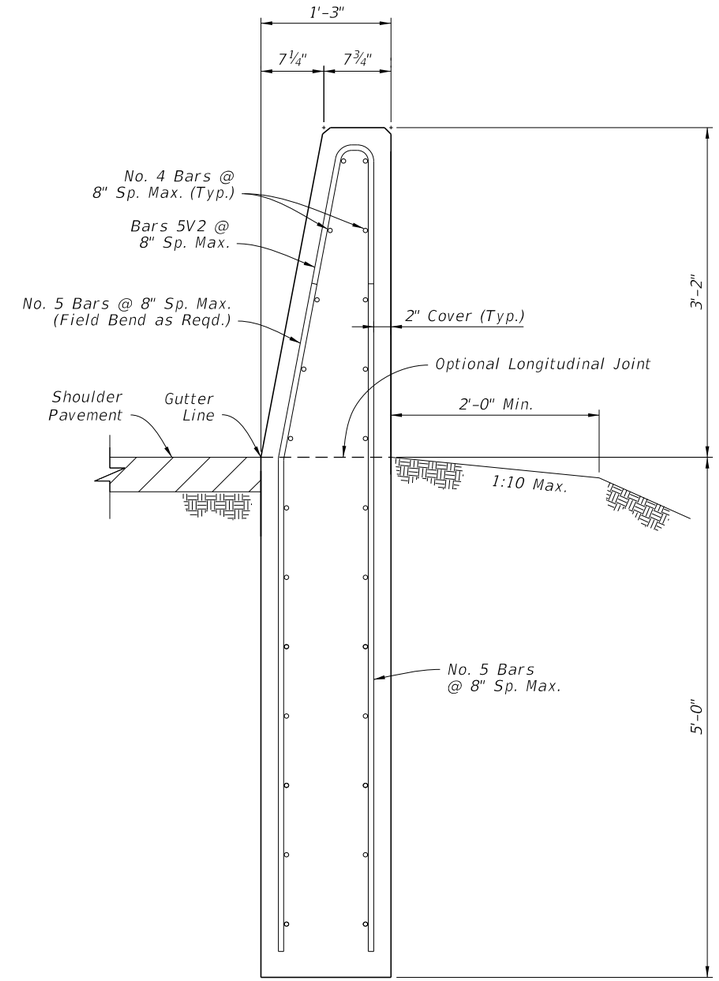

TRENCH FOOTING SECTION

Concrete Qty. = 0.35 CY/FT
Steel Qty. = 46.2 LB/FT

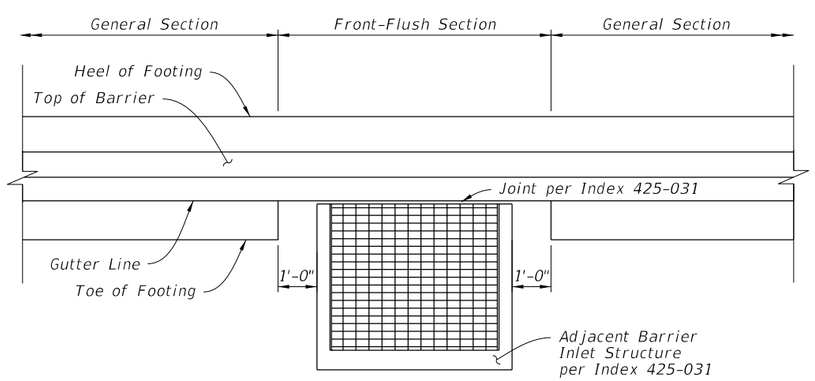

FRONT-FLUSH SECTION - PLAN VIEW
(Not Applicable for Trench Footing Sections)

NOTES:

1. GENERAL: Install the differing Section Options as required per the Plans.
2. CONNECTIONS BETWEEN DIFFERENT SECTIONS: Connect differing Shoulder Barrier sections using a continuous pour or Transverse Joint, where longitudinal steel that aligns within the adjacent section is maintained continuously between sections. Alternatively, a Doweled Joint may be used as shown on Sheet 13.
3. FLUSH RETAINING SECTION COMBINATION: Where Barrier Inlets are required in retaining segments, install the Flush Section, except replace the 1'-0" General Heel with the 2'-0" Extended Heel as shown in the Retaining Section. Use longer lateral reinforcing bars of 2'-10" length to maintain the cover shown.

SHOULDER BARRIER - SECTION OPTIONS

NOTES:

1. GENERAL: See the applicable Notes on Sheet 15.
2. DRAINAGE SLOT OPTION: Use only where called for in the Plans. Drainage Slots may be used for all Shoulder Barrier types except for the Trench Footing Section.

   Bars 5V2 and 5U3 may exceed 8 inch spacing to accommodate Drainage Slots as shown. Bars 5U3 require pairing on both sides of slots.

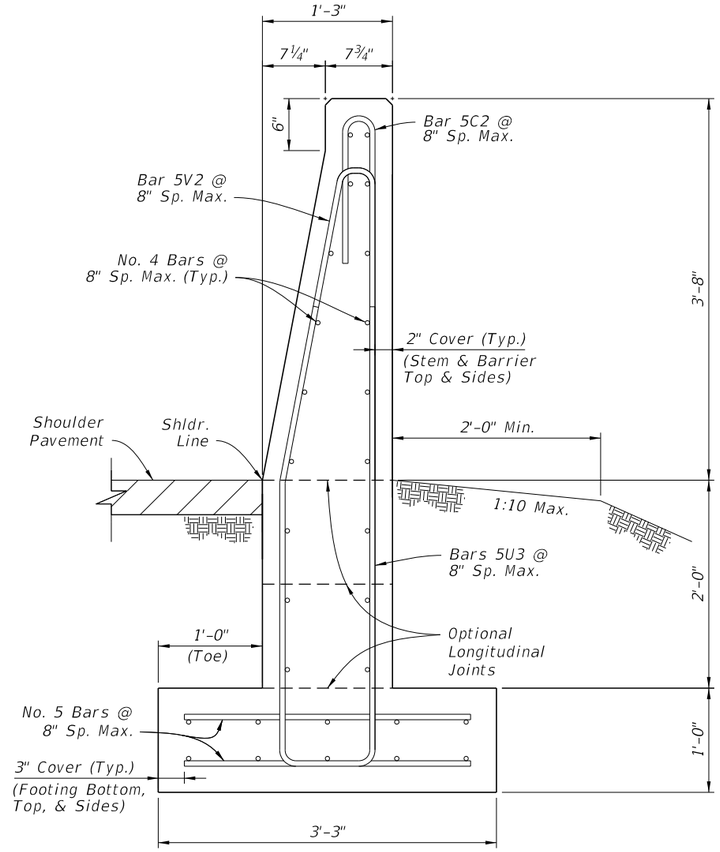

44" HEIGHT SECTION
(For Use Adjacent to Rear-Flush Section on Sheet 18)

Concrete Qty. = 0.34 CY/FT
Steel Qty. = 56.8 LB/FT

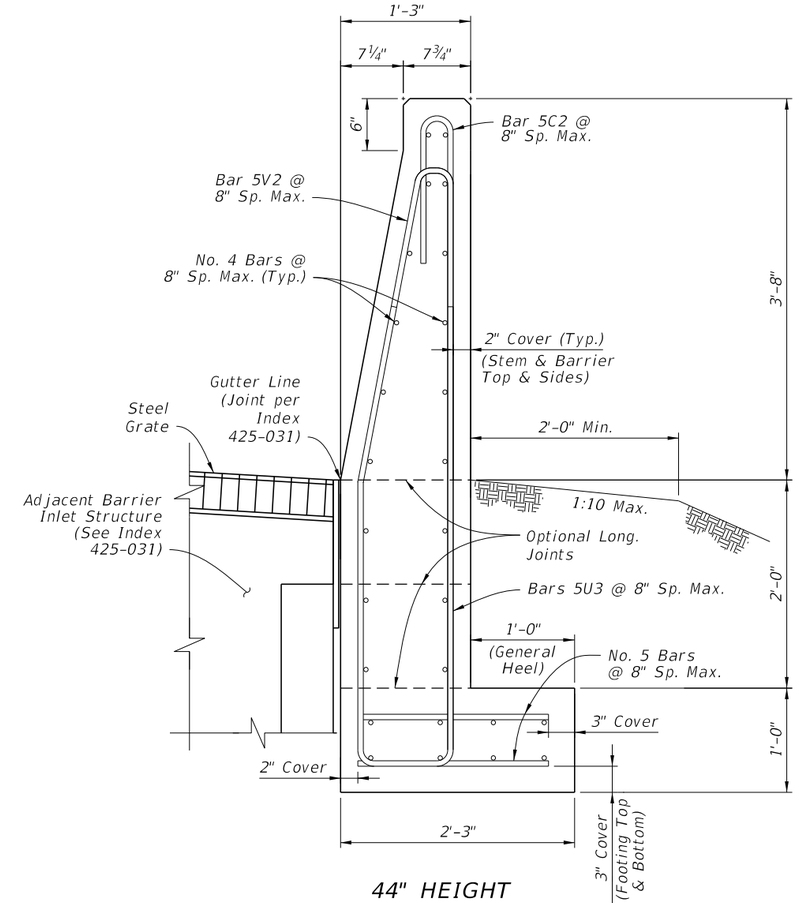

44" HEIGHT
FRONT-FLUSH SECTION
(For Use Adjacent to Rear-Flush Section on Sheet 18, as Required for Barrier Inlets)

Concrete Qty. = 0.30 CY/FT
Steel Qty. = 52.6 LB/FT

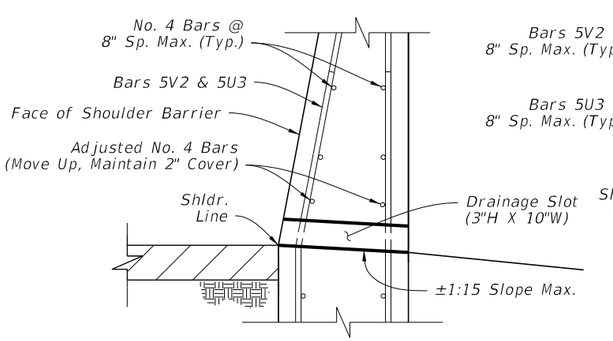

DRAINAGE SLOT SECTION
(See Note 2)

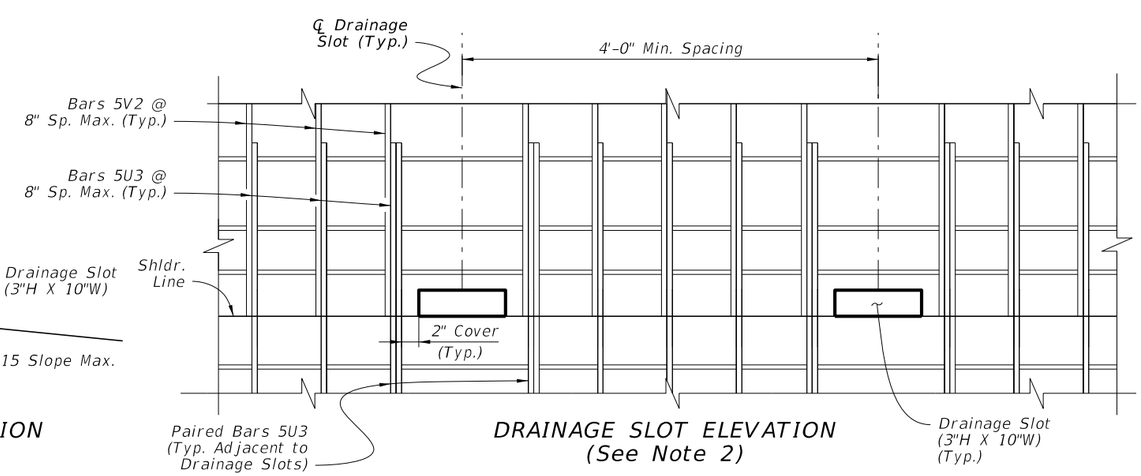

DRAINAGE SLOT ELEVATION
(See Note 2)

SHOULDER BARRIER -
SECTION OPTIONS (CONTINUED)

10/20/2022 8:50:58 AM

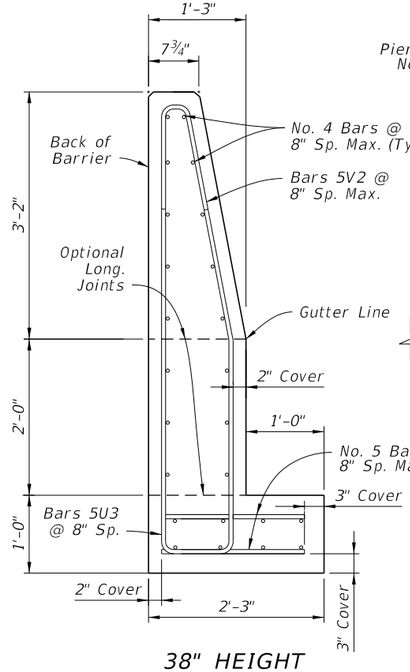

38" HEIGHT
REAR-FLUSH SECTION

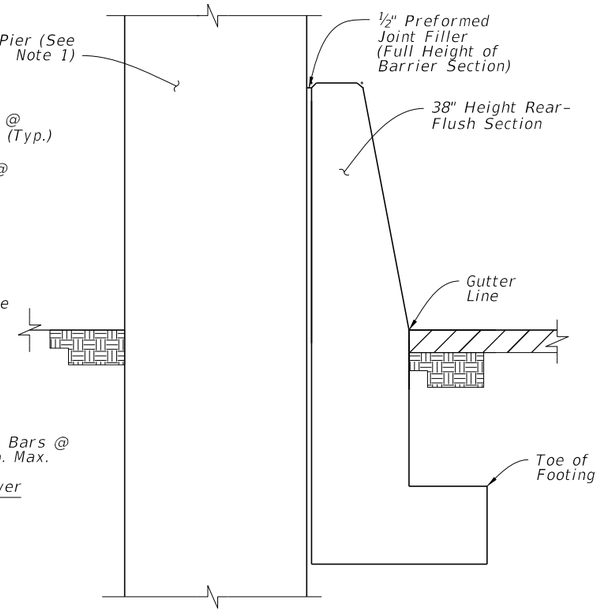

SECTION A-A
ABOVE-GROUND HAZARD
EMBEDDED IN FOOTING

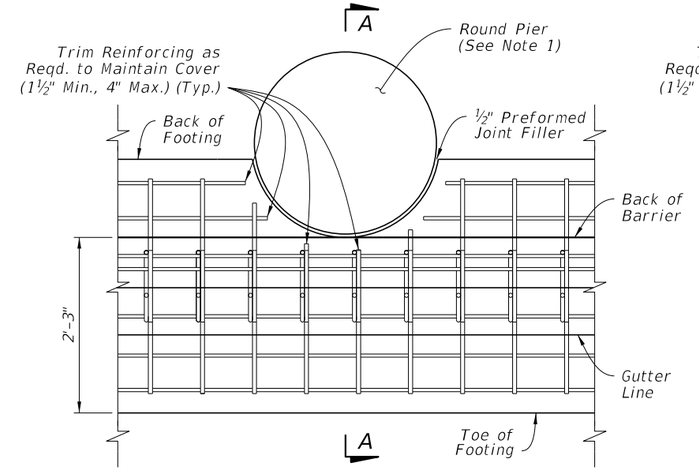

PLAN - ROUND PIER EXAMPLE
REAR-FLUSH SECTION
(See Section View for All
Longitudinal Steel Locations)

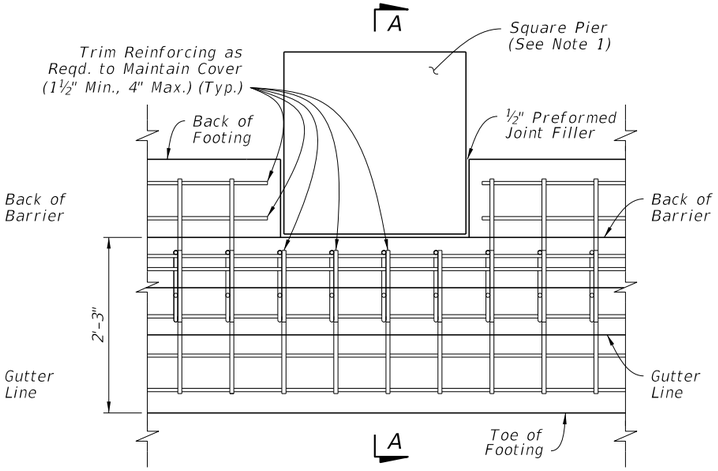

PLAN - SQUARE PIER EXAMPLE
REAR-FLUSH SECTION
(See Section View for All
Longitudinal Steel Locations)

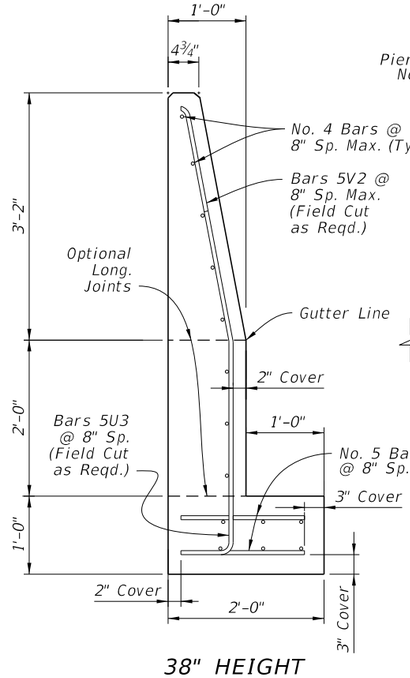

38" HEIGHT
REAR-FLUSH SECTION
WITH 3" WIDTH REDUCTION

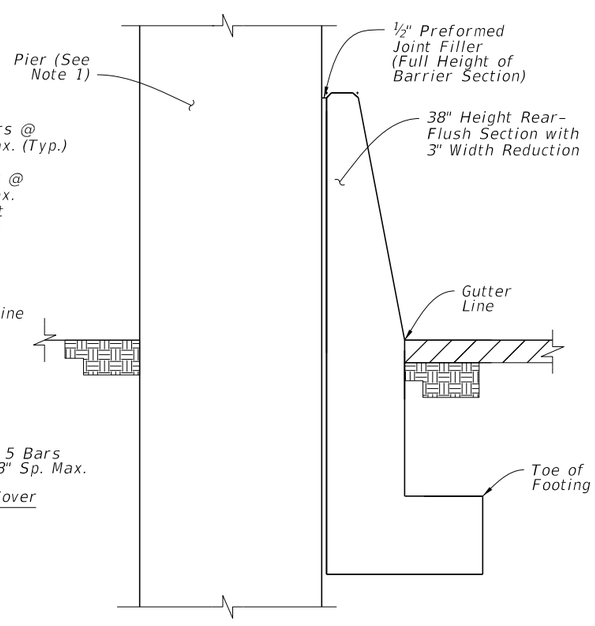

SECTION B-B
ABOVE-GROUND HAZARD
EMBEDDED IN FOOTING
& BARRIER

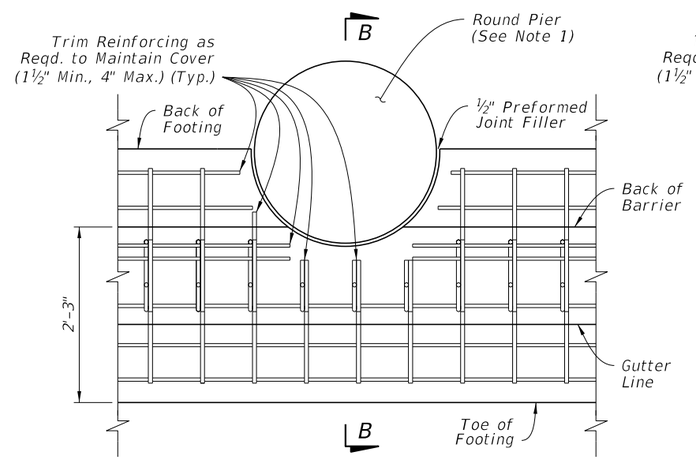

PLAN - ROUND PIER EXAMPLE
REAR-FLUSH SECTION
WITH 3" WIDTH REDUCTION
(See Section View for All
Longitudinal Steel Locations)

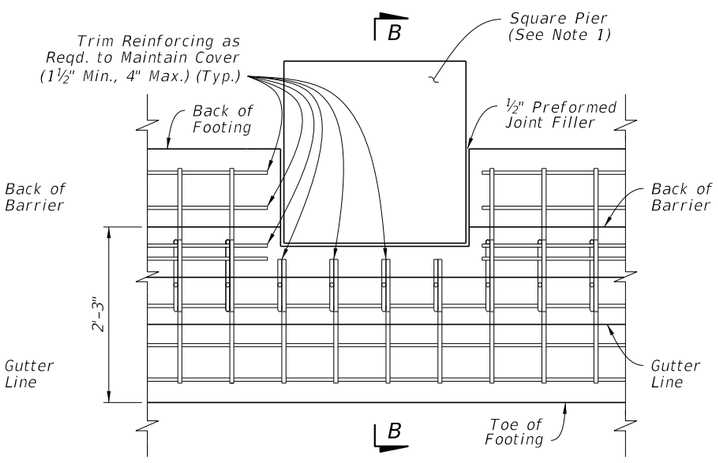

PLAN - SQUARE PIER EXAMPLE
REAR-FLUSH SECTION
WITH 3" WIDTH REDUCTION
(See Section View for All
Longitudinal Steel Locations)

NOTE:

1. PIERS: The piers shown herein are example shapes only; see the Plans for the project-specific dimensions. The details shown herein are only for use when piers do not require protection per the AASHTO LRFD requirements. For piers requiring protection, see Index 521-002.

SHOULDER BARRIER - 38" HEIGHT REAR-FLUSH SECTION FOR REDUCED SETBACK PIER SHIELDING (DESIGN SPEED ≤ 45 MPH)

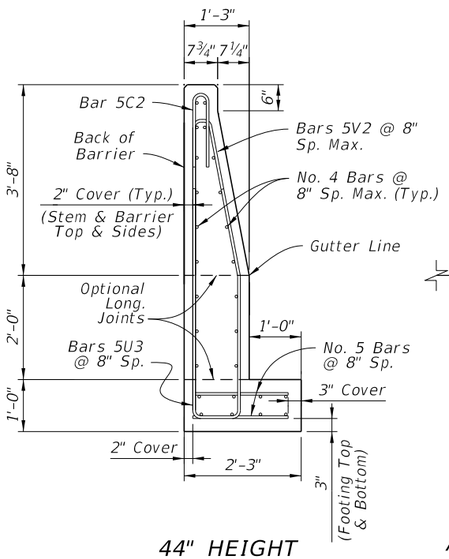

44" HEIGHT
REAR-FLUSH SECTION

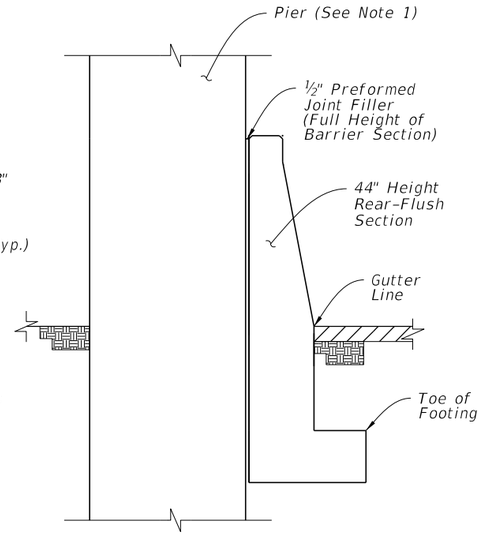

SECTION C-C
ABOVE-GROUND HAZARD
EMBEDDED IN FOOTING

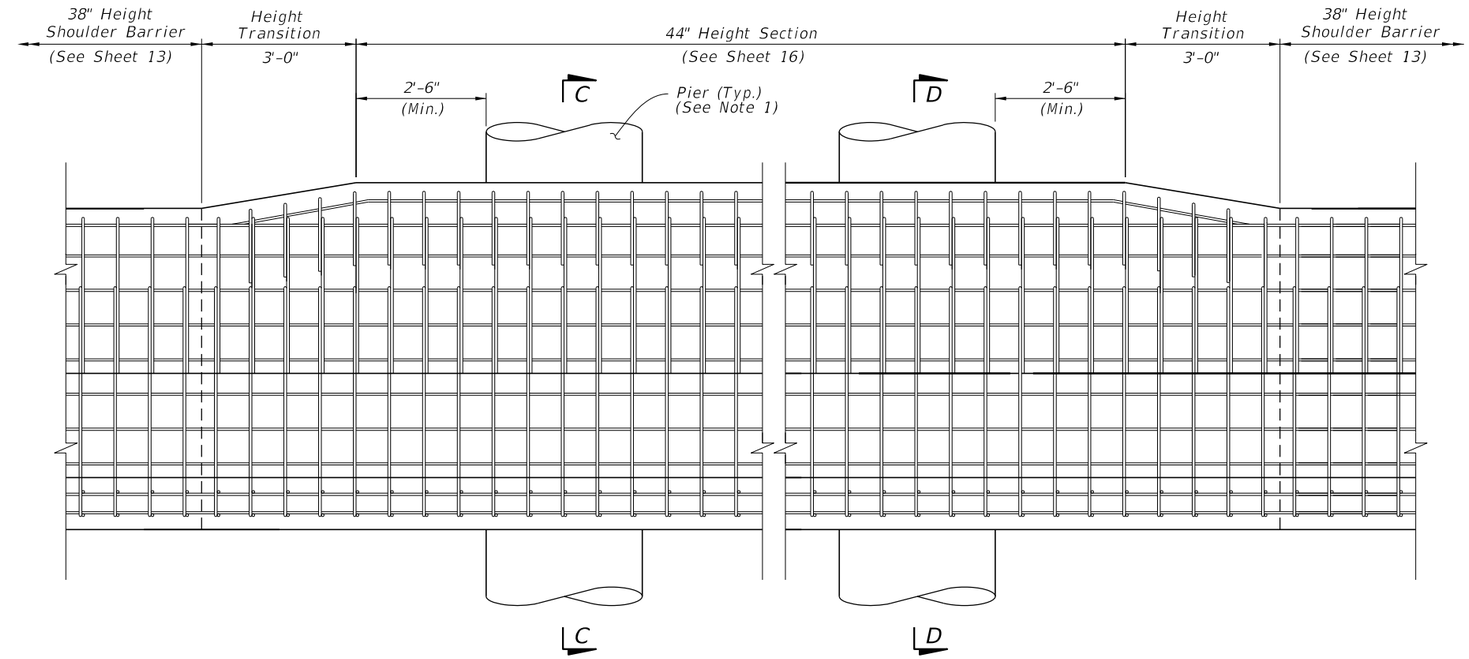

ELEVATION - ROUND PIERS EXAMPLE
(SQUARE PIERS SIMILAR)

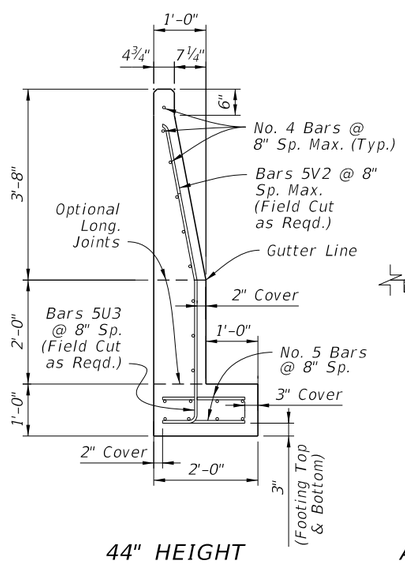

44" HEIGHT
REAR-FLUSH SECTION
WITH 3" WIDTH REDUCTION

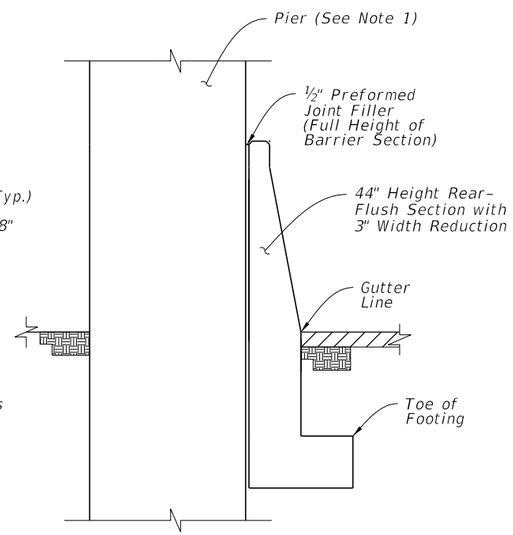

SECTION D-D
ABOVE-GROUND HAZARD
EMBEDDED IN FOOTING
& BARRIER

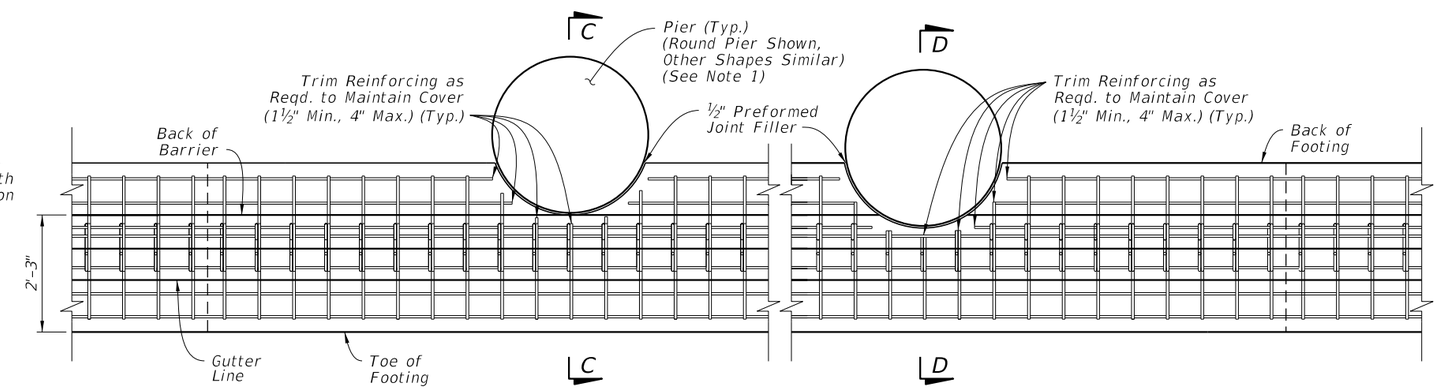

PLAN - ROUND PIERS EXAMPLE
(SQUARE PIERS SIMILAR)
(For All Longitudinal Steel Locations,
See the Section Views)

NOTE:

1. PIERS: The piers shown herein are example shapes only; see the Plans for the project-specific dimensions. The details shown herein are only for use when piers do not require protection per the AASHTO LRFD requirements. For piers requiring protection, see Index 521-002.

SHOULDER BARRIER - 44" HEIGHT REAR-FLUSH
SECTION FOR REDUCED SETBACK PIER SHIELDING

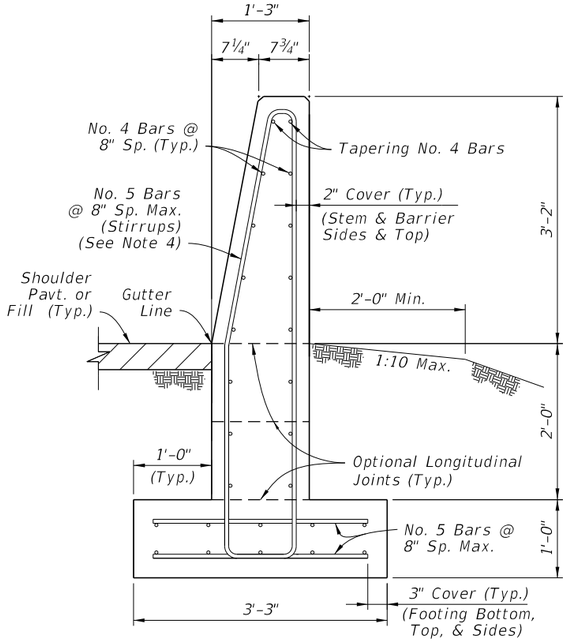

SECTION A-A
BEGIN TRANSITION - OPTION 'A'
MATCH SINGLE-SLOPE
38" HEIGHT SHOULDER BARRIER

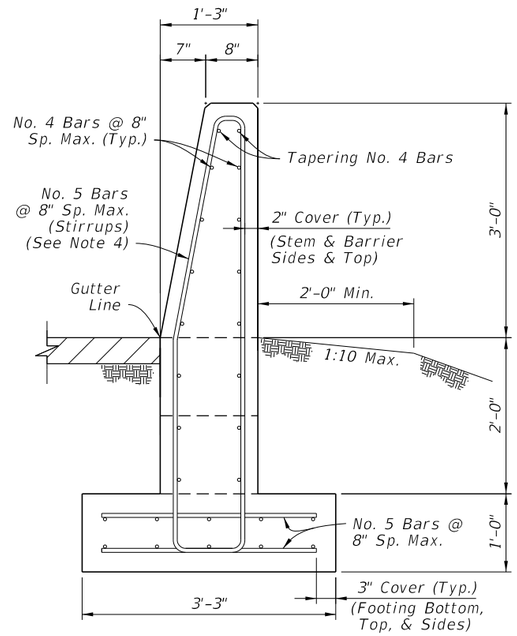

SECTION A-A
BEGIN TRANSITION - OPTION 'B'
MATCH SINGLE-SLOPE
36" HEIGHT TRAFFIC RAILING
(Bridge Applications)

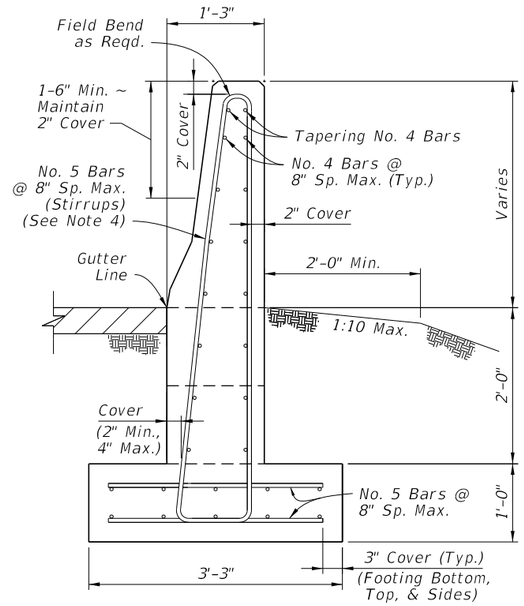

SECTION B-B
INTERMEDIATE SECTION
OF LINEAR TRANSITION

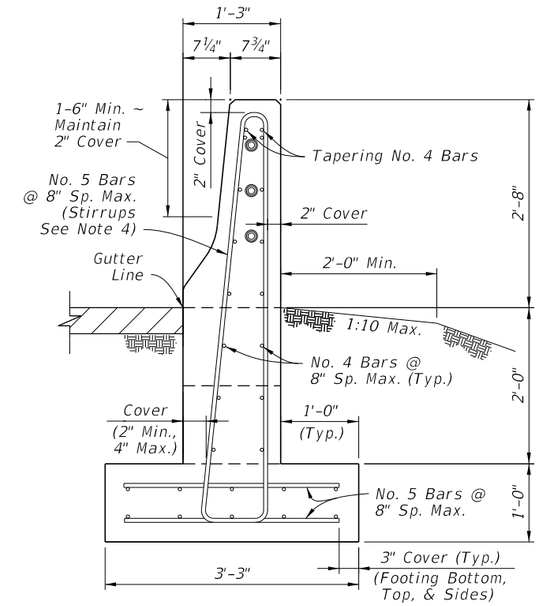

SECTION C-C
END TRANSITION
MATCH 32" HEIGHT
F-SHAPE SECTION

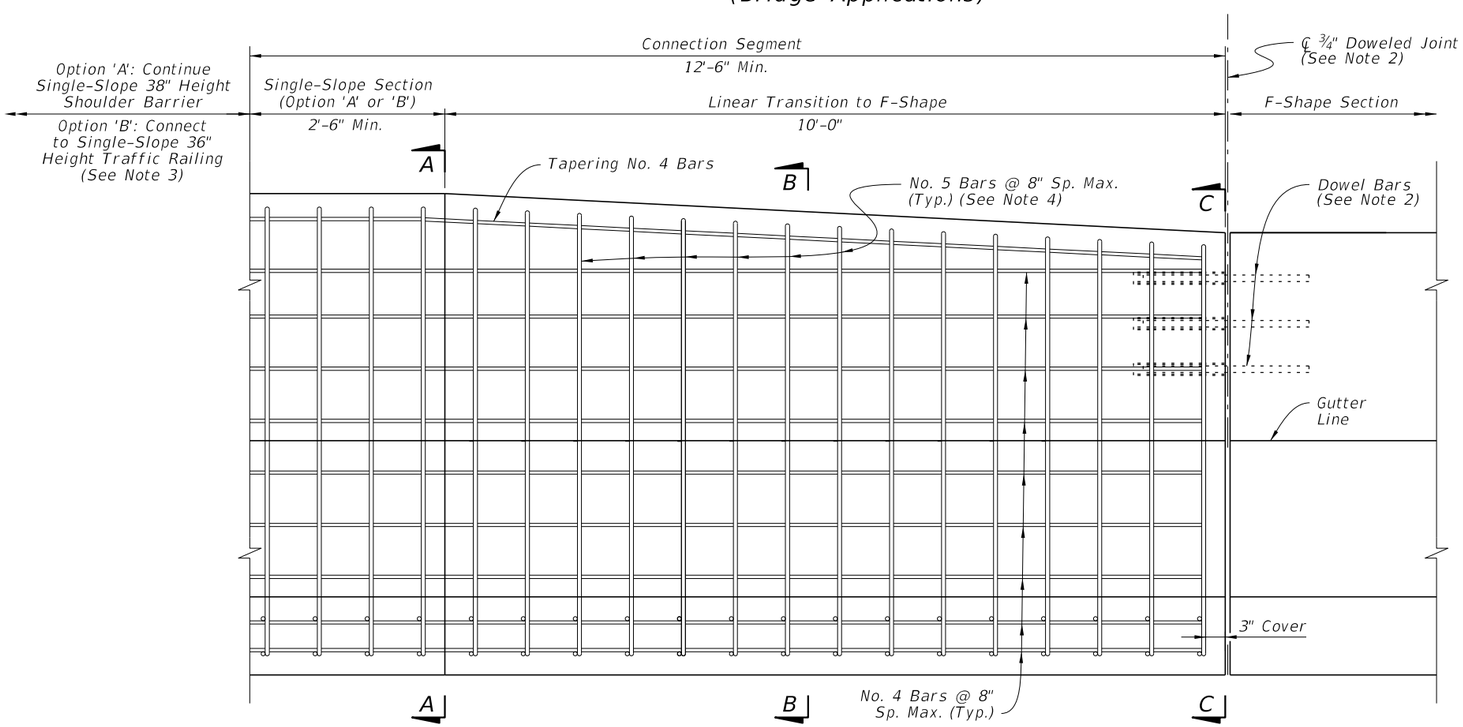

ELEVATION

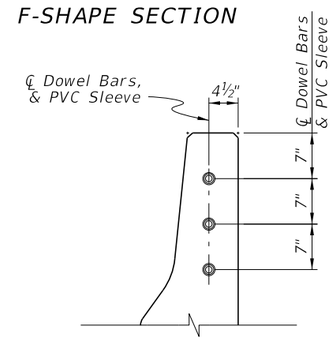

SECTION - F-SHAPE
DOWEL PLACEMENT
(See Note 2)

NOTES:

1. GENERAL: Construct the Connection Segment as required per the Plans to connect existing F-Shape sections to Single-Slope Shoulder Barrier or Traffic Railing sections. Construct Option 'A' or 'B' as required to match the heights of the connecting sections.
2. DOWELED JOINT: Install Dowel Bars per the Dowel Details on Sheet 13.
3. TRAFFIC RAILING CONNECTION: For the Option 'B' connection, use a Doweled Joint per Sheet 13 and the additional Free End Reinforcing with reduced bar spacing per Sheet 14.
4. STIRRUP BARS: For the vertical and transverse reinforcement requirements shown, bar bending diagrams are not provided due to varying section dimensions. Use any combination of spliced reinforcing steel to position the reinforcement with the same cover, spacing, continuity, and equivalent strength shown herein, as approved by the Engineer.

SHOULDER BARRIER - CONNECTION TO F-SHAPE

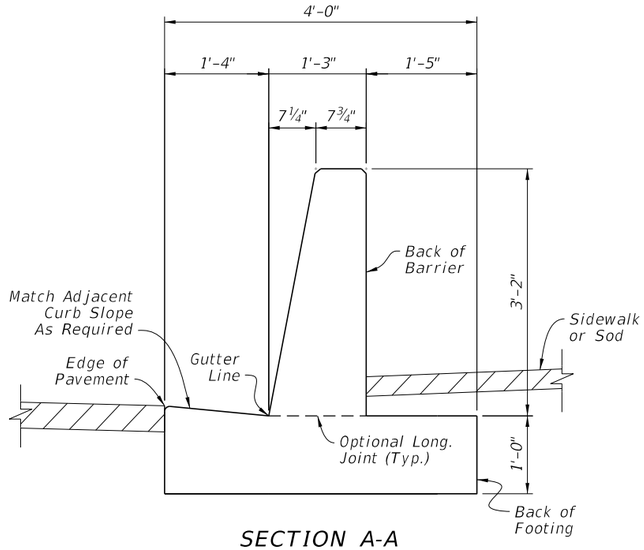

SECTION A-A
CURB & GUTTER BARRIER

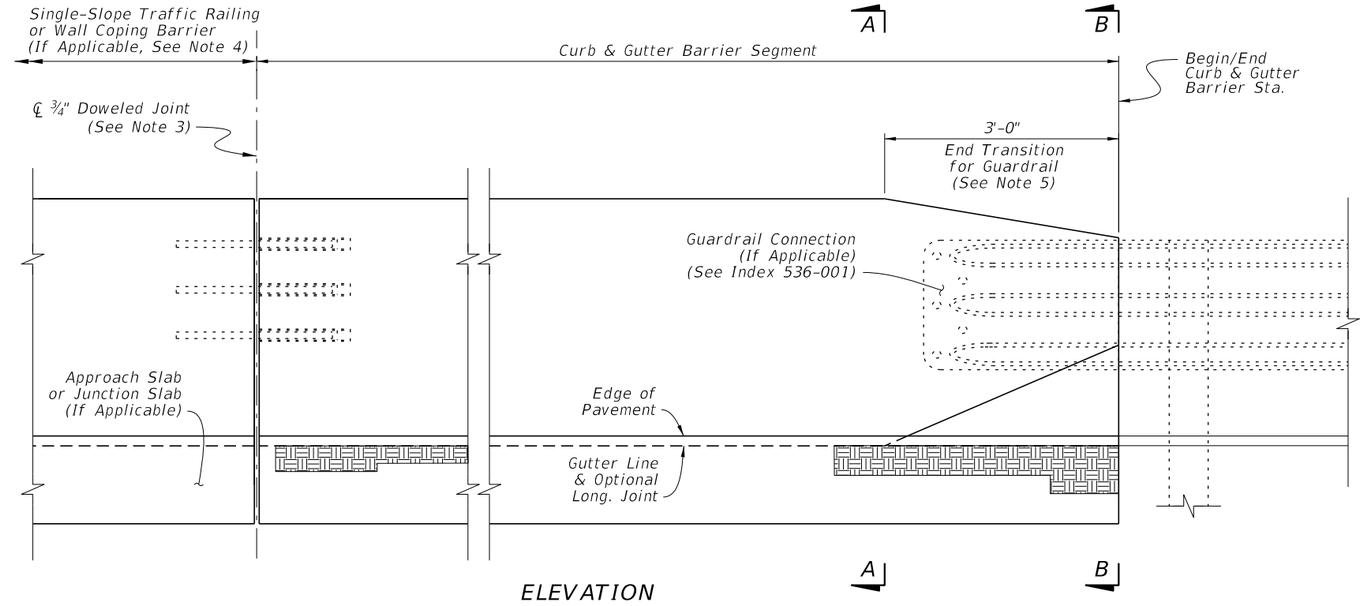

ELEVATION

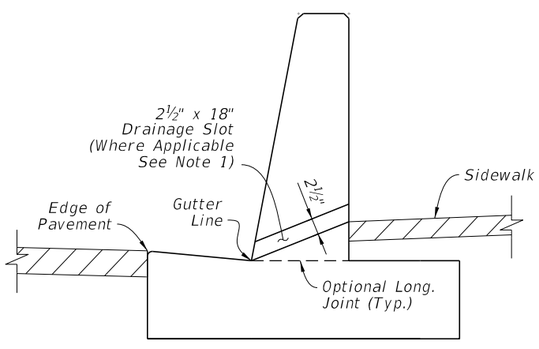

SECTION C-C
CURB & GUTTER BARRIER WITH DRAINAGE SLOT

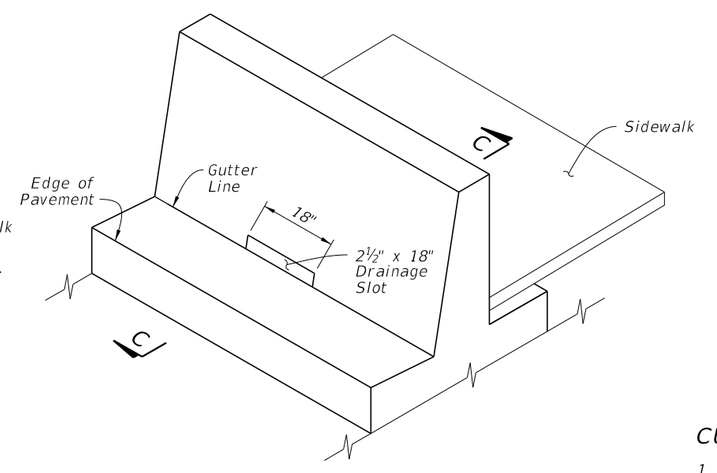

ISOMETRIC VIEW
CURB GUTTER BARRIER WITH DRAINAGE SLOT

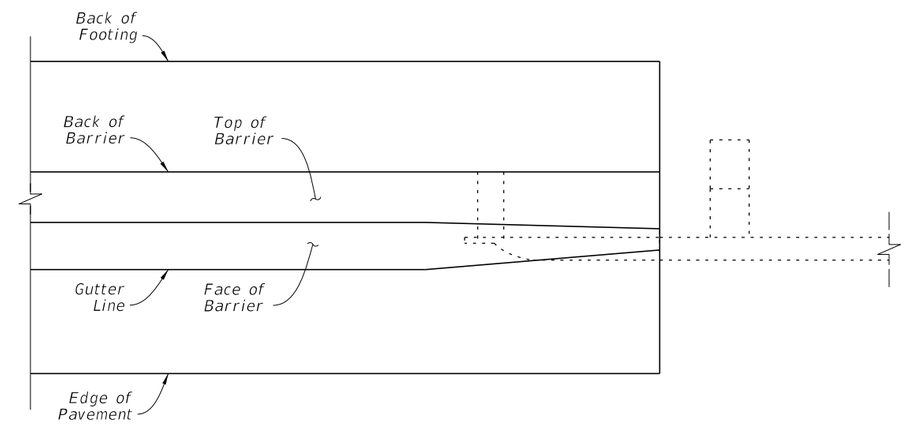

PLAN

DRAINAGE SLOT DETAILS

DRAINAGE SLOT NOTES:

1. GENERAL: Place 2½" x 18" Drainage Slots at locations and/or spacing called for in the Plans. The minimum spacing is 20 feet.
2. STEEL REINFORCEMENT CONFLICT: When the Drainage Slot encounters a conflict with reinforcing steel, shift or cut the reinforcing steel to provide 2½"(± ½") of concrete cover for the reinforcing around the Drainage Slot. If cutting the vertical bars, maintain 8" bar spacing. If shifting the vertical bars, move the bars from the standard 8" spacing location to the closest end of the drainage slot (distributing additional vertical reinforcement evenly on each side of the Drainage Slot).

CURB AND GUTTER BARRIER NOTES:

1. SECTION VIEWS: For additional Views A-A and B-B, see Sheet 21.
2. EXPANSION JOINTS: Place ½" width transverse expansion joints through the barrier and footing spaced at 100-foot maximum intervals. On both sides of each joint, use the Free End Reinforcing bar spacing per Sheet 21.
3. DOWELED JOINTS: See the General Notes on Sheet 1 for usage of joint types. Where required, install ¾" Doweled Joints as defined on Sheet 13.
4. TRAFFIC RAILING CONNECTIONS: Align the barrier and Traffic Railing faces and connect with the ¾" Doweled Joint per Sheet 13.
5. GUARDRAIL CONNECTIONS: Connect Guardrail using the Transition Connections to Rigid Barrier per Index 536-001 in conjunction with 3'-0" End Transition for Guardrail as shown herein.
6. FREE ENDS: When the barrier end does not terminate with a Traffic Railing connection or Guardrail connection as called for in the Plans, terminate the barrier in accordance with the Free End Reinforcing Note on Sheet 21.

CURB AND GUTTER BARRIER

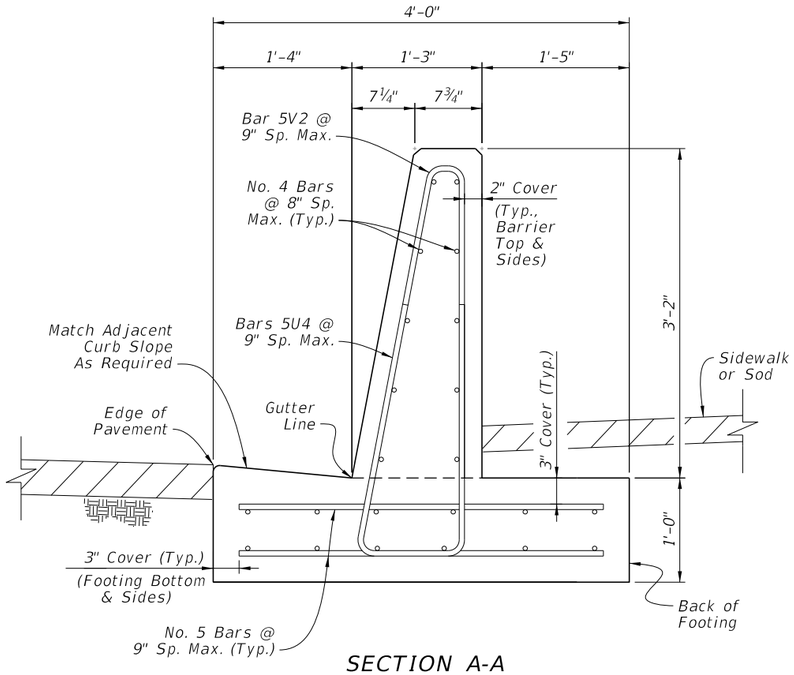

SECTION A-A
CURB & GUTTER BARRIER

Concrete Qty. = 0.26 CY/FT
Steel Qty. = 41.2 LB/FT

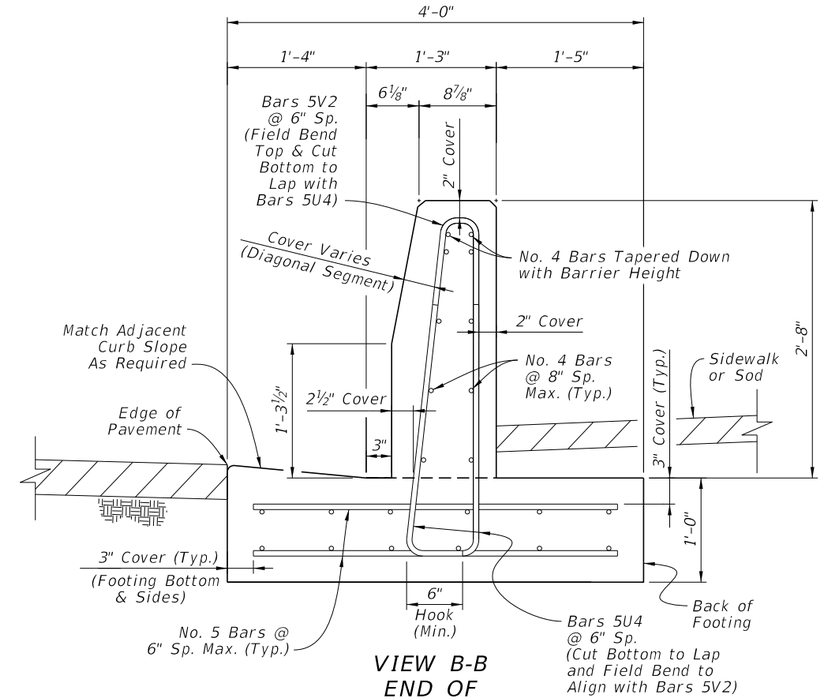

VIEW B-B
END OF TRANSITION FOR GUARDRAIL

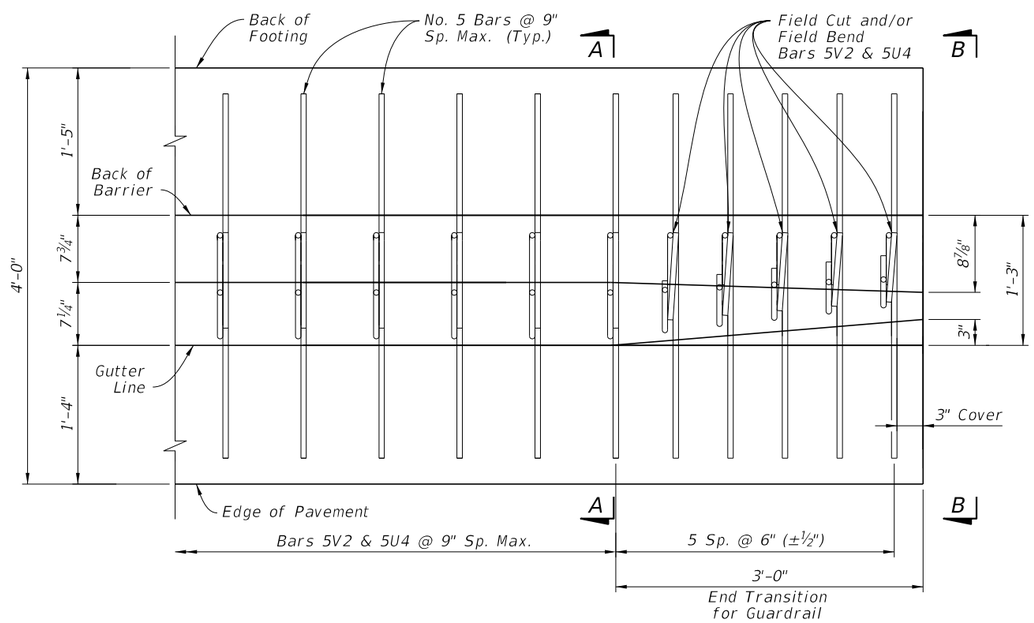

PLAN VIEW - END SEGMENT FOR GUARDRAIL CONNECTION
(Longitudinal Steel Not Shown for Clarity)

NOTES:

1. GENERAL: Work with the Plan and Elevation Views on Sheet 20.
2. FREE END REINFORCING: Where shown in the Plans, terminate the 38" Curb & Gutter Barrier section with a transverse vertical end face. Reduce the spacing of Bars 5V2 and 5U4 to 6" for 5 Spaces, placed with 3" cover from the barrier's end face.
3. BAR BENDING DIAGRAMS: For additional details for bars 5V2 and 5U4, see the Bar Bending Diagrams on Sheet 26.

CURB AND GUTTER BARRIER - REINFORCING DETAILS

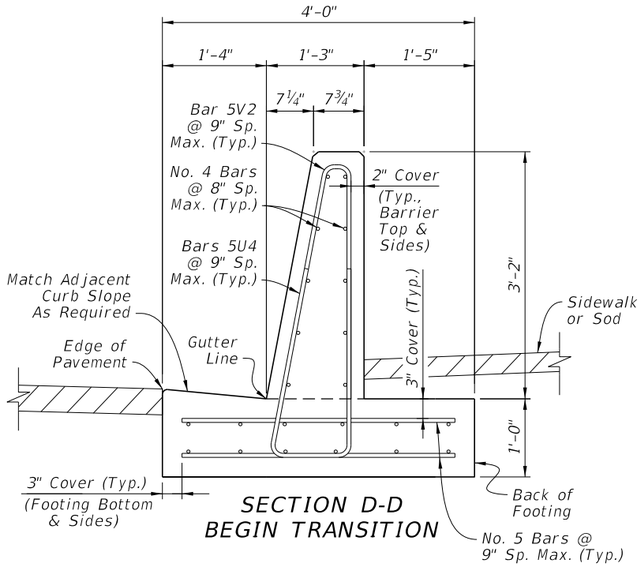

SECTION D-D
BEGIN TRANSITION

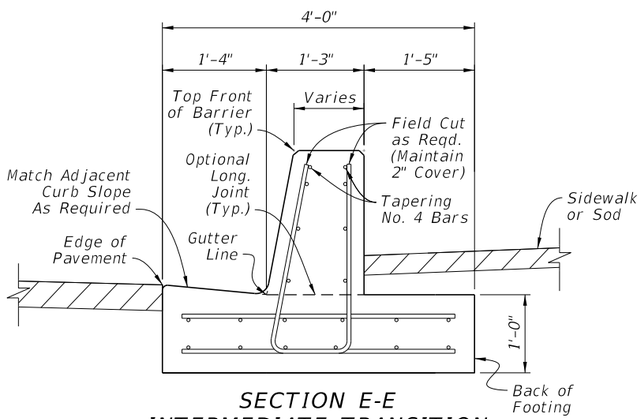

SECTION E-E
INTERMEDIATE TRANSITION
(Height Varies Linearly
Per Elevation View)

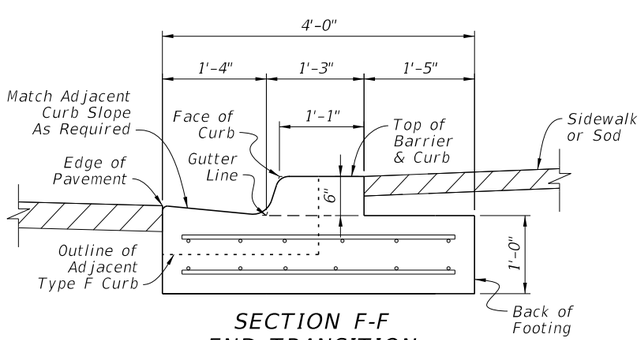

SECTION F-F
END TRANSITION
(Align with Type-F Curb)

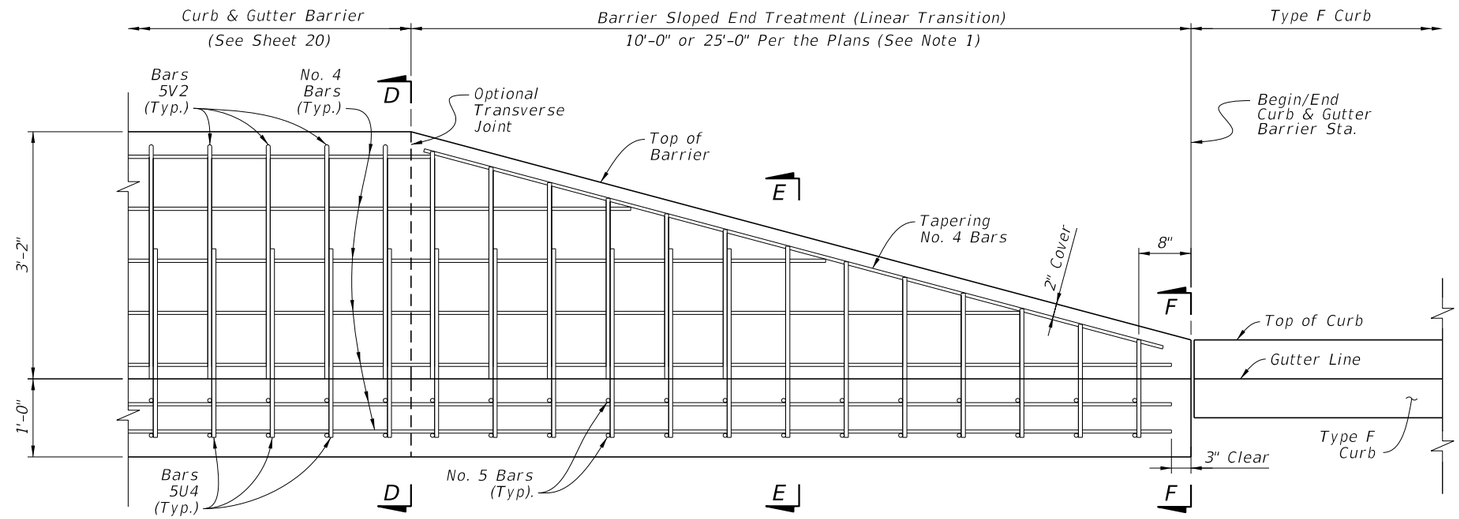

ELEVATION - CURB AND GUTTER BARRIER
SHOWING SLOPED END TREATMENT
(Approach and Trailing
End Similar by Opposite Hand)

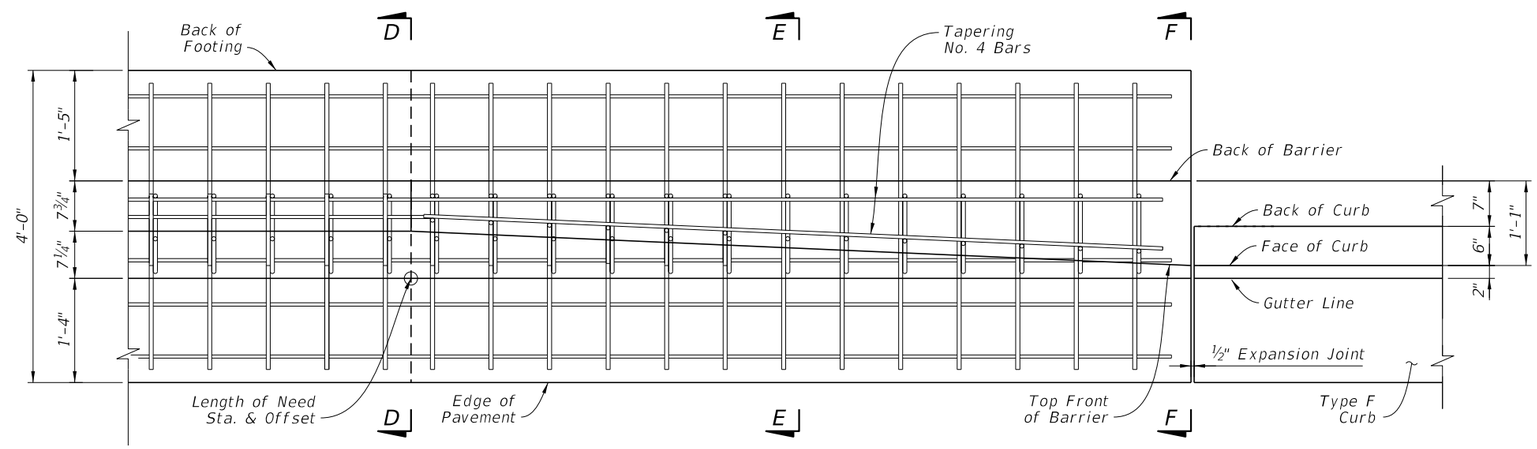

PLAN - CURB AND GUTTER BARRIER
SHOWING SLOPED END TREATMENT
(Approach and Trailing End
Similar by Opposite Hand;
See Sections for All
Longitudinal Steel Locations)

NOTES:

1. GENERAL: Install a Sloped End Treatment only where called for in the Plans, using either a 10'-0" length or 25'-0" length treatment as specified in the Plans. The 10'-0" length option is shown herein, while the 25'-0" length option requires additional trimmed Bars 5U4 & 5V2 at the same 9" longitudinal spacing.

2. BAR BENDING DIAGRAMS: For additional details on Bars 5V2 & 5U4, see the Bar Bending Diagrams on Sheet 26.

CURB AND GUTTER BARRIER - SLOPED END TREATMENT

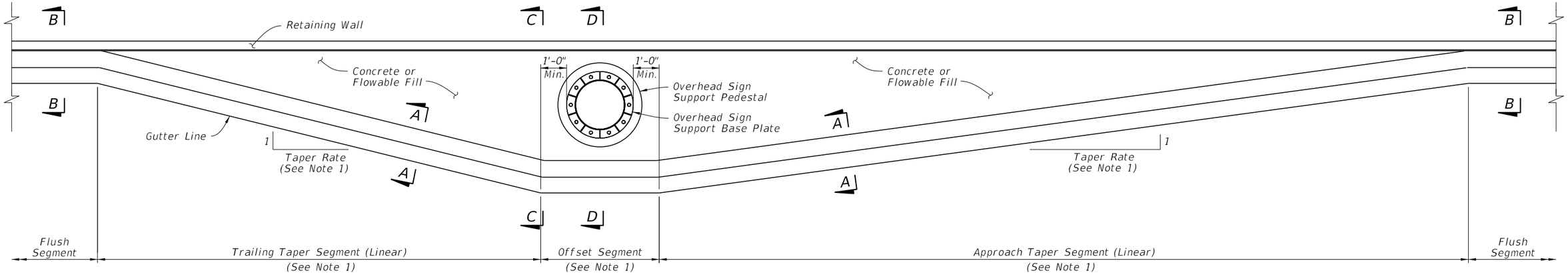

PLAN
(See Section A-A for Barrier Reinforcing)

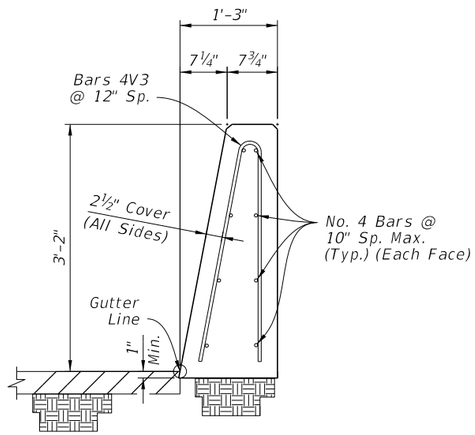

SECTION A-A
38" HEIGHT
SINGLE-FACED SECTION
(Reverse Side Similar by Opposite Hand)

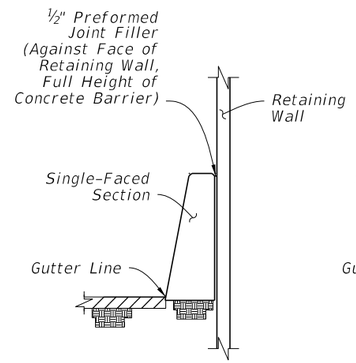

SECTION B-B
FLUSH
SEGMENT

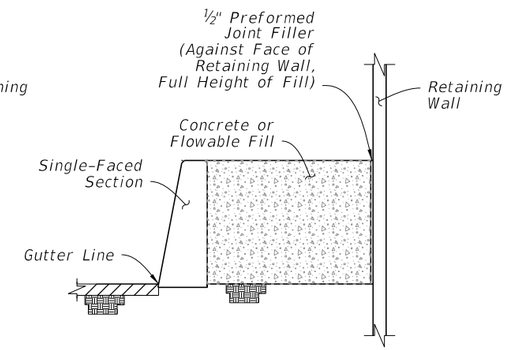

SECTION C-C
OFFSET
SEGMENT

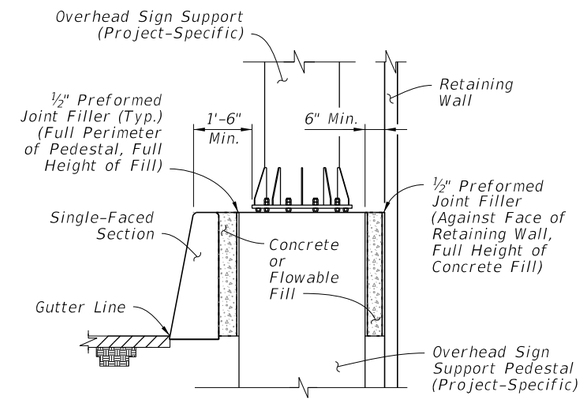

SECTION D-D
OVERHEAD SIGN
SUPPORT

NOTES:

1. TAPER SEGMENTS AND OFFSET SEGMENT: The plan view shown is an example only, showing general geometry for the taper segments and offset segment. For the actual segment lengths and corresponding taper rates required, see the barrier placement information in the Plans.

2. OVERHEAD SIGN SUPPORT: The overhead sign support shown is an example only; see the Plans for the project-specific dimensions and requirements if applicable.

3. CONNECTION TO SHOULDER BARRIER SECTIONS: Connect to Shoulder Barrier sections using a continuous pour or Transverse Joint, where longitudinal steel that aligns within the adjacent section is maintained continuously between sections or has a full lap splice with the adjacent section's longitudinal steel.

4. FREE ENDS: Where shown in the Plans, terminate the Single-Faced Section with a transverse end face. Place a stirrup bar with a 3" cover from the end face. Place longitudinal bars with a 3" cover from the end face.

5. CONCRETE OR FLOWABLE FILL: Use Class NS Concrete in accordance with Specification 347 or Non-Excavatable Flowable Fill in accordance with Specification 121.

WALL SHIELDING BARRIER -
38" HEIGHT SECTION -
APPROACH & TRAILING TRANSITION

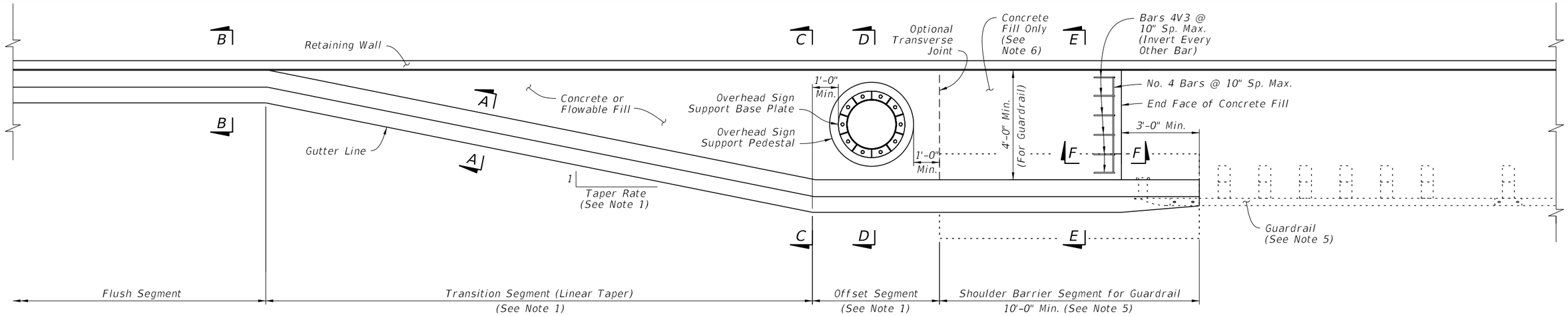

PLAN
(See Section A-A for Barrier Reinforcing)

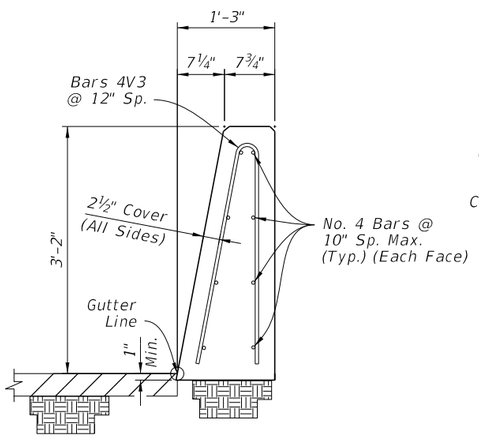

SECTION A-A
38" HEIGHT
SINGLE-FACED SECTION
(Reverse Side Similar by Opposite Hand)

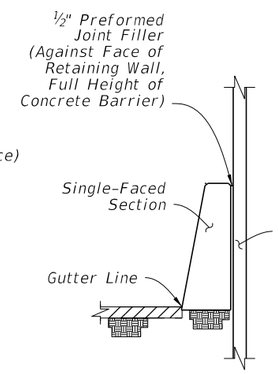

SECTION B-B
FLUSH
SEGMENT

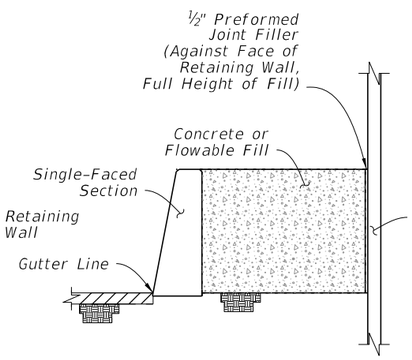

SECTION C-C
OFFSET
SEGMENT

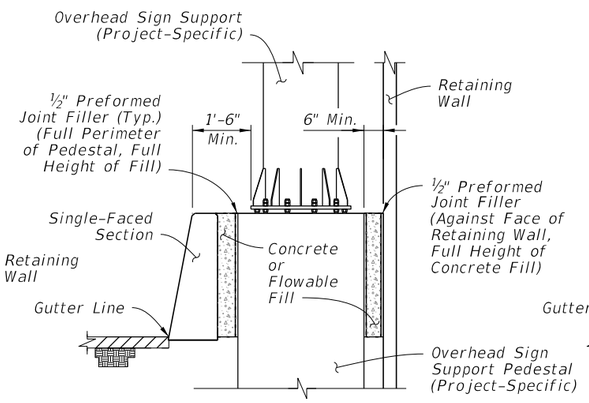

SECTION D-D
OVERHEAD SIGN
SUPPORT

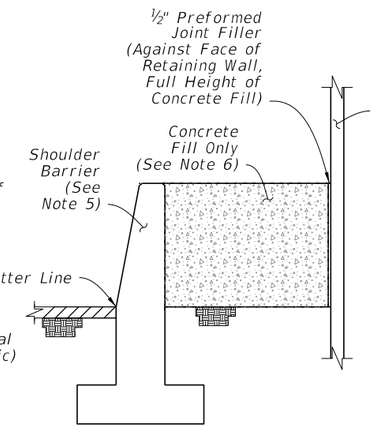

SECTION E-E
SHOULDER BARRIER
SEGMENT FOR
GUARDRAIL

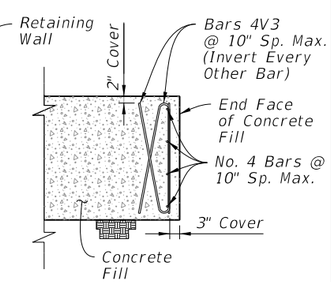

SECTION F-F
CONCRETE FILL
END FACE

NOTES:

1. TAPER SEGMENTS AND OFFSET SEGMENT: The plan view shown is an example only, showing general geometry for the taper segments and offset segment. For the actual segment lengths and corresponding taper rates required, see the barrier placement information in the Plans.

2. OVERHEAD SIGN SUPPORT: The overhead sign support shown is an example only; see the Plans for the project-specific dimensions and requirements if applicable.

3. CONNECTIONS TO DIFFERENT CONCRETE BARRIER SECTIONS: Connect to aligning barrier sections using a continuous pour or Transverse Joint, where longitudinal steel that aligns within the adjacent section is maintained continuously between sections or has a full lap splice with the adjacent section's longitudinal steel.

4. FREE ENDS: Where shown in the Plans, terminate the Single-Faced Section with a transverse end face. Place a stirrup bar with a 3" cover from the end face. Place longitudinal bars with a 3" cover from the end face.

5. GUARDRAIL CONNECTIONS: Within the Shoulder Barrier Segment for Guardrail, install Shoulder Barrier as shown per Sheet 3, including the corresponding End Transition for Guardrail. Connect Guardrail using the Transition Connections to Rigid Barrier per Index 536-001.

6. CONCRETE OR FLOWABLE FILL: Use Class NS Concrete in accordance with Specification 347 or Non-Excavatable Flowable Fill in accordance with Specification 121.

Use only concrete fill behind the Shoulder Barrier Segment; do not use flowable fill at this location.

WALL SHIELDING BARRIER - 38" HEIGHT SECTION - GUARDRAIL CONNECTION

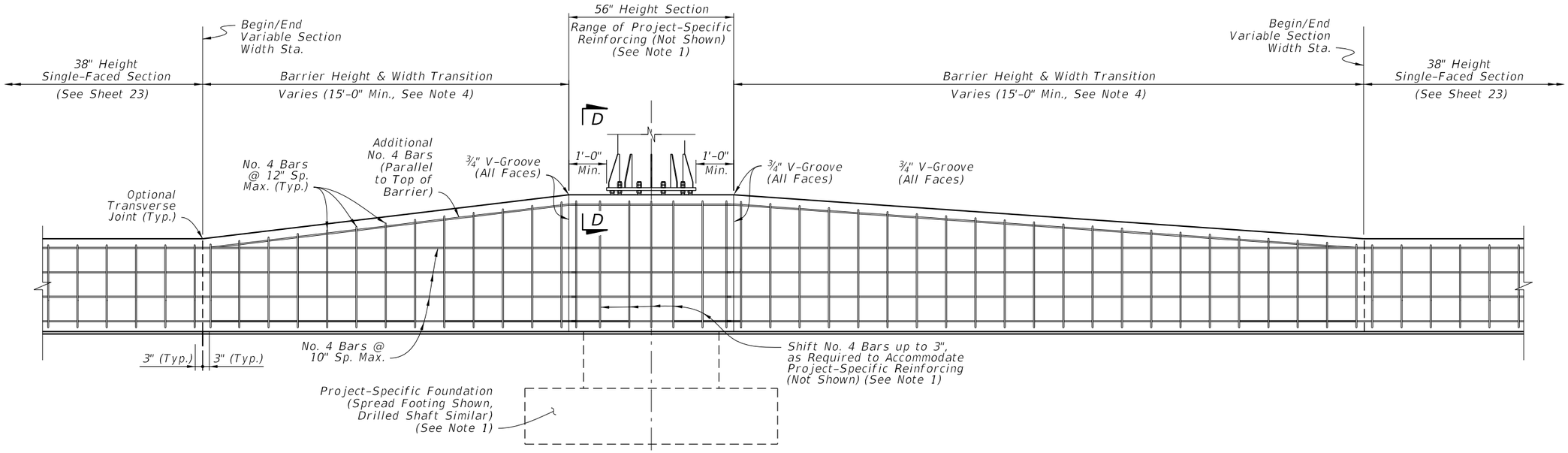

ELEVATION

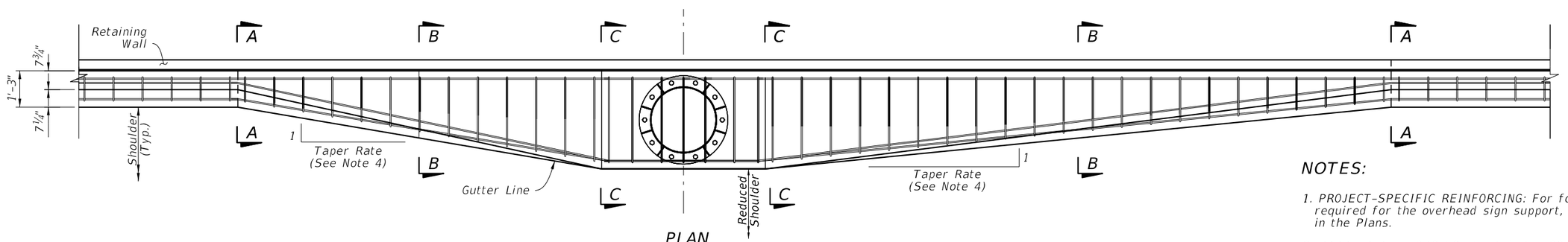

PLAN
(See Note 5)

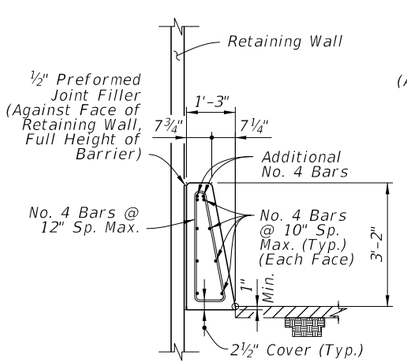

SECTION A-A
BEGIN TRANSITION

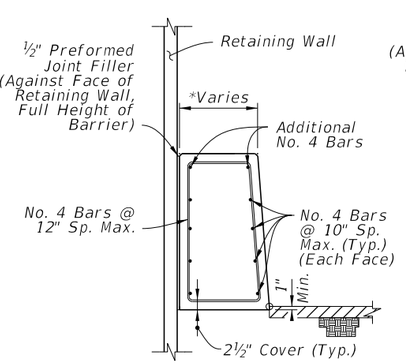

SECTION B-B
*Dimension Varies Linearly Between Section A-A and C-C

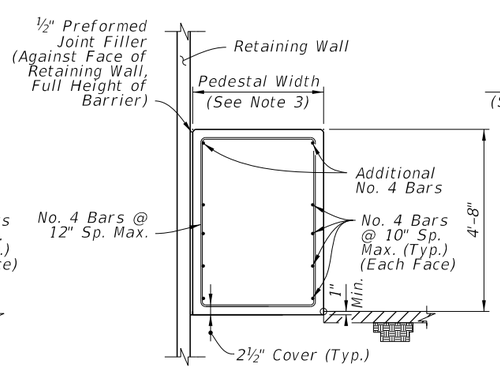

SECTION C-C
END TRANSITION
(56" Height Section)

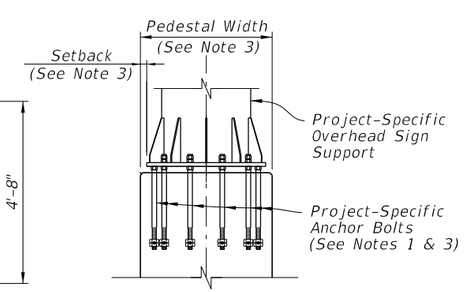

SECTION D-D
(Reinforcing Steel Not Shown for Clarity)

NOTES:

1. PROJECT-SPECIFIC REINFORCING: For footing and barrier reinforcing required for the overhead sign support, see the project-specific design in the Plans.

2. BARRIER REINFORCING: Maintain the 38" Height Median Barrier's longitudinal steel reinforcing continuously through the barrier height transition and pedestal. Provide the Additional No. 4 Bars and taper as required to maintain a 4½" maximum cover from the top of the barrier.

   For the vertical and transverse reinforcement requirements shown in Sections A-A through C-C, bar bending diagrams are not provided due to varying section dimensions. Use any combination of spliced reinforcing steel to position the reinforcement with the same cover, spacing, continuity, and equivalent strength shown herein, as approved by the Engineer.

3. PROJECT-SPECIFIC PEDESTAL WIDTH & SETBACK: The pedestal width is governed by the size requirements of the overhead sign support, as detailed in the Plans. Likewise, the setback distance from the sign support base to the barrier face is governed by the anchor bolt cover requirements, as defined per the Plans.

4 TRANSITION SEGMENTS: The Transition Segments shown are examples only. For the actual approach and trailing transition taper rate, length, and width, see the details in the Plans.

5. PLAN VIEW: Only top and bottom longitudinal reinforcing is shown for clarity. For all longitudinal reinforcing locations, see the Section Views.

WALL SHIELDING BARRIER - 56" HEIGHT SECTION FOR BARRIER-MOUNTED SIGN SUPPORT SHIELDING

BILL OF REINFORCING STEEL		
MARK	SIZE	LENGTH
C1	4	3'-8"
C2	5	3'-0"
U1	4	5'-1"
U2	4	7'-8"
U3	5	9'-7"
U4	5	5'-9"
V1	4	6'-4"
V2	5	6'-3"
V3	4	5'-10"

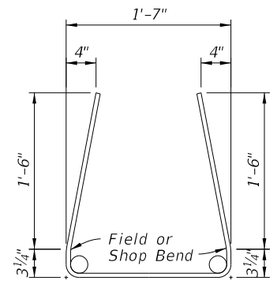

BARS 4U1

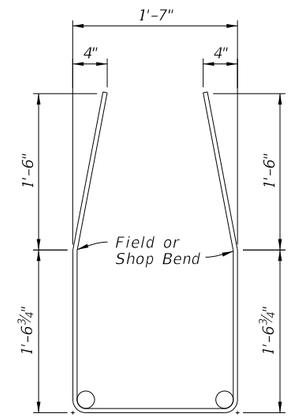

BAR 4U2

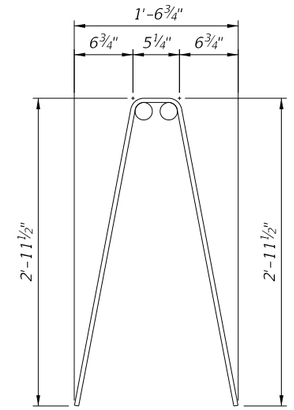

BAR 4V1

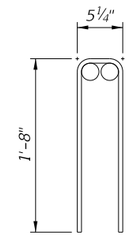

BAR 4C1

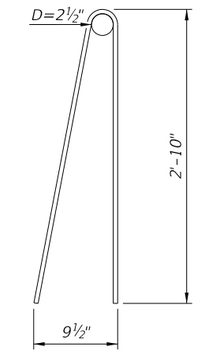

BAR 4V3

NOTES:

1. Work with the Standard Bar Bending Details per Index 415-001.
2. All bar dimensions in the bending diagrams are out to out.
3. Use standard inner diameters for bar bending unless otherwise shown.

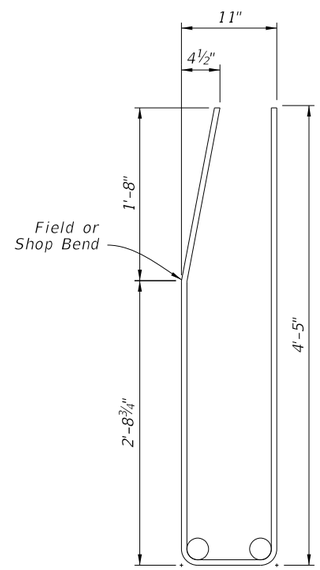

BAR 5U3

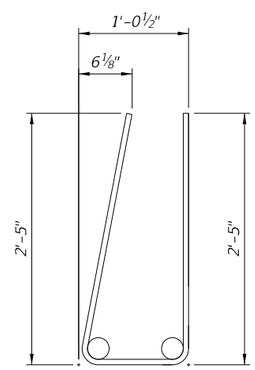

BAR 5U4

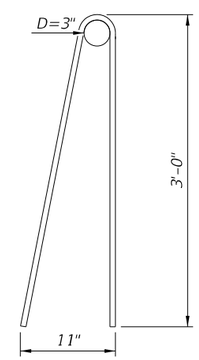

BAR 5V2

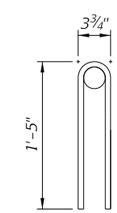

BAR 5C2

REINFORCING BAR BENDING DIAGRAMS

SHEET NO.	CONTENTS
1	Index Contents; General Notes
2	Example Layouts – Footing Placement and Connections
3	Barrier Plan and Elevation – Connection to Concrete Barrier – Connection to Guardrail
4	Barrier Details – Connection to Concrete Barrier
5	Barrier Details – Connection to Guardrail
6	Barrier Footing Options
7	Crash Wall Details
8	Reinforcing Bar Bending Diagrams

GENERAL NOTES:

1. CONCRETE: Use Class III or IV concrete unless otherwise called for in the Plans.

2. CONSTRUCTION JOINTS: Maintain continuity of reinforcement steel across Construction Joints; reinforcement lap splices are permitted immediately adjacent to joints. Construct all Pier Protection Barrier continuously, with no expansion or contraction joints. Construction Joints are classified herein as Transverse Joints or Longitudinal Joints.

   Transverse Joints are permitted at 40 foot or greater intervals along the barrier.

   Longitudinal Joints may only be installed where indicated in the following details and notes, with a location tolerance of ± 1" from the locations shown.

3. FOUNDATION: Compact the top 12 inches of the subgrade to at least 98% of the maximum density determined by FM 1-T 180, Method D.

4. DRAINAGE INLETS: See Index 425-031 for Adjacent Barrier Inlets, and isolate these structures from Pier Protection Barriers and Footings with 1" Preformed Joint Filler.

5. BARRIER END MARKERS: For all free ends of barriers that are not connected to guardrail or concrete barrier, install a Type 3 Object Marker on the end face per Specification 705.

6. BARRIER DELINEATORS: Install Barrier Delineators in accordance with Specification 705. Mount the delineators on the top face of the barrier, with the roadway side of the delineator located 2" from the front face of the barrier and the reflective sheeting facing traffic of the nearest approach.

7. CRACK CONTROL: Provide ½" depth crack control V-Grooves at 15' to 30' spacing. Locate V-Grooves above any joint or discontinuity in the barrier footing. Align V-Grooves perpendicular to the longitudinal axis of the Pier Protection Barrier and make continuous across the top surface and both side faces. For slip formed barriers, score ½" V-Grooves while the concrete is still plastic, otherwise pre-form the joints when stationary forms are utilized.

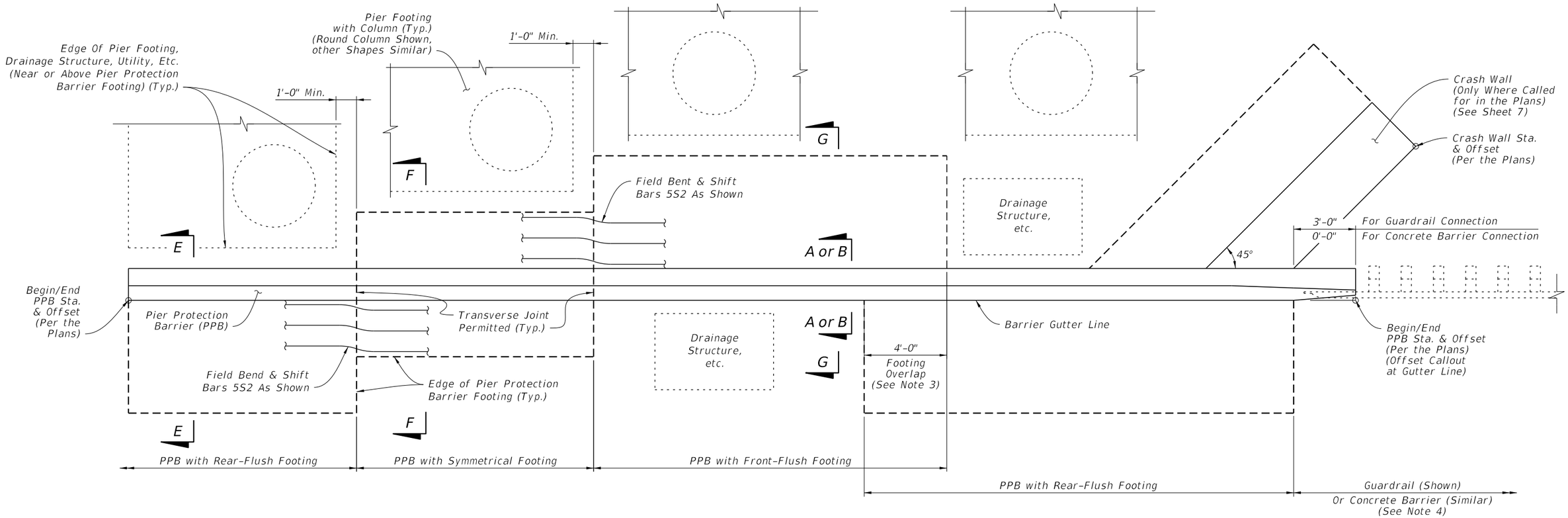

EXAMPLE PLAN VIEW

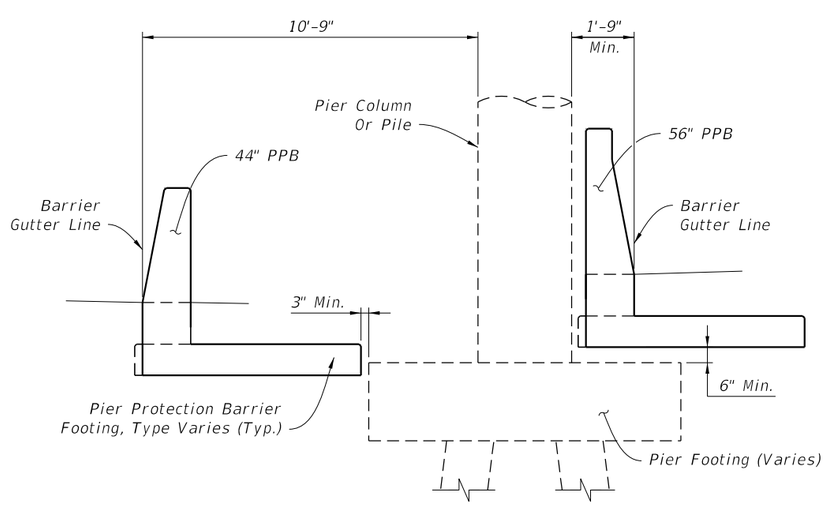

EXAMPLE SECTION VIEW

NOTES:

1. GENERAL: The views shown herein are schematic only, showing example layouts for Pier Protection Barrier (PPB) footings and Crash Wall placement in relation to adjacent miscellaneous structures (including bridge piers, footings, drainage structures, etc.). The actual PPB footing placement depends on the project-specific configuration of adjacent structures and obstacles. For project-specific locations of PPB and adjacent features, see the Plans.

2. MINIMUM FOOTING LENGTH: The minimum length of a single footing option (i.e. Symmetrical Footing, Rear-Flush Footing, Front-Flush Footing), is 8'-0", measured longitudinally. See Sheet 6 for the footing option details.

3. FOOTING OVERLAP: When a Front-Flush Footing section connects to a Rear-Flush Footing section, a 4'-0" footing overlap is required as shown. In footing overlap segments, place all lateral steel reinforcement continuously for the entire width of the combined footing while maintaining the cover requirements per Sheet 6.

4. CONNECTING GUARDRAIL OR CONCRETE BARRIER: Connect the PPB to either Guardrail or Concrete Barrier as specified in the Plans. For additional Guardrail Details, see Sheet 3 and Index 536-001. For additional Concrete Barrier Details, see Sheet 3 and Index 521-001.

EXAMPLE LAYOUTS - FOOTING PLACEMENT AND CONNECTIONS

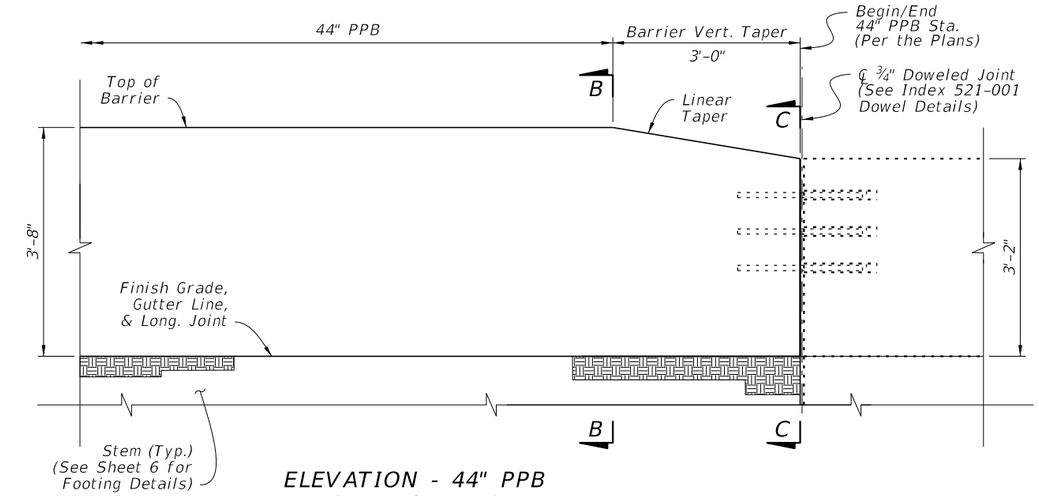

ELEVATION - 44" PPB
(See Sheet 4)

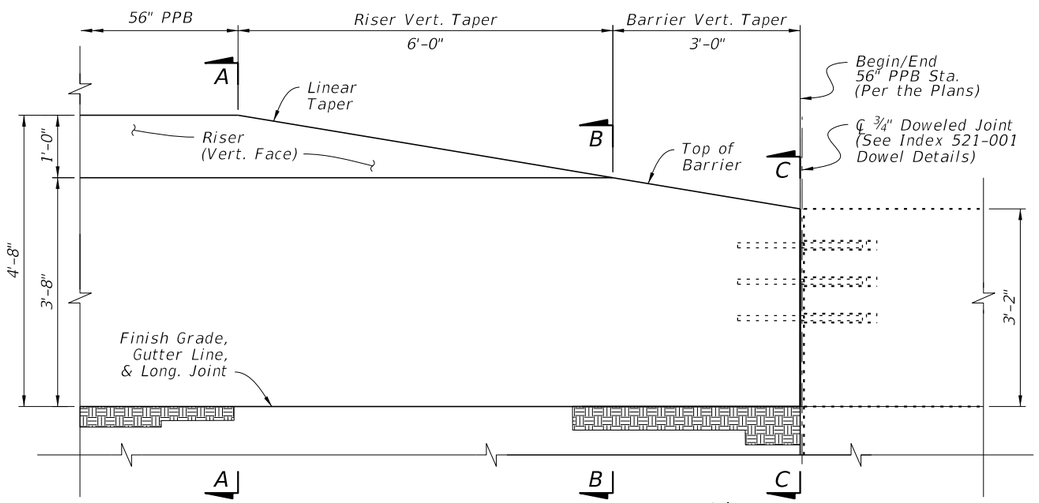

ELEVATION - 56" PPB
(See Sheet 4)

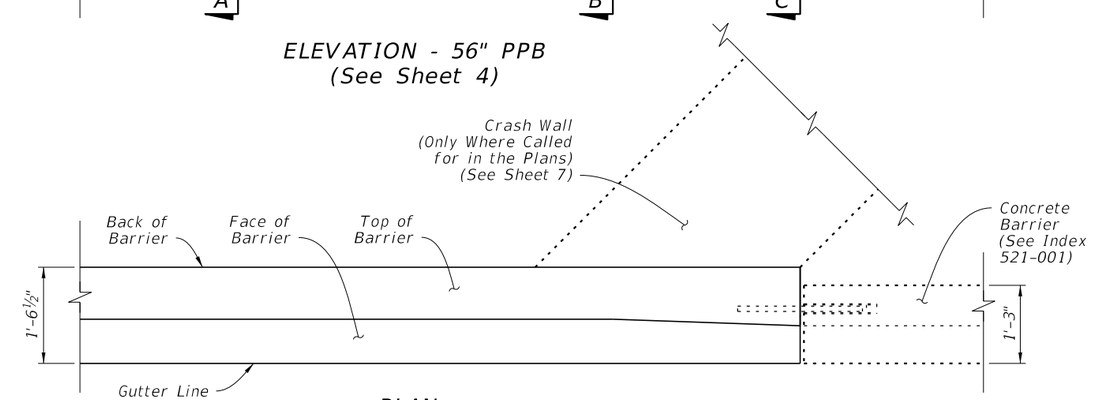

PLAN
(Footing Not Shown,
See Sheet 6 for Options)

CONNECTION TO
CONCRETE BARRIER

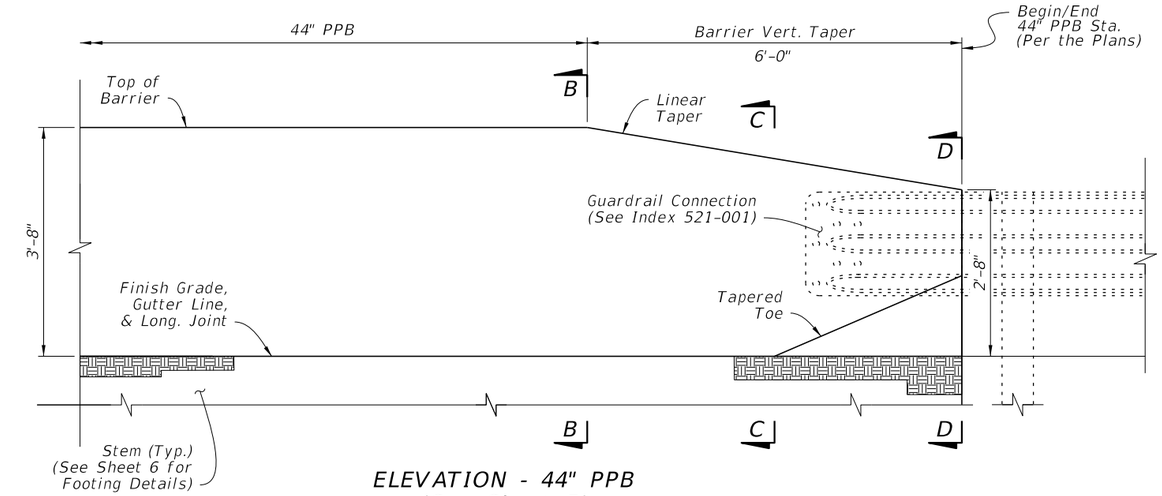

ELEVATION - 44" PPB
(See Sheet 5)

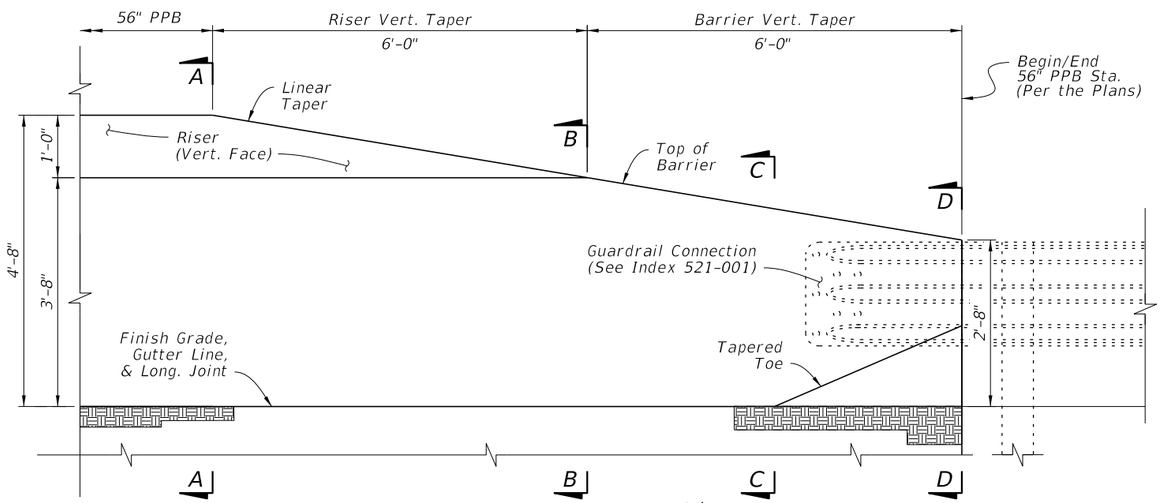

ELEVATION - 56" PPB
(See Sheet 5)

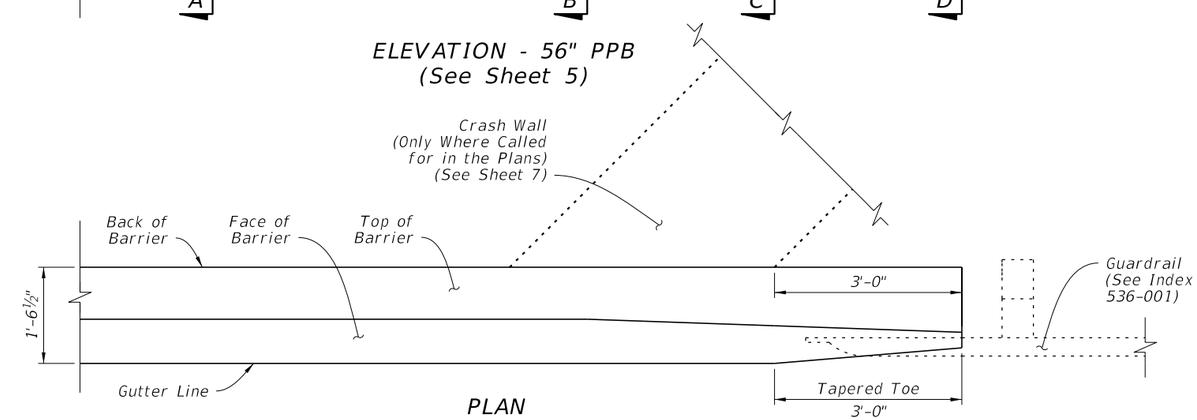

PLAN
(Footing Not Shown,
See Sheet 6 for Options)

CONNECTION TO
GUARDRAIL

10/20/2022 8:51:09 AM

LAST REVISION	REVISION	DESCRIPTION:			INDEX	SHEET
11/01/17			FDOT FY 2023-24 STANDARD PLANS	PIER PROTECTION BARRIER	521-002	3 of 8

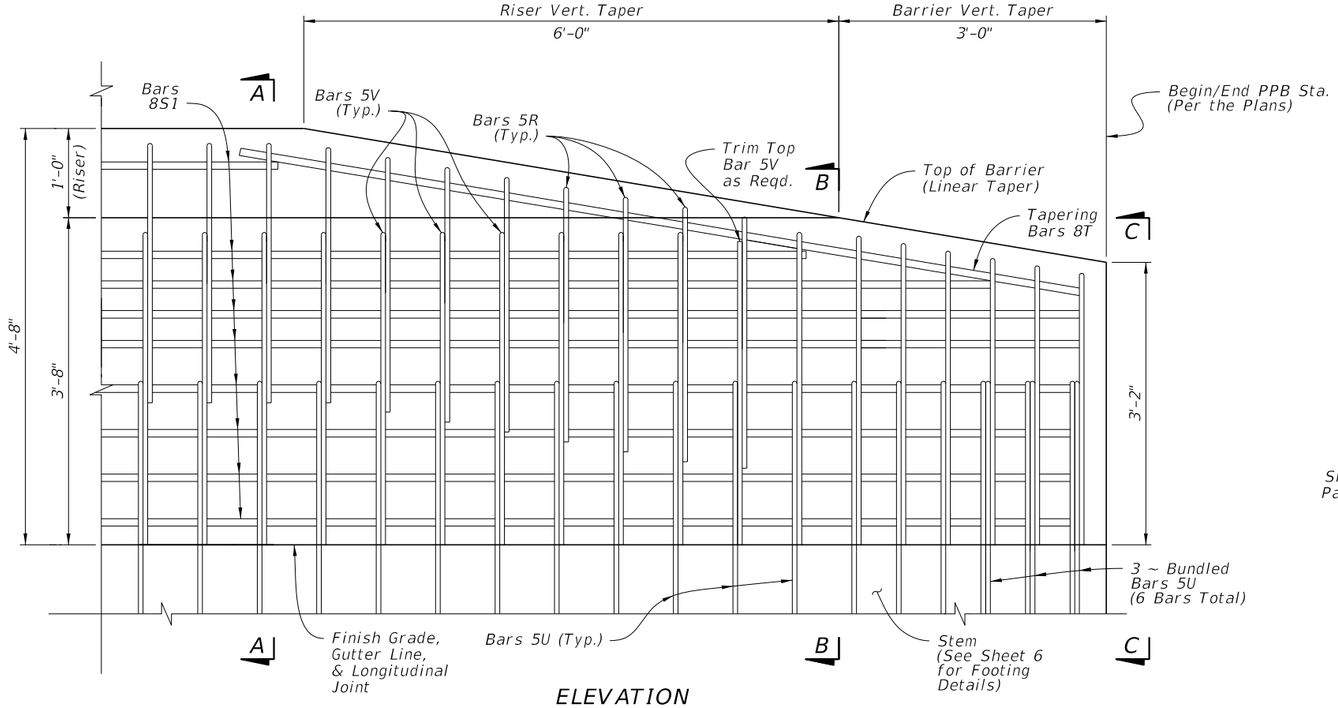

ELEVATION
(56" PPB Shown, 44" PPB Similar with 1'-0" Riser and Related Reinforcing Removed)

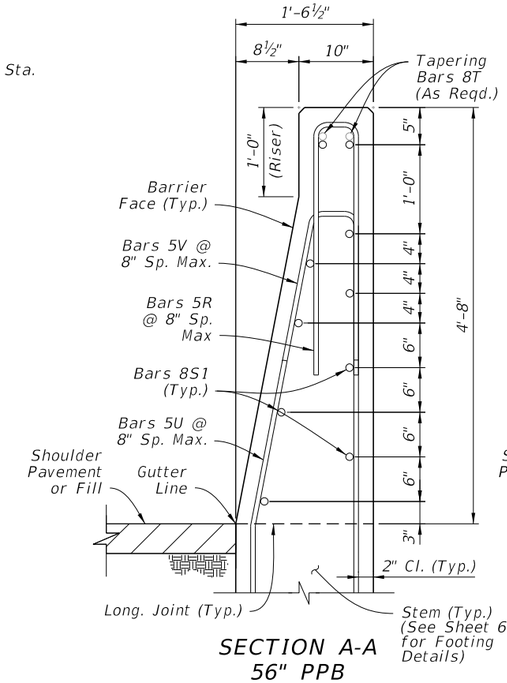

SECTION A-A
56" PPB

Concrete Qty. = 0.19 CY/FT (Above Gutter Line)
Steel Qty. = 47.7 LB/FT (Excluding Bars 5U & 8T)

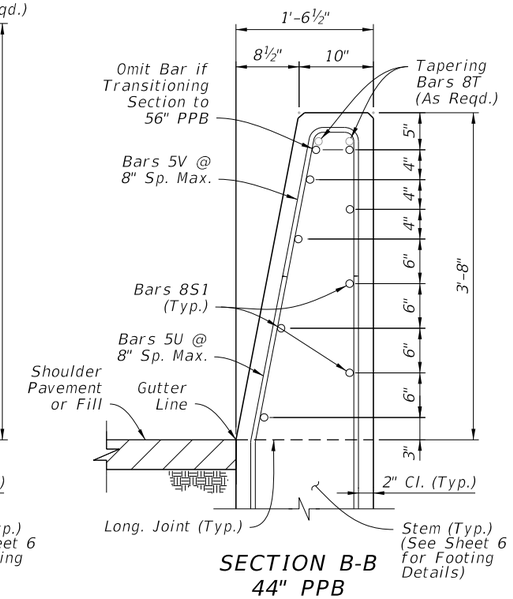

SECTION B-B
44" PPB

Concrete Qty. = 0.16 CY/FT (Above Gutter Line)
Steel Qty. = 35.7 LB/FT (Excluding Bars 5U & 8T)

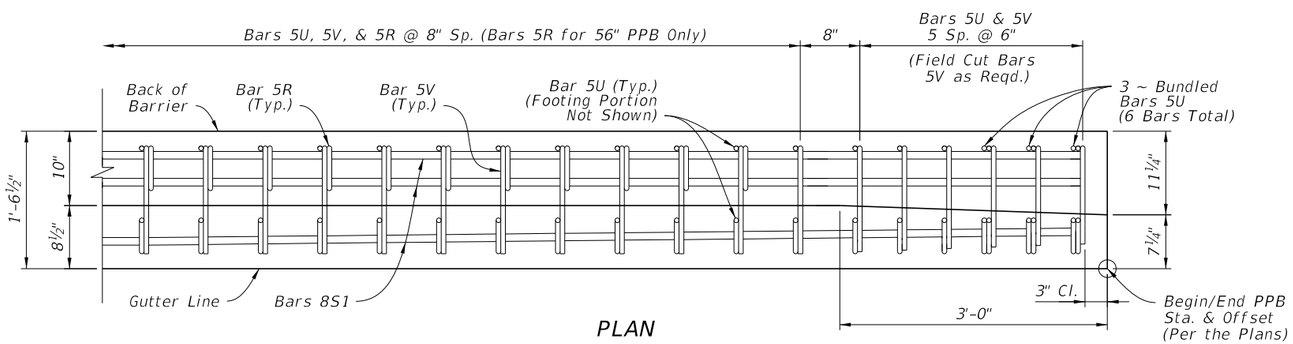

PLAN
(Details Not Shown Below Gutter Line, See Sheet 6 for Footing and Stem Details)
(Only Top & Bottom Longitudinal Steel Shown, See Section Views for All Steel Locations)

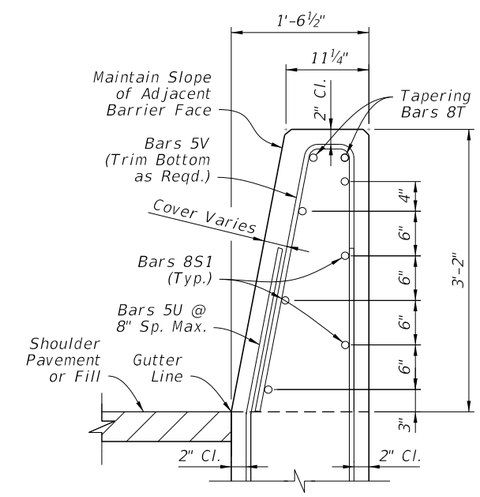

END VIEW C-C
(Connects to Adjacent Concrete Barrier, Aligned at Gutter Line)

NOTES:

1. GENERAL: Construct either the 56" PPB or the 44" PPB height as called for in the Plans. See Sheets 2 & 3 for additional plan and elevation details.

2. FOOTING OPTIONS: See Sheet 6 for the supporting stem and footing details.

BARRIER DETAILS - CONNECTION TO CONCRETE BARRIER

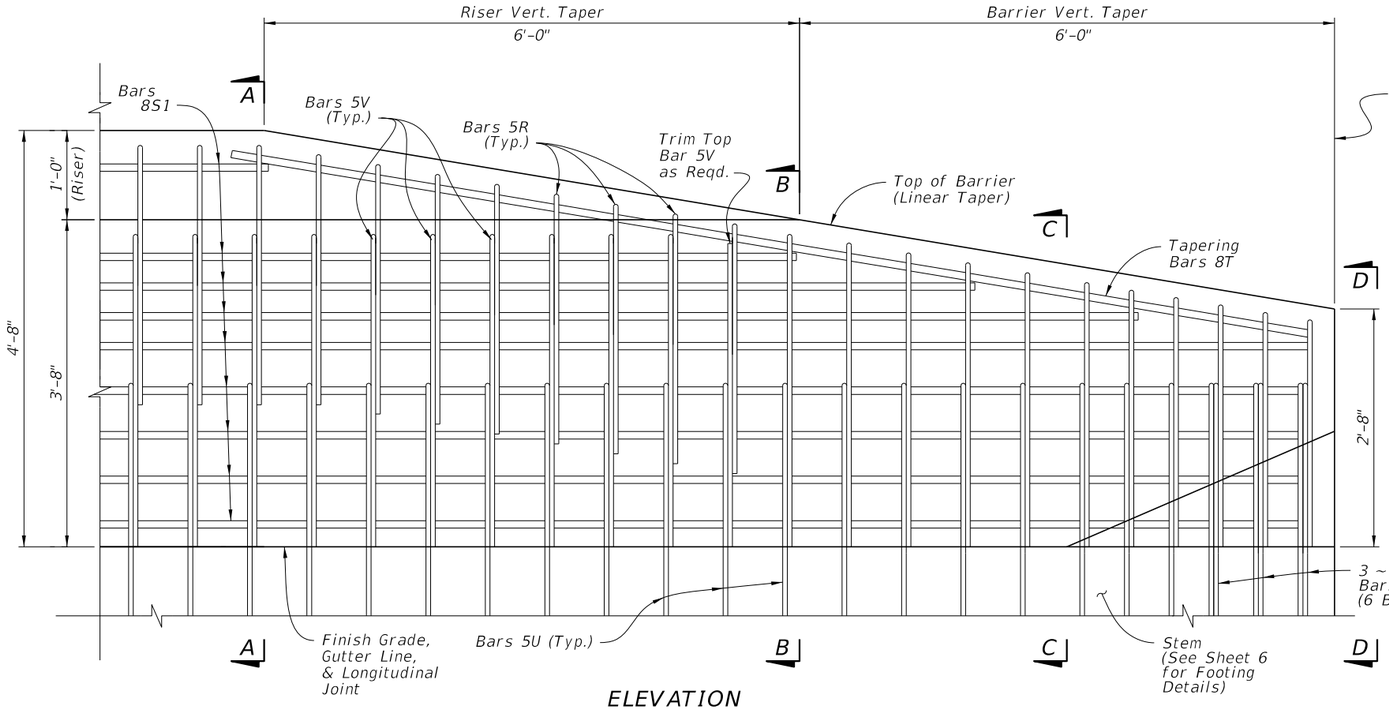

ELEVATION
(56" PPB Shown, 44" PPB Similar with 1'-0" Riser and Related Reinforcing Removed)

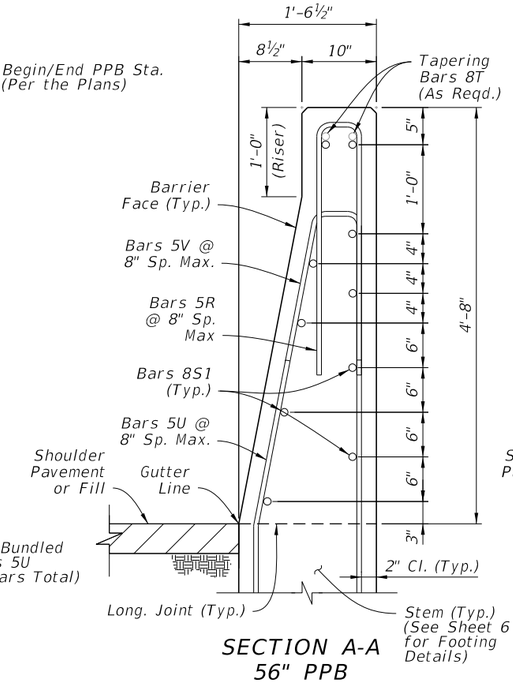

SECTION A-A
56" PPB

Concrete Qty. = 0.19 CY/FT (Above Gutter Line)
Steel Qty. = 47.7 LB/FT (Excluding Bars 5U & 8T)

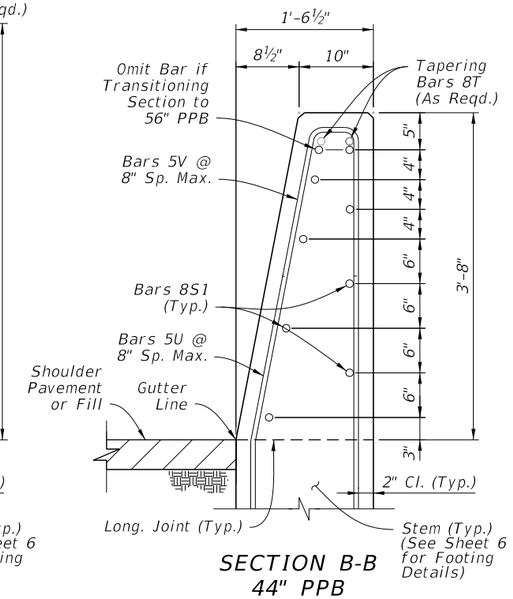

SECTION B-B
44" PPB

Concrete Qty. = 0.16 CY/FT (Above Gutter Line)
Steel Qty. = 35.7 LB/FT (Excluding Bars 5U & 8T)

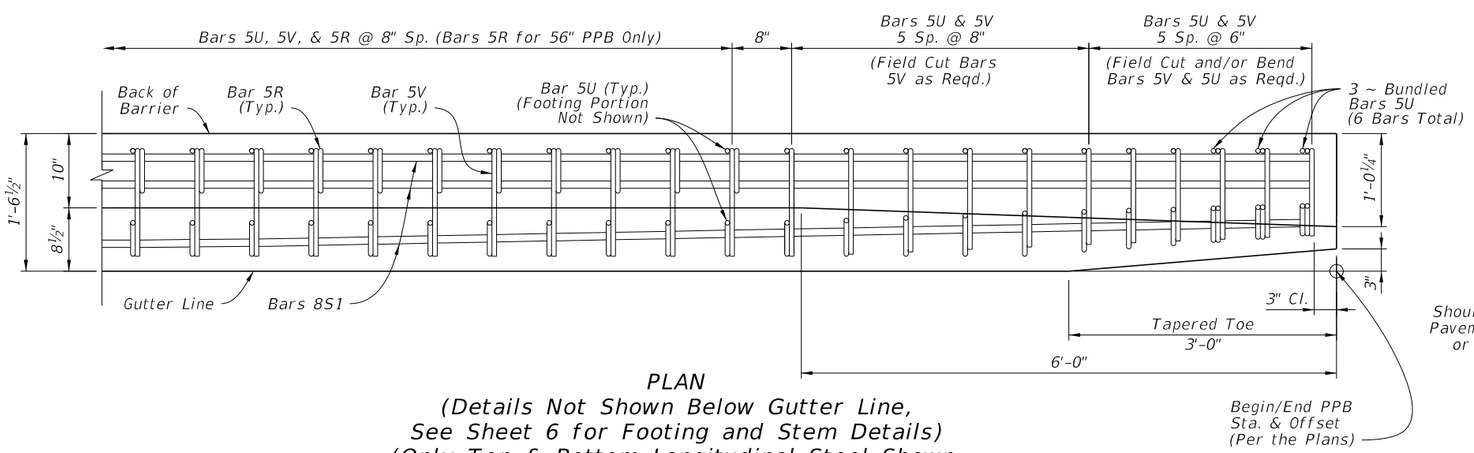

PLAN
(Details Not Shown Below Gutter Line, See Sheet 6 for Footing and Stem Details)
(Only Top & Bottom Longitudinal Steel Shown, See Section Views for All Steel Locations)

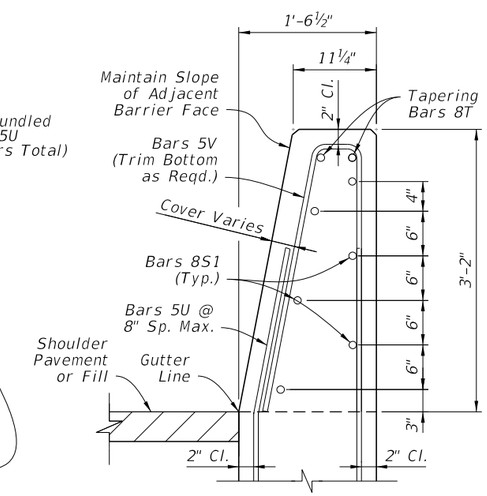

END VIEW C-C
(Begin Tapered Toe for Guardrail)

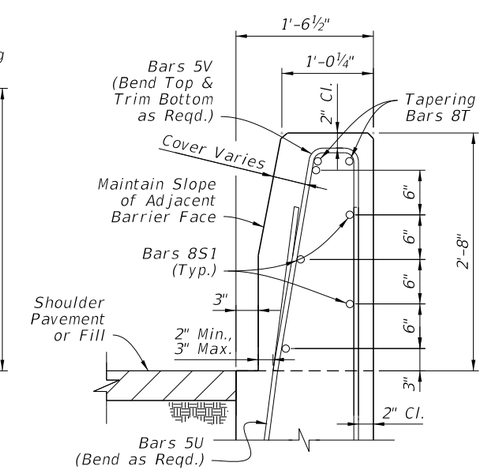

END VIEW D-D
(End Tapered Toe for Guardrail)

NOTES:

1. GENERAL: Construct either the 56" PPB or the 44" PPB height as called for in the Plans. See Sheets 2 & 3 for additional plan and elevation details.

2. FOOTING OPTIONS: See Sheet 6 for the supporting stem and footing details.

BARRIER DETAILS - CONNECTION TO GUARDRAIL

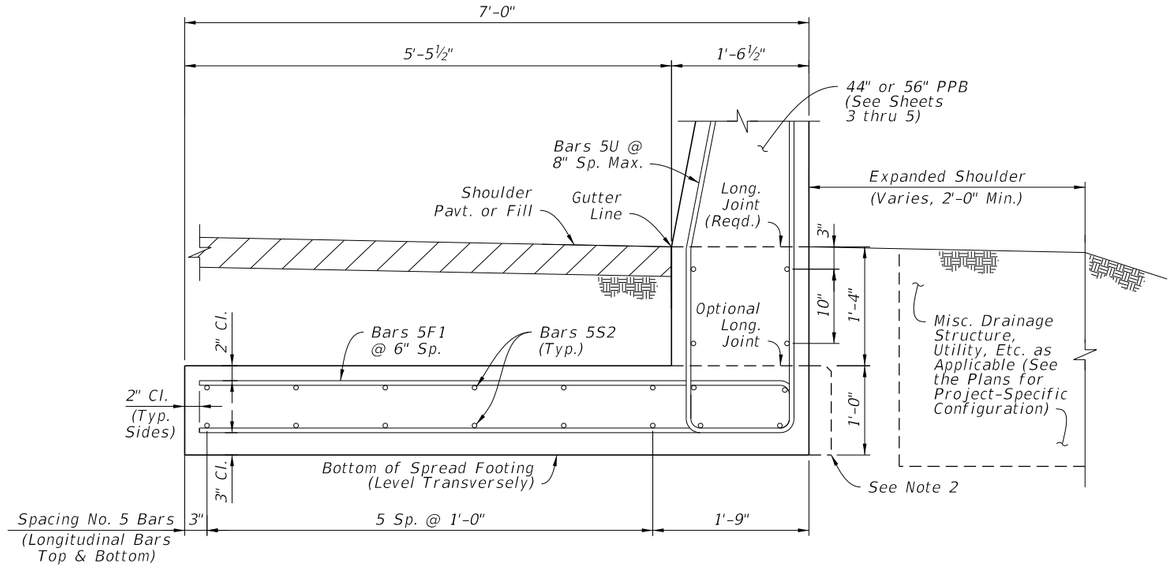

SECTION E-E
REAR-FLUSH FOOTING OPTION

Concrete Qty. = 0.34 CY/FT (Below Gutter Line)
Steel Qty. = 63.5 LB/FT (Including Bars 5U)

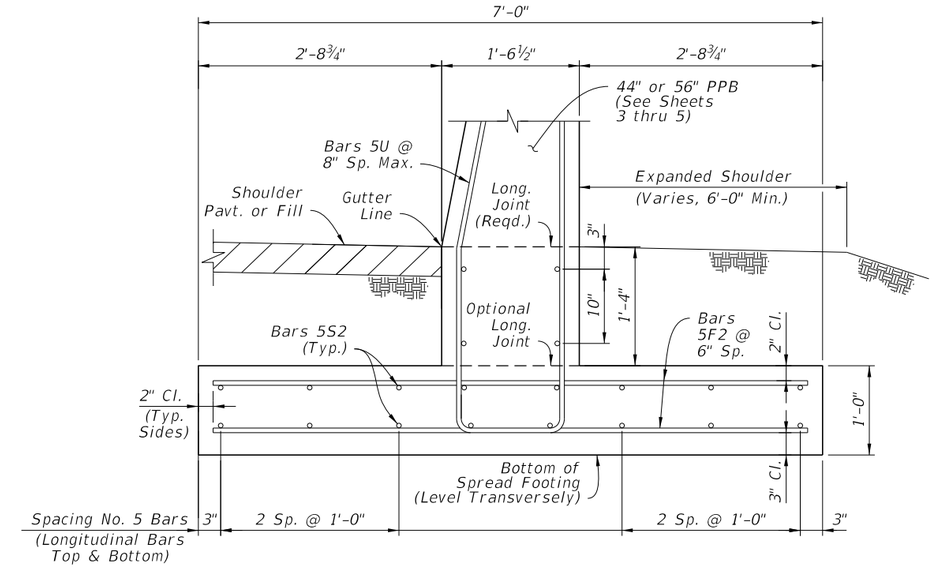

SECTION F-F
SYMMETRICAL FOOTING OPTION

Concrete Qty. = 0.34 CY/FT (Below Gutter Line)
Steel Qty. = 62.6 LB/FT (Including Bars 5U)

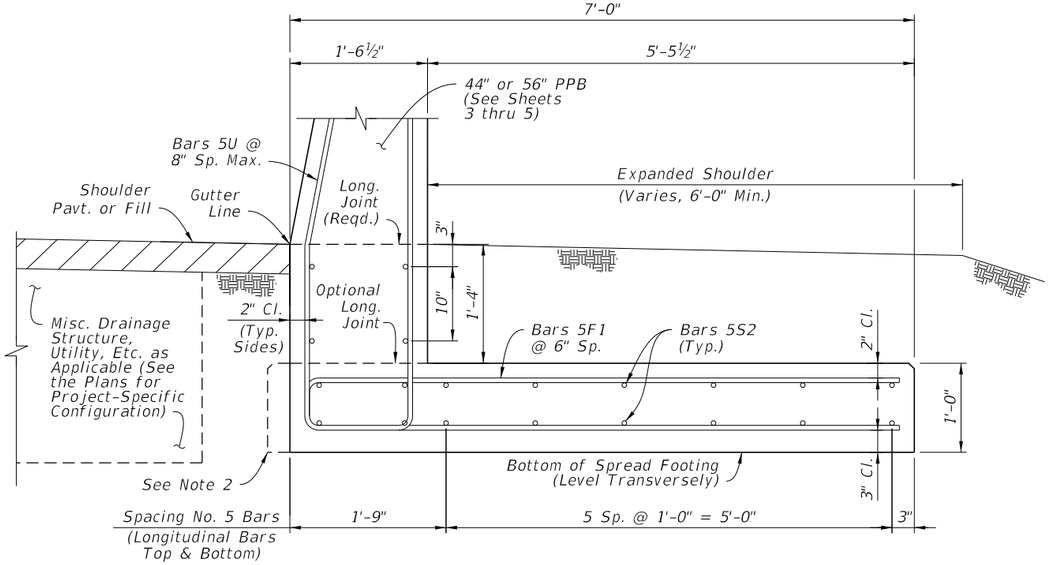

SECTION G-G
FRONT-FLUSH FOOTING OPTION

Concrete Qty. = 0.34 CY/FT (Below Gutter Line)
Steel Qty. = 63.5 LB/FT (Including Bars 5U)

NOTES:

1. GENERAL: Install the footing options per project-specific requirements, as defined on Sheet 2 and specified per the Plans.

   Work with the supported 44" PPB and 56" PPB as shown on Sheets 3, 4, & 5.

2. OPTIONAL SLIP FORMING SUPPORT: The 1'-0" depth spread footing may be extended by 3" laterally beyond the face of the stem to provide support for a subsequent slip forming operation above. Do not adjust the steel reinforcement location for the additional concrete.

3. GUARDRAIL CONNECTION TAPERED TOE: For tapering the barrier as shown on Sheet 5, View D-D, bend Bars U away from the stem face as required. For this case, the cover requirement is variable for one side of the stem (only at the tapered toe locations).

BARRIER FOOTING OPTIONS

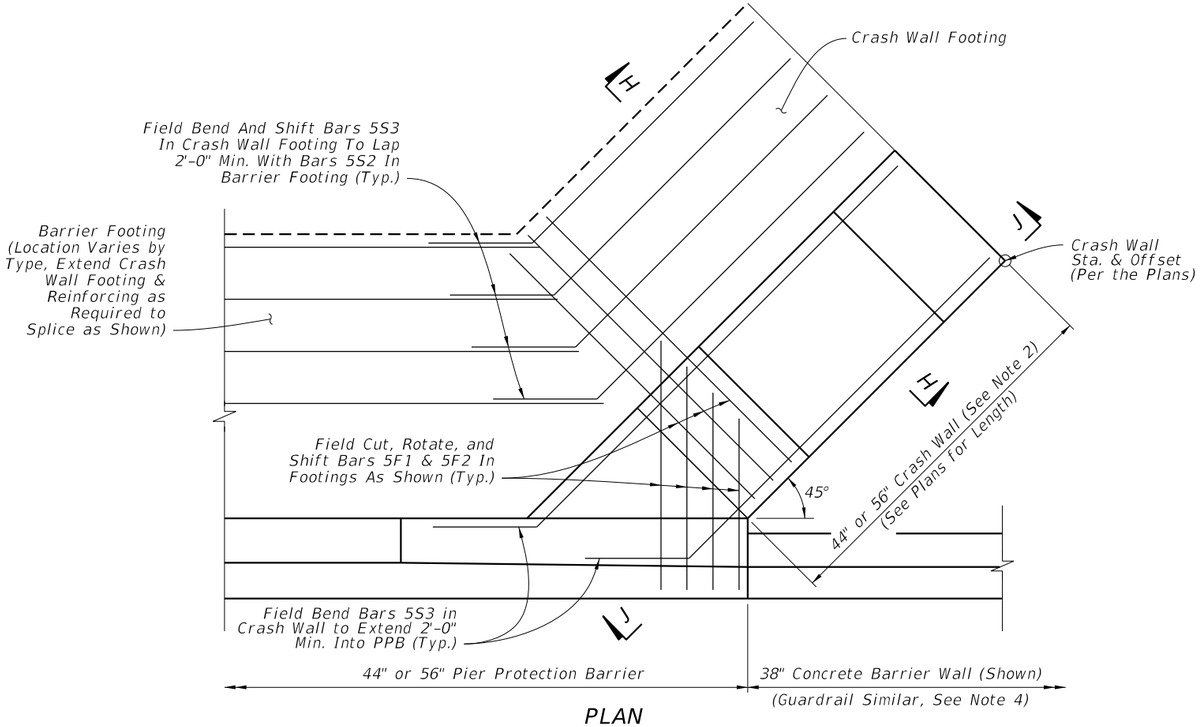

PLAN
(Schematic View - See Note 3)

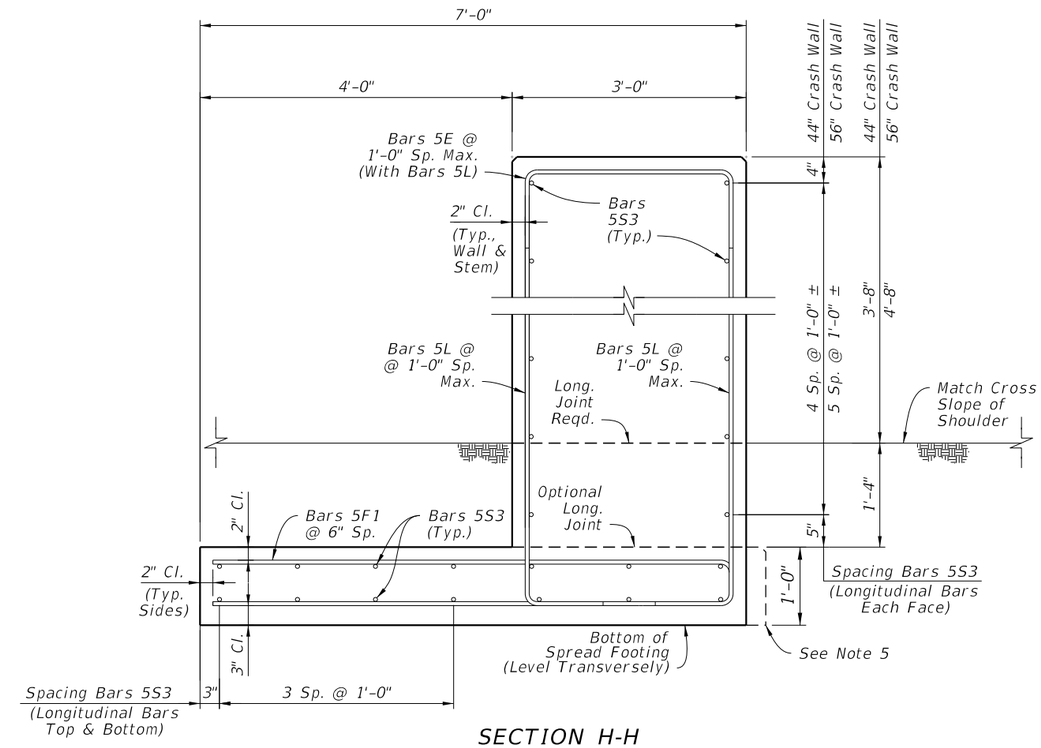

SECTION H-H
CRASH WALL

Concrete Qty. = 0.82 CY/FT (44" Crash Wall) or 0.93 CY/FT (56" Crash Wall)
Steel Qty. = 71.8 LB/FT (44" Crash Wall) or 76.0 LB/FT (56" Crash Wall)

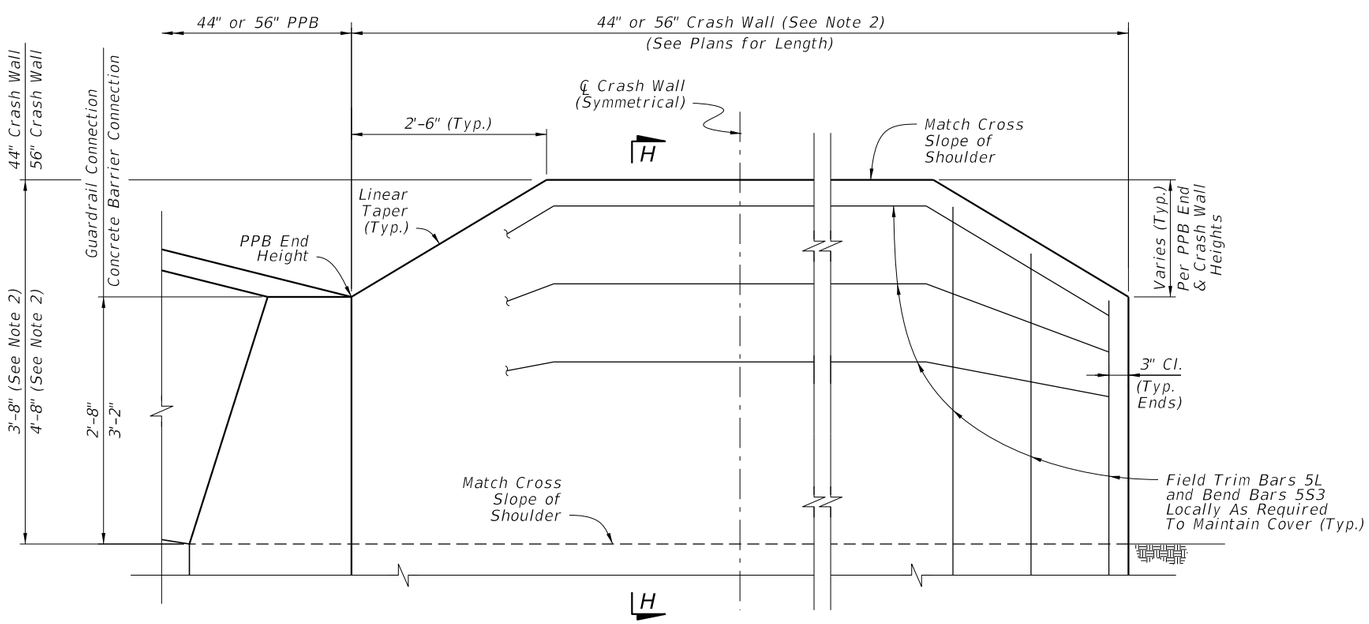

VIEW J-J CRASH WALL ELEVATION
(Schematic View - See Note 3)

NOTES:

1. GENERAL: Only where called for in the Plans, install the Crash Wall as a supplement for PPB. If applicable, see the Plans for the corresponding Station and Offset required.

   For additional layout details, see Sheets 2 & 3.

2. CRASH WALL HEIGHT: Install the Crash Wall at a height which matches the adjacent PPB (either 44" or 56").

3. SCHEMATIC VIEWS: Only partial reinforcing is shown in the Schematic Views to establish a trend while keeping clarity. For all reinforcing steel locations and spacing requirements, see Section H-H.

4. GUARDRAIL CONNECTIONS: To facilitate guardrail connections, shift the Crash Wall 3 feet from the end of the PPB as shown on Sheets 2 & 3.

5. OPTIONAL SLIP FORMING SUPPORT: The 1'-0" depth spread footing may be extended by 3" laterally beyond the face of the wall to provide support for a subsequent slip forming operation above. Do not adjust the steel reinforcement location for the additional concrete.

CRASH WALL DETAILS

BILL OF REINFORCING STEEL		
MARK	SIZE	LENGTH
V	5	7'-5"
U	5	8'-11"
R	5	6'-0"
F1	5	13'-9"
F2	5	Varies (Straight)
L	5	6'-5" / 7'-5"
E	5	4'-6"
S1	8	Varies (Straight)
S2, S3	5	Varies (Straight)

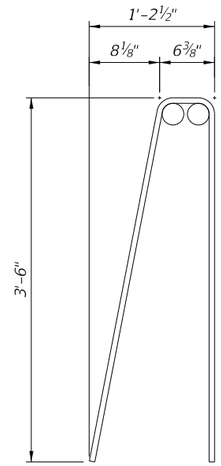

BARS 5V

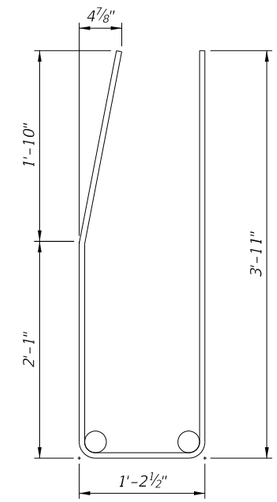

BARS 5U

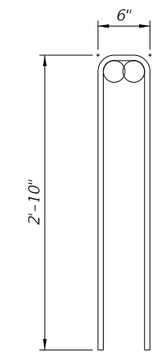

BARS 5R

NOTES:

1. Work with the Standard Bar Bending Details per Index 415-001.
2. All bar dimensions in the bending diagrams are out to out.

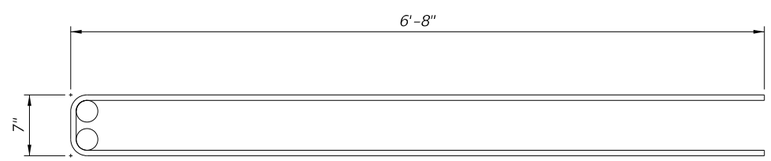

BARS 5F1

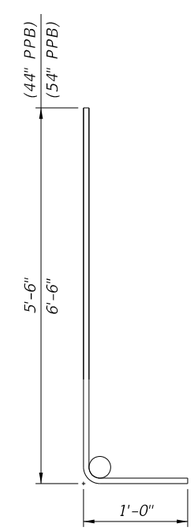

BARS 5L

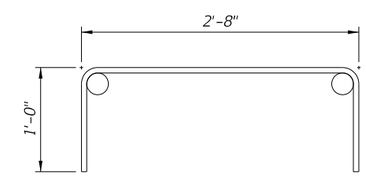

BARS 5E

BAR BENDING DIAGRAMS

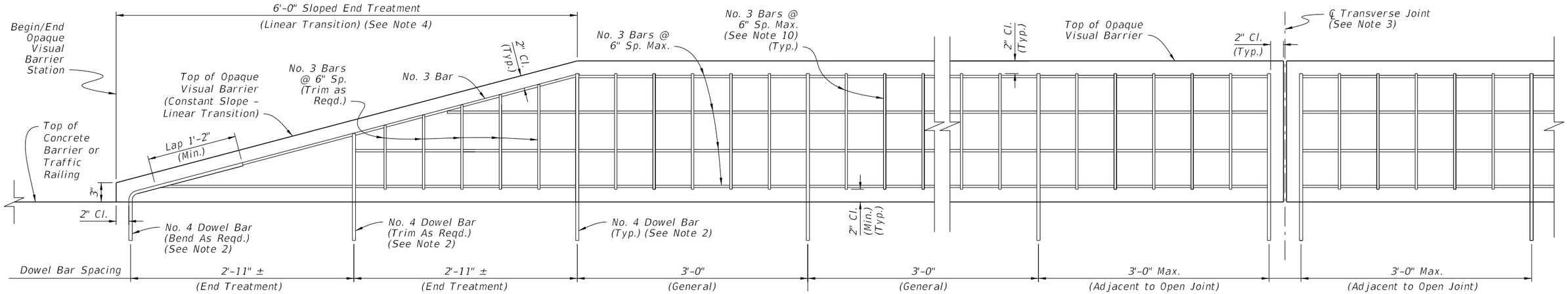

ELEVATION VIEW - OPAQUE VISUAL BARRIER

GENERAL NOTES:

1. GENERAL: Construct Opaque Visual Barrier (OVB) in accordance with Specification 521. Use either cast-in-place or precast panels with Class II Concrete and Class 3 Surface Finish. Do not cast OVB concrete monolithically with the Concrete Barrier or Traffic Railing; use an ASTM D6380, Class S, Type III Organic Felt bond breaker as needed.

2. DOWEL BAR CONNECTION: For the embedment in Concrete Barrier or Traffic Railing concrete, dowel bars must be either cast in place for new concrete or grouted in place for existing concrete. Embed the dowel bars to the corresponding depths shown, and use the bar lengths provided in the Dowel Bar Length Table.

   At cast in place embedment locations, longitudinally shift the dowel bars only as required to avoid reinforcing steel in the Concrete Barrier or Traffic Railing.

   At grouted embedment locations, drill ⅝" Ø holes to a depth of 6¼". Use only approved non-shrink grout on the APL. Drilling through existing reinforcing steel is permitted.

3. TRANSVERSE JOINTS: Place ½" Transverse Joints with a maximum spacing of 50'-0" and a minimum spacing of 20'-0". Use a consistent spacing where practical.

   Without violating the above spacing requirements, place Transverse Joints matching the location and width of open joints in the supporting Concrete Barrier or Traffic Railing.

4. SLOPED END TREATMENTS: Regardless of the traffic direction, place Sloped End Treatments on all exposed ends of OVB, excluding leave-outs for barrier-mounted signs and light poles. See Note 7 below.

5. BARRIER-MOUNTED SIGNS AND LIGHT POLES: Where signs and barrier-mounted light pole structures conflict with placement of OVB, end and restart the OVB with a transverse vertical face located a longitudinal distance of 2" (±½") from the base of the structure. Follow the same reinforcing scheme and concrete cover requirement for the Transverse Joint shown herein. See Note 7 below.

6. LARGE BARRIER-MOUNTED SIGN SUPPORTS: See Sheet 2 for details. See Note 7 below.

7. LEAVE-OUTS: OVB leave-outs are longitudinal gaps in OVB segments required to accommodate barrier-mounted signs and light pole placement. Leave-outs up to 15 feet in length are included in OVB length measurement.

8. ASYMMETRICAL CONCRETE BARRIER SECTIONS: When mounting on top of an asymmetrical Concrete Barrier section (not shown), align the centerline of the OVB with the centerline of the top face of the Concrete Barrier section.

9. SPLIT CONCRETE BARRIER SECTIONS: For split Concrete Barrier sections that run separately (for vertical structures, bridges, etc.), OVB is only required on top of one of the Concrete Barrier sections. Place OVB on top of the Concrete Barrier section with the highest elevation. For these segments, mount barrier delineators on only the OVB face nearest the roadway (barrier mount other side). Longitudinally overlapping OVB runs are permitted where called for in the Plans, as designated with overlapping Begin and End Station OVB callouts.

10. VERTICAL REINFORCING: Place vertical No. 3 bars with the spacing shown, except that No. 3 bars at the dowel bar locations may be shifted longitudinally to fit or they may be omitted at the contractor's option.

11. OPTIONAL WELDED WIRE REINFORCEMENT: With the approval of the Engineer, the No. 3 bars shown herein may be replaced with welded wire reinforcement in accordance with Specification 415. Use welded wire reinforcement of equal or greater strength than the bars being replaced; maintain the same cover requirements with equivalent or smaller spacing.

12. VARIABLE HEIGHT CONCRETE BARRIERS: See Sheet 2 for details.

13. CONCRETE BARRIER AND TRAFFIC RAILING TRANSITIONS BETWEEN DIFFERING SECTIONS: Transition the OVB section using a method similar to the OVB Linear Bottom Transition shown in Elevation View 'B' on Sheet 2, except adjust the longitudinal length of the transition as required.

DOWEL BAR LENGTH TABLE

Type:	Grouted	C-I-P
Single-Slope Concrete Barrier	2'-2"	2'-8"
Single-Slope Traffic Railing	2'-4"	2'-10"
F-Shape	2'-8"	3'-2"

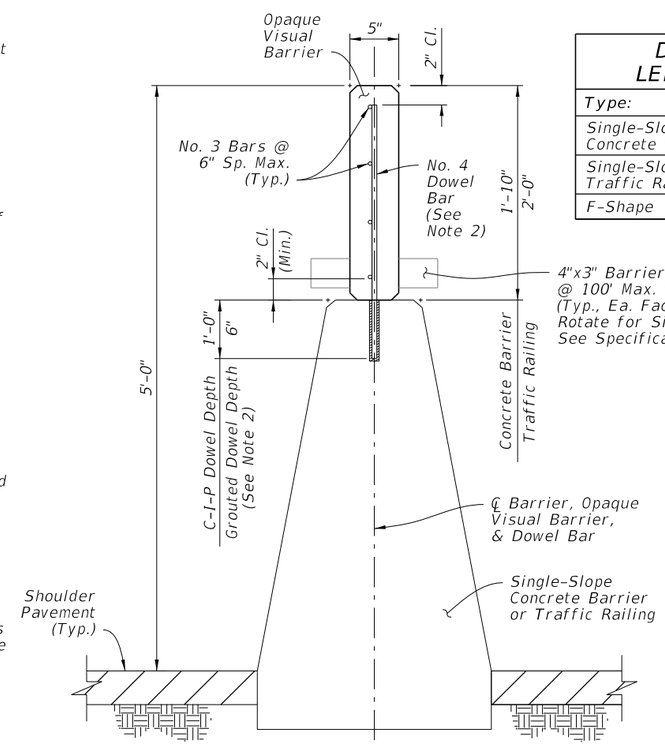

SECTION VIEW - OPAQUE VISUAL BARRIER FOR MEDIAN SINGLE-SLOPE CONCRETE BARRIER OR TRAFFIC RAILING

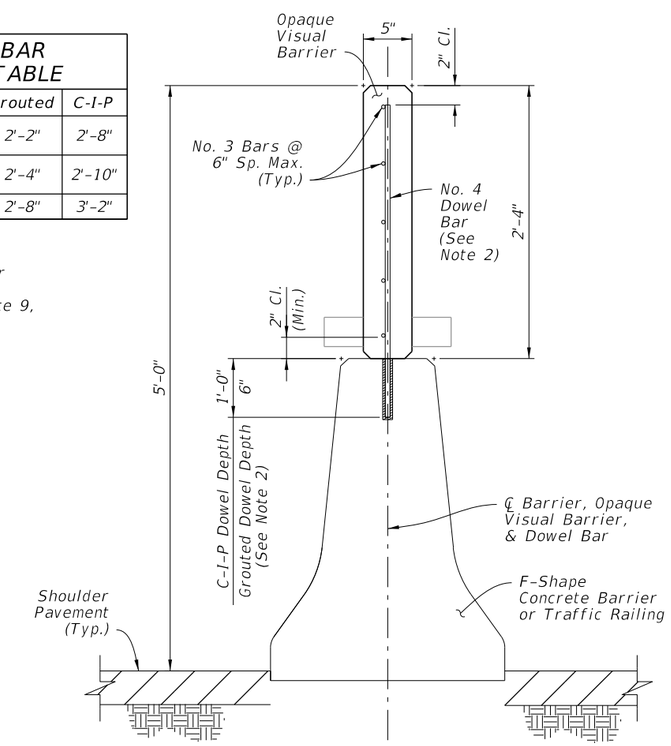

SECTION VIEW - OPAQUE VISUAL BARRIER FOR MEDIAN F-SHAPE CONCRETE BARRIER OR TRAFFIC RAILING

10/20/2022 8:51:13 AM

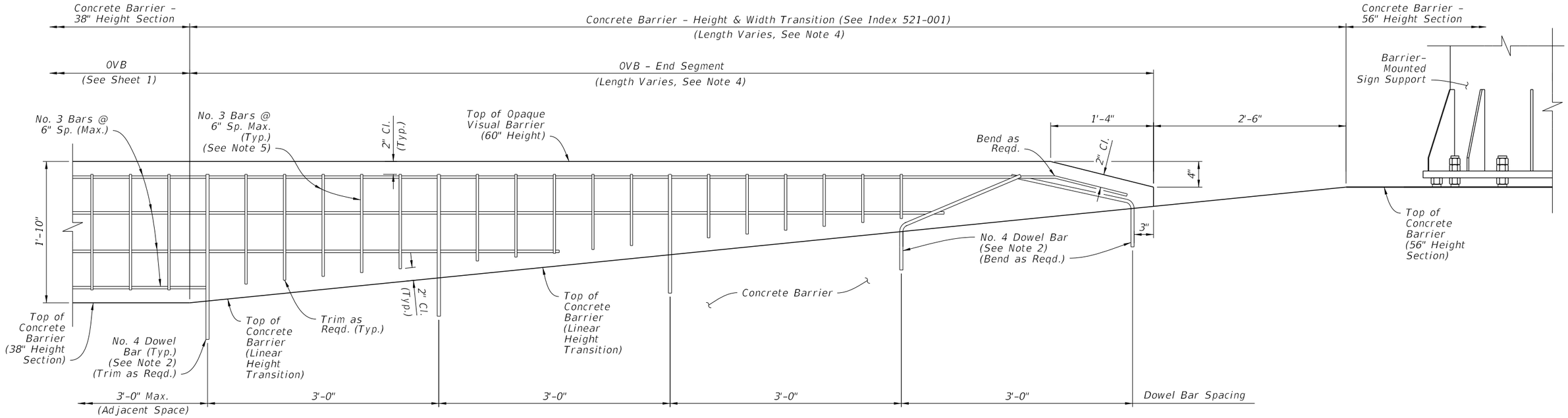

ELEVATION VIEW 'A' - OVB END SEGMENT AT CONCRETE BARRIER HEIGHT TRANSITION FROM 38" HEIGHT TO 56" HEIGHT SECTION (REVERSE DIRECTION SIMILAR BY OPPOSITE HAND)

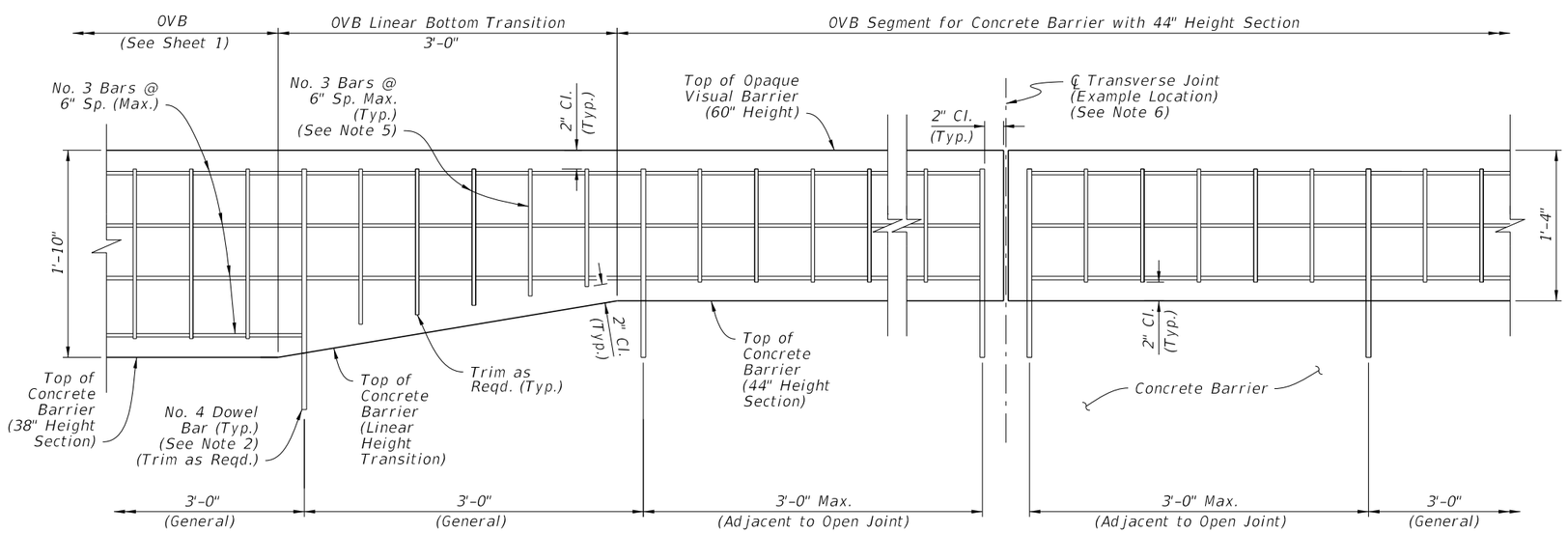

ELEVATION VIEW 'B' - OVB SEGMENT FOR CONCRETE BARRIER WITH 44" HEIGHT SECTION (OVB LINEAR BOTTOM TRANSITION SHOWN, REVERSE DIRECTION SIMILAR BY OPPOSITE HAND)

NOTES:

1. LATERAL DIMENSIONS: Maintain the OVB section width and lateral placement as defined on Sheet 1.

2. DOWEL BAR LENGTHS & CONNECTIONS: For the differing OVB section heights, trim or adjust the dowel bar lengths as required to meet the clearances shown while maintaining the dowel bar connection requirements of Sheet 1.

   Elevation View 'A' – For the two dowel bars closest to the OVB end location, use full dowel bar lengths and bend as shown to maintain clearances. Overlapping dowel bars may deviate from the lateral centerline as required.

3. DOWEL BAR SPACING:

   Elevation View 'B' – The dowel locations shown in this detail are examples only, and may shift to maintain the spacing pattern that is governed by adjacent OVB. Maintain the dowel bar spacing scheme as defined on Sheet 1; place dowel bars within the OVB Linear Bottom Transition as required.

4. SEGMENT LENGTHS:

   Elevation View 'A' – The length of the OVB End Segment is governed by the length of linear width and height transition of the Concrete Barrier.

   Elevation View 'B' – The length of the reduced-section OVB segment is governed by the length of Concrete Barrier with 44" Height Section.

5. VERTICAL REINFORCING: For the differing OVB section heights, trim or adjust the vertical No. 3 Bar lengths as required to meet the clearances shown.

6. TRANSVERSE JOINTS:

   Follow the requirements of Sheet 1.

   Elevation View 'A' – Do not place Transverse Joints within the End Segment.

   Elevation View 'B' – Maintain the Transverse Joint spacing scheme as defined on Sheet 1; place dowel bars within the OVB Linear Bottom Transition as required.

10/20/2022 8:51:14 AM

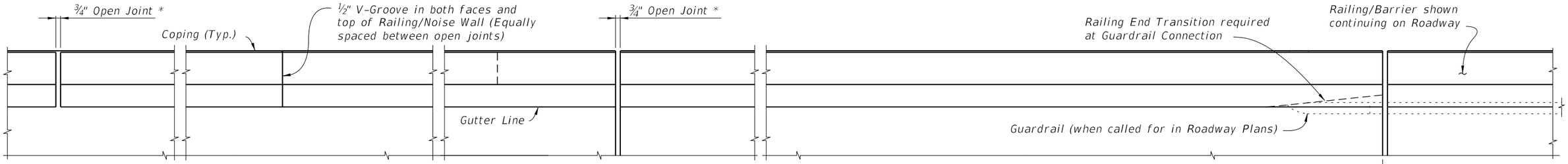

* Construct ¾" Open Joints plumb at Construction Joints in Junction Slabs or Footings.

CROSS REFERENCE:
For Section A-A see Sheet 3.
For Section C-C and Detail "A" see Sheet 5.
For Wall mounted Barrier/Noise Wall Details see Index 521-512.
For Footing mounted Barrier/Noise Wall Details see Index 521-513 (T-Shaped), 521-514 (L-Shaped) or 521-515 (Trench).

PLAN
(Reinforcing Steel not shown for clarity)

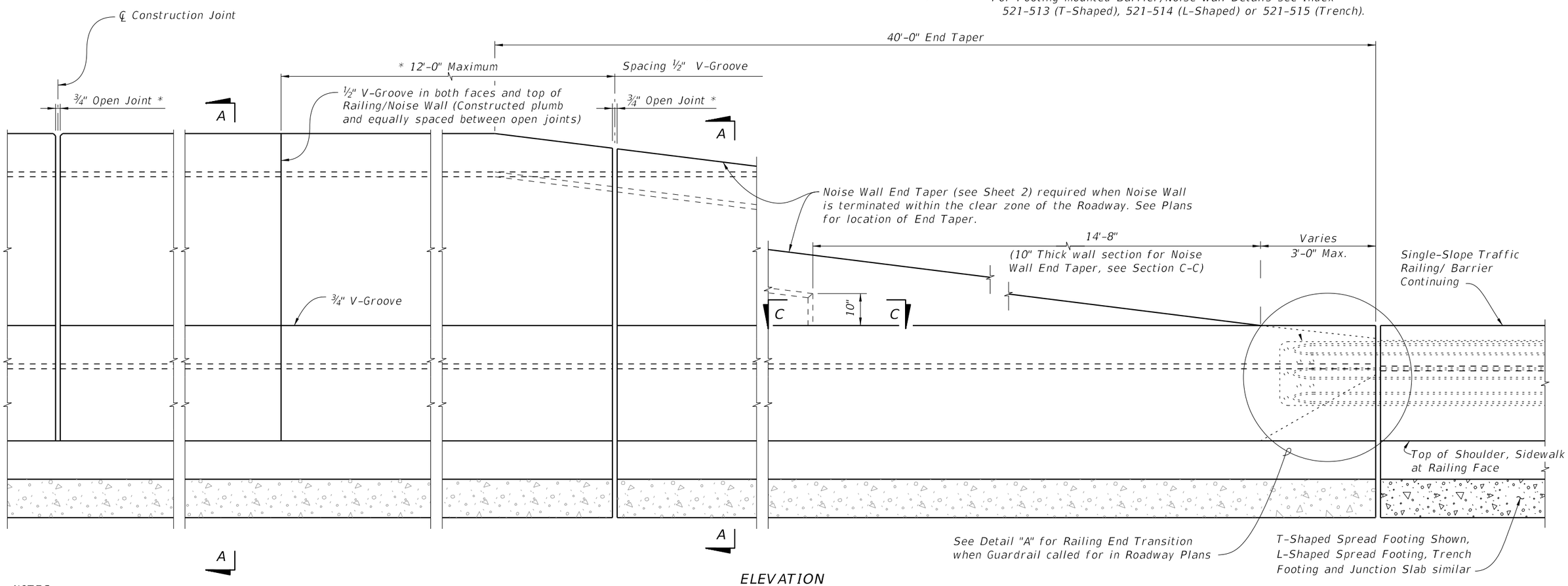

ELEVATION
(INSIDE FACE OF CONCRETE BARRIER/NOISE WALL WITH T-SHAPED FOOTING SHOWN,
(Other footings similar, Reinforcing steel not shown for clarity)

NOTES:
1. Work this Index with Indexes 521-512 through 521-515.
2. The Concrete Barrier/Noise Wall and joints shall be constructed plumb.
3. Concrete:
   A. Class II for slightly aggressive environments.
   B. Class IV for moderately or extremely aggressive environments.
4. Provide ¾" Open Joints spaced between 30 feet minimum to 90 feet maximum. Align Open Joints with construction joints in the Junction Slab or Footing. Provide additional reinforcing (see Sheet 2) at each open joint.
5. Install Barrier Delineators 2'-4" above the riding surface in accordance with Specification Section 705. Match the Barrier Delineators color (White or Yellow) to the near edgeline.
6. Slip forming of the barrier portion is permitted.
   A. Stem walls may be widened, at no additional cost, to accommodate slip forming.

10/20/2022 8:51:16 AM

LAST REVISION	REVISION	DESCRIPTION:			INDEX	SHEET
11/01/19			FY 2023-24 STANDARD PLANS	CONCRETE BARRIER/NOISE WALL (8'-0")	521-510	1 of 5

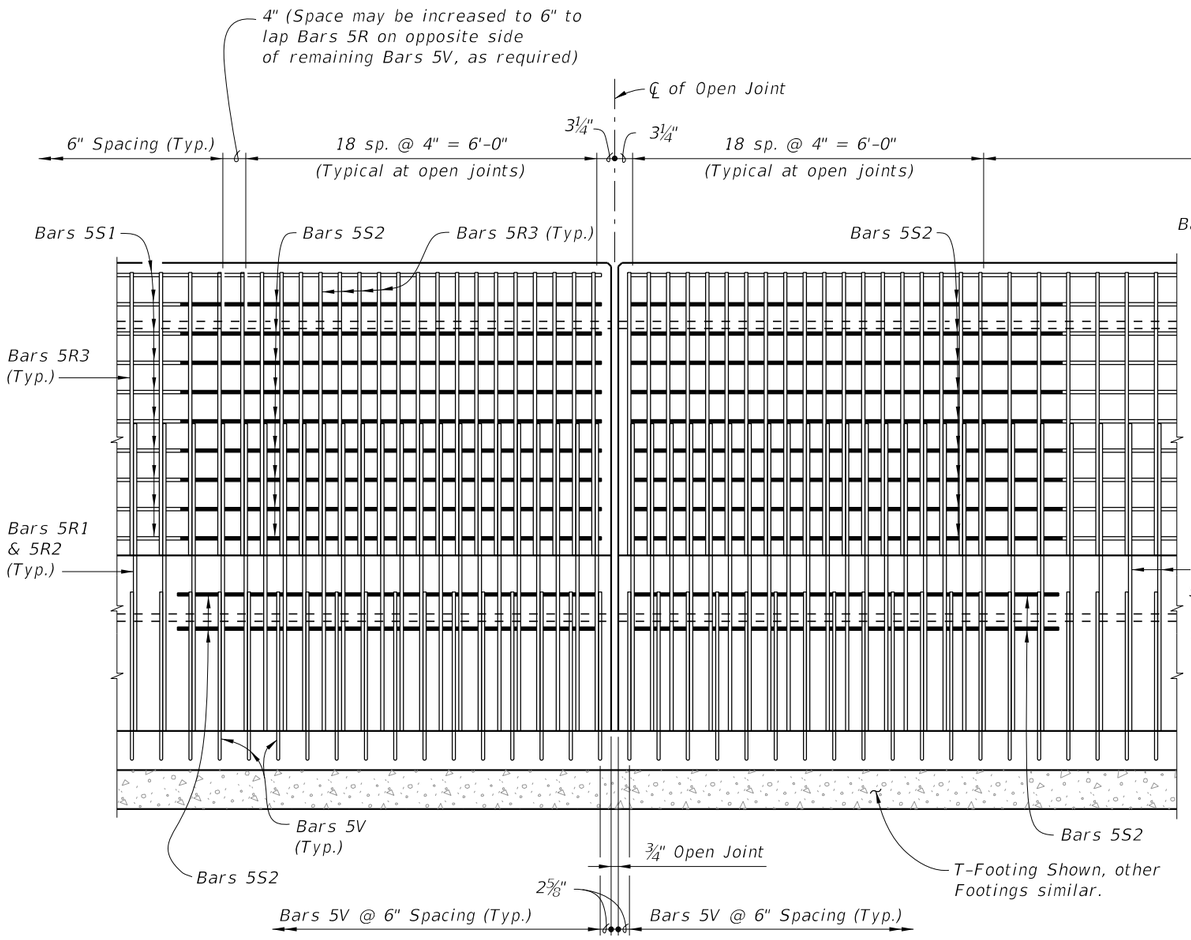

ELEVATION OF BARRIER/NOISE WALL REINFORCING STEEL AT OPEN JOINT
(Bars 5S1 in Barrier not shown for clarity)
(Footing or Junction Slab Details not shown)

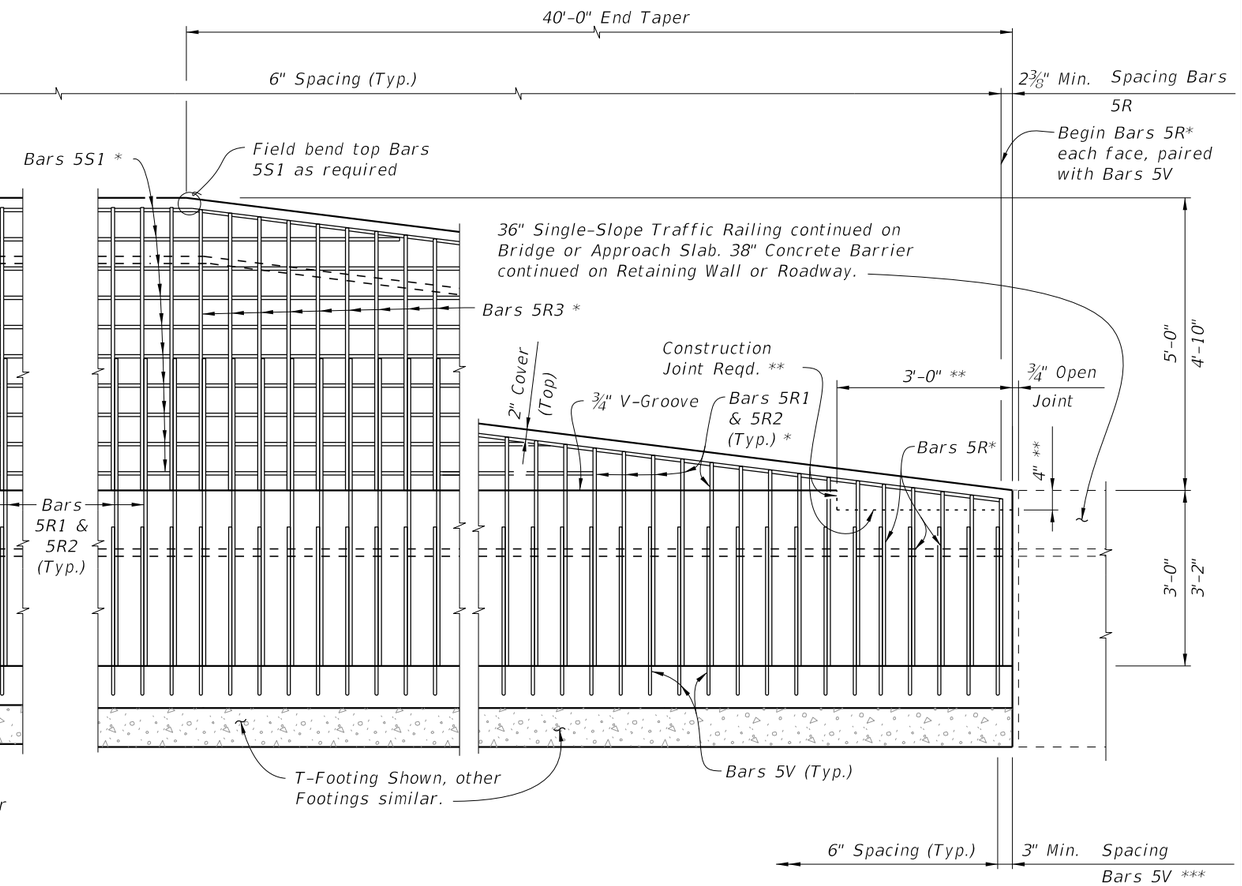

ELEVATION OF BARRIER/NOISE WALL END TAPER (ADJACENT TO CONCRETE BARRIER SHOWN, GUARDRAIL ATTACHMENT SIMILAR SEE DETAIL "A", SHEET 5)
(Bars 5S1 in Railing not shown for clarity)
(Footing or Junction Slab Details not shown)

NOTES:

* Field Cut Bars 5R & 5S1 to maintain clearance.

** Terminate ¾" V-groove at construction joint & cast top of railing with End Taper.

*** Bar spacing shown for Bars 5V only applies when Single-Slope Concrete Barrier continues. For transition to guardrail see Sheet 5. Work Traffic/ Railing Noise Wall reinforcing with Index 521-512 (Junction Slab) or Index 521-513 through 521-515 (T, L or Trench Footings)

10/20/2022 8:51:17 AM

LAST REVISION	REVISION	DESCRIPTION:			INDEX	SHEET
11/01/18			FY 2023-24 STANDARD PLANS	CONCRETE BARRIER/NOISE WALL (8'-0")	521-510	2 of 5

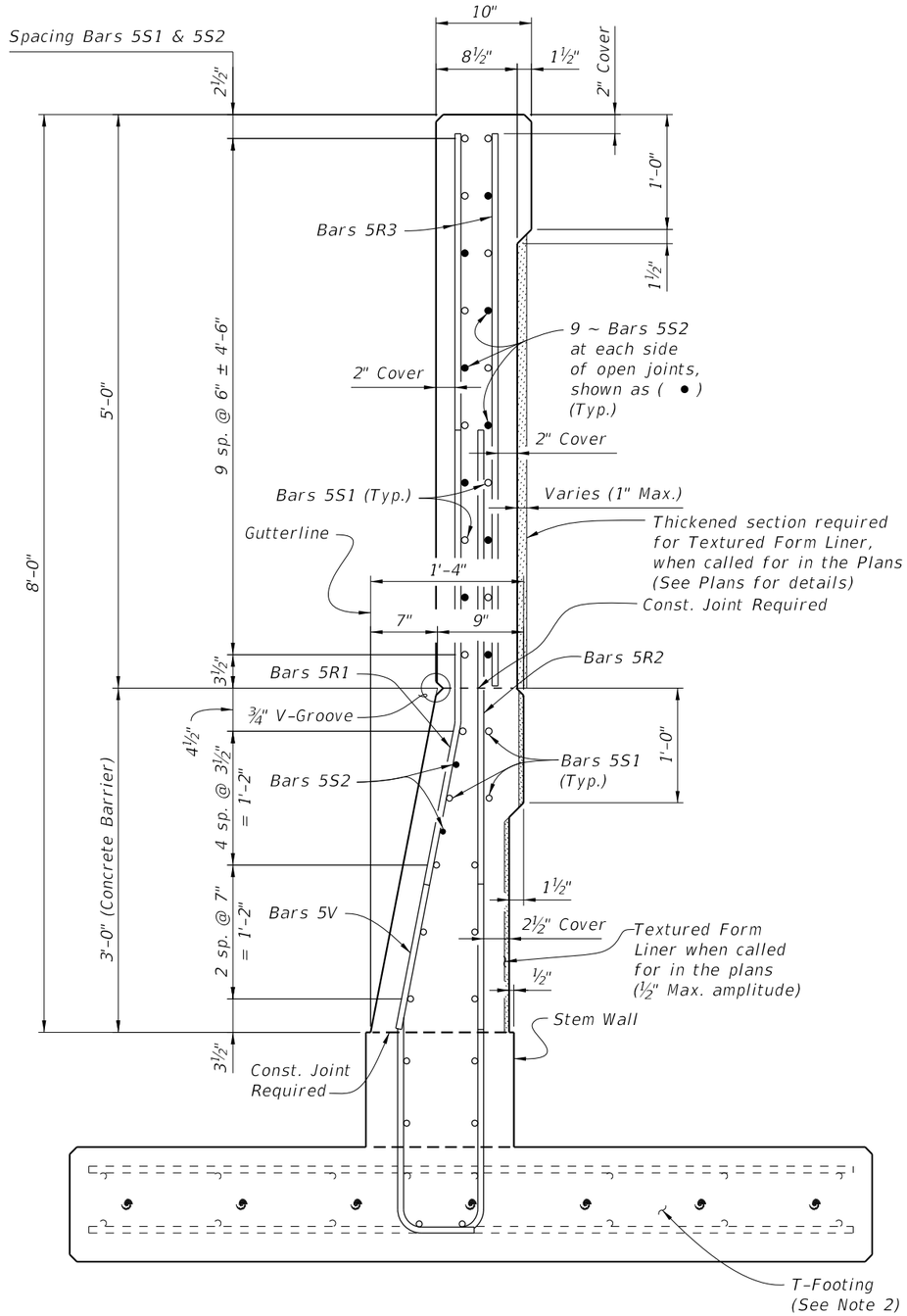

SECTION A-A
TYPICAL SECTION THRU CONCRETE BARRIER/NOISE WALL AT OPEN JOINT
(Section Thru T-Footing Shown, Section Thru
Junction Slab, L or Trench Footings similar)

NOTES:

1. Bars 5V shown are for T-Shape footings.
   5V for Junction Slab, L-Shape and Trench footings are similar.
2. Foundation Details:
   Index 521-512 (Junction Slab)
   Index 521-513 (T-Shape)
   Index 521-514 (L-Shape)
   Index 521-515 (Trench)

CROSS REFERENCE:
For locations of Section A-A see Sheet 1.
For location of View B-B, see Sheet 5.
For Detail "A", see Sheet 5

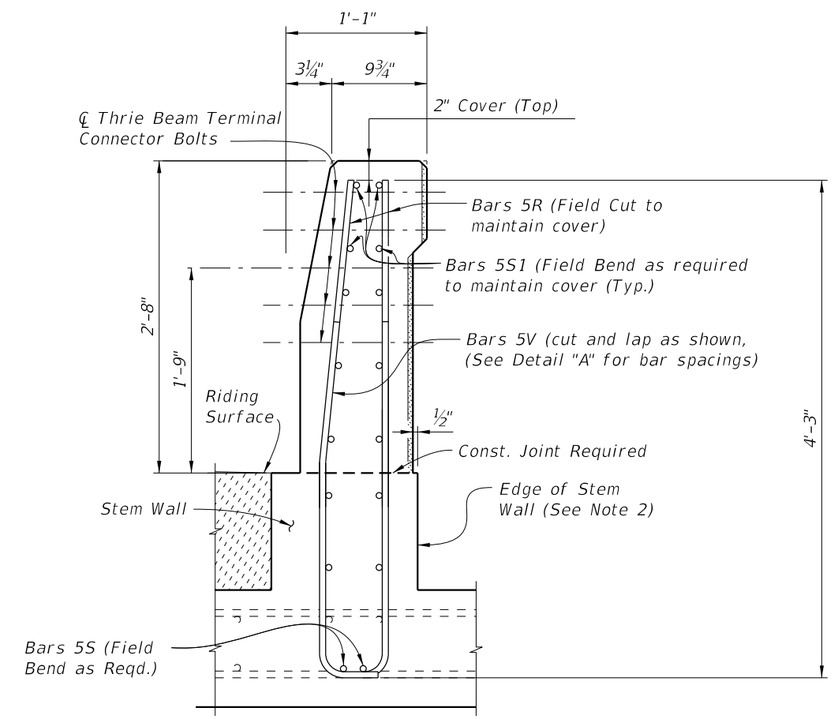

VIEW B-B
END VIEW OF RAILING END TRANSITION FOR
GUARDRAIL ATTACHMENT
(T-Footing shown, Junction Slab, L or Trench Footings similar)

10/20/2022 8:51:18 AM

LAST REVISION	REVISION	DESCRIPTION:			INDEX	SHEET
11/01/18			FY 2023-24 STANDARD PLANS	CONCRETE BARRIER/NOISE WALL (8'-0")	521-510	3 of 5

REINFORCING STEEL BENDING DIAGRAMS

BILL OF REINFORCING STEEL		
MARK	SIZE	LENGTH
R1	5	5'-2"
R2	5	5'-2½"
R3	5	4'-10"
S1	5	As Reqd.
S2	5	7'-3"
V (Wall)	5	6'-6½"
V (T-Footing)	5	7'-8½"

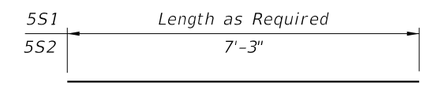

BARS 5S1 & 5S2

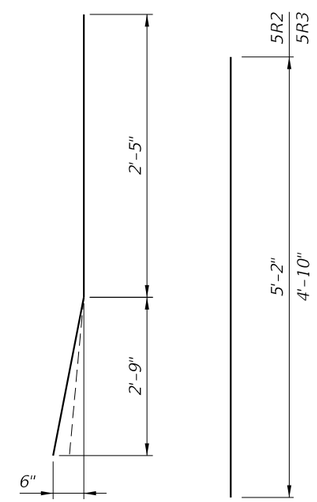

BAR 5R1

BAR 5R2 &
BAR 5R3

(Field Cut and Bend
for Railing End Transition)

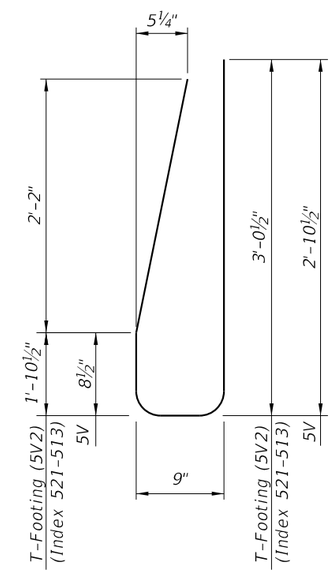

STIRRUP BAR 5V

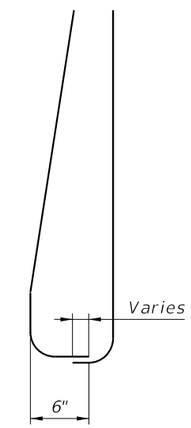

END STIRRUP BAR 5V
To Be Field Cut
(Railing End Transition)

REINFORCING STEEL NOTES:

1. All bar dimensions in the bending diagrams are out to out.
2. All reinforcing steel at the open joints shall have a 2" minimum cover.
3. Bars 5R shall be one continuous or lap spliced bar. No mechanical couplers are permitted.
4. Bars 5S1 may be continuous or spliced at the construction joints. Lap splices for Bars 5R, 5S1 and 5W shall be a minimum of 2'-2".
5. The Contractor may use Welded Wire Reinforcement (WWR) when approved by the Engineer. WWR must consist of deformed wire meeting the requirements of Specification Section 931.
6. See Index 521-514 and 521-515 for L-shaped and Trench footing vertical reinforcing.

ESTIMATED TRAFFIC RAILING/NOISE WALL QUANTITIES		
ITEM	UNIT	QUANTITY
Concrete (Railing)	CY/LF	0.107
Concrete (Noise Wall)	CY/LF	0.136
Reinforcing Steel (Typical)	LB/LF	69.36
Additional Reinf. @ Open Joint	LB	226.85

(The above quantities are based on the Concrete Barrier/ Noise wall typical section, (excluding junction slab or footing)

CROSS REFERENCE:
See Index 521-512 for Junction Slab Details and Indexes 521-513 thru 521-515 for additional footing details.

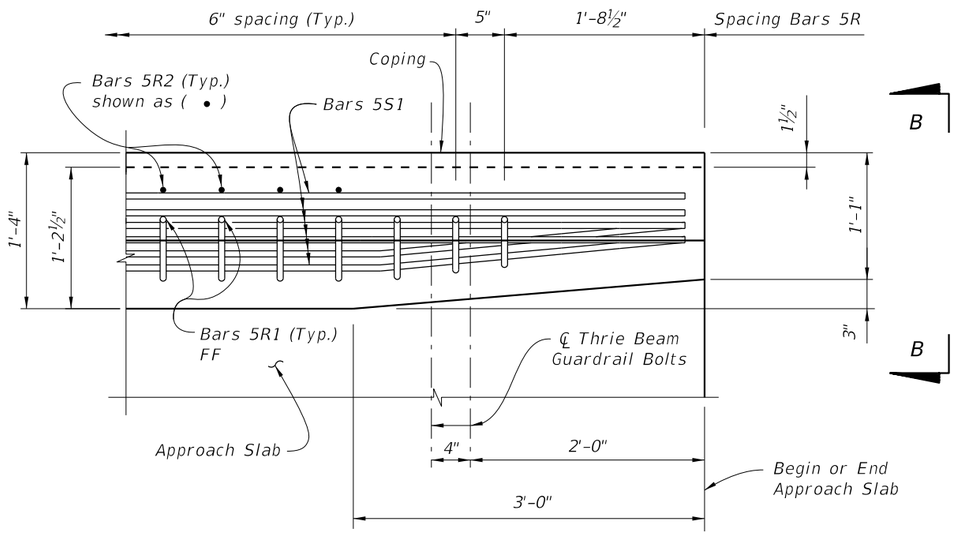

PLAN - RAILING END TRANSITION
(Showing Bars 5R, and Bars 5S1)
(Bars 5V not shown for Clarity)

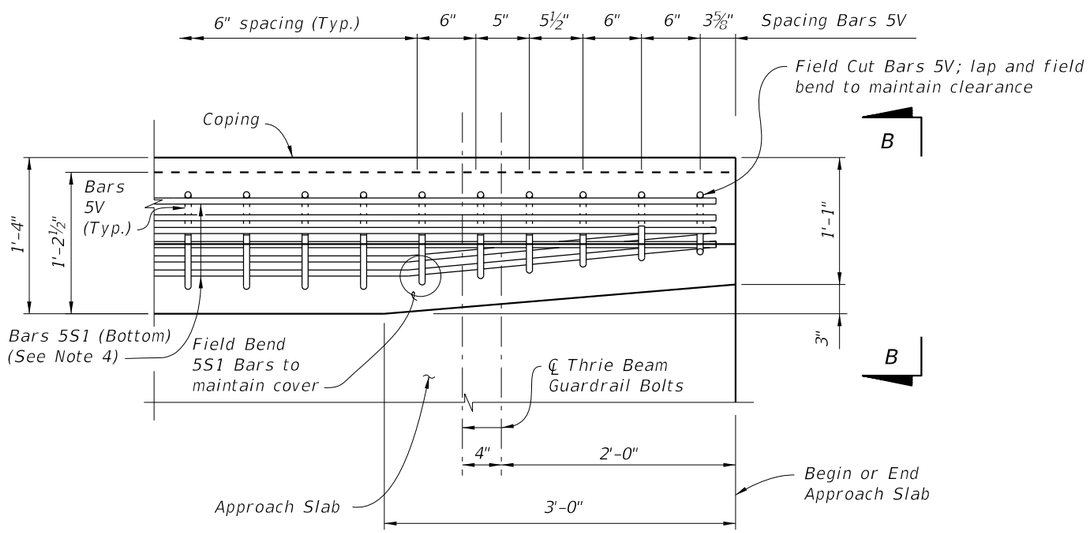

PLAN - RAILING END TRANSITION
(Showing Bars 5V and Bars 5S1)
(Bars 5R not shown for Clarity)

DETAIL "A"

DETAIL "A" NOTES:

1. Begin placing Railing Bars 5V at the railing end and proceed toward the guardrail (thrie beam) terminal connector to ensure placement of guardrail bolt holes. Pair Bars 5R with Bars 5V as shown. Clearance of Bars 5R & 5V to guardrail bolt holes shall be checked to prevent cutting of bars if bolt holes are to be drilled. Shift bars locally where conflicts occur.
2. For Guardrail connection details see Index 536-001.
3. Omit Railing End Transition if a Single-Slope Concrete Barrier/ Barrier continues beyond the End Taper. See the Plan Sheets.
4. Field cut Bars 5R2 to maintain cover. Field cut Bars 5V and lap as necessary to maintain cover; field cut & bend Bars 5R1 front leg (more plumb) to maintain cover and tie to S1 Bars. (See Sheet 1 Notes 1 and 2)

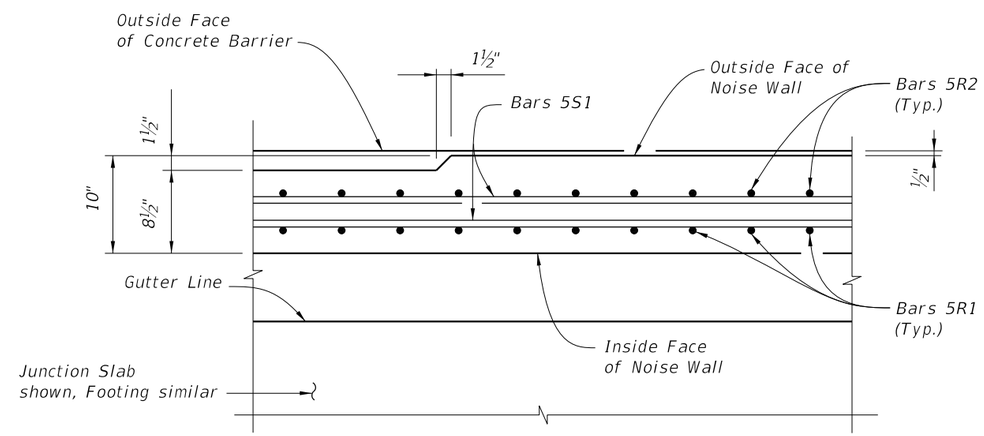

SECTION C-C
THRU NOISE WALL END TAPER

CROSS REFERENCE:
For location of Detail "A" see Sheet 1.
For location of Section C-C see Sheet 1.
For View B-B see Sheet 3.

10/20/2022 8:51:20 AM

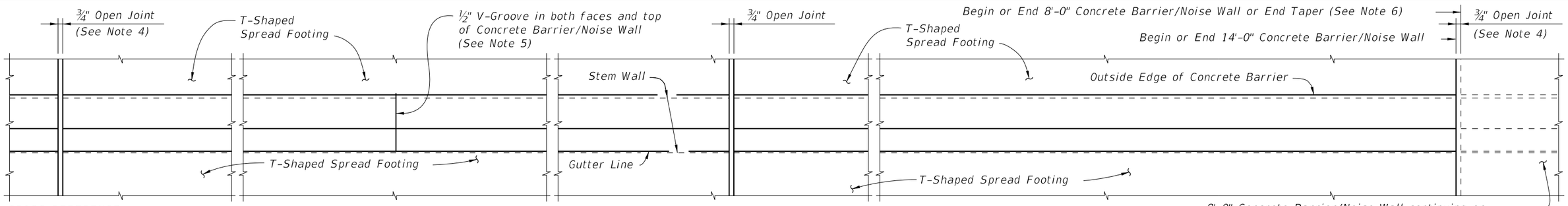

CROSS REFERENCE:
For Section A-A, Detail "A" and Estimated Quantities, see Sheet 3.
For Expansion Joint Detail in Footing, see Index 521-513, 521-514 or 521-515.

PLAN (Reinforcing Steel not shown for clarity)
(T-Shaped Spread Footing Shown, L-Shaped Spread Footing and Trench Footing Similar)

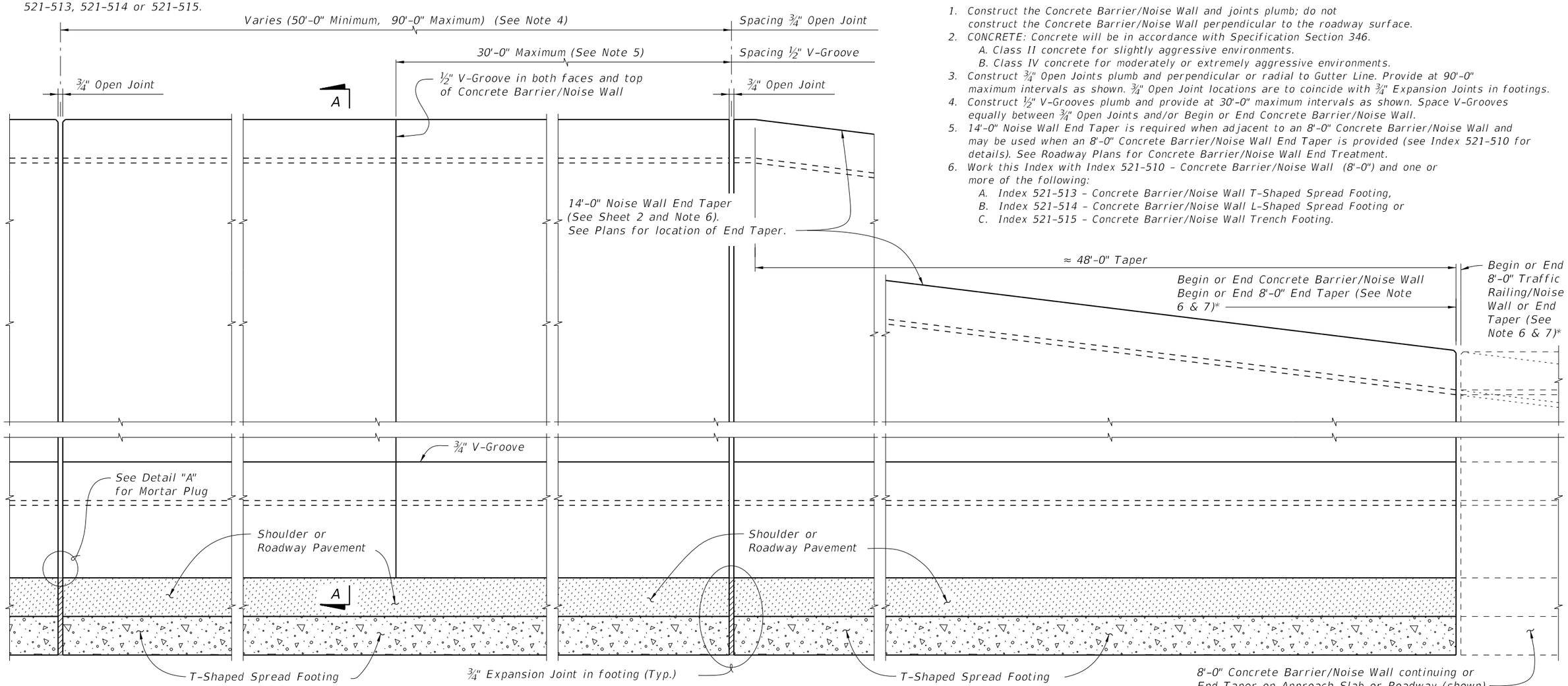

ELEVATION OF INSIDE FACE OF CONCRETE BARRIER/NOISE WALL
(Reinforcing Steel not shown for clarity)
(T-Shaped Spread Footing Shown, L-Shaped Spread Footing and Trench Footing Similar)

Concrete Barrier/NOISE WALL NOTES

1. Construct the Concrete Barrier/Noise Wall and joints plumb; do not construct the Concrete Barrier/Noise Wall perpendicular to the roadway surface.
2. CONCRETE: Concrete will be in accordance with Specification Section 346.
   A. Class II concrete for slightly aggressive environments.
   B. Class IV concrete for moderately or extremely aggressive environments.
3. Construct ¾" Open Joints plumb and perpendicular or radial to Gutter Line. Provide at 90'-0" maximum intervals as shown. ¾" Open Joint locations are to coincide with ¾" Expansion Joints in footings.
4. Construct ½" V-Grooves plumb and provide at 30'-0" maximum intervals as shown. Space V-Grooves equally between ¾" Open Joints and/or Begin or End Concrete Barrier/Noise Wall.
5. 14'-0" Noise Wall End Taper is required when adjacent to an 8'-0" Concrete Barrier/Noise Wall and may be used when an 8'-0" Concrete Barrier/Noise Wall End Taper is provided (see Index 521-510 for details). See Roadway Plans for Concrete Barrier/Noise Wall End Treatment.
6. Work this Index with Index 521-510 - Concrete Barrier/Noise Wall (8'-0") and one or more of the following:
   A. Index 521-513 - Concrete Barrier/Noise Wall T-Shaped Spread Footing,
   B. Index 521-514 - Concrete Barrier/Noise Wall L-Shaped Spread Footing or
   C. Index 521-515 - Concrete Barrier/Noise Wall Trench Footing.

* ¾" Open Joint may be omitted when 8'-0" Railing/Noise Wall End Taper is adjacent to a 14'-0" Concrete Barrier/Noise Wall End Taper.

10/20/2022 8:51:21 AM

LAST REVISION	REVISION	DESCRIPTION:			INDEX	SHEET
11/01/18			FY 2023-24 STANDARD PLANS	CONCRETE BARRIER/NOISE WALL (14'-0")	521-511	1 of 3

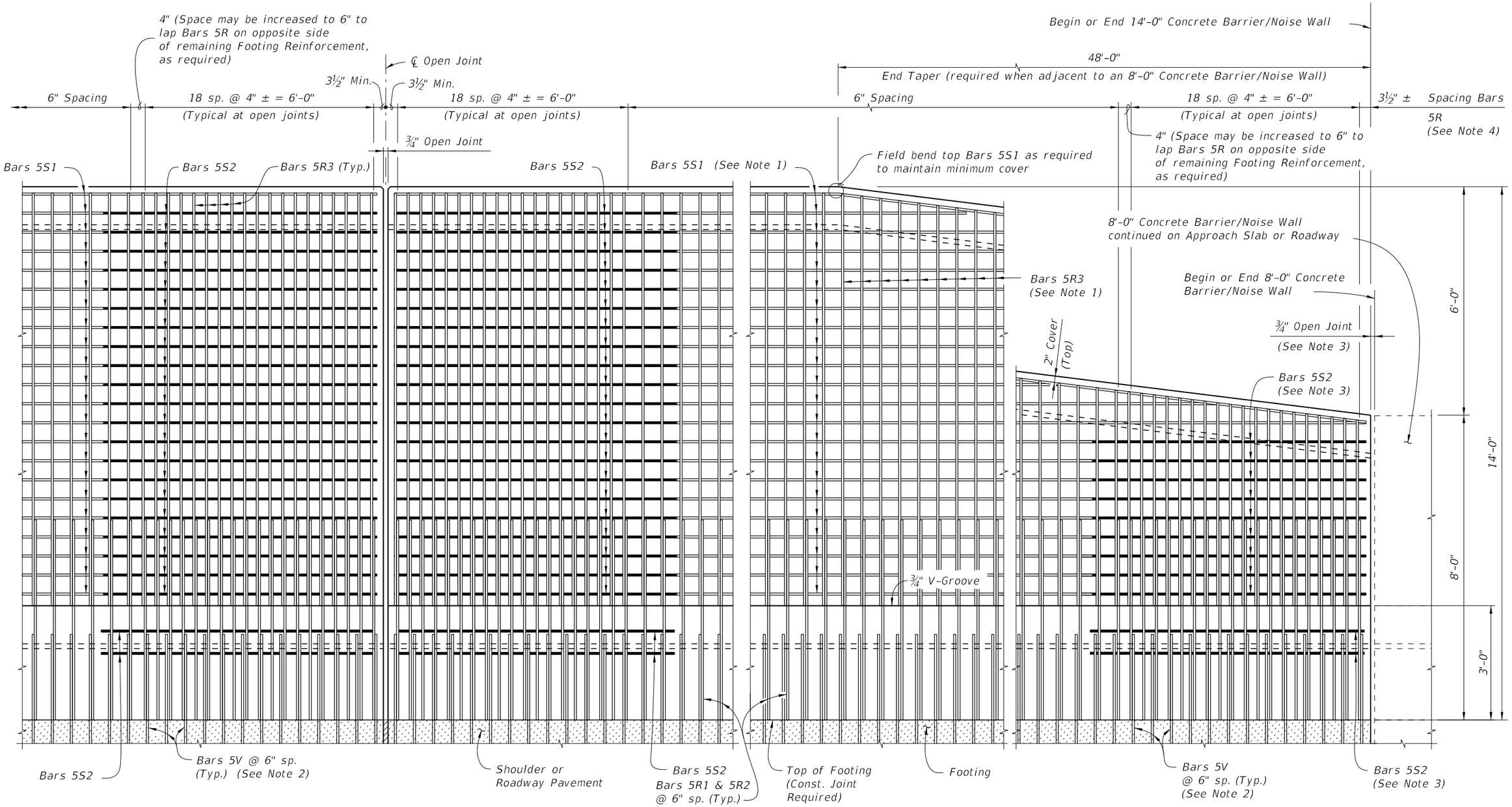

ELEVATION OF CONCRETE BARRIER/NOISE WALL REINFORCING STEEL
(Bars 5S1 in Railing not shown for clarity)

ELEVATION OF CONCRETE BARRIER/NOISE WALL END TAPER
(Bars 5S1 in Railing not shown for clarity)

NOTES:
1. Field Cut Bars 5R & 5S1 in Noise Wall End Taper as required to maintain minimum cover.
2. See Index 521-513, 521-514 and 521-515 for footing reinforcement.
3. ¾" Open Joint may be omitted when 8'-0" Railing/Noise Wall End Taper is adjacent to a 14'-0" Concrete Barrier/Noise Wall End Taper as shown on Sheet 1. See Index 521-510 for reinforcement details and spacing. Bars 5S2 are not required when ¾" Open Joint is omitted.
4. Bar spacing shown is along the Gutter Line.

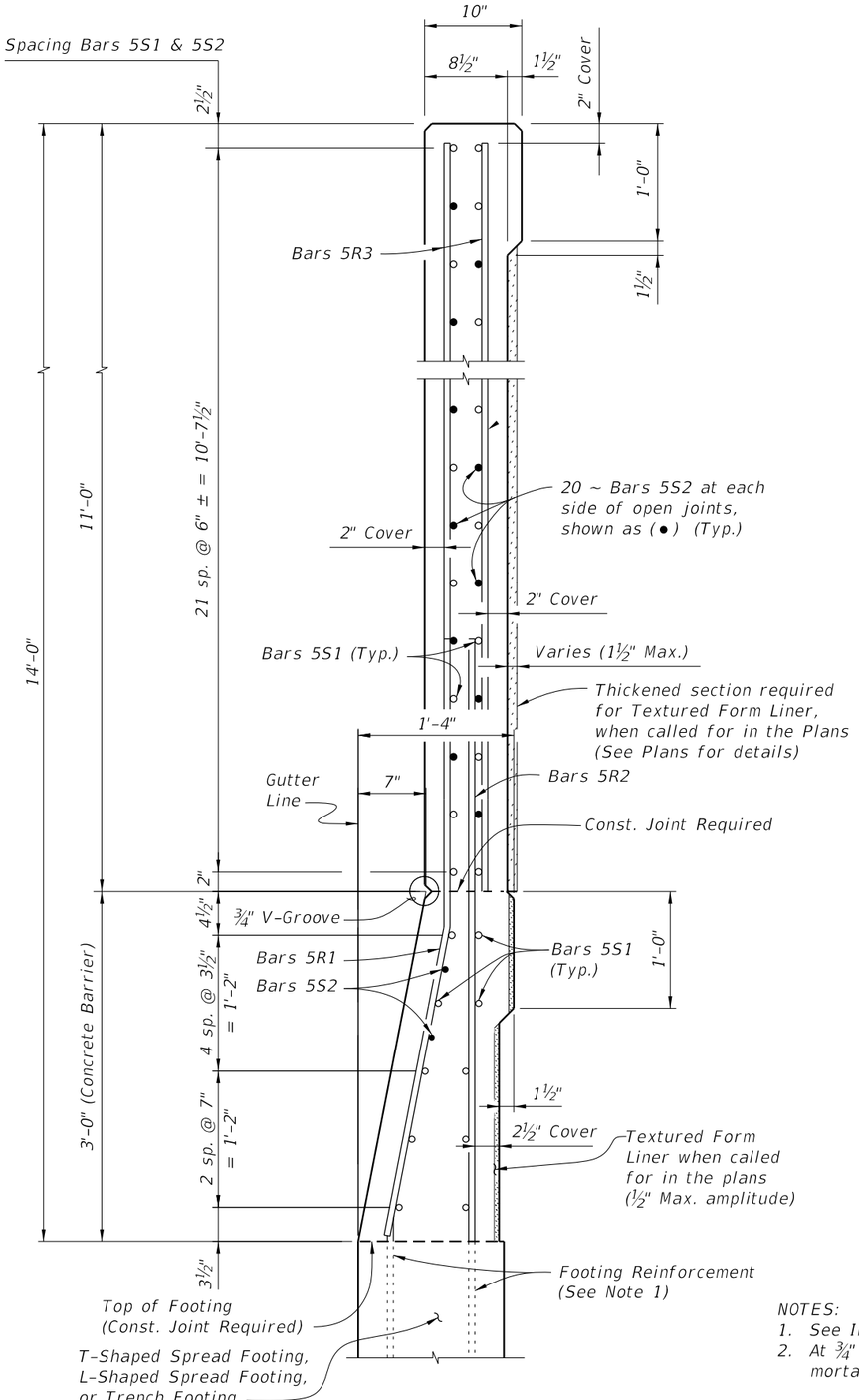

SECTION A-A
TYPICAL SECTION THRU CONCRETE BARRIER/NOISE WALL

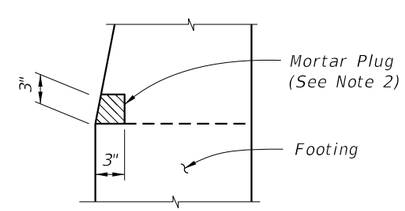

DETAIL "A" -
SECTION AT OPEN JOINT

NOTES:
1. See Index 521-513, 521-514 or 521-515 for footing reinforcement.
2. At ¾" Open Joints, plug the lower 3" portion of the open joint by filling it with mortar in accordance with Specification Section 400.

REINFORCING STEEL BENDING DIAGRAMS

BILL OF REINFORCING STEEL

MARK	SIZE	LENGTH
R1	5	5'-2"
R2	5	5'-2½"
R3	5	10'-10"
S1	5	AS REQD.
S2	5	7'-3"

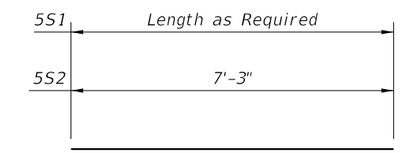

BARS 5S1 & 5S2

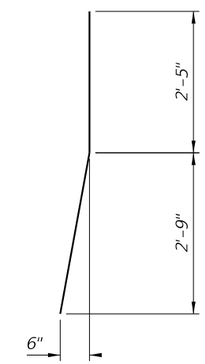

BAR 5R1 (FF)

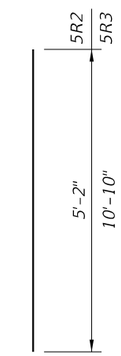

BAR 5R2 &
BAR 5R3

REINFORCING STEEL NOTES:

1. All bar dimensions in the bending diagrams are out to out.
2. All reinforcing steel at the open joints will have a 2" minimum cover.
3. Bars 5R may be continuous or spliced at construction joints. Lap splices for Bars 5R, and 5S1 will be a minimum of 2'-2".
4. The Contractor may use Welded Wire Reinforcement (WWR) when approved by the Engineer. WWR must consist of Deformed wire meeting the requirements of Specification Section 931.

ESTIMATED CONCRETE BARRIER/NOISE WALL QUANTITIES

ITEM	UNIT	QUANTITY
Concrete (Concrete Barrier)	CY/FT	0.107
Concrete (Noise Wall, excluding any thickening)	CY/FT	0.293
Reinforcing Steel (Railing/Noise Wall) (Bars R1, R2, R3, S1 & V)	LB/FT	100.31
Additional Reinf. @ Open Joint (Railing/Noise Wall)	LB	397.38

CROSS REFERENCE:
For locations of Section A-A and Detail "A", see Sheet 1.

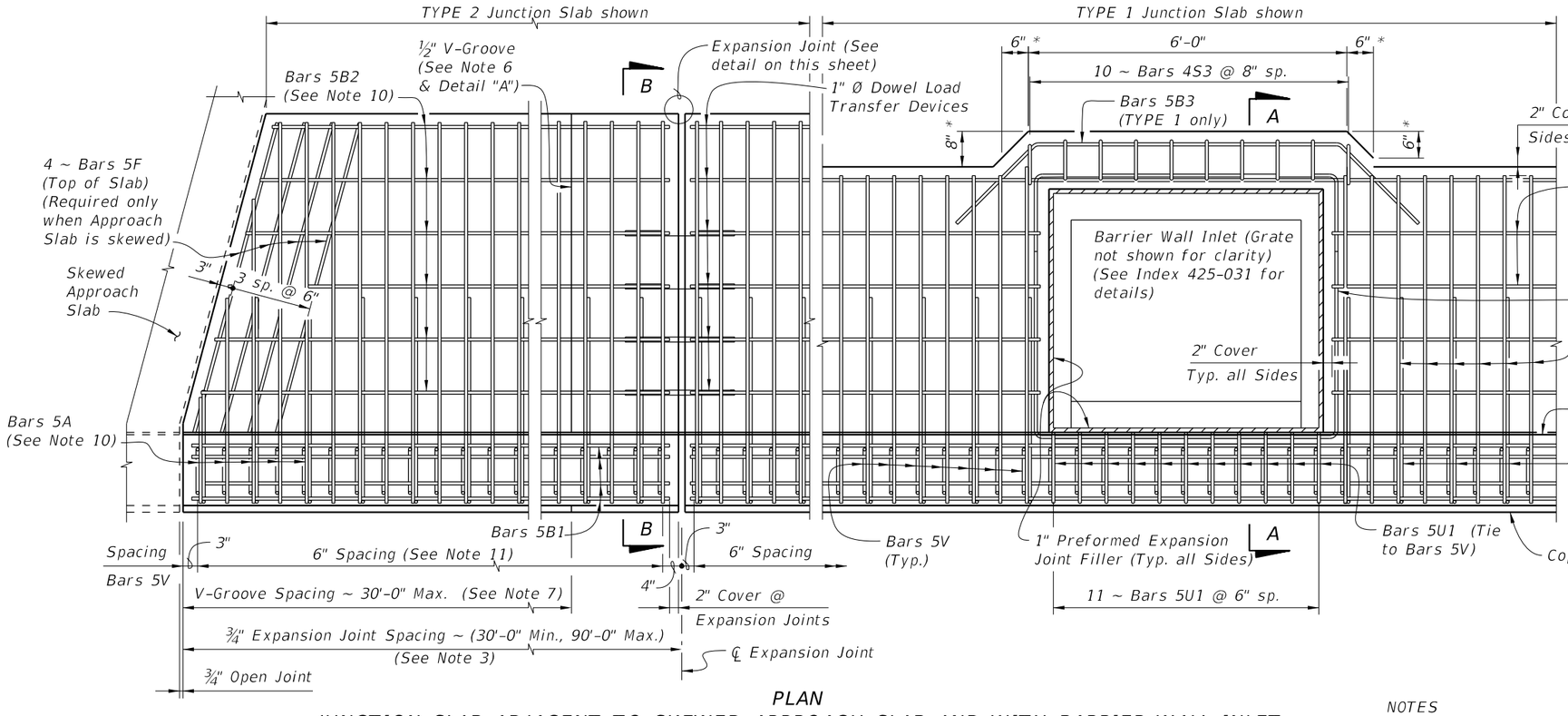

PLAN

JUNCTION SLAB ADJACENT TO SKEWED APPROACH SLAB AND WITH BARRIER WALL INLET

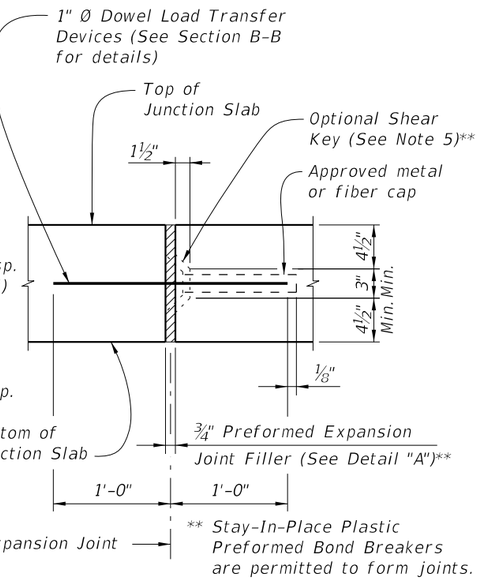

EXPANSION JOINT DETAIL**

(Junction Slab expansion joints are required at ¾" open joints in Concrete Barrier/Noise Wall)

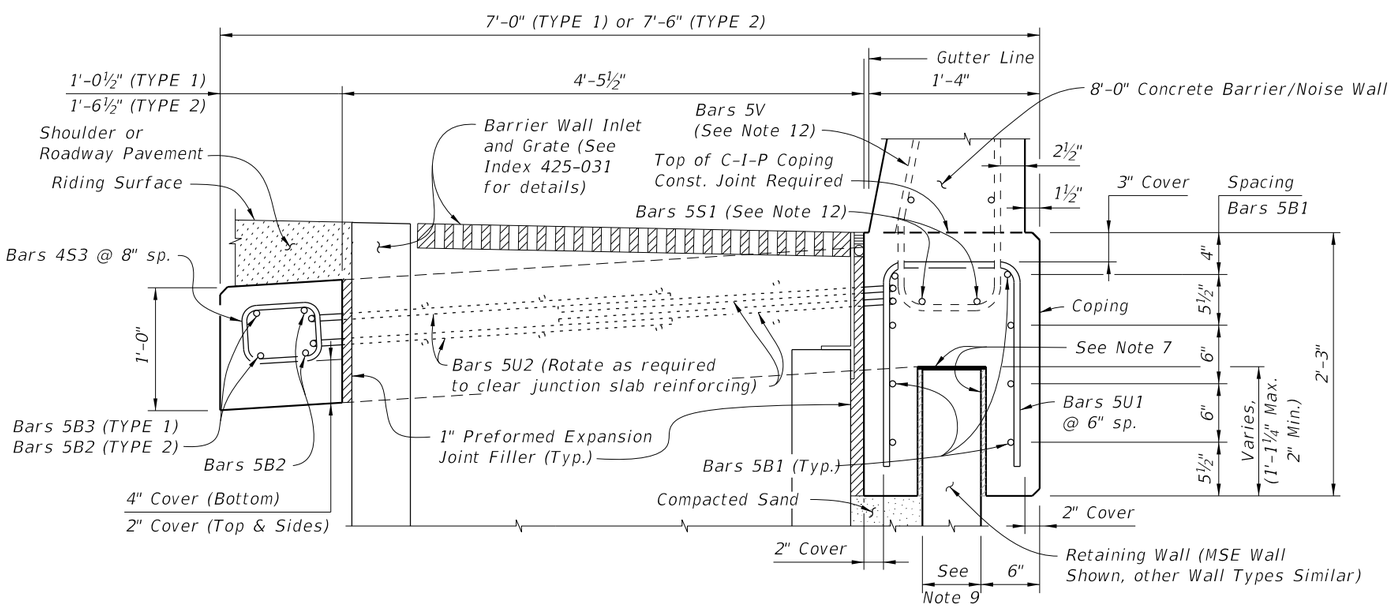

SECTION A-A

SECTION THRU JUNCTION SLAB, BARRIER WALL INLET AND RETAINING WALL

(TYPE 1 Junction Slab Shown, TYPE 2 Similar)

NOTES

1. Work this Index with Index 521-510 - Concrete Barrier/Noise Wall (8'-0").
2. Concrete will be in accordance with Specification Section 346.
   A. Use Class II concrete for slightly aggressive environments.
   B. Class IV concrete for moderately or extremely aggressive environments.
3. Construct ¾" Expansion Joints and face of coping plumb, and either perpendicular or radial to Gutter Line. Provide at 90'-0" maximum intervals as shown.
4. Dowel Load Transfer Devices will be hot-dip galvanized ASTM A36 smooth round bars or GFRP smooth round bars with a minimum shear strength of 22 ksi in accordance with ASTM D7617. Install Dowel Load Transfer Devices in accordance with Specification Section 350.
5. Shear Keys in Junction Slab are required when GFRP bars are used for Dowel Transfer Devices and are optional with steel dowel bars. Tongue Slope on Shear Key must be constant and between 5° to 45° from horizontal.
6. Construct ½" V-Grooves plumb and provide at 30'-0" maximum intervals as shown. Space V-Grooves equally between ¾" Expansion Joints and/or Begin or End Junction Slab. V-Groove locations are to coincide with V-Groove locations in the Barrier/Noise Wall.
7. Provide Organic Felt bond breaker on top and Expanded Polystyrene (½" thick) on sides of retaining wall.
8. Shoulder or Roadway Pavement is required on top of the junction slab for its entire length on the traffic side of the Barrier/Noise Wall. See Section B-B for details.
9. Actual location & width vary depending on type of Retaining Wall used.
10. Field cut Bars 5A and 5B2 as required to maintain minimum cover for skewed Approach Slab.
11. Spacing shown is along the Gutter Line.
12. See Index 521-510 for Bars 5V and 2 ~ Bars 5S1. See Plans for Junction Slab width (TYPE).

CROSS REFERENCE:
For Section B-B and Detail "A", see Sheet 2.

10/20/2022 8:51:25 AM

LAST REVISION	REVISION	DESCRIPTION:			INDEX	SHEET
11/01/20			FY 2023-24 STANDARD PLANS	CONCRETE BARRIER/NOISE WALL JUNCTION SLAB	521-512	1 of 2

REINFORCING STEEL BENDING DIAGRAMS (8'-0" Concrete Barrier/Noise Wall) (TYPE 1 and 2)

BILL OF REINFORCING STEEL

MARK	SIZE	LENGTH	
		TYPE 1	TYPE 2
A	5	7'-10"	8'-10"
B1	5	AS REQD.	AS REQD.
B2	5	AS REQD.	AS REQD.
B3	5	10'-0"	N/A
F	5	4'-8"	5'-8"
L	5	4'-5"	4'-5"
S3	4	3'-1"	4'-0"
U1	5	4'-9"	4'-9"
U2	5	12'-10"	12'-10"
DOWEL	1" Ø Smooth Bar	2'-0"	2'-0"

REINFORCING STEEL NOTES:

1. All bar dimensions in the bending diagrams are out to out.
2. All reinforcing steel at the open joints will have a 2" minimum cover.
3. Lap splices for Bars 5B will be a minimum of 2'-2".
4. The Contractor may use Deformed WWR when approved by the Engineer. Deformed WWR must meet the requirements of Specification Section 931.

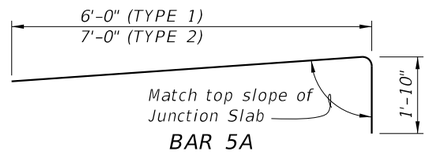

BAR 5A

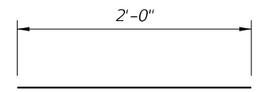

1" Ø DOWEL

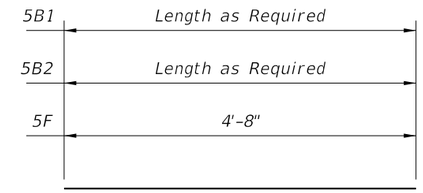

BARS 5B & 5F

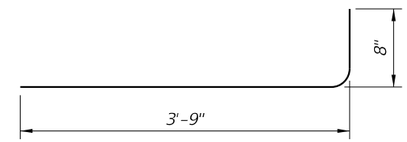

BAR 5L

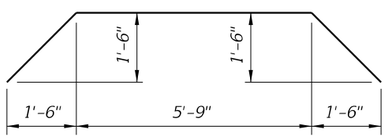

BAR 5B3 (TYPE 1 only)

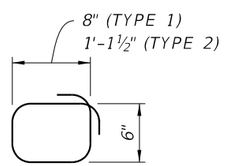

BAR 4S3

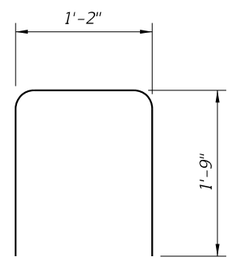

BAR 5U1

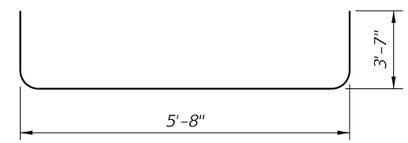

BAR 5U2

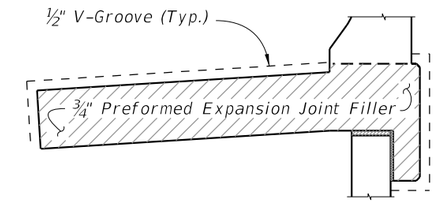

DETAIL "A"

(Showing Locations of ½" V-Grooves and ¾" Preformed Expansion Joint Filler)

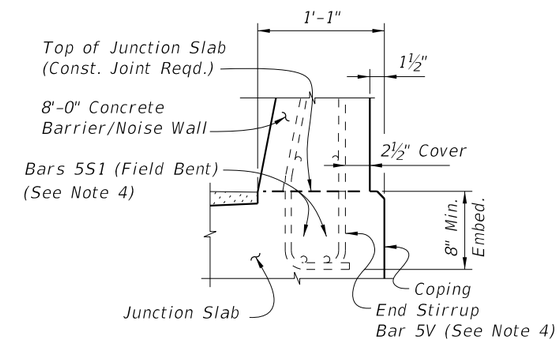

PARTIAL END VIEW OF RAILING END TRANSITION FOR GUARDRAIL ATTACHMENT (Showing Bars 5V and Bars 5B1)

NOTE: See Index 521-510, Detail "A" for details.

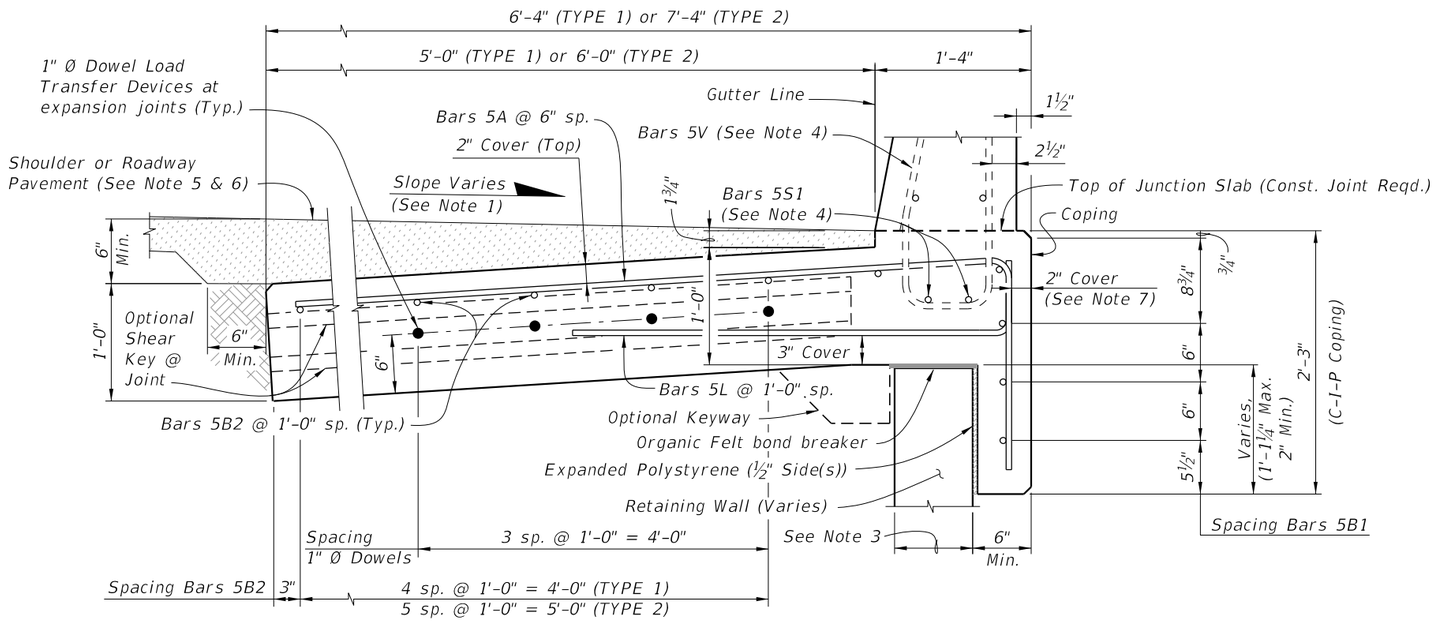

SECTION B-B
TYPICAL SECTION THRU JUNCTION SLAB AND RETAINING WALL
(8'-0" Concrete Barrier/Noise Wall)

ESTIMATED JUNCTION SLAB QUANTITIES

ITEM	UNIT	QUANTITY	
		TYPE 1	TYPE 2
Concrete (Junction Slab)	CY/FT	0.268	0.305
Reinforcing Steel (Typical)	LB/FT	31.72	34.85
Additional Reinf. @ Expansion Joint	LB	21.36	21.36

NOTES:

1. Match Cross Slope of Travel Lane or Shoulder.
2. Vary Junction Slab slope based on roadway cross slope to maintain a minimum 6" asphalt depth at the edge of the slab as shown.
3. Actual width varies depending on type of Retaining Wall used.
4. See Index 521-510 for Bars 5V and Bars 5S1.
5. For Rigid Pavement (Concrete), Junction Slab may be thickened to match finished grade. Vary the Junction Slab slope to maintain a minimum 1'-6" thickness at the inside edge of the slab.
6. See Roadway Plans for asphalt shoulder, roadway pavement and overbuild.
7. If slip forming is used, submit shop drawings for approval showing Expansion Joint support details and 2½" side cover with adjusted Typical Section dimensions.
8. Bars 5L and 5C are grouped together and placed with every other Bar 5A.
9. Bar 5L to lap Bar 5C for minimum wall embedment. Minimum Lap splice length 2'-2".

CROSS REFERENCE:
For location of Section B-B, see Sheet 1.

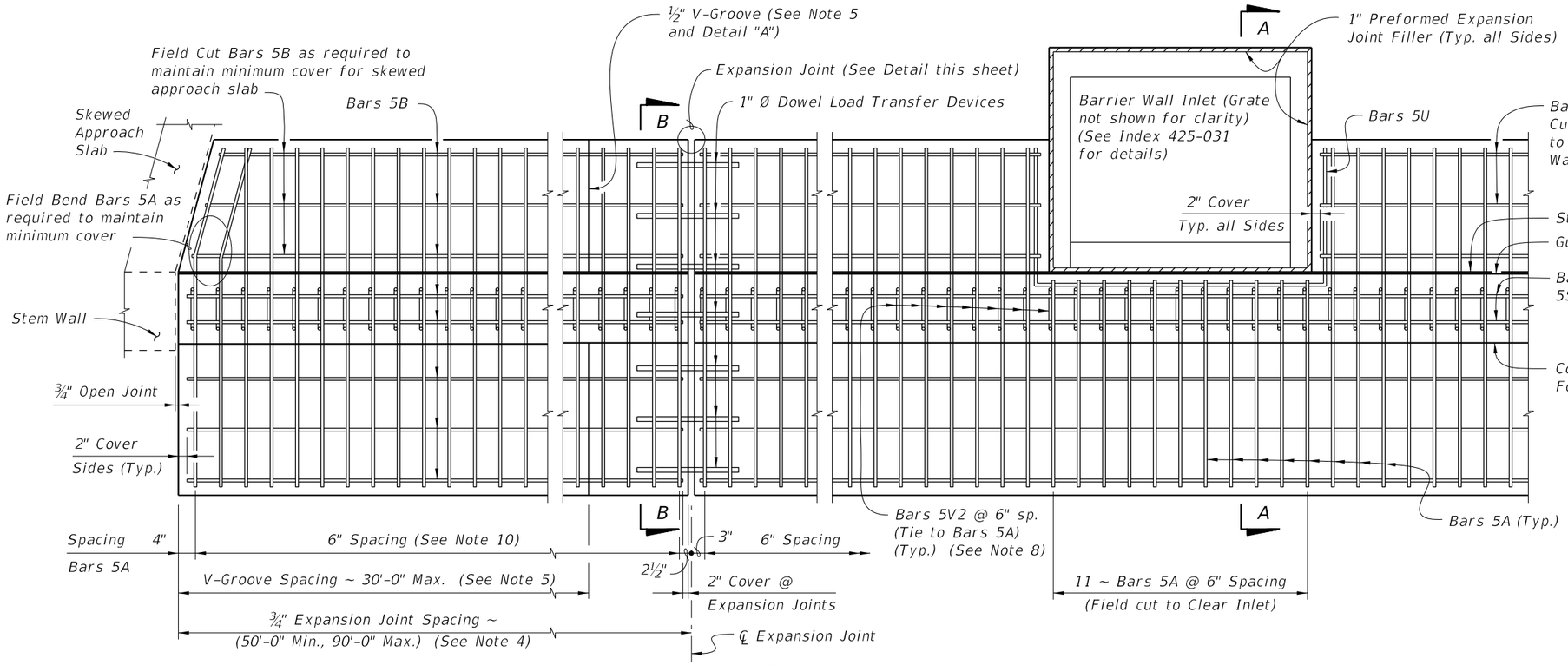

PLAN

SPREAD FOOTING ADJACENT TO SKEWED APPROACH SLAB AND WITH BARRIER WALL INLET

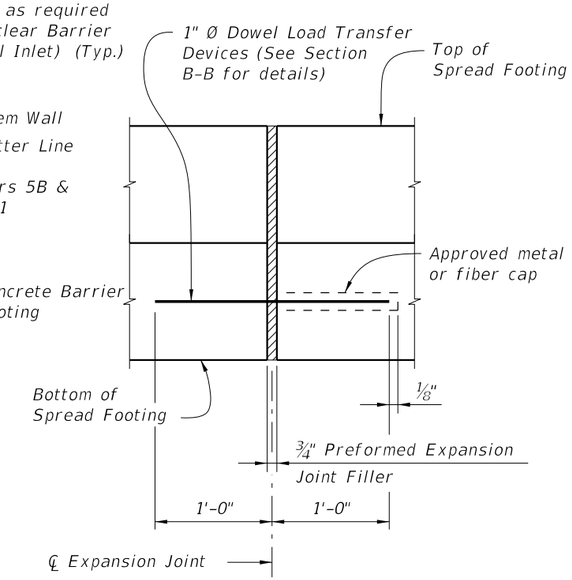

EXPANSION JOINT DETAIL

(Spread Footing expansion joints are required at ¾" open joints in Concrete Barrier/Noise Wall)

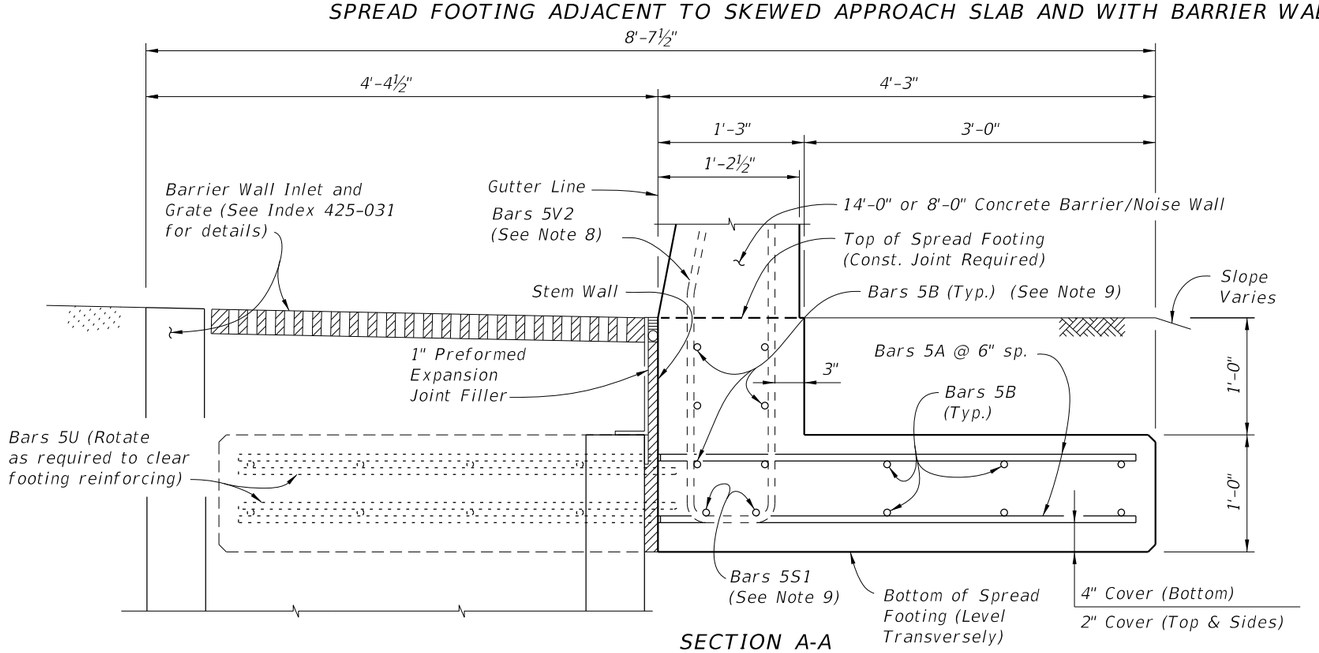

SECTION A-A

SECTION THRU SPREAD FOOTING AND BARRIER WALL INLET

(Bars 5P, 5R and 5S1 in Concrete Barrier/Noise Wall not shown for clarity)

NOTES

1. Construct the Spread Footing level transversely and plumb vertically; do not construct the spread footing perpendicular to the roadway surface.
2. Concrete will be in accordance with Specification Section 346.
   A. Class II concrete for slightly aggressive environments.
   B. Class IV concrete for moderately or extremely aggressive environments.
3. Dowel Load Transfer Devices will be ASTM A 36 smooth round bar and hot-dip galvanized in accordance with Specification Section 962. Install Dowel Load Transfer Devices in accordance with Specification Section 350.
4. Construct ¾" Expansion Joints plumb and perpendicular or radial to Gutter Line. Provide at 90'-0" maximum intervals as shown.
5. Construct ½" V-Grooves plumb and provide at 30'-0" maximum intervals as shown. Space V-Grooves equally between ¾" Expansion Joints and/or Begin or End Spread Footing. V-Groove locations are to coincide with V-Groove locations in the Barrier/Noise Wall.
6. Provide and install Preformed Expansion Joint Filler in accordance with Specification Section 932.
7. FILL REQUIREMENTS: Shoulder or Roadway Pavement or Fill is required on top (1'-0" minimum depth) for the entire length of the spread footing on both sides of the Barrier/Noise Wall. See Section B-B for details.
8. See Index 521-510 for Bars 5V2.
9. Place 8 ~ Bars (6 ~ 5B1 & 2 ~ 5S1) inside Stirrup Bars 5V2 as shown. (2 ~ 5S1 Bars included in 521-510 or 521-511 quantities)
10. Spacing shown is along the Gutter Line.
11. Work this Index with one or both of the following:
    a. Index 521-510 - Concrete Barrier/Noise Wall (8'-0").
    b. Index 521-511 - Concrete Barrier/Noise Wall (14'-0").

CROSS REFERENCE:
For Section B-B and Detail "A", see Sheet 2.

REINFORCING STEEL BENDING DIAGRAMS

BILL OF REINFORCING STEEL

MARK	SIZE	LENGTH
A	5	6'-8"
B	5	AS REQD.
U	5	11'-0"
DOWEL	1" Ø Smooth Bar	2'-0"

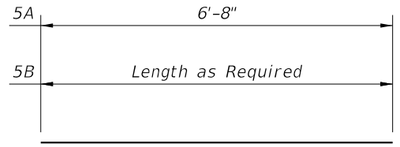

BARS 5A & 5B

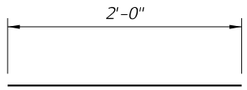

1" Ø DOWEL

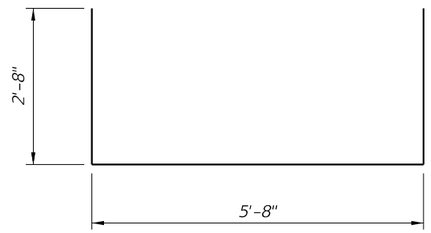

BAR 5U

REINFORCING STEEL NOTES:

1. All bar dimensions in the bending diagrams are out to out.
2. All reinforcing steel at the open joints will have a 2" minimum cover.
3. Lap splices for Bars 5B will be a minimum of 2'-2".
4. The Contractor may use Welded Wire Reinforcement (WWR) when approved by the Engineer. WWR must consist of Deformed wire meeting the requirements of Specification Section 931.

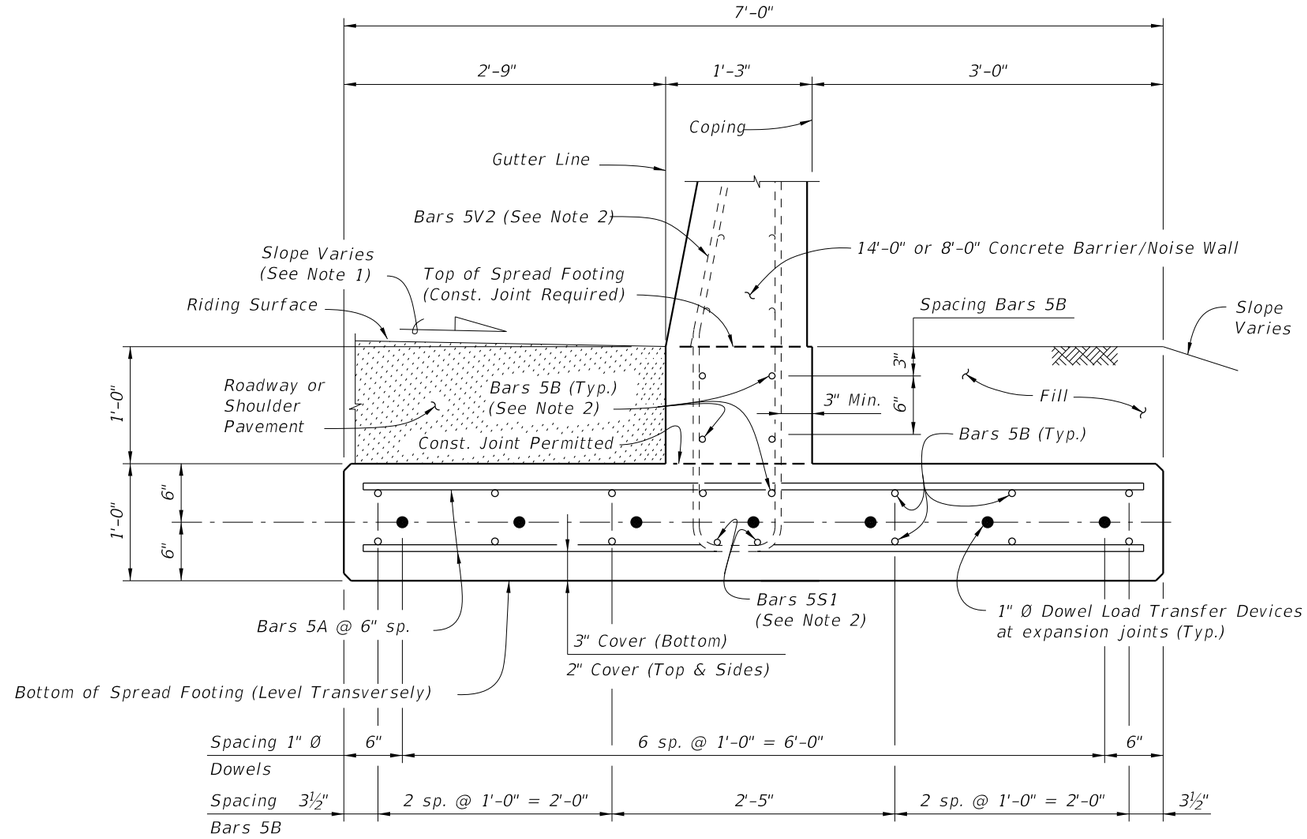

SECTION B-B
TYPICAL SECTION THRU SPREAD FOOTING
(Bars 5R and 5S1 in Concrete Barrier/Noise Wall not shown for clarity)

NOTES:
1. Match Cross Slope of Travel Lane or Shoulder.
2. See Sheet 1, Notes 8 & 9.

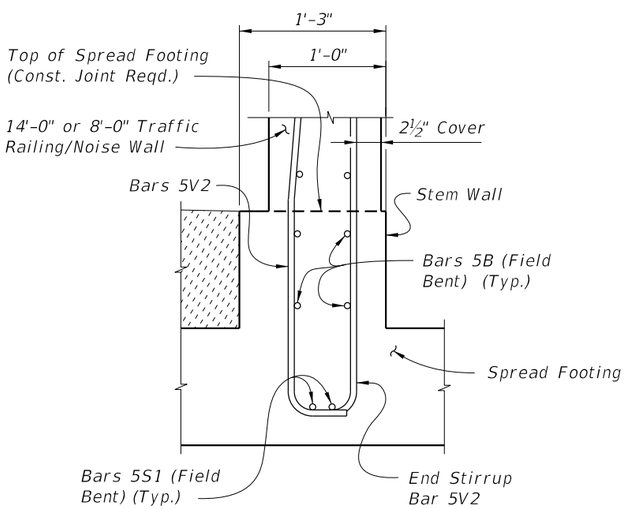

PARTIAL END VIEW OF RAILING END TRANSITION FOR GUARDRAIL ATTACHMENT (Showing Bars 5V2, and Bars 5B inside of Stirrup Bars 5V2)

NOTE: See Index 521-510, Detail "A" for details.

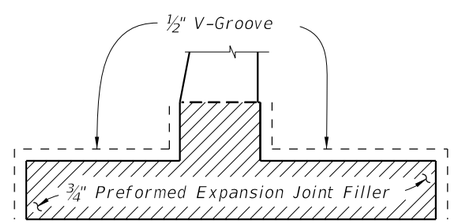

DETAIL "A"

(Showing Locations of ½" V-Grooves and ¾" Preformed Expansion Joint Filler)

ESTIMATED T-SHAPED SPREAD FOOTING QUANTITIES

ITEM	UNIT	QUANTITY
Concrete (Footing)	CY/FT	0.312
Reinforcing Steel (Typical)	LB/FT	25.90
Additional Reinf. @ Expansion Joint	LB	37.38

Note: The reinforcing steel quantity includes the difference between Index 521-510 or 521-511 and Bars 5V shown. Bars 5S1 are included in Index 521-510 or 521-511 quantities.

CROSS REFERENCE:
For location of Section B-B, see Sheet 1.

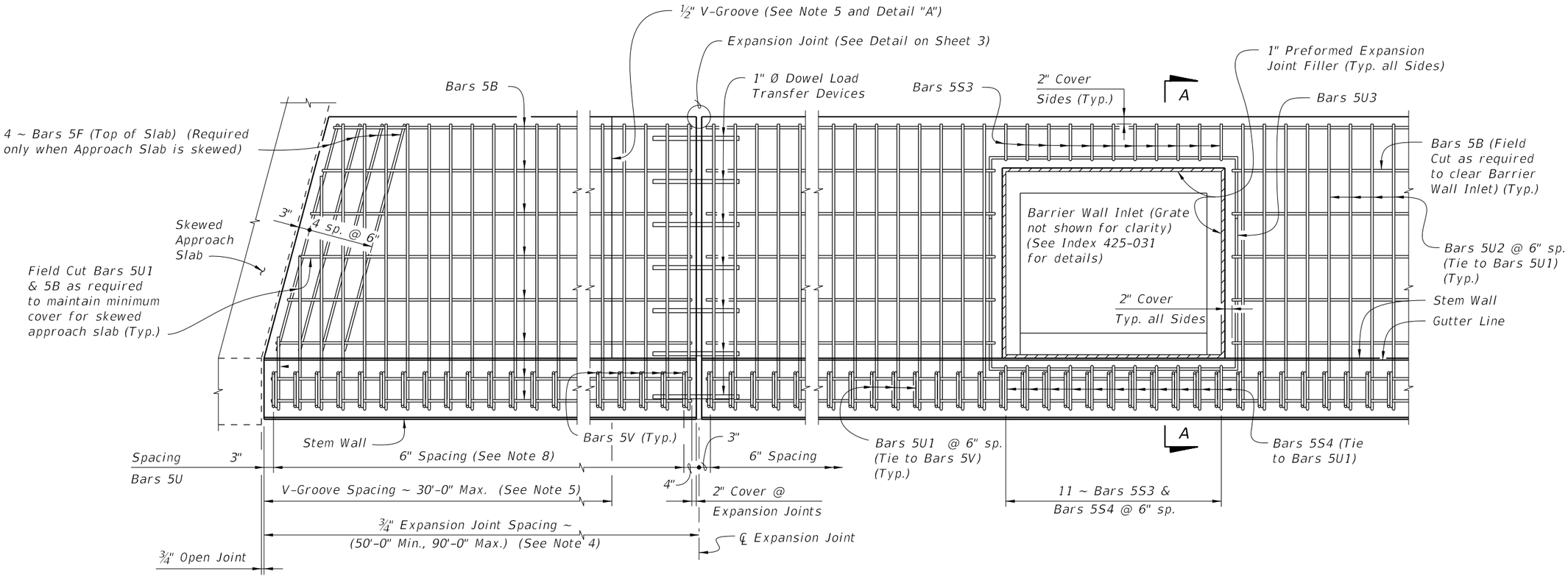

PLAN - OPTION B
SPREAD FOOTING ADJACENT TO SKEWED APPROACH SLAB AND WITH BARRIER WALL INLET
(Option A Similar) (Bars S1 Not Shown)

NOTES

1. Construct the Spread Footing level transversely; do not construct the spread footing perpendicular to the roadway surface.
2. Concrete will be in accordance with Specification Section 346.
   A. Class II concrete for slightly aggressive environments.
   B. Class IV concrete for moderately or extremely aggressive environments.
3. Dowel Load Transfer Devices will be ASTM A 36 smooth round bar and hot-dip galvanized in accordance with Specification Section 962. Install Dowel Load Transfer Devices in accordance with Specification Section 350.
4. Construct ¾" Expansion Joints plumb and perpendicular or radial to Gutter Line. Provide at 90'-0" maximum intervals as shown.
5. Construct ½" V-Grooves plumb and provide at 30'-0" maximum intervals as shown. Space V-Grooves equally between ¾" Expansion Joints and/or Begin or End Spread Footing. V-Groove locations are to coincide with V-Groove locations in the Concrete Barrier/Noise Wall.
6. Provide and install Preformed Expansion Joint Filler in accordance with Specification Section 932.
7. Shoulder or Roadway Pavement and Fill is required on the traffic side of the spread footing for a distance of 4'-0" and the full length of the spread footing (3'-0" minimum depth) on the backside of the spread footing for Option A. Fill is required for a distance of 4'-0" on the backside of the spread footing and the full length of the spread footing (3'-0" minimum depth) on the traffic side of the spread footing for Option B. See Typical Sections on Sheets 2 and 3 for details.
8. Spacing shown is along the Gutter Line.
9. Work this Index with one or both of the following:
   a. Index 521-510 - Concrete Barrier/Noise Wall (8'-0").
   b. Index 521-511 - Concrete Barrier/Noise Wall (14'-0").

CROSS REFERENCE:
For Detail "A", see Sheet 3.
For Section A-A and Estimated Quantities, see Sheet 4.

10/20/2022 8:51:30 AM

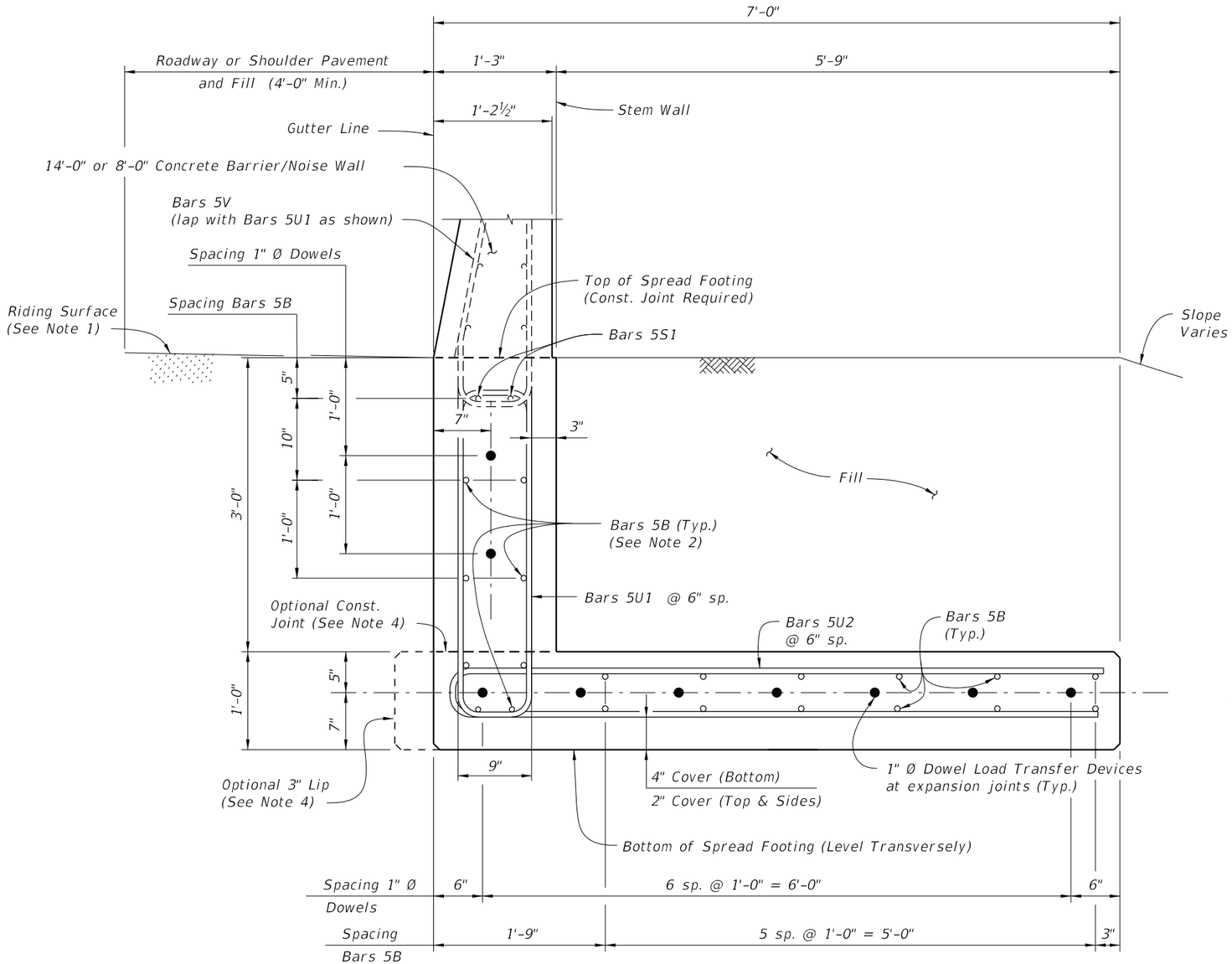

TYPICAL SECTION THRU SPREAD FOOTING - OPTION A
(Bars 5R and 5S1 in Concrete Barrier/Noise Wall not shown for clarity)

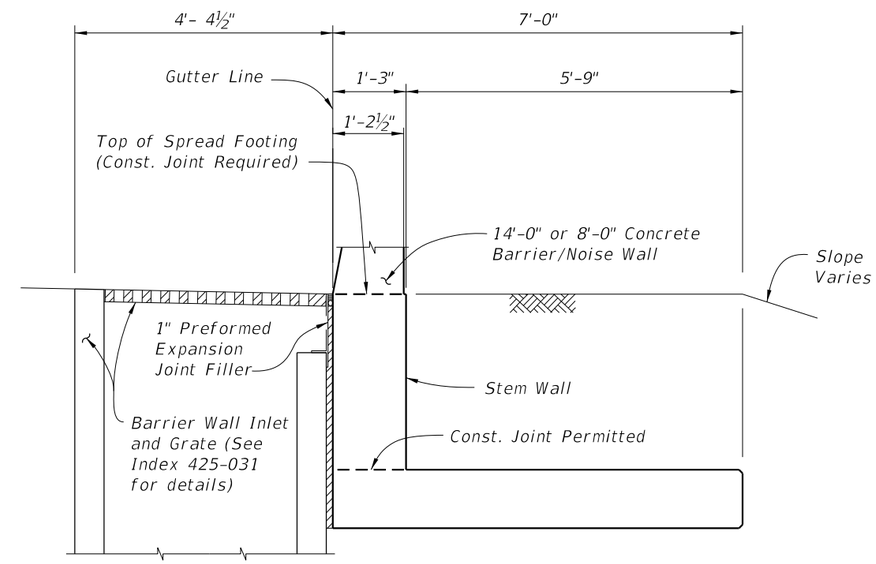

TYPICAL SECTION THRU SPREAD FOOTING AND BARRIER WALL INLET - OPTION A
(Reinforcing Steel not shown for clarity (See Note 3))

NOTES:
1. Match Cross Slope of Travel Lane or Shoulder.
2. Place 10 ~ Bars (8 ~ Bars 5B and 2 ~ Bars 5S1) inside Bars 5U1 as shown, (2 ~ 5S1 Bars are included in 521-510 or 521-511 quantities)
3. For Reinforcing Steel spacing, see Typical Section Thru Spread Footing - Option A this Sheet.
4. Provide 3" lip when optional construction joint is used.

10/20/2022 8:51:31 AM

LAST REVISION	REVISION	DESCRIPTION:			INDEX	SHEET
11/01/17			FY 2023-24 STANDARD PLANS	CONCRETE BARRIER/NOISE WALL L-SHAPED SPREAD FOOTING	521-514	2 of 4

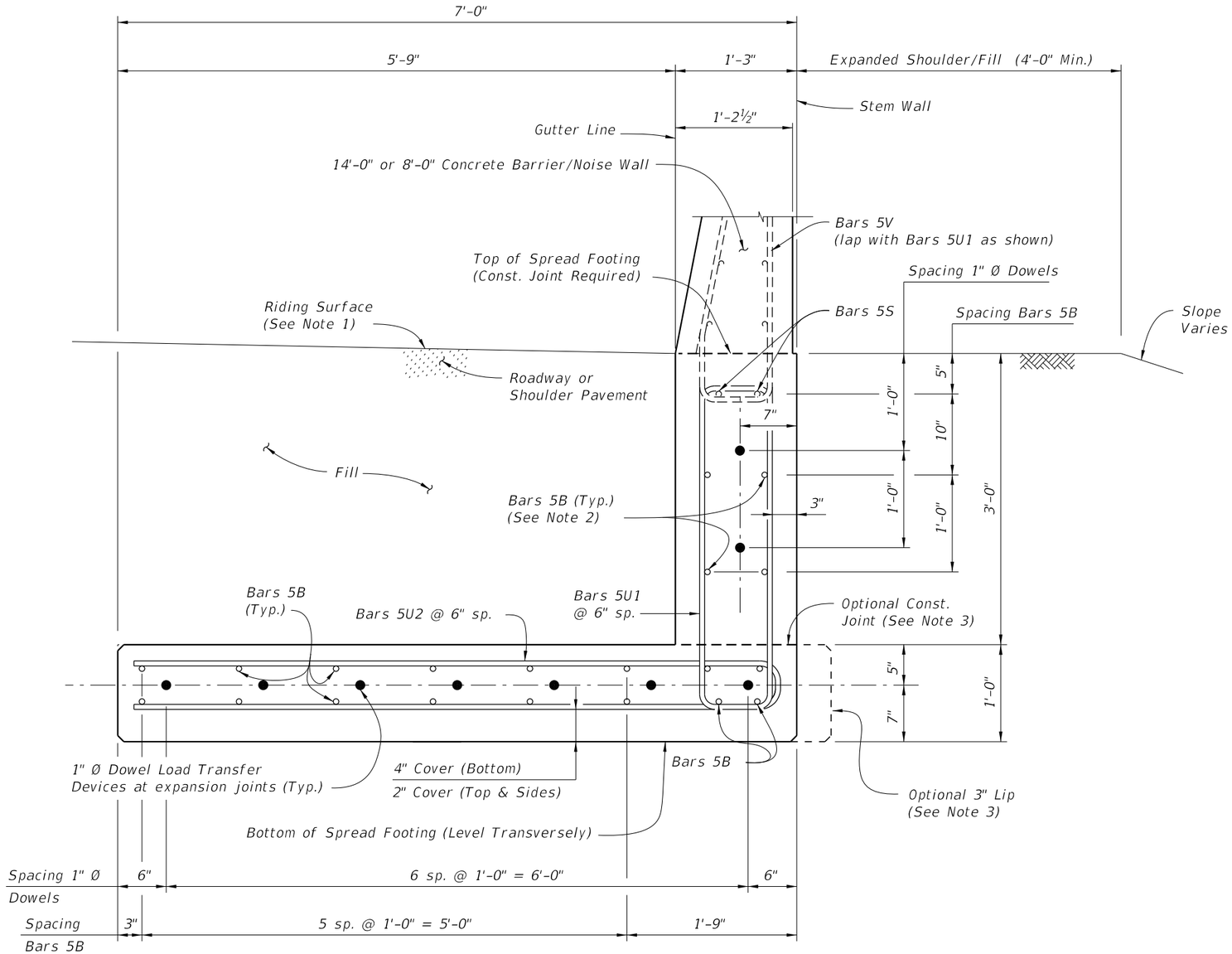

TYPICAL SECTION THRU SPREAD FOOTING - OPTION B
(Bars 5P, 5R and 5S1 in Concrete Barrier/Noise Wall not shown for clarity)

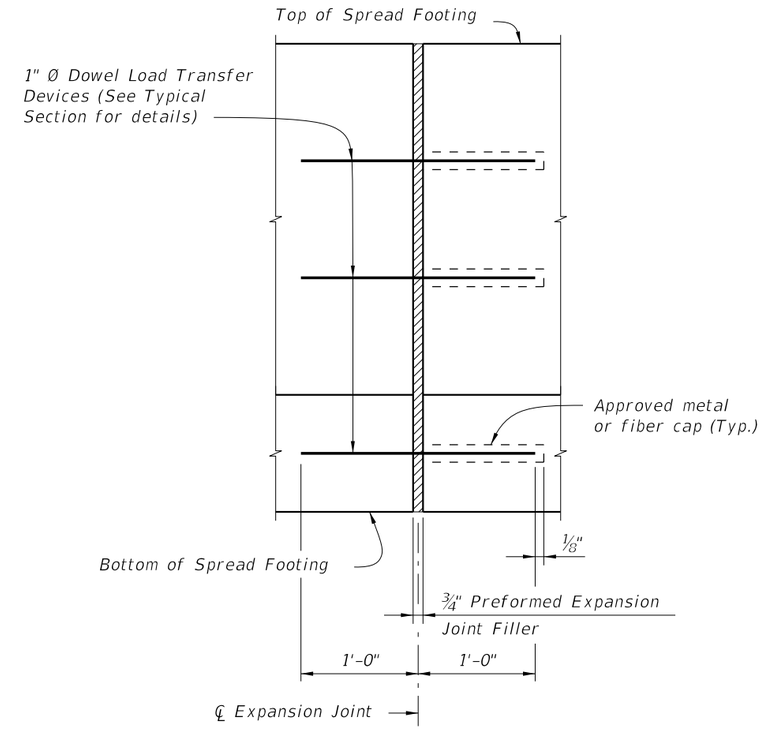

EXPANSION JOINT DETAIL

(Spread Footing expansion joints are required at ¾" open joints in Concrete Barrier/Noise Wall)

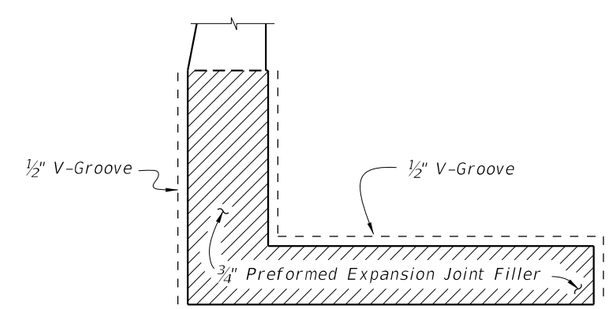

DETAIL "A"
(Option A Shown, Option B Similar)

(Showing Locations of ½" V-Grooves
and ¾" Preformed Expansion Joint Filler)

NOTES:
1. Match Cross Slope of Travel Lane or Shoulder.
2. Place 10 ~ Bars (8 ~ Bars 5B and 2 ~ Bars 5S1) inside Bars 5U1 as shown.
3. Provide 3" lip when optional construction joint is used.

10/20/2022 8:51:32 AM

LAST REVISION	REVISION	DESCRIPTION:			INDEX	SHEET
11/01/17			FY 2023-24 STANDARD PLANS	CONCRETE BARRIER/NOISE WALL L-SHAPED SPREAD FOOTING	521-514	3 of 4

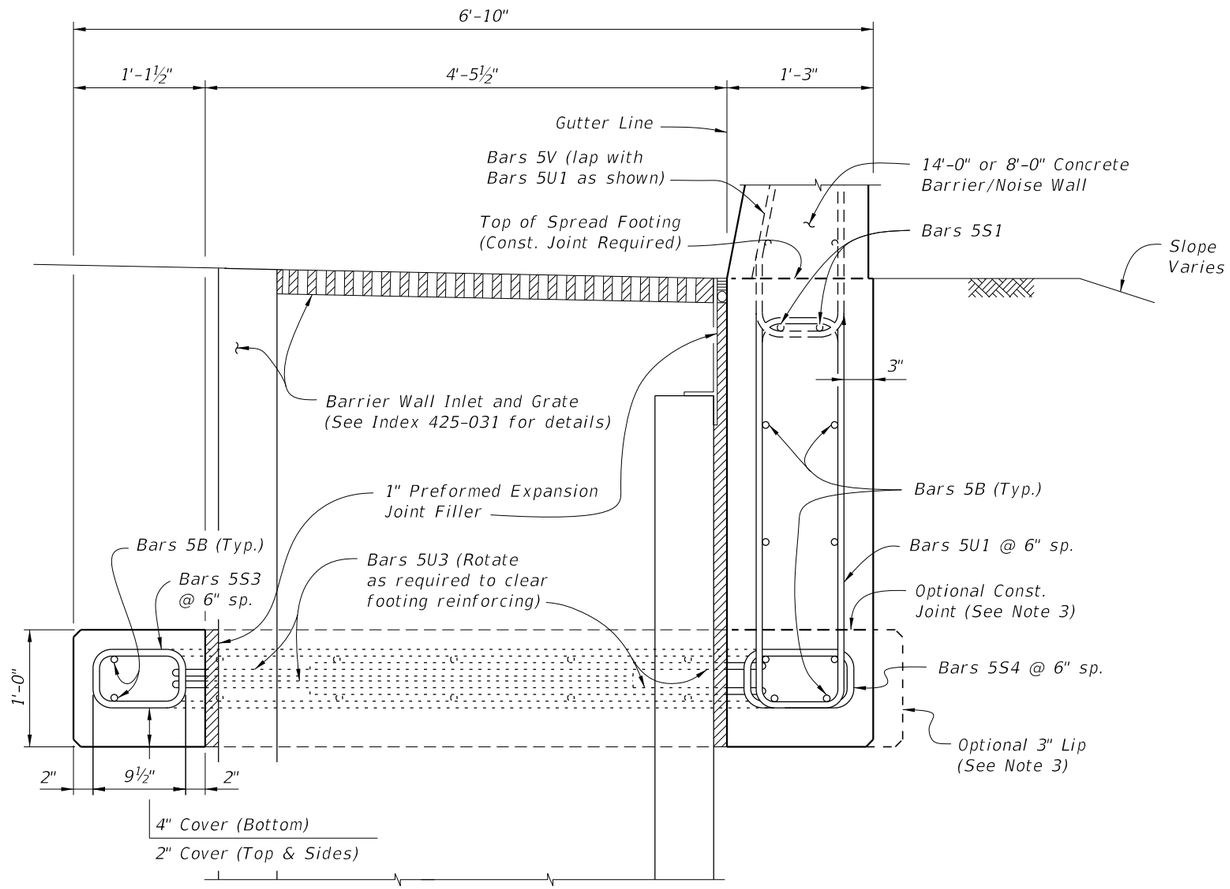

SECTION A-A
TYPICAL SECTION THRU SPREAD FOOTING AND BARRIER WALL INLET - OPTION B
(Bars 5P, 5R and 5S1 in Concrete Barrier/Noise Wall not shown for clarity)

NOTES:
1. Place 8 ~ Bars 5B and 2 Bars S1 inside Bars 5U1 as shown.
2. For Reinforcing Steel spacing, see Typical Section Thru Spread Footing - Option B on Sheet 3.
3. Provide 3" lip when optional construction joint is used.

ESTIMATED L-SHAPED SPREAD FOOTING QUANTITIES		
ITEM	UNIT	QUANTITY
Concrete (Footing)	CY/FT	0.398
Reinforcing Steel (Typical) *	LB/FT	68.84
Additional Reinf. @ Expansion Joint	LB	48.06

* Bars 5V and 5S1 are included in Index 521-510 or 521-511 quantities.

CROSS REFERENCE:
For location of Section A-A, see Sheet 1.

REINFORCING STEEL BENDING DIAGRAMS

BILL OF REINFORCING STEEL		
MARK	SIZE	LENGTH
B	5	AS REQD.
F	5	5'-6"
S3	5	3'-7"
S4	5	3'-10"
U1	5	9'-2"
U2	5	13'-10"
U3	5	12'-10"
DOWEL	1" Ø Smooth Bar	2'-0"

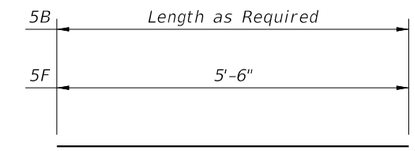

BARS 5B & 5F

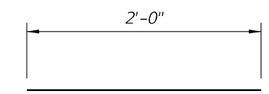

1" Ø DOWEL

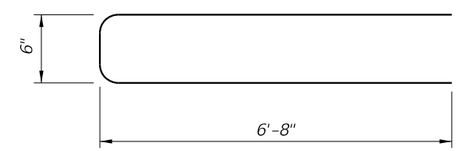

BAR 5U2

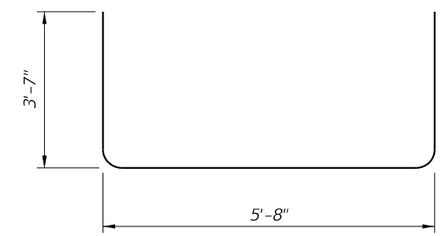

BAR 5U3

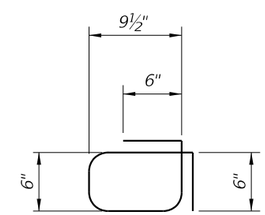

BAR 5S3

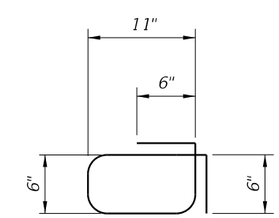

BAR 5S4

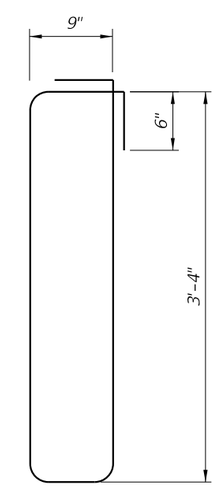

BAR 5U1

REINFORCING STEEL NOTES:

1. All bar dimensions in the bending diagrams are out to out.
2. All reinforcing steel at the open joints will have a 2" minimum cover.
3. Lap splices for Bars 5B will be a minimum of 2'-2".
4. Lap splices Bars 5T and 5V with 5U1 will be a minimum of 2'-2".
5. The Contractor may use Welded Wire Reinforcement (WWR) when approved by the Engineer. WWR must consist of Deformed wire meeting the requirements of Specification Section 931.

REINFORCING STEEL BENDING DIAGRAMS

BILL OF REINFORCING STEEL

MARK	SIZE	LENGTH
B	5	AS REQD.
T	5	13'-7"
DOWEL	1" Ø Smooth Bar	2'-0"

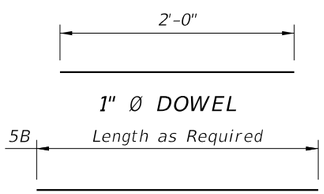

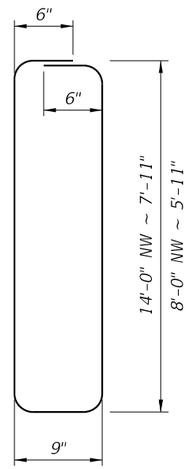

REINFORCING STEEL NOTES:

1. All bar dimensions in the bending diagrams are out to out.
2. All reinforcing steel at the open joints will have a 2" minimum cover.
3. Lap splices for Bars 5B will be a minimum of 2'-2".
4. The Contractor may use Deformed Welded Wire Reinforcement (WWR) meeting the requirements of Specification Section 931 when approved by the Engineer.

NOTES

1. Construct the Trench Footing plumb, do not construct the Trench Footing perpendicular to the roadway surface.
2. Concrete will be in accordance with Specification Section 346.
   A. Class II concrete for slightly aggressive environments.
   B. Class VI concrete for moderately or extremely aggressive environments.
3. Dowel Load Transfer Devices will be hot-dip galvanized ASTM A36 smooth round bar or GFRP smooth round bars with a minimum shear strength of 22 ksi in accordance with ASTM D7617.
   Install Dowel Load Transfer Devices in accordance with Specification Section 350.
4. Shear Keys in footing are required when GFRP bars are used for Dowel Transfer Devices and are optional with steel dowel bars. Tongue Slope on Shear Key must be constant and between 5° to 45° from the transverse vertical plane.
5. Construct ¾" Expansion Joints plumb and perpendicular or radial to Gutter Line. Provide at 90'-0" maximum intervals as shown.
6. Construct ½" V-Grooves plumb and provide at 30'-0" maximum intervals as shown. Space V-Grooves equally between ¾" Expansion Joints and/or Begin or End Trench Footing. V-Groove locations are to coincide with V-Groove locations in the Barrier/Noise Wall.
7. Fill is required a distance of 4'-0" on both sides for the entire depth of the trench footing. See Typical Section for details.
8. Match Cross Slope of travel lane or shoulder.
9. Spacing shown is along the Gutter Line.
10. Work this Index with one or both of the following:
    a. Index 521-510 - Concrete Barrier/Noise Wall (8'-0").
    b. Index 521-511 - Concrete Barrier/Noise Wall (14'-0").

LEGEND: NW = Concrete Barrier Barrier/Noise Wall

ESTIMATED TRENCH FOOTING QUANTITIES

ITEM	UNIT	QUANTITY	
		8'-0" NW	14'-0" NW
Concrete (Footing)	CY/FT	0.341	0.446
Reinforcing Steel (Typical) *	LB/FT	38.76	49.19
Additional Reinf. @ Expansion Joint	LB	21.36	21.36

* Bars 5V and 5S1 are included in Index 521-510 or 521-511 quantities.

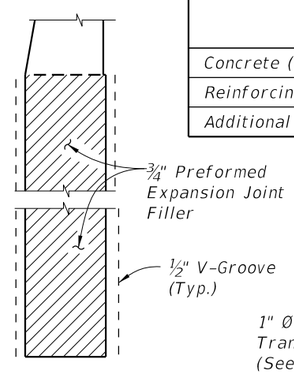

DETAIL "A"
(Showing Locations of ½" V-Grooves and ¾" Preformed Expansion Joint Filler)

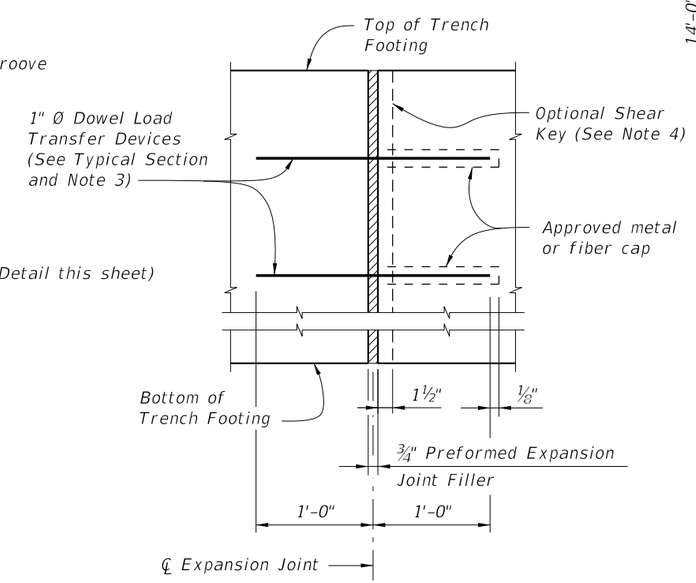

EXPANSION JOINT DETAIL
(Trench Footing expansion joints are required at ¾" open joints in Concrete Barrier/Noise Wall)

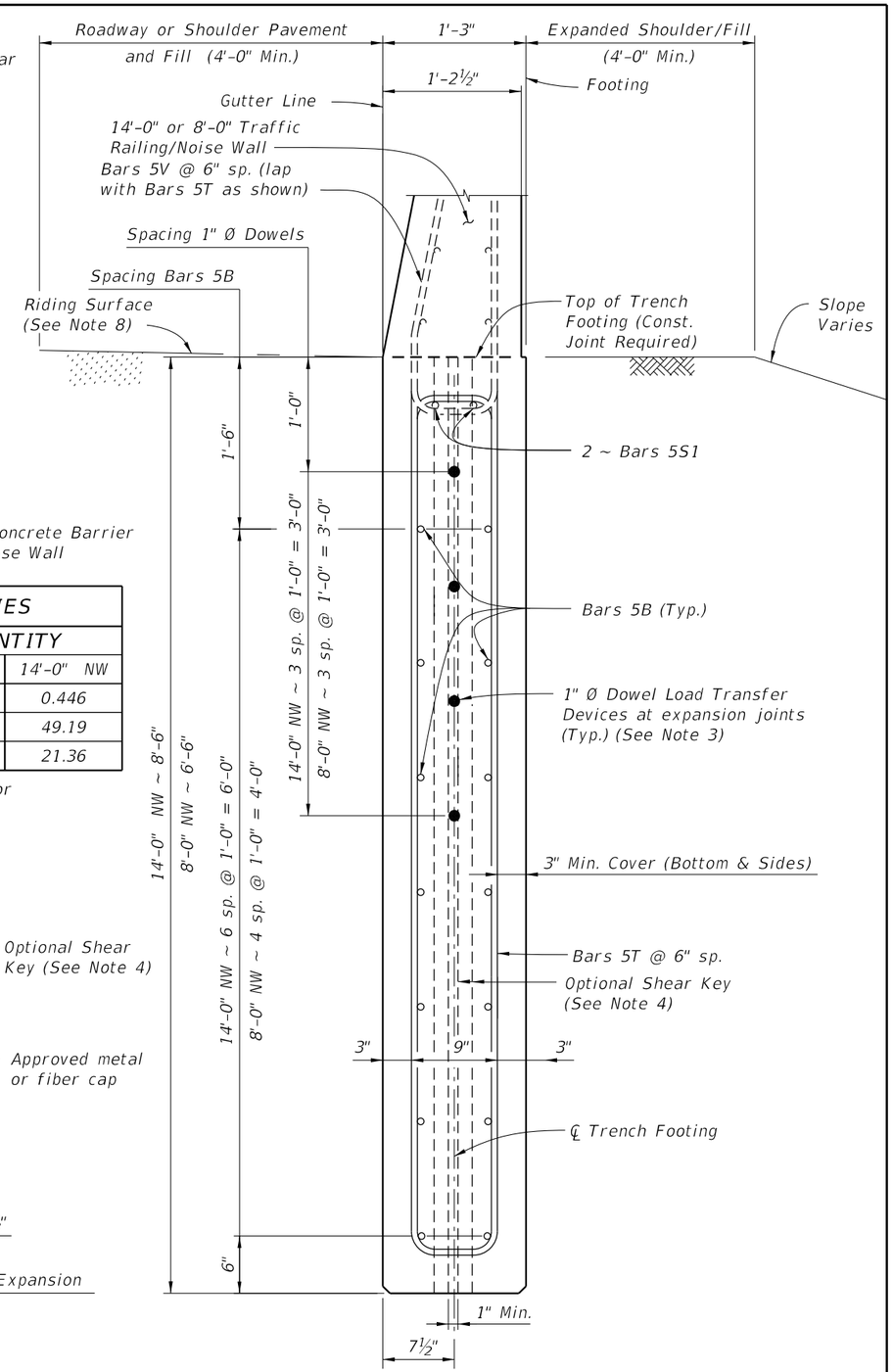

TYPICAL SECTION THRU TRENCH FOOTING
(Bars 5R and 5S1 in Concrete Barrier /Noise Wall not shown for clarity)

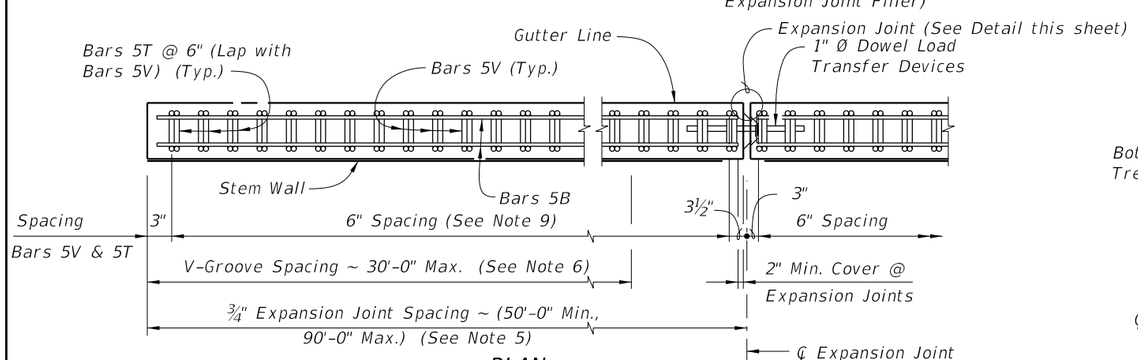

PLAN
(Bars 5S1 Not Shown)

10/20/2022 8:51:34 AM

LAST REVISION	REVISION	DESCRIPTION:			INDEX	SHEET
11/01/18			FY 2023-24 STANDARD PLANS	CONCRETE BARRIER/NOISE WALL TRENCH FOOTING	521-515	1 of 1

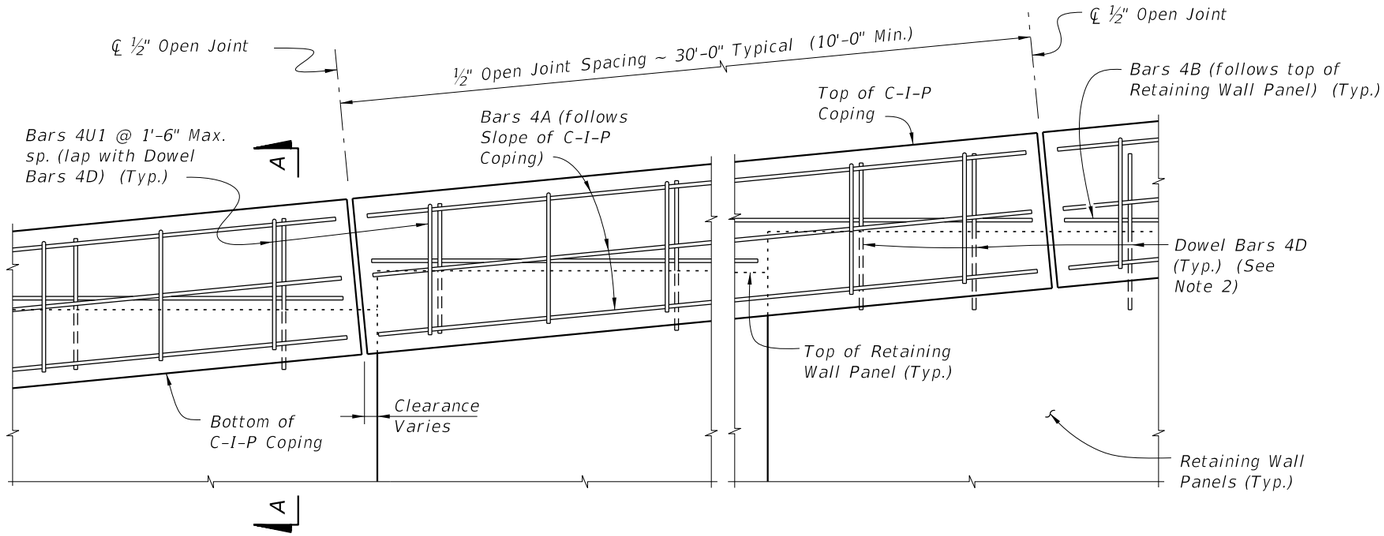

C-I-P COPING - PARTIAL ELEVATION VIEW

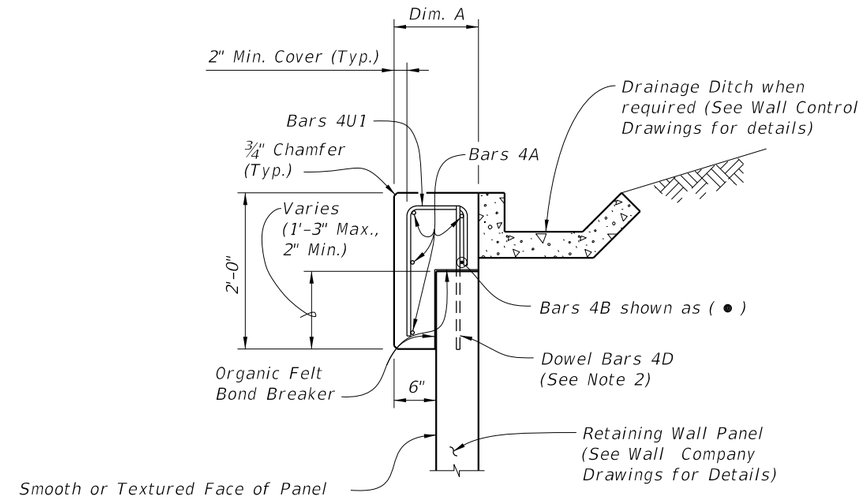

SECTION A-A
C-I-P COPING

PRECAST AND C-I-P COPING NOTES:

1. Provide Class II concrete for slightly aggressive environments or Class IV for moderately or extremely aggressive environments.
2. Dowel Bars 4D extend 11" above the top of retaining wall panel. Field cut as necessary to maintain 2" minimum cover. See Wall Company Drawings for number and spacing of Dowel Bars 4D.
3. Payment for Dowel Bars 4D, Buildup Concrete and Coping will be made under Retaining Wall System (Permanent).

Dim. A	Panel width + 6"
Dim. B	Panel width + 1'-0" Min.

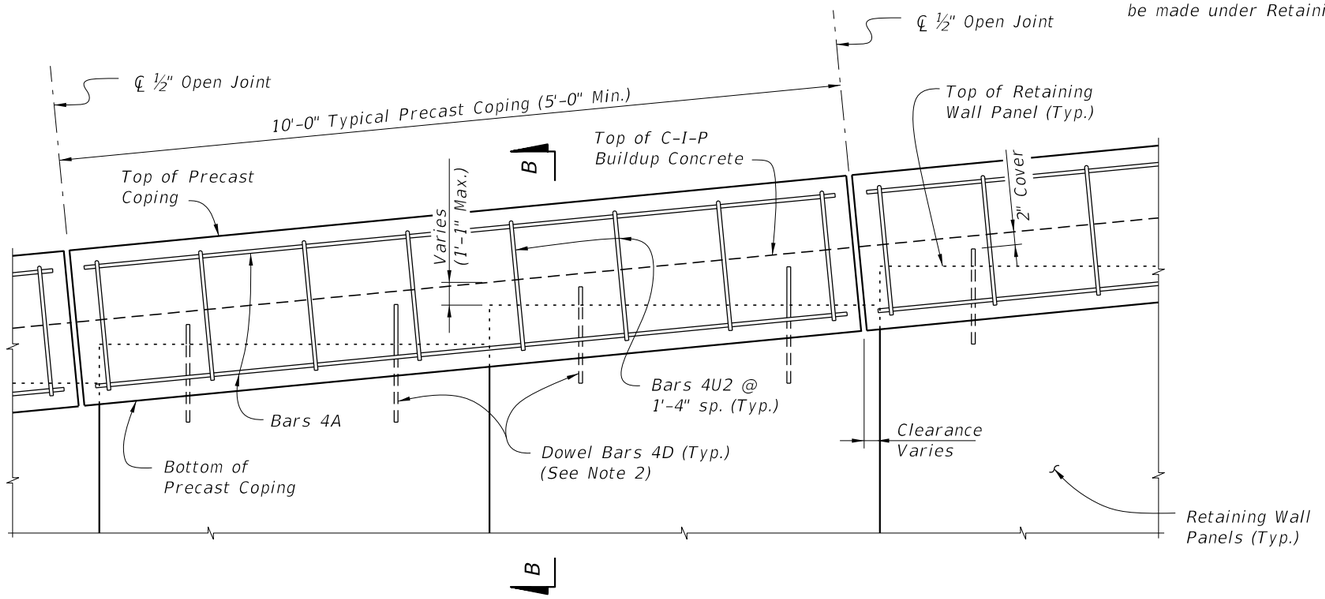

PRECAST COPING - PARTIAL ELEVATION VIEW

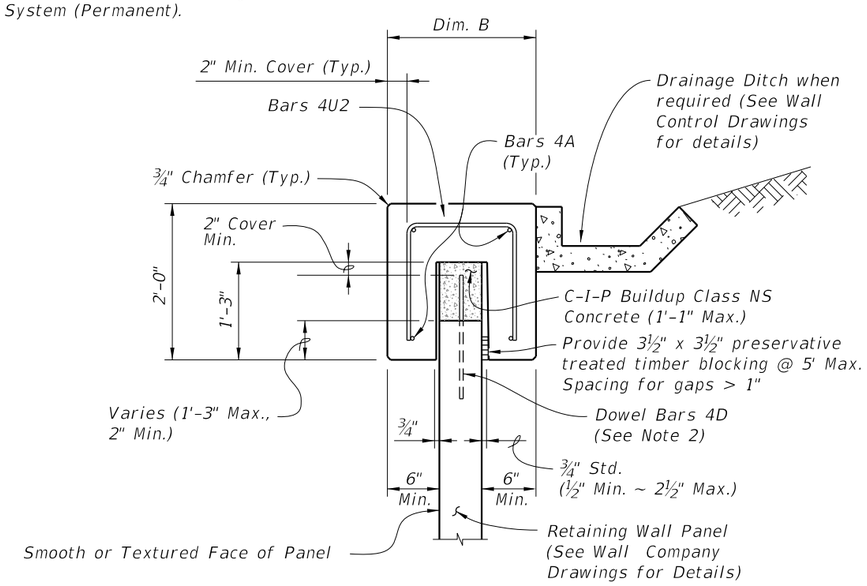

SECTION B-B
PRECAST COPING

10/20/2022 8:51:35 AM

LAST REVISION	REVISION	DESCRIPTION:			INDEX	SHEET
11/01/22			FY 2023-24 STANDARD PLANS	MSE WALL COPING (PRECAST OR C-I-P)	521-600	1 of 2

REINFORCING STEEL BENDING DIAGRAMS - PRECAST AND C-I-P COPINGS

BILL OF REINFORCING STEEL

MARK	SIZE	LENGTH (L) ## S or M	LENGTH (L) ## E
A	4	AS REQD.	AS REQD.
B	4	AS REQD.	AS REQD.
D	4	2'-0"	2'-0"
U1	4	Panel width + 4"	Panel width + 4"
U2	4	Dim. B - 4"	Dim. B - 4"
U3	4	Dim. C - 4"	Dim. C - 6"

REINFORCING STEEL NOTES:

1. All bar dimensions in the bending diagrams are out to out.
2. All reinforcing steel at the open joints will have a 2" minimum cover.
3. Bars 4A may be continuous or spliced at the construction joints. Lap splices for Bars 4A will be a minimum of 1'-8".
4. The Contractor may use Welded Wire Reinforcement (WWR) when approved by the Engineer. WWR must consist of Deformed wire meeting the requirements of Specification Section 931.

S = Slightly Aggressive
M = Moderately Aggressive
E = Extremely Aggressive

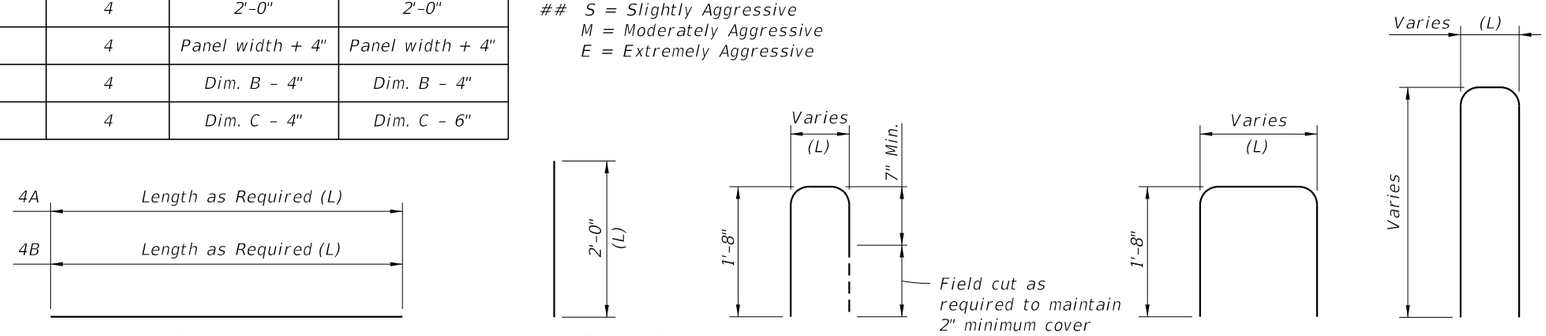

BARS 4A & 4B | DOWEL BAR 4D | BAR 4U1 | BAR 4U2 | BAR 4U3

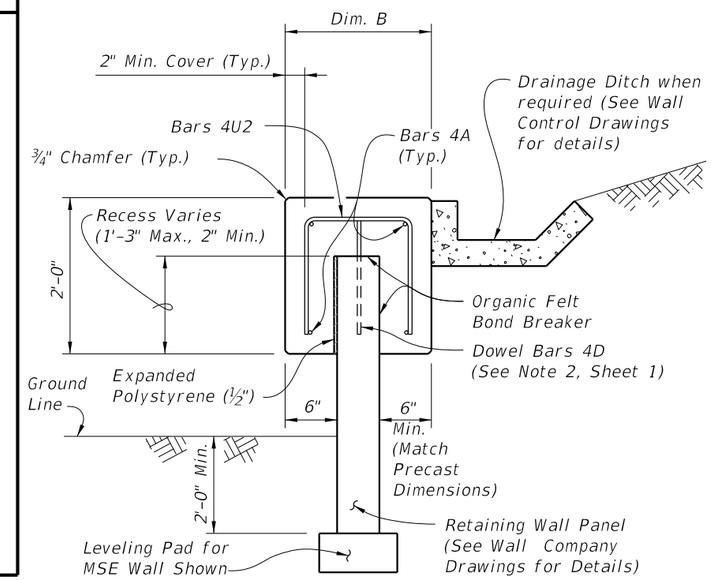

C-I-P COPING USED WITH PRECAST COPING

Note: When precast coping units do not fit the entire length of the retaining wall, use this similar C-I-P coping for short portions between precast coping units. This C-I-P coping may also be used for vertical copings.

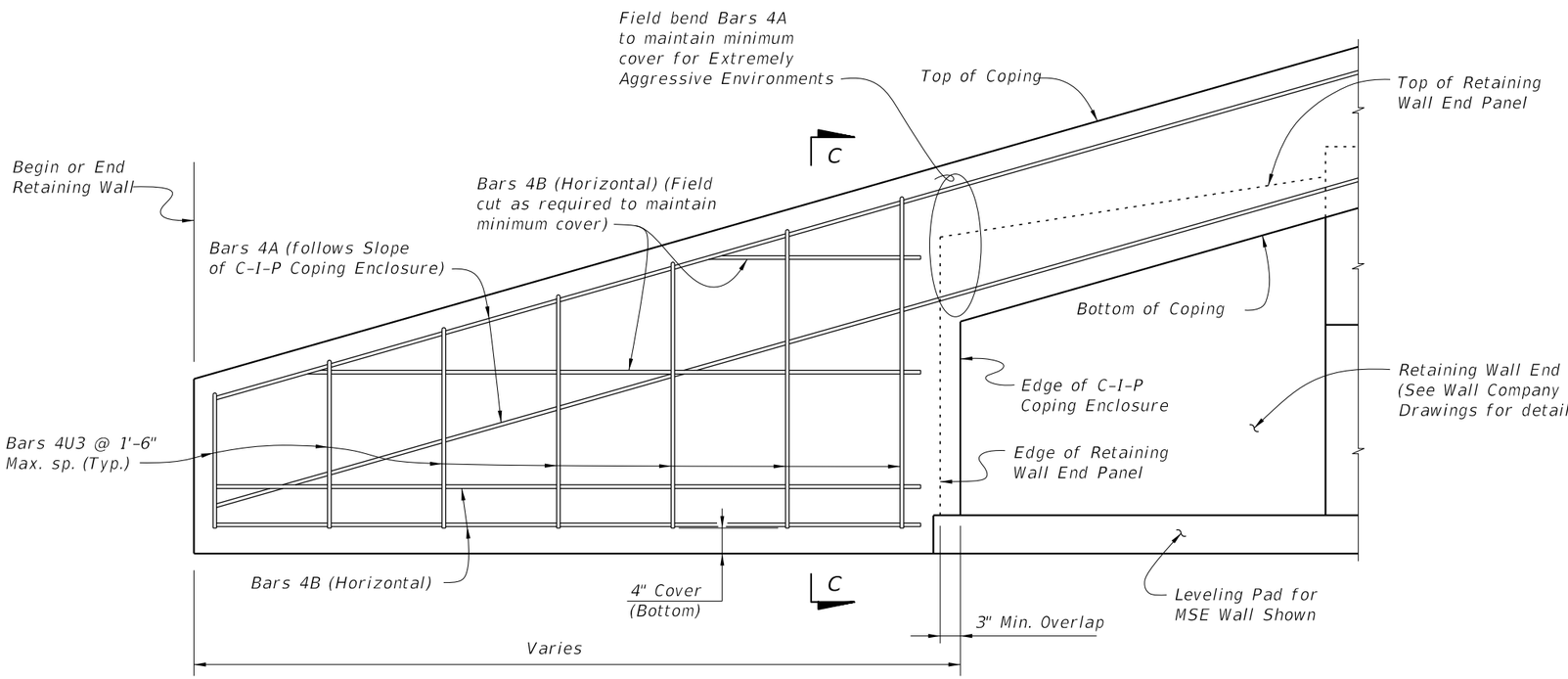

C-I-P COPING ENCLOSURE DETAIL

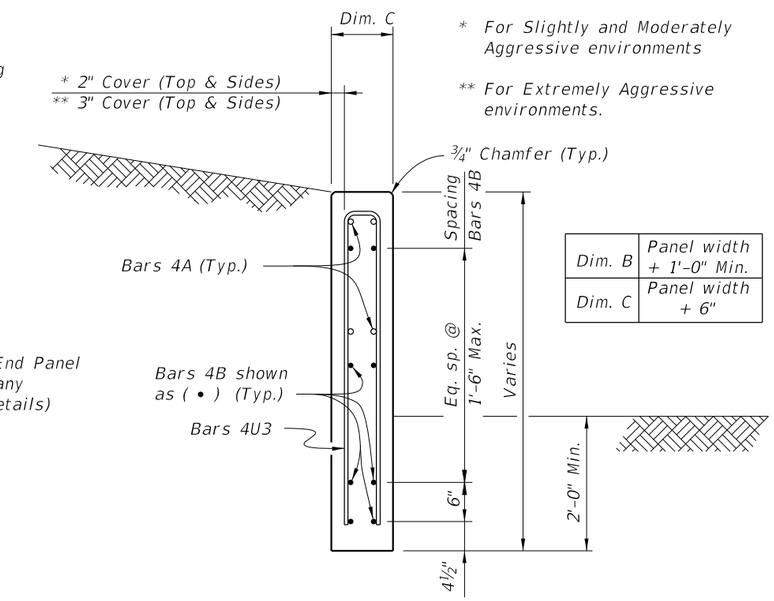

* For Slightly and Moderately Aggressive environments

** For Extremely Aggressive environments.

Dim. B	Panel width + 1'-0" Min.
Dim. C	Panel width + 6"

SECTION C-C

10/20/2022 8:51:36 AM

LAST REVISION	REVISION	DESCRIPTION:			INDEX	SHEET
11/01/19			FDOT FY 2023-24 STANDARD PLANS	MSE WALL COPING (PRECAST OR C-I-P)	521-600	2 of 2

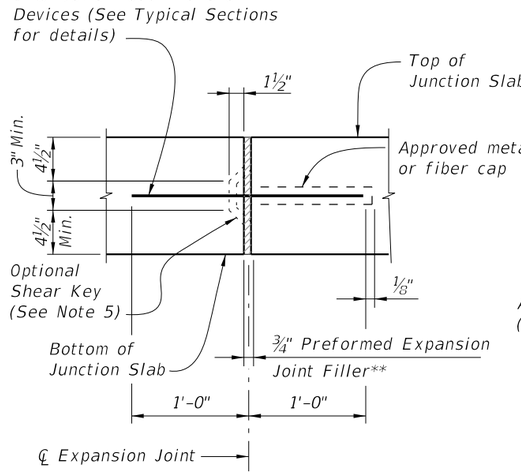

EXPANSION JOINT DETAIL

(Junction Slab expansion joints are to coincide with ¾" open joints in Concrete Barrier)

** Stay-In-Place Plastic Preformed Bond Breakers are permitted to form joints.

CROSS REFERENCE: For Detail "A", see Sheet 2. For Detail "B", see Sheet 3.

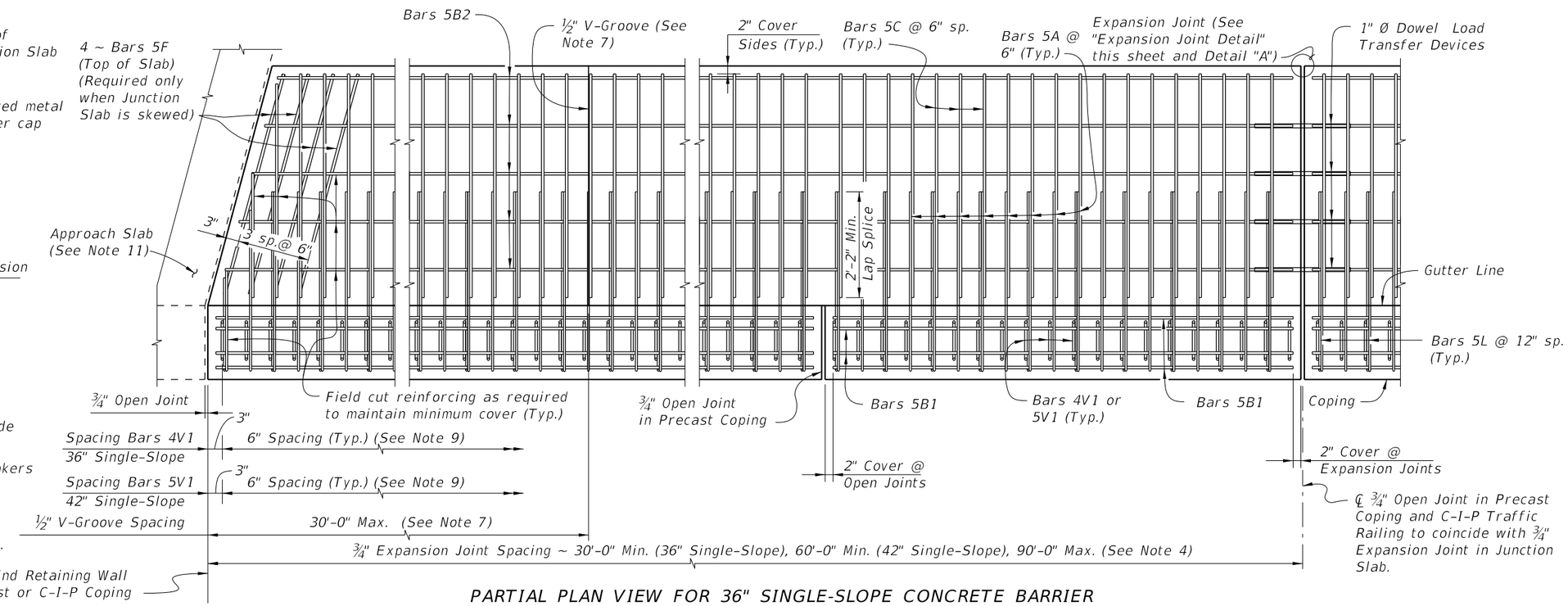

PARTIAL PLAN VIEW FOR 36" SINGLE-SLOPE CONCRETE BARRIER
(Skewed Approach Slab Shown, Perpendicular Approach Slab Similar)
(Precast Coping Shown, C-I-P Coping Similar) (Concrete Barrier not Shown for Clarity)

JUNCTION SLAB NOTES:

1. Construct the expansion joints, V-Grooves and face of coping plumb.
2. Provide Class II concrete for slightly aggressive environments or Class IV for moderate or extremely aggressive environments.
3. Dowel Load Transfer Devices will be hot-dip galvanized ASTM A 36 smooth round bar, or GFRP smooth round bars with a minimum shear strength of 22 ksi in accordance with ASTM D7617. Install Dowel Load Transfer Devices in accordance with Specification Section 350.
4. Construct ¾" Expansion Joints in junction slabs and C-I-P copings plumb and perpendicular or radial to the Gutter Line. Provide at 90'-0" maximum intervals as shown. Provide 3"x3" Mortar plugs in open joints at the base of Concrete Barriers to contain runoff.
5. Shear Keys in Junction Slab are required when GFRP bars are used for Dowel Transfer Devices and are optional with steel dowel bars. Tongue Slope on Shear Key must be constant and between 5° to 45° from horizontal.
6. Provide and install Preformed Expansion Joint Filler in accordance with Specification Section 932.
7. Construct ½" V-Grooves in junction slabs and C-I-P copings at 30'-0" maximum intervals as shown. Space V-Grooves equally between ¾" Expansion Joints and/or Begin or End Junction Slab. V-Groove locations are to coincide with V-Groove locations in the Concrete Barrier.
8. Shoulder or Roadway Pavement is required on top of the junction slab for its entire length on the traffic side of the Concrete Barrier. See Typical Sections on Sheets 2 and 3 for details.
9. Spacing shown is along the Gutter Line.
10. For Precast Coping only, provide Dowel Bars 4D embedded 1'-0" and extended 9" above the top of MSE wall panels. Field cut as necessary to maintain 2" minimum cover to the top of the buildup concrete. See Wall Company Drawings for number and spacing of Dowel Bars 4D.
11. The following Indexes contain details of the intersection of the retaining wall at approach slabs:
    Index 400-090 - Approach Slabs (Flexible Pavement Approaches)
    Index 400-091 - Approach Slabs (Rigid Pavement Approaches)
12. Junction slabs with rigid pavement: the two inch increase in concrete barrier height is not required.
13. There are two options to accommodate the 2" height transitions :
    A. Raise the top of coping elevation 2" and mount either a 36" or 42" standard barrier on top
    B. Transition the height of the concrete barrier by gradually extending the toe and back of the barrier 2" while keeping the top of coping elevation even with the gutterline elevation.
14. The barrier construction joint must be at the interface of the coping and the barrier base. Embed the V bars a minimum of 9" below the construction joint.
15. For embedded conduit and junction boxes, see Index 630-010.

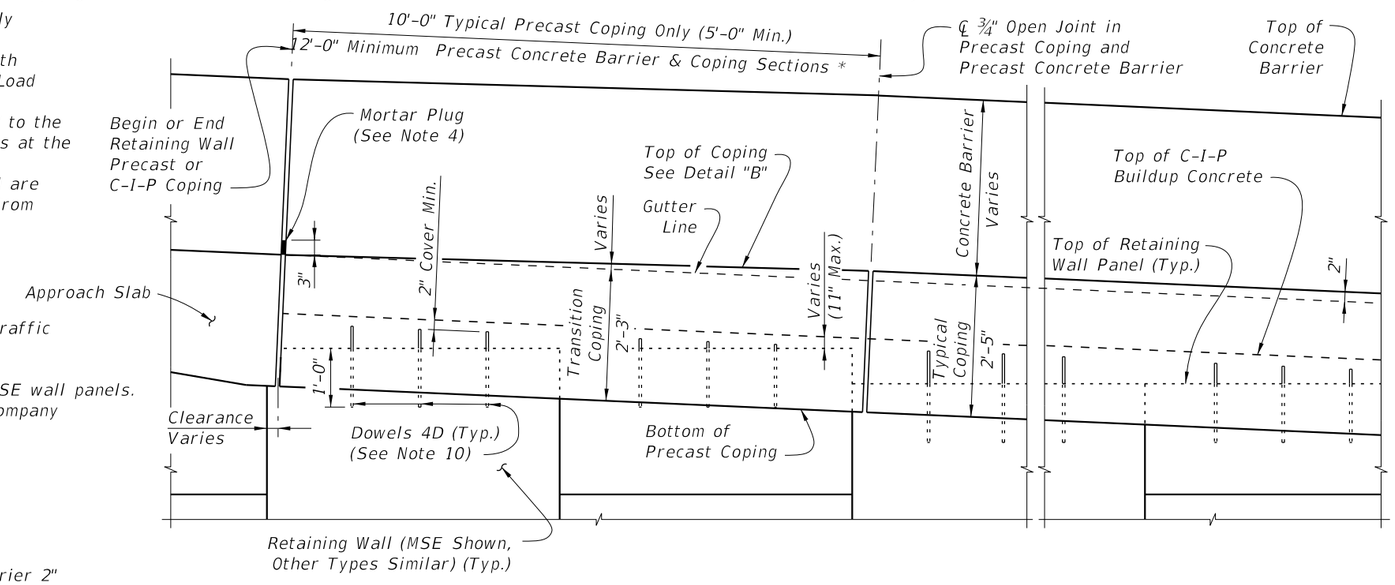

PARTIAL ELEVATION VIEW
(Precast Coping and Junction Slab Reinforcing not Shown for Clarity)
(Precast Coping Shown, C-I-P Coping Similar)

* C-I-P End Section must be ≥ 12'-0".

SINGLE-SLOPE CONCRETE BARRIERS

LAST REVISION	REVISION	DESCRIPTION:				
11/01/21			FY 2023-24 STANDARD PLANS	CONCRETE BARRIER/JUNCTION SLAB - WALL COPING	INDEX 521-610	SHEET 1 of 3

10/20/2022 8:51:37 AM

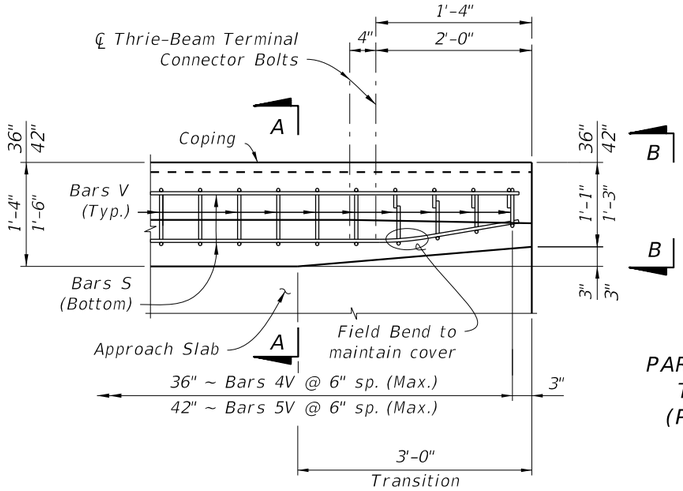

PLAN - RAILING END TRANSITION
(Showing Bars V and S)

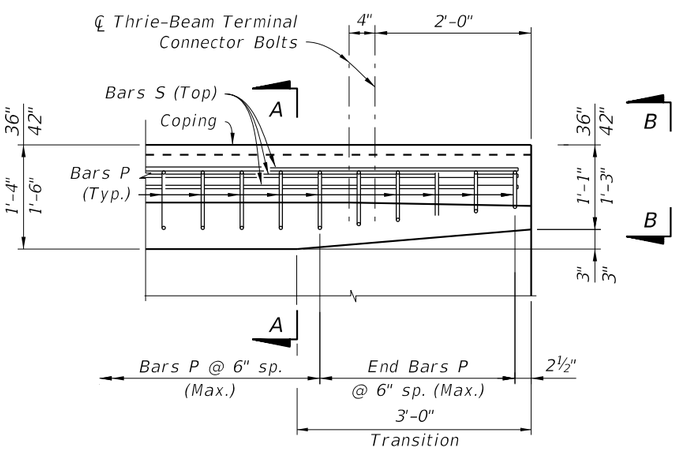

PLAN - RAILING END TRANSITION
(Showing Bars P and S)

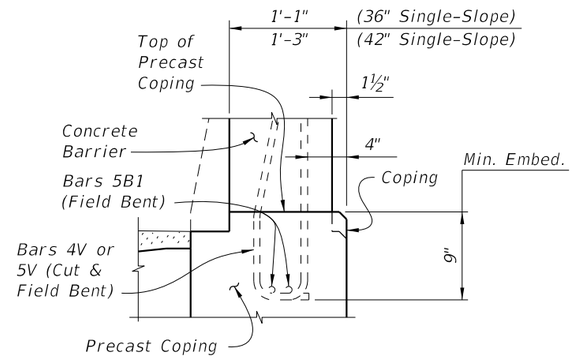

PARTIAL END VIEW OF CONCRETE BARRIER END TRANSITION FOR GUARDRAIL ATTACHMENT
(Precast Coping Shown, C-I-P Coping Similar)

*** Transition the Concrete Barrier Height to 32" as shown in Index 521-427 or 521-428. See Note 10.

RAILING END TRANSITION DETAILS ***

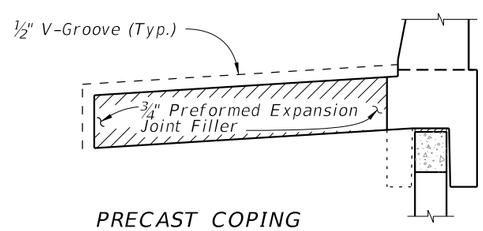

PRECAST COPING

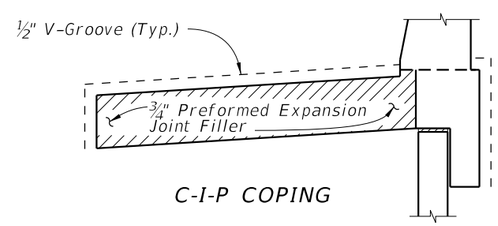

C-I-P COPING

DETAIL "A"
(Showing Locations of ½" V-Grooves and ¾" Preformed Expansion Joint Filler)

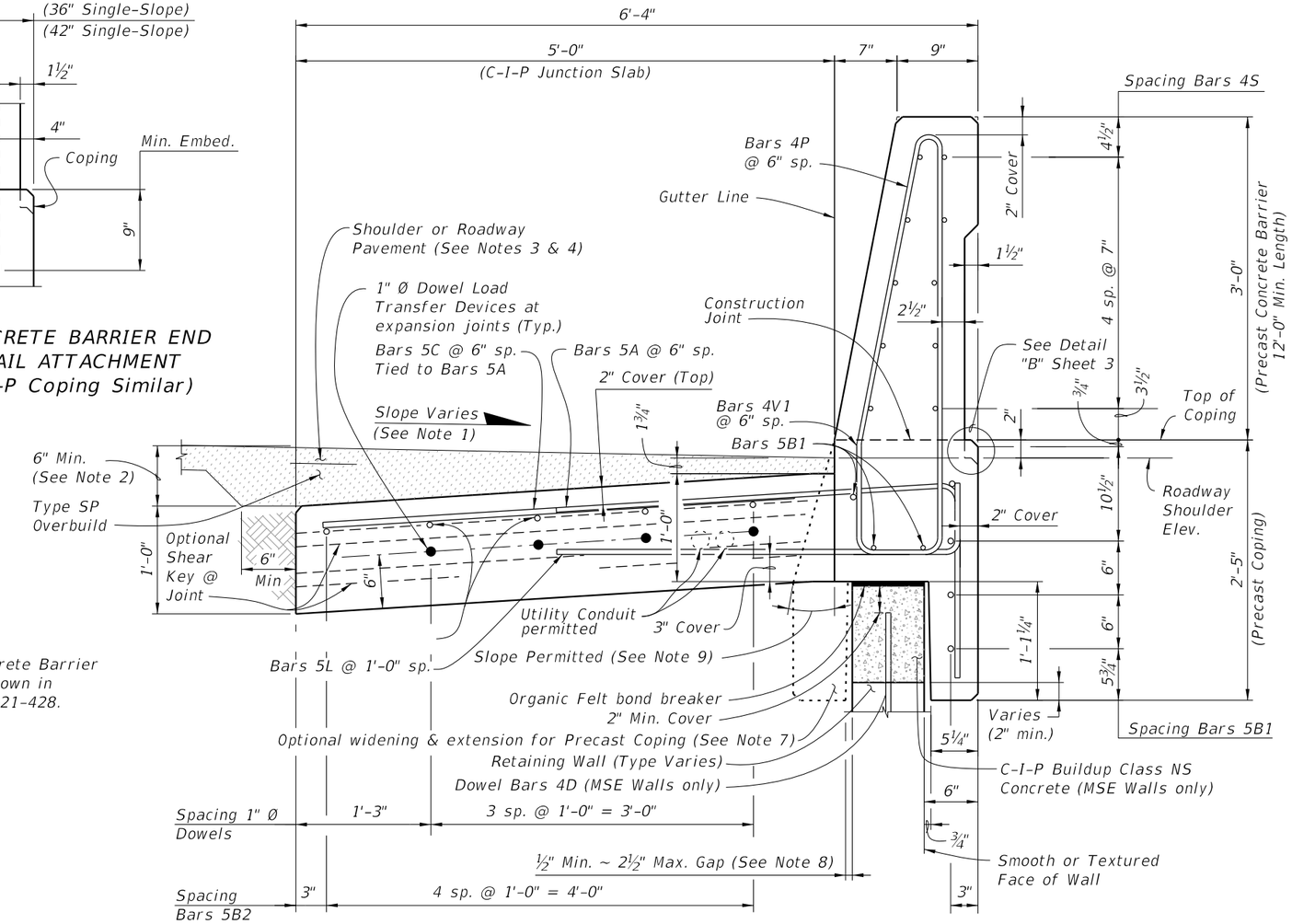

TYPICAL SECTION THRU PRECAST 36" SINGLE-SLOPE CONCRETE BARRIER AND COPING WITH C-I-P JUNCTION SLAB

NOTES:

1. Match Cross Slope of Travel Lane or Shoulder.
2. Vary Junction Slab slope based on roadway cross slope to maintain a minimum 6" asphalt depth at the edge of the slab as shown.
3. For Rigid Pavement (Concrete), Junction Slab may be thickened to match finished grade. Vary the Junction Slab slope to maintain a minimum 1'-6" thickness at the edge of the slab.
4. See Roadway Plans for asphalt shoulder, roadway pavement and overbuild.
5. Minimum length of Junction Slab between expansion joints is 30'-0".
6. At the Contractor's option, mechanical couplers may be used to splice reinforcing. Complete details, including reinforcement lengths are required in the Shop Drawings. Provide mechanical couplers in accordance with Specification Section 415. Mechanical couplers shall develop 125% of the bar yield strength.
7. Contractor to maintain stability of precast coping/Concrete Barrier prior to junction slab completion. In the Shop Drawings, show reinforcement for optional extension required for stability, shipping and handling. Maintain 2" minimum concrete cover.
8. When the air gap between the precast coping extension and retaining wall exceeds 2½", fill gap with full depth Expanded Polystyrene to provide a maximum 2½" air gap.
9. Angle varies ~ 0° min., 25° max.
10. The height of the concrete barrier at the guardrail connection is 32" from the riding surface for all pavement types. See Index 534-001 for connection details.

SINGLE-SLOPE CONCRETE BARRIERS

REINFORCING STEEL BENDING DIAGRAMS

BILL OF REINFORCING STEEL

MARK	SIZE	LENGTH			
		PRECAST COPING FOR SINGLE-SLOPE		C-I-P COPING FOR SINGLE-SLOPE	
		(36")	(42")	(36")	(42")
A	5	5'-3"	5'-5"	7'-10"	8'-0"
B1	5	11'-6"	9'-6"	AS REQD.	AS REQD.
B2	5	AS REQD.	AS REQD.	AS REQD.	AS REQD.
C	5	4'-10"	4'-10"	N/A	N/A
F	5	4'-10"	4'-10"	4'-10"	4'-10"
L	5	4'-5"	4'-5"	4'-5"	4'-5"
P	4	5'-11"	N/A	5'-11"	N/A
P	5	N/A	7'-0"	N/A	7'-0"
S	4	11'-6"	N/A	AS REQD.	N/A
S	6	N/A	9'-6"	N/A	AS REQD.
V1	4	5'-9"	N/A	5'-9"	N/A
V1	5	N/A	6'-4"	N/A	6'-4"
1" Ø Dowel	Smooth Bar	2'-0"	2'-0"	2'-0"	2'-0"

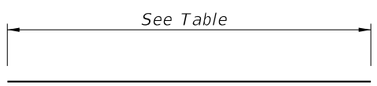

BARS 5B1, 5B2, 5C, 5F, 4S, & 6S

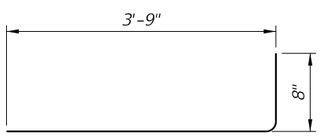

BARS 5L

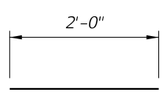

1" Ø DOWEL

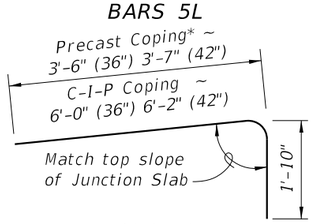

BAR 5A

* See Note 5 & 6

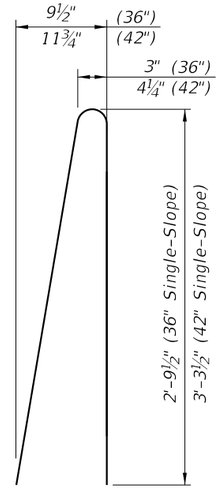

STIRRUP BAR
4P (36") 5P (42")

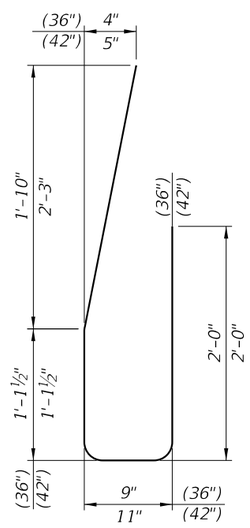

STIRRUP BAR
4V1 (36") 5V1 (42")

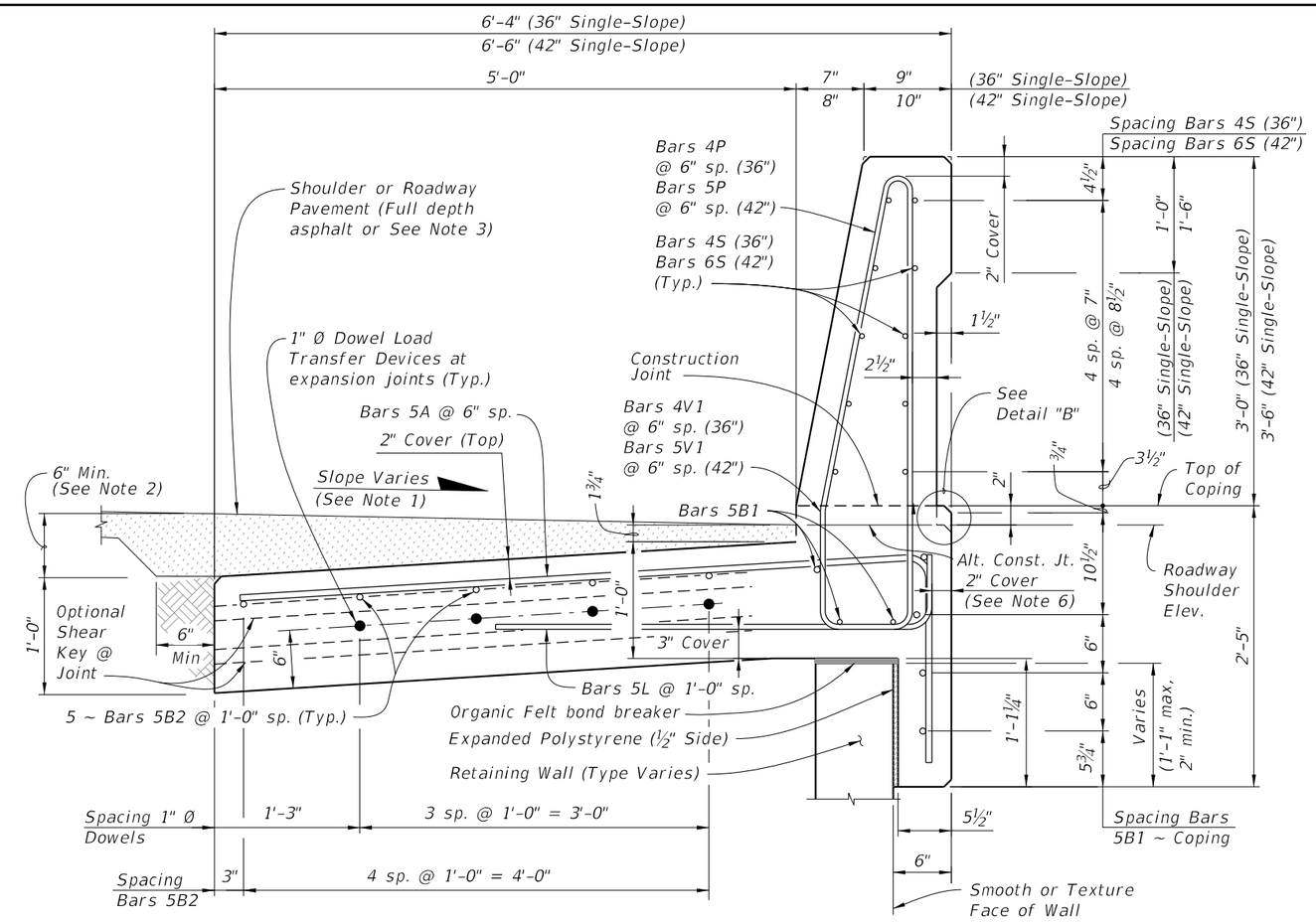

TYPICAL SECTION THRU C-I-P CONCRETE BARRIER WITH C-I-P JUNCTION SLAB AND C-I-P COPING
(PRECAST COPING SIMILAR WITH C-I-P BUILDUP)

NOTES:

1. Match Cross Slope of Travel Lane or Shoulder.
2. Vary the Junction Slab slope based on the roadway cross slope to maintain a minimum 6" asphalt depth at the edge of the slab.
3. For Rigid Pavement (Concrete), Junction Slab may be thickened to match finish grade. Vary the Junction Slab slope to maintain a minimum 1'-6" thickness at the inside edge of the slab.
4. Minimum length of Junction Slab between expansion joints is 30'-0" for 36" Single-Slope or 60'-0" for 42" Single-Slope.
5. Contractor to maintain stability of precast coping prior to junction slab completion. In the Shop Drawings, show reinforcement for optional extension required for stability, shipping and handling. Maintain 2" minimum concrete cover.
6. If slip forming is used, submit shop drawings for approval showing 2½" side cover with the Typical Section dimensions adjusted.

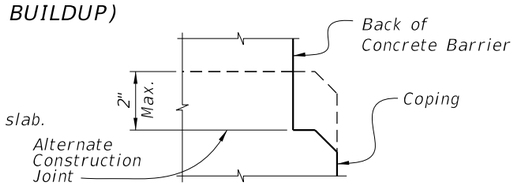

DETAIL "B"
OPTIONAL NOTCH AT TOP OF COPING

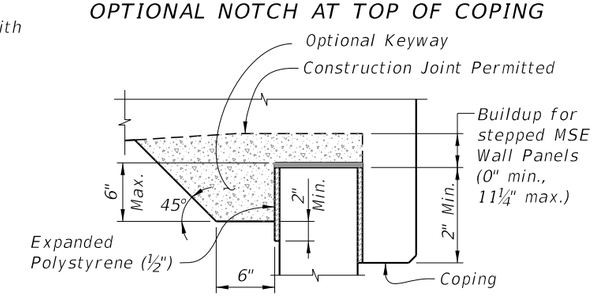

BUILDUP FOR STEPPED MSE WALL PANELS
AND C-I-P COPING

SINGLE-SLOPE CONCRETE BARRIERS

ESTIMATED QUANTITIES FOR C-I-P

ITEM	UNIT	QUANTITY (36")	QUANTITY (42")
Concrete	CY/LF	0.376	0.420
Reinforcing Steel (Typical) (excludes Bars 5C & 5F)	LB/LF	62.45	82.17
Additional Reinf. @ Expansion Joint (Steel Dowels)	LB	21.36	21.36

(The above concrete quantities are based on a max. superelevation of 6.25%)

REINFORCING STEEL NOTES:

1. All bar dimensions in the bending diagrams are out to out.
2. All reinforcing steel at expansion and open joints will have a 2" minimum cover.
3. Lap splices for Bars 5B & 5S will be a minimum of 2'-2".
4. For Precast Copings only, lap splice Bars 5A with Bars 5C. Lap splices will be a minimum of 2'-2".
5. The Contractor may use either full length Bars 5A or lap splice with Bars 5C at Bars 5A for C-I-P Copings.
6. Dimension shown is for lap splice option. For mechanical coupler option, this dimension is 1'-2½" (36" Single-Slope) or 1'-4½" (42" Single-Slope).
7. Dimension shown is for lap splice option. For mechanical coupler option, this dimension is 4'-8".
8. When approved by the Engineer, the Contractor may use deformed Welded Wire Reinforcement (WWR) meeting the requirements of Specification Section 931.
9. Contractor may use a single #4 stirrup for Bars 4P and 4V1, or a single #5 stirrup for Bars 5P and 5V1.

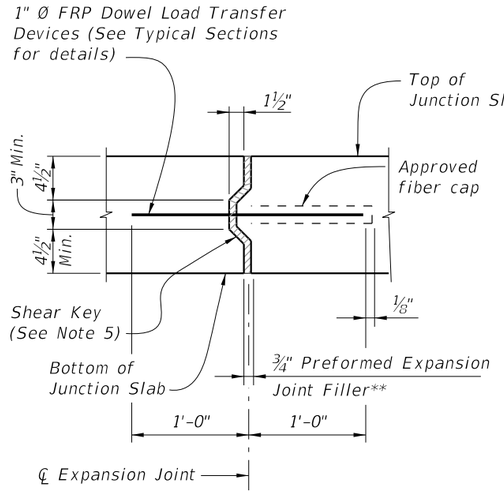

EXPANSION JOINT DETAIL

(Junction Slab expansion joints are to coincide with ¾" open joints in Concrete Barrier)

** Stay-In-Place Plastic Preformed Bond Breakers are permitted to form joints.

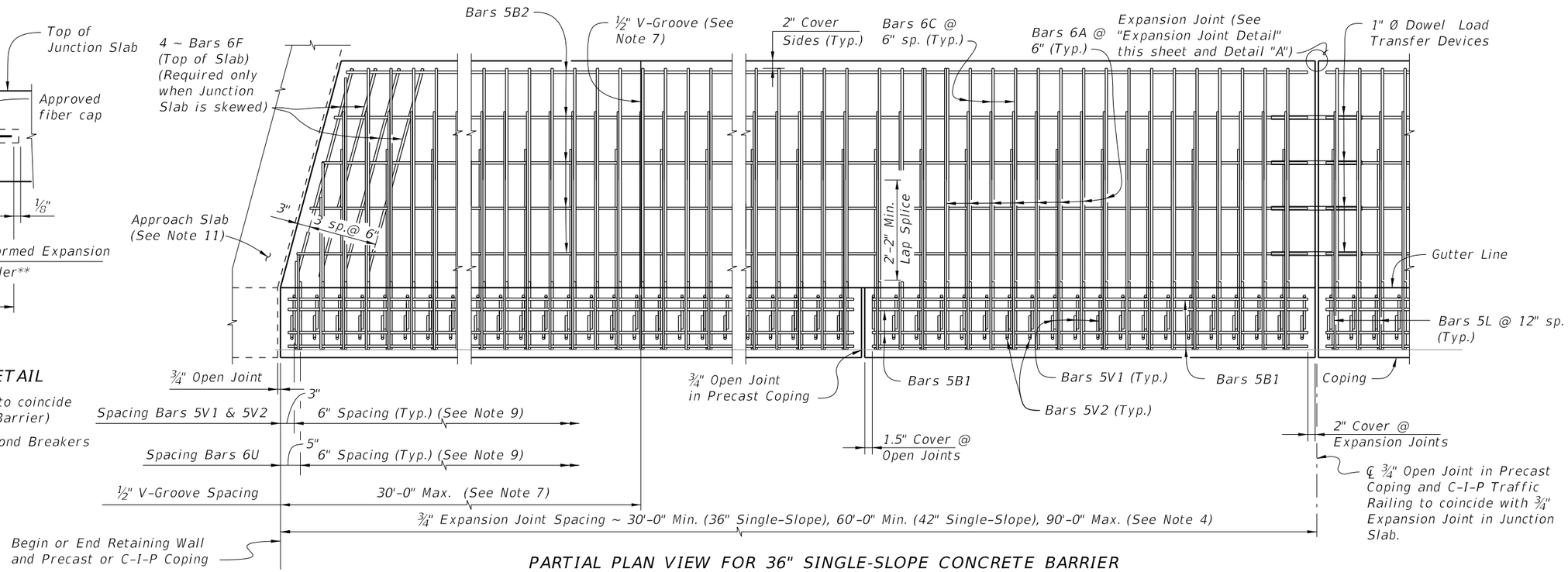

PARTIAL PLAN VIEW FOR 36" SINGLE-SLOPE CONCRETE BARRIER

(Skewed Approach Slab Shown, Perpendicular Approach Slab Similar)
(Precast Coping Shown, C-I-P Coping Similar) (Concrete Barrier not Shown for Clarity)

CROSS REFERENCE: For Detail "A", see Sheet 2.
For Detail "B", see Sheet 3.

JUNCTION SLAB NOTES:

1. Construct the expansion joints, V-Grooves and face of coping plumb.
2. Provide Class II concrete.
3. Dowel Load Transfer Devices will be GFRP smooth round bars with a minimum shear strength of 22 ksi in accordance with ASTM D7617. Install Dowel Load Transfer Devices in accordance with Specification Section 350.
4. Construct ¾" Expansion Joints in junction slabs and C-I-P copings plumb and perpendicular or radial to the Gutter Line. Provide at 90'-0" maximum intervals as shown. Provide 3"x3" Mortar plugs in open joints at the base of Concrete Barriers to contain runoff.
5. Shear Keys in Junction Slab are required. Tongue Slope on Shear Key must be constant and between 5° to 45° from horizontal.
6. Provide and install Preformed Expansion Joint Filler in accordance with Specification Section 932.
7. Construct ½" V-Grooves in junction slabs and C-I-P copings at 30'-0" maximum intervals as shown. Space V-Grooves equally between ¾" Expansion Joints and/or Begin or End Junction Slab. V-Groove locations are to coincide with V-Groove locations in the Concrete Barrier.
8. Shoulder or Roadway Pavement is required on top of the junction slab for its entire length on the traffic side of the Concrete Barrier. See Typical Sections on Sheets 2 and 3 for details.
9. Spacing shown is along the Gutter Line.
10. For Precast Coping only, provide Dowel Bars 4D embedded 1'-0" and extended 9" above the top of MSE wall panels. Field cut as necessary to maintain 2" minimum cover to the top of the buildup concrete. See Wall Company Drawings for number and spacing of Dowel Bars 4D.
11. The following Indexes contain details of the intersection of the retaining wall at approach slabs:
    Index 400-090 - Approach Slabs (Flexible Pavement Approaches)
    Index 400-091 - Approach Slabs (Rigid Pavement Approaches)
12. Junction slabs with rigid pavement: the two inch increase in concrete barrier height is not required.
13. There are two options to accommodate the 2" height transitions :
    A. Raise the top of coping elevation 2" and mount either a 36" or 42" standard barrier on top
    B. Transition the height of the concrete barrier by gradually extending the toe and back of the barrier 2" while keeping the top of coping elevation even with the gutterline elevation.
14. The barrier construction joint must be at the interface of the coping and the barrier base. Embed the V bars a minimum of 9" below the construction joint.
15. For embedded conduit and junction boxes, see Index 630-010.

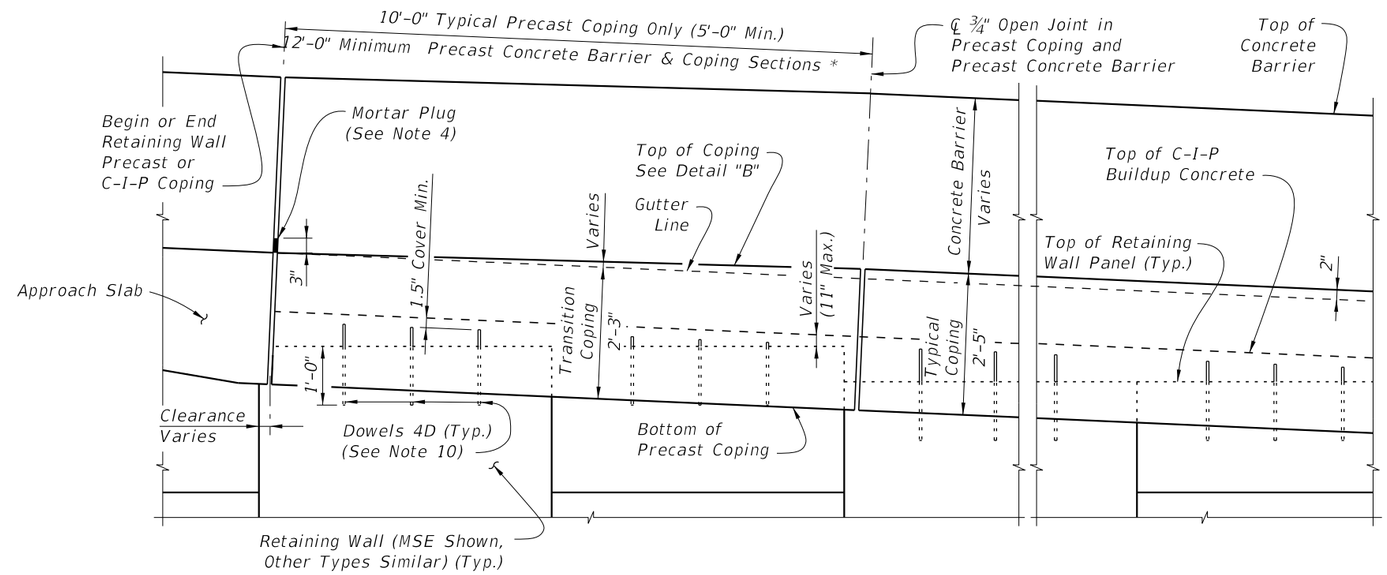

PARTIAL ELEVATION VIEW

(Precast Coping and Junction Slab Reinforcing not Shown for Clarity)
(Precast Coping Shown, C-I-P Coping Similar)

* C-I-P End Section must be ≥ 12'-0".

SINGLE-SLOPE CONCRETE BARRIERS

LAST REVISION	REVISION	DESCRIPTION:			INDEX	SHEET
11/01/21			FY 2023-24 STANDARD PLANS	CONCRETE BARRIER/JUNCTION SLAB - WALL COPING (FRP)	521-611	1 of 4

10/20/2022 8:51:41 AM

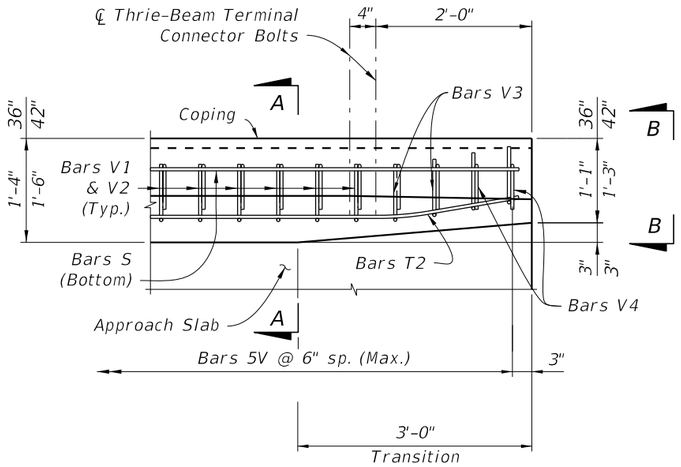

PLAN - RAILING END TRANSITION
(Showing Bars V,S & T2)

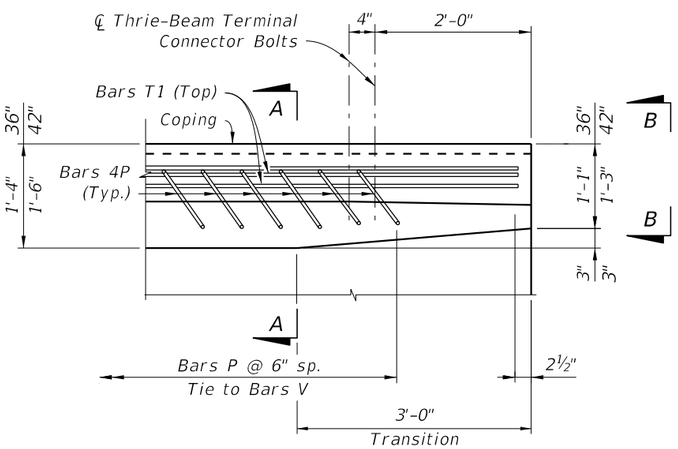

PLAN - RAILING END TRANSITION
(Showing Bars P and T1)

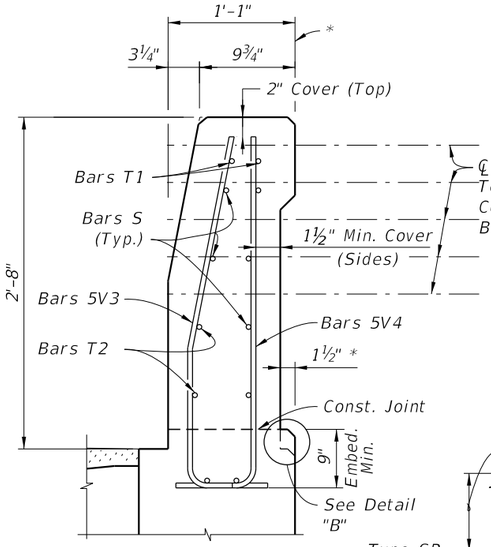

PARTIAL END VIEW OF CONCRETE BARRIER END TRANSITION FOR GUARDRAIL ATTACHMENT
(Precast Coping Shown, C-I-P Coping Similar)

*** Transition the Concrete Barrier Height to 32" as shown in Index 521-427 or 521-428. See Note 9.

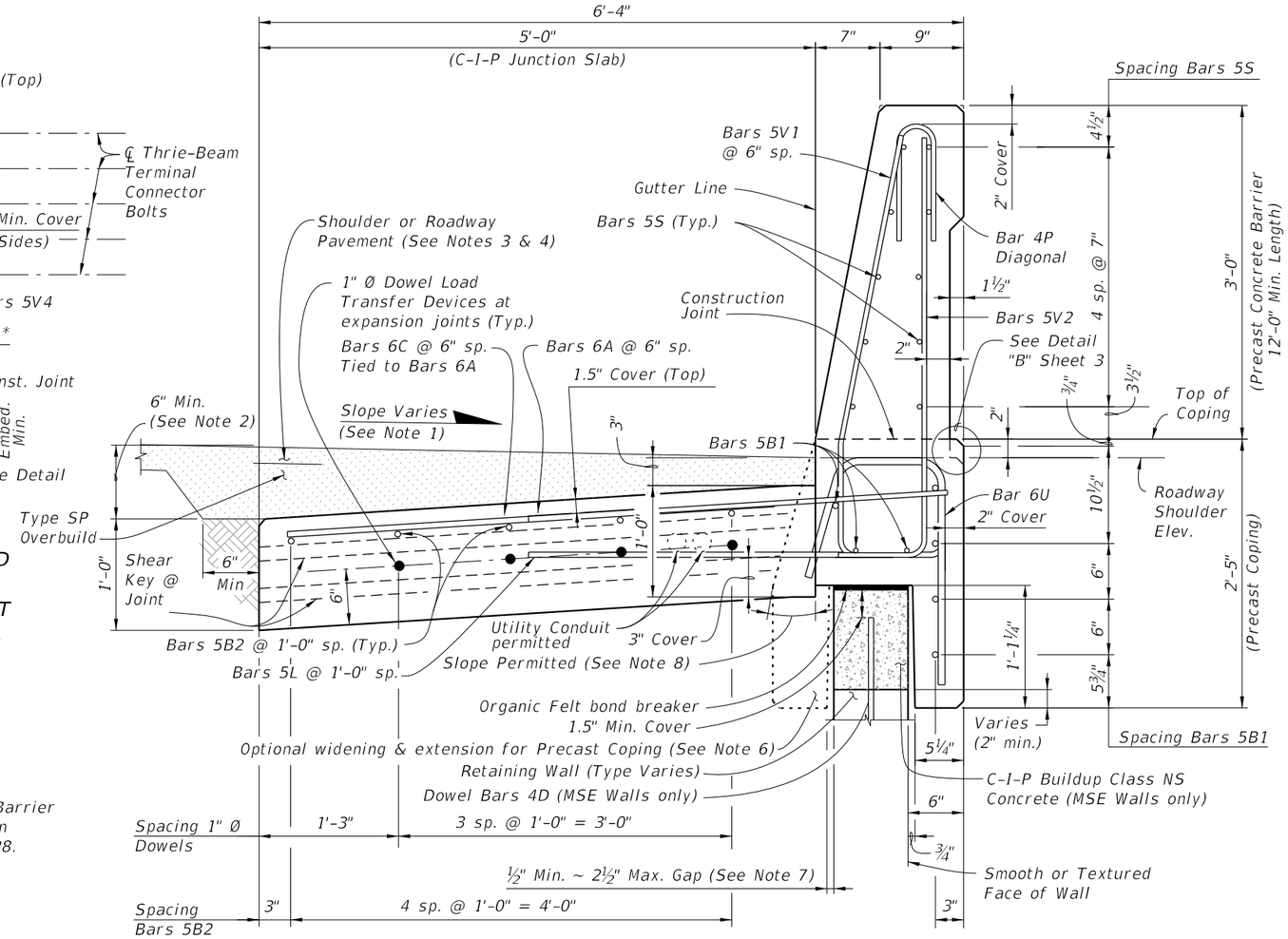

TYPICAL SECTION THRU PRECAST 36" SINGLE-SLOPE CONCRETE BARRIER AND COPING WITH C-I-P JUNCTION SLAB

RAILING END TRANSITION DETAILS ***

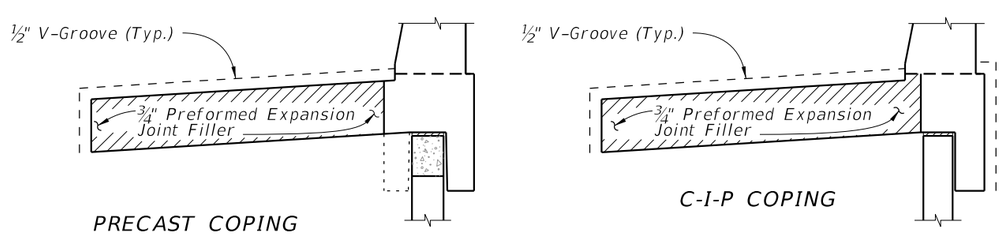

DETAIL "A"
(Showing Locations of ½" V-Grooves and ¾" Preformed Expansion Joint Filler)

NOTES:

1. Match Cross Slope of Travel Lane or Shoulder.
2. Vary Junction Slab slope based on roadway cross slope to maintain a minimum 6" asphalt depth at the inside edge of the slab as shown.
3. For Rigid Pavement (Concrete), Junction Slab may be thickened to match finished grade. Vary the Junction Slab slope to maintain a minimum 1'-6" asphalt thickness at the inside edge of the slab.
4. See Roadway Plans for asphalt shoulder, roadway pavement and overbuild.
5. Minimum length of Junction Slab between expansion joints is 30'-0".
6. Contractor to maintain stability of precast coping/Concrete Barrier prior to junction slab completion. In the Shop Drawings, show reinforcement for optional extension required for stability, shipping and handling. Maintain 1½" minimum concrete cover.
7. When the air gap between the precast coping extension and retaining wall exceeds 2½", fill gap with full depth Expanded Polystyrene to provide a maximum 2½" air gap.
8. Angle varies ~ 0° min., 25° max.
9. The height of the concrete barrier at the guardrail connection is 32" from the riding surface for all pavement types. See Index 534-001 for connection details.
10. 2" cover allows for 1/2" variance due to slip forming.

SINGLE-SLOPE CONCRETE BARRIERS

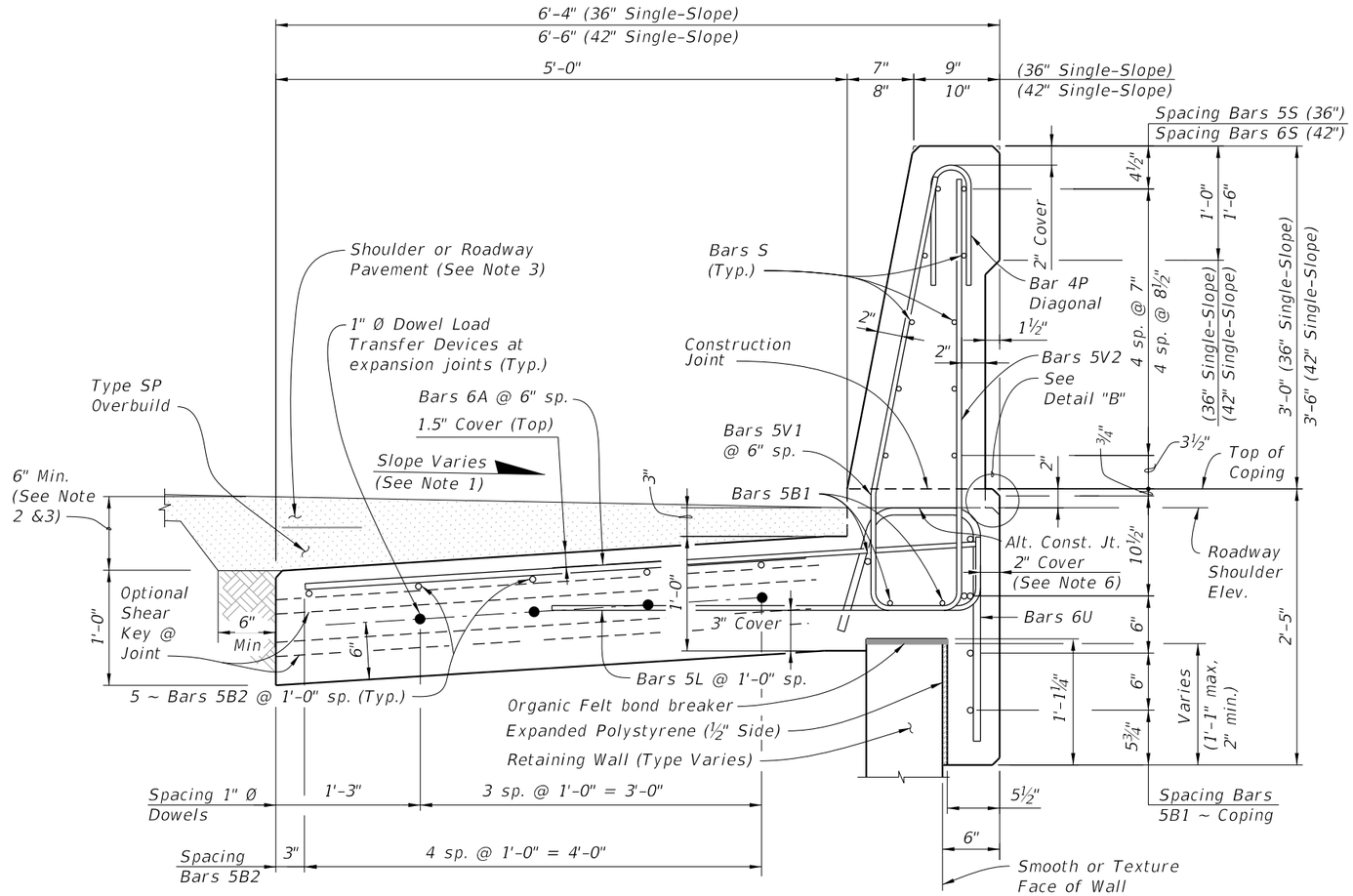

TYPICAL SECTION THRU C-I-P CONCRETE BARRIER WITH C-I-P JUNCTION SLAB AND C-I-P COPING
(PRECAST COPING SIMILAR WITH C-I-P BUILDUP)

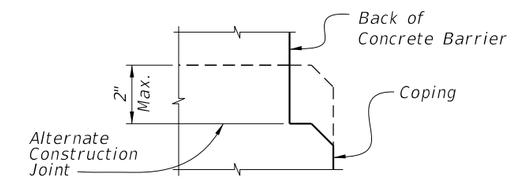

DETAIL "B"
OPTIONAL NOTCH AT TOP OF COPING

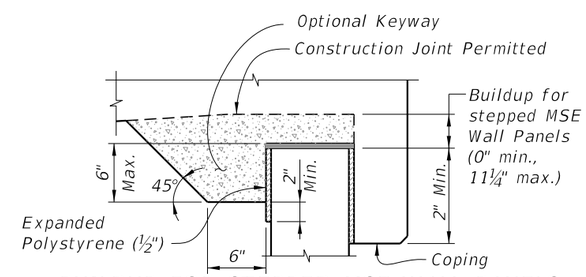

BUILDUP FOR STEPPED MSE WALL PANELS
AND C-I-P COPING

NOTES:

1. Match Cross Slope of Travel Lane or Shoulder.
2. Vary the Junction Slab slope based on the roadway cross slope to maintain a minimum 6" asphalt depth at the inside edge of the slab.
3. For Rigid Pavement (Concrete), Junction Slab may be thickened to match finish grade. Vary the Junction Slab slope to maintain a minimum 1'-6" thickness at the inside edge of the slab.
4. Minimum length of Junction Slab between expansion joints is 30'-0" for 36" Single-Slope or 60'-0" for 42" Single-Slope.
5. Contractor to maintain stability of precast coping prior to junction slab completion. In the Shop Drawings, show reinforcement for optional extension required for stability, shipping and handling. Maintain 1.5" minimum concrete cover.
6. 2" cover allows for ½" variance due to slip forming.

ESTIMATED QUANTITIES FOR C-I-P

ITEM	UNIT	QUANTITY (36")	QUANTITY (42")
Concrete	CY/LF	0.376	0.420
GFRP (excludes Bars 6C & 6F)	LF/LF	69.42	72.41
Additional Reinf. @ Expansion Joint (Dowels)	LF	8.00	8.00

(The above concrete quantities are based on a max. superelevation of 6.25%)

SINGLE-SLOPE CONCRETE BARRIERS

FRP BENDING DIAGRAMS

FRP REINFORCING

MARK	SIZE	LENGTH			
		PRECAST COPING FOR SINGLE-SLOPE		C-I-P COPING FOR SINGLE-SLOPE	
		(36")	(42")	(36")	(42")
A	6	5'-3"	5'-5"	7'-10"	8'-0"
B1	5	11'-6"	9'-6"	AS REQD.	AS REQD.
B2	5	AS REQD.	AS REQD.	AS REQD.	AS REQD.
C	6	4'-10"	4'-10"	N/A	N/A
F	6	4'-10"	4'-10"	4'-10"	4'-10"
L	5	4'-5"	4'-5"	4'-5"	4'-5"
P	4	2'-7"	2'-7"	2'-7"	2'-7"
S	5	11'-6"	N/A	AS REQD.	N/A
S	6	N/A	9'-6"	N/A	AS REQD.
T1	5	6'-1"	N/A	6'-1"	N/A
T1	6	N/A	9'-6"	N/A	9'-6"
T2	5	6'-1"	N/A	6'-1"	N/A
T2	6	N/A	6'-1"	N/A	6'-1"
U	7	4'-4"	4'-6"	4'-4"	4'-6"
V1	5	4'-6"	5'-2"	4'-6"	5'-2"
V2	5	4'-3"	4'-8"	4'-3"	4'-8"
V3	5	4'-2"	4'-2"	4'-2"	4'-2"
V4	5	3'-11"	3'-11"	3'-11"	3'-11"
1" Ø Dowel	Smooth Bar	2'-0"	2'-0"	2'-0"	2'-0"

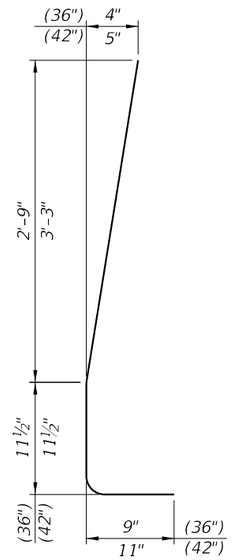

STIRRUP BAR 5V1

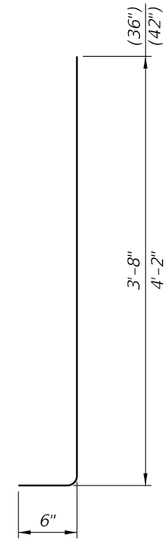

STIRRUP BAR 5V2

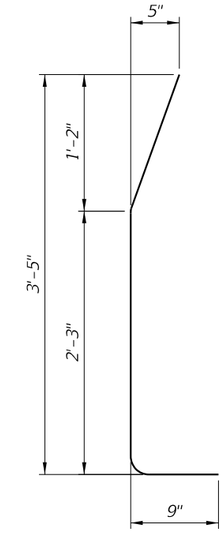

STIRRUP BAR 5V3

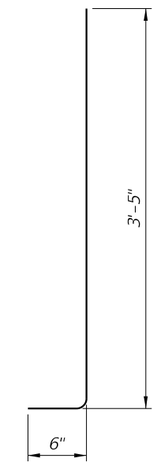

STIRRUP BAR 5V4

GUARDRAIL TRANSITION BARS

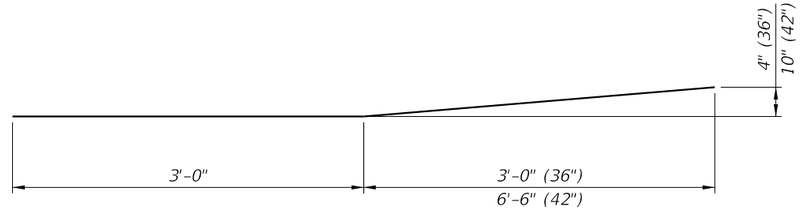

BAR T1

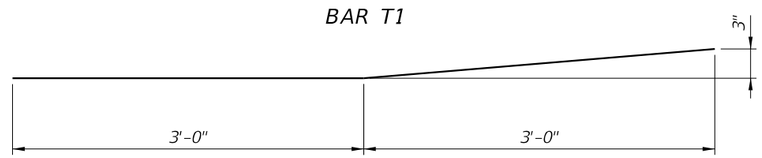

BAR T2

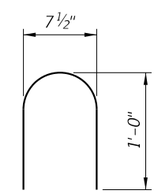

STIRRUP BAR 4P

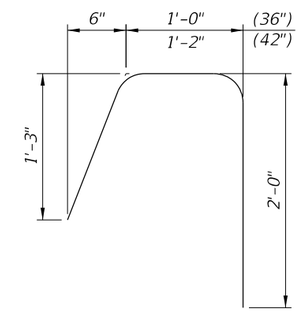

BAR 6U

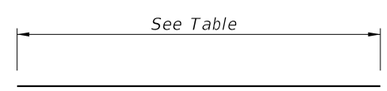

BARS 6A, 5B1, 5B2, 6C, 6F, 5S, & 6S

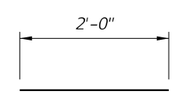

1" Ø DOWEL

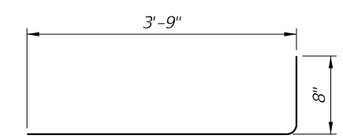

BARS 5L

REINFORCING STEEL NOTES:

1. All bar dimensions in the bending diagrams are out to out.
2. All reinforcing at expansion and open joints will have a 1.5" minimum cover.
3. Lap splices for Bars 5B & 5S will be a minimum of 2'-2".
4. For Precast Copings only, lap splice Bars 6A with Bars 6C. Lap splices will be a minimum of 2'-5".
5. The Contractor may use either full length Bars 7A or lap splice with Bars 6C at Bars 5A for C-I-P Copings.
6. Contractor may use a single #5 stirrup in lieu of two bars for 5P and 5V1.
7. FRP Bars can not be field bent.

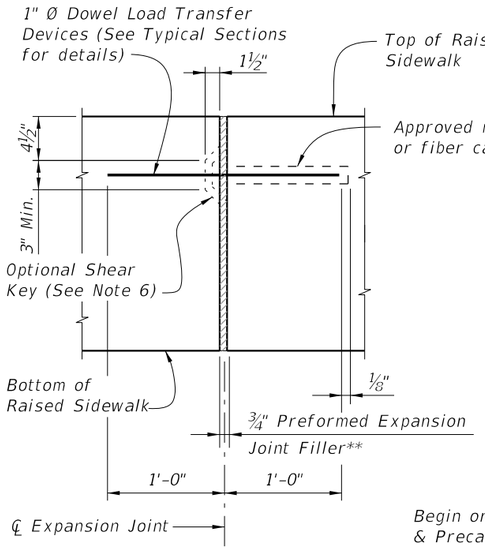

EXPANSION JOINT DETAIL

(Raised Sidewalk expansion joints are to coincide with ¾" open joints in Concrete Barrier)

** Stay-In-Place Plastic Preformed Bond Breakers are permitted to form joints.

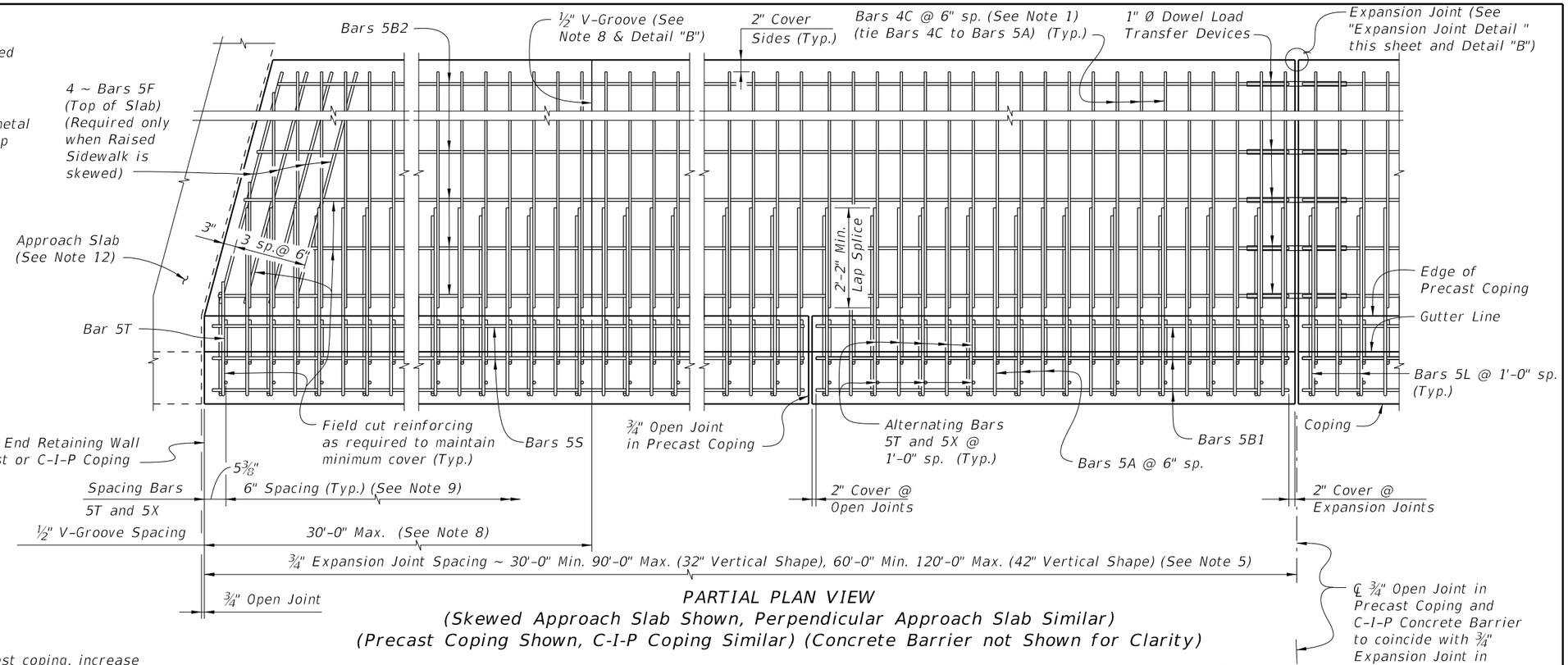

PARTIAL PLAN VIEW

(Skewed Approach Slab Shown, Perpendicular Approach Slab Similar)
(Precast Coping Shown, C-I-P Coping Similar) (Concrete Barrier not Shown for Clarity)

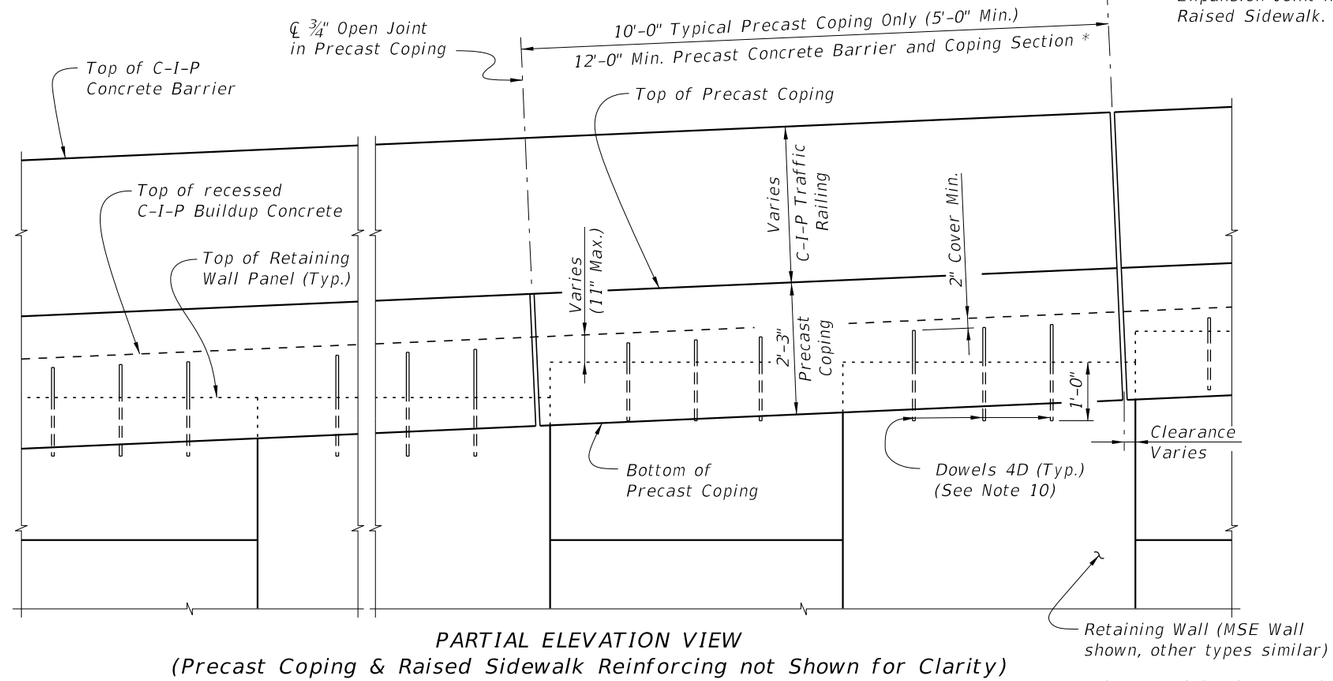

PARTIAL ELEVATION VIEW

(Precast Coping & Raised Sidewalk Reinforcing not Shown for Clarity)
(Precast Coping Shown, C-I-P Coping Similar)

* C-I-P End Section must be ≥ 12'-0".

RAISED SIDEWALK NOTES:

1. When a 42" Vertical Shape is used with a precast coping, increase Bars 4C to Bars 5C or provide Bars 4C @ 4" spacing within 6'-0" of Expansion Joints.
2. Construct the expansion joints, V-Grooves and face of coping plumb.
3. Provide Class II concrete for slightly aggressive environments or Class IV for moderately or extremely aggressive environments.
4. Dowel Load Transfer Devices will be hot-dip galvanized ASTM A 36 smooth round bar, or GFRP smooth round bars with a minimum shear strength of 22 ksi in accordance with ASTM D7617. Install Dowel Load Transfer Devices in accordance with Specification Section 350.
5. Construct ¾" Expansion Joints in raised sidewalk and C-I-P copings perpendicular or radial to the Gutter Line. Provide at 90'-0" maximum intervals as shown.
6. Shear Keys in Junction Slab are required when GFRP bars are used for Dowel Transfer Devices and are optional with steel dowel bars. Tongue Slope on Shear Key must be constant and between 5° to 45° from horizontal.
7. Provide and install Preformed Expansion Joint Filler in accordance with Specification Section 932.
8. Construct ½" V-Grooves in raised sidewalk and C-I-P coping at 30'-0" maximum intervals as shown. Space V-Grooves equally between ¾" Expansion Joints and/or Begin or End Raised Sidewalk. V-Groove locations are to coincide with V-Groove locations in the Concrete Barrier.
9. Spacing shown is along the Gutter Line.
10. For Precast Coping only, provide Dowel Bars 4D embedded 1'-0" and extend 9" above the top of MSE wall panels. Field cut as necessary to maintain 2" minimum cover to the top of the buildup concrete. See Wall Company Drawings for number and spacing of Dowel Bars 4D.
11. Finish Sidewalks in accordance with Specification Section 522.
12. The following Indexes contain details of the intersection of the retaining wall at approach slabs:
    Index 400-090 - Approach Slabs (Flexible Pavement Approaches)
    Index 400-091 - Approach Slabs (Rigid Pavement Approaches)

CROSS REFERENCE: For Detail "B", see Sheet 4.

VERTICAL SHAPE

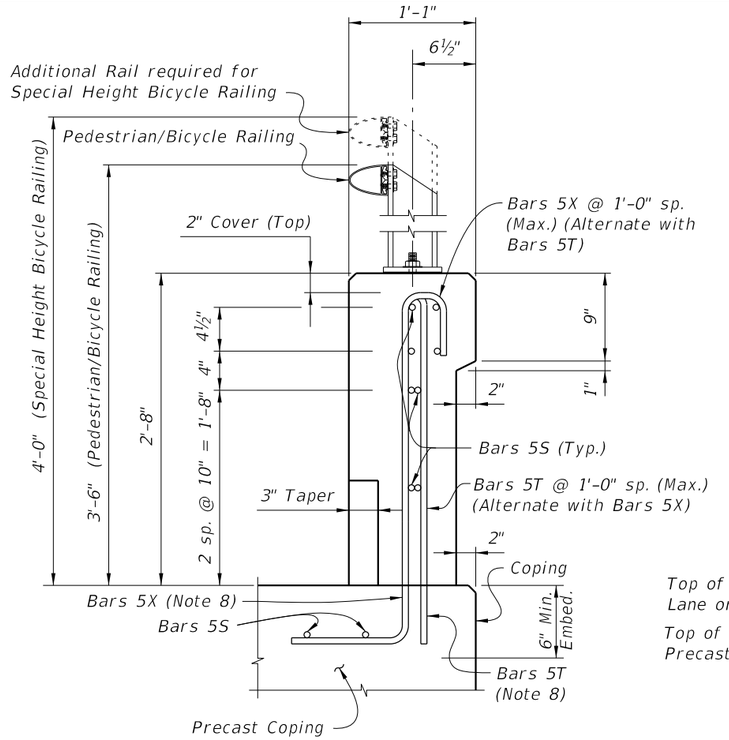

END VIEW OF 32" VERTICAL SHAPE END TRANSITION FOR GUARDRAIL ATTACHMENT
(Showing Bars 5S, Bars 5T and Bars 5X)
(Precast Coping Shown, C-I-P Coping Similar)

NOTE: See Sheet 4 for End Transition Elevation.

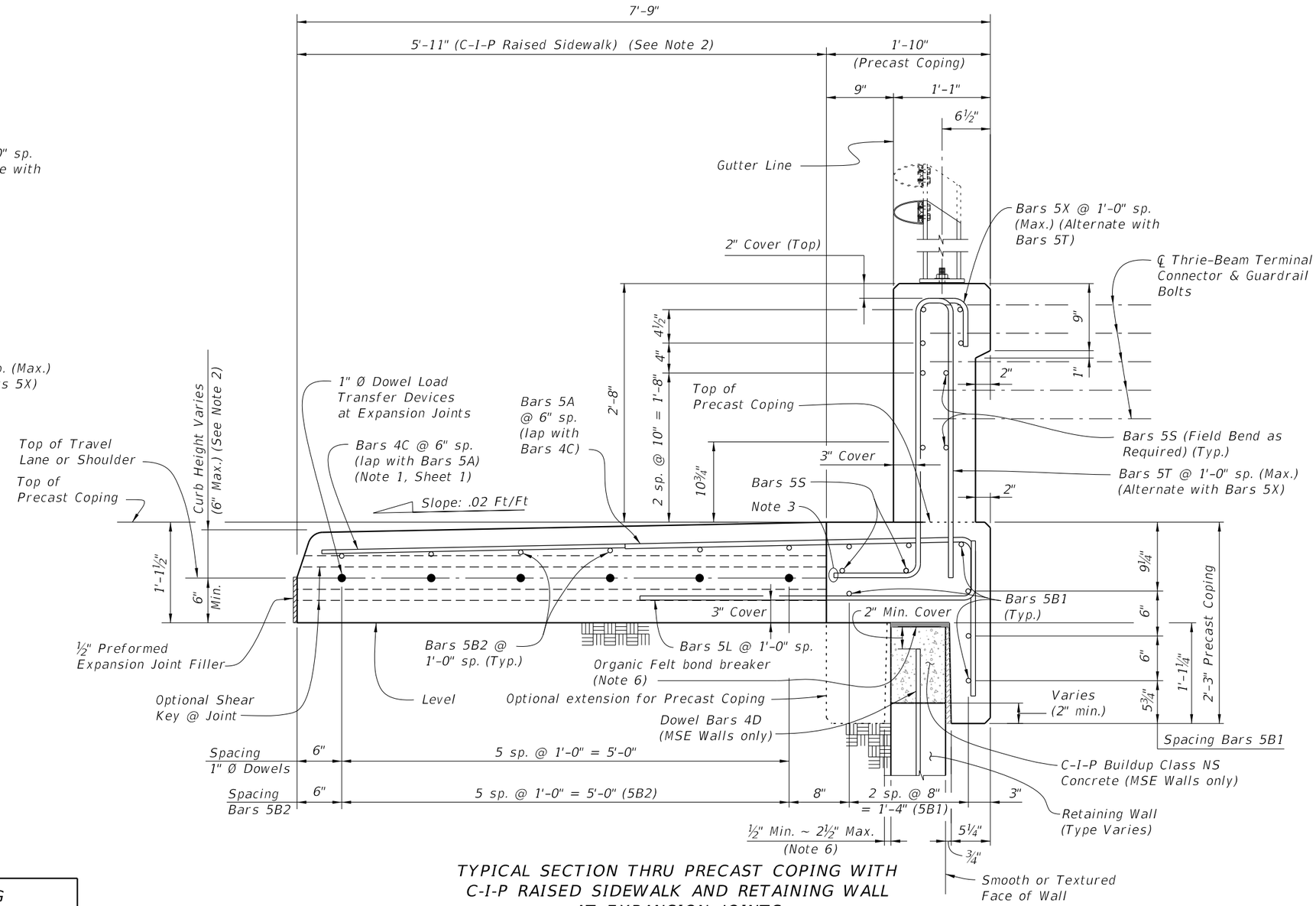

TYPICAL SECTION THRU PRECAST COPING WITH C-I-P RAISED SIDEWALK AND RETAINING WALL AT EXPANSION JOINTS
(32" Vertical Shape Shown, 42" Vertical Shape Similar)

ESTIMATED QUANTITIES FOR PRECAST COPING		
ITEM	UNIT	QUANTITY
Concrete (Precast Coping)	CY/LF	0.095
Concrete (C-I-P Raised Sidewalk)	CY/LF	0.232
Reinforcing Steel (Precast Coping) excluding Bars 5T, 5X and 5S (Typ.)	LB/LF	23.90
Reinforcing Steel (C-I-P Raised Sidewalk) (Typ.)	LB/LF	13.50
Additional Reinf. @ Expansion Joints (Steel Dowels)	LB	32.04

The above concrete quantities are based on a Type D Concrete Curb (See Note 2).

NOTES:
1. Actual width varies depending on type of Retaining Wall used.
2. Match roadway curb shape (Type) and height. See Roadway Plans and Index 520-001. 5'-11" dimension is based on a 32" Vertical Shape with a Type D curb adjacent to a 6'-0" wide sidewalk. Adjust this dimension as required for other curb types or transitions at Begin or End Retaining Wall.
3. Trim end of Bars 5T and 5X to clear construction joint for 42" Vertical Shape.
4. At the Contractor's option, mechanical couplers may be used to splice reinforcing. Complete details, including reinforcement lengths are required in the Shop Drawings. Mechanical couplers shall develop 125% of the bar yield strength.
5. Contractor to maintain stability of precast coping prior to junction slab completion.
6. When the air gap between the precast coping extension and retaining wall exceeds 2½", fill gap with full depth Expanded Polystyrene to provide a maximum 2½" air gap.
7. For Bullet Railings, see Index 515-021 and 515-022.
8. Begin placing Railing Bars 5T and 5X at the railing end and proceed toward Retaining Wall to avoid conflict with guardrail bolt holes. If required, adjustments to the bar spacing for Bars 5T and 5X shall be made immediately adjacent to Begin or End Bridge. Cut, shift and rotate Bars 5T and 5X as required to maintain cover in End Transition.

32" VERTICAL SHAPE

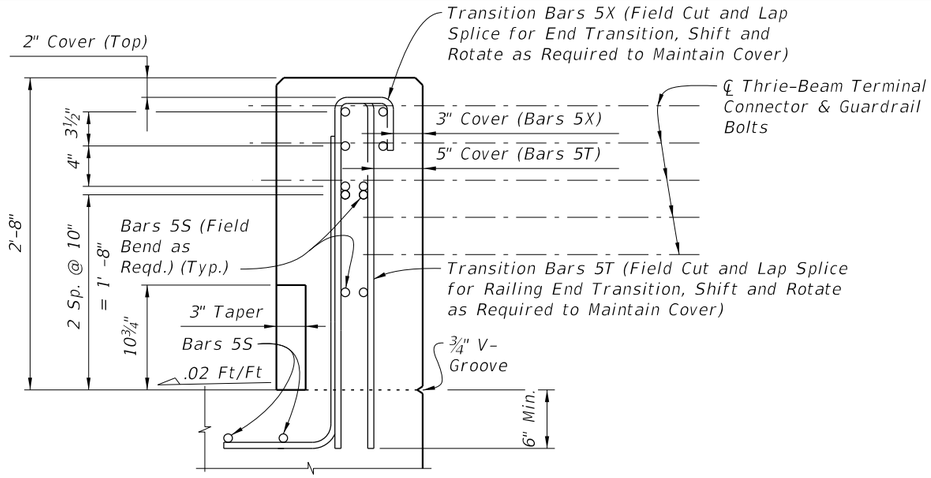

END VIEW OF VERTICAL FACE END TRANSITION

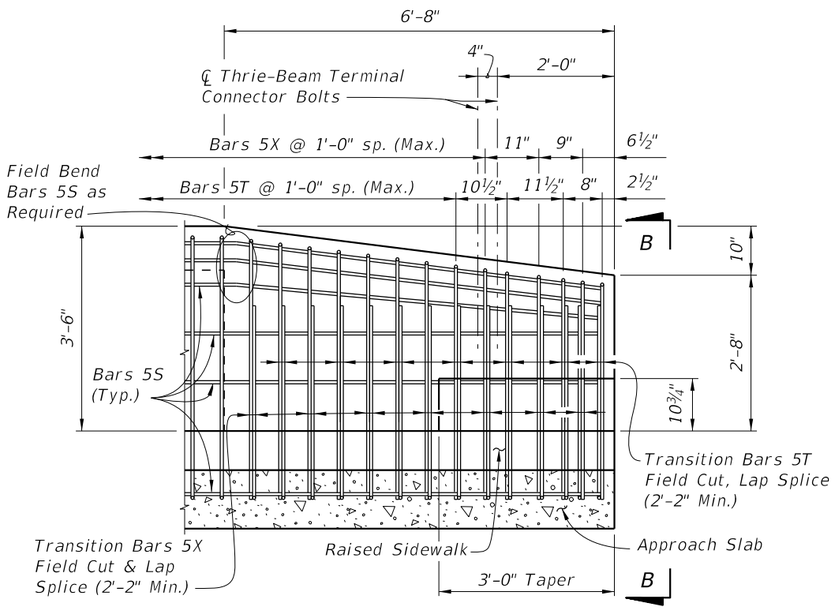

ELEVATION
END TRANSITION
(Guardrail Not Shown For Clarity)

ESTIMATED QUANTITIES FOR C-I-P COPING		
ITEM	UNIT	QUANTITY
Concrete	CY/LF	0.326
Reinforcing Steel (Typical) excluding Bars 5T, 5X and 5S (Typ.)	LB/LF	35.38
Additional Reinf. @ Expansion Joints (Steel Dowels)	LB	32.04

The above concrete quantities are based on a Type D Concrete Curb on a level Retaining Wall (See Note 1).

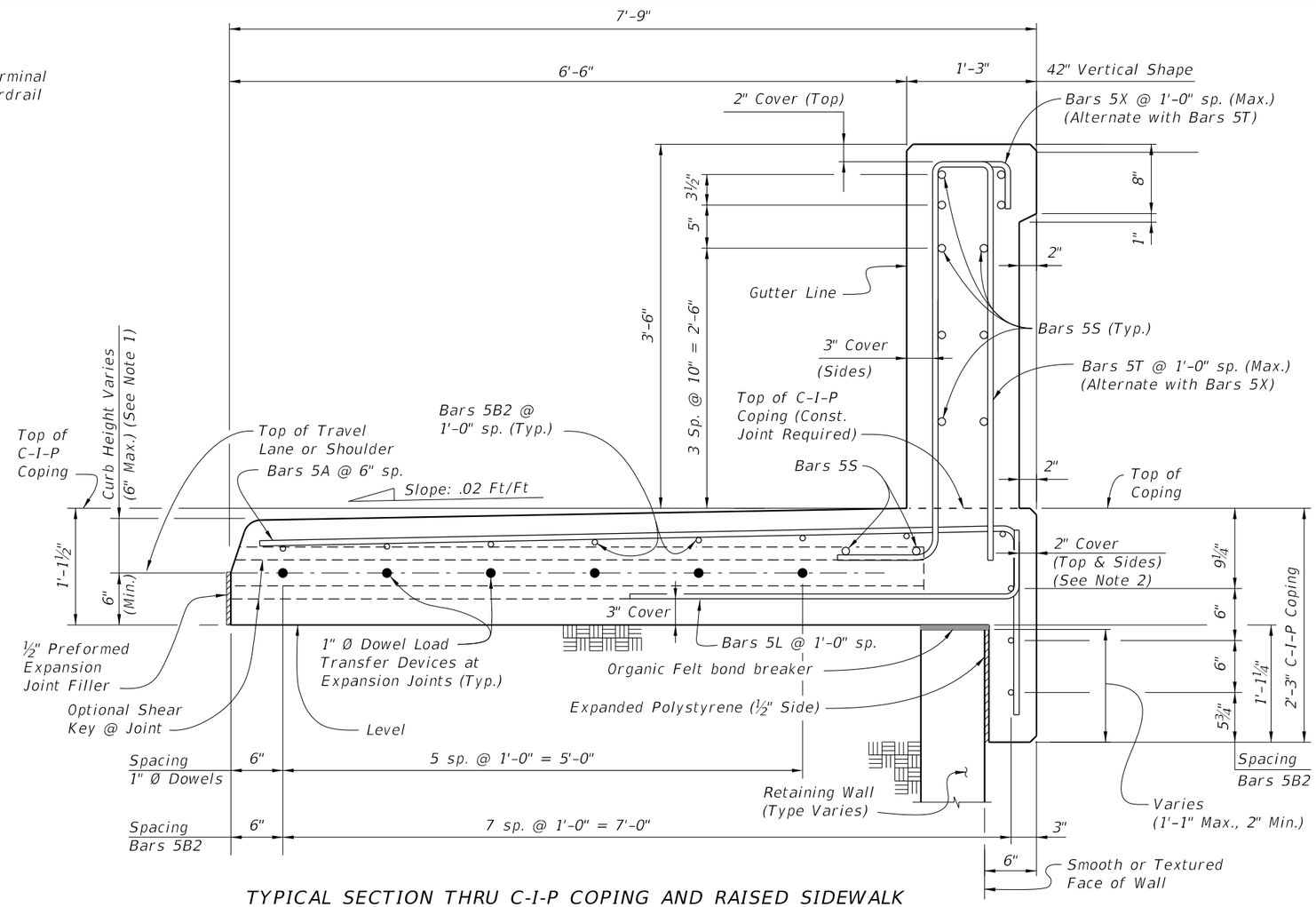

TYPICAL SECTION THRU C-I-P COPING AND RAISED SIDEWALK
AND RETAINING WALL AT EXPANSION JOINTS
(42" Vertical Face Shown, 32" Vertical Face Similar)

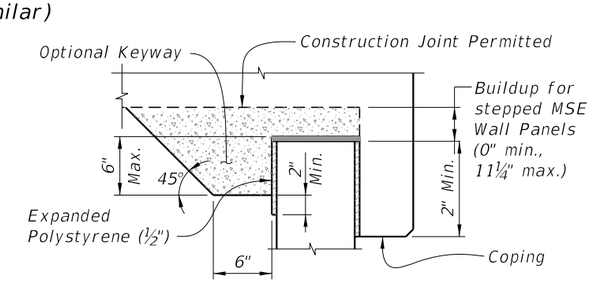

BUILDUP FOR STEPPED MSE WALL PANELS
AND C-I-P COPING

NOTES:
1. Match roadway curb shape (Type) and height. See Roadway Plans and Index 520-001. 6'-6" dimension is based on a 42" Vertical Shape with a Type D curb adjacent to a 6'-0" wide sidewalk. Adjust this dimension as required for other curb types or transitions at Begin or End Retaining Wall.
2. If slip forming is used, submit shop drawings for approval showing 3" side cover with the Typical Section dimensions adjusted.
3. Begin placing Railing Bars 5T and 5X at the railing end and proceed toward Retaining Wall to avoid conflict with guardrail bolt holes. If required, adjustments to the bar spacing for Bars 5T and 5X shall be made immediately adjacent to Begin or End Retaining Wall. Cut, shift and rotate Bars 5T and 5X as required to maintain cover in End Transition.

42" VERTICAL SHAPE

CONVENTIONAL REINFORCING STEEL BENDING DIAGRAMS

BILL OF REINFORCING STEEL

MARK	SIZE	LENGTH	
		PRECAST COPING/ RAILING	C-I-P COPING
A	5	5'-11"	9'-1"
B1	5	9'-6"/11'-6"	N/A
B2	5	AS REQD.	AS REQD.
C	4	5'-5"	N/A
F	5	5'-0"	5'-0"
L	5	4'-5"	4'-5"
1" Ø Dowel	Smooth Bar	2'-0"	2'-0"
		32"	42"
T	5	7'-4"	9'-2"
X	5	5'-1"	6'-0"

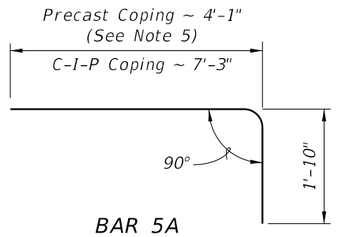

BAR 5A

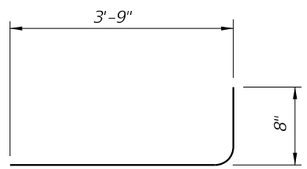

BAR 5L

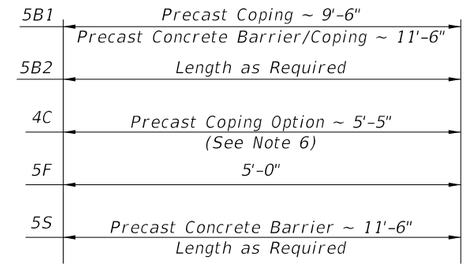

BARS 5B1, 5B2, 4C, 5F & 5S

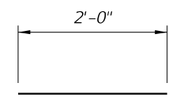

1" Ø DOWEL

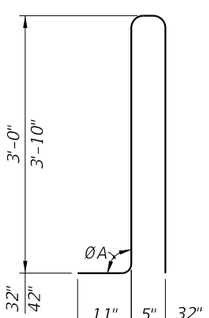

STIRRUP BAR 5T

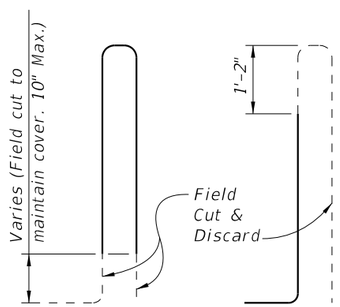

END TRANSITION STIRRUP BARS 5T FOR 42"

To Be Field Cut (7 of each required per Railing End Transition)

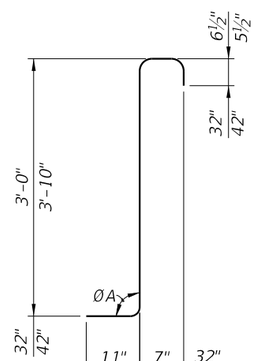

STIRRUP BAR 5X

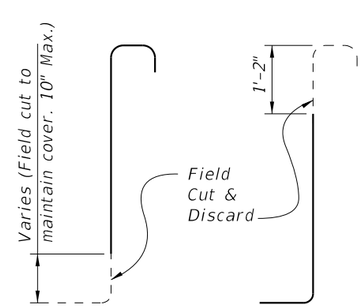

END TRANSITION STIRRUP BARS 5X FOR 42"

To Be Field Cut (7 of each required per Railing End Transition)

REINFORCING STEEL NOTES:

1. All bar dimensions in the bending diagrams are out to out.
2. All reinforcing steel at expansion joints will have a 2" minimum cover.
3. Lap splices for Bars 5B and 5S will be a minimum of 2'-2".
4. Lap splice Bars 5A with Bars 4C will be a minimum of 2'-2".
5. Dimension shown is for lap splice option. For mechanical coupler option, this dimension is 1'-8".
6. Dimension shown is for lap splice option. For mechanical coupler option, this dimension is 5'-8", and reinforcing size must be increased to #5 bars (Bars 5C).
7. The Contractor may use deformed WWR when approved by the Engineer. WWR must meet the requirements of Specification Section 931.

* See Sheet 3 Note 3.

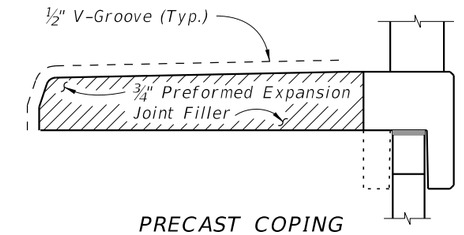

PRECAST COPING

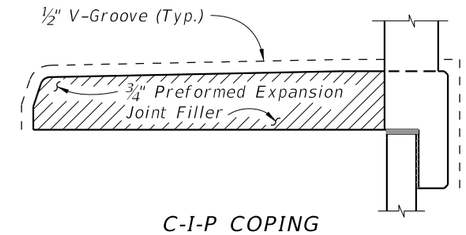

C-I-P COPING

DETAIL "B"

(Showing Locations of ½" V-Grooves and ¾" Preformed Expansion Joint Filler)

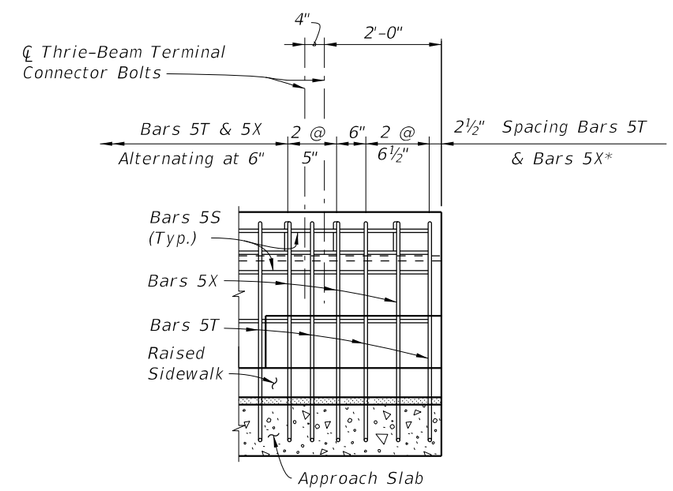

END TRANSITION ELEVATION FOR 32" VERTICAL SHAPE
(Guardrail Not Shown For Clarity)

ESTIMATED CONCRETE BARRIER QUANTITIES

ITEM	UNIT	QUANTITY	
		32"	42"
Concrete	CY/LF	0.095	0.145
Reinforcing Steel	LB/LF	23.38	28.33

VERTICAL SHAPE

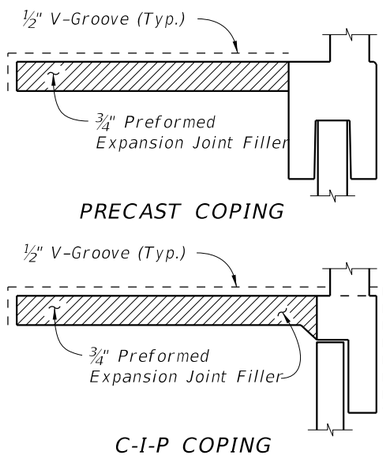

DETAIL "C"

(Showing Locations of ½" V-Grooves and ¾" Preformed Expansion Joint Filler)

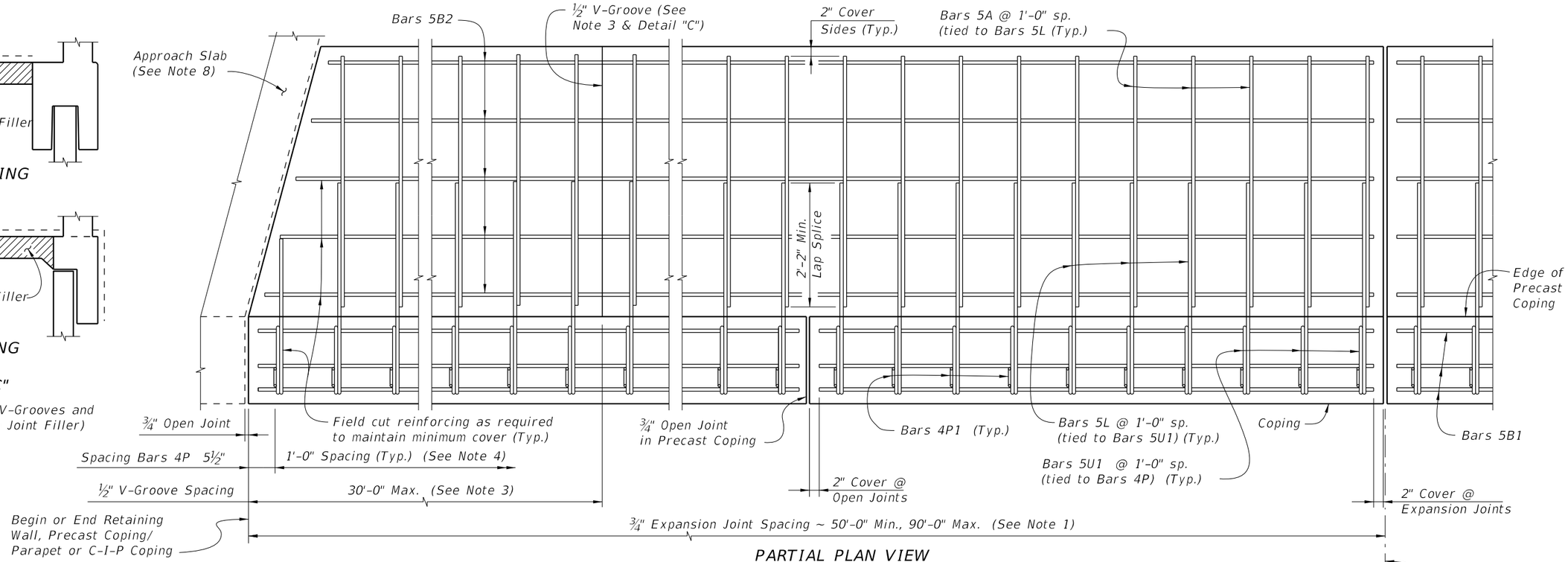

PARTIAL PLAN VIEW
(Skewed Approach Slab Shown, Perpendicular Approach Slab Similar)
(Precast Coping Shown, C-I-P Coping Similar) (Concrete Parapet not Shown for Clarity)

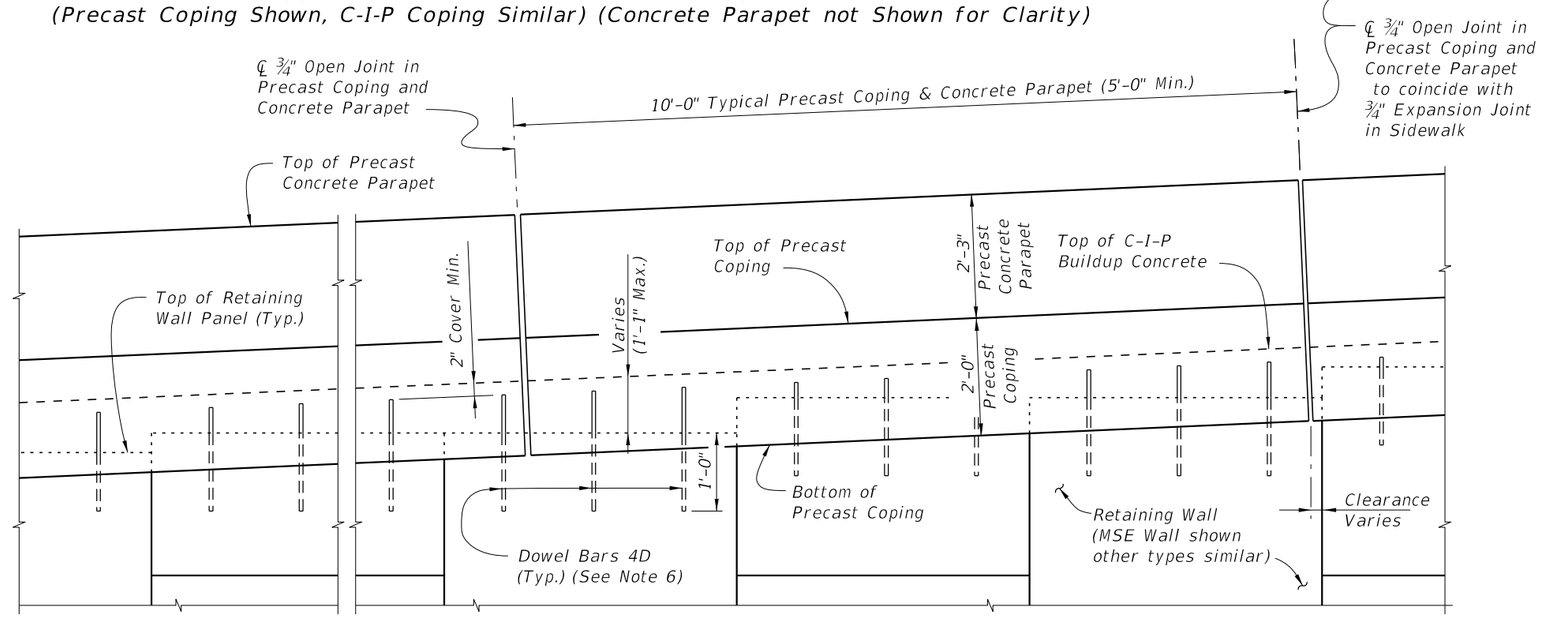

PARTIAL ELEVATION VIEW
(Precast Coping and Sidewalk Reinforcing not Shown for Clarity)
(Precast Coping Shown, C-I-P Coping Similar)

PRECAST COPING/PARAPET AND SIDEWALK NOTES:

1. Provide Class II concrete for slightly aggressive environments or Class IV for moderately or extremely aggressive environments.
2. Construct ¾" Expansion Joints in sidewalk and C-I-P coping plumb and either perpendicular or radial to the Gutter Line. Provide Expansion Joints at 90'-0" maximum intervals as shown.
3. Provide and install Preformed Expansion Joint Filler in accordance with Specification Section 932.
4. Construct ½" V-Grooves in sidewalk and C-I-P coping. Space V-Grooves at 30'-0" Maximum intervals equally spaced between ¾" Expansion Joints and/or Begin or End Sidewalk. For C-I-P Coping only, V-Groove locations are to coincide with V-Groove locations in the Concrete Parapet.
5. Spacing shown is along the Gutter Line.
6. For Precast Coping only, provide Dowel Bars 4D embedded 1'-0" and extend 11" above the top of MSE wall panels. Field cut as necessary to maintain 2" minimum cover to the top of the buildup concrete. See Wall Company Drawings for number and spacing of Dowel Bars 4D.
7. Work this Index with Index 521-001 - Concrete Barrier Wall
8. For C-I-P Coping only, work this Index with Index 521-820 - Pedestrian/Bicycle Railing, or Index 521-825 - 42" Concrete Pedestrian/ Bicycle Railing.
9. Finish Sidewalks in accordance with Specifications Section 522.
10. The following Indexes contain details of the intersection of the retaining wall at approach slabs:
    Index 400-090 - Approach Slabs (Flexible Pavement Approaches)
    Index 400-091 - Approach Slabs (Rigid Pavement Approaches)

10/20/2022 8:52:16 AM

LAST REVISION	REVISION	DESCRIPTION:			INDEX	SHEET
11/01/17			FY 2023-24 STANDARD PLANS	PARAPET WITH C-I-P SIDEWALK - WALL COPING	521-630	1 of 2

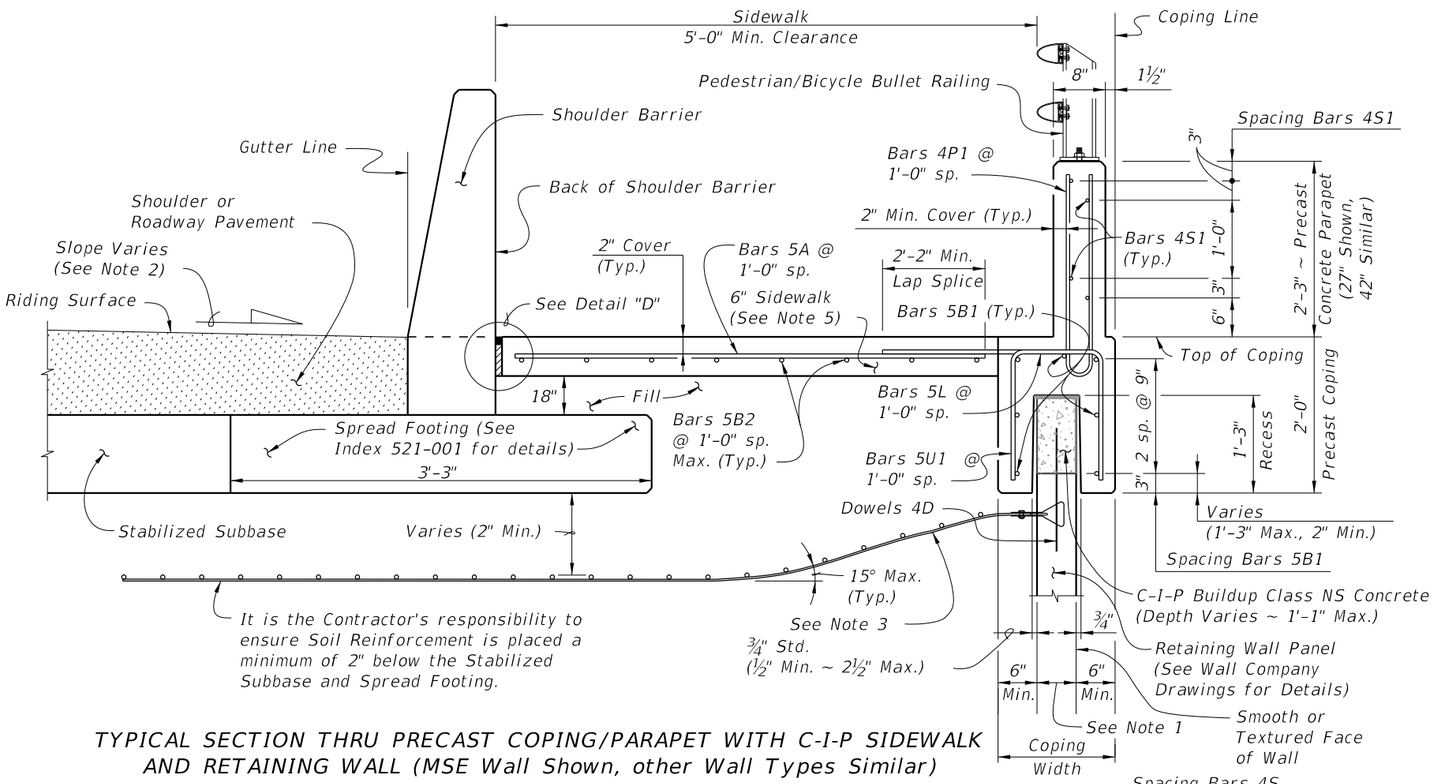

TYPICAL SECTION THRU PRECAST COPING/PARAPET WITH C-I-P SIDEWALK AND RETAINING WALL (MSE Wall Shown, other Wall Types Similar)

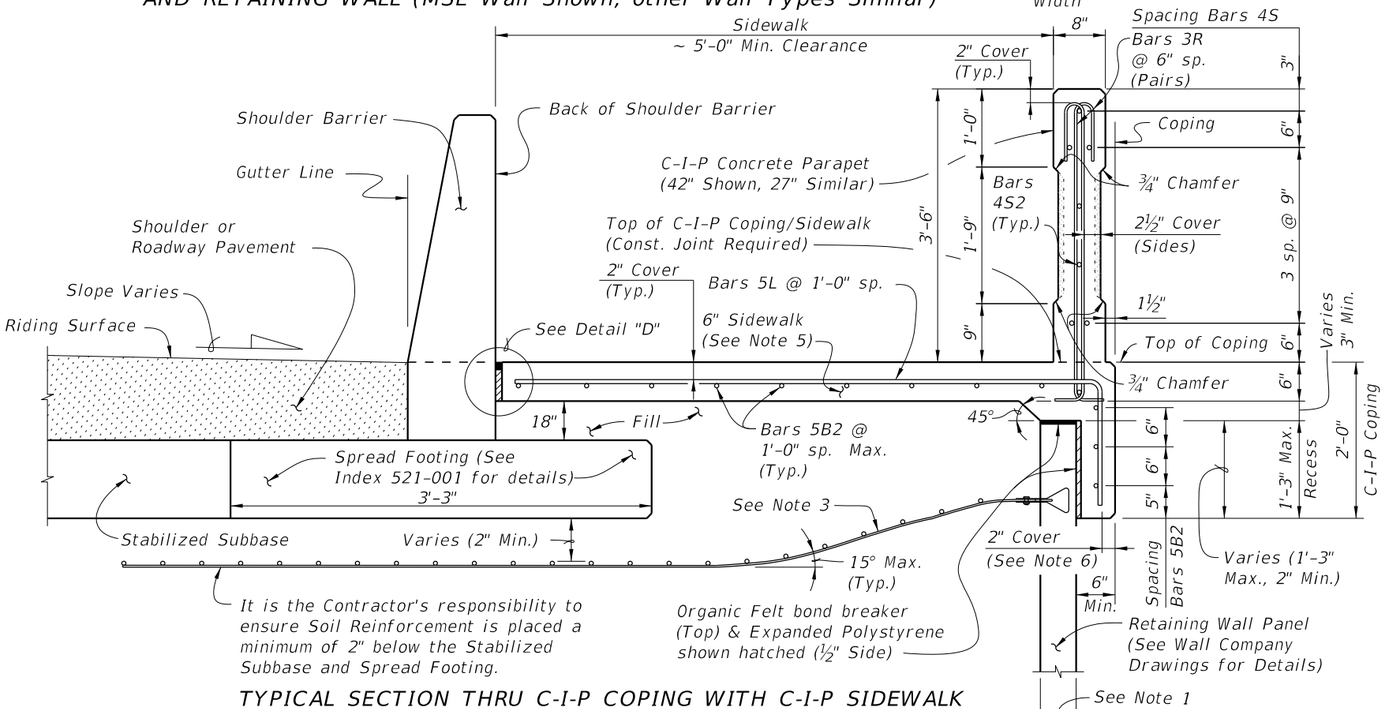

TYPICAL SECTION THRU C-I-P COPING WITH C-I-P SIDEWALK AND RETAINING WALL (MSE Wall Shown, other Wall Types Similar)

REINFORCING STEEL BENDING DIAGRAMS - COPING/PARAPET AND SIDEWALK

BILL OF REINFORCING STEEL

MARK	SIZE	LENGTH	
		PRECAST COPING	C-I-P COPING
A	5	VARIES	N/A
B1	5	9'-6"	N/A
B2	5	AS REQD.	AS REQD.
D	4	2'-0"	N/A
L	5	VARIES	VARIES
P1	4	5'-5"	5'-5"
S1	4	9'-6"	AS REQD.
S2	4	9'-6"	AS REQD.
R	3	5'-2"	5'-2"
U1	5	VARIES	N/A

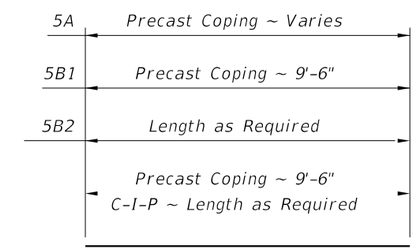

BARS 5A, 5B1, 5B2, 4S1 & 4S2

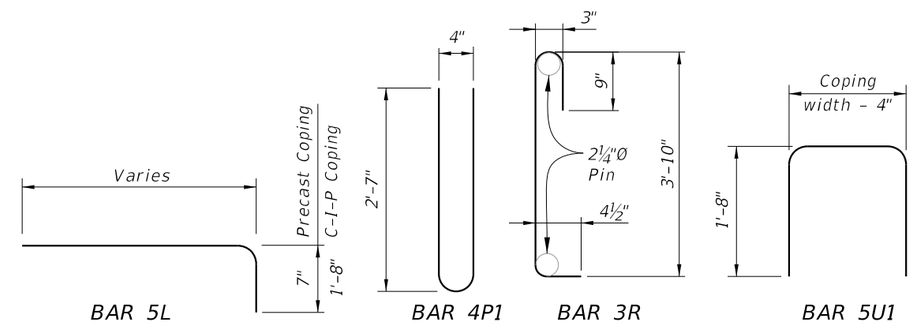

REINFORCING STEEL NOTES:

1. All bar dimensions in the bending diagrams are out to out.
2. All reinforcing steel at expansion joints will have a 2" minimum cover.
3. Lap splices for Bars 5B2 and 5S will be a minimum of 2'-2".
4. For Precast Coping only, lap splice Bars 5L with Bars 5A. Lap splices will be a minimum of 2'-2".
5. The Contractor may use Deformed WWR when approved by the Engineer. WWR must meet the requirements of Specification Section 931.

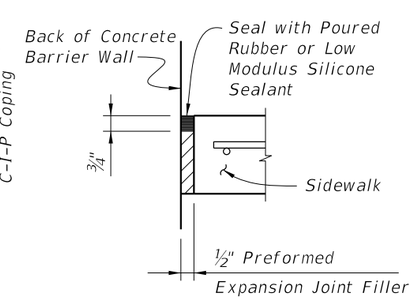

DETAIL "D"

PRECAST COPING/PARAPET AND SIDEWALK NOTES:

1. Actual width varies depending on type of Retaining Wall used.
2. Place or cast Concrete Parapet vertical.
3. Gradually deflect/displace Soil Reinforcement downward as required. Soil Reinforcement is shown deflected downward for illustrative purposes only and is not to scale. See Wall Company Drawings for details.
4. Complete details and dimensions of Concrete Pedestrian/Bicycle Railing are required in the Shop Drawings.
5. Match cross slope of connecting sidewalk or as shown in the Wall Control Drawings.
6. If slip forming is used, submit shop drawings for approval showing 2½" side cover with adjusted Typical Section dimensions.
7. Bullet Railing: See Indexes 515-021 and 515-022.

10/20/2022 8:52:17 AM

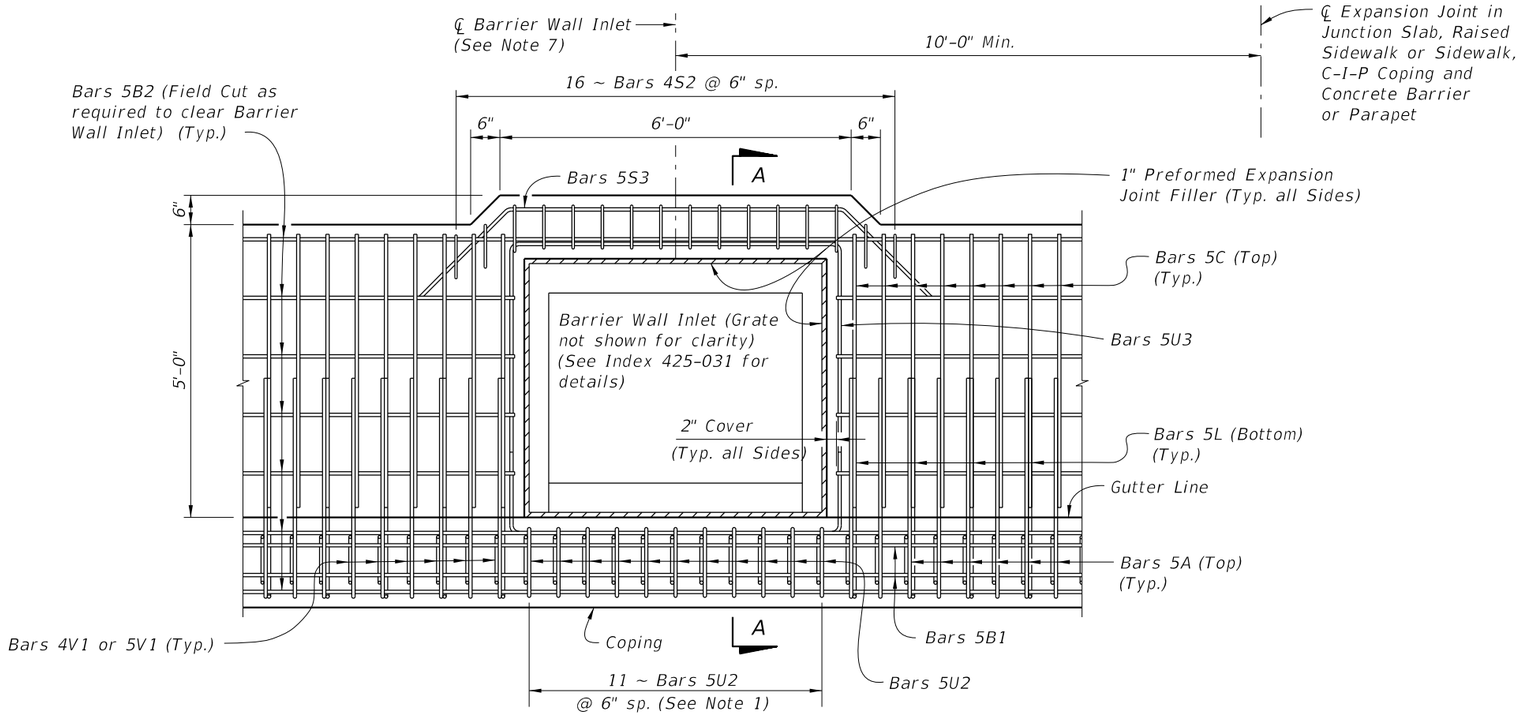

PLAN VIEW
(Junction Slab Shown, Raised Sidewalk Similar)

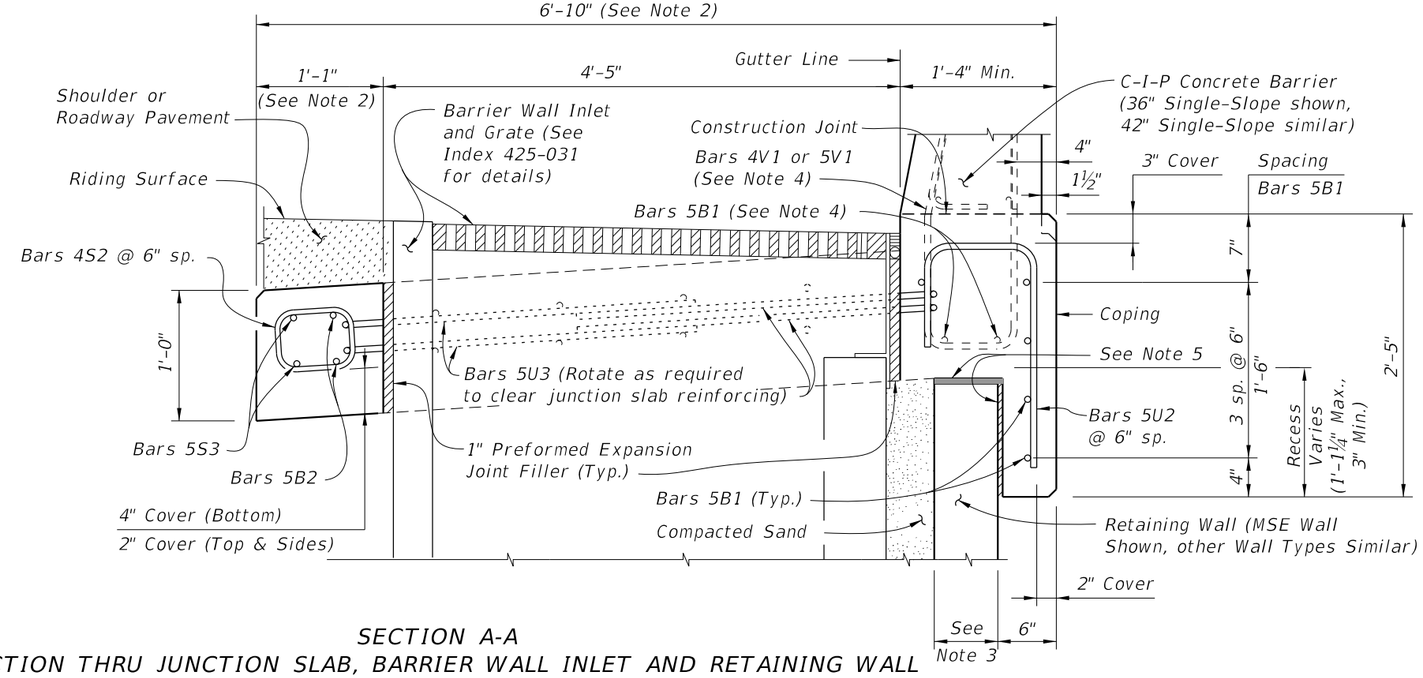

SECTION A-A
SECTION THRU JUNCTION SLAB, BARRIER WALL INLET AND RETAINING WALL
(Junction Slab Shown, Raised Sidewalk Similar)

REINFORCING STEEL BENDING DIAGRAMS - DRAINAGE

BILL OF REINFORCING STEEL

MARK	REQD.	SIZE	LENGTH
S2	16	4	3'-1"
S3	2	5	10'-0"
U2	11	5	VARIES
U3	4	5	12'-10"

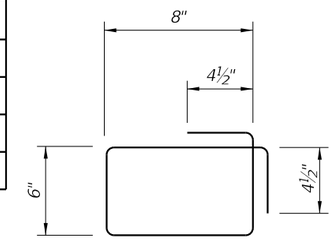

STIRRUP BAR 4S2

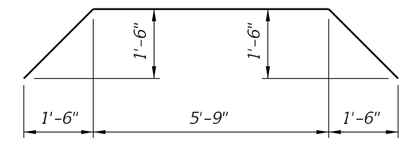

BAR 5S3

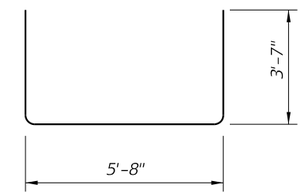

BAR 5U3

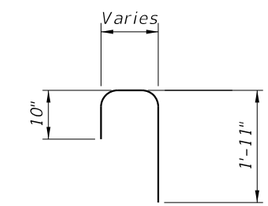

BAR 5U2

REINFORCING STEEL NOTES:

1. All bar dimensions in the bending diagrams are out to out.
2. All reinforcing steel at open joints will have a 2" minimum cover.
3. See Index 521-610, 521-620 & 521-630 for Bars 5A, 5B, 5C and 5L.
4. The Contractor may use Welded Wire Reinforcement (WWR) when approved by the Engineer. WWR must consist of Deformed wire meeting the requirements of Specification Section 931.

NOTES:

1. Spacing shown is along the Gutter Line. Spacing shown is for C-I-P Junction Slab. For C-I-P Raised Sidewalks or Sidewalks, match bar spacing and size shown in Typical Sections (i.e., 11 ~ Bars 5U2 and 15 ~ Bars 4S2 @ 6" spacing for Raised Sidewalks).
2. Dimensions shown are for junction slab. Increase width as required for C-I-P Raised Sidewalk and Sidewalks.
3. Actual location & width vary depending on type of Retaining Wall used.
4. See Index 521-610 for Bars 4V1 or 5V1 and 5B1.
5. Organic Felt bond breaker (Top) & Expanded Polystyrene shown hatched (½" Side).
6. Locate ℄ Barrier Wall Inlet a minimum of 10'-0" away from ℄ Expansion Joints in Junctions Slab, Raised Sidewalk or Sidewalk, C-I-P Coping and Traffic Railing or Concrete Parapet.
7. Locate open joints in Barrier Wall and Coping a minimum of 5'-0" from the centerline of the Barrier Wall Inlet.
8. Work this Index with the following as appropriate:
   Index 521-610
   Index 521-620
   Index 521-630

10/20/2022 8:52:18 AM

LAST REVISION	REVISION	DESCRIPTION:			INDEX	SHEET
11/01/19			FDOT FY 2023-24 STANDARD PLANS	DRAINAGE INLET OPENINGS IN JUNCTION SLAB - WALL COPING	521-640	1 of 1

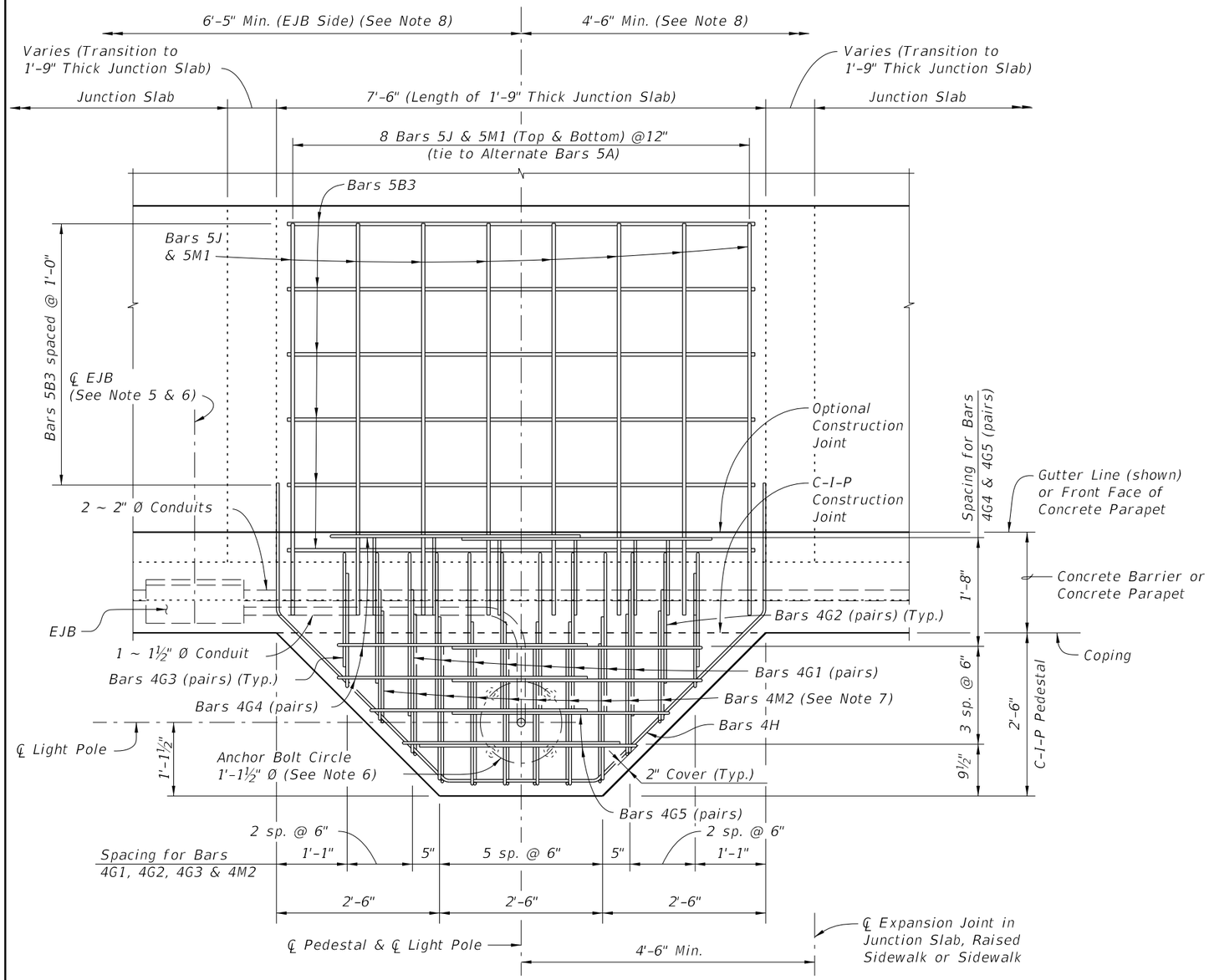

PLAN VIEW
(Junction Slab reinforcing not shown for clarity)
(Junction Slab Shown, Raised Sidewalk or Sidewalk Similar)

LIGHT POLE PEDESTAL NOTES:

1. ANCHOR BOLTS:
   Anchor Bolt design is based on the standard Roadway Aluminum Light Pole configurations shown on Index 715-002 with top of pedestal 75' or less above ground or MLW.
   Anchor Bolt Diameter: See Table 1
2. MATERIALS:
   Anchor Bolts: ASTM F1554 Grade 55.
   Nuts: ASTM A563 Grade A, Heavy-Hex.
   Washers: ASTM F436 Type 1.
   Anchor Plate: ASTM A709 (Grade 36) or ASTM A36.
   Coating: Galvanize all Nuts, Bolts Washers, and plates in accordance with ASTM F2329.
3. The Contractor is responsible for ensuring the anchor bolt design is compatible with the light pole base plate. Modifications to the anchor bolt design shown must be signed and sealed by the Contractor's Specialty Engineer and submitted to the Engineer for approval prior to construction.
4. Install Anchor Bolts plumb.
5. For conduit, EJB and expansion/deflection fitting details, see Utility Conduit Detail Drawings and Index 630-010.
6. The cost of anchor bolts, nuts, washers and anchor plates will be included in the Bid Price for Light Poles. Include the cost of all labor, concrete and reinforcing steel required for construction of the pedestals, and miscellaneous hardware required for the completion of the electrical system in the Bid Price for either the Concrete Barrier or Concrete Parapet that the pedestal is behind.
7. Field Cut Bars 4M2 as required to maintain clearance.
8. Slip Forming Method of construction requires the Engineer's approval within the limits shown.
9. Reinforcing shown for light pole pedestals is in addition to typical reinforcing for Junction Slabs and Raised Sidewalks.
10. Work this Index with the following as appropriate:
    Index 521-512
    Index 521-610
    Index 521-620
    Index 521-630
11. Pedestal may be precast in one section with Coping. Minimum Precast Coping section length is 10 ft. or 12 ft for combination Precast Concrete Barrier and Coping section.
12. For Estimated Quantities, see Sheet 3.
13. Unless otherwise noted, Concrete Barrier (36" Single-Slope) is shown in all Views and Sections. The Pedestal details for other Concrete Barriers or pedestrian/bicycle railings are similar.

TABLE 1 DESIGN LIMITATION FOR ANCHOR BOLTS (1" Dia.)

Wind Speed (MPH)	Arm Length (FT)	BASE OF POLE HEIGHT*		
		40 ft.	45 ft.	50 ft.
120	ALL	75	75	75
140	ALL	75	75	75
160	8 & 10	75	75	45**
160	12 & 15	75	75	25**

* Above Natural Ground

** Use 1¼" Ø Anchor bolts for wall heights greater than the height shown and less than 75'.

11/30/2022 9:32:16 AM

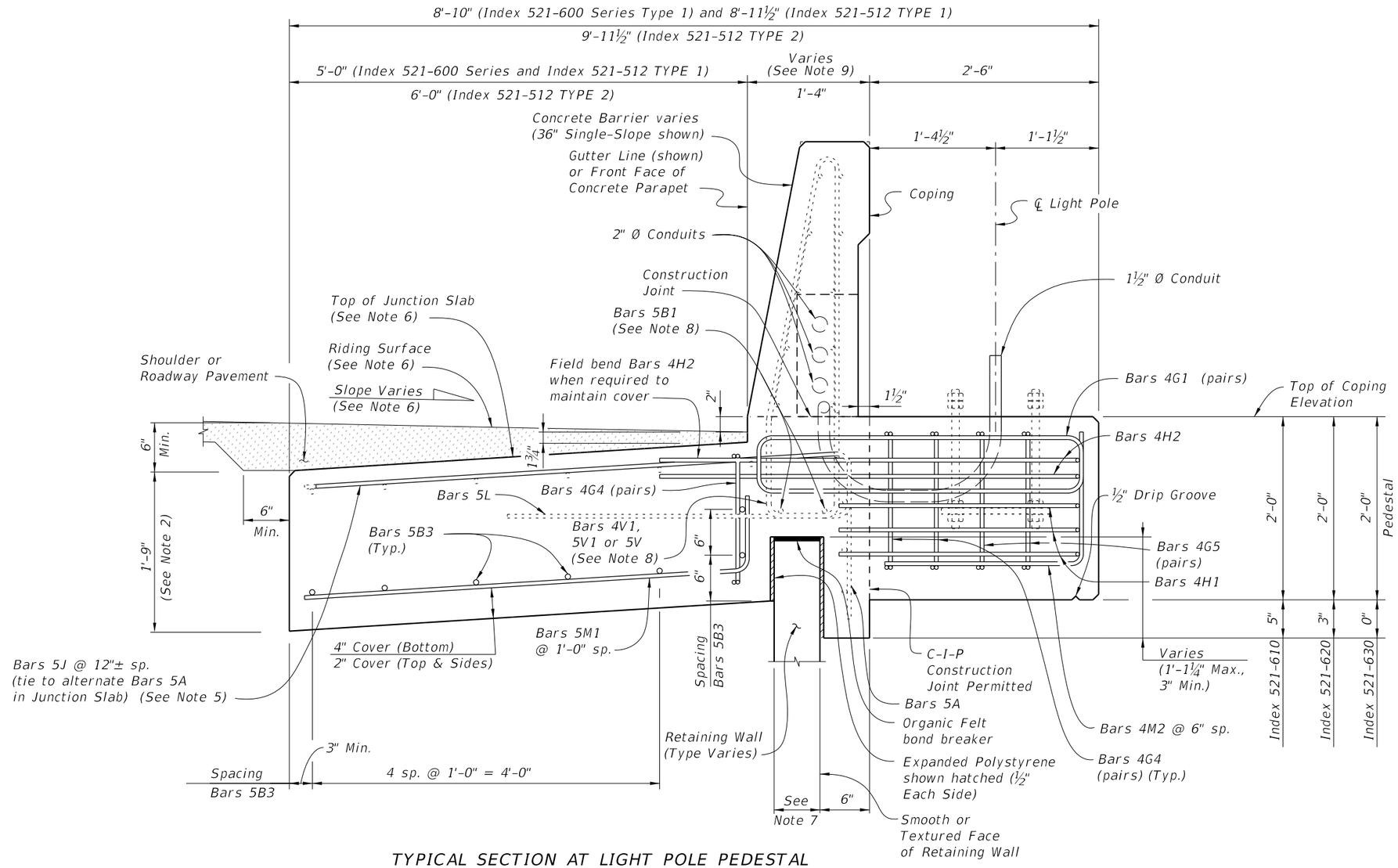

TYPICAL SECTION AT LIGHT POLE PEDESTAL
(Junction Slab Shown, Raised Sidewalk or Sidewalk Similar) (36" Single-Slope Concrete Barrier shown, other railings similar)

NOTES:

1. Provide Concrete Class to match adjacent coping.
2. For junction slabs, increase the 1'-0" depth dimension to 1'-9".
3. For Parapet with sidewalk see Index 521-630, but increase 6" sidewalk depth to 1'-6". For raised sidewalk see Index 521-620.
4. The minimum length of the Junction Slabs, raised sidewalks and sidewalks is 30'-0", measured along the Gutter Line.
5. Bars 4J are only required when pedestals are behind a Concrete Barrier or Concrete Barrier/ Noise Wall.
6. Top of junction slab may be thickened to match finished grade of concrete pavement or shoulder, or top of sidewalk or raised sidewalk (See Notes 3 & 4).
7. Actual width varies depending on type of retaining wall used.
8. See Index 521-610 for Bars 4V1, 5V1 and 5B, or Index 521-512 for Bars 5V and 5B1.
9. Work with Index 521-512 (Concrete Barrier/ Noise Wall), Index 521-610 (Single-Slope), Index 521-620 (Vertical Shape), and Index 521-630 (Concrete Parapet).

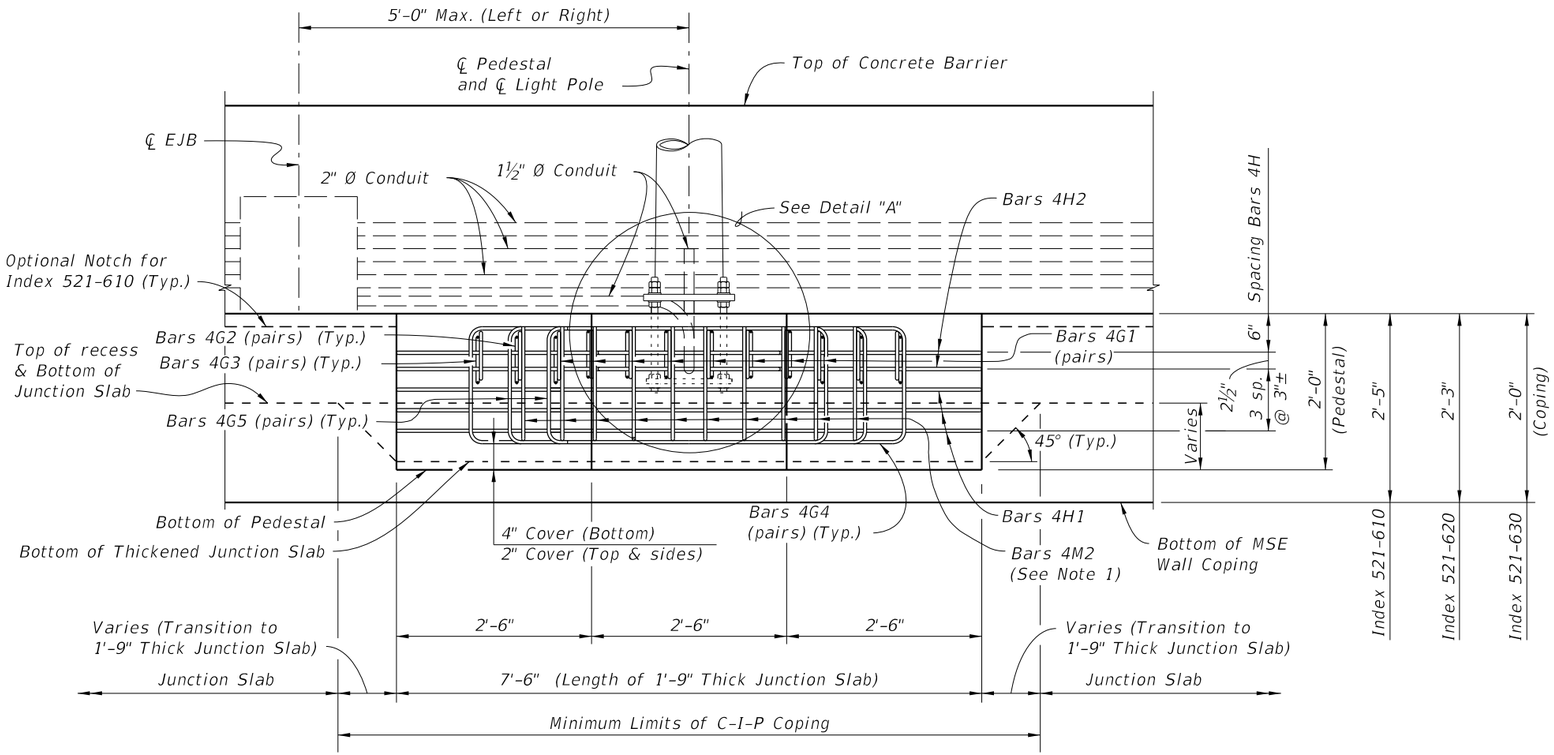

ELEVATION VIEW
(Junction Slab Reinforcing & Bars 4J not Shown for Clarity)
(Junction Slab Shown, Raised Sidewalk or Sidewalk Similar)

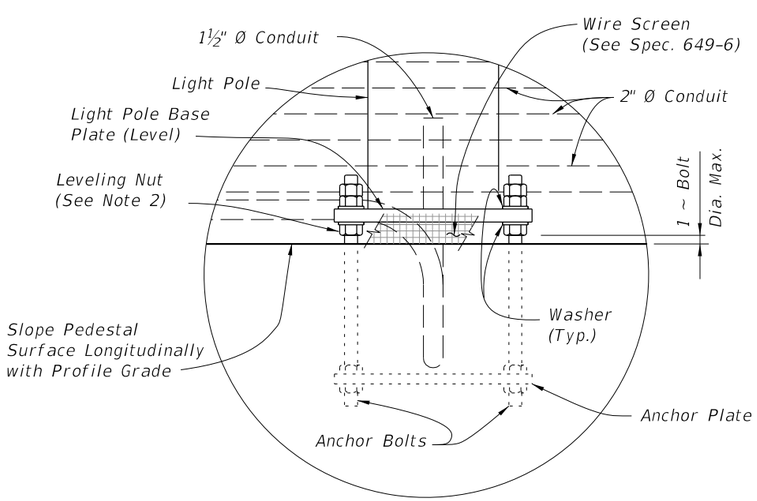

DETAIL "A"

NOTES:
1. Field Cut Bars 4M2 as required to maintain minimum cover.
2. Maximum clearance between leveling nut and top of pedestal will not exceed anchor bolt diameter.

ESTIMATED QUANTITIES		
ITEM	UNIT	QUANTITY
Concrete (Pedestal)	CY	0.926
Concrete (Thickened Junction Slab)	CY	1.222
Reinforcing Steel	LB	334.09

(The quantities above are for one C-I-P Light Pole Pedestal. The concrete quantity for the thickened junction slab is based on a 5'-0" length, 9" increase in thickness and a 5" wide retaining wall panel. Adjust thickened concrete quantity as required.

REINFORCING STEEL BENDING DIAGRAMS - LIGHT POLE PEDESTAL

BILL OF REINFORCING STEEL

MARK	SIZE	NO. REQD.	LENGTH
B3	5	7	7'-2"
G1	4	16	5'-8"
G2	4	4	4'-8"
G3	4	4	4'-2"
G4	4	6	8'-10"
G5	4	4	7'-4"
H1	4	3	9'-8"
H2	4	2	13'-8"
J	5	8	6'-0"
M1	5	8	5'-10"
M2	4	10	3'-8"

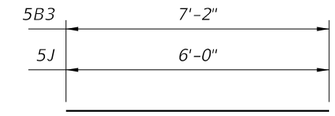

BARS 5B3 & 5J

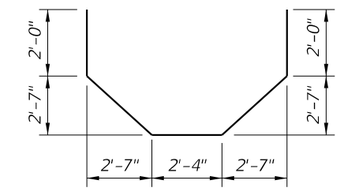

BAR 4H2

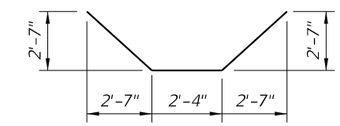

BAR 4H1

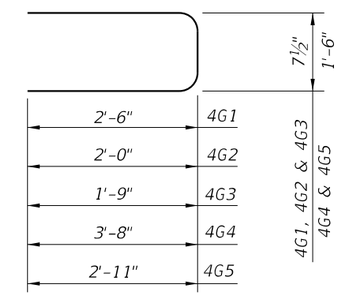

BARS 4G1, 4G2, 4G3, 4G4 & 4G5

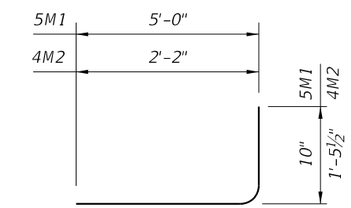

BAR 5M1 & 4M2

REINFORCING STEEL NOTES:
1. All bar dimensions in the bending diagrams are out to out.
2. Lap splices for Bars 4G1, 4G2, 4G3, 4G4 & 4G5 will be a minimum of 1'-4".
3. The Contractor may use Welded Wire Reinforcement (WWR) when approved by the Engineer. WWR must consist of deformed wire meeting the requirements of Specification Section 931.

GENERAL NOTES:

1. Construct sidewalks in accordance with Specification 522. Use 6" concrete for Sidewalks and Curb Ramps Located within Curb Returns (See Plan View). Install all other concrete with thickness as shown, unless otherwise detailed in the Plans.
2. Include detectable warnings on sidewalk curb ramps in accordance with Index 522-002.
3. For Driveways see Index 522-003.
4. Bond breaker material can be any impermeable coated or sheet membrane or preformed material having a thickness of not less than 6 mils and not more than ½".
5. Construct sidewalks with Edge Beam through the limits of any surface mounted Pedestrian/Bicycle Railing or Pipe Guiderail shown in the plans. (See RAILING DETAIL)

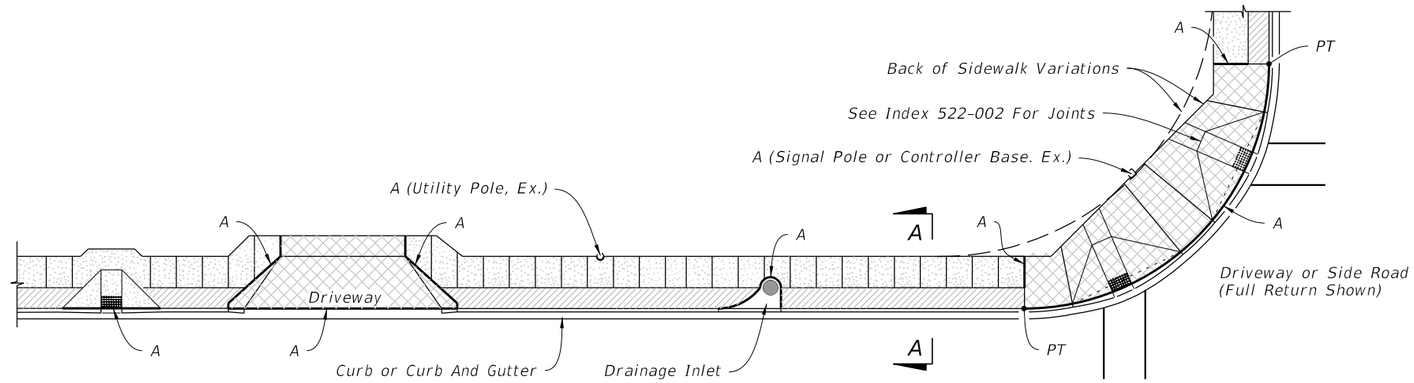

PLAN

SIDEWALK WITH UTILITY STRIP

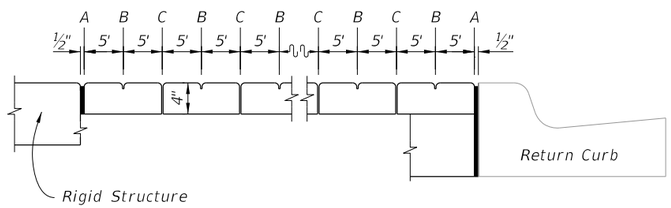

OPEN JOINTS

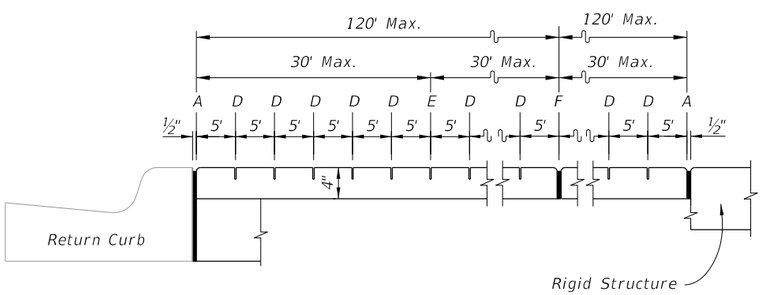

SAWED JOINTS

LONGITUDINAL SECTION

LEGEND:

A- ½" Expansion Joints (Preformed Joint Filler) between the sidewalk and; driveways, sidewalk-intersections, and all other fixed objects (e.g. drainage inlets and utility poles).

B- ⅛" Dummy Joints, Tooled

C- ⅛" Formed Open Joints

D- 3/16" Saw Cut Joints, 1½" Deep (within 96 hours) Max. 5' Centers

E- 3/16" Saw Cut Joints, 1½" Deep (within 12 hours) Max. 30' Centers Joint(s) Required When Length Exceeds 30'

F- ½" Expansion Joint When Run Of Sidewalk Exceeds 120'. Intermediate locations when called for in the plans or at locations as directed by the Engineer.

G- Cold Joint With Bond Breaker, Tooled

SIDEWALK JOINTS

LEGEND:

- 4" Thick Sidewalk
- 6" Thick Sidewalk
- Utility Strip

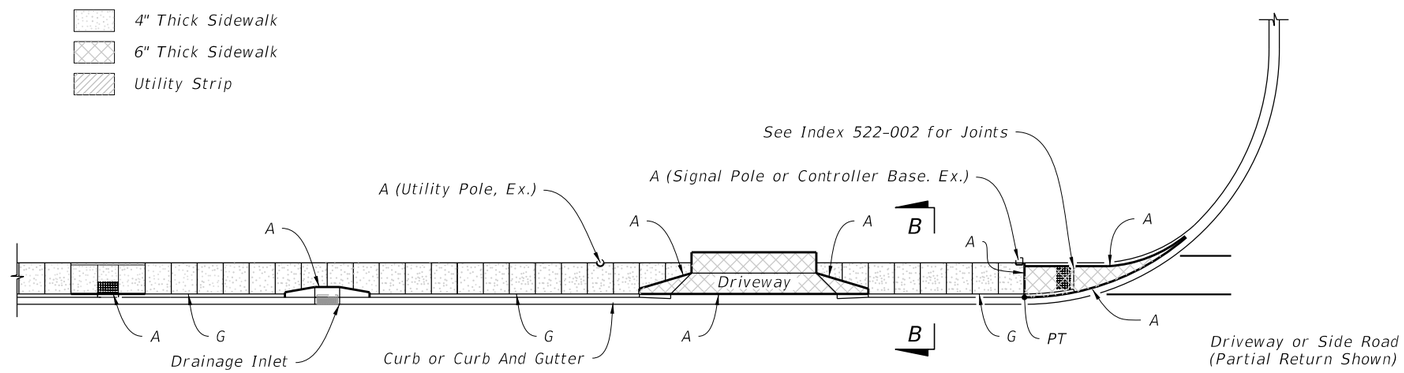

PLAN

SIDEWALK WITHOUT UTILITY STRIP

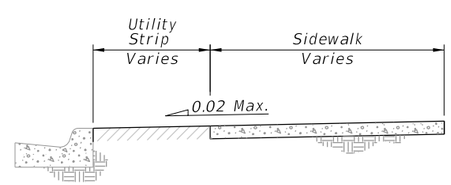

SECTION A-A

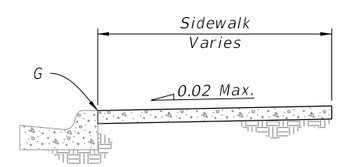

SECTION B-B

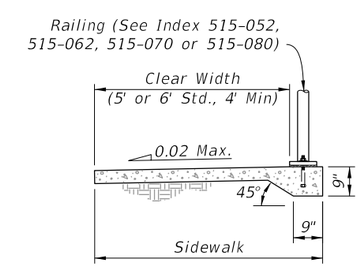

Varies Based on Railing Used

RAILING DETAIL

GENERAL NOTES AND CONCRETE SIDEWALK ON CURBED ROADWAYS

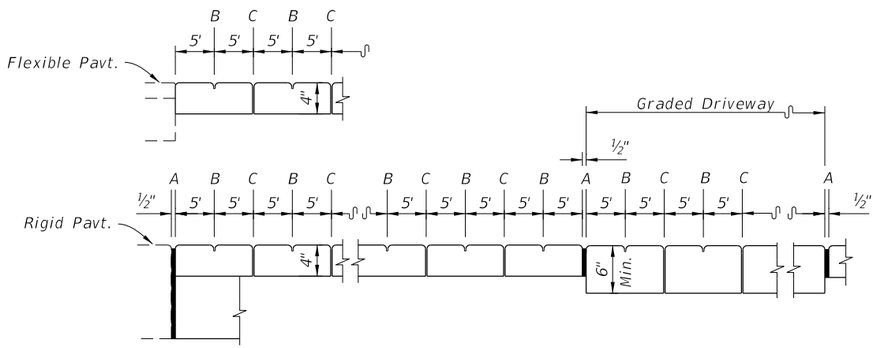

OPEN JOINTS

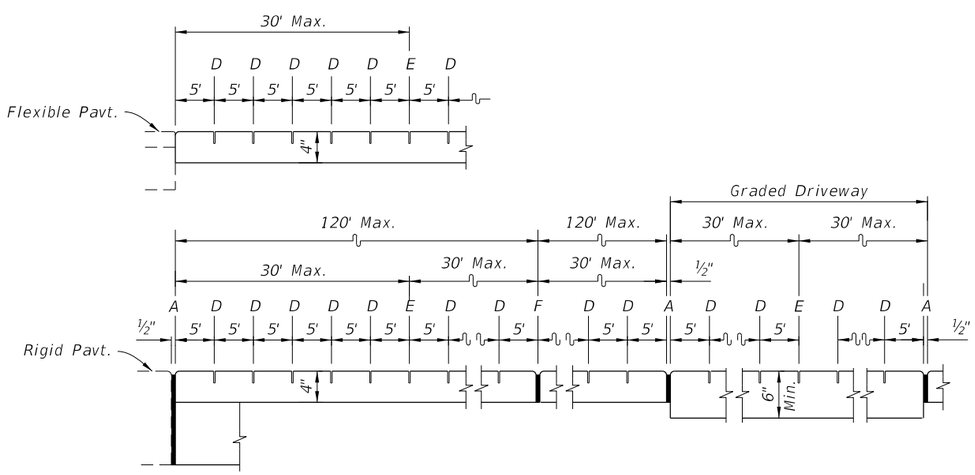

SAWED JOINTS

LONGITUDINAL SECTION

LEGEND:

A- ½" Expansion Joints (Preformed Joint Filler) between the sidewalk and driveways, sidewalk-intersections, and all other fixed objects (e.g. drainage inlets and utility poles).

B- ⅛" Dummy Joints, Tooled

C- ⅛" Formed Open Joints

D- 3/16" Saw Cut Joints, 1½" Deep (within 96 hours) Max. 5' Centers

E- 3/16" Saw Cut Joints, 1½" Deep (within 12 hours) Max. 30' Centers Joint(s) Required When Length Exceeds 30'

F- ½" Expansion Joint When Run Of Sidewalk Exceeds 120'. Intermediate locations when called for in the plans or at locations as directed by the Engineer.

SIDEWALK JOINTS

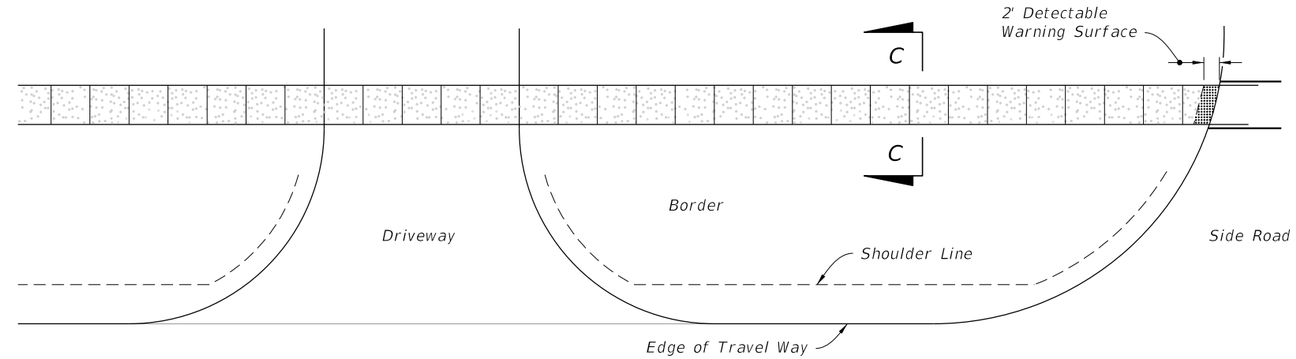

PLAN

CONTINUOUS SIDEWALK

LEGEND:

4" Thick Sidewalk

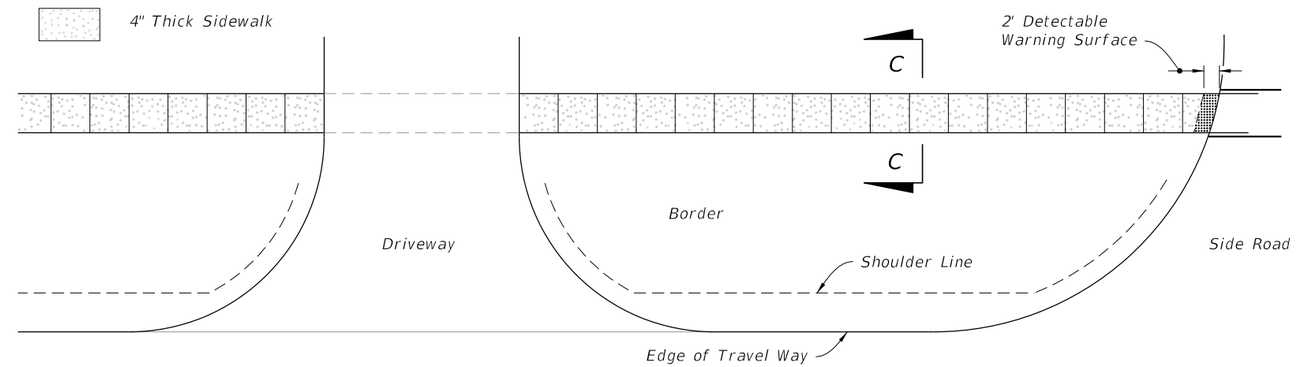

PLAN

DISCONTINUOUS SIDEWALK

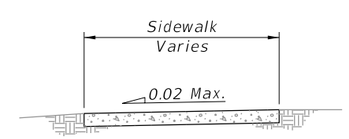

SECTION C-C

CONCRETE SIDEWALK ON FLUSH SHOULDER ROADWAYS

10/20/2022 8:52:24 AM

LAST REVISION	REVISION	DESCRIPTION:			INDEX	SHEET
11/01/18			FY 2023-24 STANDARD PLANS	CONCRETE SIDEWALK	522-001	2 of 2

GENERAL NOTES:

1. Cross Slopes and Grades:

   A. Sidewalk, ramp, and landing slopes (i.e. 0.02, 0.05, and 1:12) shown in this Index are maximums. With approval of the Engineer, provide the minimum feasible slope where the requirements cannot be met.

   B. Landings must have cross-slopes less than or equal to 0.02 in any direction.

   C. Maintain a single longitudinal slope along each side of the curb ramp. Ramp slopes are not required to exceed 15 feet in length.

   D. Joints permitted at the location of Slope Breaks. Otherwise locate joints in accordance with Index 522-001. No joints are permitted within the ramp portion of the Curb Ramp.

2. Curb, Curb and Gutter and/or Sidewalk:

   A. Refer to Index 522-001 for concrete thickness and sidewalk details.

   B. Remove any existing curb, curb and gutter, or sidewalk to the nearest joint beyond the curb transition or to the extent that no remaining section is less than 5 feet long.

   C. Width of Curb Ramp is 4'-0" minimum. Match sidewalk or Shared Use Path width as shown in the Plans.

3. Curb Ramp Alpha-Identification:

   A. Sidewalk curb ramp alpha-identifications (e.g. CR-A) are provided for reference purposes in the Plans.

   B. Alpha-identifications CR-I and CR-J are intentionally omitted.

4. Detectable Warnings:

   A. Install detectable warnings in accordance with Specification 527.

   B. Place detectable warnings across the full width of the ramp or landing, to a minimum depth of 2 feet measured perpendicular to the curb line and no greater than 5 feet from the back of the curb or edge of pavement.

   C. If detectable warnings are shown in the Plans on slopes greater than 5%, align the truncated domes with the centerline of the ramp; otherwise, the truncated domes are not required to be aligned.

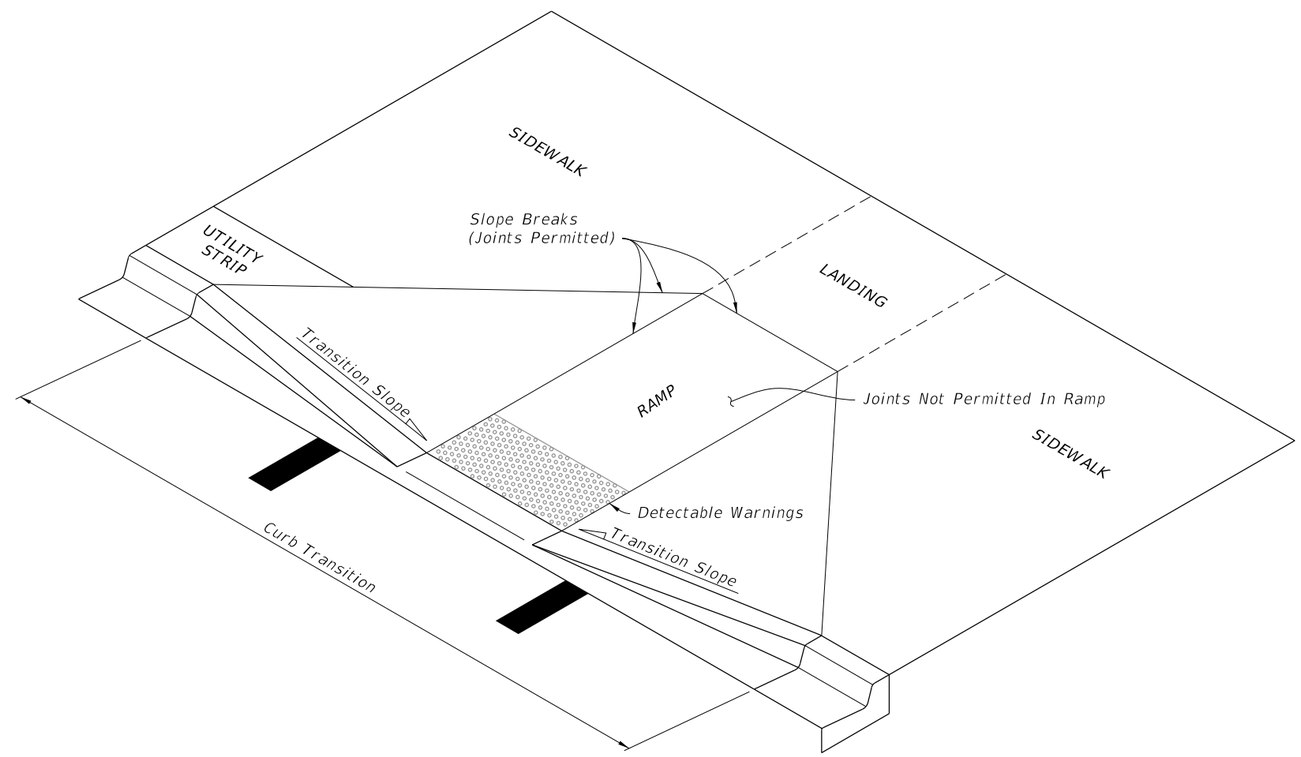

CURB RAMP NOMENCLATURE

10/20/2022 8:52:25 AM

LAST REVISION	REVISION	DESCRIPTION:			INDEX	SHEET
11/01/21			FY 2023-24 STANDARD PLANS	DETECTABLE WARNINGS AND SIDEWALK CURB RAMPS	522-002	1 of 7

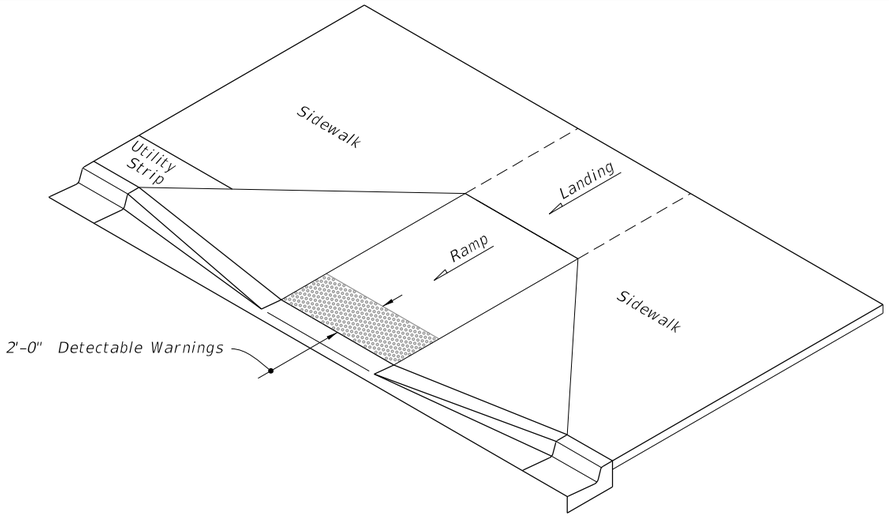

ISOMETRIC VIEW

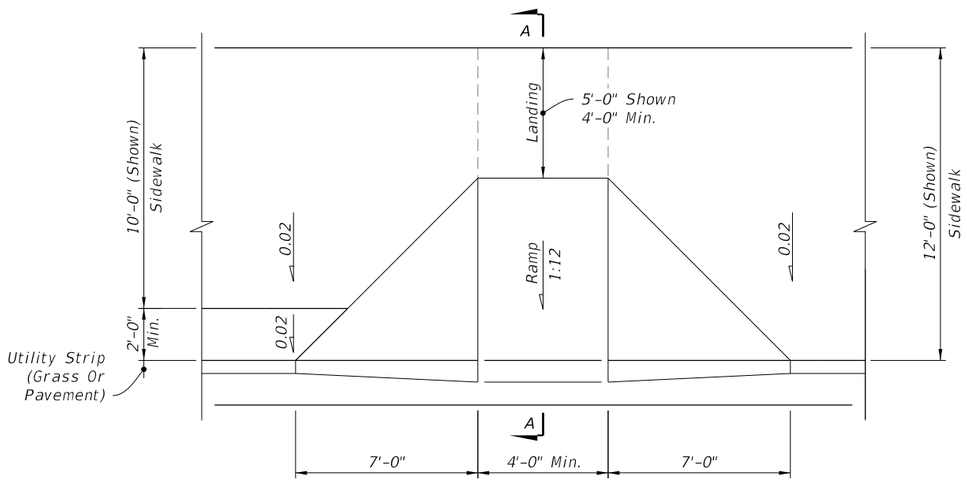

PLAN VIEW

NOTE: For Example of CR-A used in Radial Curb Returns, See Sheet 7.

CR-A

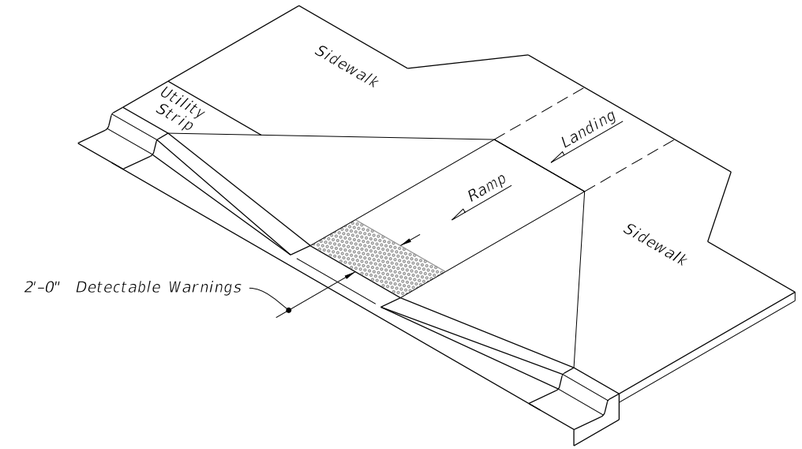

ISOMETRIC VIEW

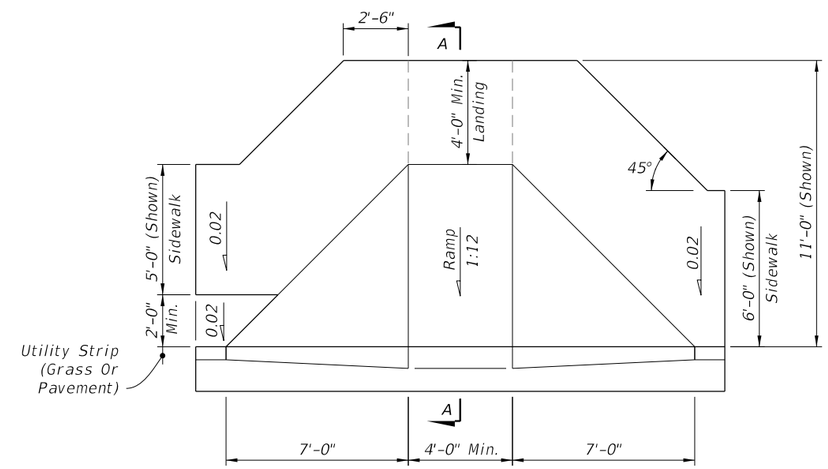

PLAN VIEW

CR-B

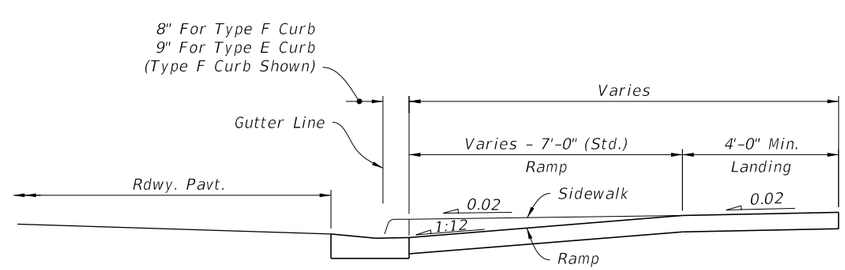

SECTION A-A

SIDEWALK CURB RAMPS CR-A AND CR-B

LAST REVISION	REVISION	DESCRIPTION:				
11/01/20			FY 2023-24 STANDARD PLANS	DETECTABLE WARNINGS AND SIDEWALK CURB RAMPS	INDEX 522-002	SHEET 2 of 7

5/24/2024 9:21:10 AM

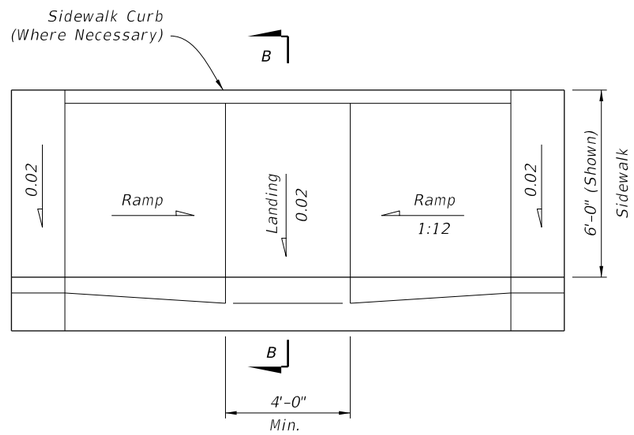

PLAN VIEW

CR-C

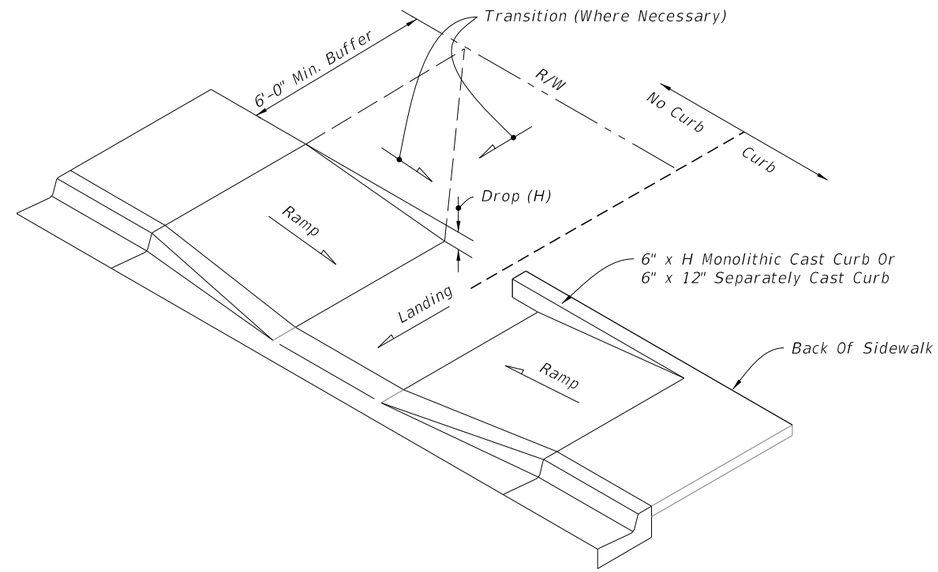

CONSTRUCTION OF SIDEWALK CURB IN CUT SECTIONS

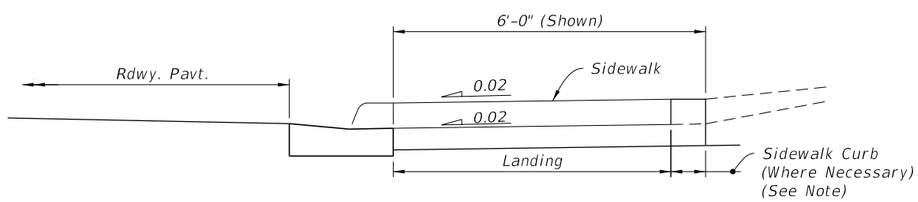

NOTE: For additional information on sidewalk curb construction, see SIDEWALK CURB OPTIONS details.

SECTION B-B

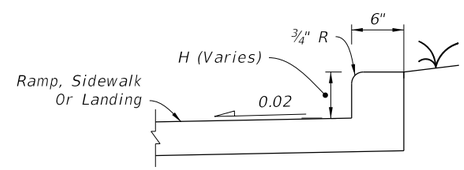

MONOLITHIC CAST CURB

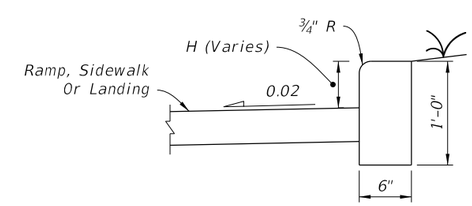

SEPARATELY CAST CURB

SIDEWALK CURB OPTIONS

SIDEWALK CURB RAMPS CR-C AND SIDEWALK CURB

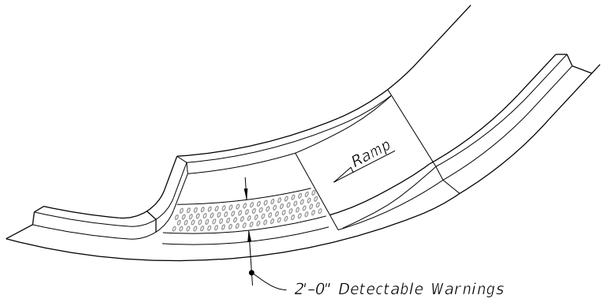

ISOMETRIC VIEW

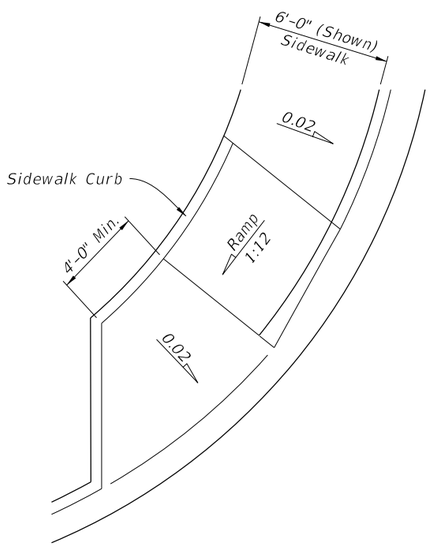

PLAN VIEW

CR-D

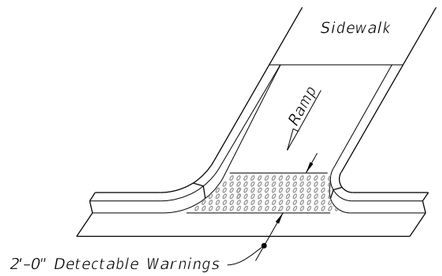

OPTION A

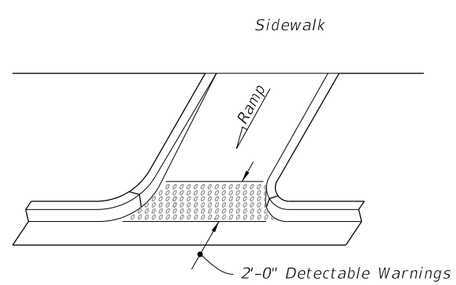

OPTION B

ISOMETRIC VIEW

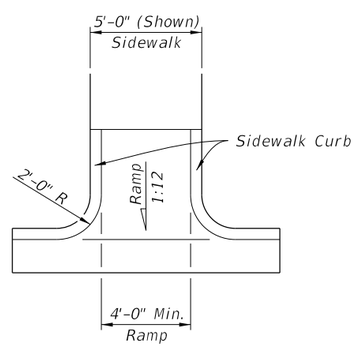

PLAN VIEW

CR-E

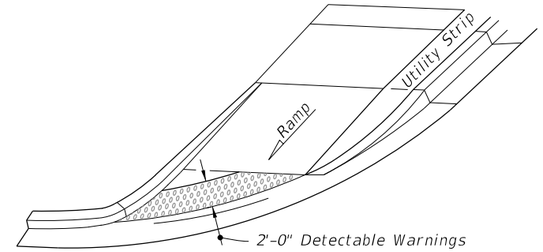

OPTION A

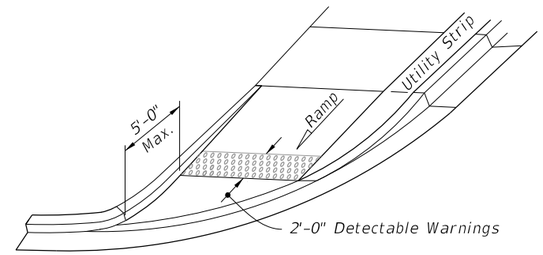

OPTION B

ISOMETRIC VIEW

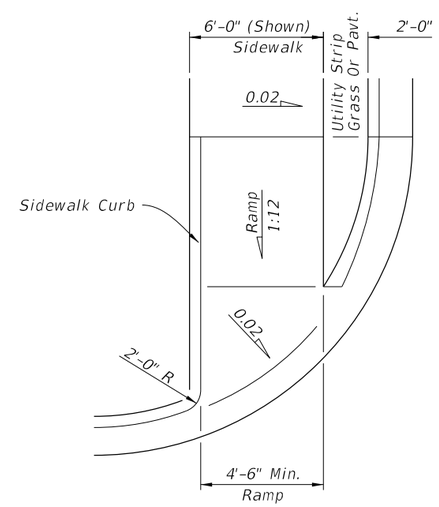

PLAN VIEW

CR-F

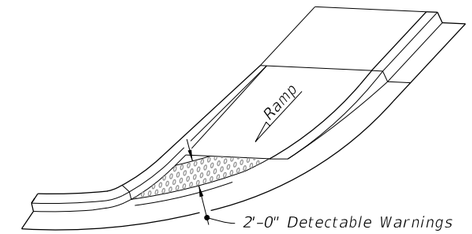

OPTION A

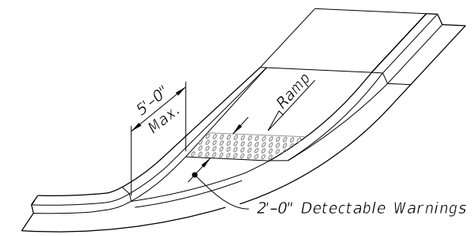

OPTION B

ISOMETRIC VIEW

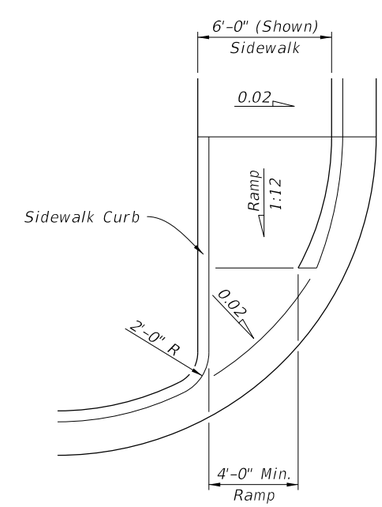

PLAN VIEW

CR-G

SIDEWALK CURB RAMPS CR-D, CR-E, CR-F & CR-G

LAST REVISION	REVISION	DESCRIPTION:			INDEX	SHEET
11/01/21			FY 2023-24 STANDARD PLANS	DETECTABLE WARNINGS AND SIDEWALK CURB RAMPS	522-002	4 of 7

10/20/2022 8:52:27 AM

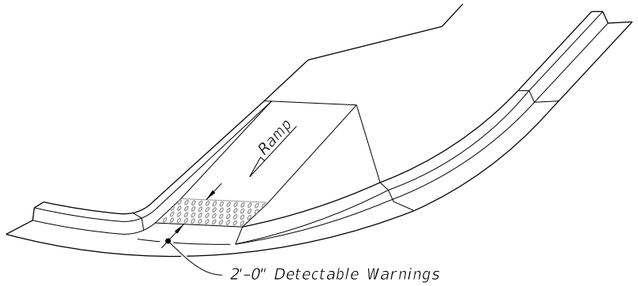

ISOMETRIC VIEW

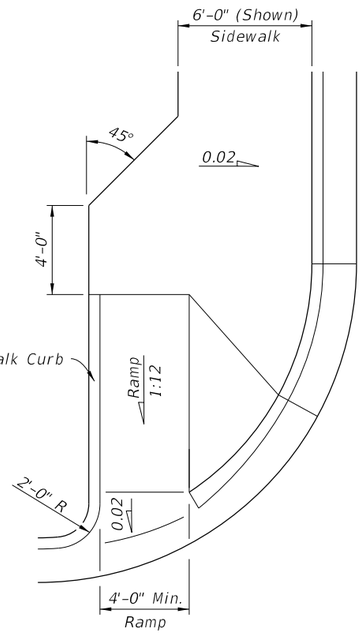

PLAN VIEW

CR-H

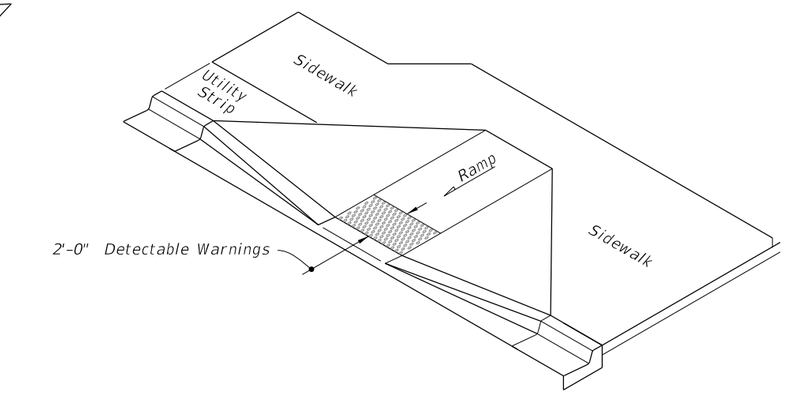

ISOMETRIC VIEW

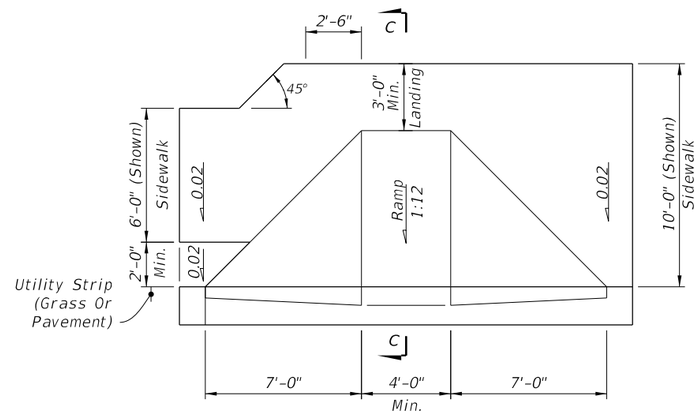

PLAN VIEW

CR-K

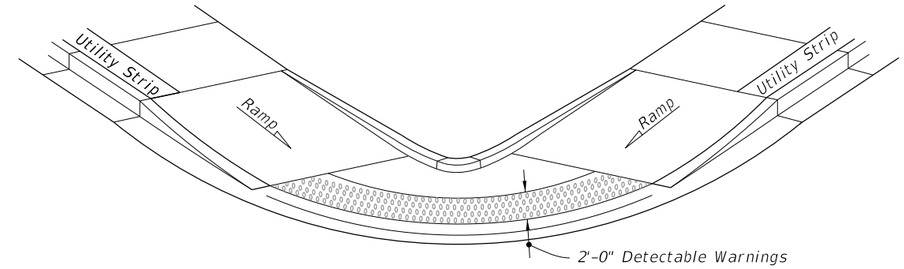

OPTION A

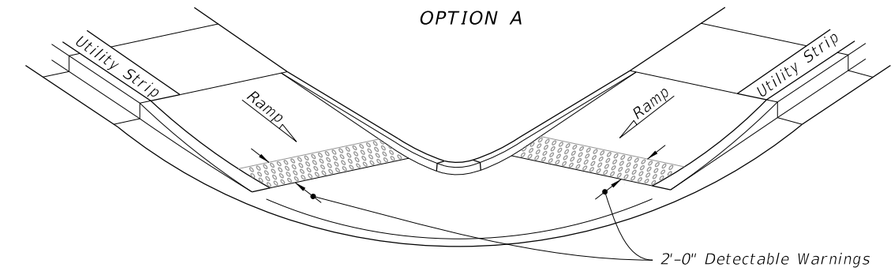

OPTION B

ISOMETRIC VIEW

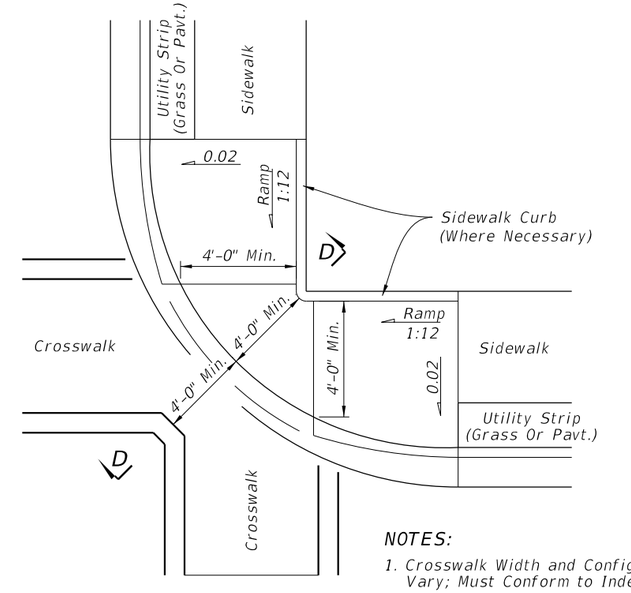

PLAN VIEW

CR-L

NOTES:

1. Crosswalk Width and Configuration Vary; Must Conform to Index 711-001.
2. 15' Radius Curve Shown for CR-L.
3. For additional information on sidewalk curb construction, see SIDEWALK CURB OPTIONS details, on Sheet 3.

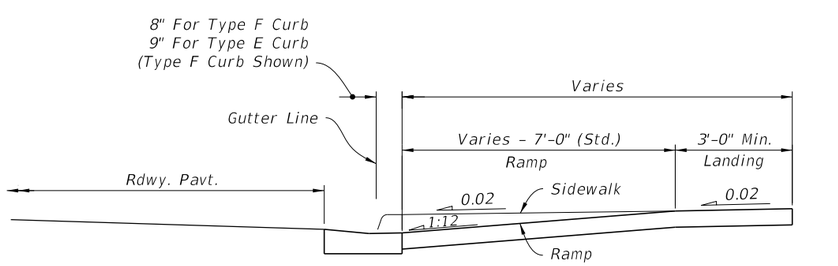

SECTION C-C

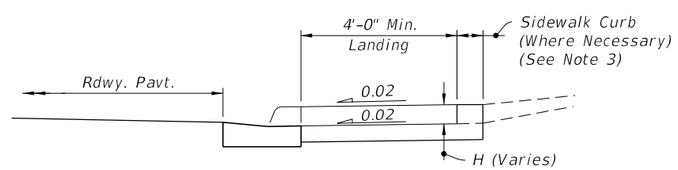

SECTION D-D

SIDEWALK CURB RAMPS CR-H, CR-K & CR-L

LAST REVISION	REVISION	DESCRIPTION:				INDEX	SHEET
11/01/20			FDOT	FY 2023-24 STANDARD PLANS	DETECTABLE WARNINGS AND SIDEWALK CURB RAMPS	522-002	5 of 7

10/20/2022 8:52:27 AM

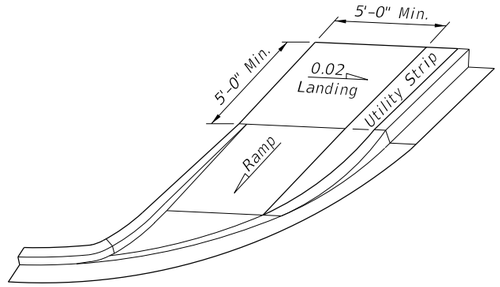

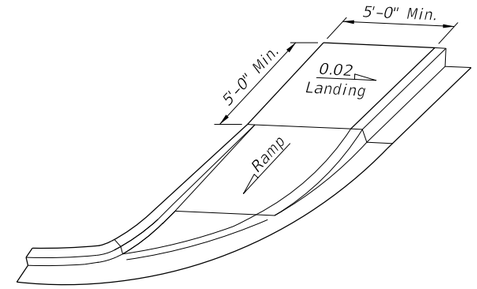

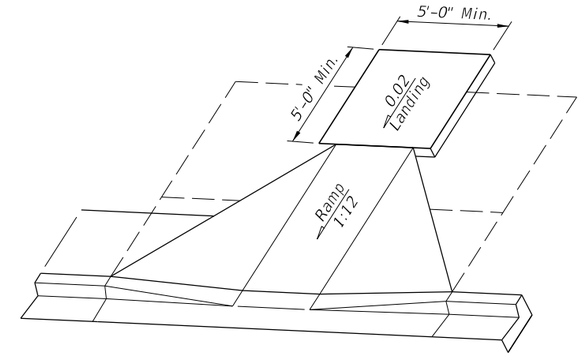

LANDINGS FOR CURB RAMPS WITHOUT SIDEWALKS

(See CR-F, CR-G & CR-K Respectively For Detectable Warning Details/Options)

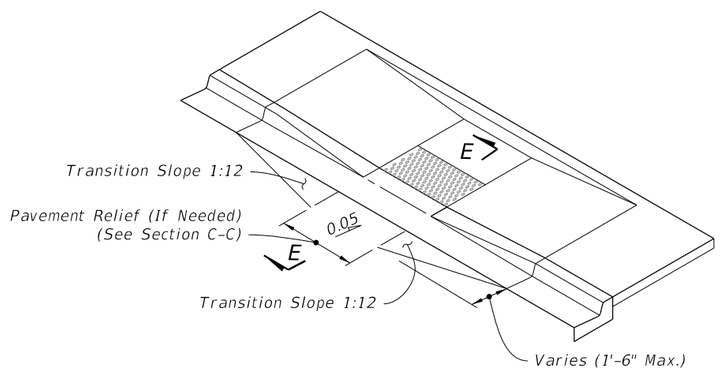

ISOMETRIC VIEW

(CR-C Shown, Other Similar)

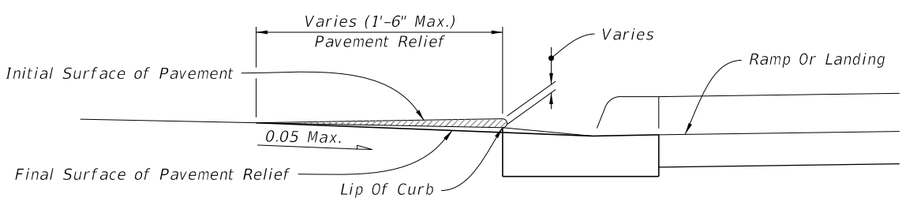

NOTE: Remove Elevated Pavement By Spading And Rolling, Smooth Milling, or Grinding.

SECTION E-E

PAVEMENT RELIEF DETAILS

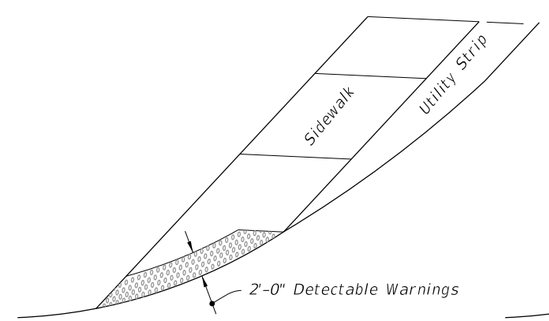

OPTION A

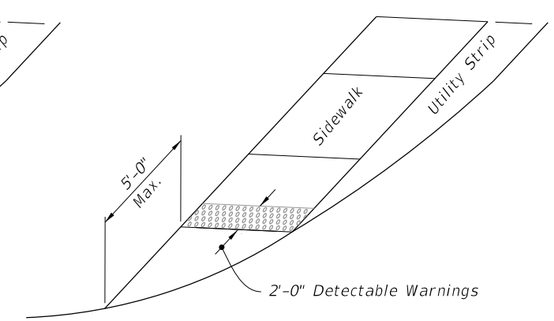

OPTION B

DETECTABLE WARNING ON FLUSH SHOULDER SIDEWALKS

CURB RAMPS WITHOUT SIDEWALKS AND FLUSH SHOULDER SIDEWALKS

NOTES:

1. Where crosswalk markings are used, ramps must fall within the crosswalk limits. A clear space of 48" minimum is required at the bottom of the ramp within a marked crosswalk. If crosswalk markings are not present, a clear space of 48" minimum is required at the bottom of the ramp outside of active travel lanes.
2. Crosswalk widths and configurations vary; must conform to Index 711-001.
3. Flangeway Gap may be up to 3" for Freight-only Railways.

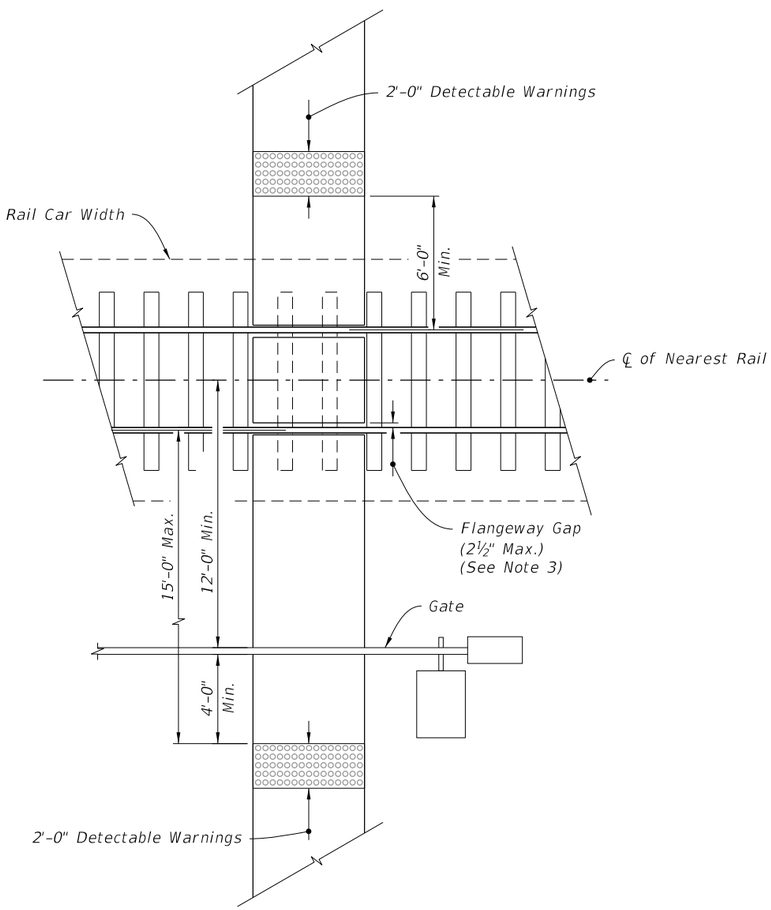

RAILROAD CROSSING

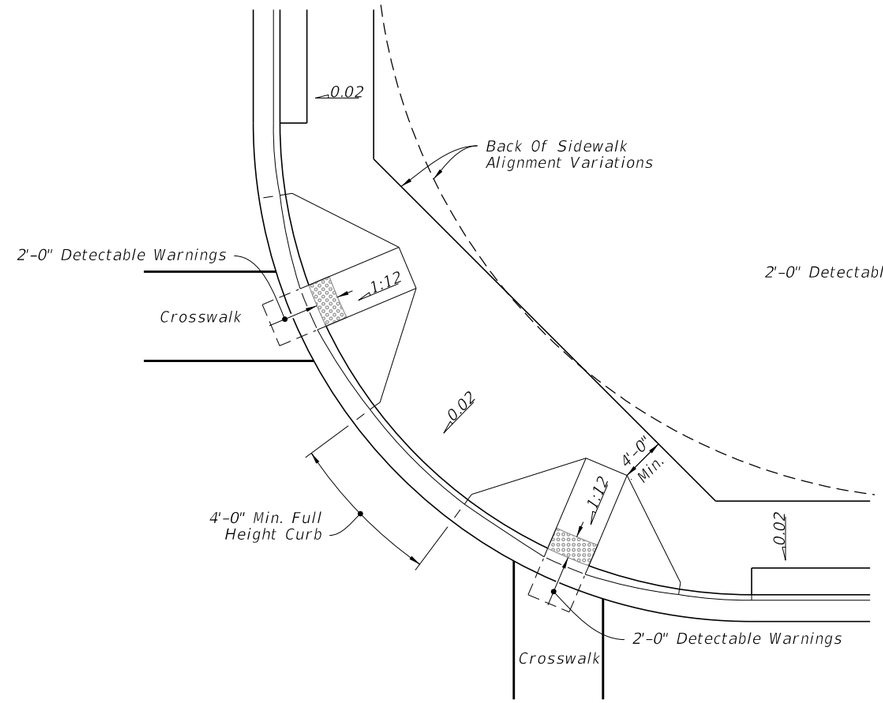

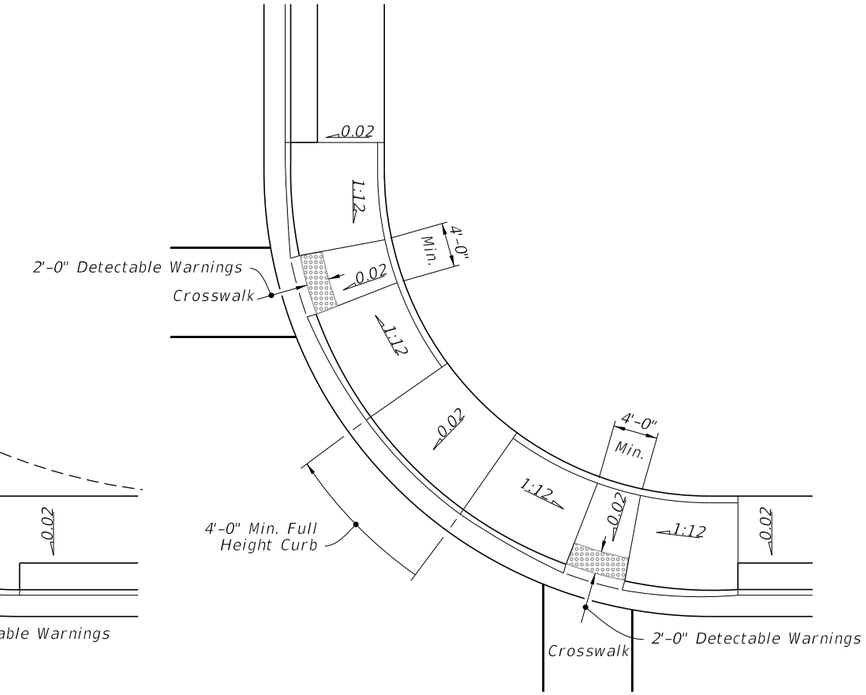

CURB RAMPS WITHIN RADIAL RETURN

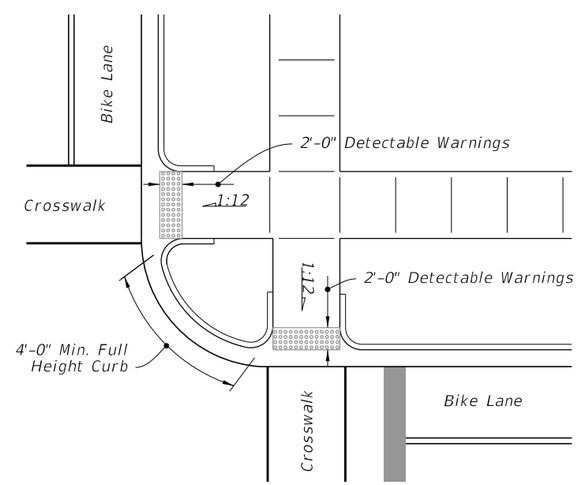

CURB RAMPS OUTSIDE RADIAL RETURN

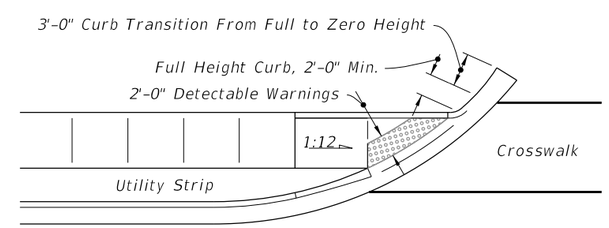

LINEAR SIDEWALK RAMPS

PLACEMENT OF SIDEWALK CURB RAMPS AT CURBED RETURNS (TYP.)

RAILROAD CROSSING AND CURB RAMPS AT CURBED RETURNS

LAST REVISION	REVISION	DESCRIPTION:			INDEX	SHEET
11/01/20			FY 2023-24 STANDARD PLANS	DETECTABLE WARNINGS AND SIDEWALK CURB RAMPS	522-002	7 of 7

12/13/2022 8:33:09 AM

GENERAL NOTES:

1. Work this Index with Specification 522.

2. Refer to Index 520-001 for drop curb details and Index 522-001 for joints between driveway, sidewalks, and curb.

3. Existing Curb and Gutter:
   Remove existing curb and gutter to either the nearest joint beyond the flared point or to where no remaining section is less than 5 feet long.

4. Grades and cross slopes shown are maximums.

5. Longitudinal Joints:
   Construct ⅛" open joints placed at equal (20' max.) intervals for driveways over 20' wide. Match joints in curb and gutter to match joints in driveways.

6. Transverse Joints:
   Construct ⅛" open joints @ 10' Centers and ½" expansion joints with preformed joint filler every 5th joint.

7. Construct driveways (6" thick concrete) to a uniform width (W) to the R/W line or the extent shown in the Plans.

8. Width of Sidewalk Thru Driveway is 4'-0" minimum. Match sidewalk width when shown in Plans or when utility strip width is equal to or greater than the depth of the Driveway Apron.

9. Alpha-Numeric Identification:
   Concrete Flared Driveway Alpha-Numeric Identifications (e.g. G4) are provided for reference purposes in the Plans.

LEGEND:

- Sidewalk
- Flared Driveway (6" Thick Concrete)
- Sidewalk Thru Driveway (6" Thick Concrete)
- Utility Strip
- G_A Grade of Apron
- G_D Grade of Driveway (Per Plans)

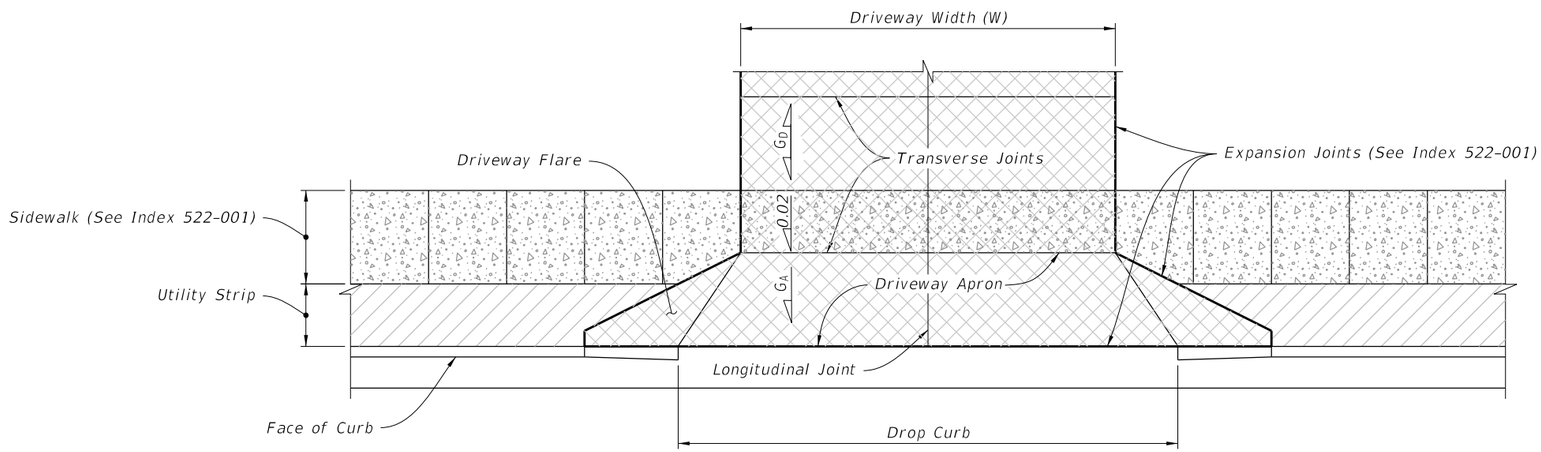

PLAN

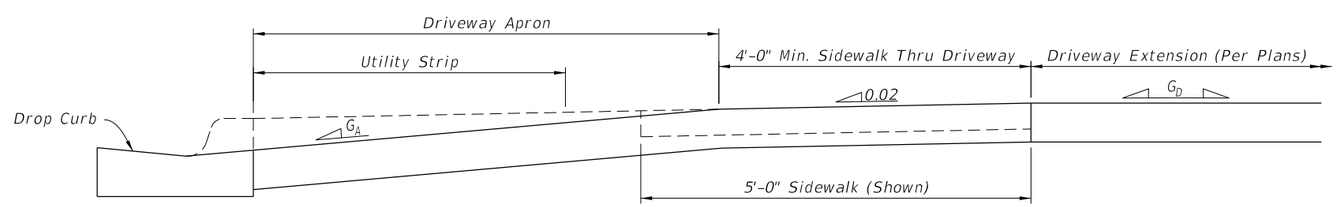

ELEVATION

CONCRETE FLARED DRIVEWAY NOMENCLATURE

10/20/2022 8:52:30 AM

LAST REVISION	REVISION	DESCRIPTION:			INDEX	SHEET
11/01/18			FY 2023-24 STANDARD PLANS	CONCRETE FLARED DRIVEWAYS	522-003	1 of 4

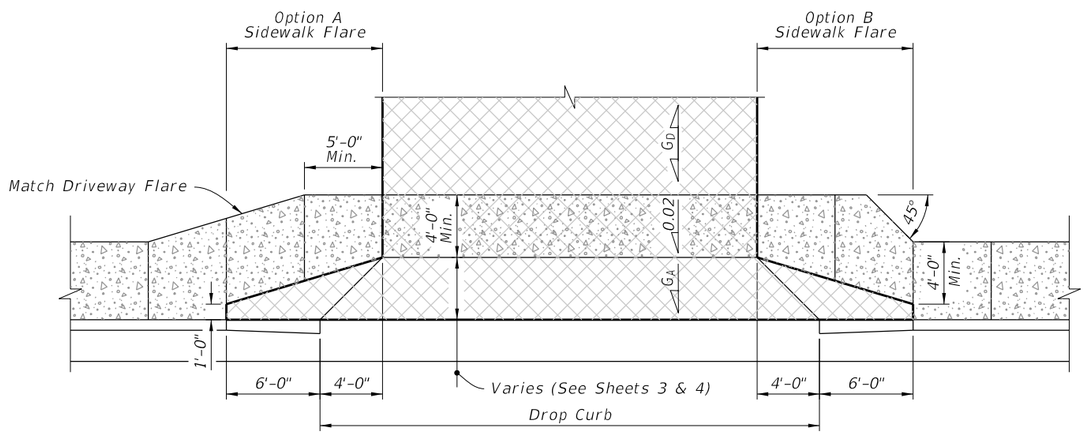

SIDEWALK WITHOUT UTILITY STRIP

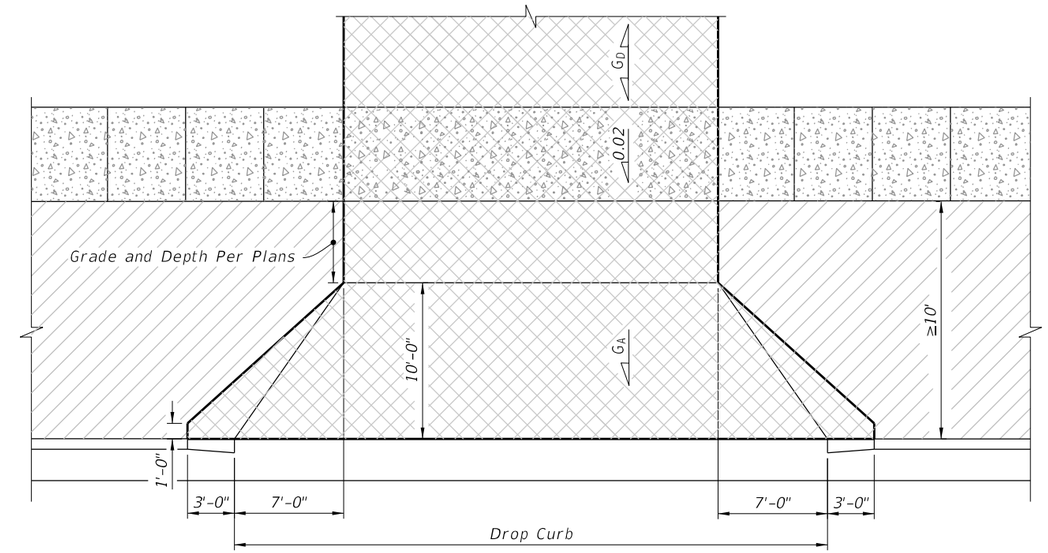

WITHOUT SIDEWALK OR UTILITY STRIP ≥ 10' WIDE

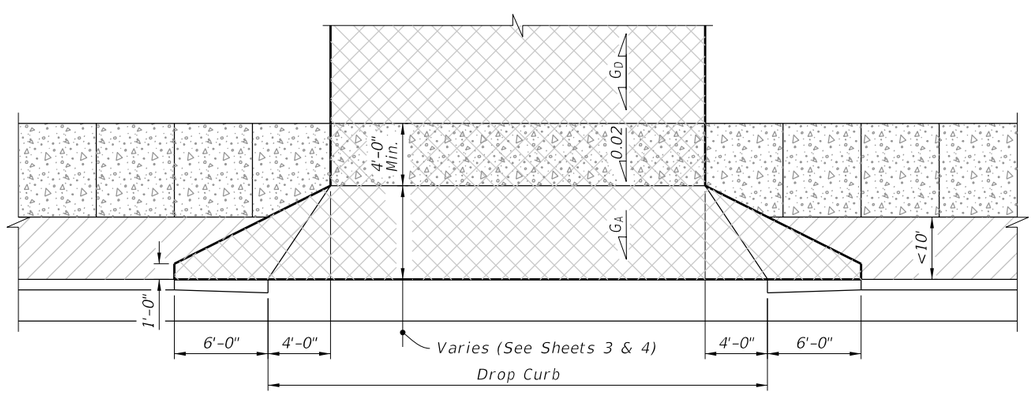

UTILITY STRIP < 10' WIDE

LEGEND:

- Sidewalk
- Flared Driveway (6" Thick Concrete)
- Sidewalk Thru Driveway (6" Thick Concrete)
- Utility Strip

10/20/2022 8:52:31 AM

LAST REVISION	REVISION	DESCRIPTION:			INDEX	SHEET
11/01/18			FY 2023-24 STANDARD PLANS	CONCRETE FLARED DRIVEWAYS	522-003	2 of 4

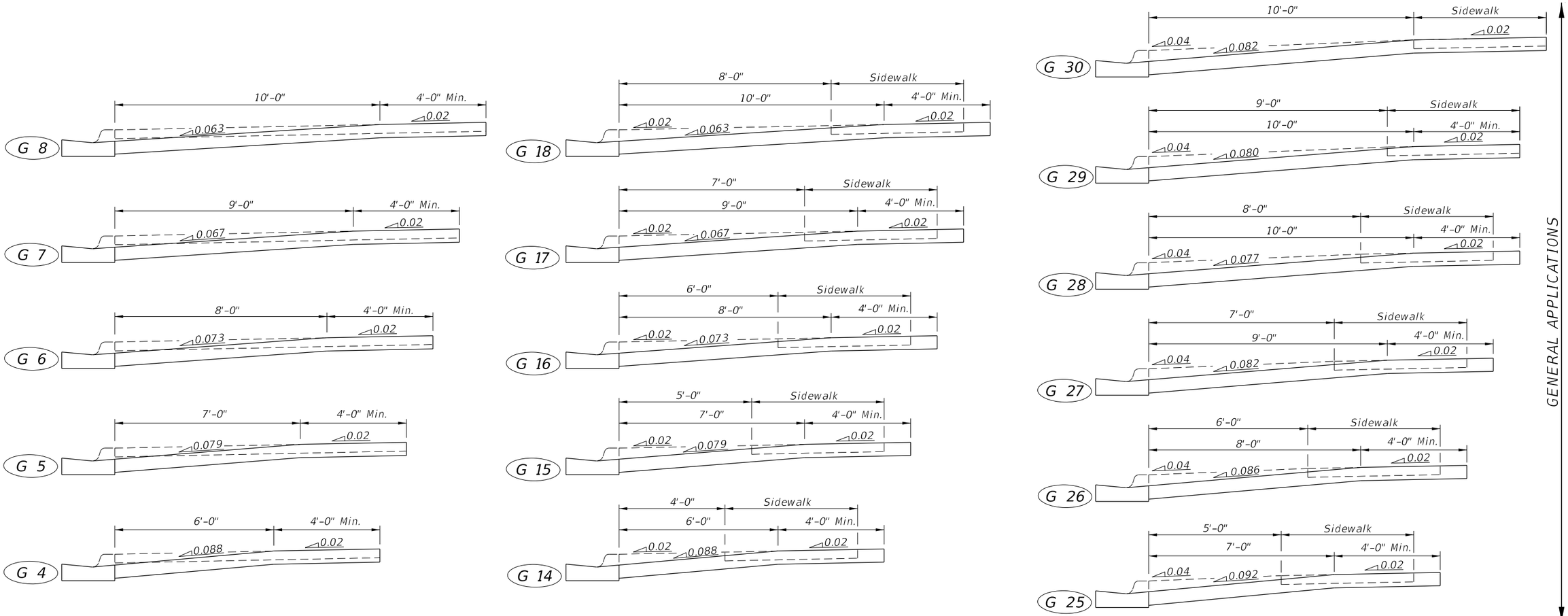

SIDEWALK WITHOUT UTILITY STRIP

SIDEWALK WITH UTILITY STRIP ON 0.02 SLOPE

SIDEWALK WITH UTILITY STRIP ON 0.04 SLOPE

NOTE:

5' sidewalks shown.

DRIVEWAY SECTIONS ON CURBED FACILITIES WITH SIDEWALKS

LAST REVISION	REVISION	DESCRIPTION:			INDEX	SHEET
11/01/18			FY 2023-24 STANDARD PLANS	CONCRETE FLARED DRIVEWAYS	522-003	3 of 4

10/20/2022 8:52:32 AM

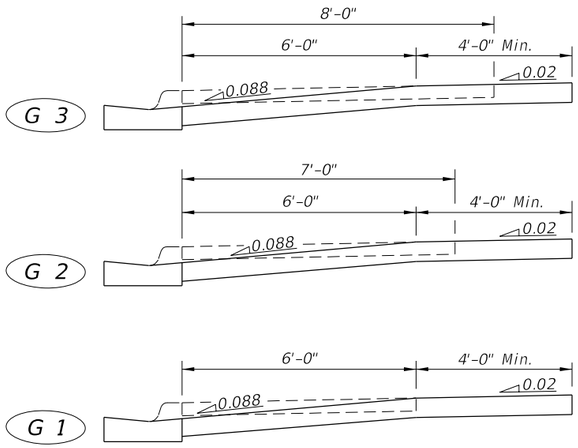

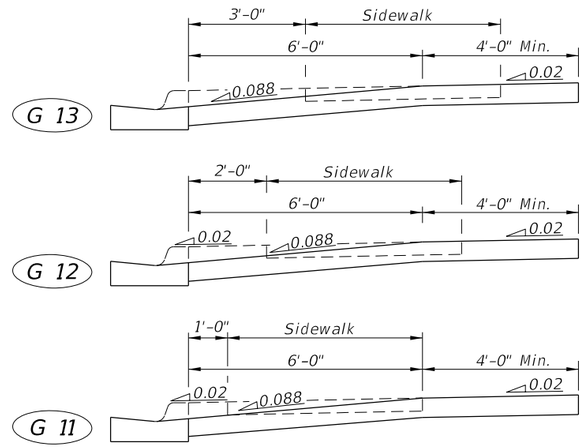

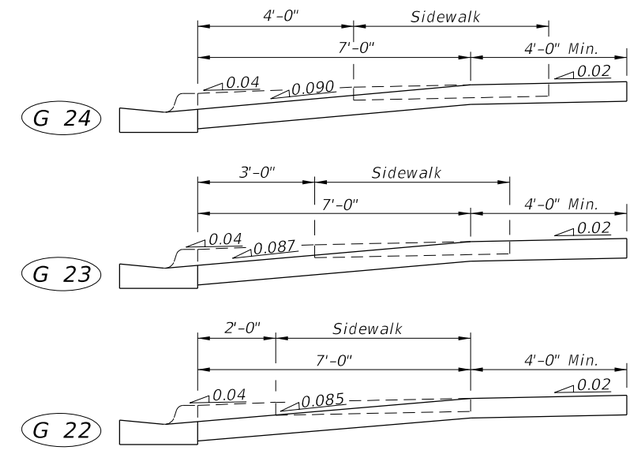

GENERAL APPLICATIONS

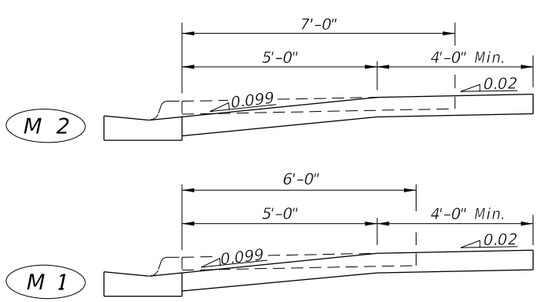

SIDEWALK WITHOUT UTILITY STRIP

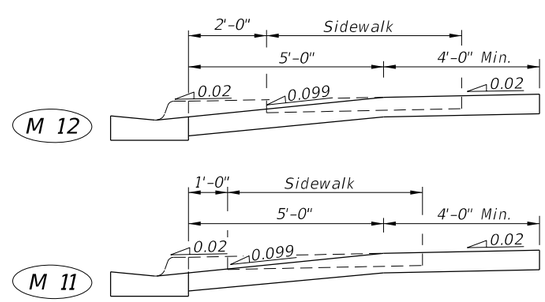

SIDEWALK WITH UTILITY STRIP ON 0.02 SLOPE

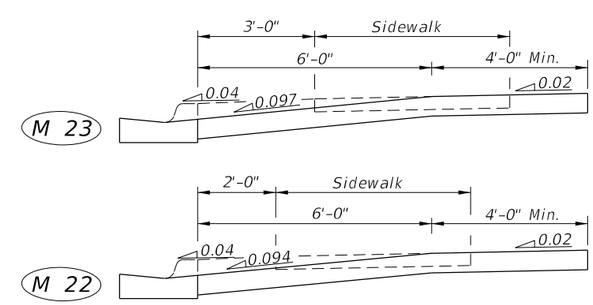

SIDEWALK WITH UTILITY STRIP ON 0.04 SLOPE

MARGINAL

NOTE:

5' sidewalks shown.

DRIVEWAY SECTIONS ON CURBED FACILITIES WITH SIDEWALKS

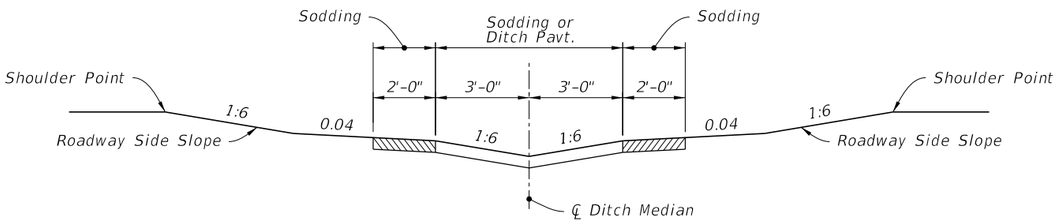

SWALED MEDIAN
(No Weep Holes)

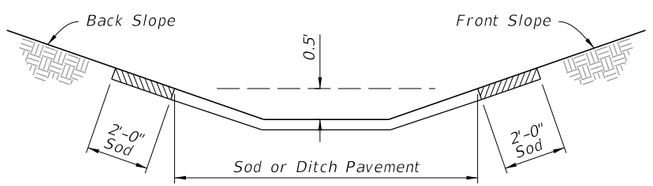

ROADWAY SIDE DITCH

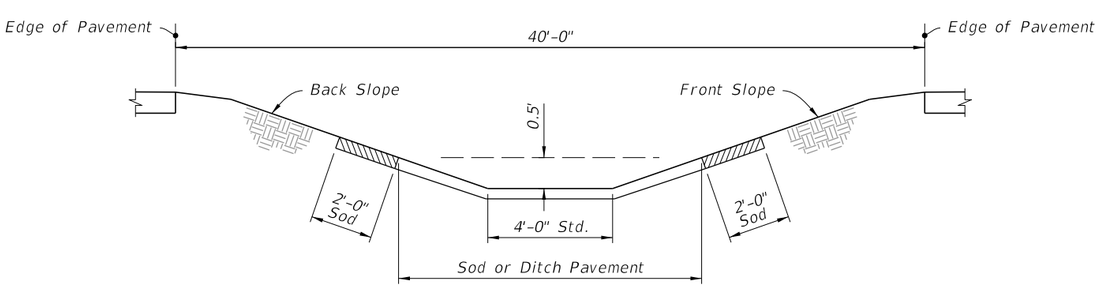

40' MEDIAN

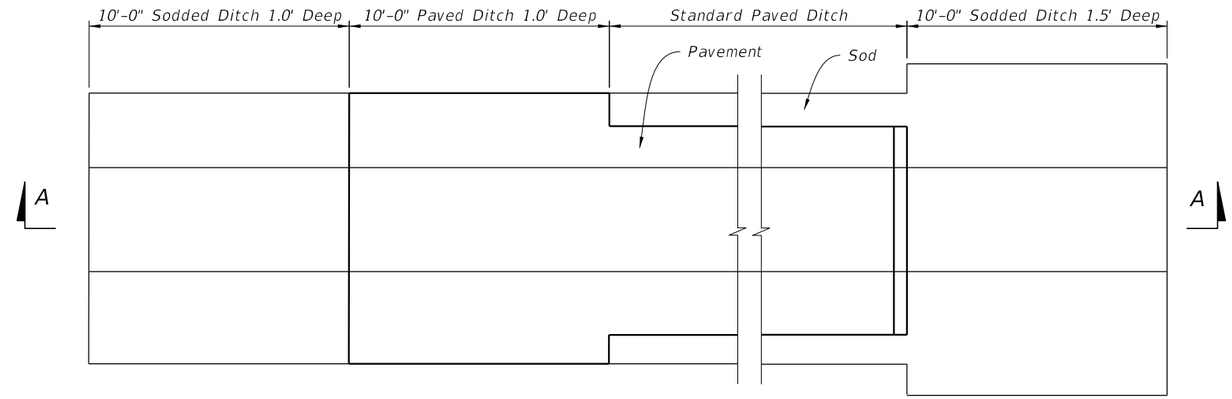

PLAN

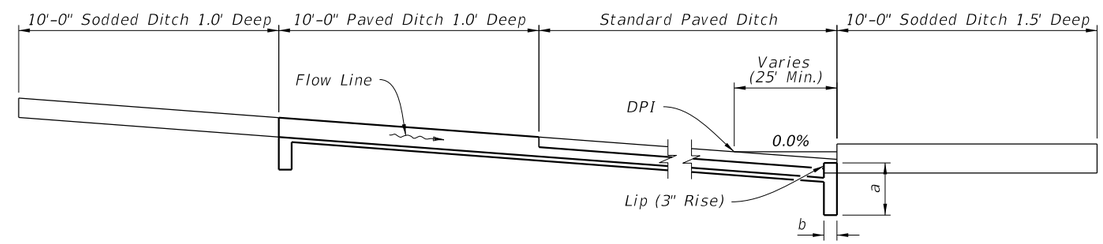

SECTION A-A

PAVED DITCH END TREATMENT

GENERAL NOTES:

1. Install type of ditch pavement shown on Plans.
2. Construct lip at the end of ditch pavement downstream of DPI or on flatter grades where there is a decrease in ditch velocity.
3. Use toewalls with all ditch paving, except adjacent to drainage structures.
4. Construct sides of paving with 1' minimum height for junction of R/W ditch spillway and lateral ditch.
5. Install filter fabric under all ditch pavement except for miscellaneous asphalt.
6. Install ditch pavement requiring reinforcement as detailed in Plans.

12/14/2023 3:13:22 PM

LAST REVISION	REVISION	DESCRIPTION:			INDEX	SHEET
11/01/22			FY 2023-24 STANDARD PLANS	DITCH PAVEMENT AND SODDING	524-001	1 of 3

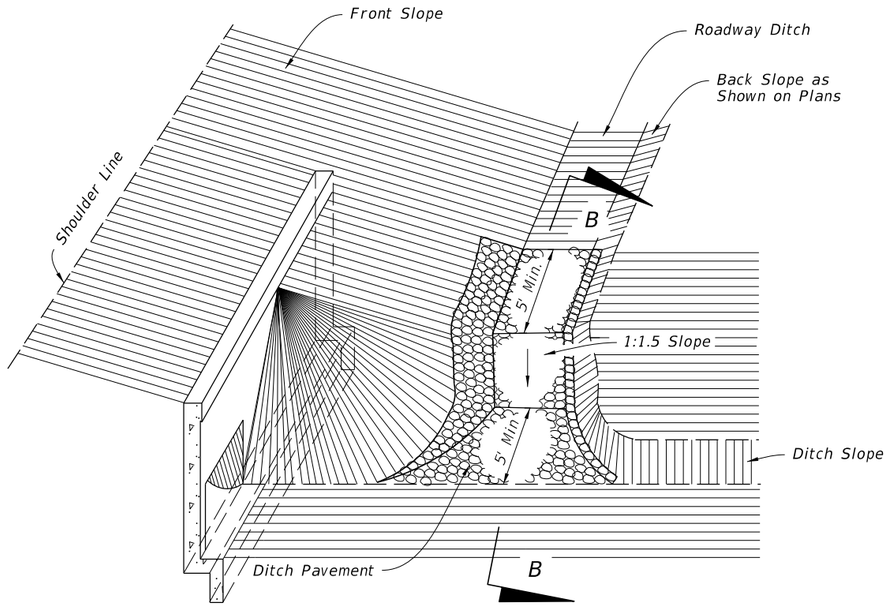

NOTE:
Miscellaneous asphalt will not be permitted for this type of construction.

JUNCTION OF ROADWAY DITCH AND LATERAL DITCH

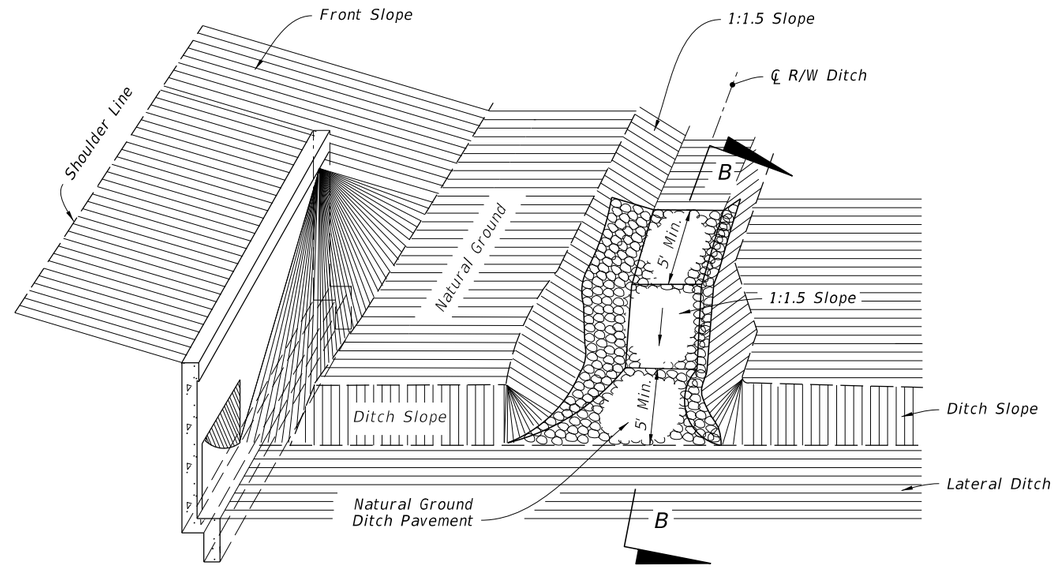

NOTE:
Miscellaneous asphalt will not be permitted for this type of construction.

JUNCTION OF R/W DITCH AND LATERAL DITCH

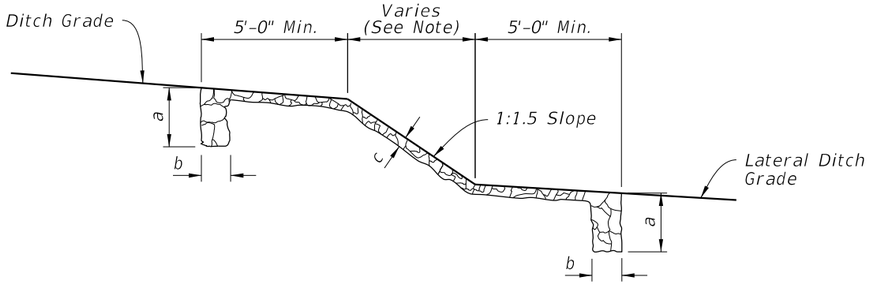

NOTE:
Do not construct weep holes in this area or 5' upstream

SECTION B-B
(As Shown)

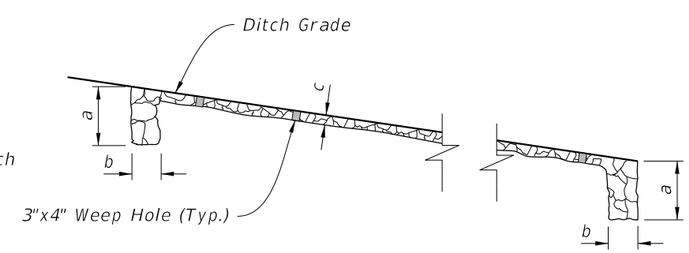

SECTION B-B
(Locations Other Than Junction with Lateral Ditch)

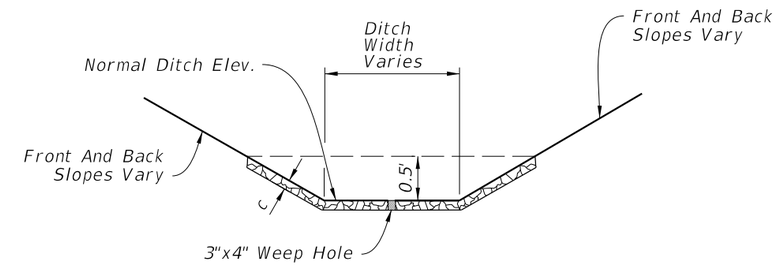

TYPICAL SECTION

TABLE 1: DITCH PAVEMENT					
Pavement Type	Dimensions			Filter Fabric Type	References & Remarks
	a	b	c		
Concrete	24"	6"	Varies	D-4	Specification 524
Miscellaneous Asphalt	24"	12"	4"	None	Specification 339
Riprap (Sand-Cement)	24"	12"	4"	D-4	Specification 530, Grouting of joints required
Riprap (Ditch Lining)	--	--	--	D-2	Specification 530

10/20/2022 8:52:34 AM

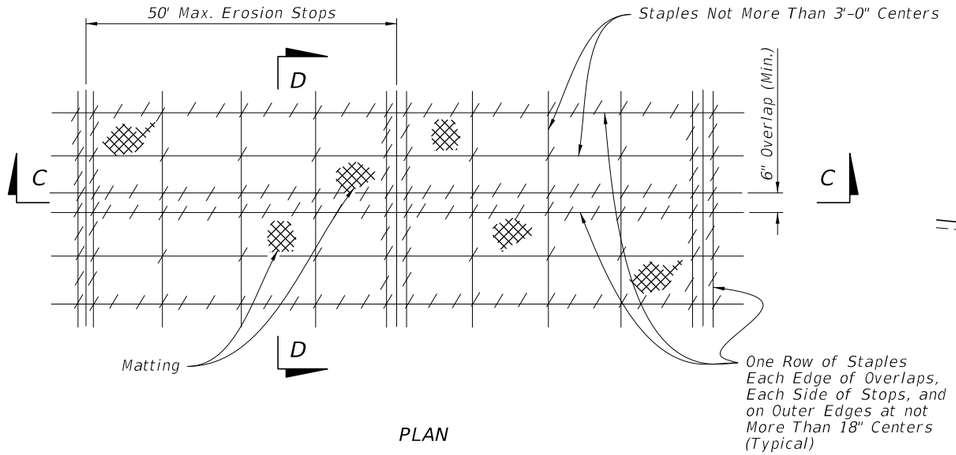

PLAN

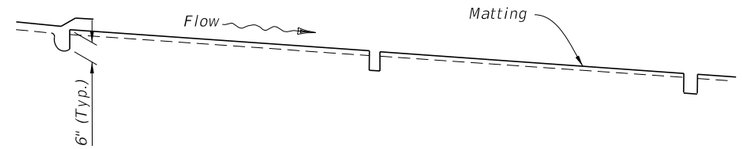

SECTION C-C

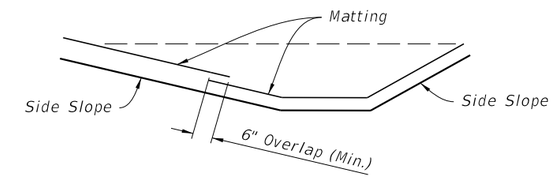

SECTION D-D

MATTING FOR DITCH

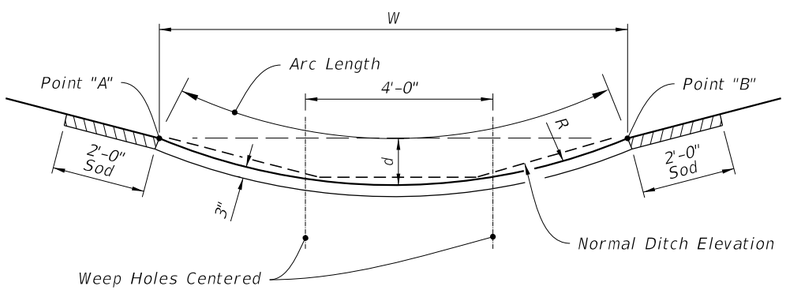

TABLE 2: ALTERNATE DITCH PAVEMENT					
TO REPLACE:	W	d	R	Rows Of Weep Holes	Arc Length
6' Median Swale	6'	0.24'	19'	0	6.0'
1:6 Front Slopes; 1:4 Back Slope					
5' Ditch Bottom Width	10'	0.67'	19'	2	10.1'
4' Ditch Bottom Width	9'	0.54'	19'	2	9.1'
1:4 Front Slopes & Back Slope					
5' Ditch Bottom Width	9'	0.74'	14'	2	9.2'
4' Ditch Bottom Width	8'	0.58'	14'	1 (in center)	8.1'

NOTE:

For use only where side slopes are 1:4 or flatter. Point "A" and "B" are at the same elevation and should be used to locate the paved section.

ALTERNATE DITCH PAVEMENT

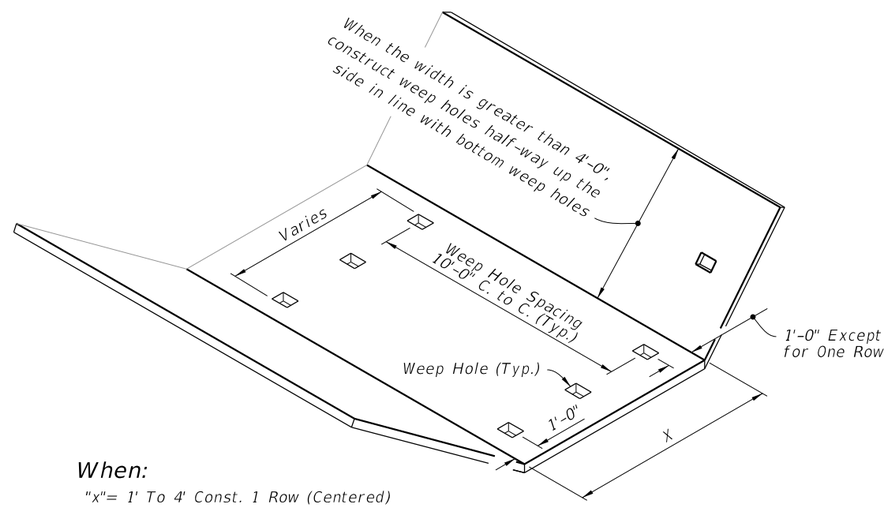

When:

"x"= 1' To 4' Const. 1 Row (Centered)
"x"= 5' To 7' Const. 2 Rows
"x"= 8' To 12' Const. 3 Rows
"x"= 13' To 17' Const. 4 Rows
"x"= 18' To 22' Const. 5 Rows

NOTES:

1. Construct all weep holes 3"x4" rectangle or 4" or 5" diameter circle hole. Place ½ cu. ft. (12" x 12" x 6") of No. 57 aggregate under each hole with 1 sq. ft. of galvanized wire mesh (¼" openings) placed between the aggregate and the ditch pavement.

2. Rectangle weep holes shown, round weep holes similar.

3. Weep hole spacing may be reduced to 5' minimum when directed by the Engineer.

WEEP HOLE ARRANGEMENT

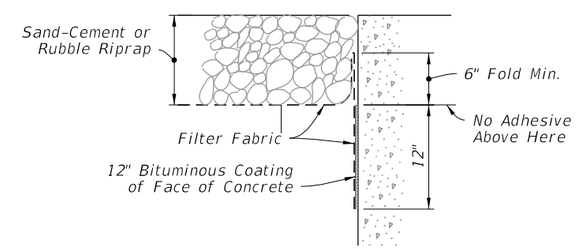

BONDED OPTION

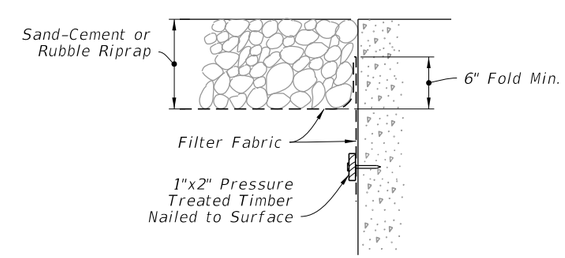

NAILED OPTION

NOTE:

Either option may be used, unless called for in the plans.

FILTER FABRIC PLACEMENT AT CONCRETE STRUCTURE

8:52:35 AM
10/20/2022

LAST REVISION	REVISION	DESCRIPTION:			INDEX	SHEET
11/01/22			FY 2023-24 STANDARD PLANS	DITCH PAVEMENT AND SODDING	524-001	3 of 3

NOTES

1. Work this Index with the Noise Wall Data Tables, and Wall Control Drawings in the Plans.
   A. Prestressed concrete posts with equivalent strength resistance may be substituted for conventionally reinforced precast posts shown in this index when approved as part of a Producer's Quality Control Plan.
   B. Producer shop drawings for prestressed concrete post designs must be approved by the State Structures Design Office prior to inclusion in the Quality Control Plan.

2. Construct Noise Walls in accordance with the requirements of Specification Section 534, and Augers Cast Piles in accordance with Specification Section 455.

3. Field verify the location of all overhead and underground services shown in the Wall Control Drawings.

4. Wall Height is the nominal height of the walls above finished grade. The Wall Embedment Depth for design is 1'-0". The actual embedment depth may vary plus or minus 6" along the length of the wall.

5. Post Spacing in this Index are nominal, and are measured from centerline to centerline of the auger cast piles. Actual post spacing may vary as shown in the Wall Control Drawings.

6. Panels:
   A. The sum of the individual stacked panel heights is the Wall Height plus 1'-0" (embedment depth).
   B. Where special graphics are required, locate the horizontal panel joints outside of the graphics. Where possible, hold horizontal panel joints at a constant elevation.
   C. Side Installed Panels are only permitted when reduced overhead clearance between posts prohibits installing panels from the top.
      1. For Flush Face panels, install panel into posts from the back face of the wall. Recessed panels may be installed from the back or front face of the wall.
      2. After panels are installed and centered between posts, grout between both panel ends and the adjoining posts (see Sheets 4 and 5 for details).
   D. Individual panel heights should be between 6'-0" and 12'-0" tall. The minimum panel height is 4'-0" and may be used where overhead clearance is limited, or where graphic panels are required on shorter walls.
7. Concrete And Grout:
   A. Concrete Class and Compressive Strength for:
      1. Precast Panels, Posts, and Post Caps: Class IV
      2. Cast-In-Place Collars: Class IV
   B. Minimum Compressive Strength for form removal and handling of posts and panels:
      1. 2,500 psi for horizontally cast post and panels
      2. 2,000 psi for vertically cast panels or when tilt-up tables are used for horizontally cast panels.
   C. Grout for Auger Cast Piles:
      1. Maximum Working Compressive Strength = 2,000 psi
      2. Minimum 28 day strength = 5,000 psi

8. Reinforcing Steel:
   A. In addition to the requirements of Specification Section 415, tie post and pile stirrups at the following locations as a minimum:
      1. Post Stirrups Tie at all four corner bars and at every third interior bar intersection.
      2. Pile Stirrups Tie to the main vertical reinforcing at alternate intersections for circular configurations and at the four corners and at every third interior bar intersection for rectangular configurations.
   B. Provide 2" concrete cover unless noted otherwise.

9. Casting Tolerances for precast panels and posts:
   A. Overall Height and Width: +/- ¼"
   B. Thickness: +/- ¼"
   C. Plane of side mold: +/- 1/16"
   D. Openings: +/- ½"
   E. Out of Square: 1/8" per 6 ft., but not more than 3/8"total along any side
   F. Warping: 1/16" per foot distance to nearest corner
   G. Bowing: 1/240 panel dimension
   H. Surface Smoothness for Type "A" Smooth Surface Texture Option: +/- 1/16"

10. Provide Plain or Fiber Reinforced Bearing Pads meeting the requirements of Specification Section 932 for Ancillary Structures.
    A. For Collar Bearing Points provide:
       1. 4"x 4"x ½" Fiber Reinforced Pads;
       2. Plain Pads may be substituted for Fiber Reinforced Pads when sufficient bearing area is available on the concrete collar for the following:
          a. 10' Post Spacing: 4"x 4"x ½"
          b. 20' Post Spacing and Wall Height < 17 feet: 4"x 4"x ½"
          c. 20' Post Spacing and Wall Height ≥ 17 feet: 4"x 5"x ½"
    B. At panel bearing points between stacked panels, use Plain or Fiber Reinforced Bearing Pads.

GENERAL NOTES

Type "A"
SMOOTH

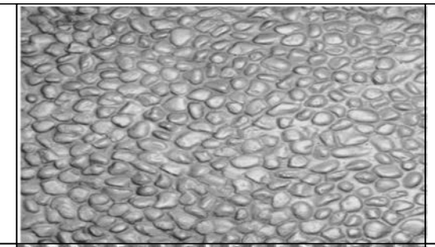

Type "F"
PEA GRAVEL

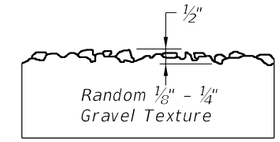

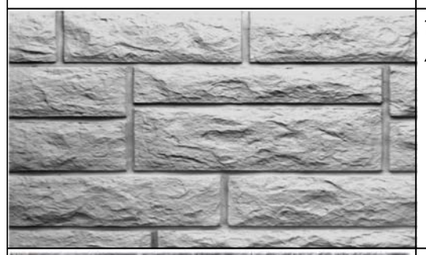

Type "B"
ASHLAR STONE

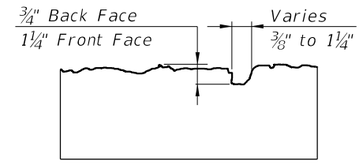

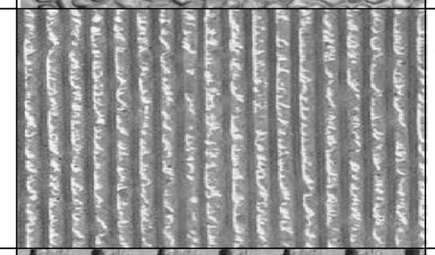

Type "G"
VERTICAL FRACTURED FIN

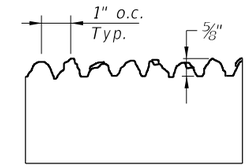

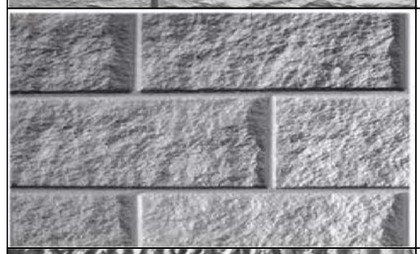

Type "C"
SPLIT FACE RUNNING BOND BLOCK

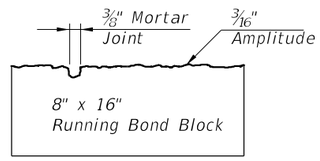

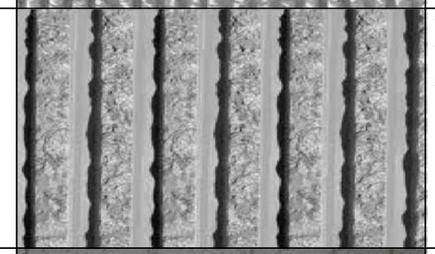

Type "H"
TRAPEZOID VERTICAL FINS W/ FRACTURED FACE (COLORADO DRAG AGGREGATE)

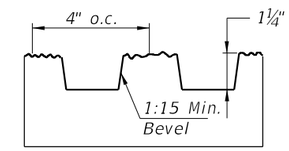

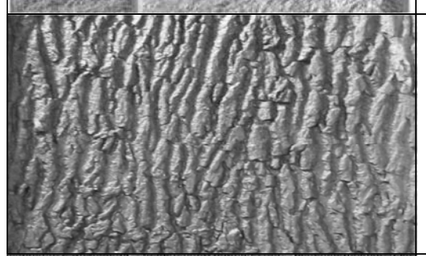

Type "D"
FRACTURED GRANITE

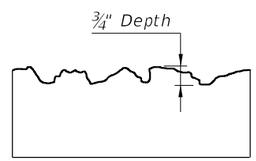

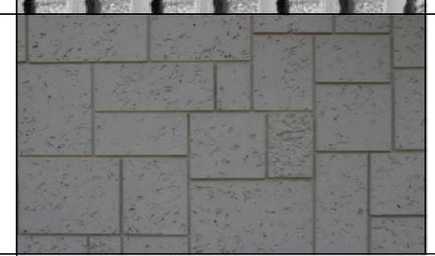

Type "I"
CUT CORAL BLOCK (RUNNING BOND)

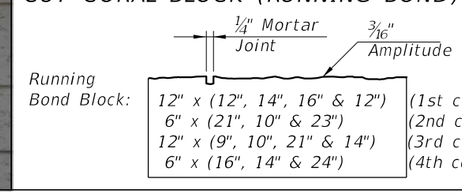

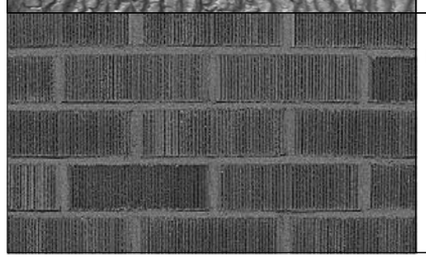

Type "E"
WIRE-CUT BRICK

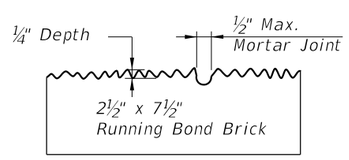

NOTES:

1. Surfaces shall be formed, rolled, or pressed using form liners in accordance with the Plans and Specifications for Class 3 Surface Finish.
2. See Noise Wall Data Tables for project aesthetic requirements.

TEXTURE OPTIONS

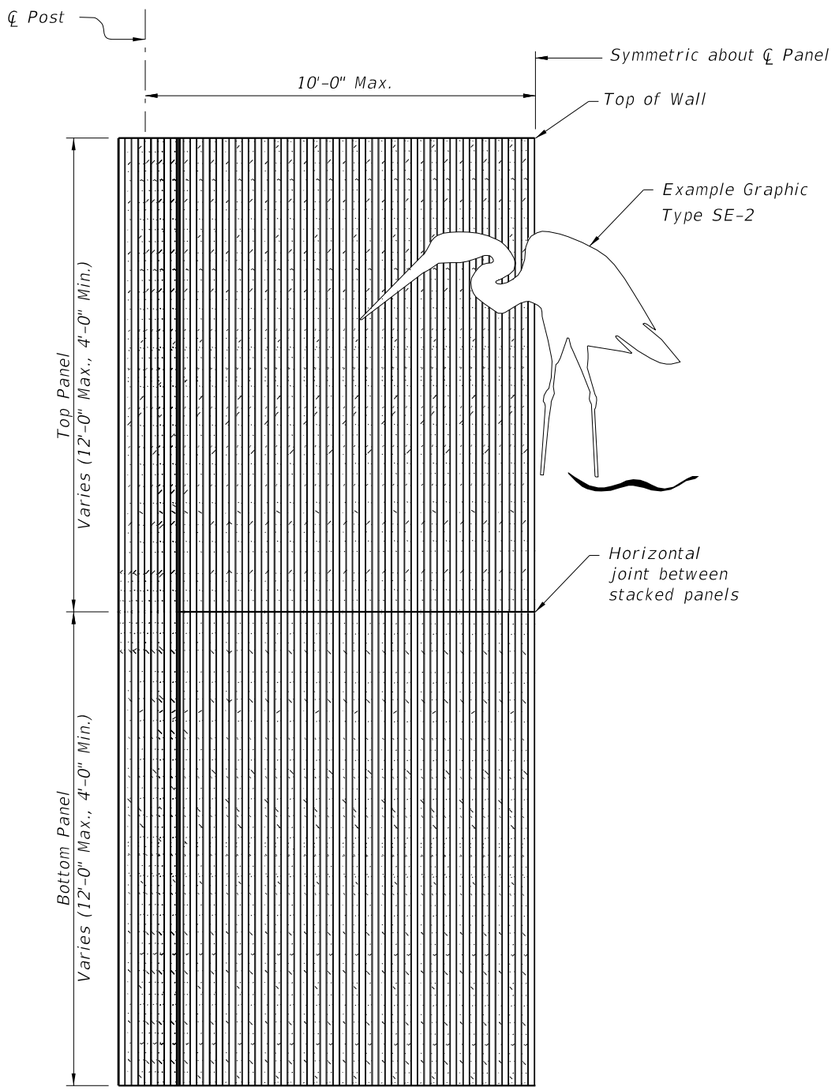

HALF ELEVATION
(Front Face Post and Panel Texture Type "H" shown)
(Graphic Type SE-2 shown)
(Two stacked panels shown, three stacked panels similar)

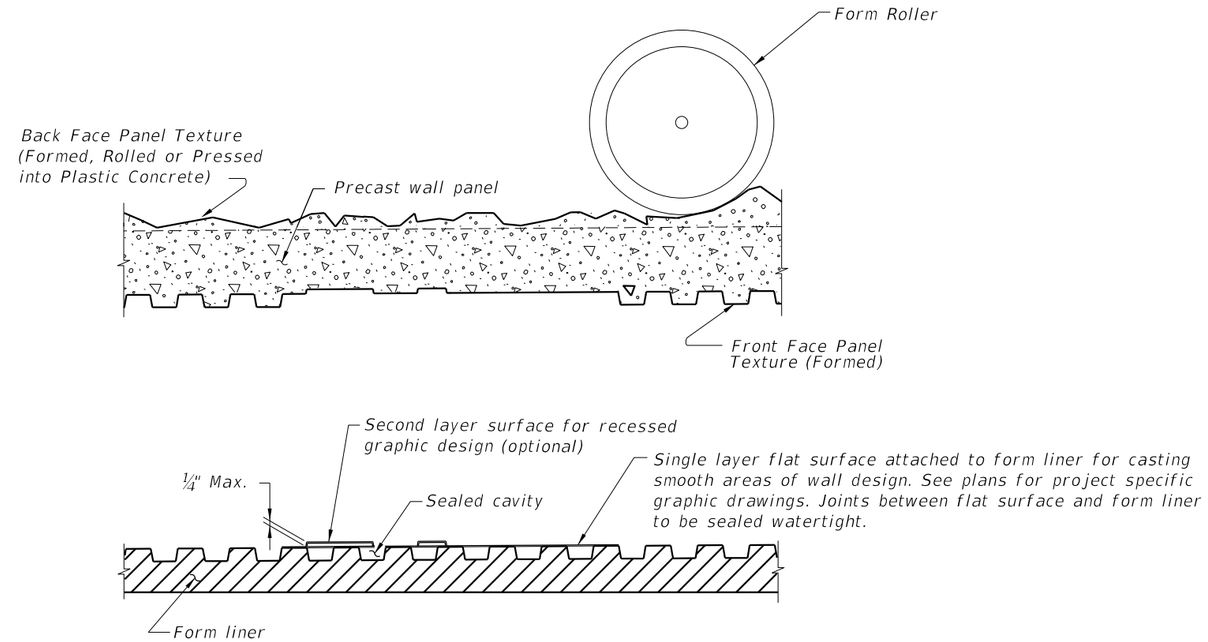

TYPICAL FORMING DETAIL
(Front Face Panel Texture Type "H" shown)
(Back Face Panel Texture Type "D" shown)
(Post Forming Details Similar)

NOTES:

1. Submit specific form liner samples for approval by the Engineer.
2. Textures and graphics shown are for demonstration purposes only. See Noise Wall Data Tables in the plans for project specific texture and graphic requirements.

GRAPHICS & TEXTURE DETAILS

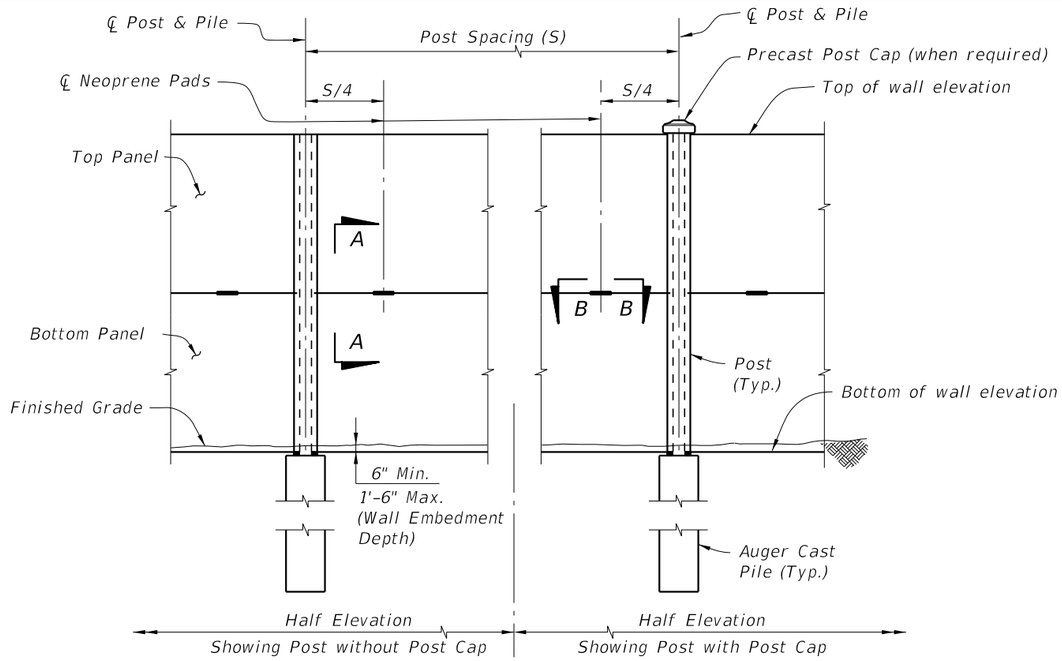

TYPICAL ELEVATION

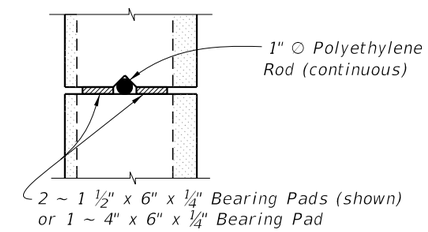

SECTION A-A

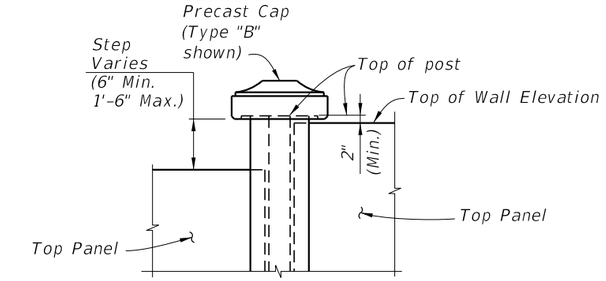

WITH POST CAP

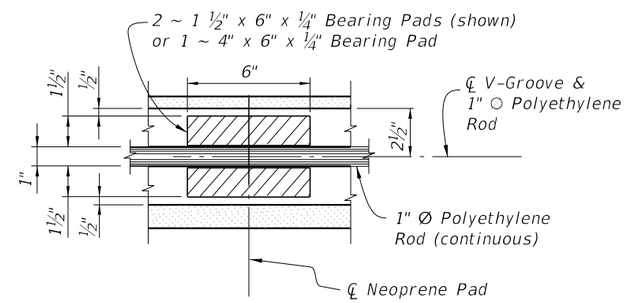

SECTION B-B

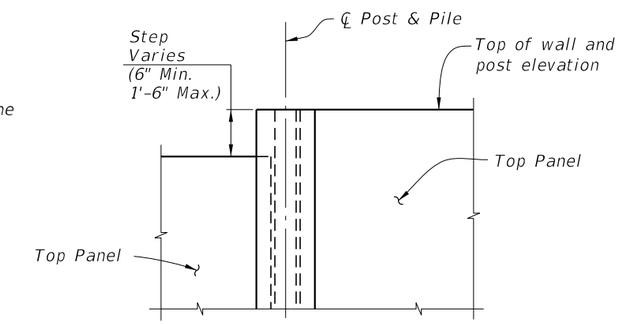

WITHOUT POST CAP

ELEVATION STEP AT TOP OF WALL

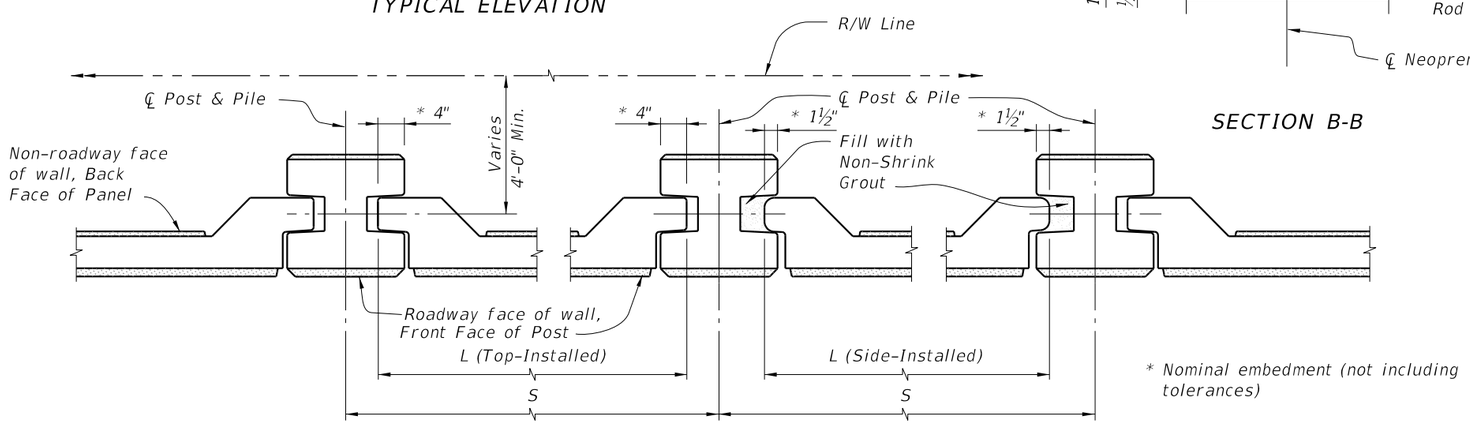

PLAN
(Showing Flush Panel)

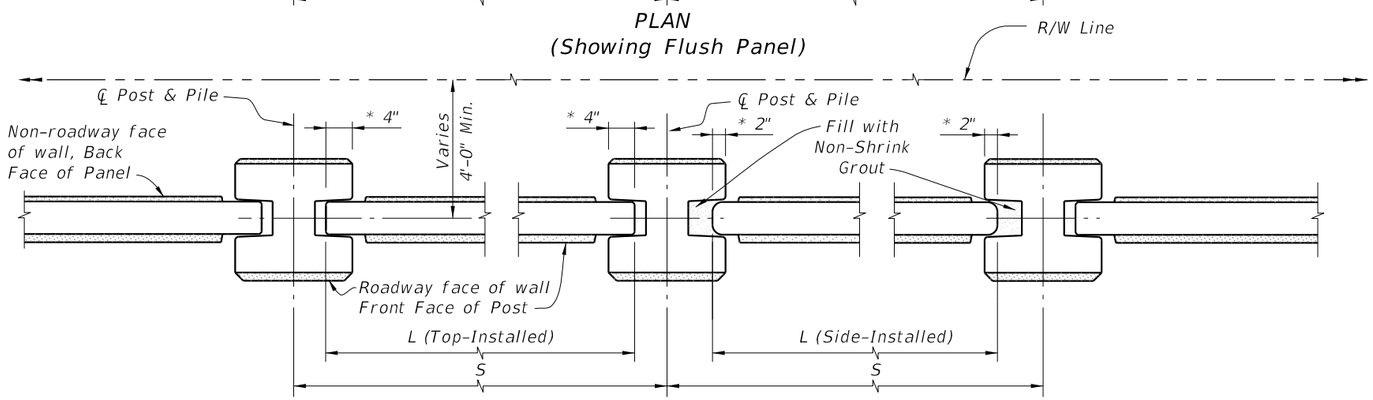

PLAN
(Showing Recessed Panel)

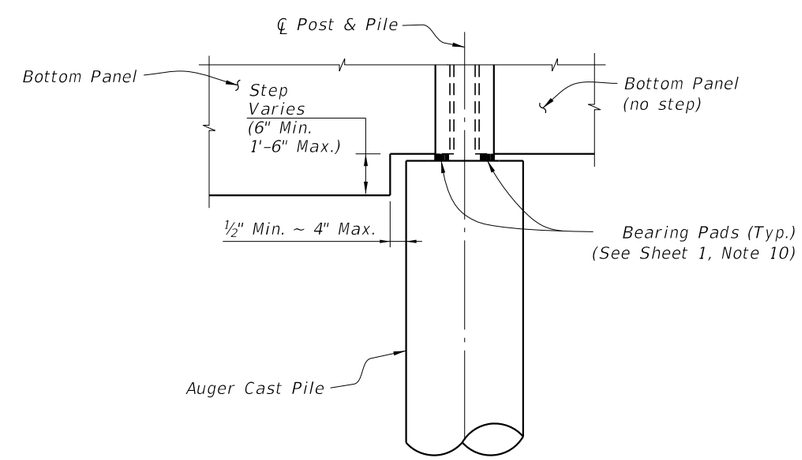

ELEVATION STEP AT BOTTOM OF WALL

Note:
See the plans for required post spacings (S).

TYPICAL DETAILS

LAST REVISION	REVISION	DESCRIPTION:			INDEX	SHEET
11/01/16			FY 2023-24 STANDARD PLANS	NOISE WALLS - (PRECAST)	534-200	4 of 16

10/20/2022 8:52:39 AM

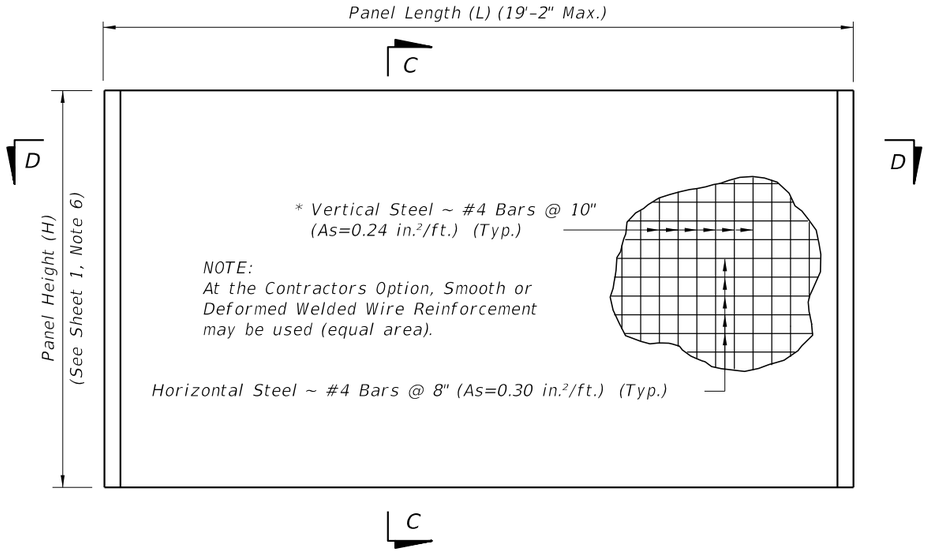

TYPICAL PANEL ELEVATION

* In lieu of utilizing the standard pick up points below, panels may be cast vertically or cast horizontally then tilted upright using tilt-tables prior to lifting from form. In this case, pick points must be placed in the top of panels only and transported maintaining the vertical orientation. If these criteria are met, the vertical steel may be reduced to #4 Bars @ 1'-3" (As=0.16 in.²/ft.).

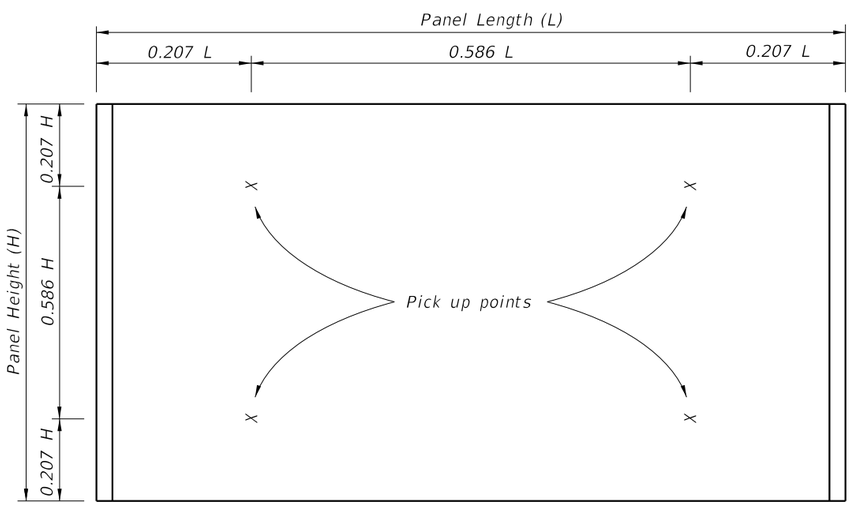

STANDARD PICK UP POINTS FOR PANELS
(Panels shall be rotated about long axis only)

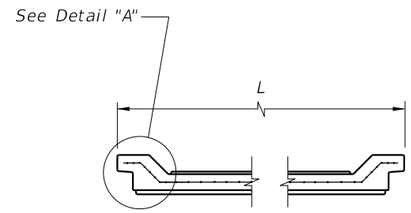

SECTION D-D
(Showing Flush Type Panel)

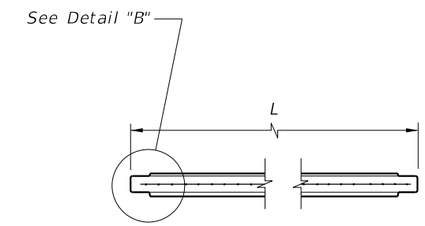

SECTION D-D
(Showing Recessed Type Panel)

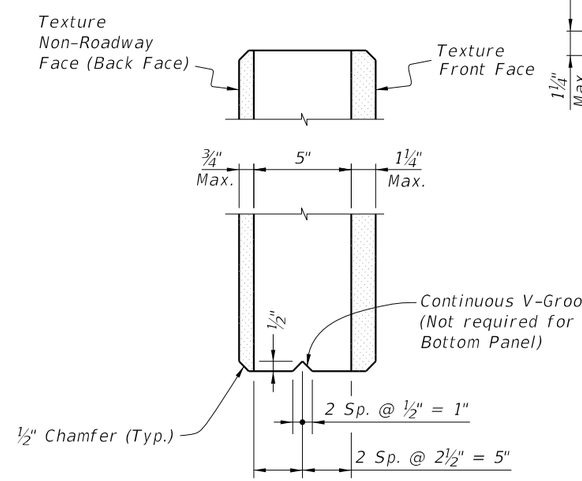

SECTION C-C

Notes:
1. See Sheet 3 for allowable methods of applying textures.
2. See plans for panel type and aesthetic requirements.
3. For equal post spacing, side-installed panel length will be shorter than top-installed Panel length.

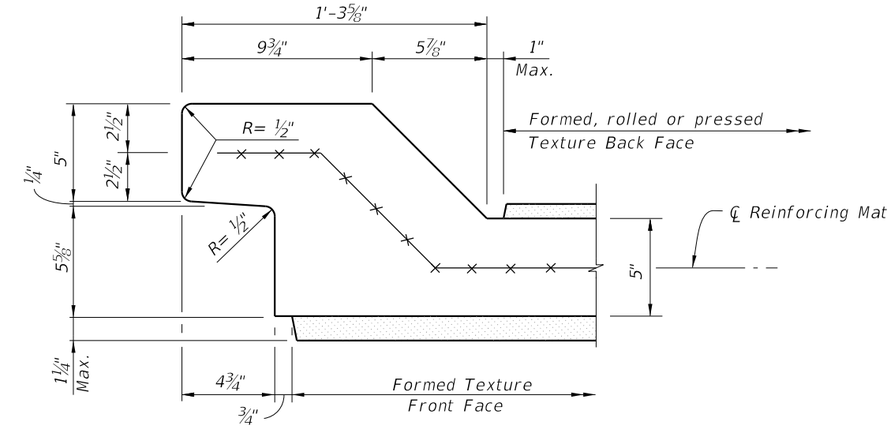

DETAIL "A" - TOP-INSTALLED
(Typical both ends)

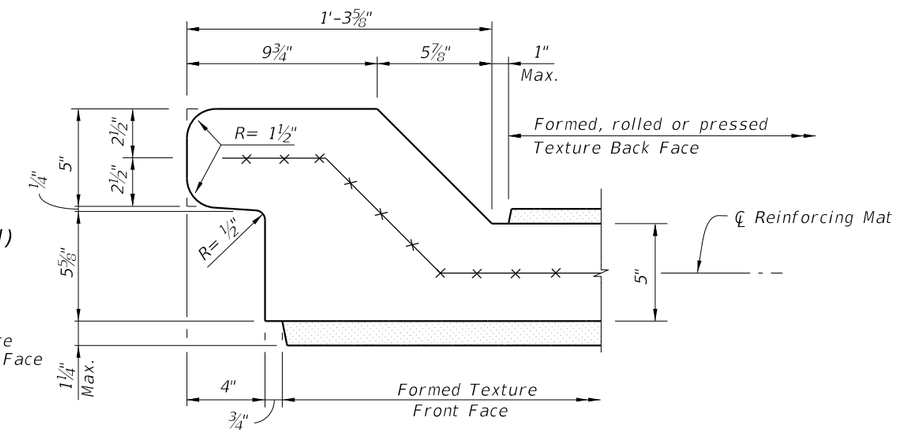

DETAIL "A" - SIDE-INSTALLED
(Typical both ends)

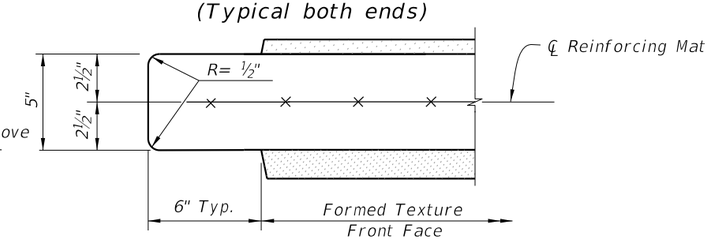

DETAIL "B" - TOP-INSTALLED
(Typical both ends)

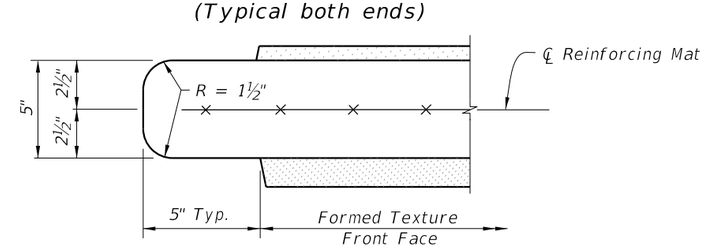

DETAIL "B" - SIDE-INSTALLED
(Typical both ends)

TYPICAL PANEL DETAILS

10/20/2022 8:52:40 AM

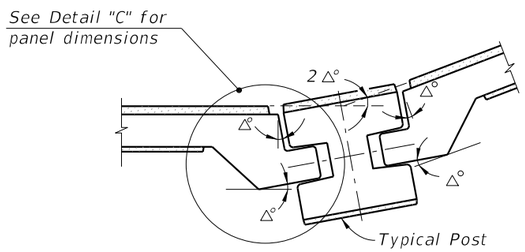

CASE 1
(Interior Angle)

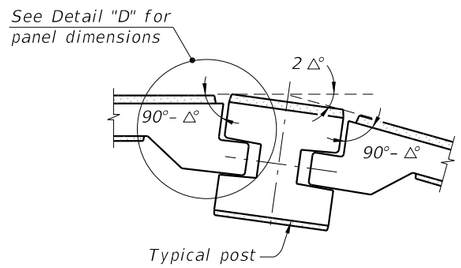

CASE 2
(Exterior Angle)

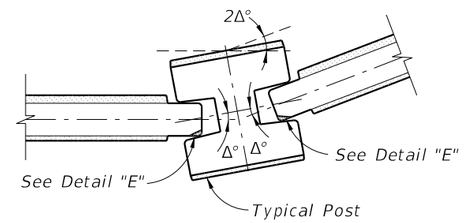

CASE 1
(Interior Angle)

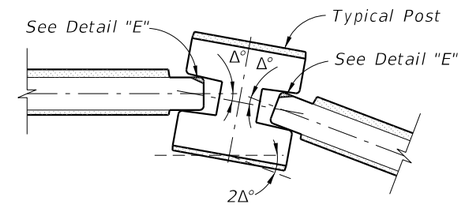

CASE 2
(Exterior Angle)

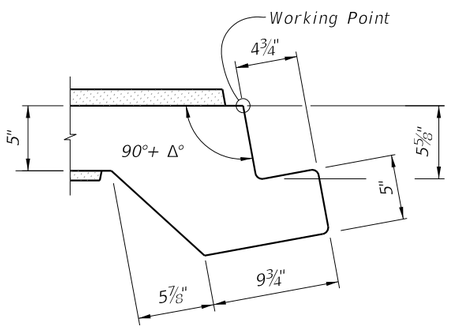

DETAIL "C"

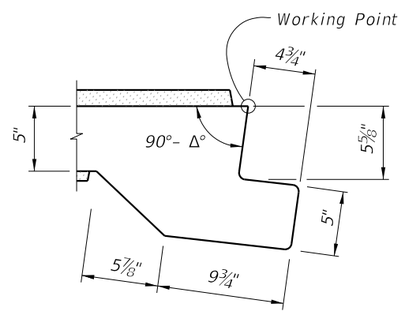

DETAIL "D"

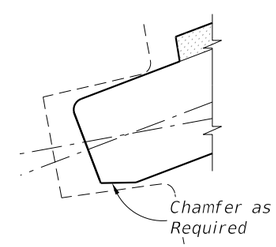

DETAIL "E"
(Back Face Chamfer Shown
Front Face Chamfer Similar)

NOTE:
The shop drawings shall include specific pivoting details of panel ends at locations where the deflection angle (2Δ°) between panels exceeds 7°.

PIVOTING DETAILS
(Flush Type Panel)

NOTE:
The shop drawings shall include specific pivoting details of panel ends at locations where the deflection angle (2Δ°) between panels exceeds 20°.

PIVOTING DETAILS
(Recessed Type Panel)

TYPICAL PANEL DETAILS

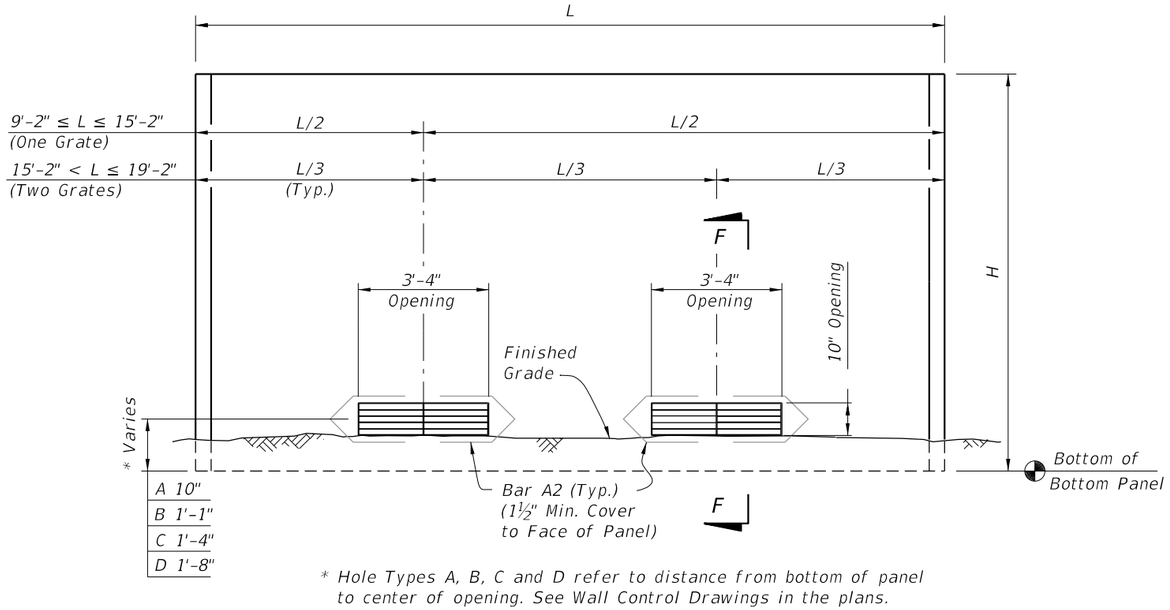

* Hole Types A, B, C and D refer to distance from bottom of panel to center of opening. See Wall Control Drawings in the plans.

DRAINAGE HOLES TYPES A, B, C & D
(Front Face of Wall Shown)
(Two Holes Shown,
One Hole Similar)

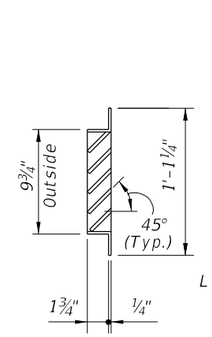

SECTION G-G

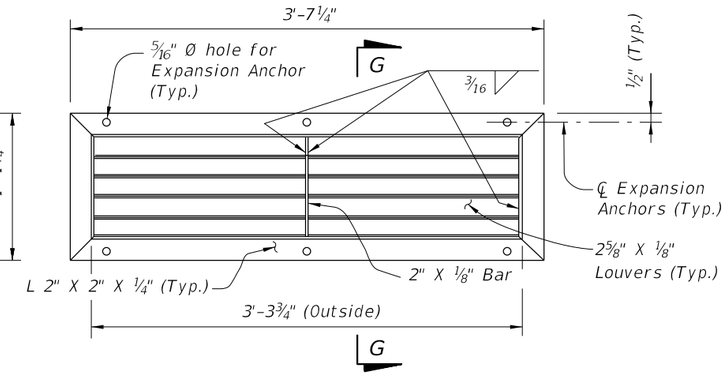

GRATING DETAIL

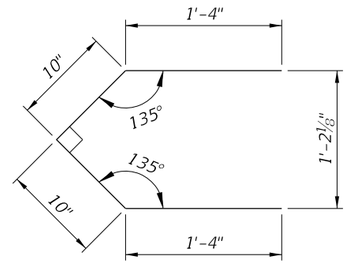

BAR A2 (Pair)
Bar Length = 4'-4"

BAR BENDING DETAILS (#3 Bars)

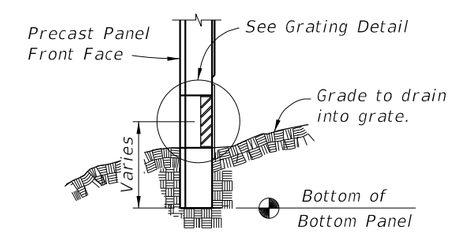

SECTION F-F

GRATING NOTES:

1. Grating shall be ASTM A36 steel welded in accordance with the current edition of ANSI/AWS D1.1 Steel Welding Code. Hot-dip galvanize grate after fabrication in accordance with Specification Section 962.
2. Expansion Anchors: Use ¼" Ø x 2" min. corrosion resistant (zinc/aluminum alloy or stainless steel) expansion anchors to connect grates to panels.
3. Blockout textured concrete surface for a strip 2" wide around drainage hole to enable secure attachment of the drainage grate.

DRAINAGE HOLE DETAILS

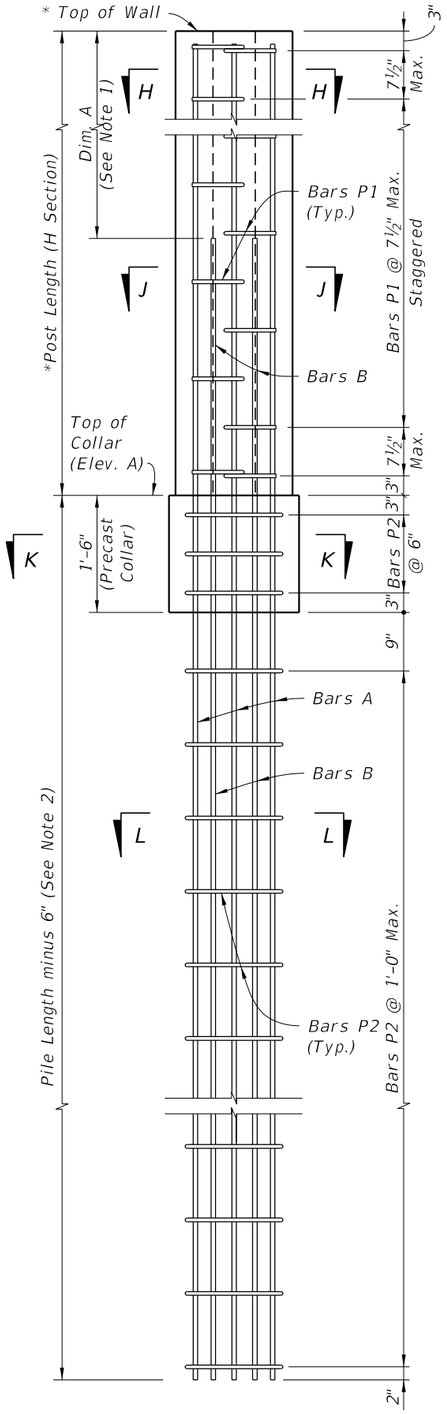

TYPICAL POST

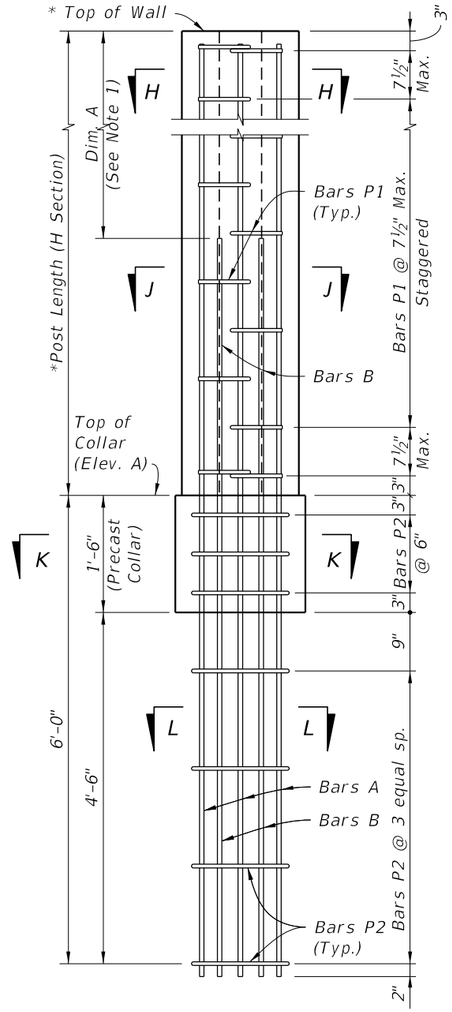

LOW CLEARANCE OPTION

* Extend Post 2" above top of high side wall panel when post caps are shown in plans. See Sheet 4, "ELEVATION STEP AT TOP OF WALL".

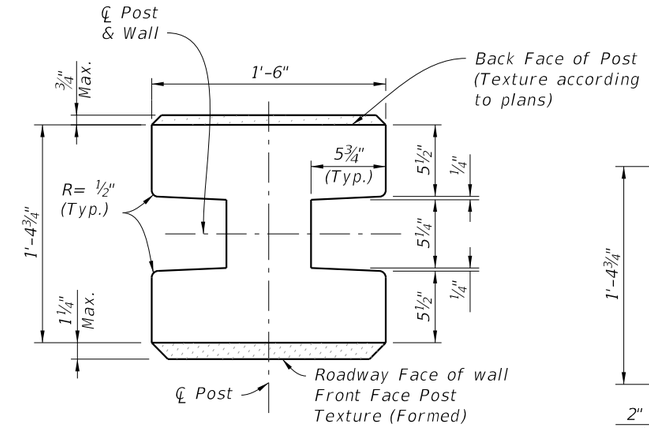

TYPICAL POST SECTION
(H Section)

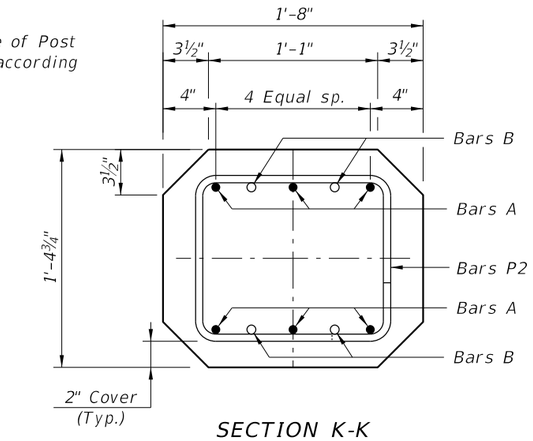

SECTION K-K
(Collar Section)

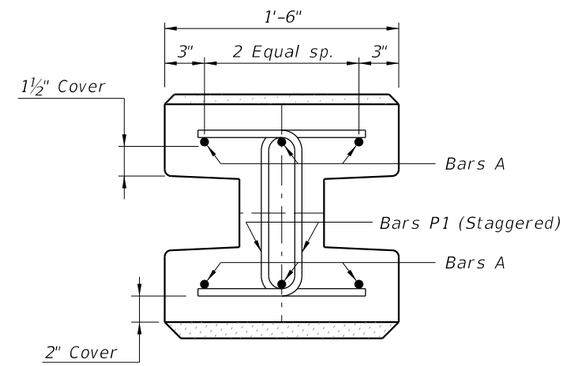

SECTION H-H

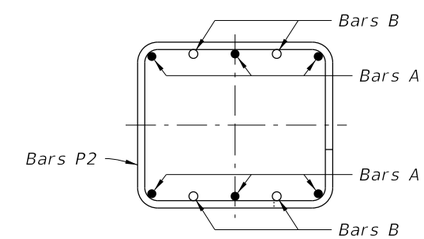

SECTION L-L

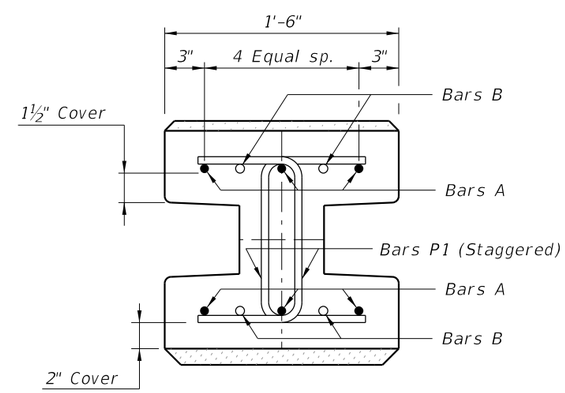

SECTION J-J

NOTES:
1. For Post Reinforcing see Sheets 15 and 16.
2. For Pile Lengths Tables see Sheets 15 and 16.

STANDARD POST REINFORCEMENT
(Standard Post Shown, 45° Corner Posts Similar)

STANDARD POST DETAILS

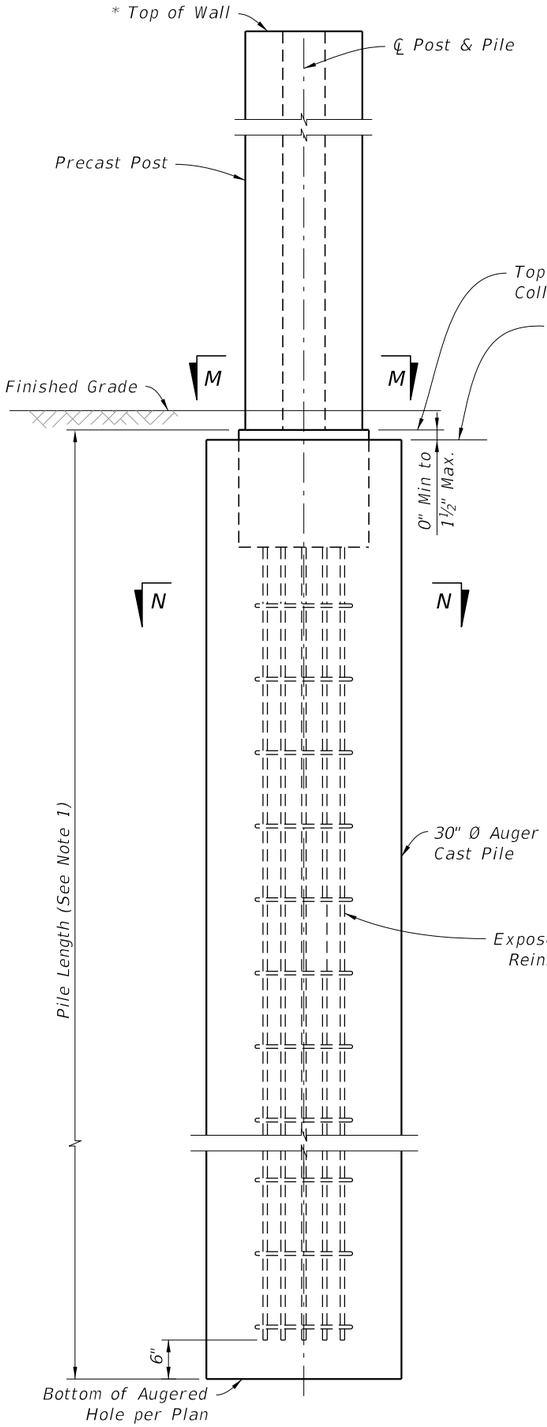

TYPICAL POST

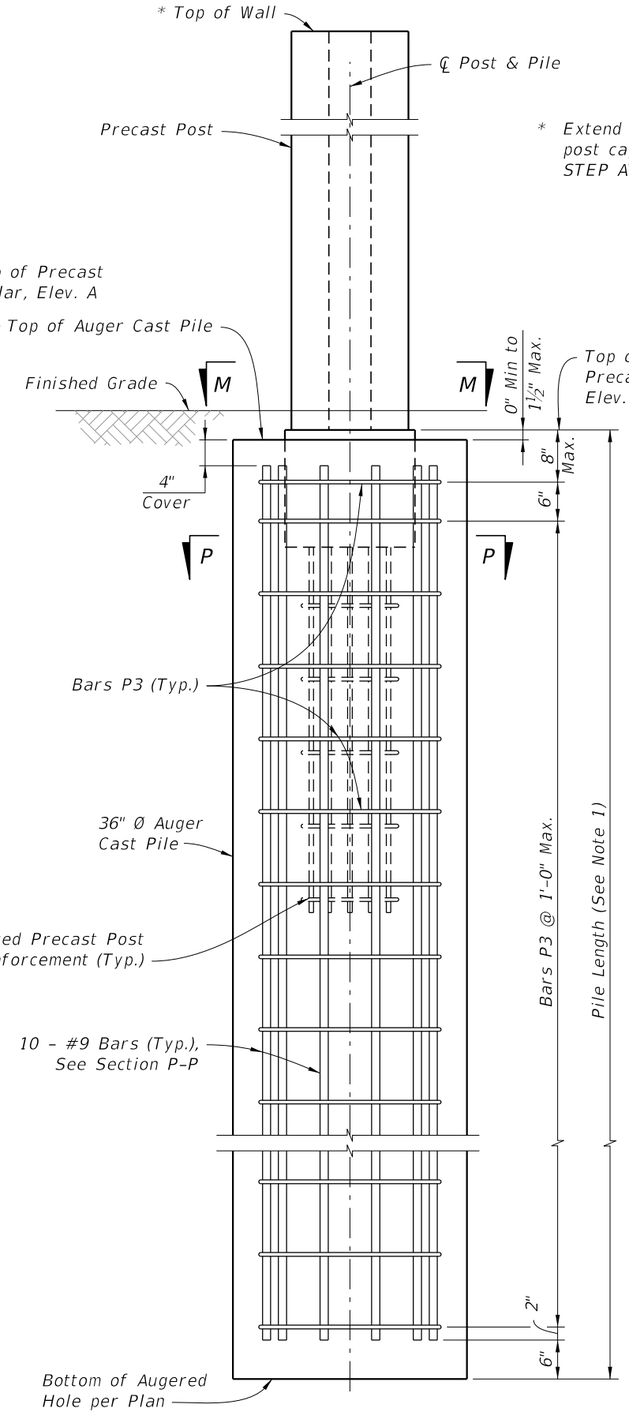

LOW CLEARANCE OPTION

STANDARD POST PLACEMENT IN AUGER CAST PILE
(H-Post Shown, 45° Corner Posts Similar)

* Extend Post 2" above top of high side wall panel when post caps are shown in plans. See Sheet 4, "ELEVATION STEP AT TOP OF WALL".

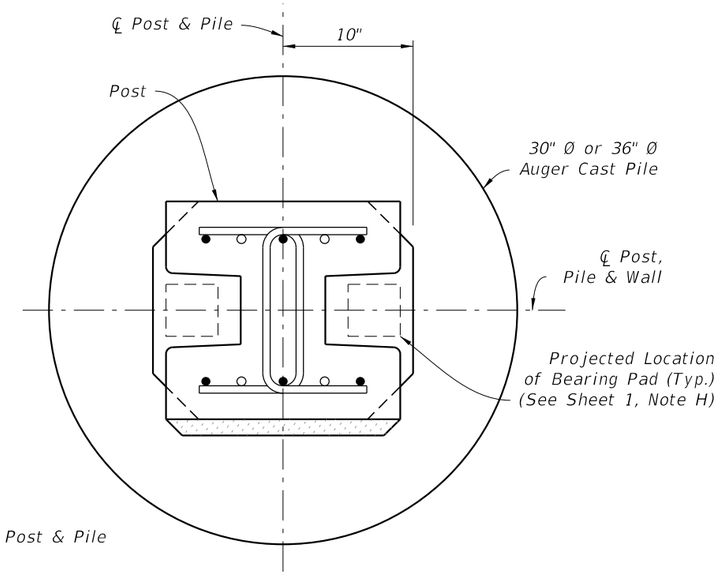

SECTION M-M

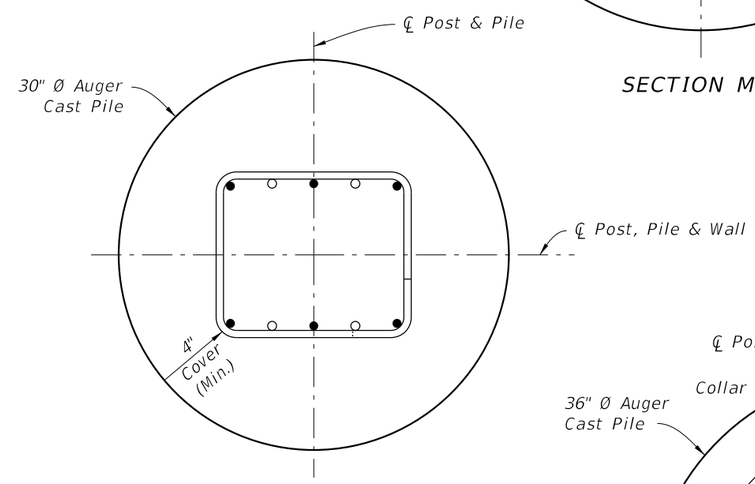

SECTION N-N

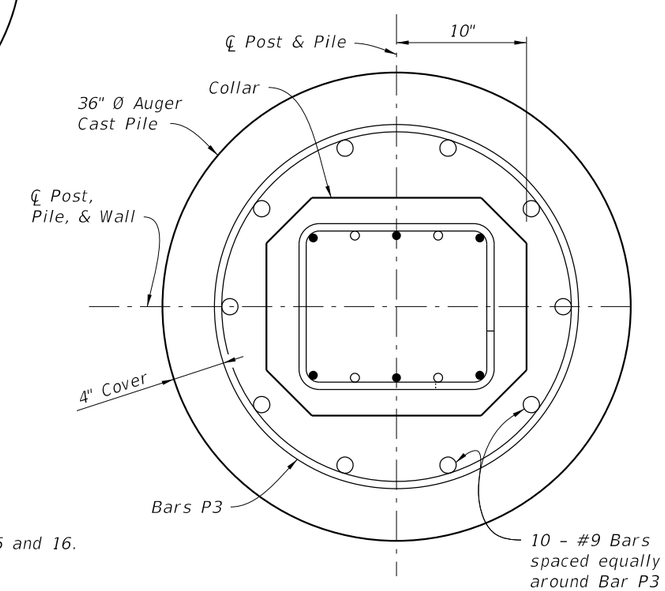

SECTION P-P
Low Clearance Option

NOTE:
1. For Pile Length Tables, see Sheets 15 and 16.

POST PLACEMENT & PILE REINFORCING STEEL DETAILS

10/20/2022 8:52:43 AM

LAST REVISION	REVISION	DESCRIPTION:			INDEX	SHEET
11/01/16			FY 2023-24 STANDARD PLANS	NOISE WALLS - (PRECAST)	534-200	9 of 16

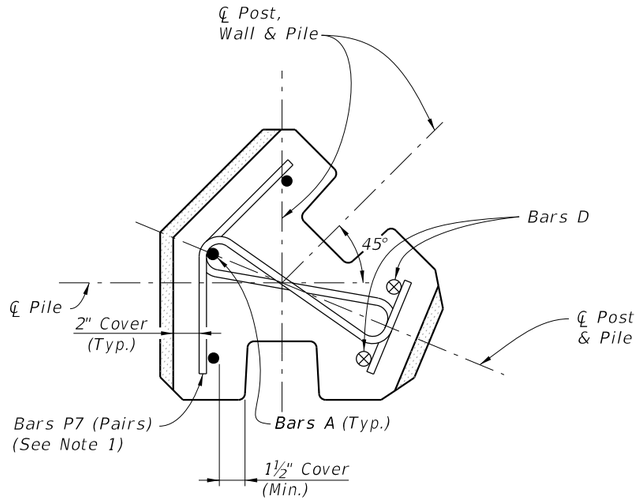

SECTION H-H
(45° Corner Post)

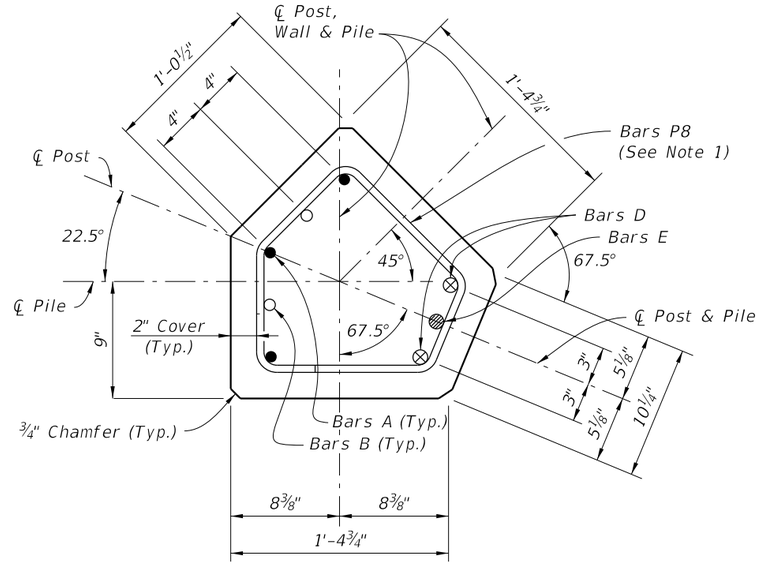

SECTION K-K
(Collar Section, 45° Corner Post)

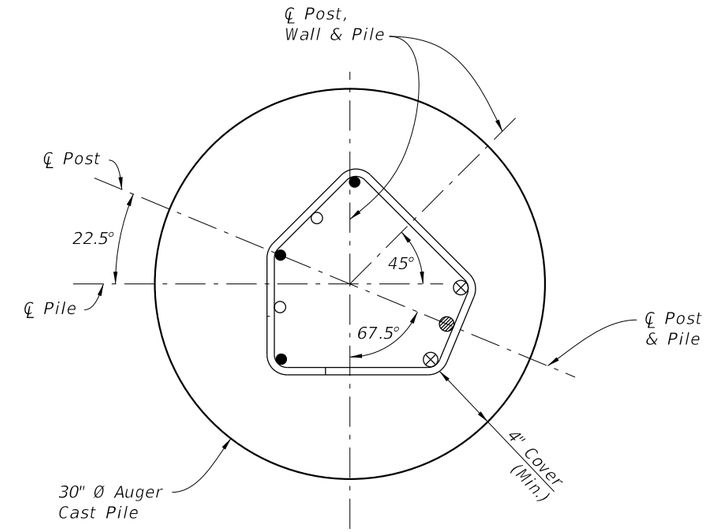

SECTION N-N
(45° Corner Post)

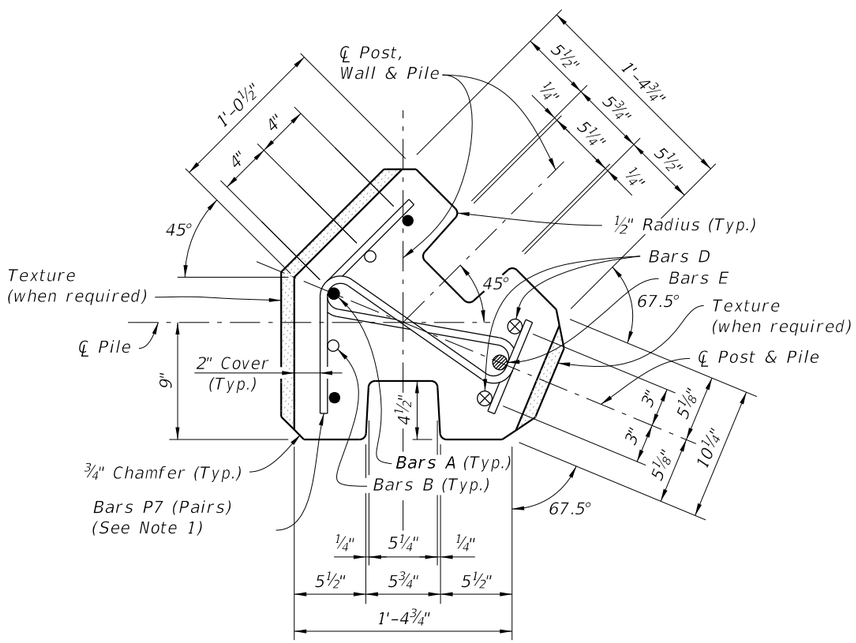

SECTION J-J
(45° Corner Post)

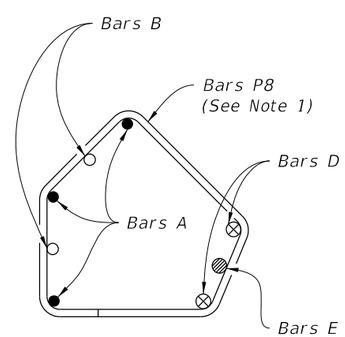

SECTION L-L
(45° Corner Post)

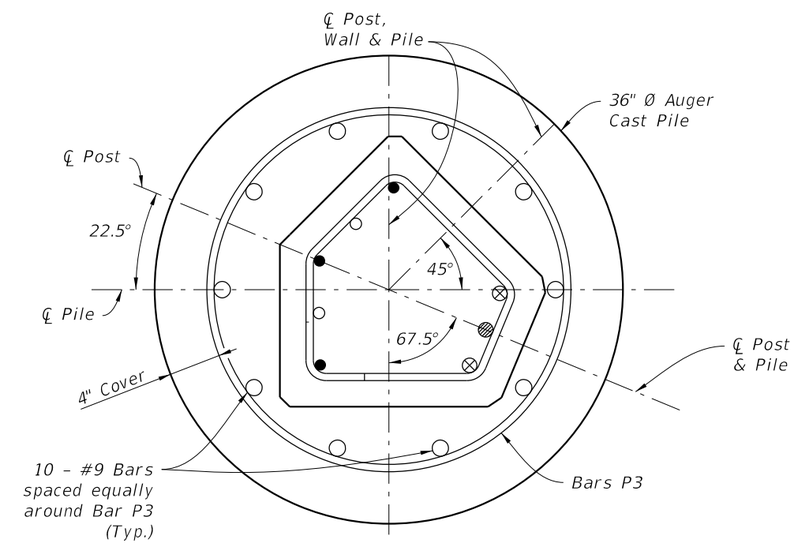

SECTION P-P
(45° Corner Post)

45° POST NOTES:

1. Reference Sheets 8 & 9 for location of Sections.
   Space Bars P7 as shown for Bars P1.
   Space Bars P8 as shown for Bars P2.
2. Match texture thickness with appropriate Panel face.
3. For Post Reinforcing, see sheets 15 & 16.
4. For Pile Length Tables, see sheets 15 & 16.

45° POST DETAILS

45° POST PLACEMENT IN AUGER CAST PILE

45° CORNER POST DETAILS

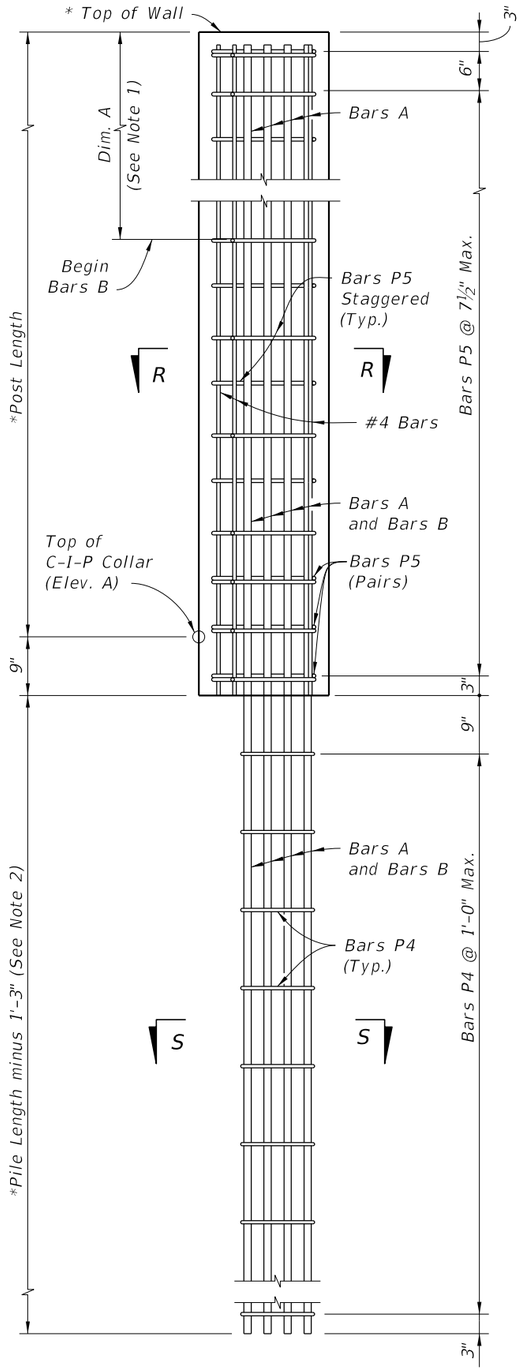

TYPICAL POST

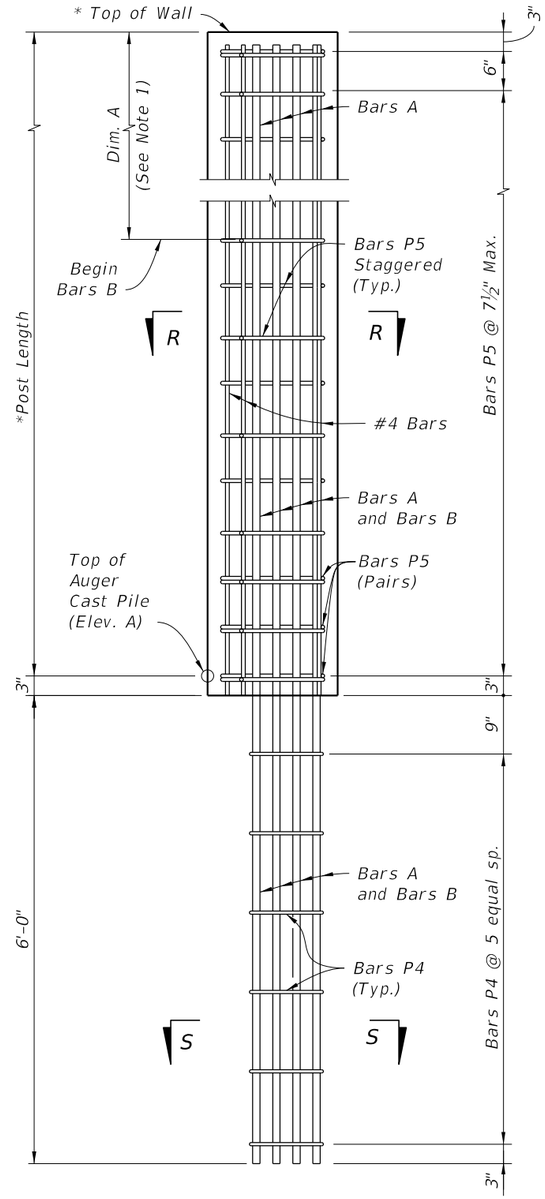

LOW CLEARANCE OPTION

* Extend Post 2" above top of high side wall panel when post caps are shown in plans. See Sheet 4, "ELEVATION STEP AT TOP OF WALL".

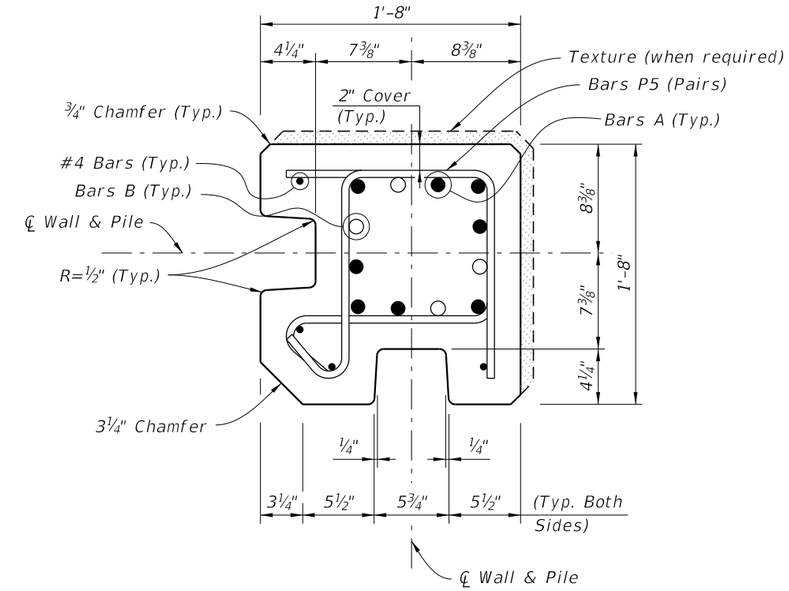

SECTION R-R

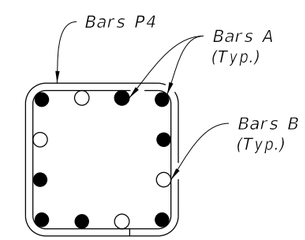

SECTION S-S

90° CORNER POST NOTES:

1. For Post Reinforcing, see Sheets 15 and 16.
2. For Pile Length Tables, see Sheets 15 and 16.
3. Reduce typical panel length or adjust pile spacing at each 90° Corner Post.
4. Match texture thickness with appropriate Panel face.

90° CORNER POST REINFORCMENT

(Post Surface Features Not Shown For Clarity)

90° CORNER POST DETAILS

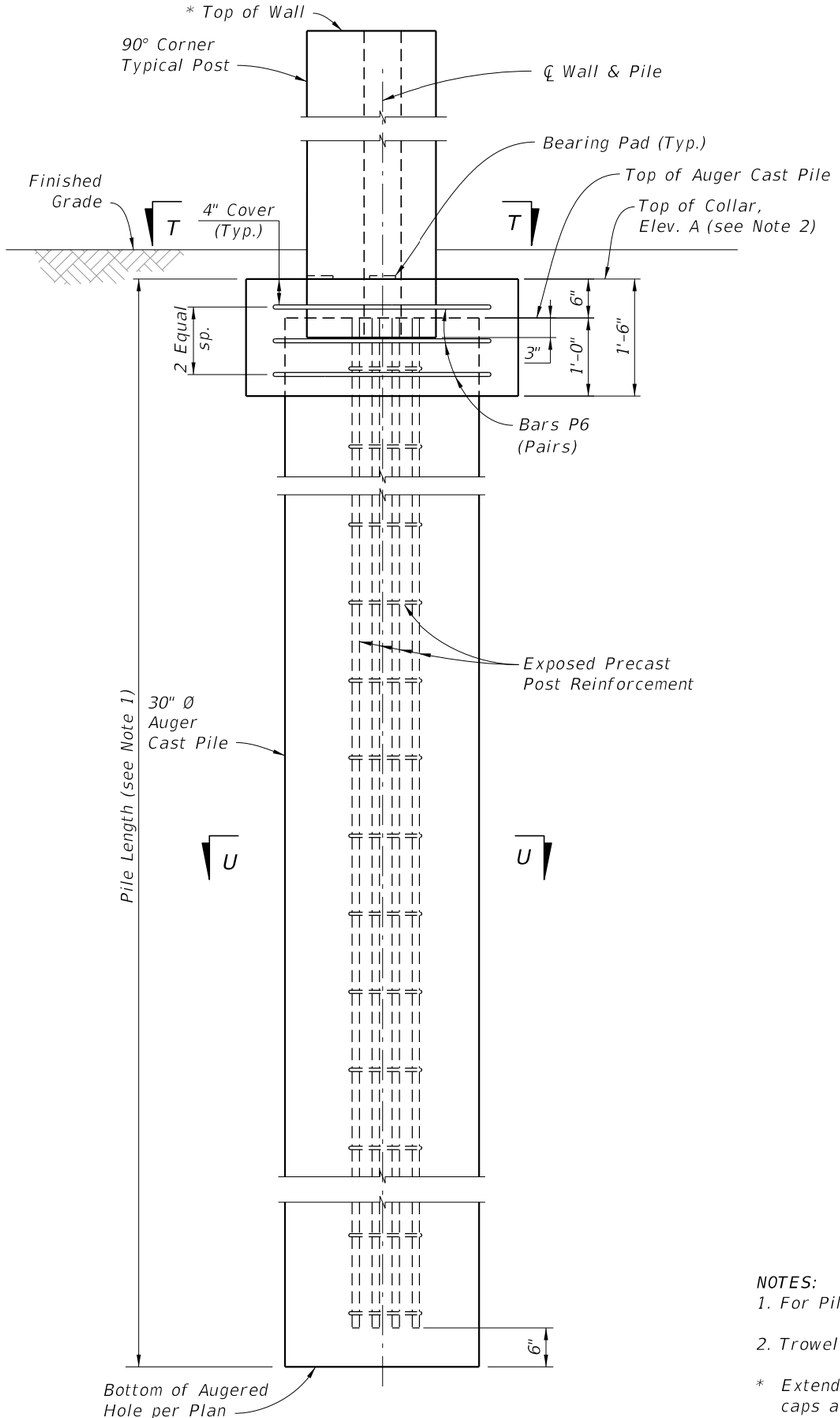

ELEVATION

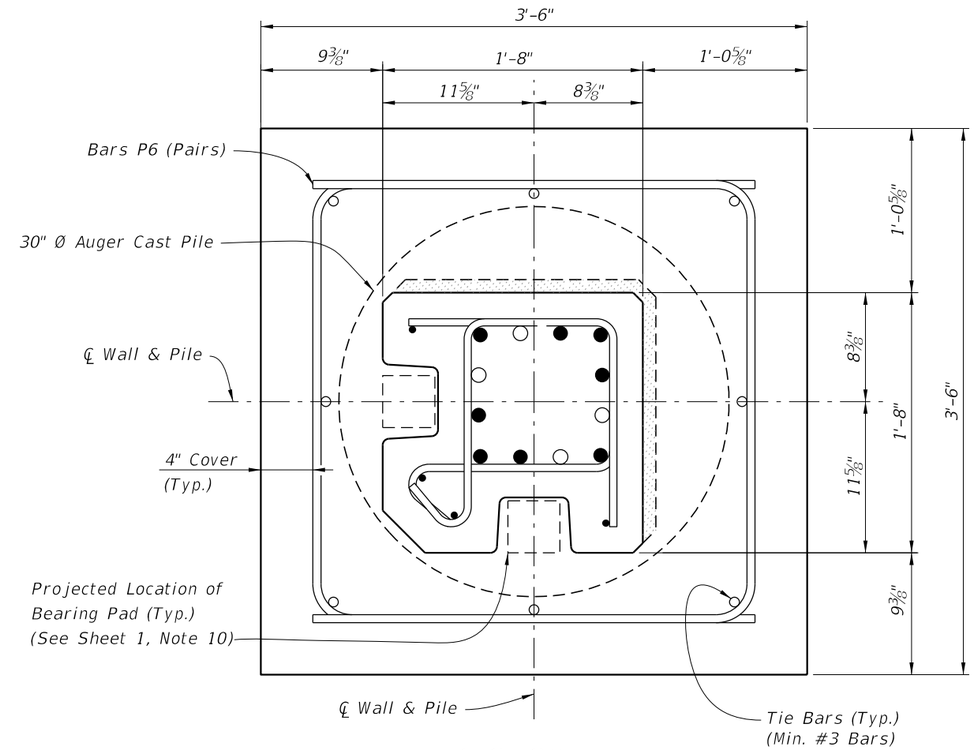

SECTION T-T
C-I-P COLLAR

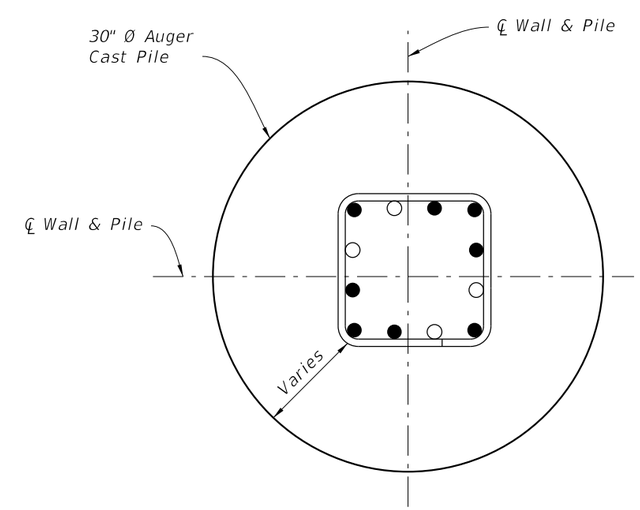

SECTION U-U

NOTES:
1. For Pile Length Tables, see Sheets 15 and 16.

2. Trowel Finish top of Collar to allow placement of Bearing Pads.

* Extend Post 2" above top of high side wall panel when post caps are shown in plans. See Sheet 4, "ELEVATION STEP AT TOP OF WALL".

90° CORNER TYPICAL POST PLACEMENT DETAILS

LAST REVISION	REVISION	DESCRIPTION:	FY 2023-24 STANDARD PLANS	NOISE WALLS - (PRECAST)	INDEX	SHEET
11/01/17					534-200	12 of 16

10/20/2022 8:52:46 AM

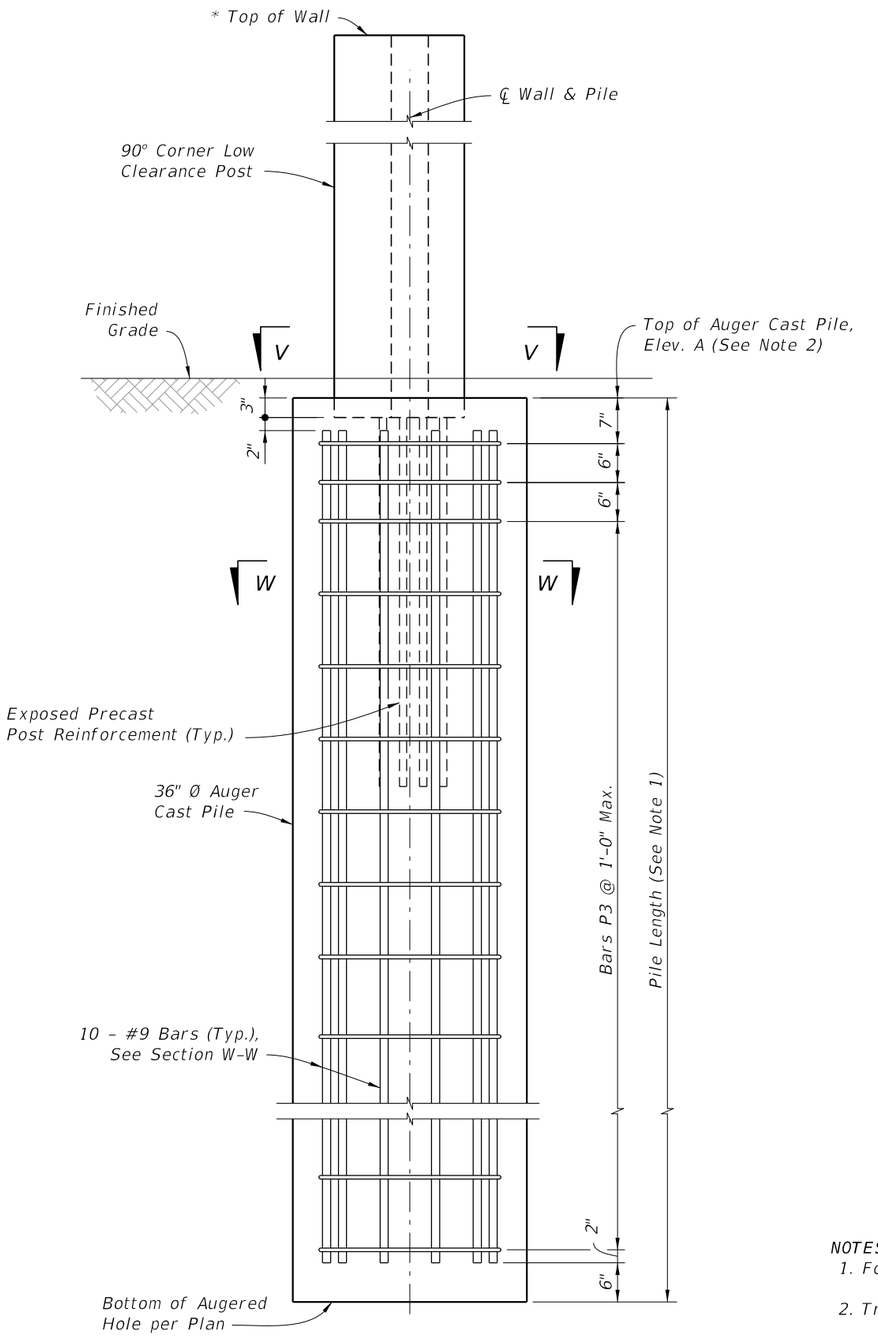

ELEVATION

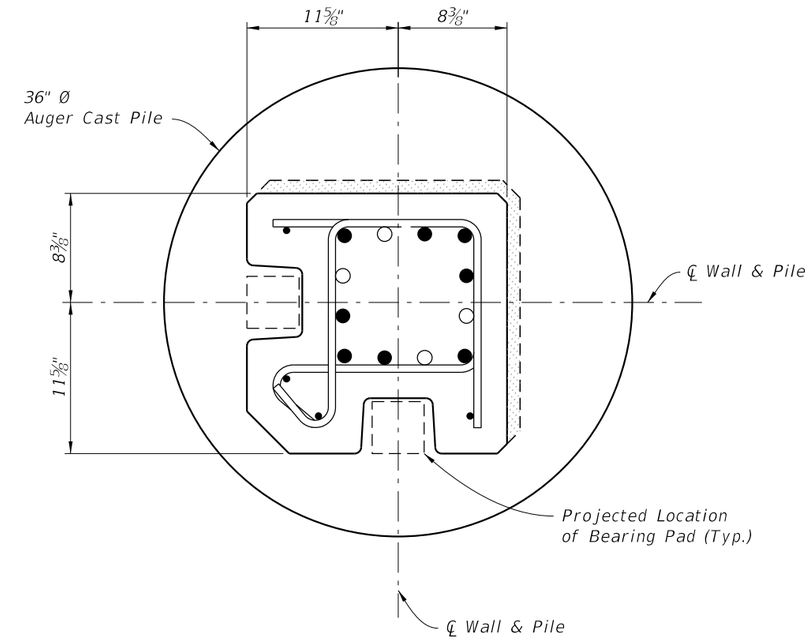

SECTION V-V

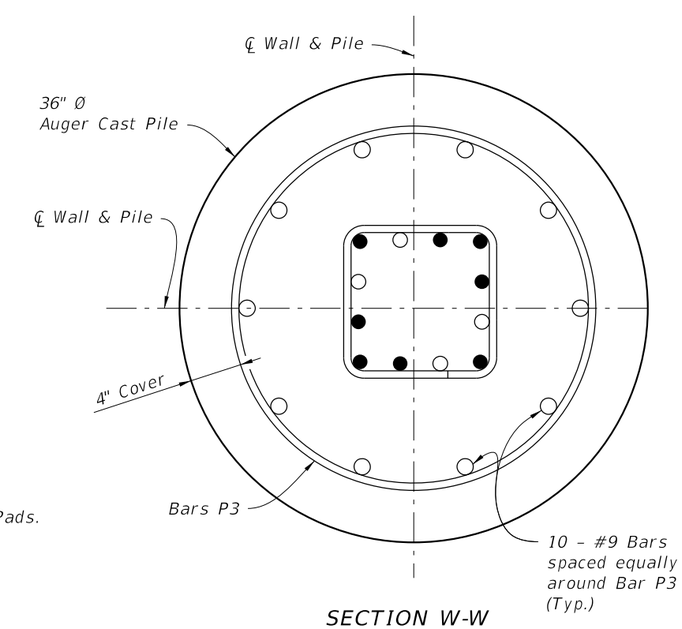

SECTION W-W

NOTES:

1. For Pile Length Tables, see Sheets 15 and 16.
2. Trowel Finish top of auger cast pile to allow placement of Bearing Pads.

* Extend Post 2" above top of high side wall panel when post caps are shown in plans. See Sheet 4, "ELEVATION STEP AT TOP OF WALL".

90° CORNER LOW CLEARANCE POST PLACEMENT & PILE REINFORCING STEEL DETAILS

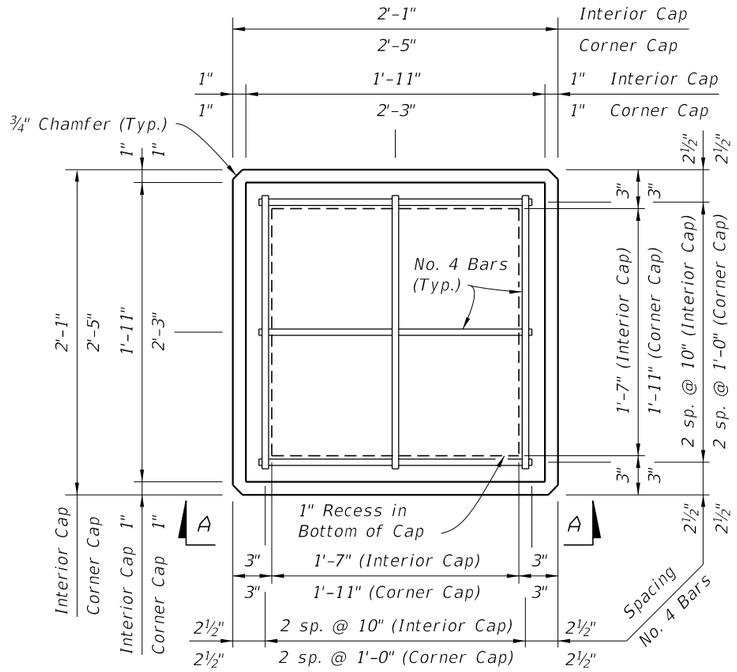

PLAN VIEW
(Type "A" Cap Shown, Type "B" & "C" Caps Similar)

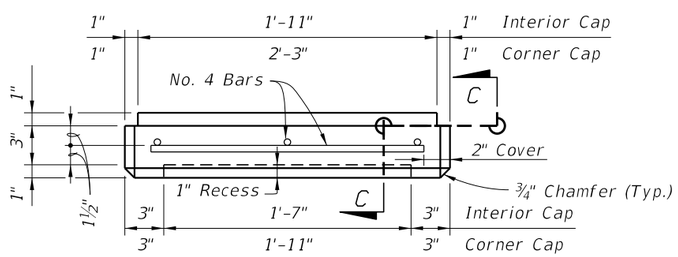

VIEW A-A SHOWN, VIEW B-B SIMILAR
(Type "A" Cap Shown, Type "B" & "C" Caps Similar)

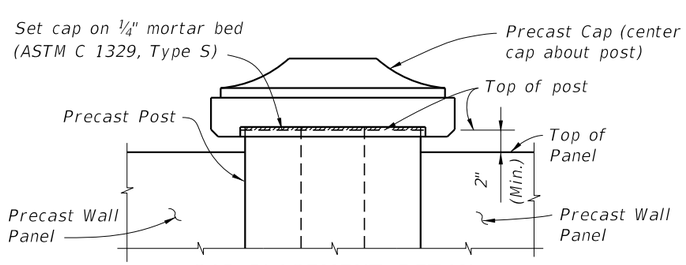

CAP PLACEMENT DETAIL
(Type "B" Cap Shown, Type "A" & "C" Caps Similar)

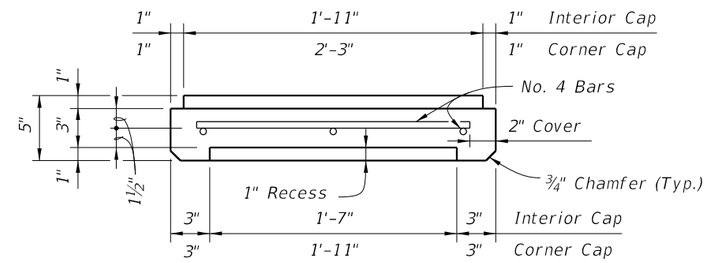

SECTION C-C

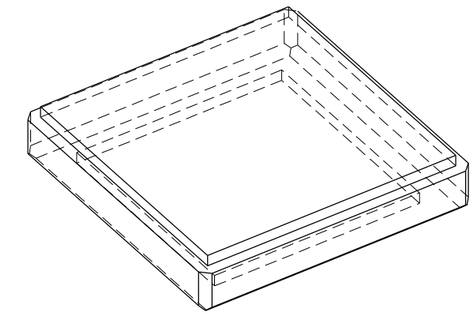

PICTORIAL VIEW

TYPE "A" CAP DETAILS

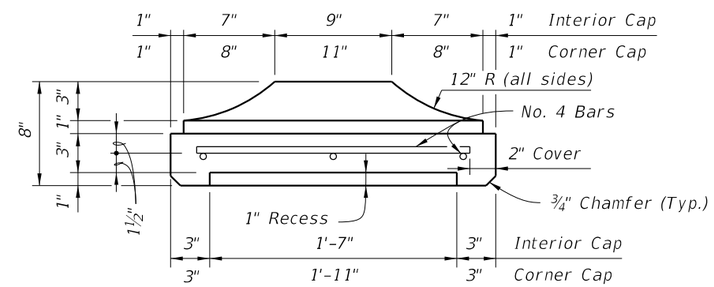

SECTION C-C

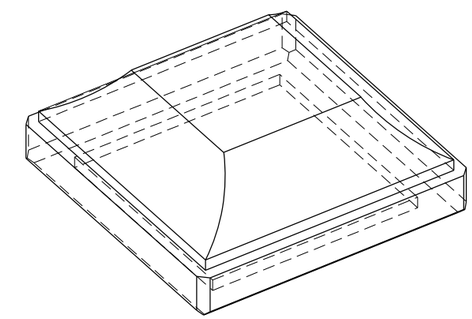

PICTORIAL VIEW

TYPE "B" CAP DETAILS

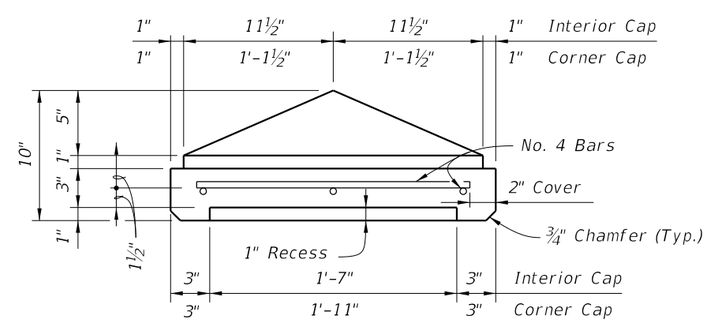

SECTION C-C

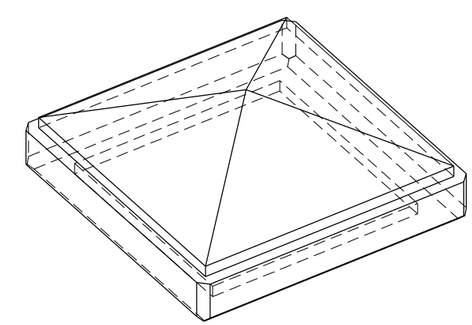

PICTORIAL VIEW

TYPE "C" CAP DETAILS

PRECAST POST CAPITAL

10/20/2022 8:52:48 AM

LAST REVISION	REVISION	DESCRIPTION:			INDEX	SHEET
11/01/14			FY 2023-24 STANDARD PLANS	NOISE WALLS - (PRECAST)	534-200	14 of 16

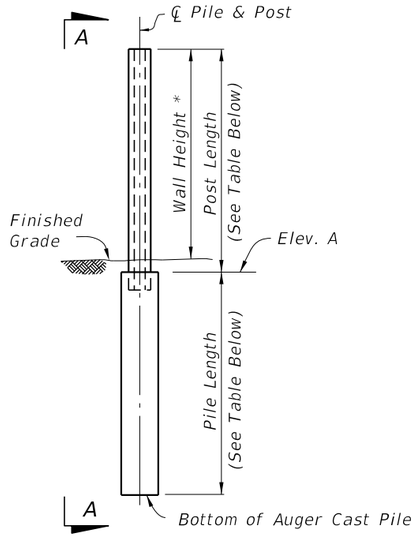

PILE/POST ELEVATION

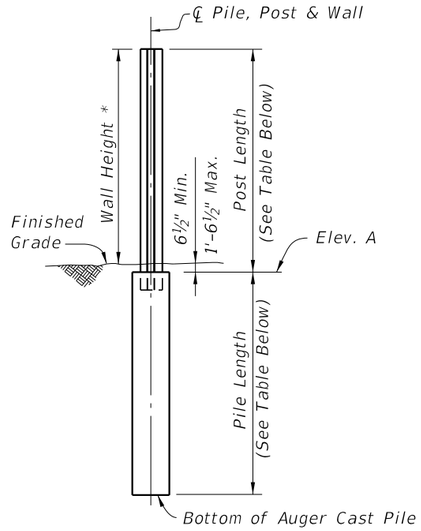

VIEW A-A

* See Sheet 1, Note 4.

BAR BENDING DETAILS

All bar dimensions in bending diagrams are out-to-out. All bars not shown in the bending diagrams are straight.

STANDARD POST (#4 Bars)

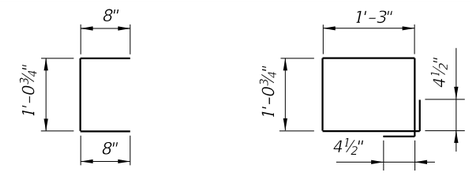

BAR P1
Bar Length = 2'-5"

BAR P2
Bar Length = 5'-5"

PILE (Low Clearance) (#4 Bars)

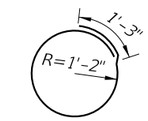

BAR P3
Bar Length = 8'-7"

45° CORNER POST (#4 Bars)

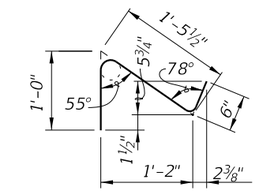

BAR P7
Bar Length = 3'-0"

90° CORNER POST (#4 Bars)

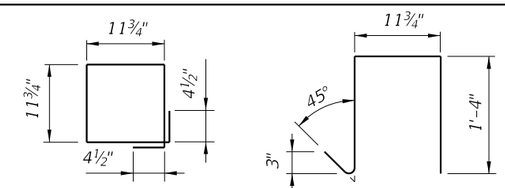

BAR P4
Bar Length = 4'-8"

BAR P5
Bar Length = 4'-0"

CAST-IN-PLACE COLLAR (#5 Bars)

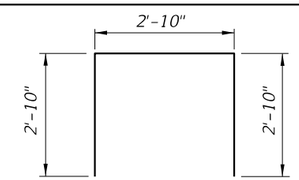

BAR P6 (Pair)
Bar Length = 8'-6" Each

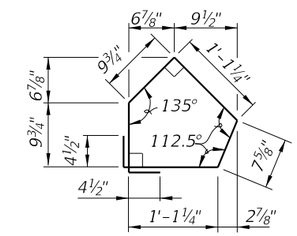

BAR P8
Bar Length = 5'-3"

TABLE 1A - TABLE OF POST REINFORCING STEEL

NOMINAL WALL HEIGHT (Feet)	POST LENGTHS		WIND SPEED = 130 MPH											
			10'-0" POST SPACING						20'-0" POST SPACING					
	WITHOUT CAP	WITH CAP	BARS A	BARS B		BARS D	BARS E		BARS A	BARS B		BARS D	BARS E	
			SIZE	SIZE	DIM 'A'	SIZE	SIZE	DIM 'A'	SIZE	SIZE	DIM 'A'	SIZE	SIZE	DIM 'A'
12	13'-0½"	13'-2½"	#4	#4	7'-11"	#4	#4	9'-11"	#5	#5	9'-8"	#6	#6	9'-4"
13	14'-0½"	14'-2½"	#4	#4	10'-11"	#4	#4	10'-11"	#5	#5	9'-8"	#6	#6	9'-4"
14	15'-0½"	15'-2½"	#4	#4	10'-11"	#5	#5	11'-8"	#6	#6	11'-4"	#7	#7	10'-8"
15	16'-0½"	16'-2½"	#4	#4	10'-11"	#5	#5	12'-8"	#6	#6	11'-4"	#7	#7	10'-8"
16	17'-0½"	17'-2½"	#5	#5	13'-8"	#5	#5	12'-8"	#6	#6	11'-4"	#7	#7	10'-8"
17	18'-0½"	18'-2½"	#5	#5	14'-8"	#5	#5	12'-8"	#7	#7	12'-8"	#7	#8	10'-0"
18	19'-0½"	19'-2½"	#5	#5	14'-8"	#6	#6	14'-4"	#7	#7	12'-8"	#8	#8	12'-0"
19	20'-0½"	20'-2½"	#5	#5	14'-8"	#6	#6	14'-4"	#7	#8	12'-0"	#8	#9	11'-3"
20	21'-0½"	21'-2½"	#6	#6	16'-4"	#6	#6	14'-4"	#8	#7	14'-8"	#9	#8	14'-0"
21	22'-0½"	22'-2½"	#6	#6	16'-4"	#6	#6	14'-4"	#8	#8	14'-0"	#9	#10	12'-4"
22	23'-0½"	23'-2½"	#6	#6	16'-4"	#7	#7	16'-8"	#8	#9	13'-3"	#10	#9	15'-3"

TABLE 1B - PILE LENGTHS (Feet) - WIND SPEED = 130 MPH

NOMINAL WALL HEIGHT (Feet)	10'-0" POST SPACING								20'-0" POST SPACING							
	H-POSTS				CORNER POSTS				H-POSTS				CORNER POSTS			
	SOIL 1		SOIL 2		SOIL 1		SOIL 2		SOIL 1		SOIL 2		SOIL 1		SOIL 2	
	30" ○	36" ○	30" ○	36" ○	30" ○	36" ○	30" ○	36" ○	30" ○	36" ○	30" ○	36" ○	30" ○	36" ○	30" ○	36" ○
12	11	10	10	10	11	10	10	10	15	14	13	12	14	13	13	12
13	12	11	10	10	11	10	10	10	15	14	13	13	15	14	13	12
14	12	11	11	10	12	11	10	10	16	15	14	13	15	14	14	13
15	12	12	11	10	12	11	11	10	16	15	15	13	16	15	14	13
16	13	12	11	11	12	12	11	10	17	16	15	14	16	15	15	14
17	13	12	12	11	13	12	11	11	18	16	16	14	17	16	15	14
18	14	13	12	11	13	12	12	11	18	17	16	15	18	16	15	14
19	14	13	12	12	14	13	12	11	19	17	16	15	18	17	16	15
20	14	13	13	12	14	13	12	12	19	18	17	16	19	17	16	15
21	15	14	13	12	14	13	13	12	20	18	17	16	19	18	17	16
22	15	14	14	13	15	14	13	12	20	19	18	17	20	18	17	16

TABLE NOTE:
1. Bars D and Bars E are for 45° Corner Posts only.
2. See Contract Plans for project wind speed.
3. Soil 1 = Loose Granular Soil, N = 4 to 9.
   Soil 2 = Medium Dense Granular Soil, N = 10 to 40.

PILE DEPTH & REINFORCING SUMMARY

TABLE 2A - TABLE OF POST REINFORCING STEEL

NOMINAL WALL HEIGHT (Feet)	POST LENGTHS		WIND SPEED = 150 MPH											
			10'-0" POST SPACING						20'-0" POST SPACING					
	WITHOUT CAP	WITH CAP	BARS A	BARS B		BARS D	BARS E		BARS A	BARS B		BARS D	BARS E	
			SIZE	SIZE	DIM 'A'	SIZE	SIZE	DIM 'A'	SIZE	SIZE	DIM 'A'	SIZE	SIZE	DIM 'A'
12	13'-0½"	13'-2½"	#4	#4	9'-11"	#5	#5	9'-8"	#6	#6	9'-4"	#6	#6	8'-4"
13	14'-0½"	14'-2½"	#4	#4	9'-11"	#5	#5	10'-8"	#6	#6	9'-4"	#7	#7	8'-8"
14	15'-0½"	15'-2½"	#5	#5	11'-8"	#5	#5	10'-8"	#7	#7	10'-8"	#7	#7	8'-8"
15	16'-0½"	16'-2½"	#5	#5	11'-8"	#6	#6	12'-4"	#7	#7	10'-8"	#8	#7	10'-8"
16	17'-0½"	17'-2½"	#5	#5	11'-8"	#6	#6	12'-4"	#7	#7	10'-8"	#8	#8	10'-0"
17	18'-0½"	18'-2½"	#6	#6	14'-4"	#6	#6	12'-4"	#7	#8	10'-0"	#9	#8	11'-0"
18	19'-0½"	19'-2½"	#6	#6	14'-4"	#7	#7	13'-8"	#8	#8	12'-0"	#9	#10	9'-4"
19	20'-0½"	20'-2½"	#6	#6	14'-4"	#7	#7	13'-8"	#8	#9	11'-3"	#10	#9	12'-3"
20	21'-0½"	21'-2½"	#6	#6	14'-4"	#7	#8	13'-0"	#9	#9	13'-3"	#10	#10	11'-4"
21	22'-0½"	22'-2½"	#7	#7	16'-8"	#7	#7	13'-8"	#9	#10	12'-4"	#11	#10	13'-4"
22	23'-0½"	23'-2½"	#7	#7	16'-8"	#8	#8	16'-0"	#10	#9	14'-3"	#11	#11	12'-5"

TABLE 2B - PILE LENGTHS (Feet) - WIND SPEED = 150 MPH

NOMINAL WALL HEIGHT (Feet)	10'-0" POST SPACING								20'-0" POST SPACING							
	H-POSTS				CORNER POSTS				H-POSTS				CORNER POSTS			
	SOIL 1		SOIL 2		SOIL 1		SOIL 2		SOIL 1		SOIL 2		SOIL 1		SOIL 2	
	30" ∅	36" ∅	30" ∅	36" ∅	30" ∅	36" ∅	30" ∅	36" ∅	30" ∅	36" ∅	30" ∅	36" ∅	30" ∅	36" ∅	30" ∅	36" ∅
12	12	12	11	10	12	11	11	10	17	15	15	14	16	15	14	13
13	13	12	11	11	13	12	11	10	17	16	15	14	17	15	15	14
14	13	12	12	11	13	12	12	11	18	17	16	15	17	16	15	14
15	14	13	12	11	13	13	12	11	19	17	16	15	18	17	16	15
16	14	13	13	12	14	13	12	12	19	18	17	16	19	17	16	15
17	15	14	13	12	14	13	13	12	20	18	17	16	19	18	17	16
18	15	14	14	13	15	14	13	12	20	19	18	17	20	18	17	16
19	16	15	14	13	15	14	14	13	21	19	19	17	20	19	18	17
20	16	15	14	13	16	15	14	13	22	20	19	18	21	19	18	17
21	17	15	15	14	16	15	14	13	22	21	20	18	21	20	19	18
22	17	16	15	14	17	15	15	14	23	21	20	19	22	20	19	18

TABLE 3A - TABLE OF POST REINFORCING STEEL

NOMINAL WALL HEIGHT (Feet)	POST LENGTHS		WIND SPEED = 170 MPH											
			10'-0" POST SPACING						20'-0" POST SPACING					
	WITHOUT CAP	WITH CAP	BARS A	BARS B		BARS D	BARS E		BARS A	BARS B		BARS D	BARS E	
			SIZE	SIZE	DIM 'A'	SIZE	SIZE	DIM 'A'	SIZE	SIZE	DIM 'A'	SIZE	SIZE	DIM 'A'
12	13'-0½"	13'-2½"	#5	#5	9'-8"	#5	#5	8'-8"	#6	#6	8'-4"	#7	#7	7'-8"
13	14'-0½"	14'-2½"	#5	#5	10'-8"	#6	#6	10'-4"	#7	#7	8'-8"	#8	#7	8'-8"
14	15'-0½"	15'-2½"	#5	#5	10'-8"	#6	#6	10'-4"	#7	#7	8'-8"	#8	#8	8'-0"
15	16'-0½"	16'-2½"	#6	#6	12'-4"	#6	#6	10'-4"	#8	#7	10'-8"	#9	#8	10'-0"
16	17'-0½"	17'-2½"	#6	#6	12'-4"	#7	#7	11'-8"	#8	#8	10'-0"	#9	#10	8'-4"
17	18'-0½"	18'-2½"	#6	#6	12'-4"	#7	#7	11'-8"	#9	#8	12'-0"	#10	#9	10'-3"
18	19'-0½"	19'-2½"	#7	#7	13'-8"	#7	#8	11'-0"	#9	#10	10'-4"	#10	#11	8'-5"
19	20'-0½"	20'-2½"	#7	#7	13'-8"	#8	#7	13'-8"	#10	#10	11'-4"	#11	#11	10'-5"
20	21'-0½"	21'-2½"	#7	#7	13'-8"	#8	#8	13'-0"	#10	#11	10'-5"	#11	#14	7'-0"
21	22'-0½"	22'-2½"	#7	#8	13'-0"	#9	#8	15'-0"	#11	#10	13'-4"	#14	#11	12'-5"
22	23'-0½"	23'-2½"	#8	#7	16'-8"	#9	#9	14'-3"	#11	#11	12'-5"	#14	#14	9'-0"

TABLE 3B - PILE LENGTHS (Feet) - WIND SPEED = 170 MPH

NOMINAL WALL HEIGHT (Feet)	10'-0" POST SPACING								20'-0" POST SPACING							
	H-POSTS				CORNER POSTS				H-POSTS				CORNER POSTS			
	SOIL 1		SOIL 2		SOIL 1		SOIL 2		SOIL 1		SOIL 2		SOIL 1		SOIL 2	
	30" ∅	36" ∅	30" ∅	36" ∅	30" ∅	36" ∅	30" ∅	36" ∅	30" ∅	36" ∅	30" ∅	36" ∅	30" ∅	36" ∅	30" ∅	36" ∅
12	14	13	12	11	13	12	12	11	18	17	16	15	18	16	16	15
13	14	13	13	12	14	13	12	11	19	18	17	16	19	17	16	15
14	15	14	13	12	14	13	13	12	20	18	18	16	19	18	17	16
15	15	14	14	13	15	14	13	12	21	19	18	17	20	18	18	16
16	16	15	14	13	15	14	14	13	21	20	19	17	21	19	18	17
17	16	15	15	14	16	15	14	13	22	20	19	18	21	20	19	17
18	17	16	15	14	16	15	15	14	23	21	20	19	22	20	19	18
19	17	16	15	14	17	16	15	14	23	22	21	19	23	21	20	18
20	18	17	16	15	17	16	15	14	24	22	21	20	23	21	20	19
21	18	17	16	15	18	17	16	15	25	23	22	20	24	22	21	19
22	19	18	17	16	18	17	16	15	25	23	22	21	24	23	22	20

TABLE NOTE:
1. Bars D and Bars E are for 45° Corner Posts only.
2. See Contract Plans for project wind speed.
3. Soil 1 = Loose Granular Soil, N = 4 to 9;
   Soil 2 = Medium Dense Granular Soil, N = 10 to 40.

PILE DEPTH & REINFORCING SUMMARY

GENERAL NOTES:

1. Construct Perimeter Walls in accordance with Specification Section 534.
2. Choice of either Precast Option or Masonry Option is at the discretion of the Contractor. Contractor must also select the desired foundation type. Modifications to this Index is restricted to those required for geometric needs only.
3. Post spacing is measured from centerline to centerline of foundation element. For this Index, posts and foundation elements have been designed for 20 ft. spacings. Use post spacings less than 20 feet only at changes in horizontal alignment, wall terminations or to accommodate steep grades.
4. See "Perimeter Wall Data Tables" in the plans for project requirements.
5. Field verify the locations of all overhead and underground utilities shown in the Wall Control Drawings.

PRECAST OPTION NOTES:

6. WALL NOTES:
   - A. Walls may consist of either a single height panel or two stacked panels. Minimum panel height is 4'-3".
   - B. Only when reduced overhead clearance between posts prohibits installation of panels from the top, side-installed panels are allowed. After panel is centered between posts, grout between panel ends and posts.

7. CONCRETE AND GROUT:
   - A. Cast-in-Place and Precast Concrete: Class IV
   - B. Grout for Auger Cast Piling: Minimum 28 Day Strength = 5000 psi
   - C. Minimum Compressive Strength for Form Removal and Handling of Posts, Panels and Precast Spread Footings:
     - i. 2,500 psi for horizontally cast post, panels and precast spread footings.
     - ii. 2,000 psi for vertically cast panels or when tilt-up form tables are used for horizontally cast panels.

8. REINFORCING STEEL:
   - A. Concrete Cover: 1½" unless otherwise noted.
   - B. In addition to the requirements of Specification Section 415, tie post and pile stirrups at the following locations as a minimum:
     - i. Post Stirrups - Tie at all four corner bars and at every third interior bar intersection.
     - ii. Pile Stirrups - Tie to the main vertical reinforcing at alternate intersections.

9. BEARING PADS:
   - A. Bearing Pads for Collar or Pedestal Bearing Points and between stacked panels may be either Plain or Fiber Reinforced Neoprene Pads, in accordance with Specification Section 932 for ancillary structures.

10. CASTING TOLERANCES:
   - A. Overall Height & Width: +/- ¼"
   - B. Thickness: +/- ¼"
   - C. Plane of side mold: +/- 1/16"
   - D. Openings: +/- ½"
   - E. Out of Square: ⅛" per 6 ft., but not more than ⅜" total along any side
   - F. Warping: 1/16" per foot distance to nearest corner
   - G. Bowing: 1/240 panel dimension

11. PILING:
   Construct Auger Cast Piling in accordance with the Plans and Specification Section 455.

MASONRY OPTION NOTES:

12. WALL NOTES:
   - A. Inspect construction in accordance with the International Building Code (IBC) Section 17.
   - B. Construct masonry walls with 8x8x16 block using a running bond pattern and concave tooled joints.
   - C. Make all elevation changes (steps) in footing and top of wall using full height blocks. Make top of wall steps at pilasters exclusively. Footing steps may be made between pilasters as necessary to maintain minimum soil cover.

MASONRY OPTION NOTES (CONT.):

   - D. Fully Grout all cells with horizontal or vertical reinforcing bars.
   - E. Use reinforcing bar positioners to maintain vertical and horizontal bar placement.
   - F. Fully grout first three courses of the wall.
   - G. Joint Reinforcement: Use W 1.7 (9mm) galvanized ladder reinforcing spaced at 16" vertically. Provide special accessories for corners, intersections, etc. Joint reinforcing shall be continuous except it shall not pass through vertical masonry control joints. Lap joint reinforcing a minimum of 6".
   - H. Construct expansion joints in the foundation at 90 foot maximum intervals, and directly below a wall control joint.
   - I. Dowel Load Transfer Devices will be ASTM A 36 smooth round bars hot-dip galvanized in accordance with Specification Section 962. Install Dowel Load Transfer Devices in accordance with Specification Section 350.
   - J. For spread footings, use a walk-behind compactor of at least 600 lbs. in weight. Obtain a minimum density of 95% of the maximum dry density as determined by FM 1 T-180. Perform soil density tests at 100 foot intervals.
   - K. Protect walls during construction from soil, grout or mortar stains. Clean wall as work progresses by dry brushing to remove mortar fins and smears before tooling joints.
   - L. Use soap and potable water to clean walls. If stain removal is necessary, use a cleaning method indicated in NCMA TEK 8-2A applicable to the type of stain on the exposed surface.
   - M. During construction, cover tops of walls, with waterproof sheeting at the end of each day's work, or when construction is not in progress. Extend sheeting a minimum of 2 feet down each side and secure in place.
   - N. Comply with Hot Weather Requirements in ACI 530.1.

13. MATERIALS:
   - A. Concrete Masonry Units (CMU): Provide normal weight blocks.
   - B. Cast-In-Place Concrete: Class II for slightly to moderate aggressive environments or Class IV for extremely aggressive environments.
   - C. Mortar: Type S meeting requirements of ASTM C1329
   - D. Grout: Type S; coarse grout.
   - E. Aggregate for Grout: Meet the requirements of ASTM C404 or Specification Section 901 size 8 or 89.

14. STORAGE OF MATERIALS:
   - A. Store CMU's on elevated platforms in a dry location or under cover. If units become wet, do not install until they are dry.
   - B. Store cementitious materials on elevated platforms, under cover, and in a dry location. Do not use cementitious materials that have become damp or exceeded the manufacturers shelf life.
   - C. Store masonry accessories and reinforcing to prevent corrosion and accumulation of dirt and oil.

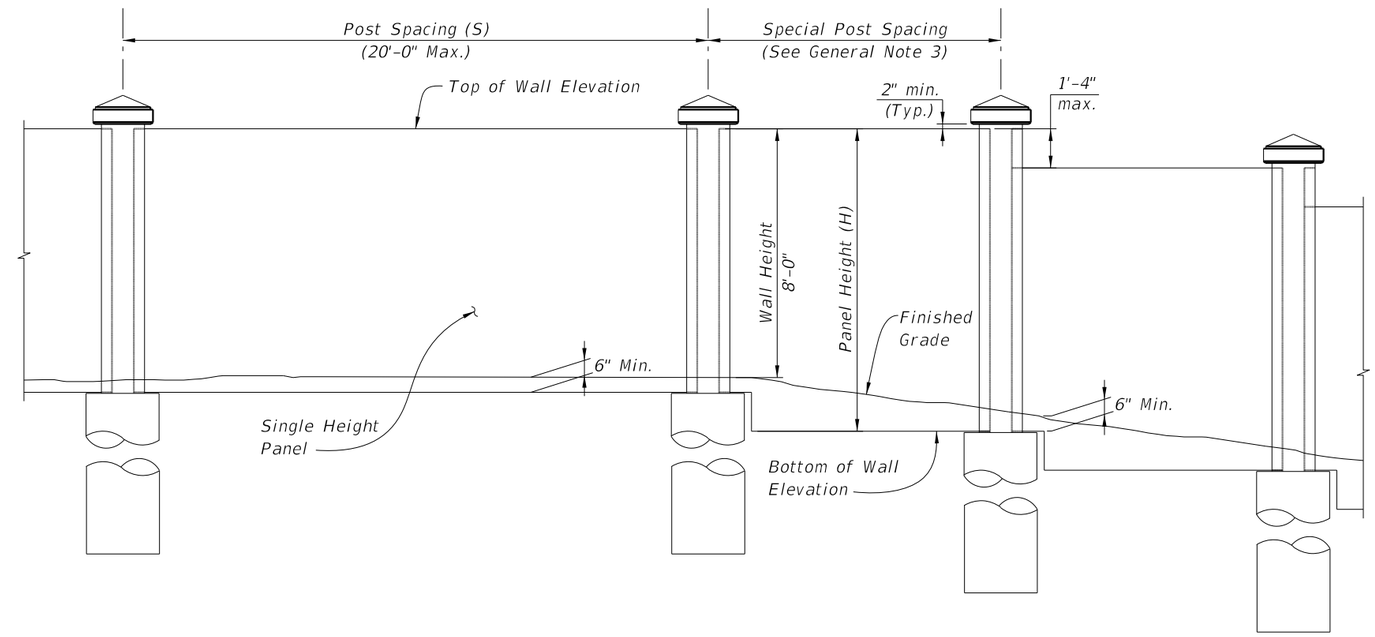

GENERAL WALL ELEVATION
(Precast Option with SIngle Height Panel Shown, Others Similar)

GENERAL NOTES

LAST REVISION	REVISION	DESCRIPTION:	FY 2023-24 STANDARD PLANS	PERIMETER WALLS	INDEX	SHEET
11/01/17					534-250	1 of 10

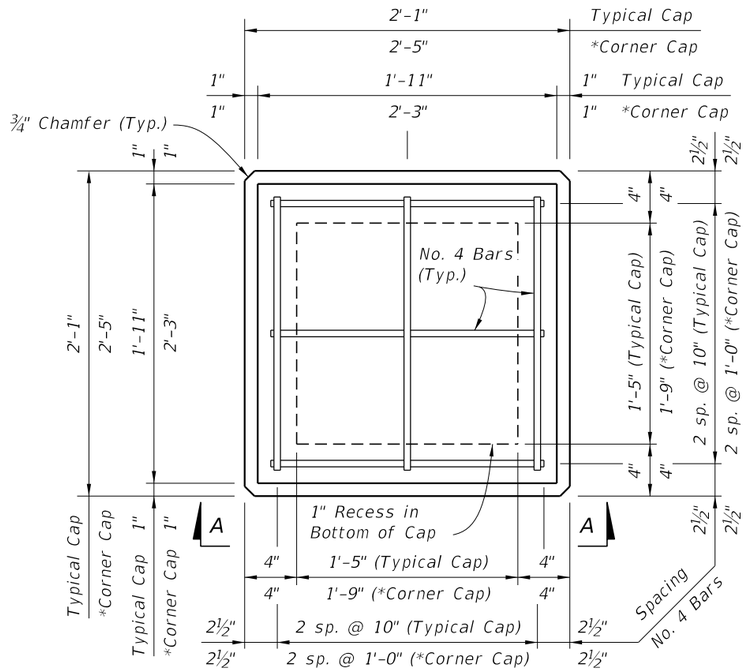

PLAN VIEW
(Type "A" Cap Shown, Type "B" & "C" Caps Similar)

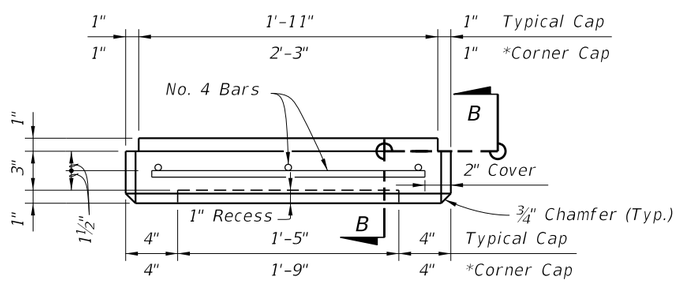

VIEW A-A
(Type "A" Cap Shown, Type "B" & "C" Caps Similar)

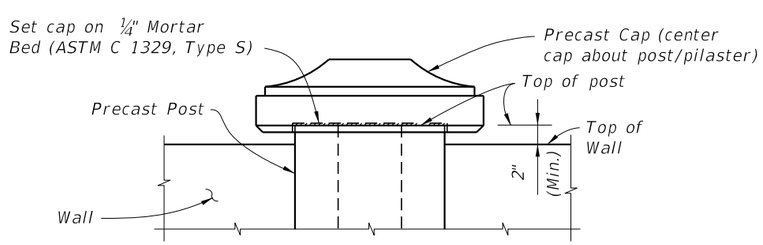

CAP PLACEMENT DETAIL
(Type "B" Post Cap with Precast Option Shown)

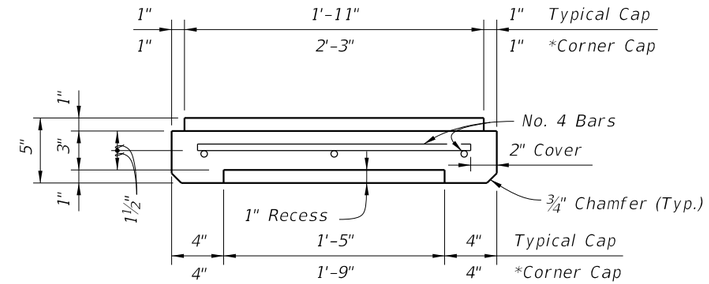

SECTION B-B

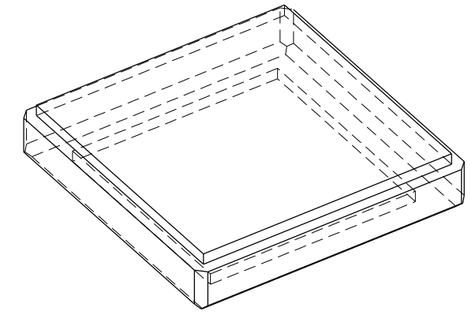

PICTORIAL VIEW

TYPE "A" CAP DETAILS

*Precast Option only

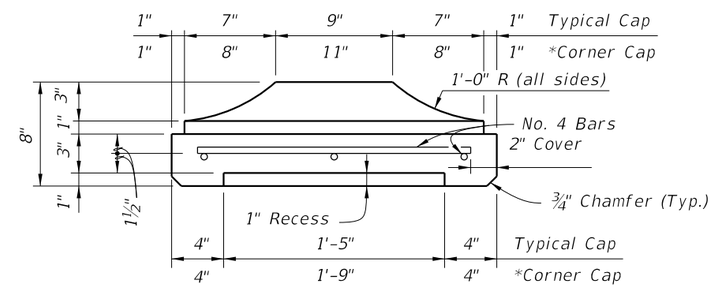

SECTION B-B

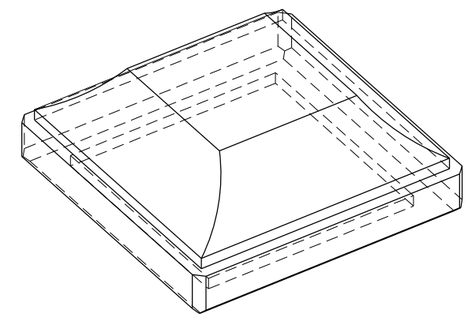

PICTORIAL VIEW

TYPE "B" CAP DETAILS

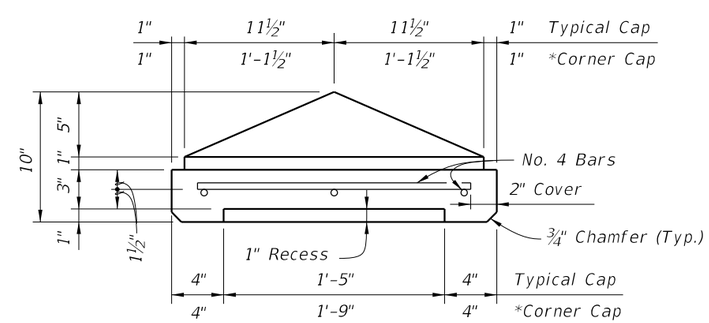

SECTION B-B

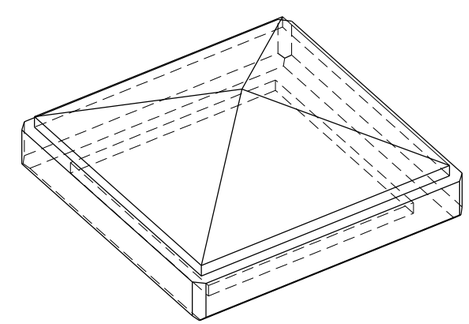

PICTORIAL VIEW

TYPE "C" CAP DETAILS

POST CAP DETAILS

LAST REVISION	REVISION	DESCRIPTION:			INDEX	SHEET
11/01/14			FY 2023-24 STANDARD PLANS	PERIMETER WALLS	534-250	2 of 10

10/20/2022 8:52:52 AM

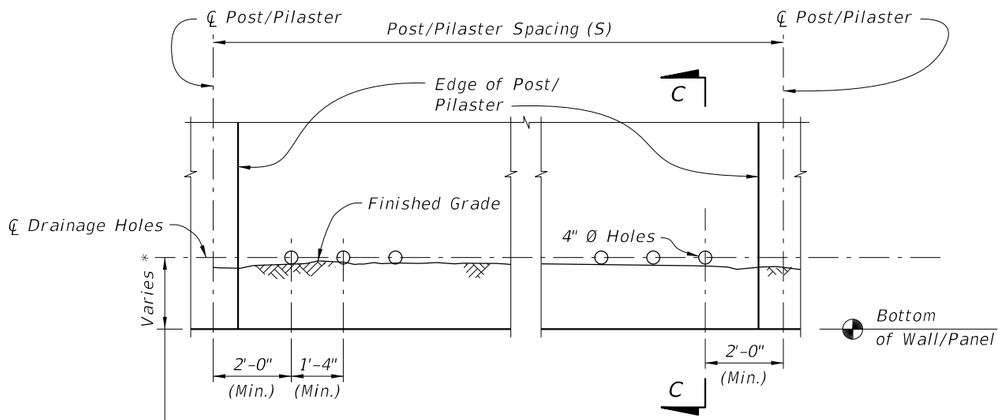

Type A:	8"
Type B:	1'-0"
Type C:	1'-4"
Type D:	1'-8"

DRAINAGE HOLES TYPES A, B, C & D

* Hole Types A, B, C, & D refer to distance from bottom of panel/wall to center of the pipe.

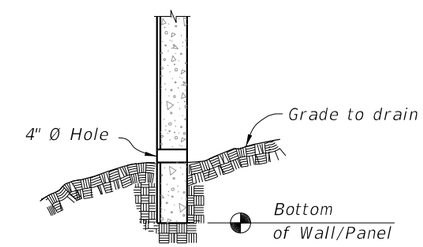

SECTION C-C
(Precast Option Shown, Masonry Option Similar)

NOTES:

1. Drainage holes may be formed with 4" NPS PVC pipe that may remain in place.
2. See Wall Control drawings for number, Type and location/ spacing of drainage holes.

DRAINAGE DETAILS

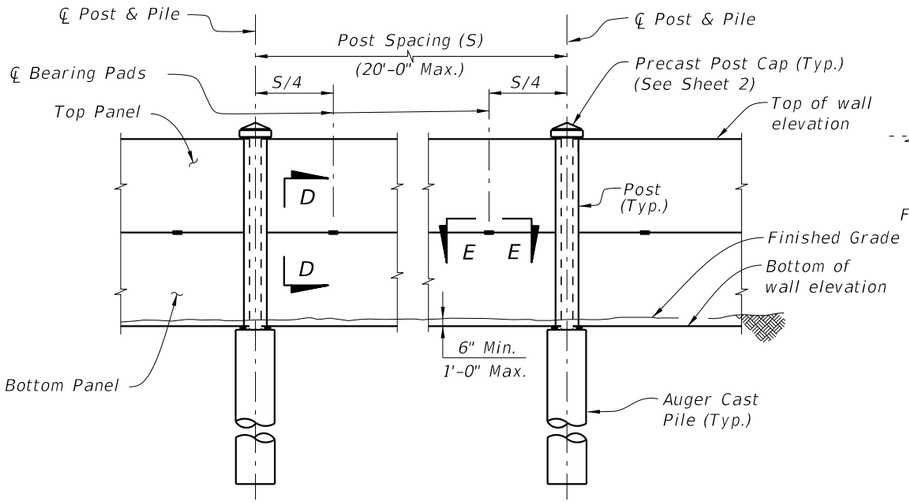

TYPICAL ELEVATION
(Front Face Shown, Textured Finish not Shown for Clarity)

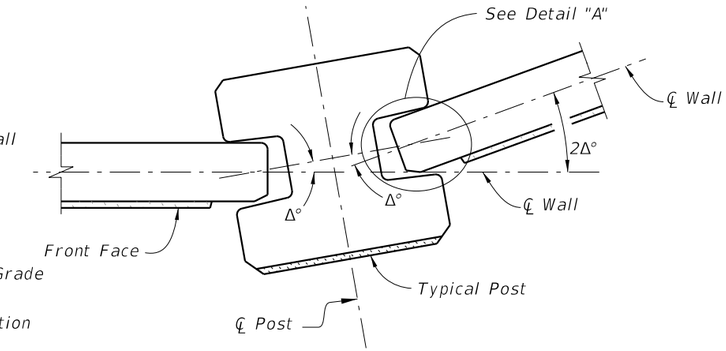

PIVOTING JOINT DETAILS

NOTE: Shop Drawings shall include specific pivoting point details of panel ends at locations where the deflection angle (2Δ°) between panels exceeds 20°.

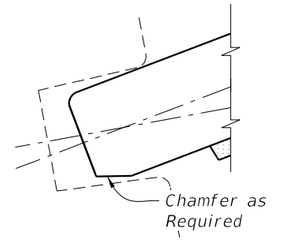

DETAIL "A"
(Back Face Chamfer Shown
Front Face Chamfer Similar)

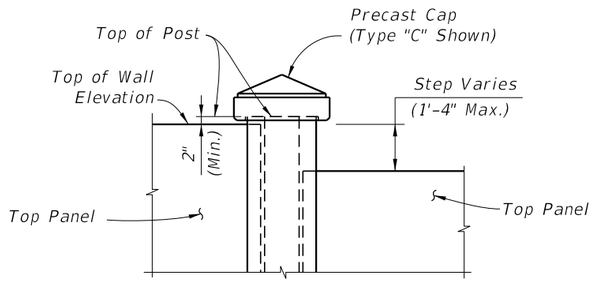

ELEVATION STEP AT TOP OF WALL
(Precast Panel Cap not Shown)

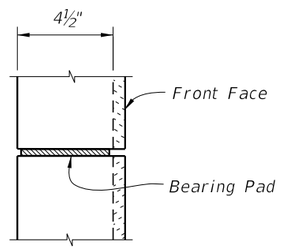

SECTION D-D

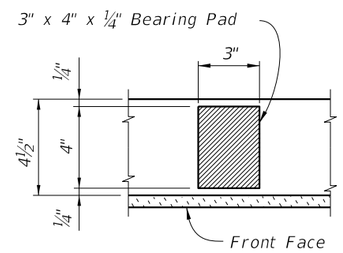

SECTION E-E

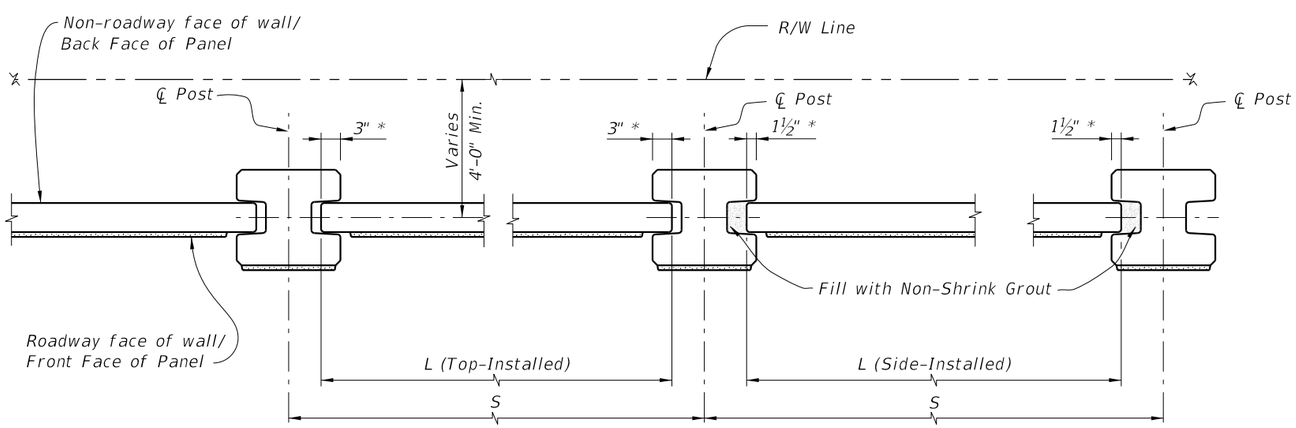

TYPICAL PLAN

* Nominal embedment (not including tolerances)

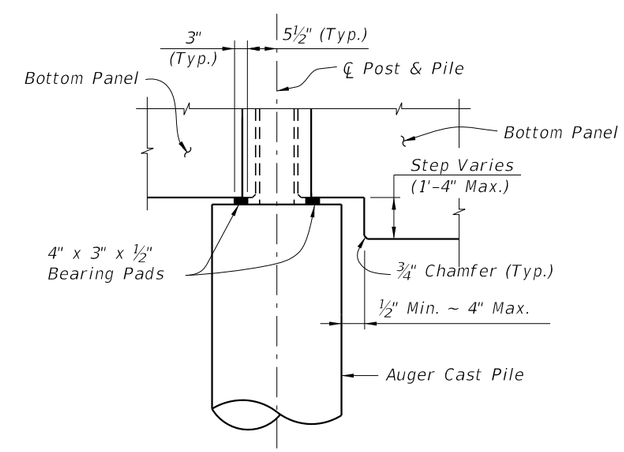

ELEVATION STEP AT BOTTOM OF WALL

PRECAST OPTION - TYPICAL DETAILS

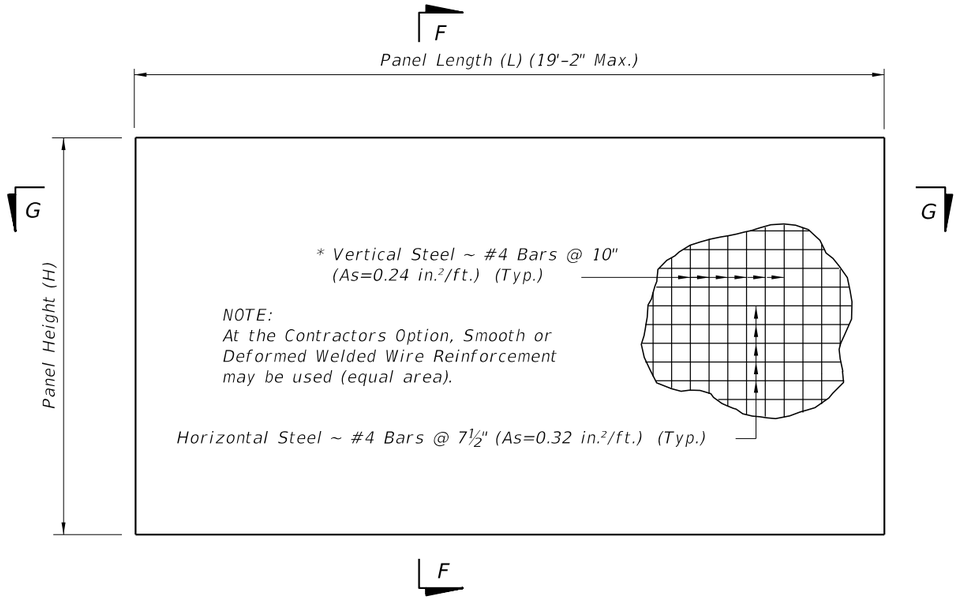

TYPICAL PANEL ELEVATION

* In lieu of utilizing the standard pick up points below, panels may be cast vertically or cast horizontally then tilted upright using tilt-tables prior to lifting from form. In this case, pick points must be placed in the top of panels only and transported maintaining the vertical orientation. If these criteria are met, the vertical steel may be reduced to #4 Bars @ 1'-3" (As=0.16 in.²/ft.).

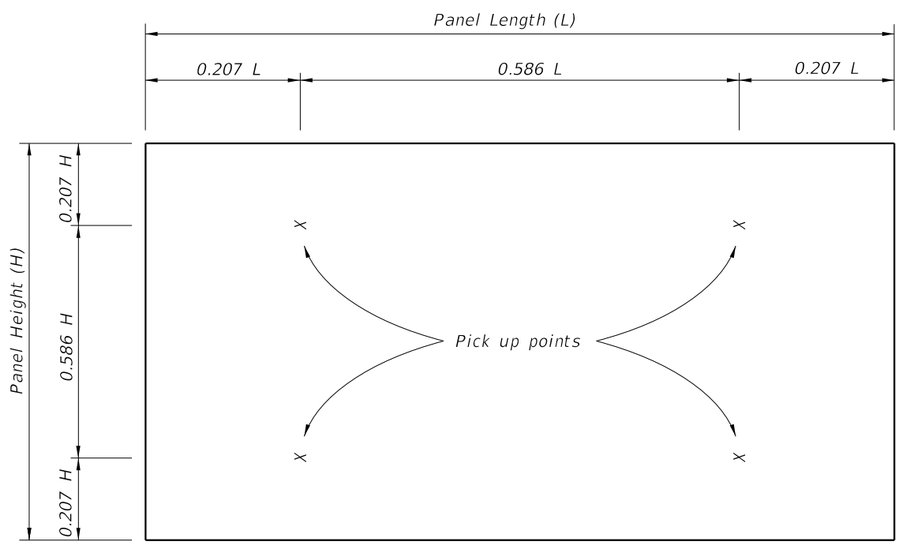

STANDARD PICK UP POINTS FOR PANELS
(Panels shall be rotated about long axis only)

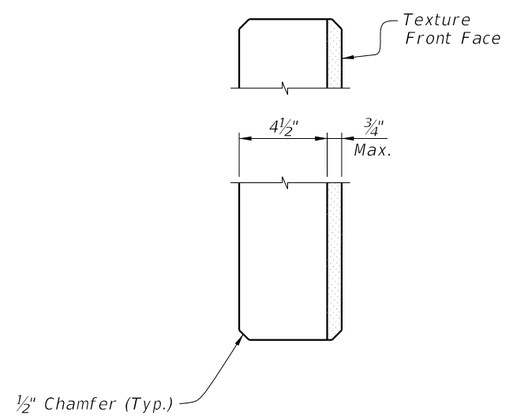

SECTION F-F

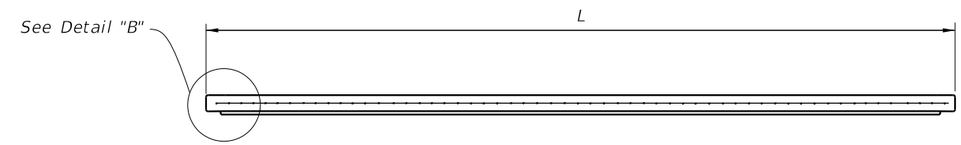

SECTION G-G

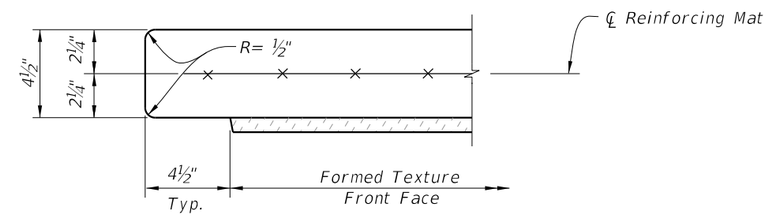

DETAIL "B" - TOP-INSTALLED
(Typ. Both Ends)

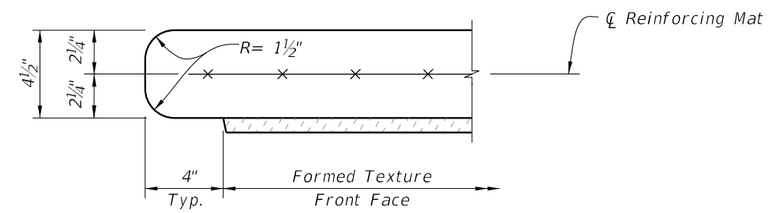

DETAIL "B" - SIDE-INSTALLED
(Typ. Both Ends)

PRECAST OPTION - TYPICAL PANEL DETAILS

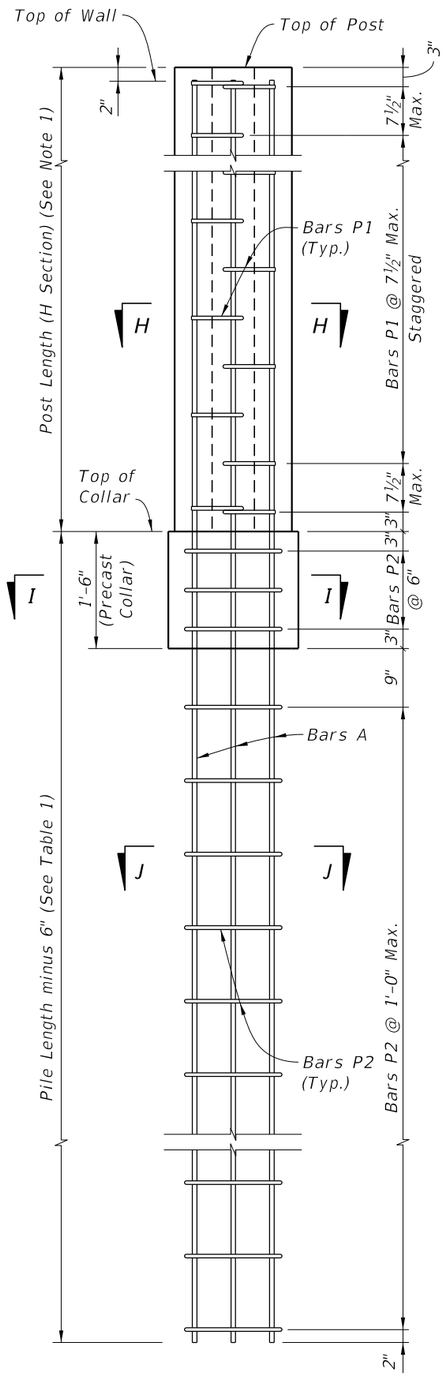

TYPICAL POST

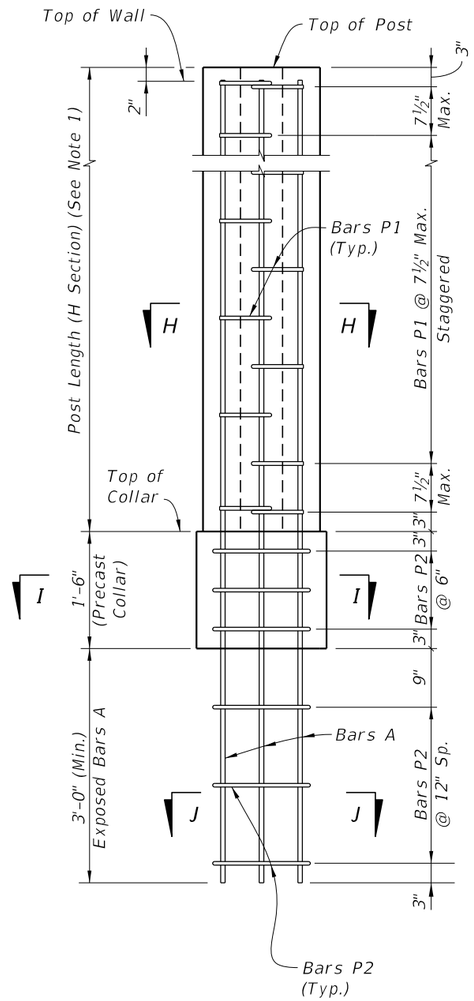

LOW CLEARANCE OPTION

NOTES:
1. See Shop Drawing for Post Lengths.

STANDARD POST REINFORCEMENT

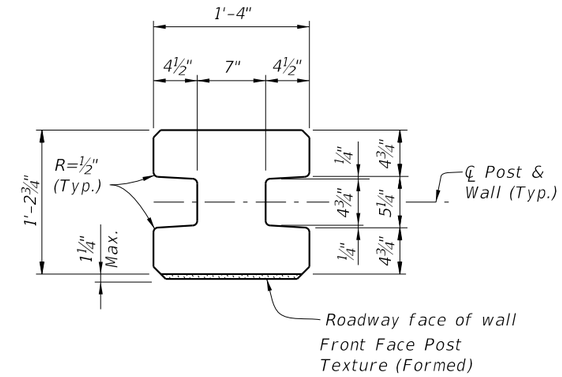

TYPICAL POST SECTION
(H Section)

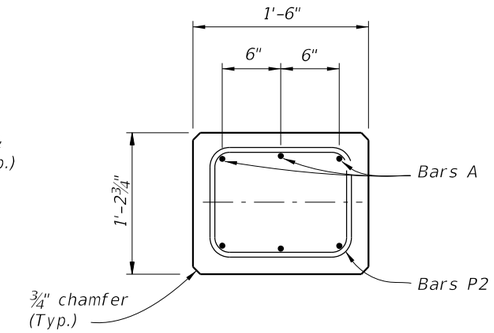

SECTION I-I
Precast Collar

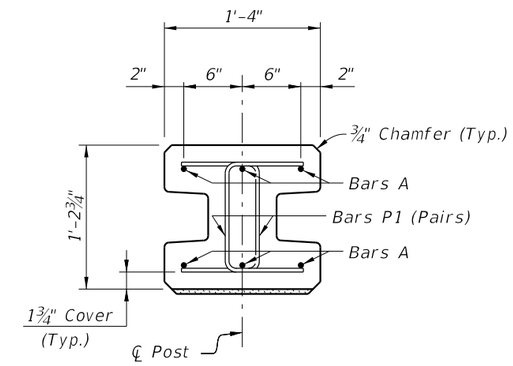

SECTION H-H
(H Section - Above Collar)

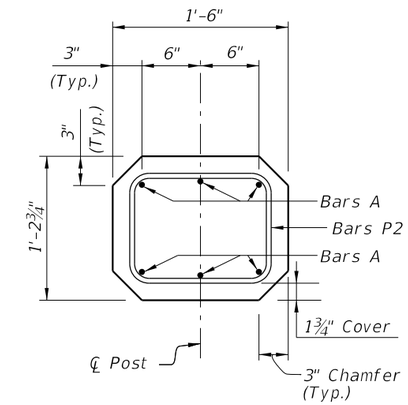

SECTION I-I
(for Low Clearance Option)

TABLE 1				
Wind Speed (MPH)	Pile Length	Bars A	Bars P1 thru P6	Bars S1
130	12'-0"	#5	#3	#4
150	13'-6"	#5	#3	#4
170	15'-0"	#6	#3	#4

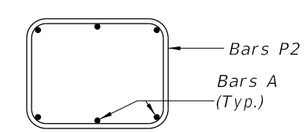

SECTION J-J

BAR BENDING DETAILS

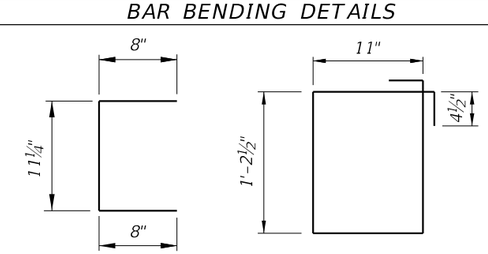

BAR P1
Bar Length = 2'-3¼"

BAR P2
Bar Length = 5'-0"

All bar dimensions in bending diagrams are out-to-out.
All bars not shown in the bending diagrams are straight.

PRECAST OPTION - STANDARD POST DETAILS

8:52:56 AM
10/20/2022

LAST REVISION	REVISION	DESCRIPTION:			INDEX	SHEET
11/01/17			FY 2023-24 STANDARD PLANS	PERIMETER WALLS	534-250	6 of 10

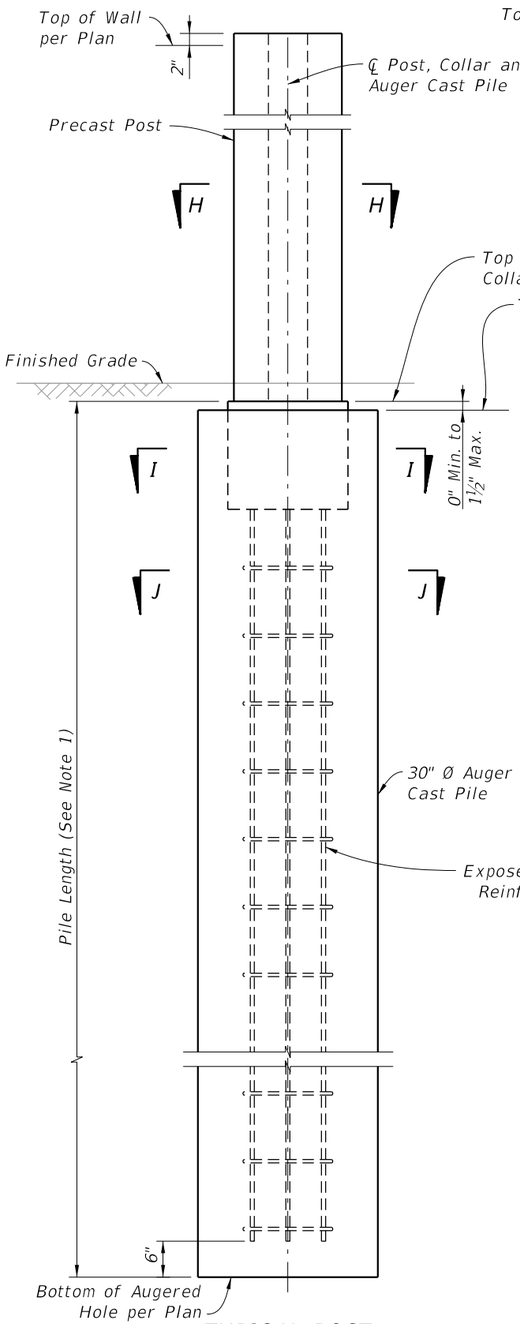

TYPICAL POST

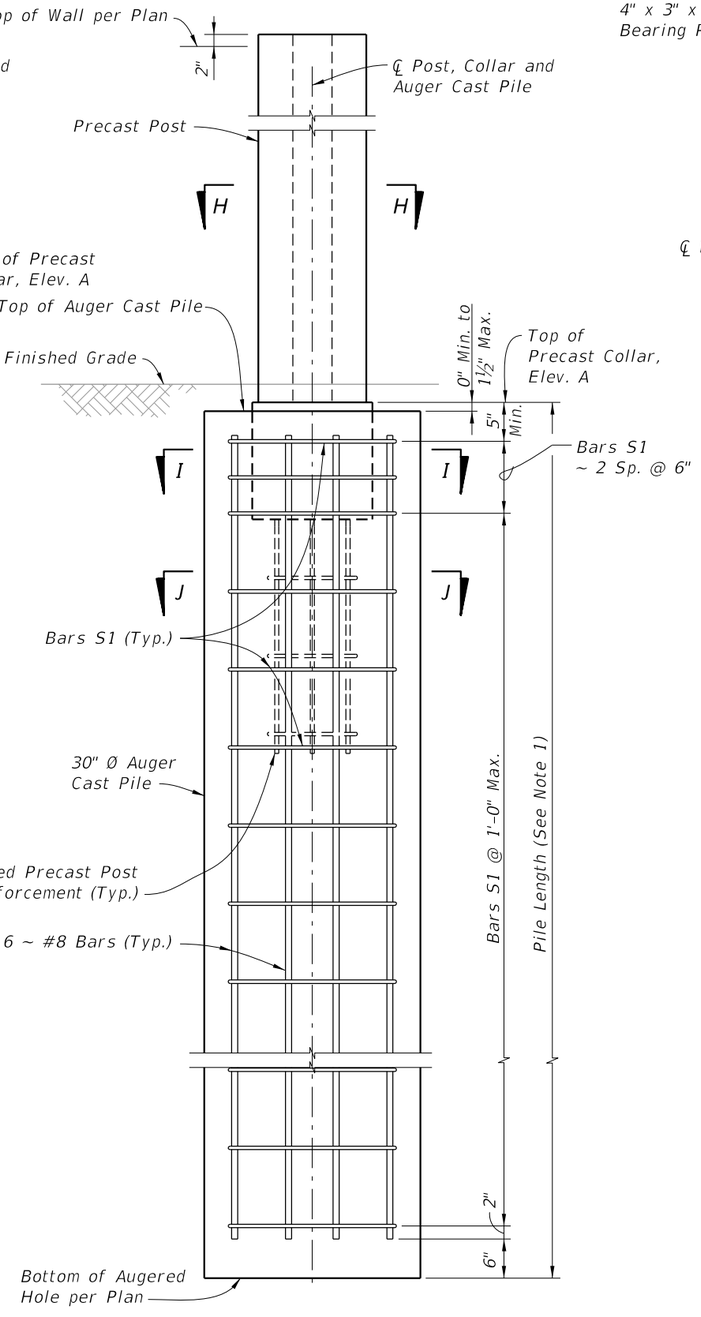

LOW CLEARANCE OPTION

STANDARD POST PLACEMENT IN AUGER CAST PILE
(Standard Post Shown, 45° and 90° Corner Posts Similar)

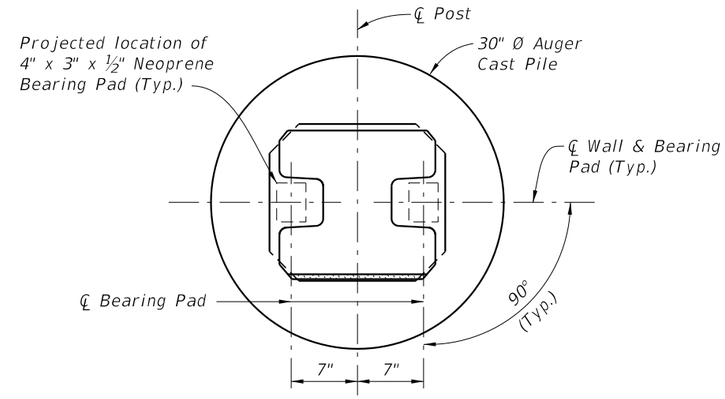

SECTION H-H
(Reinforcing not Shown for Clarity)

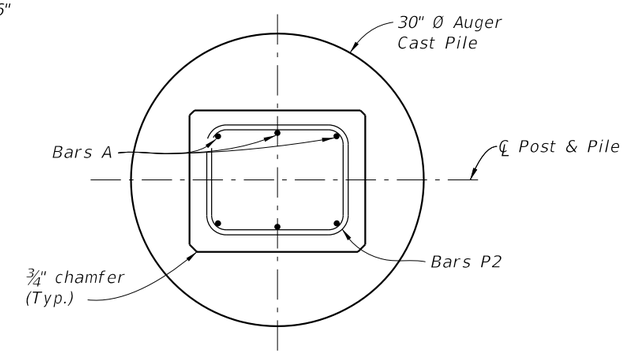

SECTION I-I
(Typical Post Option)

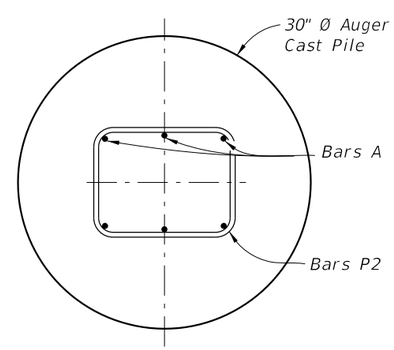

SECTION J-J
(Typical Post Option)

BAR BENDING DETAIL

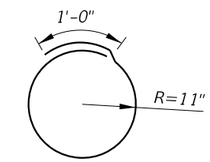

BAR S1

Bar Length = 6'-9"

All bar dimensions in bending diagrams are out-to-out.
All bars not shown in the bending diagrams are straight.

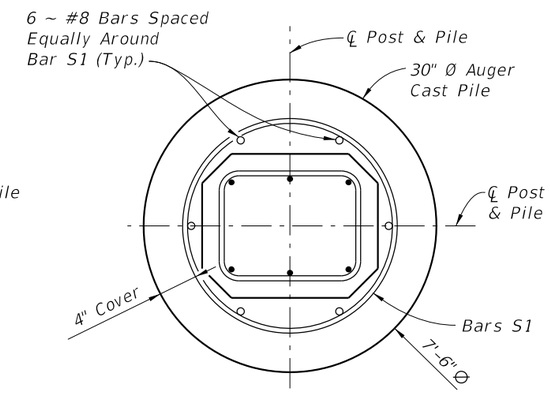

SECTION I-I
(Low Clearance Option)

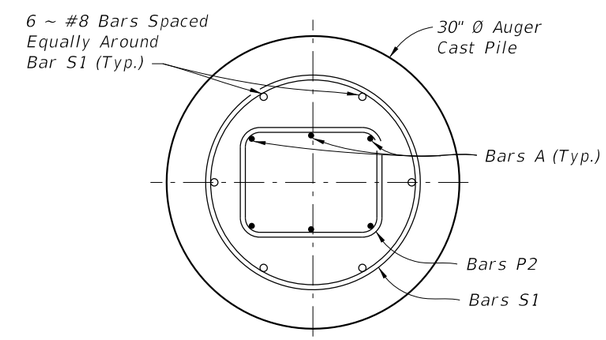

SECTION J-J
(Low Clearance Option)

Notes:
1. For Reinforcing Steel Sizes and Pile Lengths, see Table 1, Sheet 6.
2. For Corner Posts, see Sheet 8.
3. For Typical Post Section Dimensions, see Sheet 6.

PRECAST OPTION - POST PLACEMENT & PILE REINFORCING STEEL DETAILS

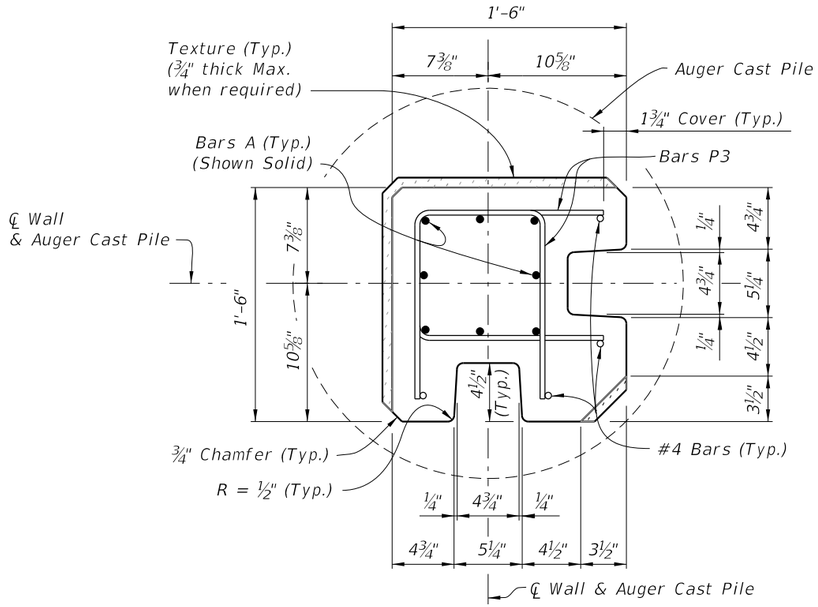

SECTION H-H

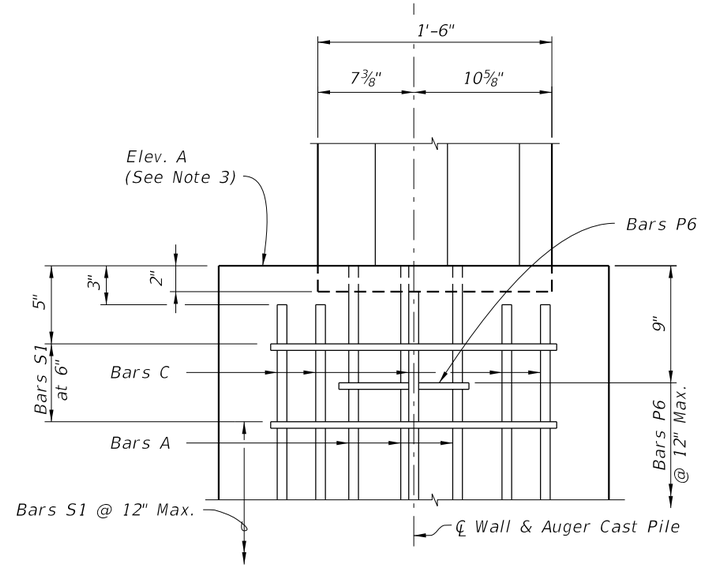

ELEVATION VIEW
(Low Clearance Shown)

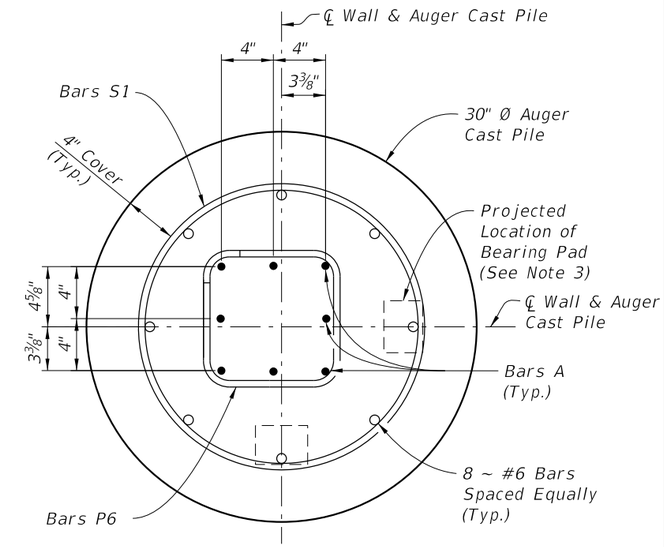

SECTION I-I
(See Note 3)

SPECIAL POST FOR 90° CORNERS

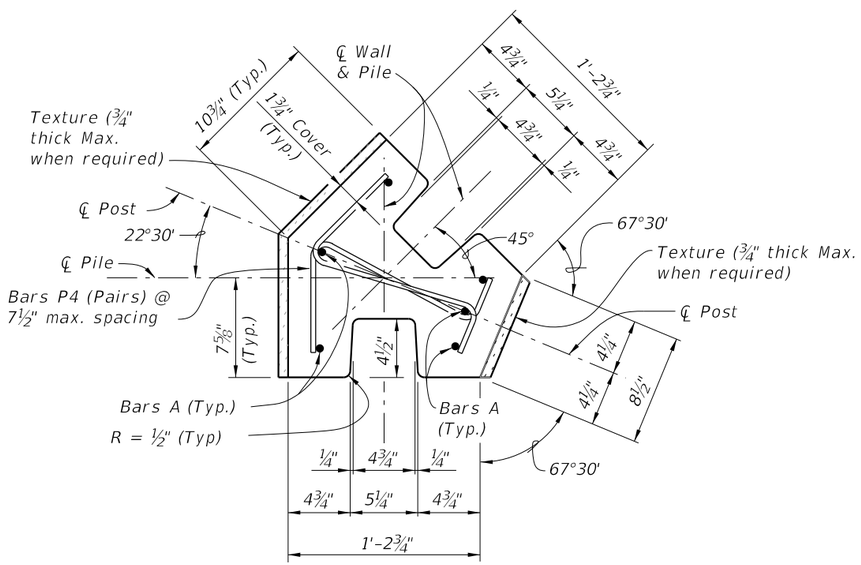

SECTION H-H

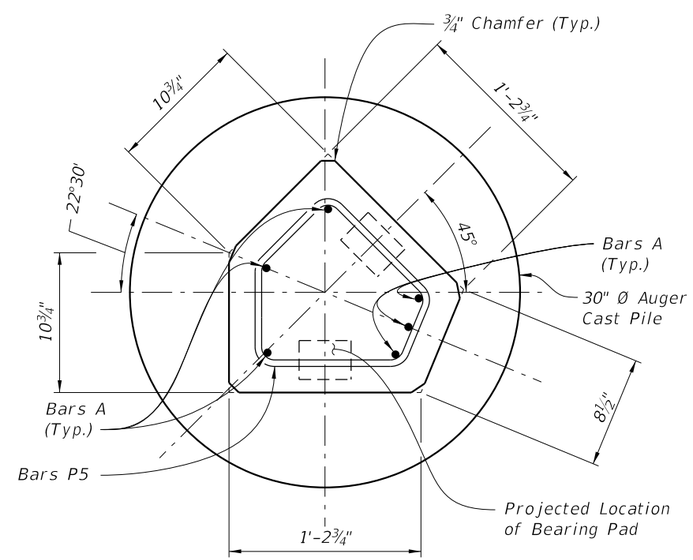

SECTION I-I
(Precast Collar)

NOTES:
1. For Reinforcing Steel Sizes, and Foundation Dimensions, see Table 1 Sheet 6.
2. For location of Section H-H and I-I, see Sheet 6.
3. The Bearing area beneath Neoprene Pads is formed by top of Auger Cast Pile Grout.

BAR BENDING DETAILS

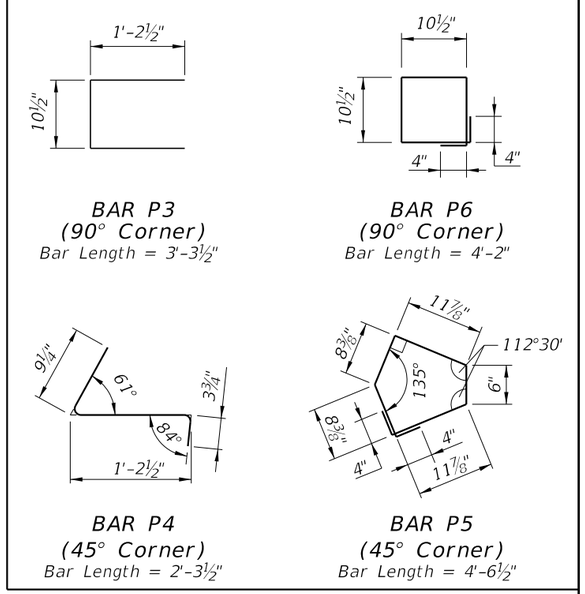

All bar dimensions in bending diagrams are out-to-out.
All bars not shown in the bending diagrams are straight.

SPECIAL POSTS FOR 45° CORNERS

PRECAST OPTION - SPECIAL CORNER POSTS

10/20/2022 8:52:58 AM

LAST REVISION	REVISION	DESCRIPTION:			INDEX	SHEET
11/01/17			FY 2023-24 STANDARD PLANS	PERIMETER WALLS	534-250	8 of 10

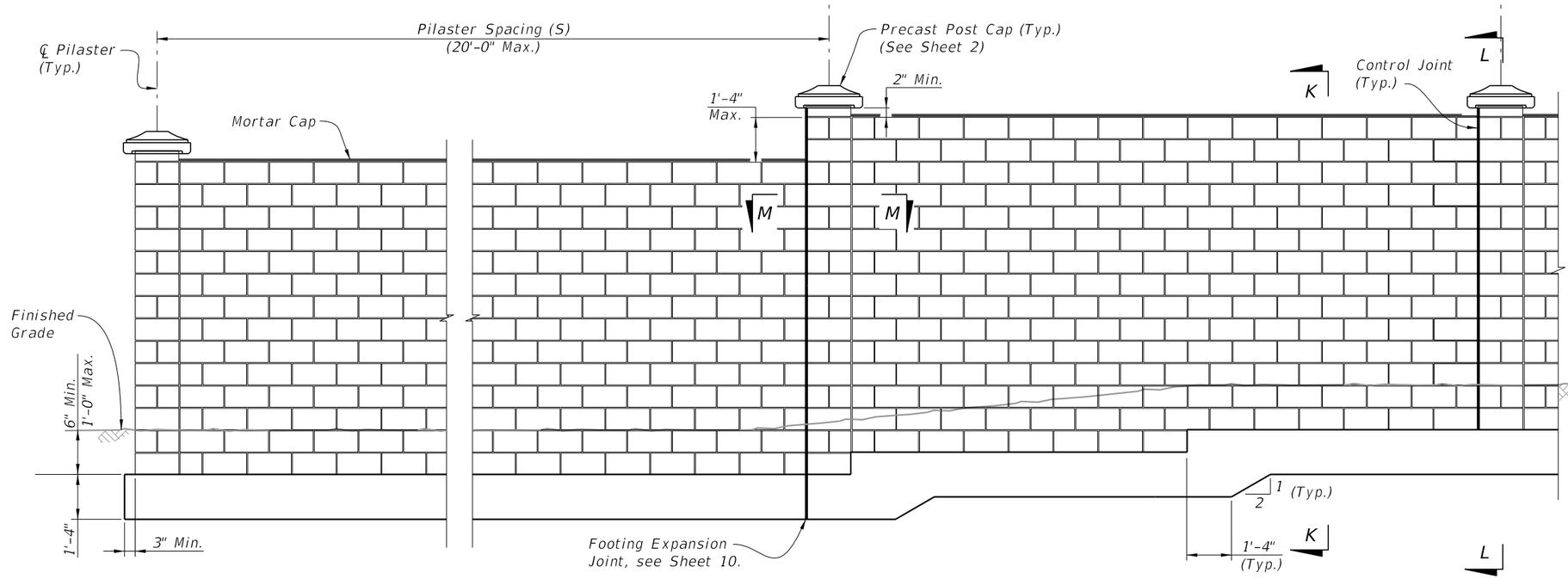

TYPICAL ELEVATION
(T-Footing Shown, Trench Footing Similar)

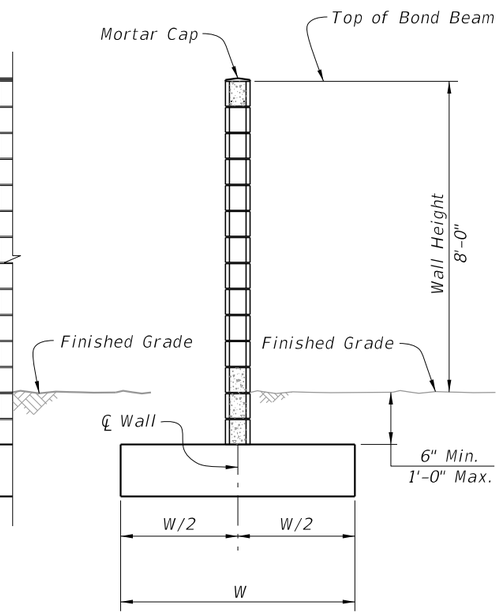

SECTION K-K
(Shown at Cell Without Vertical Reinforcing)

Table 2					
Wind Speed Category	Masonry Walls (8x8x16)		Foundations		
	Bars V1	SV Spacing	Bars F1 & F2	T-Footing Width (W)	Trench Footing Depth (D)
130	#5	2'-8"	#5	4'-4"	5'-6"
150	#5	2'-0"	#5	5'-0"	6'-4"
170	#5	1'-4"	#5	6'-0"	7'-0"

Notes:
1. End vertical reinforcing bars 1½" from top of bond beam blocks and horizontal bars 1½" from edge of control joints.
2. Do not continue horizontal #4 Bond beam reinforcing through control joint.
3. Use stainless steel joint stabilizing anchors spaced at 16" vertically at all control joints. Install per manufacturers instructions.
4. Seal Control Joints with backer rod and Type "A" silicone sealant (top and both sides).
5. See Sheet 10 for Bar placement details.
6. For Pilaster Cap Details, see Sheet 2.

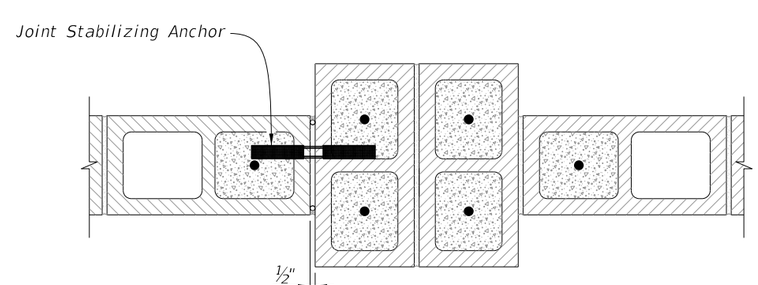

SECTION M-M
PILASTER REINFORCING AND
WALL CONTROL JOINT DETAIL

BAR BENDING DETAIL

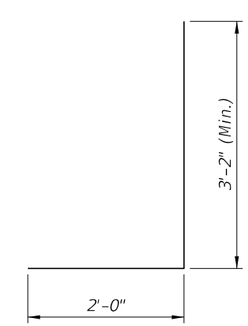

BAR F1
Length = 5'-2"

All bar dimensions in bending diagram are out to out.
All bars not shown in the bending diagrams are straight.

MASONRY OPTION

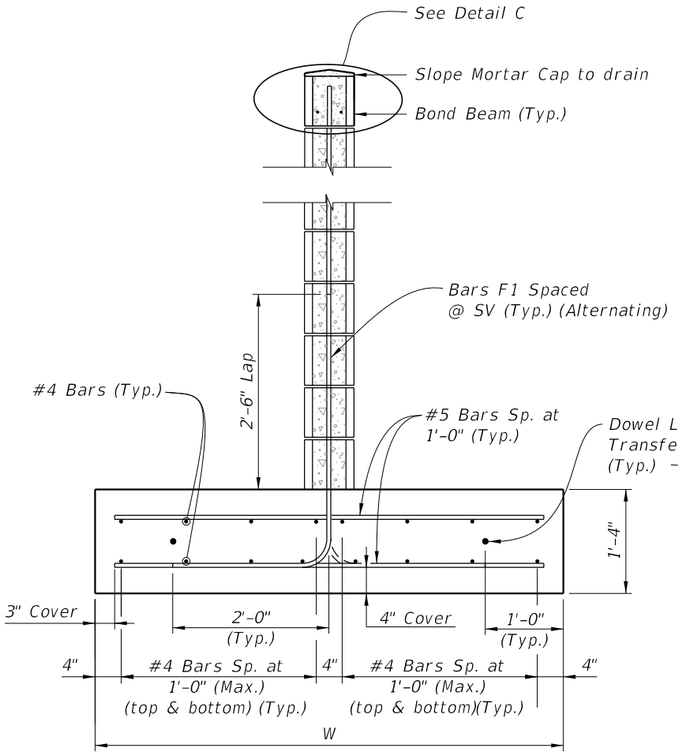

SECTION K-K
TYPICAL WALL SECTION
WITH T-FOOTING

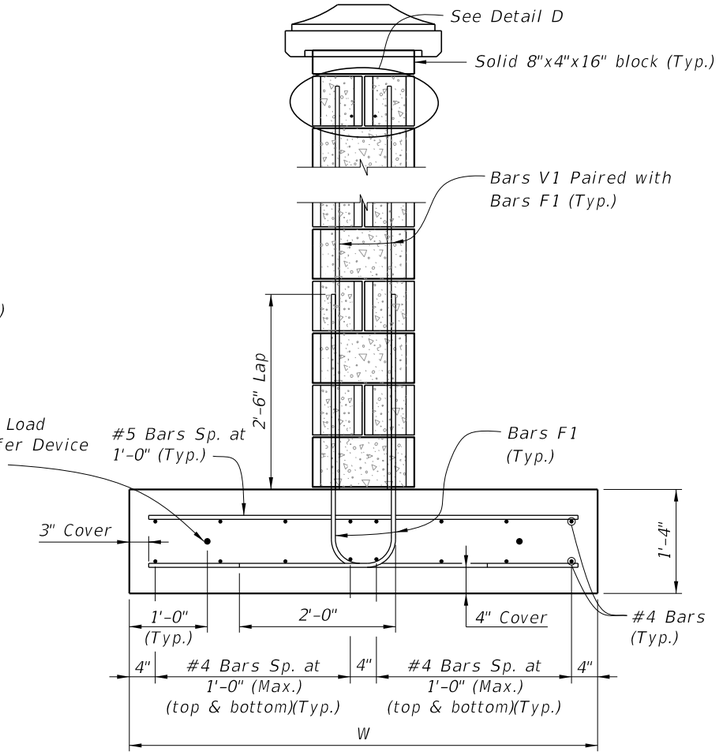

SECTION L-L
PILASTER SECTION
WITH T-FOOTING

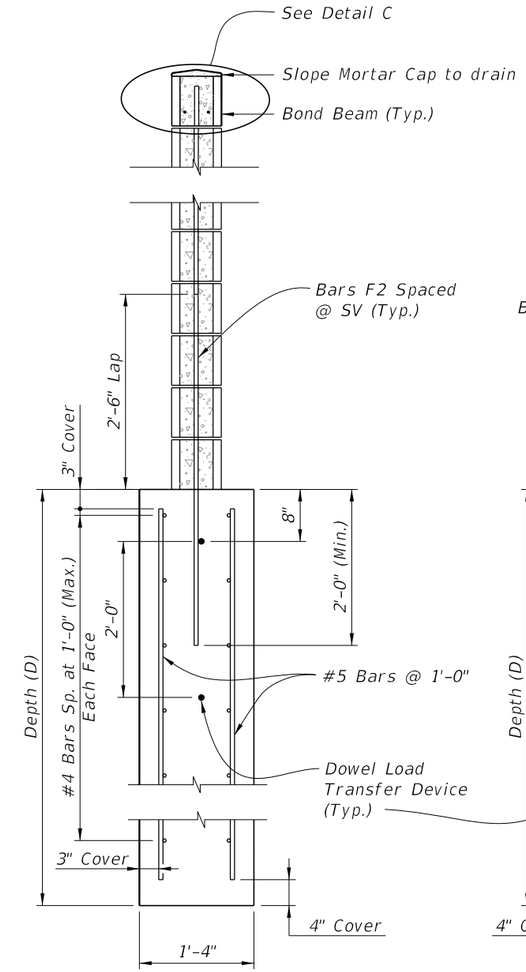

SECTION K-K
TYPICAL WALL SECTION
WITH TRENCH FOOTING

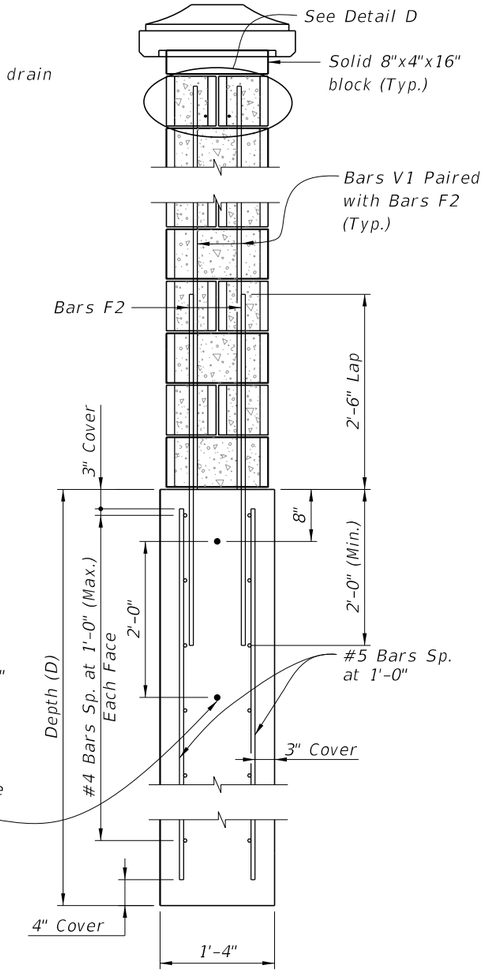

SECTION L-L
TYPICAL PILASTER SECTION
WITH TRENCH FOOTING

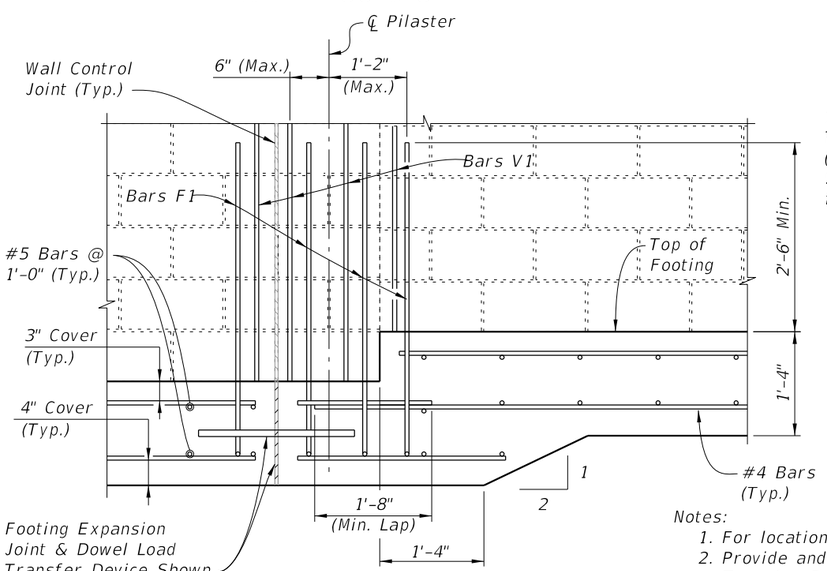

REINFORCING AT PILASTER WITH EXPANSION JOINT
(Step Shown, without Step Similar)
(T-Footing Shown, Trench Footing Similar)

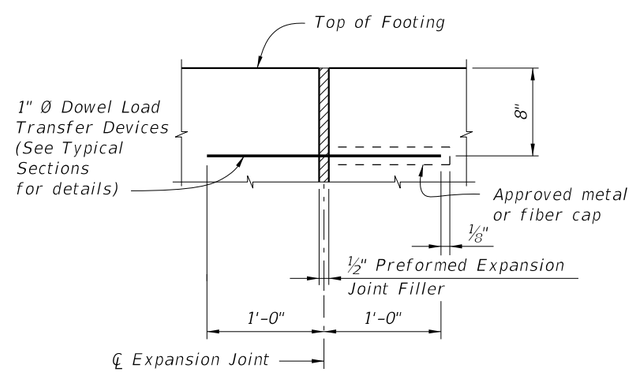

EXPANSION JOINT DETAILS

Notes:

1. For location of Sections K-K and L-L see Sheet 9.
2. Provide and install ½" Preformed Expansion Joints with 2 ~ 1" Ø Dowel Load Transfer Devices at 90' Max. as shown. See Sections L-L for placement details.
3. For Reinforcing sizes and spacings, see Table 2, Sheet 9.
4. Pairs F1, V1 are required in the wall cells on both sides of pilasters, plus a pair in each pilaster cell. Space wall reinforcing per Table 2, Sheet 9.

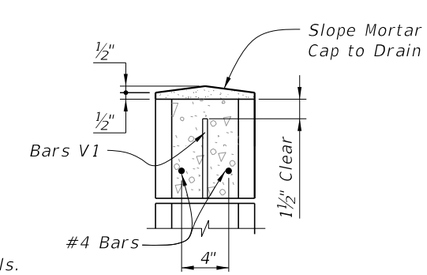

DETAIL C

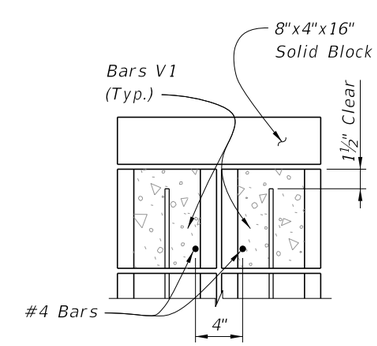

DETAIL D

MASONRY OPTION

10/20/2022 8:53:01 AM

LAST REVISION	REVISION	DESCRIPTION:			INDEX	SHEET
11/01/16			FY 2023-24 STANDARD PLANS	PERIMETER WALLS	534-250	10 of 10

SHEET	CONTENTS
1	General Notes; Index Contents
2	General, TL-3 Guardrail - Installed Plan and Elevation
3	Low-Speed, TL-2 Guardrail - Installed Plan and Elevation
4	W-Beam and Thrie-Beam Panel Details
5	Post and Offset Block Details
6	Guardrail Sections - Heights and Adjacent Slopes
7	End Treatment - Approach Terminal Geometry, Parallel
8	End Treatment - Approach Terminal Geometry, Curbed and Double Faced
9	End Treatment - Trailing Anchorage
10	End Treatment - Component Details
11	End Treatment - Controlled Release Terminal (CRT) System
12	Layout for CRT System - Side Roads and Driveways
13	Approach Transition Connection to Rigid Barrier - General, TL-3
14	Approach Transition Connection to Rigid Barrier - General, TL-3 - Curb Connections
15	Approach Transition Connection to Rigid Barrier - Low-Speed, TL-2
16	Approach Transition Connection to Rigid Barrier - Low-Speed, TL-2 - Curb Connections
17	Approach Transition Connection to Rigid Barrier - Details
18	Approach Transition Connection to Rigid Barrier - Double Faced Guardrail
19	Layout to Rigid Barrier - Approach Ends
20	Layout to Rigid Barrier - Approach Ends with Double Faced Guardrail Layout to Rigid Barrier - Trailing Ends Trailing End Transition Connection to Rigid Barrier
21	Rub Rail Details
22	Pedestrian Safety Treatment - Pipe Rail
23	Modified Mount - Special Steel Post for Concrete Structure Mount; Modified Mount - Encased Post for Shallow Mount; Modified Mount - Frangible Leave-Out for Concrete Surface Mount
24	Barrier Delineators - Post Mounted; Clear Space - Reduced Post Spacing for Hazards; ⅝" Button-Head Bolt System

GENERAL NOTES:

1. INSTALLATION: Construct guardrail in accordance with Specification 536.

   This Index, along with the plans and the manufacturers' drawings on the Approved Products List (APL), is sufficiently detailed for installation of General Guardrail, Low-Speed Guardrail, End Treatment assemblies, and their connecting options shown herein. This precludes requirements for shop drawing submittals unless otherwise specified in the plans.

2. COMPATIBILITY: The General Guardrail in this Index is based on the Midwest Guardrail System (MGS) design, with an approximate height of 31" at the top of the Panel (2'-1" mounting height at vertical ℄ of Panel) and a midspan panel splice as shown on Sheet 2. Guardrail components included on the APL, which are compatible with this Index, may also be identified as 31" or MGS Guardrail.

3. STANDARD COMPONENTS: Standard guardrail components, including posts, panels, and bolt systems, are based on the Task Force 13 Publication: Guide to Roadside Hardware Components (http://tf13.org/Guides/componentGuide/).

4. BUTTON-HEAD BOLTS: Install Button-Head Bolts where indicated using bolts, nuts, and washers as defined on Sheet 24. Place washers under nuts. Do not place washers between bolt heads and panels, except where otherwise shown in this Index.

5. HEX-HEAD BOLTS: Install Hex-Head Bolts where indicated using bolts, nuts, and washers in accordance with material properties of Specification 967. Place washers under nuts.

6. MISCELLANEOUS ASPHALT PAVEMENT: Install Miscellaneous Asphalt Pavement where indicated with a tolerance of ± ½" depth and in accordance with Specification 339.

7. ADJACENT SIDEWALKS & SHARED USE PATHS: When guardrail posts are placed within 4'-0" of a sidewalk or shared use path, use timber posts, or use steel posts only if treated with Pipe Rail as shown on Sheet 22.

   When timber posts are used, one of the following safety treatments is required for the bolt(s) protruding from the back face of the posts:
   a. After tightening the nut, trim the protruding post bolt flush with the nut and galvanize per Specification 562.
   b. Use post bolts 15" in length and countersink the washer and nut between 1" and 1½" deep into the back face of the post.
   c. Use 15" post bolts with sleeve nuts and washers.

   When End Treatment posts are within 4'-0" of a sidewalk or shared use path, steel posts are not permitted within the End Treatment segment. Terminate the Pipe Rail outside of End Treatment segments, as noted per Sheet 22.

8. NESTED W-BEAM: Where called for in the plans, install two W-Beam Panels mounted flush per location, securing all panels with Button-Head Bolts threaded through aligned slots and holes. 2" Button-Head Bolts are permitted for panel splice locations.

9. CONNECTION TO RIGID BARRIER: The connections to Rigid Barrier in this Index only apply to newly constructed bridge Traffic Railing and Concrete Barrier or where the complete Approach Transition Connection to Rigid Barrier shown herein can be installed without conflicting with existing Traffic Railings, structures, or approach slabs.

   For connecting guardrail to existing bridge Traffic Railings, see Indexes 536-002, 521-404, and 521-405.

10. CONNECTION TO EXISTING GUARDRAIL: Where a transition to existing guardrail at 27" height is required, linearly transition the new guardrail height over a distance ranging from 25'-0" to 31'-3". Height transitions must occur outside of End Treatment and Approach Transition segments.

    Provide an immediate transition to the required midspan panel splice using the available panel options on Sheet 4 (9'-4½" or 15'-7½" panel). Alternatively, this transition to midspan panel splice may be achieved by installing a single reduced post spacing of 3'- 1½" within the new guardrail, immediately adjacent to the connection location.

11. PLANS CALLOUTS: Begin/End Station labels are shown throughout this Index as they correspond to the station and offset callouts specified in the plans.

    In the plans, Begin/End Guardrail Station refers to the General TL-3 Guardrail Pay Item, and it may be abbreviated as Begin/End GR. Station. Where the Low-Speed TL-2 Guardrail Pay Item is specifically required, the callout in the plans will then specify Begin/End TL-2 GR. Station.

12. QUANTITY MEASUREMENT: Measure guardrail and corresponding components as defined in Specification 536. The Guardrail length is measured along the centerline of installed Panels, between the points labeled Begin/End Guardrail Station shown on the following Index Sheets and defined in the plans (typically measured from the ℄ of the panel's post bolt slots at the approach/trailing ends).

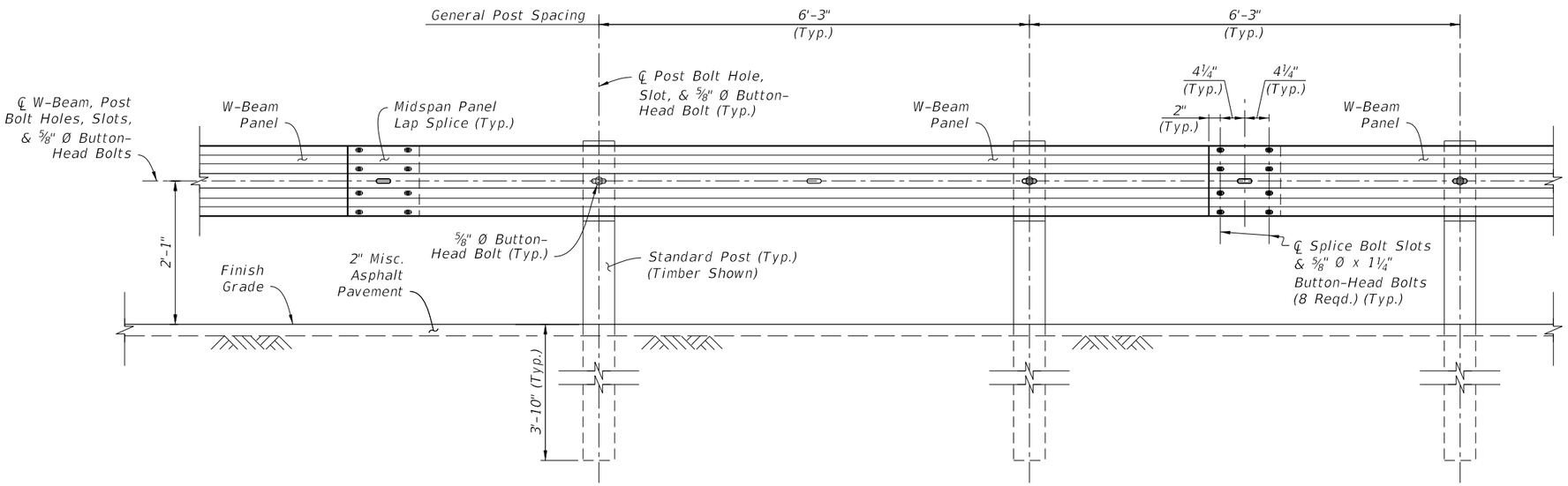

GENERAL GUARDRAIL
INSTALLED ELEVATION

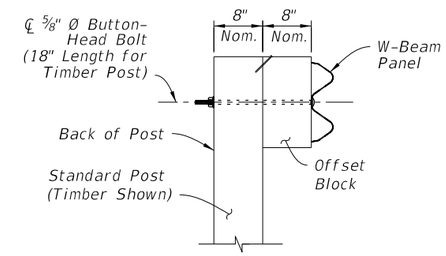

INSTALLED SECTION

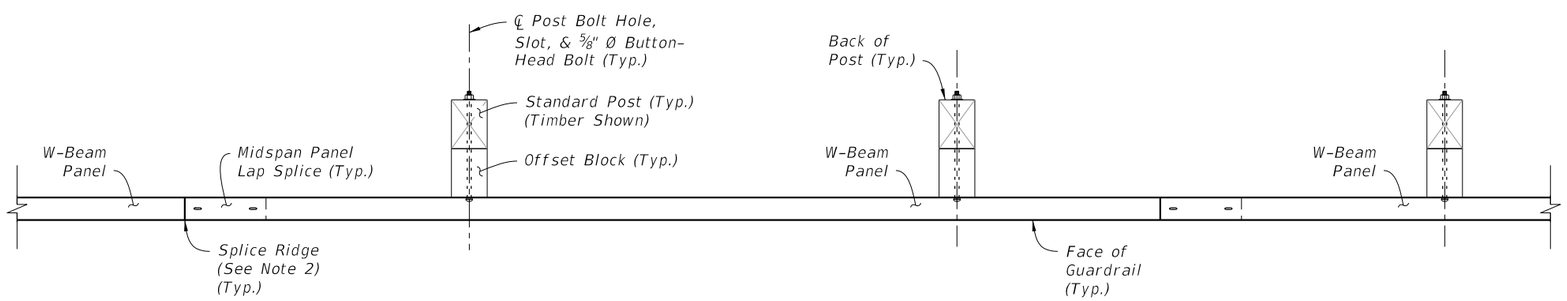

INSTALLED PLAN

NOTES:

1. GENERAL: Install the General Guardrail configuration where indicated in the plans. This may include tapered segments if called for in the plans.

   Use 12'-6" or longer W-Beam Panels. A single 6'-3" Panel may be used at the end of the run to meet the nominal Begin/End Guardrail Sta. requirements.

   Where a differing guardrail configuration is required for constructability beyond the options shown in this Index or the plans, obtain approval from the Engineer prior to installation.

2. MIDSPAN PANEL LAP SPLICE: For proper structural function, place all Lap Splices at midspan unless otherwise indicated.

   Lap the Panels with the Splice Ridge oriented downstream of the final Direction of Traffic in the nearest traffic lane. For reverse lane conditions, orient the Splice Ridge downstream of the lane direction with the highest traffic volume. Orienting Lap Splices for Temporary Traffic Control phasing is not required.

3. CONNECTION DETAILS: Connections to End Treatments, Approach Transitions, or other segment types are defined in the following Index Sheets, APL Drawings, or the plans.

4. W-BEAM PANEL DETAILS: See Sheet 4.

5. POST & OFFSET BLOCK DETAILS: See Sheet 5.

6. GUARDRAIL SECTIONS: For Sections showing typical mounting heights, grading, and lateral offsets in relation to adjacent roadway features, see Sheet 6.

7. MODIFIED MOUNTS: Where concrete structures, concrete sidewalk, or shallow depth conditions are encountered, see Sheet 23 for additional post mounting options.

8. DEFINED SEGMENTS: The General Guardrail shown provides the base configuration, including Post Spacing and splice locations, for Defined Segment modifications where indicated in the plans and using the Guardrail Types, Sections, and/or hardware as shown in this Index (e.g. Double Faced W-Beam, Deep Posts at Slope Breaks, Pipe Rail, Rub Rail, or Reduced Post Spacing for Hazards).

GENERAL, TL-3 GUARDRAIL DETAILS

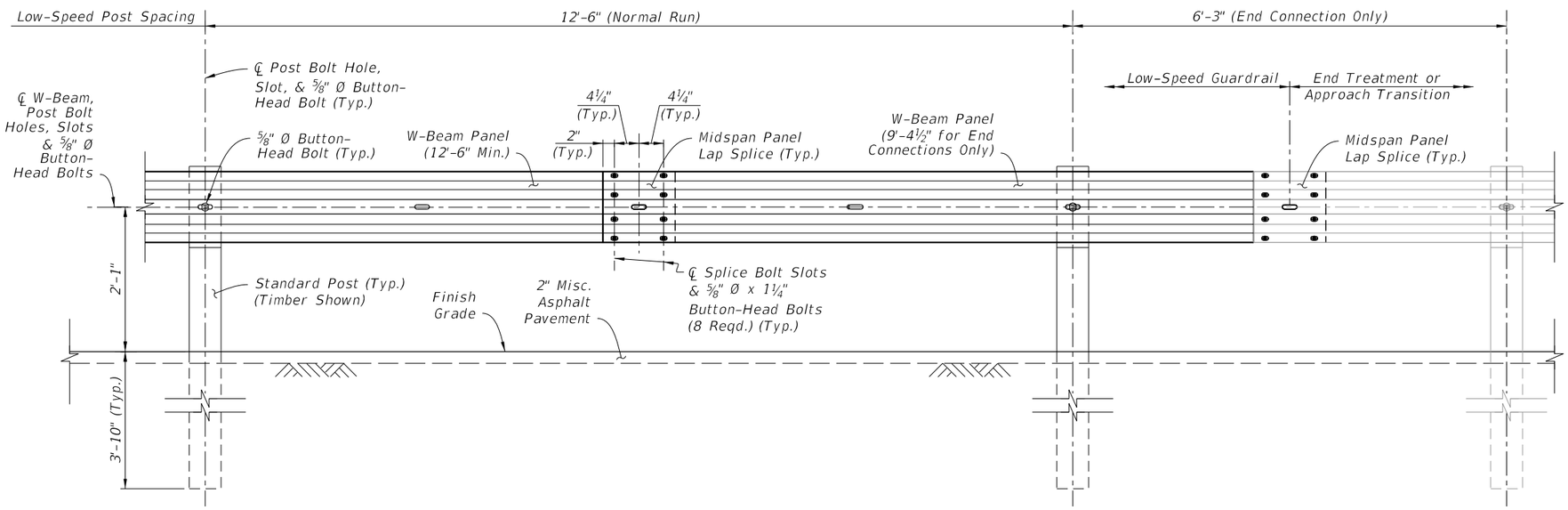

LOW-SPEED GUARDRAIL
INSTALLED ELEVATION

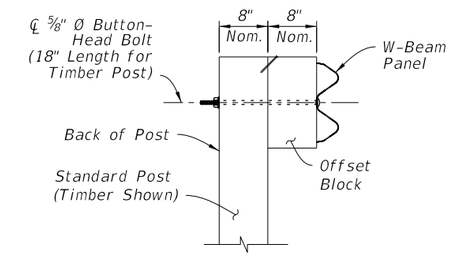

INSTALLED SECTION

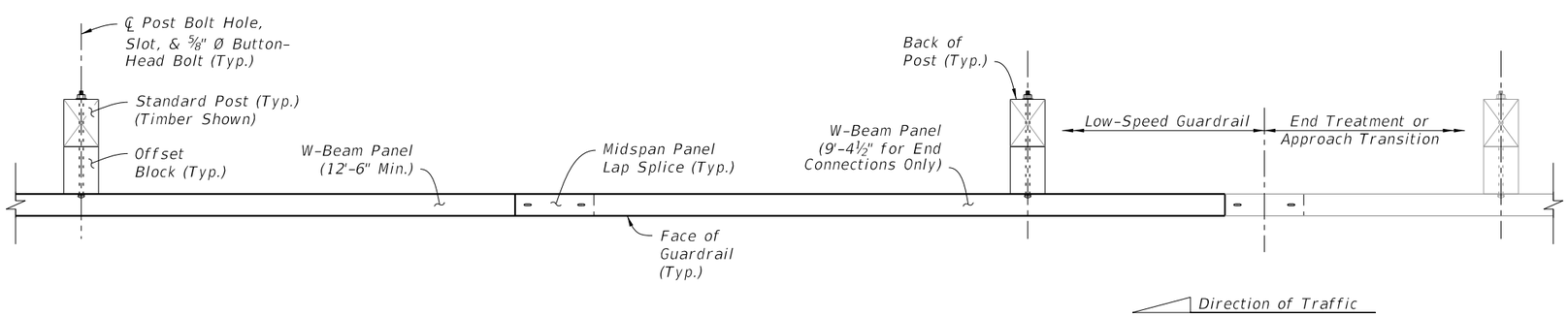

INSTALLED PLAN

NOTES:

1. GENERAL: Install the Low-Speed Guardrail configuration where indicated in the plans. Low-Speed Guardrail may include tapered segments if called for in the plans.

   Use 12'-6" or 25'-0" W-Beam Panels for normal spans, and use 9'-4½" Panels for end connections to adjoining segments as shown. A single 6'-3" Panel may be used at the end of the Low-Speed Guardrail run along with a single reduced 6'-3" post spacing to meet the nominal Begin/End Guardrail Sta. required.

   Where a differing guardrail configuration is required for constructability beyond the options shown in this Index or the Plans, obtain approval from the Engineer prior to installation.

2. MIDSPAN PANEL LAP SPLICE: For proper structural function, place all Lap Splices at midspan unless otherwise indicated.

   Lap the Panels with the Splice Ridge oriented downstream of the final Direction of Traffic in the nearest traffic lane. For reverse lane conditions, orient the Splice Ridge downstream of the lane direction with the highest traffic volume. Orienting Lap Splices for Temporary Traffic Control phasing is not required.

3. CONNECTION DETAILS: Connections to End Treatments, Approach Transitions, or other segment types are defined in the following Index Sheets, APL Drawings, or the plans.

4. W-BEAM PANEL DETAILS: See Sheet 4.

5. POST & OFFSET BLOCK DETAILS: See Sheet 5.

6. GUARDRAIL SECTIONS: For Sections showing typical mounting heights, grading, and lateral offsets in relation to adjacent roadway features, see Sheet 6.

7. MODIFIED MOUNTS: Where concrete structures, concrete sidewalk, or shallow depth conditions are encountered, see Sheet 23 for additional post mounting options.

8. RESTRICTIONS: Low-Speed Guardrail segments are not permitted for use with items including, but not limited to, Double Faced W-Beam, Deep Posts at Slope Breaks, Raised Curb, Pipe Rail, and/or Rub Rail.

LOW-SPEED, TL-2 GUARDRAIL DETAILS

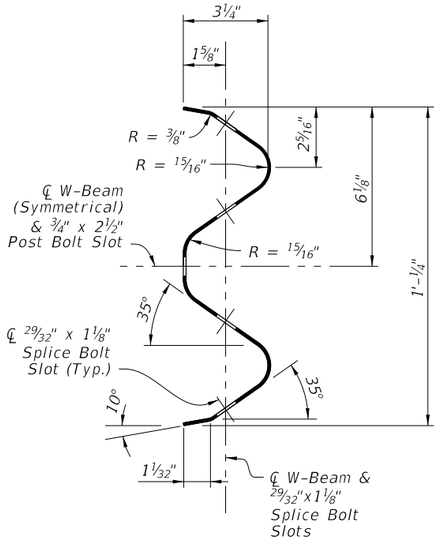

W-BEAM PANEL SECTION

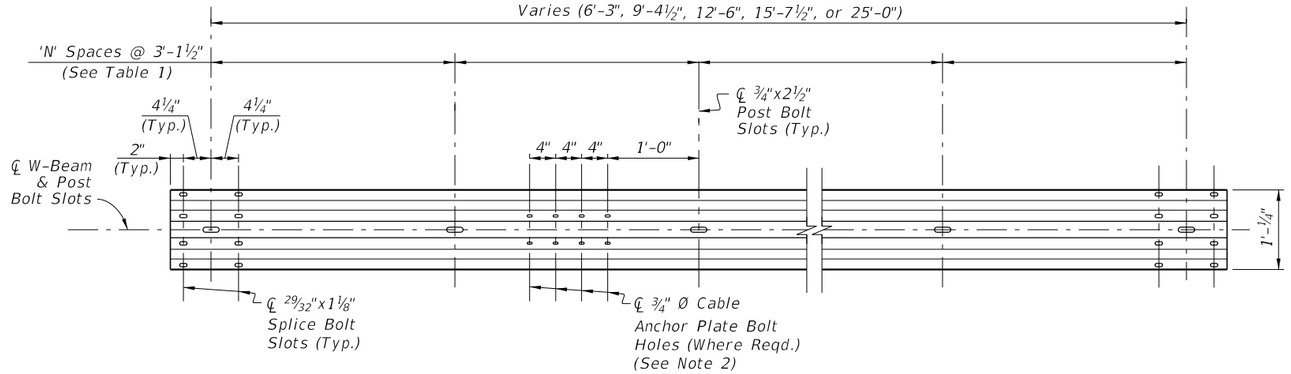

W-BEAM PANEL ELEVATION

PANEL SUMMARY TABLE:

Panel Type	Number of Spaces 'N'	Gauge
6'-3" W-Beam	2	12
9'-4½" W-Beam	3	12
12'-6" W-Beam	4	12
15'-7½" W-Beam	5	12
25'-0" W-Beam	8	12
3'-1½" Thrie-Beam	1	10
6'-3" Thrie-Beam	2	12
12-6" Thrie-Beam	4	12
25-0" Thrie-Beam	8	12
Thrie-Beam Trans.	2	10

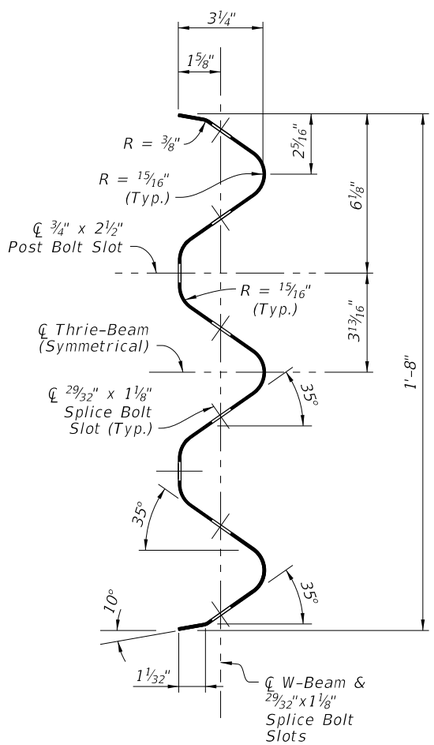

THRIE-BEAM PANEL SECTION

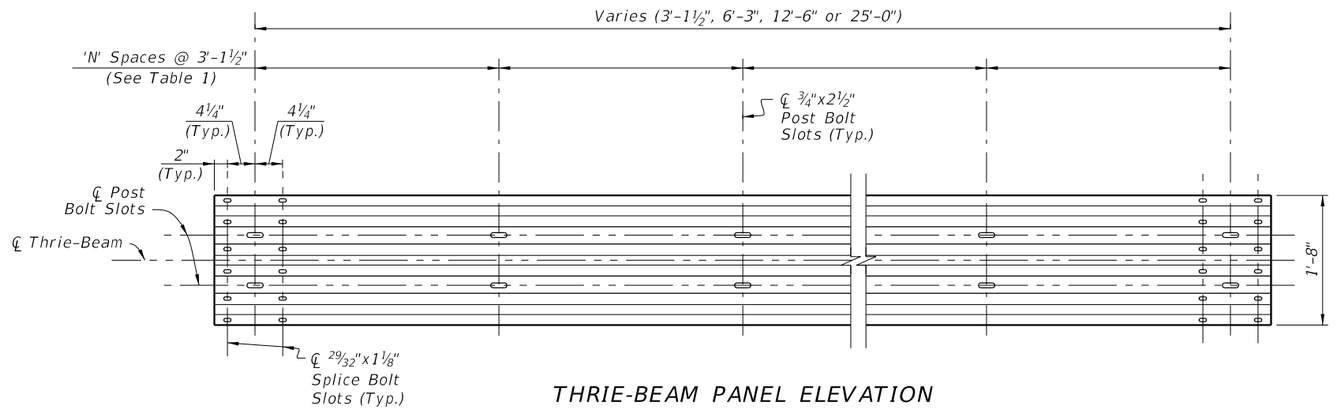

THRIE-BEAM PANEL ELEVATION

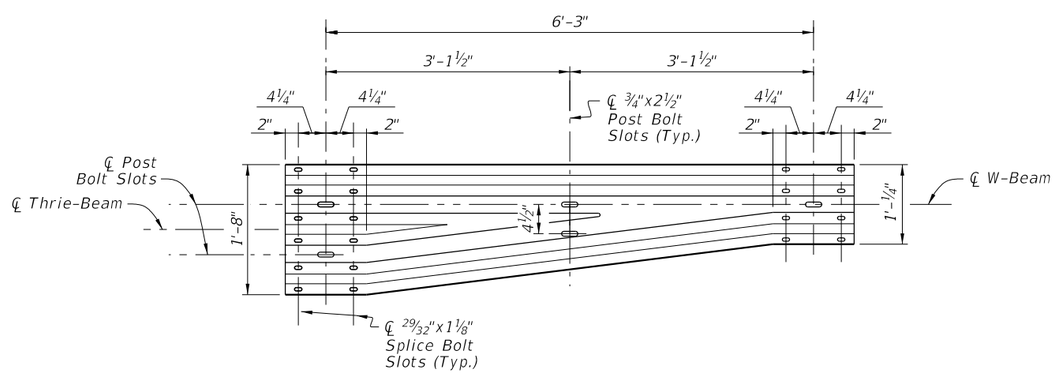

THRIE-BEAM TRANSITION PANEL ELEVATION
(Reverse Direction Similar by Opposite Hand)

NOTES:

1. MATERIALS:
   Use corrugated steel panels in accordance with Specification 967 and made from either Class A, 12 gauge steel or Class B, 10 gauge steel as specified in the 'Panel Summary Table' above.

2. CABLE ANCHOR PLATE BOLT HOLES:
   Include ¾" Ø Cable Anchor Plate Bolt Holes only where required for installation of the Cable Anchor Plate shown on Sheet 9, 10, & 11.

   29/32" x 1⅛" slots may substitute for the ¾" Ø holes shown.

W-BEAM AND THRIE-BEAM PANEL DETAILS

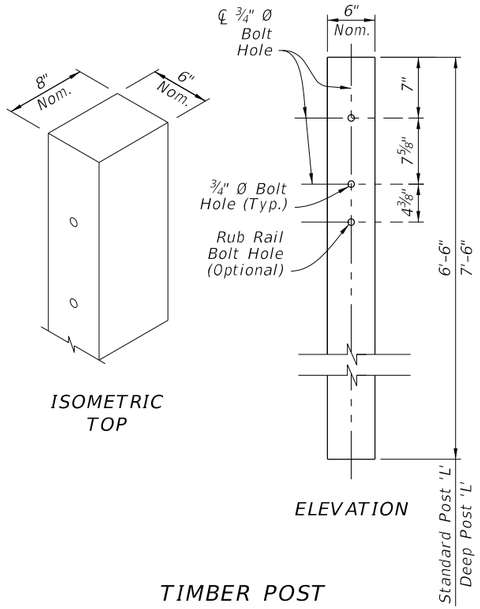

TIMBER POST
(6"X8" Nominal)

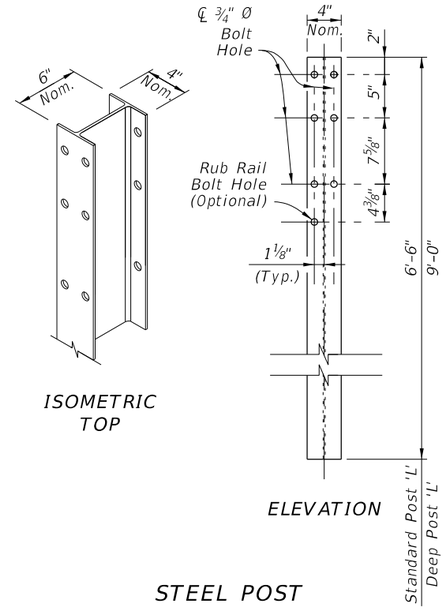

STEEL POST
(W6X8.5 or W6X9)

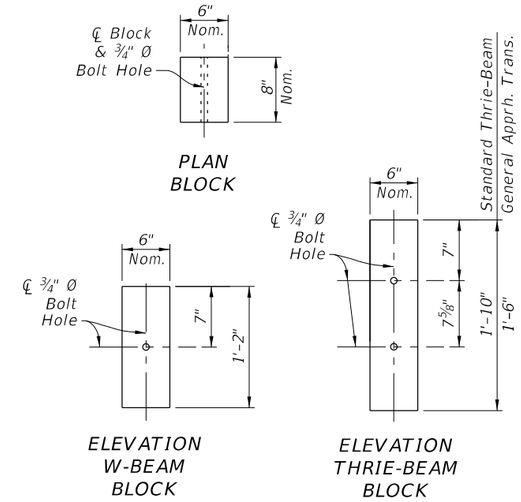

TIMBER OFFSET BLOCK
(6"X8" Nominal)

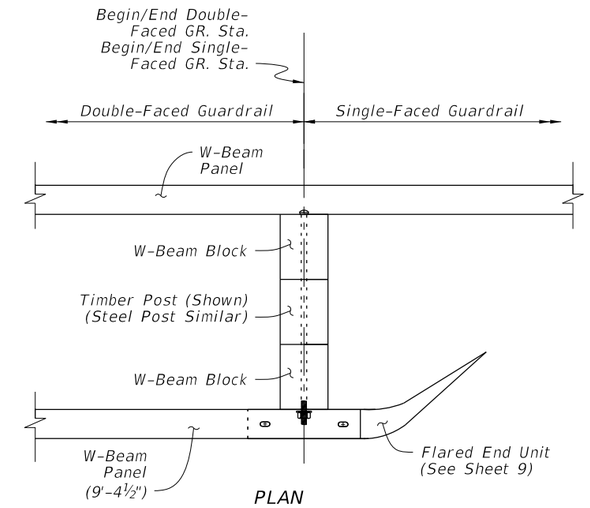

SINGLE-FACED / DOUBLE-FACED
GUARDRAIL CONNECTION

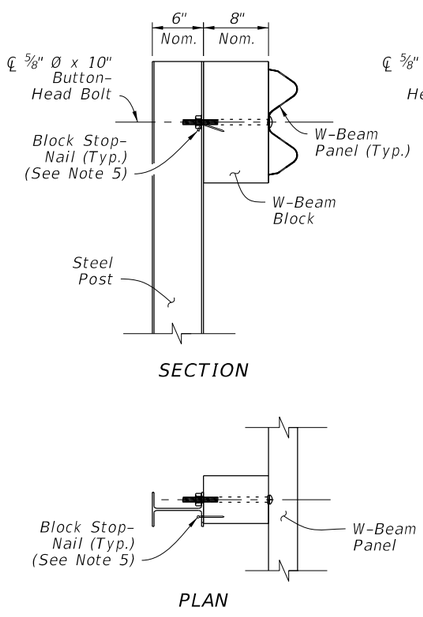

SINGLE-FACED
W-BEAM
STEEL POST

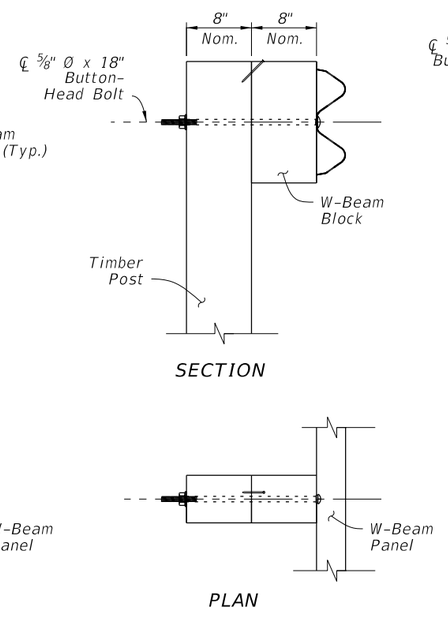

SINGLE-FACED
W-BEAM
TIMBER POST

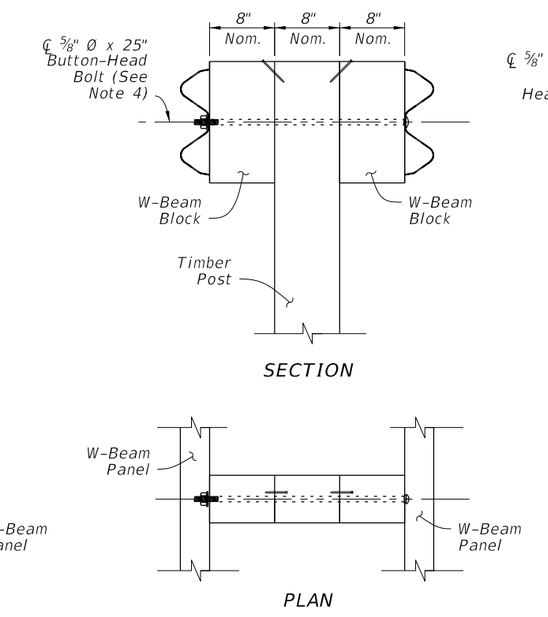

DOUBLE-FACED W-BEAM
TIMBER POST
(Thrie-Beam Similar)
(Steel Post Similar)

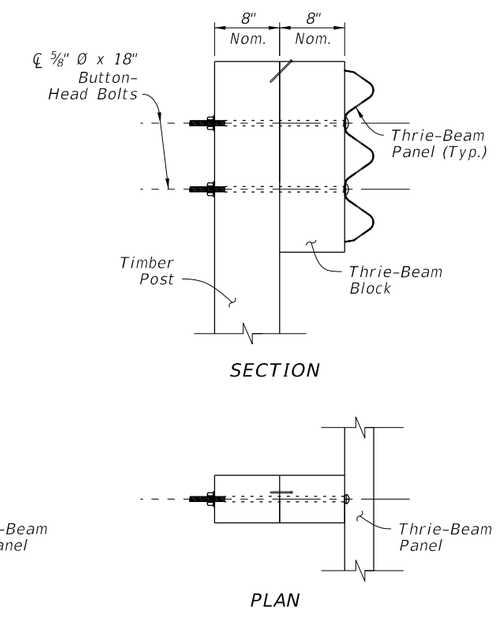

THRIE-BEAM
TIMBER POST
(Steel Post Similar)

NOTES:

1. STANDARD POSTS: Where Standard Posts are called for in this Index, use either a Timber Post or Steel Post at the Length, 'L', shown for Standard Posts. Use a single post material type consistently per each run of guardrail. Only where specified in the Plans, use the Deep Post 'L' for Slope Break Conditions as shown on Sheet 6.
2. OFFSET BLOCKS: For each Panel type, install the corresponding Offset Block type as shown. For General, TL-3 (Single Faced) Approach Transitions only, use the 1'-6" Thrie-Beam Block (See Sheet 13).
3. BOLT HOLES: ¾" Ø Bolt Holes shown in posts within this Index may be substituted with 13⁄16" Ø Bolt Holes.
4. DOUBLE FACED GUARDRAIL: Orient Post Bolts with the Button-Head located on the side nearest the traffic lane. The bolt's threaded portion is not permitted to extend beyond ¾" from the face of the tightened nut; trim the threaded portion as needed and galvanize in accordance with Specification 562.
5. BLOCK STOP-NAIL: Drive one nail per Standard Offset Block as shown to prevent Block rotation. Use steel 3½" Type 16d nails with ASTM A153 hot-dip galvanization. For steel posts, drive the nail through the unused flange Bolt Hole and bend the nail so its head contacts the flange.
6. MATERIALS: Use timber and steel posts and offset blocks in accordance with Specification 967. Composite offset blocks may be substituted as approved on the APL. Use a single offset block type consistently per each run of guardrail. Steel offset blocks are only permitted for Modified Thrie Beam.

POST AND OFFSET BLOCK DETAILS

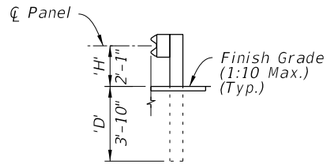

W-BEAM

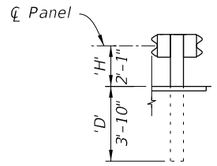

DOUBLE FACED W-BEAM

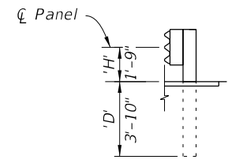

THRIE-BEAM

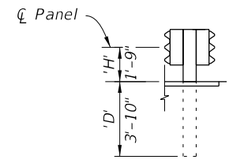

DOUBLE FACED THRIE-BEAM

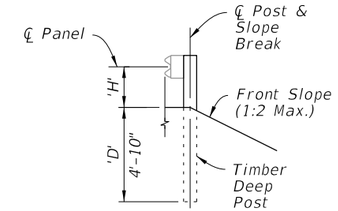

SLOPE BREAK CONDITION TIMBER DEEP POST

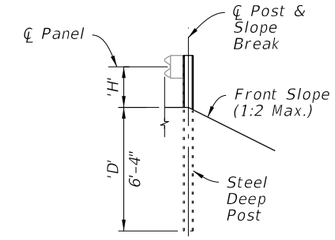

SLOPE BREAK CONDITION STEEL DEEP POST

GUARDRAIL TYPES - MOUNTING HEIGHTS & POST DEPTHS

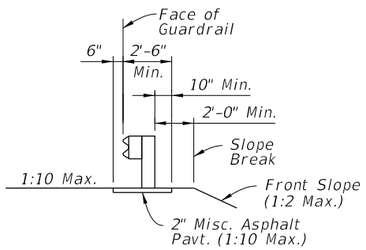

TYPICAL GRADING & PAVT. PLACEMENT DETAIL (See Note 2)

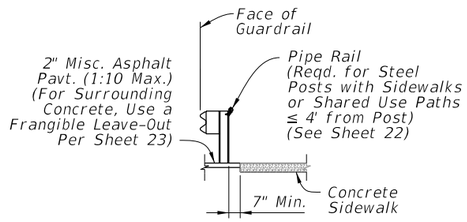

TYPICAL SIDEWALK DETAIL (Work with Other Sections as Reqd.)

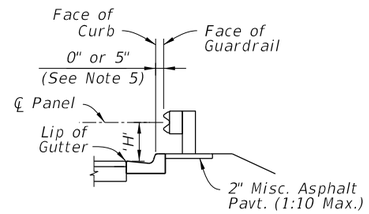

ADJACENT TO CURB (Type F Curb Shown)

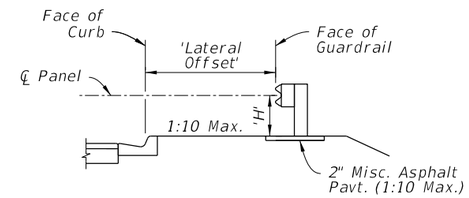

BEHIND CURB (Type F Curb Shown)

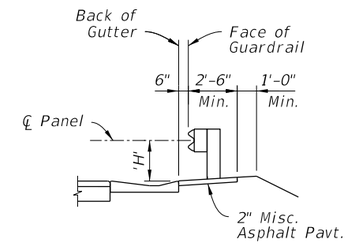

ADJACENT TO SHOULDER GUTTER

GUARDRAIL SECTIONS - TYPICAL

GUARDRAIL SECTIONS - CURB & GUTTER

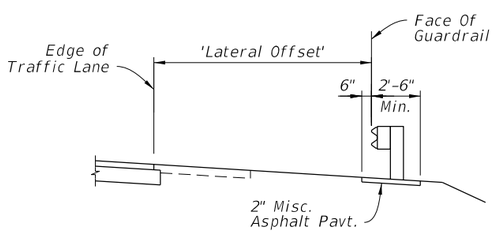

UNPAVED OR PARTIALLY PAVED SHOULDER

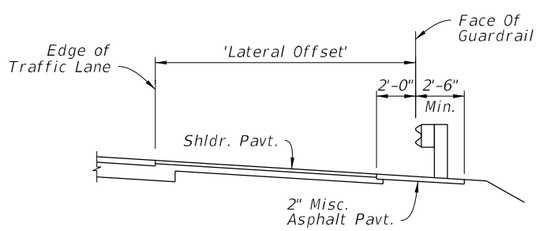

FULLY PAVED SHOULDER

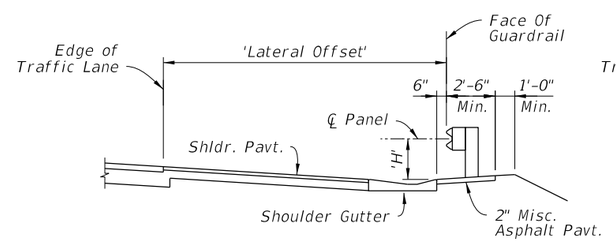

SHOULDER GUTTER

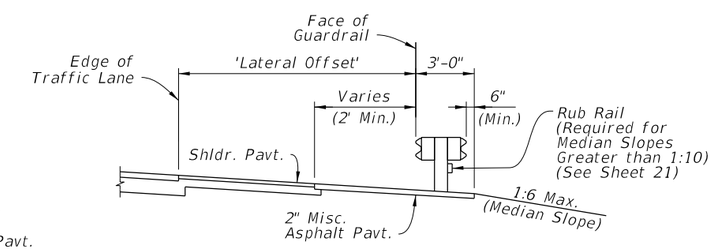

DOUBLE FACED GUARDRAIL (Shown In Median)

GUARDRAIL SECTIONS - SHOULDERS

GUARDRAIL HEIGHT SUMMARY TABLE:			
Type:	Min. Depth 'D':	Mounting Height 'H':	Post Length 'L':
W-Beam (Single and Double Faced)	3'-10"	2'-1"	6'-6"
Thrie-Beam (Single and Double Faced)	3'-10"	1'-9"	6'-6"
Timber Deep Post	4'-10"	See Above	7'-6"
Steel Deep Post	6'-4"	See Above	9'-0"

NOTES:

1. GUARDRAIL SECTIONS: Construct Sections as indicated in the plans. The details shown herein depict W-Beam Guardrail, but are applicable to the other defined Guardrail Types placed at the corresponding height, 'H'. Use components per Sheets 4 & 5. Steel and timber post types are interchangeable unless otherwise defined. The 1:10 Max. cross slope shown is the maximum slope permitted for proper guardrail function, but project-specific cross slope requirements are governed by additional design criteria, per the plans.

2. TYPICAL GRADING & PAVEMENT PLACEMENT DETAIL: Construct features as depicted except where superceded by specific Guardrail Sections or the plans. Place the Slope Break a Minimum of 2' behind the post. For Deep Posts, the slope break may be placed at the ℄ Post with the 2" Miscellaneous Asphalt Pavement omitted.

3. SLOPE BREAK CONDITION: Install Deep Posts only where called for in the plans. Deep Posts are only permitted where post spacing is 6'-3" or less.

4. LATERAL OFFSETS: The Lateral Offsets shown are governed by the station and offset call outs for Face of Guardrail, as shown in the plans.

5. ADJACENT TO CURB: Place the Face of Guardrail consistently offset either flush with the Face of Curb or 5" behind the Face of Curb, as indicated by the plans station and offset callout. For offset changes, transition the Face of Guardrail as shown in the plans.

GUARDRAIL SECTIONS

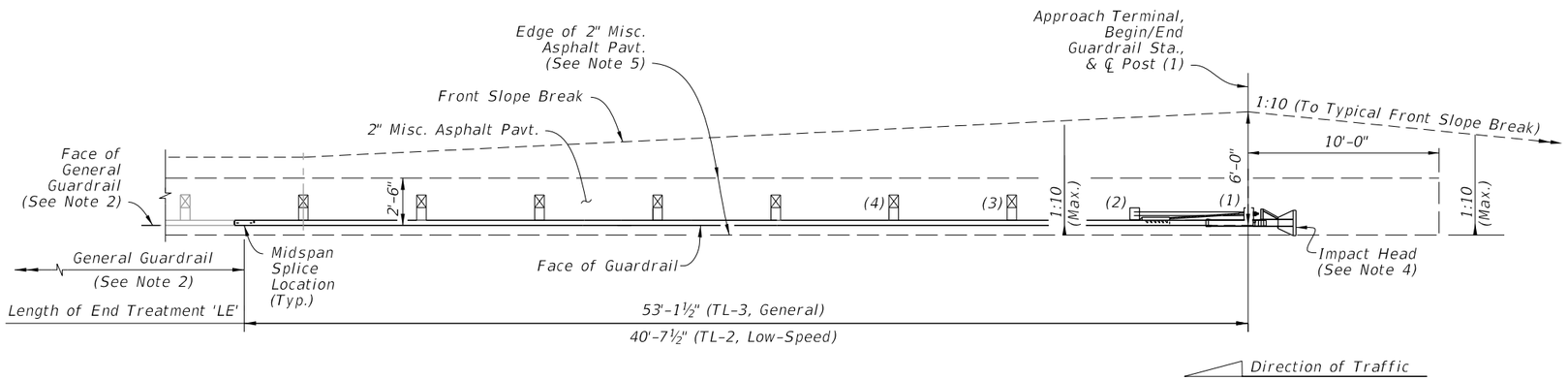

APPROACH TERMINAL ASSEMBLY
'PARALLEL' TYPE - PLAN VIEW

NOTES:

1. INSTALLATION: Locate Approach Terminals where called for in the plans, with the Post (1) ℄ placed at the Begin/End Guardrail Station indicated in the plans.

   The Plan Views shown herein are schematic only, showing basic geometry for Approach Terminals listed on the APL. The predefined Length of End Treatment, 'LE', includes the proprietary portion of various Approach Terminals and provides for more consistent planning of assembly installations across the differing Approach Terminal types. Forward-anchoring style Approach Terminals may vary from the planned lengths shown by up to 3'-0".

   Construct Approach Terminals as shown in the APL and in accordance with the manufacturer's unique drawing details, procedures, and specifications.

   Install posts in accordance with the manufacturer's drawings. The Special Posts on Sheet 23, including Special Steel Posts, Encased Posts, and Frangible Leave-Outs, are not permitted within the Approach Terminal segment unless otherwise called for in the plans.

   Align panel lap splices in accordance with the manufacturer's drawings, regardless of the direction of traffic.

   Install adjacent grading, gutters, and/or curbing as shown herein.

2. GENERAL GUARDRAIL: General Guardrail typically includes Panels and Post Spacing as shown on Sheet 2, including parallel and tapered segments.

   Approach Transitions, Low-Speed Guardrail, or Reduced Post Spacing Guardrail segments may be substituted for the General Guardrail shown herein if indicated in the plans.

3. APPROACH TERMINAL TEST LEVEL: Install either a Test Level 3 (TL-3) or Test Level 2 (TL-2) Approach Terminal as specified in the plans. TL-3 Approach Terminals may substitute for TL-2 Approach Terminals unless the substitution is specifically prohibited in the plans. TL-2 Approach Terminals may not substitute for TL-3 installations.

4. IMPACT HEAD END DELINEATOR: Apply Yellow Retroreflective Sheeting to the nose of the End Terminal in accordance with Specification 536.

5. 2" MISCELLANEOUS ASPHALT PAVEMENT: The Plan View depicts the Unpaved Shoulder condition. For Fully Paved Shoulder and Shoulder Gutter conditions, extend the 2" Misc. Asphalt Pavement as shown in the corresponding 'Section at Post (1)' details below.

   The 2" Misc. Asphalt Pavement shown upstream of Post (1) may be substituted with a different pavement type where called for in the Plans.

6. CLEAR AREA REQUIREMENT: Do not place any permanent aboveground installations within the areas shown with 1:10 maximum grading. For the finished condition, keep this area free of all aboveground obstructions, including dense vegetation and trees.

7. 'CURBED' AND 'DOUBLE FACED' GUARDRAIL SEGMENTS: See Sheet 8.

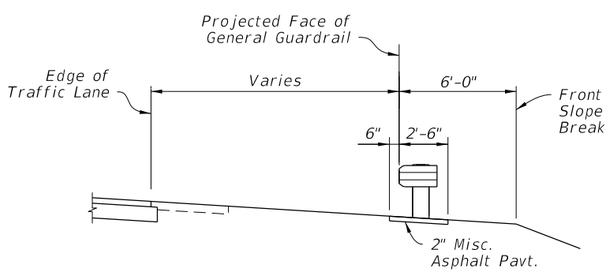

SECTION AT POST (1)
WITH UNPAVED SHOULDER

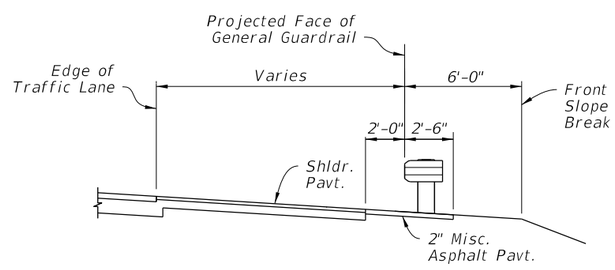

SECTION AT POST (1)
WITH FULLY PAVED SHOULDER

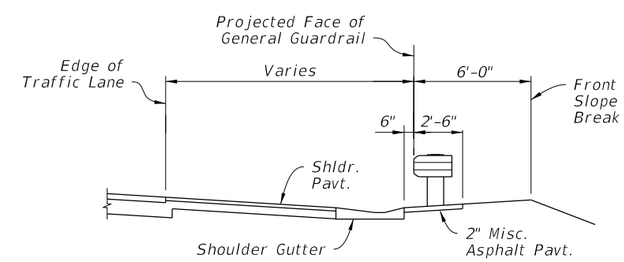

SECTION AT POST (1)
WITH SHOULDER GUTTER

END TREATMENT - APPROACH TERMINAL GEOMETRY - PARALLEL

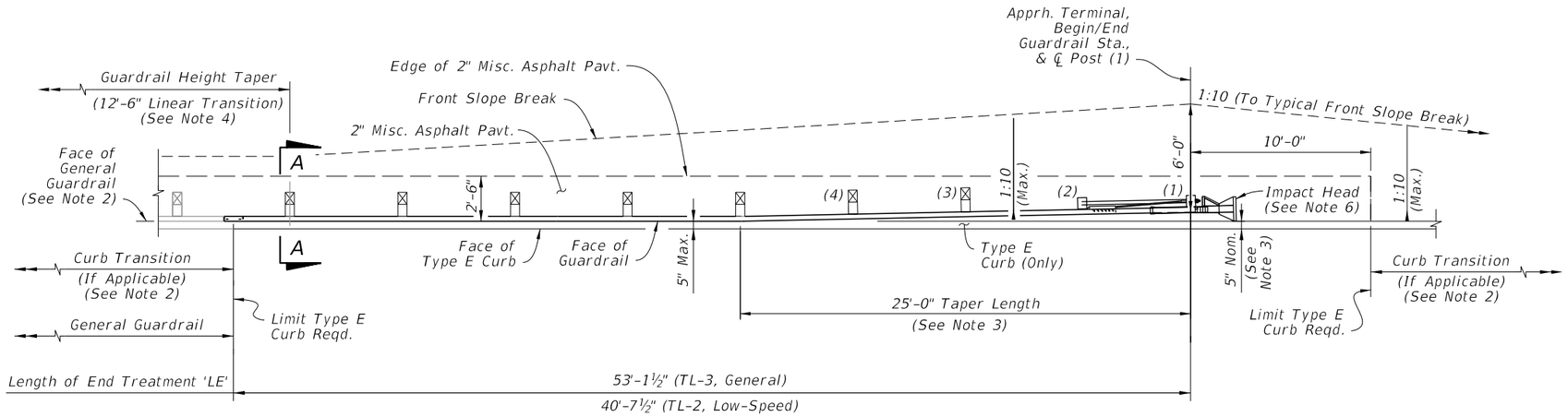

APPROACH TERMINAL ASSEMBLY
'CURBED' SEGMENT - PLAN VIEW

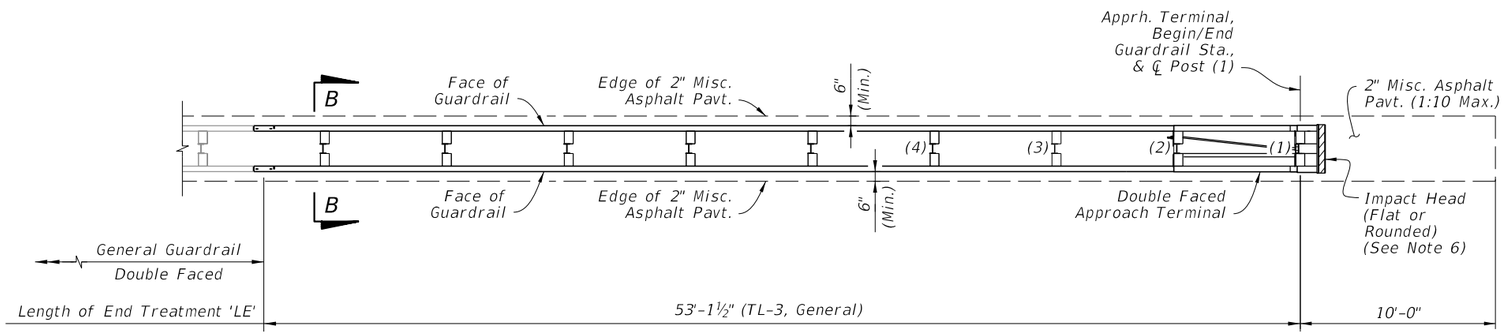

APPROACH TERMINAL ASSEMBLY
'DOUBLE FACED' SEGMENT - PLAN VIEW

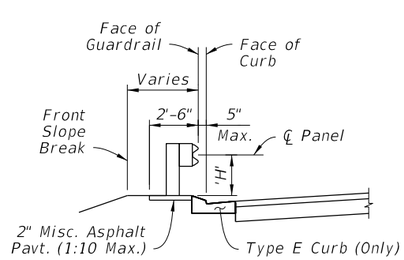

'CURBED' SECTION A-A
(Height, 'H', Measured from
Misc. Asphalt Pavt.)

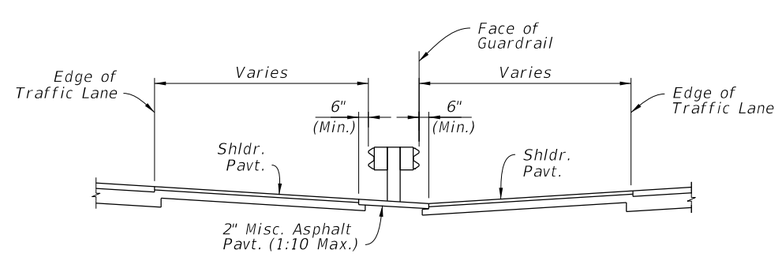

'DOUBLE FACED' SECTION B-B
(1:10 Slope or Flatter Reqd.)

NOTES:

1. GENERAL: See Notes 1 through 3 on Sheet 7.
2. CURBED SEGMENTS: Type E curb is required within the limits shown. When a different curb type is called for outside of the Type E curb limits, transition the curb shape linearly, over a nominal distance ranging 5'-0" to 10'-0"
3. TAPER LENGTH: For Curbed Segments, taper the guardrail away from the roadway where shown to place the inside edge of the Impact Head at 5" behind the face of the curb. Where additional lateral offset is required to fit the Approach Terminal Assembly hardware, such as a soil plate, place the Impact Head as close to the curb as the hardware allows, not to exceed 2'-0" from the face of curb.
4. GUARDRAIL HEIGHT TAPER: For Curbed Segments, the connecting General Guardrail Mounting Height, 'H', is typically measured from the Lip of Gutter (See Sheet 6 Guardrail Sections, 'Adjacent to Curb'), while the End Terminal Assembly 'H' is measured from the Misc. Asphalt Pavt. (See Section A-A). Linearly taper the difference in Mounting Height over a minimum length of 12'-6", starting where indicated herein.
5. DOUBLE FACED SEGMENT: Connect to Double Faced General Guardrail. Use consistent Posts and Offset Block types as specified in the APL drawings over the entire Length of End Treatment, 'LE'. Posts and Offset Blocks in the adjoining General Guardrail segment may be different from those inside of the 'LE'. A change in post type between timber and steel is permitted, immediately outside of the 'LE' segment.

   Maintain the 1:10 maximum grading as shown in Section B-B throughout segment 'LE'. Where required, transition to differing adjacent slopes linearly, over a minimum longitudinal length of 25'-0".
6. IMPACT HEAD END DELINEATOR: Apply Yellow Retroreflective Sheeting to the nose of the End Terminal in accordance with Specification 536.
7. CLEAR AREA REQUIREMENT: Do not place any permanent aboveground installations within the areas shown with 1:10 maximum grading. For the finished condition, keep this area free of all aboveground obstructions, including dense vegetation and trees.
8. 2" MISCELLANEOUS ASPHALT PAVEMENT: The 2" Misc. Asphalt Pavement shown upstream of Post (1) may be substituted with a different pavement type where called for in the Plans.
9. SINGLE FACED 'PARALLEL' SEGMENTS: See Sheet 7.

10/20/2022 8:53:08 AM

END TREATMENT - APPROACH TERMINAL GEOMETRY CURBED AND DOUBLE FACED

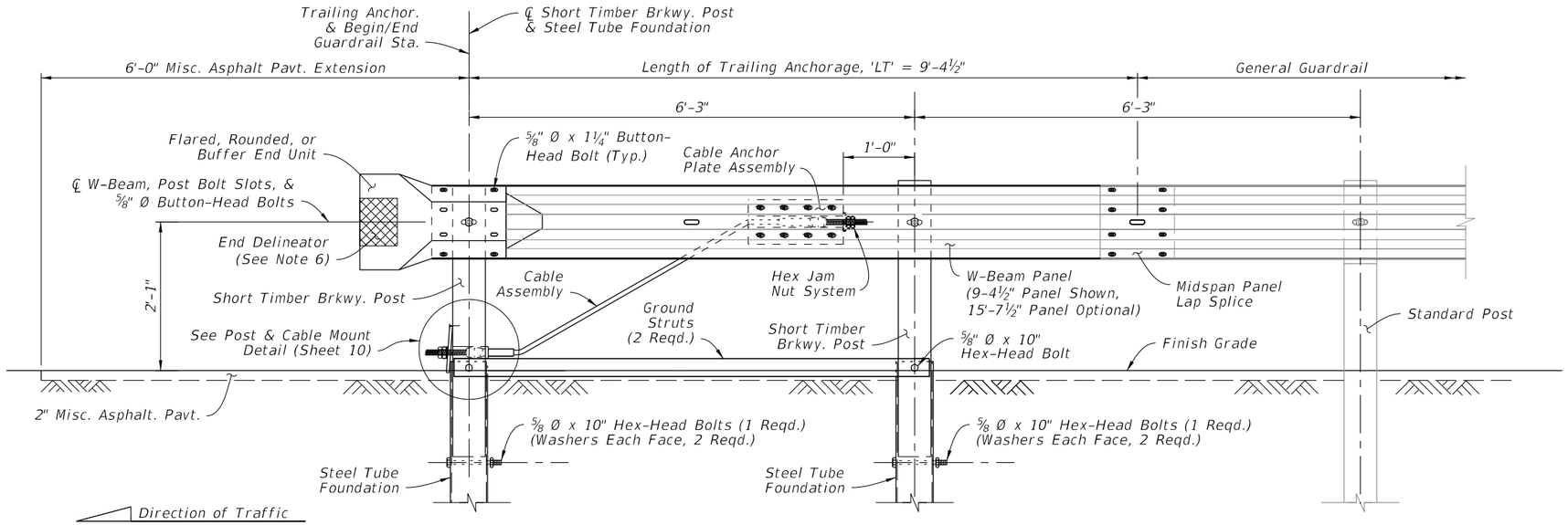

INSTALLED ELEVATION

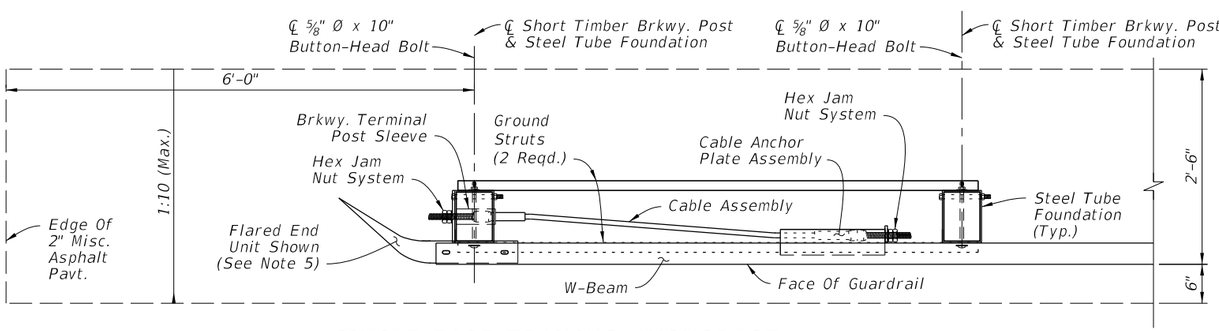

SINGLE FACE TRAILING ANCHORAGE
INSTALLED PLAN

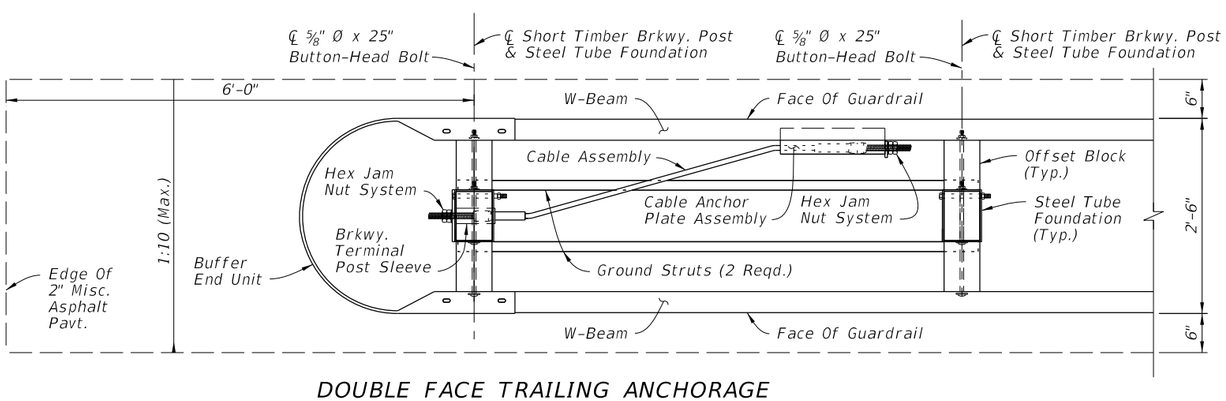

DOUBLE FACE TRAILING ANCHORAGE
INSTALLED PLAN

NOTES:

1. COMPONENT DETAILS: For additional component details, See Sheet 10.
2. END UNITS: Use materials for end units as defined in Specifications Section 967. End Units are referred to as "End or Buffer Sections" in AASHTO M180.

   Lap the Flared End Unit behind the W-Beam; lap the Rounded and Buffered End Units over the face of the W-Beam.
3. FOUNDATIONS: Install Steel Tubes by either of the following methods:

   a. Excavate, backfill, and compact material to provide full passive soil resistance to the surface of the Tube.

   b. Drive the Tube using a dummy timber post to prevent damage to the Breakaway Post.
4. GENERAL GUARDRAIL: General Guardrail typically includes Panels and Post Spacing as shown on Sheet 2, including parallel and tapered segments. Transitions, Low-Speed Guardrail, or Reduced Post Spacing Guardrail segments may be substituted for the General Guardrail shown herein if indicated in the plans.
5. SIDEWALK REQUIREMENTS: When sidewalks are located adjacent to the End Treatment, install a Rounded End Unit (Flared End Unit not permitted for this case).
6. END DELINEATOR: Mount retroreflective sheeting to the approach face of the End Unit in accordance with Specification Sections 536 and 967.

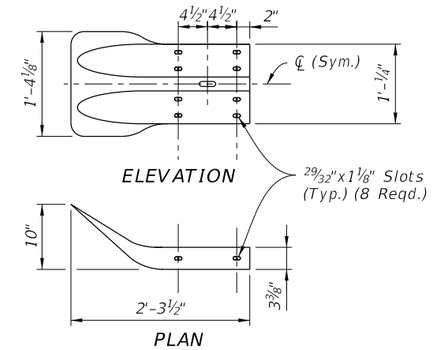

FLARED END UNIT

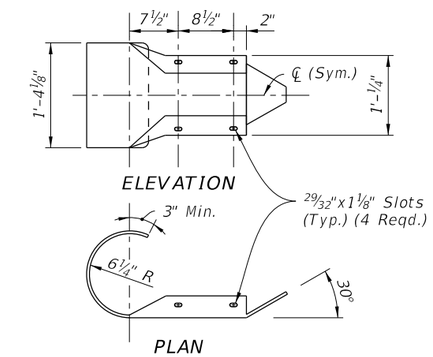

ROUNDED END UNIT

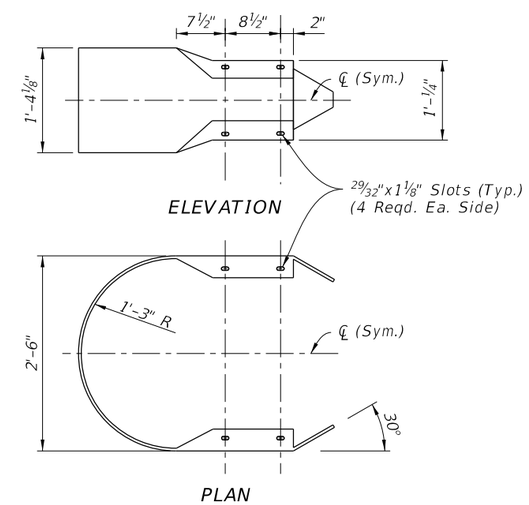

BUFFER END UNIT

END TREATMENT - TRAILING ANCHORAGE

10/20/2022 8:53:09 AM

LAST REVISION	REVISION	DESCRIPTION:			INDEX	SHEET
11/01/20			FY 2023-24 STANDARD PLANS	GUARDRAIL	536-001	9 of 24

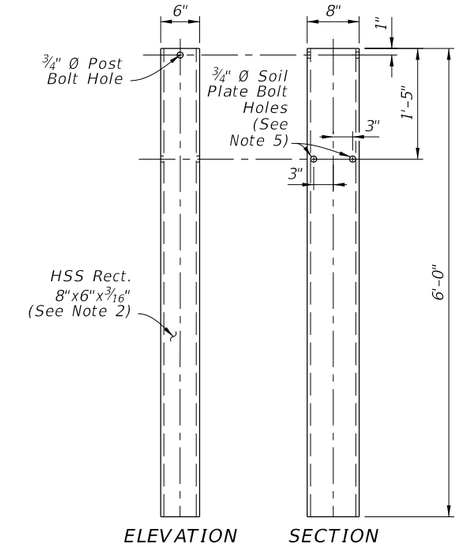

STEEL TUBE FOUNDATION

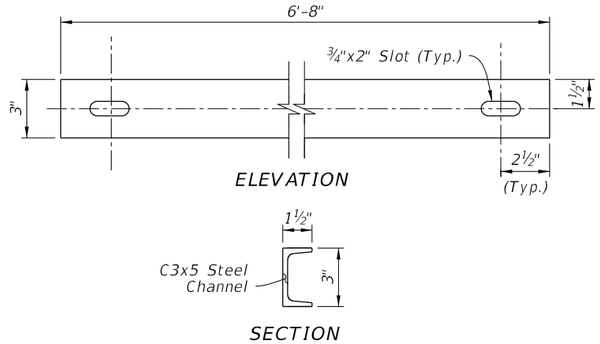

GROUND STRUT

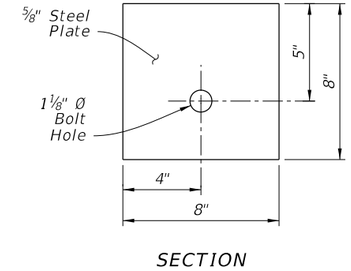

BEARING PLATE

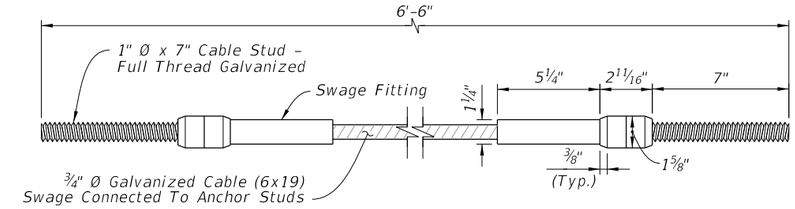

CABLE ASSEMBLY

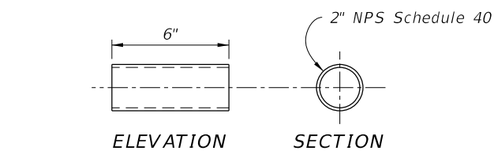

BREAKAWAY TERMINAL POST SLEEVE

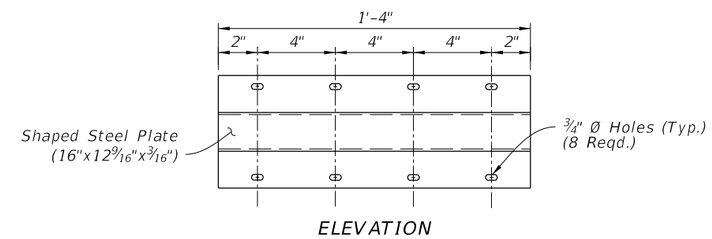

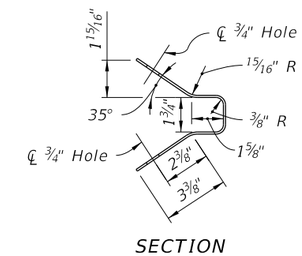

CABLE ANCHOR PLATE

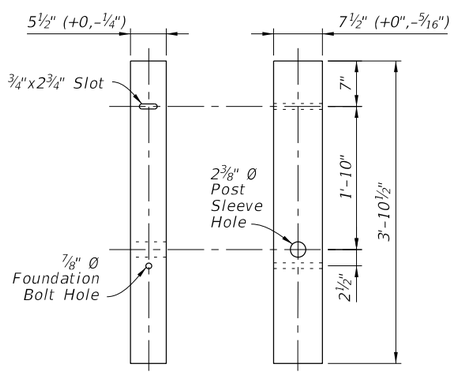

SHORT TIMBER BREAKAWAY POST (6"x8" Nom.)

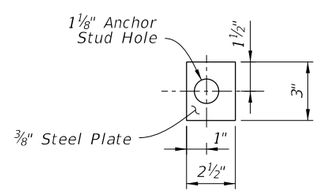

STEEL END PLATE

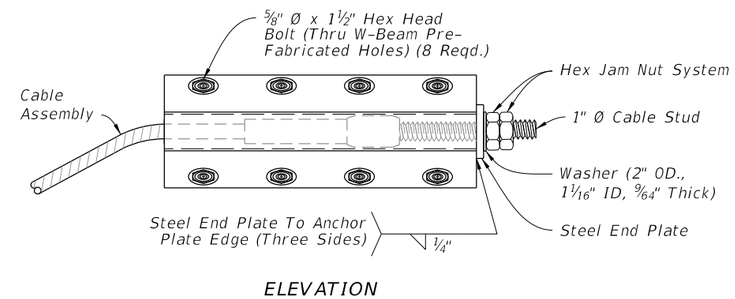

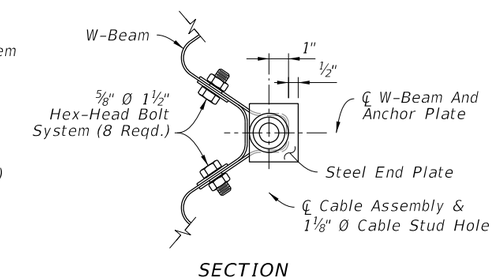

CABLE ANCHOR PLATE ASSEMBLY

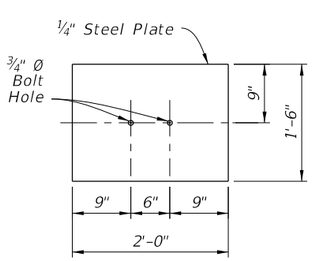

SOIL PLATE

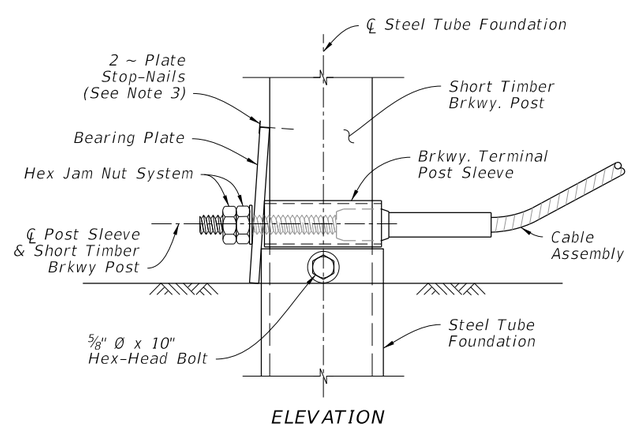

POST & CABLE MOUNT ASSEMBLY

NOTES:

1. INSTALLATION: Use components as shown on Sheets 9 & 11.
2. MATERIALS: Use steel plates, channels, and Cable Assemblies in accordance with Specification 967.

   Use Short Timber Breakaway Posts and Steel Tube Foundations in accordance with Specification 536.

   Use Hex Nuts, Hex Jam Nuts, and Washers in accordance with the AASHTO-AGC-ARTBA Guide to Standardized Barrier Hardware with English unit equivalents of components FNX24a and FWC24a, respectively. Two Hex Nuts may be used for the Hex Jam Nut System.
3. PLATE STOP-NAILS: To prevent rotation of the Bearing Plate, drive steel 2½" Type 8d nails with ASTM A153 hot-dip galvanization.
4. CABLE ANCHOR PLATE ASSEMBLY INSTALLATION: Mount to the pre-fabricated Cable Anchor Plate Bolt Holes in the W-Beam Panel, as shown on Sheet 4. These panel holes are only permitted for this Cable Anchor Plate Assembly application.
5. SOIL PLATE BOLT HOLE(S): For Trailing Anchorage installations as shown on Sheet 9, the two bolt holes shown may be substituted with a single bolt hole located at the tube centerline.

END TREATMENT - COMPONENT DETAILS

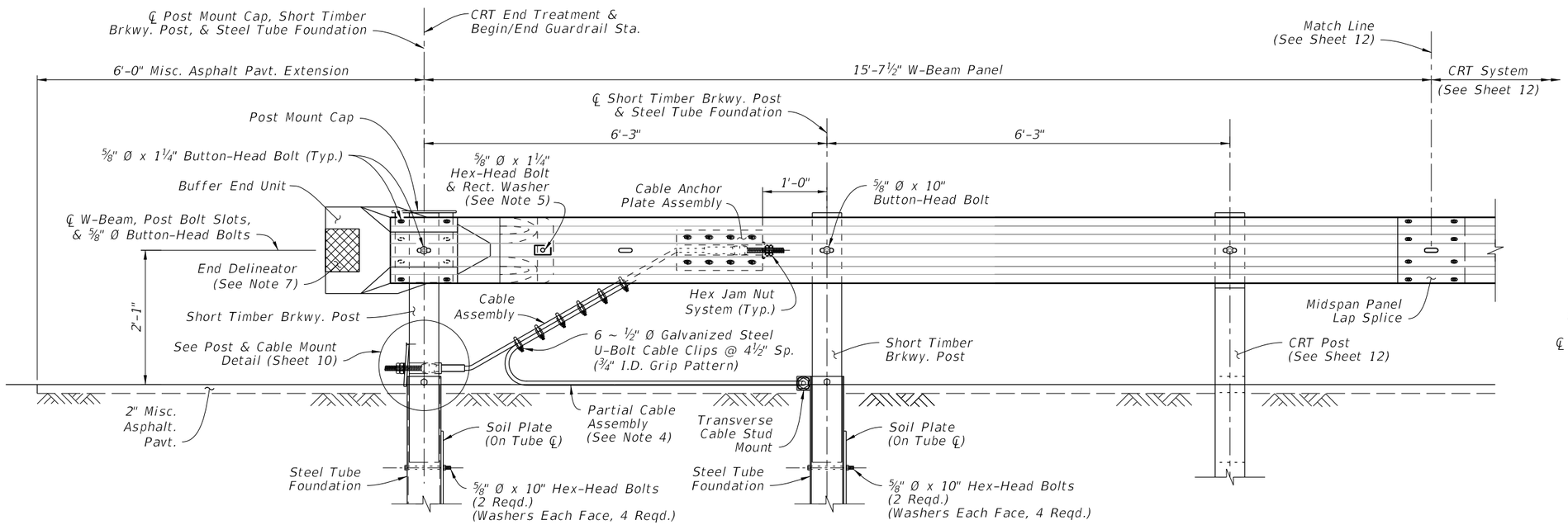

INSTALLED ELEVATION

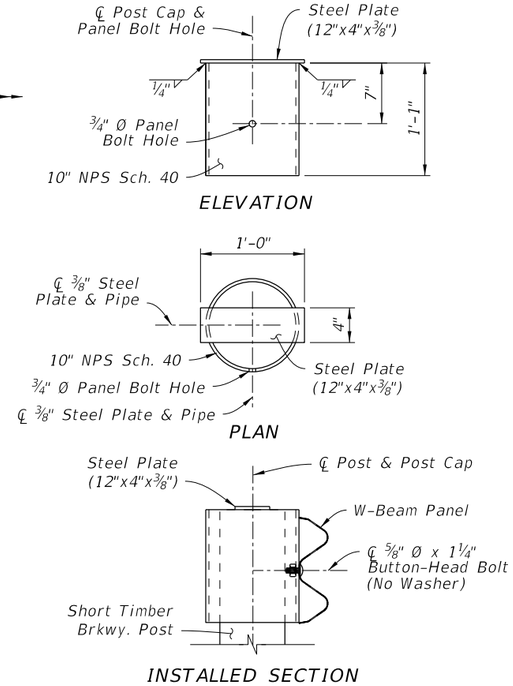

POST MOUNT CAP

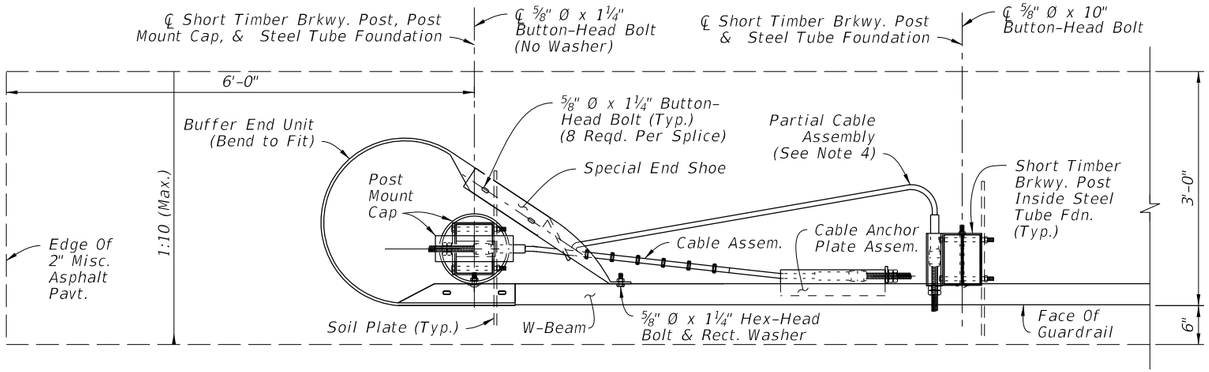

INSTALLED PLAN

CRT END TREATMENT ASSEMBLY

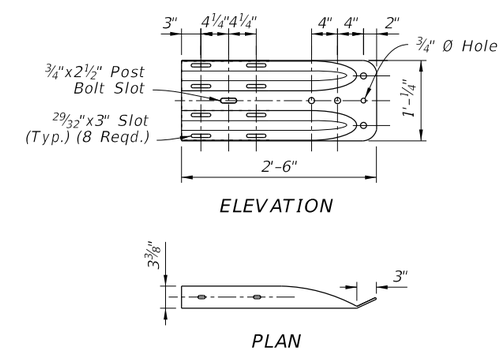

SPECIAL END SHOE

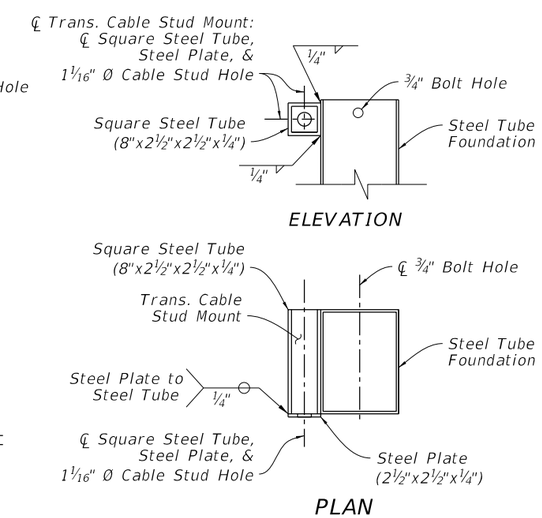

TRANSVERSE CABLE STUD MOUNT

NOTES:

1. INSTALLATION: Use with CRT Systems as required on Sheet 12.
2. COMPONENT DETAILS: For additional component details, See Sheet 10 & 12. For the Rectangular Washer detail, see Sheet 24.
3. MATERIALS: Use steel End Shoes, Plates, Tubes, and pipes in accordance with Specification 967.
4. PARTIAL CABLE ASSEMBLY: The Partial Cable Assembly is similar to the Cable Assembly defined on Sheet 10, except with a 9'-0" total length and the Swage Fitting and Cable Stud omitted from one end.

   Feed the Cable Stud through the Cable Stud Hole of the Transverse Cable Stud Mount as shown, and secure it with the Hex Jam Nut System as defined on Sheet 10.
5. SPECIAL END SHOE MOUNT: Punch a ¾" Ø hole in the W-Beam Panel as needed to secure the Special End Shoe with the ⅝" Ø Hex-Head Bolt. Galvanize hole per Specification 562.
6. FOUNDATIONS: Install Steel Tubes with attached Soil Plates by either of the following methods:

   a. Excavate, backfill, and compact material to provide full passive soil resistance to all surfaces of the tube and soil plate.

   b. Drive the steel tube and soil plate as a single unit using a dummy timber post to prevent damage to the breakaway post.
7. END DELINEATOR: Mount retroreflective sheeting to the approach face of the Buffer End Unit in accordance with Specifications 536 and 967.

10/20/2022 8:53:11 AM

END TREATMENT - CONTROLLED RELEASE TERMINAL (CRT) SYSTEM

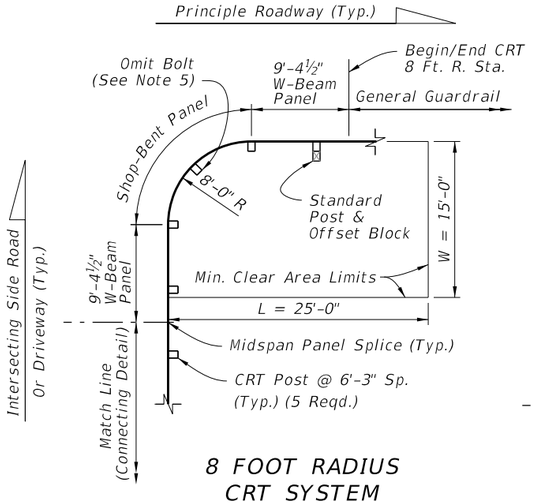

8 FOOT RADIUS CRT SYSTEM PLAN VIEW

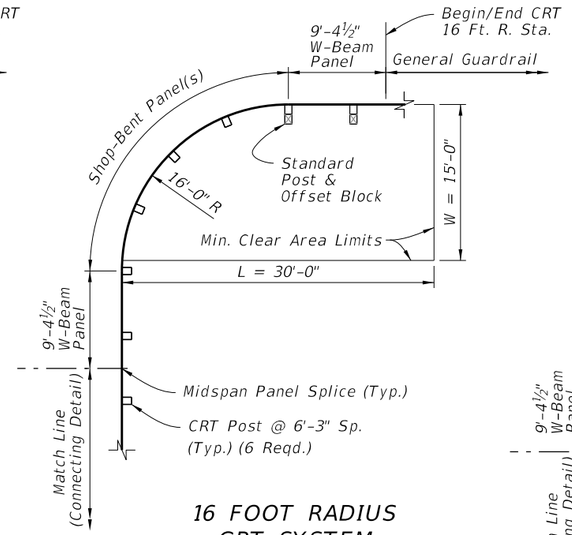

16 FOOT RADIUS CRT SYSTEM PLAN VIEW

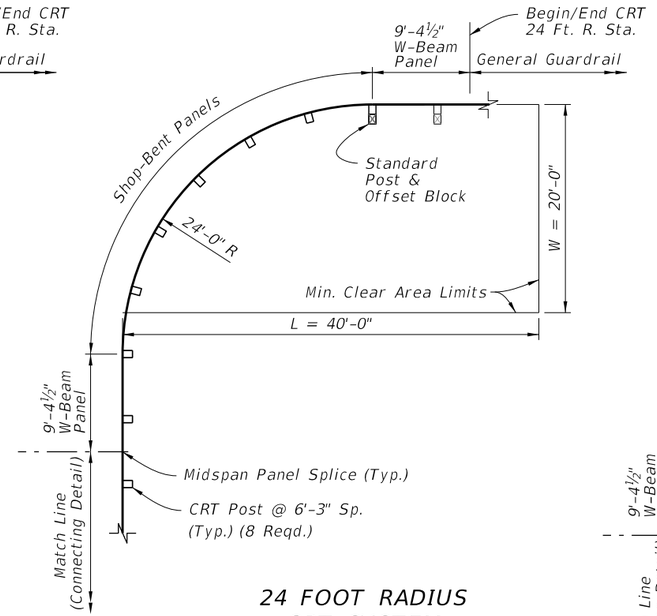

24 FOOT RADIUS CRT SYSTEM PLAN VIEW

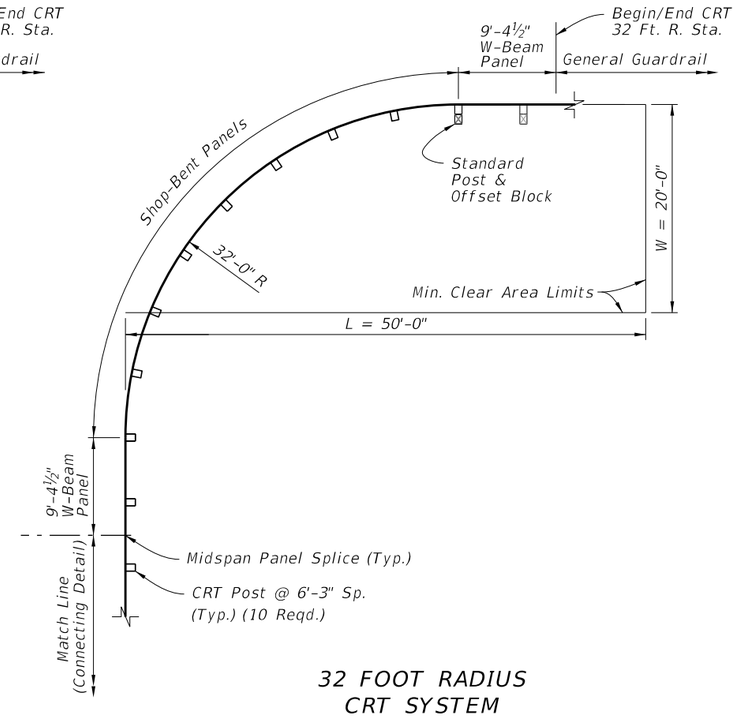

32 FOOT RADIUS CRT SYSTEM PLAN VIEW

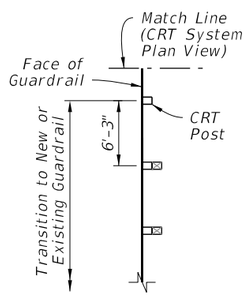

CONTINUING OPTION

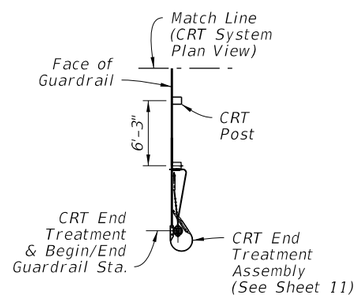

END TREATMENT OPTION

CONNECTING DETAIL

CRT SYSTEM SUMMARY TABLE:

RETURN RADIUS (FT.)	LENGTH OF SHOP-BENT PANEL(S) (FT.)	QUANTITY OF CRT POSTS	AREA CLEAR OF HAZARDS 'L' x 'W' (FT.)
8	12.5	5	25 x 15
16	25.0	6	30 x 15
24	37.5	8	40 x 20
32	50.0	10	50 x 20

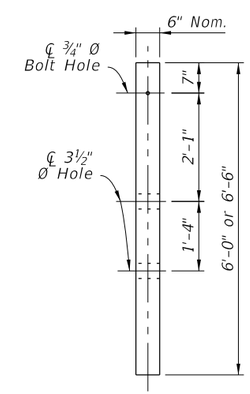

CRT POST ELEVATION (6"x8" Nom. Timber)

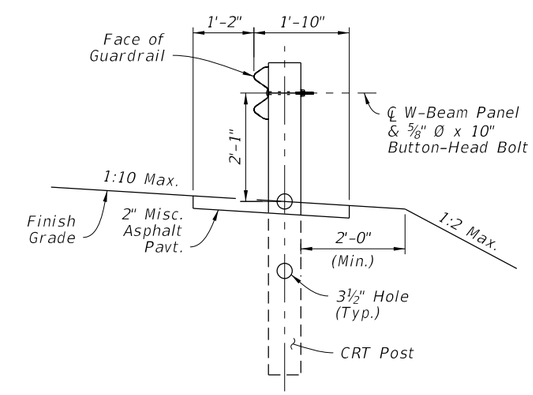

CRT INSTALLED SECTION

NOTES:

1. INSTALLATION: Construct the specified radius layout and Connecting Detail option as shown in the plans.
2. MIN. CLEAR AREA: Keep the area behind the CRT free of fixed objects and aboveground hazards within the Min. Clear Area limits shown. Maintain a slope not steeper than 1:10 for a minimum 2' behind the posts, and maintain a slope not steeper than 1:2 beyond 2' from the posts.
3. APPROACH GRADING: Maintain grading on the roadway side of the guardrail face at a maximum slope of 1:10.
4. MATERIALS: For CRT Posts, use Timber Post material in accordance with Specification 967. Use steel panels and hardware in accordance with Specification 967.
5. BOLT OMISSION: For the 8 Foot Radius CRT System only, do not place a panel-to-post mount bolt at the center CRT Post (omit the ⅝" Button-Head Bolt only at the location shown).
6. SHOP-BENT PANELS: Install Shop-Bent panel(s) where indicated using 12'-0" or 25'-0" W-Beam Panels. Splice at post locations within the CRT radius using the General configuration of ⅝" Ø Button-Head Bolts (8 reqd. per splice).
7. GENERAL GUARDRAIL: General Guardrail typically includes Panels and Post Spacing as shown on Sheet 2, including parallel and tapered segments. Approach Transitions, Low-Speed Guardrail, or Reduced Post Spacing Guardrail segments may be substituted for the General Guardrail shown herein if indicated in the plans.

10/20/2022 8:53:12 AM

LAYOUT FOR CONTROLLED RELEASE TERMINAL (CRT) SYSTEMS - SIDE ROADS AND DRIVEWAYS

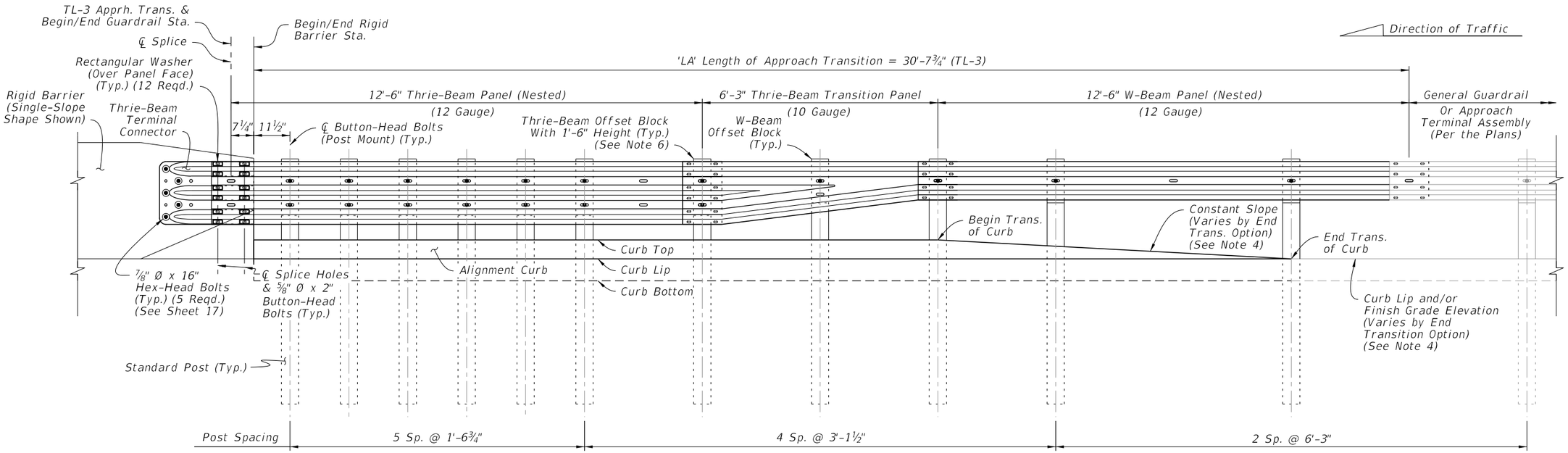

TL-3 APPROACH TRANSITION
INSTALLED ELEVATION

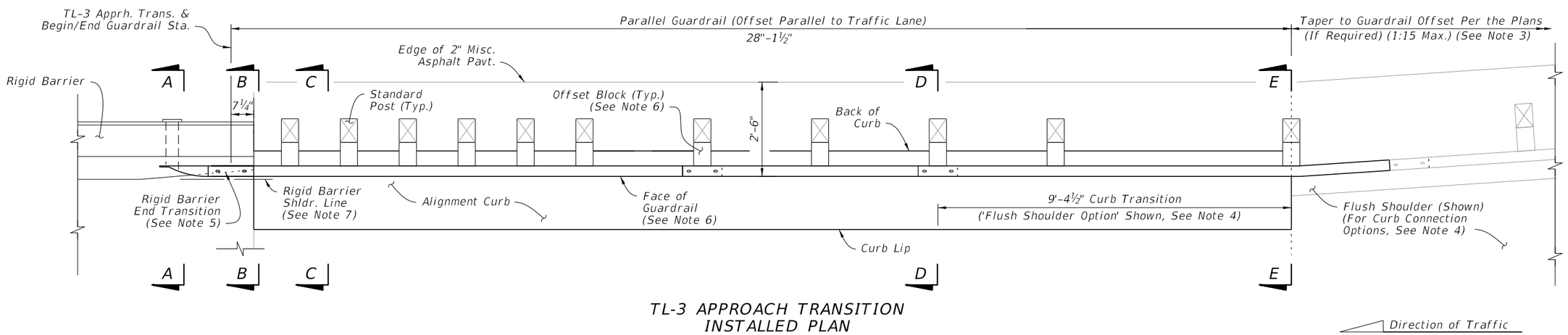

TL-3 APPROACH TRANSITION
INSTALLED PLAN

NOTES:

1. INSTALLATION: Construct the Approach Transition segment where indicated in the plans. For example Layouts showing the Approach Transition's fit among other guardrail segments, see Sheet 19.

   For existing bridge connection options, see Indexes 536-002, 521-404, and 521-405.

2. SECTION VIEWS & DETAILS: For cross sections and details, including the barrier mounting hardware, curb transition, adjacent grading, and installation dimensions, see Sheet 17.

3. GUARDRAIL TAPER: The connecting guardrail may require a different lateral offset if shown in the plans. At the location shown herein, taper the guardrail to the connecting guardrail offset. If the adjacent guardrail segment has the same offset as the Approach Transition segment, then no taper is required.

4. END TRANSITION OF CURB OPTIONS: The Plan and Elevation views depict an example Curb Transition to Flush Shoulder from Section D-D to E-E, but this transition may require a different shape depending on the End Transition option shown in the plans (Either a 'Shoulder Gutter Option', 'Raised Curb Option', or 'Flush Shoulder Option'). See Sheet 14 for additional curb options and Sheet 17 for curb shape details.

5. RIGID BARRIER END TRANSITION: Taper the Rigid Barrier toe as shown. See Concrete Barrier, Index 521-001, and Traffic Railing, Indexes 521-422 and 521-428, for details.

6. OFFSET BLOCKS: For Thrie-Beam post locations within the Length of Approach Transition segment, use the Timber Offset Blocks with 1'-6" height shown on Sheet 5.

   For the midspan of the Thrie-Beam Transition Panel and for all other W-Beam locations shown herein, use the W-Beam Offset Blocks with 1'-2" height.

7. OFFSET: The required offset difference between the Face of Guardrail and Rigid Barrier Shoulder Line is considered negligible and may not be shown in the guardrail offset callouts in the plans. A consistent guardrail offset deviation of up to 4 inches outside of the Rigid Barrier Shoulder Line is permitted over the length 'LA'.

8. GENERAL GUARDRAIL: General Guardrail typically includes Panels and Post Spacing as shown on Sheet 2, including parallel and tapered segments. Approach Terminals, Low-Speed Guardrail, or Reduced Post Spacing Guardrail segments may be substituted for the General Guardrail shown herein if indicated in the plans.

10/20/2022 8:53:13 AM

APPROACH TRANSITION CONNECTION TO RIGID BARRIER - GENERAL, TL-3

LAST REVISION	REVISION	DESCRIPTION:			INDEX	SHEET
11/01/19			FY 2023-24 STANDARD PLANS	GUARDRAIL	536-001	13 of 24

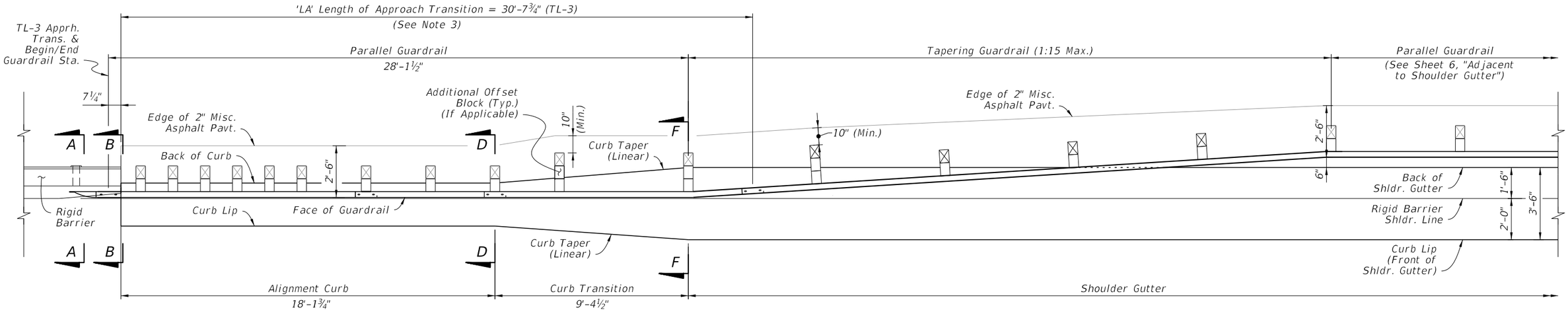

TL-3 APPROACH TRANSITION
WITH 'SHOULDER GUTTER'
CONNECTION - PLAN VIEW

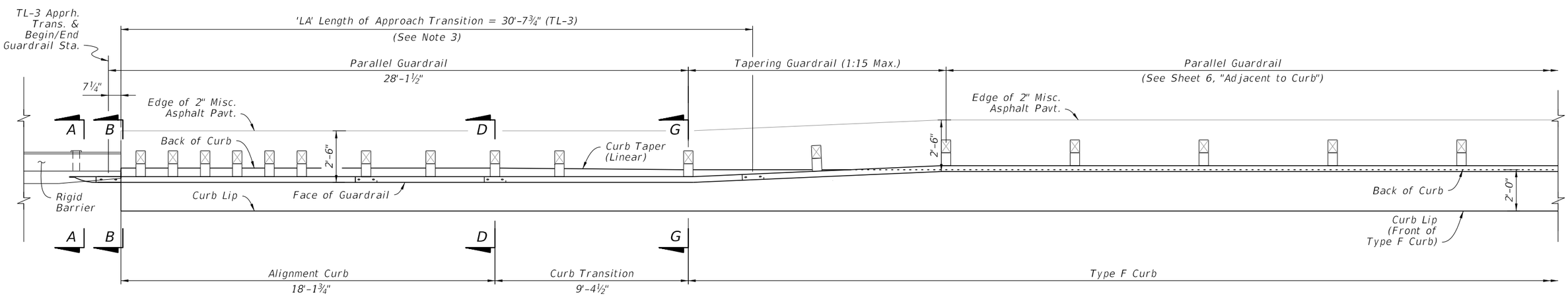

TL-3 APPROACH TRANSITION
WITH 'TYPE F CURB'
CONNECTION - PLAN VIEW

NOTES:

1. GENERAL: See the applicable notes and details on Sheet 13.
2. SECTION VIEWS & DETAILS: For cross sections and details, including the barrier mounting hardware, curb transition, adjacent grading, and installation dimensions, see Sheet 17.
3. ELEVATION VIEW: For post and panel installation details within 'LA', see the elevation view on Sheet 13. The curb details will differ depending on curb option required.

10/20/2022 8:53:14 AM

APPROACH TRANSITION CONNECTION TO RIGID BARRIER - GENERAL, TL-3 CURB CONNECTIONS

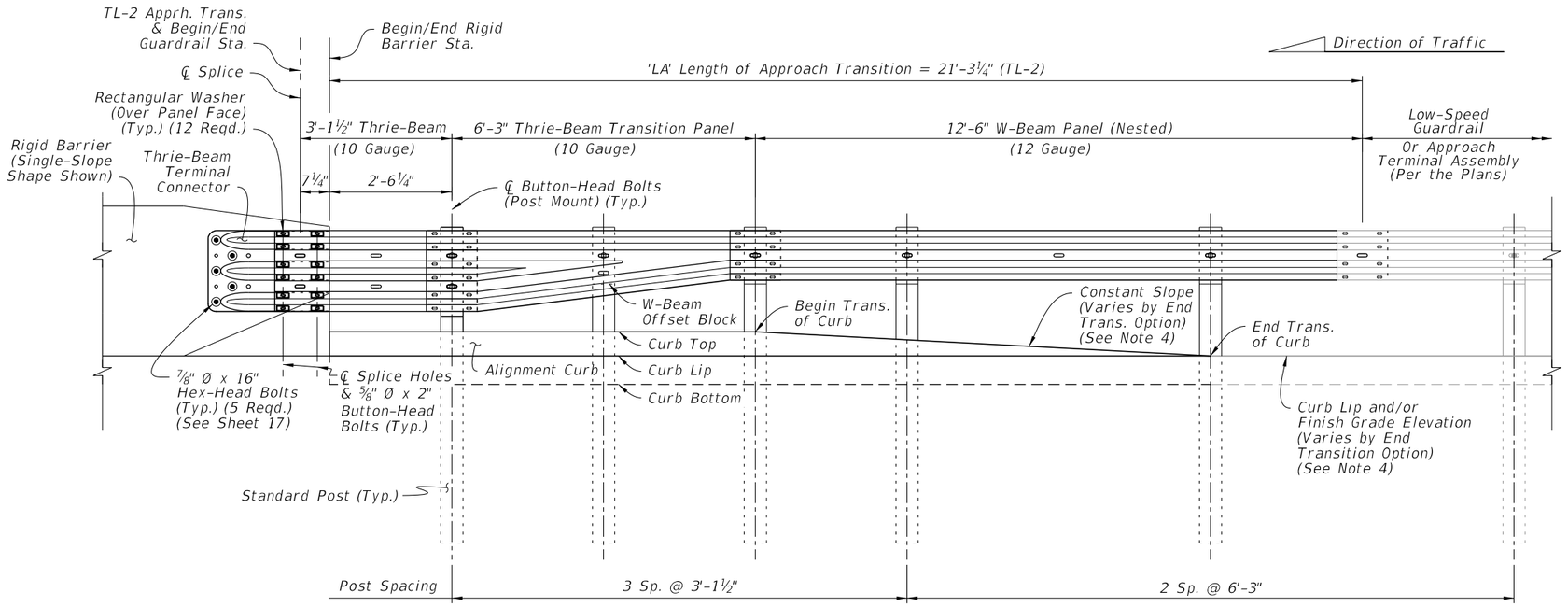

TL-2 APPROACH TRANSITION
INSTALLED ELEVATION

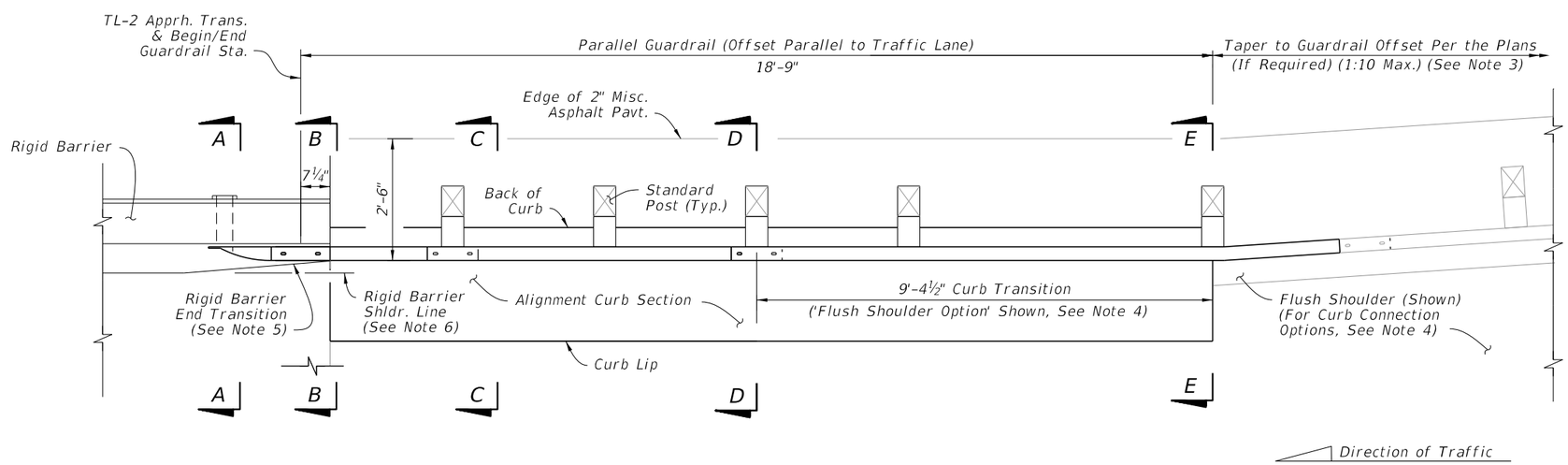

TL-2 APPROACH TRANSITION
INSTALLED PLAN

NOTES:

1. INSTALLATION: Construct the Approach Transition segment where indicated in the plans. For example Layouts showing the Approach Transition's fit among other guardrail segments, see Sheet 19.

   For existing bridge connection options, see Indexes 536-002, 521-404, and 521-405.

2. SECTION VIEWS & DETAILS: For cross sections and details, including the barrier mounting hardware, curb transition, adjacent grading, and installation dimensions, see Sheet 17.

3. GUARDRAIL TAPER: The connecting guardrail may require a different lateral offset if shown in the plans. At the location indicated herein, taper the guardrail to the connecting guardrail offset. If the adjacent guardrail segment has the same offset as the Approach Transition segment, then no taper is required.

4. END TRANSITION OF CURB OPTIONS: The Plan and Elevation views depict an example Curb Transition to Flush Shoulder from Section D-D to E-E, but this transition may require a different shape depending on the End Transition option shown in the plans (Either a 'Shoulder Gutter Option', 'Raised Curb Option', or 'Flush Shoulder Option'). See Sheet 16 for additional curb options and Sheet 17 for curb shape details.

5. RIGID BARRIER END TRANSITION: Taper the Rigid Barrier toe as shown. See Concrete Barrier, Index 521-001, and Traffic Railing, Indexes 521-422 and 521-428, for details.

6. OFFSET: The required offset difference between the Face of Guardrail and Rigid Barrier Shoulder Line is considered negligible and may not be shown in the guardrail offset callouts in the plans. A consistent guardrail offset deviation of up to 4 inches outside of the Rigid Barrier Shoulder Line is permitted over the length 'LA'.

7. GENERAL GUARDRAIL: General Guardrail typically includes Panels and Post Spacing as shown on Sheet 2, including parallel and tapered segments. Approach Terminals, Low-Speed Guardrail, or Reduced Post Spacing Guardrail segments may be substituted for the General Guardrail shown herein if indicated in the plans.

10/20/2022 8:53:15 AM

APPROACH TRANSITION CONNECTION TO RIGID BARRIER - LOW-SPEED, TL-2

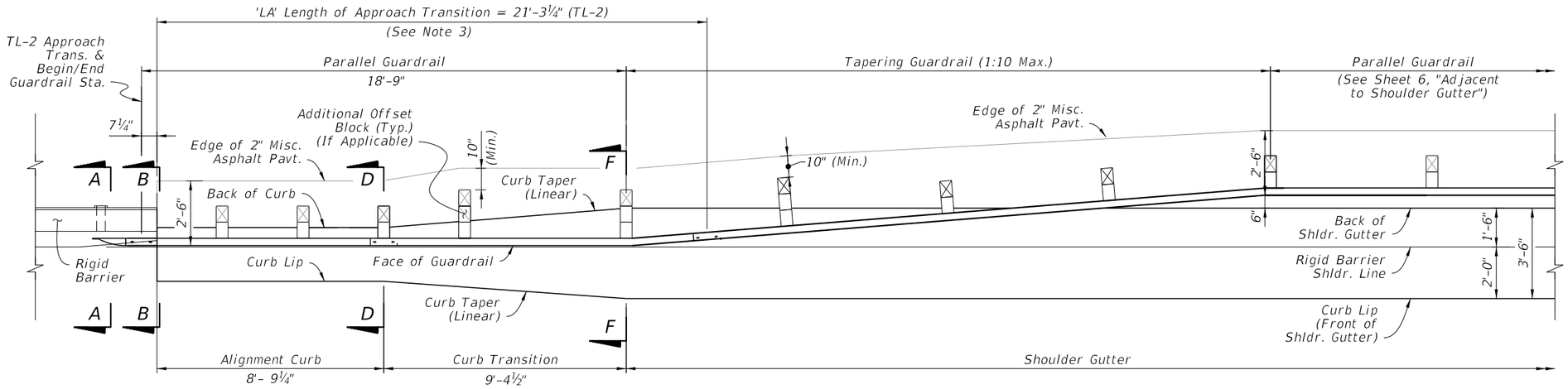

TL-2 APPROACH TRANSITION WITH 'SHOULDER GUTTER' CONNECTION - PLAN VIEW

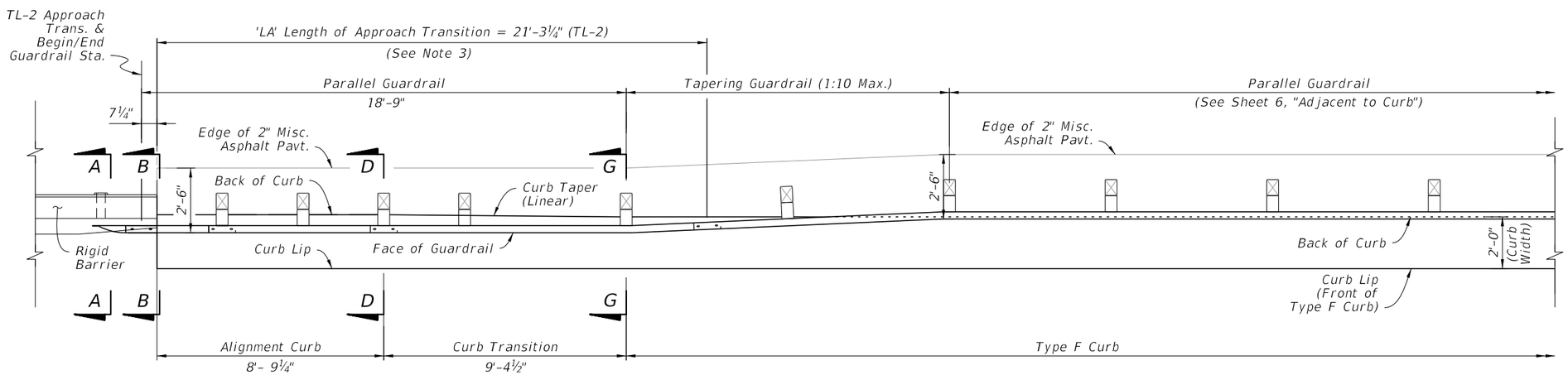

TL-2 APPROACH TRANSITION WITH 'TYPE F CURB' CONNECTION - PLAN VIEW

NOTES:

1. GENERAL: See the applicable notes and details on Sheet 15.
2. SECTION VIEWS & DETAILS: For cross sections and details, including the barrier mounting hardware, curb transition, adjacent grading, and installation dimensions, see Sheet 17.
3. ELEVATION VIEW: For post and panel installation details within 'LA', see the elevation view on Sheet 15. The curb details will differ depending on curb option required.

10/20/2022 8:53:16 AM

APPROACH TRANSITION CONNECTION TO RIGID BARRIER - LOW-SPEED, TL-2 CURB CONNECTIONS

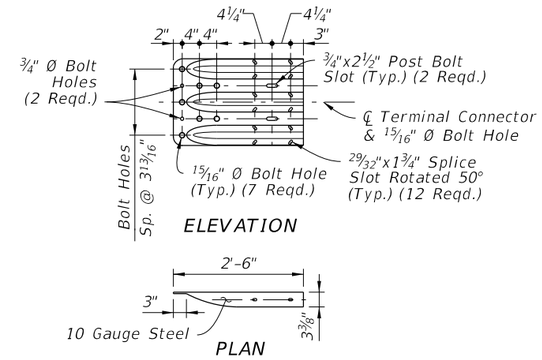

THRIE-BEAM TERMINAL CONNECTOR DETAIL

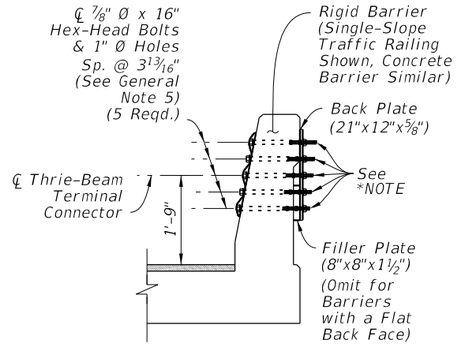

SECTION A-A
RIGID BARRIER TERMINAL CONNECTOR MOUNT

*NOTE: For locations within 4'-0" of a sidewalk or shared use path, trim bolts down to within ¼" of tightend nut. Deform exposed threads. File down sharp edges and burrs.

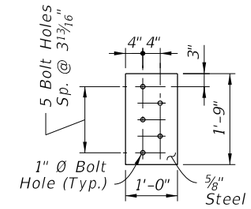

BACK PLATE

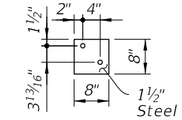

FILLER PLATE

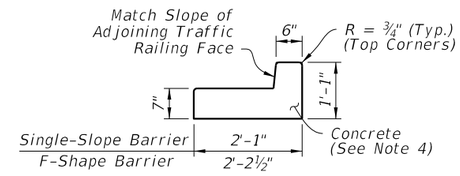

ALIGNMENT CURB SECTION

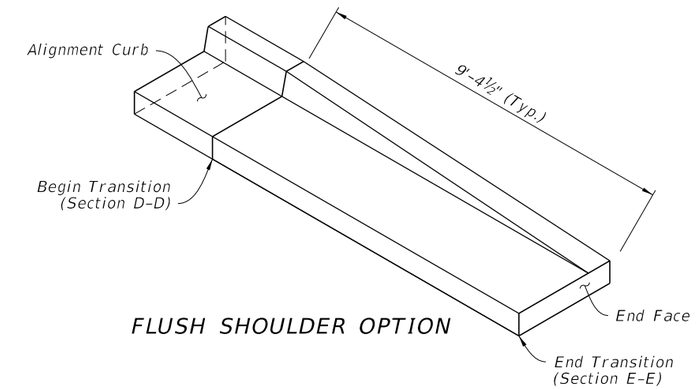

FLUSH SHOULDER OPTION

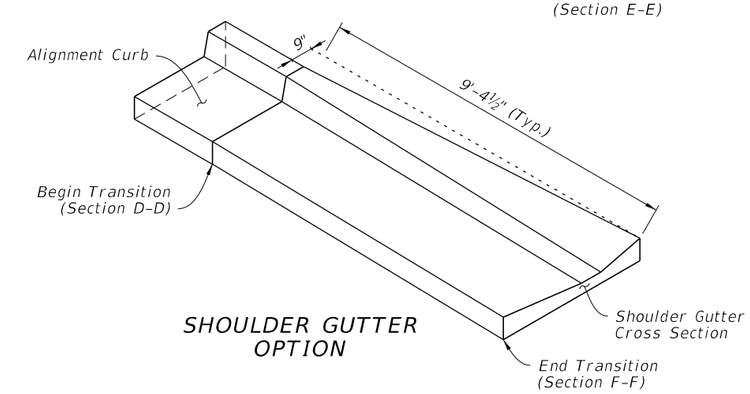

SHOULDER GUTTER OPTION

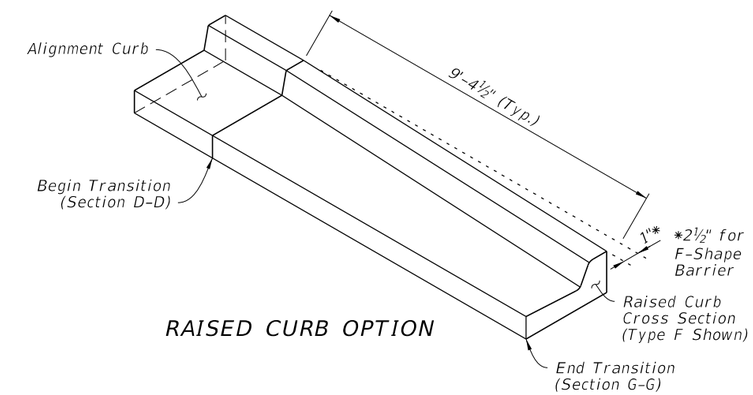

RAISED CURB OPTION

CURB TRANSITION ISOMETRIC VIEWS

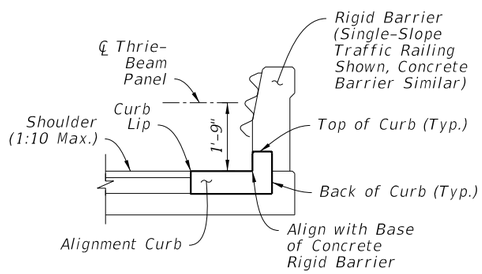

SECTION B-B
BEGIN ALIGNMENT CURB
(Mate to Rigid Barrier)

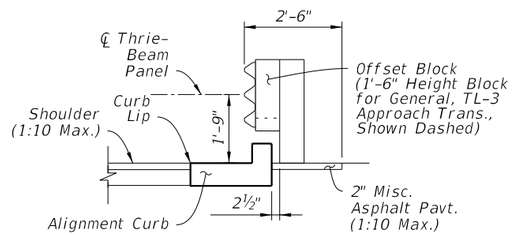

SECTION C-C
ALIGNMENT CURB
(Intermediate)

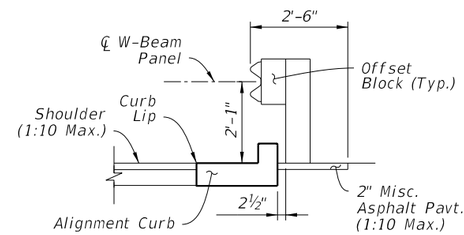

SECTION D-D
BEGIN TRANSITION
(End Alignment Curb)

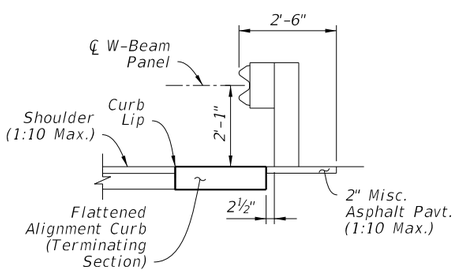

SECTION E-E
END TRANSITION
FLUSH SHOULDER OPTION

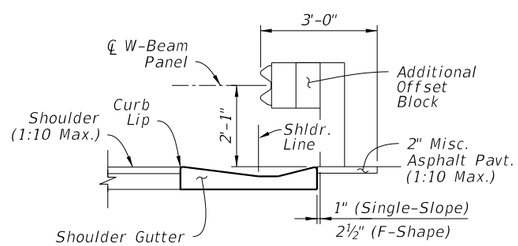

SECTION F-F
END TRANSITION
SHOULDER GUTTER OPTION

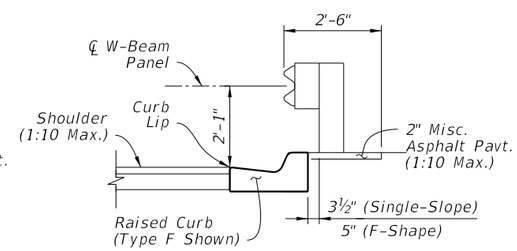

SECTION G-G
END TRANSITION
RAISED CURB OPTION

CURB TYPICAL SECTIONS

NOTES:

1. PLAN AND ELEVATION VIEWS: Work with Sheets 13 thru 16.
2. END TRANSITION OF CURB OPTION: Install one of the three End Transition types shown per Section E-E as indicated by the plans.
3. GRADING BEHIND POSTS: Place Slope Break a Min. 2'-0" behind the post, per Sheet 6.
4. MATERIALS & CONSTRUCTION: Construct the concrete Aligning Curb and Curb transition in accordance with Specification 520. Use steel Plates and Thrie-Beam Terminal Connectors in accordance with Specification 967.

APPROACH TRANSITION CONNECTION - DETAILS

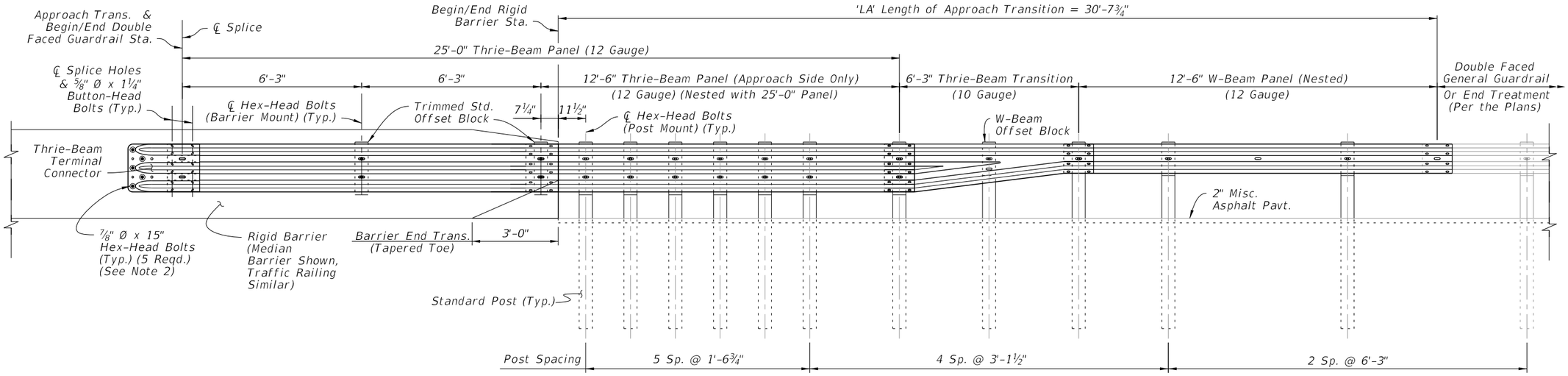

TL-3 DOUBLE FACED APPROACH TRANSITION
INSTALLED ELEVATION

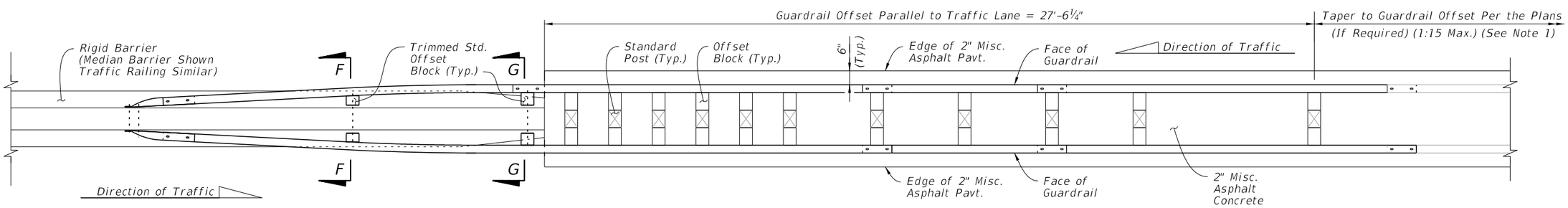

TL-3 DOUBLE FACED APPROACH TRANSITION
INSTALLED PLAN

NOTES:

1. INSTALLATION: Construct the Approach Transition segment where indicated in the plans. The required offset of the connecting adjacent guardrail is shown in the plans.

   The Layout given on Sheet 20 provides a basic scheme for connections to adjacent guardrail, where a taper to a differing guardrail offset may be required. If the adjacent guardrail has the same offset as the Approach Transition segment, then no taper is required.

2. THRIE-BEAM TERMINAL CONNECTOR: See Sheet 17 for Details. The installed bolt's threaded portion is not permitted to extend beyond 3#4" from the face of the nut; trim the threaded portion as needed and galvanize in accordance with Specification 562.

3. GENERAL GUARDRAIL: General Guardrail typically includes Panels and Post Spacing as shown on Sheet 2, including parallel and tapered segments. End Treatments or Reduced Post Spacing Guardrail segments may be substituted for the General Guardrail shown herein if indicated in the plans.

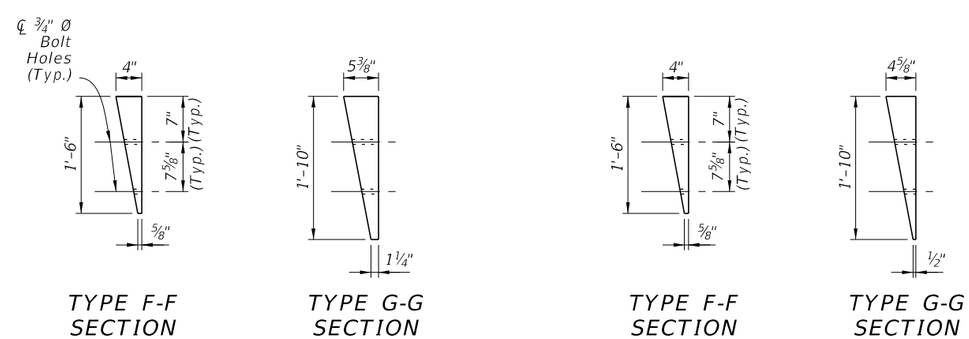

TYPE F-F SECTION | TYPE G-G SECTION | TYPE F-F SECTION | TYPE G-G SECTION

TRIMMED STD. OFFSET BLOCKS
TIMBER POST ALIGNMENT WIDTH

TRIMMED STD. OFFSET BLOCKS
STEEL POST ALIGNMENT WIDTH

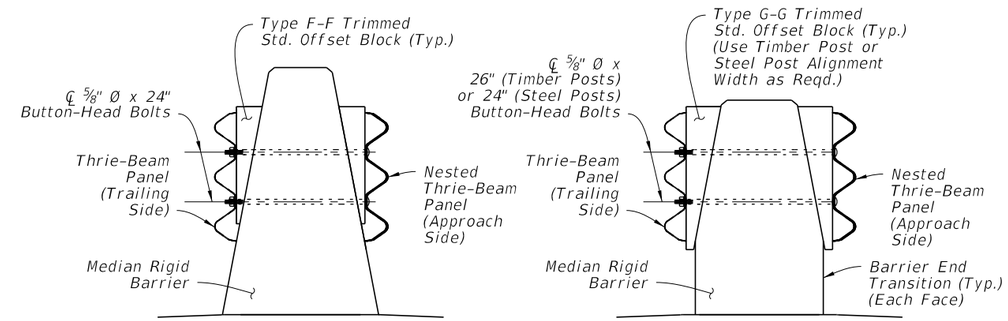

SECTION F-F | SECTION G-G

APPROACH TRANSITION CONNECTION TO RIGID BARRIER WITH DOUBLE FACED GUARDRAIL

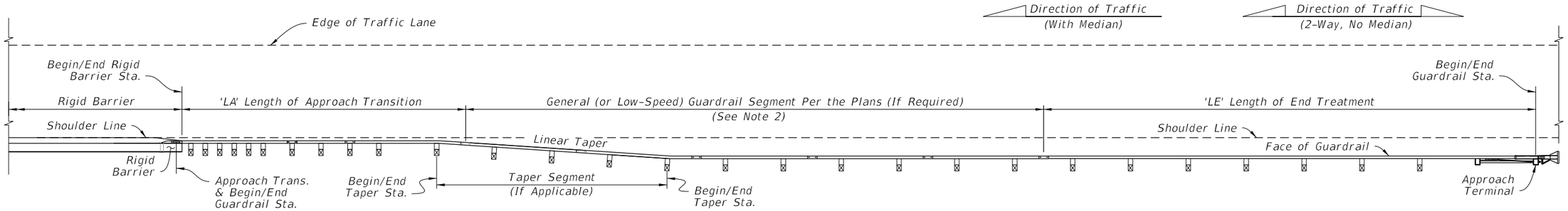

TYPE A APPROACH TO RIGID BARRIER - PLAN VIEW
MEDIAN OR OUTSIDE SHOULDERS
(Mirror Horiz. and/or Vert. for Opposite
Direction and/or Side of Road)

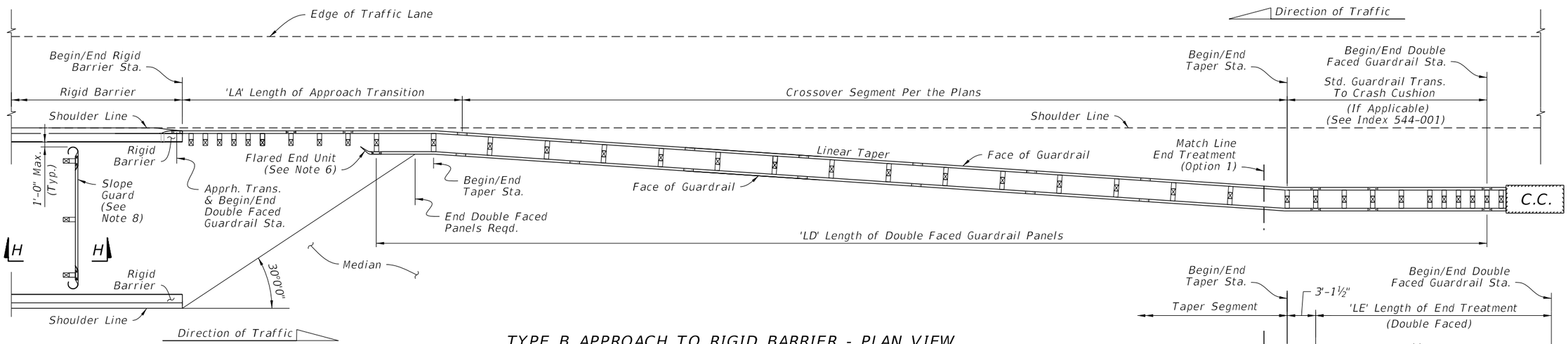

TYPE B APPROACH TO RIGID BARRIER - PLAN VIEW
CROSSOVER GUARDRAIL FOR MEDIAN SHOULDERS ONLY
DUAL BRIDGE APPROACH CONFIGURATION
(Mirror Horiz. and Vert. for Opposite Direction)

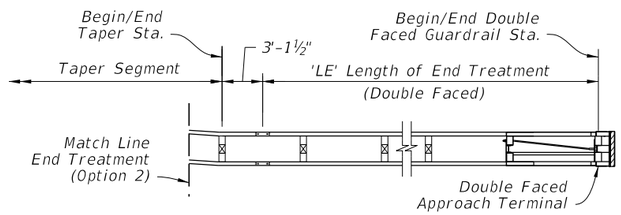

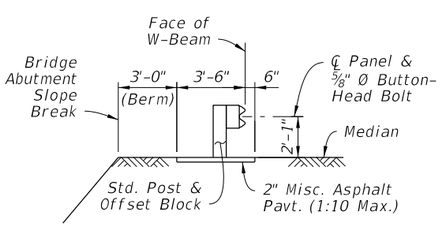

SECTION H-H
BRIDGE ABUTMENT
SLOPE GUARD
(Between Bridges)

NOTES:

1. INSTALLATION: The Plan Views shown are schematic only, showing example geometry for connecting guardrail segments including taper locations and Double Faced Guardrail requirements as applicable. Work this Sheet with the plans, where stationing and offsets for Begin/End Guardrail, Begin/End Rigid Barrier, and Begin/End Taper are specified. For existing bridge layouts, see Index 536-002, 521-404, and 521-405.

2. GENERAL (OR LOW-SPEED) GUARDRAIL SEGMENT: Construct this segment if shown in the plans. For the case where this segment's offset differs from the Approach Transition offset, linearly taper the guardrail between the Begin/End Taper Stations and offsets as specified in the plans.

   For the shortest length case of a direct connection between the End Treatment and the Approach Transition, this segment may be omitted as shown in the plans.

3. LENGTH OF APPROACH TRANSITION 'LA': Install the applicable Approach Transition as shown per Sheets 13 thru 16, where called for in the plans.

4. LENGTH OF END TREATMENT 'LE': Install the Approach Terminal End Treatment as shown per Sheet 7 or 8, where called for in the plans. Use the corresponding APL drawings for construction details.

5. CROSSOVER GUARDRAIL (FOR TYPE B APPROACH): Install the Crossover Segment tapering linearly from the Begin Taper Sta. and offset to the End Taper Sta. and offset as specified in the plans.

6. LENGTH OF DOUBLE FACED GUARDRAIL PANELS, 'LD' (FOR TYPE B APPROACH): Terminate the Double Faced Guardrail panels as shown (based upon the 30° line measured from the hazard on the opposite side of the median). Extend the panel segment longer than the dimension 'LD' as needed for the Panel's end Bolt Slot to align with a post Bolt hole.

   Install a Flared End Unit where shown, as defined on Sheet 9.

7. END TREATMENT OPTIONS (FOR TYPE B & C APPROACH): For Double Faced applications, use either a Double Faced Approach Terminal Assembly per Sheet 8 or a Crash Cushion per Index 544-001. For either Option, meet the 1:10 adjacent grading requirements for Approach Terminals as shown on Sheet 8.

8. SLOPE GUARD: Where indicated in the plans, install a Guardrail segment between bridge approaches and offset from the bridge abutment's Slope Break as shown. Install posts at the end bolt slots of the panel system. Use post spacing of either 3'-1½" or 6'-3", as needed to correctly fit system between barriers. The system may also be lengthened to fit by installing two Rounded End Units as defined on Sheet 9.

LAYOUT TO RIGID BARRIER - APPROACH ENDS

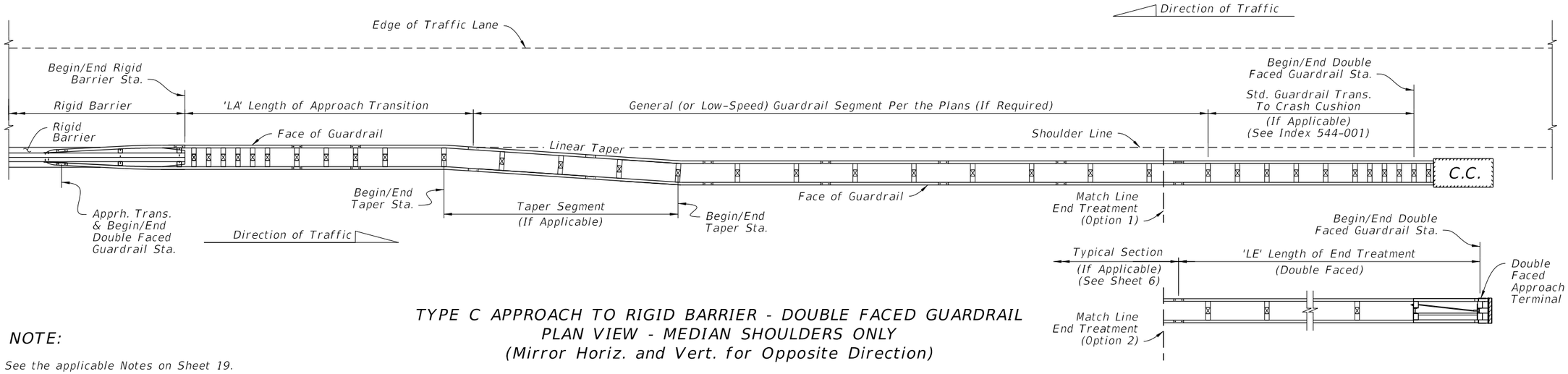

TYPE C APPROACH TO RIGID BARRIER - DOUBLE FACED GUARDRAIL
PLAN VIEW - MEDIAN SHOULDERS ONLY
(Mirror Horiz. and Vert. for Opposite Direction)

NOTE:

See the applicable Notes on Sheet 19.

LAYOUT TO RIGID BARRIER - APPROACH ENDS WITH DOUBLE FACED GUARDRAIL

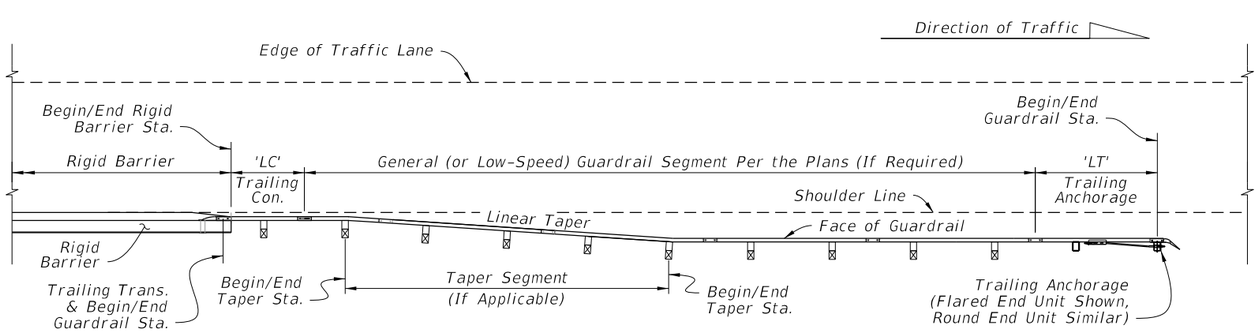

TYPE D TRAILING CONNECTION FROM RIGID BARRIER
PLAN VIEW - MEDIAN OR OUTSIDE SHOULDER
(Mirror Horiz. and/or Vert. for Opposite Direction and/or Side of Road)

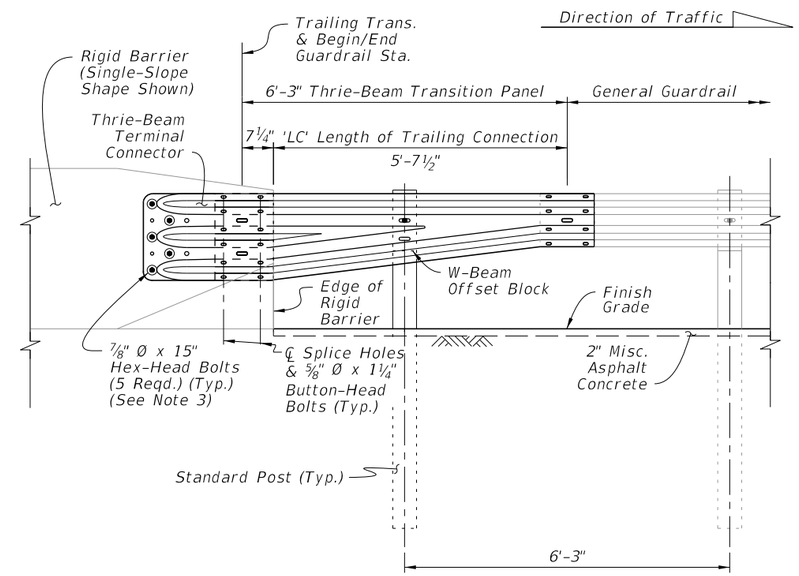

TRAILING END TRANSITION CONNECTION
TO RIGID BARRIER - INSTALLED ELEVATION

NOTES:

1. See the applicable Notes on Sheet 19.
2. LENGTH OF TRAILING ANCHORAGE, 'LT': Install the Trailing Anchorage as shown on Sheet 9, where called for in the plans.
3. THRIE-BEAM TERMINAL CONNECTOR: Install connector and bolts as shown on Sheet 17.
4. RIGID BARRIER SINGLE SLOPE END FACE: See Concrete Barrier Wall, Index 521-001, and Traffic Railing, Indexes 521-422 and 521-423, for details.

LAYOUT TO RIGID BARRIER - TRAILING ENDS

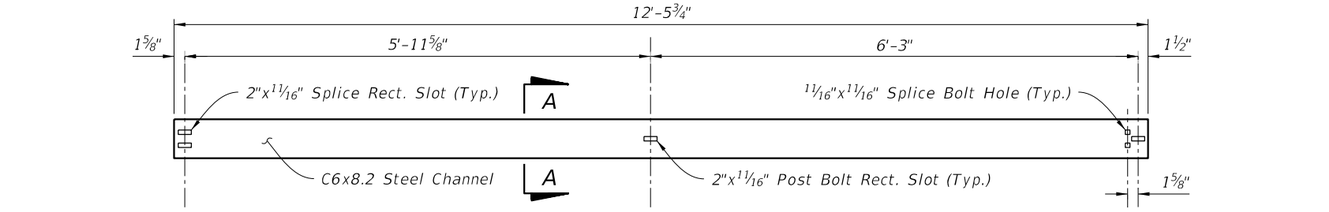

PANEL ELEVATION

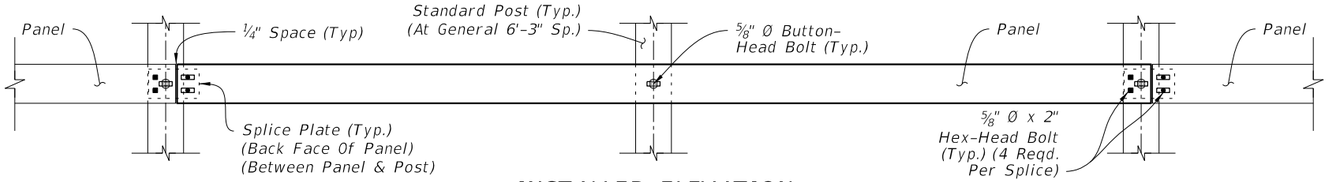

INSTALLED ELEVATION

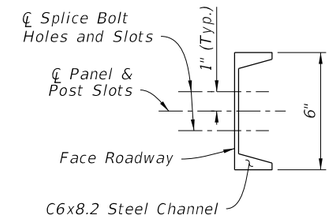

SECTION A-A
(Panel Typical)

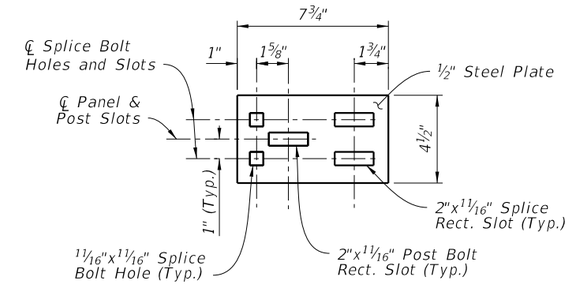

SPLICE PLATE
ELEVATION

CHANNEL SECTION RUB RAIL

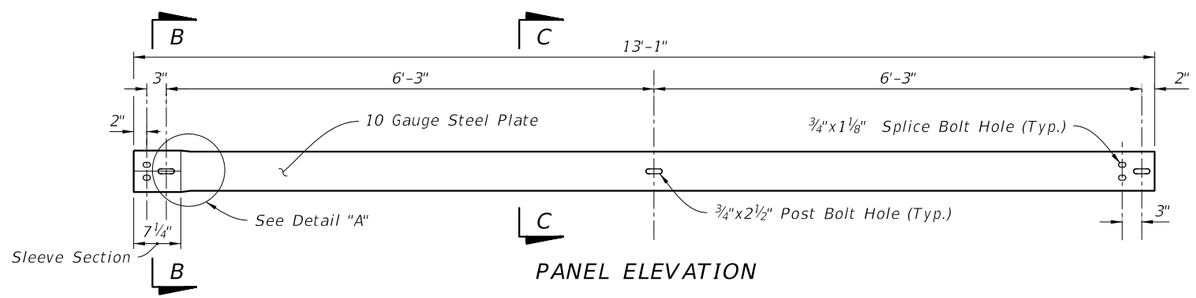

PANEL ELEVATION

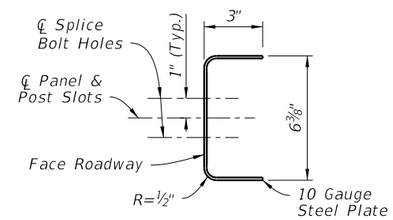

SECTION B-B
(Panel Sleeve End)

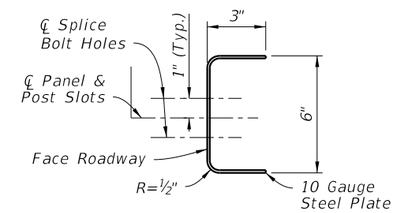

SECTION C-C
(Panel Typical)

PANEL PLAN

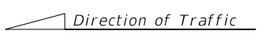

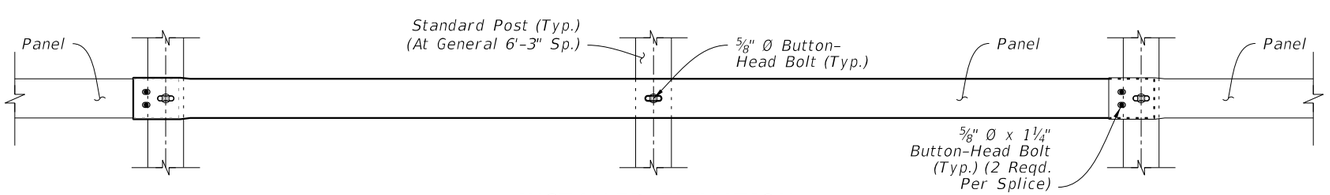

INSTALLED ELEVATION

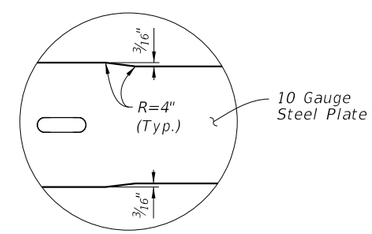

DETAIL "A"
(Sleeve Transition Elevation)

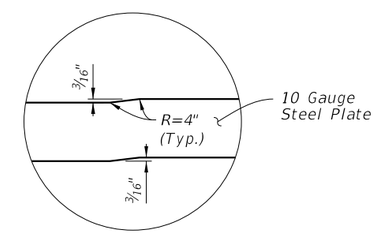

DETAIL "B"
(Sleeve Transition Plan)

BENT-PLATE PANEL RUB RAIL

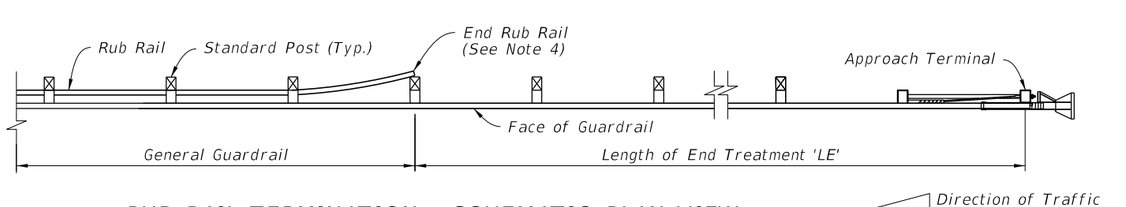

RUB RAIL TERMINATION - SCHEMATIC PLAN VIEW

NOTES:

1. GENERAL: Install Rub Rail where called for in the plans. Position as shown on Sheet 6 unless otherwise shown in the plans. Install the backs of Rub Rail panels flush against Standard Posts. Either of the Channel Section or Bent-Plate Panel Rub Rail options may be used (consistent type per project). Where Double Sided Rub Rail is called for, thread the Button-Head Bolt through the Post Bolt Hole(s) and the panels on either side, and tighten the nut against the face of the panel farthest from adjacent traffic lanes. Trim the bolt's threaded portion in accordance with Note 4 on Sheet 5.
2. MOUNTING HEIGHT: Mount to the Standard Post's Rub Rail Bolt Hole as defined on Sheet 5.
3. MATERIALS: Use steel components in accordance with Specification 967.
4. END RUB RAIL: For Single Sided Rub Rail, terminate the run of Rub Rail by bending the panel behind the post and securing in place (as shown). For Double Sided Rub Rail, terminate the runs of Rub Rail on their respective front face of the post and secure with the typical Button-Head bolt.

RUB RAIL DETAILS

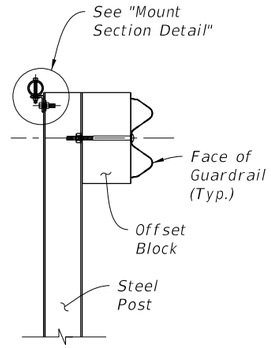

GENERAL PIPE RAIL SECTION

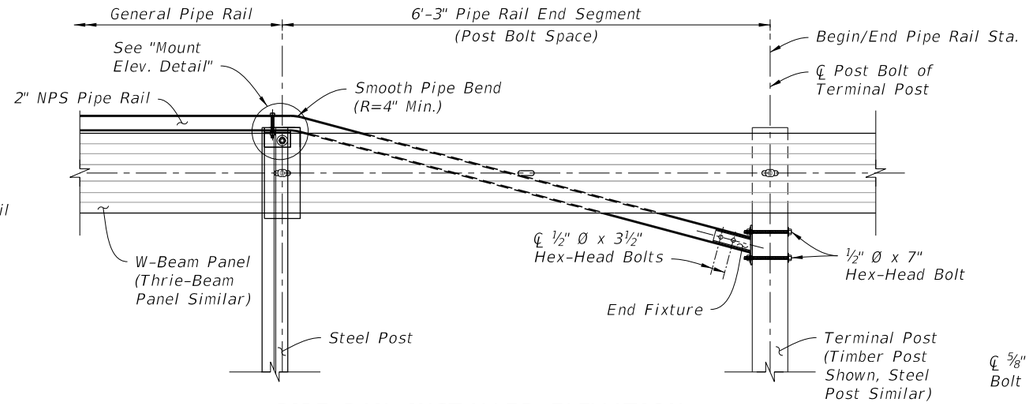

PIPE RAIL INSTALLED ELEVATION
(End Segment Shown)

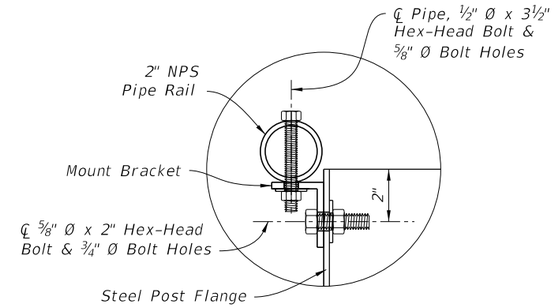

MOUNT SECTION DETAIL

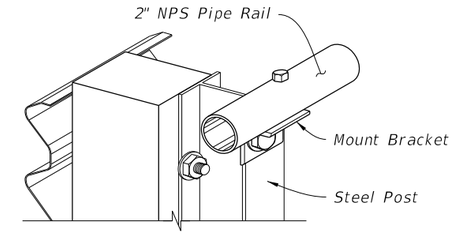

MOUNT ISOMETRIC
CUT-AWAY

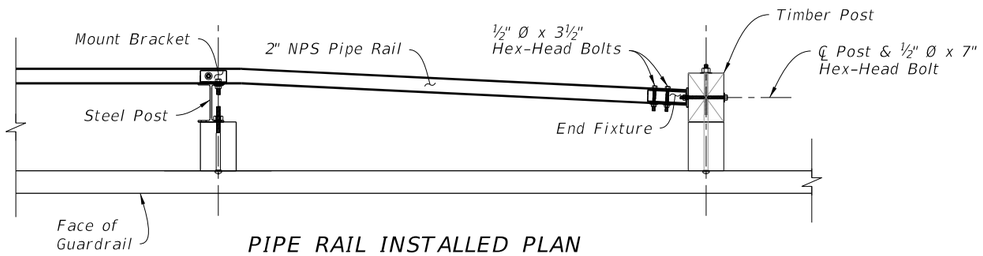

PIPE RAIL INSTALLED PLAN
END AT TIMBER POST OPTION

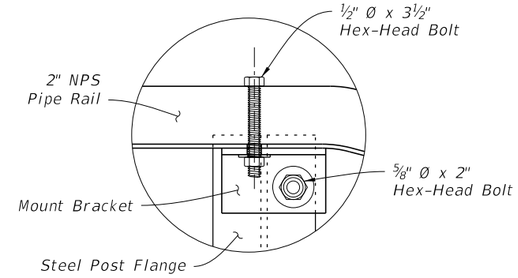

MOUNT ELEVATION DETAIL
(Back View - Mirrored)

NOTES:

1. GENERAL: Install General Pipe Rail where indicated in the plans or when existing sidewalks or shared use paths are located less than 4'-0" from the back of Steel Posts as shown on Sheet 6.

2. PIPE RAIL END SEGMENTS: Place End Segments on both ends of General Pipe Rail runs, with End Fixtures mounted to Terminal Posts located outside of Approach Terminal Assembly ('LE'), Trailing Anchorage Assembly ('LT'), and Approach Transition ('LA') segments.

3. MATERIALS: Use steel brackets, fixtures, and pipes in accordance with Specification 967.

4. RAIL SPLICES: Install Rail Splices to join pieces of 2" NPS Pipe Rail into a continuous system. Place splices as needed, at a spacing of 18'-0" or greater. Orient the head of bolt on the top of the pipe.

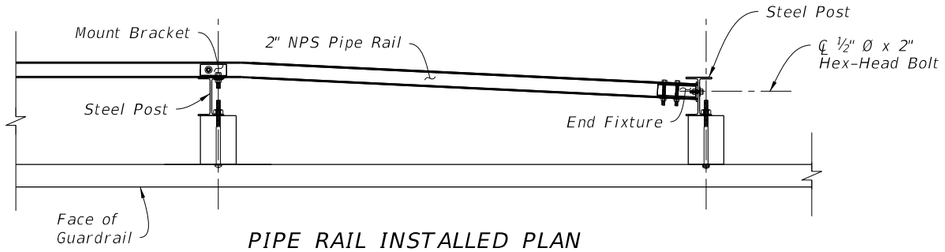

PIPE RAIL INSTALLED PLAN
END AT STEEL POST OPTION

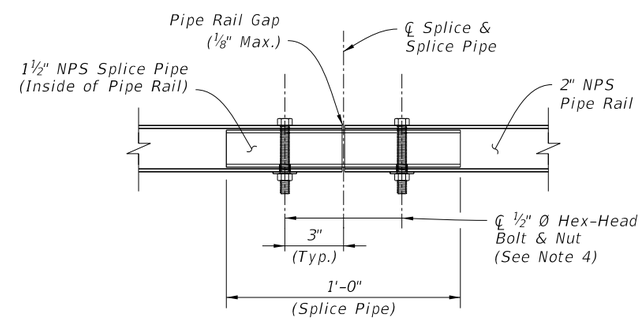

RAIL SPLICE DETAIL

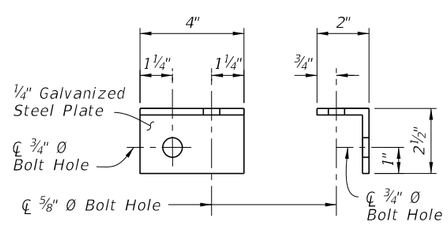

MOUNT BRACKET DETAIL

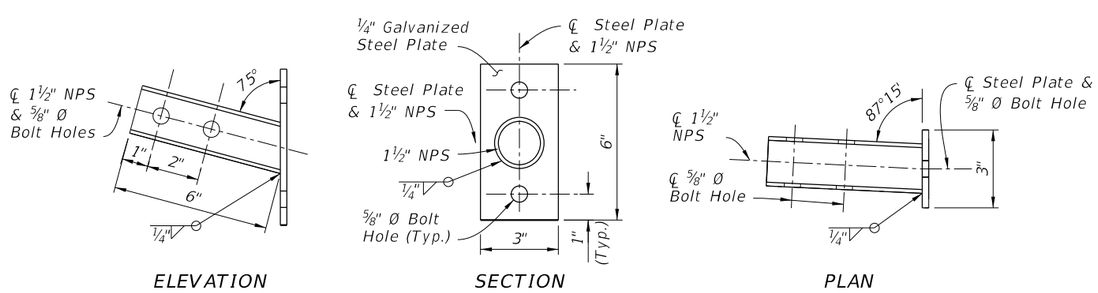

END FIXTURE DETAIL

PEDESTRIAN SAFETY TREATMENT - PIPE RAIL

LAST REVISION	REVISION	DESCRIPTION:			INDEX	SHEET
11/01/19			FY 2023-24 STANDARD PLANS	GUARDRAIL	536-001	22 of 24

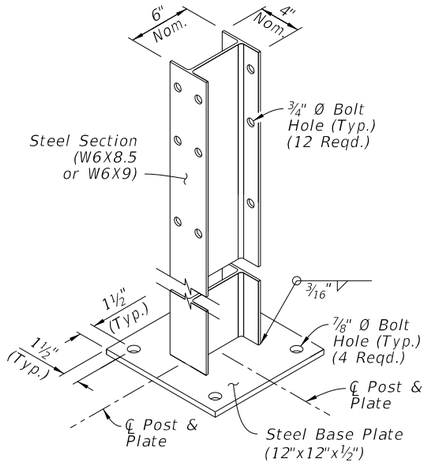

ISOMETRIC VIEW

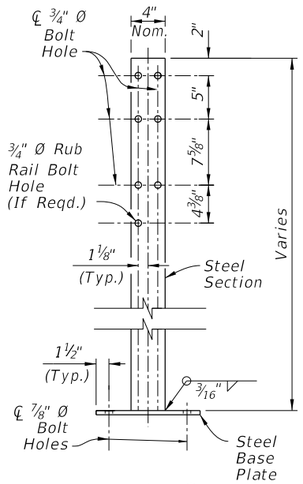

ELEVATION

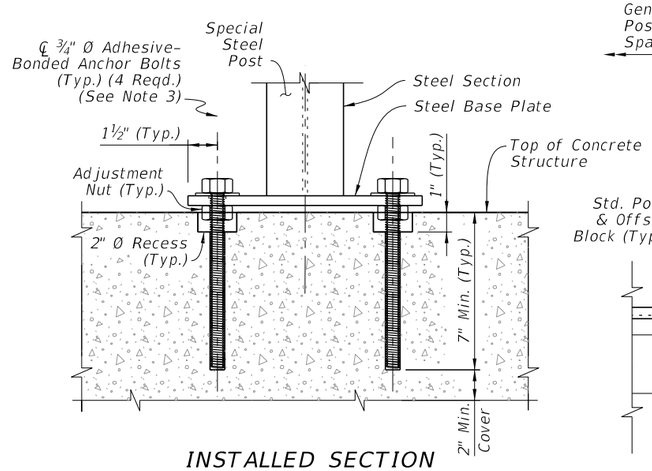

INSTALLED SECTION
(Option 2, Special Post)

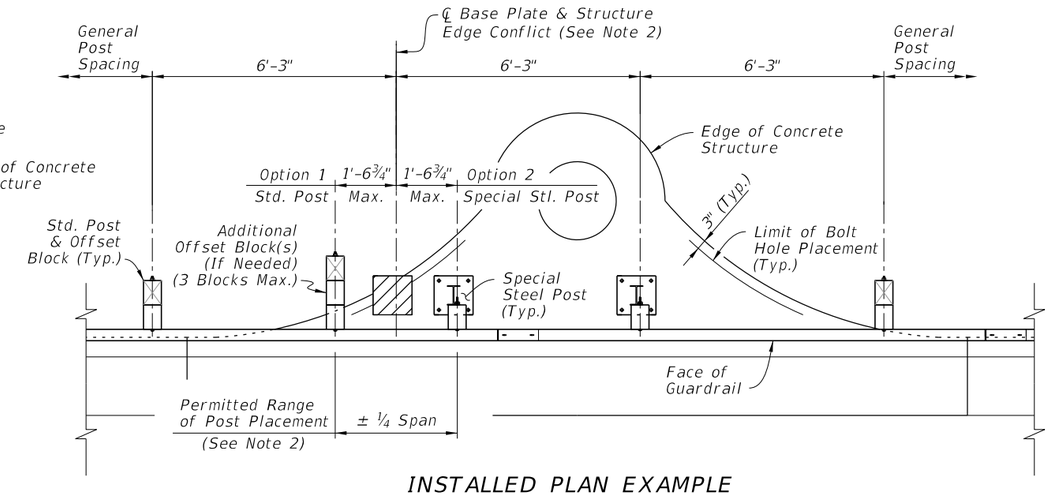

INSTALLED PLAN EXAMPLE
(Curb Inlet Top Type 2 Shown)

SPECIAL STEEL POST

STRUCTURE MOUNTING

NOTES:

1. INSTALLATION: When the construction of Guardrail at the required post spacing results in post(s) located atop culverts, inlets, pier footings, or similar concrete structures, a Special Steel Post may be substituted for a Standard Post. Install where shown in the plans and/or as-needed, in accordance with Specification 536.

2. EDGE CONFLICT: When a required post location causes an Edge Conflict with the structure, where the Steel Base Plate is not located entirely on the structure at least 3" from the Edge of Concrete, the longitudinal post location may be altered by up to 1'-6¾" (Quarter Span) from the original required spacing location to prevent the Edge Conflict. With the post location adjusted, use a Std. Post mounted in soil (Option 1) or a Special Steel Post with its Base Plate mounted entirely on the structure (Option 2). Maintain the original required spacing locations upstream and downstream of the structure.

3. BASE PLATE MOUNT: Install Special Steel Posts as shown using steel Adhesive-Bonded Anchor Bolts in accordance with Specification 536. Use ¾" Hex-Head Bolts for structures less than 9" deep as defined in the Specification.

4. PANEL MOUNT TO ADJUSTED POST: Punch additional ¾"x2½" Post Bolt Slot(s) in the W-Beam or Thrie-Beam Panel only where needed to mount the panel to a post in an adjusted location. Meet the Panel Post Bolt Slots requirements of Specification 536.

5. MATERIALS: Use steel base plates in accordance with Specification 536.

SPECIAL STEEL POST FOR CONCRETE STRUCTURE MOUNT

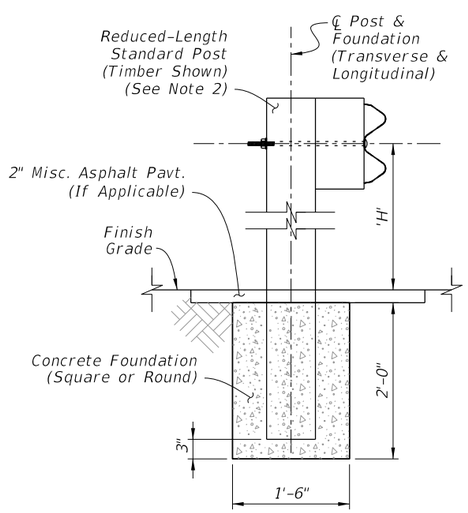

INSTALLED SECTION

NOTES:

1. INSTALLATION: When the construction of Guardrail at the required post spacing results in post(s) conflicting with underground utilities or other underground obstructions, an Encased Post may be used where a 2'-0" depth will avoid the conflict. Install where shown in the plans and/or as-needed, in accordance with Specification 536.

2. REDUCED-LENGTH STANDARD POST: Use a Standard Post with reduced Length such that the Panel Height 'H' is maintained while the post bottom terminates 3" from the bottom of the Concrete Foundation. Typically, the Post Length 'L' is 4'-7" for W-Beam Guardrail.

3. FOUNDATION: Use non-reinforced Class NS Concrete material in accordance with Specification 347. After casting the concrete, ensure the surrounding soil material is completely backfilled and tamped to provide full passive resistance.

4. LIMIT: Encased Posts are not permitted for more than 3 consecutive posts.

ENCASED POST FOR SHALLOW MOUNT

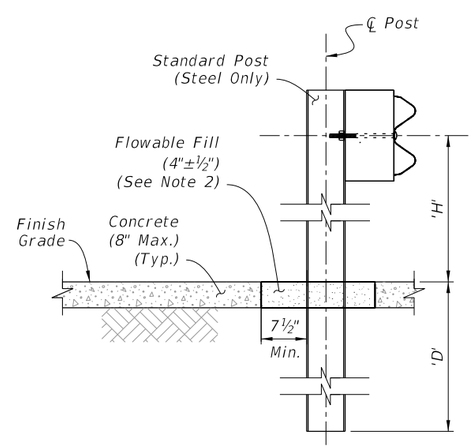

INSTALLED SECTION

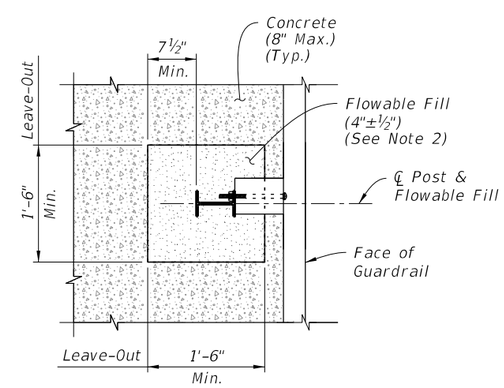

INSTALLED PLAN

NOTES:

1. INSTALLATION: When the construction of Guardrail at the required post spacing results in post(s) placed within a concrete surface (typically a sidewalk), use a Frangible Leave-Out around the post base as shown. Install where shown in the plans and/or as-needed, in accordance with Specification 536.

   Use Standard steel posts. Timber posts are not permitted for frangible leave-outs.

   For the required 1'-6" x 1'-6" Leave-Out, smoothly cut the existing concrete surface or form-up the square shape when an application has new surrounding concrete.

   Ensure Flowable Fill surface is smooth and even with the adjacent concrete surface.

2. MATERIALS: Use Non-Excavatable Flowable Fill in accordance with Specification 121, not to exceed 150 psi.

FRANGIBLE LEAVE-OUT FOR CONCRETE SURFACE MOUNT

12/13/2022 8:36:50 AM

NOTES:

1. INSTALLATION: Install Barrier Delineators as shown in accordance with the plans, with Specifications 536 and 705, and with the manufacturer's design as approved on the APL.

2. MATERIALS: Use materials of the size and type defined for Barrier Delineators in Specification 993.

3. COLOR: Use either white or yellow retroreflective sheeting to match the color of the nearest lane's edgeline.

4. MOUNT LOCATIONS: Mount Barrier Delineators atop posts as shown, starting with Post (3) of Approach Terminals and incrementally increasing spacing towards the downstream direction. Install the Barrier Delineators at the following spacing:

   S1 = 25' x 1 Space
   S2 = 50' x 1 Space
   S3 = 75' x 1 Space
   S4 = 100' x for the Remaining Run

   Additionally, place a Barrier Delineator on Post (2) of the Trailing Anchorage or on the post nearest the Rigid Barrier.

5. MEDIAN GUARDRAIL: Install retroreflective sheeting on both sides of the barrier delineator for Guardrail on medians.

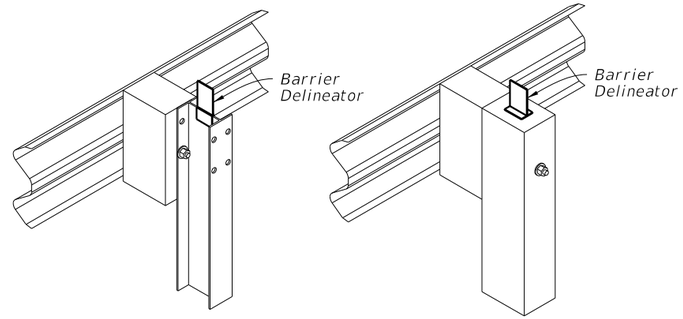

STEEL POSTS TIMBER POSTS

MOUNT LOCATION - ISOMETRIC VIEWS

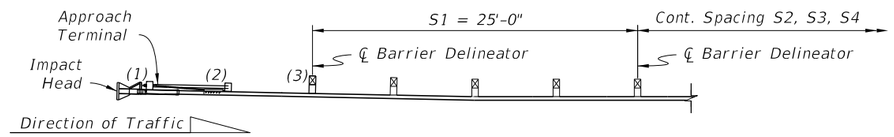

MOUNT LOCATION - PLAN VIEW

BARRIER DELINEATORS

NOTES:

1. INSTALLATION:
   Work these details with the plans, where Stationing for Begin/End Half Spacing and Begin/End Quarter Spacing are indicated if required.

   Where the Begin/End Stations indicated in the plans do not correspond exactly to post locations in construction, extend the Reduced Post Spacing segment to the nearest post(s) before the Begin Station and/or after the End Station called for.

2. PANEL SPLICES: Midspan Panel Splices are not required in Transition and Reduced Post Spacing segments, however they are required for General segments. To place midspan splices in General segments, use one Non-General panel length (9'-4½" or 15'-7½") or add an additional Transition spaced post where required.

3. LOW-SPEED GUARDRAIL: For Reduced Post Spacing with Low-Speed Guardrail (12'-6" post spacing), the Reduced Spacing pattern requires a 6'-3" space between the 12'-6" and 3'-1½" spaces.

4. PANEL POST BOLT SLOTS:
   For Quarter Spacing configurations, punch additional ¾"x2½" Post Bolt Slots in the panels only where required for mounting and in accordance with Specification 536.

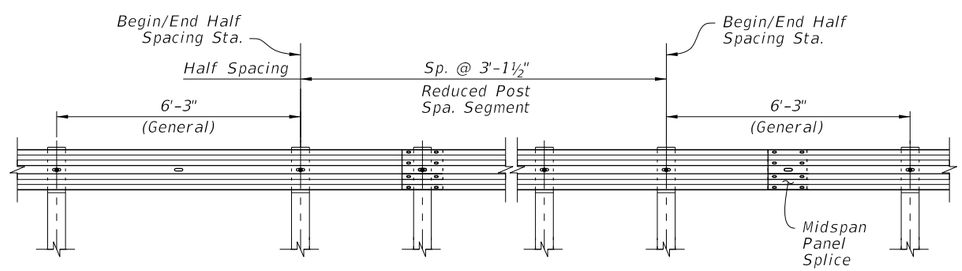

DETAIL 'S' - HALF SPACING ELEVATION
(AS REQD. PER THE PLANS)

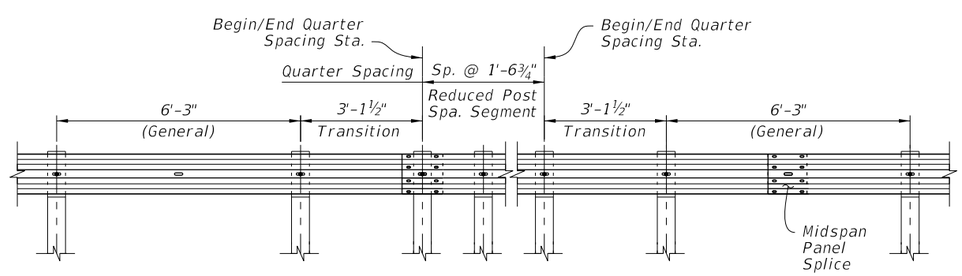

DETAIL 'S' - QUARTER SPACING ELEVATION
(AS REQD. PER THE PLANS)

REDUCED POST SPACING FOR HAZARDS

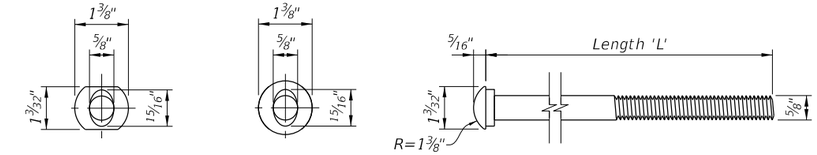

ELEVATION OPTION 1 ELEVATION OPTION 2 PROFILE (Option 1 Shown)

BUTTON-HEAD BOLT

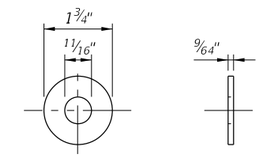

ELEVATION PROFILE

WASHER

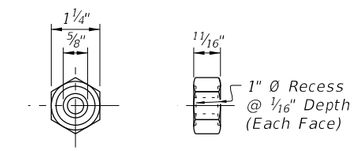

ELEVATION PROFILE

HEX-NUT

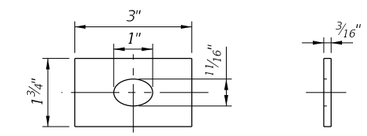

ELEVATION PROFILE

RECTANGULAR WASHER
(For CRT & Terminal Connectors Where Shown - Install Over Panel Face)

BUTTON-HEAD BOLT LENGTHS:

Application(s):	Length 'L':	Min. Thread Length:
Panel Splice	1¼"	Full Length
Steel Post Mount - Single Faced Guardrail	10"	4"
Timber Post Mount - Single Faced Guardrail	18"	4"
Steel or Timber Post Mount - Double Faced Guardrail	25"	4"

NOTES:

1. Use nuts, bolts, and washers in accordance with Specification 967.

2. For Steel Posts with Double Faced Guardrail, the single 25" Length bolt (one bolt thru both post flanges) may be replaced with two 10" Length bolts (one bolt per post flange).

3. Use bolts listed in Table 2 in corresponding locations shown in this Index.

5/8" BUTTON-HEAD BOLT

12/13/2022 8:36:51 AM

LAST REVISION	REVISION	DESCRIPTION:			INDEX	SHEET
11/01/19			FDOT FY 2023-24 STANDARD PLANS	GUARDRAIL	536-001	24 of 24

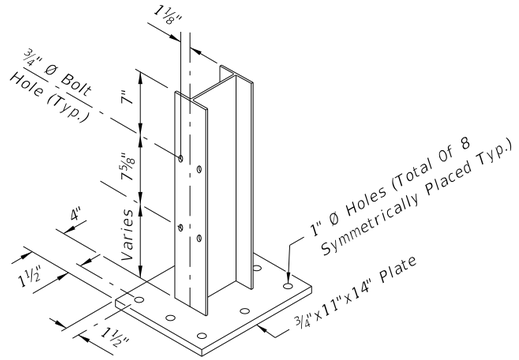

PICTORIAL

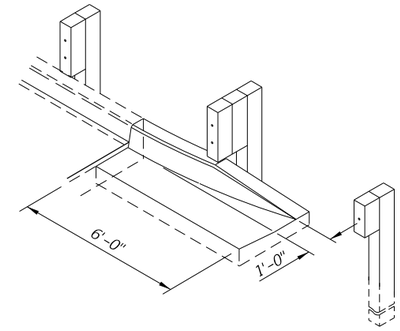

CURB TYPE F FLARE WHEN END OF EXISTING APPROACH SLAB CURB EXPOSED

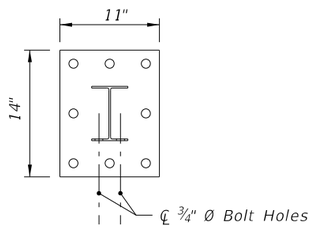

TOP VIEW

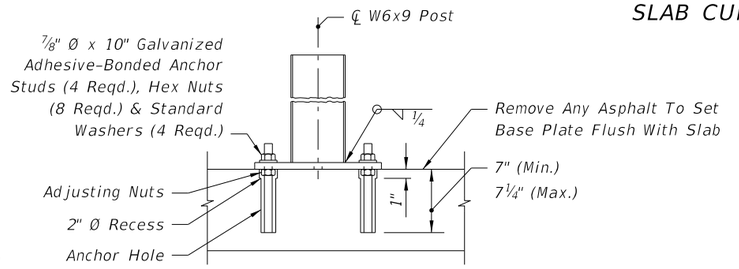

SIDE VIEW

SPECIAL STEEL POST FOR ROADWAY THRIE-BEAM TRANSITIONS TO BRIDGE TRAFFIC RAILING RETROFITS

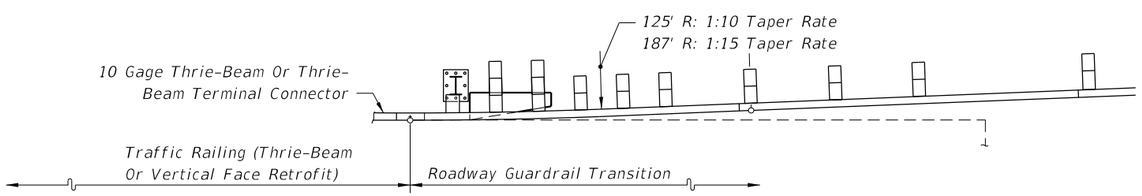

APPROACH SLAB WITHOUT CURB

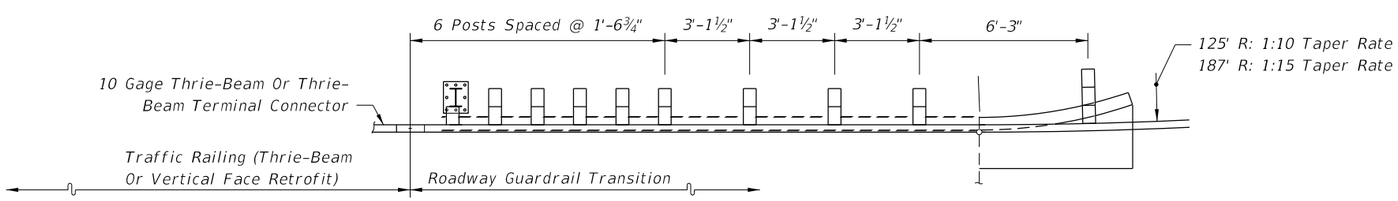

APPROACH SLAB WITH CURB

Longitudinal Location Of Transition Blocks And Curb End Flares Will Vary With Scheme Type

PARTIAL PLAN VIEWS

GENERAL NOTES

1. This index provides guardrail transition details for approach and trailing end guardrail connections to existing bridges, including details for connecting to traffic railing retrofits and safety shape barriers on existing bridges. Sheets 1 through 26 apply to bridges with retrofitted traffic railings (Sheet 26 shows the trailing end guardrail connections). Sheets 27 and 28 apply to bridges with safety shape traffic railing, and they provide approach and trailing end transition connection details for guardrail. Construct these guardrail transitions and connections where called for in the plans.

2. For miscellaneous guardrail components and construction details that are not provided in this Index, refer to Index 536-001.

NOTES FOR GUARDRAIL TRANSITIONS CONNECTING TO TRAFFIC RAILING RETROFITS ON EXISTING BRIDGES

1. The transition detail shown on this sheet shows (a) the standard post spacings within the typical thrie-beam approach transitions connecting to existing bridges with retrofit traffic railings, and (b) depict the typical alignments of the approach transitions.

2. The curb and gutter flare shown on this sheet is typical of flares that are to be constructed when approach slab curbs extend to the beginning of the slab, and where other treatment to curb blunt ends are not in place.

3. The special steel post for roadway thrie-beam transitions detailed on this sheet is specific to all transition applications on this index that require one or more steel posts.

   The special steel post and base plate assembly shall be fabricated in accordance with Specification 967.

   Anchor studs shall be fully threaded rods in accordance with ASTM F1554 Grade 36 or ASTM A193 Grade B7. All nuts shall be heavy hex in accordance with ASTM A563 or ASTM A19

4. Anchor studs and nuts shall be hot-dip zinc coated in accordance with the Specifications. After the nuts have been snug tightened, the anchor stud threads shall be single punch distorted immediately above the top nuts to prevent loosening of the nuts. Distorted threads shall be coated with a galvanizing compound in accordance with the Specifications.

   Adhesive bonding material systems for anchors shall comply with Specification 937 and be installed in accordance with Specification 416.4. Nested beam extensions and points for terminal connector attachments will vary for traffic railing barrier vertical face retrofits. The plan views for the vertical face retrofit barriers show the primary configurations for each particular scheme. The associated pictorial views show the variations.

5. For installing thrie-beam terminal connector to traffic railing vertical face retrofits, see notations on Sheets 15 through 18 and the flag notation on Sheet 26.

GUARDRAIL TRANSITION ALIGNMENTS FOR BRIDGE THRIE-BEAM AND VERTICAL FACE TRAFFIC RAILING RETROFIT

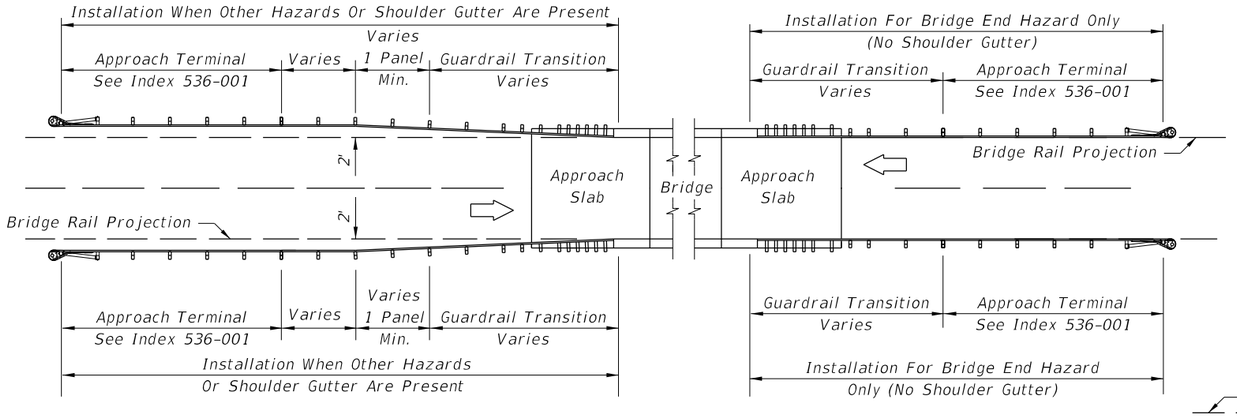

UNDIVIDED ROADWAY - DETAIL H

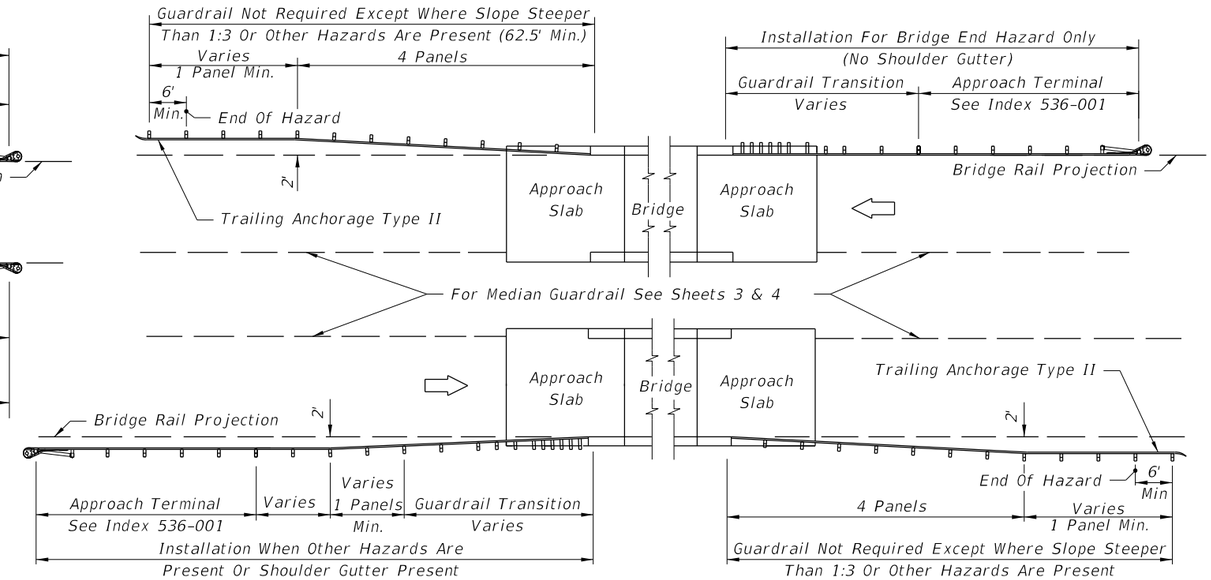

DIVIDED ROADWAY - DETAIL I

GUARDRAIL APPLICATIONS FOR BRIDGES WITH FULL WIDTH SHOULDERS AND SAFETY SHAPE TRAFFIC RAILING BARRIER EXTENDING LESS THAN FULL APPROACH SLAB LENGTH

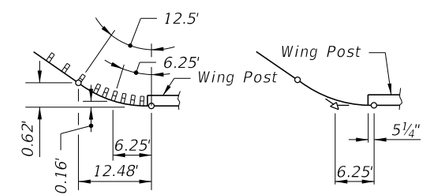

125' R LAYOUT

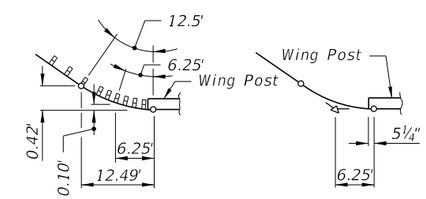

187' R LAYOUT

STANDARD PANELS SET TO RADIALS ADJOINING BRIDGES DETAIL W

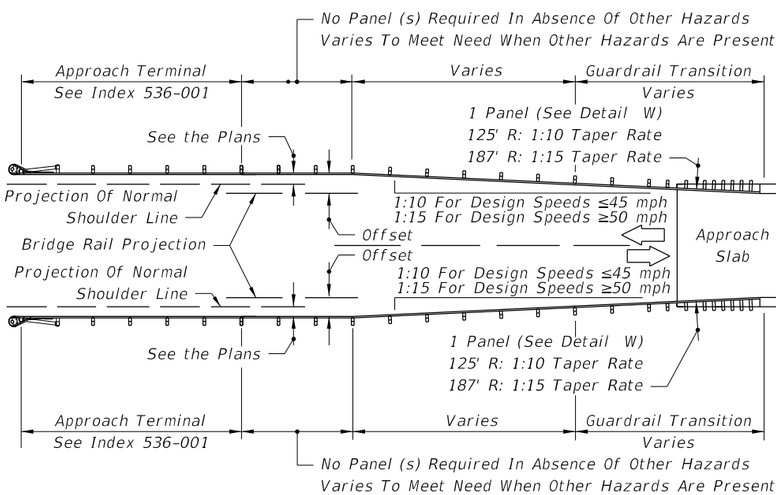

UNDIVIDED ROADWAY - DETAIL S

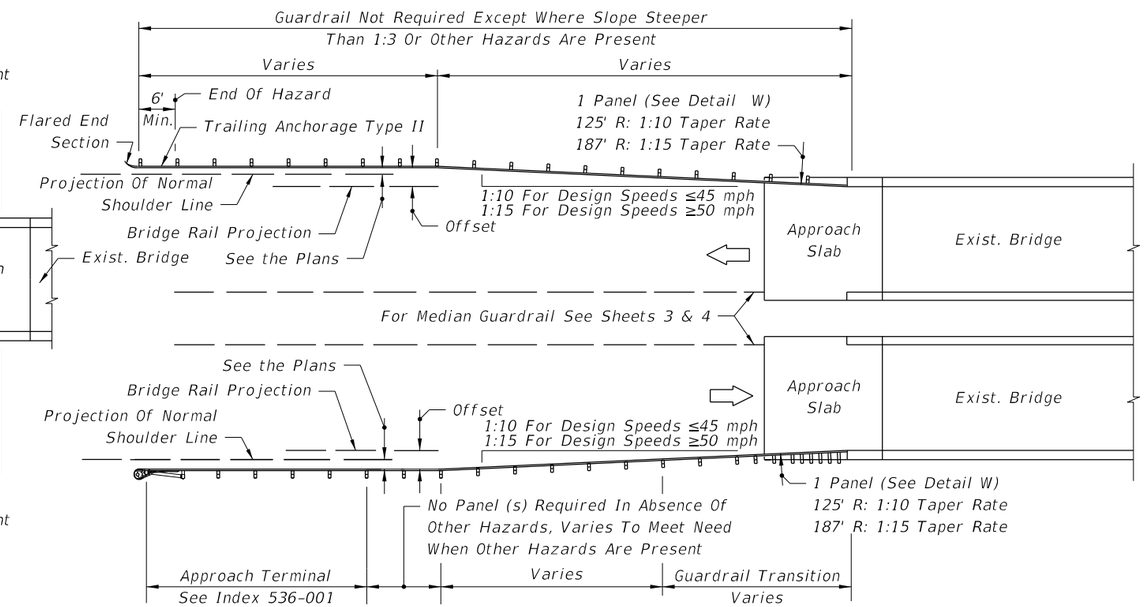

DIVIDED ROADWAY - DETAIL T

GUARDRAIL APPLICATIONS FOR BRIDGES WITH LESS THAN FULL WIDTH SHOULDERS AND CONCRETE TRAFFIC RAILING EXTENDING LESS THAN FULL APPROACH SLAB LENGTH

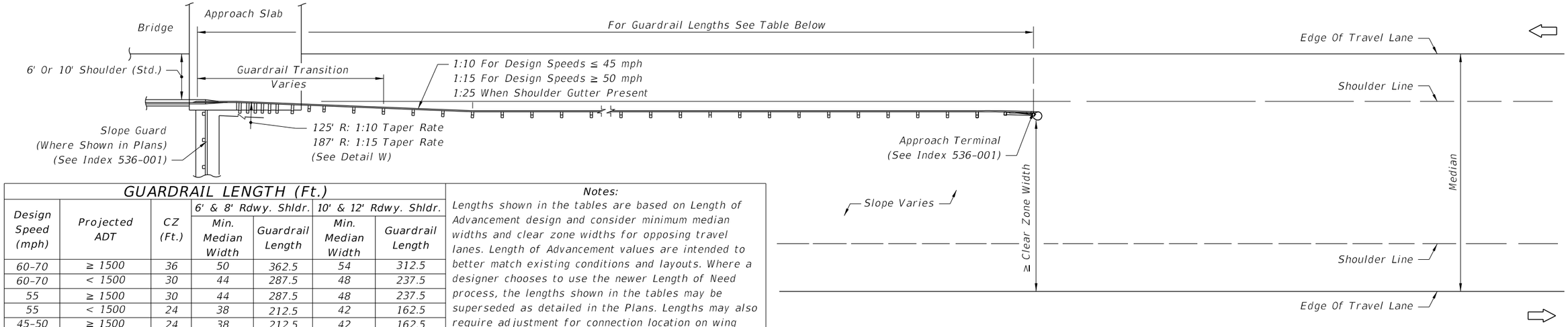

GUARDRAIL LENGTH (Ft.)						
Design Speed (mph)	Projected ADT	CZ (Ft.)	6' & 8' Rdwy. Shldr.		10' & 12' Rdwy. Shldr.	
			Min. Median Width	Guardrail Length	Min. Median Width	Guardrail Length
60-70	≥ 1500	36	50	362.5	54	312.5
60-70	< 1500	30	44	287.5	48	237.5
55	≥ 1500	30	44	287.5	48	237.5
55	< 1500	24	38	212.5	42	162.5
45-50	≥ 1500	24	38	212.5	42	162.5
45-50	< 1500	20	34	162.5	38	112.5
45-50	Urban w/o Curb	24	38	212.5	42	162.5
35-40	Urban w/o Curb	18	32	162.5	36	100.0

Notes:
Lengths shown in the tables are based on Length of Advancement design and consider minimum median widths and clear zone widths for opposing travel lanes. Length of Advancement values are intended to better match existing conditions and layouts. Where a designer chooses to use the newer Length of Need process, the lengths shown in the tables may be superseded as detailed in the Plans. Lengths may also require adjustment for connection location on wing post or bridge traffic railing barrier, auxiliary lanes, skewed crossings, and other hazards if present.

Note: For Approach Terminals, see sheets elsewhere in this Index and the plans.

WHEN END TERMINAL IS OUTSIDE OF OPPOSING ROADWAY CLEAR ZONE

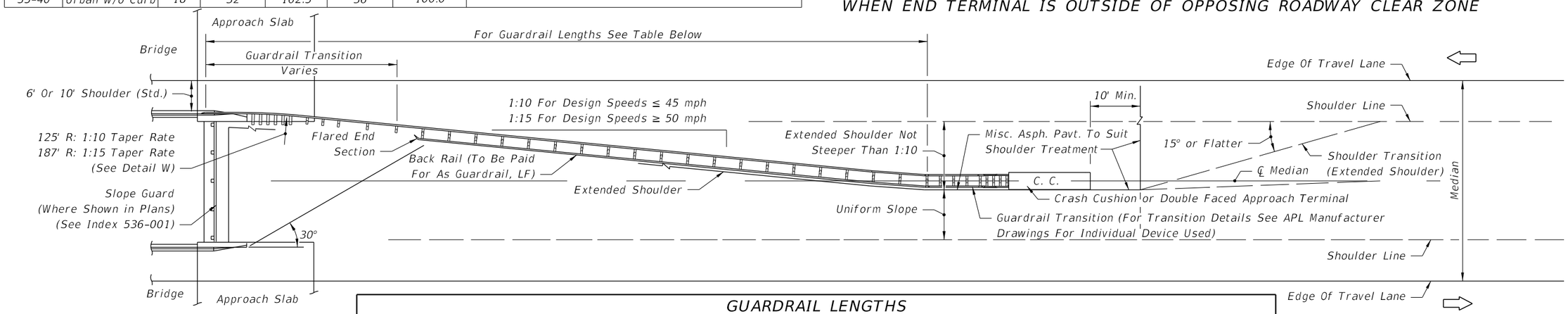

GUARDRAIL LENGTHS																
Median Width (ft.)	1:10 TAPER RATE								1:15 TAPER RATE							
	6' Bridge Shoulder				10' Bridge Shoulder				6' Bridge Shoulder				10' Bridge Shoulder			
	Panels (No.)			Length (Ft.)	Panels (No.)			Length (Ft.)	Panels (No.)			Length (Ft.)	Panels (No.)			Length (Ft.)
	Front	Back	Total	Total	Front	Back	Total	Total	Front	Back	Total	Total	Front	Back	Total	Total
32	7.5	6	13.5	168.75	4.5	3	7.5	93.75	11.5	9	20.5	256.25	7.5	6	13.5	168.75
34	8.5	6	14.5	181.25	5.5	4	9.5	118.75	12.5	10	22.5	281.25	7.5	6	13.5	168.75
36	9.5	7	16.5	206.25	6.5	5	11.5	143.75	13.5	11	24.5	306.25	8.5	7	15.5	193.75
38	10.5	8	18.5	231.25	7.5	6	13.5	168.75	14.5	12	26.5	331.25	10.5	9	19.5	243.75
40	10.5	8	18.5	231.25	7.5	6	13.5	168.75	16.5	13	29.5	368.75	11.5	9	20.5	256.25
42	11.5	8	19.5	243.75	8.5	6	14.5	181.25	17.5	14	31.5	393.75	12.5	10	22.5	281.25
44	12.5	9	21.5	268.75	9.5	7	16.5	206.25	18.5	15	33.5	418.75	13.5	11	24.5	306.25
46	12.5	9	21.5	268.75	10.5	8	18.5	231.25	19.5	16	35.5	443.75	14.5	12	26.5	331.25
48	14.5	11	25.5	318.75	11.5	9	20.5	256.25	20.5	16	36.5	456.25	16.5	13	29.5	368.75

The lengths shown on this table are typical for roadways with standard width shoulders and a relocated connection to the existing wing post. Length requirements shall be determined on a site specific basis for both standard width and narrow bridge shoulders and for end anchorage or end shielding use. See design notes in above table.

WHEN END TERMINAL CANNOT BE LOCATED OUTSIDE OF OPPOSING ROADWAY CLEAR ZONE

APPROACH GUARDRAIL TREATMENTS FOR BRIDGES WITH CONCRETE TRAFFIC RAILING EXTENDING LESS THAN FULL APPROACH SLAB LENGTH IN WIDE MEDIANS WITH FLUSH SHOULDERS

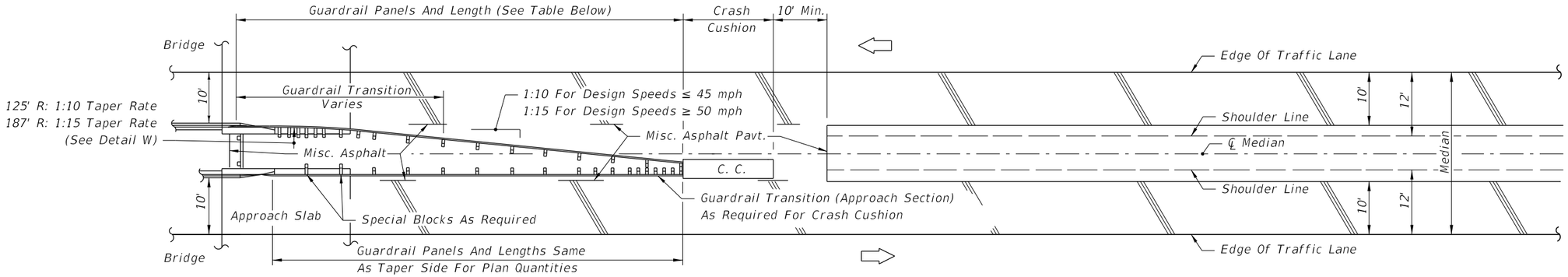

MEDIANS WITH 10' BRIDGE SHOULDERS

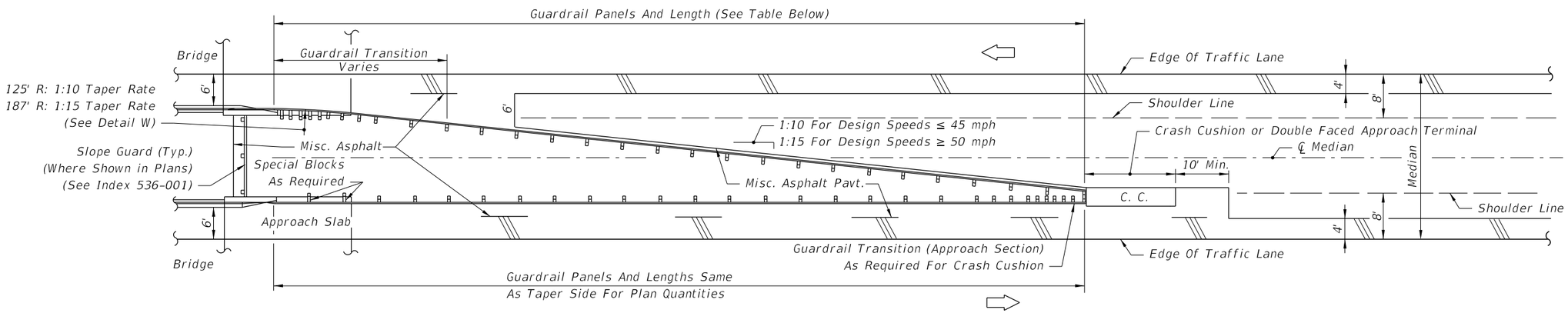

MEDIANS WITH 6' BRIDGE SHOULDERS

Note: The guardrail configurations shown apply only to parallel or near parallel bridges with open medians.

GUARDRAIL LENGTHS

MEDIAN WIDTH (Ft.)	6' BRIDGE SHOULDERS				10' BRIDGE SHOULDERS			
	1:10 TAPER RATE		1:15 TAPER RATE		1:10 TAPER RATE		1:15 TAPER RATE	
	PANELS (No.)	LENGTH (Ft.)	PANELS (No.)	LENGTH (Ft.)	PANELS (No.)	LENGTH (Ft.)	PANELS (No.)	LENGTH (Ft.)
30	12.5	156.25	18.5	231.25	6.5	81.25	9.5	118.75
28	11.5	143.75	16.5	206.25	5.5	68.75	7.5	93.75
26	9.5	118.75	14.5	181.25	5.5*	68.75	5.5*	68.75
24	8.5	106.25	11.5	143.75	5.5*	68.75	5.5*	68.75

The lengths shown in this table are based on standard widths for roadway and bridge median shoulders. Length requirements for both standard width and narrow bridge shoulders and end anchorage or end shielding requirements shall be determined on a site specific basis. The number of panels may be reduced when installing a crash cushion more than 2.5' in width; see * below.

*Number shown is the minimum number of panels plus a W-Thrie beam transition panel; single faced guardrail must have a length of five (5) or more panels.

APPROACH GUARDRAIL TREATMENTS FOR BRIDGES WITH CONCRETE TRAFFIC RAILING EXTENDING LESS THAN FULL APPROACH SLAB LENGTH IN NARROW MEDIANS WITH FLUSH SHOULDERS

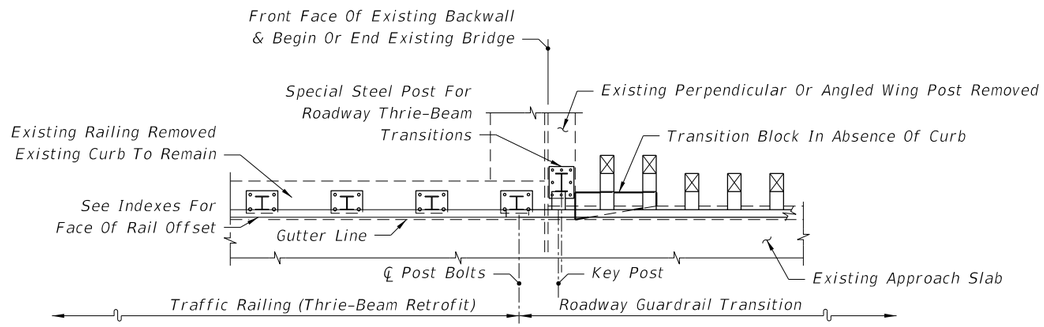

SEE INDEX 460-471 - SCHEME 1

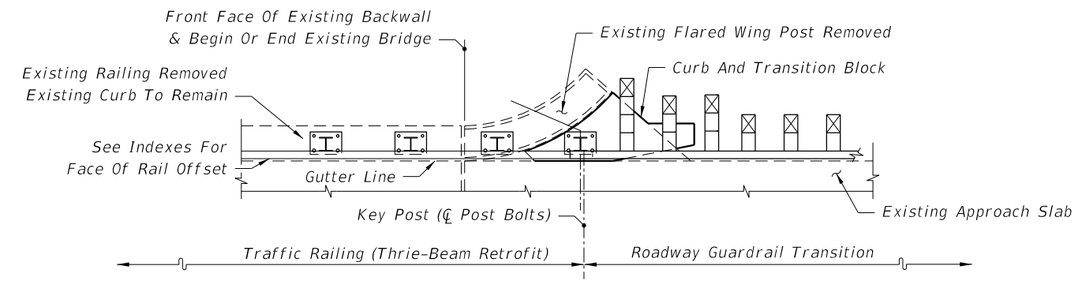

SEE INDEX 460-471 - SCHEME 3

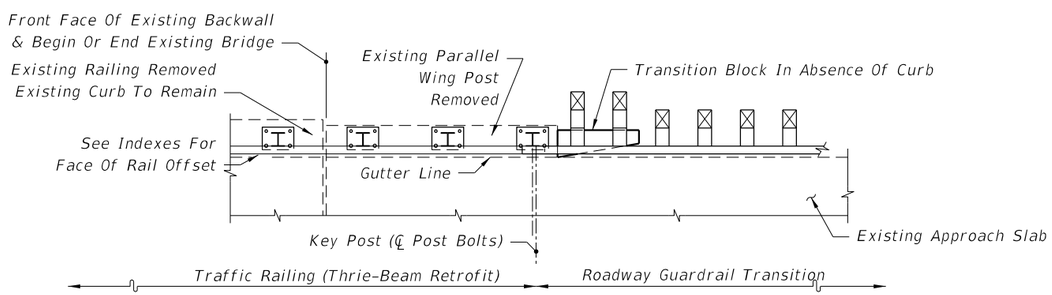

SEE INDEX 460-471 - SCHEME 2

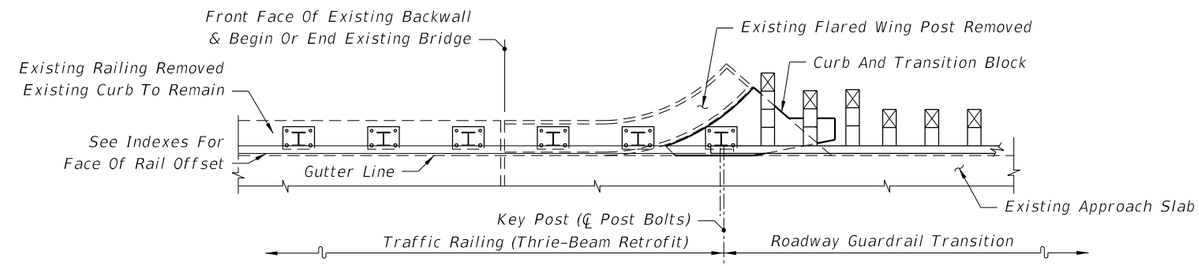

SEE INDEX 460-471 - SCHEME 3

PARTIAL PLAN VIEWS OF GUARDRAIL APPROACH TRANSITIONS AND CONNECTIONS
FOR BRIDGE TRAFFIC RAILING (THRIE-BEAM RETROFIT)

10/20/2022 8:53:31 AM

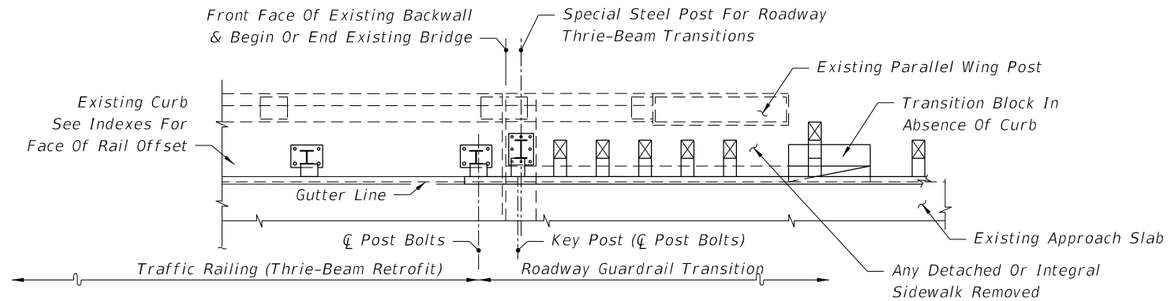

SEE INDEXES 460-472 & 460-475 - SCHEME 2

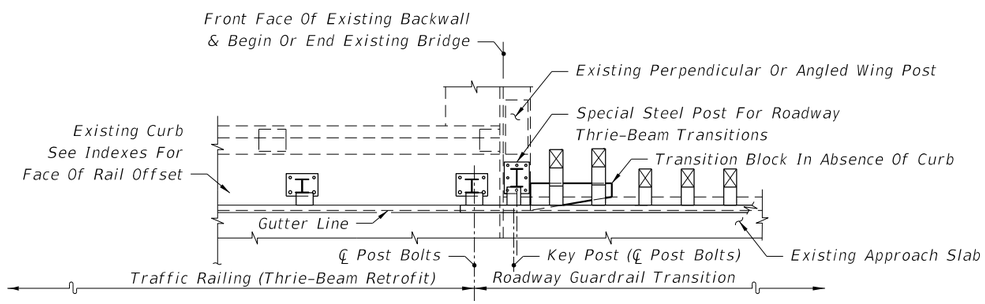

SEE INDEXES 460-472 & 460-475 - SCHEME 1

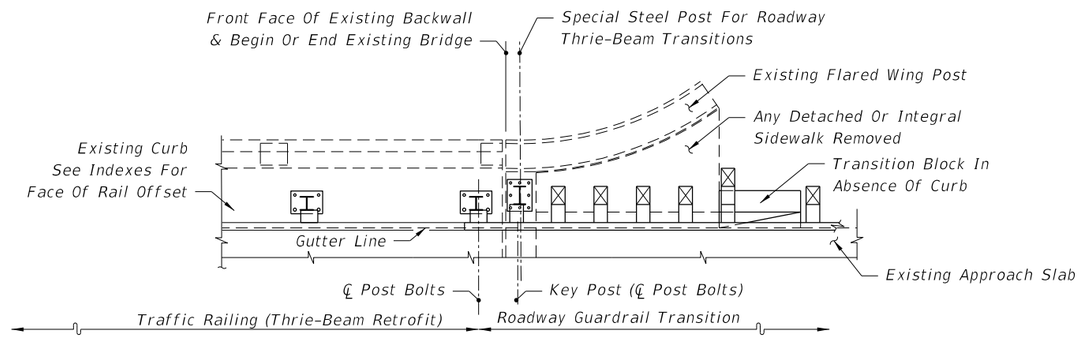

SEE INDEXES 460-472 & 460-475 - SCHEME 2

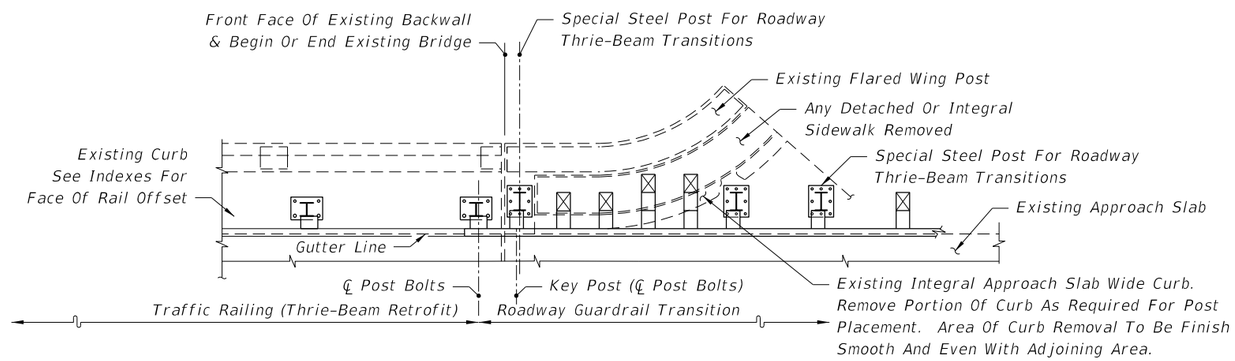

SEE INDEXES 460-472 & 460-475 - SCHEME 2

PARTIAL PLAN VIEWS OF GUARDRAIL APPROACH TRANSITIONS AND CONNECTIONS FOR BRIDGE TRAFFIC RAILING (THRIE-BEAM RETROFIT)

10/20/2022 8:53:32 AM

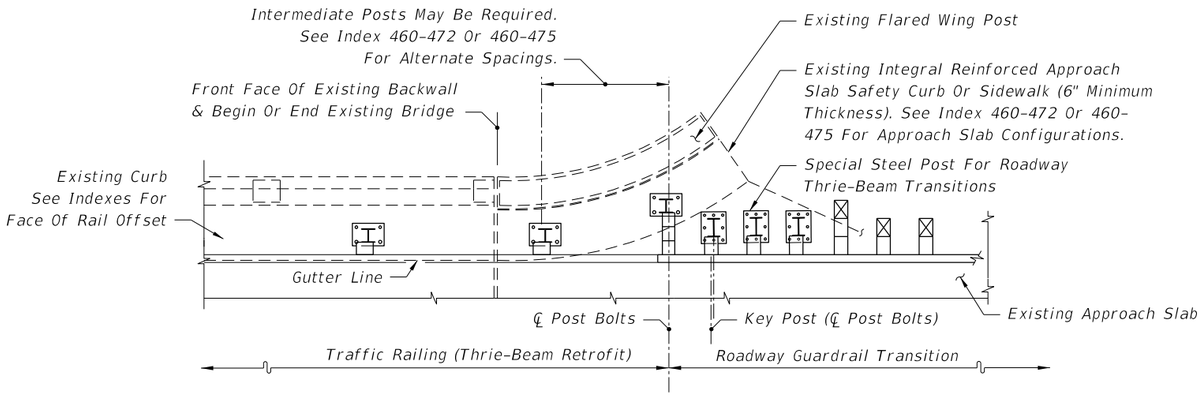

SEE INDEXES 460-472 & 460-475 - SCHEMES 3 & 4

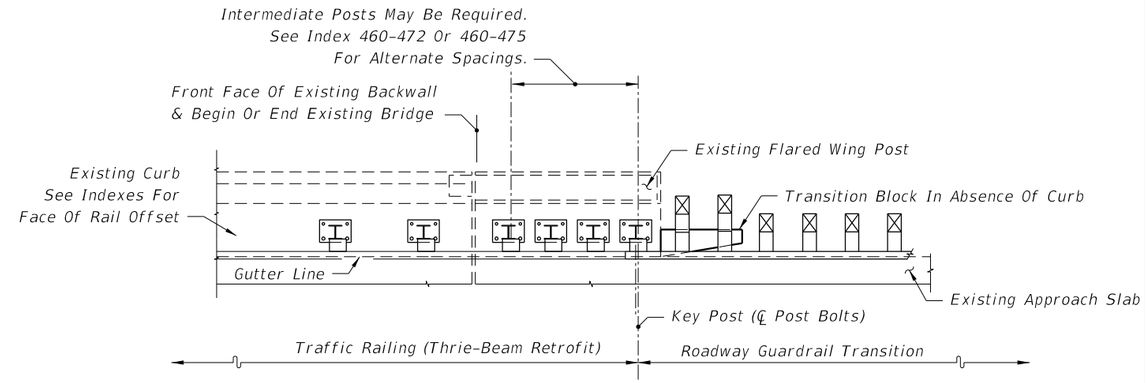

SEE INDEXES 460-472 & 460-475 - SCHEMES 5 & 6

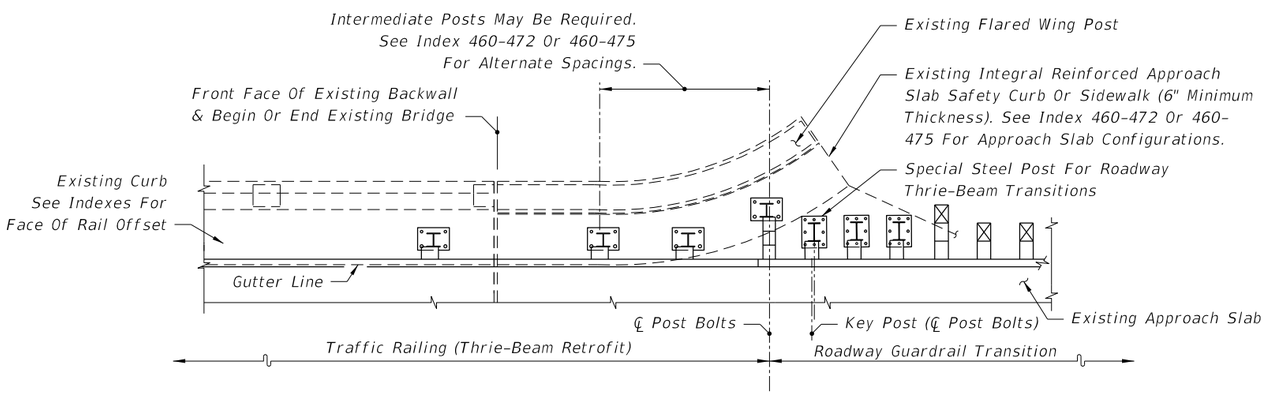

SEE INDEXES 460-472 & 460-475 - SCHEMES 3 & 4

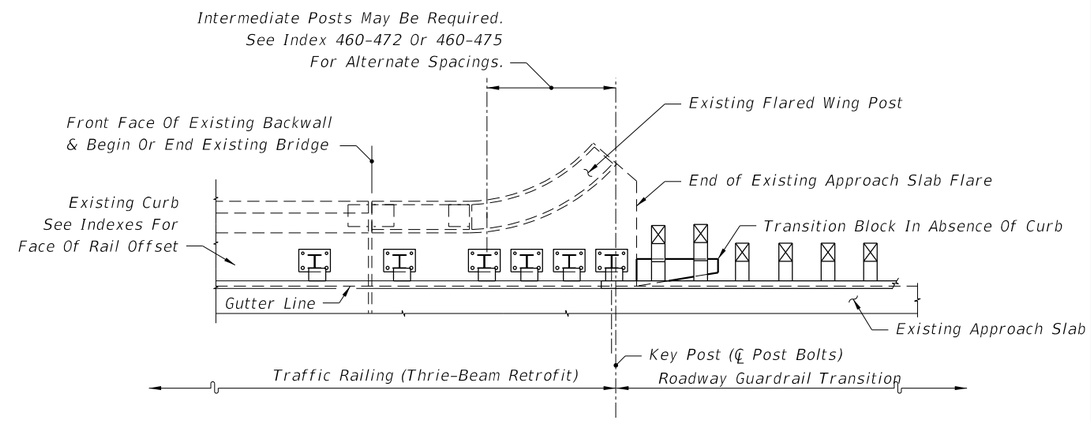

SEE INDEXES 460-472 & 460-475 - SCHEMES 5 & 6

PARTIAL PLAN VIEWS OF GUARDRAIL APPROACH TRANSITIONS AND CONNECTIONS
FOR BRIDGE TRAFFIC RAILING (THRIE-BEAM RETROFIT)

10/20/2022 8:53:33 AM

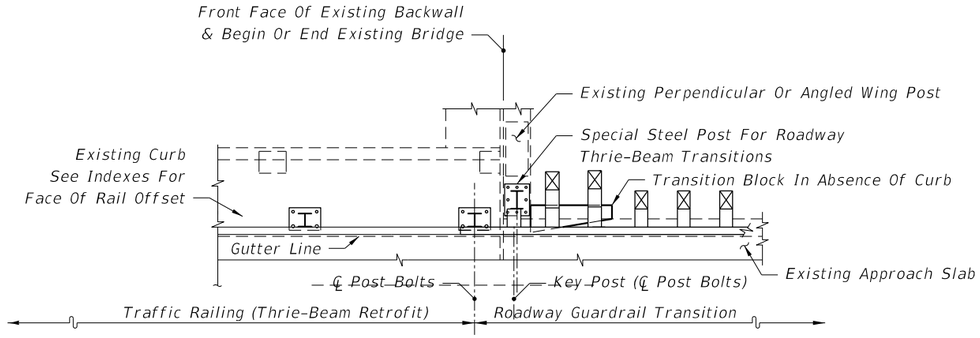

SEE INDEXES 460-473 & 460-476 - SCHEME 1

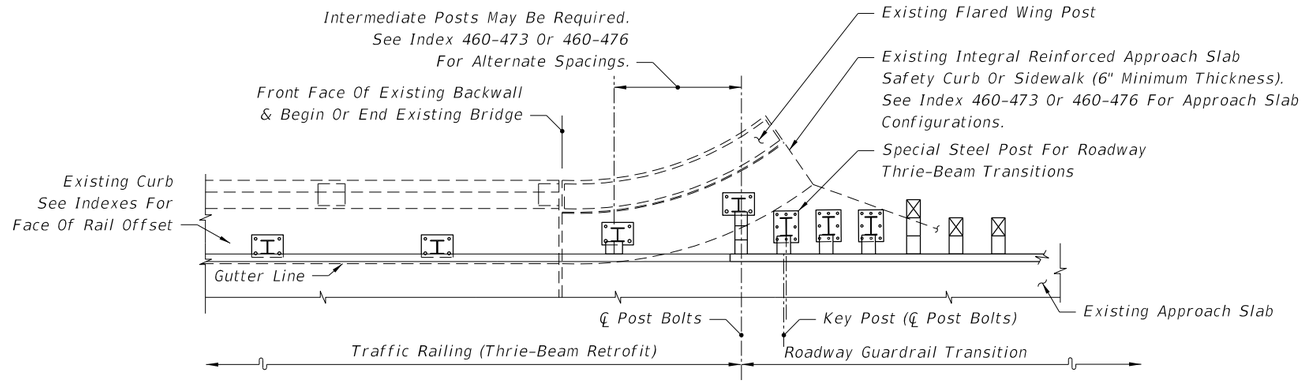

SEE INDEXES 460-473 & 460-476 - SCHEMES 3 & 4

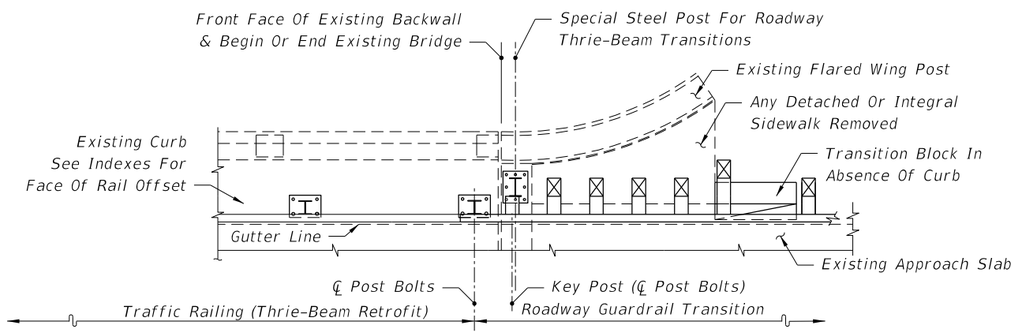

SEE INDEXES 460-473 & 460-476 - SCHEME 2

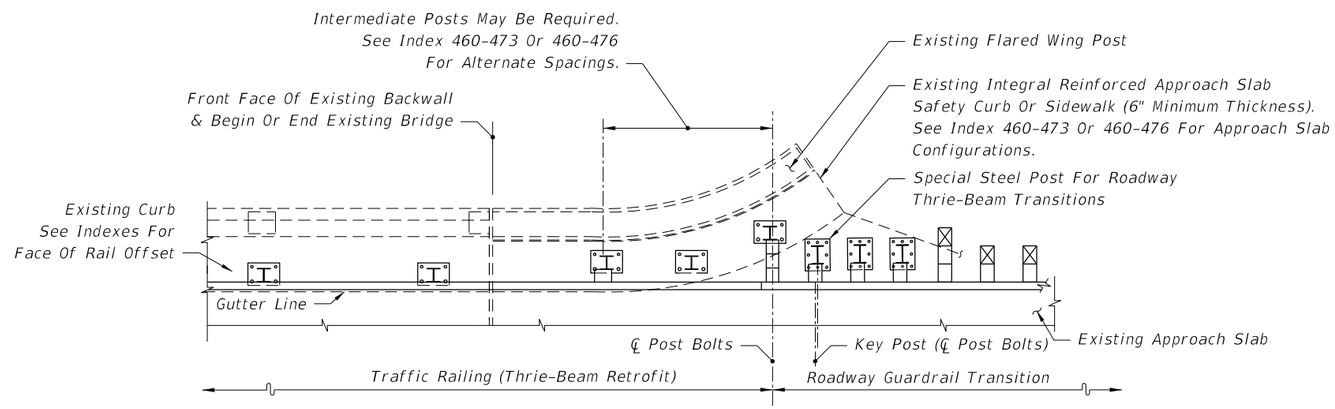

SEE INDEXES 460-473 & 460-476 - SCHEMES 3 & 4

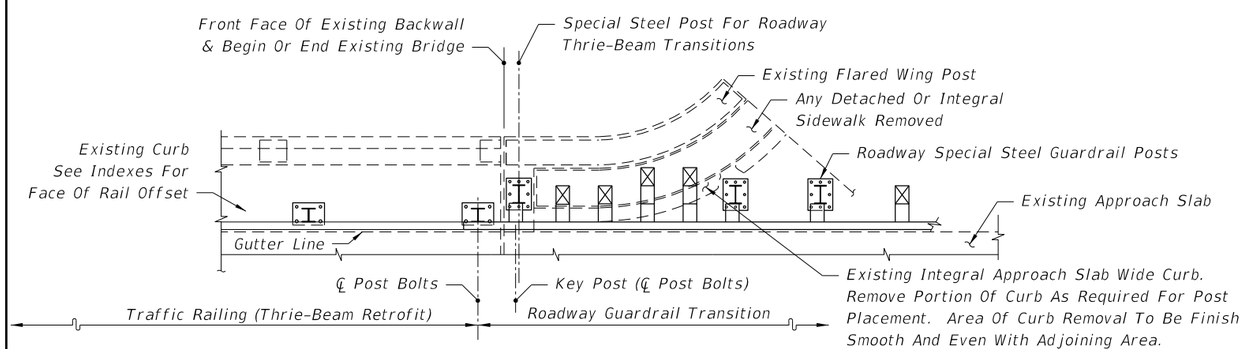

SEE INDEXES 460-473 & 460-476 - SCHEME 2

PARTIAL PLAN VIEWS OF GUARDRAIL APPROACH TRANSITIONS AND CONNECTIONS FOR BRIDGE TRAFFIC RAILING (THRIE-BEAM RETROFIT)

10/20/2022 8:53:34 AM

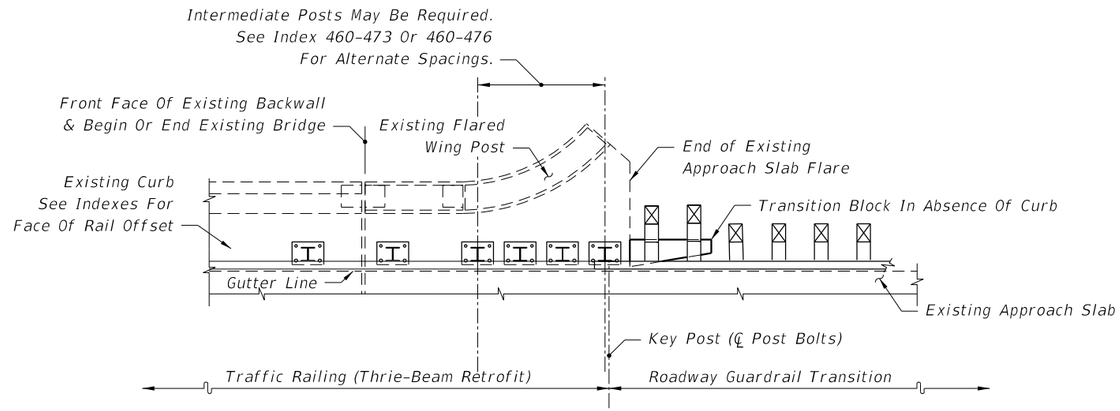

SEE INDEXES 460-473 & 460-476 - SCHEMES 5 & 6

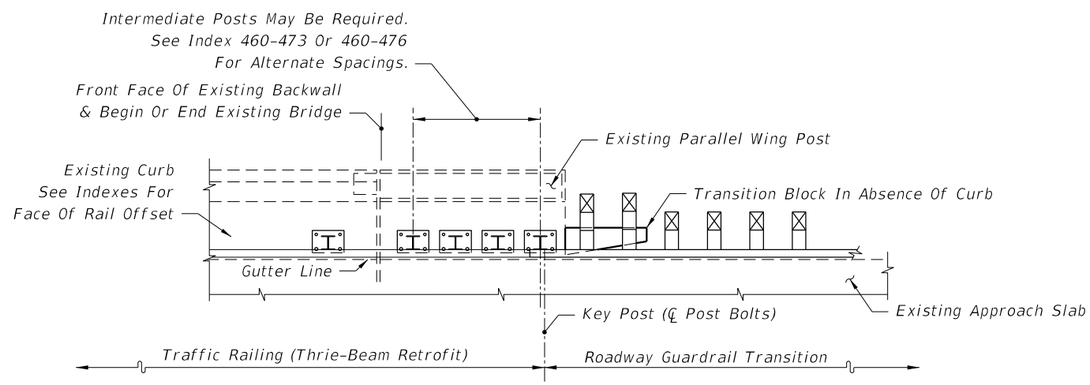

SEE INDEXES 460-473 & 460-476 - SCHEMES 5 & 6

PARTIAL PLAN VIEWS OF GUARDRAIL APPROACH TRANSITIONS AND CONNECTIONS
FOR BRIDGE TRAFFIC RAILING (THRIE-BEAM RETROFIT)

10/20/2022 8:53:35 AM

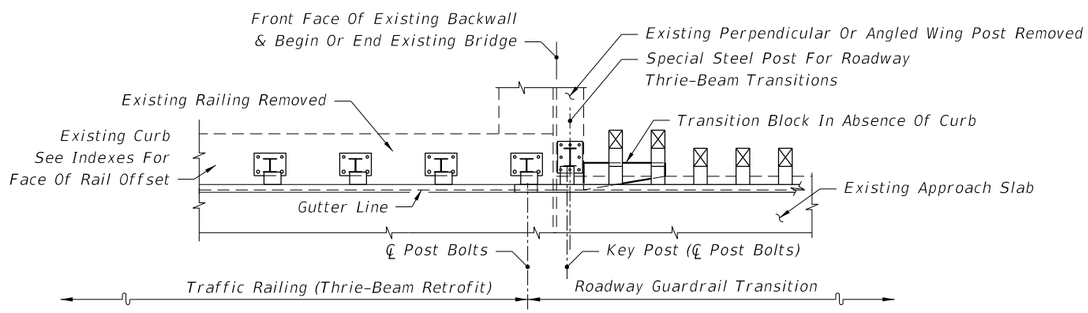

SEE INDEX 460-474 - SCHEME 1

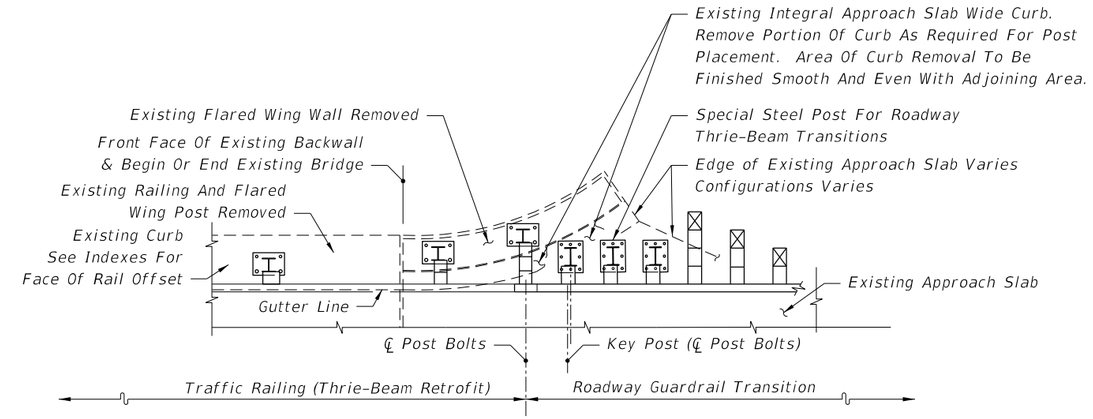

SEE INDEX 460-474 - SCHEME 3

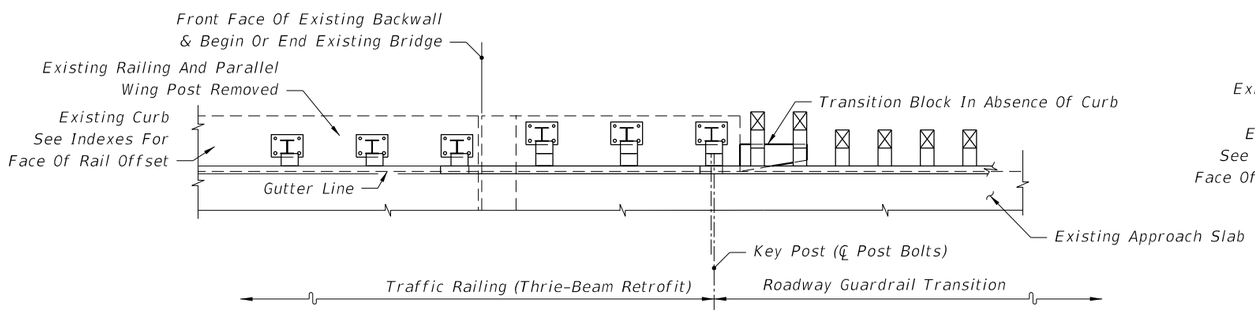

SEE INDEX 460-474 - SCHEME 2

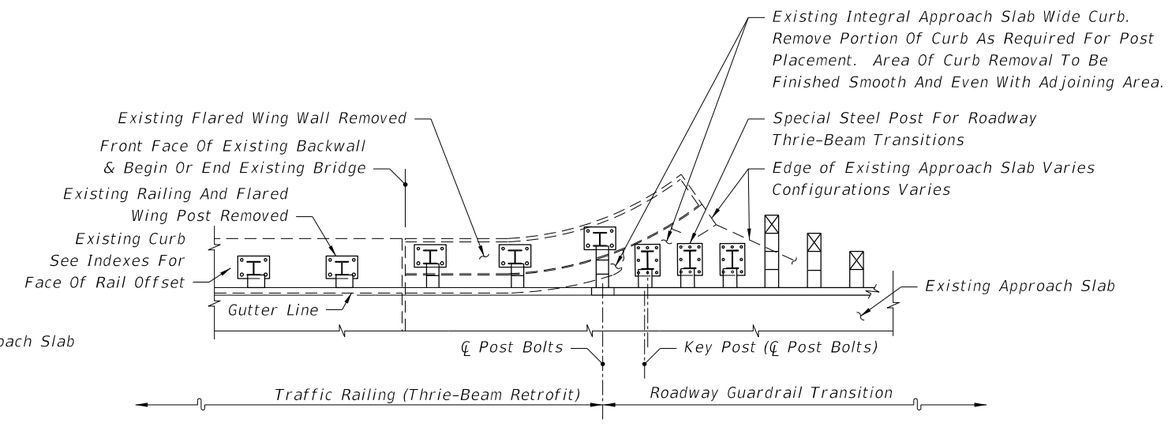

SEE INDEX 460-474 - SCHEME 3

PARTIAL PLAN VIEWS OF GUARDRAIL APPROACH TRANSITIONS AND CONNECTIONS FOR BRIDGE TRAFFIC RAILING (THRIE-BEAM RETROFIT)

10/20/2022 8:53:35 AM

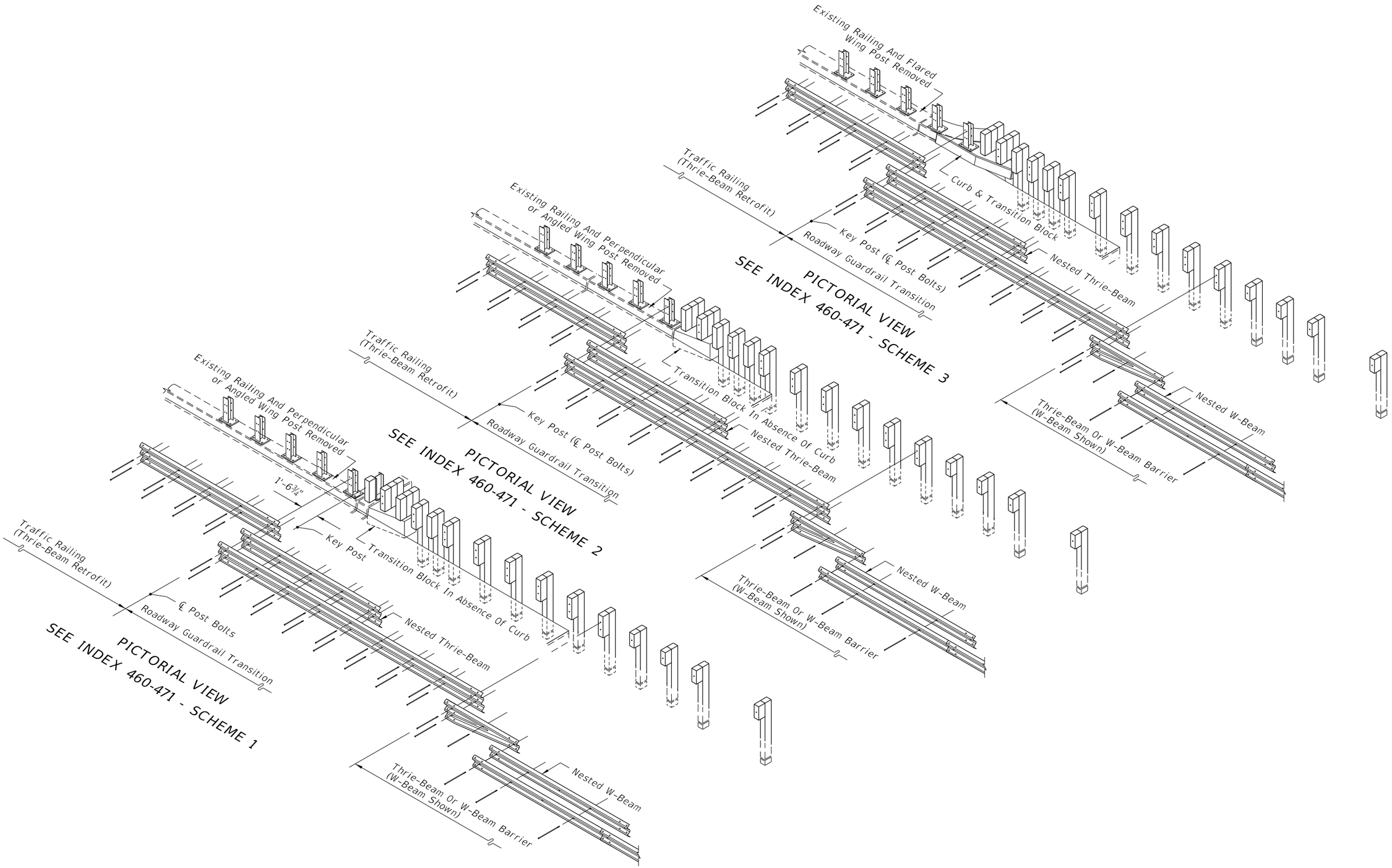

PICTORIAL VIEWS OF GUARDRAIL APPROACH TRANSITIONS AND CONNECTIONS FOR BRIDGE TRAFFIC RAILING (THRIE-BEAM RETROFIT)

10/20/2022 8:53:36 AM

LAST REVISION	REVISION	DESCRIPTION:				INDEX	SHEET
11/01/19			FDOT	FY 2023-24 STANDARD PLANS	GUARDRAIL TRANSITIONS AND CONNECTIONS FOR EXISTING BRIDGES	536-002	11 of 28

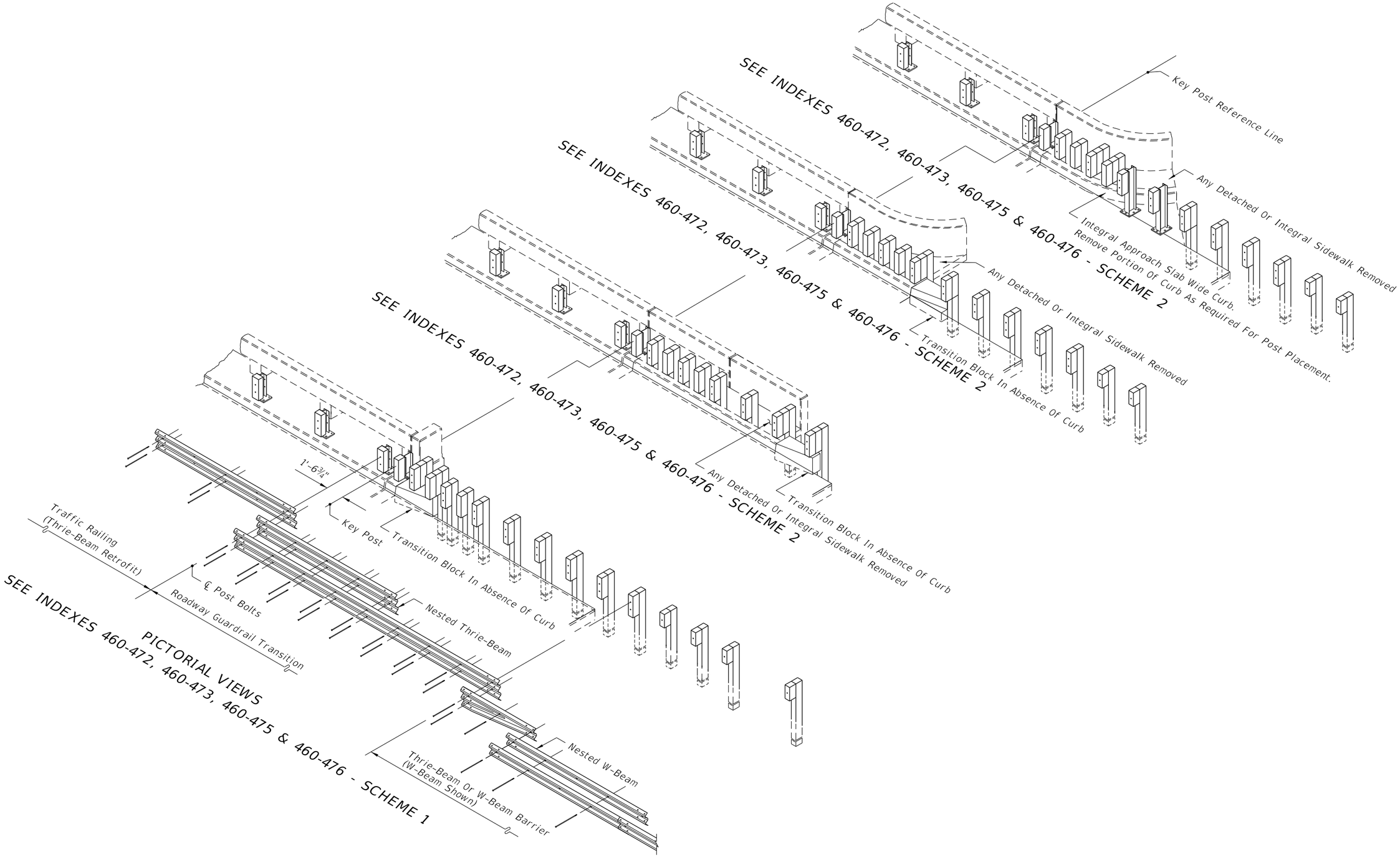

PICTORIAL VIEWS OF GUARDRAIL APPROACH TRANSITIONS AND CONNECTIONS FOR BRIDGE TRAFFIC RAILING (THRIE-BEAM RETROFIT)

10/20/2022 8:53:37 AM

LAST REVISION	REVISION	DESCRIPTION:			INDEX	SHEET
11/01/19			FY 2023-24 STANDARD PLANS	GUARDRAIL TRANSITIONS AND CONNECTIONS FOR EXISTING BRIDGES	536-002	12 of 28

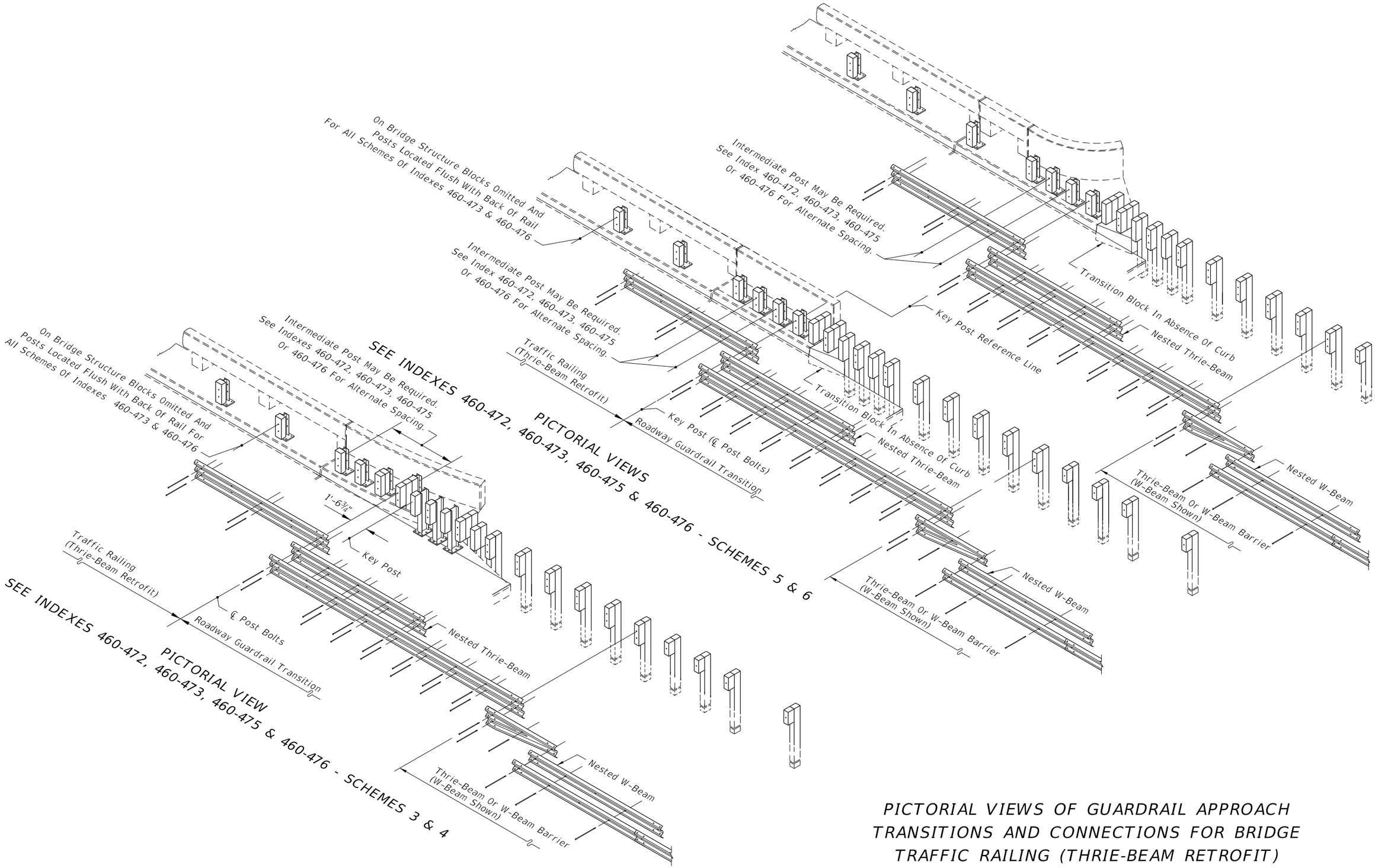

PICTORIAL VIEWS OF GUARDRAIL APPROACH TRANSITIONS AND CONNECTIONS FOR BRIDGE TRAFFIC RAILING (THRIE-BEAM RETROFIT)

10/20/2022 8:53:38 AM

LAST REVISION	REVISION	DESCRIPTION:				INDEX	SHEET
11/01/19			FDOT	FY 2023-24 STANDARD PLANS	GUARDRAIL TRANSITIONS AND CONNECTIONS FOR EXISTING BRIDGES	536-002	13 of 28

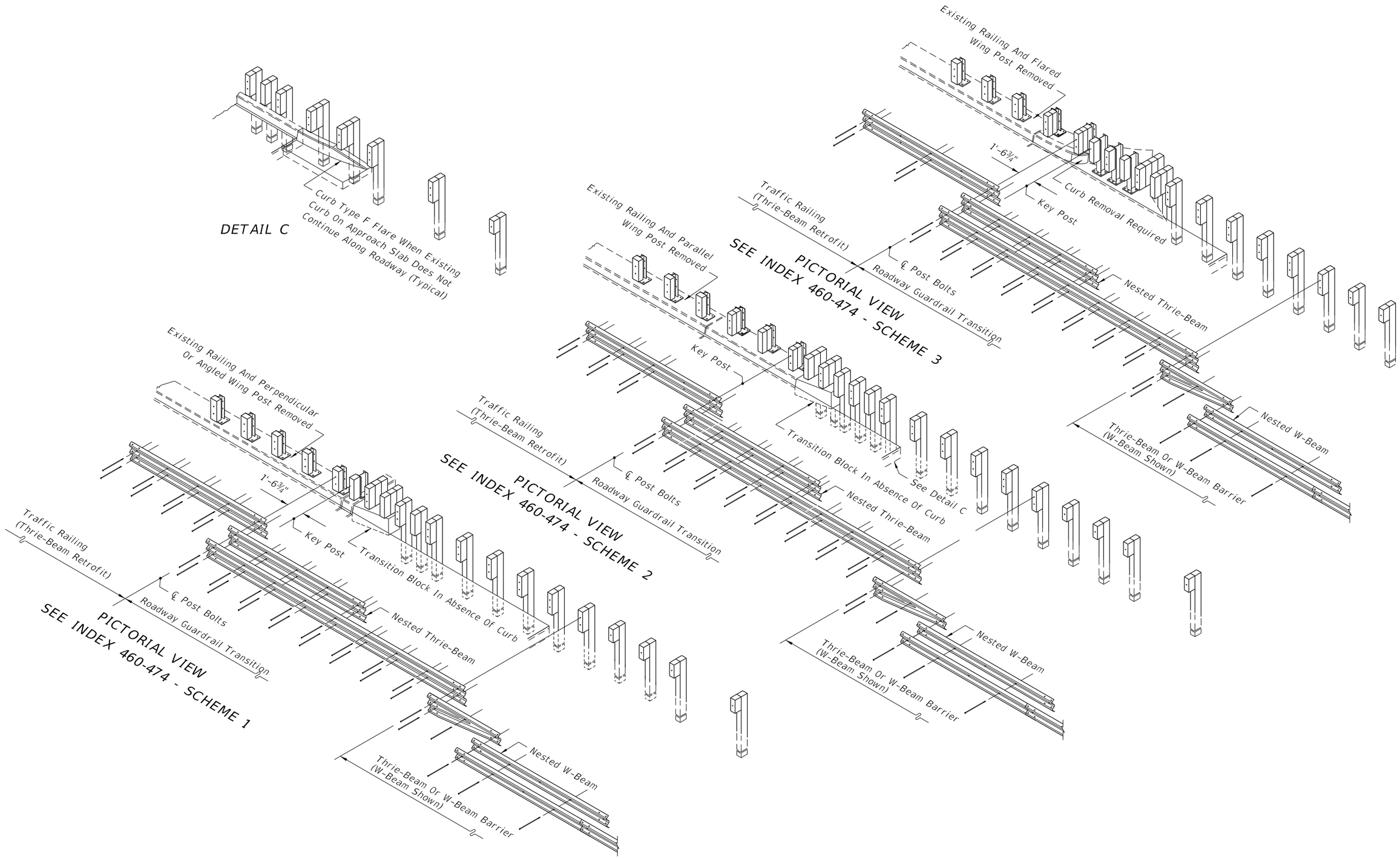

PICTORIAL VIEWS OF GUARDRAIL APPROACH TRANSITIONS AND CONNECTIONS FOR BRIDGE TRAFFIC RAILING (THRIE-BEAM RETROFIT)

10/20/2022 8:53:39 AM

LAST REVISION	REVISION	DESCRIPTION:			INDEX	SHEET
11/01/19			FY 2023-24 STANDARD PLANS	GUARDRAIL TRANSITIONS AND CONNECTIONS FOR EXISTING BRIDGES	536-002	14 of 28

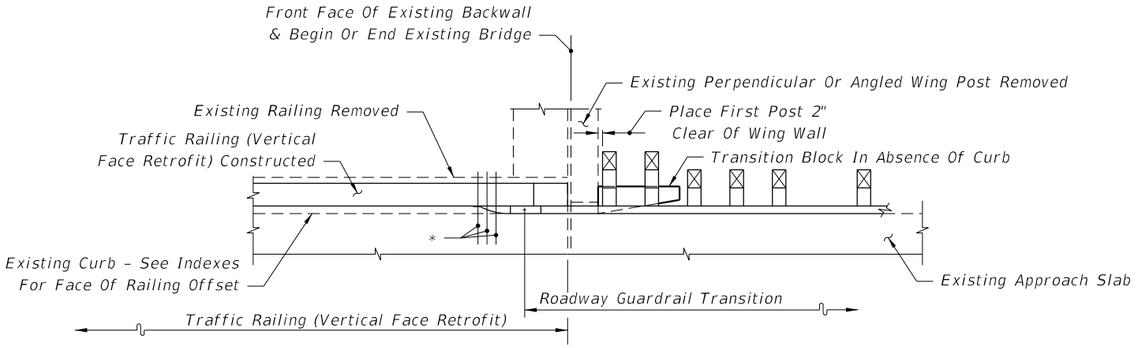

SEE INDEX 521-481 - SCHEME 1

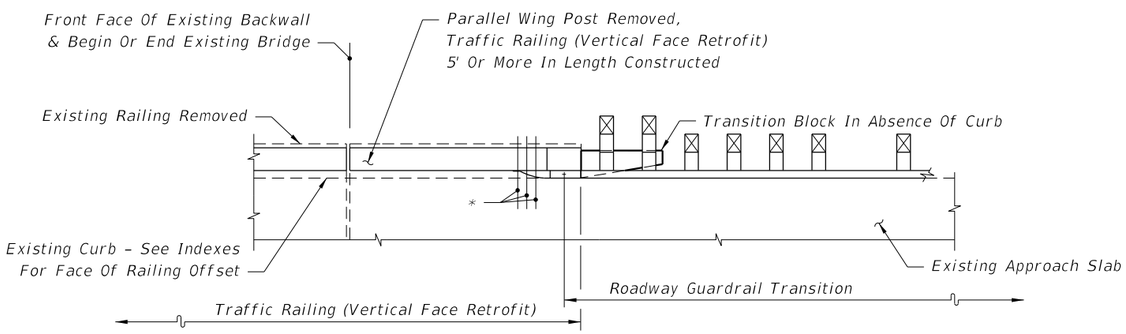

SEE INDEX 521-481 - SCHEME 2

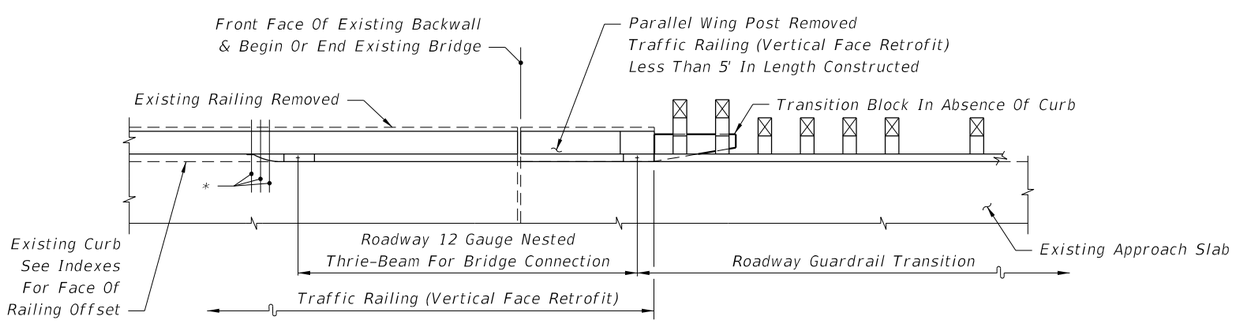

SEE INDEX 521-481 - SCHEME 2

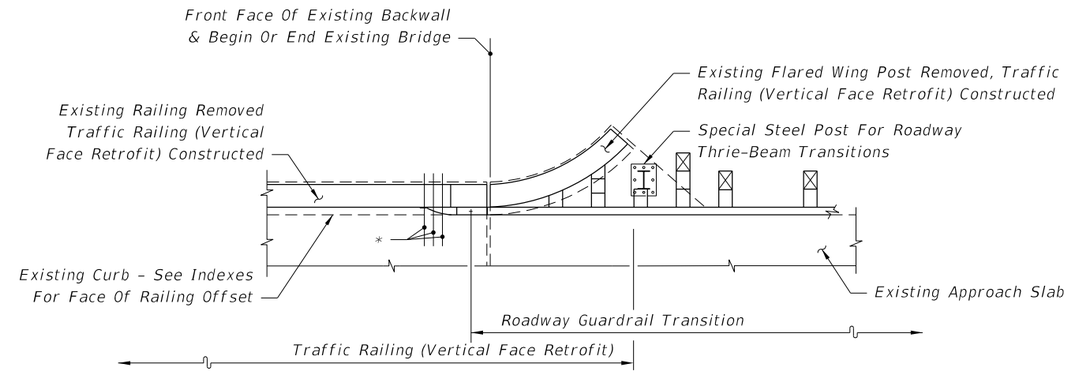

SEE INDEX 521-481 - SCHEME 3

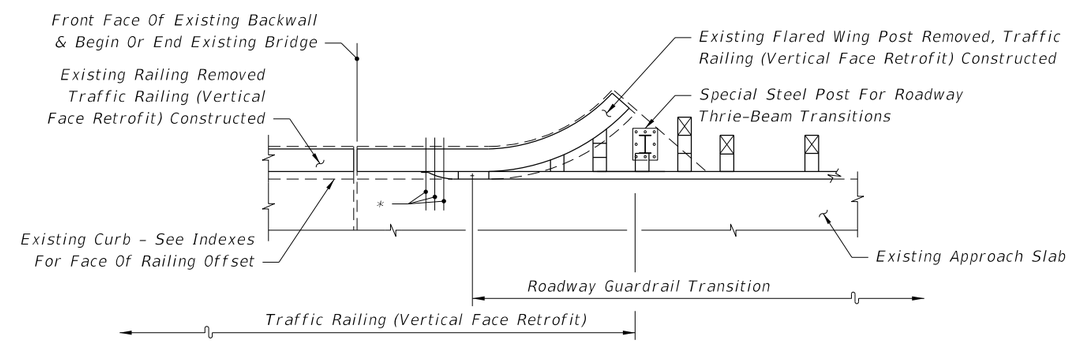

SEE INDEX 521-481 - SCHEME 3

Note:
* 21"x 12" x 5/8" Thrie-Beam Terminal Connector Plate (Back-Up Plate), And 7/8"Ø x 12" Long HS Hex Bolts And Nuts (5 Reqd.) With 2¼" OD Plain Round Washers Under Heads And Nuts

PARTIAL PLAN VIEWS OF TRAFFIC RAILING (VERTICAL FACE RETROFIT)

10/20/2022 8:53:40 AM

LAST REVISION	REVISION	DESCRIPTION:			INDEX	SHEET
11/01/19			FY 2023-24 STANDARD PLANS	GUARDRAIL TRANSITIONS AND CONNECTIONS FOR EXISTING BRIDGES	536-002	15 of 28

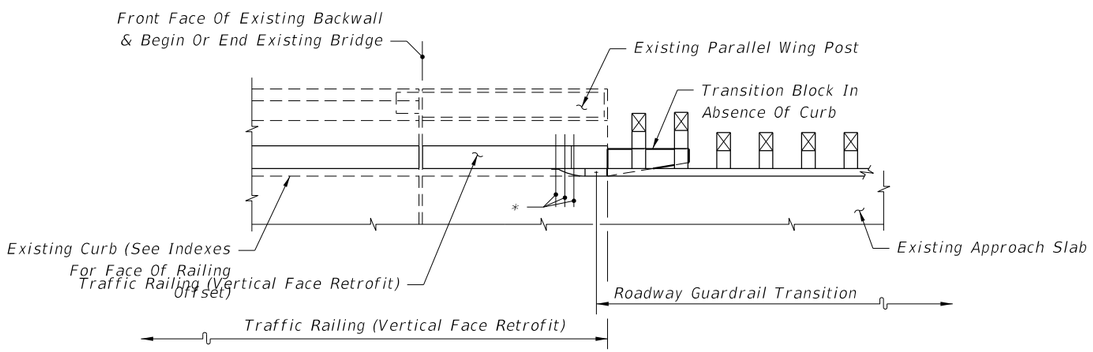

SEE INDEX 521-405 OR 521-482 - SCHEME 2

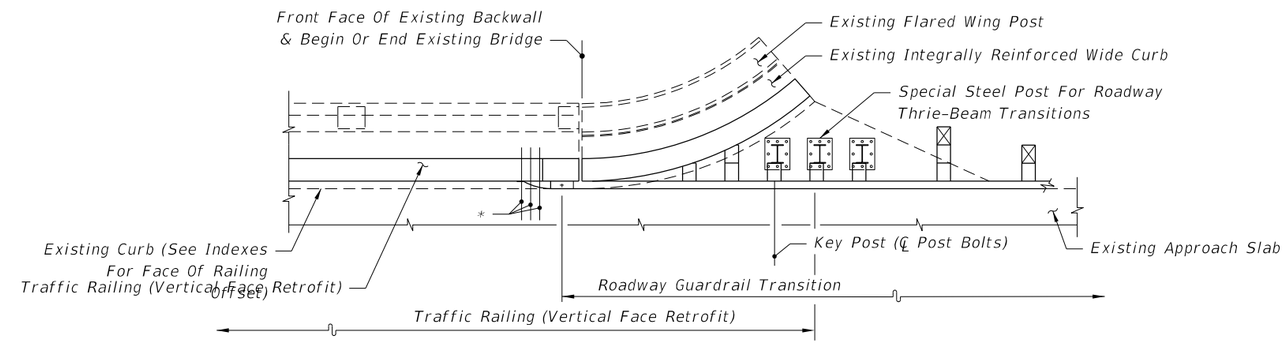

SEE INDEX 521-405 OR 521-482 - SCHEME 3

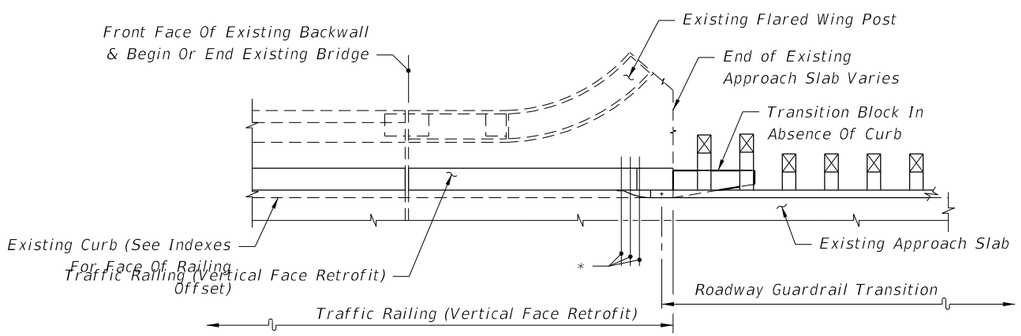

SEE INDEX 521-405 OR 521-482 - SCHEME 2

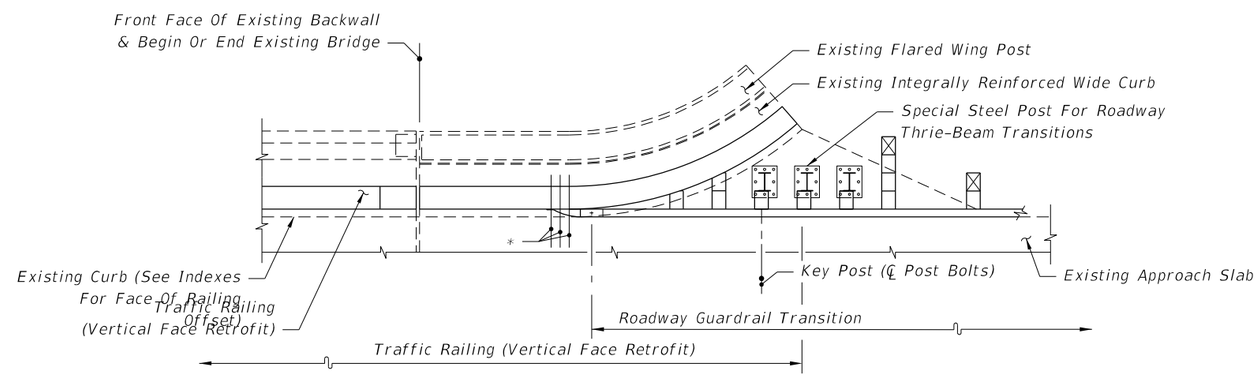

SEE INDEX 521-405 OR 521-482 - SCHEME 3

Note:
* 21" x 12" x 5/8" Thrie-Beam Terminal Connector Plate (Back-Up Plate), And 7/8"Ø x 12" Long HS Hex Bolts And Nuts (5 Reqd.) With 2¼" OD Plain Round Washers Under Heads And Nuts

PARTIAL PLAN VIEWS OF TRAFFIC RAILING (VERTICAL FACE RETROFIT)
(INDEX 521-482 SHOWN, INDEX 521-405 SIMILAR)

10/20/2022 8:53:41 AM

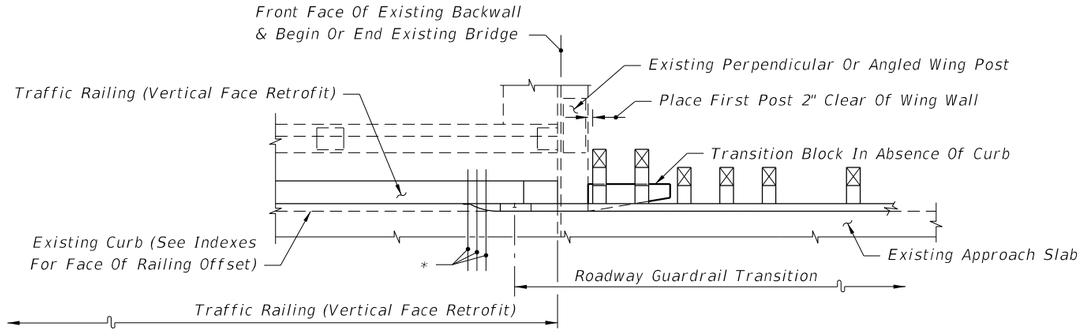

SEE INDEX 521-405 OR 521-482 - SCHEME 1

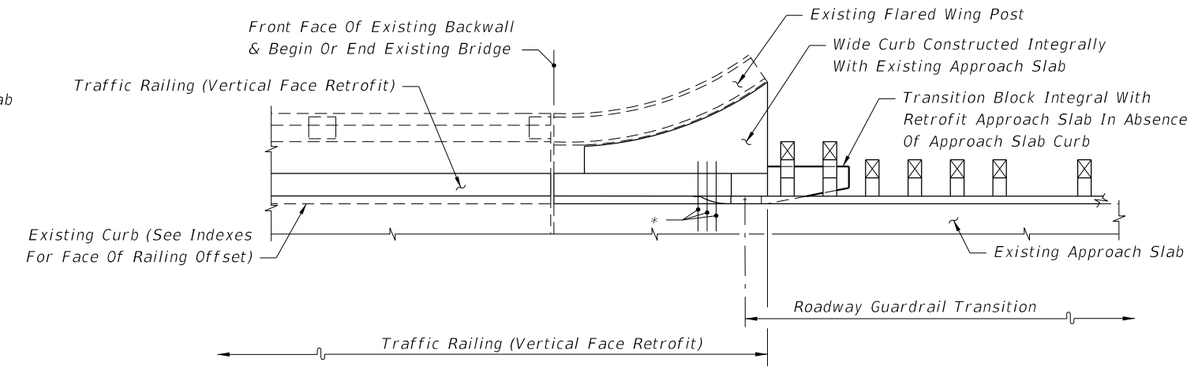

SEE INDEX 521-405 OR 521-482 - SCHEME 5

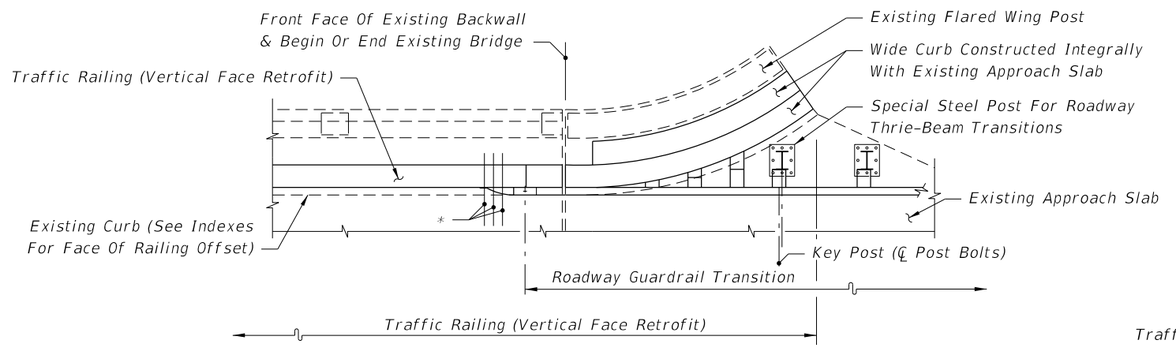

SEE INDEX 521-405 OR 521-482 - SCHEME 4

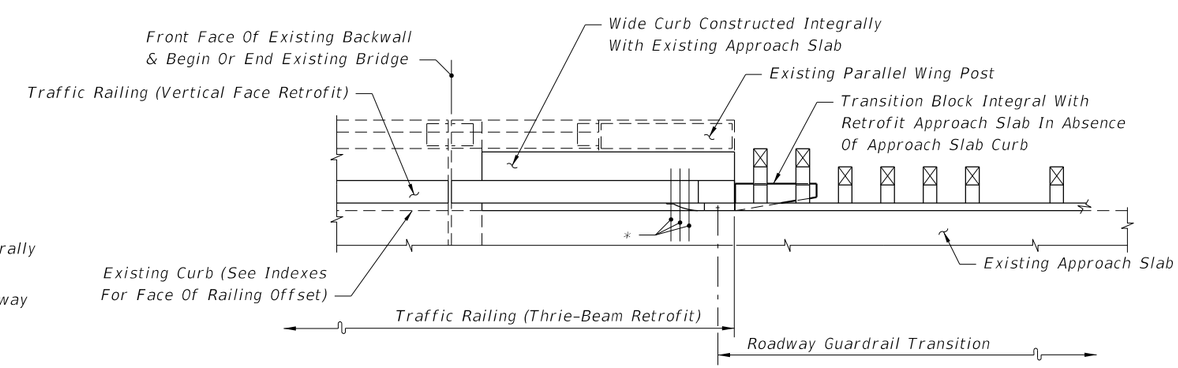

SEE INDEX 521-405 OR 521-482 - SCHEME 5

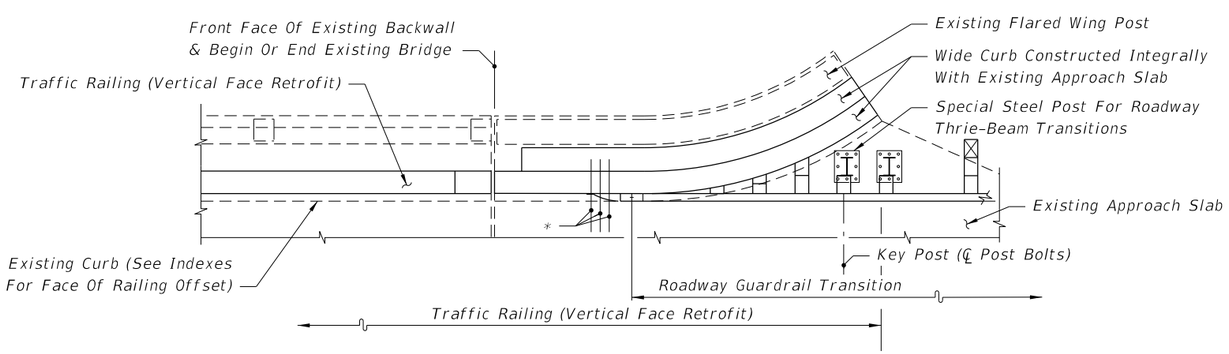

SEE INDEX 521-405 OR 521-482 - SCHEME 4

Note:
* 21" x 12" x 5/8" Thrie-Beam Terminal Connector Plate (Back-Up Plate), And 7/8"Ø x 12" Long HS Hex Bolts And Nuts (5 Reqd.) With 2¼" OD Plain Round Washers Under Heads And Nuts

PARTIAL PLAN VIEWS OF TRAFFIC RAILING (VERTICAL FACE RETROFIT)
(INDEX 521-482 SHOWN, INDEX 521-405 SIMILAR)

10/20/2022 8:53:42 AM

LAST REVISION	REVISION	DESCRIPTION:			INDEX	SHEET
11/01/19			FY 2023-24 STANDARD PLANS	GUARDRAIL TRANSITIONS AND CONNECTIONS FOR EXISTING BRIDGES	536-002	17 of 28

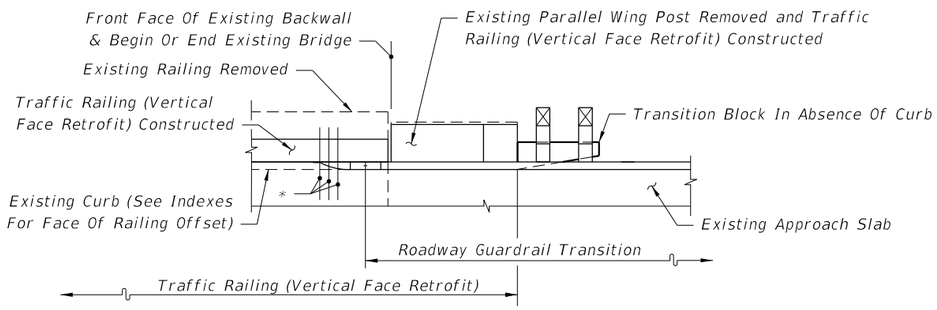

SEE INDEX 521-483 - SCHEME 2

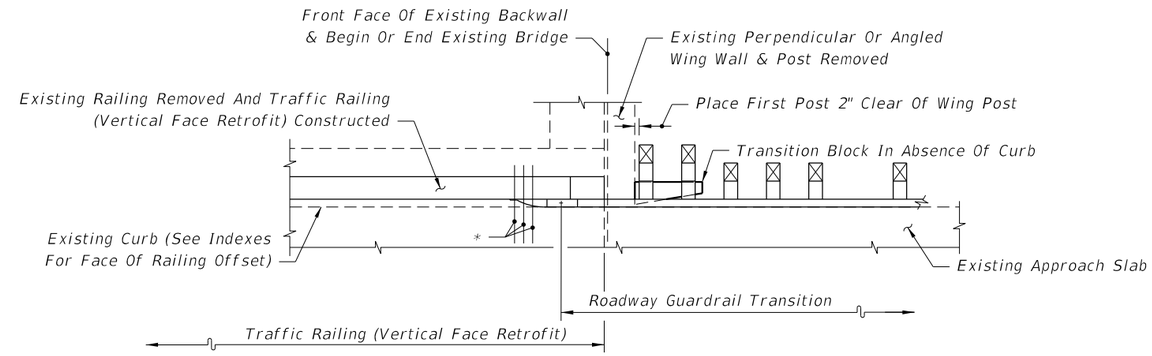

SEE INDEX 521-483 - SCHEME 1

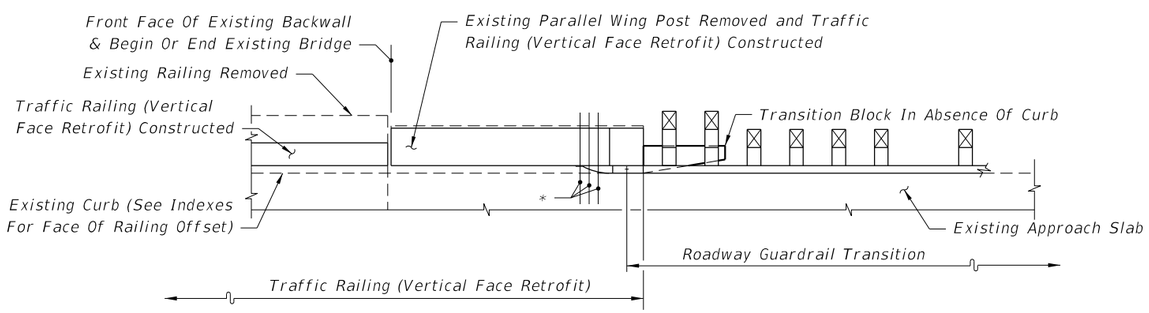

SEE INDEX 521-483 - SCHEME 2

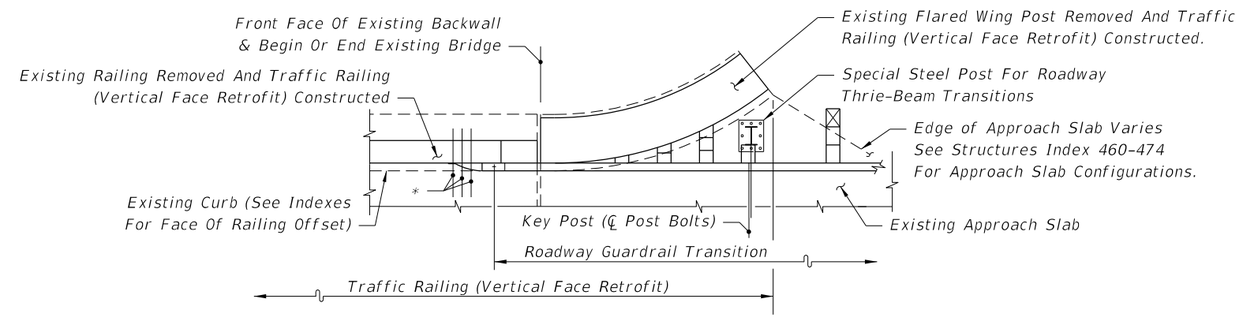

SEE INDEX 521-483 - SCHEME 3

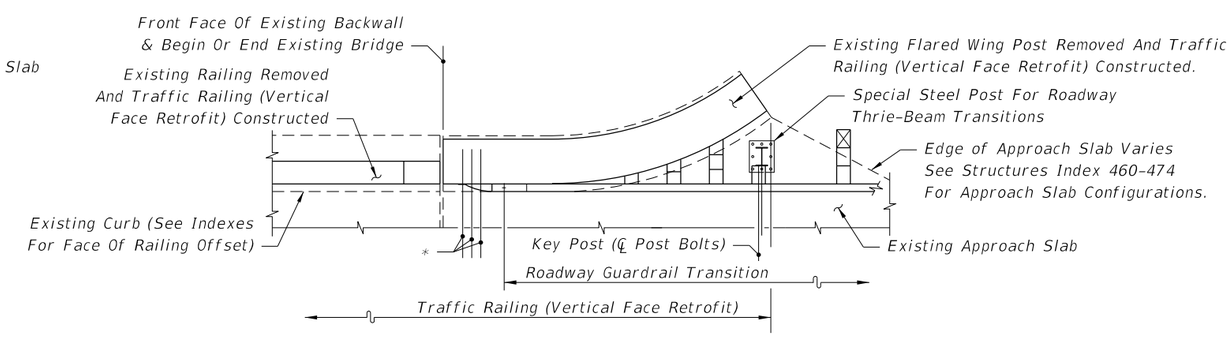

SEE INDEX 521-483 - SCHEME 3

Note:
* 21" x 12" x 5/8" Thrie-Beam Terminal Connector Plate (Back-Up Plate), And 7/8"Ø HS Hex Bolts And Nuts (12" Long For Scheme 1 And Length To Fit For Schemes 2 And 3) (5 Reqd.) With 2¼" OD Plain Round Washers Under Heads And Nuts

PARTIAL PLAN VIEWS OF TRAFFIC RAILING (VERTICAL FACE RETROFIT)

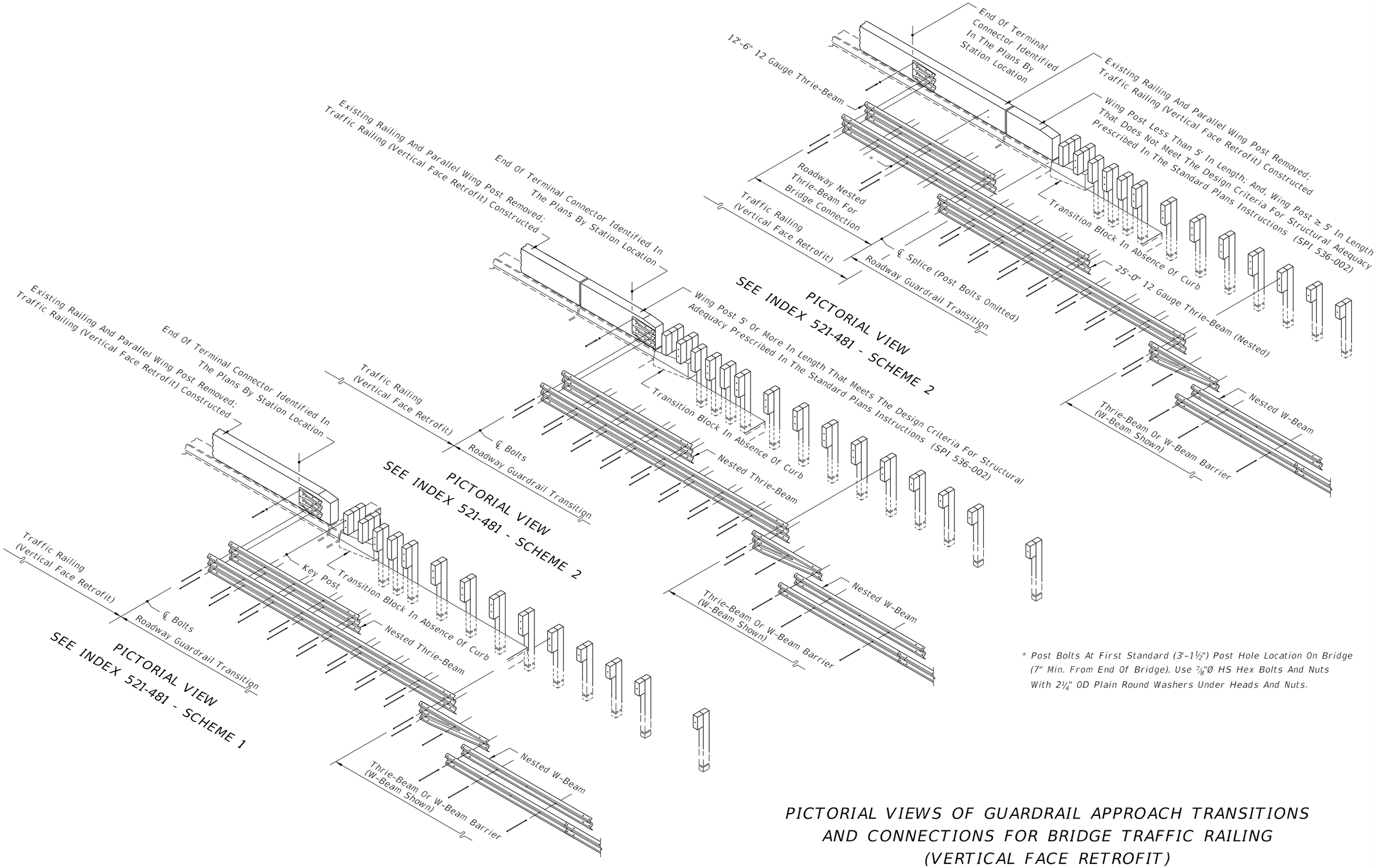

* Post Bolts At First Standard (3'-1½") Post Hole Location On Bridge (7" Min. From End Of Bridge). Use ⅞"Ø HS Hex Bolts And Nuts With 2¼" OD Plain Round Washers Under Heads And Nuts.

PICTORIAL VIEWS OF GUARDRAIL APPROACH TRANSITIONS AND CONNECTIONS FOR BRIDGE TRAFFIC RAILING (VERTICAL FACE RETROFIT)

10/20/2022 8:53:44 AM

LAST REVISION	REVISION	DESCRIPTION:	FDOT	FY 2023-24 STANDARD PLANS	GUARDRAIL TRANSITIONS AND CONNECTIONS FOR EXISTING BRIDGES	INDEX	SHEET
11/01/19						536-002	19 of 28

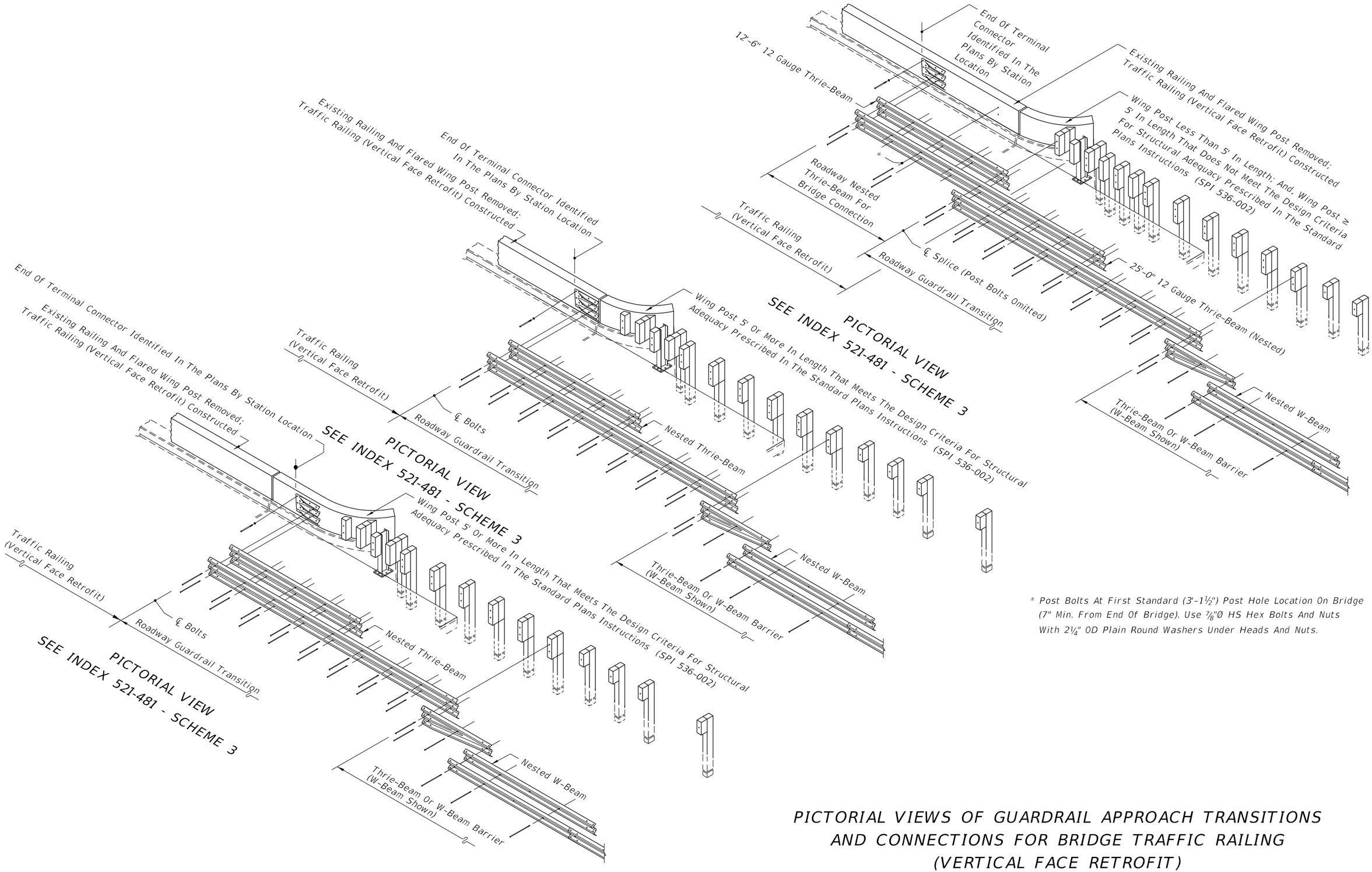

* Post Bolts At First Standard (3'-1½") Post Hole Location On Bridge (7" Min. From End Of Bridge). Use ⅞"Ø HS Hex Bolts And Nuts With 2¼" OD Plain Round Washers Under Heads And Nuts.

PICTORIAL VIEWS OF GUARDRAIL APPROACH TRANSITIONS AND CONNECTIONS FOR BRIDGE TRAFFIC RAILING (VERTICAL FACE RETROFIT)

10/20/2022 8:53:45 AM

LAST REVISION	REVISION	DESCRIPTION:			INDEX	SHEET
11/01/19			FY 2023-24 STANDARD PLANS	GUARDRAIL TRANSITIONS AND CONNECTIONS FOR EXISTING BRIDGES	536-002	20 of 28

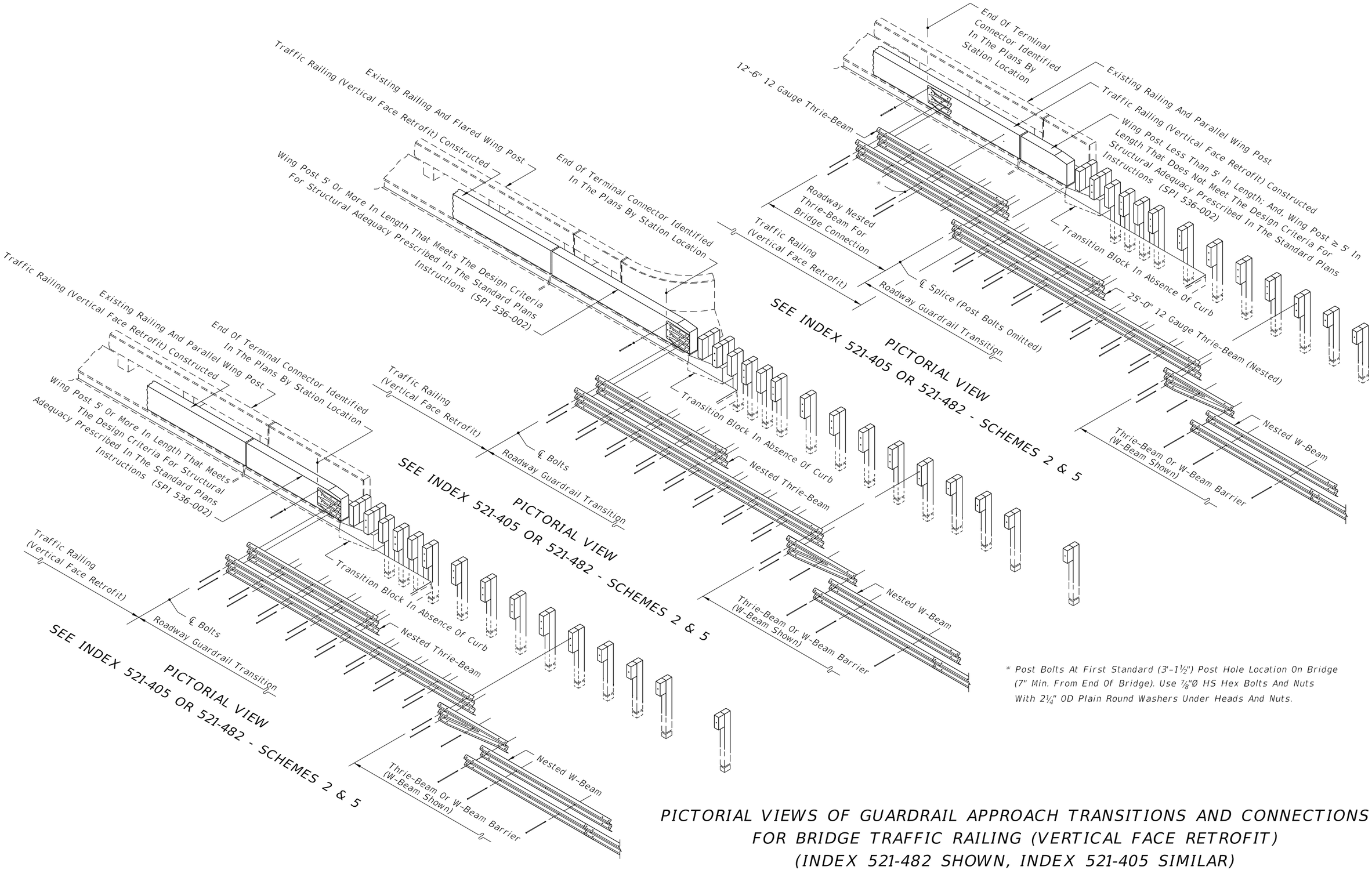

* Post Bolts At First Standard (3'-1½") Post Hole Location On Bridge (7" Min. From End Of Bridge). Use ⅞"Ø HS Hex Bolts And Nuts With 2¼" OD Plain Round Washers Under Heads And Nuts.

PICTORIAL VIEWS OF GUARDRAIL APPROACH TRANSITIONS AND CONNECTIONS FOR BRIDGE TRAFFIC RAILING (VERTICAL FACE RETROFIT) (INDEX 521-482 SHOWN, INDEX 521-405 SIMILAR)

10/20/2022 8:53:47 AM

LAST REVISION	REVISION	DESCRIPTION:				INDEX	SHEET
11/01/19			FDOT	FY 2023-24 STANDARD PLANS	GUARDRAIL TRANSITIONS AND CONNECTIONS FOR EXISTING BRIDGES	536-002	21 of 28

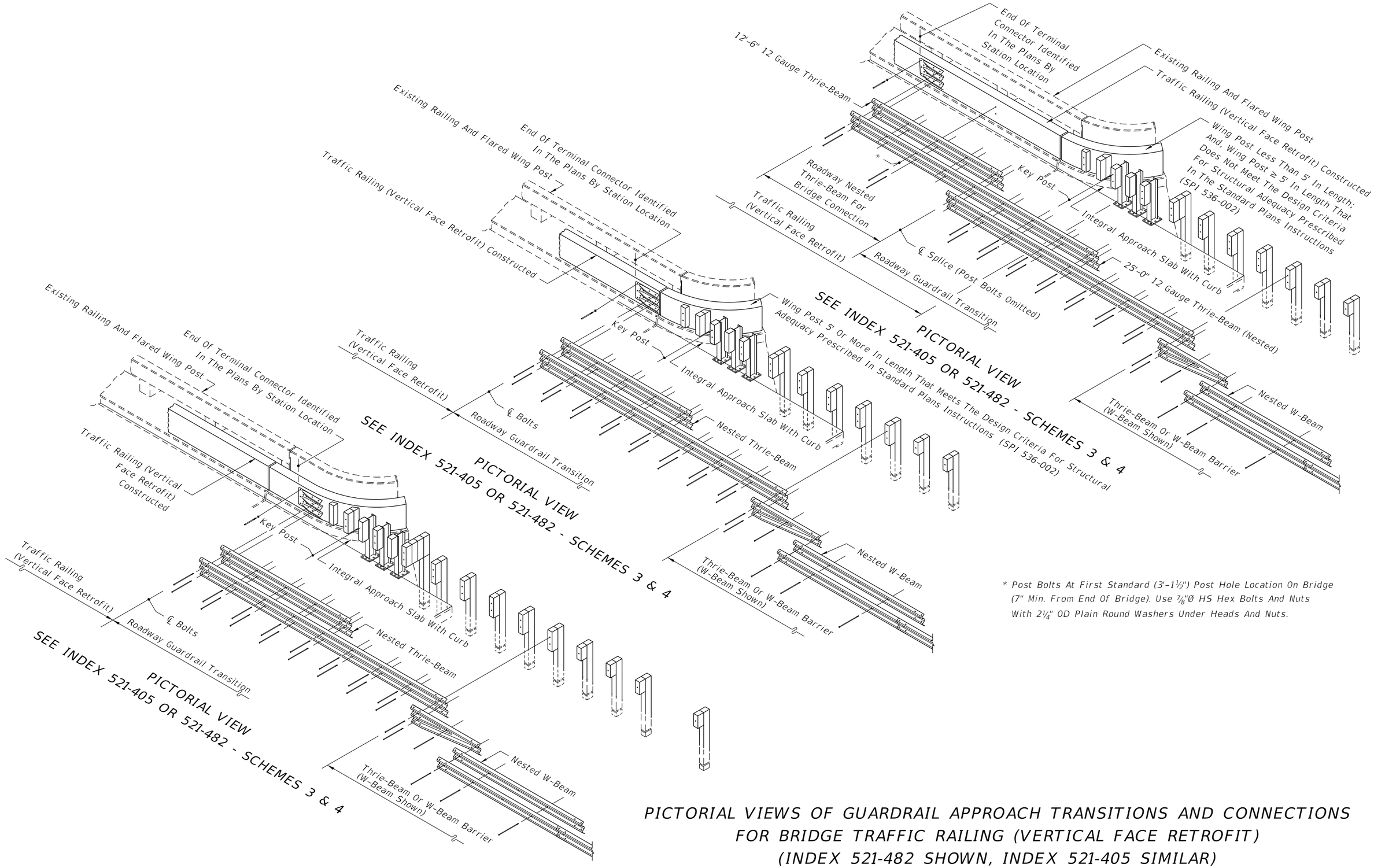

* Post Bolts At First Standard (3'-1½") Post Hole Location On Bridge (7" Min. From End Of Bridge). Use ⅞"Ø HS Hex Bolts And Nuts With 2¼" OD Plain Round Washers Under Heads And Nuts.

PICTORIAL VIEWS OF GUARDRAIL APPROACH TRANSITIONS AND CONNECTIONS FOR BRIDGE TRAFFIC RAILING (VERTICAL FACE RETROFIT) (INDEX 521-482 SHOWN, INDEX 521-405 SIMILAR)

10/20/2022 8:53:48 AM

LAST REVISION	REVISION	DESCRIPTION:				
11/01/19			FY 2023-24 STANDARD PLANS	GUARDRAIL TRANSITIONS AND CONNECTIONS FOR EXISTING BRIDGES	INDEX 536-002	SHEET 22 of 28

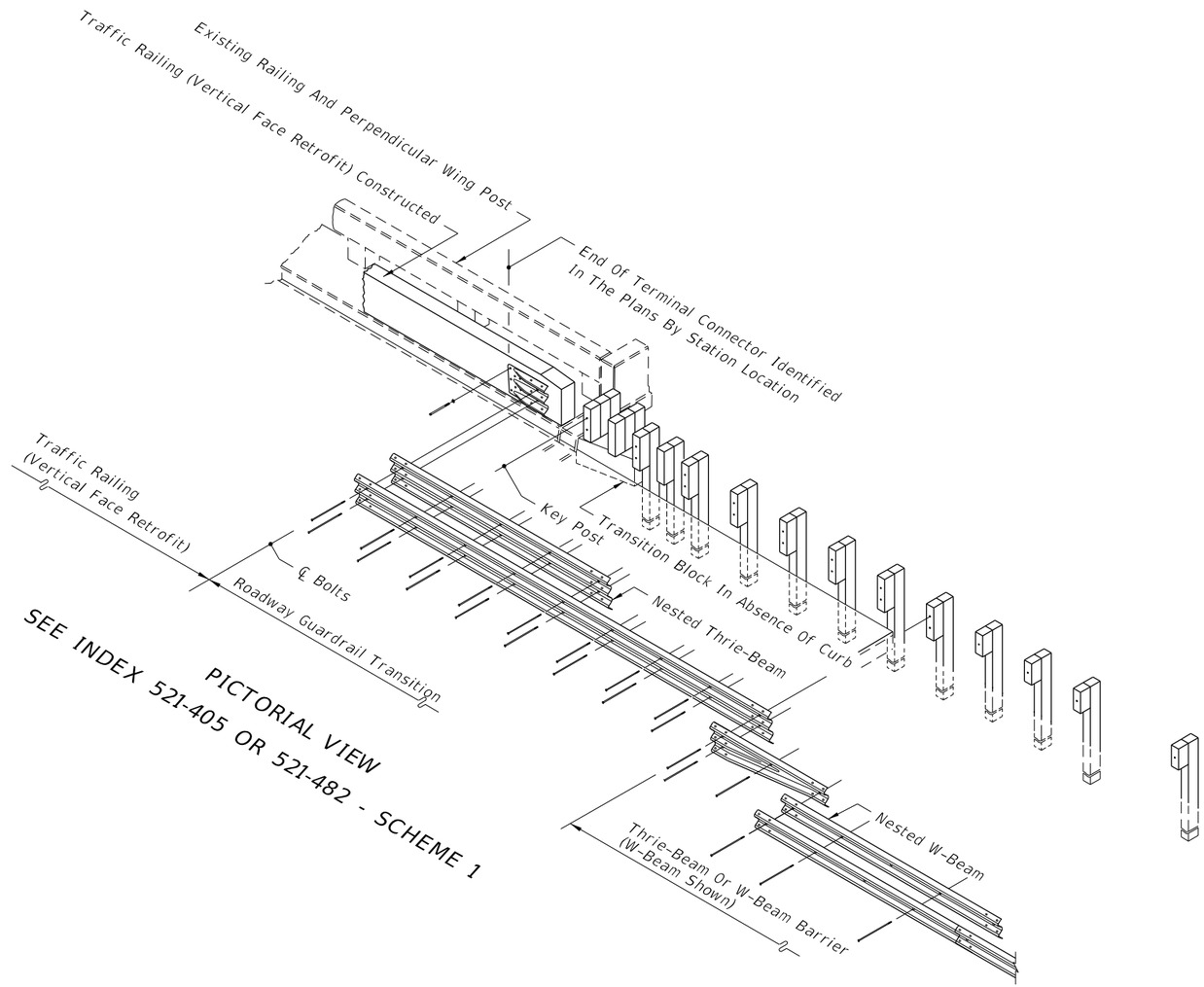

PICTORIAL VIEW

SEE INDEX 521-405 OR 521-482 - SCHEME 1

PICTORIAL VIEWS OF GUARDRAIL APPROACH TRANSITIONS AND CONNECTIONS FOR BRIDGE TRAFFIC RAILING (VERTICAL FACE RETROFIT) (INDEX 521-482 SHOWN, INDEX 521-405 SIMILAR)

10/20/2022 8:54:17 AM

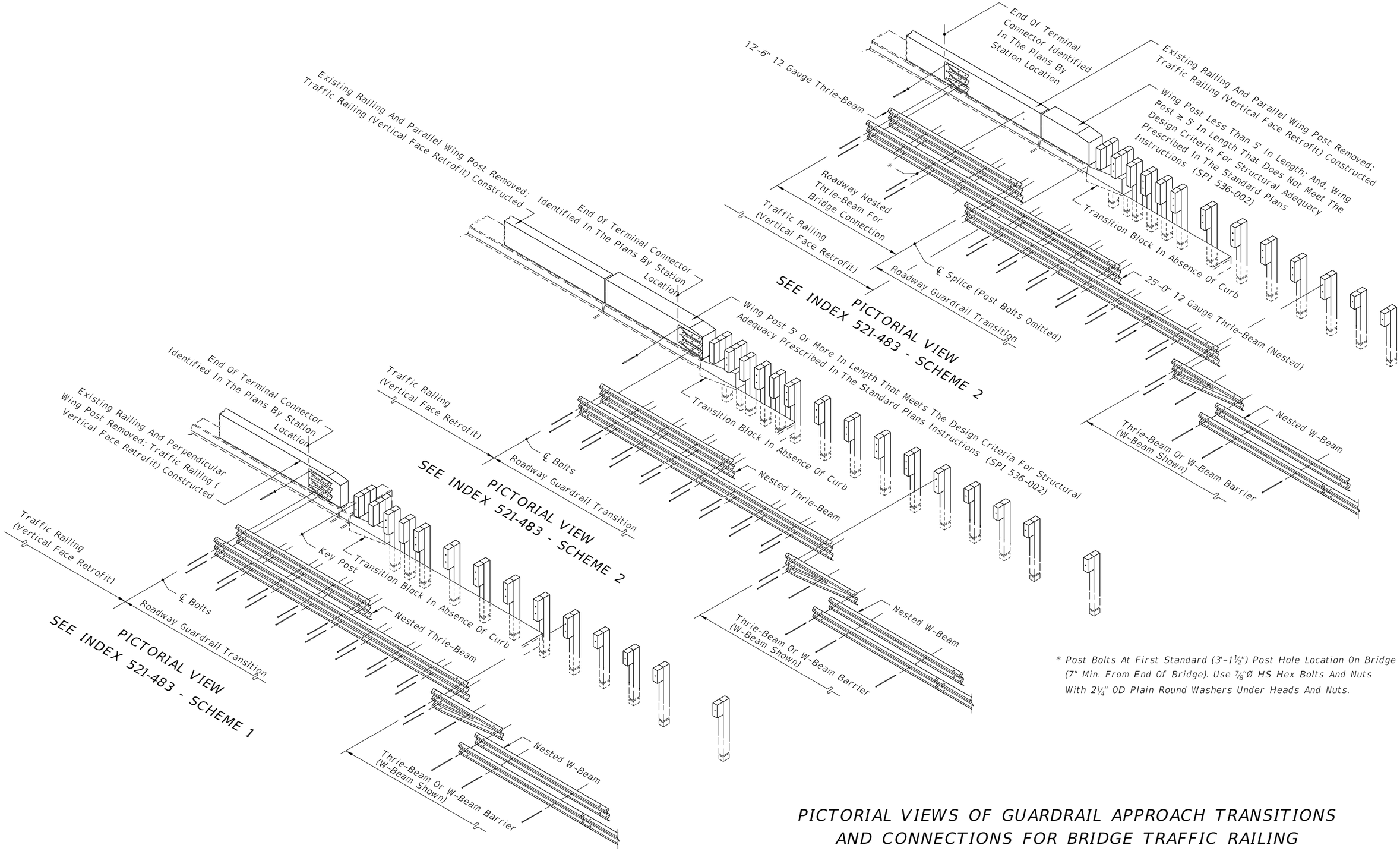

* Post Bolts At First Standard (3'-1½") Post Hole Location On Bridge (7" Min. From End Of Bridge). Use ⅞"Ø HS Hex Bolts And Nuts With 2¼" OD Plain Round Washers Under Heads And Nuts.

PICTORIAL VIEWS OF GUARDRAIL APPROACH TRANSITIONS AND CONNECTIONS FOR BRIDGE TRAFFIC RAILING (VERTICAL FACE RETROFIT)

10/20/2022 8:54:18 AM

LAST REVISION	REVISION	DESCRIPTION:				INDEX	SHEET
11/01/19			FDOT	FY 2023-24 STANDARD PLANS	GUARDRAIL TRANSITIONS AND CONNECTIONS FOR EXISTING BRIDGES	536-002	24 of 28

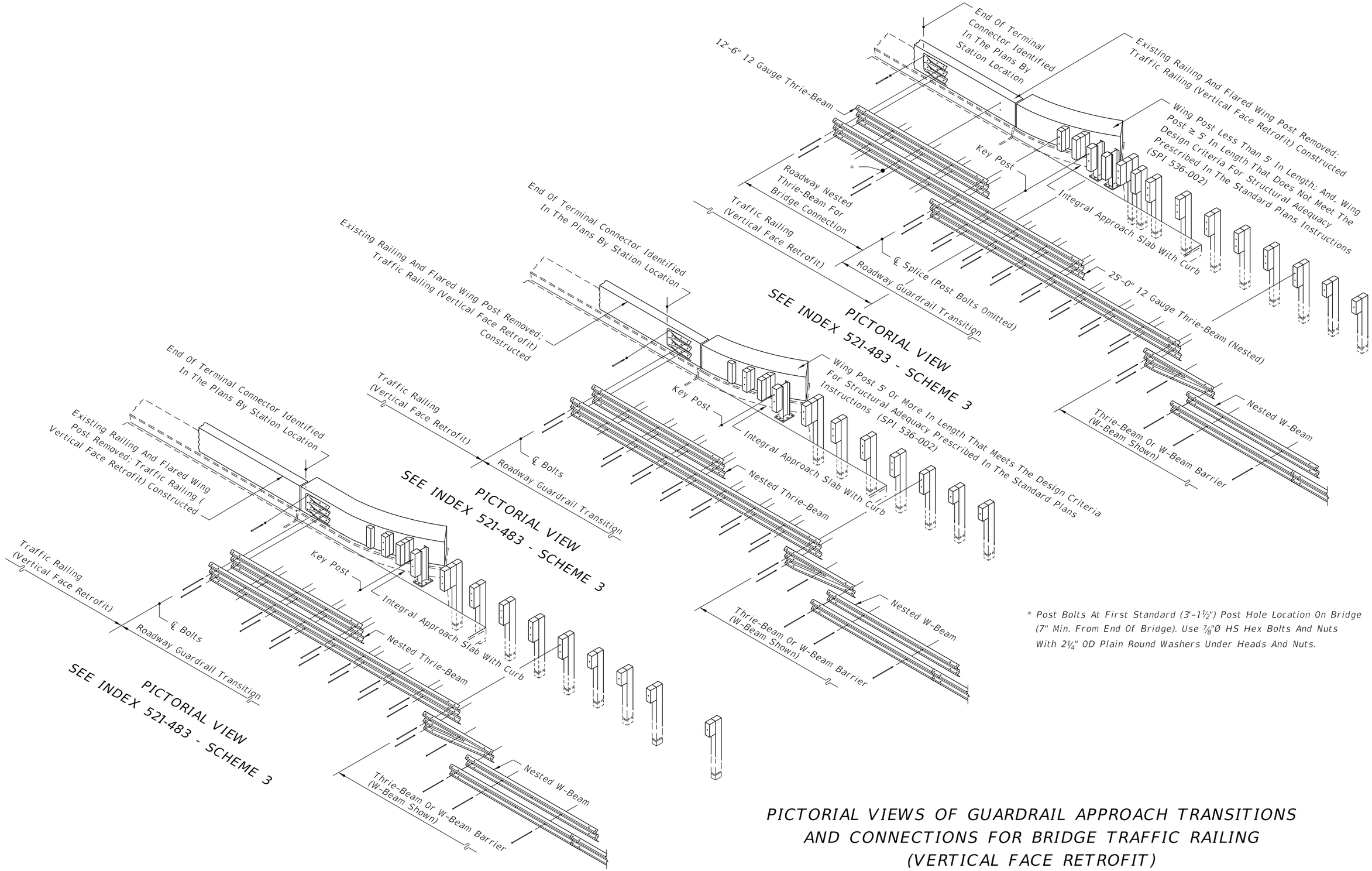

* Post Bolts At First Standard (3'-1½") Post Hole Location On Bridge (7" Min. From End Of Bridge). Use ⅞"Ø HS Hex Bolts And Nuts With 2¼" OD Plain Round Washers Under Heads And Nuts.

PICTORIAL VIEWS OF GUARDRAIL APPROACH TRANSITIONS AND CONNECTIONS FOR BRIDGE TRAFFIC RAILING (VERTICAL FACE RETROFIT)

10/20/2022 8:54:20 AM

LAST REVISION	REVISION	DESCRIPTION:			INDEX	SHEET
11/01/19			FY 2023-24 STANDARD PLANS	GUARDRAIL TRANSITIONS AND CONNECTIONS FOR EXISTING BRIDGES	536-002	25 of 28

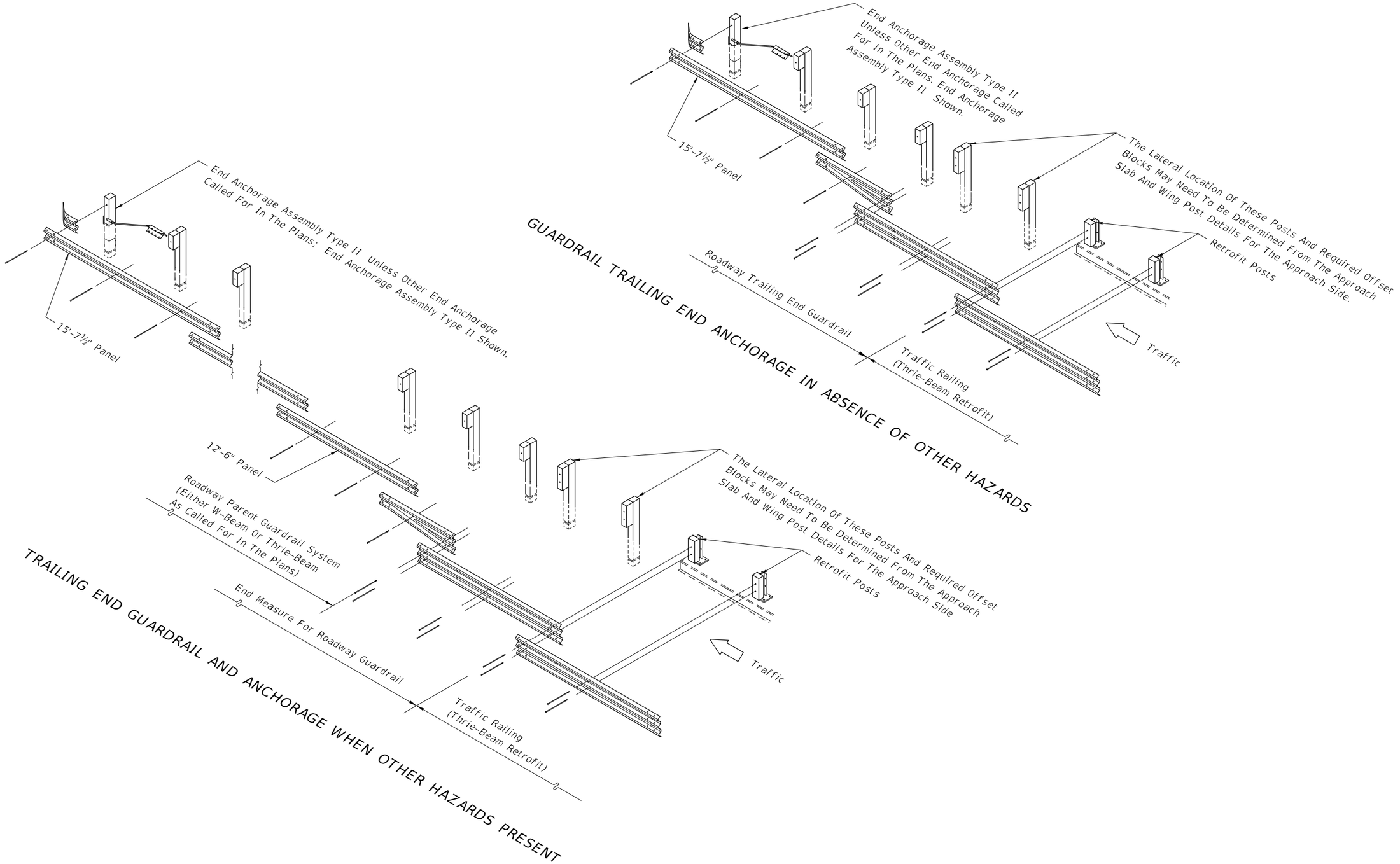

TRAILING END GUARDRAIL AND ANCHORAGE FOR BRIDGE TRAFFIC RAILING (THRIE BEAM RETROFITS)

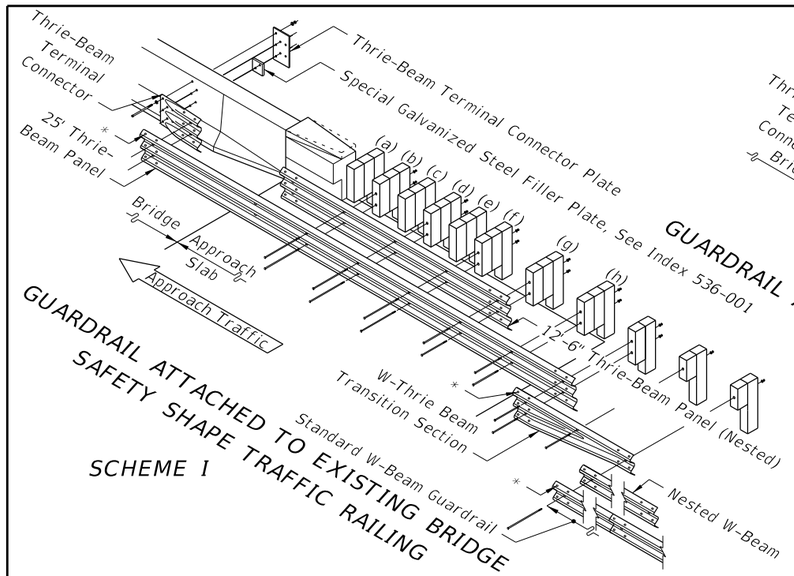

GUARDRAIL ATTACHED TO EXISTING BRIDGE SAFETY SHAPE TRAFFIC RAILING

SCHEME I

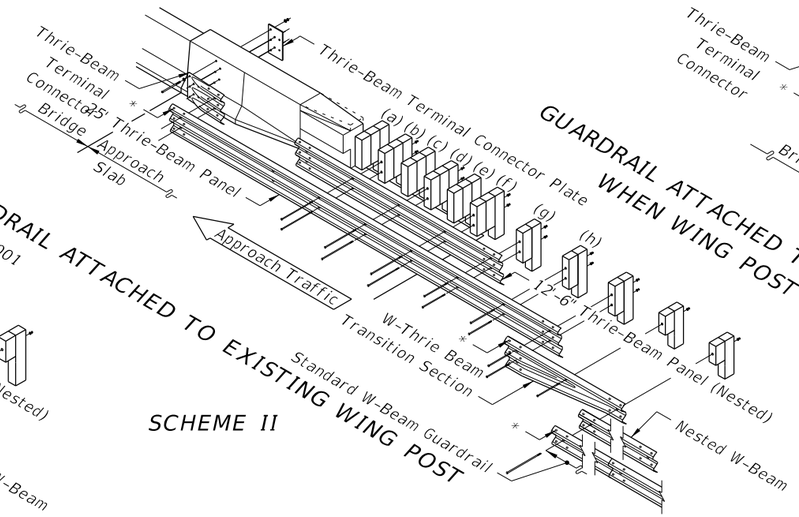

GUARDRAIL ATTACHED TO EXISTING WING POST

SCHEME II

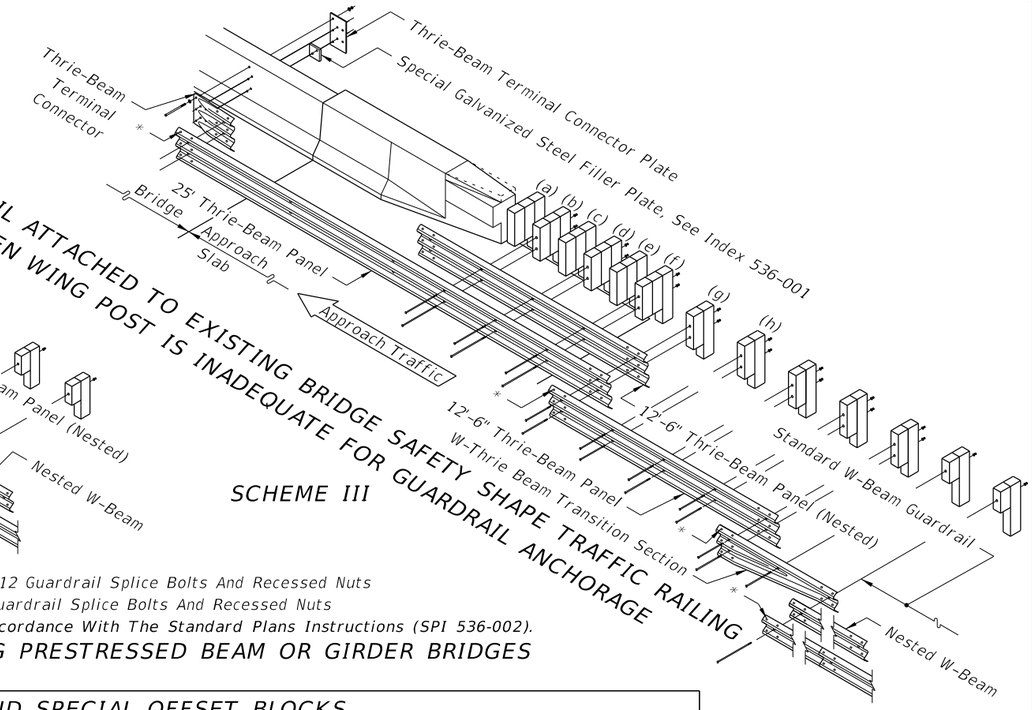

GUARDRAIL ATTACHED TO EXISTING BRIDGE SAFETY SHAPE TRAFFIC RAILING WHEN WING POST IS INADEQUATE FOR GUARDRAIL ANCHORAGE

SCHEME III

Use Of Scheme I Shall Be Determined
In Accordance With The Standard Plans Instructions (SPI 536-002).

GUARDRAIL TRANSITION TO EXISTING FLAT SLAB BRIDGES

* Splice Locations: Thrie-Beam - 12 Guardrail Splice Bolts And Recessed Nuts
W-Beam - 8 Guardrail Splice Bolts And Recessed Nuts

Use Of Schemes II And III Shall Be Determined In Accordance With The Standard Plans Instructions (SPI 536-002).

GUARDRAIL TRANSITIONS TO EXISTING PRESTRESSED BEAM OR GIRDER BRIDGES

APPROACH POSTS AND SPECIAL OFFSET BLOCKS

Block assemblies for special offsets can be made up of one special block plus one standard size block or of three standard size blocks field dressed to approximately equal size, with the pieces secured for relative position by 16d galvanized nails, see '16d NAIL FOR PREVENTION OF OFFSET BLOCK ROTATION' - Index 536-001. The nested rails shall not be bolted to the blocks and posts at posts (a), (c) and (e). The details shown are for approach slabs with internal edge dike extending beyond parapet type traffic railing termini.

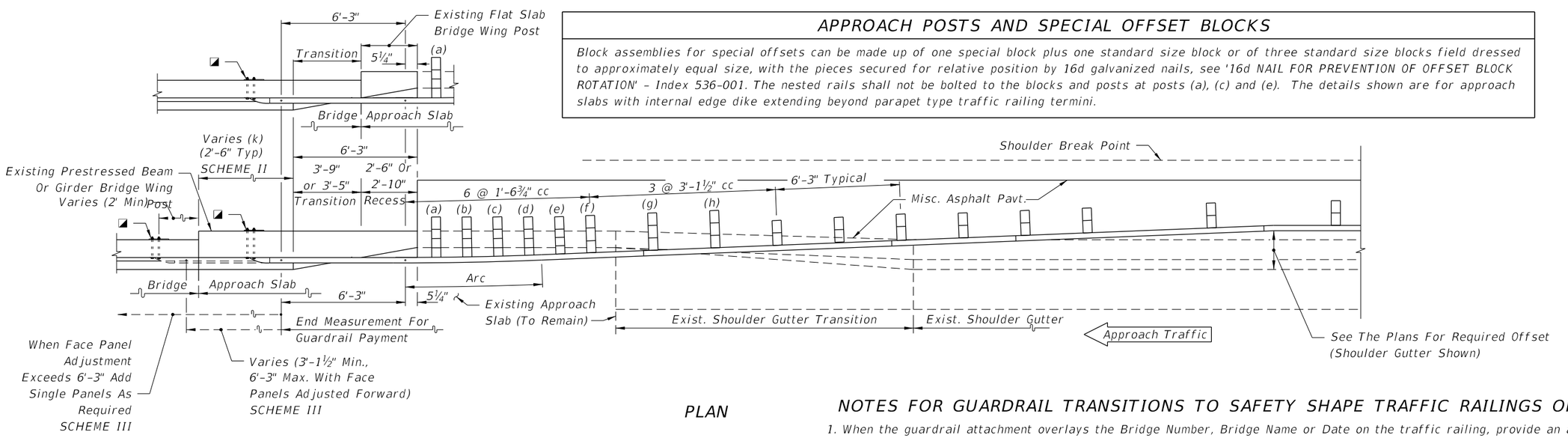

PLAN

◪ 21"x12"x⅝" Thrie-Beam Terminal Connector Plate (Back-Up Plate), And ⅞"Ø x 18" Long [15" Long With 3½" Min. Thread Length For Bridge Safety Shape Railing] HS Hex Bolts And Nuts (5 Reqd.) With 2¼" OD Plain Round Washers Under Heads And Nuts. [When Attaching Guardrail To Existing Wing Posts Or Bridge Rails, Care Should Be Exercised To Avoid Damaging Conduits And Their Utilities That May Be Routed Through Wing Posts Or Bridge Rails. When Conduits And Their Utilities Are Encountered, At Least Five ⅞" HS Hex Bolts Shall Be Installed In Any Of The Seven Holes Provided In The Thrie-Beam Terminal Connector.]

NOTES FOR GUARDRAIL TRANSITIONS TO SAFETY SHAPE TRAFFIC RAILINGS ON EXISTING BRIDGES

1. When the guardrail attachment overlays the Bridge Number, Bridge Name or Date on the traffic railing, provide an aluminum sign panel with the obscured information. Attach the sign panel to the face of the traffic railing adjacent to the Thrie-Beam Terminal Connector with ¼"Ø x 1" long concrete screws or expansion anchors at each corner, as approved by the Engineer. The sign panel shall be a minimum 1/16" thick and meet the requirements of Specification 700 with a white background and 3" tall black letters and sized appropriately to contain the information required. The cost of the sign panel shall be included in the cost of the Guardrail Bridge Anchorage Assembly.

2. When retrofitting thrie-beam guardrail to existing wing posts or existing bridge safety shape traffic railing, attachment construction to be paid for under the contract unit price for Guardrail Bridge Anchorage Assembly, EA., and shall be full compensation for bolt hole construction, terminal connector, terminal connector plate(s) and bolts, nuts and washers.

GUARDRAIL APPROACH TRANSITION CONNECTIONS FOR EXISTING FLAT SLAB, PRESTRESSED BEAM AND GIRDER BRIDGES WITH SAFETY SHAPE TRAFFIC RAILING EXTENDING LESS THAN FULL APPROACH SLAB LENGTH

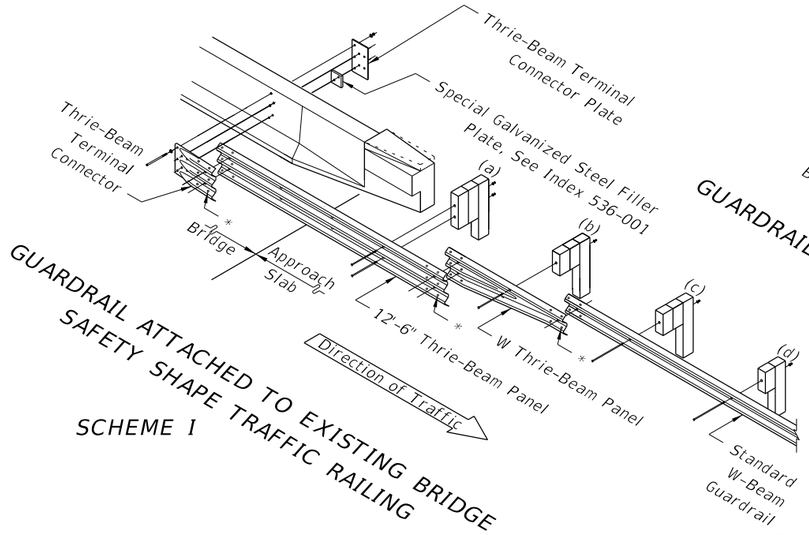

GUARDRAIL ATTACHED TO EXISTING BRIDGE SAFETY SHAPE TRAFFIC RAILING

SCHEME I

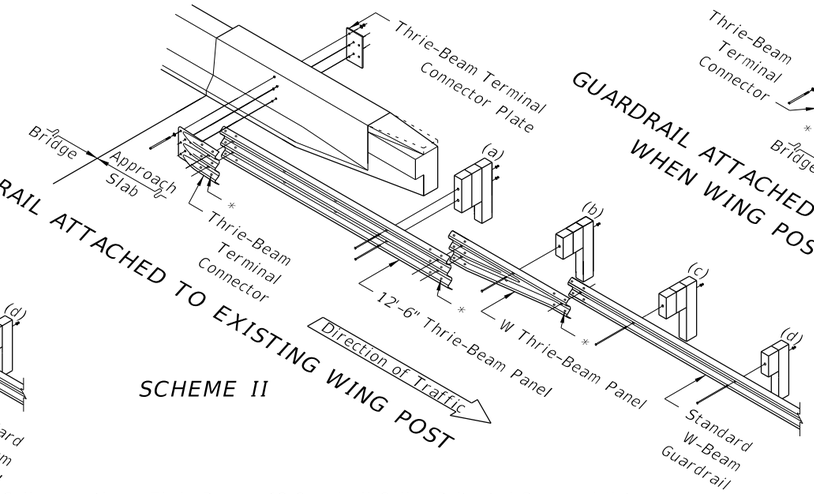

GUARDRAIL ATTACHED TO EXISTING WING POST

SCHEME II

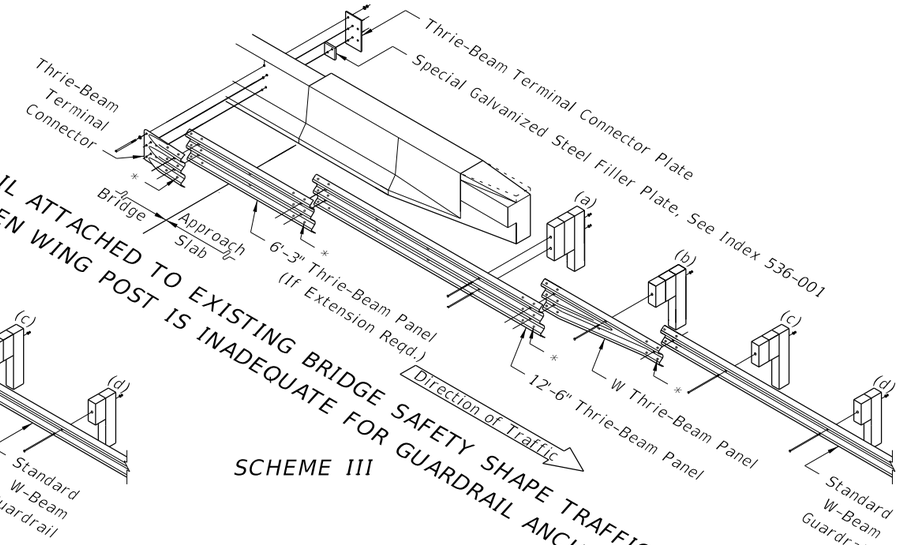

GUARDRAIL ATTACHED TO EXISTING BRIDGE SAFETY SHAPE TRAFFIC RAILING WHEN WING POST IS INADEQUATE FOR GUARDRAIL ANCHORAGE

SCHEME III

* Splice Locations: Thrie-Beam - 12 Guardrail Splice Bolts And Recessed Nuts
W-Beam - 8 Guardrail Splice Bolts And Recessed Nuts

Use Of Scheme I Shall Be Determined
In Accordance With The Standard Plans Instructions (SPI 536-002).

GUARDRAIL TRANSITION TO EXISTING FLAT SLAB BRIDGES

Use Of Schemes II And III Shall Be Determined In Accordance With The Standard Plans Instructions (SPI 536-002).

GUARDRAIL TRANSITIONS TO EXISTING PRESTRESSED BEAM OR GIRDER BRIDGES

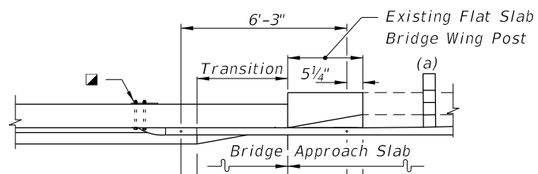

TRAILING END POSTS AND SPECIAL OFFSET BLOCKS

Block assemblies for special offsets can be made up of one special block plus one standard size block or of three standard size blocks field dressed to approximately equal size, with the pieces secured for relative position by 16d galvanized nails, see '16d NAIL FOR PREVENTION OF OFFSET BLOCK ROTATION' - Index 536-001. The nested rails shall not be bolted to the blocks and posts at posts (a), (c) and (e). The details shown are for approach slabs with internal edge dike extending beyond parapet type traffic railing termini.

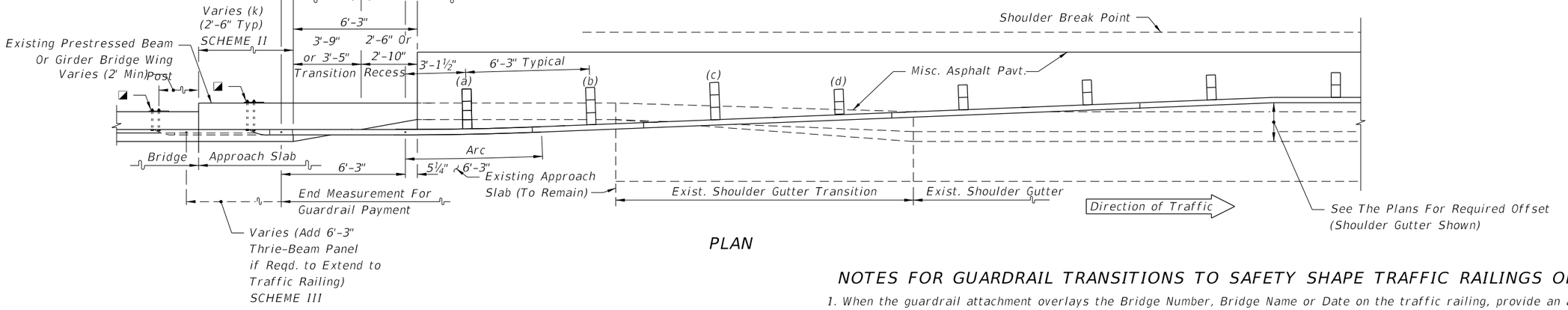

PLAN

◪ 21"x12"x⅝" Thrie-Beam Terminal Connector Plate (Back-Up Plate), And ⅞"Ø x 18" Long [15" Long With 3½" Min. Thread Length For Bridge Safety Shape Railing] HS Hex Bolts And Nuts (5 Reqd.) With 2¼" OD Plain Round Washers Under Heads And Nuts. [When Attaching Guardrail To Existing Wing Posts Or Bridge Rails, Care Should Be Exercised To Avoid Damaging Conduits And Their Utilities That May Be Routed Through Wing Posts Or Bridge Rails. When Conduits And Their Utilities Are Encountered, At Least Five ⅞" HS Hex Bolts Shall Be Installed In Any Of The Seven Holes Provided In The Thrie-Beam Terminal Connector.]

NOTES FOR GUARDRAIL TRANSITIONS TO SAFETY SHAPE TRAFFIC RAILINGS ON EXISTING BRIDGES

1. When the guardrail attachment overlays the Bridge Number, Bridge Name or Date on the traffic railing, provide an aluminum sign panel with the obscured information. Attach the sign panel to the face of the traffic railing adjacent to the Thrie-Beam Terminal Connector with ¼"Ø x 1" long concrete screws or expansion anchors at each corner, as approved by the Engineer. The sign panel shall be a minimum 1/16" thick and meet the requirements of Specification 700 with a white background and 3" tall black letters and sized appropriately to contain the information required. The cost of the sign panel shall be included in the cost of the Guardrail Bridge Anchorage Assembly.

2. When retrofitting thrie-beam guardrail to existing wing posts or existing bridge safety shape traffic railing, attachment construction to be paid for under the contract unit price for Guardrail Bridge Anchorage Assembly, EA., and shall be full compensation for bolt hole construction, terminal connector, terminal connector plate(s) and bolts, nuts and washers.

GUARDRAIL TRAILING END TRANSITION CONNECTIONS FOR EXISTING FLAT SLAB, PRESTRESSED BEAM AND GIRDER BRIDGES WITH SAFETY SHAPE TRAFFIC RAILING EXTENDING LESS THAN FULL APPROACH SLAB LENGTH

GENERAL NOTES:

1. GENERAL: Work this Index in accordance with Specification 544 and the "Summary of Permanent Crash Cushions" table in the Plans. Where applicable, use Guardrail components and panel lap splices in accordance with Index 536-001.

2. TRANSITION PANEL: Where crash cushions are placed between two-way traffic or adjacent to two-way two-lane traffic, place a Transition Panel from the Concrete Barrier to the Crash Cushion on the downstream side of the barrier end (as shown). Follow the requirements of the APL drawing.

3. MANUFACTURER'S TRANSITION: Construct the proprietary guardrail transition only if shown in the applicable APL drawing. See Note 4 below.

4. STANDARD GUARDRAIL TRANSITION: If the APL drawing does not provide a guardrail transition to w-beam guardrail, construct the Standard Guardrail Transition segment from thrie-beam to w-beam as shown per Sheet 2. This 21'-10½" segment must remain parallel to the roadway.

   If the APL drawing does provide a guardrail transition to w-beam guardrail, replace the Standard Guardrail Transition segment with a w-beam guardrail segment at 6'-3" post spacing, except that Post (10) will remain where shown herein if it is located at a guardrail begin or end taper station callout per the Plans. This 21'-10½" segment must also remain parallel to the roadway.

5. LENGTH OF END TREATMENT: For Crash Cushions, the Length of End Treatment includes all proprietary elements of the design as shown in the APL drawing, including the manufacturer's transition of guardrail if applicable.

   The actual Length of End Treatment varies per Crash Cushion type, but an estimated Length of End Treatment is generally shown in the Plans to provide sufficient space for the Contractor's option of differing Crash Cushion types.

6. LENGTH RESTRICTION: In the "Summary of Permanent Crash Cushions" table, if a value is provided in the Length Restriction column, then select a Crash Cushion from the APL which has a Length of End Treatment less than or equal to the value shown. If the table instead shows not applicable (N/A), then Crash Cushion selection is unrestricted regarding length.

7. CRASH CUSHION STATION: The Crash Cushion Station point shown herein corresponds to the station provided in the "Summary of Permanent Crash Cushions" table in the Plans.

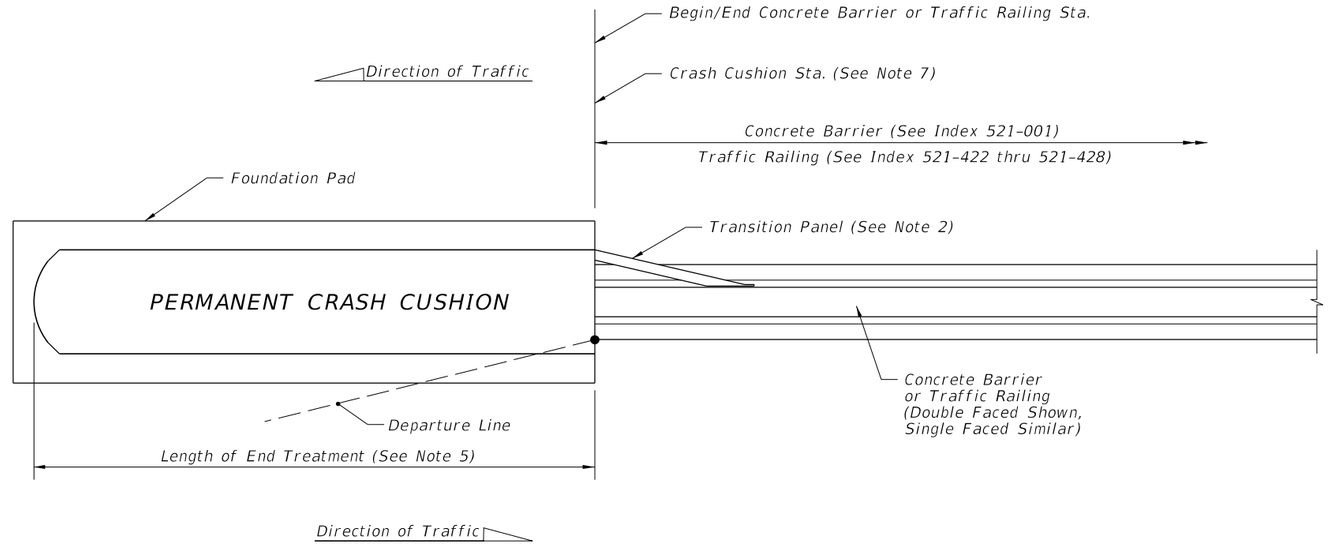

CONCRETE BARRIER APPLICATION

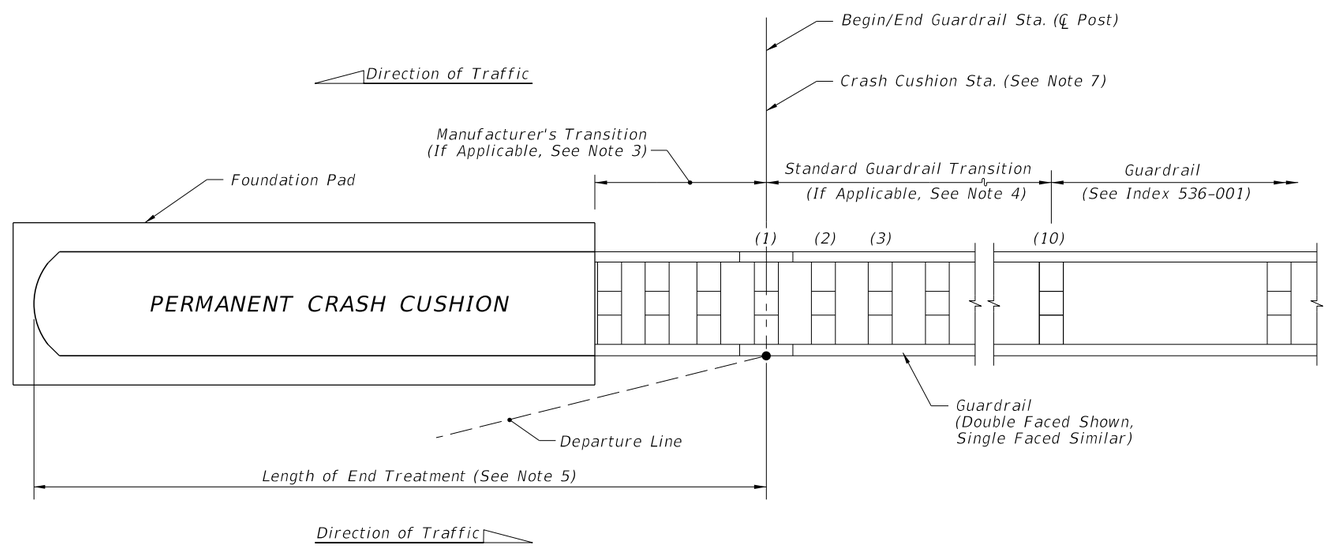

GUARDRAIL APPLICATION

PERMANENT CRASH CUSHION APPLICATIONS

10/20/2022 8:54:24 AM

LAST REVISION	REVISION	DESCRIPTION:	FY 2023-24 STANDARD PLANS	CRASH CUSHION DETAILS	INDEX	SHEET
11/01/19					544-001	1 of 3

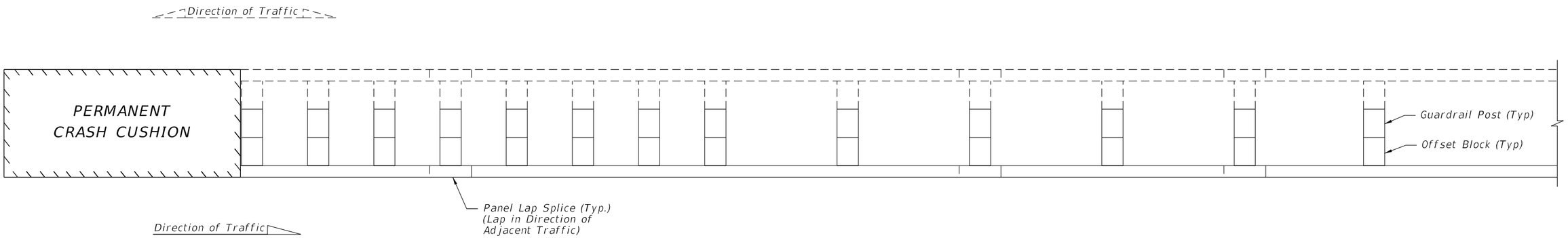

PLAN VIEW

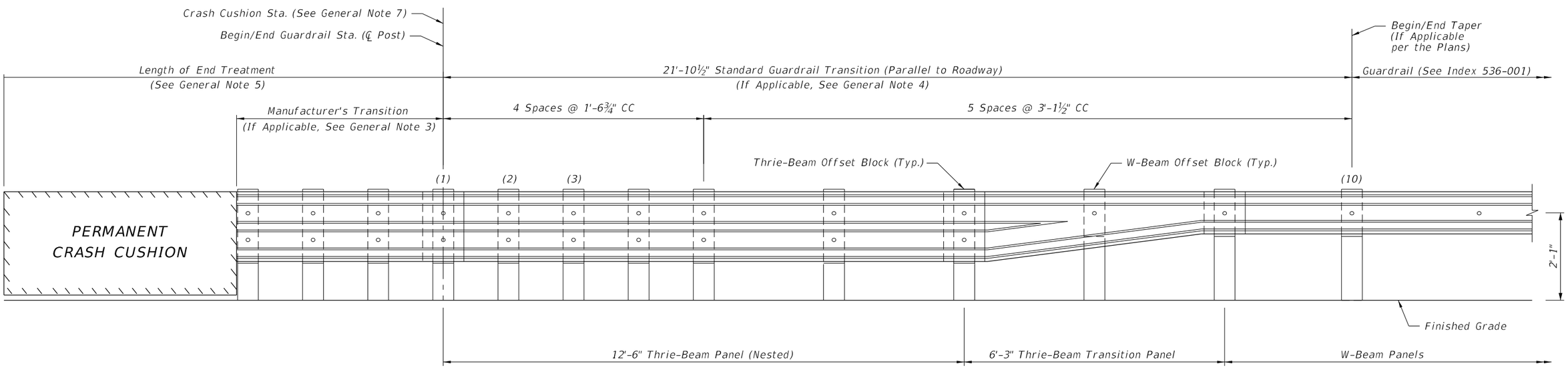

ELEVATION VIEW

NOTE:
Work this Sheet with the details and General Notes on Sheet 1.

STANDARD GUARDRAIL TRANSITION

LAST REVISION	REVISION	DESCRIPTION:	FY 2023-24 STANDARD PLANS	CRASH CUSHION DETAILS	INDEX	SHEET
11/01/19					544-001	2 of 3

10/20/2022 8:54:24 AM

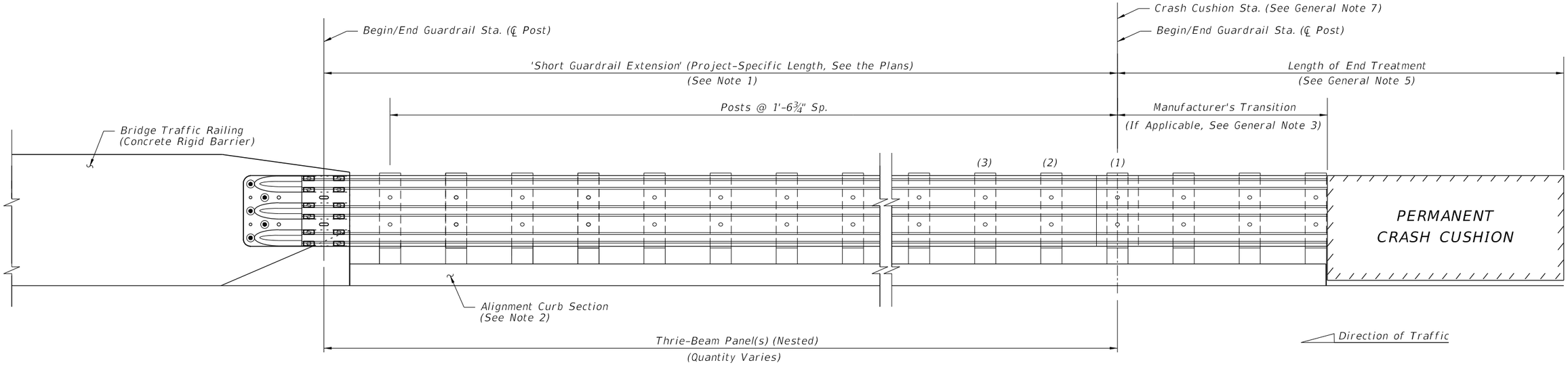

ELEVATION - CONNECTION TO CONCRETE TRAFFIC RAILING (See Note 2)

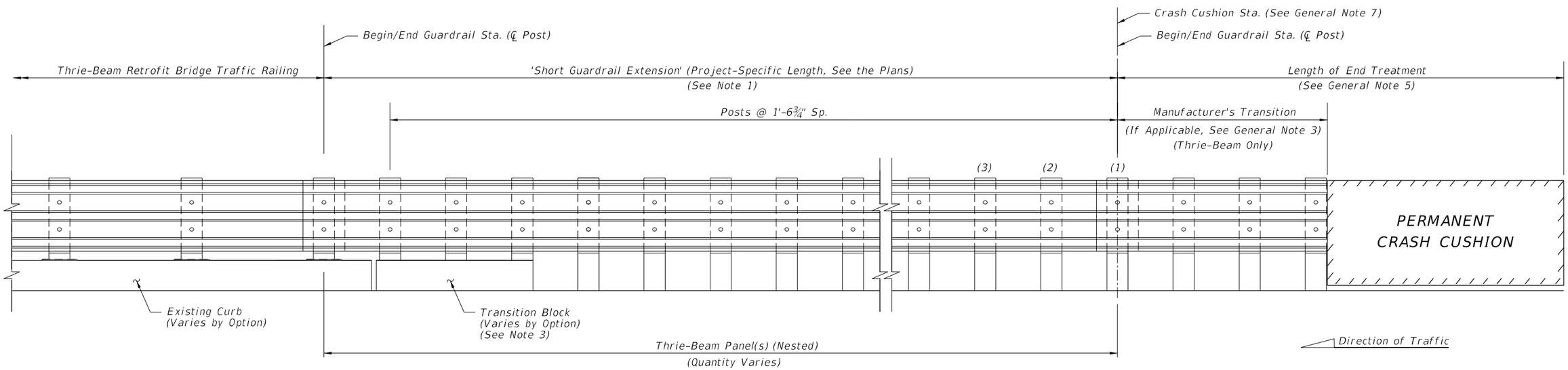

ELEVATION - CONNECTION TO THRIE-BEAM RETROFIT (See Note 3)

NOTES:

1. GENERAL: Work this Sheet with the details and General Notes on Sheet 1.

   Install short guardrail extension only where called for in the plans, using the project-specific length specified. Short guardrail extensions are typically used where adding length to a barrier system is warranted, but a full Approach Transition Connection to Rigid Barrier will not fit.

2. CONNECTION TO CONCRETE TRAFFIC RAILING: See Index 536-001 for connection details to rigid barrier, including the Thrie-Beam Terminal Connector and Alignment Curb details. Install the Alignment Curb section with no curb transition, and extend the curb to the crash cushion as shown. The crash cushion must laterally extend beyond the above-ground portion of the alignment curb to shield its end face from approaching traffic.

3. CONNECTION TO THRIE-BEAM RETROFIT: Provide Thrie-Beam Retrofit guardrail connection splice, curb, and Transition Block per Index 536-002 and the applicable Index 460-470 series.

ADDITIONAL BRIDGE CONNECTION OPTIONS SHORT GUARDRAIL EXTENSIONS

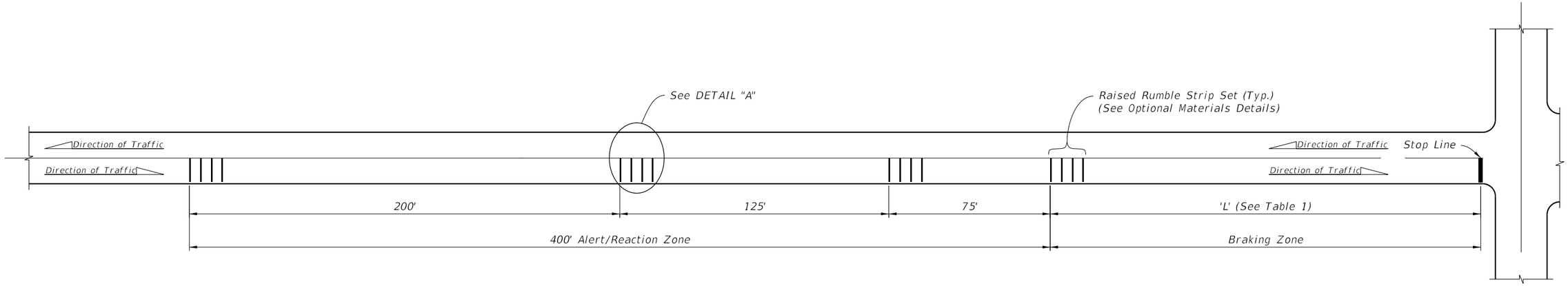

PLAN

SPACING OF RAISED RUMBLE STRIP SETS AT INTERSECTIONS

(Preformed Thermoplastic Set Shown, Others Similar)

TABLE 1 - BRAKING ZONE	
Posted Speed (mph)	'L' (Feet)
≤ 30	150
35	200
40	250
45	300
50	350
55	410
60	470
65	550

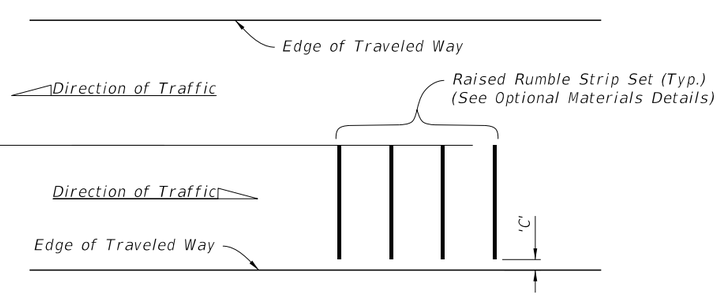

'C' = 0' For Roadways With Paved Shoulders

'C' = 1.5' For Roadways Without Paved Shoulders

DETAIL "A"

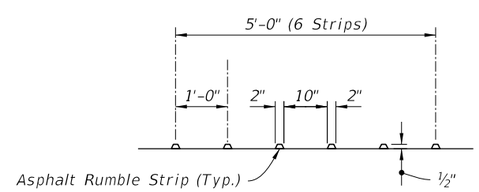

OPTION P1 - ASPHALT SET

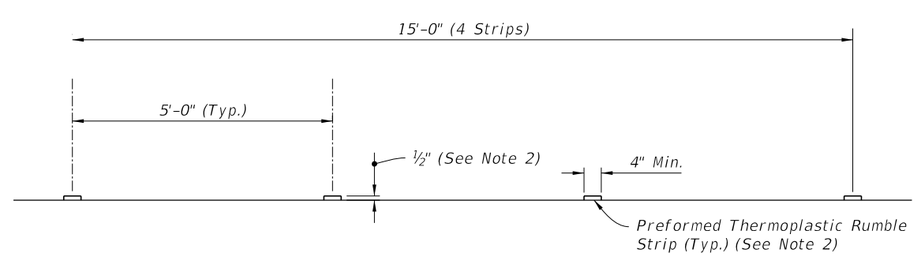

OPTION P2 - PREFORMED THERMOPLASTIC SET

OPTIONAL MATERIALS DETAILS

NOTES:

1. Construct permanent raised rumble strips where shown in the Plans and in accordance with Specification 546.

2. Preformed Thermoplastic Set:
   a. Use multiple applications to achieve desired ½" thickness.
   b. Use color white.

PERMANENT RAISED RUMBLE STRIPS

LAST REVISION	REVISION	DESCRIPTION:			INDEX	SHEET
04/23/18			FY 2023-24 STANDARD PLANS	RAISED RUMBLE STRIPS	546-001	1 of 2

10/20/2022 8:54:27 AM

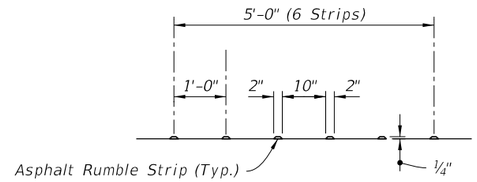

OPTION ST1 - ASPHALT SET

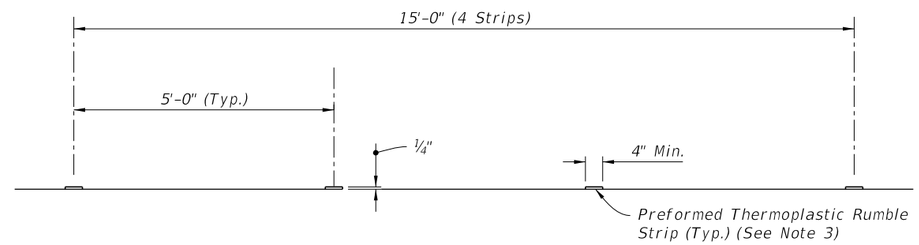

OPTION ST2 - PREFORMED THERMOPLASTIC SET

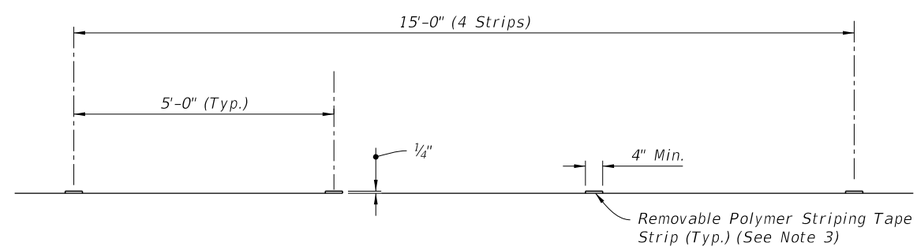

OPTION ST3 - REMOVABLE POLYMER STRIPING TAPE SET

OPTIONAL MATERIALS DETAILS

NOTES:

1. Construct short-term raised rumble strips where noted in the Plans and in accordance with Specification 546.
2. See Sheet 1 for placement and additional details.
3. Use color white for Preformed Thermoplastic and Removable Polymer Striping Tape Sets.

SHORT-TERM RAISED RUMBLE STRIPS

NOTES:

1. When friction course extends more than 8" beyond the edge of the traveled way, blade off the extended friction course to the 8" line prior to rumble strip grinding.

2. Use the continuous array on both inside and outside shoulders 1,000 feet in advance of bridge ends or back to the gore recovery area for mainline interchange bridges. Use the skip array for all other locations.

3. Exclude rumble strips at the following locations:

   A. At mainline tolling areas, terminate rumble strips at the end of the mainline normal section.
   B. At All Electronic Tolling (AET) facilities, terminate rumble strips within 50 feet of the centerline of the overhead gantry.
   C. On outside shoulders of entrance ramp terminals, terminate rumble strips at the point of the physical gore and resume at the end of the acceleration lane taper.
   D. On outside shoulders of exit ramp terminals, terminate rumble strips at the start of the deceleration lane taper and resume at the point of the physical gore.
   E. On approaches to bridges, terminate rumble strips at the approach slab joint.

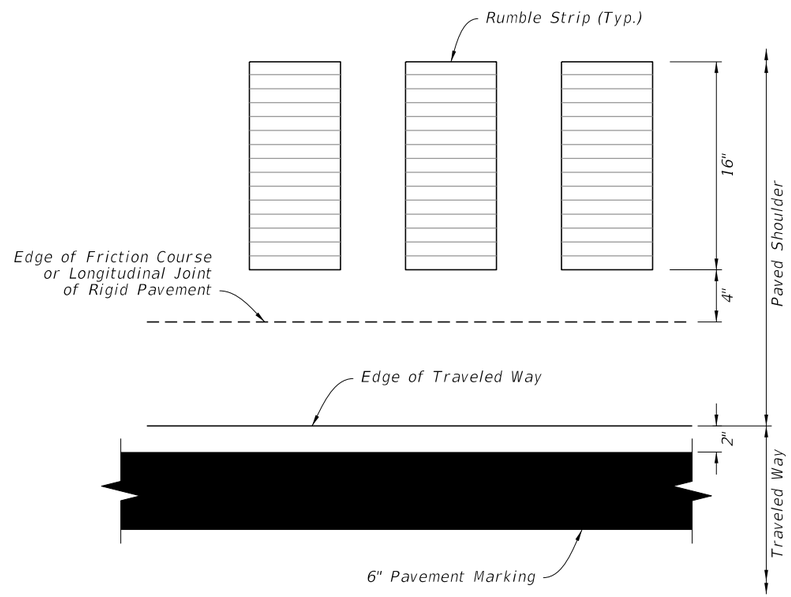

RUMBLE STRIP PLACEMENT
(Plan View)

RUMBLE STRIP DEPTH TABLE	
LOCATION	DEPTH FROM SURFACE (IN.)
A	0
B	9/16 (±1/16)

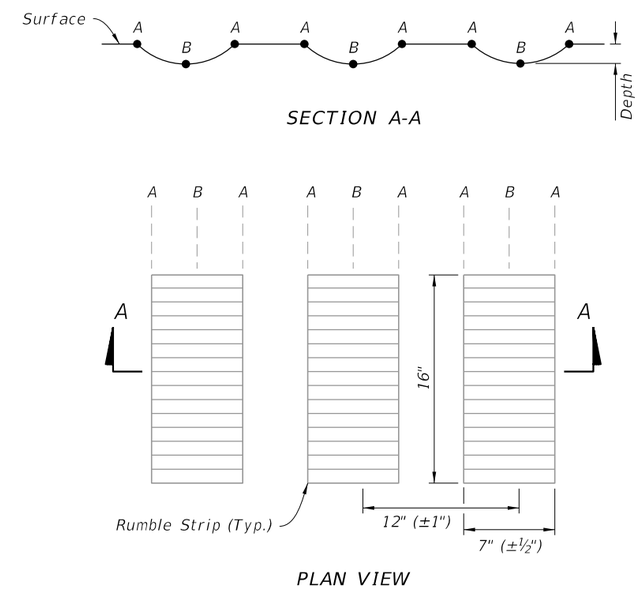

RUMBLE STRIP DETAILS

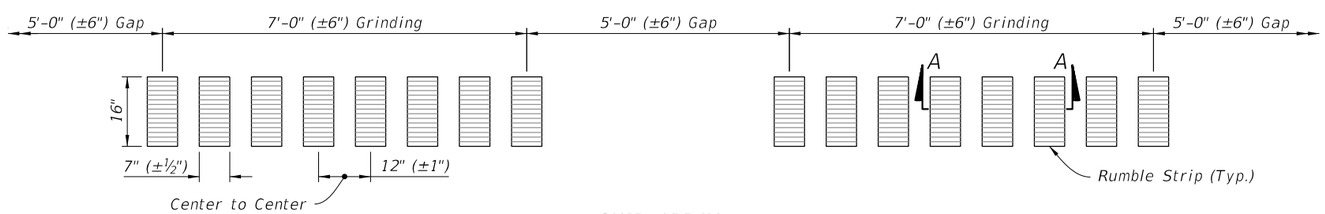

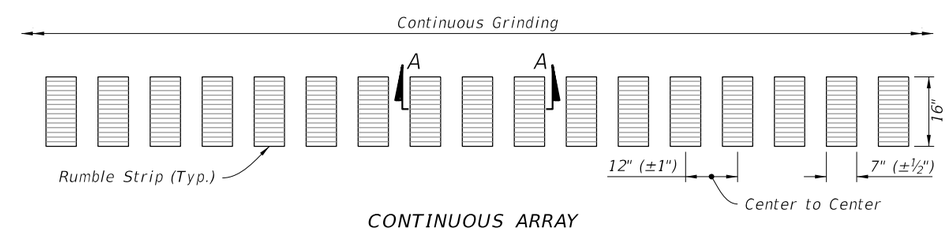

RUMBLE STRIP ARRAY DETAILS

10/20/2022 8:54:28 AM

LAST REVISION	REVISION	DESCRIPTION:			INDEX	SHEET
11/01/22			FY 2023-24 STANDARD PLANS	GROUND-IN RUMBLE STRIPS - LIMITED ACCESS	546-010	1 of 1

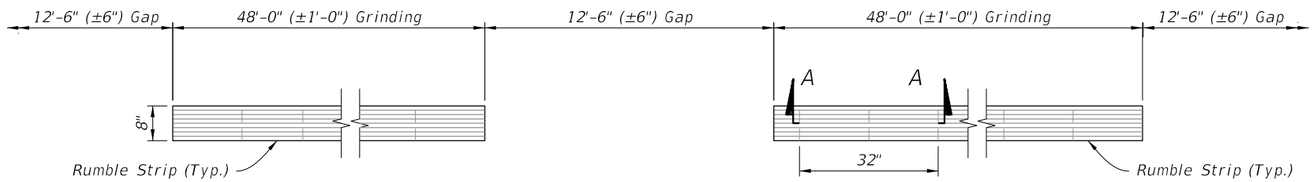

SKIP ARRAY
(Plan View)

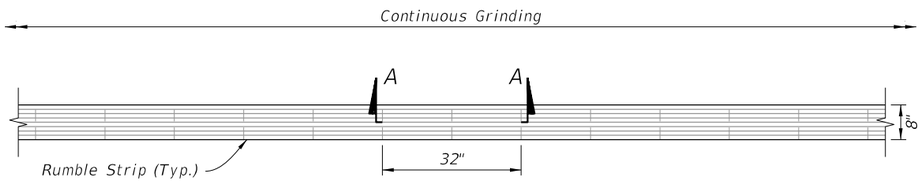

CONTINUOUS ARRAY
(Plan View)

TABLE 1 SKIP AND CONTINUOUS ARRAY APPLICATIONS	
Rumble Strip Placement	Array
Outside Shoulder with Buffered Bike Lane	Skip
Outside Paved Shoulder Width Greater than or Equal to 5'-0"	Skip
Outside Paved Shoulder Width Greater than 0'-0" and Less Than 5'-0"	Skip
Outside Paved Shoulder Equal to 0'-0"	Skip
Inside Paved Shoulder Width Greater Than or Equal to 1'-0"	Continuous
Inside Paved Shoulder Width Greater Than 0'-0" and Less Than 1'-0"	Skip
Inside Paved Shoulder Width Equal to 0'-0"	Skip
One - Direction Passing Centerline	Continuous (See Note 3)
Two - Direction Passing Centerline	Continuous (See Note 3)
Two - Direction No-Passing Centerline	Continuous

RUMBLE STRIP ARRAY DETAILS

TABLE 2 RUMBLE STRIP DEPTH (Depth Tolerance = $\pm\frac{1}{16}$)	
LOCATION	DEPTH FROM SURFACE (IN.)
A	$\frac{1}{16}$
B	$\frac{9}{16}$

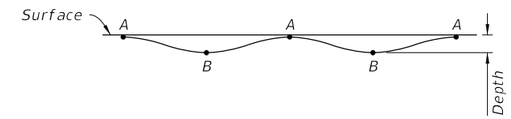

SECTION A-A
(Sinusoidal Pattern)

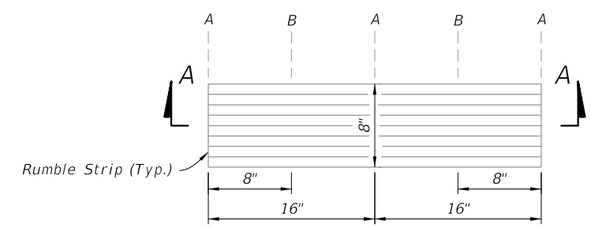

PLAN VIEW

RUMBLE STRIP DETAILS

GENERAL NOTES:

1. Straightness tolerance of ground-in rumble strips in the roadway longitudinal direction is plus or minus 1/2".

2. At intersections and major driveways:

   A. Terminate outside shoulder rumble strips at the radius return.
   B. Terminate median shoulder rumble strips at the radial return of median nose.
   C. Terminate centerline rumble strips on undivided highways at the termination of centerline striping.
   D. Terminate rumble strips at auxiliary lane tapers.

3. For Centerlines in passing zones, provide 2 foot gaps in the continuous array spaced at 40 feet and centered on RPM locations.

12/22/2022 12:41:08 PM

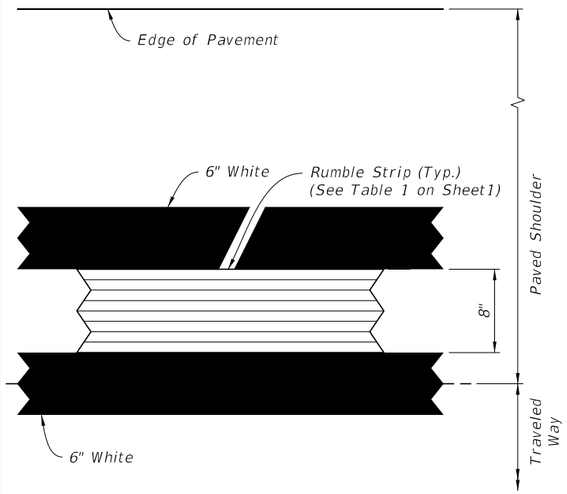

Outside Shoulder with Buffered Bike Lane

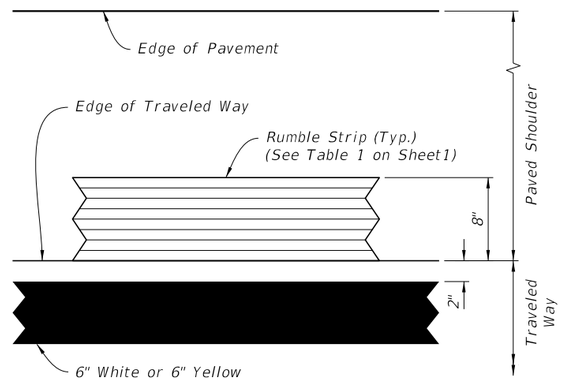

Outside Paved Shoulder Width
Greater Than or Equal to 5'-0"
or
Inside Paved Shoulder Width
Greater Than or Equal to 1'-0"

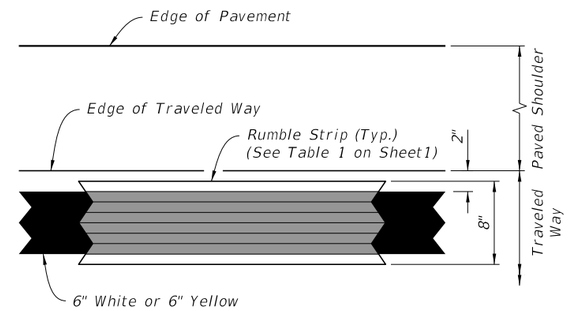

Outside Paved Shoulder Width
Greater Than 0'-0" and Less Than 5'-0"
or
Inside Paved Shoulder Width
Greater Than 0'-0" and Less Than 1'-0"

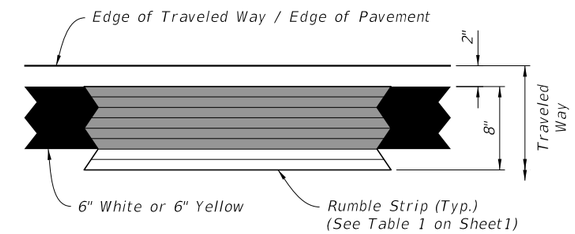

Outside or Inside Paved Shoulder Width Equal to 0'-0"

EDGE LINE AND SHOULDER RUMBLE STRIP PLACEMENT
(Plan View)

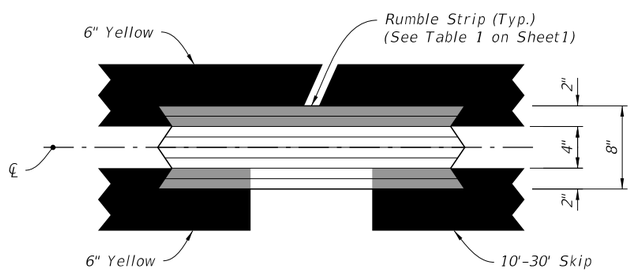

ONE-DIRECTION PASSING CENTERLINE

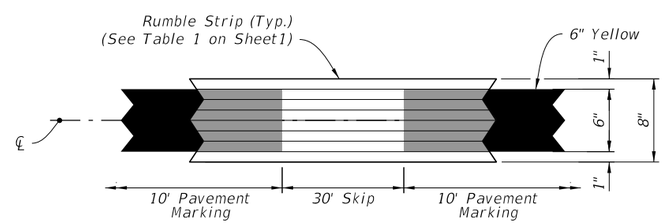

TWO-DIRECTION PASSING CENTERLINE

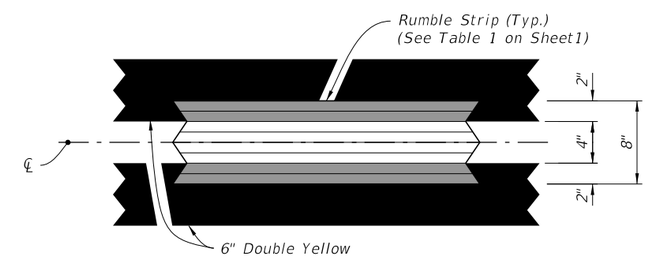

TWO-DIRECTION NO-PASSING CENTERLINE

CENTERLINE RUMBLE STRIP PLACEMENT
(Plan View)

12/22/2022 12:41:10 PM

LAST REVISION	REVISION	DESCRIPTION:			INDEX	SHEET
11/01/22			FY 2023-24 STANDARD PLANS	GROUND-IN RUMBLE STRIPS - ARTERIALS AND COLLECTORS	546-020	2 of 2

NOTES

DESIGN CRITERIA:

1. Design is based on the assumption that the material contained within the reinforced soil volume, methods of construction and quality of prefabricated materials are in accordance with Specification Section 548 and Chapter 3 of the FDOT Structures Design Guidelines.

SOIL PARAMETERS:

1. See Wall Control Drawings for soil characteristics of foundation material to be used in the design of the wall system.
2. The Contractor will provide soil design parameters for backfill material based on the actual soil characteristics utilized at the site.

MATERIALS:

1. See Specification Section 548 for material requirements.

CONSTRUCTION:

1. Walls will be constructed in accordance with Specification Section 548 and the Wall Company's instructions.
2. For location and alignment of retaining walls, see Wall Control Drawings.
3. If required, locate manholes and drop inlets as shown on wall elevations.
4. Refer to Wall Control Drawings of individual walls for minimum reinforcement strip/mesh length, factored bearing resistance's, minimum wall embedment and anticipated long term and differential settlements.
5. The Contractor is responsible for controlling water during storm events as needed during construction.
6. It is the Contractor's responsibility to determine the location of any guardrail posts behind retaining wall panels. Prior to placement of the top layer of soil reinforcement, individual reinforcing strips/mesh may be skewed (15° maximum) to avoid the post locations if authorized by the Engineer. No cutting of soil reinforcement is allowed unless shown on Shop Drawings and approved by the Engineer. Any damage done to the soil reinforcement due to installation of the guardrail will be repaired by the Contractor at the Contractor's expense. Repair method will be approved by the Engineer.
7. If existing or future structures, pipes, foundations or guardrail posts within the reinforced soil volume interfere with the normal placement of soil reinforcement and specific directions have not been provided on the plans, the Contractor will notify the Engineer to determine what course of action shall be taken.
8. The Contractor is responsible for gradually displacing upper layer(s) of soil reinforcement downward (15° maximum from horizontal) to avoid cutting soil reinforcement and conflicts with paving and subgrade preparation. The Contractor's attention is directed especially to situations where roadway superelevation and/or soil mixing are anticipated.
9. For concrete facing panel surface treatment, see Wall Control Drawings. Extend surface treatment a minimum of 6" below final ground line.
10. Drive piles located within the soil volume prior to construction of the retaining wall, unless a method to protect the structure, acceptable to both the Engineer and Wall Company, is proposed and approved in writing. The portion of piles or drilled shafts extensions within the soil volume will be wrapped with polyethylene sheeting in accordance with Specification Section 459.
11. A structural extension of the connection of the retaining wall panel to soil reinforcement will be used whenever necessary to avoid cutting or excessive skewing (greater than 15°) of the soil reinforcement around obstructions (i.e., piles, pipes, manholes, drop inlets, etc.).
12. Steps in leveling pads will occur at MSE Wall panel interfaces. Panels will not cantilever more than 2" past the end of the upper tier leveling pad.
13. The top of the leveling pad or footing will be 2'-0" minimum below final ground line.
14. Top of leveling pad elevations shown in the Wall Control Drawings are maximum elevations. The constructed leveling pad elevations may be deeper based on the panel layout shown in the shop drawings.
15. The height of panels in the bottom course of MSE Walls must not be less than half the height of a standard panel.
16. Work this Index with Index 521-600 thru 521-650.

SHOP DRAWINGS:

See Specification Section 548 for shop drawing requirements.

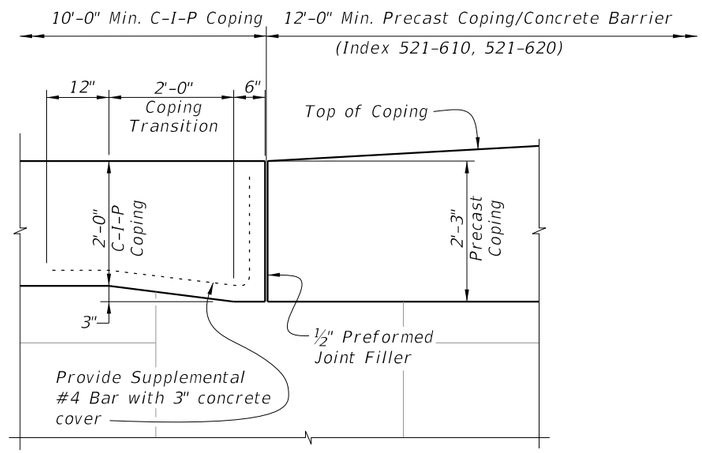

ELEVATION VIEW OF COPING HEIGHT TRANSITION

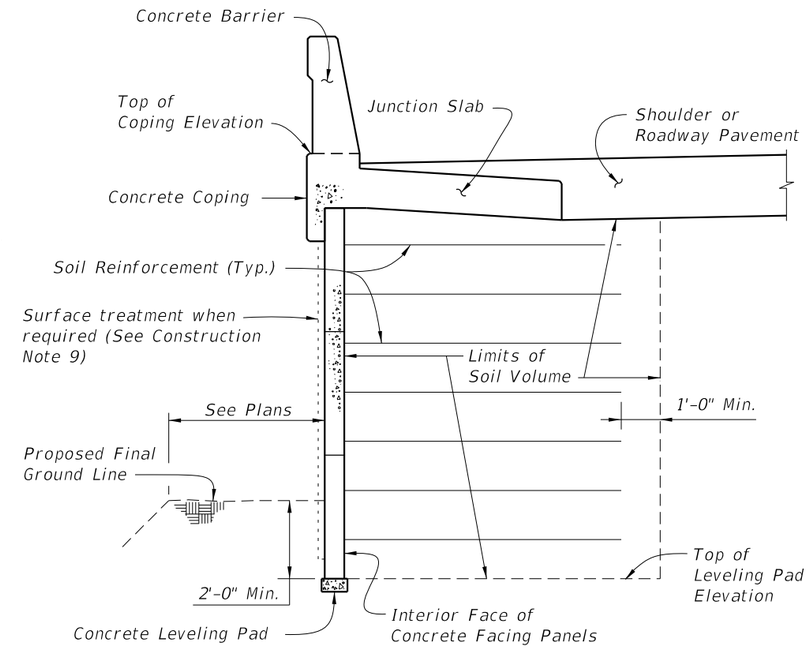

TYPICAL MSE RETAINING WALL SECTION WITH A CONCRETE BARRIER (Showing Limits of the Reinforced Soil Volume)

FDOT MSE RETAINING WALL CLASSIFICATION TABLE

Applicable FDOT Wall Type *	Durability Requirements (Carbon-Steel Reinforcing)			Durability Requirements (FRP Reinforcing)			Soil Reinforcement Type	Other Allowable FDOT Wall Types					
	Concrete Cover (in.)	Concrete Class for Panels	Pozzolan Additions? **	Concrete Cover (in.)	Concrete Class for Panels	Pozzolan Additions? **		2A	2B	2C	2D	2E	2F
Type 2A	2	II	No	1.5	II	No	Metal		✔	✔	✔	✔	✔
Type 2B	2	IV	No	1.5	IV	No	Metal			✔	✔	✔	✔
Type 2C	3	IV	No	1.5	IV	No	Metal				✔	✔	✔
Type 2D	3	IV	Yes	2	IV	No	Metal						✔
Type 2E	3	IV	No	2	IV	No	Plastic						✔
Type 2F	3	IV	Yes	2	IV	No	Plastic						

* See Data Table in Contract Plans.

** Highly Reactive Pozzolans.

GENERAL NOTES AND DETAILS

NOTES

DESIGN CRITERIA:

1. Design is based on the assumption that the material contained within the reinforced soil volume, methods of construction and quality of prefabricated materials are in accordance with Specification Section 548 and FDOT Structures Design Guidelines Section 3.13.2.
2. It is the responsibility of the Engineer to determine that the factored bearing pressure shown for the wall does not exceed the factored bearing resistance of the foundation for that specific wall location.
3. The Wall Company is responsible for internal stability of the wall. External stability design, including foundation and slope stability, is the responsibility of the Engineer.
4. If present, consider in design and analysis and locate manholes and drop inlets as shown on wall elevations.

SOIL PARAMETERS:

1. See wall control drawings for soil characteristics of foundation material to be used in the design of the wall system. The Contractor must provide soil design parameters for backfill material based on the actual soil characteristics utilized at the site. Provide the values of unit weight, cohesion and internal friction angle in the Shop Drawings.

MATERIALS:

1. Provide soil reinforcement in accordance with Specification Section 548.
2. For additional material notes, see Wall Company General Notes.

CONSTRUCTION:

1. Walls must be constructed in accordance with Specification Section 548 and the Wall Company's instructions.
2. For location and alignment of retaining walls, see Wall Control Drawings.
3. Refer to Plan and Elevation sheets of individual walls for minimum reinforcement strip/mesh length, factored bearing resistance's, minimum wall embedment and anticipated long term and differential settlements.
4. If existing or future structures, pipes, foundations or guardrail posts within the reinforced soil volume interfere with the normal placement of soil reinforcement and specific directions have not been provided on the plans, the Contractor must notify the Engineer to determine what course of action should be taken.
5. The Contractor is responsible for gradually deflecting upper layer(s) of soil reinforcement downward (15° maximum from horizontal) to avoid cutting soil reinforcement and conflicts with paving and subgrade preparation. The Contractor's attention is directed especially to situations where roadway superelevation and/or soil mixing are anticipated.

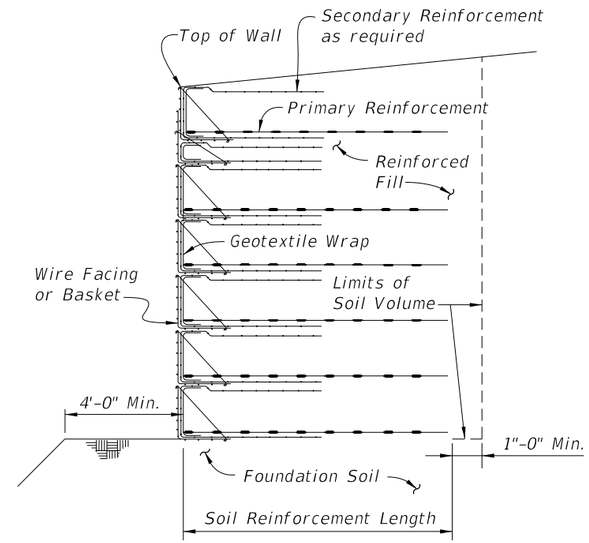

TYPICAL RETAINING WALL SECTION
(Showing Limits of the Reinforced Soil Volume)

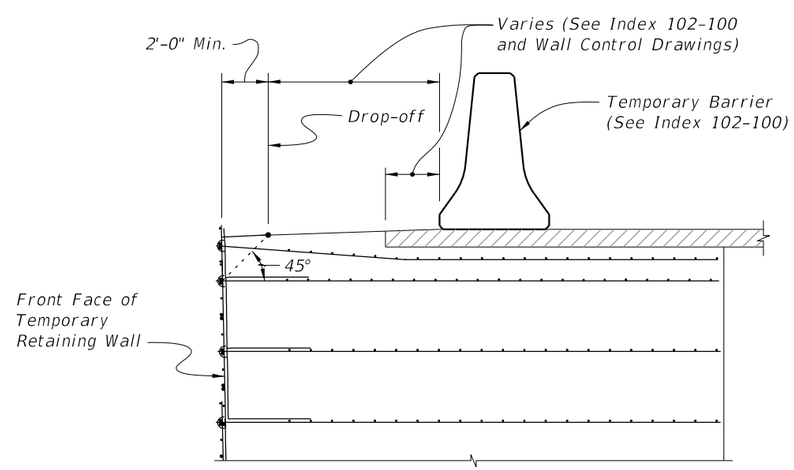

TEMPORARY TRAFFIC RAILING
PLACEMENT DETAIL

GENERAL NOTES AND DETAILS

GENERAL NOTES:

1. This fence to be provided generally in rural areas. For supplemental information see Specifications 550.

2. Fabric shall be woven wire, either galvanized steel, meeting the requirements of ASTM A116, No. 9 Grade 60, Design Number 1047-6-9, with Class 3 zinc coating; No. 12 ½ Grade 175, Design Number 1047-6-12 ½, with a 10 ½ gage top and bottom wire and with Class 3 zinc coating; or aluminum coated steel, meeting the requirements of ASTM A584, No. 9 Farm, Design Number 1047-6-9, with a minimum coating weight of 0.40 oz./ft.^{2}. For additional information see payment note below.

3. Fence shall be installed with wire side to private property except on horizontal curves greater than 3° the fence shall be installed so as to pull against all posts.

4. Posts may be either timber, steel, recycled plastic or concrete. Unless a specific post material is called for in the plans, the Contractor may elect to use either a single material or a combination of timber, steel, recycled plastic or concrete materials, but must comply with the electrical grounding requirements in Specification 550. Line posts of one material may be used with corner, pull and end post assemblies of a different material. Line posts of only one optional material and pull post assemblies of only one optional material will be permitted between corner and end post assemblies. Within individual corner and end post assemblies only one optional material will be permitted.

5. Timber posts shall meet the material requirements of Specification 954. Timber line posts are to be minimum 4" diameter. Timber corner, pull, approach and end posts are to be a minimum 5" diameter. Timber braces are to be minimum 4" diameter.
   (A) Staples for line posts to be 1¼" minimum length; for approach, corner and pull posts 1½" minimum length. At approach, corner and pull posts, staple every line wire. At line posts, staple every line wire in top half and alternate line wires in bottom half. Staples shall be driven diagonally across the line wire with the points in separate grains.
   (B) Connections between timber posts and braces to be provided by dowels as shown in fastener details.
   (C) Wire to be wrapped and tied, as shown in the splice details, at the following locations:
      (a) All end posts, (b) Corner post, including the assemblies at vertical breaks of 15° or more and
      (c) Pull posts where the wire is not spliced and pulled through the assembly; see General Note 18.

6. Steel posts and braces shall be standard steel posts, galvanized at the rate of 2 oz./ft.^{2}, together with necessary hardware and wire clamps and meeting the following requirements:
   (A) Line posts: 8' long; 1.33 lbs./ft.; hot rolled studded; anchor plate attached, ASTM A702 (18 in.^{2}).
   (B) Approach posts: 2½"x2½"x¼" angles, 8' long; fabricated for attaching brace; with necessary hardware, clamps, etc.
   (C) Pull, end and corner posts: 2½"x2½"x¼" angles, 8' long; fabricated for attaching brace; with necessary hardware, clamps, etc.
   (D) Braces: 2"x2"x¼" angles with necessary hardware and fabricated for attaching to post.
   (E) The pull, corner, approach and end posts are to be set in concrete as per detail. (Also see General Note 15)

7. Recycled plastic posts shall meet the following material requirements: Line posts shall have a minimum section of 4" round or 4" square. Plastic posts shall not be used as corner, pull, end or approach posts unless such use is specifically detailed in the plans. The straightness of the post shall comply with Specification 954 for timber post. The flexural strength shall meet the requirements of the latest edition of the Southern Pine Inspection Bureau's Standard Grading Rules for Southern Pine Lumber for No. 2SR Stress Rated Grade Timber. Plastic posts can be set by either digging and tamped backfill or by driving into full depth preformed holes ¼" to ½" smaller than cross section of post.
   Staples for fabric and barbed wire connection to plastic line posts shall be the same size, count and location as that for timber posts.

8. The Contractor, at his option, may use any suitable precast or prestressed concrete posts; however, approval by the Engineer, of posts not shown on this index, will be required prior to construction of the fence. Precast posts shall be Class II concrete. Prestressed posts shall be Class III concrete. Lengths of concrete post to be as indicated for timber posts.

9. Aluminum post, braces and accessory framing hardware shall not be used unless the plans specifically detail their application or the Engineer specifically approves their incorporation in fence construction or repair. Aluminum framed gates are permitted as described in General Note 19.

10. The woven wire shall be attached to steel and concrete posts by a minimum of five tie wires. The single wire ties shall be applied to the top, bottom and three intermittent line wires. The ends of each tie wire shall have a minimum of two tight turns around the line wire. Tie wires shall be steel wire not less than 0.120" diameter, zinc coating Class 3, soft temper, in accordance with ASTM A641.

11. Steel Barbed Wire can be either of the following types:
   Type I: This type shall conform to the requirements of ASTM A121, with two strands of 12½ gage wire; four-point barbs, wire size 14 gage, twisted around both line wires; and, Class 3 coating, Design No. 12-4-5-14R.
   Type IIA: This type same as Type I except the two strand wires are twisted in alternating directions between consecutive barbs.
   Type IIB: This type shall conform to the requirements of ASTM A121 with two strands of 15 ½ gage high tensile wire; four-point barbs, wire size 16 ½ gage twisted around both line wires; and Class 3 coating, Design No. 15-4-5-16R.
   Aluminum Barbed Wire shall be fabricated of two strands of 0.110-inch wire with 0.08-inch diameter four-point barbs spaced at approximately 5½", and at a maximum spacing of 6". The wire for the strands and for the barbs shall be of ASTM B211M Alloy 5052-H38 or equal.

12. The woven wire shall be stretched only until one-half the tension curl has been pulled out of the line wires.

13. Posts to be set by driving or digging. If by digging, the posts shall be set at the center of the hole and the soil tamped securely on all sides.

14. Longer posts than those indicated above may be required by the plans or for deeper installations.

15. Concrete bases for angular steel posts (pull, corner, end and approach) shall be Class NS in accordance with Specification 347. Materials for Class NS concrete may be proportioned by volume and/or by weight.

16. Pull post assemblies shall be installed at approximately 330' centers except that this maximum interval may be reduced by the Engineer on curves where the radius is less than 3°.

17. Corner post assemblies are to be installed at all horizontal and vertical breaks in fence of 15° or more.

18. A maximum length of 1320' of wire may be installed as a unit. For pulls through a pull post assembly the fabric shall be spliced by crimping sleeves only. Pulls through a corner post assembly will not be permitted.

19. Unless otherwise called for in the plans gates shall be commercially available metal swing gates assembled and installed in accordance with the manufacturer's specifications as approved by the Engineer. Chain link swing gates in accordance with Index 550-002 may be substituted for metal swing gates as approved by the Engineer. Gate size is full opening width whether single leaf or double leaves. Payment for gates shall include the gate, single or double, all necessary hardware for installation and any additional length and/or size for posts at the opening. Gates shall be paid for under the contract unit price for Fence Gates, EA.

20. For construction purposes, assemblies are defined as follows: End post assemblies shall consist of: one end post, one approach post, two braces, four diagonal tension wires and all necessary fittings and hardware. Pull post assemblies shall consist of: one pull post, two braces, four diagonal tension wires and necessary fittings and hardware. Corner post assemblies shall consist of: one corner post, two approach posts, four braces, eight diagonal tension wires and all necessary fittings and hardware.

21. All posts, braces, tension wires, fabric, tie wires, Class NS concrete, and all miscellaneous fittings and hardware to be included in the cost for Fencing, LF. Fencing shall be inclusive of the lengths of pull, end and corner post assemblies, but exclusive of gate widths.

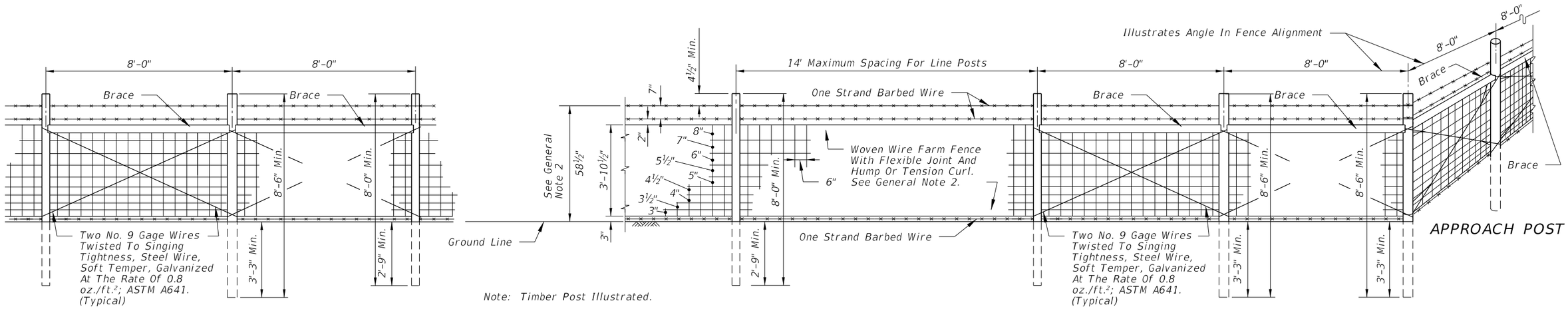

Note: Timber Post Illustrated.

DESIGN NOTE:

This index details fencing that is constructed with farm fabric 46½" (47" nominal) in height and with specific ground clearance and specific barbed wire spacings. For fencing of different height or installation details, the fence shall be fully detailed in the Contract plans.

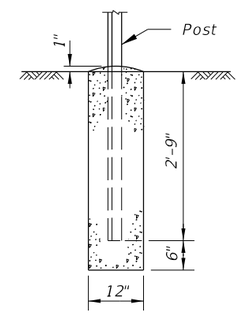

(Pull, Corner, End And Approach Posts)

CONCRETE BASE FOR ANGULAR STEEL POST

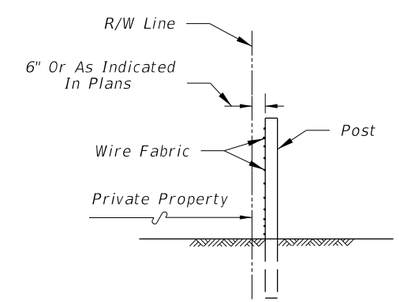

FENCE POSITION AT LOCATIONS WITHOUT FRONTAGE ROADS

(REFER TO DETAIL PLANS FOR FENCE POSITION AT LOCATIONS WITH FRONTAGE ROADS)

10/20/2022 8:54:33 AM

LAST REVISION	REVISION	DESCRIPTION:			INDEX	SHEET
11/01/17			FY 2023-24 STANDARD PLANS	FENCE TYPE A	550-001	2 of 3

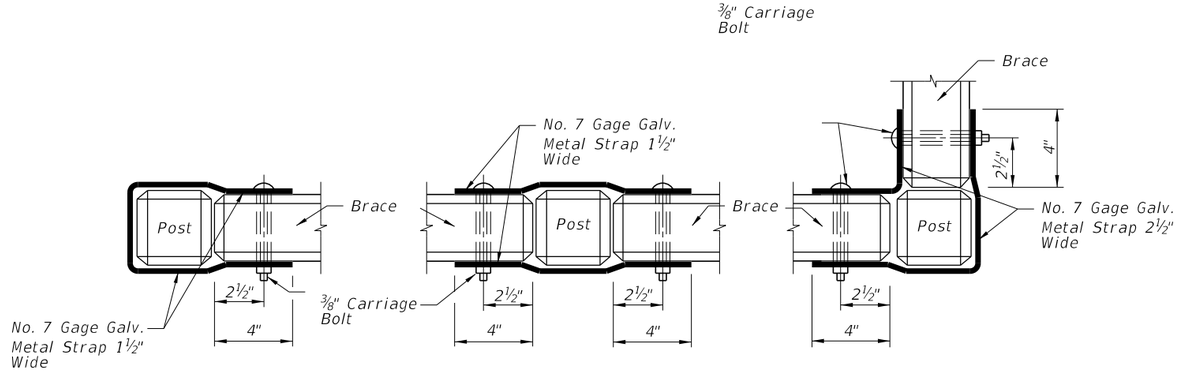

BRACE AND POST

BRACE TO BRACE ON LINE

BRACE TO BRACE AT CORNER

FASTENER FOR CONCRETE POST AND BRACES

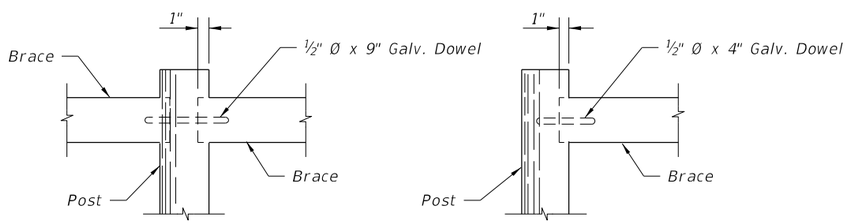

FASTENER FOR TIMBER POST AND BRACE

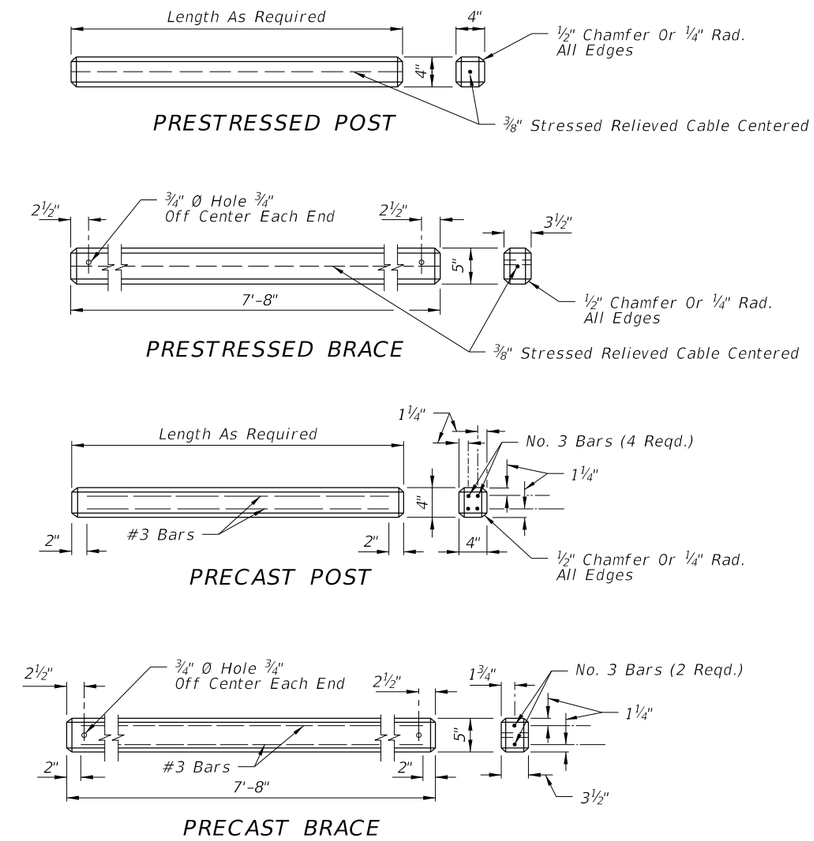

ALTERNATE CONCRETE POSTS AND BRACES

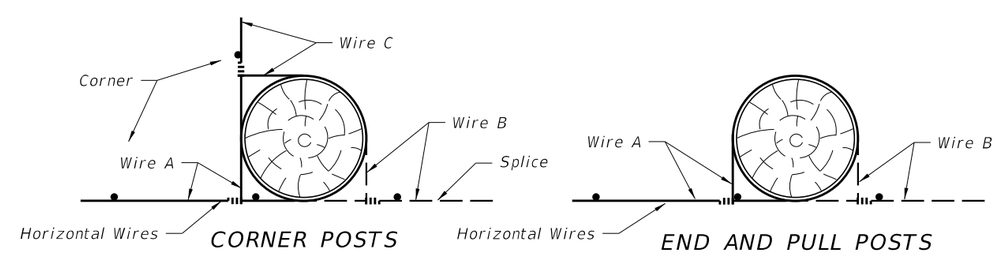

Each horizontal wire to be wrapped around corner, end and pull posts and tied to same wire. See General Notes 5 and 17. Timber post illustrated. These methods also apply to steel and concrete post illustrations.

SPLICES

10/20/2022 8:54:34 AM

LAST REVISION	REVISION	DESCRIPTION:			INDEX	SHEET
11/01/17			FY 2023-24 STANDARD PLANS	FENCE TYPE A	550-001	3 of 3

GENERAL NOTES:

1. This fence to be used generally in urban areas.

2. For supplemental information refer to Specification 550.

3. Chain link fabric, post, truss rods, tension wires, tie wires, stretcher bars, gates and all miscellaneous fittings and hardware shall meet the requirements of AASHTO and ASTM signify current reference.

4. Fence Component Options:

A. Line post options:

(1) Galvanized steel pipe, Schedule 40– 1½" nominal dia. zinc galvanized at the rate of 1.8 oz./ft².: ASTM A53 Table 2 (Grade A or B), ASTM F1083, and AASHTO M111.

(2) Aluminum coated steel pipe: ASTM A53, Table 2 (Grade A or B): Schedule 40– 1½" nominal dia., 1.90" OD; coated at the rate 0.40 oz./ft.: AASHTO M111.

(3) Aluminum alloy pipe– 2" nominal dia.: ASTM B241 or B221, Alloy 6063, T6.

(4) Steel H–Beam– 1⅞"x 1⅝": Zinc Galv. 1.8 oz./ft.: AASHTO M111 and Detail.

(5) Aluminum alloy H–Beam– 1⅞"X 1⅝" Detail.

(6) Steel C– 1⅞"X 1⅝": Galv.: 1.8 oz/ft. zinc: AASHTO M111; OR , 0.9 oz./ft². zinc–5% aluminum–mischmetal: ASTM F1043 and Detail.

(7) Resistance welded steel pipe; 50,000 psi min. yield strength ASTM A569/A569M, A653/A653M or undepleted stock of discontinued A446/A446M base materials; ASTM F669 Group IV (Alternative Design); fence industry 2" OD, 1½" NPS, 1.900" dec. equiv., 0.120" min. wall thick. and min. wt. 2.28 lb./ft.; with ASTM F1043 metric equivalent internal coating Types A, B, C or D and external coating Types A, B, or C; the chromate conversion coating of external Type B shall have a thickness of 15µg/in². min. and the polymer film topcoat shall have a thickness of 0.0003" min.; internal and external coatings are not restricted to the combinations of Table 2, ASTM F1043.

B. Corner, end, and pull post options:

(1) Galvanized steel pipe, Schedule 40– 2" nominal dia. zinc galvanized at the rate of 1.8 oz./ft².: ASTM A53 Table X 2, ASTM F1083, and AASHTO M111.

(2) Aluminum coated steel pipe: ASTM A53 steel, X 2 Tables: Schedule 40; 2" nominal dia., 2.375" OD; coated at the rate 0.40 oz./ft.: AASHTO M111.

(3) Aluminum alloy pipe– 2½" nominal dia.: ASTM B241 or B221, Alloy 6063,T6.

(4) Resistance welded steel pipe; 50,000 psi min. yield strength ASTM A569/A569M, A653/A653M or undepleted stock of discontinued A446/A446M base materials; ASTM F669 Group IV (Alternative Design); fence industry 2½" OD, 2" NPS, 2.375" dec. equiv., 0.130"min. wall thick. and min. wt. 3.117 lb./ft.; with ASTM F1043 metric equivalent internal coating Types A, B, C or D and external coating Types A, B, or C; the chromate conversion coating of external Type B shall have a thickness of 15µg/in². min. and the polymer film topcoat shall have a thickness of 0.0003" min.; internal and external coatings are not restricted to the combinations of Table 2, ASTM F1043.

C. Rail options:

(1) Galvanized steel pipe, Schedule 40– 11#4" nominal dia. zinc galvanized at the rate of 1.8 oz./ft².: ASTM A53 Table X 2, ASTM F1083, and AASHTO M111.

(2) Aluminum coated steel pipe; ASTM A53 steel, X 2 Tables Schedule 40; 11#4" nominal dia., 1.660" OD; coated at the rate 0.40 oz./ft.: AASHTO M111.

(3) Aluminum alloy pipe– 11#4" nominal dia.: ASTM B241 or B221, Alloy 6063, T6.

(4) Resistance welded steel pipe; 50,000 psi min. yield strength ASTM A569/A569M, A653/A653M or undepleted stock of discontinued A446/A446M base materials; ASTM F669 Group IV (Alternative Design); fence industry 15#8" OD, 11#4" NPS, 1.660" dec. equiv., 0.111" min. wall thick. and min. wt. 1.836 lb./ft.; with ASTM F1043 metric equivalent internal coating Types A, B, C or D and external coating Types A, B, or C; the chromate conversion coating of external Type B shall have a thickness of 15µg/in². min. and the polymer film topcoat shall have a thickness of 0.0003" min.; internal and external coatings are not restricted to the combinations of Table 2, ASTM F1043.

D. Chain link fabric options (2" mesh with twisted and barbed selvage top and bottom for all options except as described in Note 10):

(1) AASHTO M181 Type I – Zinc Coated Steel, No. 9 gage (coated wire diameter), coated at the rate of 1.8 oz/ft². (M181 Class D 2.0 oz./ft². modified to 1.8 oz./ft².).

(2) AASHTO M181 Type II –Aluminum Coated Steel, No. 9 gage (coated wire diameter), coated at the rate of 0.40 oz./ft².

(3) AASHTO M181 Type IV– Polyvinyl Chloride (PVC) Coated Steel, No. 9 gage (coated core wire diameter), core wire–zinc coated steel. PVC coating: M181 Class A (either extruded or extruded and bonded) or Class B (bonded). See table right. Unless the plans call for M181 standard colors medium green, dark green or black the coating color shall be soft gray matching that of No. 36622 of Federal Standard 595a.

E. Tension wire options:

(1) Steel wire No. 7 gage zinc galvanized at the rate of 1.2 oz./ft².: AASHTO M181.

(2) Aluminum alloy wire with a diameter of 0.1875" or larger conforming to the requirements of ASTM B211, Alloy 5056 Temper H38, or, Alclad Alloy 5056 Temper H192.

(3) Aluminum coated steel wire No.7 gage coated at the rate of 0.040 oz./ft².: AASHTO M181.

F. Tie wire and hog ring options:

(1) Steel wire No.9 gage zinc galvanized at the rate of 1.2 oz./ft².

(2) Aluminum alloy wire with a diameter of 0.1443" or larger conforming to the requirements of ASTM B211, Alloy 5056 Temper H38, or, Alclad Alloy 5056 Temper H192.

(3) Aluminum coated steel wire No. 7 gage coated at the rate of 0.040 oz./ft².

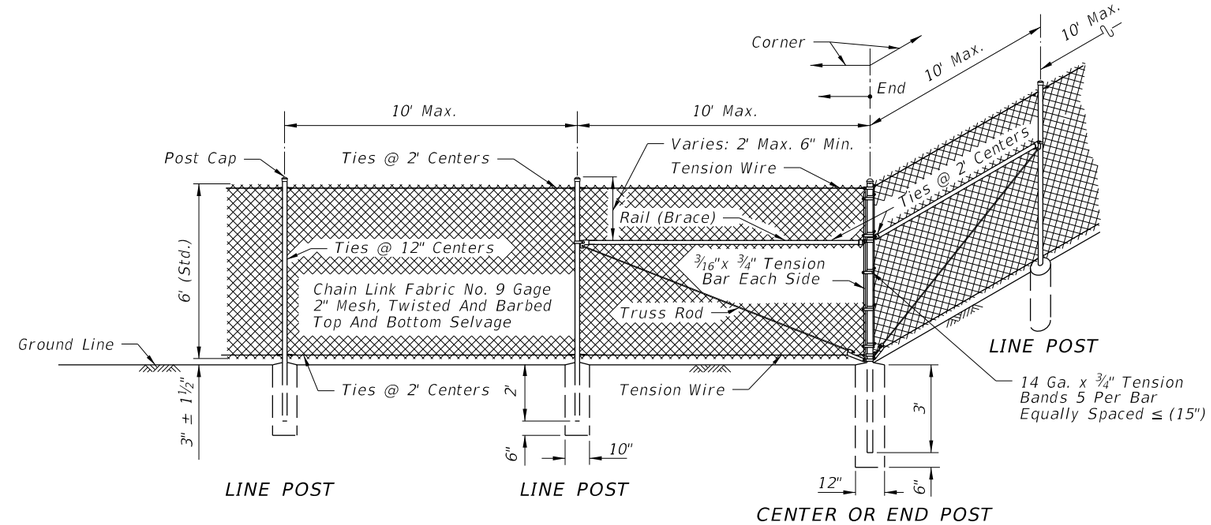

CORNER OR END POST

NOTE: Tubular Post Illustrated

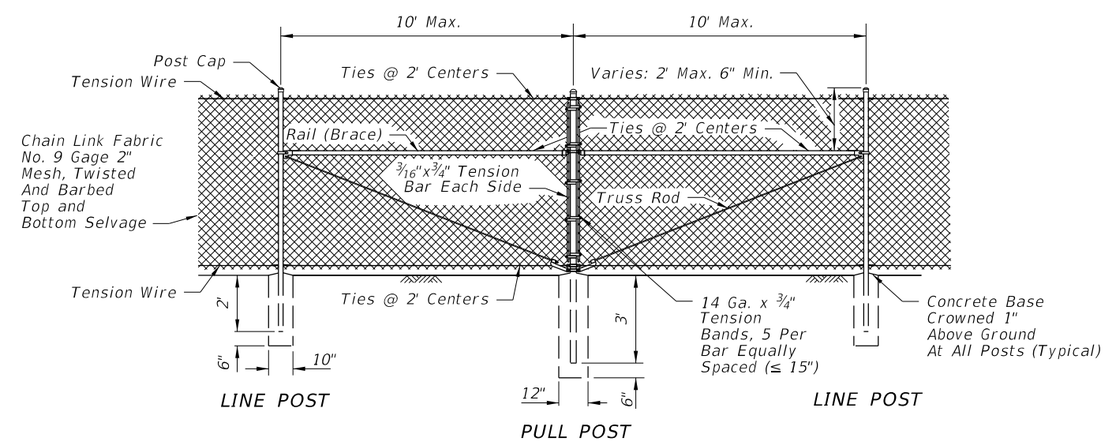

PULL POST

NOTE: Tubular Post Illustrated

10/20/2022 8:54:35 AM

LAST REVISION	REVISION	DESCRIPTION:			INDEX	SHEET
11/01/17			FY 2023-24 STANDARD PLANS	FENCE TYPE B	550-002	1 of 3

GENERAL NOTES CONTINUED

5. Unless a specific material is called for in the plans the Contractor may elect to use either a single type of material or a combination of material types from the component options listed in note 4. Combinations of optional materials are restricted as follows:
   (a) Only one fabric optional material will be permitted between corner and/or end post assemblies.
   (b) Only one line post optional material will be permitted between corner and/or end post assemblies.
   (c) Pull post assemblies shall be optional materials identical to either the line post optional material or the corner and end post assembly optional material; but, pull post assemblies shall be the same optional material between any set of corner and/or end post assemblies.

6. Concrete for bases shall be Class NS concrete as specified in Specification 347 or a packaged, dry material meeting the requirements of a concrete under ASTM C-387. Materials for Class NS concrete may be proportioned by volume and/or by weight.

7. Line post shall be 8'-6" long (Standard). Line post are to be set in concrete as described above or by the following methods:
   (a) In accordance with special details and/or as specifically described in the Contract Plans and Specifications.
   (b) In accordance with ASTM F567 Subsections 5.4 through 5.10 as approved by the Engineer. Line post installed in accordance with Section 5.8 shall be 9'-6" long.
   (c) Post mounted on concrete structure or solid rock shall be mounted in accordance with the base plate detail "Fence Mounting On Concrete Endwalls And Retaining Wall", Sheet 3; or, by embedment in accordance with ASTM F567 Subsection 5.5.

   End, pull and corner post assemblies shall be in concrete as detailed above for all soil conditions other than solid rock. Post within assemblies that are located on concrete structures or solid rock shall be set by base plate or by embedment as prescribed under (b) above for line post.

   Line and assembly posts for 6' fence which must be lengthened due to a variation in the normal ground clearance, shall be set an additional 3" in depth for each 1' of of additional ground clearance.

8. Pull post shall be used at breaks in vertical grades of 15° or more, or at approximately 350' centers except that this maximum interval may be reduced by the Engineer on curves where the curve is greater than 3°.

9. Corner post are to be installed at all horizontal breaks in fence at 15° or more and as required at vertical breaks over 15° as determined by the Engineer.

10. When fence has an installed top of fabric height less than 6' knuckled top and bottom selvages shall be used unless the plans specifically identify locations for twisted selvage fabrics.

11. Unless sliding gates or special gates are called for in the plans, all gates shall be chain link swing gates meeting the material requirements described and as approved by the Engineer. Payment shall include the gates, single or double, all necessary hardware for installation and any additional length and/or size for posts at the opening. Gates shall be paid for under the contract unit price for Fence Gates, EA.

12. For construction purposes corner post assemblies shall consist of one corner post, two braces, two truss rods, and all necessary fittings and hardware as detailed. End post assemblies shall consist of one end post, one brace, one truss rod and all necessary fittings and hardware as detailed.

13. In areas where there are physical constraints outside the right-of-way which restricts the fence construction, the fabric may be installed on the inside of the posts..

TYPE IV VINYL COATED FABRIC								
AASHTO M181 Table 4 Redefined As Follows								
Specified Diameter Of Metallic Coated Core Wire			Minimum Weight Of Zinc Coating		PVC Thickness Range			
					M181 Class A (Extruded Or Extruded And Bonded Coating)		M181 Class B (Bonded Coating)	
in.	mm	gage	oz./ft².	g/m²	in.	mm	in.	mm
0.148	3.77	9	0.30	92	0.015 to 0.025	0.38 to 0.64	0.006 to 0.010	0.15 to 0.25

DESIGN NOTE

This index details fencing that is constructed with chain link fabric 6' (nominal) in height and with specific ground clearance.
For fencing of different height or installation details, the fence shall be fully detailed in the Contract plans.

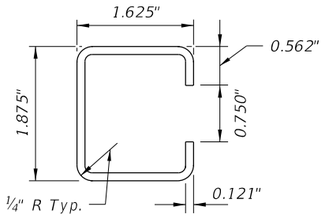

Galv. Wt. Per. Ft.= 2.34# ±5%
Yield PSI (Min.) 45,000

STANDARD WALL

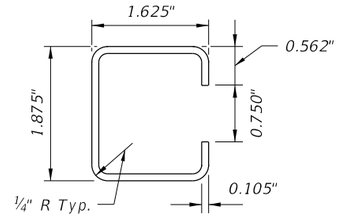

Galv. Wt. Per. Ft.= 1.85# ±5%
Yield PSI (Min.) 45,000

THINWALL

OPTIONAL "C" LINE POST

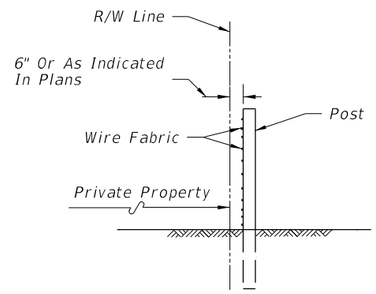

FENCE POSITION AT LOCATIONS WITHOUT FRONTAGE ROADS

(REFER TO DETAIL PLANS FOR FENCE POSITION AT LOCATIONS WITH FRONTAGE ROADS)

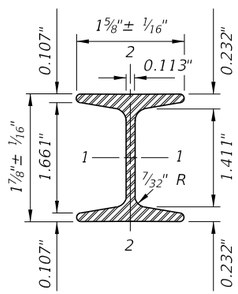

	STEEL	ALUMINUM
Area (Sq. In.)	724	724
Weight (Lb./Ft.)	2.72 ± 5% (Galv.)	0.91 ± 5%
Surface Area (SF/Ft.)	0.776	0.776
Tensile Strength (psi Min.)	80,000	30,000
Yielding Point (psi Min.)	48,000	25,000

	Axes 1-1	Axes 2-2	Axes 1-1	Axes 2-2
Moment Of Inertia	0.428	0.101	0.428	0.101
Section Modulus	0.456	0.124	0.456	0.124
Rad. Of Gyration	0.779	0.373	0.779	0.373

OPTIONAL 1⅞"x 1⅝" H-BEAM LINE POST

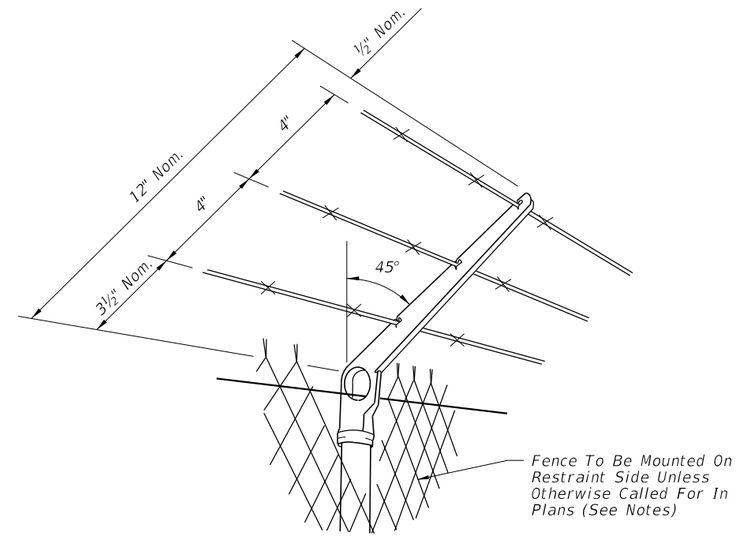

NOTES

Attachments to be used only when called for in the plans.
Attachments to extend in direction of restraint. Unless otherwise called for in plans, direction of restraint will be as follows:

(a.) Outward on limited access right of way line.
(b.) Outward on controlled access right of way line.
(c.) Outward from utilities and hazardous facilities located within highway right of way.
(d.) Outward from lateral ditches, outfalls, retention basins, canals, borrow areas and similar support facilities.
(e.) Inward on pedestrian ways.

The cap-arm shall be designed to provide a drive fit over the top of posts and to exclude moisture in posts with tubular sections.

BARB WIRE ATTACHMENT

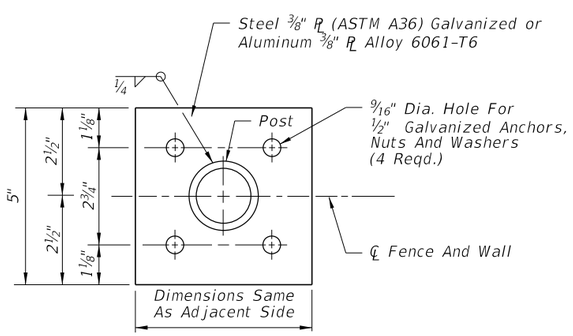

TOP VIEW
FOUR ANCHOR PLATE OPTION

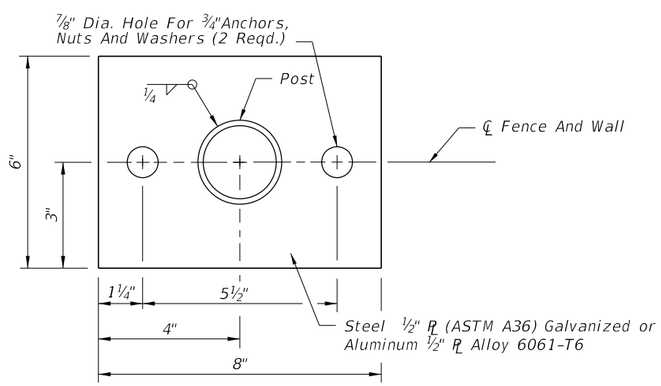

TOP VIEW
TWO ANCHOR PLATE OPTION

BASE PLATE AND ANCHOR NOTES:

1. Base plate identical for line, pull, end and corner posts and shall be considered an integral part of the respective posts for basis of payment.
2. Post to be plumbed by grout shim under base plate.
3. Anchors (Galvanized Steel):
   12" Cast In Place, 10½" Embedment:
   Headed Bolts, U-Bolts or Cluster Plates.
   8" Adhesive Anchors, 6" Min. Embedment.*
   *Adhesive anchors shall be headless anchor bolts set in drilled holes with an Adhesive Material System in accordance with Specifications 416 and 937; drilled holes shall be ⅛" larger in diameter than the anchor bolt.
   Expansion Bolts Not Permitted.

FENCE MOUNTING ON CONCRETE ENDWALL AND RETAINING WALLS

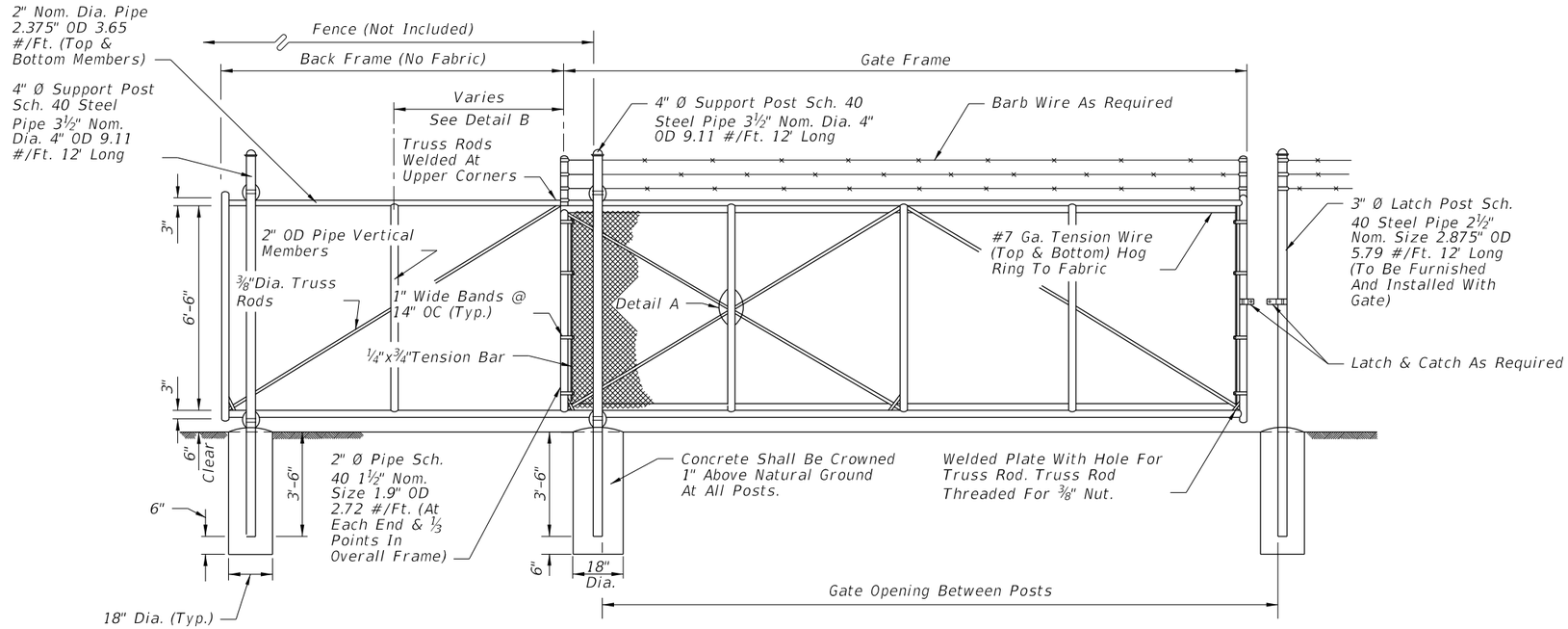

FRONT ELEVATION

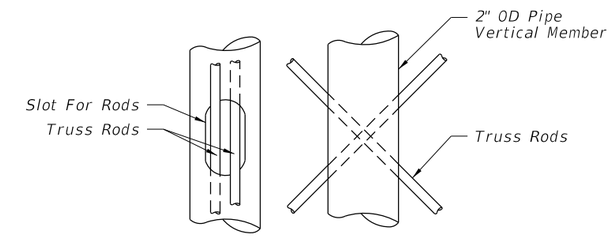

DETAIL A

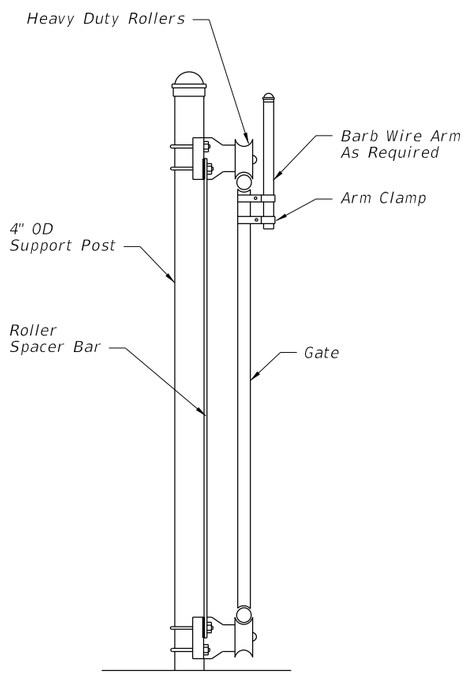

SUPPORT POST DETAIL

GATE OPENING	GATE FRAME	BACK FRAME
12'	12'-3"	6'
16'	16'-3"	8'
20'	20'-3"	10'
24'	24'-3"	12'

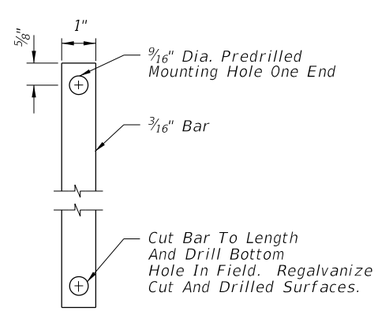

ROLLER SPACER BAR

GENERAL NOTES:

1. Extruded, rolled or formed components that provide equal strength and stability may be used in lieu of the pipe components shown; and, internal rollers may be used in lieu of the external roller units shown.

   Gate components shall meet or exceed the protective coatings specified on Index 550-002.

2. Steel gate frame shall be fabricated prior to galvanizing, except that truss rods may be fabricated following frame galvanizing provided surfaces damaged during welding are galvanized in accordance with Section 24 of AASHTO M36; or, fabricated from pipe components with protective coating meeting the requirements of Index 550-002 that are tolerant of welding (low burn back), and a protective coating applied to the weld and damaged pipe surfaces that is equivalent to the protective coating of the fabricated pipe stock.

3. All fabric shall be knuckled top and bottom selvages.

4. Concrete for bases shall be either Class NS concrete in accordance with Specification 347 or a packaged, dry material meeting the requirements of a concrete under ASTM C-387. Materials for Class NS concrete may be proportioned by volume and/or by weight.

5. Cost of all gate components shall be included in the contract unit price for Sliding Fence Gate (Cantilever), EA.

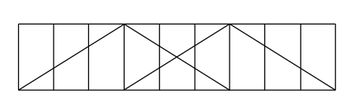

TYPICAL FRAME - 24' Opening

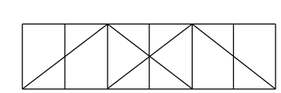

TYPICAL FRAME - 12', 16' & 20' Opening

DETAIL B

10/20/2022 8:54:38 AM

LAST REVISION	REVISION	DESCRIPTION:	FY 2023-24 STANDARD PLANS	CANTILEVER SLIDE GATE TYPE B FENCE	INDEX	SHEET
11/01/17					550-003	1 of 1

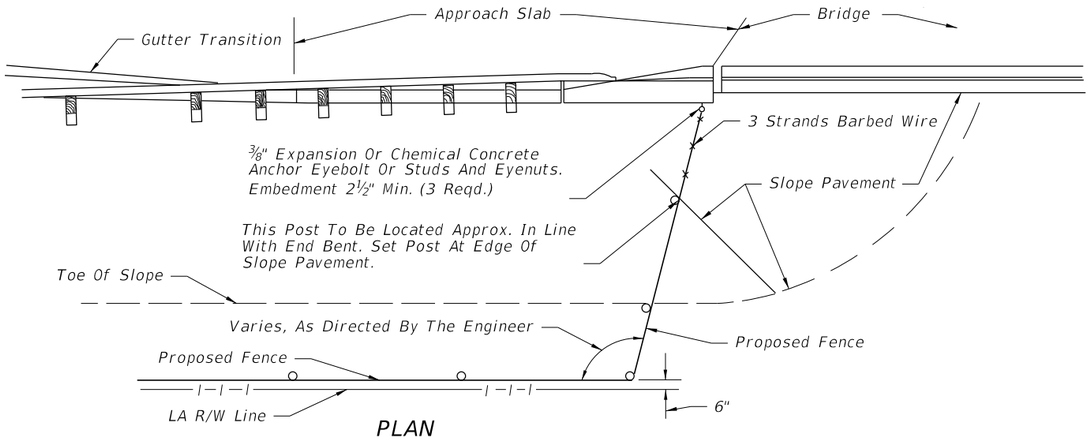

PLAN

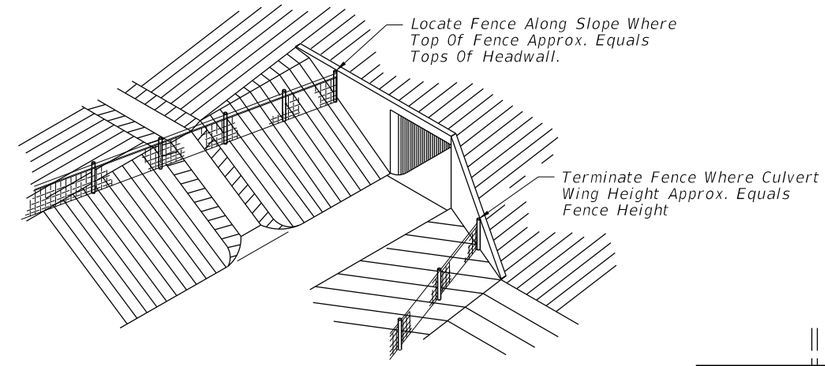

PICTORIAL VIEW

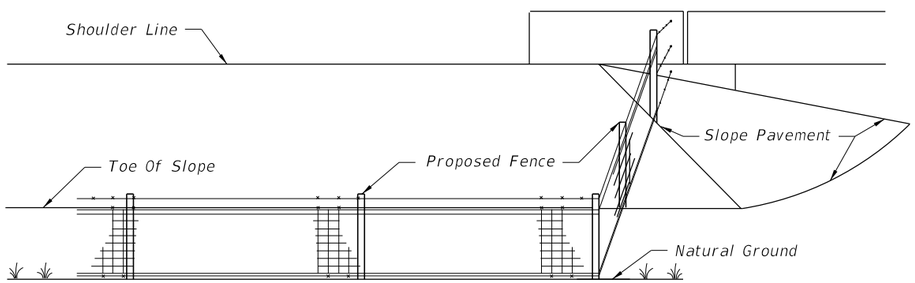

ELEVATION

FENCING TERMINALS AT BRIDGE ENDS
(ROADWAY)

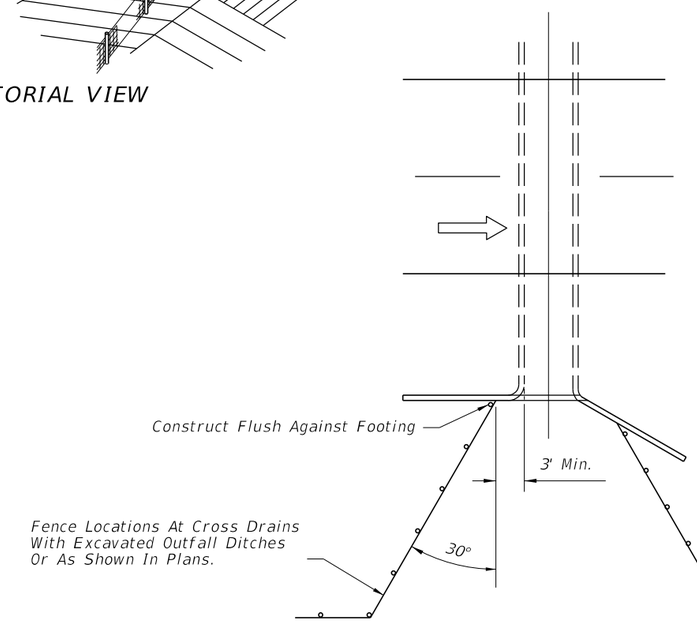

PLAN
(For Heights Of Headwall Greater Than 4')
FENCING TERMINALS AT BOX CULVERTS

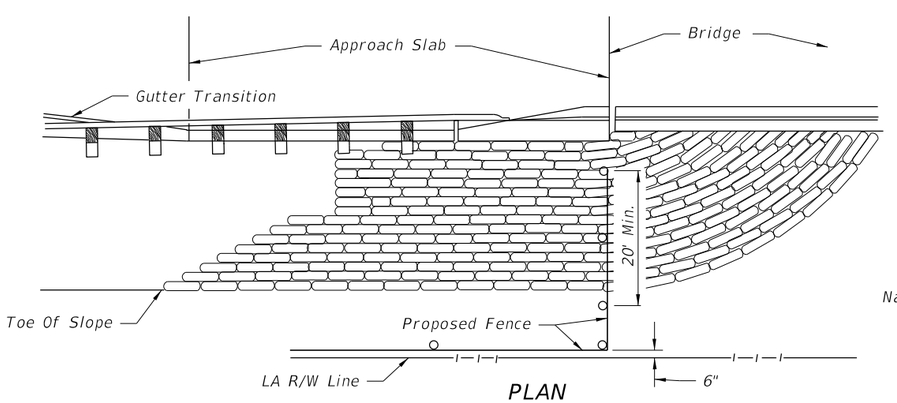

PLAN

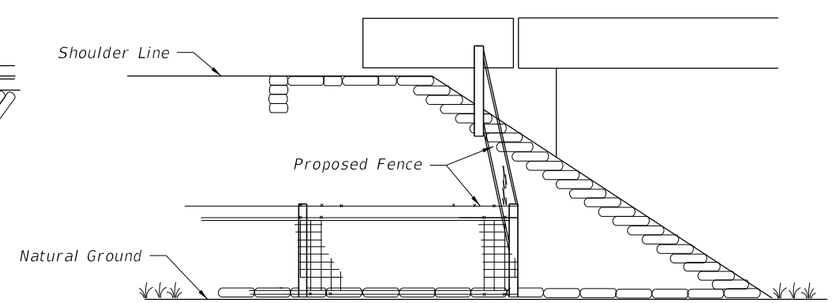

ELEVATION

FENCING TERMINALS AT BRIDGE ENDS
(STREAM CROSSING)

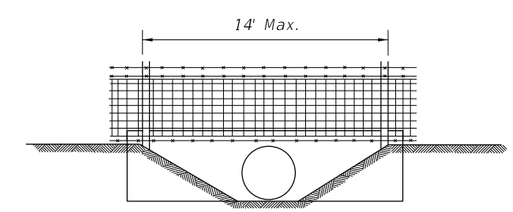

FENCING DETAIL AT CULVERT
(For Heights Of Headwalls 4' Or Less.)

Note: When height of headwall is 4' or less (drainage pipe 36" or less) the fence shall not be tied to the headwall, but shall span the lateral ditch.

10/20/2022 8:54:39 AM

LAST REVISION	REVISION	DESCRIPTION:			INDEX	SHEET
11/01/17			FY 2023-24 STANDARD PLANS	FENCE LOCATION	550-004	1 of 2

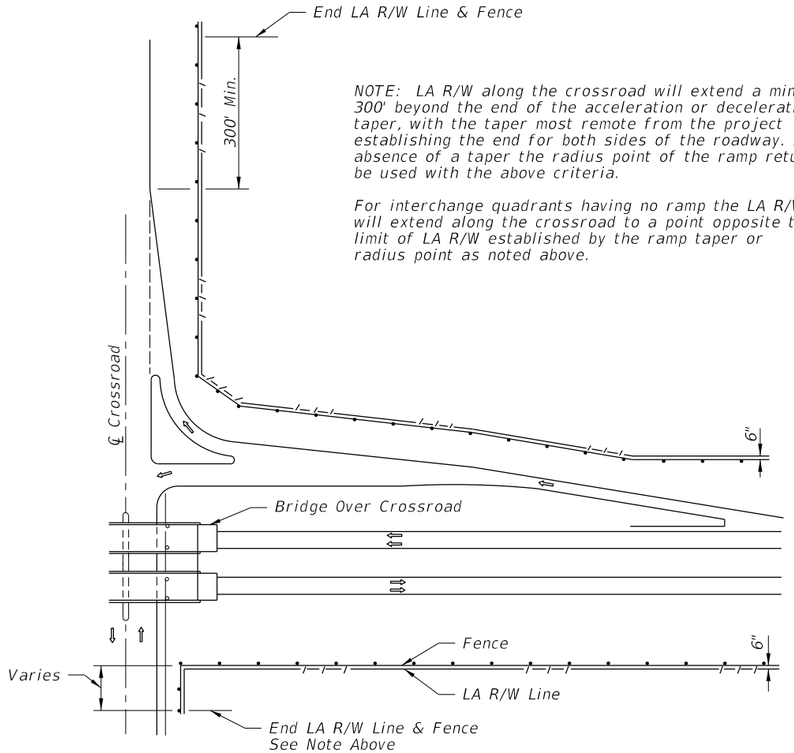

NOTE: LA R/W along the crossroad will extend a minimum 300' beyond the end of the acceleration or deceleration taper, with the taper most remote from the project establishing the end for both sides of the roadway. In the absence of a taper the radius point of the ramp return will be used with the above criteria.

For interchange quadrants having no ramp the LA R/W will extend along the crossroad to a point opposite the limit of LA R/W established by the ramp taper or radius point as noted above.

APPLIES TO BRIDGE OVER CROSSROAD AND CROSSROAD OVER FREEWAY (BRIDGE OVER CROSSROAD SHOWN)

FENCING TERMINALS AT RURAL INTERCHANGES

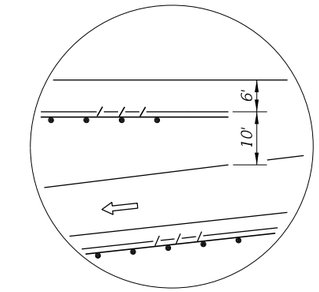

INSET A

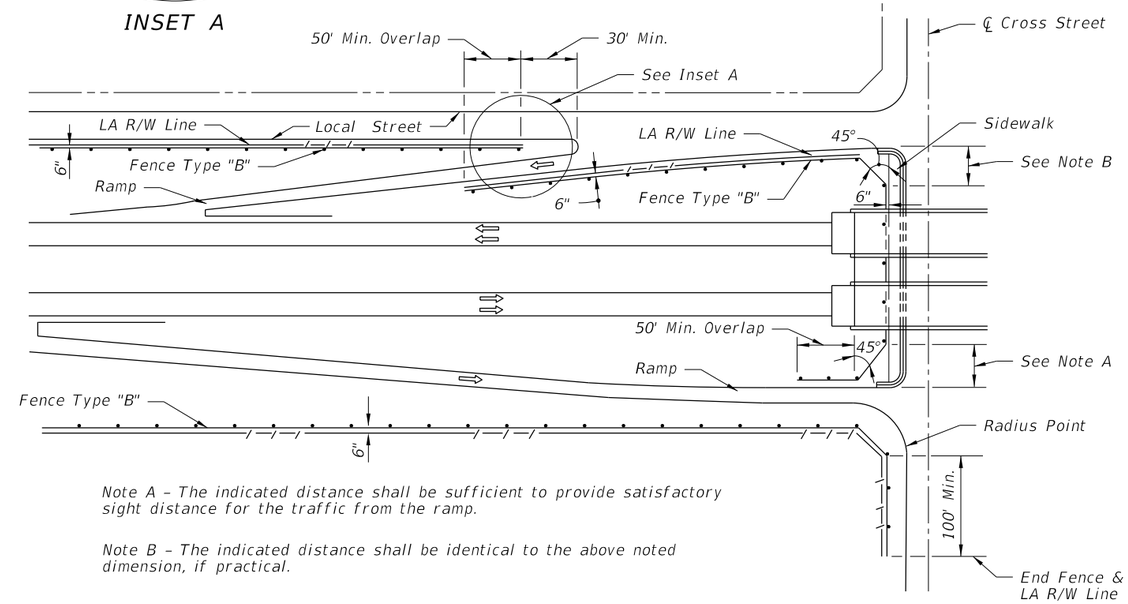

Note A – The indicated distance shall be sufficient to provide satisfactory sight distance for the traffic from the ramp.

Note B – The indicated distance shall be identical to the above noted dimension, if practical.

FENCING TERMINALS AT URBAN INTERCHANGES

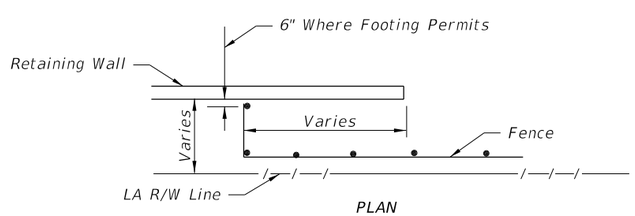

PLAN

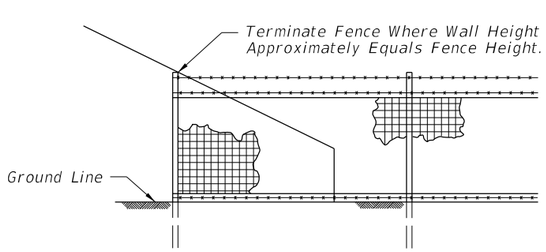

ELEVATION

FENCING TERMINALS AT RETAINING WALLS

10/20/2022 8:54:40 AM

LAST REVISION	REVISION	DESCRIPTION:	FY 2023-24 STANDARD PLANS	FENCE LOCATION	INDEX	SHEET
11/01/17					550-004	2 of 2

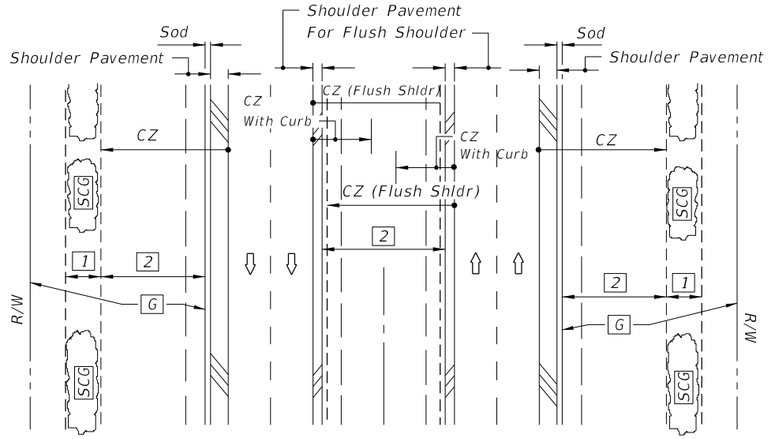

DIVIDED NARROW MEDIAN WITH OR WITHOUT CURBED MEDIAN

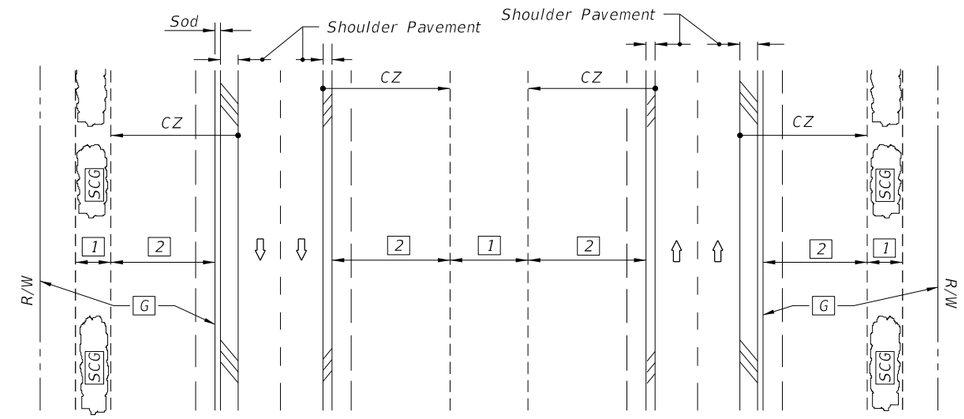

DIVIDED WIDE MEDIAN WITH OR WITHOUT CURBED MEDIAN

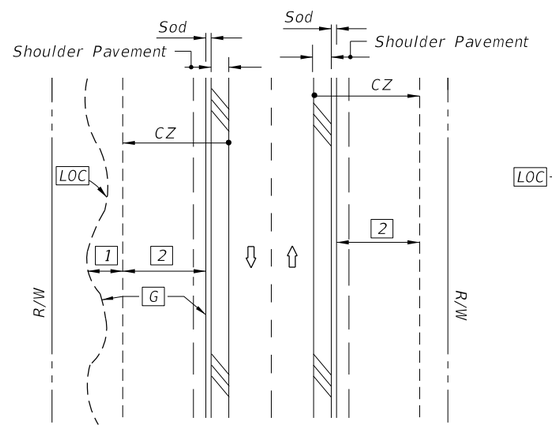

UNDIVIDED FLUSH SHOULDER

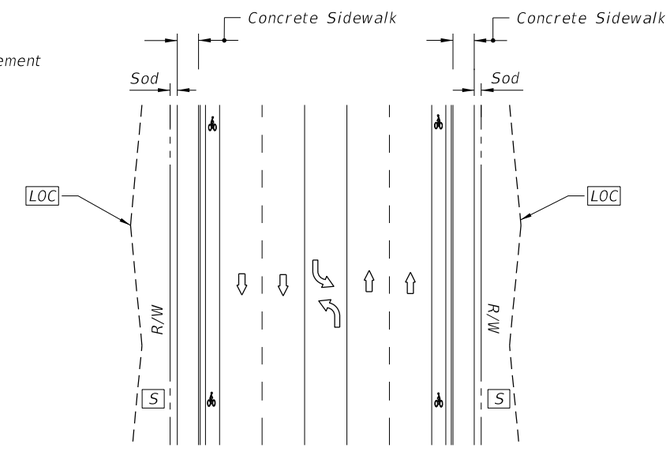

UNDIVIDED CURBED

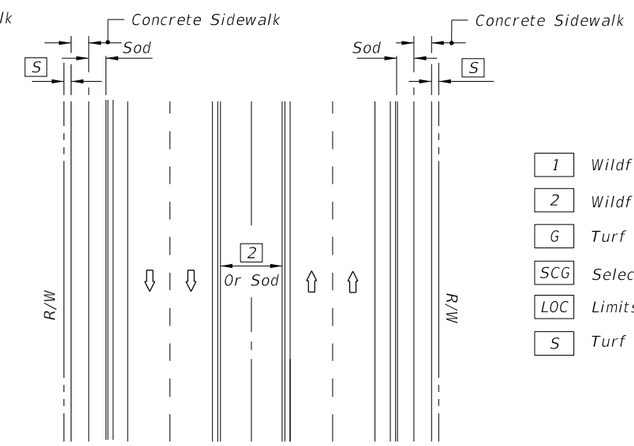

DIVIDED CURBED

LEGEND

1	Wildflower Group #1
2	Wildflower Group #2
G	Turf (To Limit of Construction)
SCG	Selective Clearing And Grubbing
LOC	Limits Of Construction
S	Turf

WILDFLOWER SEEDING RATES

Common Name (Botanical Name)	lbs/ac
#1 Group	
Black-Eyed Susan (Rudbeckia hirta)	2
Lance-Leaf Tickseed (Coreopsis lanceolata)	10
Goldenmane Tickseed (Coreopsis basalis)	10
Leavenworth's Tickseed (Coreopsis leavenworthii)	10
Fire Wheel (Gaillardia pulchella)	10
Softhair Coneflower (Rudbeckia mollis)	2
Crimson Clover (Trifolium incarnatum)	15
#2 Group	
Annual Phlox (Phlox drummondii)	10
Moss Verbena (Verbena tenuisecta)	6
Leavenworth's Tickseed (Coreopsis leavenworthii)	10
Fire Wheel (Gaillardia pulchella)	10
Crimson Clover (Trifolium incarnatum)	15

Note: Wildflower seeding rates are for restoring impacted wildflower areas.

GENERAL NOTES

1. All turf establishment shall be performed meeting the requirements of Specification 570.
2. Activities such as clearing, grading, and excavating that will disturb one or more acres of land require coverage under the Generic Permit for Stormwater Discharge from Large and Small Construction Activities from the Florida Department of Environmental Protection, and implementation of appropriate pollution prevention measures to minimize erosion and sedimentation and properly manage stormwater.
3. Confirm compatibility of wildflower with Seeding Zones.

SEEDING ZONES

10/20/2022 8:54:41 AM

LAST REVISION	REVISION	DESCRIPTION:			INDEX	SHEET
11/01/19			FY 2023-24 STANDARD PLANS	PERMANENT EROSION CONTROL	570-001	1 of 3

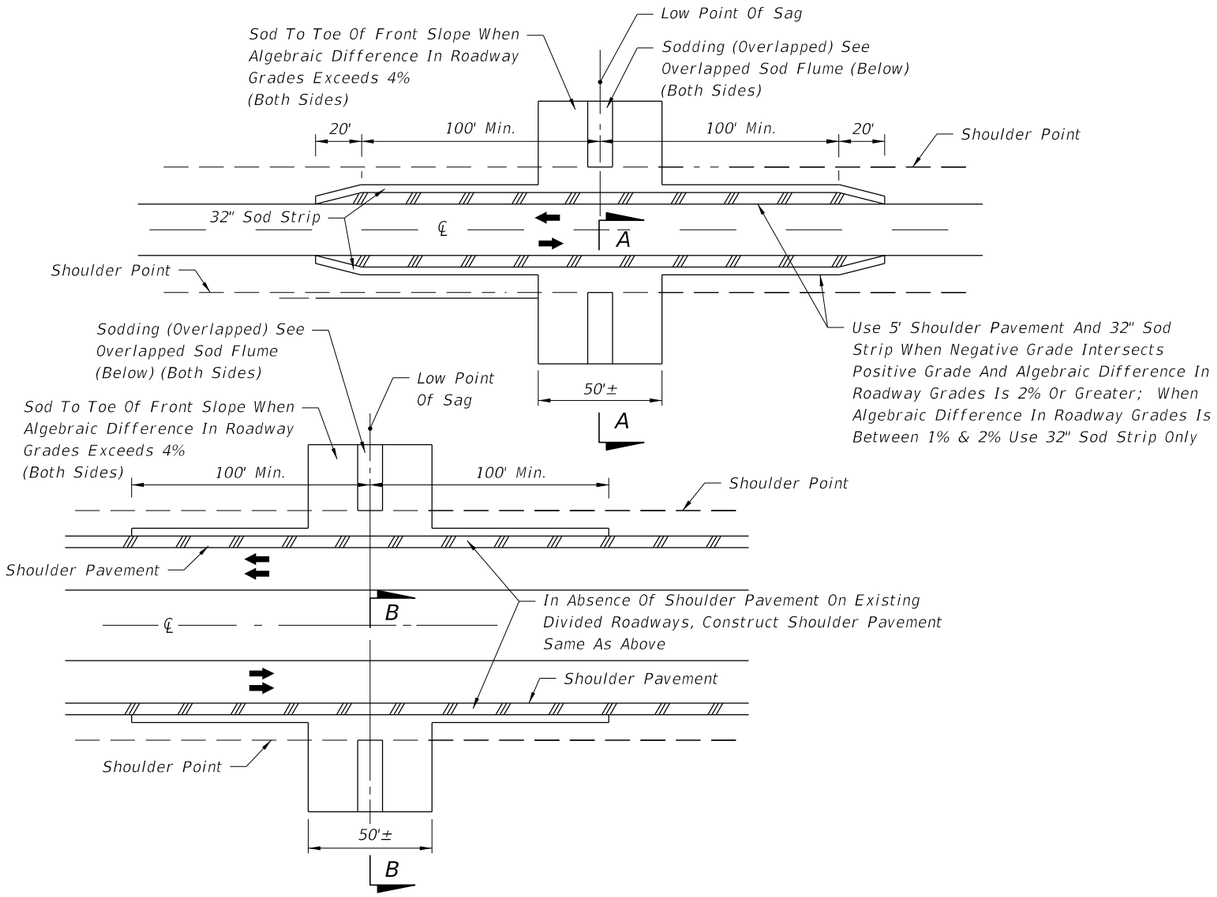

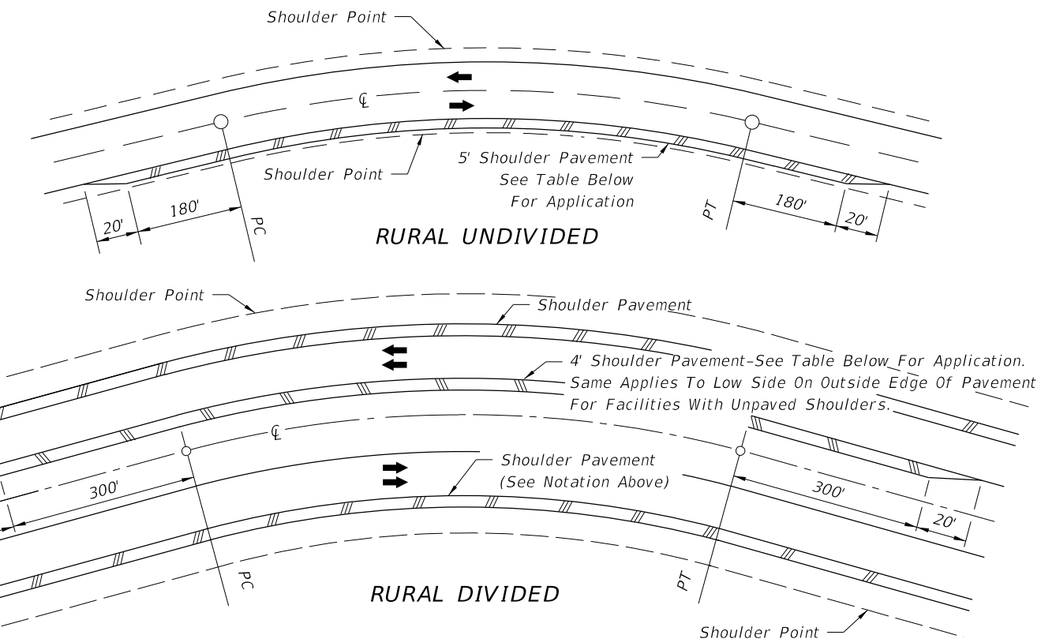

CRITERIA FOR PAVING SHOULDER ON DIVIDED AND UNDIVIDED FACILITIES		
Design Speed (mph)	Degree Of Curve	Note: Shoulder Pavement is required on all curves meeting the criteria tabulated. For curves not meeting the criteria, shoulders are to be paved where erosion of the shoulder is evident or anticipated.
30	7° Or Greater	
40	5° Or Greater	
50	4° Or Greater	
60	3° Or Greater	
65	3° Or Greater	
70	2° Or Greater	

SHOULDER AND SLOPE TREATMENT FOR SUPERELEVATED ROADWAYS

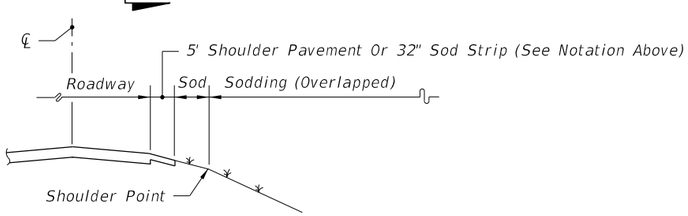

SECTION AA
(Symmetrical About ℄)

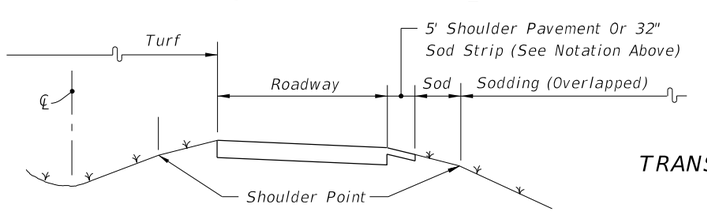

SECTION BB
(Symmetrical About ℄)

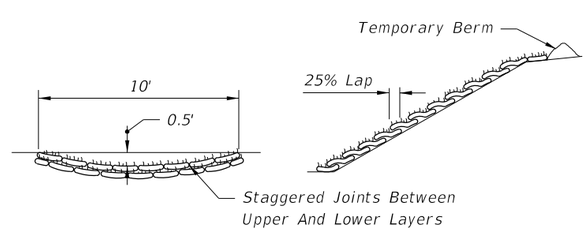

TRANSVERSE SECTION LONGITUDINAL SECTION
OVERLAPPED SOD FLUME

SHOULDER AND SLOPE TREATMENT IN SAG VERTICAL CURVES

NOTES:

1. These treatments are applicable to new construction, reconstruction and RRR projects. Project requirements for shoulder pavement and sodding that exceed the limits of this standard take precedence.
2. For sodding adjacent to ditches and at headwalls, see Index 524-001.
3. All front slopes steeper than 1:3 are to be sodded.

TREATMENTS FOR PROTECTION FROM CONCENTRATED ROADWAY RUNOFF EROSION AND SHOULDER RAVELING

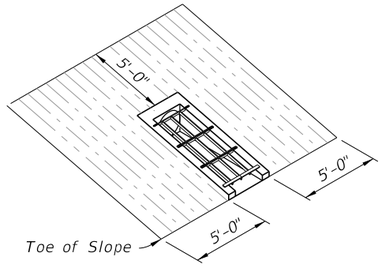

INDEX 430-010

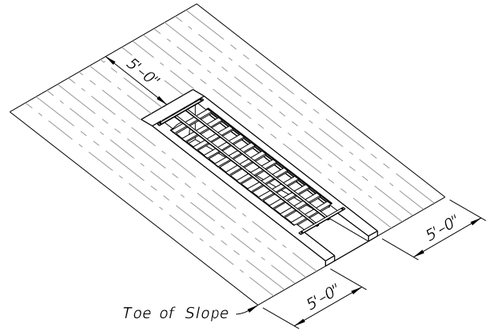

INDEX 430-011

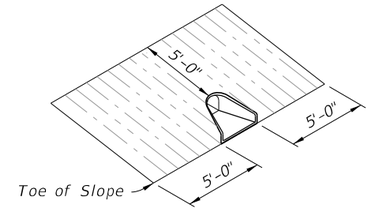

INDEX 430-020

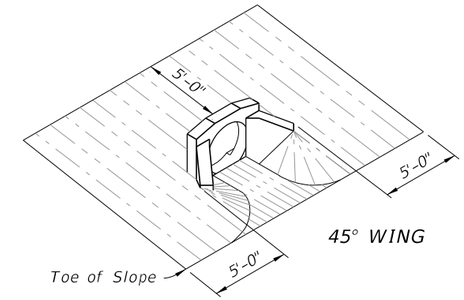

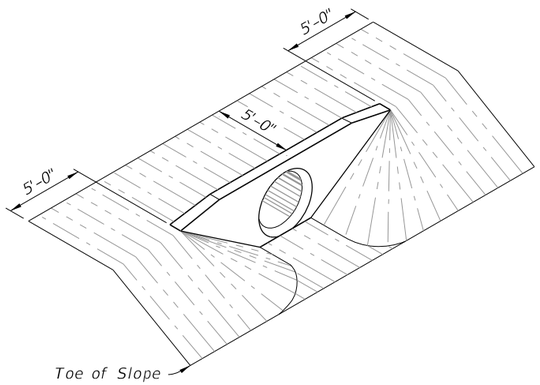

INDEX 430-030

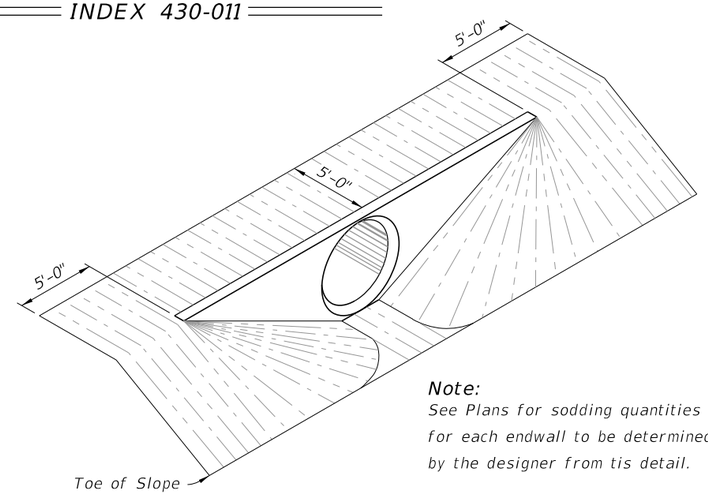

Note:
See Plans for sodding quantities for each endwall to be determined by the designer from tis detail.

INDEX 430-031 Through 430-034

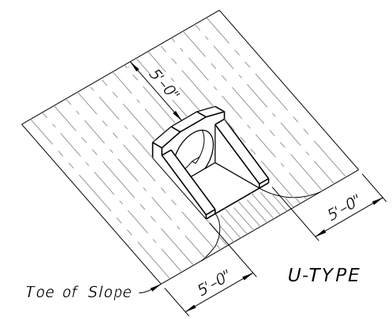

INDEX 430-040

TABLE 2: SOD QUANTITIES (SY)

	INDEX 430-010	INDEX 430-011				INDEX 430-020	INDEX 430-030												INDEX 430-040			
		SLOPE				ALL SLOPES	SLOPE												SLOPE			
PIPE SIZE	1:4	1:2	1:3	1:4	1:6		1:2			1:3			1:4			1:6			1:2	1:3	1:4	1:6
		PIPES				PIPES	PIPES												PIPES			
	1	1	1	1	1	1	1	2	3	1	2	3	1	2	3	1	2	3	1	1	1	1
12"						10													14	15	18	22
15"	15	13 (15)	16	17	23	11	19	21	24	22	26	29	26	30	33	34	38	43	15	17	20	25
18"	16	14 (16)	17	19	25	11	21	24	27	25	29	33	30	34	38	39	44	50	16	18	22	28
21"						12																
24"	19	15 (17)	19	21	28	14	26	30	34	32	37	42	38	44	50	50	58	66	19	22	26	34
27"						15																
30"	21	17 (18)	21	24	32	16	31	37	42	39	46	53	46	55	63	62	74	85	21	25	30	40
36"						18	37	44	52	46	56	65	56	67	79	76	91	107	24	29	35	47
42"						19	43	53	62	55	67	79	67	82	96	91	111	132	27	32	39	54
48"						21	50	62	73	64	79	93	78	97	115	108	133	158	30	36	44	61
54"						21	57	71	85	74	92	110	91	113	136	126	157	188				
60"						22																
66"						25																
72"						26																
		() Endwall With Baffles																				

SOD PLACEMENT AT PIPE/CULVERT END TREATMENTS

TREATMENT I

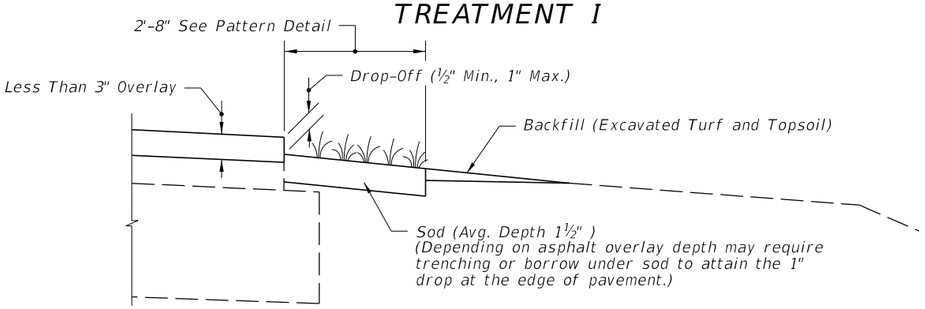

COMPLETED SHOULDER

CRITERIA FOR USING TREATMENT I

Project___
- is resurfacing, widening and resurfacing or construction of shoulder pavement
- is rural or is urban without curb and gutter
- resurfacing build-up is less than 3"

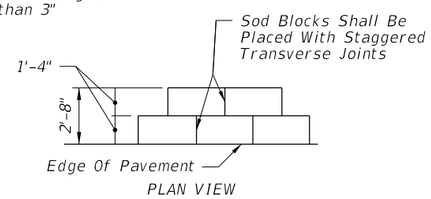

PATTERN DETAIL

TREATMENT II

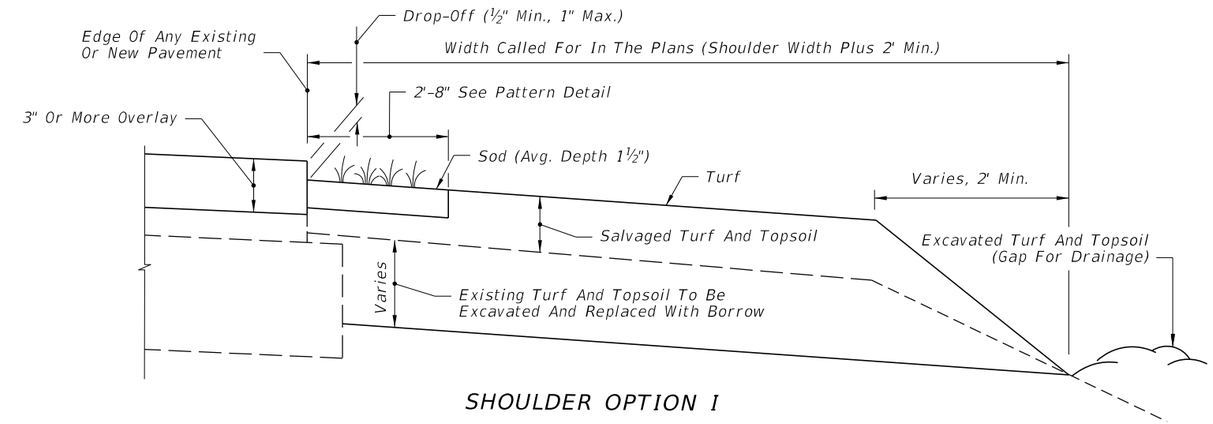

SHOULDER OPTION I

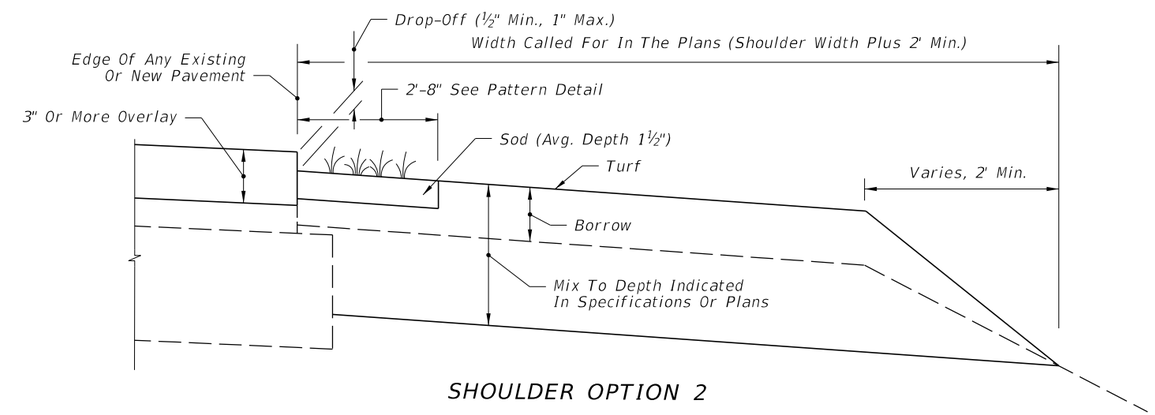

SHOULDER OPTION 2

CRITERIA FOR USING TREATMENT II

Project___
- is resurfacing or construction of shoulder pavement
- is rural or is urban without curb and gutter
- resurfacing build-up is 3" or more

A SIMILAR TREATMENT MAY BE USED FOR PROJECTS THAT REQUIRE SHOULDER WIDENING. DETAILS ARE TO BE SHOWN IN THE PLANS.

GENERAL NOTES

1. Treatment I:

   If trenching under sod is necessary to achieve the required Drop-Off, excavated topsoil is to be used for filling voids and low areas at the edge of pavement or for flushing along the edge of sod. Excess material to be uniformly distributed over the shoulder.

2. Treatment II:

   A. Borrow must meet the requirements for a "Select" material in accordance with Index 120-001 and Specification 120.

   B. Borrow may be used in lieu of excavated turf and topsoil when economically feasible. There will be no additional payment for substituting borrow for excavated turf and topsoil.

3. Special attention is to be directed at achieving the required Drop-Off at the edge of pavement, within the dimension range shown.

4. Activities such as clearing, grading, and excavating that will disturb one or more acres of land require coverage under the Generic Permit for Stormwater Discharge from Large and Small Construction Activities from the Florida Department of Environmental Protection, and implementation of appropriate pollution prevention measures to minimize erosion and sedimentation and properly manage stormwater.

5. Turf Establishment:

   A. Wildflowers destroyed by shoulder sodding and turf operations are to be reestablished under the seeding rates prescribed for permanent wildflower #2 Group shown by table on Index 570-001.

   B. Establish turf in accordance with Specification 570.

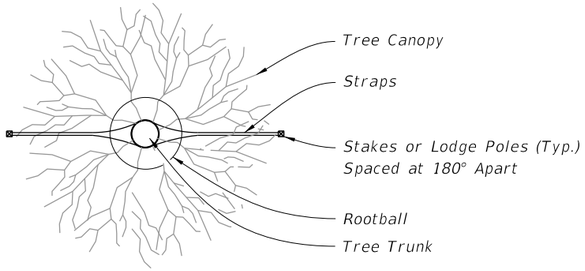

PLAN

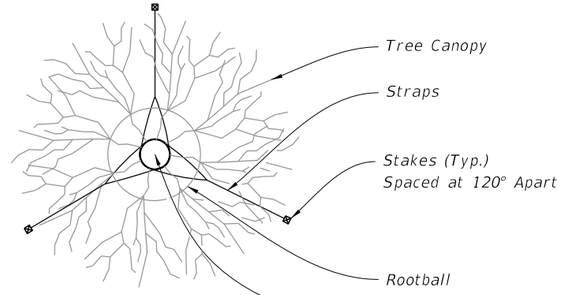

PLAN

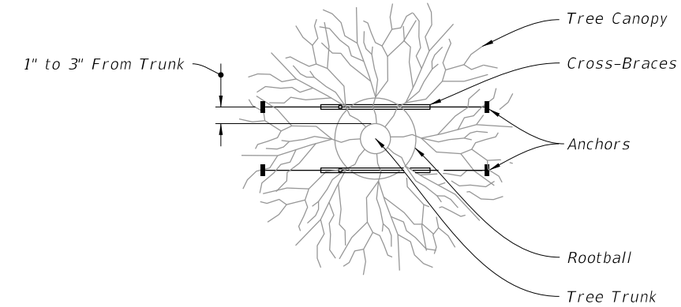

PLAN

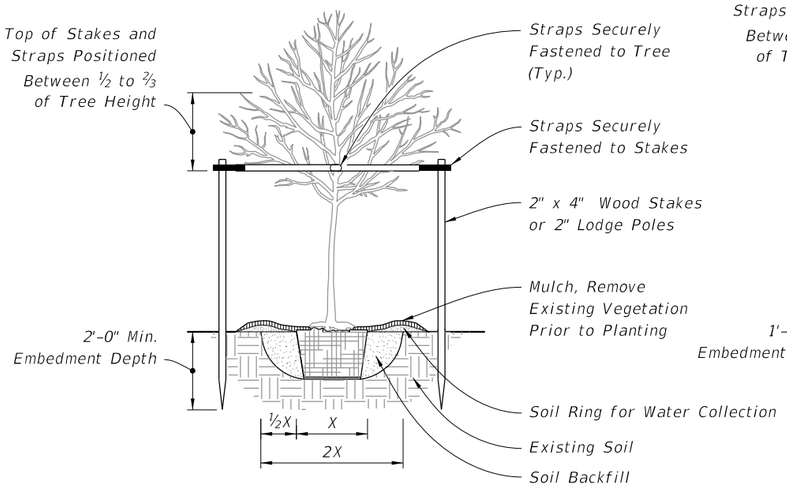

ELEVATION

UNDER 2½" CALIPER TREE PLANTING

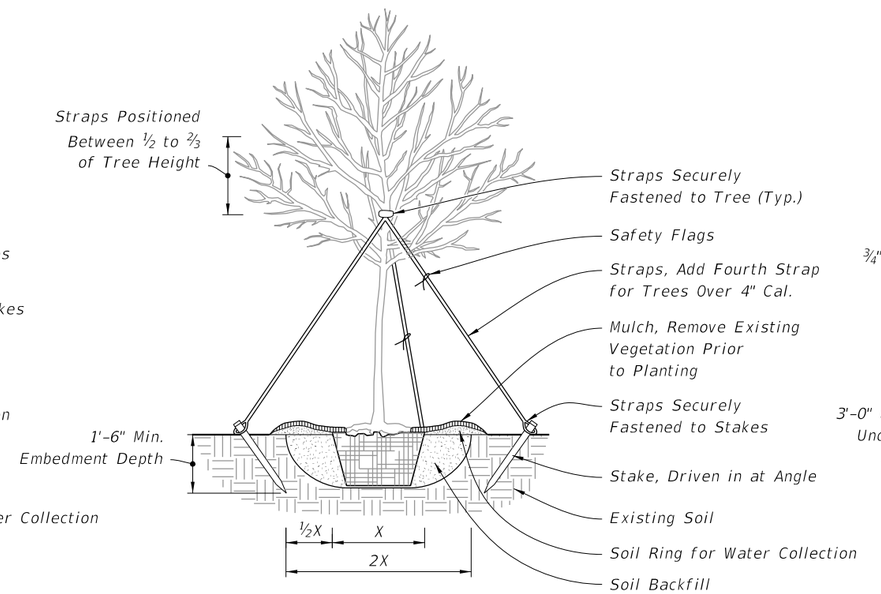

ELEVATION

2½" TO 6" CALIPER TREE PLANTING

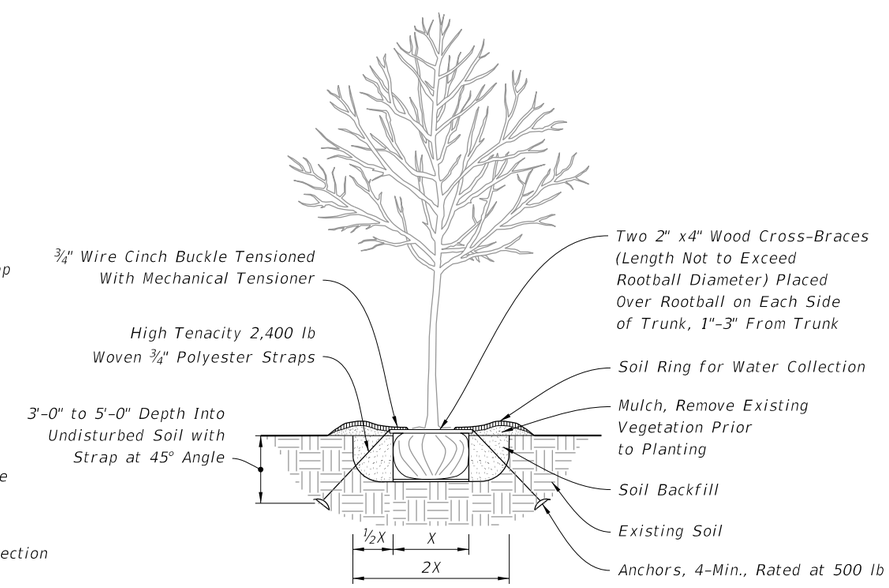

ELEVATION

UNDER 4" CALIPER TREE PLANTING WITH UNDERGROUND BRACING

GENERAL NOTES:

1. Staking guidelines are based on standard horticultural requirements and are provided for plant establishment purposes only. Details not intended to apply when bracing is intended to address safety considerations. When bracing for safety, refer to Designer generated signed and sealed details. These guidelines are not intended to apply when the tree or palm is within falling distance of a roadway, pedestrian or bicycle route, under extreme wind loads, non-standard soil properties, non-standard plant dimensions, or when rootball is anticipated to be greater than 4 feet diameter and planted on 1:3 slope or steeper.

2. All dimensions 6" and less are exaggerated for illustrative purposes only. Dimensions shown for wood materials are nominal. Slopes shown are Vertical:Horizontal.

3. Remove plant containers prior to planting. Remove a minimum of the top 1/3 of burlap, fabric, or wire mesh for plants not grown in containers.

4. Allow no more than 1" of soil to cover the uppermost root on all trees. Set the top of rootball 1"-2" above finish grade after settling and set plumb to the horizon.

5. Backfill with loosened existing soil or as shown in the plans. Remove rocks, sticks, or other deleterious material greater than 1" in any direction prior to backfilling. Water and tamp to remove air pockets. Contact the Engineer prior to planting if existing soils contain excessive sand, clay, or other material not conducive to proper plant growth.

6. Construct soil rings at the outer edge of the planting pit with a height of 3" and gently sloping sides unless a permanent, subsurface or drip irrigation system is provided. Do not pile soil on top of rootball.

7. Construct a 3" deep layer of mulch placed 2" off the edge of the trunk flare, around the base of shrub, or solidly around ground cover. Never pile mulch against the tree trunk.

8. Install guying with minimum 1" wide nylon or polypropylene straps with a minimum 600 lb. break strength. Check straps monthly and adjust as required to eliminate girdling of tree. Locate all wood stakes beyond the edge of soil ring in existing soil and embed a minimum of 18" below finished grade unless otherwise specified. Alternate tree bracing and guying systems specified or approved by the Engineer may be used in lieu of the tree bracing and guying methods detailed on the Index.

9. Relocated Trees and Palms: Brace relocated trees and palms in accordance with the Contract Documents. Remove bracing at the conclusion of the contract or as directed by the Engineer. Bracing or straps must not damage or become embedded in the tree bark.

10. Use 2" x 2" minimum wood stakes unless otherwise shown in the Plans or directed by the Engineer. Use wood meeting #2 Common or better in accordance with the Standard Grading Rules for Southern Pine.

11. Drive stakes into existing, undisturbed soil. Localized compaction may be provided to prevent displacement of the stakes for previously disturbed existing soils that do not provide sufficient stability.

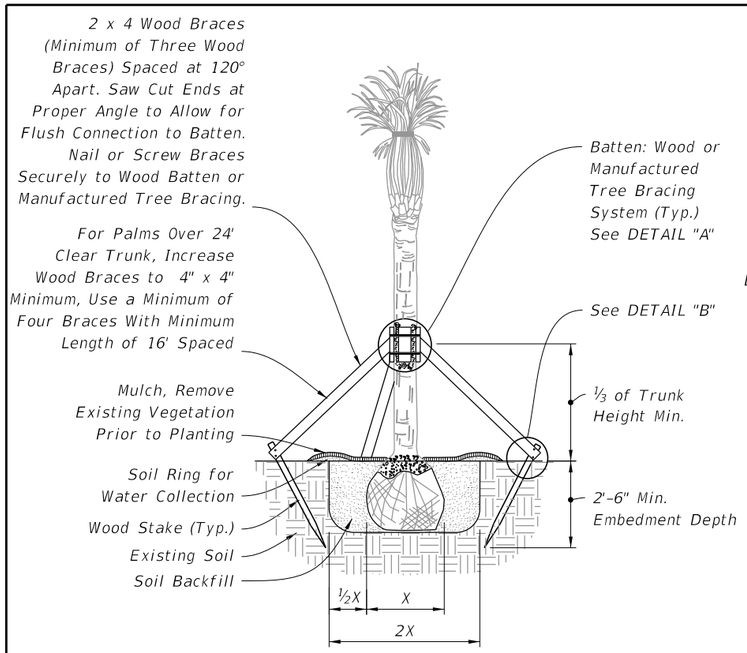

ELEVATION

NOTE: May be used on large caliper canopy trees, adjust banding every 6 months or as needed (for fast growing species) to prevent girdling.

PALM PLANTING

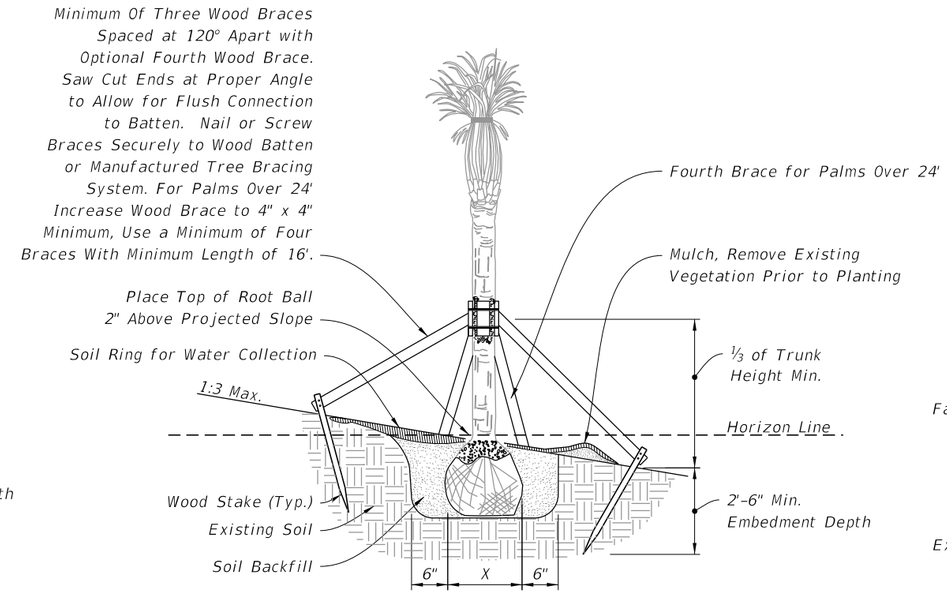

ELEVATION

NOTE: May be used on large caliper canopy trees pending slope and rootball width, adjust banding every 6 months or as needed (for fast growing species) to prevent girdling.

PALM PLANTING ON SLOPE

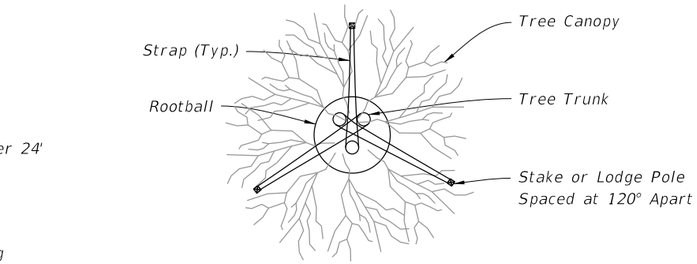

PLAN

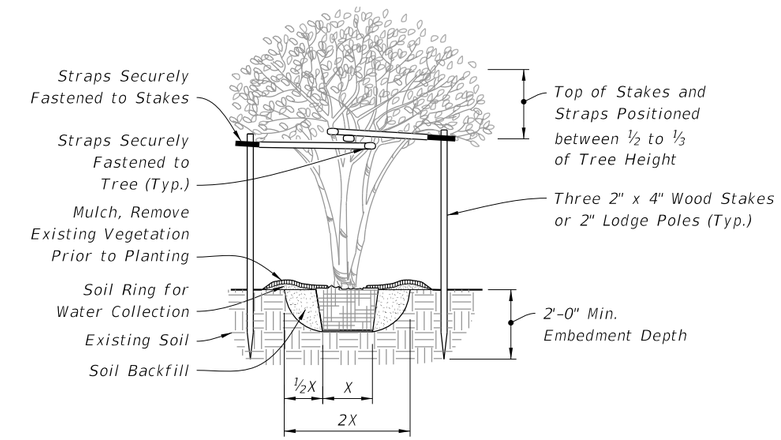

ELEVATION

MAX 10' HT. MULTI-TRUNK TREE PLANTING

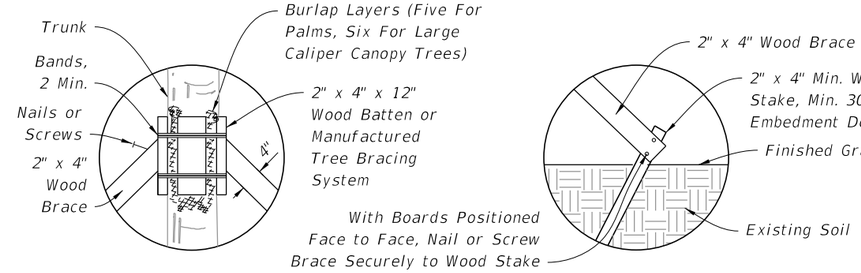

NOTE: Install bands and couplings that are rated a min. 900 lb. tensile strength, and are corrosion and UV resistant.

DETAIL "A"

NOTE: Stake Into Firm, Existing Soil.

DETAIL "B"

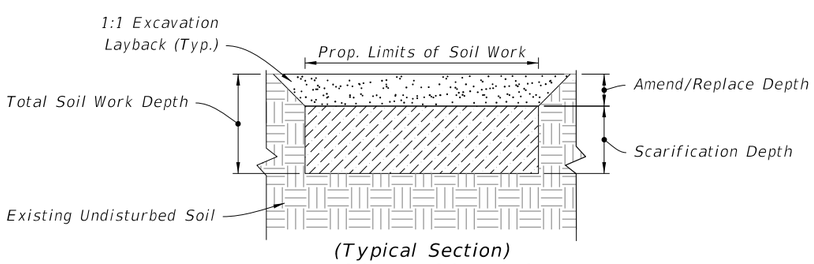

(Typical Section)

LANDSCAPE SOIL WORK

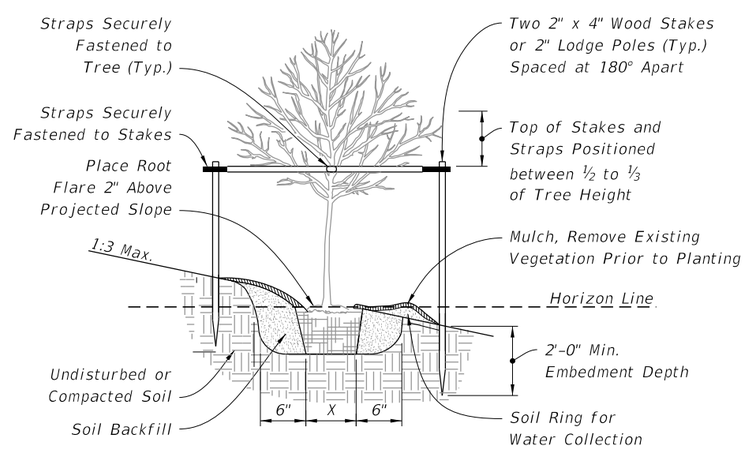

ELEVATION

UNDER 2½" CALIPER TREE PLANTING ON SLOPE

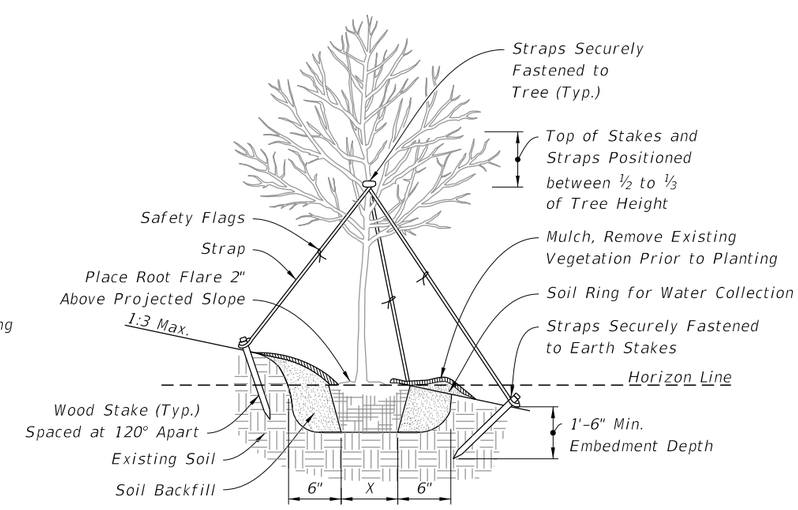

ELEVATION

2½" TO 6" CALIPER TREE PLANTING ON SLOPE

8:54:46 AM

10/20/2022

LAST REVISION	REVISION	DESCRIPTION:			INDEX	SHEET
11/01/19			FY 2023-24 STANDARD PLANS	LANDSCAPE INSTALLATION	580-001	2 of 2

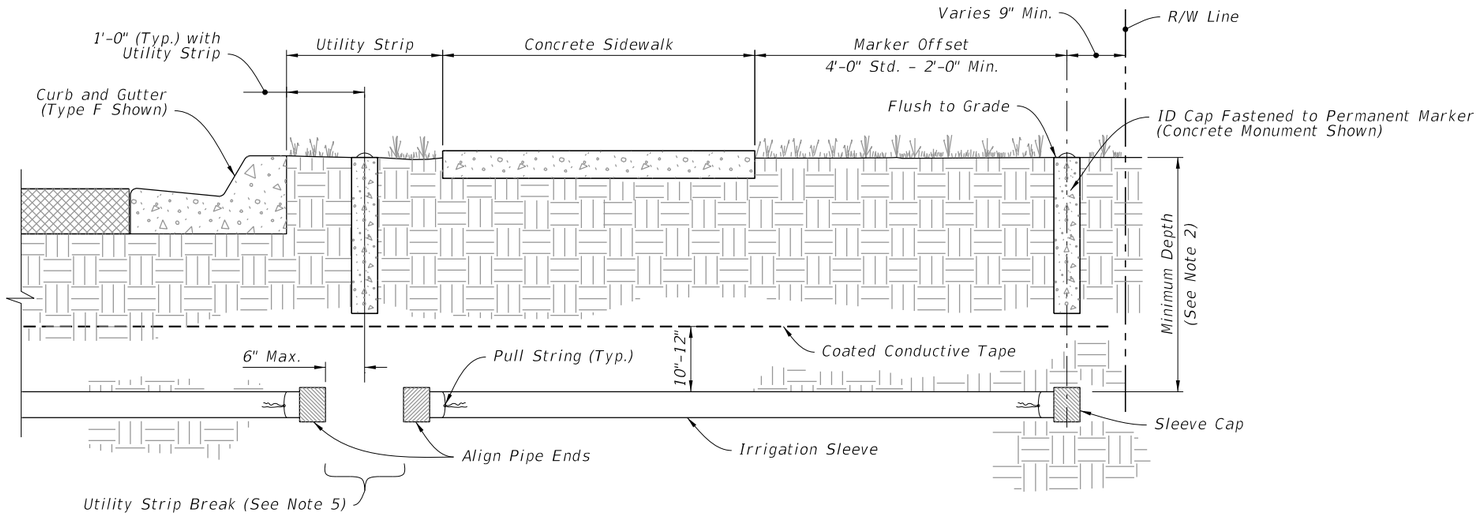

ROADWAY WITH UTILITY STRIP

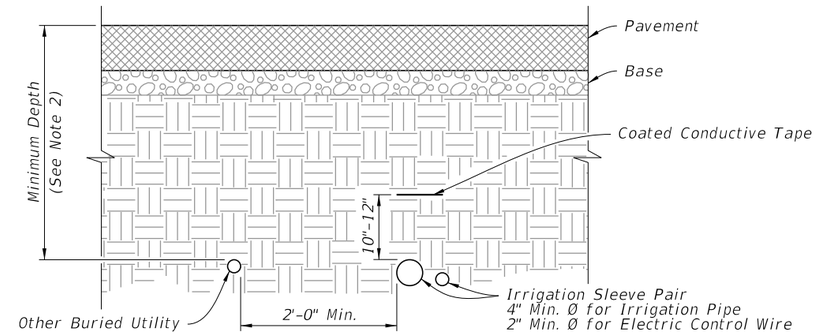

ROADWAY CROSS SECTION

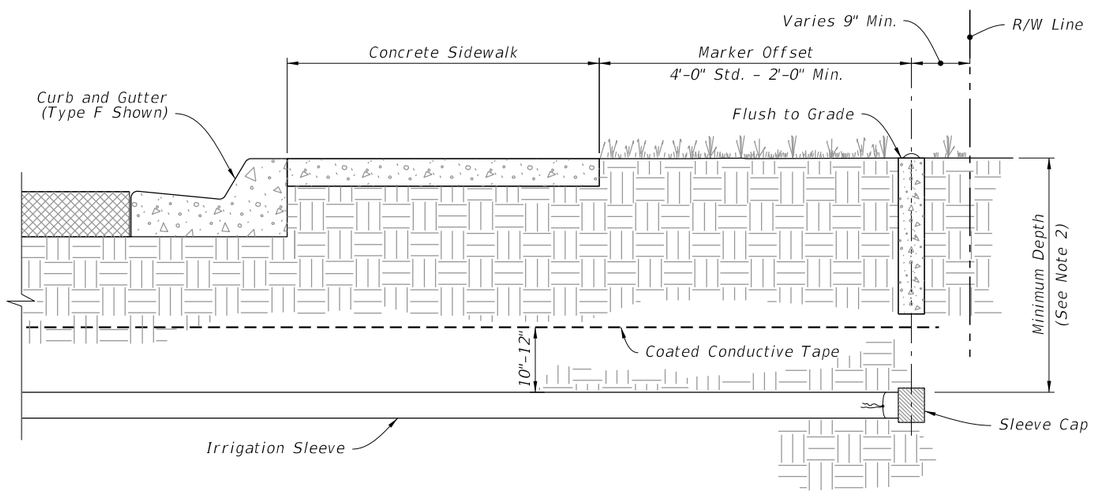

ROADWAY WITHOUT UTILITY STRIP

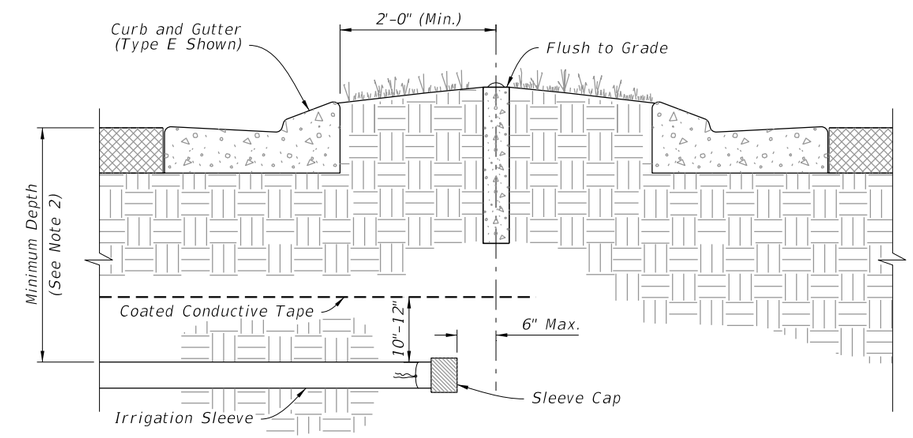

ROADWAY MEDIAN OR ROUNDABOUT

NOTES:

1. Work this Index with Specification 591.
2. Install Sleeve with the minimum depth measured from the top of the Irrigation Sleeve as shown in the Plans or specified in Index 630-001.
3. When installing Irrigation Sleeves in a median crossover, place sleeves along the centerline.
4. Irrigation Sleeves for Electrical Control Wire and Irrigation Pipe must be no further than 12" apart.
5. Install Utility Strip Breaks only when shown in the Plans.

GENERAL NOTES:

1. Install conduit in accordance with Specification 630.
2. When sidewalk is damaged by conduit installation, replace entire sidewalk slab.
3. Trench not to be open more than 250' at a time when construction area is subject to vehicular or pedestrian traffic.
4. Sawcut asphalt at the edges of the trench to leave neat lines.
5. Provide route marker and route marker label in accordance with Specification 630.

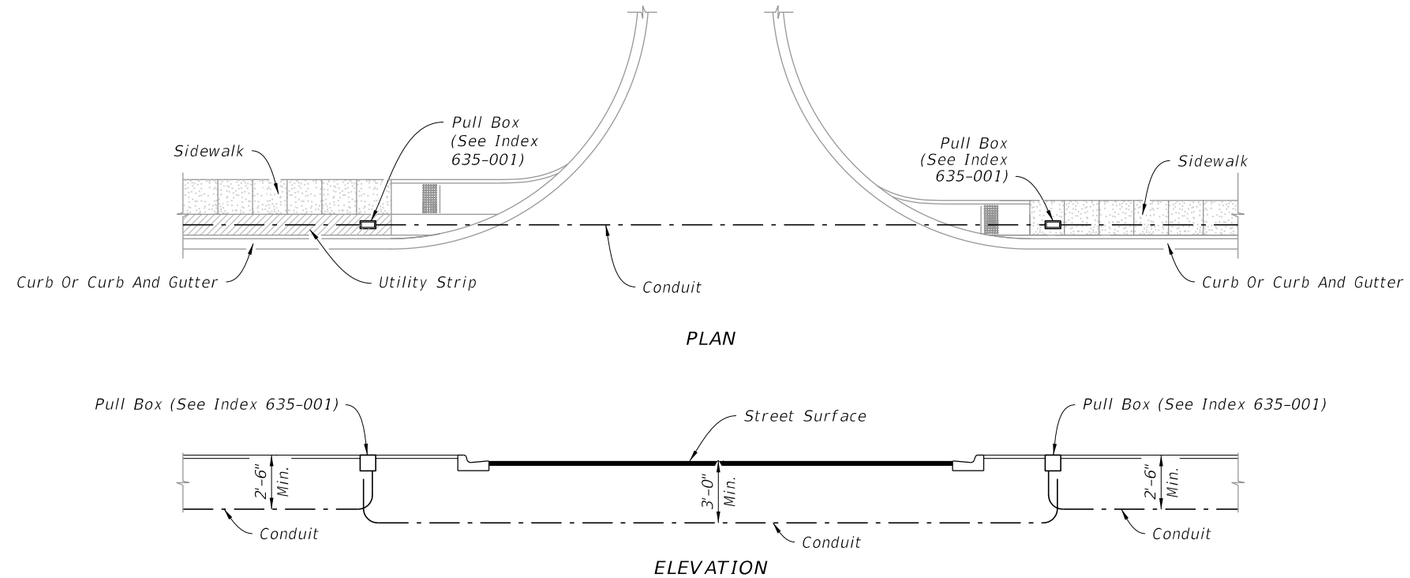

CURB AND GUTTER

ROUTE MARKER DETAIL

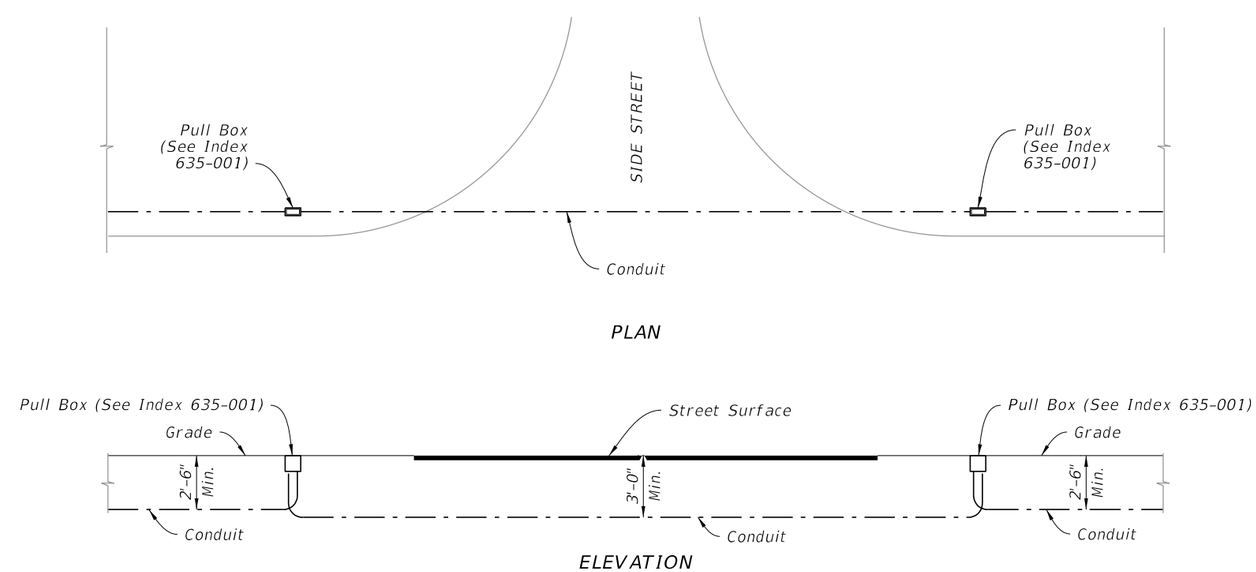

FLUSH SHOULDER

10/20/2022 8:54:48 AM

LAST REVISION	REVISION	DESCRIPTION:			INDEX	SHEET
11/01/21			FY 2023-24 STANDARD PLANS	CONDUIT INSTALLATION DETAILS	630-001	1 of 4

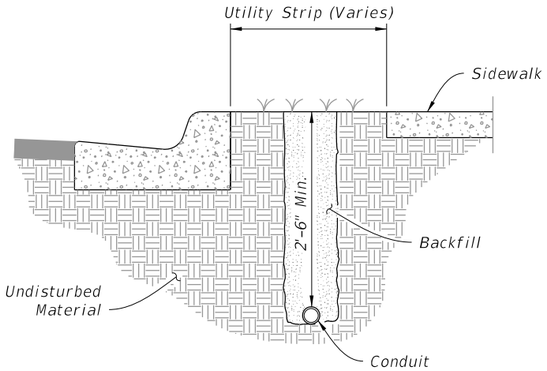

PLACEMENT WITHIN THE UTILITY STRIP

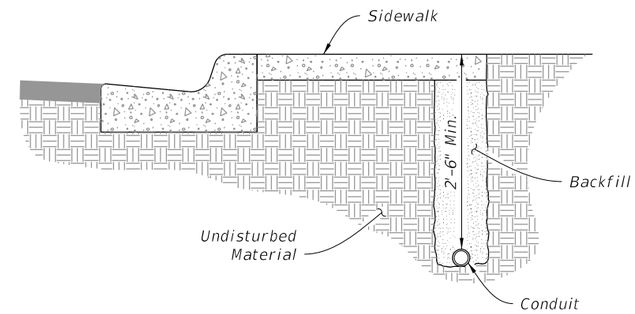

PLACEMENT UNDER SIDEWALK

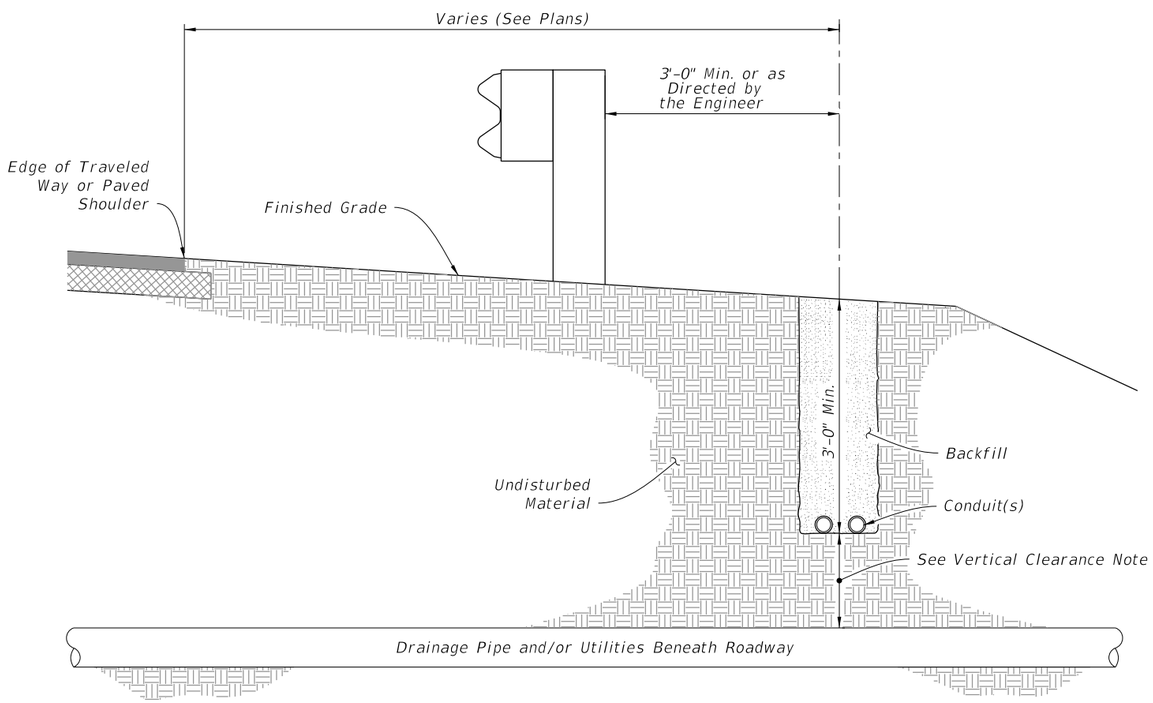

PLACEMENT BEHIND GUARDRAIL

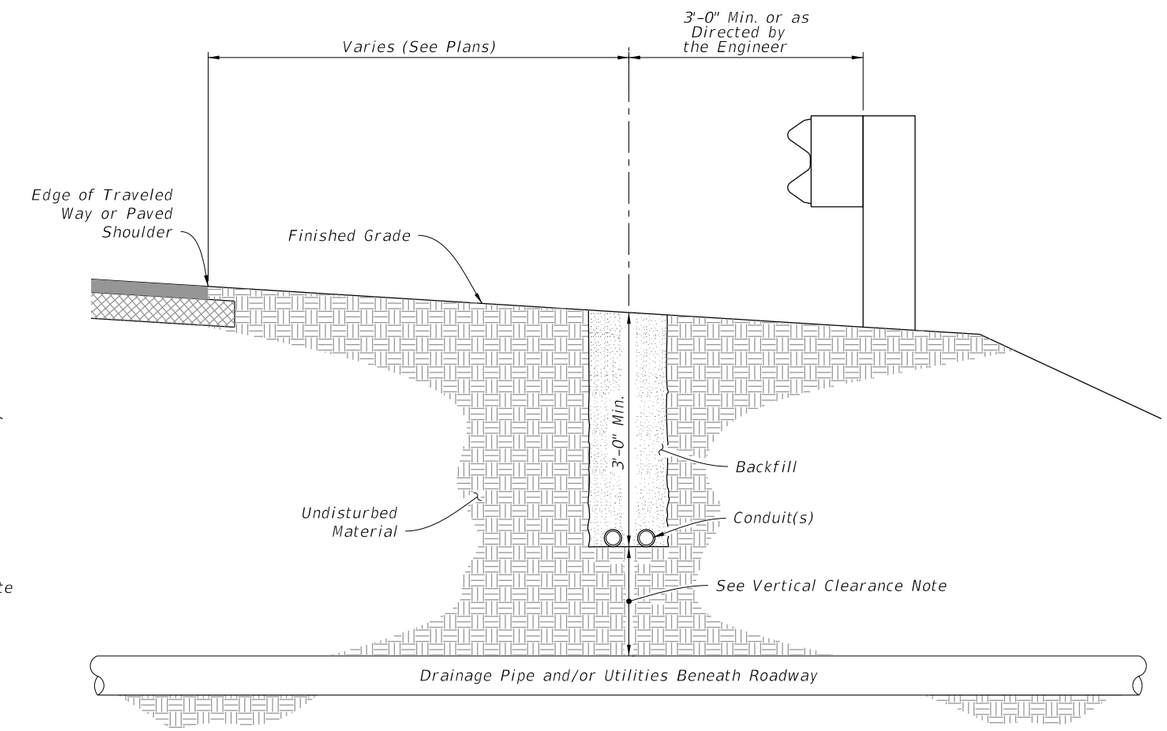

PLACEMENT IN FRONT OF GUARDRAIL

VERTICAL CLEARANCE NOTE:

Maintain 1'-0" minimum vertical clearance when crossing over pipe and or utilities. If minimum vertical clearance cannot be maintained, conduit is to be routed under pipe maintaining 1'-0" minimum vertical clearance.

10/20/2022 8:54:49 AM

LAST REVISION	REVISION	DESCRIPTION:			INDEX	SHEET
11/01/18			FDOT FY 2023-24 STANDARD PLANS	CONDUIT INSTALLATION DETAILS	630-001	2 of 4

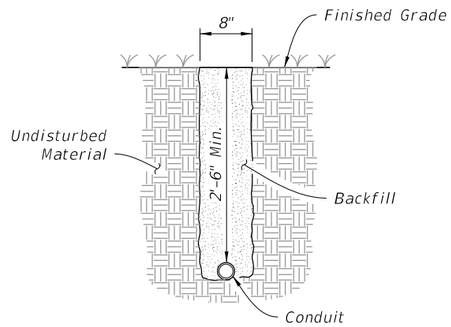

PLACEMENT NOT EXPOSED TO VEHICULAR TRAFFIC

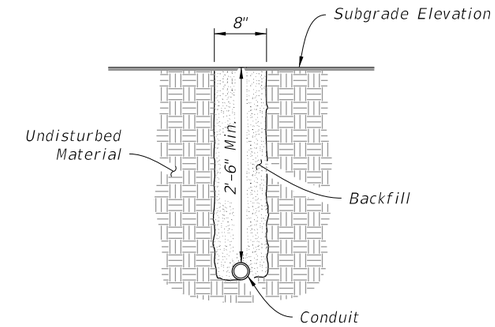

PLACEMENT UNDER NEW ROADWAY PRIOR TO INSTALLATION OF BASE AND PAVEMENT

NOTES:

1. Pavement Removal: The removal and replacement of the additional pavement width (i.e., 6" Width either side of trench) will not be required when the trench can be constructed without disturbing the asphalt surface on either side.

2. Placement Under Existing Pavement: Place conduit prior to installation of base and pavement, unless otherwise shown in the Plans or approved by the Engineer.

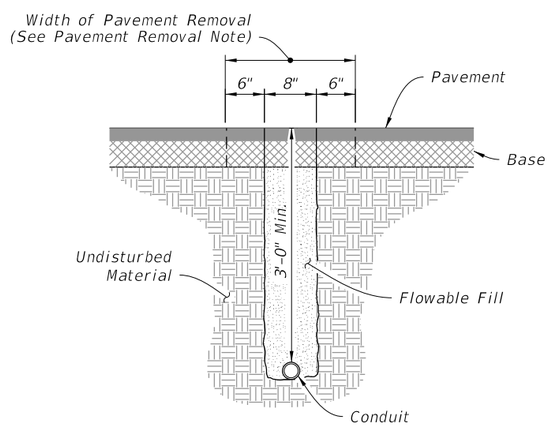

PLACEMENT UNDER EXISTING PAVEMENT NOT ADJACENT TO GUTTER

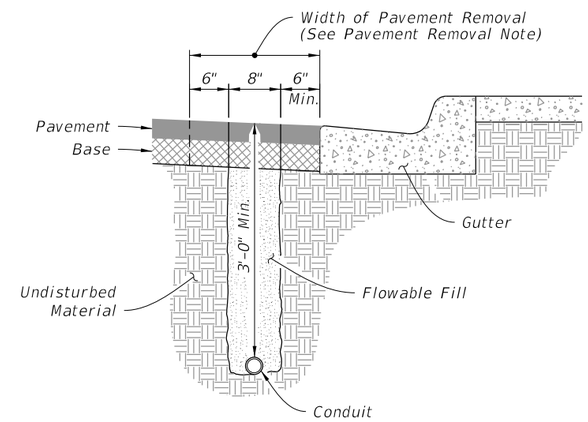

PLACEMENT UNDER EXISTING PAVEMENT ADJACENT TO GUTTER

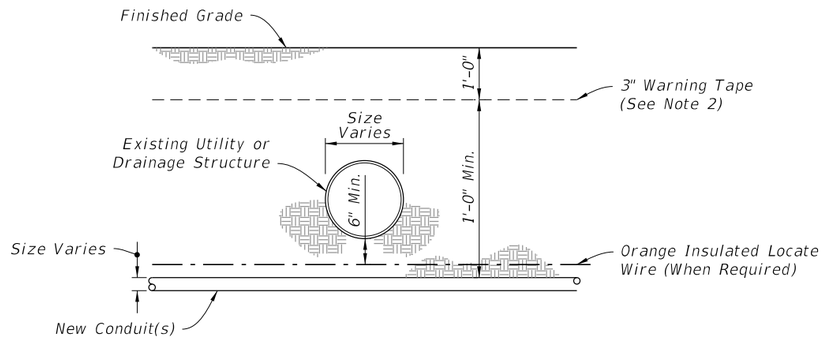

BELOW EXISTING

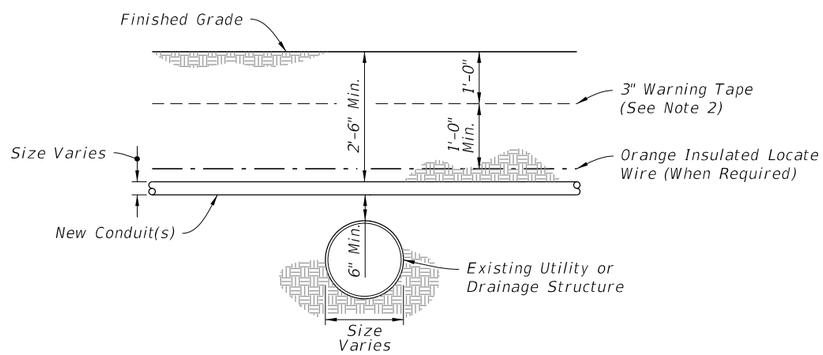

ABOVE EXISTING - DEPTH 2'-6" OR GREATER

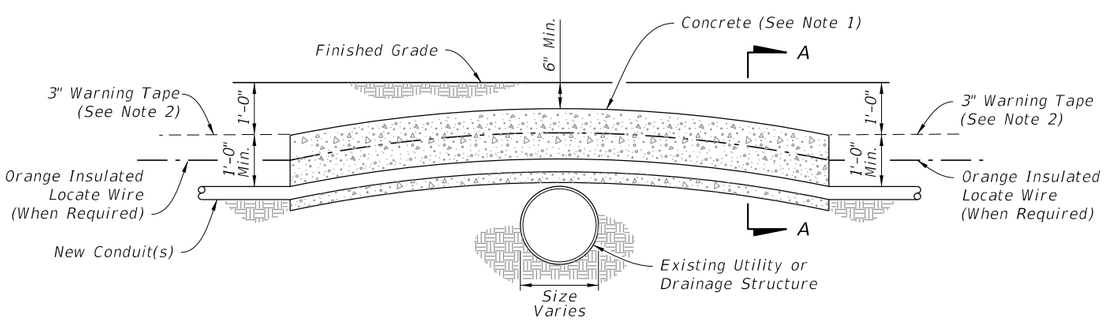

ABOVE EXISTING - DEPTH 2'-6" OR LESS

PLACEMENT ACROSS EXISTING DRAINAGE PIPES OR UTILITIES

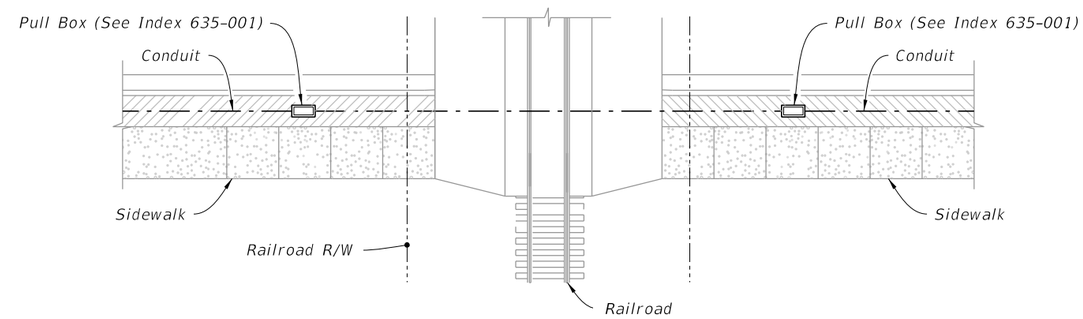

PLAN

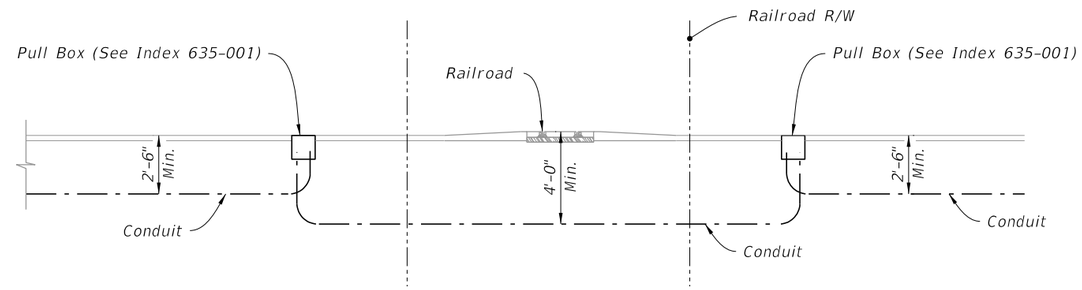

PLACEMENT UNDER RAILROAD

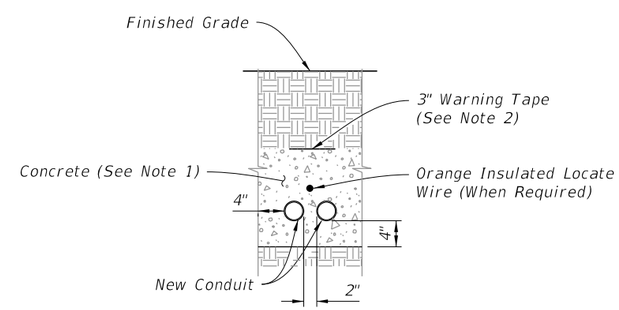

SECTION A-A

NOTES:

1. Where conduits are to be installed over existing underground structures (e.g., drainage pipes or utility lines) which are less than 2'-6" deep, encase the conduit in Class NS concrete for the entire length of conduit that is installed at a depth of less than 2'-6".

2. Place 3" Warning Tape when new conduit is installed at a depth of 1'-6" or greater, and the new conduit is not encased in concrete.

10/20/2022 8:54:51 AM

LAST REVISION	REVISION	DESCRIPTION:			INDEX	SHEET
11/01/18			FDOT FY 2023-24 STANDARD PLANS	CONDUIT INSTALLATION DETAILS	630-001	4 of 4

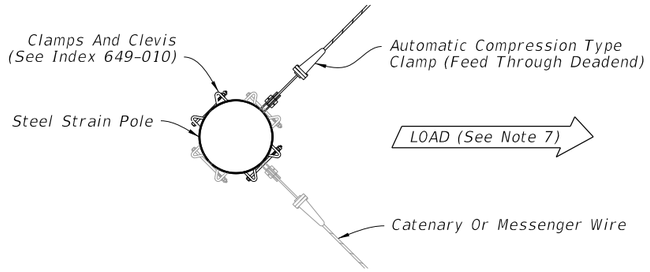

PLAN
(Two Span Connections Shown)

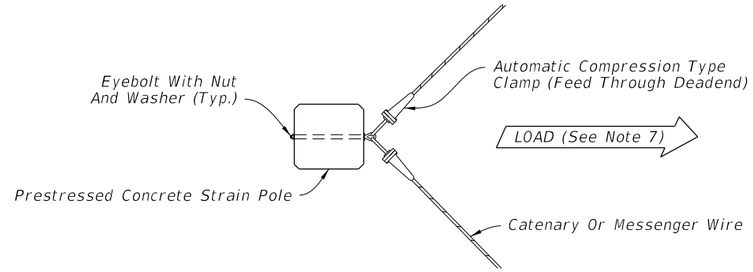

PLAN
(Two Span Connections Shown)

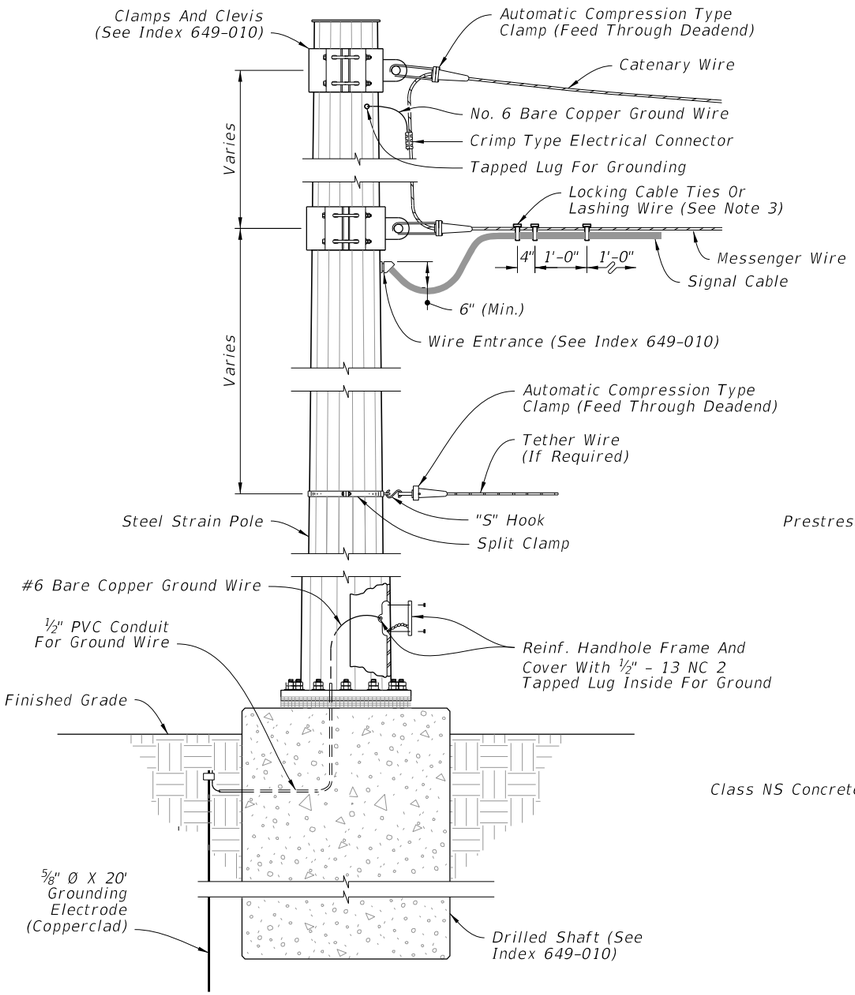

ELEVATION

STEEL STRAIN POLE

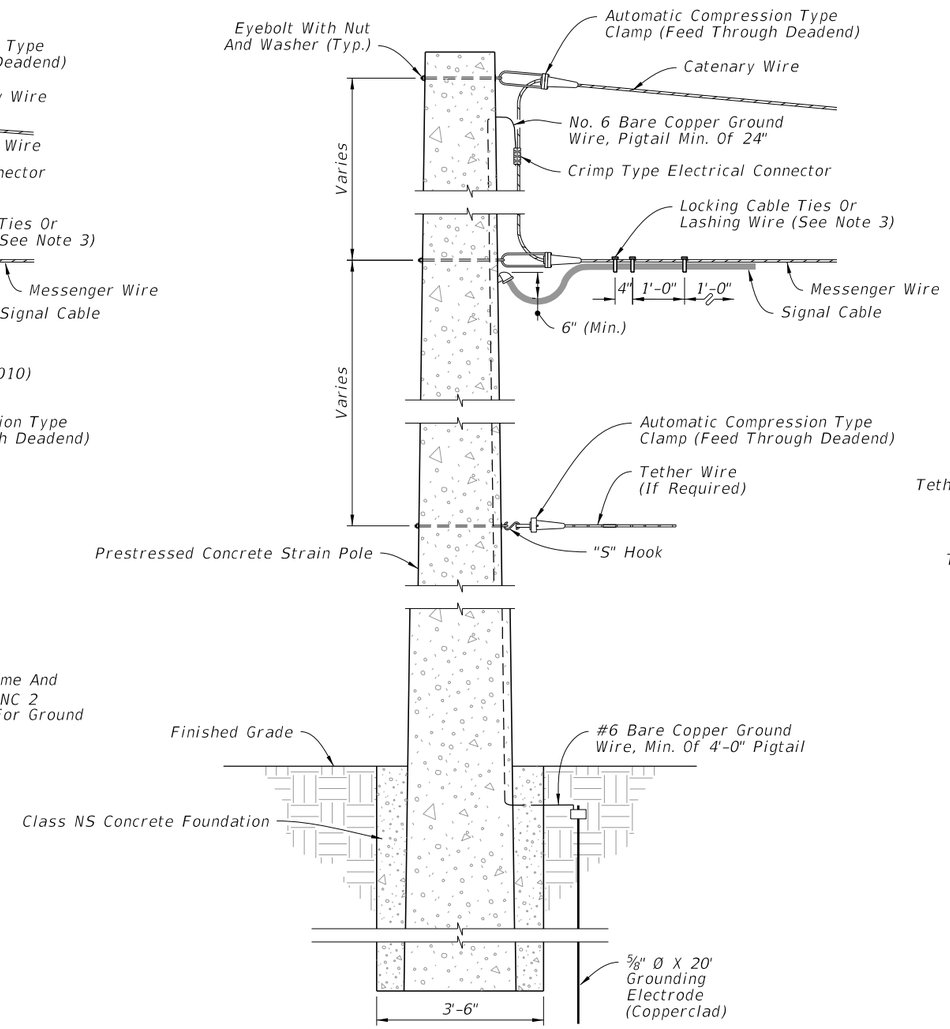

ELEVATION

PRESTRESSED CONCRETE STRAIN POLE

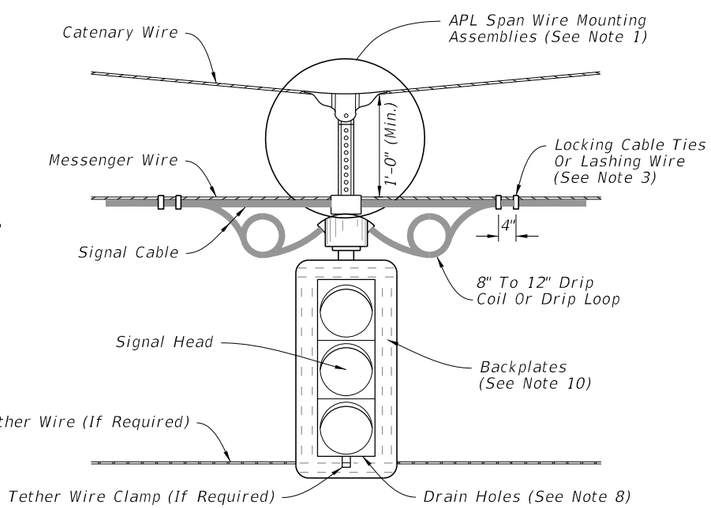

ELEVATION

SIGNAL ATTACHMENT

NOTES:

1. Use only span wire mounting assemblies listed on the APL. For specific details and requirements, see the vendor drawings on the APL.
2. With the approval of the resident engineer, the service head hole for joint use poles may be drilled by the utility company at an angle of 90° but not less than 45° to the face of the pole.
3. Lashing wire should normally be used for distances of 12' or greater.
4. Use only stainless steel hardware on all signal attachments.
5. Hole for eyebolt will require field reaming for 1" & 1¼" eyebolts.
6. Meet all grounding requirements of Specification 620.
7. The load face of pole is to be perpendicular to the resultant load.
8. Field Drill 2~¼" drain holes in the bottom of the installed signals.
9. Method of framing corner Strain Poles angles 10° to 120°.
10. Use only backplates listed on the APL. For specific details and requirements, see the vendor drawings on the APL.

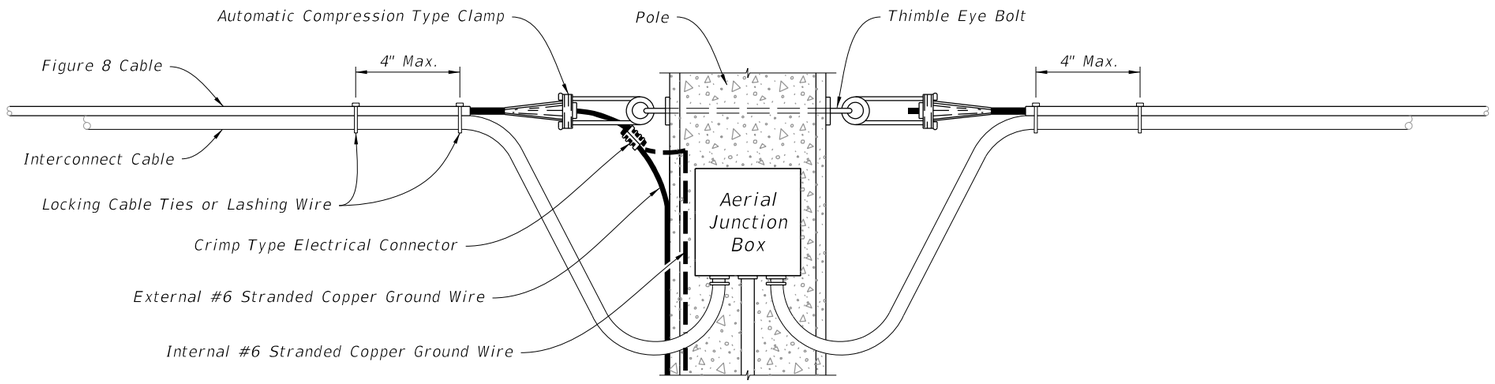

CABLE DROP AND TERMINATION WITH FIGURE 8 CABLE

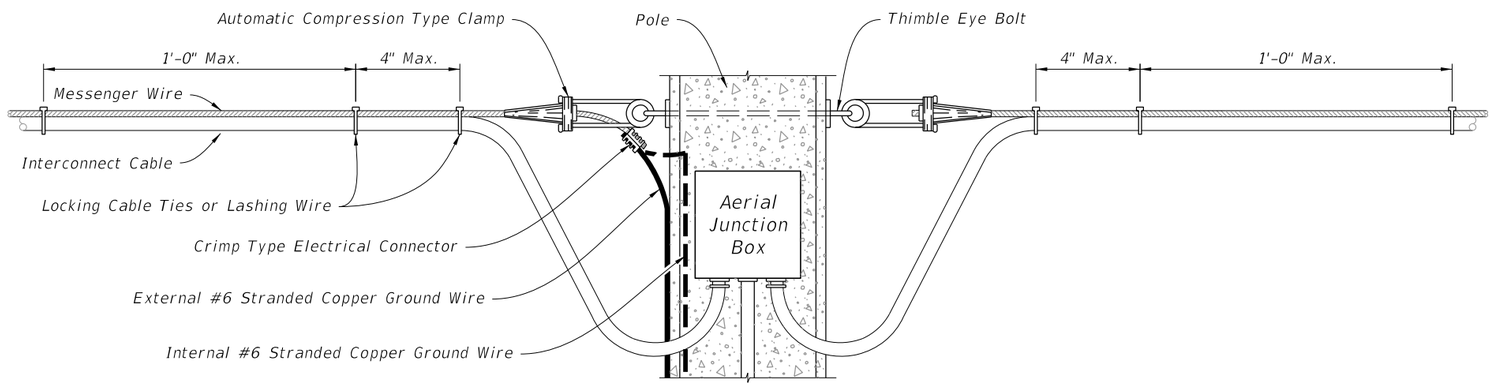

CABLE DROP AND TERMINATION WITH MESSENGER WIRE AND COMPRESSION CLAMP

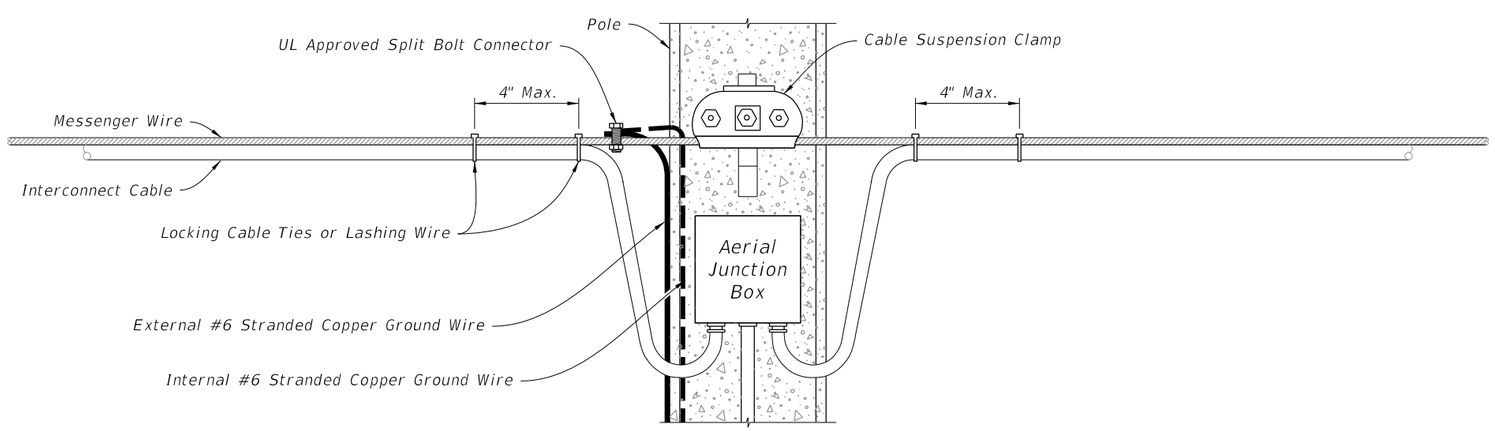

CABLE DROP AND TERMINATION WITH MESSENGER WIRE AND SUSPENSION CLAMP

NOTES:

1. Meet all grounding requirements of Specification 620.
2. If accessible, ground the messenger wire of the interconnect cables to the copper ground wire of the pole or to the external wire extending down the pole.
3. When utilizing the external ground wire, install a piece of ½" conduit extending up 8' from the finish grade to protect the ground wire connecting the messenger wire to the ground rod.
4. Use either locking cable ties or lashing wire, placed no further than 12" apart. Except at the point of cable drop or terminations, place one (1) at the point where the cables separate from the messenger wire and place another at a maximum distance of 4" from that tie.
5. When installing Figure 8 interconnect cable, only use locking cable ties.
6. Lashing wire should normally be used for distances of 12' or greater.

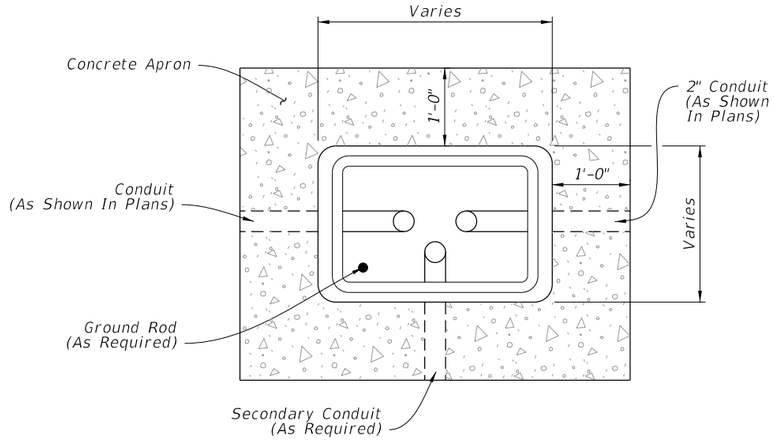

PLAN

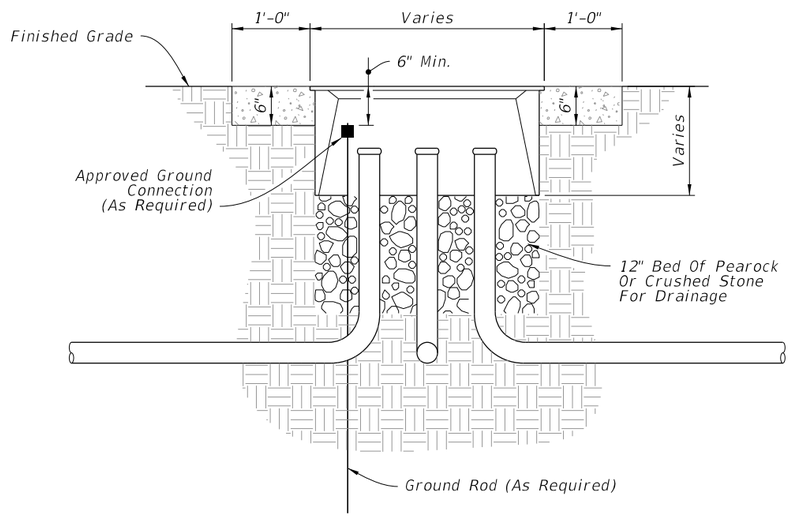

ELEVATION

PULL BOX

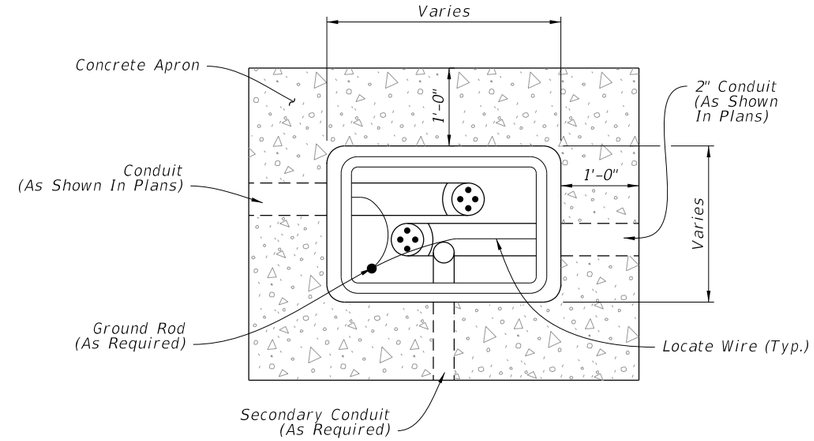

PLAN

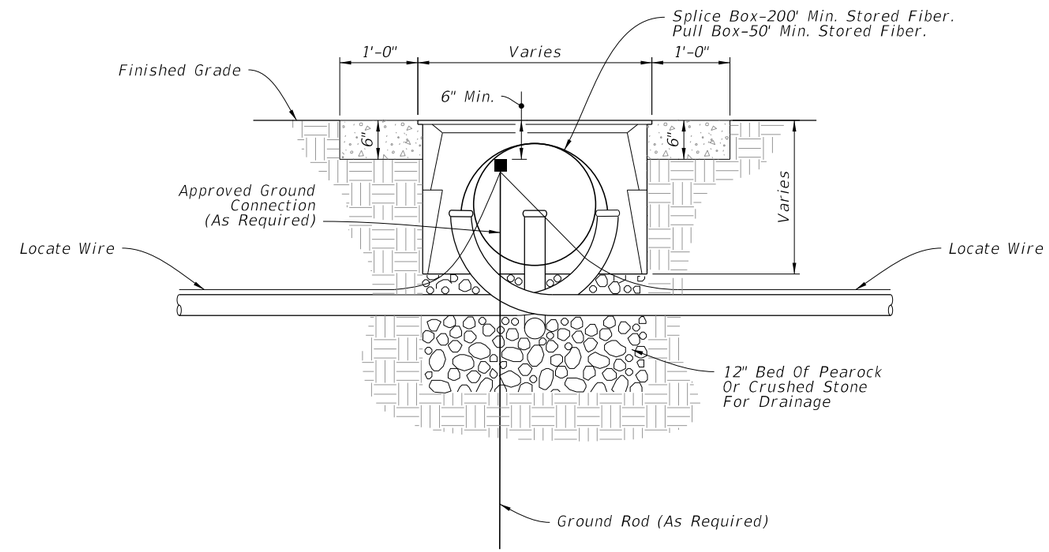

ELEVATION

FIBER OPTIC BOX

NOTES:

1. Provide fiber optic splice boxes with cable hanger racks designed to support cables and splice enclosures.
2. Install a 1'-0" wide (Min.) concrete apron around all boxes using Class NS concrete. Slope the apron away from the box.
3. Where multiple pull boxes are placed side by side, maintain at least 8" between the pull boxes.
4. Rectangular boxes shown, others similar.

GENERAL NOTES:

1. It shall be the contractors responsibility to provide a complete service assembly as per the plans and service specifications.
2. The service installation shall meet the requirements of the national electric code and applicable local codes.
3. Shop drawings are not required for service equipment, unless noted in the plans.
4. A Pull Box is required at each service point, see Index 635-001.

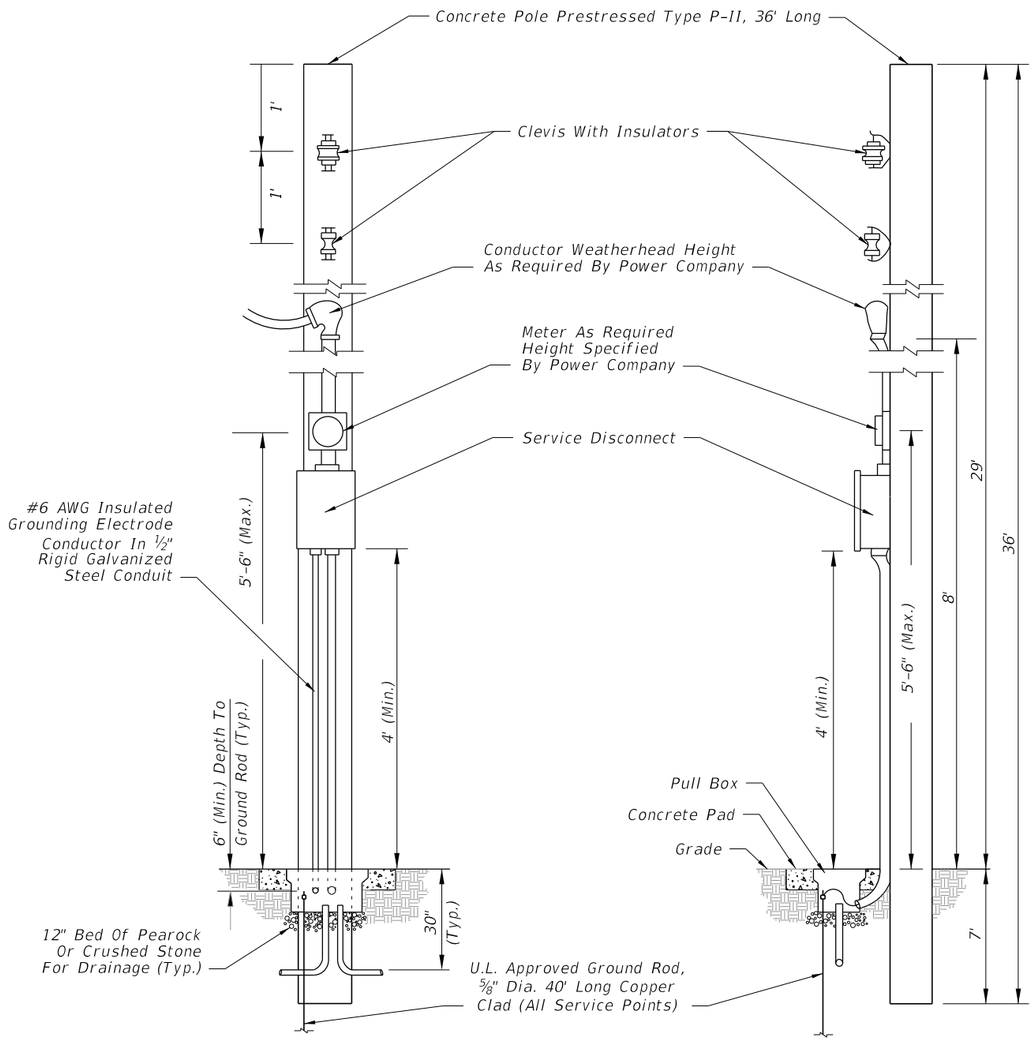

DETAIL A
AERIAL FEED

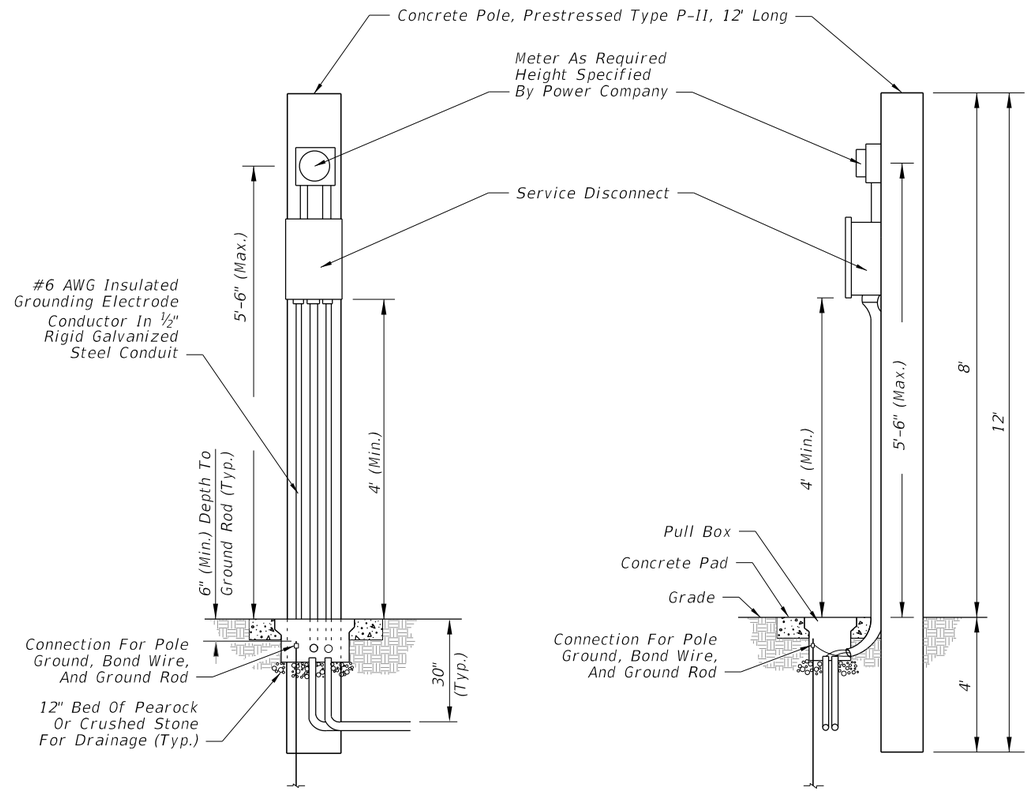

DETAIL B
UNDERGROUND FEED

10/20/2022 8:54:54 AM

LAST REVISION	REVISION	DESCRIPTION:			INDEX	SHEET
11/01/17			FY 2023-24 STANDARD PLANS	SERVICE POINT DETAILS	639-001	1 of 2

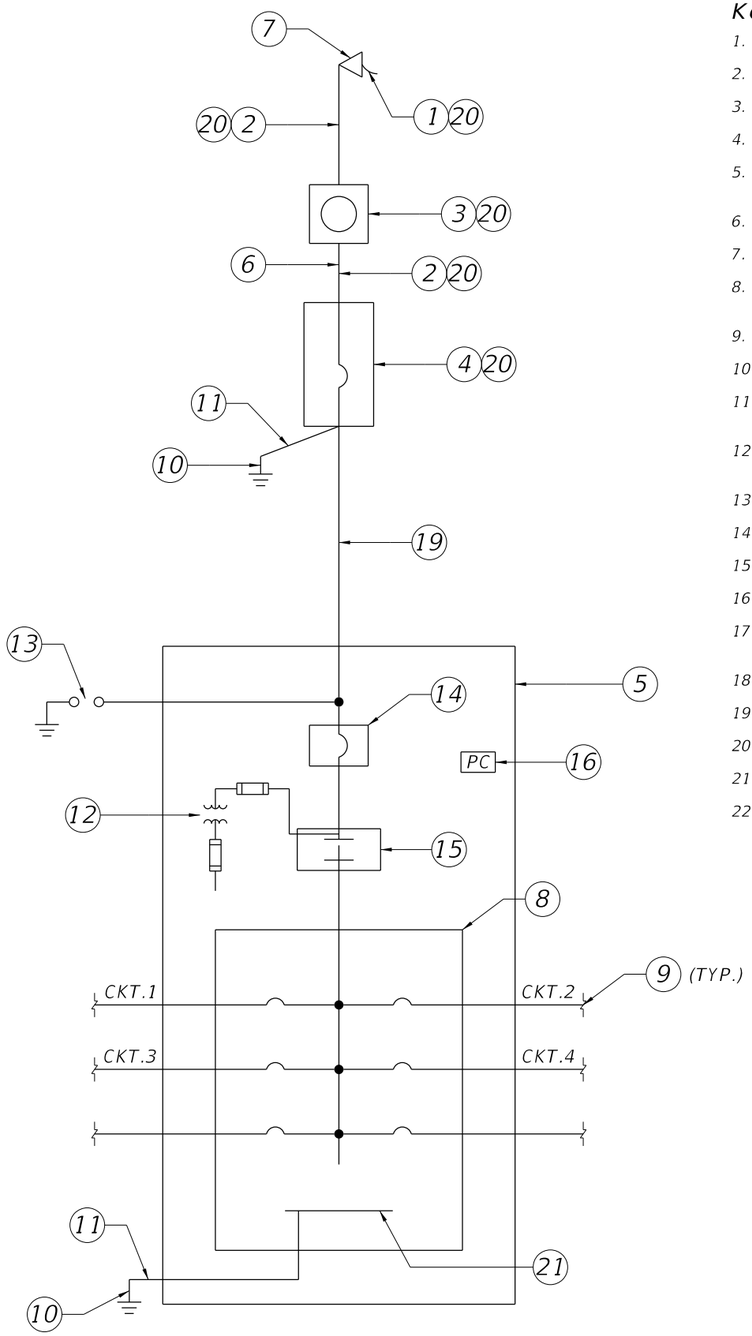

ONE LINE DIAGRAM DISTRIBUTION POINT

Keyed Notes:

1. 240/480V, Single Phase 3 Wire Electric Distribution Overhead Service Drop.
2. Service Feeder in Rigid Galvanized Steel Conduit.
3. Meter Socket by Contractor
4. Service Main Disconnect.
5. Lighting Control Panel Enclosure (NEMA 4X SST). Dimensions as Necessary for Equipment Inside. Ground Mounted Cabinet per Index 639-002.
6. Concrete Riser Pole.
7. Weatherhead.
8. Electrical Panel. Number and Rating of Branch Circuit Breakers shall be as Indicated on Distribution Point Description on Lighting Plan Sheets.
9. Branch Circuit to Roadway Luminaires.
10. 5/8" Copper Clad Ground Rod, 40' Long.
11. #6 Insulated Copper Ground Wire. Bond the Service Neutral to Ground at Service Main Disconnect.
12. Fused Control Power Transformer 0.5 KVA, Single Phase, 480V Primary, 120V Secondary (Part of Lighting Contactor, Shown Outside for Clarity).
13. Lightning Arrester Mounted on Outside of Enclosure.
14. Lighting Control Panel Main Breaker.
15. 2 Pole Electrical Lighting Contactor.
16. 120V Photoelectric cell, 1800VA with 2000V Peak Surge Protection.
17. Hand-off Automatic Selector Switch (Part of Lighting Contactor, Shown Outside for Clarity).
18. Concrete Pad.
19. Underground Feeder Conduit.
20. Mount on Riser Pole.
21. Ground BUS.
22. NEMA 4X SST Ground Mounted Storage Cabinet with Two Shelves. Only Required for High Mast Lighting Systems.

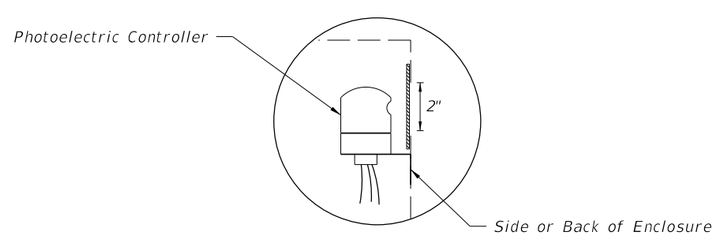

Cut a 2" hole in the side of the Lighting Control Panel enclosure for the operation and mounting of the Photo Electric controller. Use plexiglass and a clear silicone sealant to cover hole, install Photo Electric Controller.

PHOTOELECTRIC CONTROLLER DETAIL

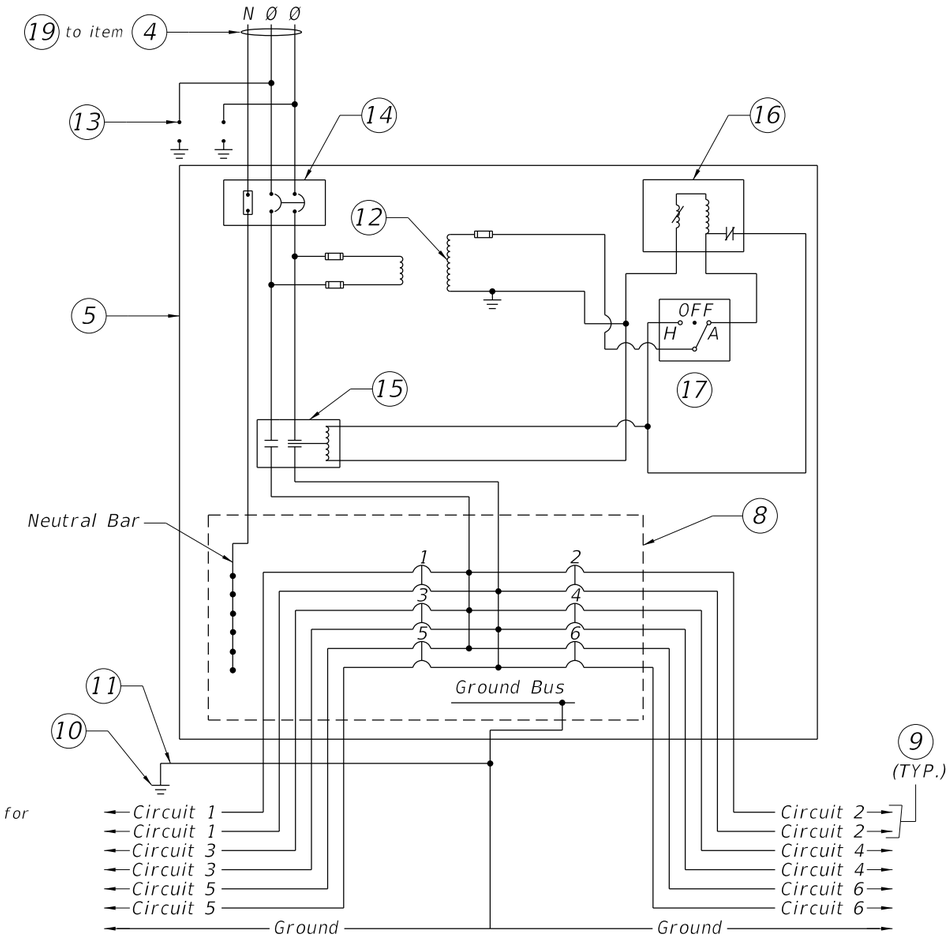

TYPICAL DISTRIBUTION POINT SCHEMATIC DETAIL

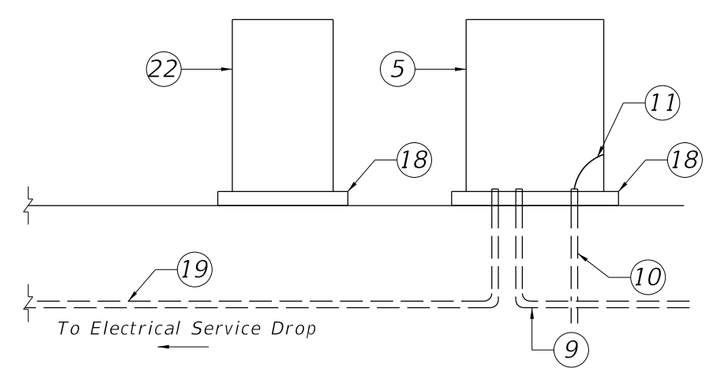

RISER DIAGRAM - TYPICAL DISTRIBUTION POINT

10/20/2022 8:54:55 AM

LAST REVISION	REVISION	DESCRIPTION:			INDEX	SHEET
11/01/19			FY 2023-24 STANDARD PLANS	SERVICE POINT DETAILS	639-001	2 of 2

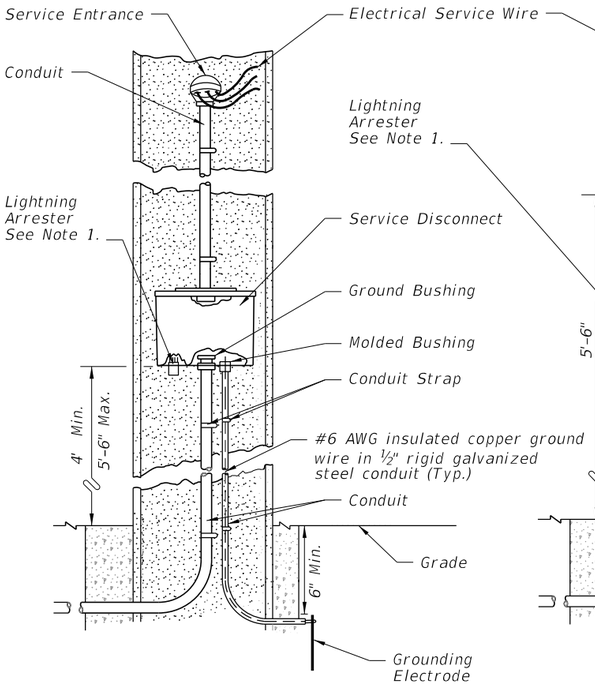

AERIAL FEED
(NO METER USED)
FIGURE A

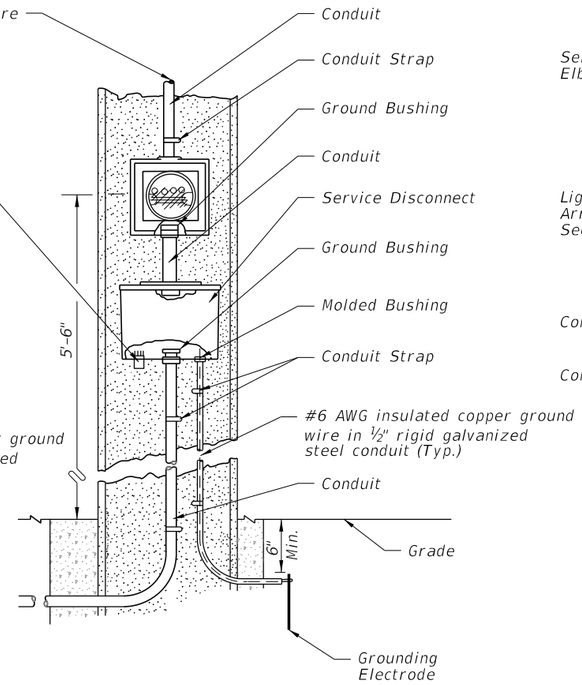

AERIAL FEED
(METER USED)
FIGURE B

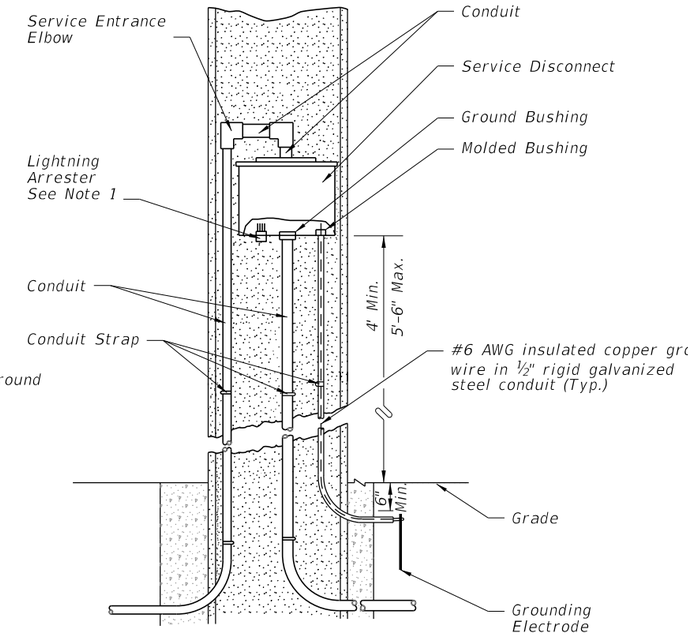

UNDERGROUND FEED
(NO METER USED)
FIGURE C

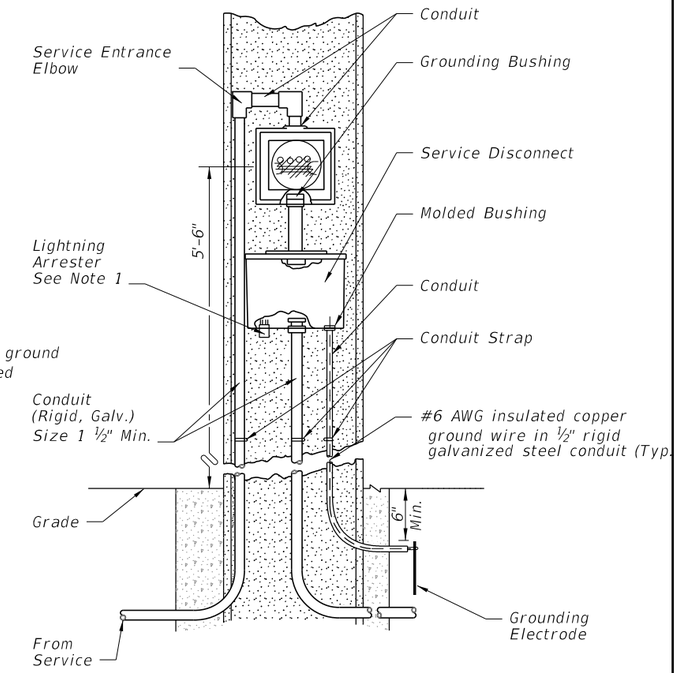

TYPE "B" UNDERGROUND FEED
(METER USED)
FIGURE D

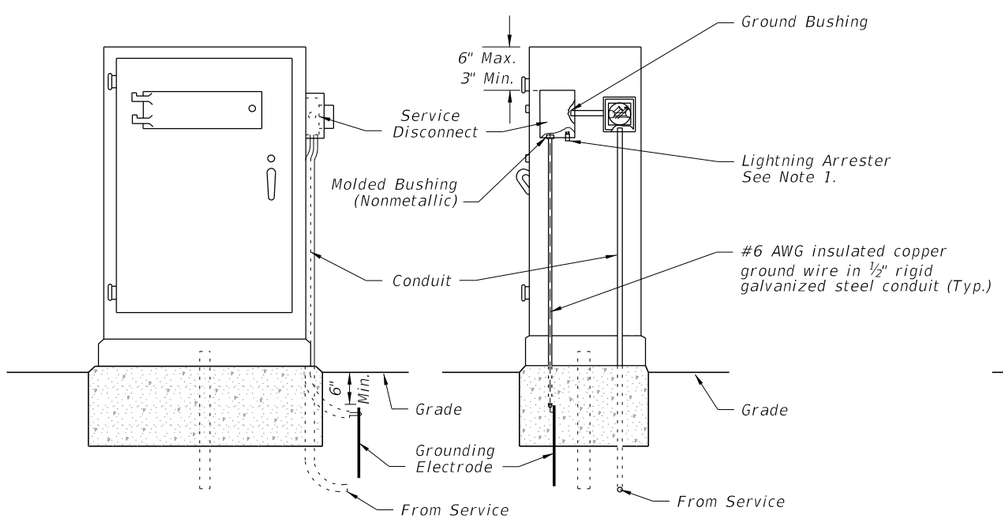

UNDERGROUND CABINET MOUNTED
(METER USED)
FIGURE E

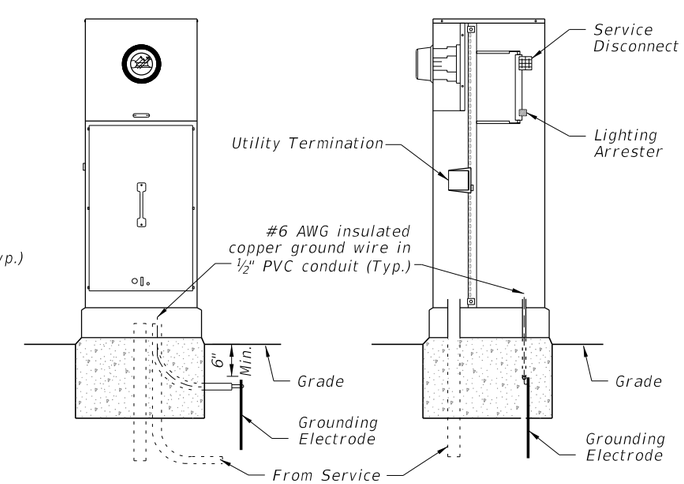

UNDERGROUND PEDESTAL
MOUNTED METER
FIGURE F

NOTES:

1. The lightning arrester can be located on the side or bottom of the service disconnect enclosure at the Contractor's Option.
2. Liquidtight flexible conduit is approved for use from the electrical disconnect to the cabinet when both are installed on the same pole.
3. Bond all elements together to form an Intersection Grounding Network in accordance with Specification 620. Run the bond wire in the conduit with the Electrical Service Wire or Signal Cable.
4. Meet all grounding requirements of Specification 620.
5. The Service Disconnect has a minimum of three hinges and is lockable using a padliock. Provide four keys to the maintaining agency. No screws are to be used to attach door.
6. The Service Disconnect meets NEMA 3R requirements or better.

10/20/2022 8:54:56 AM

LAST REVISION	REVISION	DESCRIPTION:			INDEX	SHEET
11/01/20			FY 2023-24 STANDARD PLANS	ELECTRIC POWER SERVICE	639-002	1 of 1

GENERAL NOTES:

1. Work these Index Sheets with the Strain Pole Schedule in the Plans. See Index 634-001 for corresponding signal cable and span wire installation details.

2. Shop Drawings:

   This Index is considered fully detailed and no shop drawing are necessary. Submit shop drawings only for minor modifications not detailed in the Plans.

3. Materials:

A. Concrete:	Class V with 4 ksi minimum strength at transfer or Class VI with 6.5 ksi minimum strength at transfer
B. Prestress Strands & Spiral Reinforcing:	Specification 641
C. Hand and coupler cover plates:	Non-corrosive material
D. Screws:	Round headed, chrome plated

4. Fabrication:

   A. Pole Total Taper shown is for pole width, strands, reinforcing and void (0.081 in/ft per face).
   B. Concrete Cover: 1" minimum.
   C. Spiral Reinforcing: Place as shown, and add one turn for splices and two turns at both the tip and butt ends of the pole.
   D. The design dimensions for Front Face (FF) and Back Face (BF) of the poles may vary transversely from the section shown by ± ¼" to assist with removal from forms. Balance addition and subtraction of the face widths to maintain section areas shown.
   E. Tie ground wires to the interior of reinforcing steel to prevent displacement during concreting operations.
   F. Cut the tip end of the prestressed strand either first or simultaneously with the butt end.
   G. Provide cover plates and screws for hand hole and couplers. Attach cover plates to the poles using lead anchors or embedded threaded inserts.
   H. Provide Aluminum Identification Tag on the pole with the following information:

      a. Financial Project ID.
      b. Pole Manufacturer
      c. Standard Pole Type Number
      d. Pole Length (L)

5. Support Points:
   Support Points shown may vary within a tolerance of ±3".

   Horizontal Pole Support Points shown are for strand release, storage, handling and transport of the horizontal pole. Keep Back Face oriented downward until final erection.

6. Two point attachment: Provide an eye bolt hole for the messenger wire.

7. Tether Wire: When required, field-drill the eyebolt hole prior to installation.

TABLE OF CONTENTS:

Sheet	Description
1	General Notes and Contents
2	Service Pole - Type P-IIA (12 ft.)
3	Service Pole - Type P-IIB (36 Ft.)
4	Pedestal Pole - Type P-IIC (12 Ft.)
5	Pedestal Pole - Type P-IID (16 Ft.)
6	Pole - Type P-III
7	Strain Pole - Type P-IV
8	Strain Pole - Type P-V
9	Strain Pole - Type P-VI
10	Strain Pole - Type P-VII
11	Strain Pole - Type P-VIII

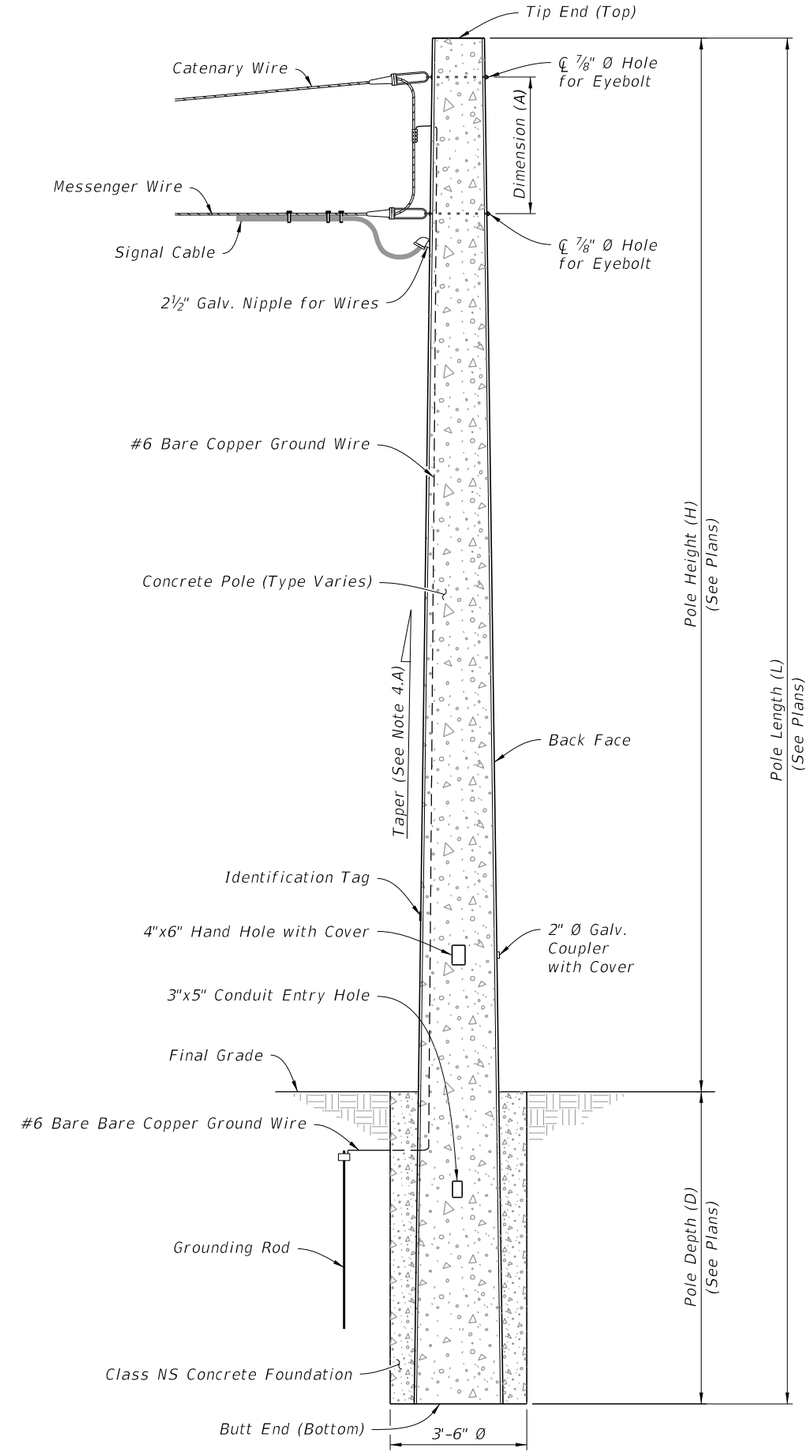

CONCRETE POLE ASSEMBLY
(Type P-VII Shown, Others Similar)

10/20/2022 8:54:57 AM

LAST REVISION	REVISION	DESCRIPTION:			INDEX	SHEET
11/01/22			FY 2023-24 STANDARD PLANS	CONCRETE POLES	641-010	1 of 11

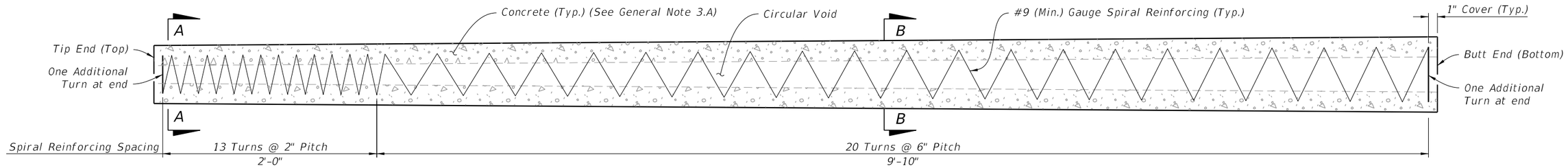

SPIRAL REINFORCING ELEVATION
(Strands and Fixtures Not Shown)

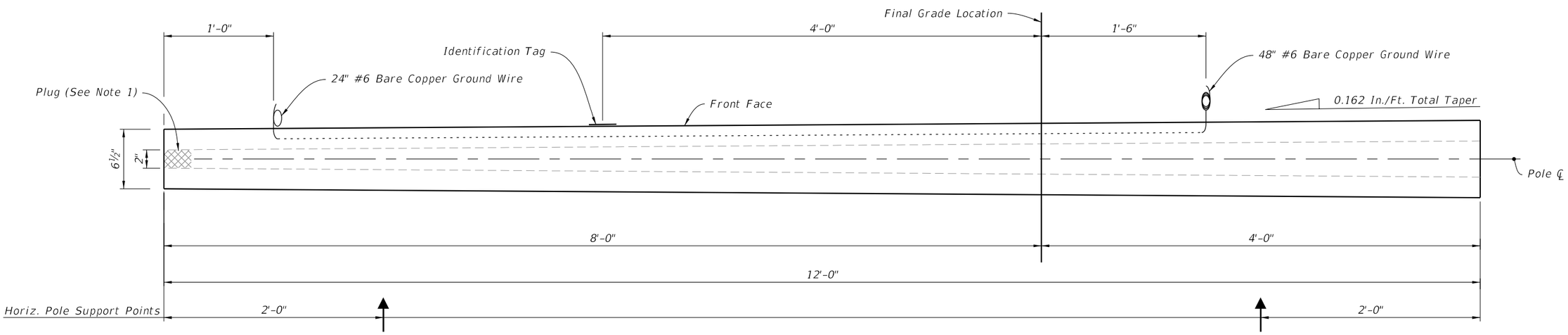

POLE ELEVATION
(Strands and Reinforcing Not Shown)

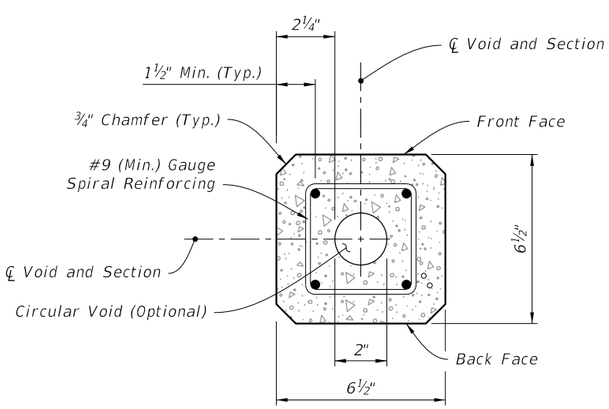

SECTION A-A - (Tip End)

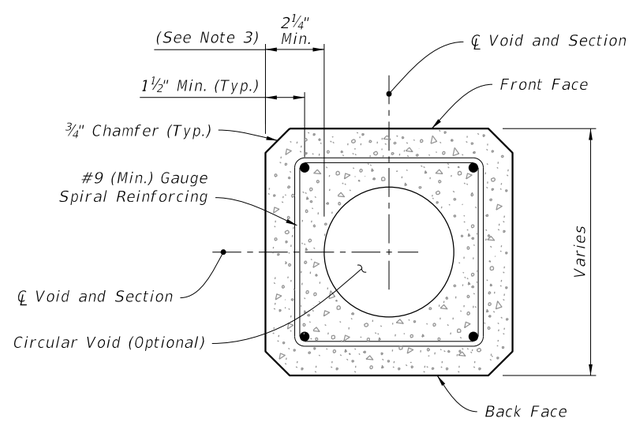

SECTION B-B (Typical Square Section)

NOTES:

1. Provide a minimum 3" concrete plug at the Tip End.
2. For final erection, tilt pole upright with single point attachment located a distance of 4 feet from the Tip End.
3. Dimension may vary from 2¼" to 3½" to accommodate smaller radius of optional stepped (PVC) void. The minimum void diameter is 2".
4. Strands shown are continuous from Tip End to Butt End.
5. Strands are not shown in the elevation views for clarity.

LEGEND:

- Prestressed Strand:
  0.5 in. ~ 24 kips before transfer or
  0.375 in. ~ 14 kips before transfer (4 strands total)

SERVICE POLE - TYPE P-IIA (12 Ft.)

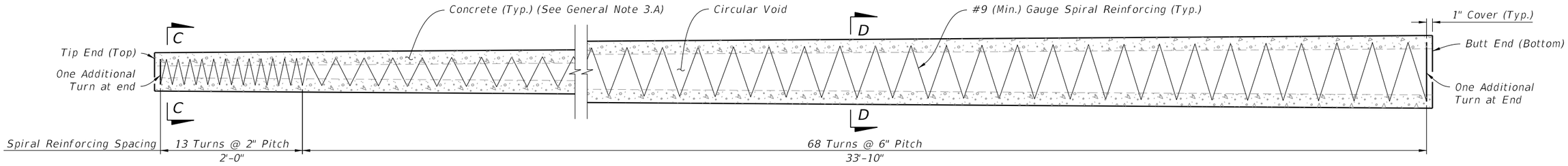

SPIRAL REINFORCING ELEVATION
(Strands and Fixtures Not Shown)

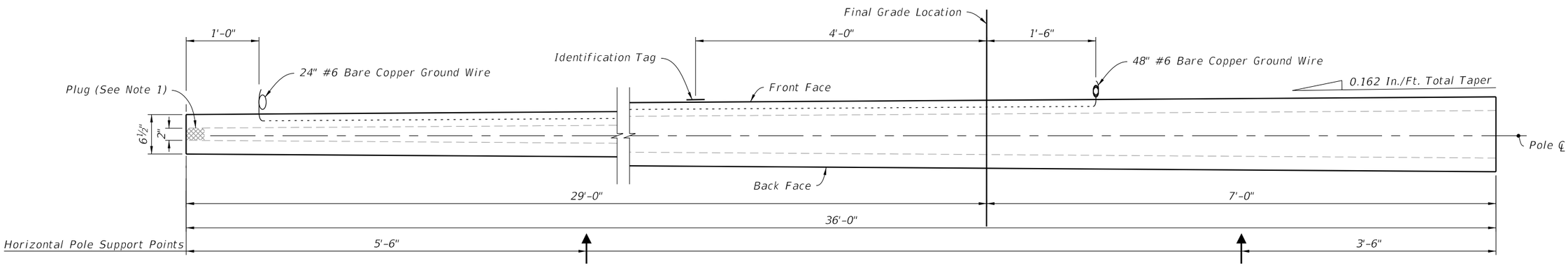

POLE ELEVATION
(Strands and Reinforcing Not Shown)

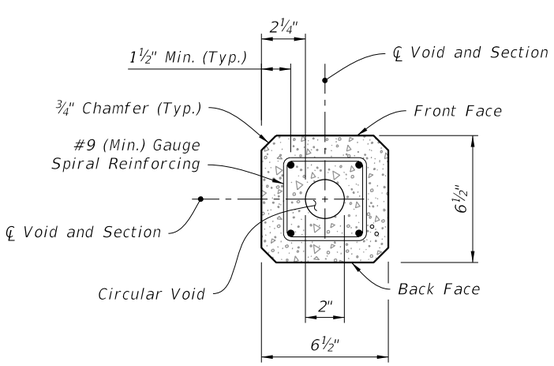

SECTION C-C (Tip End)

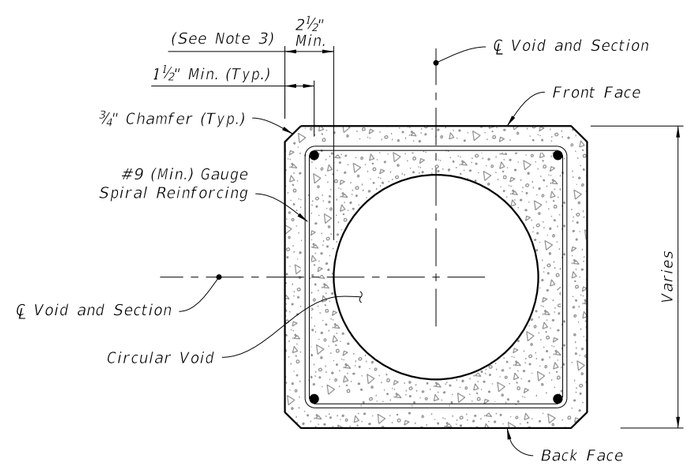

SECTION D-D (Typical Square Section)

NOTES:

1. Provide a minimum 3" concrete plug at the Tip End.
2. For final erection, tilt pole upright with single point attachment located a distance of 10 feet from the Tip End.
3. Dimension may vary from 2¼" to 3½" to accommodate smaller radius of optional stepped (PVC) void. The minimum void diameter is 2".
4. Strands shown are continuous from Tip End to Butt End.
5. Strands are not shown in the elevation views for clarity.

LEGEND:

- Prestressed Strand:
  0.5 in. ~ 24 kips before transfer or
  0.375 in. ~ 14 kips before transfer
  (4 strands total)

SERVICE POLE TYPE P-IIB (36 Ft.)

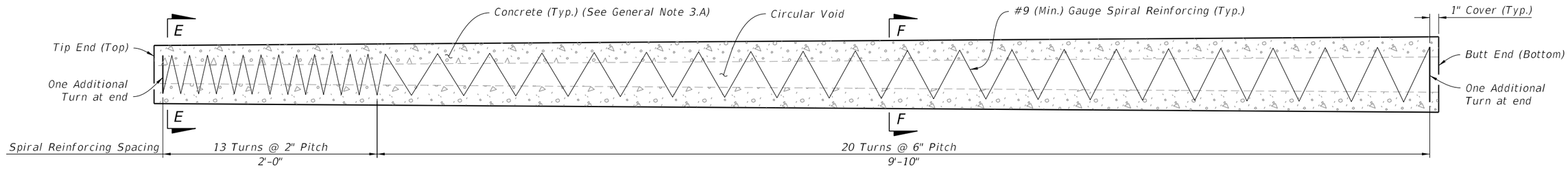

SPIRAL REINFORCING ELEVATION
(Strands, Holes, and Fixtures Not Shown)

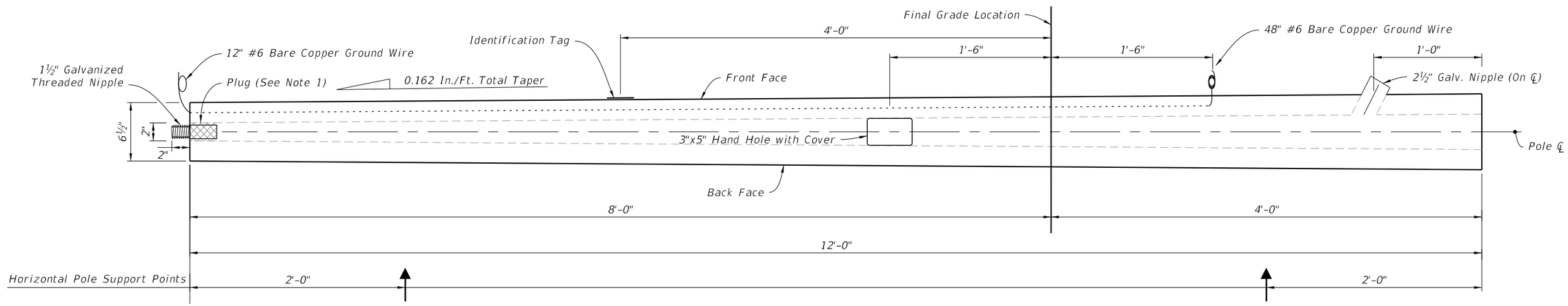

POLE ELEVATION
(Strands and Reinforcing Not Shown)

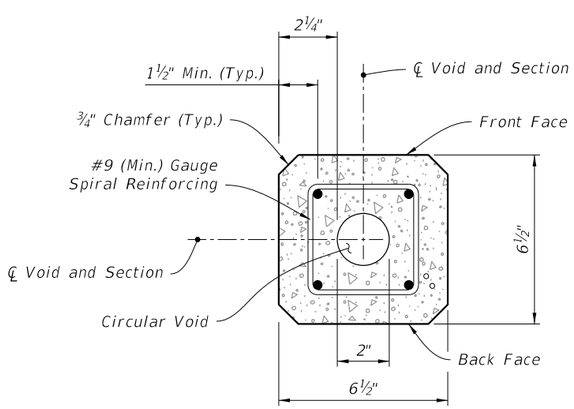

SECTION E-E (Tip End)

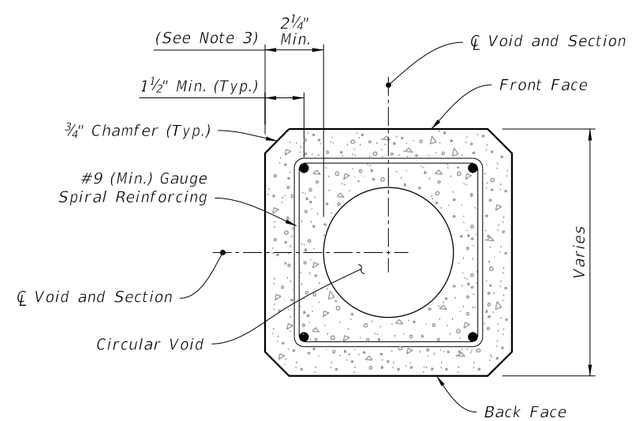

SECTION F-F (Typical Square Section)

NOTES:

1. Provide a minimum 3" concrete plug at the Tip End.
2. For final erection, tilt pole upright with single point attachment located a distance of 4 feet from the Tip End.
3. Dimension may vary from 2¼" to 3½" to accommodate smaller radius of optional stepped (PVC) void. The minimum void diameter is 2".
4. Strands shown are continuous from Tip End to Butt End.
5. Strands are not shown in the elevation views for clarity.

LEGEND:

- Prestressed Strand:
  0.5 in. ~ 24 kips before transfer or
  0.375 in. ~ 14 kips before transfer
  (4 strands total)

PEDESTAL - TYPE P-IIC (12 Ft.)

LAST REVISION	REVISION	DESCRIPTION:			INDEX	SHEET
11/01/22			FY 2023-24 STANDARD PLANS	CONCRETE POLES	641-010	4 of 11

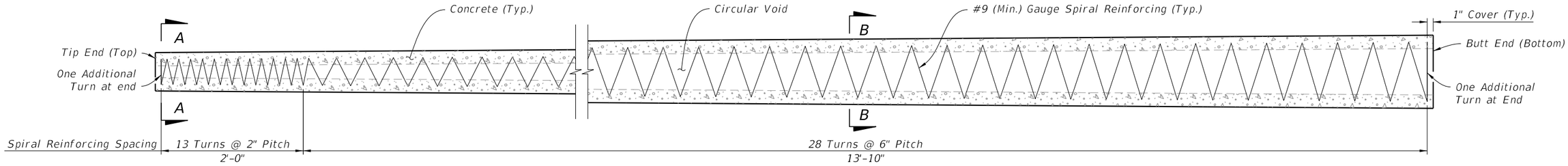

SPIRAL REINFORCING ELEVATION
(Strands and Fixtures Not Shown)

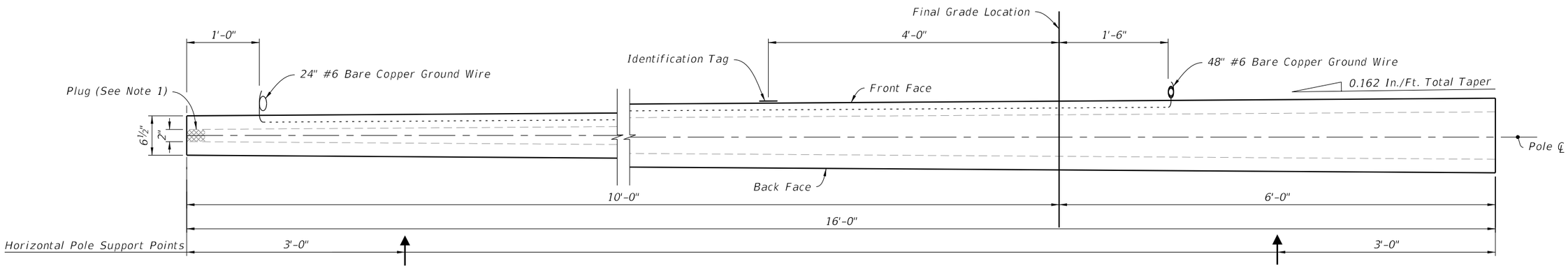

POLE ELEVATION
(Strands and Reinforcing Not Shown)

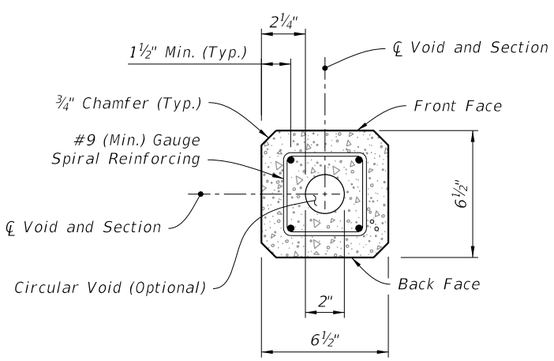

SECTION A-A (Tip End)

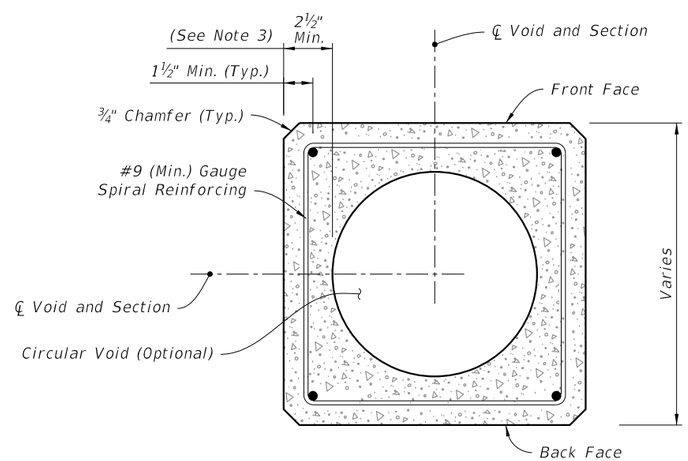

SECTION B-B (Typical Square Section)

NOTES:

1. Provide a minimum 3" concrete plug at the Tip End.
2. For final erection, tilt pole upright with single point attachment located a distance of 5 feet from the Tip End.
3. Dimension may vary from 2¼" to 3½" to accommodate smaller radius of optional stepped (PVC) void. The minimum void diameter is 2".
4. Strands shown are continuous from Tip End to Butt End.
5. Strands are not shown in the elevation views for clarity.

LEGEND:

- Prestressed Strand:
  0.5 in. ~ 24 kips before transfer or
  0.375 in. ~ 14 kips before transfer
  (4 strands total)

SERVICE POLE TYPE P-IID (16 Ft.)

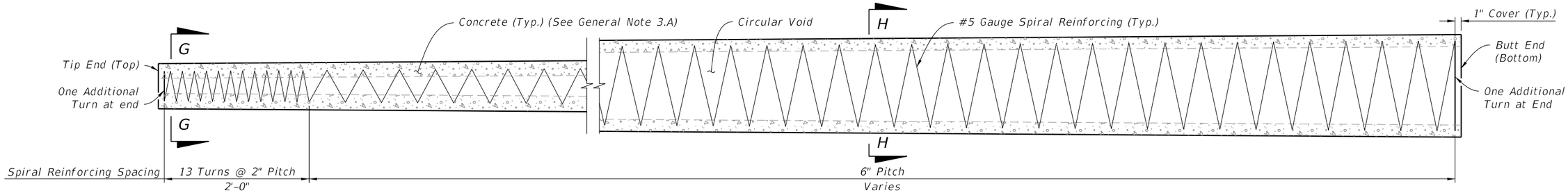

SPIRAL REINFORCING ELEVATION
(Strands, Holes and Fixtures Not Shown)

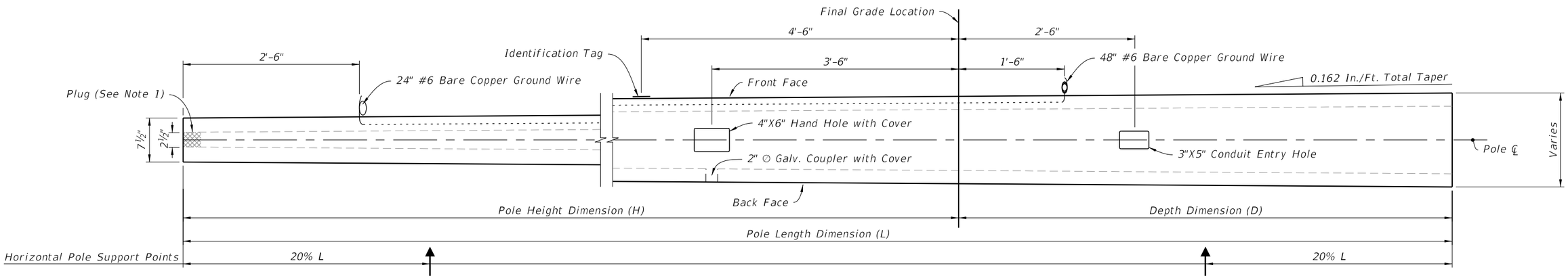

POLE ELEVATION
(Strands and Reinforcing Not Shown)

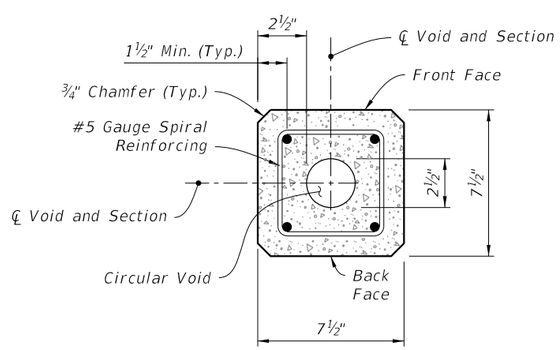

SECTION G-G (Tip End)

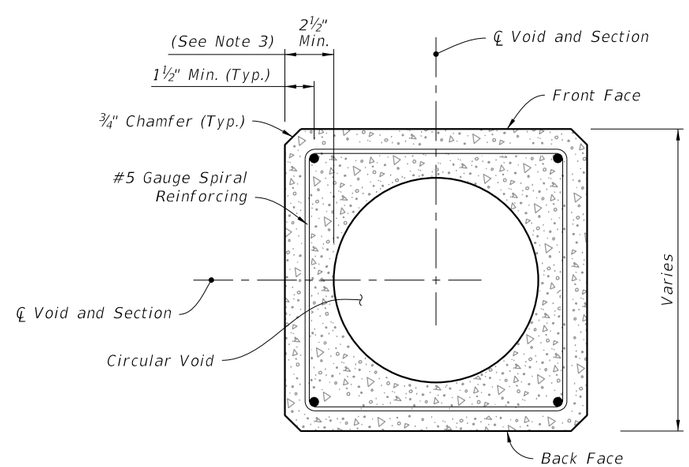

SECTION H-H (Typical Square Section)

NOTES:

1. Provide a minimum 3" concrete plug at the Tip End.
2. For final erection, tilt pole upright with single point attachment located a distance of 33% L from the Tip End.
3. Dimension may vary from 2½" to 3¾" to accommodate smaller radius of optional stepped (PVC) void. The minimum void diameter is 2½".
4. Strands shown are continuous from Tip End to Butt End.
5. Strands are not shown in the elevation views for clarity.

LEGEND:

- Prestressed Strand: 0.5 in. ~ 31 kips before transfer (4 strands total)

POLE TYPE P-III

LAST REVISION	REVISION	DESCRIPTION:	FY 2023-24 STANDARD PLANS	CONCRETE POLES	INDEX	SHEET
11/01/22					641-010	6 of 11

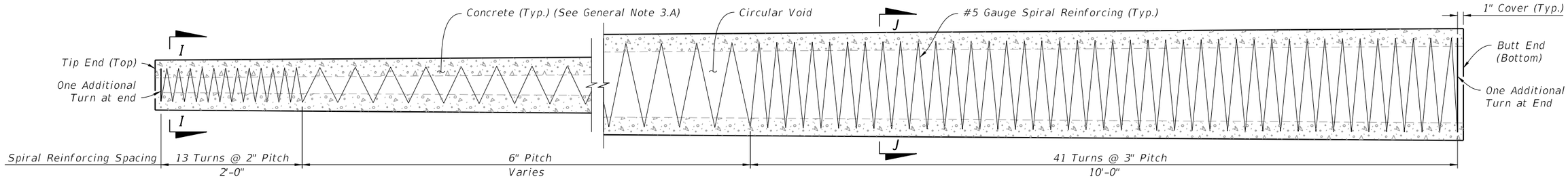

SPIRAL REINFORCING ELEVATION
(Strands, Holes and Fixtures Not Shown)

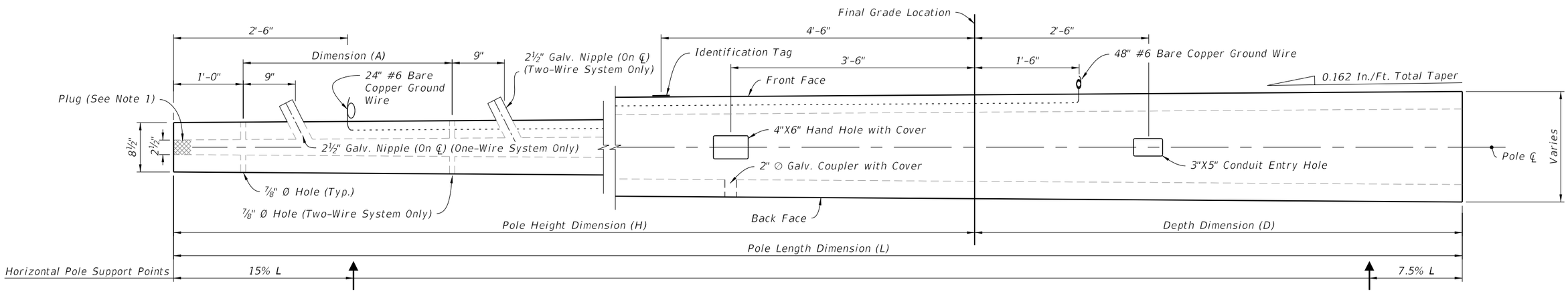

POLE ELEVATION
(Strands and Reinforcing Not Shown)

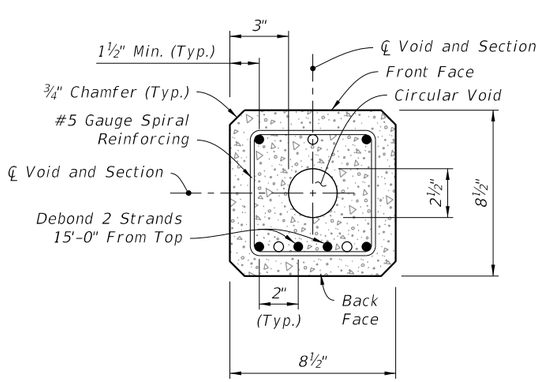

SECTION I-I (Tip End)

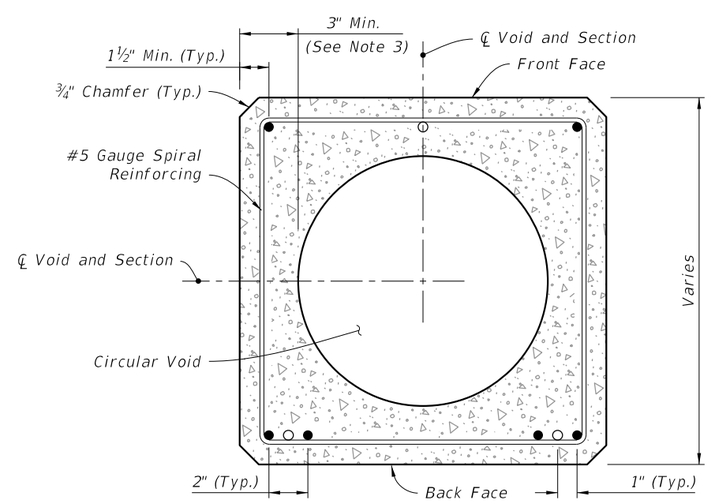

SECTION J-J (Typical Square Section)

NOTES:

1. Provide a minimum 3" concrete plug at the Tip End.
2. For final erection, tilt pole upright with single point attachment located a distance of 20% L from the Tip End.
3. Dimension may vary from 3" to 4¼" to accommodate smaller radius of optional stepped (PVC) void. The minimum void diameter is 2½".
4. Strands shown are continuous from Tip End to Butt End.
5. Strands are not shown in the elevation views for clarity.

LEGEND:

- ● Prestressed Strand: 0.5 in. ~ 31 kips before transfer (6 strands total)
- ○ Dormant Strand: 0.5 in. (3 strands total) One 24" splice allowed per strand

STRAIN POLE TYPE P-IV

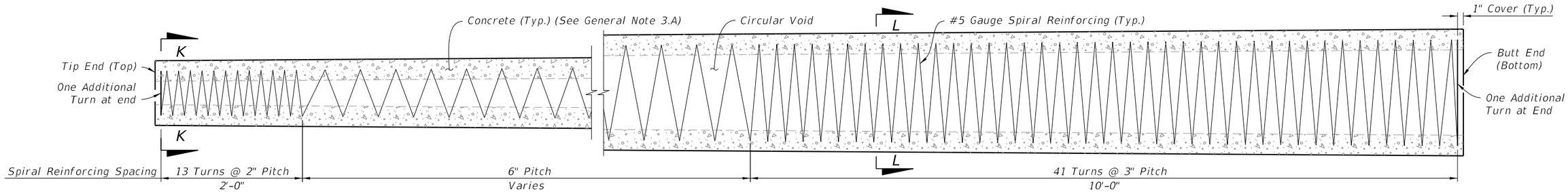

SPIRAL REINFORCING ELEVATION
(Strands, Holes, and Fixtures Not Shown)

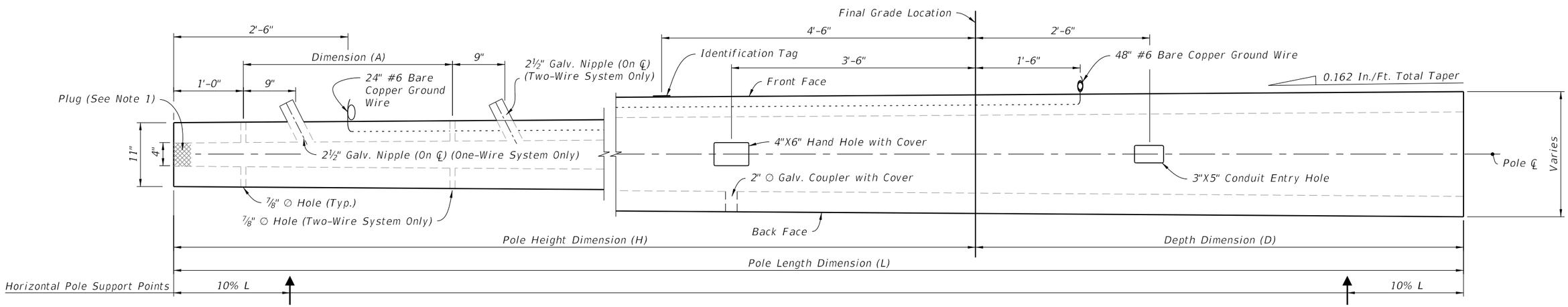

POLE ELEVATION
(Strands and Reinforcing Not Shown)

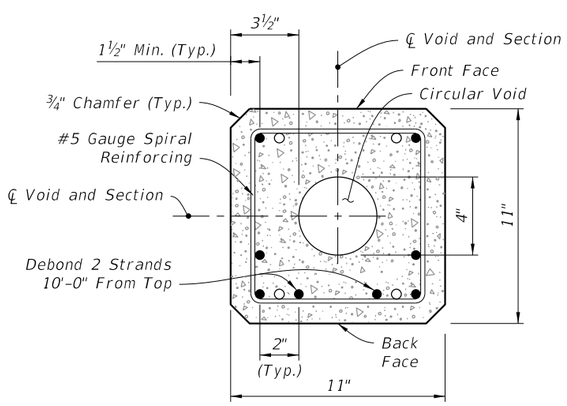

SECTION K-K (Tip End)

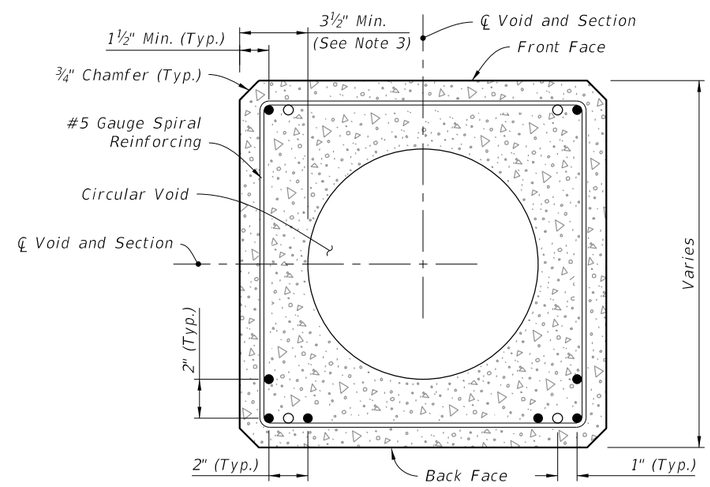

SECTION L-L (Typical Square Section)

NOTES:

1. Provide a minimum 3" concrete plug at the Tip End.
2. For final erection, tilt pole upright with single point attachment located a distance of 12.5% L from the Tip End.
3. Dimension may vary from 3½" to 4¾" to accommodate smaller radius of optional stepped (PVC) void. The minimum void diameter is 4".
4. Strands shown are continuous from Tip End to Butt End.
5. Strands are not shown in the elevation views for clarity.

LEGEND:

● Prestressed Strand:
0.5 in. ~ 31 kips before transfer (8 strands total)

○ Dormant Strand:
0.5 in. (4 strands total) One 24" splice allowed per strand

STRAIN POLE TYPE P-V

10/20/2022 8:55:05 AM

LAST REVISION	REVISION	DESCRIPTION:				
11/01/22			FY 2023-24 STANDARD PLANS	CONCRETE POLES	INDEX 641-010	SHEET 8 of 11

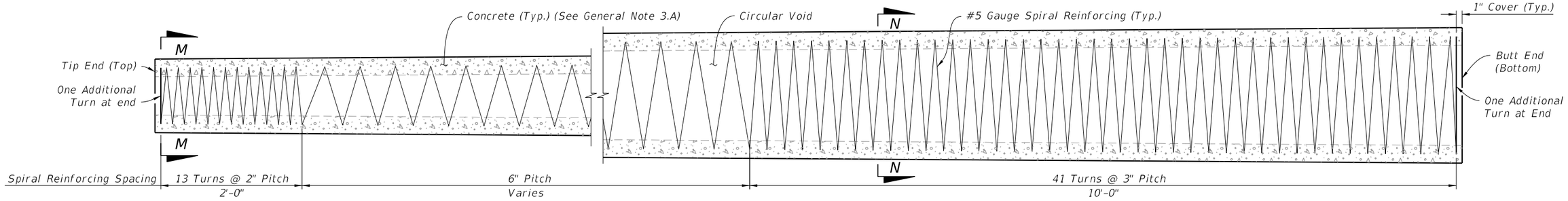

SPIRAL REINFORCING ELEVATION
(Strands, Holes, and Fixtures Not Shown)

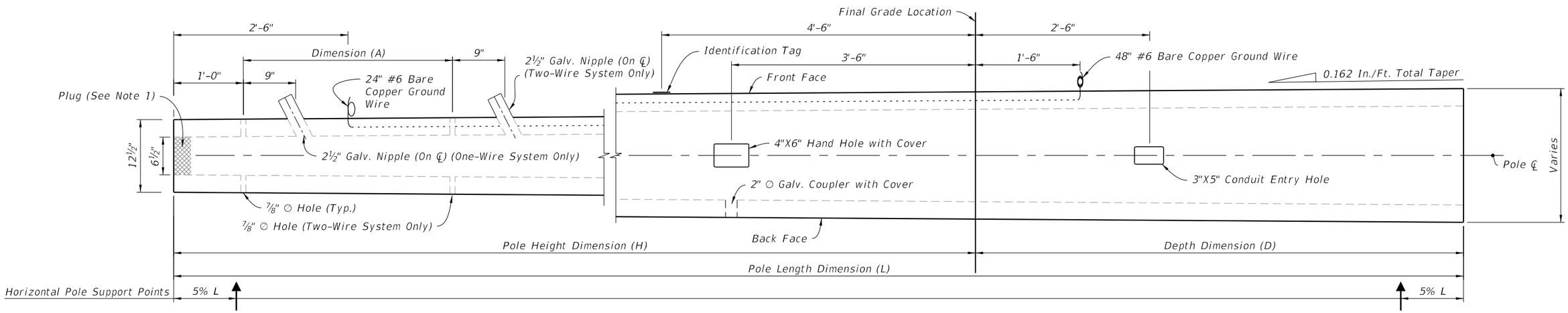

POLE ELEVATION
(Strands And Reinforcing Not Shown)

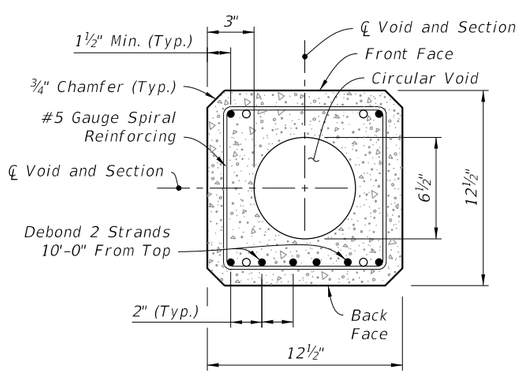

SECTION M-M (Tip End)

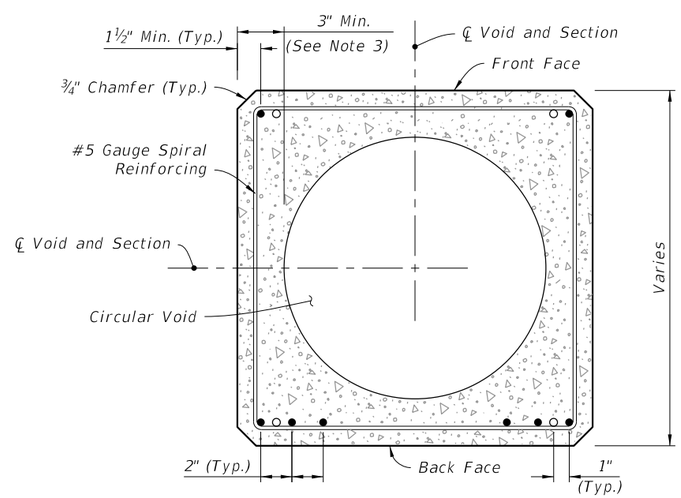

SECTION N-N (Typical Square Section)

NOTES:

1. Provide a minimum 3" concrete plug at the Tip End.
2. For final erection, tilt pole upright with single point attachment located a distance of 10% L from the Tip End.
3. Dimension may vary from 3" to 4¼" to accommodate smaller radius of optional stepped (PVC) void. The minimum void diameter is 6½".
4. Strands shown are continuous from Tip End to Butt End.
5. Strands are not shown in the elevation views for clarity.

LEGEND:

- ● Prestressed Strand: 0.5 in. ~ 31 kips before transfer (8 strands total)
- ○ Dormant Strand: 0.5 in. (4 strands total) One 24" splice allowed per strand

STRAIN POLE TYPE P-VI

10/20/2022 8:55:06 AM

LAST REVISION	REVISION	DESCRIPTION:	FY 2023-24 STANDARD PLANS	CONCRETE POLES	INDEX	SHEET
11/01/22					641-010	9 of 11

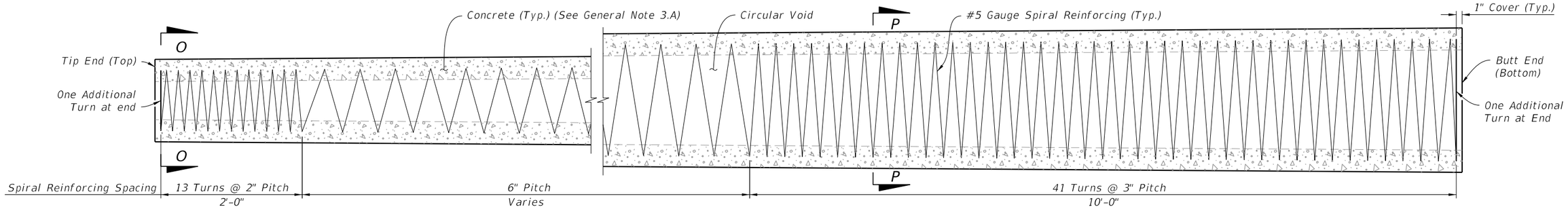

SPIRAL REINFORCING ELEVATION
(Strands, Holes, and Fixtures Not Shown)

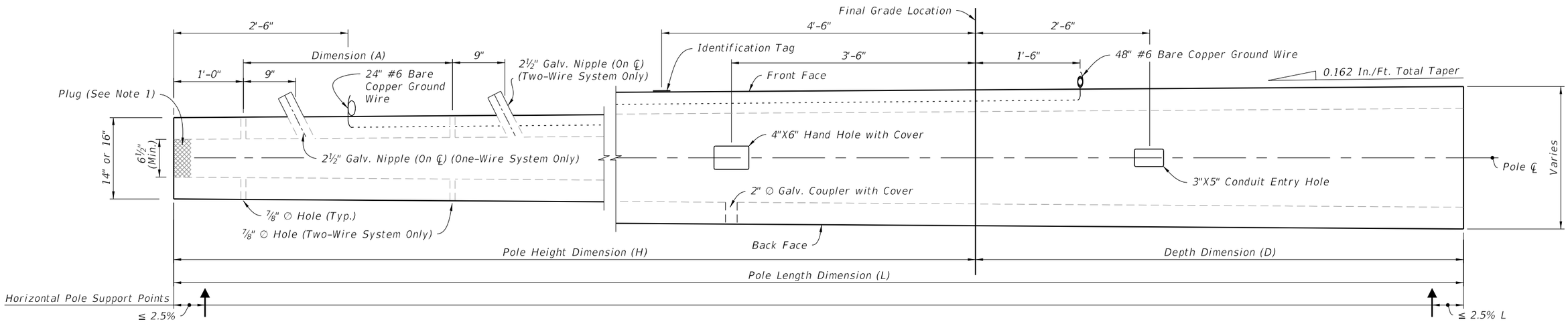

POLE ELEVATION
(Strands And Reinforcing Not Shown)

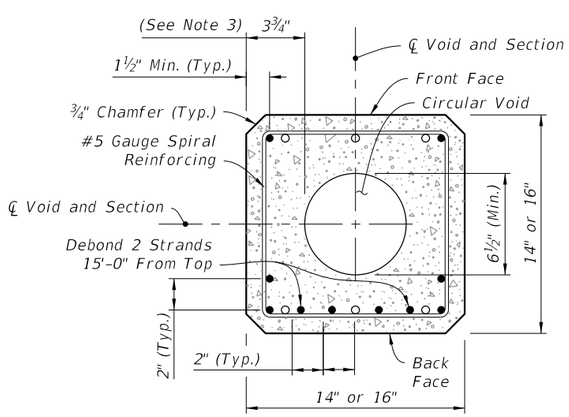

SECTION O-O (Tip End)

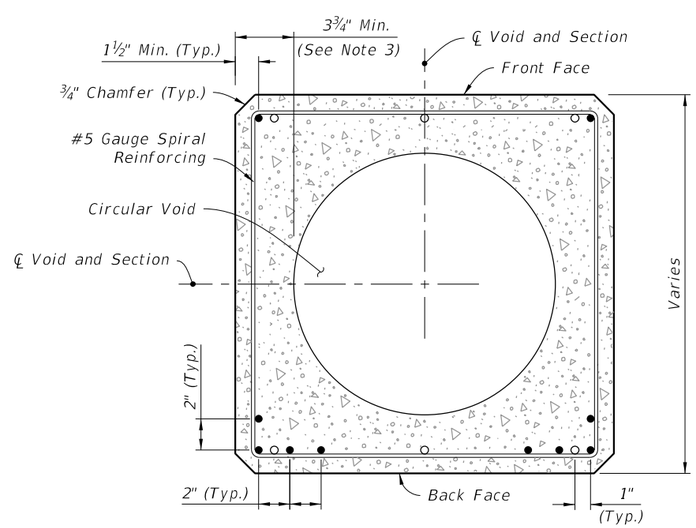

SECTION P-P (Typical Square Section)

NOTES:

1. Provide a minimum 3" concrete plug at the Tip End.
2. For final erection, tilt pole upright with single point attachment located a distance of 10% L from the Tip End.
3. Dimension may vary from 3¾" to 5" to accommodate smaller radius of optional stepped (PVC) void. The minimum void diameter is 6½".
4. Strands shown are continuous from Tip End to Butt End.
5. Strands are not shown in the elevation views for clarity.

LEGEND:

- ● Prestressed Strand: 0.5 in. ~ 31 kips before transfer (10 strands total)
- ○ Dormant Strand: 0.5 in. (6 strands total) One 24" splice allowed per strand

STRAIN POLE TYPE P-VII

LAST REVISION	REVISION	DESCRIPTION:			INDEX	SHEET
11/01/22			FY 2023-24 STANDARD PLANS	CONCRETE POLES	641-010	10 of 11

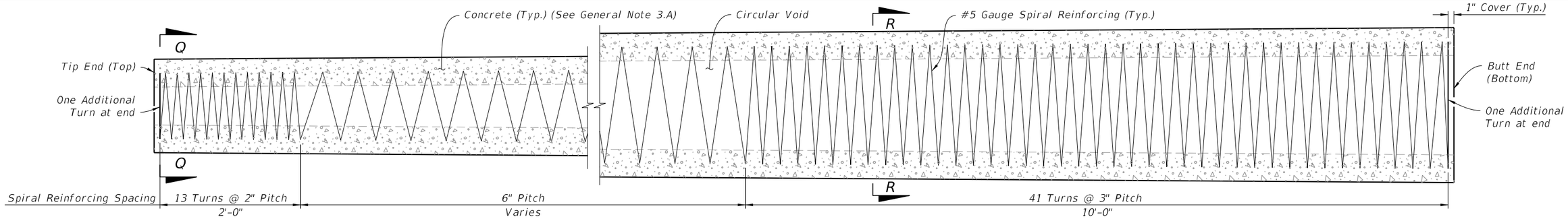

SPIRAL REINFORCING ELEVATION
(Strands, Holes, and Fixtures Not Shown)

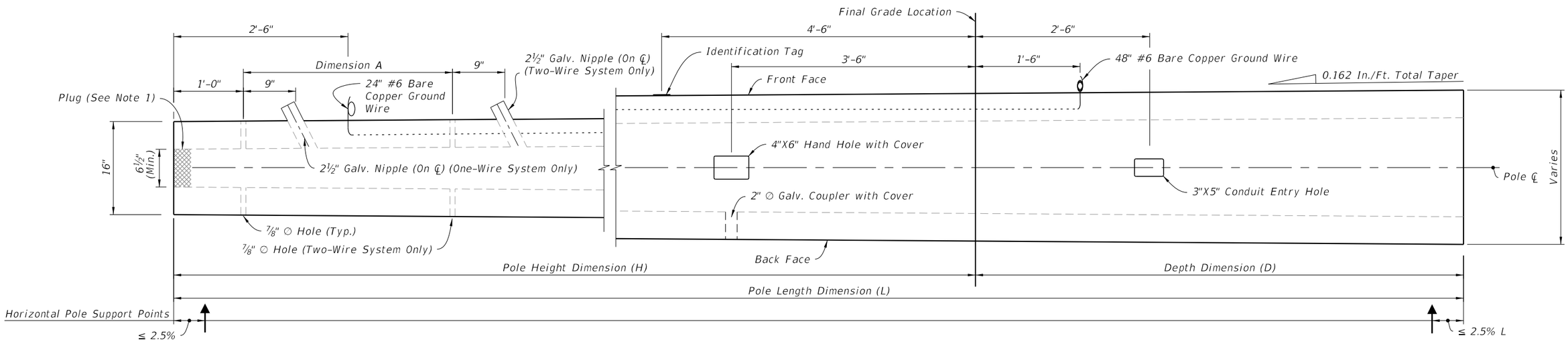

POLE ELEVATION
(Strands And Reinforcing Not Shown)

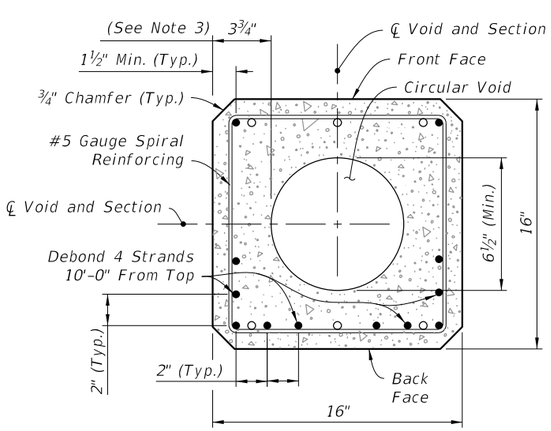

SECTION Q-Q (Tip End)

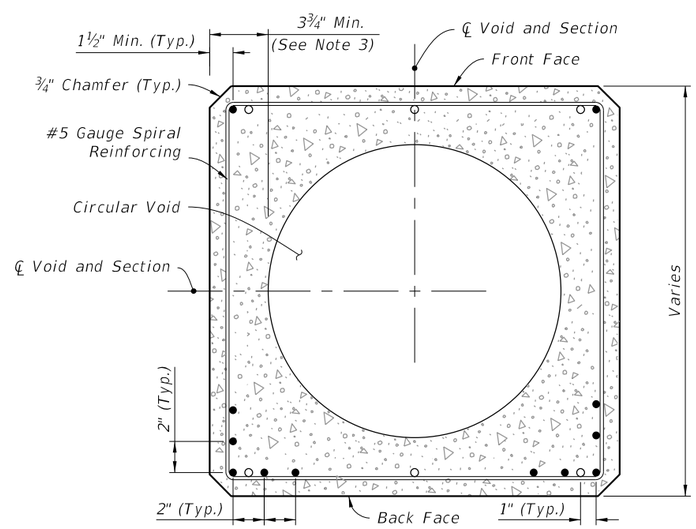

SECTION R-R (Typical Square Section)

NOTES:

1. Provide a minimum 3" concrete plug at the Tip End.
2. For final erection, tilt pole upright with single point attachment located a distance of 10% L from the Tip End.
3. Dimension may vary from 3¾" to 5" to accommodate smaller radius of optional stepped (PVC) void. The minimum void diameter is 6½".
4. Strands shown are continuous from Tip End to Butt End.
5. Strands are not shown in the elevation views for clarity.

LEGEND:

- ● Prestressed Strand: 0.5 in. ~ 31 kips before transfer (12 strands total)
- ○ Dormant Strand: 0.5 in. (6 strands total) One 24" splice allowed per strand

STRAIN POLE TYPE P-VIII

10/20/2022 8:55:09 AM

LAST REVISION	REVISION	DESCRIPTION:			INDEX	SHEET
11/01/22			FY 2023-24 STANDARD PLANS	CONCRETE POLES	641-010	11 of 11

GENERAL NOTES:

1. Work this Index with Specification 641.

2. This Index is considered fully detailed and no shop drawings are necessary. Submit Shop Drawings for minor modifications not detailed in the Plans.

3. Provide either round or 12-sided Poles.

4. See Index 635-001 for additional Pull Box details.

5. See Index 676-010 for cabinet installation details.

6. Materials:

   A. Pole: Use Class VI concrete with 6 ksi minimum strength at transfer.
   B. Prestressing Strands: ASTM A416, Grade 270 low relaxation.
   C. Reinforcing Steel: ASTM A615, Grade 60
   D. Spiral Reinforcing: ASTM A1064 Cold-Drawn
   E. Bolts: ASTM F1554, Grade 55
      Nuts: ASTM A563, Grade A Heavy Hex
      Washers: ASTM F436
   F. Steel plates and Pole Cap: ASTM A36 or ASTM A709, Grade 50
   G. Galvanization: Bolts, nuts and washers: ASTM F2329
      All other steel: ASTM A123

7. Fabrication:

   A. Cut the tip end of the prestressed strand first or simultaneously with the butt end.
   B. For spiral reinforcing, one turn is required for spiral splices and two turns are required at the top and bottom of poles.
   C. For Reinforcing Steel, lap splice to consist of a 3'-0" lap length at each splice. No more than two opposing rebar to be spliced at the same cross section. Stagger lap splices as needed.
   D. Provided a Class 3 surface finish in accordance with Specification 400.
   E. Provide a 1" minimum cover.
   F. Provide handhole and coupler cover plates made of non-corrosive materials. Attach cover plates to poles using lead anchors or threaded inserts embedded in the poles in conjunction with round headed chrome plated screws.
   G. Provide Identification Markings on the poles where indicated on the following sheets. Include the following information using inset numerals with 1" height or as approved in the Producers' Quality Control Program:

      Financial Project ID
      Pole Manufacturer
      Pole Length

   H. Tie ground wires to the interior of reinforcing steel as necessary to prevent displacement during concreting operations.
   I. Storage, Handling and Erection locations shown may vary within ± 3".

8. Pole Installation:

   A. Install the Pole plumb.
   B. Install Pole with the handhole located away from approaching traffic.

9. Cabinet Installation:

   A. Splice fiber optic cables in cabinet to preterminated patch panel.
   B. Furnish and install Surge Protection Devices (SPDs) on all cabling in cabinet.
   C. Furnish and install secondary SPDs protection on outlets for equipment in cabinet.
   D. Ensure that all electronic equipment power is protected and conditioned with SPDs.
   E. Ensure that equipment cabinet is bonded to CCTV pole grounding system.
   F. Install the pole mounted cabinet with the hinges next to the pole.
   G. Sizes and types of conduits and innerducts for network communications between the pullbox and cabinet are stated in the Contract Documents.

10. Lowering Device Installation:

   A. Place the lowering cable that moves within the pole in an interior conduit to prevent it from tangling or interfering with any electrical wire that is in the pole. Ensure that any electrical wire within the pole is routed securely and free from slack.
   B. Mount lowering arm perpendicular to the roadway or as shown in the plans. Position CCTV pole so that the camera can be safely lowered without requiring lane closures.
   C. Coordinate all lowering device hardware requirements (including Tenon, Tenon mounting plates, parking stand, etc.) with lowering device manufacturer.

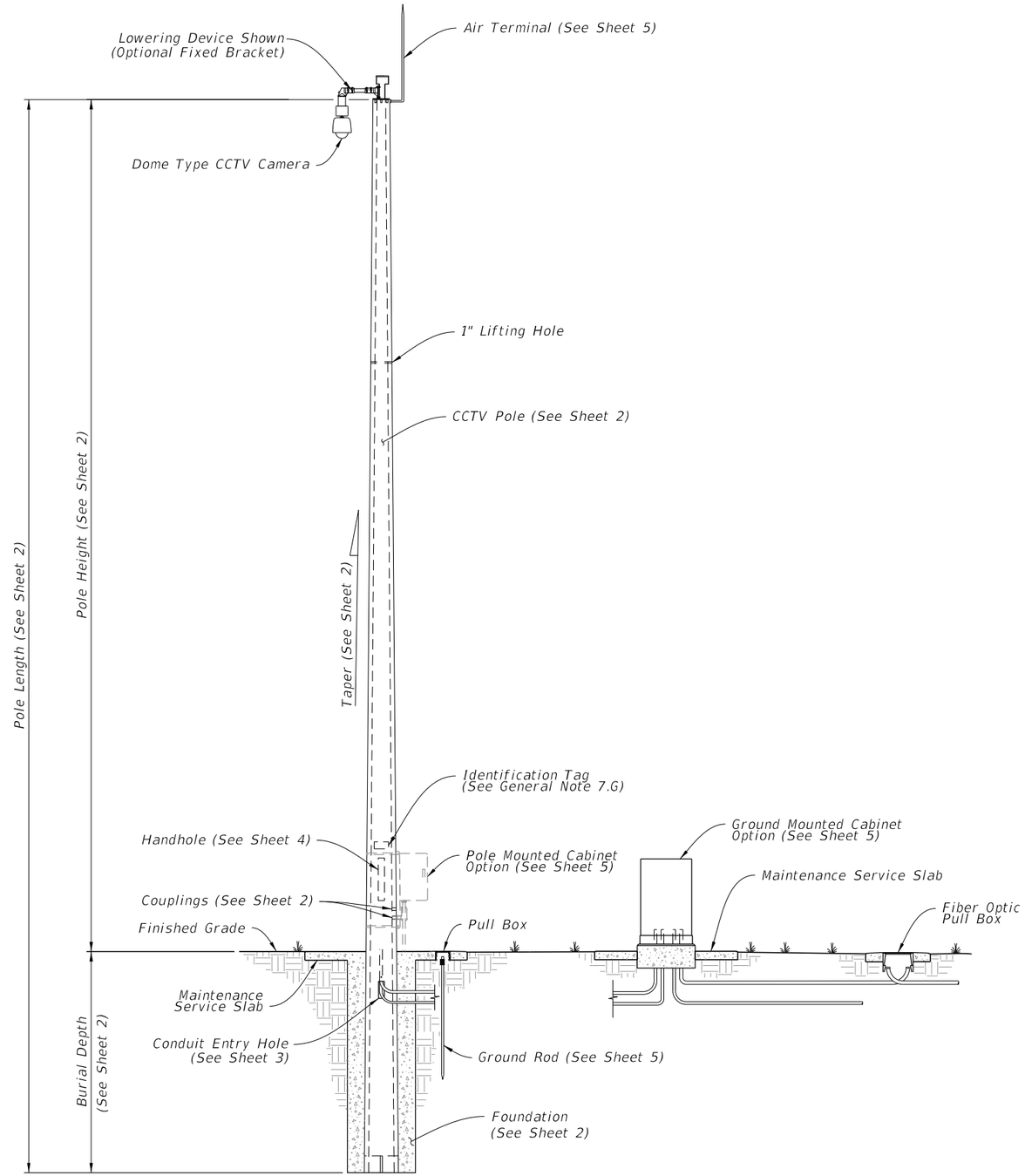

CCTV POLE ASSEMBLY

10/20/2022 8:55:10 AM

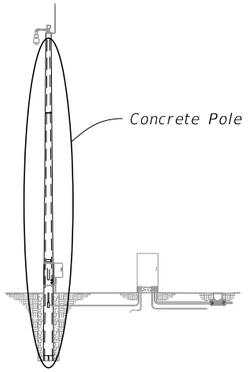

ASSEMBLY

NOTES:

1. Diameter of 12-sided poles are measured flat to flat.
2. Total Taper applies to pole, strands and reinforcing.
3. For 12-Sided Pole and Round Roles Option 2, Stress prestressed strand to 70% of Ultimate before transfer. For Round Pole Option 1, stress prestressed strand to 60% of Ultimate before transfer.
4. Pole Design Tables, Burial Depth is based on level ground (flatter than 1:5). Increase the burial depth in accordance with the Additional Burial Depth Due To Ground Slope table for foundations with slopes 1:5 and steeper. Use the higher value for slope or diameter values that fall between those shown on the table.

ADDITIONAL BURIAL DEPTH DUE TO GROUND SLOPE

Ground Slope	Additional Burial Depth (feet)
1:5	3
1:4	4
1:3	5
1:2	7

12-SIDED POLE DESIGN TABLE (See Note 1)

Pole Length (ft)	Pole Height (ft)	Burial Depth (ft)	Total Taper (in/ft) (See Note 2)	Void Taper (in/ft)	Min. Wall Thickness Tip (in)	Min. Wall Thickness Butt (in)	Tip Diameter (in)	Butt Diameter (in)	Strand Pattern	Strand Diameter
63	50	13	0.18	0.18	3	3	12	23.34	1	0.6"
69	55	14	0.18	0.18	3	3	12	24.42	1	0.6"
75	60	15	0.18	0.18	3	3	12	25.50	2	0.6"
80	65	15	0.18	0.18	3	3	12	26.40	2	0.6"
86	70	16	0.18	0.18	3	3	12	27.48	2	0.6"

ROUND POLE DESIGN TABLE

Pole Length (ft)	Pole Height (ft)	Burial Depth (ft)	Design Option	Total Taper (in/ft) (See Note 2)	Void Taper (in/ft)	Min. Wall Thickness Tip (in)	Min. Wall Thickness Butt (in)	Tip Diameter (in)	Butt Diameter (in)	Strand Pattern	Strand Diameter
63	50	13	Option 1	0.216	0.192	3	3.76	12.15	25.76	3	0.5"
			Option 2	0.180	0.172	3	3.50	12.00	23.34	4	0.5"
69	55	14	Option 1	0.216	0.192	3	3.83	12.15	27.05	3	0.5"
			Option 2	0.180	0.173	3	3.50	12.00	24.42	4	0.5"
75	60	15	Option 1	0.216	0.192	3	3.90	12.15	28.35	3	0.5"
			Option 2	0.180	0.173	3	3.50	12.00	25.50	4	0.5"
80	65	15	Option 1	0.216	0.192	3	3.96	12.15	29.43	3	0.5"
			Option 2	0.180	0.174	3	3.50	12.00	26.40	4	0.5"
86	70	16	Option 1	0.216	0.192	3	4.03	12.15	30.73	3	0.5"
			Option 2	0.180	0.174	3	3.50	13.00	28.48	4	0.5"

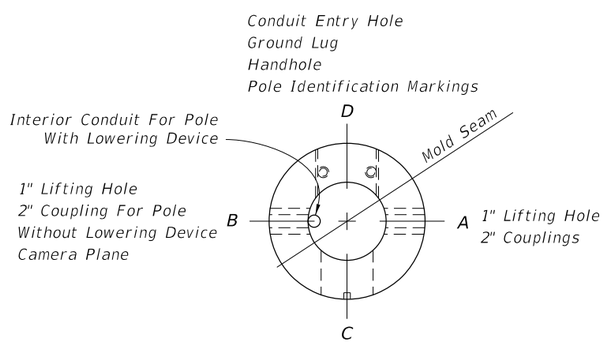

PLAN VIEW

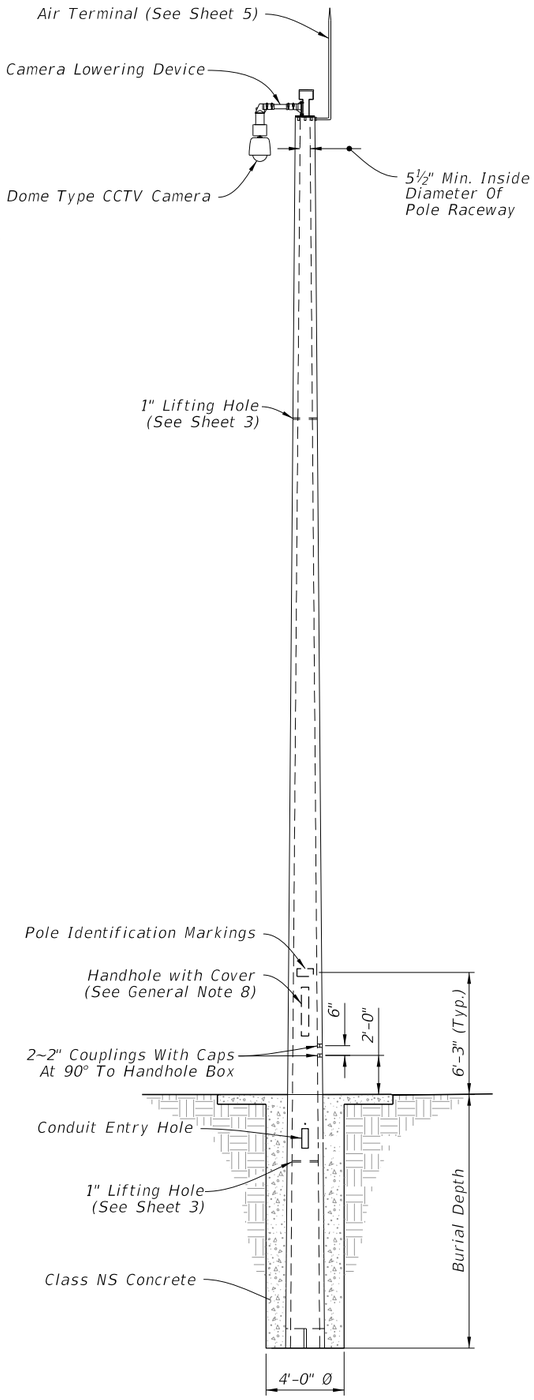

CAMERA LOWERING DEVICE

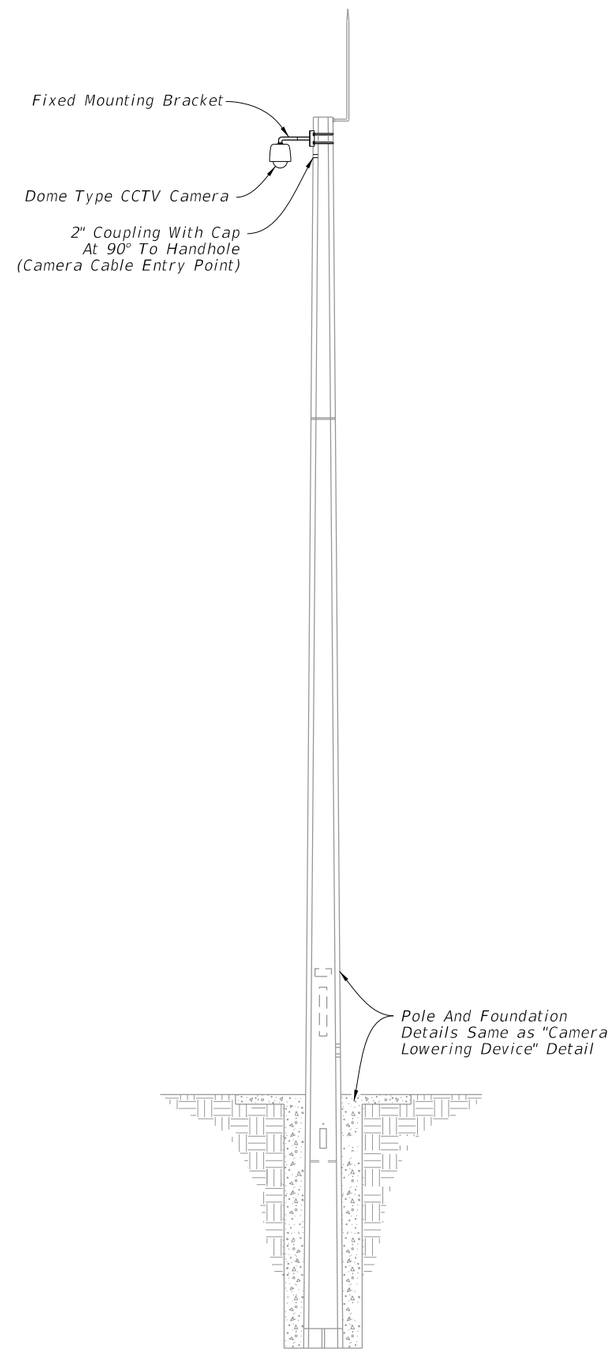

FIXED MOUNTING BRACKET

ELEVATION

10/20/2022 8:55:11 AM

LAST REVISION	REVISION	DESCRIPTION:			INDEX	SHEET
11/01/22			FDOT FY 2023-24 STANDARD PLANS	CONCRETE CCTV POLE	641-020	2 of 5

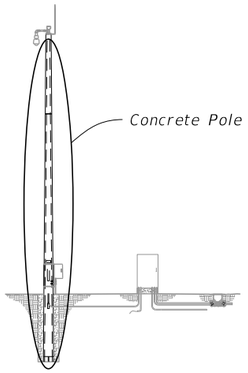

ASSEMBLY

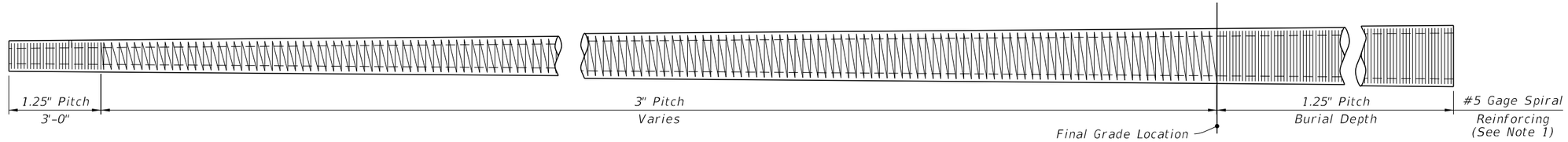

SPIRAL REINFORCING ELEVATION
(Strands, Holes and Fixtures Not Shown)

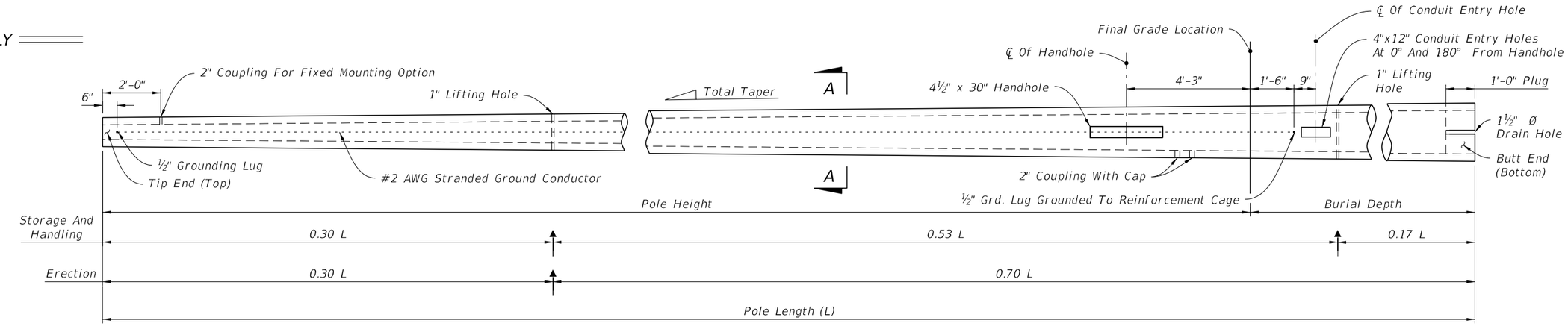

POLE ELEVATION
(Strands And Reinforcing Not Shown)

NOTES:

1. Spiral wire may be wrapped in two directions given that an equivalent area of spiral wire is provided to that shown in this Index and the cover requirements are met.
2. Work these details with Data Tables on Sheet 2.
3. Strands and rebar shown are continuous from Tip End to Butt End.

LEGEND:

- ● Prestressed Strand
- Δ (4) #5 Rebar (Shown) or (6) #4 Rebar
- ▲ Lift Points

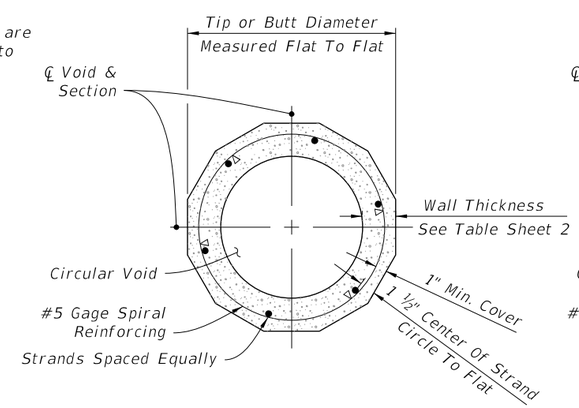

SECTION A-A
STRAND PATTERN 1

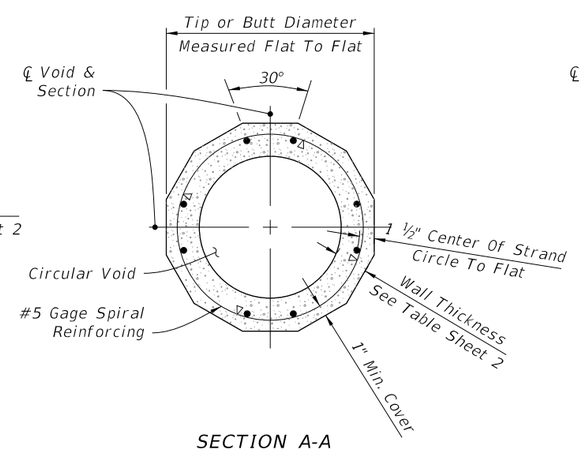

SECTION A-A
STRAND PATTERN 2

12 - SIDED CONCRETE POLE

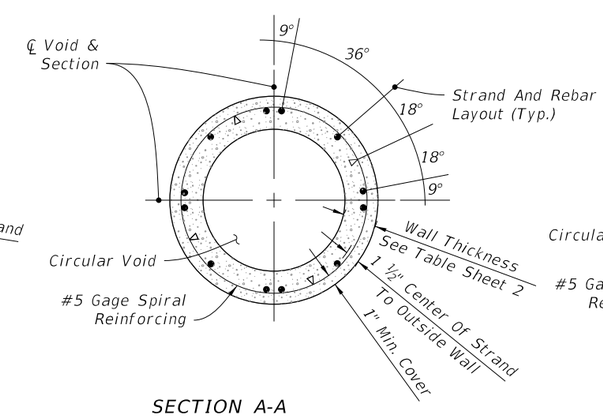

SECTION A-A
STRAND PATTERN 3
(Option 1)

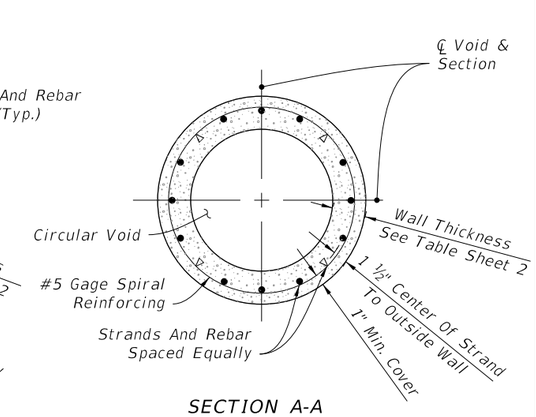

SECTION A-A
STRAND PATTERN 4
(Option 2)

ROUND CONCRETE POLE

8:55:13 AM
10/20/2022

LAST REVISION	REVISION	DESCRIPTION:			INDEX	SHEET
11/01/21			FDOT FY 2023-24 STANDARD PLANS	CONCRETE CCTV POLE	641-020	3 of 5

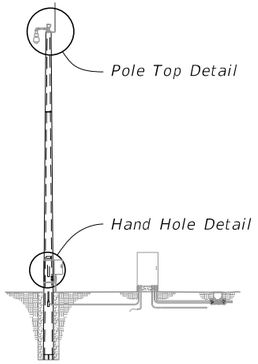

ASSEMBLY

NOTES:

1. Install all handhole and opening covers prior to shipping.
2. Install ½" Ø x 5" long stud with hex nut in insert before shipment.
3. As an alternate, embed 4~½" Ø x 18" stainless steel threaded rods with a threaded nut. At top of rod, thread a coupling nut to attach plate w/ 4~½" x 1¾" stainless steel bolts.
4. Handhole frame may be Cast Aluminum 356.2.
5. Work these details with Data Tables on Sheet 2.

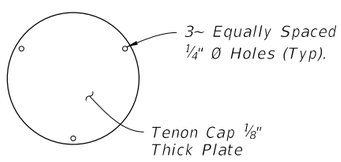

TENON CAP

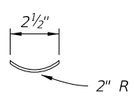

PLAN VIEW

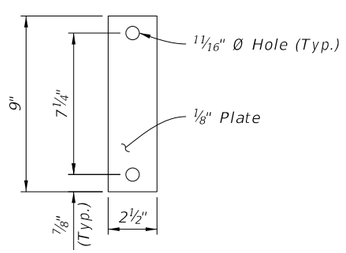

ELEVATION

TENON COVER

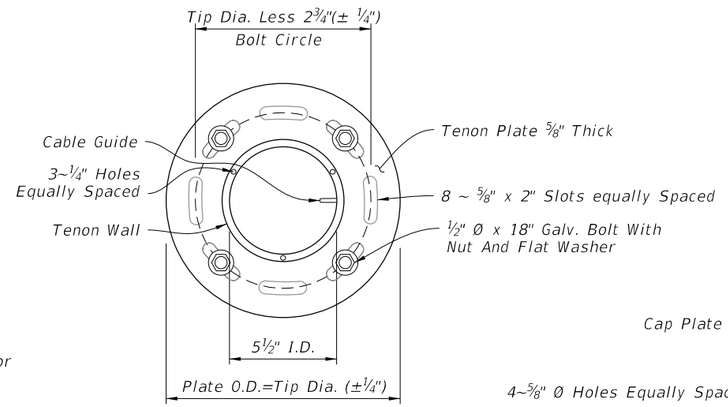

PLAN VIEW

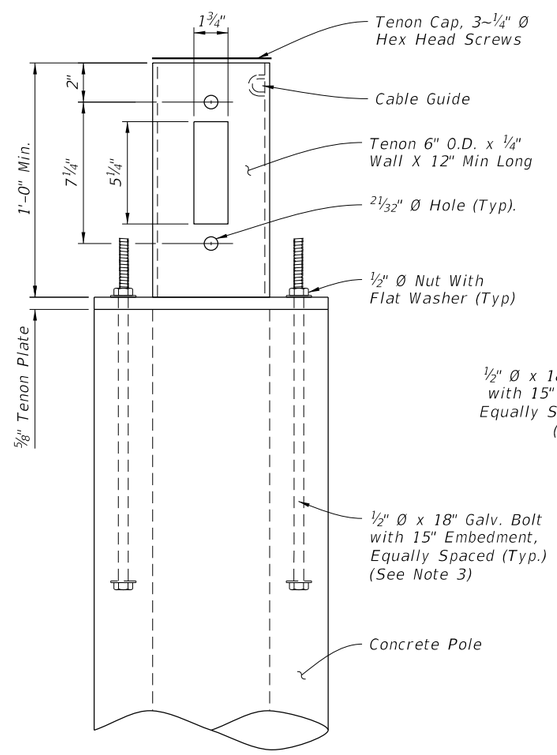

ELEVATION

LOWERING DEVICE TENON

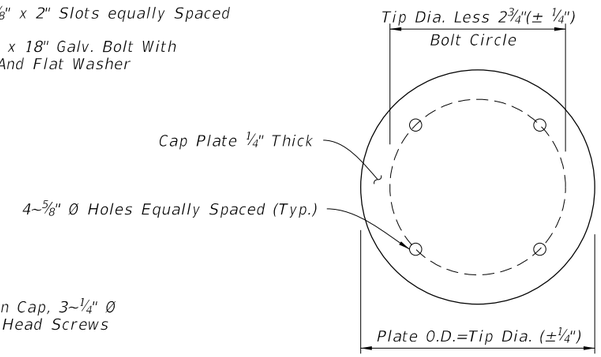

PLAN VIEW

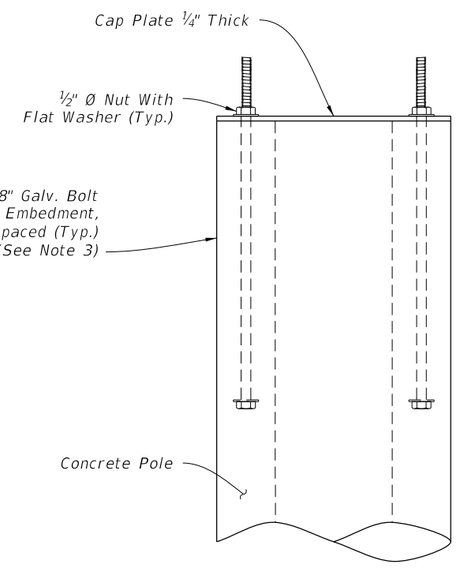

ELEVATION

CAP PLATE DETAIL
(Without Lowering Device)

POLE TOP DETAIL

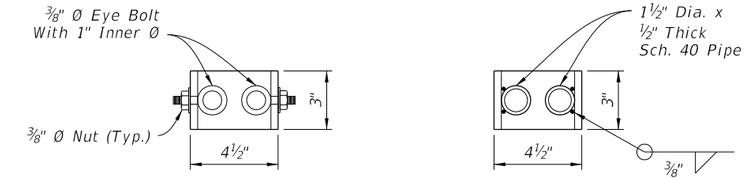

EYE BOLT OPTION

PIPE OPTION

PARK STAND DETAIL

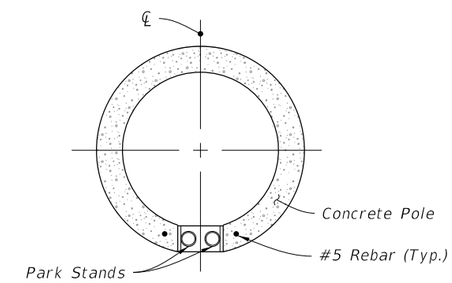

PLAN VIEW

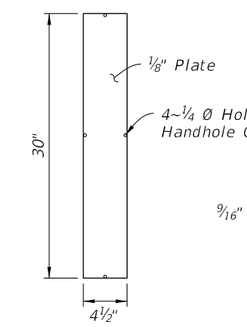

HANDHOLE COVER

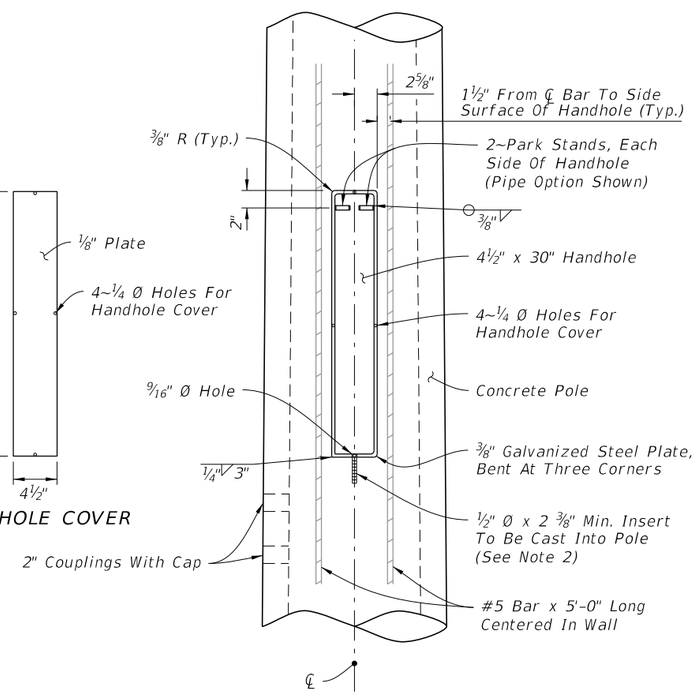

ELEVATION

HANDHOLE DETAIL

10/20/2022 8:55:14 AM

LAST REVISION	REVISION	DESCRIPTION:			INDEX	SHEET
11/01/21			FY 2023-24 STANDARD PLANS	CONCRETE CCTV POLE	641-020	4 of 5

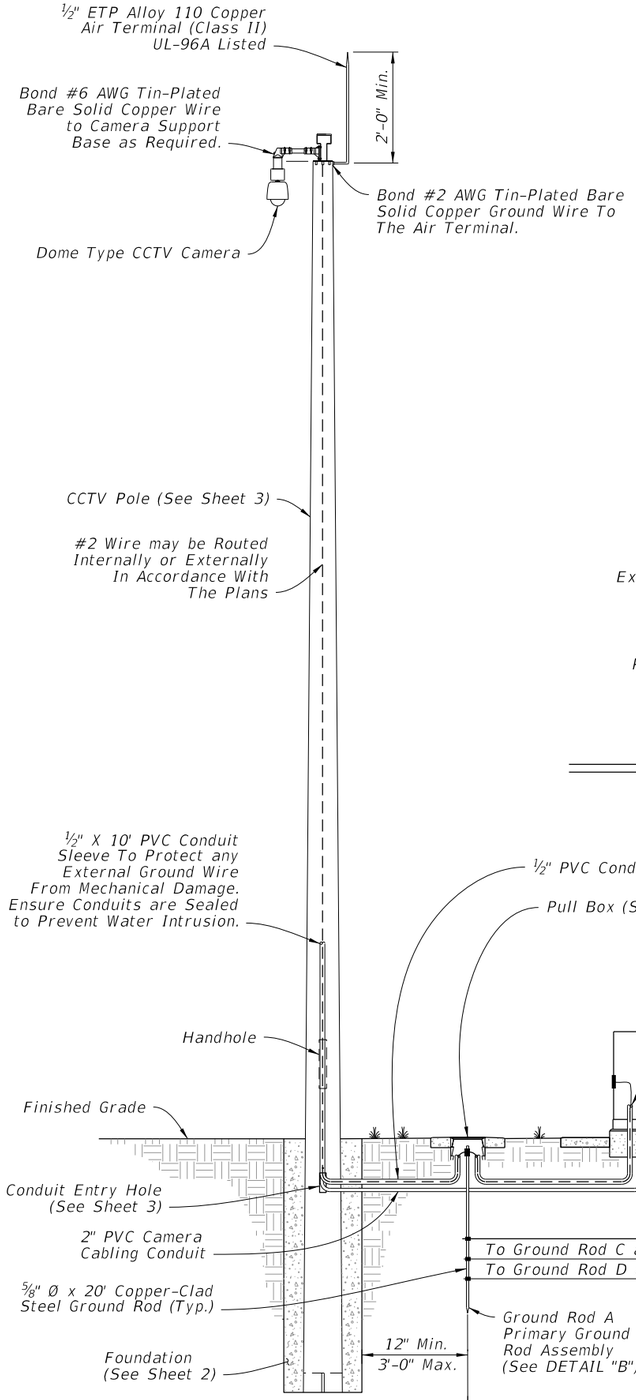

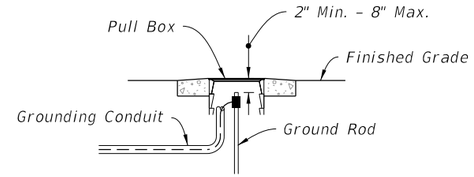

(Ground Mounted Cabinet Scenario Shown, Pole Mounted Cabinet Similar)

PULL BOX

DETAIL "A"

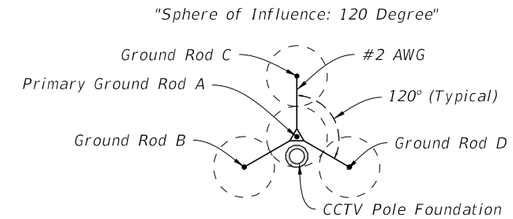

TYPICAL
(20' Rods, 40' Spacing)

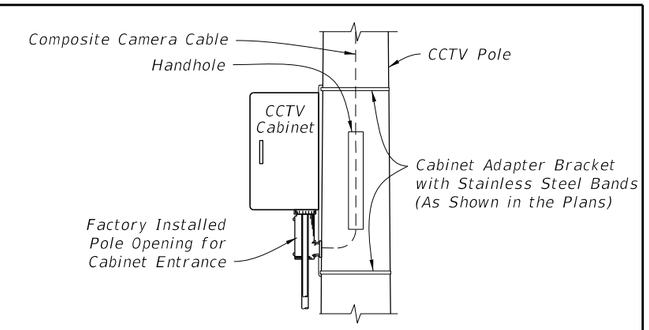

SIDE VIEW

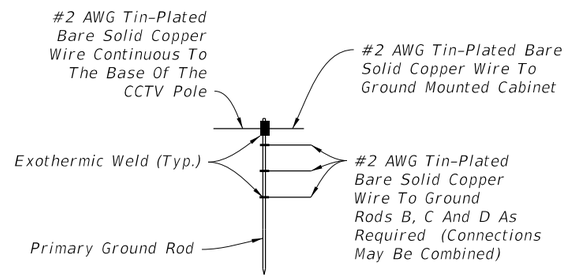

PRIMARY GROUND ROD ASSEMBLY

DETAIL "B"

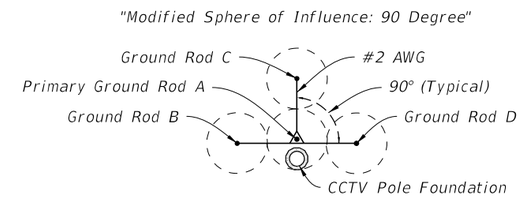

TYPICAL MODIFIED
(20' Rods, 40' Spacing)

GROUND ROD ARRAY PLACEMENT

DETAIL "C"

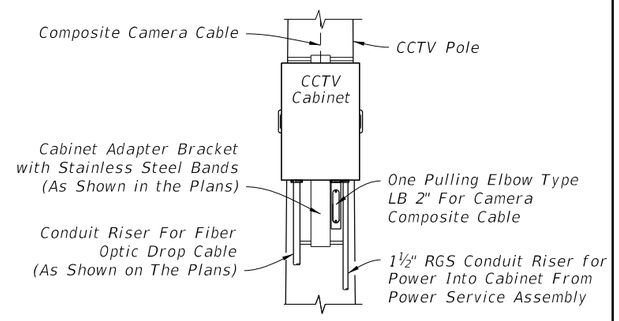

FRONT VIEW

DETAIL "D"

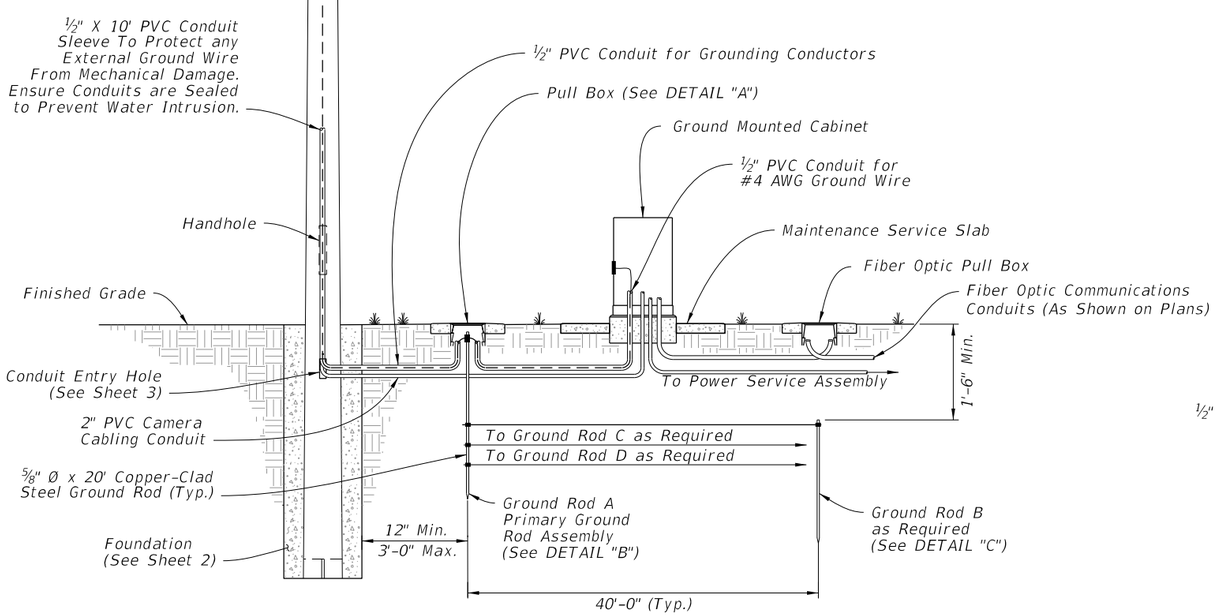

GROUND MOUNTED CABINET

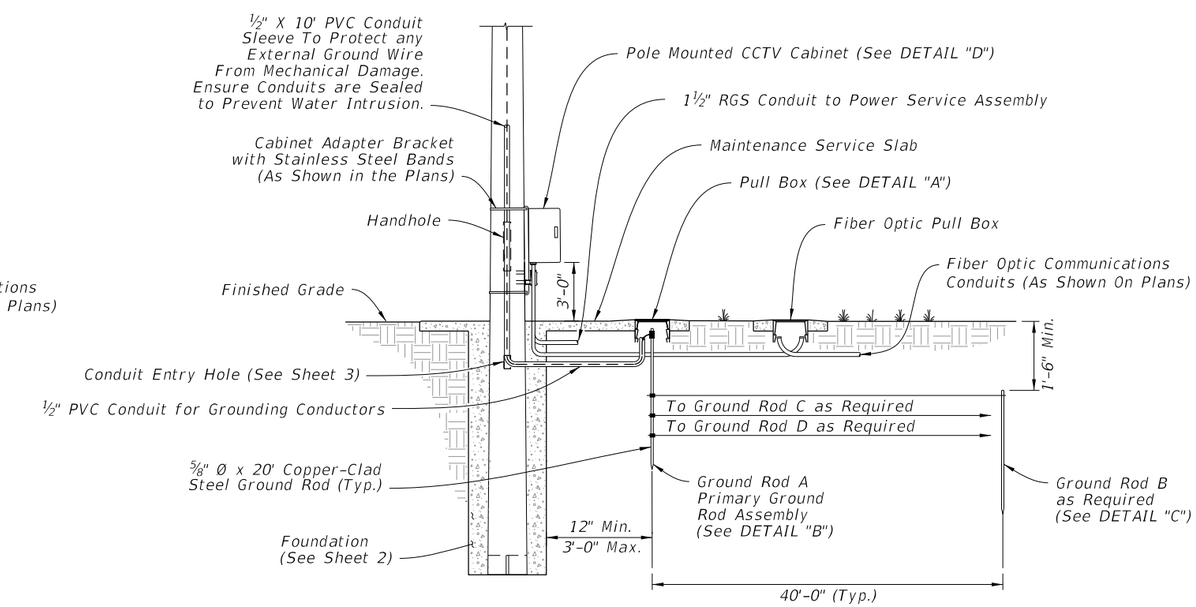

POLE MOUNTED CABINET

CONCRETE CCTV POLE GROUNDING

12/14/2022 10:38:23 AM

LAST REVISION	REVISION	DESCRIPTION:			INDEX	SHEET
11/01/22			FY 2023-24 STANDARD PLANS	CONCRETE CCTV POLE	641-020	5 of 5

NOTES:

1. Work this Index with Specification 646.
2. For Pedestrian Signals see Index 653-001.
3. For Pedestrian Detector Assembly (i.e., Pushbutton and Sign) details see Index 665-001.
4. Footing may be Cast-In-Place (C-I-P) or Precast.
5. As an alternative to the direct buried "Post Mounted" Pedestrian Detector Assembly shown below, the post may be installed on a transformer base. Use a transformer base included on the APL approved as an alternative to a "Post Mounted" assembly,

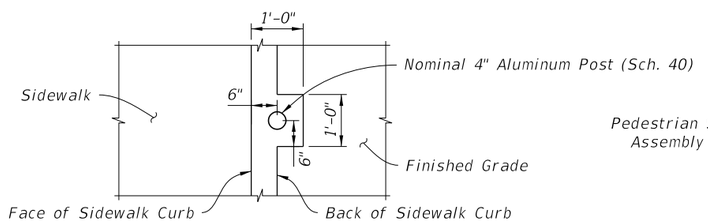

PLAN VIEW
SECTION A-A

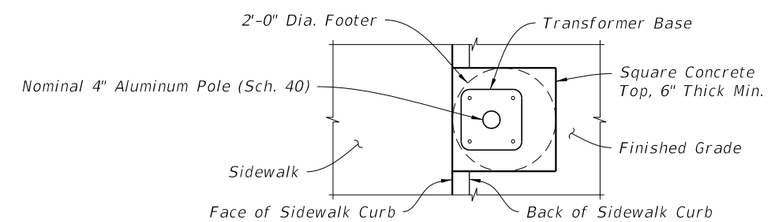

PLAN VIEW
SECTION B-B

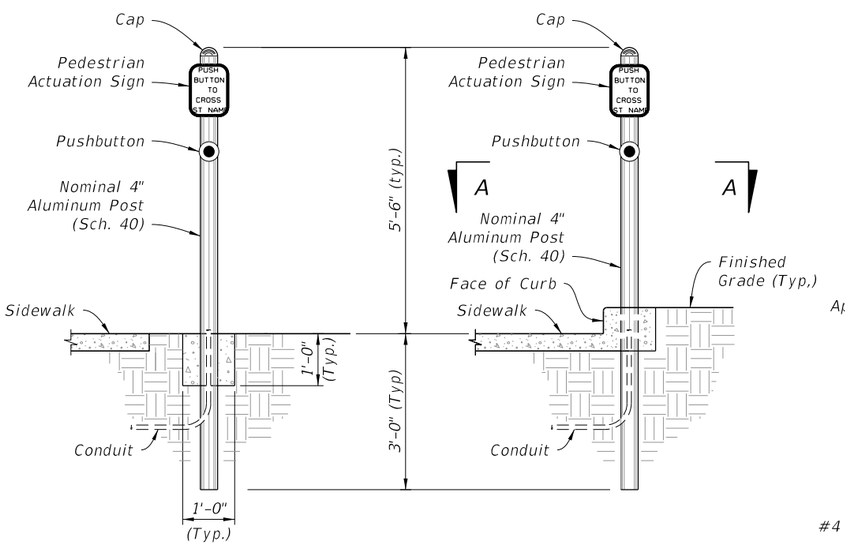

FRONT ELEVATION
ADJACENT TO SIDEWALK

FRONT ELEVATION
IN SIDEWALK CURB

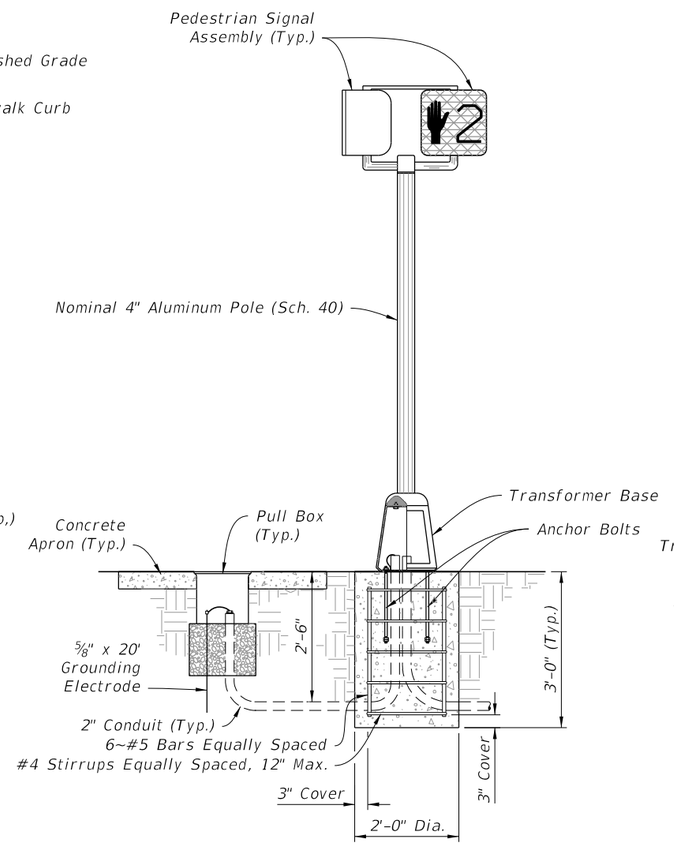

FRONT ELEVATION
ADJACENT TO SIDEWALK

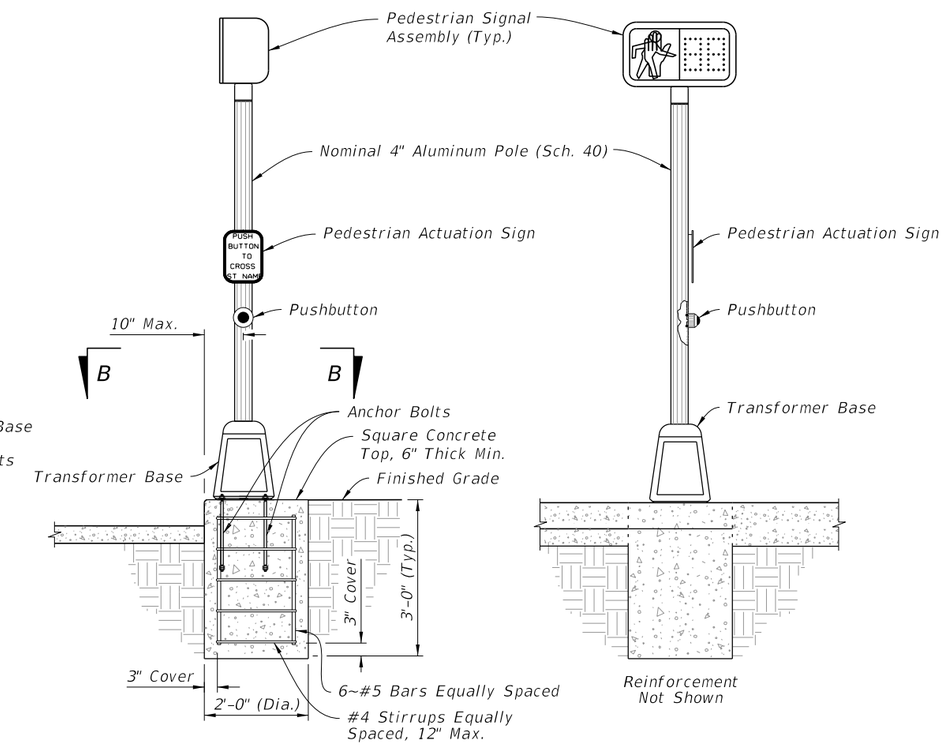

SIDE ELEVATION

FRONT ELEVATION

IN SIDEWALK CURB
(Conduit And Grounding Not Shown)

POST MOUNTED

PEDESTAL MOUNTED

10/20/2022 8:55:17 AM

LAST REVISION	REVISION	DESCRIPTION:			INDEX	SHEET
11/01/21			FY 2023-24 STANDARD PLANS	ALUMINUM POST AND PEDESTAL MOUNTED PEDESTRIAN DETECTORS AND SIGNALS	646-001	1 of 1

NOTES:

1. Work with Index 634-001 for grounding and span wire details. See the Plans for clamp spacing, cable sizes and forces, signals and sign mounting locations and details.

2. Shop Drawings:

   This Index is considered fully detailed, only submit shop drawings for minor modifications not detailed in the Plans.

3. Materials:

   A. Strain Pole and Backing Rings:
      a. Less than 3/16": ASTM A1011 Grade 50, 55, 60 or 65
      b. Greater than or equal to 3/16": ASTM A572 Grade 50, 55, 60 or 65
      c. ASTM A595 Grade A (55 ksi yield) or Grade B (60 ksi yield)
   B. Steel Plates: ASTM A36
   C. Weld Metal: E70XX
   D. Bolts, Nuts and Washers:
      a. High Strength Bolts: ASTM F3125, Grade A325, Type 1
      b. Nuts: ASTM A563 Grade DH Heavy-Hex
      c. Washers: ASTM F436 Type 1, one under turned element
   E. Anchor Bolts, Nuts and Washers:
      a. Anchor Bolts: ASTM F1554 Grade 55
      b. Nuts: ASTM A563 Grade A Heavy-Hex (5 per anchor bolt)
      c. Plate Washers: ASTM A36 (2 per bolt). Split-lock washers and self-locking nuts are not permitted
   F. Handhole Frame: ASTM A709 or ASTM A36, Grade 36
   G. Handhole Cover: ASTM A1011 Grade 50, 55, 60 or 65
   H. Aluminum Pole Caps and Nut Covers: ASTM B26 (319-F)
   I. Stainless Steel Screws: AISI Type 316
   J. Threaded Bars/Studs: ASTM A36 or ASTM A307
   K. Concrete: Class IV (Drilled Shaft) for all environmental classifications.
   L. Reinforcing Steel: Specification 415

4. Fabrication:

   A. Pole Taper: Change diameter at a rate of 0.14 inches per foot, round or 12-sided (Min.)
   B. Upright splices are not permitted. Transverse welds are only permitted at the base.
   C. Provide bolt hole diameters as follows:
      a. Bolts (except Anchor Bolts): Bolt diameter plus 1/16", prior to galvanizing.
      b. Anchor Bolts: Bolt diameter plus 1/2", maximum.
   D. Locate handhole 180° from 2" wire entrance pipe.
   E. Identification Tag: (Submit details for approval.)
      a. 2"x 4" (Max.) aluminum identification tag.
      b. Locate on the inside of the pole and visible from the handhole.
      c. Secure to pole with 1/8" diameter stainless steel rivets or screws.
      d. Include the following information on the ID Tag:
         1. Financial Project ID
         2. Pole Type
         3. Pole height
         4. Manufacturers' Name
         5. Fy of Steel
         6. Base Wall Thickness
   F. Provide a 'J' or 'C' hook at the top of the pole for signal wiring support (See Sheet 3).
   G. Perform all welding in accordance with Specification 460-6.4.
   H. Fabricate longitudinal seam welds in pole with 60 percent minimum penetration or fusion welds except, within 6" of the base plate connection use full-penetration groove welds.
   I. Hot Dip Galvanize after fabrication.

5. Coatings:

   A. All Nuts, Bolts, Washers and Threaded Bars/Studs: ASTM F2329
   B. All other steel items including plate washers: ASTM A123

6. Construction:

   A. Foundation: Specification 455, except that payment is included in the cost of the strain pole.
   B. After installation, place wire screen between top of foundation and bottom of base plate in accordance with Specification 649-6.

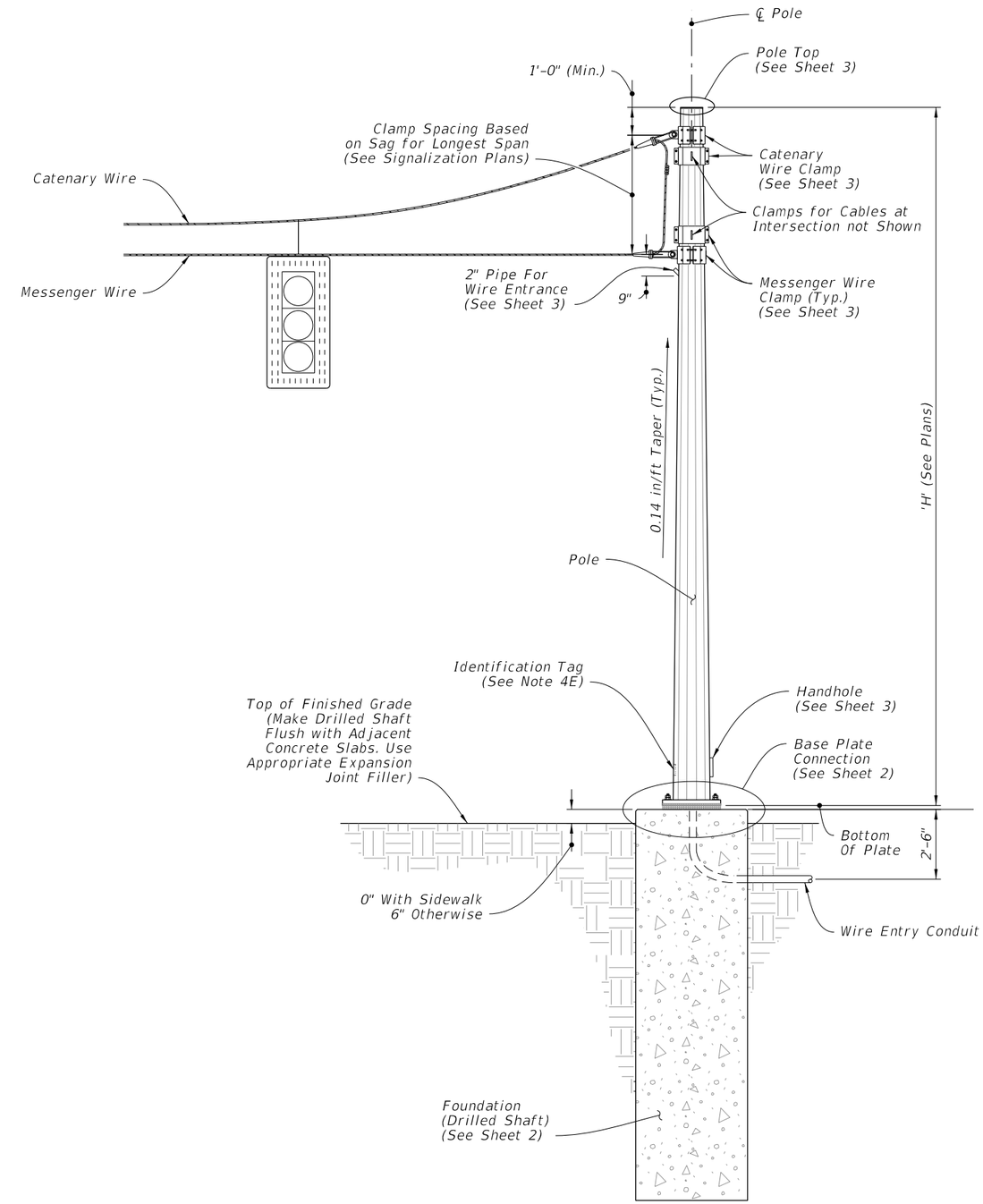

STRAIN POLE ASSEMBLY

ELEVATION AND NOTES

10/20/2022 8:55:18 AM

LAST REVISION	REVISION	DESCRIPTION:	FY 2023-24 STANDARD PLANS	STEEL STRAIN POLE	INDEX	SHEET
11/01/19					649-010	1 of 3

STEEL STRAIN POLE DATA TABLE											
POLE TYPE	POLE		BASE CONNECTION					SHAFT			
	J (in)	K (in)	No. of Bolts	BA (in)	BB (in)	BC (in)	BF (in)	DA (FT)	DB (FT)	No. of #11 Bars	
PS-IV	0.250	14	8	25	2.50	1 3/8	60	14	4	14	
PS-V	0.313	16	10	28	2.50	1 1/2	60	15	4	14	
PS-VI	0.313	18	12	30	2.50	1 1/2	60	16	4	14	
PS-VII	0.313	21	14	33	2.50	1 1/2	60	16	4.5	16	
PS-VIII	0.313	23	16	35	2.50	1 1/2	60	17	4.5	16	
PS-IX	0.313	25	12	39	3.00	1 3/4	60	17	5	18	
PS-X	0.313	27	14	41	3.00	1 3/4	60	18	5	18	

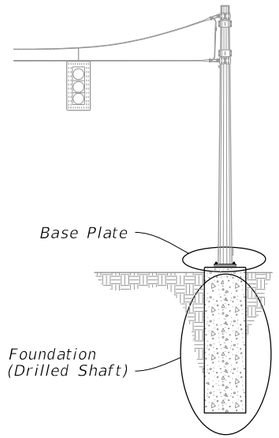

POLE ASSEMBLY

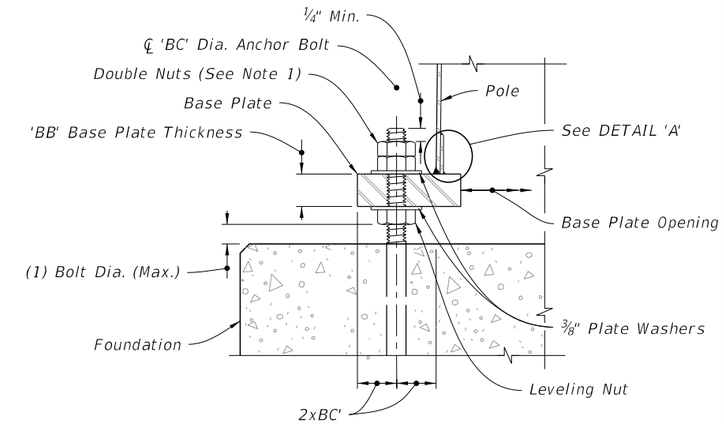

SECTION A-A

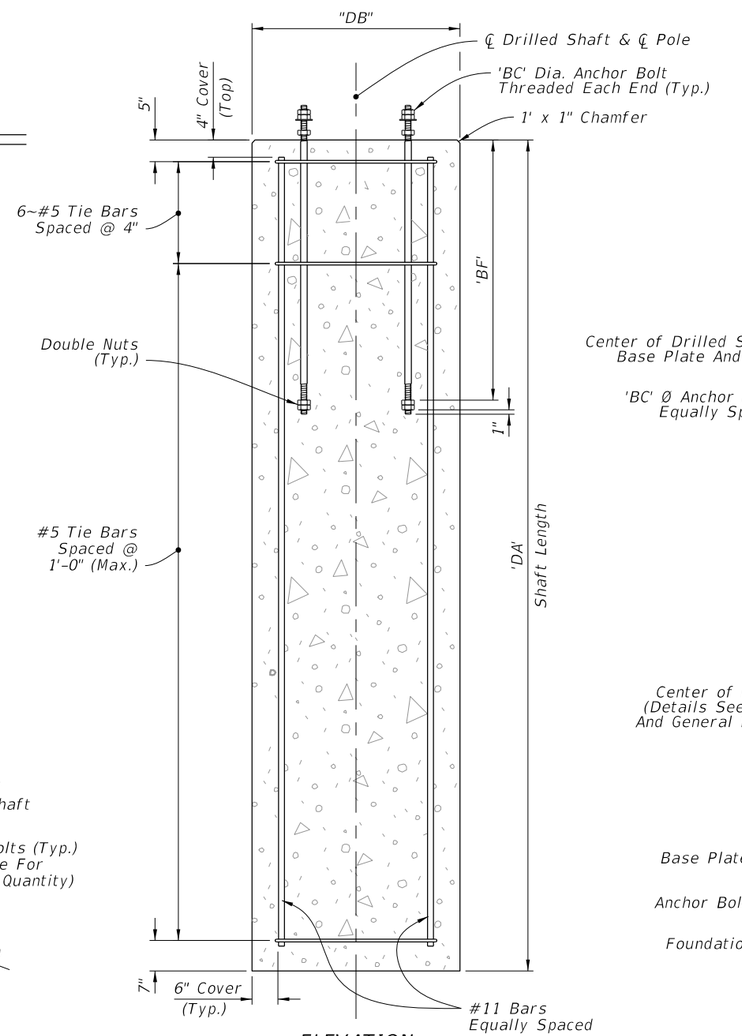

ELEVATION

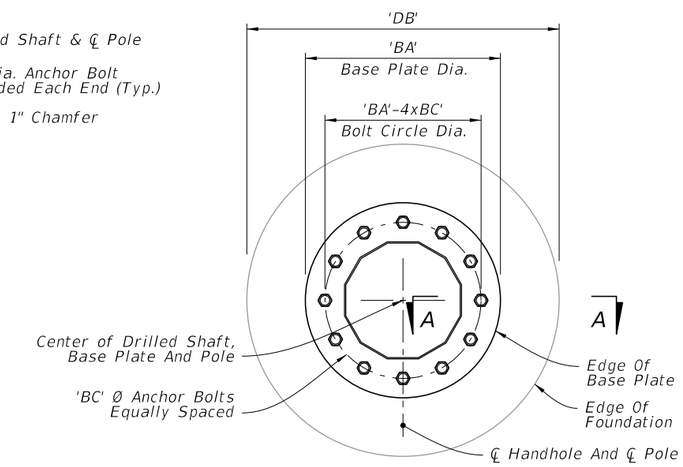

PLAN

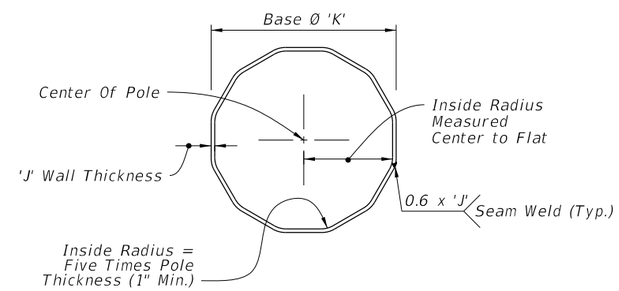

SECTION B-B

NOTE:

Double Nuts: Bottom nut may be half-height 'jam' nut. Provide Individual nut covers (not shown) for each bolt.

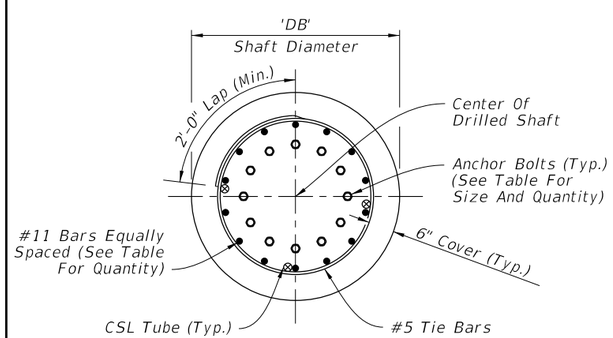

PLAN

FOUNDATION

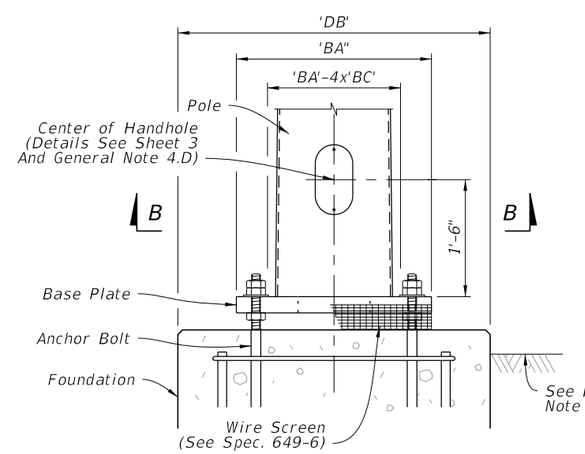

ELEVATION

BASE PLATE

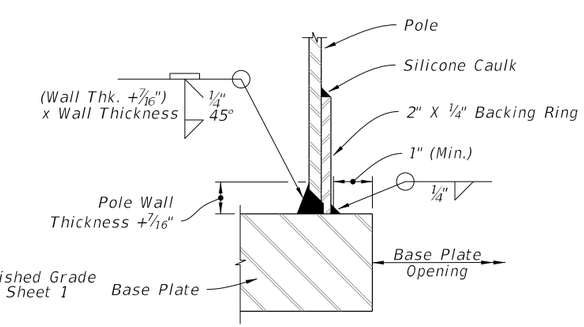

JOINT WELD DETAIL

DETAIL 'A'

FOUNDATION AND BASE DETAILS

LAST REVISION	REVISION	DESCRIPTION:				
11/01/18			FY 2023-24 STANDARD PLANS	STEEL STRAIN POLE	INDEX 649-010	SHEET 2 of 3

10/20/2022 8:55:19 AM

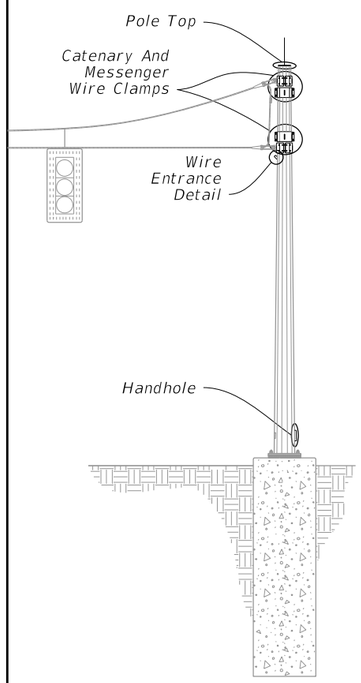

POLE ASSEMBLY

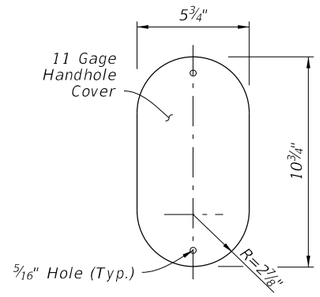

COVER

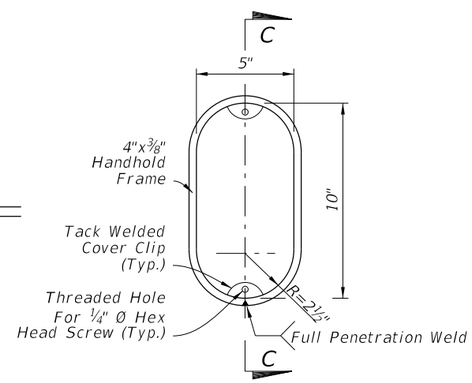

FRAME

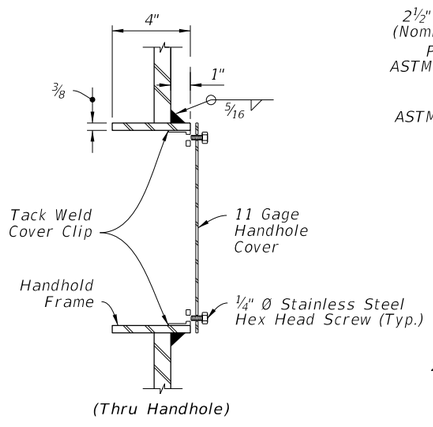

SECTION C-C

HANDHOLE

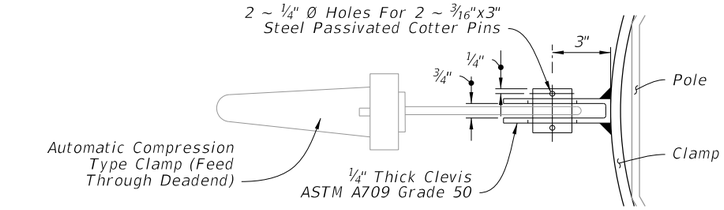

DETAIL "B"

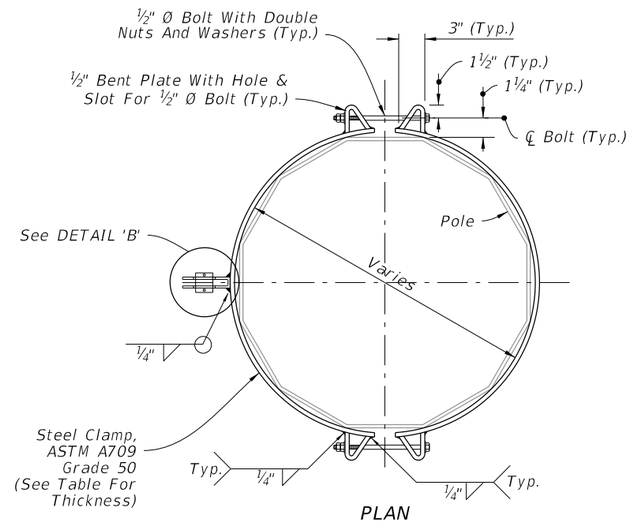

PLAN

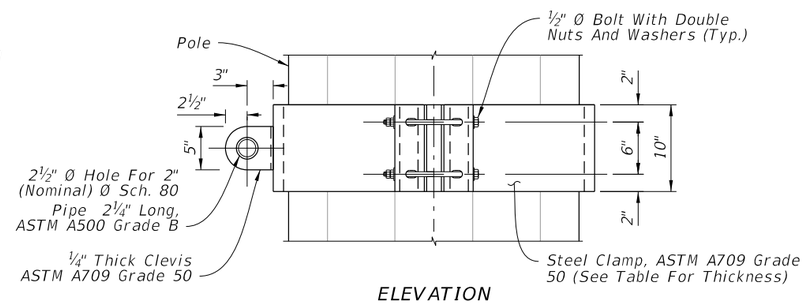

ELEVATION

CATENARY AND MESSENGER WIRE CLAMPS

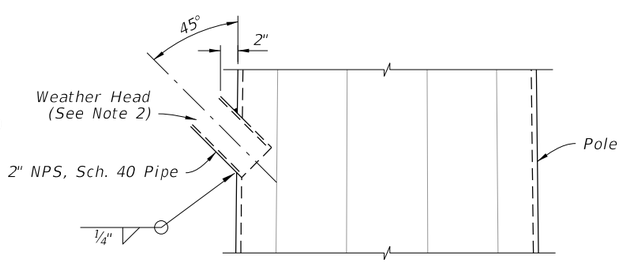

WIRE ENTRANCE DETAIL

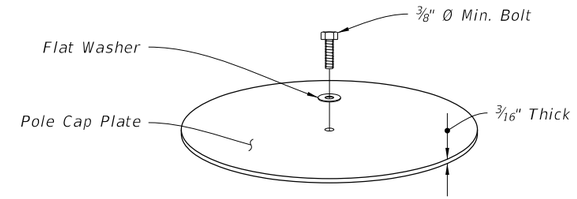

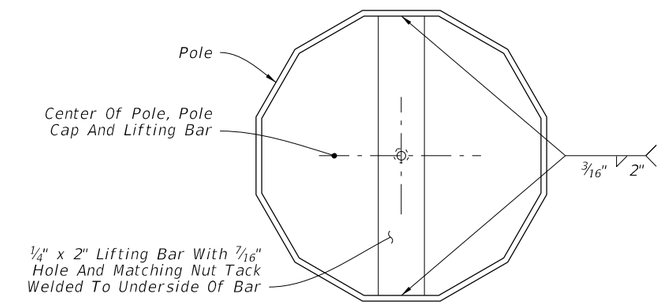

TOP VIEW

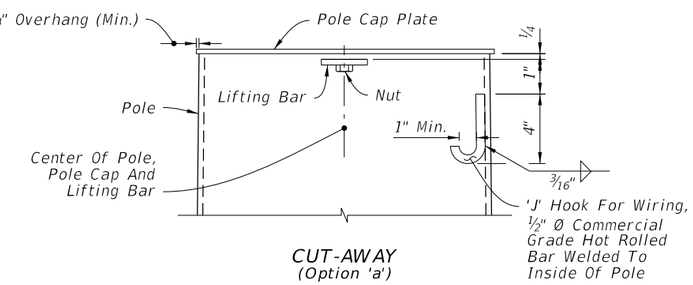

CUT-AWAY
(Option 'a')

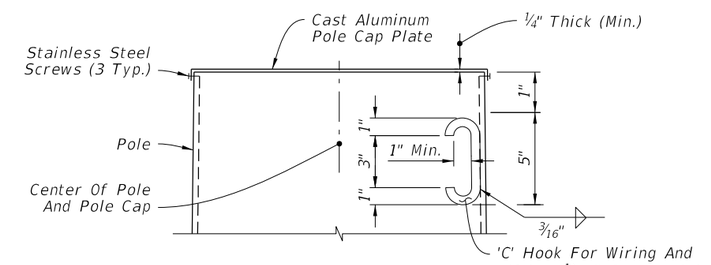

CUT-AWAY
(Option 'b')
(See Note 3)

POLE TOP

NOTES:

1. Clamps have been sized for Design Cable Loads shown in the Clamp Thickness Table, and a Maximum Pole Diameter at the Clamp location of 2'-1". Use one clamp per cable.
2. Install a properly sized Weather Head, fastened securely to the standard pipe for each pole location. At locations other than the wire entrance, the Weather Head face is to be left closed to outside atmosphere. Wire entrance installed per Index 634-001.
3. Any combination of Option 'a' or 'b' may be used provided both lifting and wiring is accommodated.

CLAMP THICKNESS TABLE

Cable Diameter (in.)	Minimum Breaking Strength (kip)	Plate Thickness (in.)
1/2	25	1
7/16	18	7/8
3/8	11.5	3/4
1/4	3.15	3/8

ATTACHMENT DETAILS

GENERAL NOTES:

1. Work this Index with Specification 649.

2. This Index is considered fully detailed; only submit shop drawings for minor modifications not detailed in the Plans.

3. See Index 635-001 for additional Pull Box details.

4. See Index 676-010 for cabinet installation details.

5. Materials:
   A. Pole: ASTM A1011 Grade 50, 55, 60 or 65 (less than ¼") or ASTM A572 Grade 50, 60 or 65 (greater than or equal to ¼") or ASTM A595 Grade A (55 ksi yield) or Grade B (60 ksi yield).
   B. Steel Plates and Pole Cap: ASTM A36 or ASTM A709 Grade 50.
   C. Weld Metal: E70XX.
   D. Bolts: ASTM F3125, Grade A325, Type 1.
      Nuts: ASTM A563.
      Washers: ASTM F-436.
   E. Anchor Bolts: ASTM F1554 Grade 55 with ASTM A563 Grade A heavy-hex nuts and ASTM A36 plate washers.
   F. Handhole Frame: ASTM A709 Grade 36 or ASTM A36.
   G. Handhole Cover: ASTM A1011 Grade 50, 55, 60 or 65.
   H. Stainless Steel Screws: AISI Type 316.
   I. Reinforcing Steel: ASTM A615 Grade 60.
   J. Galvanization: Bolts, nuts and washers: ASTM F2329 All other steel including plate washer: ASTM A123
   K. Concrete: Class IV (Drilled Shaft) for all environment classifications.

6. Fabrication:
   A. Welding:
      a. Specification 460-6.4 and
      b. AASHTO RFD Specification for Structural Supports for Highway Signs, Luminaires, and Traffic Signals Section 14.4.4.
   B. Poles:
      a. Round or 16-sided (Min.)
      b. Taper pole diameter at 0.14 inches per foot
      c. Fabricate Pole longitudinal seam welds (2 maximum) with 60 percent minimum penetration or fusion welds except as follows:
         1. Use a full-penetration groove weld within 6 inches of the circumferential tube-to-plate connection and
         2. Use full-penetration groove welds on the female end section of telescopic (i.e., slip type) field splices for a minimum length of one and one-half times the inside diameter of the female section plus 6 inches.
      d. Pole shaft may be either one or two sections (with telescopic field splice)
      e. Circumferentially welded pole shafts and laminated pole shafts are not permitted
   C. Identification Tag: (Submit details for approval)
      a. 2"x 4" (Max.) aluminum tag
      b. Locate on the inside of the pole and visible from the handhole
      c. Secure with ⅛" diameter stainless steel rivets or screws.
      d. Include the following information on the ID Tag:
         1. Financial Project ID
         2. Pole Type
         3. Pole Height
         4. Manufacturers' Name
         5. Yield Strength (Fy of Steel)
         6. Base Wall Thickness
   D. Except for Anchor Bolts, bolt hole diameters are bolt diameter plus 1/16" and anchor bolt holes are bolt diameter plus ½" (Max) prior to galvanizing.

7. Pole Installation:
   A. Do not install additional wire access holes (not shown in this Index) with a diameter that exceeds 1½" in diameter.
   B. Install Anchor Bolts in accordance with Specification 649-5.
   C. Cable Supports: Electrical Cable Guides and Eyebolts.
      a. Locate top and bottom cable guides within the pole aligned with each other.
      b. Position one cable guide 2" below the handhole.
      c. Position other cable guide 1" directly below the top of the tenon.
      d. Position Park Stands 2" below the top of the handhole.
   D. Install Pole with the handhole located away from approaching traffic.
   E. Install the Pole plumb.

8. Cabinet Installation:
   A. Splice fiber optic cables in cabinet to preterminated patch panel.
   B. Furnish and install Surge Protection Devices (SPDs) on all cabling in cabinet.
   C. Furnish and install secondary SPDs protection on outlets for equipment in cabinet.
   D. Ensure that all electronic equipment power is protected and conditioned with SPDs.
   E. Ensure that equipment cabinet is bonded to CCTV pole grounding system.
   F. Install the pole mounted cabinet with the hinges next to the pole.
   G. Sizes and types of conduits and inner ducts for network communications between the pull box and cabinet are stated in the Contract Documents.

9. Lowering Device Installation:
   A. Place the lowering cable that moves within the pole in an interior conduit to prevent it from tangling or interfering with any electrical wire that is in the pole. Ensure that any electrical wire within the pole is routed securely and free from slack.
   B. Mount lowering device perpendicular to the roadway or as shown in the plans. Position CC TV pole so that the camera can be safely lowered without requiring lane closures.
   C. Coordinate all lowering device hardware requirements (including Tenon, Tenon mounting plates, parking stands, etc.) with lowering device manufacturer.

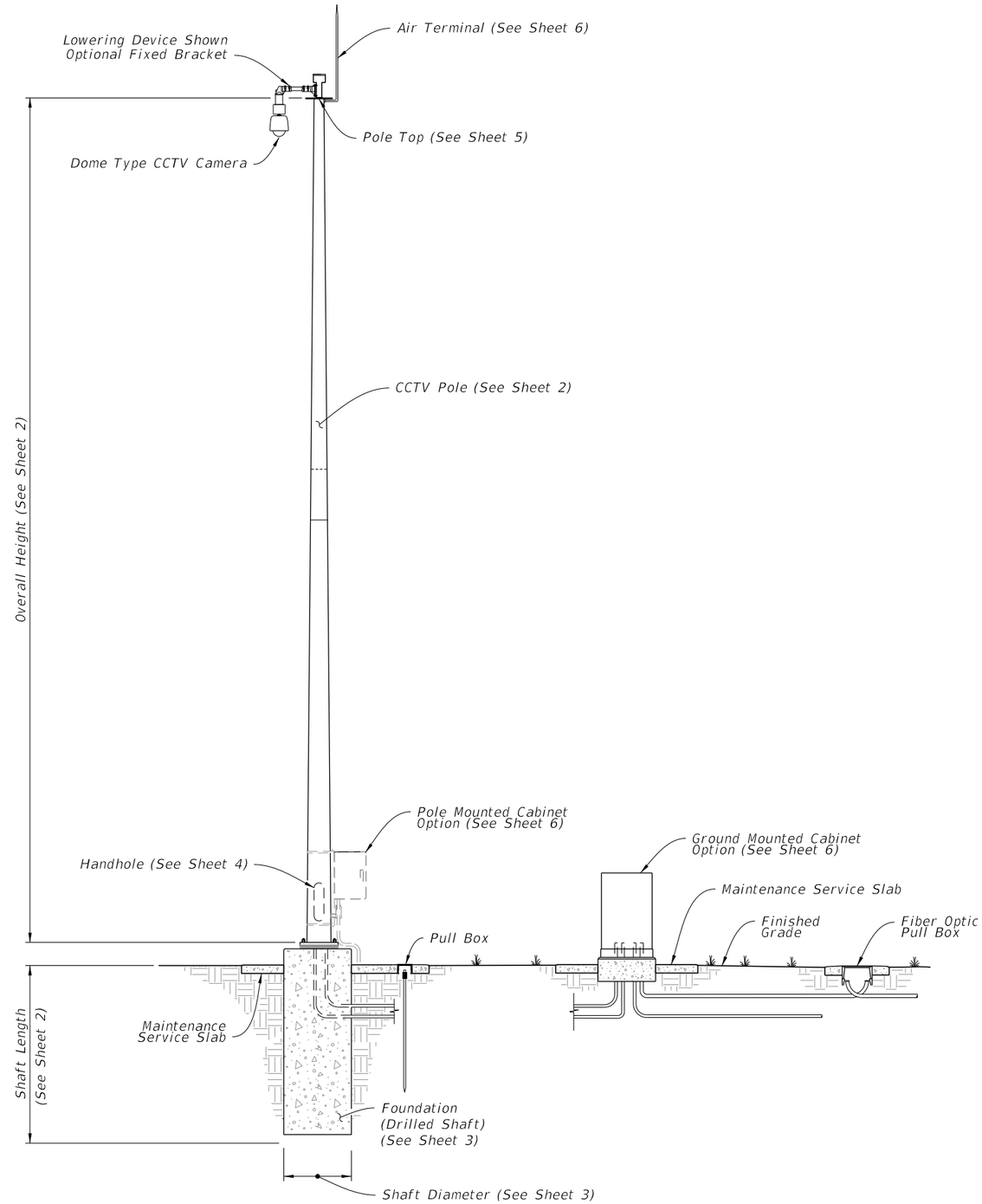

STEEL CCTV POLE ASSEMBLY

10/20/2022 8:55:22 AM

LAST REVISION	REVISION	DESCRIPTION:			INDEX	SHEET
11/01/22			FY 2023-24 STANDARD PLANS	STEEL CCTV POLE	649-020	1 of 6

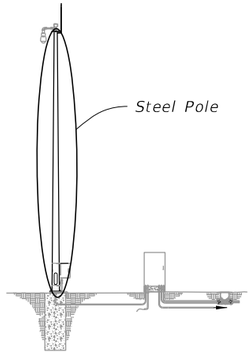

ASSEMBLY

SHAFT DESIGN TABLE			
Pole Overall Height (ft)	Shaft Diameter	Shaft Length	Longitudinal Reinforcement
50	4'-0"	11'-0"	(14) #11
55	4'-0"	12'-0"	(14) #11
60	4'-6"	13'-0"	(16) #11
65	4'-6"	13'-0"	(16) #11
70	5'-0"	14'-0"	(18) #11

ADDITIONAL SHAFT DEPTH DUE TO GROUND SLOPE		
Ground Slope	4'-0" Shaft Diameter	5'-0" Shaft Diameter
1:5	3'-0"	4'-0"
1:4	4'-0"	5'-0"
1:3	5'-0"	6'-0"
1:2	7'-0"	9'-0"

FOUNDATION NOTES:

1. Shaft Length is based on 1'-0" height above the finished grade.

2. Shaft Design Table Shaft Length is based on level ground (flatter than 1:5). Increase the shaft depth in accordance with the Additional Shaft Depth Due To Ground Slope table for foundations with slopes 1:5 and steeper. Use the higher value for slope or diameter values that fall between those shown on the table.

BASE PLATE AND ANCHOR BOLT DESIGN TABLE							
Pole Overall Height (ft)	Base Plate Diameter (in.)	Base Plate Thickness (in.)	Anchor Bolt Circle (in.)	Number of Bolts	Anchor Bolt Diameter (in.)	Anchor Bolt Embedment (in.)	Minimum Anchor Bolt Projection (in.)
50	27	2.5	22	6	1.25	31	8.5
55	28	2.5	23	6	1.25	33	8.5
60	33	2.5	27	6	1.50	34	9.5
65	35	2.5	29	6	1.50	35	9.5
70	40	2.5	33	6	1.75	38	10.5

POLE DESIGN TABLE							
Pole Overall Height (ft)	Section 1 (Top)			Section 2 (Bottom)			Joint
	Length	Wall Thickness (in.)	Base Diameter (in.)	Length	Wall Thickness (in.)	Base Diameter (in.)	Minimum Splice Length (in.)
50	---	---	---	50'-0"	0.25	17	---
	25'-0"	0.25	14	28'-0"	0.25	17	27
55	30'-0"	0.25	15	28'-0"	0.3125	18	30
60	35'-0"	0.25	18	29'-0"	0.3125	21	33
65	33'-0"	0.25	19	36'-0"	0.3125	23	33
70	38'-0"	0.25	22	36'-0"	0.3125	26	39

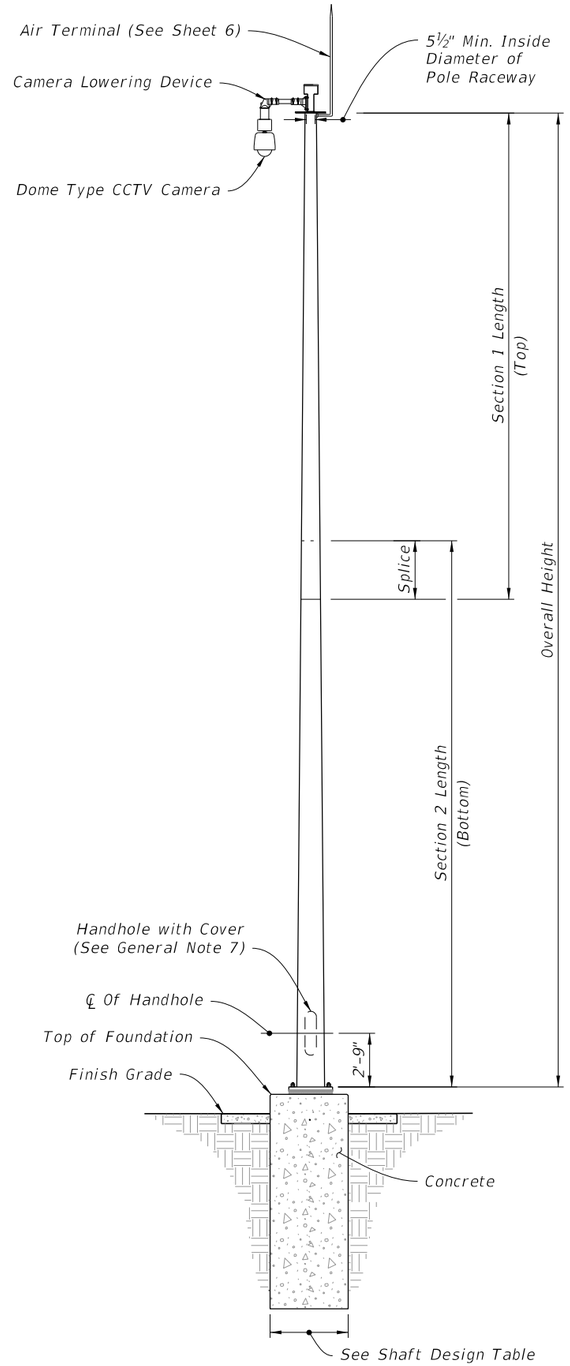

CAMERA LOWERING DEVICE

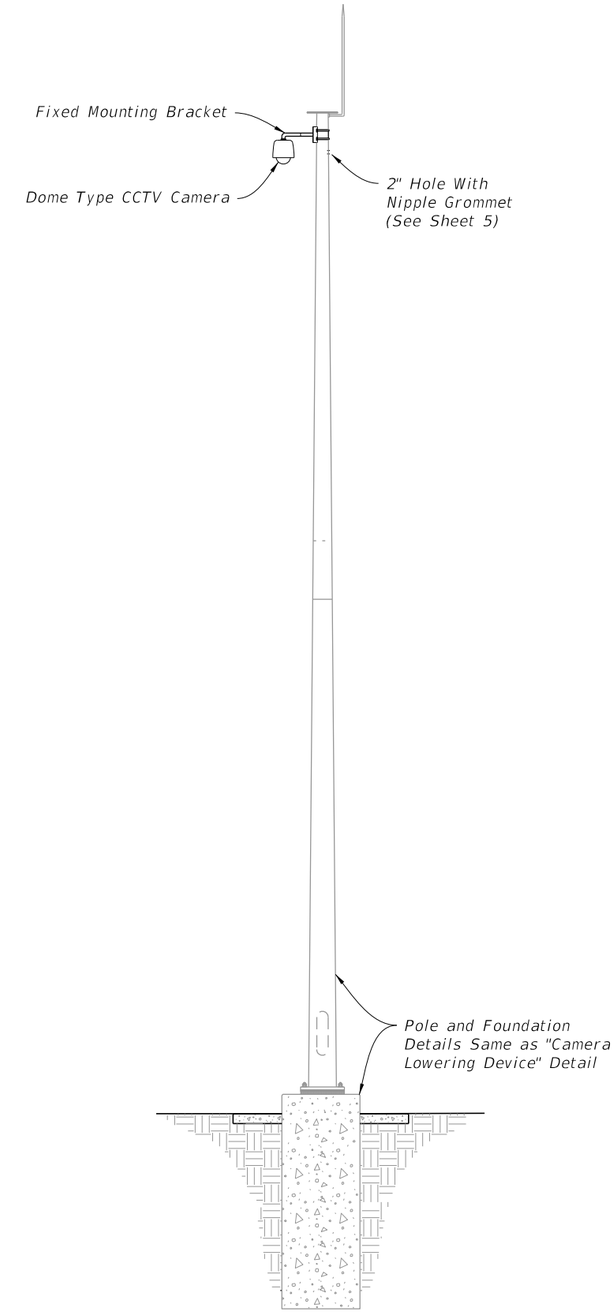

FIXED MOUNTING BRACKET

ELEVATION

10/20/2022 8:55:23 AM

LAST REVISION	REVISION	DESCRIPTION:				
11/01/22			FY 2023-24 STANDARD PLANS	STEEL CCTV POLE	INDEX 649-020	SHEET 2 of 6

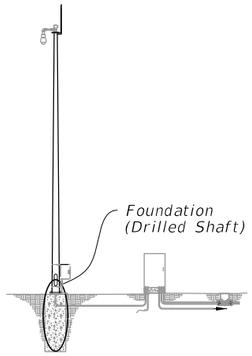

ASSEMBLY

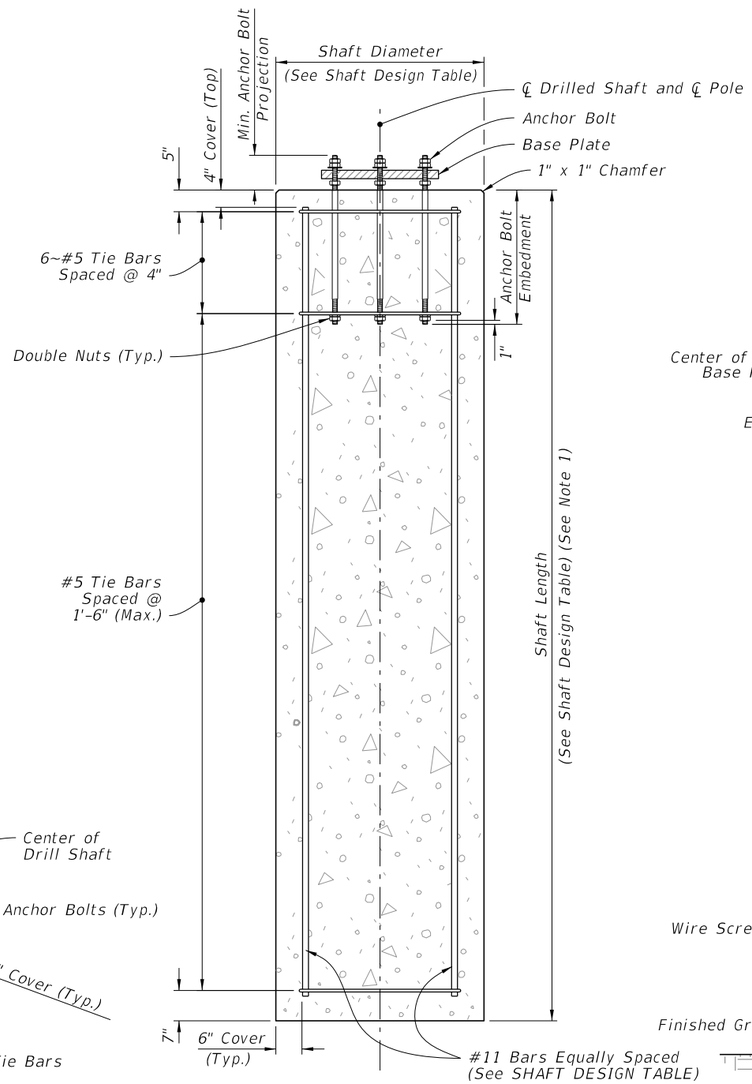

ELEVATION

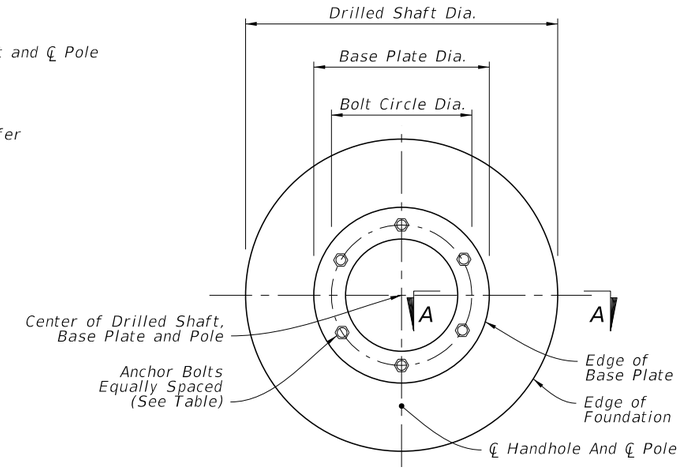

PLAN

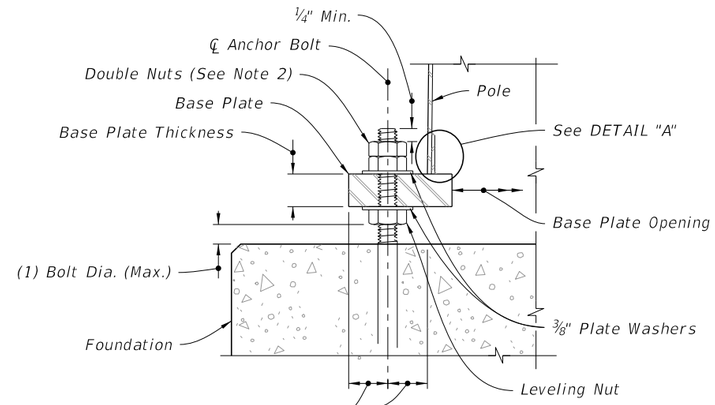

SECTION A-A

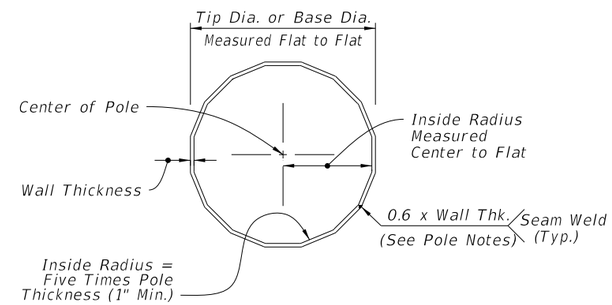

SECTION B-B

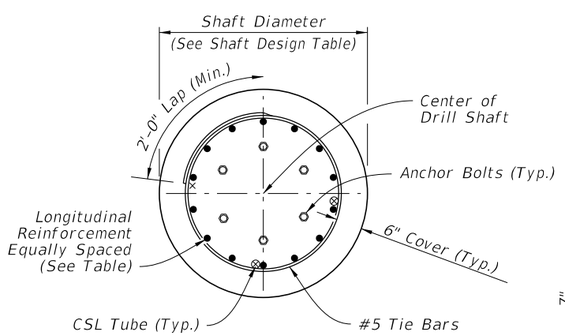

PLAN

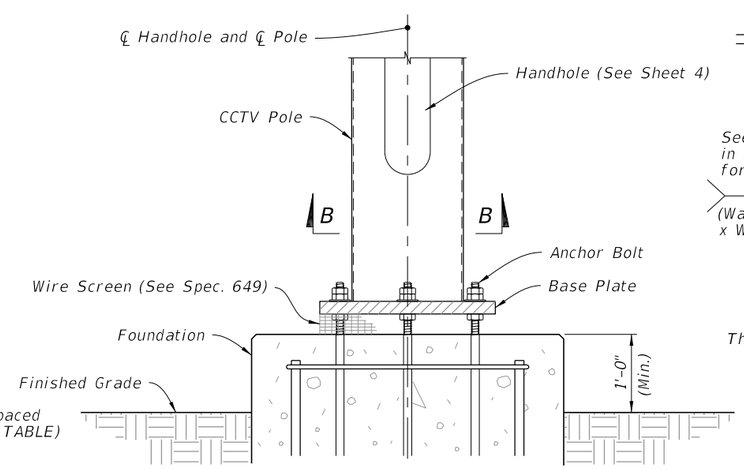

ELEVATION

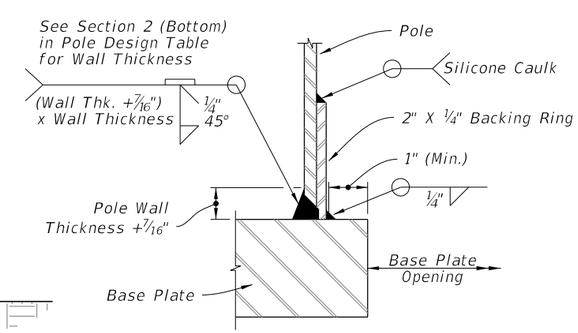

JOINT WELD DETAIL

NOTES:

1. Shaft Length is based on 1'-0" height above the finished grade.
2. Double Nuts: Bottom nut may be half-height 'jam' nut. Provide individual nut covers (not shown) for each bolt.
3. Conduit and CSL Tubes not shown for clarity.
4. Work these details with Data Table on Sheet 2.

FOUNDATION

BASE PLATE

DETAIL "A"

10/20/2022 8:55:24 AM

LAST REVISION	REVISION	DESCRIPTION:			INDEX	SHEET
11/01/21			FY 2023-24 STANDARD PLANS	STEEL CCTV POLE	649-020	3 of 6

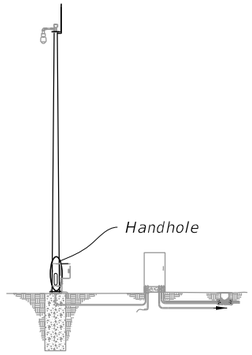

ASSEMBLY

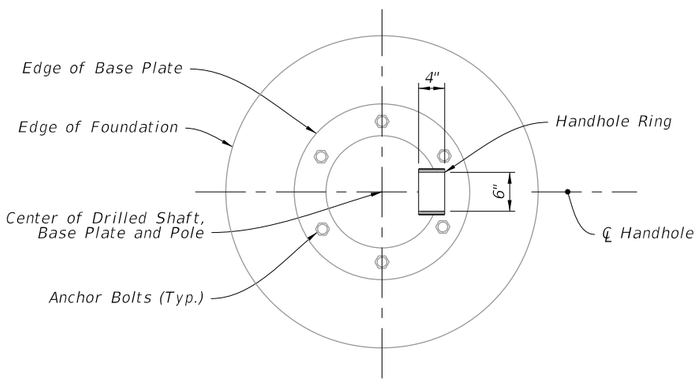

PLAN

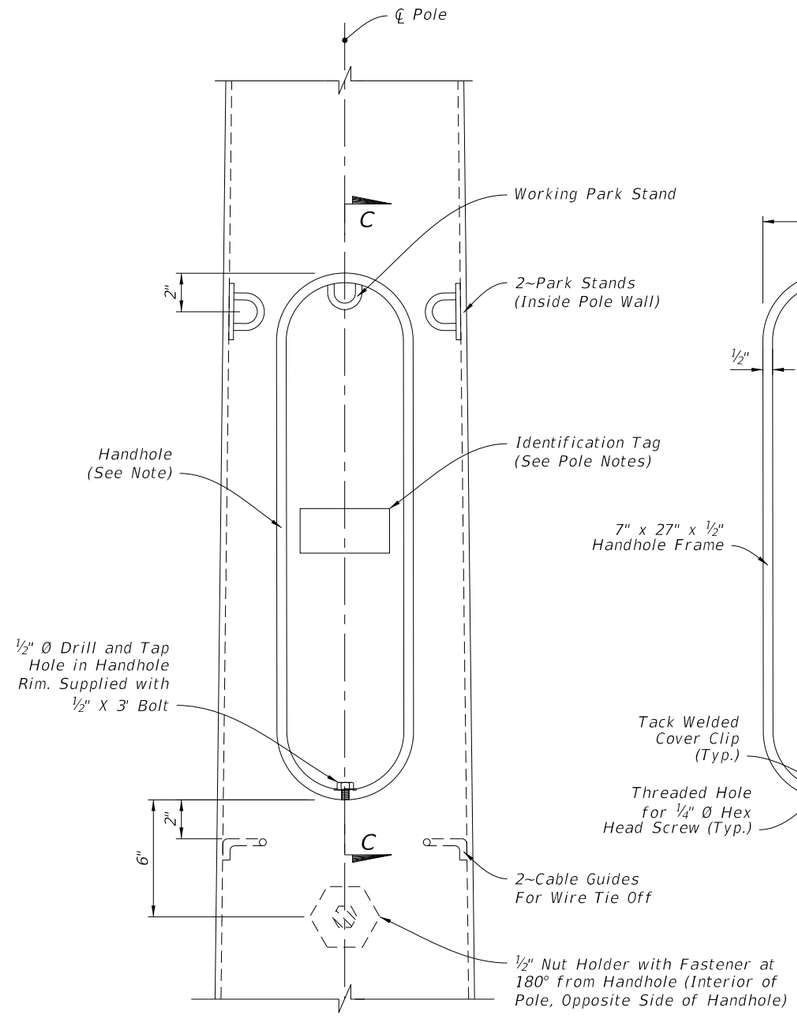

ELEVATION

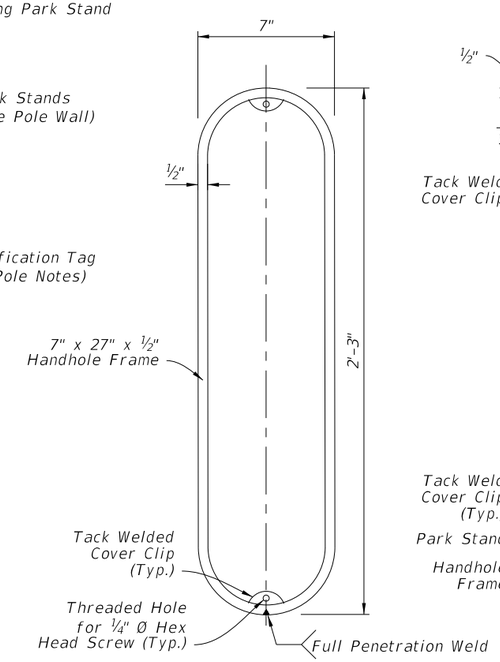

FRAME

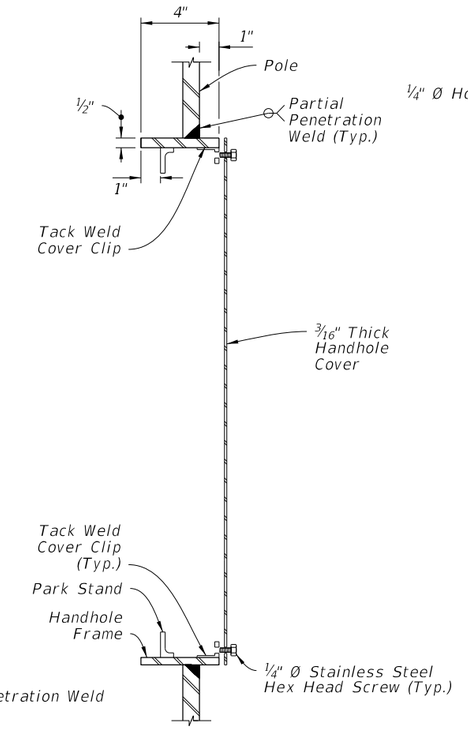

SECTION C-C

COVER PLATE

NOTE:

To secure the cover plate, install a steel chain from the cover to the pole or by mounting the cover with hinges and install a pad lock tab.

HANDHOLE DETAIL

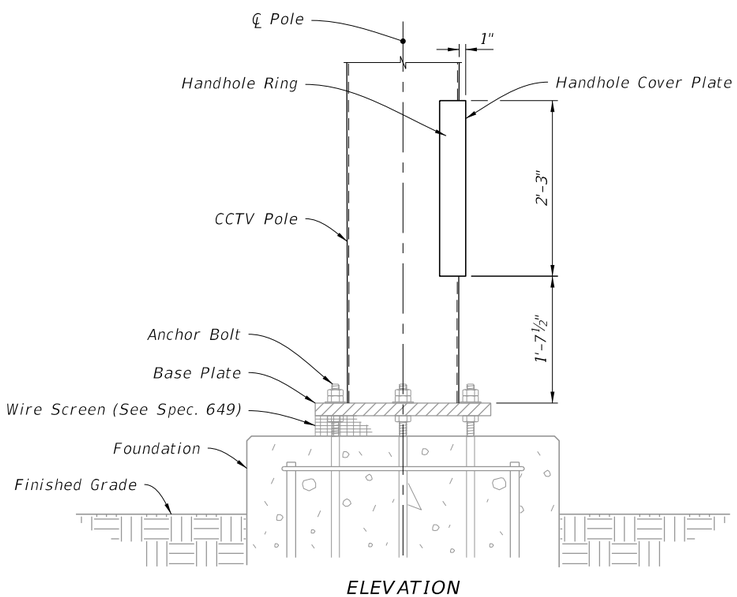

ELEVATION

HANDHOLE LOCATION

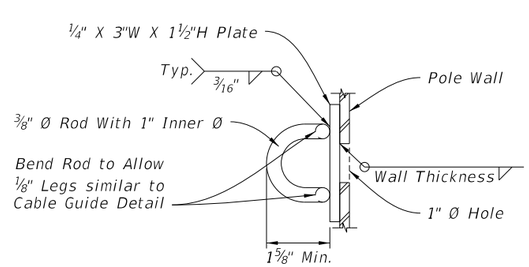

Rod Option

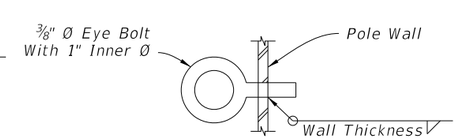

Eye Bolt Option

PARK STAND DETAILS

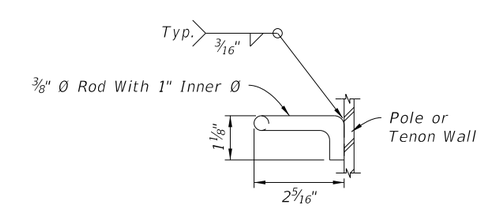

CABLE GUIDE DETAIL

10/20/2022 8:55:26 AM

LAST REVISION	REVISION	DESCRIPTION:			INDEX	SHEET
11/01/21			FY 2023-24 STANDARD PLANS	STEEL CCTV POLE	649-020	4 of 6

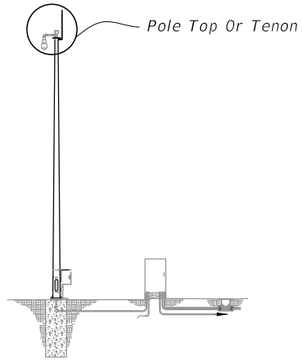

ASSEMBLY

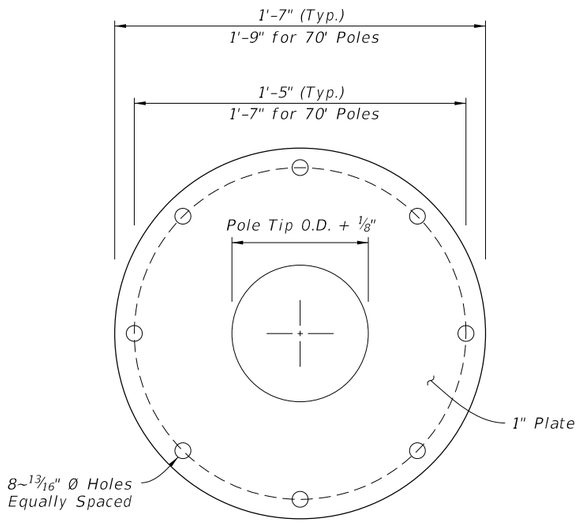

PLAN VIEW

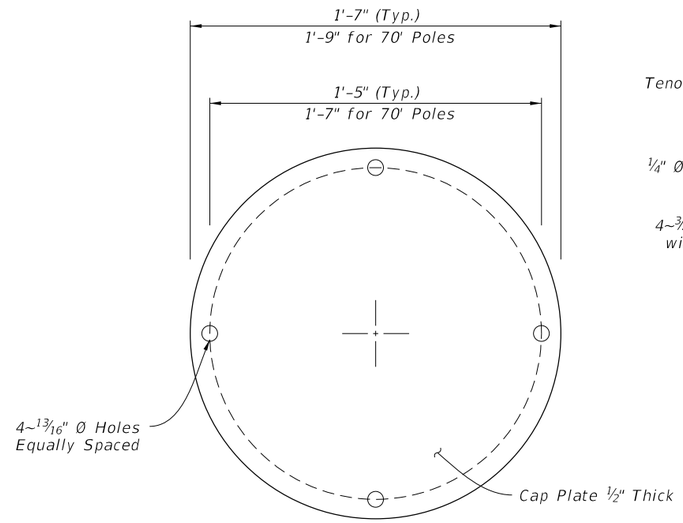

PLAN VIEW

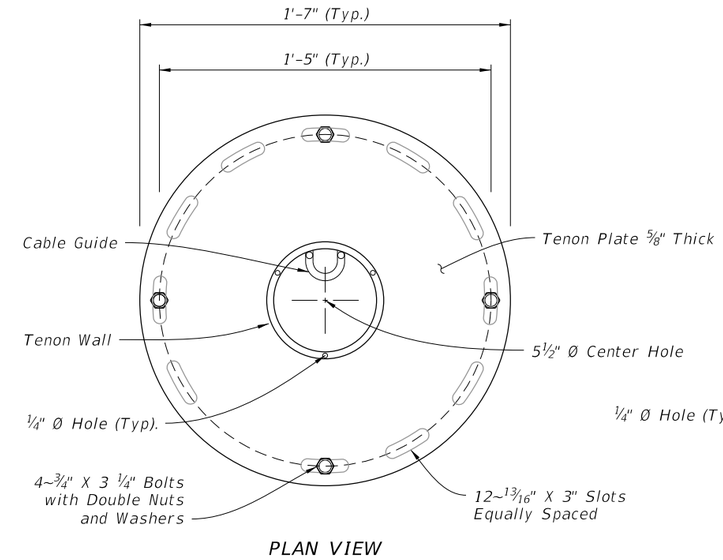

PLAN VIEW

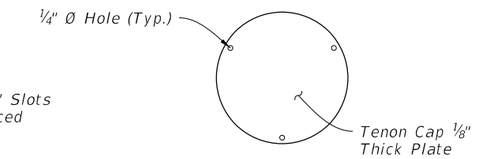

TENON CAP

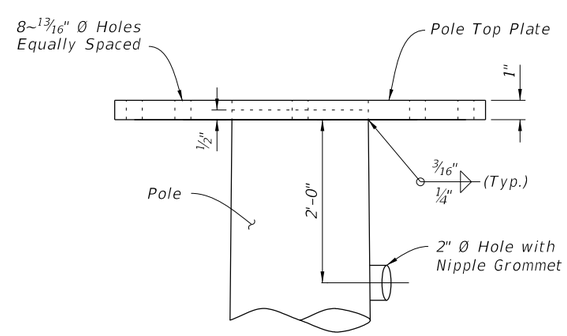

ELEVATION

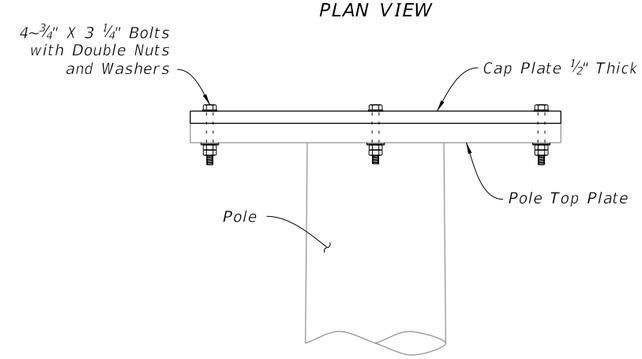

ELEVATION
CAP PLATE DETAIL

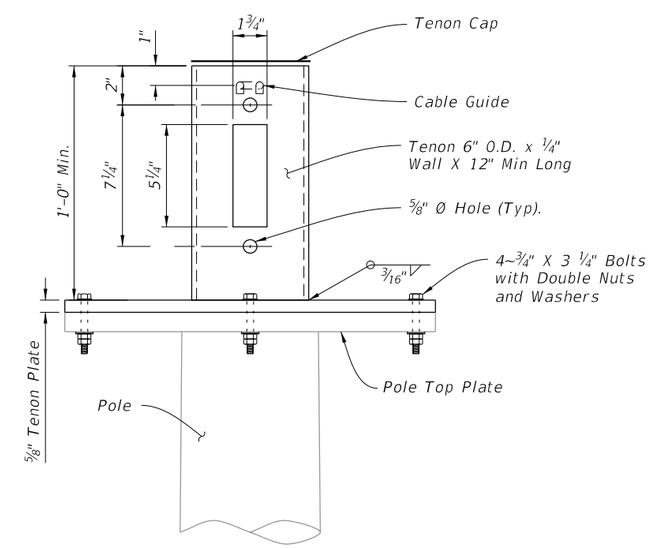

ELEVATION
LOWERING DEVICE TENON

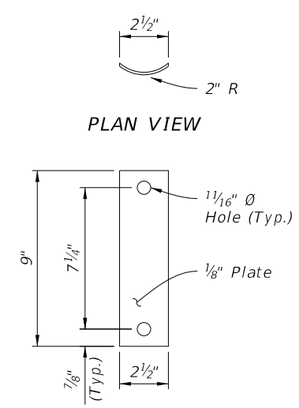

ELEVATION

POLE TOP PLATE

POLE TOP DETAIL

TENON COVER

10/20/2022 8:55:27 AM

LAST REVISION	REVISION	DESCRIPTION:			INDEX	SHEET
11/01/21			FY 2023-24 STANDARD PLANS	STEEL CCTV POLE	649-020	5 of 6

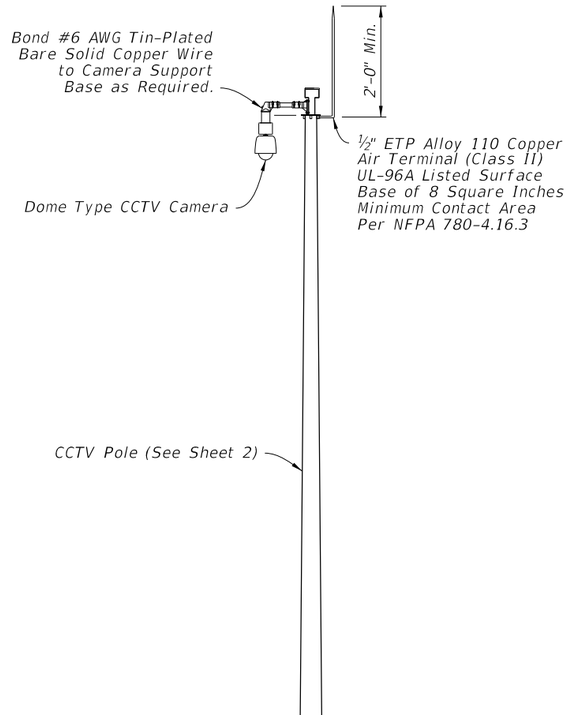

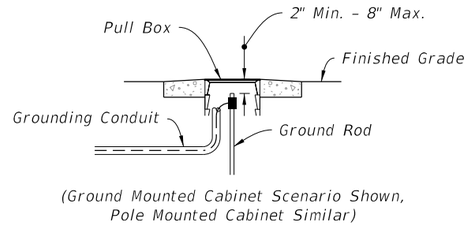

PULL BOX
DETAIL "B"

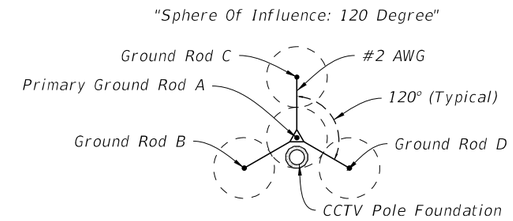

TYPICAL
(20' Rods, 40' Spacing)

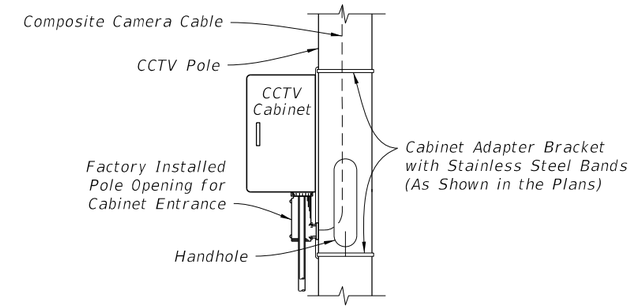

SIDE VIEW

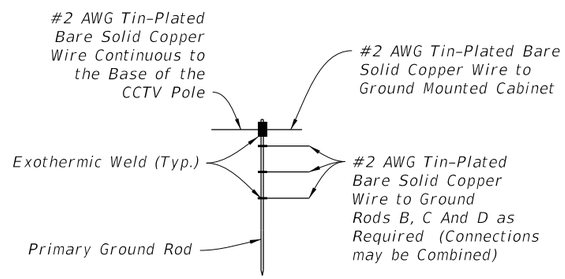

PRIMARY GROUND ROD ASSEMBLY
DETAIL "C"

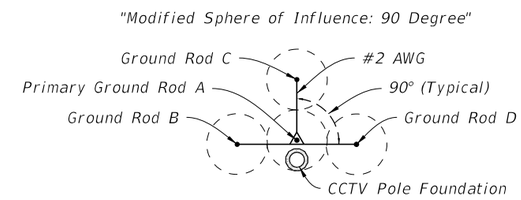

TYPICAL MODIFIED
(20' Rods, 40' Spacing)

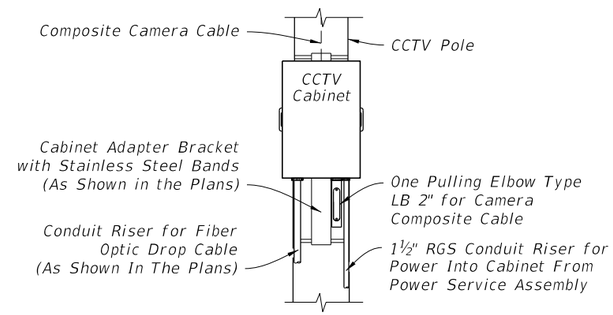

FRONT VIEW
DETAIL "E"

GROUND ROD ARRAY PLACEMENT
DETAIL "D"

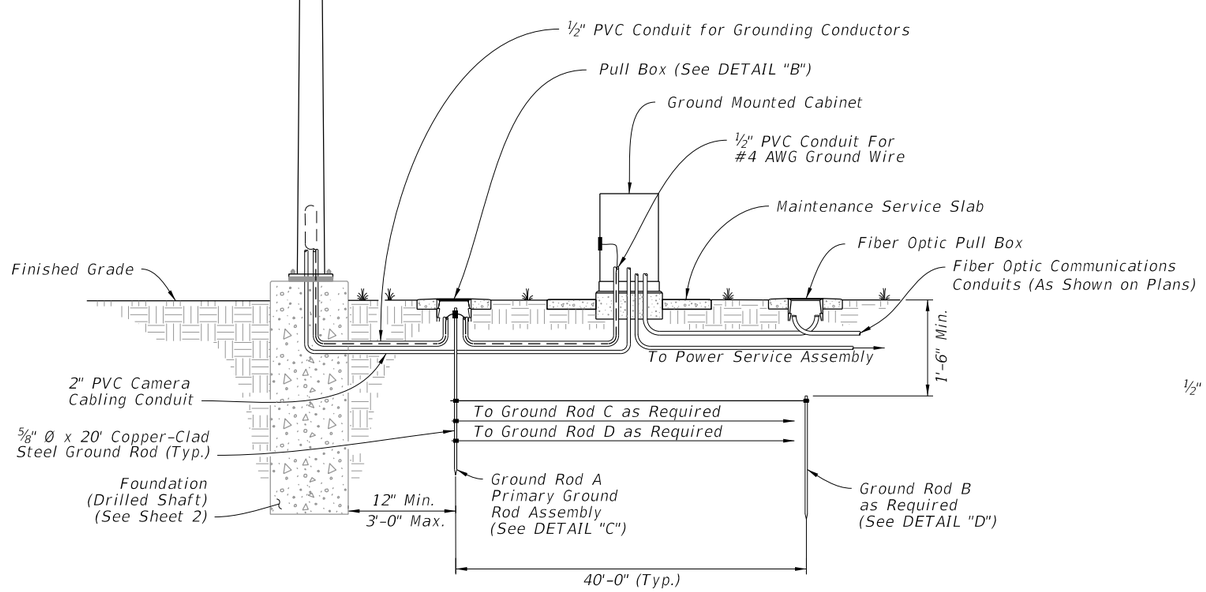

GROUND MOUNTED CABINET

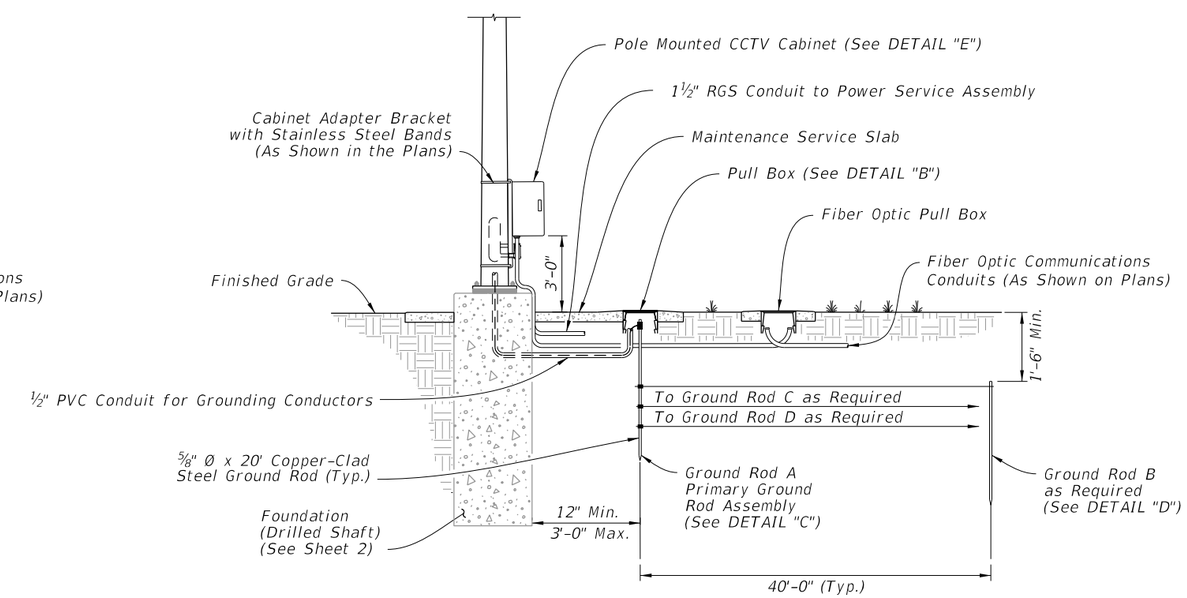

POLE MOUNTED CABINET

STEEL CCTV POLE GROUNDING

10/20/2022 8:55:28 AM

LAST REVISION	REVISION	DESCRIPTION:			INDEX	SHEET
11/01/22			FY 2023-24 STANDARD PLANS	STEEL CCTV POLE	649-020	6 of 6

ARM AND BASE PLATE

Arm ID Axx-ArmLength S-SingleArm D-DoubleArm H-HeavyDuty	Total Arm Length (ft)	Arm			Arm Extension			Base Plate		
		FA/SA (ft)	FC/SC (in)	FD/SD (in)	FE/SE (ft)	FG/SG (in)	FH/SH (in)	HT (in)	FJ/SJ (in)	FK/SK (in)
A30/S	30	30	11	0.25	--	--	--	22	25	3
A30/S/H			12							
A30/D			11					30	36	
A30/D/H			12							
A40/S	40	40	13	0.25	--	--	--	22	27	3
A40/S/H			14							
A40/D			13					30	36	
A40/D/H			14							
A50/S	50	32.5	12	0.25	20.5	14	0.313	22	29	3
A50/S/H			13			15				
A50/D			12			14		30	36	
A50/D/H			13			15				
A60/S	60	35.5	12	0.25	27.5	15	0.375	30	36	3
A60/S/H			13			16				
A60/D			12			15				
A60/D/H			13			16				
A70/S	70	38	13	0.25	35	17	0.375	30	36	3
A70/S/H			14			18				
A70/D			13			17				
A70/D/H			14			18				
A78/S	78	39	13	0.25	42	18	0.375	30	36	3
A78/S/H			15			20				
A78/D			13			18				
A78/D/H			15			20				

POLE, BASE PLATE AND ARM CONNECTION

Pole ID Px-PoleNo S-SingleArm D-DoubleArm L-Luminaire	Upright				Base Plate					Arm-Upright Connection								
	UA (ft)	UD (in)	UE (in)	UG (ft)	No. Bolts	BA (in)	BB (in)	BC (in)	BF (in)	HT (in)	FJ/SJ (in)	FL/SL (in)	FN/SN (in)	FO/SO (in)	FP/SP (in)	FR/SR (in)	FS/SS (in)	FT/ST (in)
P1/S	25	16	0.375		6	32	2.5	2	40	22	25	0.75	0.438	14	1.25	2	8.5	0.438
P1/S/L	39			37.5														
P1/D	25									30	36			23		2.75	12.5	
P1/D/L	39			37.5														
P2/S	25	18	0.375		6	34	2.5	2	40	22	27	0.75	0.438	15	1.25	2	8.5	0.438
P2/S/L	39			37.5														
P2/D	25									30	36			23		2.75	12.5	
P2/D/L	39			37.5														
P3/S	25	20	0.375		6	36	2.5	2	40	22	29	0.75	0.438	16	1.25	2	8.5	0.438
P3/S/L	39			37.5														
P3/D	25									30	36			23		2.75	12.5	
P3/D/L	39			37.5														
P4/S	25	22	0.375		8	38	2.5	2	40	30	36	0.75	0.438	17	1.25	2.5	12.5	0.438
P4/S/L	39			37.5														
P4/D	25													23				
P4/D/L	39			37.5														
P5/S	25	24	0.375		8	40	2.5	2	40	30	36	0.75	0.5	18	1.25	2.5	12.5	0.5
P5/S/L	39			37.5														
P5/D	25													23				
P5/D/L	39			37.5														
P6/S	25	24	0.5		8	40	2.5	2	40	30	36	0.75	0.625	18	1.5	2.5	12	0.625
P6/S/L	39			37.5														
P6/D	25													23				
P6/D/L	39			37.5														
P7/S	25	26	0.5		8	42	2.5	2	40	30	36	0.75	0.625	19	1.5	2.5	12	0.625
P7/S/L	39			37.5														
P7/D	25													23				
P7/D/L	39			37.5														

DRILLED SHAFT

Drilled Shaft ID	DA (ft)	DB (ft)	RA	RB	RC	RD (in)	RE	RF (in)
DS/12/4.0	12	4.0	11	14	8	12	--	--
DS/12/4.5	12	4.5	11	16	8	12	--	--
DS/14/4.5	14	4.5	11	16	10	8	--	--
DS/14/5.0	14	5.0	11	18	10	8	--	--
DS/16/4.5	16	4.5	11	16	10	8	--	--
DS/16/5.0	16	5.0	11	18	10	8	--	--
DS/18/5.0	18	5.0	11	18	10	8	--	--
DS/20/5.0	20	5.0	11	18	10	6	10	9
DS/25/5.0	25	5.0	11	18	10	6	10	9

LUMINAIRE AND CONNECTION

LA (ft)	LB (ft)	LC (in)	LD (in)	LE	LF (ft)	LG (in)	LH (in)	LJ (in)	LK (in)	LL (deg)	UG (ft)
40	10	3	0.125	0.5	8	0.5	0.75	0.25	0.25	0	37.5

NOTE:

1. Work this Index with Index 649-031.

10/20/2022 8:55:29 AM

GENERAL NOTES:

1. Shop Drawings: This Index is considered fully detailed, only submit shop drawings for minor modifications not detailed in the Plans.

2. Prior to Fabrication: Verify the installed foundation elevation will result in the required signal elevation and adjust the Pole height as needed.

3. Details for Signal and Sign locations, Signal Head attachment, Sign attachment, Pedestrian Head attachment, and Foundation Conduit are not shown for simplicity.

4. Materials:
   - A. Poles, Mast Arms and Backing Rings:
     - a. Less than 3/16": ASTM A1011 Grade 50, 55, 60 or 65
     - b. Greater than or equal to 3/16": ASTM A572 Grade 50, 55, 60 or 65
     - c. ASTM A595 Grade A (55 ksi yield) or Grade B (60 ksi yield)
   - B. Steel Plates: ASTM A36
   - C. Weld Metal: E70XX
   - D. Bolts, Nuts and Washers:
     - a. High Strength Hex Head Bolts: ASTM F3125, Grade A325, Type 1
     - b. Nuts: ASTM A563 DH Heavy-Hex
     - c. Washers: ASTM F436 Type 1, one under turned element
   - E. Anchor Bolts, Nuts and Washers:
     - a. Anchor Bolts: ASTM F1554 Grade 55
     - b. Nuts: ASTM A563 Grade A Heavy-Hex (5 per anchor bolt)
     - c. Plate Washers: ASTM A36 (2 per bolt)
   - F. Threaded Bars/Studs: ASTM A36 or ASTM A307
   - G. Handhole Frame: ASTM A709 or ASTM A36, Grade 36
   - H. Handhole Cover: ASTM A1011 Grade 50, 55, 60 or 65
   - I. Pole Caps and Nut Covers: Fabricate from cast aluminum or galvanized carbon steel.
   - J. Stainless Steel Screws: AISI Type 316
   - K. Concrete: Class IV (Drilled Shaft) for all environmental classifications.
   - L. Reinforcing Steel: Specification 415

5. Fabrication:
   - A. Welding:
     - a. Specification 460-6.4 and
     - b. AASHTO LRFD Specification for Structural Supports for Highway Signs, Luminaires, and Traffic Signals Section 14.4.4
   - B. Poles and Mast Arms:
     - a. Round or 12-sided (Min.)
     - b. Taper pole diameter at 0.14 inches per foot
     - c. Upright poles must be a single section. For arms and upright poles, circumferential welds and laminated sections are not permitted.
     - d. Arms may be either one or two sections. See Sheet 4 for telescopic splice detail
     - e. Fabricate longitudinal seam welds with 60 percent minimum penetration or fusion welds except:
       1. Use a full-penetration groove weld within 6 inches of the circumferential tube-to-plate connection.
       2. Use full-penetration groove welds on the female end section of telescopic (i.e., slip type) field splices for a minimum length of one and one-half times the inside diameter of the female section plus 6 inches.
     - f. Locate longitudinal seams weld along the:
       1. Lower quadrant of the arms.
       2. Same side of the pole as the arm connections
     - g. Face handhole perpendicular from arm on single arm poles, perpendicular from the first arm of double arms poles facing away from traffic or see special instructions on the Mast Arm Tabulation Sheet.
     - h. Provide a 'J' or 'C' hook at the top of the pole for signal wiring support (See Sheet 6)
     - i. First and Second arm camber angle = 2°
     - j. Bolt holes diameters as follows:
       1. Bolts (except Anchor bolts): Bolt diameter plus 1/16" prior to galvanizing.
       2. Anchor Bolts: Bolt diameter plus 1/2" (Max.).

6. Coatings:
   - A. All Nuts, Bolts, Washers and Threaded Bars/Studs: ASTM F2329
   - B. All other steel items including plate washers ASTM A123

7. Construction:
   - A. Foundation: Specification 455 Drilled Shaft, except that payment is included in the cost of the Mast Arm.
   - B. Install Pole vertically.
   - C. Place structural grout pad with drain between top of foundation and bottom of baseplate in accordance with Specification 649-7.
   - D. Attach Sign Panels and Signals centered on the elevation of the Mast Arm.
   - E. Wire Access holes are 1 1/2" or less in diameter.

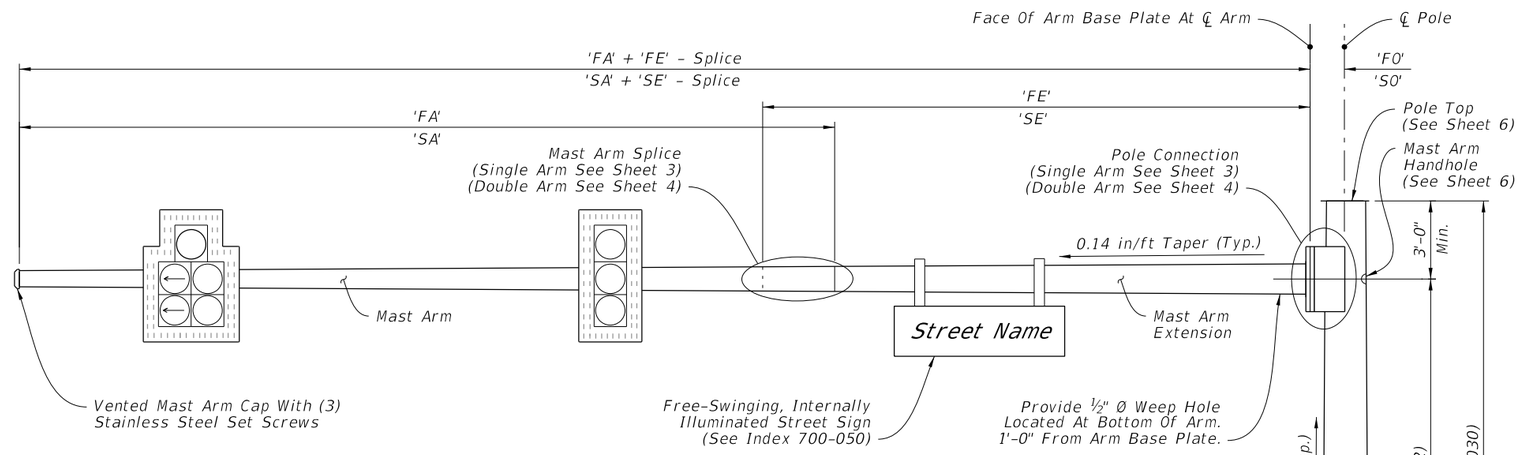

Aluminum Identification Tag not to exceed 2" x 4". Secure to pole by 1/8" stainless steel rivets or screws. Fabricators to provide details for approval. Identification Tag located on inside of pole visible from handhole, or on outside of pole inside Terminal Compartment. Tag to be stamped with the following information:

Standard Design	Special Design
Financial Project ID	Financial Project ID
Pole Type	Manufacturer's Name
Arm Type	Pole Base (F_y of Steel)
Manufacturer's Name	Arm (F_y of Steel)
Pole Base (F_y of Steel)	Pole Wall Thickness (in.)
Arm (F_y of Steel)	Arm Wall Thickness (in.)

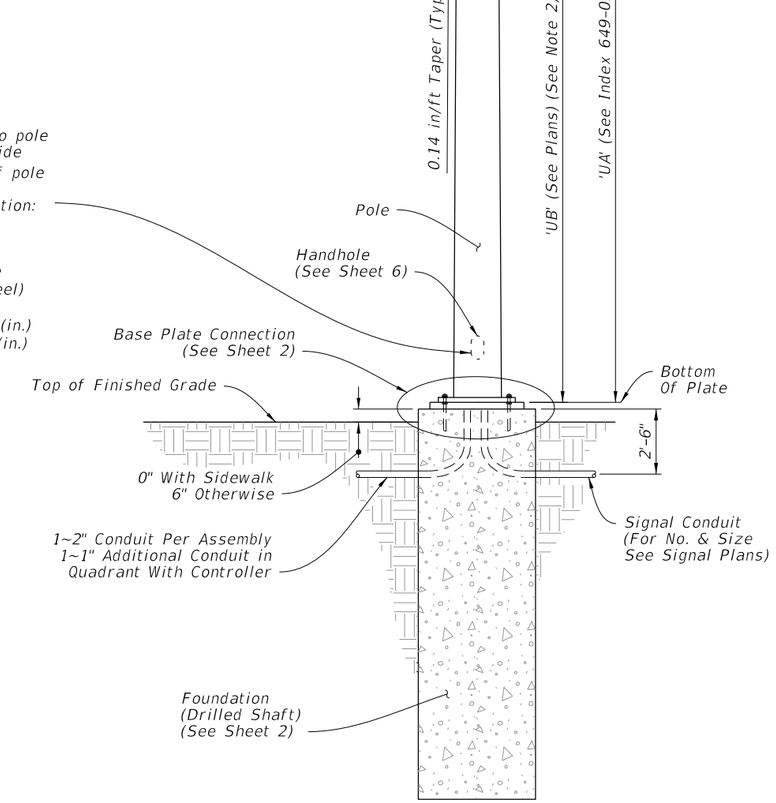

Single Arm Shown, Double Arm Similar
(Luminaire Arm Not Shown)

MAST ARM ASSEMBLY

TABLE OF CONTENTS

SHEET	SUBJECT
1	Elevation and Notes
2	Foundation and Base Plate Details
3	Single Arm Connection and Splice Details
4	Double Arm Connection and Splice Details
5	Luminaire Arm and Connection Details
6	Handhole and Pole Top Details

ELEVATION AND NOTES

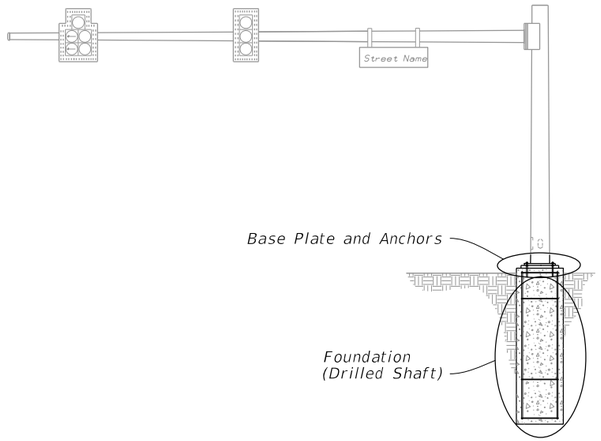

MAST ARM ASSEMBLY

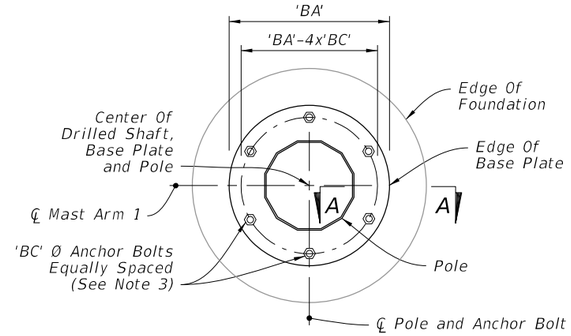

(6 Anchor Bolts)

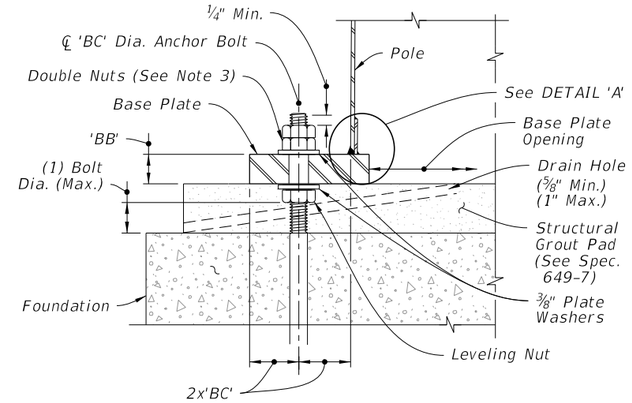

SECTION A-A

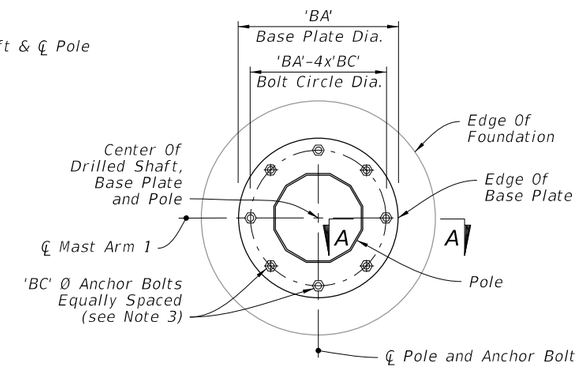

(8 Anchor Bolts)

PLAN

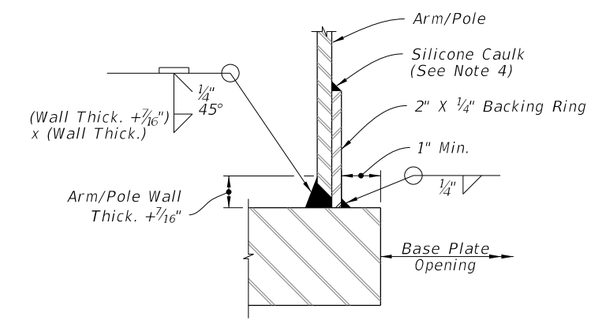

JOINT WELD DETAIL

DETAIL 'A'

NOTES:

1. The Structural Grout Pad diameter may be reduced where the footprint of the Grout Pad does not provide adequate clearance for the sidewalk and/or accessibility considerations.
2. See Index 649-030 and the plans for actual quantity of bolts in the Base Plate Connection.
3. The bottom hex nut of the Double Nuts shown in Section A-A may be substituted by a half-height anchor 'jam' nut. Provide individual nut covers (not shown) for each bolt.
4. Detail 'A' Silicone Caulk may be applied after installation. Consult with Manufacturer to determine the suitability of the caulk to be applied.

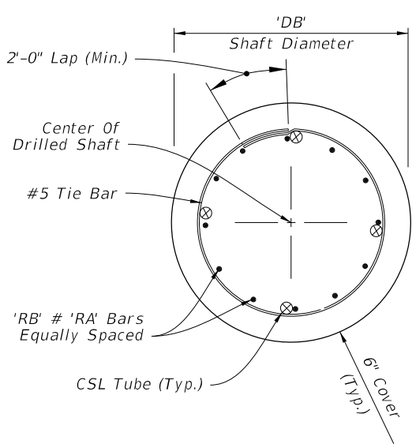

PLAN

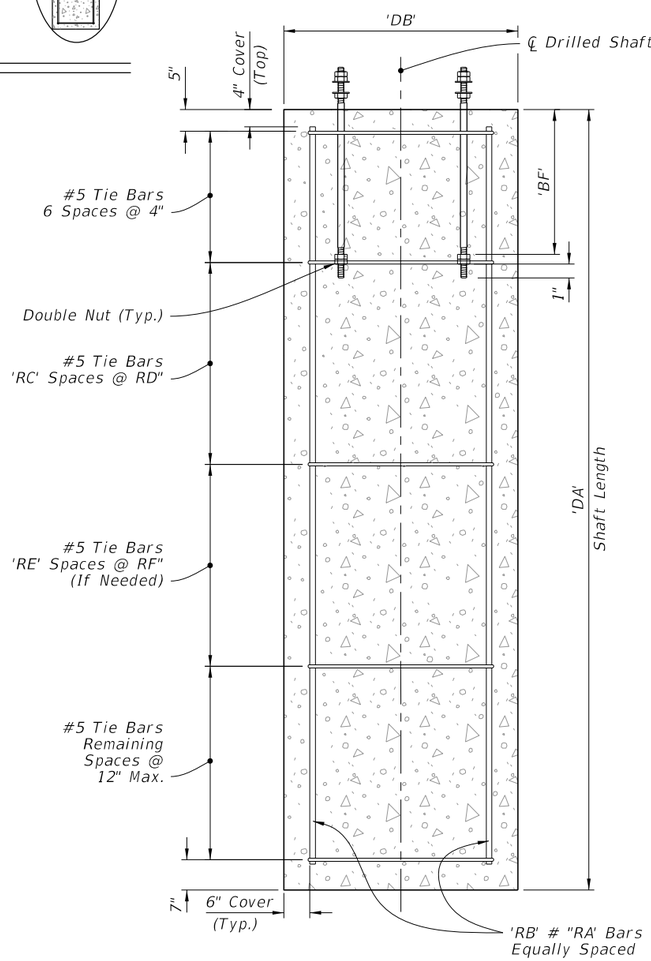

ELEVATION

FOUNDATION

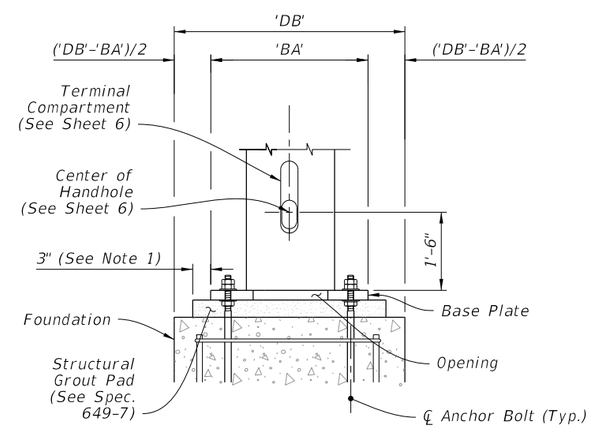

ELEVATION
(Back Face Shown)

BASE PLATE CONNECTION

FOUNDATION AND BASE PLATE DETAILS

LAST REVISION	REVISION	DESCRIPTION:			INDEX	SHEET
11/01/21			FY 2023-24 STANDARD PLANS	MAST ARM ASSEMBLIES	649-031	2 of 6

10/20/2022 8:55:32 AM

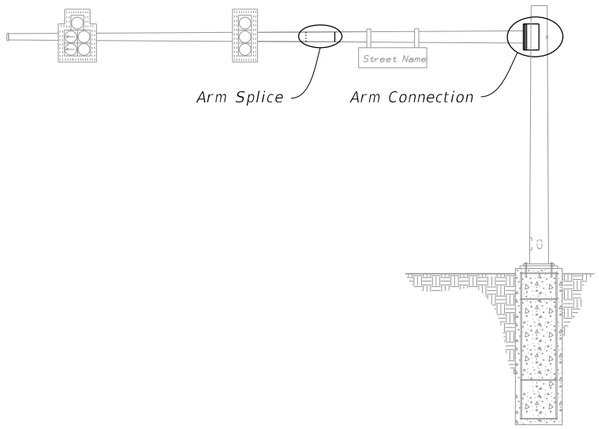

MAST ARM ASSEMBLY

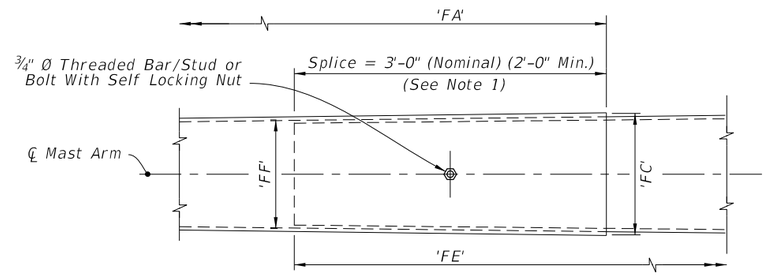

ARM SPLICE

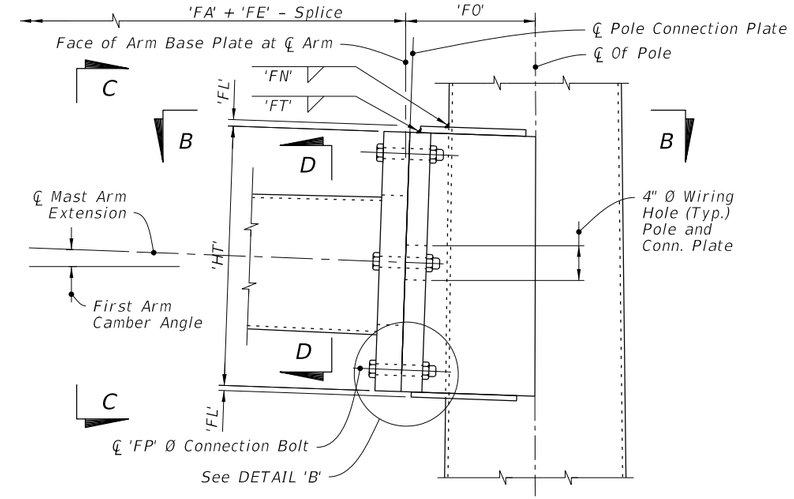

SINGLE ARM CONNECTION

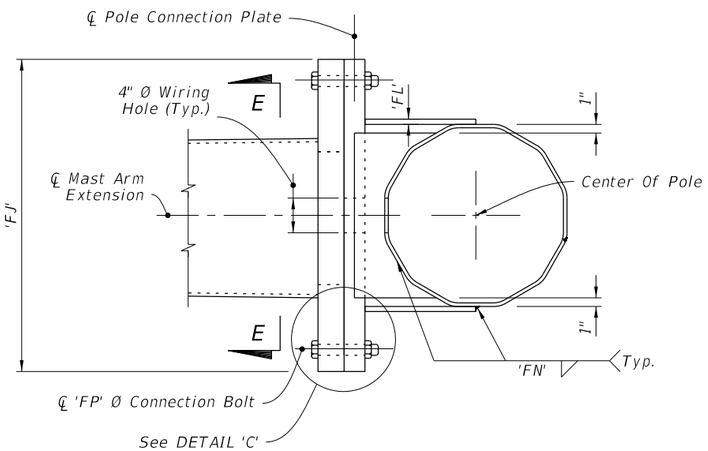

SECTION B-B

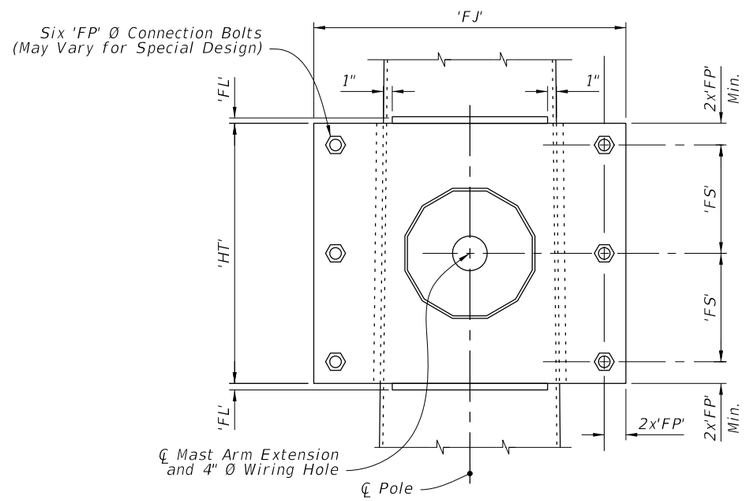

SECTION C-C

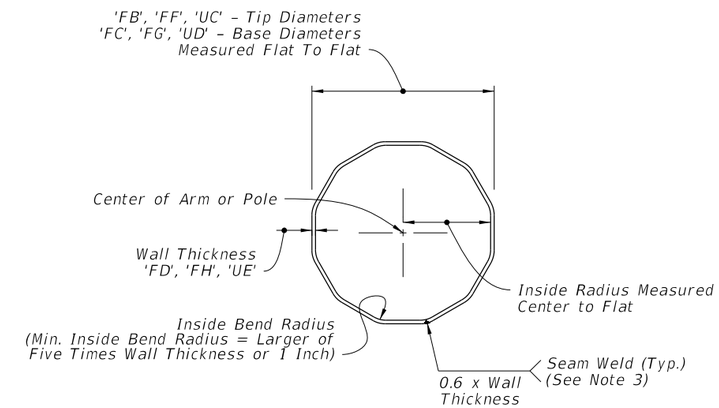

SECTION D-D

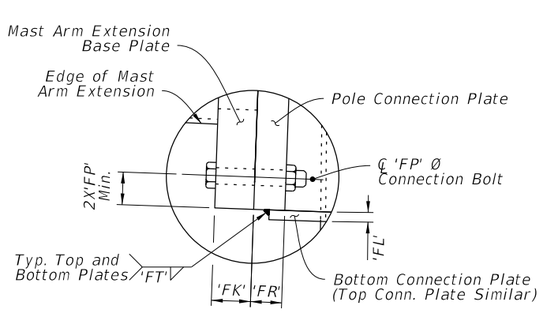

DETAIL 'B'

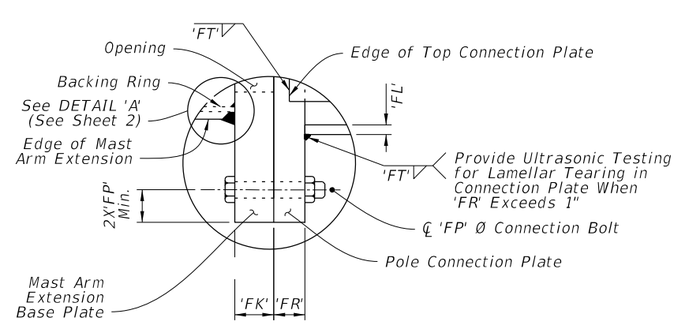

DETAIL 'C'

NOTES:

1. Install the 'Slip Joint' splice with a tight fit and no change in the Mast Arm taper due to the splice.
2. Details shown on this sheet are for 12 sided pole sections. However, sections with more than 12 sides and round sections are permitted provided outside diameter and wall thickness are not reduced.
3. Match mark the Arm and Connection Plates to ensure proper assembly and the seam weld is in the proper location (seam located at the bottom side of the Arm).

SINGLE ARM CONNECTIONS & SPLICE DETAILS

10/20/2022 8:55:33 AM

LAST REVISION	REVISION	DESCRIPTION:			INDEX	SHEET
11/01/21			FY 2023-24 STANDARD PLANS	MAST ARM ASSEMBLIES	649-031	3 of 6

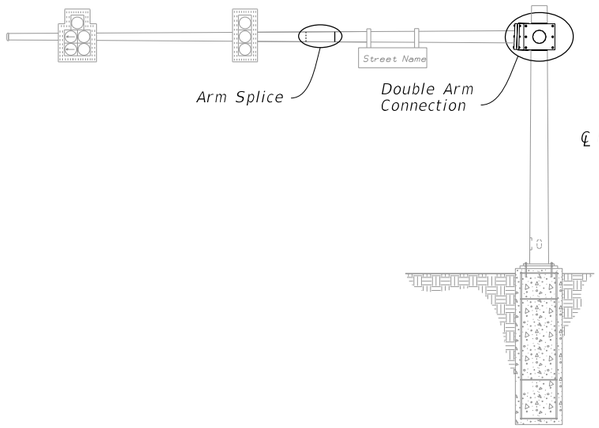

MAST ARM ASSEMBLY

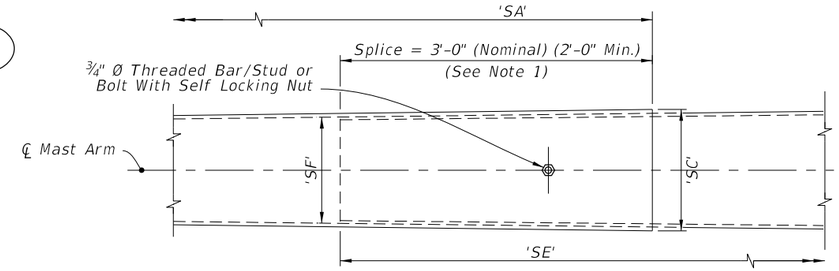

ARM SPLICE

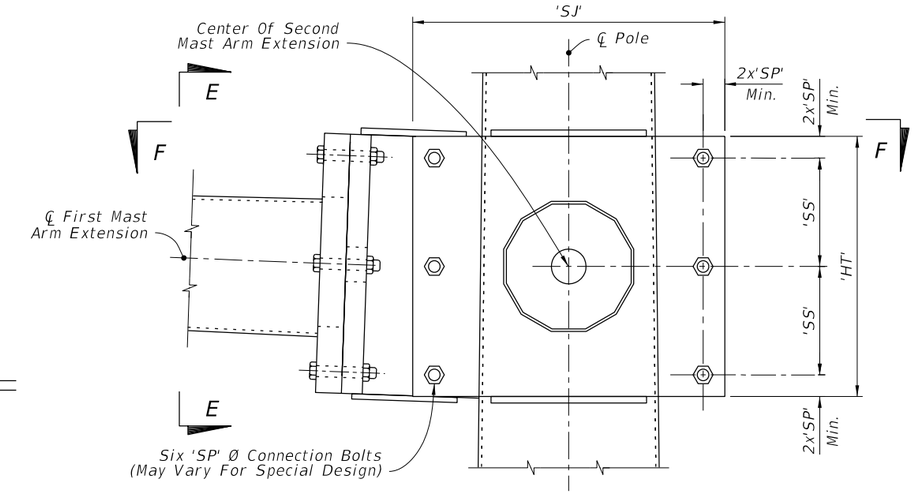

DOUBLE ARM CONNECTION

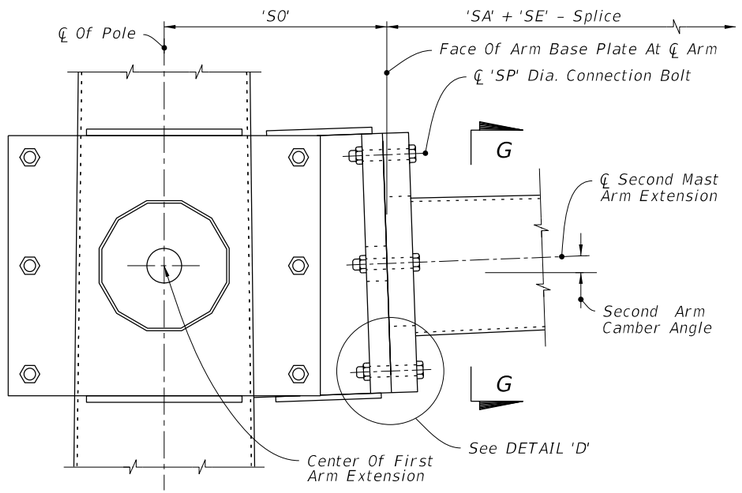

SECTION E-E

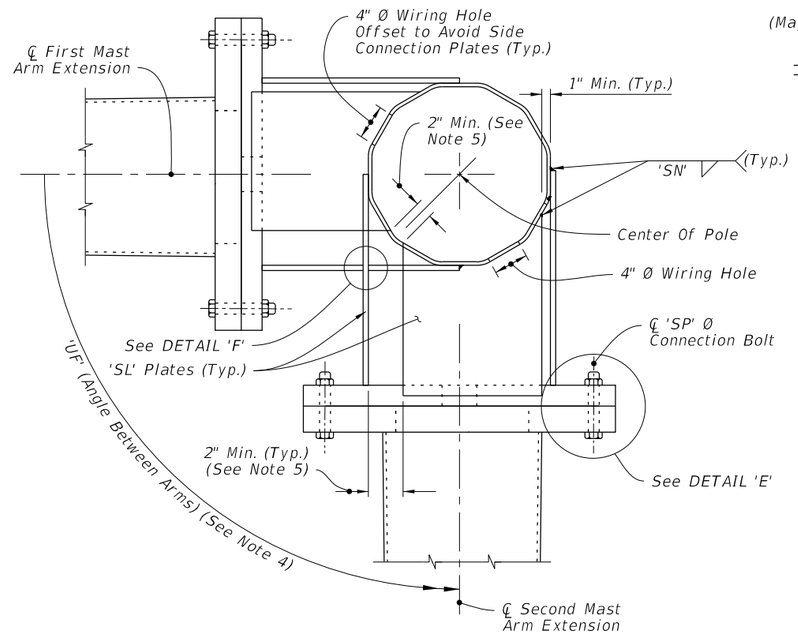

SECTION F-F

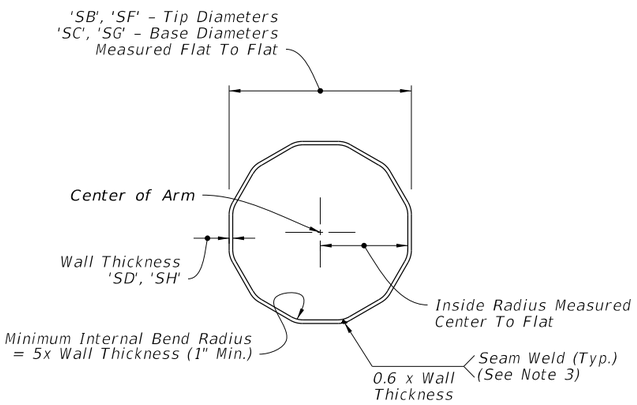

SECTION G-G

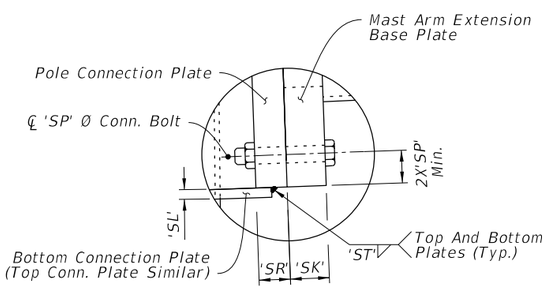

DETAIL 'D'

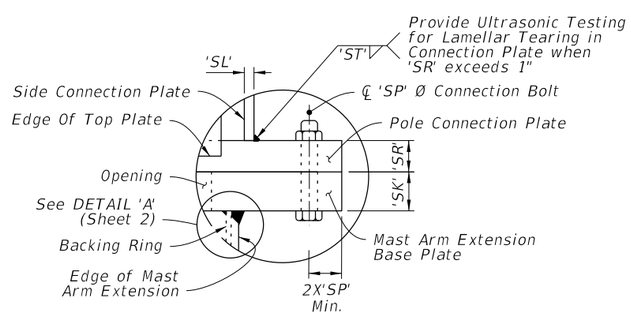

DETAIL 'E'

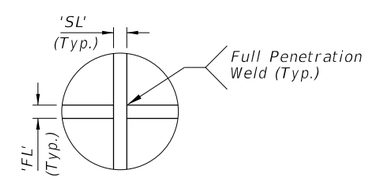

DETAIL 'F'

NOTES:

1. Install the 'Slip Joint' splice with a tight fit and no change in the Mast Arm taper due to the splice.
2. Details shown on this sheet are for 12 sided pole sections. However, sections with more than 12 sides and round sections are permitted provided outside diameter and wall thickness are not reduced.
3. Match mark the Arm and Connection Plates to ensure proper assembly and the seam weld is in the proper location (seam located at the bottom side of the Arm).
4. 'UF' measured counter clockwise from ℄ First Mast Arm Extension.
5. Adjust width of top and bottom Connection Plates to maintain minimum clearance shown.

DOUBLE ARM CONNECTIONS & SPLICE DETAILS

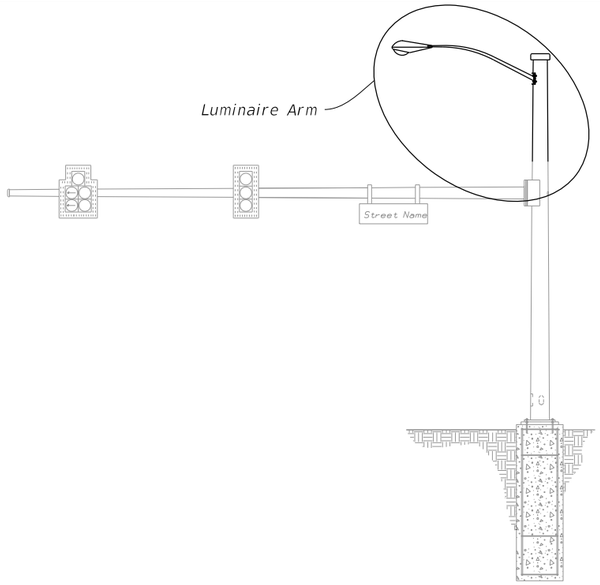

MAST ARM ASSEMBLY

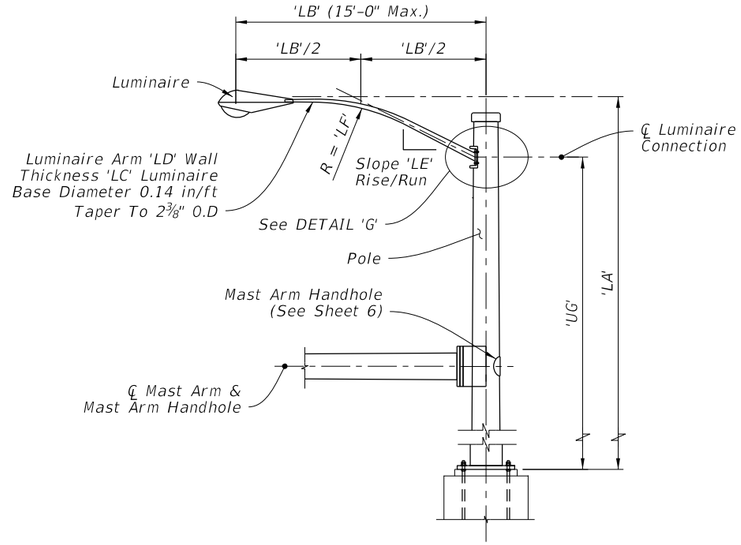

LUMINAIRE ELEVATION

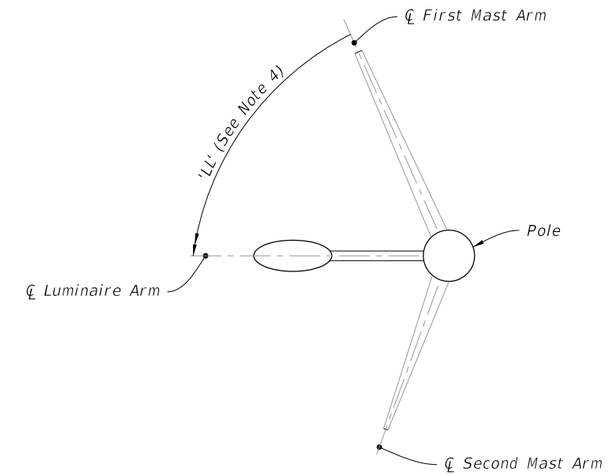

LUMINAIRE ORIENTATION

NOTES:

1. Galvanized steel luminaire type and luminaire length may be found in the Lighting Plans.
2. Align Luminaire Arm with Single Mast Arm or First Arm of Double Mast Arm unless indicated otherwise in the plans.
3. The fabricator may substitute a ½" thick bent plate with the same flange width, height, and length as the MC 10x33.6 Channel section.
4. 'LL' measure counter clockwise from First Mast Arm.

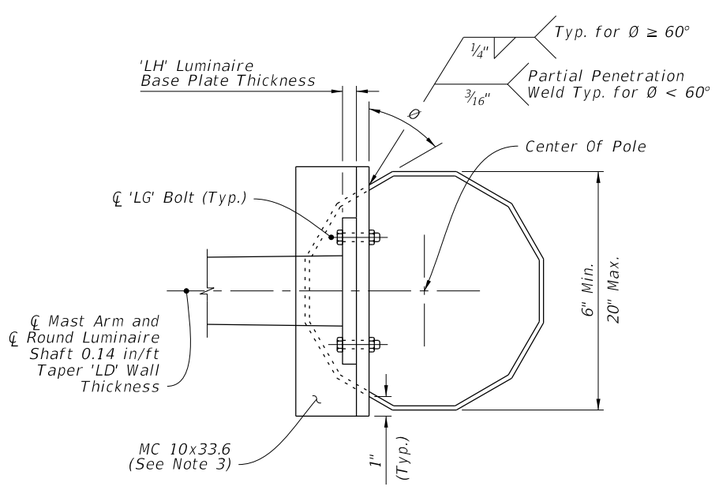

SECTION H-H

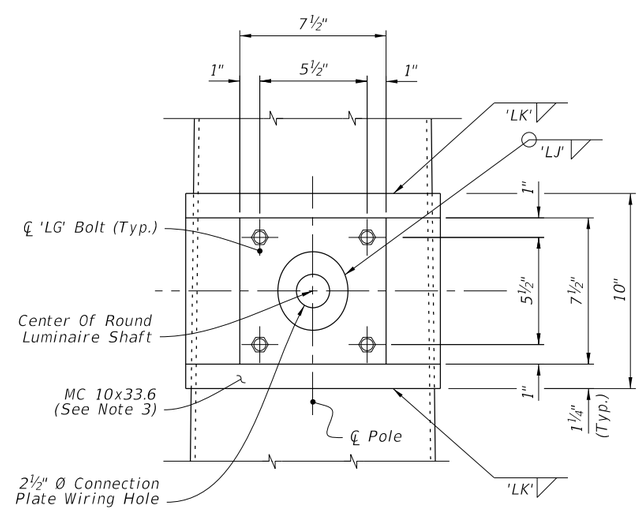

SECTION I-I

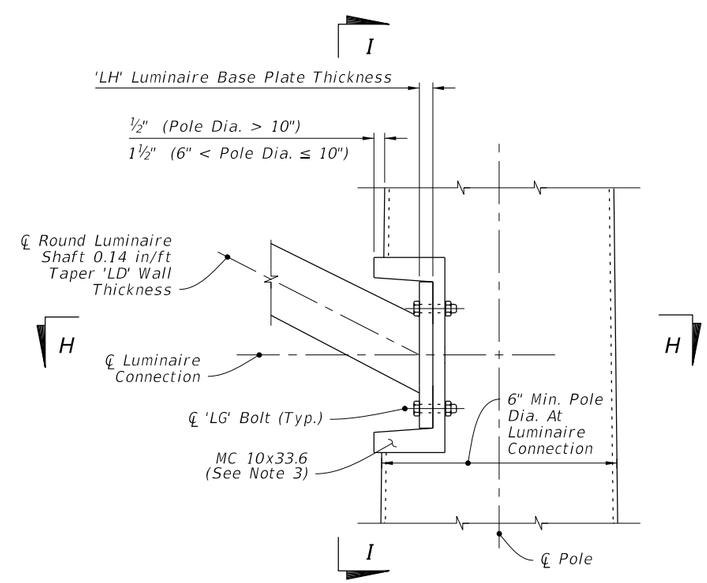

LUMINAIRE CONNECTION ELEVATION

DETAIL 'G'

LUMINAIRE ARM AND CONNECTION DETAILS

10/20/2022 8:55:35 AM

LAST REVISION	REVISION	DESCRIPTION:			INDEX	SHEET
11/01/19			FY 2023-24 STANDARD PLANS	MAST ARM ASSEMBLIES	649-031	5 of 6

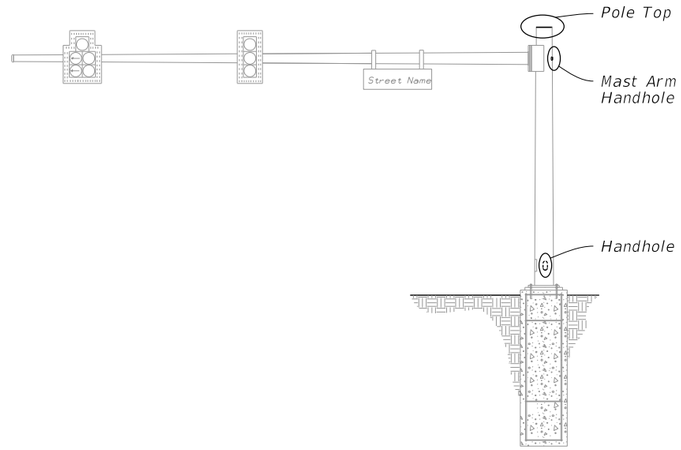

MAST ARM ASSEMBLY

NOTES:

1. Handhole covers may be omitted when Terminal Compartment is provided.
2. See Mast Arm Tabulation sheet to see if Terminal Compartment is required and for locations.
3. Terminal Compartment Frame Height 2'-0" minimum to 2'-6" maximum. Align bottom of Terminal Compartment a minimum of 1" below the bottom of the Handhole Frame.
4. Any combination of Option 'a' or 'b' may be used, provided both lifting and wiring is accommodated. Cap may be flat plate or domed cap with set screws.
5. An alternate terminal compartment frame detail is allowed where the compartment frame is of constant depth and cuts into the pole at the frame top and bottom but lays flush with the pole on the frame sides. The frame is then welded to the pole using fillet welds all around the outside.

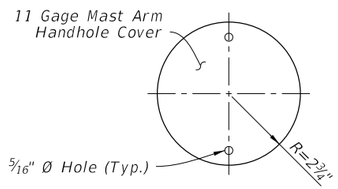

COVER

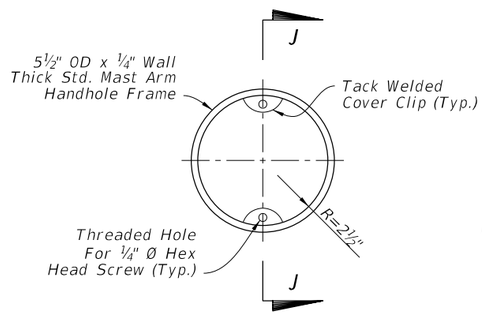

FRAME

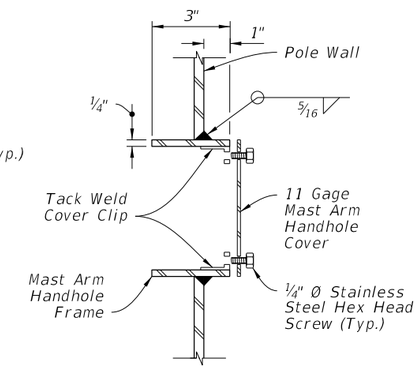

SECTION J-J

MAST ARM HANDHOLE

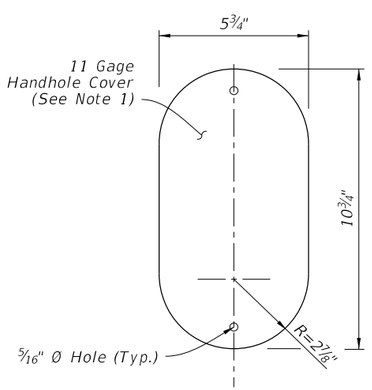

COVER

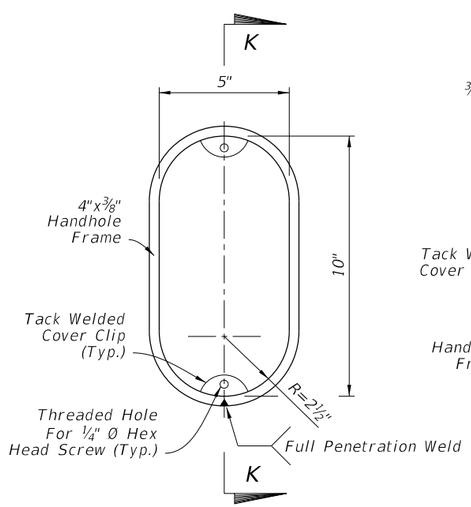

FRAME

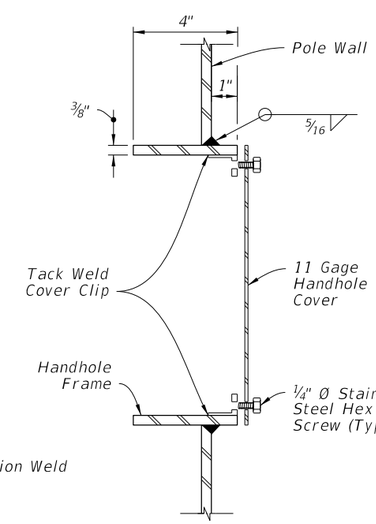

SECTION K-K
(Thru Handhole)

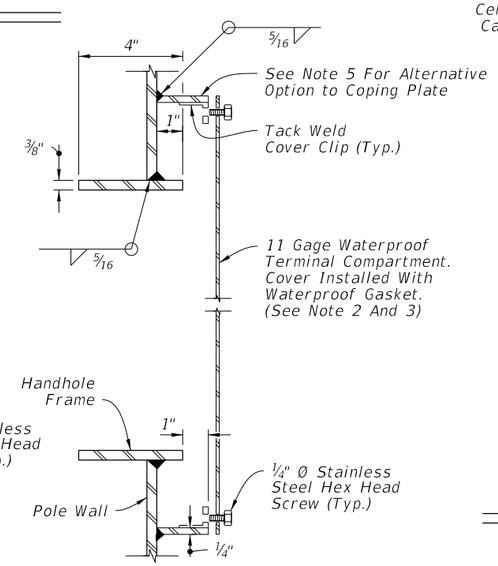

SECTION K-K
(Terminal Compartment)

HANDHOLE

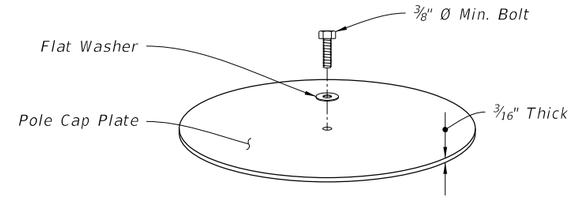

ISO VIEW
(Option 'a')

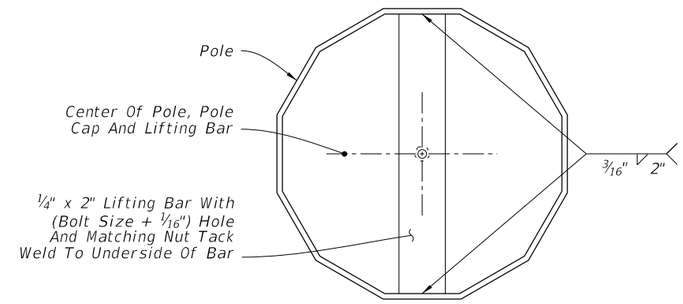

TOP VIEW
(Option 'a')

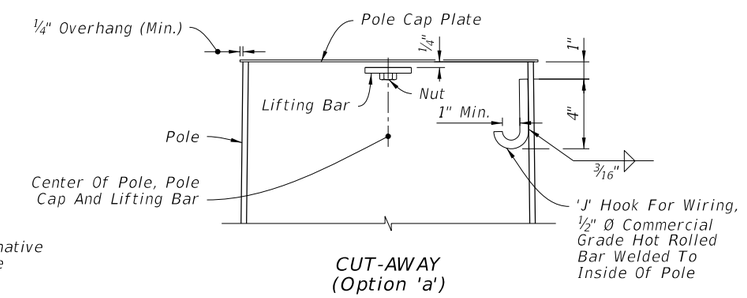

CUT-AWAY
(Option 'a')

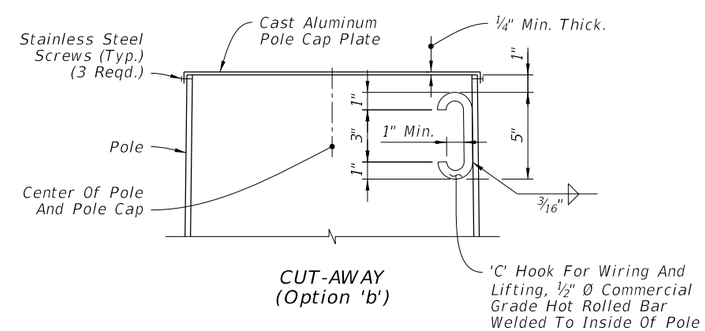

CUT-AWAY
(Option 'b')

POLE TOP

HANDHOLE AND POLE TOP DETAILS

8:55:37 AM
10/20/2022

LAST REVISION	REVISION	DESCRIPTION:			INDEX	SHEET
11/01/21			FY 2023-24 STANDARD PLANS	MAST ARM ASSEMBLIES	649-031	6 of 6

NOTES:

1. As an option, pedestrian signals may be installed on concrete poles and pedestals using lead anchors (two bolts same size per hub) in lieu of the stainless steel bands.
2. Repair drilled or punched holes in galvanized steel poles or pedestals in accordance with Specification 562. Install grommets or bushings in each hole.
3. Meet grounding requirements of Specification 620.
4. See APL for Department-approved Pedestrian Signal Assemblies and hardware.
5. For Prestressed Concrete Poles see Index 641-010.
6. For Steel Strain Poles see Index 649-010.
7. For Pedestal Mounted Signal posts and foundations see Index 646-001

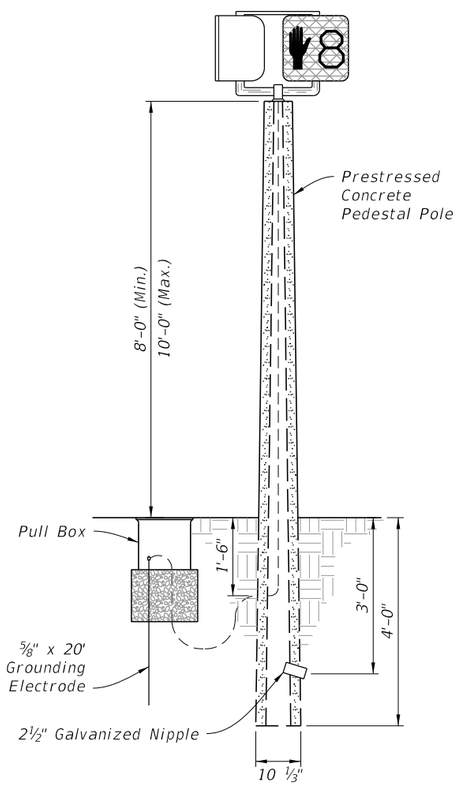

NEW CONSTRUCTION

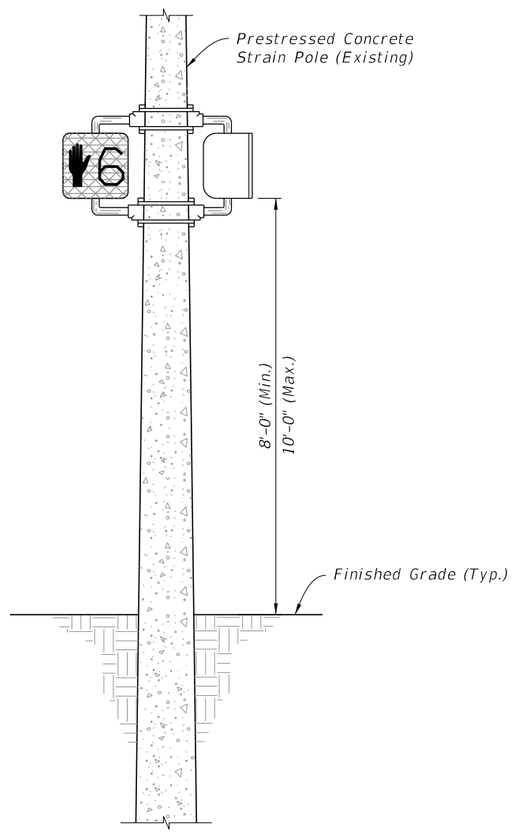

EXISTING CONSTRUCTION

CONCRETE POLE MOUNTED SIGNAL

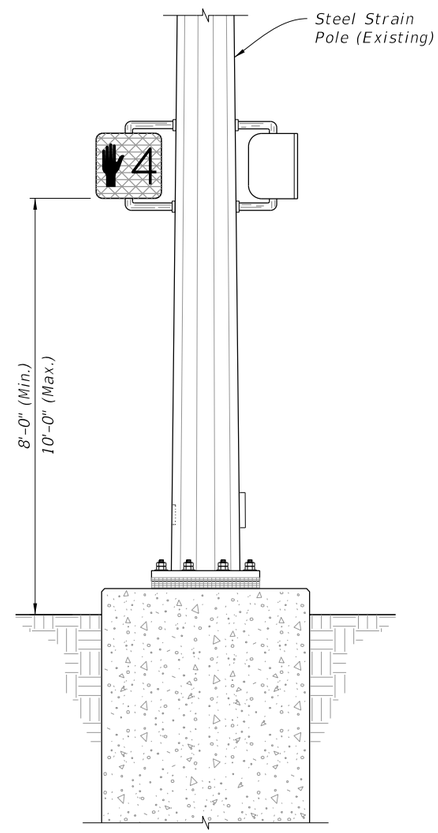

STRAIN POLE MOUNTED SIGNAL

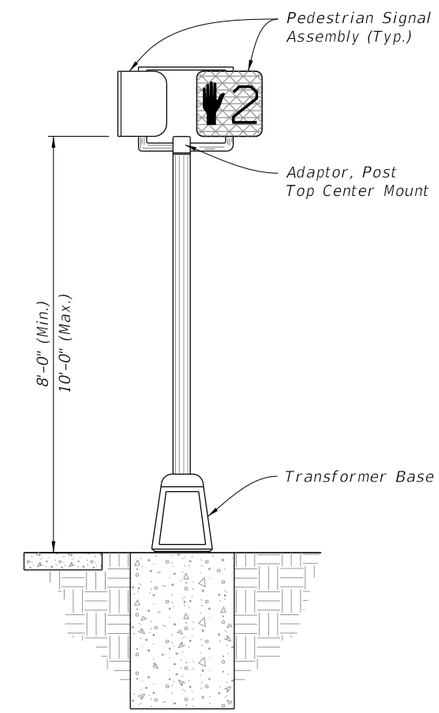

PEDESTAL MOUNTED SIGNAL

10/20/2022 8:55:38 AM

LAST REVISION	REVISION	DESCRIPTION:			INDEX	SHEET
11/01/20			FY 2023-24 STANDARD PLANS	PEDESTRIAN CONTROL SIGNAL INSTALLATION DETAILS	653-001	1 of 1

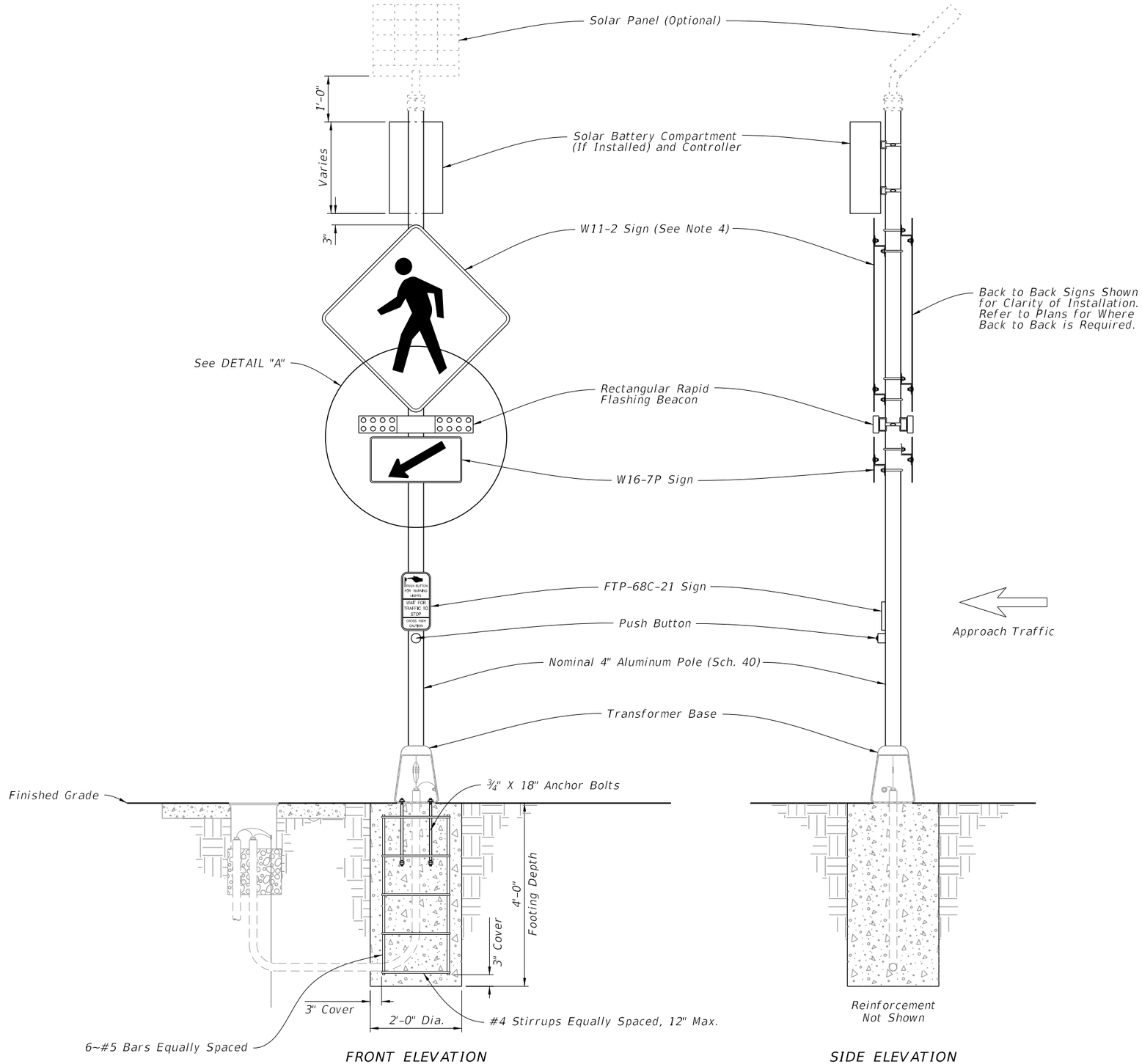

ADJACENT TO SIDEWALK

NOTES:

1. A transformer base is required for both conventionally-powered and solar-powered applications. Install pull box, conduit, wiring, and grounding in accordance with Index 700-120 based on the powering configuration called for in the Plans.
2. Install the RRFB in pairs, one on either side of approach traffic.
3. Install controller on the backside of post from approach traffic.
4. Install a 30" X 30" W11-2 sign on two-lane roadways and a 36" X 36" W11-2 sign for multilane roadways.
5. Install push button and FTP-68C-21 sign in accordance with Index 665-001.
6. Engage all threads on the transformer base and post unless the aluminum post is fully seated into base.
7. Meet the requirements of Specification 646.
8. Install a concrete slab around all pull boxes. The minimum slab dimension is 4'-0" by 4'-0". In urban areas where space is limited slab dimensions may be adjusted as shown in the Plans.
9. For assemblies connected to conventional power, provide single pole non-fused watertight breakaway electrical connectors in the frangible transformer base.
10. When wire entry holes are drilled in the sign column, use a bushing or rubber grommet to protect conductors.
11. For solar-powered applications, orient solar panel to face South for optimal exposure to sunlight.

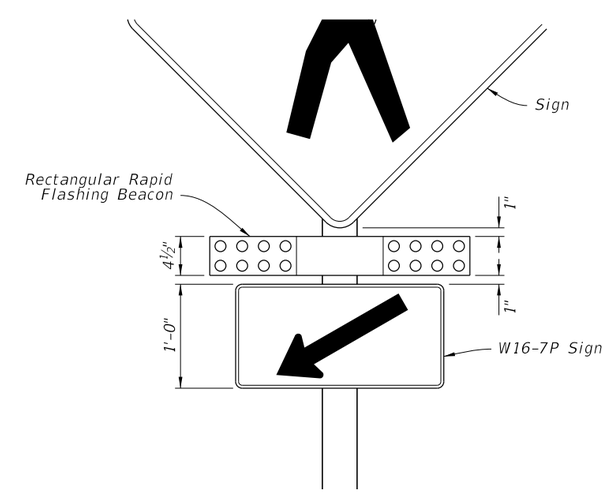

DETAIL "A"

10/20/2022 8:55:39 AM

LAST REVISION	REVISION	DESCRIPTION:			INDEX	SHEET
11/01/21			FY 2023-24 STANDARD PLANS	RECTANGULAR RAPID FLASHING BEACON ASSEMBLY	654-001	1 of 2

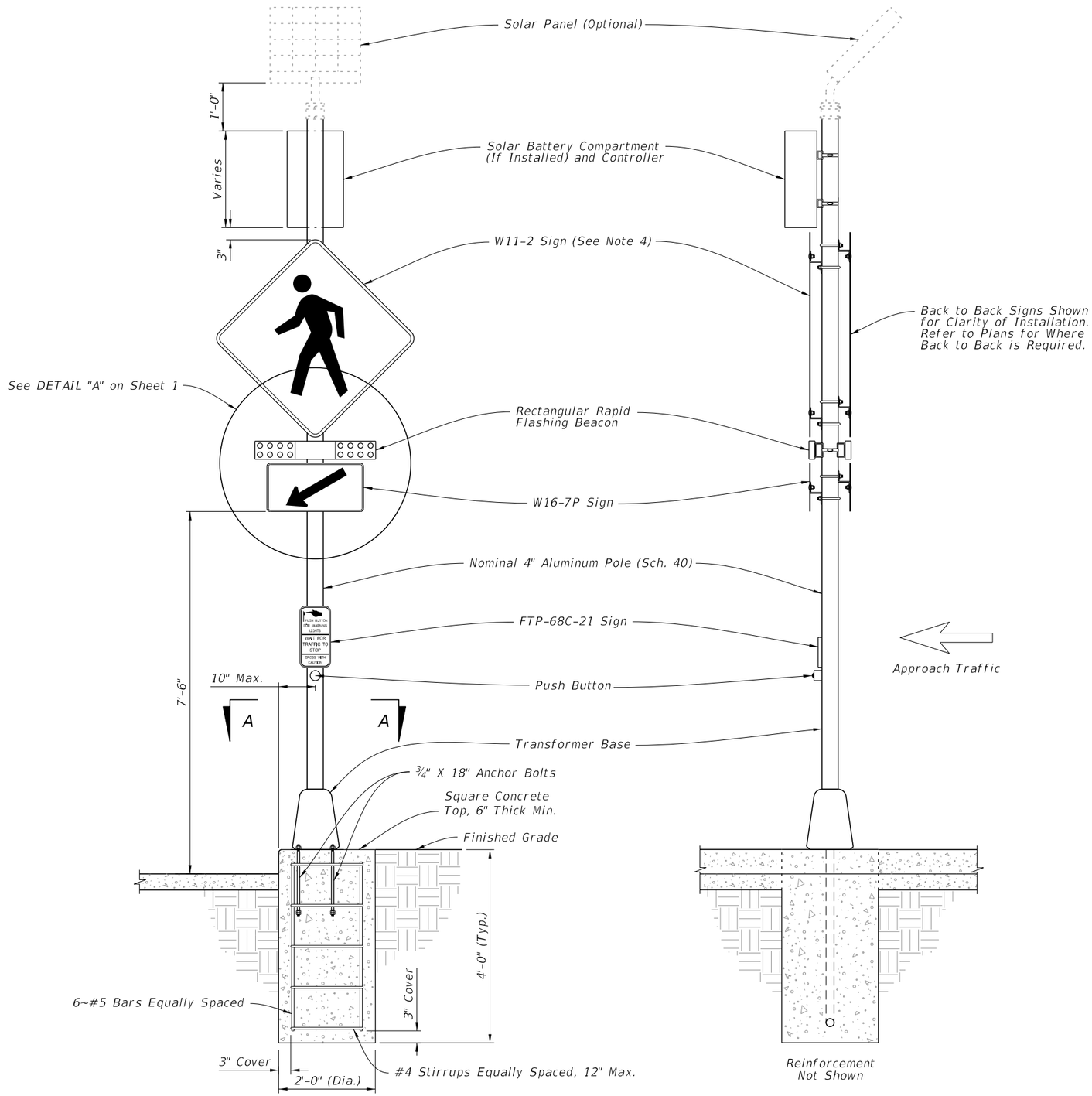

SIDE ELEVATION

FRONT ELEVATION

IN SIDEWALK CURB

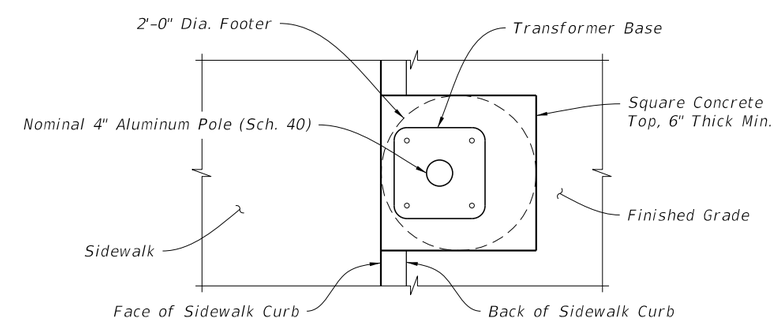

PLAN VIEW

SECTION A-A

10/20/2022 8:55:40 AM

LAST REVISION	REVISION	DESCRIPTION:			INDEX	SHEET
11/01/21			FY 2023-24 STANDARD PLANS	RECTANGULAR RAPID FLASHING BEACON ASSEMBLY	654-001	2 of 2

NOTES:

1. Materials:
   A. Sign panels, wind beams and associated hardware: See Index 700-020
   B. Sign adjustable hangers, wire rope clamps and associated hardware: See APL
   C. Wire and additional hardware requirements: See Specification 634

2. Type B and C Attachments:
   A. Extend wind beams to within 6" of the sign edge.
   B. Number of sign hangers required based on sign width:
      a. Sign width < 4'-0": One
      b. 4'-0" ≤ sign width ≤ 8'-0" : Two
   C. Number of wind beams required based on sign depth:
      a. Sign depth < 3'-6": One
      b. 3'-6" ≤ Sign depth ≤ 7'-0": Two

3. Type D Attachments:
   Maximum sign width = 3'-0"

4. Align the bottom edges of signs to approximately the same elevation.

5. Use a minimum of 2 bolts with a minimum spacing of 2" for overlapped connection of the adjustable hangers.

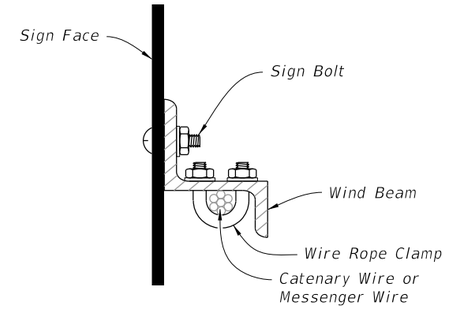

SIGN MOUNTING DETAIL

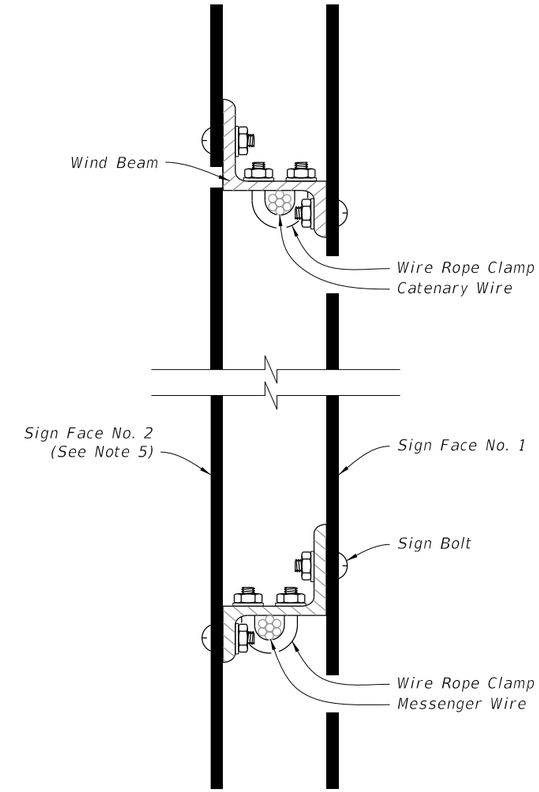

OPPOSING SIGN MOUNTING DETAIL

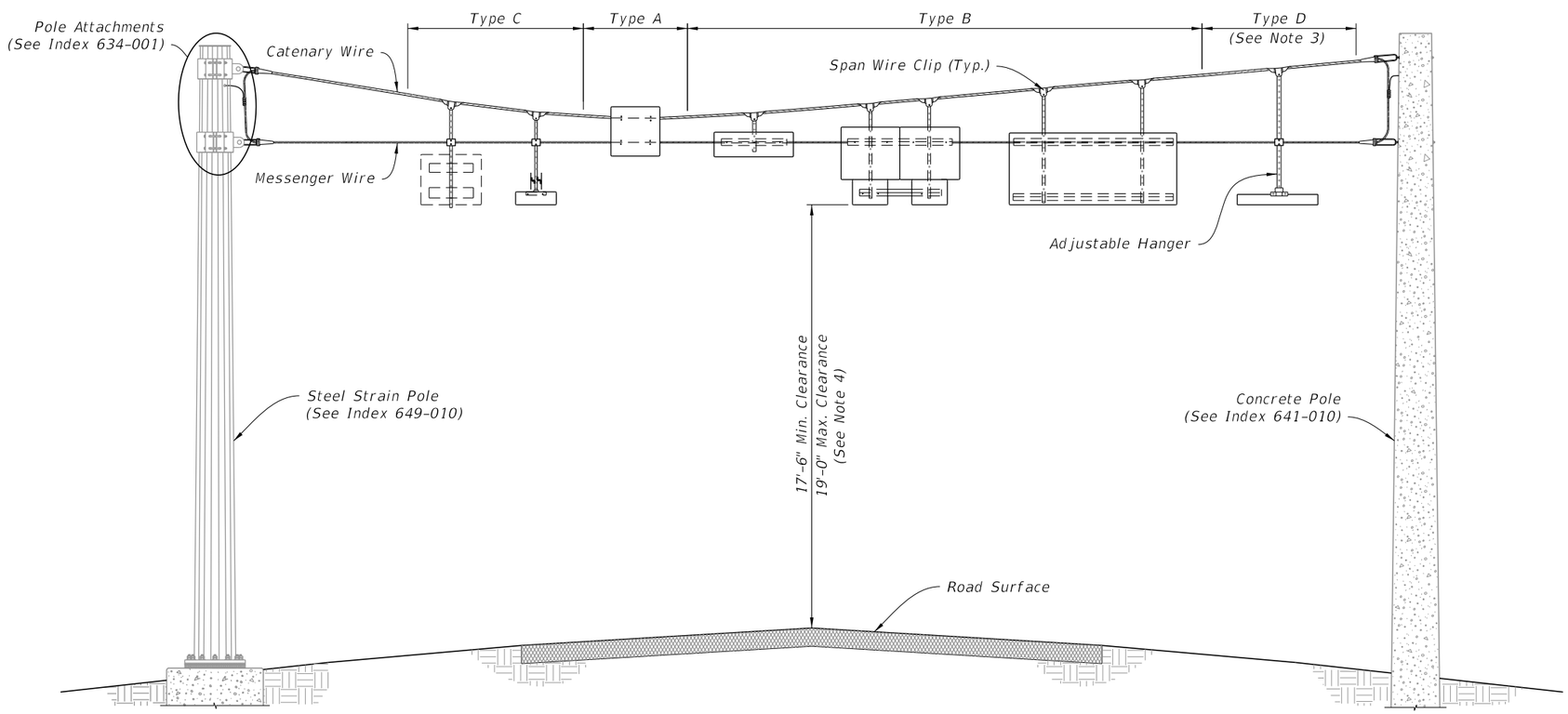

TYPICAL INSTALLATIONS FOR SIGN PANEL(S) MOUNTED ON SPAN WIRE

12/20/2022 9:09:50 AM

LAST REVISION	REVISION	DESCRIPTION:			INDEX	SHEET
11/01/21			FY 2023-24 STANDARD PLANS	SPAN WIRE MOUNTED SIGN DETAILS	659-010	1 of 1

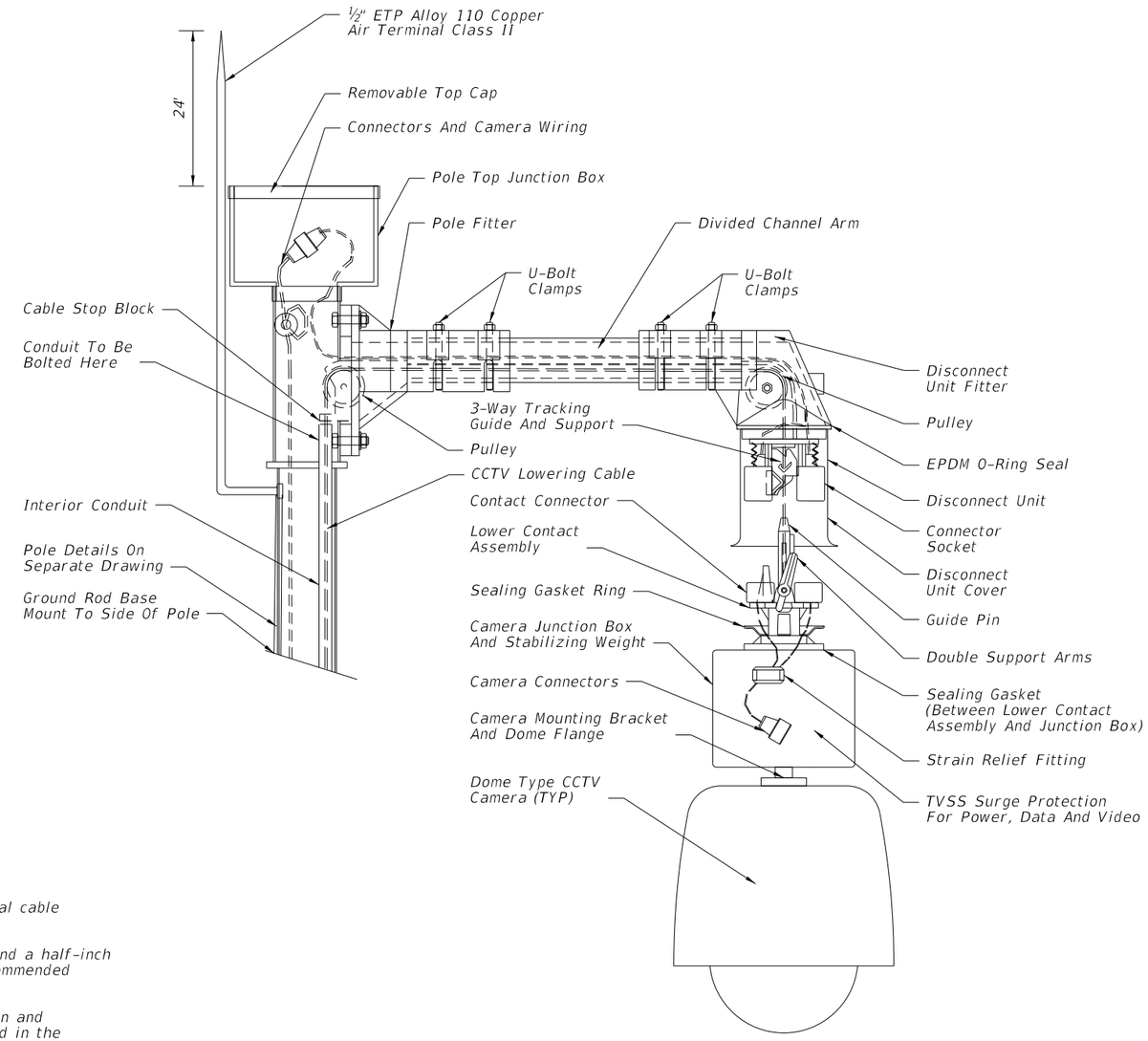

CAMERA LOWERING DEVICE DETAIL

GENERAL NOTES:

1. Lowering device to be shipped ready for pole attachment to include 100 ft. of composite power and signal cable prewired to lowering device at the factory.
2. The lowering device manufacturer shall supply both a portable lowering tool with a manual hand crank and a half-inch chuck variable-speed reversible industrial-duty electric drill that matches the winch's manufacturer-recommended revolutions per minute. One lowering tool per every 10 lowering devices is required.
3. The lowering device manufacturer shall provide an on-site installation inspection and operator instruction and certification. This ensures the product is assembled correctly and that all necessary persons are trained in the proper, safe operation of the system. Before erecting the first pole the contractor must contact the lowering device supplier and schedule a manufacturer's representative to be on-site.
4. Design camera mounting arm and connection to tenon according to FDOT Structures Manual (current edition).
5. Camera to be mounted to camera junction box and stabilizing weight via 1½" Standard NPT Pipe Thread.
6. Use air terminal extension when the pole top junction box is wider than top of pole.
7. The stainless steel device lowering cable shall be installed inside the pole within a 1 ¼" diameter PVC conduit.
8. All communication and power cables must be neatly bundled and secured.
9. Use a Camera Lowering Device listed on the Approved Product List (APL).
10. See Index 641-020 for concrete pole details and Index 649-020 for steel pole details.

CAMERA MOUNTING WITH LOWERING DEVICE

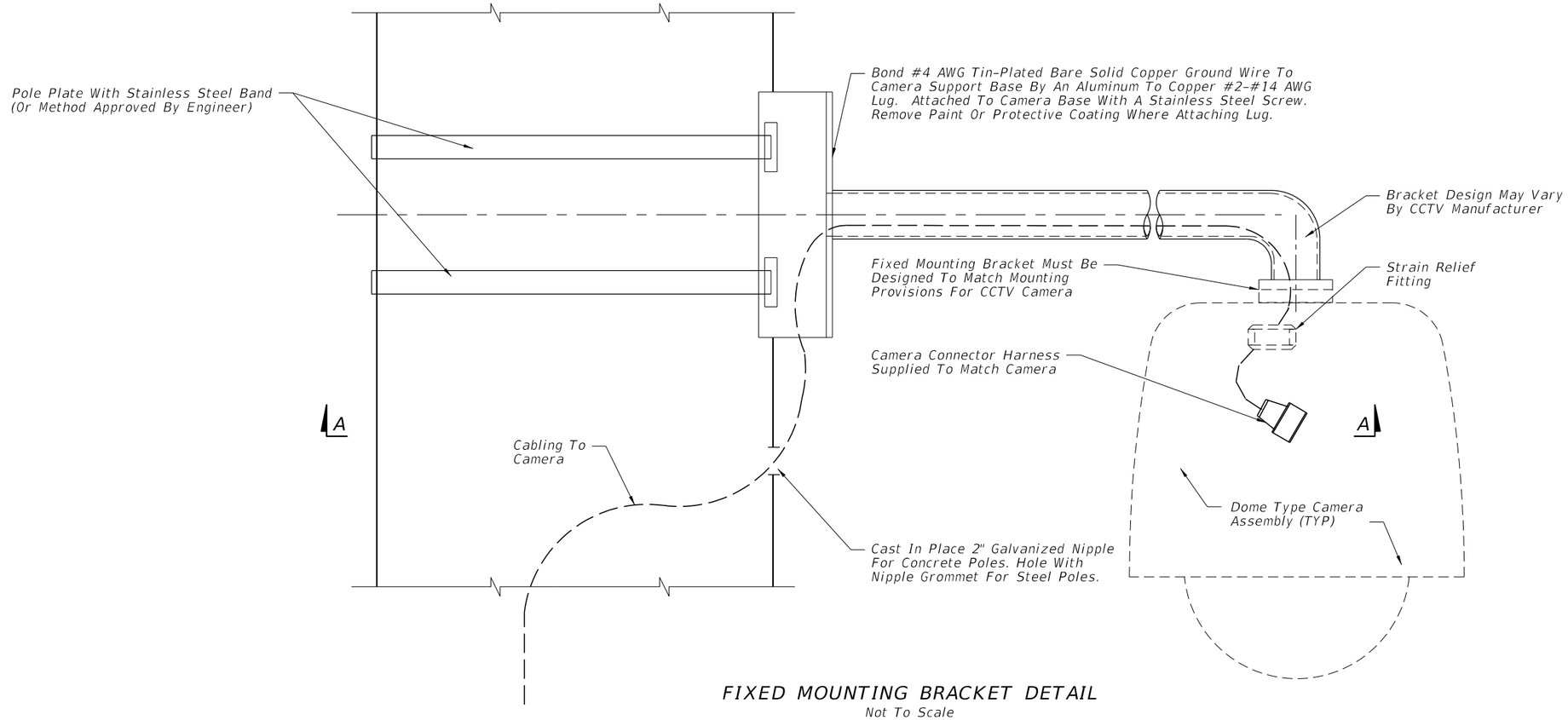

FIXED MOUNTING BRACKET DETAIL

Not To Scale

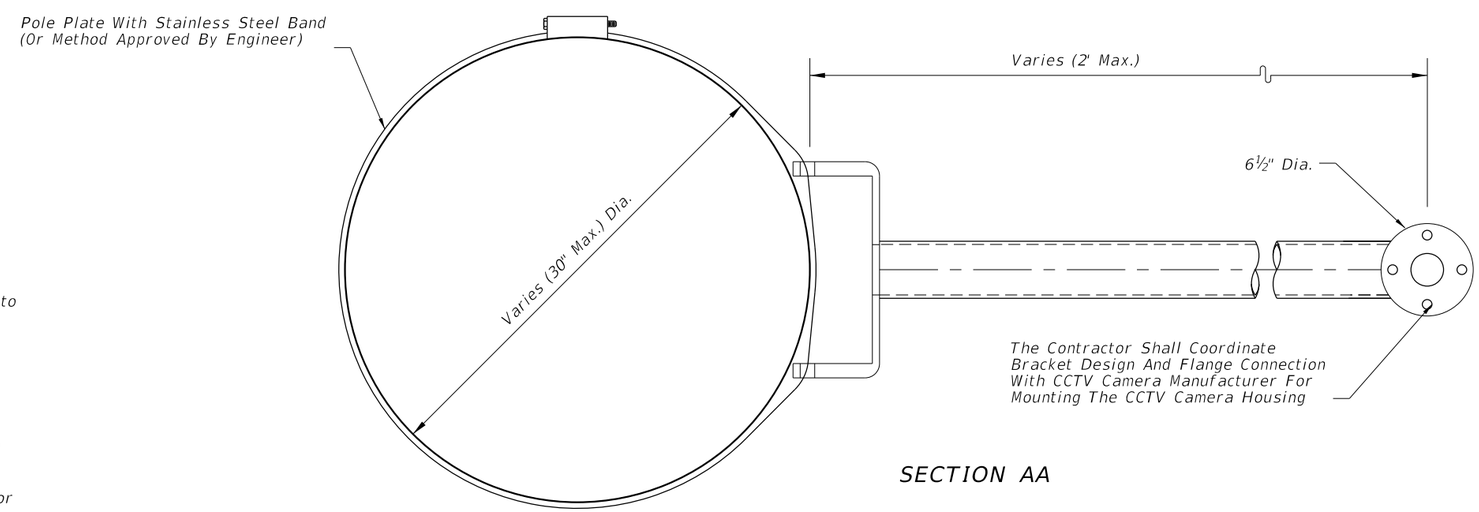

SECTION AA

GENERAL NOTES:

1. Verify the pole type, the dimensions of the pole at the point of installation of the camera mount, and angle with respect to the roadway before manufacturing camera mount assembly.
2. Design camera mounting arm and connection to the pole according to FDOT Structures Manual (current edition).
3. No field welding shall be permitted.
4. Mounting bracket arm shall be level after installation.
5. The contractor shall submit shop drawings for the proposed fixed mounting arm, signed and sealed by a Professional Engineer registered in the State of Florida, to the Engineer for review and approval.
6. See Index 641-020 for concrete pole details and Index 649-020 for steel pole details.
7. Galvanized pipe connections and conduit entry points shall be sealed in accordance with Specification 630.

CAMERA MOUNTING WITH FIXED BRACKET

10/20/2022 8:55:42 AM

LAST REVISION	REVISION	DESCRIPTION:				
11/01/17			FY 2023-24 STANDARD PLANS	CAMERA MOUNTING DETAILS	INDEX 659-020	SHEET 2 of 2

GENERAL NOTES:

1. If the loop lead-in is 75' or less from the edge of the loop detector to controller cabinet, continue the twisted pair to the cabinet. If the loop lead-in is greater than 75' continue the twisted pair an Intermediate Pullbox, splice to shielded lead-in wire and continue to the controller cabinet.
2. Provide sufficient saw-cut width to allow unforced placement of loop wires or lead-in cables into the saw-cut. Except across expansion joints, saw-cut to a standard depth of 3", but no more than 4" below the top of the final surface.
3. On resurfacing or new roadway construction projects, install the loop wires and lead-in cables in the asphalt structural course prior to the placement of the asphalt friction course. Place the loop wires and lead-in cables in a saw cut in the structural course.
4. Use nonmetallic hold down material to secure loop wires and lead-ins to the bottom of saw-cuts. Place the hold down material approximately 12" intervals around loops and 24" intervals on lead-ins.
5. The minimum distance between the twisted pairs of loop lead-in wire is 6" from the loop to 12" from the pavement edge or curb.
6. Splice Connections in pull boxes with UL listed, watertight, insulated enclosures. Place one enclosure over the end of each conductor and place a third enclosure over the exposed end of the shielded cable. As an alternate, a larger diameter enclosure that will accommodate both the splices of the conductors and the exposed end of the shielded cable may be used.
7. Do not disturb more than a 6" x 6" area of asphalt. Restore asphalt as directed by the Engineer.
8. Alternative installations may be approved by the State Traffic Operations Engineer.

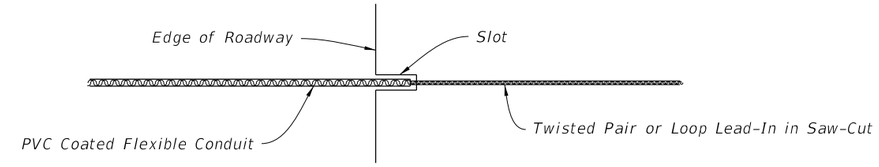

PLAN

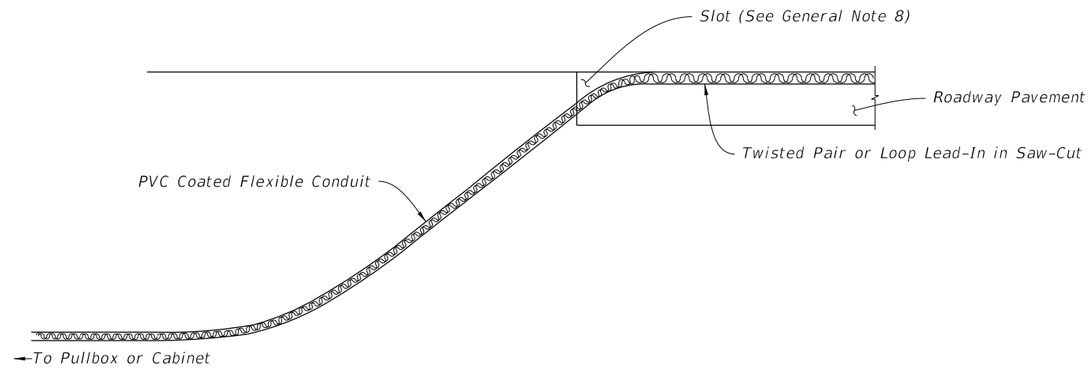

ELEVATION

NOTES:

1. Cut a slot in the edge of the roadway of sufficient size and depth to snugly place the end of the flexible conduit.
2. Install the conduit at least 6" into the roadway pavement and approximately 2" below the top of the roadway surface.
3. The departure angle of the conduit from the roadway is between 30° to 45°.

INSTALLATION WITHOUT CURB & GUTTER

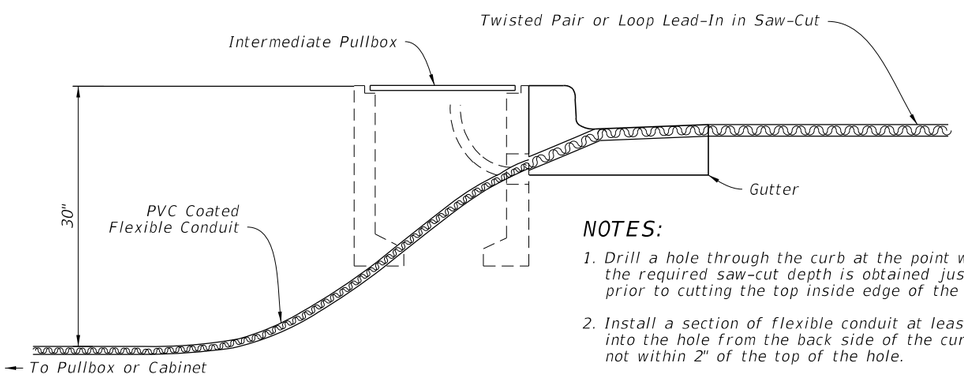

NOTES:

1. Drill a hole through the curb at the point which the required saw-cut depth is obtained just prior to cutting the top inside edge of the curb.
2. Install a section of flexible conduit at least 6" into the hole from the back side of the curb but not within 2" of the top of the hole.
3. Insure the conduit fits snug within the drilled hole.
4. Fill the top of the hole with loop sealant to the level of the curb surface.
5. Use a nonmetallic material to prevent excessive loop sealant from entering the flexible conduit.

ALTERNATIVE 1

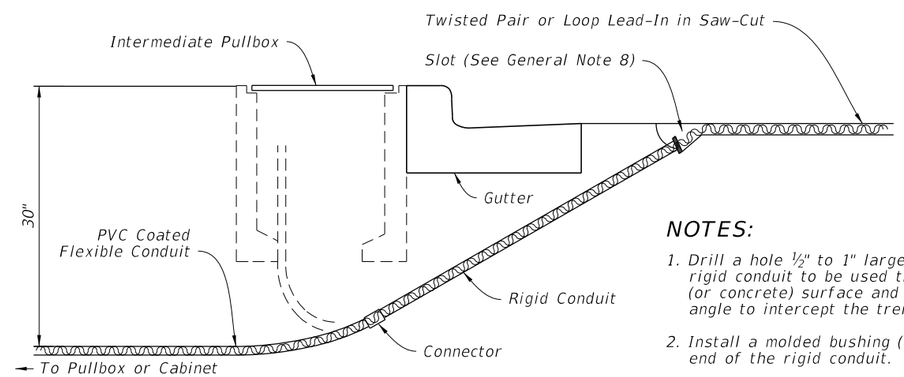

NOTES:

1. Drill a hole ½" to 1" larger in diameter than the rigid conduit to be used through the roadway asphalt (or concrete) surface and base at an appropriate angle to intercept the trench or pull box hole.
2. Install a molded bushing (nonmetallic) on the roadway end of the rigid conduit.
3. Place the top of the rigid conduit approximately 2" below the roadway surface.
4. Fill the hole with loop sealant to the level of the roadway surface.
5. Use a nonmetallic material to prevent excessive loop sealant from entering the rigid conduit.

ALTERNATIVE 2

INSTALLATION WITH CURB & GUTTER

TWISTED PAIR AND LOOP LEAD-IN INSTALLATION

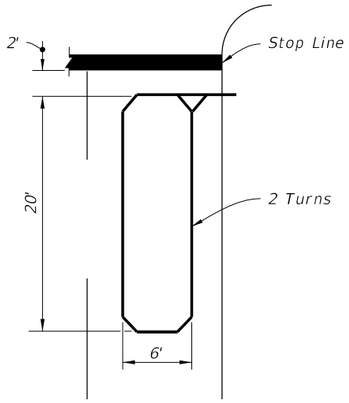

TYPE A

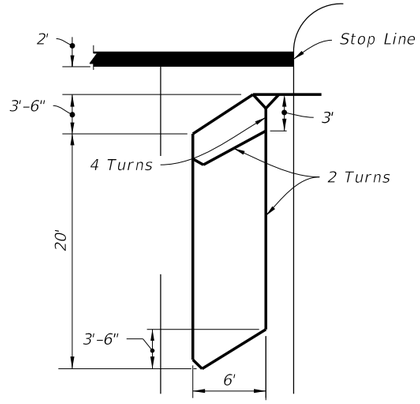

TYPE D

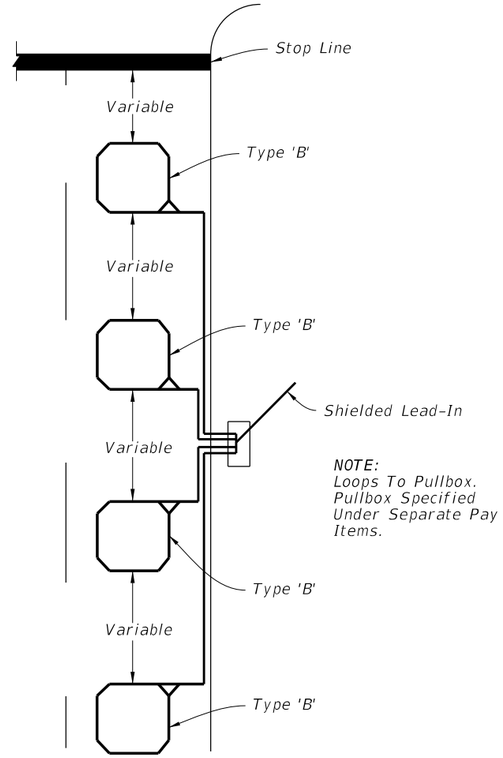

NOTE:
Loops To Pullbox. Pullbox Specified Under Separate Pay Items.

TYPE G

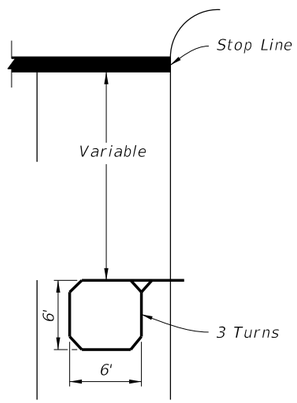

TYPE B

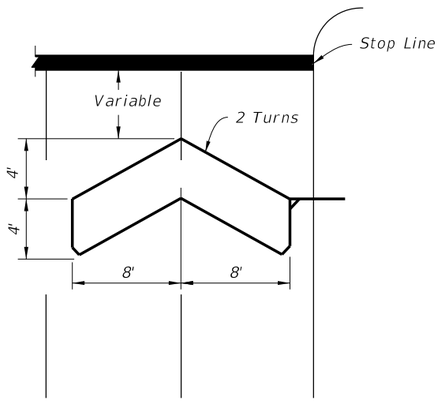

TYPE E

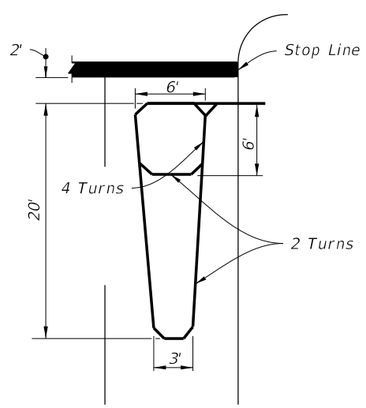

TYPE C

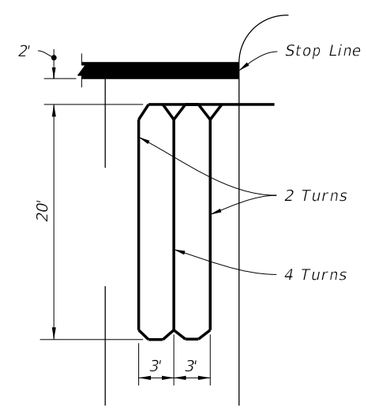

TYPE F

NOTE:
Loop conductors must follow saw-cut to bottom forming slack section at joint.

NOTES:

1. The number of "Turns" indicated at the specified point on the loop refers to the number of passes of loop wires which are placed in the saw-cut forming the complete loop.
2. Loop types or details not drawn to scale.
3. Loop Types are centered in a single lane except Type E which is centered on two lanes.
4. The number of individual loops in the Type G loop may vary up to a maximum of four (4).
5. Lead-in may be connected to either end of loop.
6. When shown in the Plans, the leading edge of loop Types A, C, D, & F may extend past the stop line a maximum of 10' and the length of these loops may be extended to a maximum of 60'.
7. Do not install loop lead-in wires in the same pull box with signal power cable.

LOOP TYPES

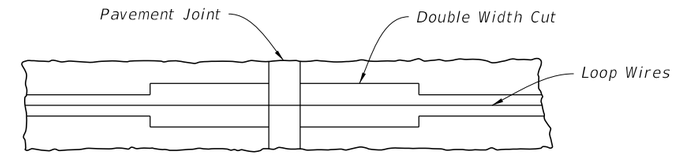

PLAN

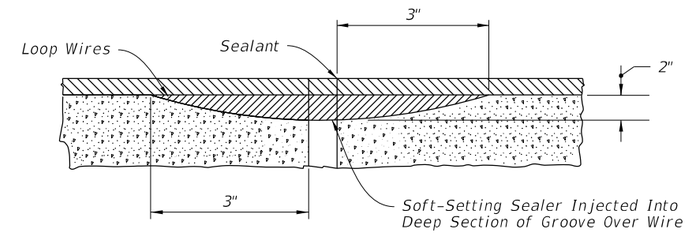

VERTICAL SECTION

CONCRETE PAVEMENT EXPANSION JOINTS

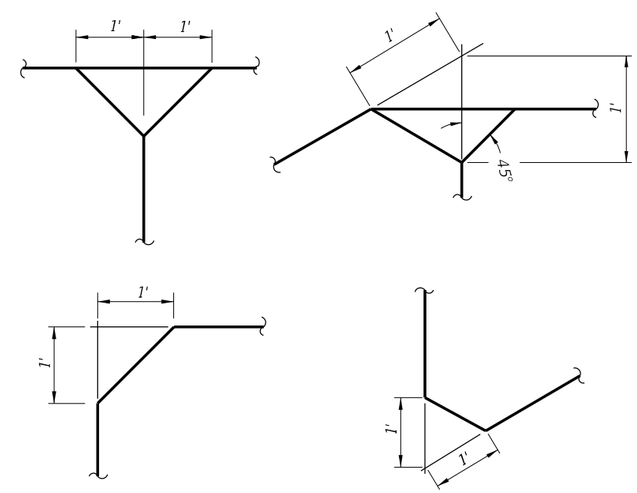

LOOP CORNER AND LEAD-IN DETAILS

LOOP TYPES, EXPANSION JOINTS, AND DETAILS

LAST REVISION	REVISION	DESCRIPTION:	FY 2023-24 STANDARD PLANS	VEHICLE LOOP INSTALLATION DETAILS	INDEX	SHEET
11/01/18					660-001	2 of 2

10/20/2022 8:55:44 AM

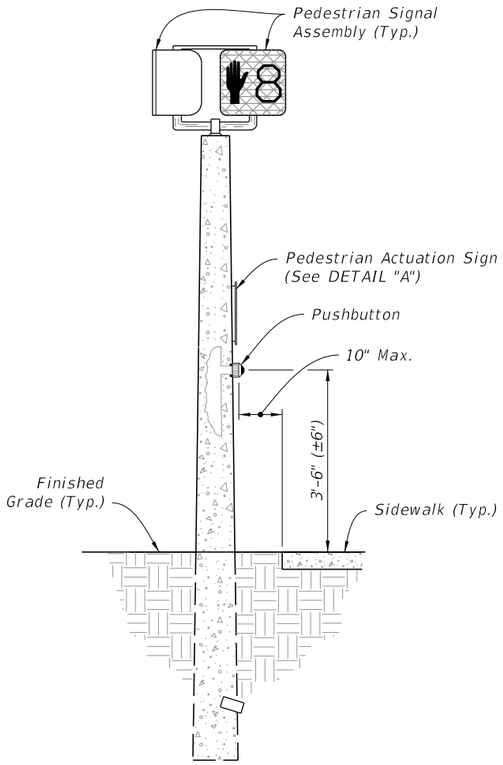

PRESTRESSED CONCRETE PEDESTAL POLE

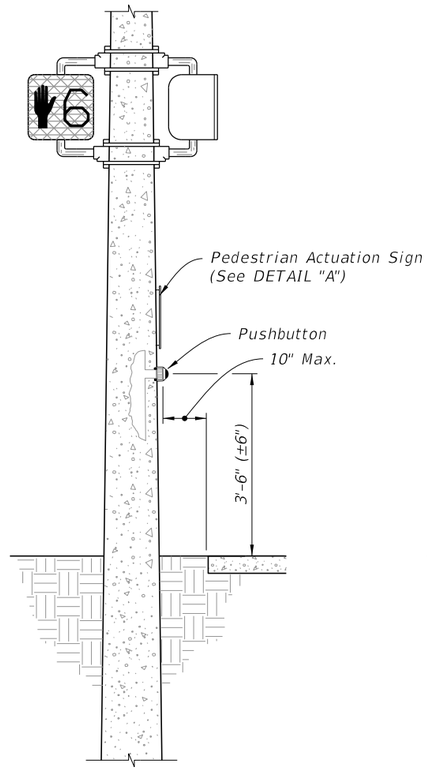

PRESTRESSED CONCRETE STRAIN POLE

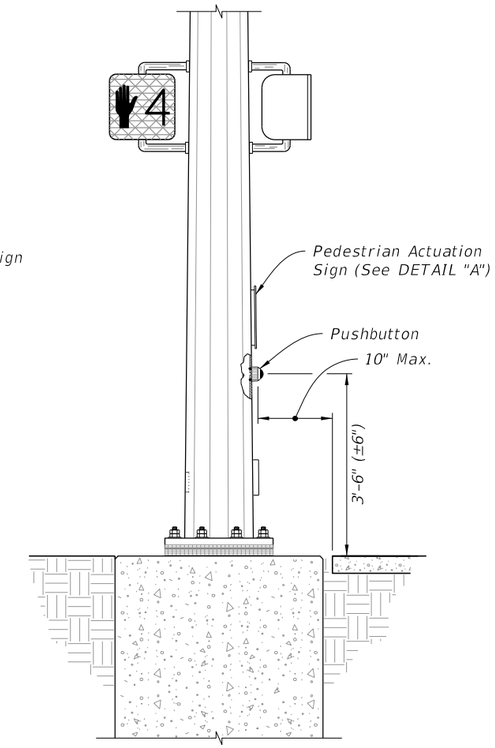

STEEL STRAIN POLE

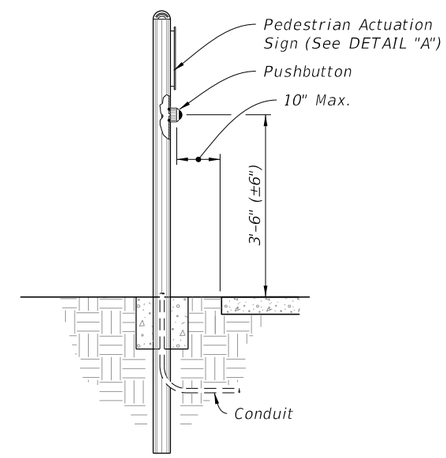

ALUMINUM POLE

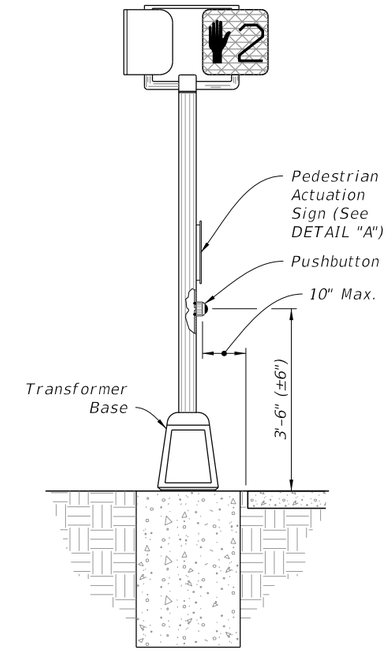

PEDESTAL

PUSHBUTTON PEDESTRIAN DETECTORS

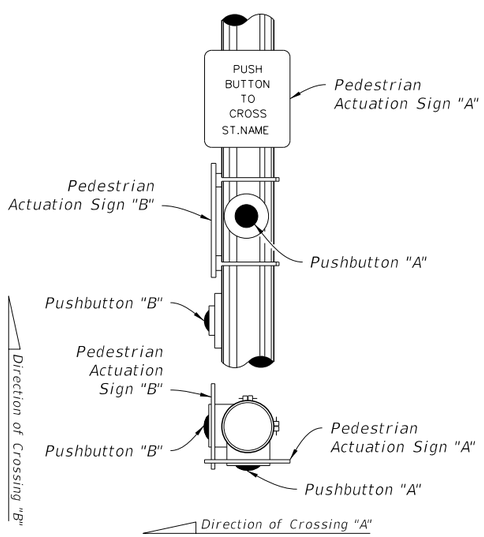

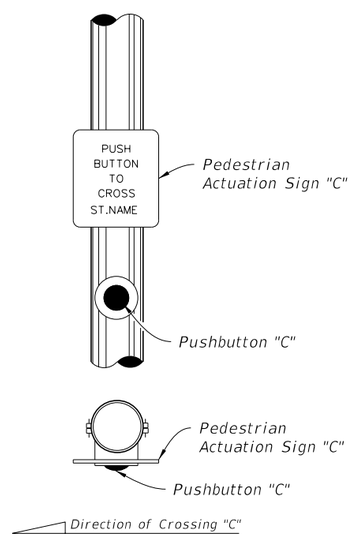

DETAIL "A"

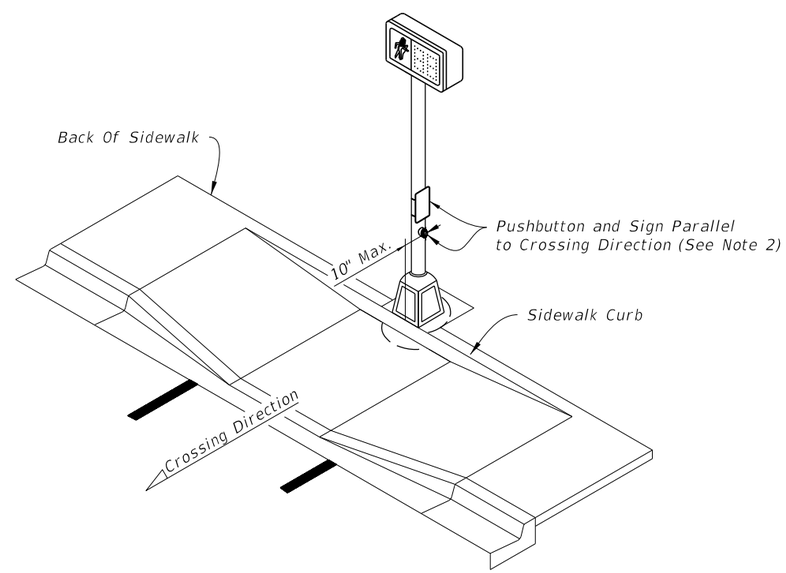

DETAIL "B"

NOTES:

1. Mount Signs above the detectors. See Index 700-102 for sign details.
2. Install Pushbuttons and Pedestrian Actuation Signs with faces parallel to the crossing direction, see DETAIL "B".
3. Mount pushbuttons and Signs in accordance with Specification 665.
4. Pushbutton mounting height shown is taken at the center of the actuation switch.
5. for pedestrian control signal see index 653-001.
6. For Aluminum Pole and Pedestal supports see Index 646-001.

10/20/2022 8:55:45 AM

LAST REVISION	REVISION	DESCRIPTION:			INDEX	SHEET
11/01/20			FY 2023-24 STANDARD PLANS	PEDESTRIAN DETECTOR ASSEMBLY INSTALLATION DETAILS	665-001	1 of 1

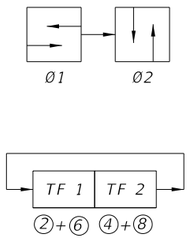

SOP 1

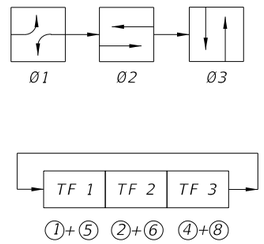

SOP 2

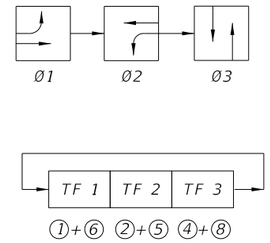

SOP 3

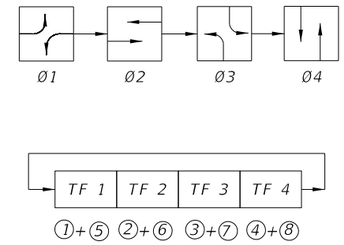

SOP 4

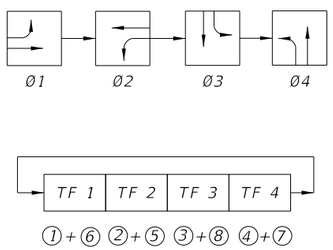

SOP 5

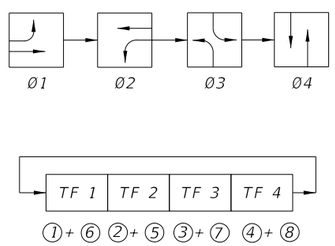

SOP 6

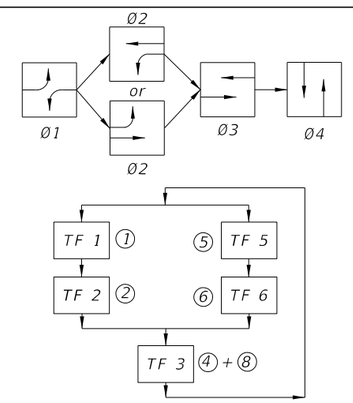

SOP 7

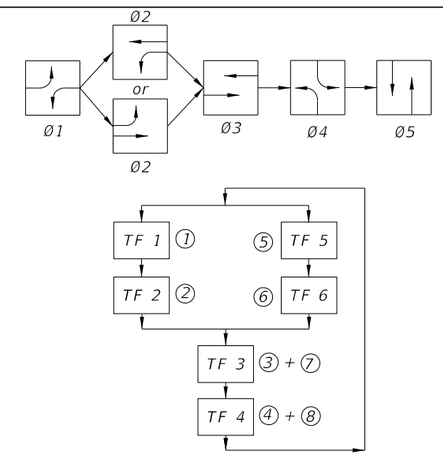

SOP 8

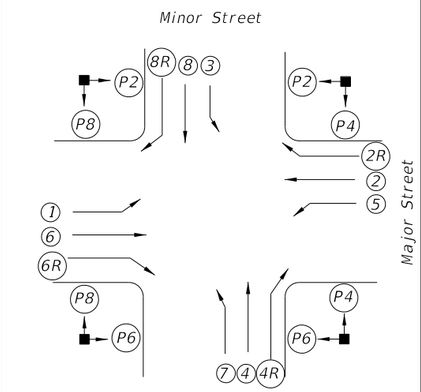

SIGNALIZED INTERSECTION

Vehicle movements & signal head number assignments are not directionally oriented but shall maintain their relative orientation about the intersection (I.E., movements 7 and 4 are always to the right of movements 1 and 6 etc.).

LEGEND

(X)	Vehicle Movement Number
(PX)	Pedestrian Movement Number
TF X	Timing Function Number
ØX	Phase Number
G	Green Arrow (Left or Right)
R	Red Arrow
Y	Yellow Arrow

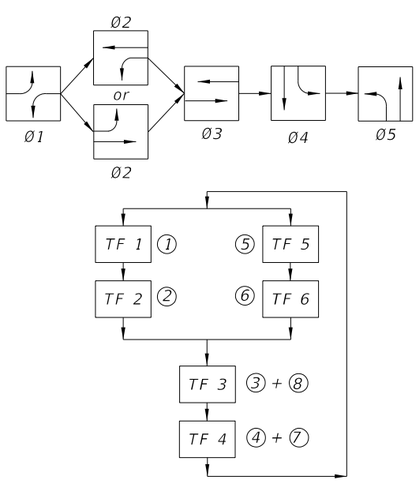

SOP 9

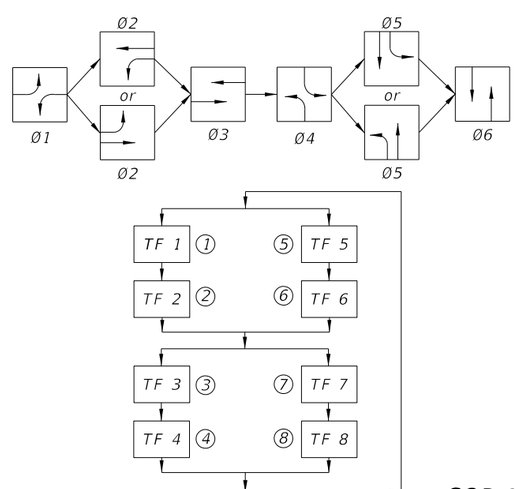

SOP 10

SIGNAL CLEARANCE TABLE

(Blank Indicates No Clearance Required)

SIGNAL INDICATIONS — To \ From	R	R	G		G	G	WALK	DONT WALK
R			Y		G	Y		
R			Y		G	Y		
G					G			
G								
G								
WALK								
DONT WALK							Flash DONT WALK	

10/20/2022 8:55:46 AM

LAST REVISION	REVISION	DESCRIPTION:			INDEX	SHEET
11/01/17			FY 2023-24 STANDARD PLANS	STANDARD SIGNAL OPERATING PLANS	671-001	1 of 2

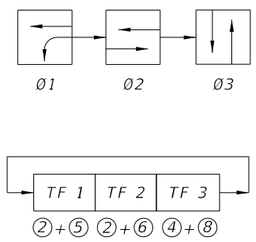

SOP 11

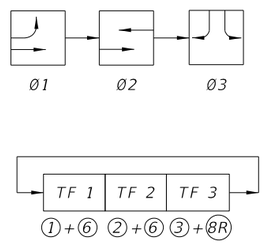

SOP 12

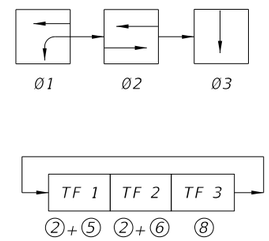

SOP 13

(ONE- WAY STREET INTERSECTION)

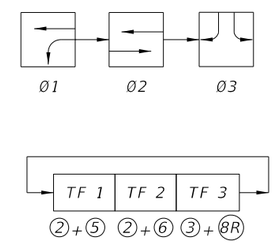

SOP 14

(DIAMOND INTERCHANGE OPERATION)

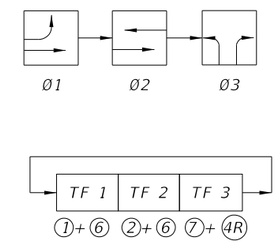

SOP 15

(DIAMOND INTERCHANGE OPERATION)

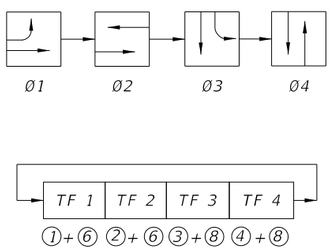

SOP 16

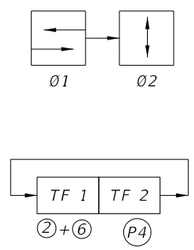

SOP 17

(MIDBLOCK)

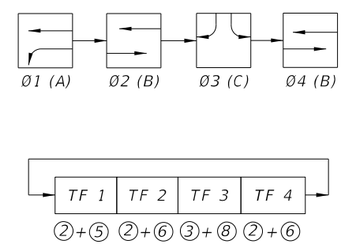

NOTE:
Only Ø2 Or Ø4 Used, Not Both To Obtain ABC, Or ACB Operation.

SOP 18

(DIAMOND INTERCHANGE OPERATIONS)

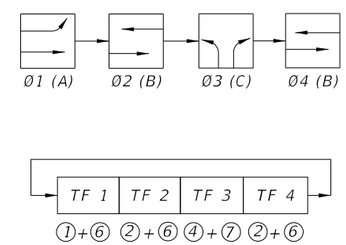

NOTE:
Only Ø2 Or Ø4 Used, Not Both To Obtain ABC, Or ACB Operation.

SOP 19

(DIAMOND INTERCHANGE OPERATIONS)

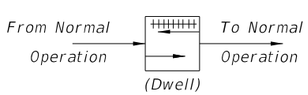

POP 1

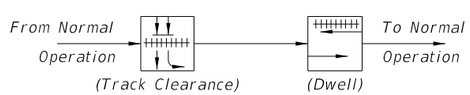

POP 2

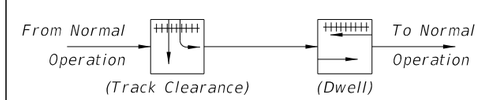

POP 3

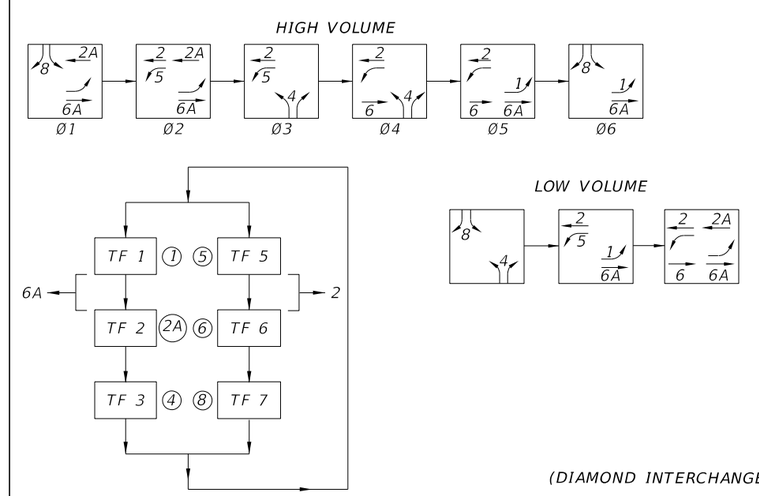

SOP 20

(DIAMOND INTERCHANGE OPERATIONS)

LAST REVISION	REVISION	DESCRIPTION:			INDEX	SHEET
11/01/17			FY 2023-24 STANDARD PLANS	STANDARD SIGNAL OPERATING PLANS	671-001	2 of 2

10/20/2022 8:55:46 AM

NOTES:

1. If cabinet mounting requires relocation of hole in concrete pole, fill existing hole with concrete or cover with a noncorrosive cover plate.

2. Liquidtight flexible conduit is approved for use from the electrical disconnect to the cabinet when both are installed on the same pole.

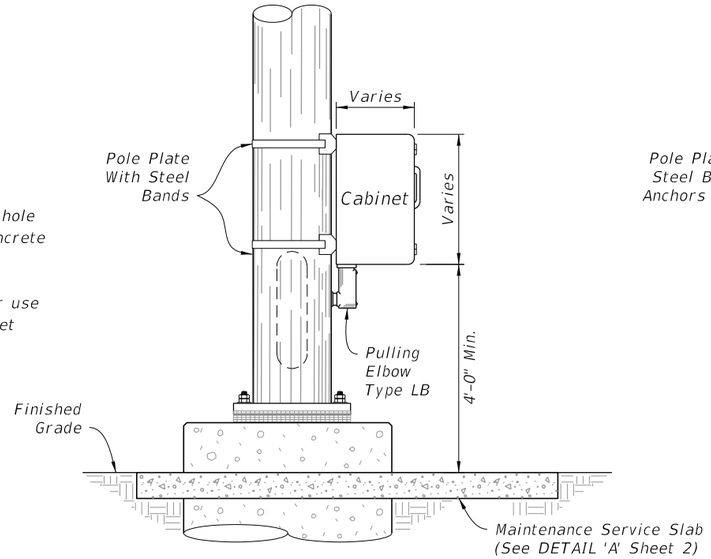

SIDE ELEVATION

METAL POLE

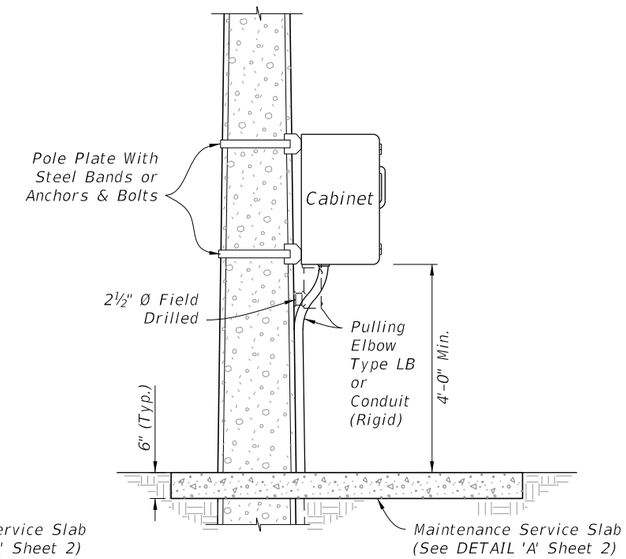

SIDE ELEVATION

CONCRETE POLE

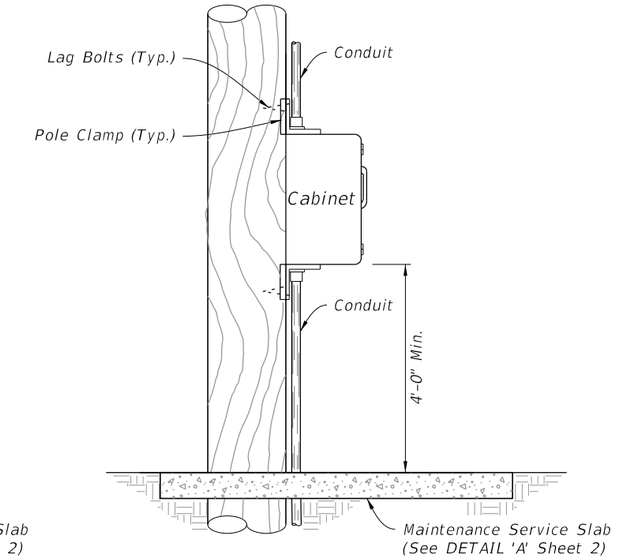

SIDE ELEVATION

WOOD POLE

POLE MOUNTED CONTROLLER CABINET

NOTES:

1. Maintenance Service Slab: Use Class NS concrete and slope ¼" to 1" for drainage. Not required in sidewalk, pavement areas, or where R/W is restricted.

2. The number, size and orientation of conduit sweep will vary according to site condition or locations. Provided two spare 2" PVC conduits in all bases. Place the exits of the spare conduits in the direction of the center rear of the cabinet base and into a pull box. If obstructions prevent the spare conduit from exiting to the rear, or the rear of the cabinet is located on the R/W line, locate as directed by the Engineer. Cap all spare conduit sweeps with a weatherproof fitting.

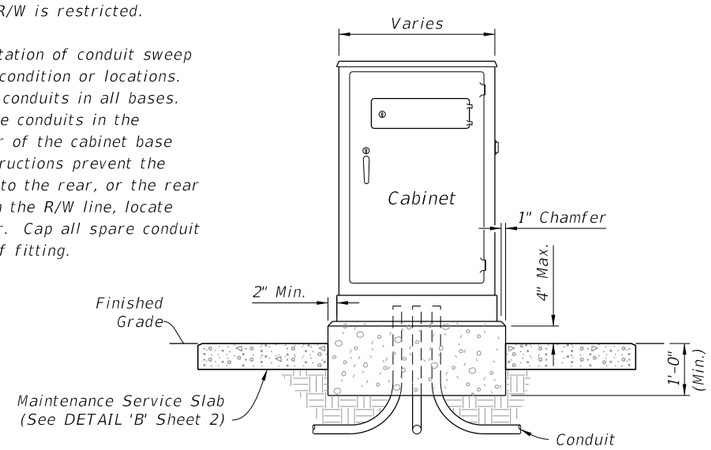

FRONT ELEVATION

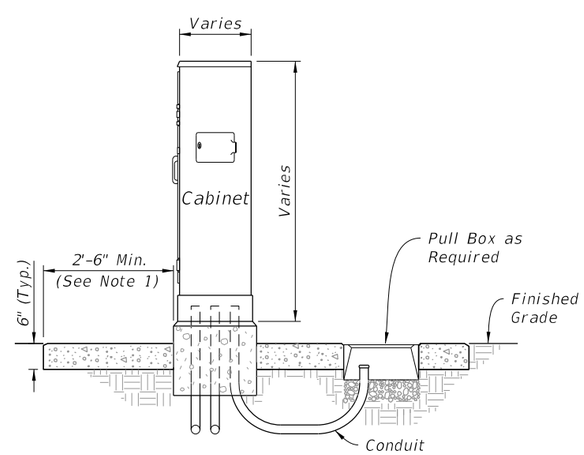

SIDE ELEVATION

NEW CONTROLLER CABINET

NOTES:

1. Retrofit existion controller cabinets in accordance with Specification 678.

2. Retrofit installation procedure for singnalized intersection controller cabinet are loacted at: http://www.fdot.gov/Traffic/Doc_Library.shtm Generator Powered for Signalized Intersection

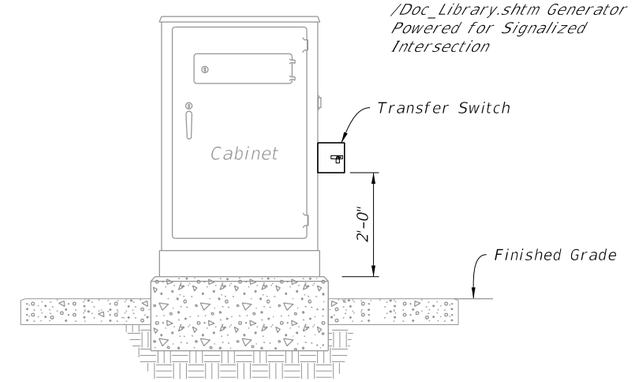

FRONT ELEVATION

EXISTING CONTROLLER CABINET

GROUND MOUNTED CONTROLLER CABINET

10/20/2022 8:55:47 AM

LAST REVISION	REVISION	DESCRIPTION:			INDEX	SHEET
11/01/22			FY 2023-24 STANDARD PLANS	CABINET INSTALLATION DETAILS	676-010	1 of 3

NOTES:

1. Maintenance Service Slab: Use Class NS concrete and slope ¼" to 1" for drainage. Not required in sidewalk, pavement areas, or where R/W is restricted.
2. If cabinet mounting requires relocation of hole in concrete pole, fill existing hole with concrete or cover with a noncorrosive cover plate.
3. Liquidtight flexible conduit is approved for use from the electrical disconnect to the cabinet when both are installed on the same pole.
4. Where a pull box is to be placed within the maintenance service slab, the slab width must be extended to provide for the required pull box concrete apron as detailed in Index 635-001.
5. Coordinate placement of maintenance service slab with proposed final grade. Grade and compact side slopes around the maintenance service slab to provide a stable and level working area and tie into the proposed embankment.

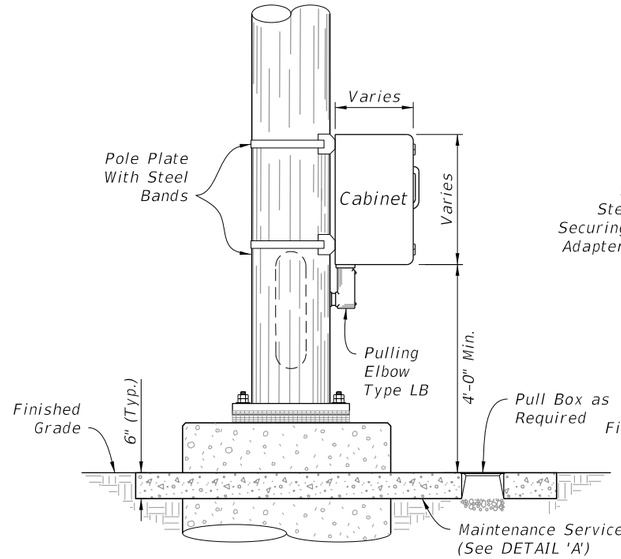

SIDE ELEVATION

METAL POLE

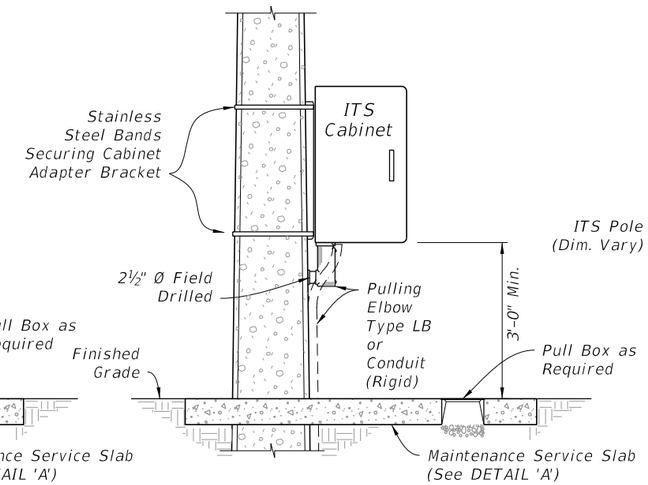

SIDE ELEVATION

CONCRETE POLE

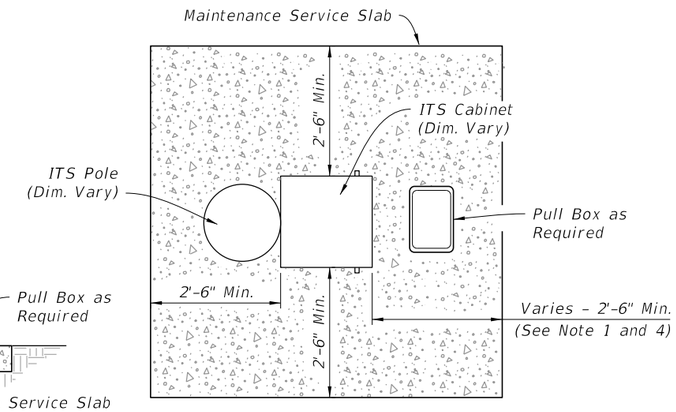

PLAN VIEW

DETAIL 'A'

POLE MOUNTED INTELLIGENT TRANSPORTATION SYSTEMS (ITS) CABINET

NOTES:

1. Maintenance Service Slab: Use Class NS concrete and slope ¼" to 1" for drainage. Not required in sidewalk, pavement areas, or where R/W is restricted.
2. The number, size and orientation of conduit sweep will vary according to site condition or locations. Provided two spare 2" PVC conduits in all bases. Place the exits of the spare conduits in the direction of the center rear of the cabinet base and into a pull box. If obstructions prevent the spare conduit from exiting to the rear, or the rear of the cabinet is located on the R/W line, locate as directed by the Engineer. Cap all spare conduit sweeps with a weatherproof fitting.
3. When a pull box is to be placed within the maintenance service slab, the slab width must be extended to provide for the required pull box apron as detailed in Index 635-001.
4. Coordinate placement of maintenance service slab with proposed final grade. Grade and compact side slopes around the maintenance service slab to provide a stable and level working area and tie into the proposed embankment.

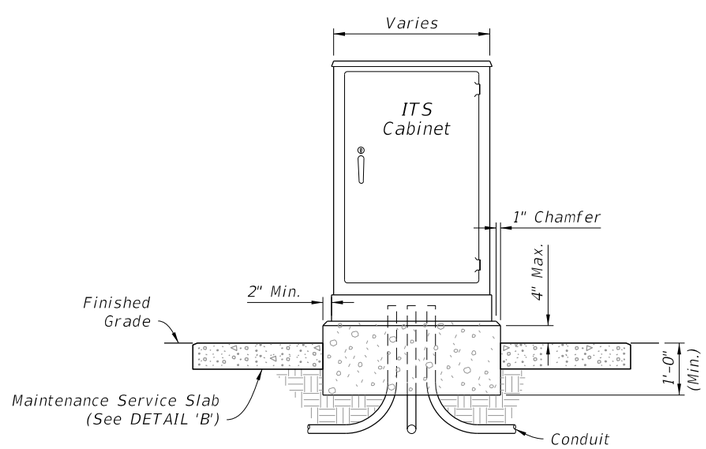

FRONT ELEVATION

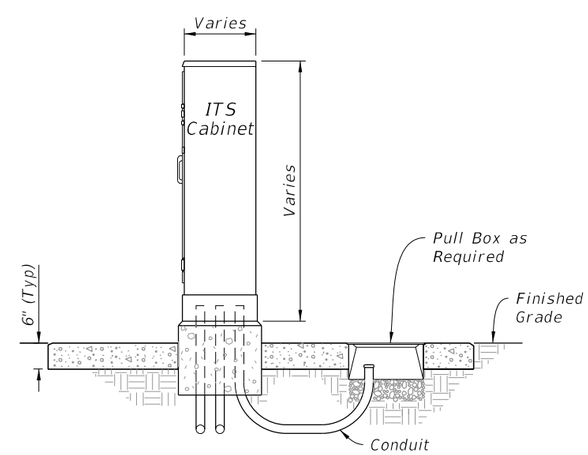

SIDE ELEVATION

NEW ITS CABINET

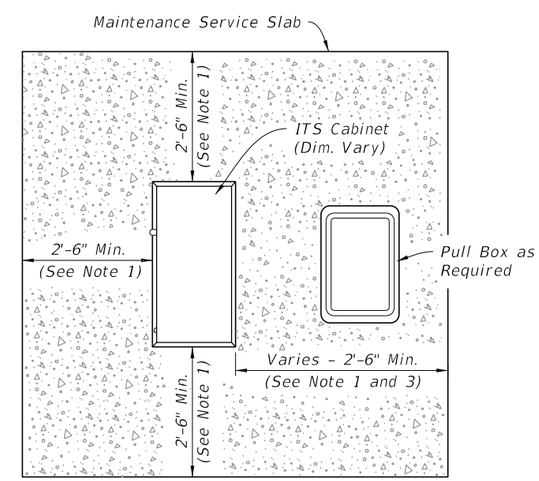

PLAN VIEW

DETAIL 'B'

GROUND MOUNTED INTELLIGENT TRANSPORTATION SYSTEMS (ITS) CABINET

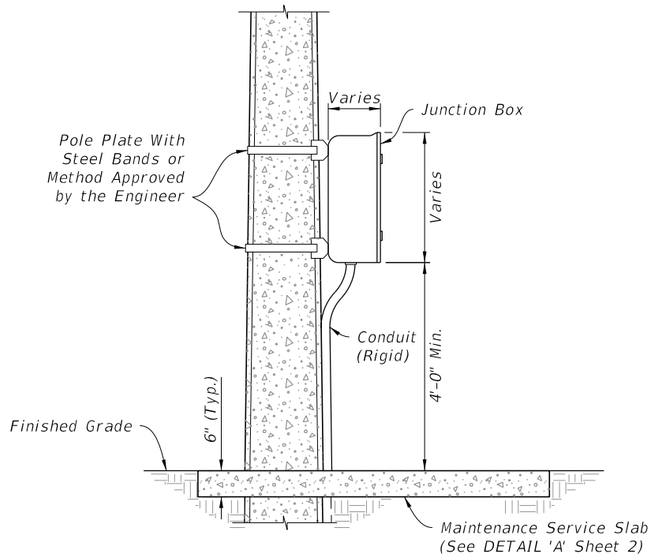

SIDE ELEVATION

POLE MOUNTED

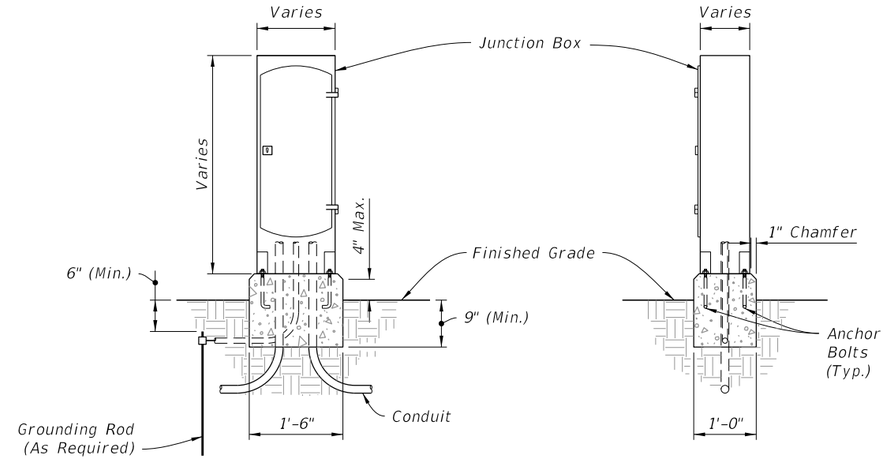

FRONT ELEVATION

SIDE ELEVATION

GROUND MOUNTED

INTERCONNECT JUNCTION BOX

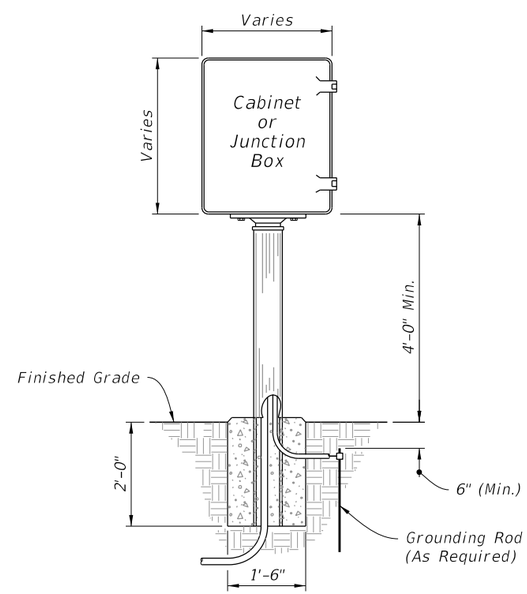

FRONT ELEVATION

PEDESTAL MOUNTED CABINET

10/20/2022 8:55:49 AM

LAST REVISION	REVISION	DESCRIPTION:			INDEX	SHEET
11/01/22			FY 2023-24 STANDARD PLANS	CABINET INSTALLATION DETAILS	676-010	3 of 3

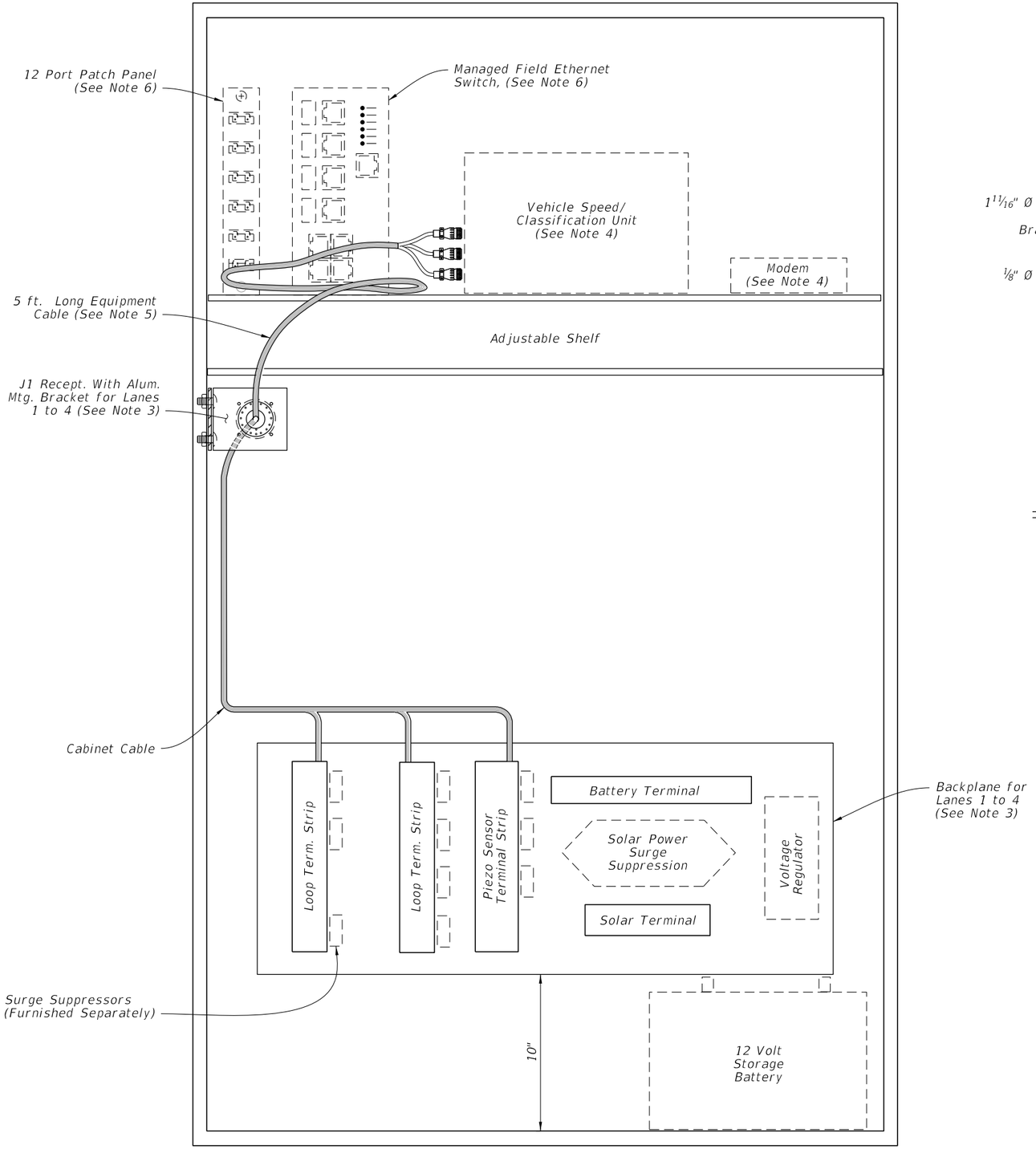

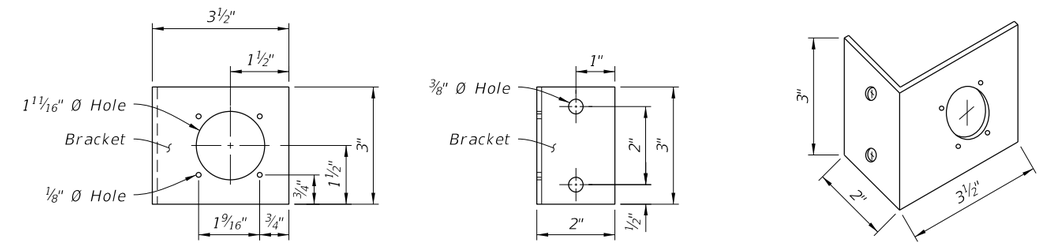

NOTE:

Fabricate bracket out of 3/32" – ⅛" inch thick aluminum. Dimensions may vary depending on the manufacturer of the J1 receptacle being furnished. The cabinet manufacturer will construct the mounting bracket to fit the receptacle.

J1 MOUNTING BRACKET

NOTES:

1. Traffic monitoring site cabinet includes:
   A. One adjustable Shelf; (equipped as shown)
   B. One backplane assembly; (equipped as shown)
   C. One J1 receptacle with mounting bracket;
   D. One J1 equipment cable 5 ft. long (Reference Sheet 4);
   E. All Associated wiring and wiring harnesses.

2. Basic backplane assembly consists of:
   A. Two inductive loop terminal strips;
   B. One piezo sensor terminal strip;
   C. One battery terminal strip;
   D. One solar panel terminal strip.

3. The contractor is responsible for contacting the TMS Manager at the Transportation Data and Analytics Office for lane number information and verification.

4. Speed/Classification Unit and Modem furnished separately.

5. Cable ends must be fabricated to fit the vehicle speed/ classification unit. (Reference Sheet 4)

6. Provide a 12 fiber single mode cable, a 12 port patch panel, and a managed field ethernet switch separately.

CABINET LAYOUT DETAILS (Four Lanes or Less)

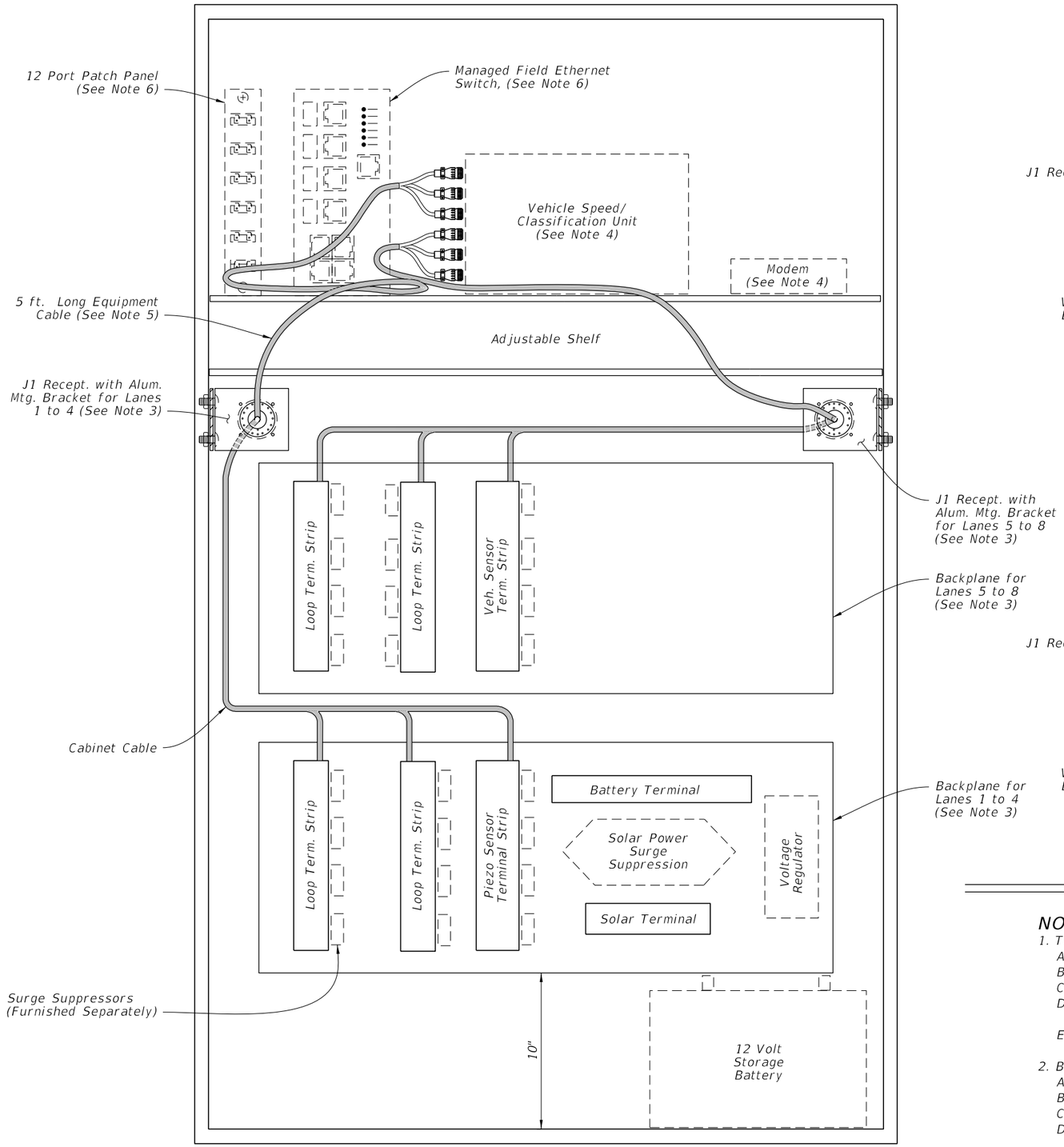

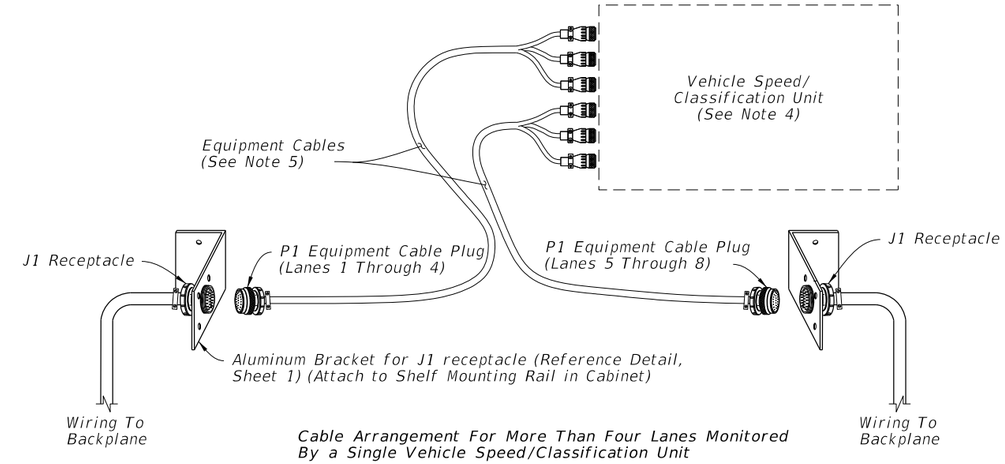

Cable Arrangement For More Than Four Lanes Monitored By a Single Vehicle Speed/Classification Unit

OPTION A
(Shown)

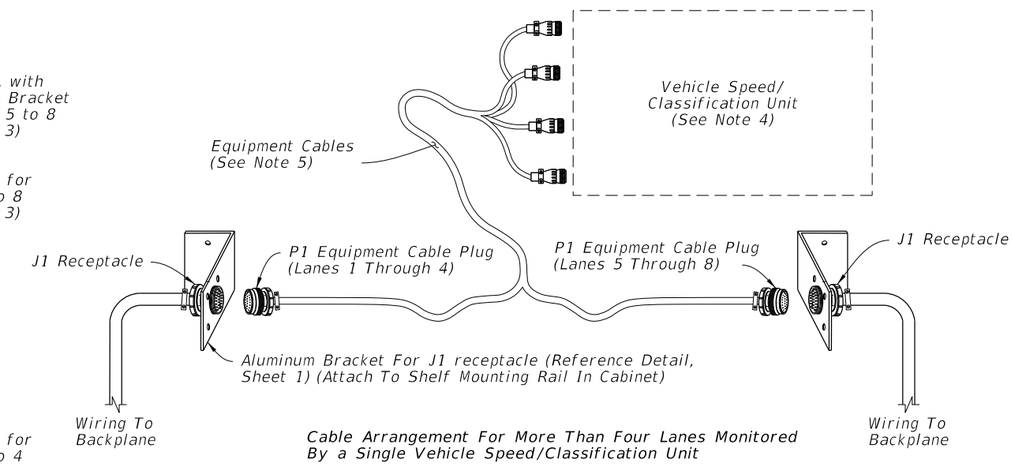

Cable Arrangement For More Than Four Lanes Monitored By a Single Vehicle Speed/Classification Unit

OPTION B

EQUIPMENT CABLE ASSEMBLY

NOTES:

1. Traffic monitoring site cabinet includes:
   A. One adjustable Shelf; (equipped as shown)
   B. Two backplane assembly; (equipped as shown)
   C. Two J1 receptacle with mounting bracket;
   D. One J1 equipment cable 5 ft. long (Reference Sheet 4);
   E. All Associated wiring and wiring harnesses.

2. Basic backplane assembly consists of:
   A. Two inductive loop terminal strips;
   B. One piezo sensor terminal strip;
   C. One battery terminal strip;
   D. One solar panel terminal strip.

3. The contractor is responsible for contacting the TMS Manager in the Transportation Data and Analytics Office for lane number information and verification.

4. Speed/Classification Unit and Modem furnished separately.

5. Cable ends must be fabricated to fit the vehicle speed/ classification unit. (Reference Sheet 4 for Pinout Charts, receptacle and plug details.

6. Provide a 12 fiber single mode cable, a 12 port patch panel, and a managed field ethernet switch separately.

CABINET LAYOUT DETAILS (Five to Eight Lanes)

NOTES:

1. Reference Sheet 1 or 2, Note 2 for items to be included with backplane.
2. All terminal strip contacts are on 9/16" centers (Clinch 142 Series or equal) Use insulated fork wire terminations.
3. The contractor is responsible for contacting the TMS Manager in the Transportation Data and Analytics Office for lane number information and verification.

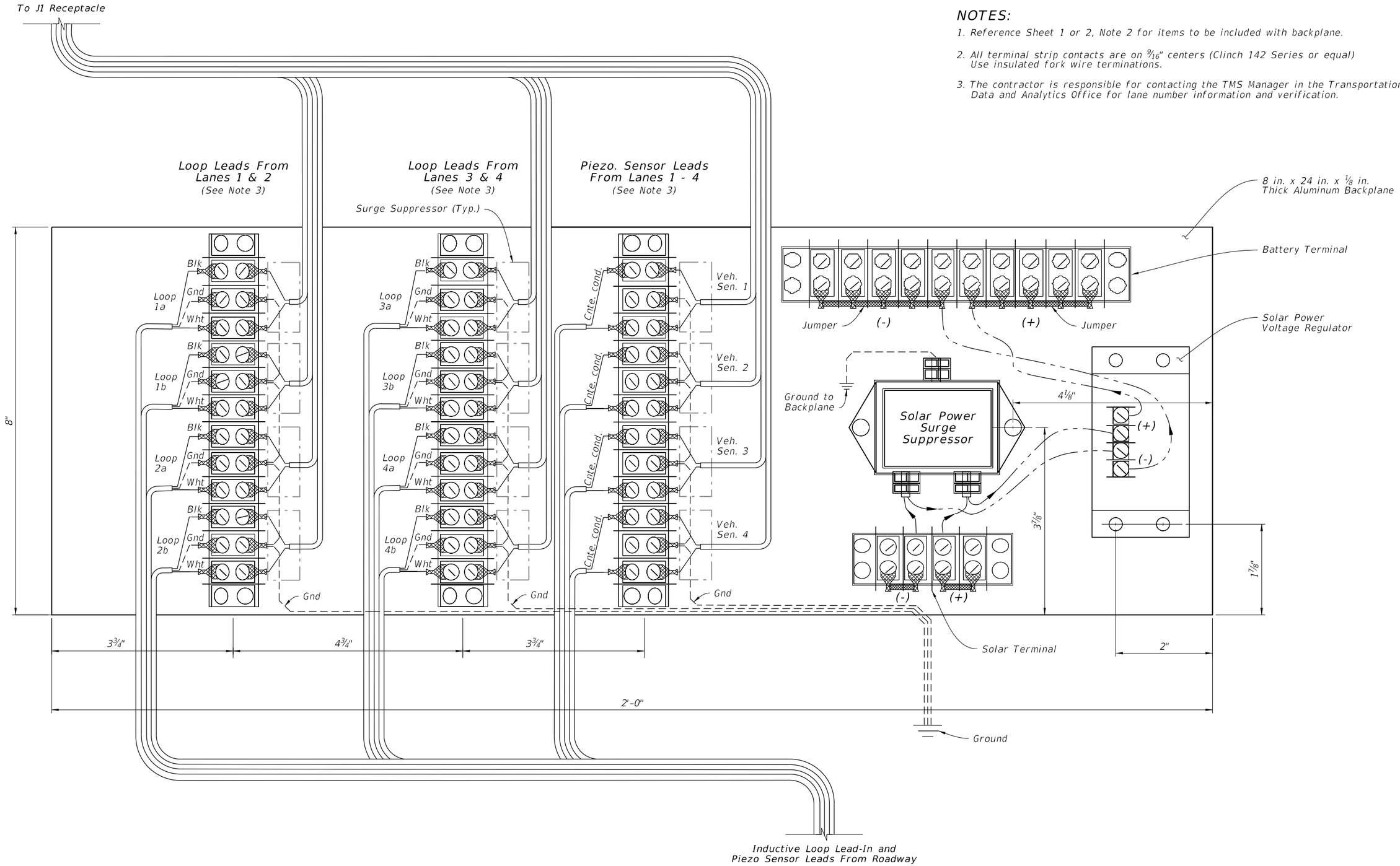

CABINET BACKPLANE DETAIL

LAST REVISION	REVISION	DESCRIPTION:			INDEX	SHEET
11/01/21			FY 2023-24 STANDARD PLANS	TRAFFIC MONITORING SITE	695-001	3 of 9

10/20/2022 8:55:52 AM

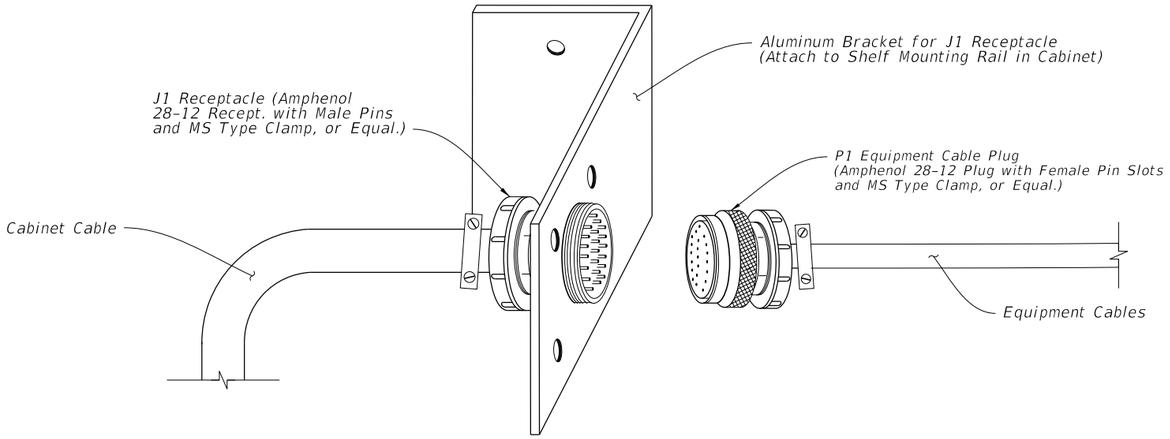

J1 RECEPTACLE PINOUT	
26 Recessed Male Pins	
A	Loop 1a (5a) white
B	Loop 1a (5a) black
C	Loop 1b (5b) red
D	Loop 1b (5b) black
E	Loop 2a (6a) green
F	Loop 2a (6a) blue
G	Loop 2b (6b) orange
H	Loop 2b (6b) tan
J	Loop 3a (7a) white
K	Loop 3a (7a) green
L	Loop 3b (7b) red
M	Loop 3b (7b) black
N	Gnd
P	Loop 4a (8a) w/white
R	Loop 4a (8a) w/black
S	Loop 4b (8b) w/red
T	Loop 4b (8b) w/green
U	Piezo 1 (5) (+) w/blue
V	Piezo 1 (5) sh w/orange
W	Piezo 2 (6) (+) w/green
X	Piezo 2 (6) sh w/red
Y	Piezo 3 (7) (+) w/black
Z	Piezo 3 (7) sh w/red/blk
a	Piezo 4 (8) (+) red/ green
b	Piezo 4 (8) sh red/white
d	Gnd green

J1 EQUIPMENT CABLE PLUG		
26 Female Pin Slots		
A	Loop 1a (5a)	Connect To Electronics Unit
B	Loop 1a (5a)	
C	Loop 1b (5b)	
D	Loop 1b (5b)	
E	Loop 2a (6a)	
F	Loop 2a (6a)	
G	Loop 2b (6b)	
H	Loop 2b (6b)	
N	Gnd	
J	Loop 3a (7a)	Connect To Electronics Unit
K	Loop 3b (7b)	
L	Loop 3b (7b)	
M	Loop 3b (7b)	
P	Loop 4a (8a)	
R	Loop 4a (8a)	
S	Loop 4b (8b)	
T	Loop 4b (8b)	
d	Gnd	
U	Piezo 1 (5) (+)	Connect To Electronics Unit
V	Piezo 1 sh	
W	Piezo 2 (6) (+)	
X	Piezo 2 sh	
Y	Piezo 3 (7) (+)	
Z	Piezo 3 sh	
a	Piezo 4 (8) (+)	
b	Piezo 4 sh	

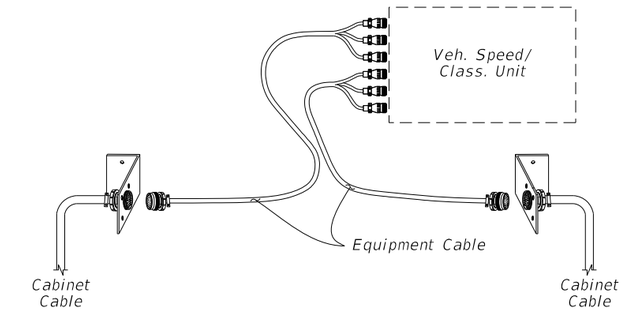

OPTION A

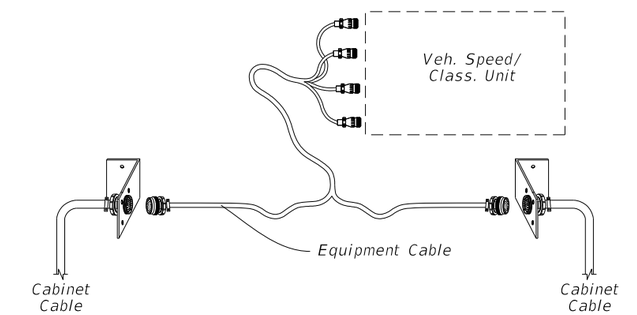

OPTION B

NOTES:

1. The contractor is responsible for contacting the TMS Manager in the Transportation Data and Analytics Office for lane number information and verification.

2. The equipment cable can accommodate up to four lanes of inductive loop and piezo sensor inputs. (Reference Sheet 1 for cabinet layout)

3. For more than four lanes and up to eight lanes of inputs, the following options are available:

   A. Second Vehicle Speed/Class. Unit and separate equipment cable connecting to a second J1 receptacle; or

   B. Single Vehicle Speed/Class. Unit capable of up to eight lanes of inputs and a single equipment cable with split ends to fit two J1 receptacles. (Reference Sheet 2 detail)

4. Numbers in parenthesis in the pinout chart identify lane numbers when a second backplane for lanes 5 through 8 is required.

5. Cable Ends must be fabricated to fit the vehicle Speed/Classification Unit.

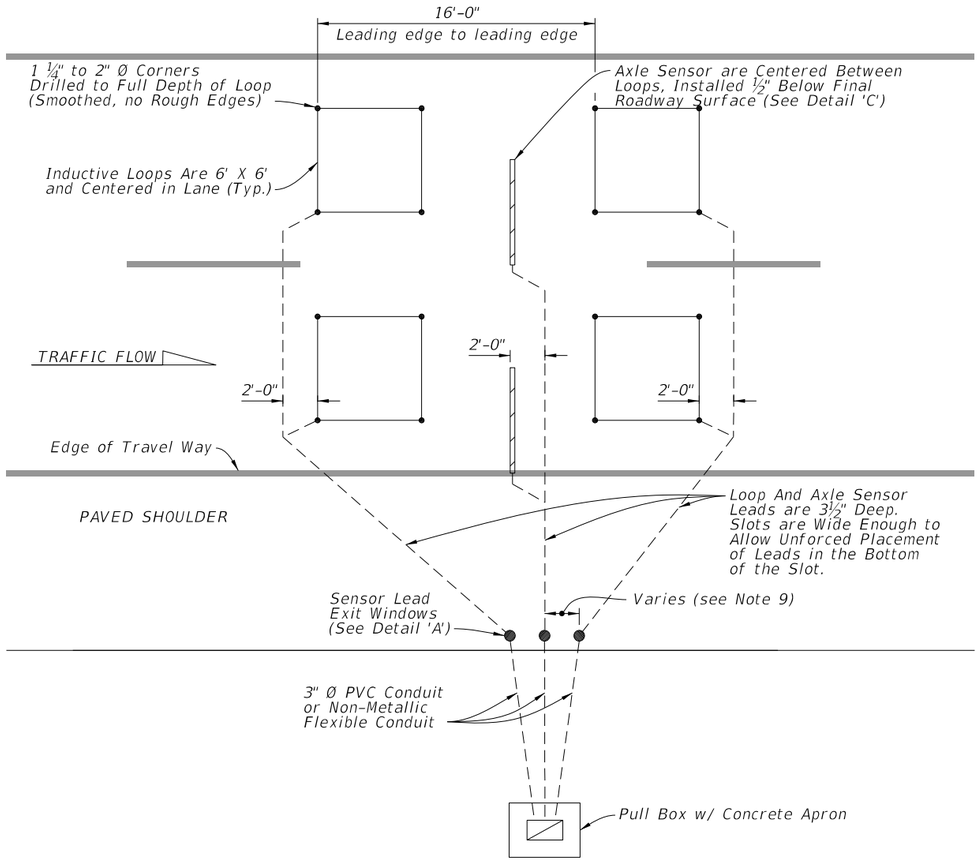

ROADWAYS WITH PAVED SHOULDERS

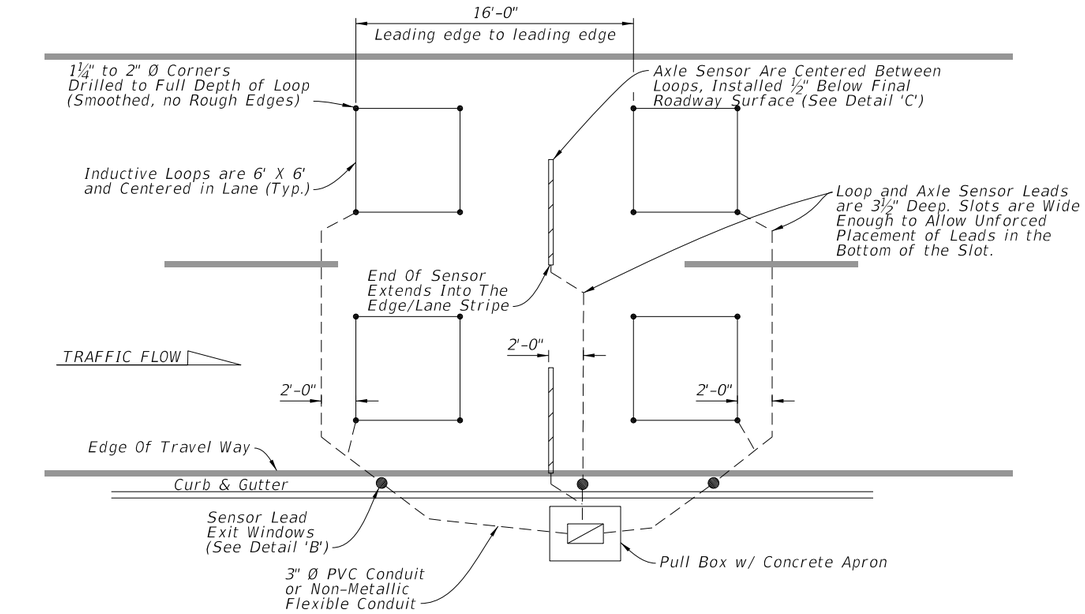

CURB & GUTTER ROADWAYS

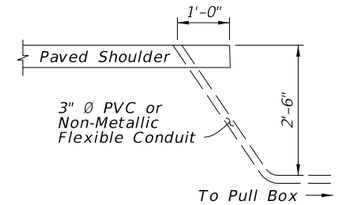

EXIT WINDOW
DETAIL 'A'

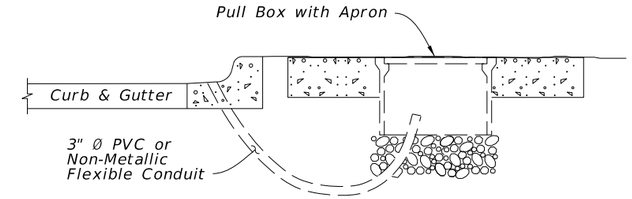

EXIT WINDOW
DETAIL 'B'

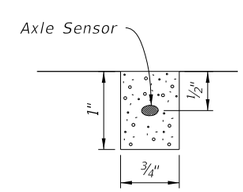

END VIEW
(Axle Sensor Slot)
DETAIL 'C'

NOTES:

1. Install axle sensors and loops associated with axle sensors after placement of the friction course.
2. Cut a 3½" deep slot for the Inductive loops. Loop slots will be cut wide enough to allow unforced placement of the wire into the bottom of the slot. Four turns of #14 AWG, place the IMSA 51-7 copper wire in the slot. Place short pieces of backer rod (2" to 3" in length) every 18" to 24" to hold the loop wire in the bottom of the slot.
3. Twist loop leads at the rate of 8 to 16 twists per foot. Loops that are within 150' of the cabinet, extend the twisted pair loop wire directly to the cabinet. For distances over 150', #14 IMSA 50-2 shielded lead-in cable must be spliced to the loop wire twisted pair at the first pull box to which the loop wire is pulled.
4. Marking will consist of two rounds of contrasting colored tape, one color for the lane number and the second color for the lead loop location in the lane. The first band closest to the cabinet will represent the lane number, one round of tape will be for lane 1 and two rounds will be lane 2, etc. The lead loop in lane one would have one round of tape and a second round of a contrasting colored tape for the lead loop in the lane. The trailing loop would not have a second contrasting colored band of tape.
5. See Index 635-001 for pull box and apron details.
6. All splices will be performed using splice kits designed for direct burial. Splice kits will include screw on wire connectors and a housing with sufficient sealant to fully encapsulate the spliced connections. Taped splices are not permitted.
7. Use a chalk line or string and paint to layout the position of the sensor and lead-in cable slots. Ensure saw cuts do not deviate more than 0.5 inches from the chalk line. Use a single blade or ganged blade saw wide enough to cut the axle sensor slot at full width in a single pass. Cutting two slots and chipping out roadway material between them is not allowed.
8. All sensor slots and any cuts in the roadway will be thoroughly blown out to ensure there is no dust or debris prior to installation of sensors or leads.
9. Install Exit Windows at least 2' apart.

TYPICAL FOR UP TO 4 LANES OF SENSOR LEADS PULLED TO ONE SIDE OF THE ROADWAY

LANE LAYOUT FOR TMS INDUCTIVE LOOP AND AXLE SENSOR

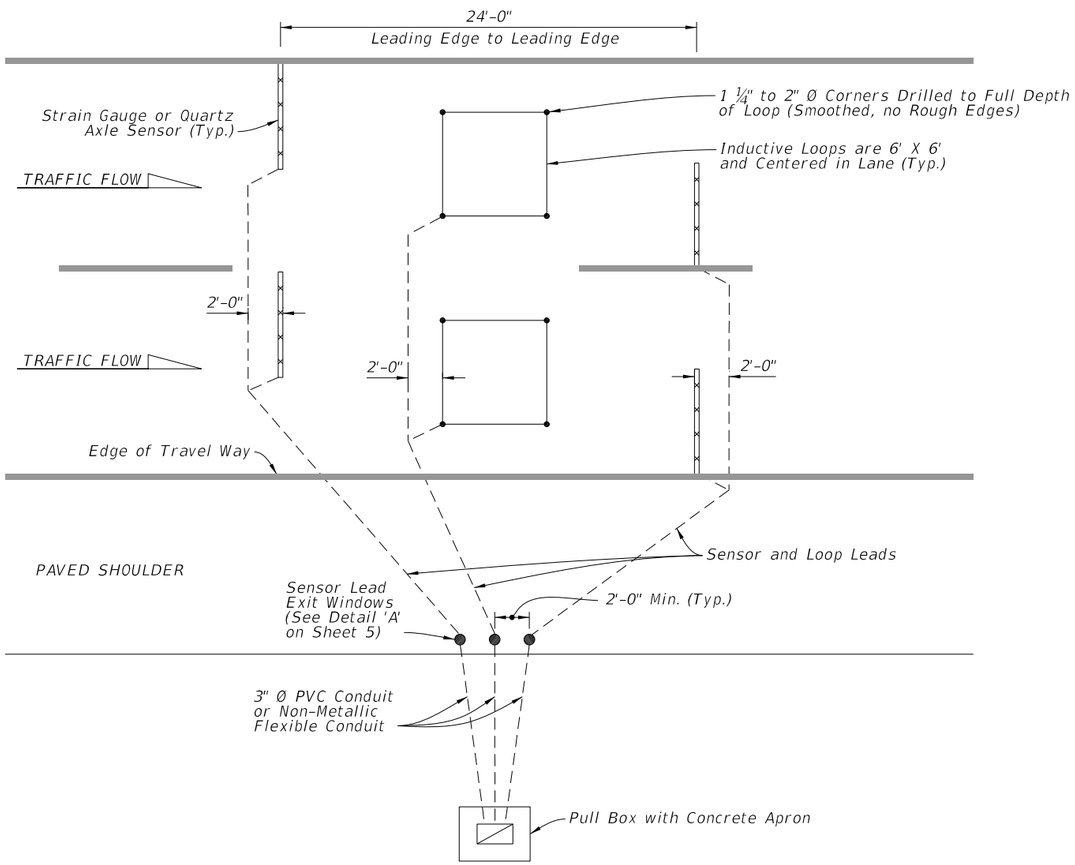

TYPE I CONFIGURATION-A
(Vehicle Classification System)

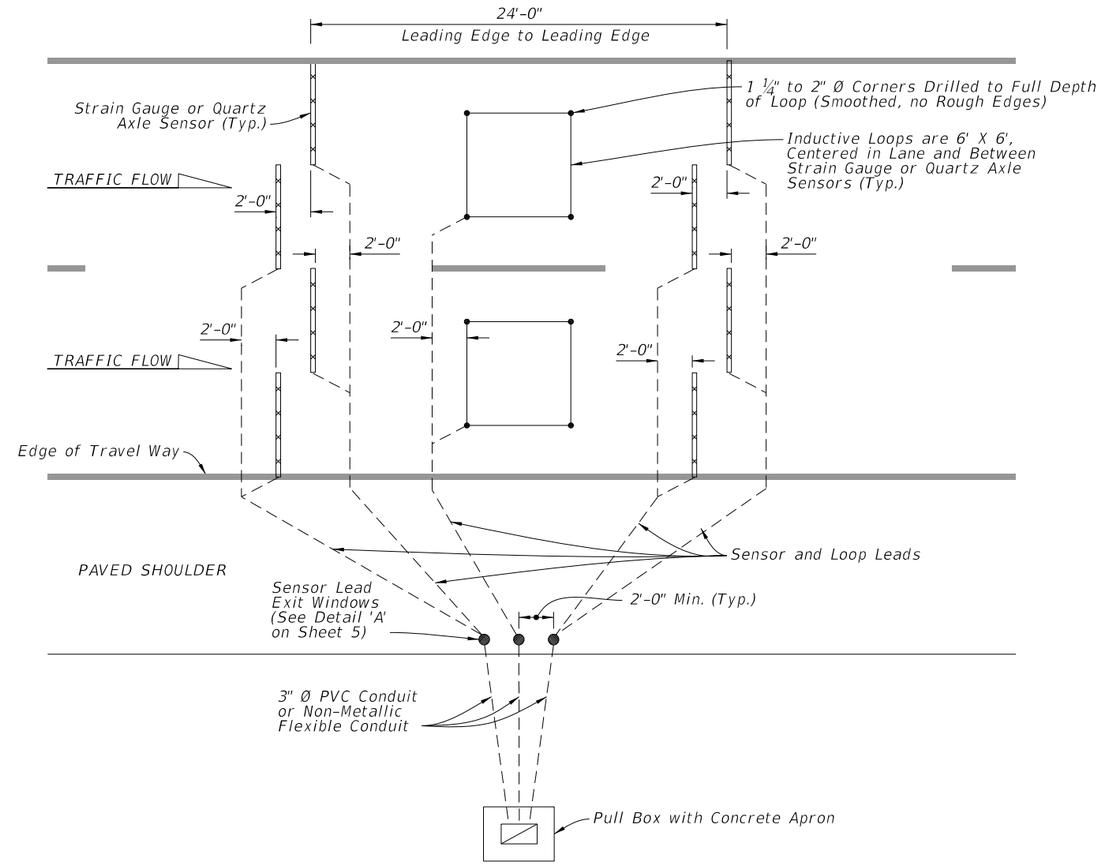

TYPE I CONFIGURATION-B
(Vehicle Classification System)

NOTE:

Configuration-A and Configuration-B are based on the vehicle Speed/classification unit. Contact the TMS Manager in the Transportation Data and Analytics Office for the correct configuration.

LANE CONFIGURATION FOR TMS INDUCTIVE LOOP AND STRAIN GAUGE/QUARTZ AXLE SENSOR

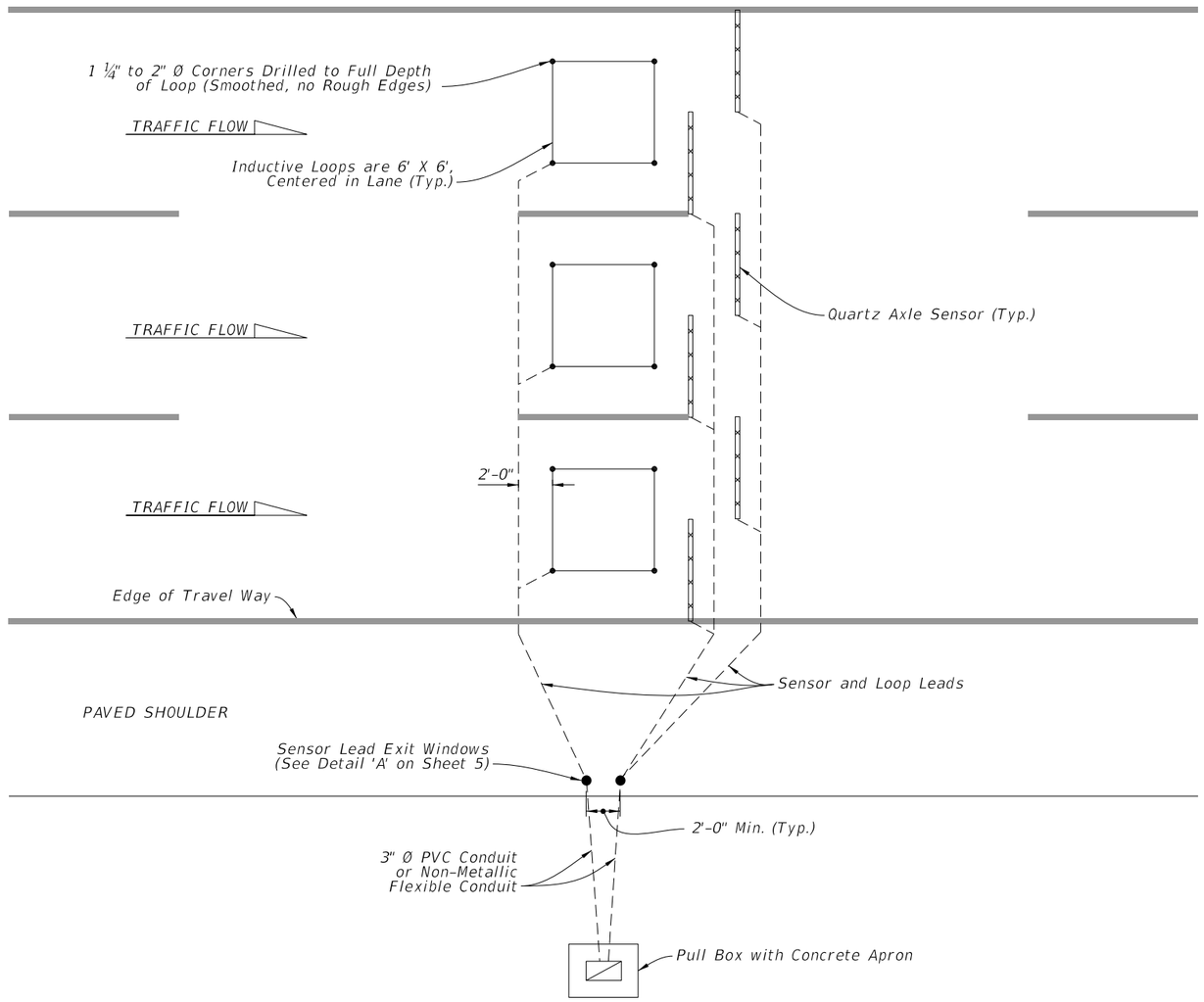

TYPE III CONFIGURATION
(Commercial Vehicle Weight Enforcement System)

LANE CONFIGURATION FOR MAINLINE INDUCTIVE LOOP AND QUARTZ AXLE SENSOR

LAST REVISION	REVISION	DESCRIPTION:			INDEX	SHEET
11/01/21			FDOT FY 2023-24 STANDARD PLANS	TRAFFIC MONITORING SITE	695-001	7 of 9

10/20/2022 8:55:56 AM

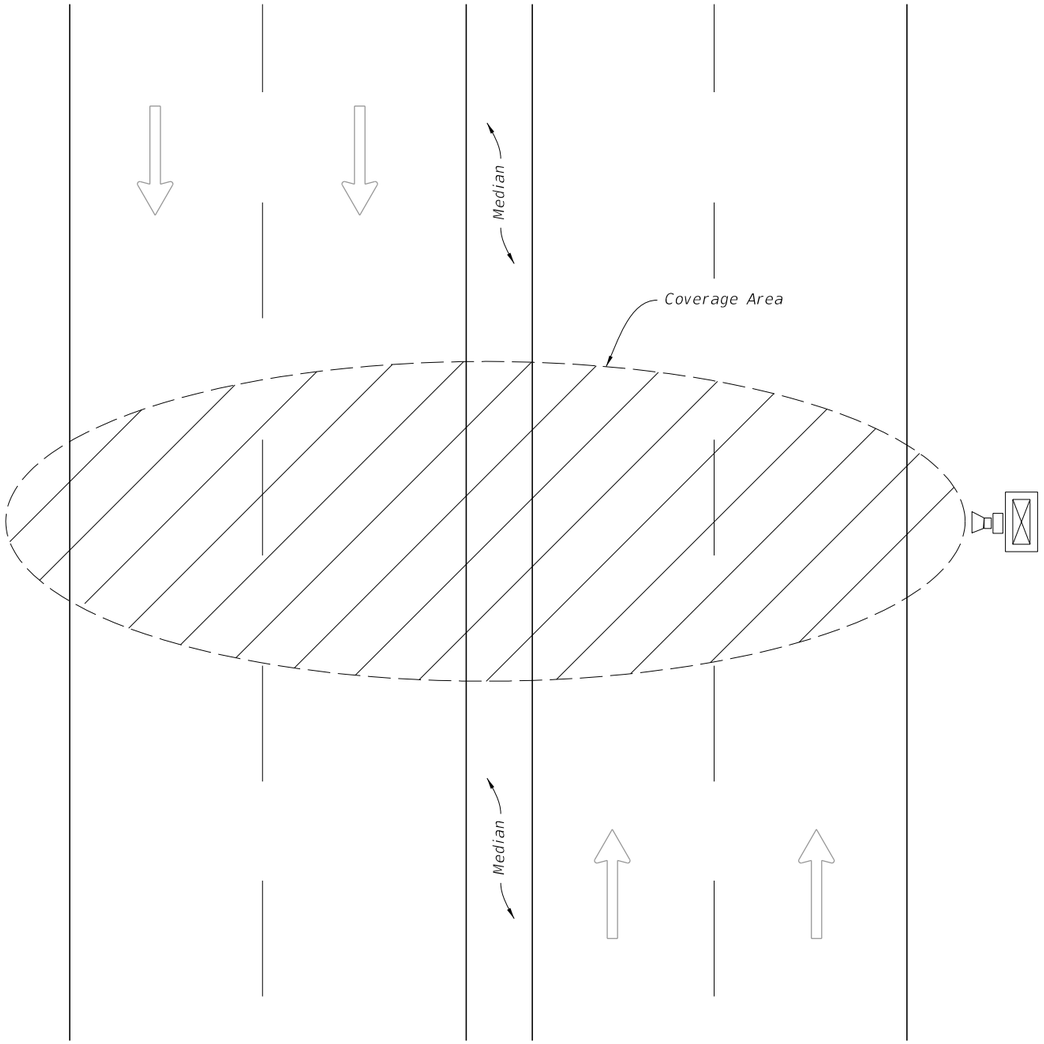

PLAN

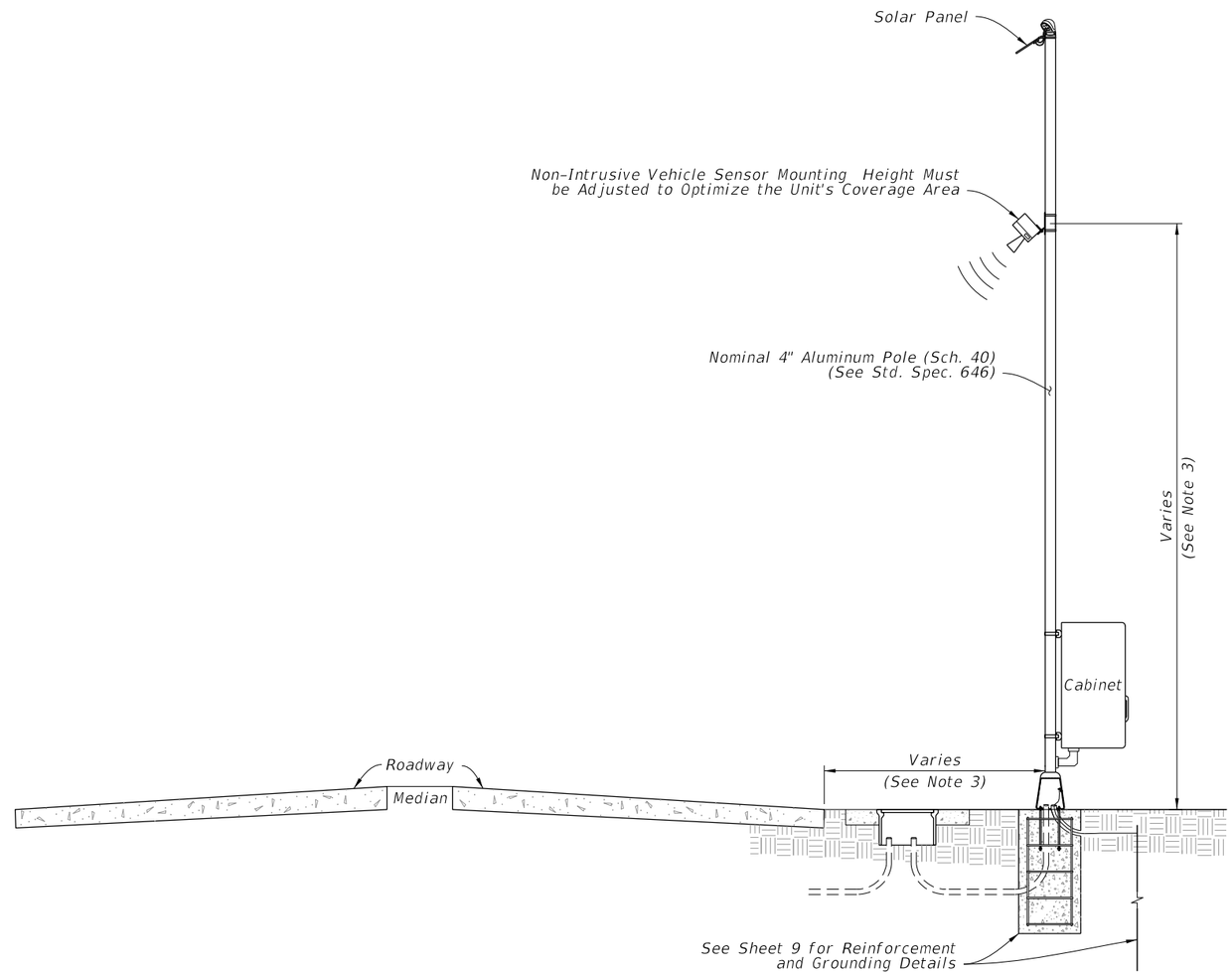

ELEVATION

NOTES:

1. The unit must be capable of detecting up to eight lanes of traffic (in either or both directions) when mounted perpendicular to the roadway.

2. Coverage area of the unit is affected by the roadway geometry: distance from the travel lanes, median type and width, barrier walls, etc.

3. Mounting height of the unit and offset from the roadway must be determined on a site-by-site basis, in accordance with the manufacturer's recommended guidelines. Offset of pole must be greater than or equal to minimum clear zone requirements.

NON-INTRUSIVE VEHICLE SENSOR

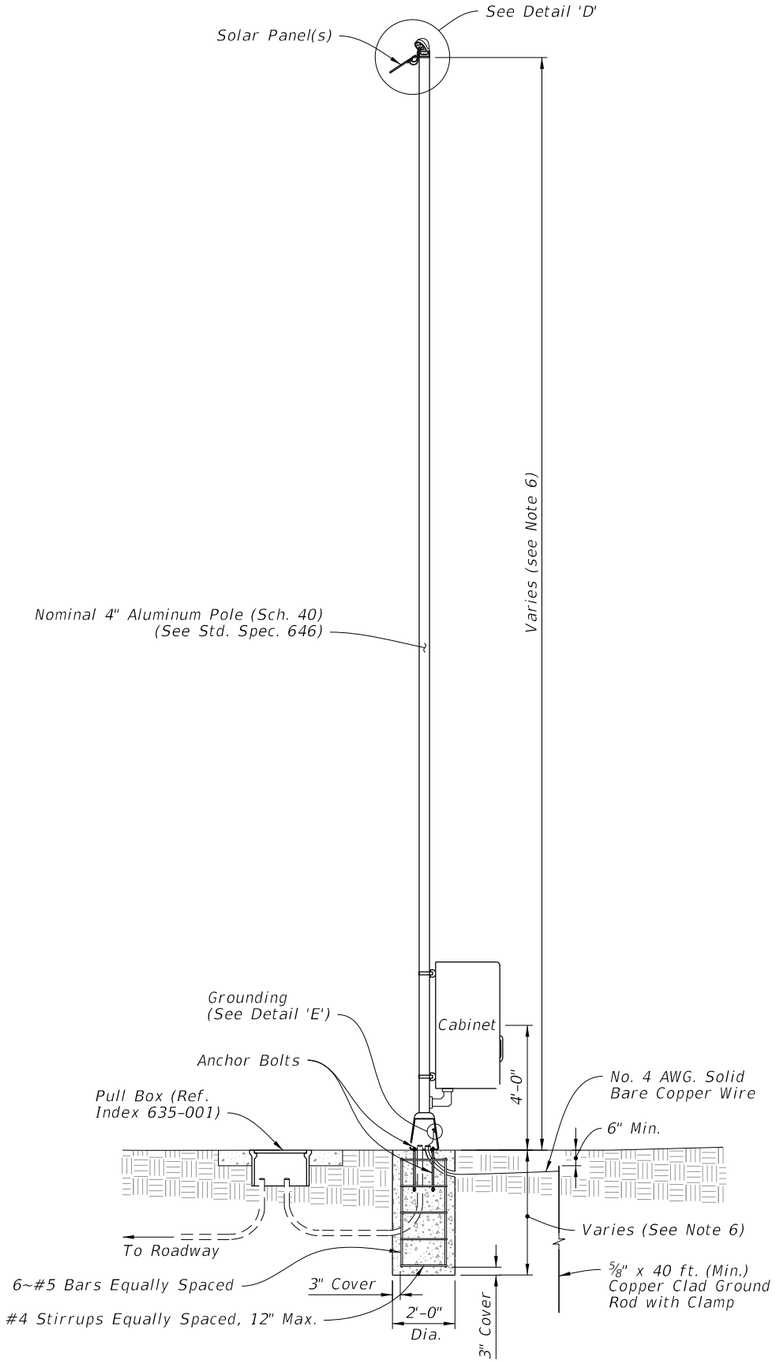

ELEVATION

SOLAR POWER POLE
WITH POLE MOUNTED CABINET
(Telemeter Sites)

NOTES:

1. Cabinet installed per Index 676-010 except cabinet center will be 4 feet above grade.
2. Meet the requirements of Specification 646.
3. Use #10 AWG stranded copper wire for Solar Panel Array installations, Red insulation is THHN or THWN for positive 12 volts wiring, Black insulation is THHN or THWN for negative, 12 volts wiring, Green insulation is THHN or THWN for ground bonding of the solar panel frame to the pole and earth.
4. Solar panel should be installed facing due south with angle of tilt equal to the sum of the following equation. The Latitude of the panel's location, multiplied by 0.76, plus 3.1 degrees. Equation expressed as (LAT)X(0.76)+(3.1°)
5. Encase all wiring from the weather head to the solar panel in outdoor flexible conduit.
6. Concrete Base Dimensions:

   a. 4' poles: depth of 2'-0"

   b. 12' or 15' poles: depth of 3'-0"

   c. 20' or 30' poles: depth of 4'-0"

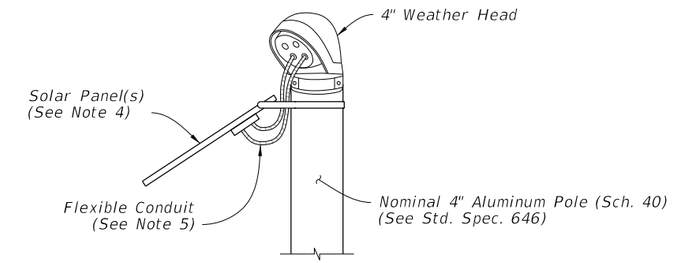

DETAIL 'D'

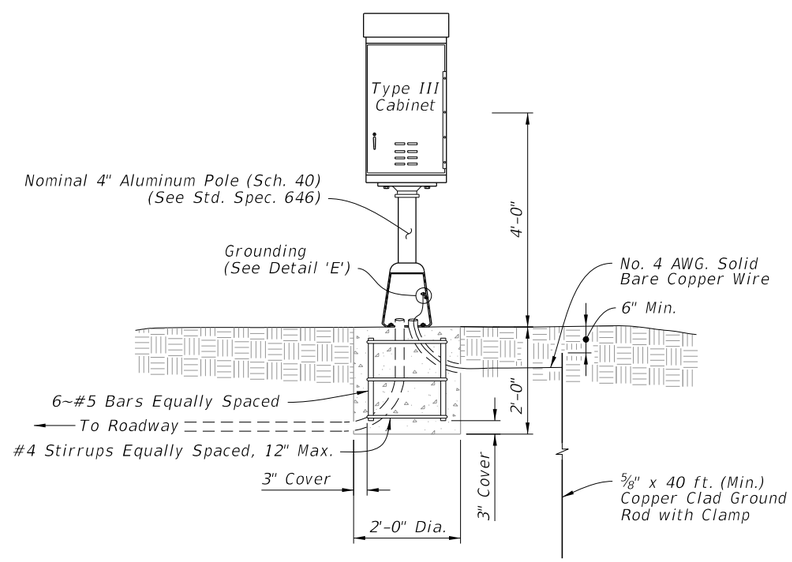

ELEVATION

PEDESTAL MOUNTED CABINET
(Portable Traffic Monitoring Sites)

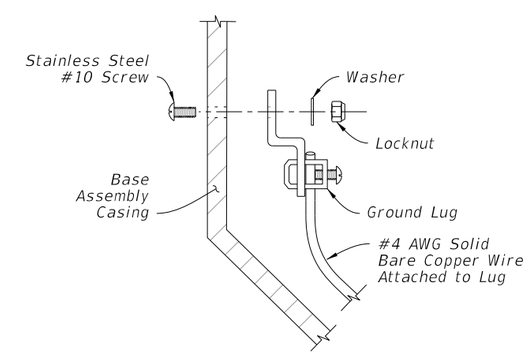

DETAIL 'E'

8:55:57 AM

10/20/2022

LAST REVISION	REVISION	DESCRIPTION:				INDEX	SHEET
11/01/21			FDOT	FY 2023-24 STANDARD PLANS	TRAFFIC MONITORING SITE	695-001	9 of 9

GENERAL NOTES:

1. Meet the requirements of Specification 700.

2. Shop Drawings:
   This Index is considered fully detailed. Submit Shop Drawings only for minor modifications not detailed in the Plans.

3. BREAKAWAY SUPPORTS REQUIREMENTS: Install non-frangible aluminum column (post) (larger than 3½") with breakaway supports as shown on Sheet 4. Signs shielded by barrier wall or guardrail do not require breakaway support.

4. Aluminum Sign, Wind Beams and Column (Post) Materials:
   A. Aluminum Plates: ASTM B209, Alloy 6061-T6
   B. Aluminum Bars and Extruded Shapes: ASTM B221, Alloy 6061-T6
   C. Aluminum Structural Shapes: ASTM B221 Alloy 6061-T6
   D. Cast Aluminum: ASTM B26 Alloy A356-T6

5. Galvanized Steel Slip Base Stub Materials:
   A. Steel Plate and Structural Shapes: ASTM A36 or ASTM A709, Grade 36

6. Sign Mounting Bolts, Nuts and Washers:
   A. Aluminum Button Head and Flat Head Bolts: ASTM F468 Alloy 2024-T4
   B. Aluminum Hex Nuts: ASTM F467 Alloy 6061-T6 or 6262-T9
   C. Aluminum Washers: ASTM B221, Alloy 7075-T6

7. Stainless Steel Bolts, Nuts and Washers may be used in lieu of the Aluminum button head and flat head bolts as follows:
   A. Stainless Steel Bolts: ASTM Ft 593 Alloy Group 2, Condition A, CW1 or SH1
   B. Stainless Steel Nuts: ASTM F594

8. Sign Column (Post) Bolts, Nuts and Washers:
   A. Galvanized U-Bolt (Column): ASTM A449 or ASTM A193 B7 according to ASTM F2329 with double nuts (nut and lock washer optional).
   B .Aluminum Bolts (Sleeve): ASTM F468, Alloy 6061-T6 or 2024-T4 with Hex Nuts F467 6061-T6 or 6262-T9 and Washers B221, Al clad 2024-T4
   C. Galvanized High Strength Hex Head Bolts (BaseBolts): ASTM F3125, Grade A325, Type 1
   D. Galvanized Hex Nuts: ASTM A563 Grade D
   E. Galvanized Washers: ASTM F436
   F. Galvanized Bolts (Sleeve): ASTM A307 with Galvanized Hex Nuts and Washers

SHEET	CONTENTS
1	General Notes and Design Example
2	Design Example - Centroid
3	Column and Foundation Tables
4	Slip Base and Foundation Details
5	Driven Post, Concrete Stub, and Soil Plate Details
6	Wind Beam Connection
7	Wind Beam Connection for Flip Down Sign
8	Slam-Latch Detail
9, 10, & 11	Frequently Used Sign Clusters

STEP 1: Calculate the area and the centroid for an individual sign or a sign cluster. Note that the centroid and areas have been calculated for frequently used sign clusters. These are shown on Sheets 7, 8, and 9.

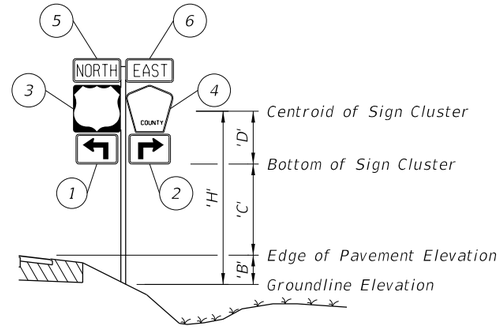

	Size a x h	Centroid: Local $'Y_n'$	Centroid: Global $'X_n'$	Centroid: Global $'Y_n'$	$'A_n'$	$'X_n'$ x $'A_n'$	$'Y_n'$ x $'A_n'$
	(in. x in.)	(in.)	(in.)		(in.²)	(in.³)	(in.³)
1	21 x 15	7.5	-10.5-1.5-1.5 = -13.5	7.5	315	-4,252.5	2,362.5
2	21 x 15	7.5	10.5+1.5+1.5 = 13.5	7.5	315	+4,252.5	2,362.5
3	24 x 24	12	-12-1.5 = -13.5	15+1+12 = 28	576	-7,776	16,128
4	24 x 24	12	12+1.5 = 13.5	15+1+12 = 28	436	5,886	12,208
5	24 x 12	6	-12-1.5 = -13.5	15+1+24+1+6 = 47	288	-3,888	13,536
6	24 x 12	6	12+1.5 = 13.5	15+1+24+1+6 = 47	288	3,888	13,536
				TOTALS	2,218	-1,890	60,133

$\Sigma\,('A_n') = 2{,}218$ in.² $= 15.4$ ft.² $\qquad \Sigma\,('X_n' \times 'A_n') = -1{,}890$ in.³ $= -1.09$ ft.³ $\qquad \Sigma\,('Y_n' \times 'A_n') = 60{,}133$ in.³ $= 34.8$ ft.³

$$'X_c' = \frac{\Sigma\,('X_n' \times 'A_n')}{\Sigma\,'A_n'} = -0.1 \text{ ft.} \qquad 'Y_c' = \frac{\Sigma\,('Y_n' \times 'A_n')}{\Sigma\,'A_n'} = 2.26 \text{ ft.}$$

STEP 2: Determine the height 'H' from groundline to the centroid of the individual sign or sign cluster.

Assume: 'B' = 1 ft., 'C' = 7 ft.

Calculated: $X_c' = -0.1$ ft., $'Y_c' =$ 'D' 2.26 ft.

'H' = 'B' + 'C' + 'D' = 10.26 ft. ==> USE 11 ft. $\qquad \Sigma\,('A_n') = 15.4$ ft.² ==> USE 16 ft.²

STEP 3: Refer to the Aluminum Column (Post) Selection Tables and find the intersection point. See Sheet 3.

ALUMINUM COLUMN (POST) SELECTION TABLE

TOTAL PANEL AREA (SF)	'H' (FT) 8 ft	9 ft	10 ft	11 ft	12 ft	13 ft	14 ft	15 ft	16 ft	17 ft	18 ft	19 ft	20 ft
3 sf	2	2.5	2.5	2.5	3	3	3	3	3.5	3.5	3.5	3.5	3.5
4 sf	2.5	2.5	3	3	3	3	3.5	3.5	3.5	3.5	3.5	3.5	3.5
5 sf	2.5	3	3	3	3.5	3.5	3.5	3.5	3.5	3.5	3.5	4	4
6 sf	3	3	3.5	3.5	3.5	3.5	3.5	3.5	3.5	3.5	4	4	4
7 sf	3	3.5	3.5	3.5	3.5	3.5	3.5	3.5	4	4	4	4	4
8 sf	3.5	3.5	3.5	3.5	3.5	3.5	3.5	4	4	4	4	4	4
9 sf	3.5	3.5	3.5	3.5	3.5	3.5	4	4	4	4	4	4	4
10 sf	3.5	3.5	3.5	3.5	3.5	4	4	4	4	4	4	4.5	4.5
11 sf	3.5	3.5	3.5	3.5	4	4	4	4	4	4	4.5	4.5	4.5
12 sf	3.5	3.5	3.5	4	4	4	4	4	4	4	4.5	4.5	4.5
13 sf	3.5	3.5	4	4	4	4	4	4	4	4.5	4.5	4.5	5
14 sf	3.5	3.5	4	4	4	4	4	4	4.5	4.5	4.5	5	5
15 sf	3.5	4	4	4	4	4	4	4.5	4.5	4.5	5	5	5
16 sf	3.5	4	4	4	4	4	4	4.5	4.5	5	5	5	6
17 sf	4	4	4	4	4	4	4.5	4.5	4.5	5	5	6	6
18 sf	4	4	4	4	4	4.5	4.5	4.5	5	5	5	6	6
19 sf	4	4	4	4	4	4.5	4.5	4.5	5	5	6	6	6
20 sf	4	4	4	4	4.5	4.5	4.5	5	5	5	6	6	6
21 sf	4	4	4	4	4.5	4.5	5	5	5	6	6	6	6
22 sf	4	4	4	4.5	4.5	4.5	5	5	6	6	6	6	6
23 sf	4	4	4	4.5	4.5	5	5	5	6	6	6	6	6
24 sf	4	4	4.5	4.5	4.5	5	5	6	6	6	6	6	6
25 sf	4	4	4.5	4.5	5	5	5	6	6	6	6	6	8
26 sf	4	4.5	4.5	4.5	5	5	5	6	6	6	6	8	8
27 sf	4	4.5	4.5	4.5	5	5	6	6	6	6	6	8	8
28 sf	4	4.5	4.5	5	5	5	6	6	6	6	6	8	8
29 sf	4.5	4.5	4.5	5	5	6	6	6	6	6	8	8	8
30 sf	4.5	4.5	5	5	5	6	6	6	6	6	8	8	8

For 'H' = 11 ft., Area = 16 ft.²

- Refer to the Aluminum Column (Post) Selection Table, from Sheet 3 and shown here for reference.
- To determine the required post size, find the intersection of the row labeled "16 SF" and the column labeled "11 FT". For the example the intersection value is "4" (4" OD).
- In the Column (Post) and Foundation Table, the value "4" shows the design requires a 4.0" diameter and ¼" thick Aluminum Column (Post) and a 2.0' diameter and 3.5' deep Concrete Foundation and 3.0' Stub.

STEP 4: For sign assemblies with signs oriented in two directions, only the sign with the largest area should be analyzed to determine the Column (Post) requirements.

GUIDE TO USE THIS INDEX

GENERAL NOTES AND DESIGN EXAMPLE

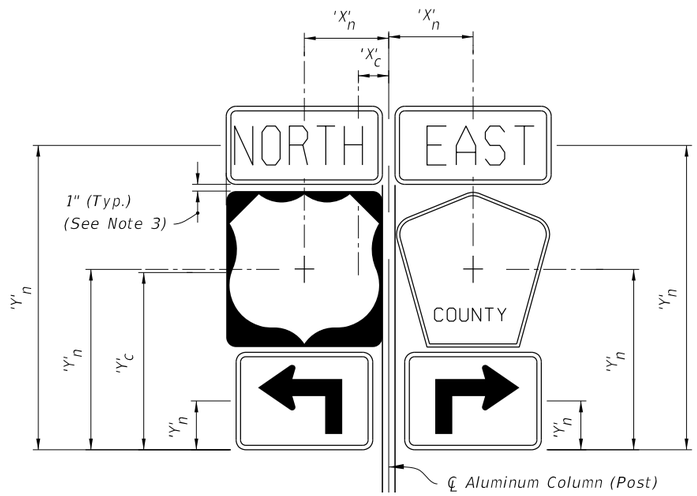

SIGN CLUSTER

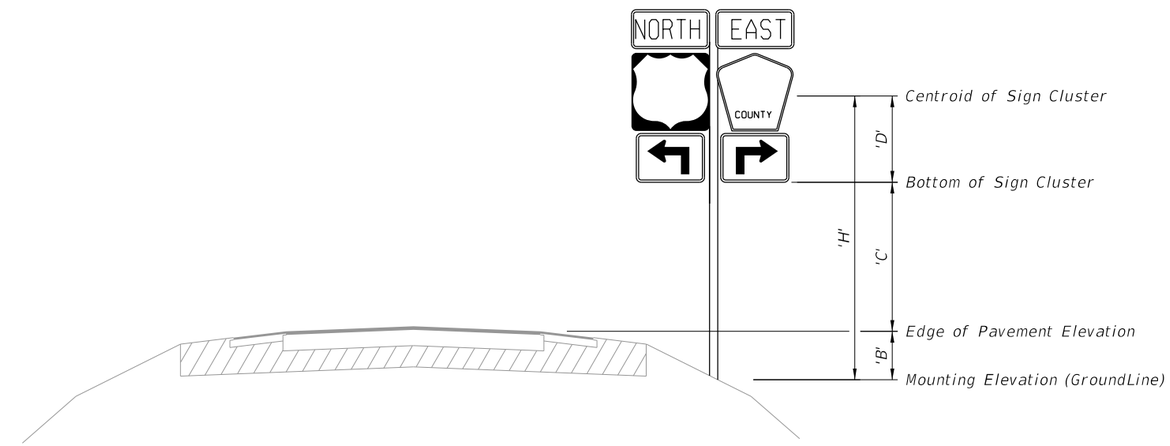

TYPICAL SECTION

$$'X'_c = \frac{\Sigma\,('X'_n \times 'A'_n)}{\Sigma\,'A'_n} \qquad 'C' = 'Y'_c = \frac{\Sigma\,('Y'_n \times 'A'_n)}{\Sigma\,'A'_n}$$

'A'$_n$ = Area of individual sign

'B' = Height of the edge of pavement from the mounting elevation

'C' = Height of the the bottom of the sign or cluster from the edge of pavement elevation

'D' = Height of the centroid of the sign or cluster from the bottom of the sign or cluster

h = Individual sign height

'H' = Height of sign or cluster centroid from groundline

a = Individual sign width

'X'$_c$ = Centroid horizontal location of sign or cluster from ℄ Aluminum Column (Post)

'Y'$_c$ = Centroid height of sign or cluster from bottom of sign cluster

'X'$_n$ = Individual sign centroid horizontal location from ℄ Aluminum Column (Post)

'Y'$_n$ = Individual Sign centroid height from bottom of sign cluster

NOTES:

1. For 'B' & 'C' see Index 700-101 and Roadway Plans.
2. Do not exceed an area of 30 SF or a width of 60 inches for a sign or a sign cluster, including rotated sign panels.
3. Vertical sign spacing (1" shown on Sign Cluster detail) also applies to rotated signs.

CALCULATION OF SIGN CLUSTER CENTROID

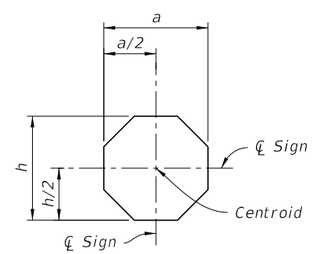

STOP

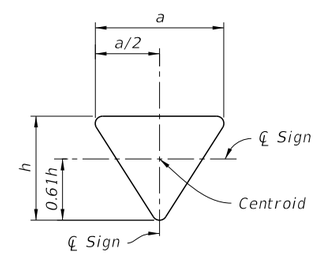

YIELD

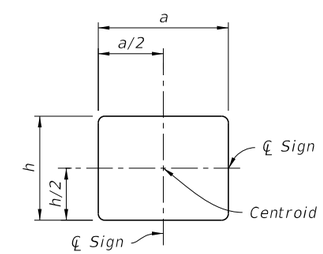

RECTANGLE

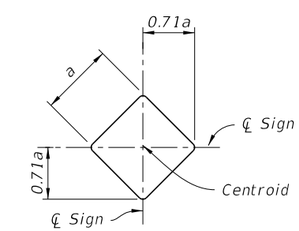

DIAMOND

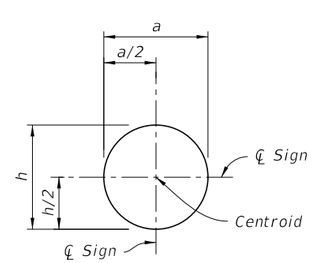

RAILROAD

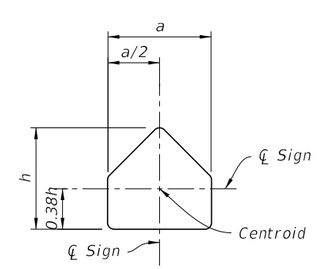

SCHOOL

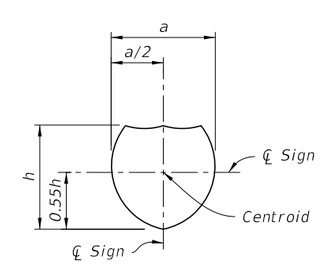

SHIELD

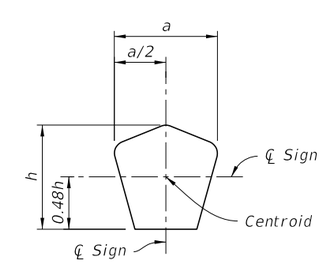

COUNTY

DESIGN EXAMPLE - CENTROID

ALUMINUM COLUMN (POST) SELECTION TABLE (O.D. in.)

TOTAL PANEL AREA (SF)	'H' (FT) 8 ft	9 ft	10 ft	11 ft	12 ft	13 ft	14 ft	15 ft	16 ft	17 ft	18 ft	19 ft	20 ft
3 sf	2	2.5	2.5	2.5	3	3	3	3	3.5	3.5	3.5	3.5	3.5
4 sf	2.5	2.5	3	3	3	3	3.5	3.5	3.5	3.5	3.5	3.5	3.5
5 sf	2.5	3	3	3	3.5	3.5	3.5	3.5	3.5	3.5	3.5	4	4
6 sf	3	3	3.5	3.5	3.5	3.5	3.5	3.5	3.5	3.5	4	4	4
7 sf	3	3.5	3.5	3.5	3.5	3.5	3.5	3.5	4	4	4	4	4
8 sf	3.5	3.5	3.5	3.5	3.5	3.5	3.5	4	4	4	4	4	4
9 sf	3.5	3.5	3.5	3.5	3.5	3.5	4	4	4	4	4	4	4
10 sf	3.5	3.5	3.5	3.5	3.5	4	4	4	4	4	4	4.5	4.5
11 sf	3.5	3.5	3.5	3.5	4	4	4	4	4	4	4.5	4.5	4.5
12 sf	3.5	3.5	3.5	4	4	4	4	4	4	4	4.5	4.5	4.5
13 sf	3.5	3.5	4	4	4	4	4	4	4	4.5	4.5	4.5	5
14 sf	3.5	3.5	4	4	4	4	4	4	4.5	4.5	4.5	5	5
15 sf	3.5	4	4	4	4	4	4	4.5	4.5	4.5	5	5	5
16 sf	3.5	4	4	4	4	4	4	4.5	4.5	5	5	5	6
17 sf	4	4	4	4	4	4	4.5	4.5	4.5	5	5	6	6
18 sf	4	4	4	4	4	4.5	4.5	4.5	5	5	5	6	6
19 sf	4	4	4	4	4	4.5	4.5	4.5	5	5	6	6	6
20 sf	4	4	4	4	4.5	4.5	4.5	5	5	5	6	6	6
21 sf	4	4	4	4	4.5	4.5	5	5	5	6	6	6	6
22 sf	4	4	4	4.5	4.5	4.5	5	5	6	6	6	6	6
23 sf	4	4	4	4.5	4.5	5	5	5	6	6	6	6	6
24 sf	4	4	4.5	4.5	4.5	5	5	6	6	6	6	6	6
25 sf	4	4	4.5	4.5	5	5	5	6	6	6	6	6	8
26 sf	4	4.5	4.5	4.5	5	5	5	6	6	6	6	8	8
27 sf	4	4.5	4.5	4.5	5	5	6	6	6	6	6	8	8
28 sf	4	4.5	4.5	5	5	5	6	6	6	6	6	8	8
29 sf	4.5	4.5	4.5	5	5	6	6	6	6	6	8	8	8
30 sf	4.5	4.5	5	5	5	6	6	6	6	6	8	8	8

FOUNDATION TABLE

Column (Post) Size		Foundation Alternatives				
		Driven Post *		Concrete (Class II)		
Outside Diameter (in)	Wall Thk. (in)	Embedment Depth (ft) without Soil Plate	Embedment Depth (ft) with Soil Plate	Diameter (ft)	Embedment Depth (ft)	Stub Length (ft)
2.0	1/8	4.5	2.5	---	---	---
2.5	1/8	5.0	3.0	---	---	---
3.0	1/8	5.0	3.5	---	---	---
3.5	3/16	6.0	4.5	---	---	---
4.0	1/4	---	---	2.0	3.5	3.0
4.5	1/4	---	---	2.0	4.0	3.0
5.0	1/4	---	---	2.0	4.5	3.0
6.0	1/4	---	---	2.0	5.0	3.0
8.0	1/4	---	---	2.0	5.5	3.0

* INSTALLING FRANGIBLE COLUMN SUPPORTS:

Columns (posts) 3½" O.D. and less are considered frangible and may be installed either by driving the post or setting the posts in preformed holes. Backfill preformed holes with suitable material tamped in layers not thicker than 6" (to provide adequate compaction) or filled with flowable fill or bagged concrete.

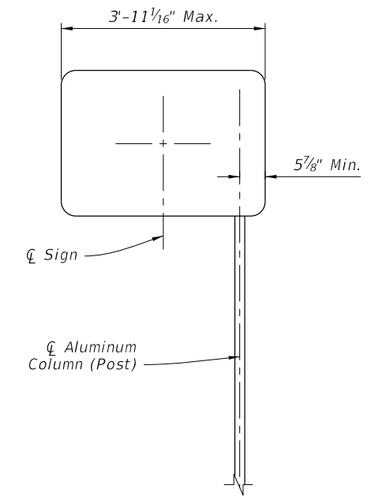

OFFSET SIGN

NOTES:

1. For offset sign placement see Index 700-101.
2. For signs with widths greater than 4' see Index 700-011.
3. Offset signs with driven posts require a soil plate.

10/20/2022 8:56:27 AM

COLUMN AND FOUNDATION TABLES

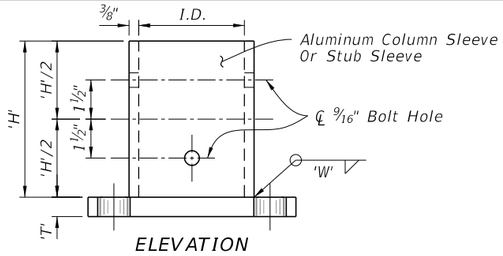

ELEVATION

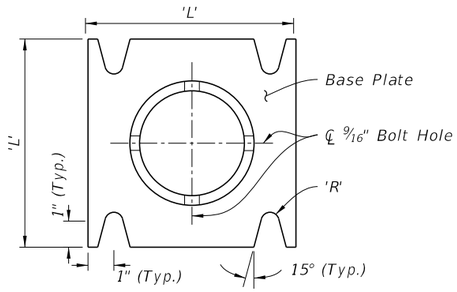

PLAN

(Welded Or Sandcast)

STUB/SLEEVE & BASE PLATE DETAILS

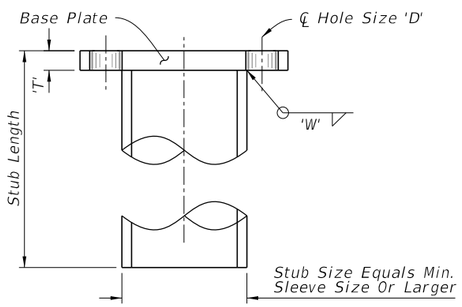

(Welded)

STUB DETAIL

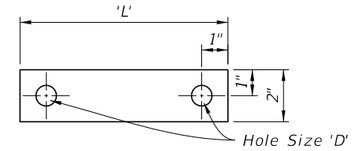

28 Ga. Thick Aluminum Strip
2 Reqd. Per Base

BOLT KEEPER PLATE DETAIL

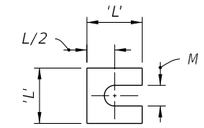

Provide 2~0.0149" Thick (28 gauge)
and 2~0.0329" Thick (21 gauge)
Brass Shims Per Post

SHIM DETAIL

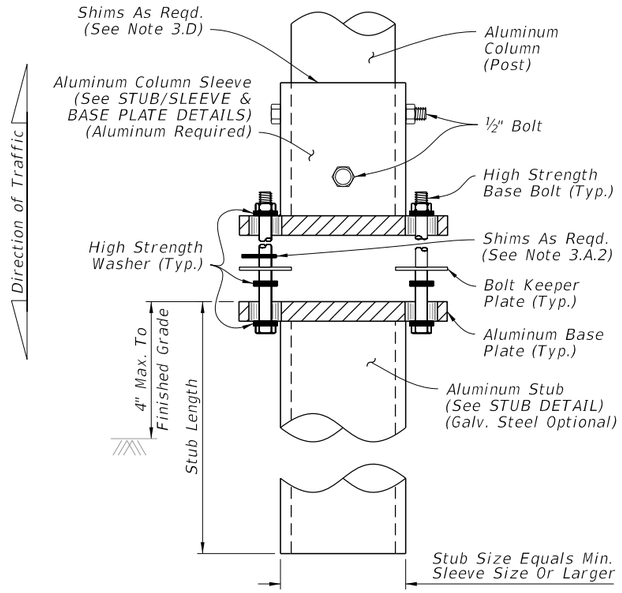

WELDED STUB BASE

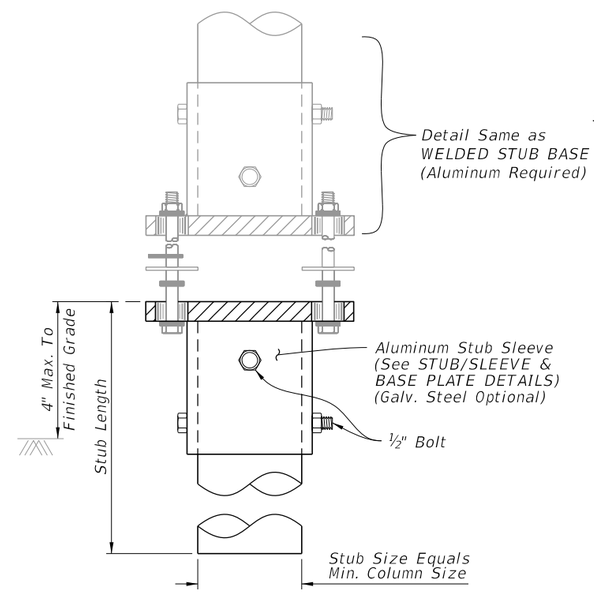

BOLTED STUB/SLEEVE BASE

DETAIL 'A'

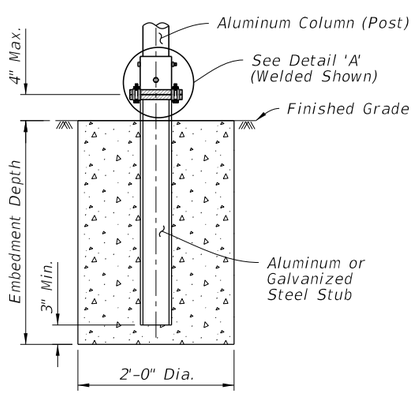

SLIP BASE AND FOUNDATION DETAIL
(Non-Frangible Column, Typ.)

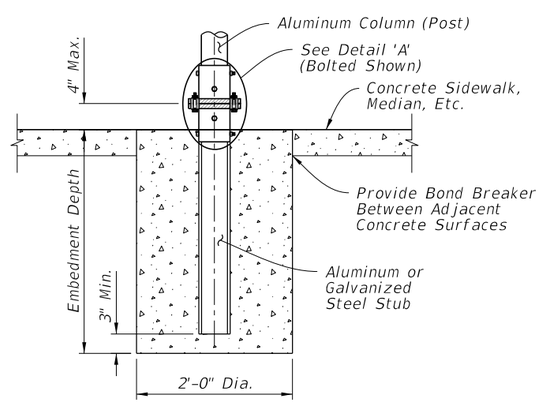

SLIP BASE AND FOUNDATION DETAIL IN CONCRETE
(Non-Frangible Column In Crossovers, Medians & Sidewalks)

NOTES:

1. Foundation Notes for Slip Base:

   A. See FOUNDATION TABLE on Sheet 3 for foundation embedment depth and stub length.

2. Slip Base Fabrication Notes:

   A. The difference between the O.D. of the post and I.D. of the Sleeve must be 1/16" or less.

   B. The WELDED STUB BASE and lower STUB/SLEEVE BASE PLATE may be fabricated using galvanized steel as an option to aluminum. The upper portion of the SLIP BASE must be aluminum.

   C. Either a Welded Stub Base or Bolted Stub/Sleeve Base may be used in Slip Base.

   D. For cast base plates bolted to foundation stubs, use a foundation stub the same size as the sign column (Post).

3. Slip-Base Assembly Instructions:

   A. Assemble the Slip Base as follows:
      1. Insert Post into Sleeve and connect using 2 ~ ½" diameter Sleeve Bolts.
      2. Assemble top base plate to bottom Base Plate using Base Bolts (High strength) with 3 washers per bolt. (See Detail 'A'):
         a. Place one washer on each Base Bolt between the bottom Base Plate and the Base Bolt head.
         b. Place the next washer between the Bottom Base Plate and the Bolt Keeper Plate.
         c. Use brass or galvanized steel shims to plumb the post.
         d. Add the top base plate section.
         e. Place the third washer between the Top Base Plate and the Nut.

   B. Orient the Bolt Keeper Plates in the Direction of Traffic.

   C. Tighten Base Bolts as follows:
      1. Tighten Base Bolts to the maximum possible with a 12" to 15" wrench (this will bed the washers and shims and clear the bolt threads).
      2. Loosen each Base Bolt one turn.
      3. Under the supervision of the Engineer, use a calibrated wrench to tighten bolts to the torque prescribed in the SLIP BASE DETAILS Table. Over tightened Base Bolts are not permitted.
      4. Distort bolt threads at the junction with nuts to prevent loosening. Repair damaged galvanizing.

   D. Obtain a tight sleeve connection by placing 4 galvanized steel shims between the column (post) and sleeve. Space the shims evenly around the perimeter of the column (1 between each bolt hole, 4 total). Use shims that are 1" shorter than the height of the sleeve.

Column (Post) Size	SLIP BASE DETAILS													
Outside Dia.	Wall Thickness	Sleeve I.D. (Max.)	Sleeve Height 'H'	Weld 'W'	Base Plate 'L'	Base Plate 'T'	Radius 'R'	Base Bolt Size	Base Bolt Length	Base Plate Torque ft-lbs	Base Plate Torque in.-lbs	Hole Size 'D'	SHIM L	SHIM M
4"	1/4"	4 1/16"	6"	1/4"	8"	3/4"	11/32"	5/8"	3"	29	345	11/16"	1 3/8"	1 1/16"
4 1/2"	1/4"	4 9/16"	6"	1/4"	8"	7/8"	11/32"	5/8"	3 1/4"	29	345	11/16"	1 3/8"	1 1/16"
5"	1/4"	5 1/16"	7"	1/4"	8"	7/8"	11/32"	5/8"	3 1/4"	29	345	11/16"	1 3/8"	1 1/16"
6"	1/4"	6 1/16"	8"	1/4"	9"	1"	13/32"	3/4"	3 1/2"	46	554	13/16"	1 3/4"	1 3/16"
8"	1/4"	8 1/16"	10"	1/4"	11"	1"	15/32"	7/8"	3 3/4"	53	640	15/16"	2 3/8"	1 1/16"

SLIP BASE AND FOUNDATION DETAILS

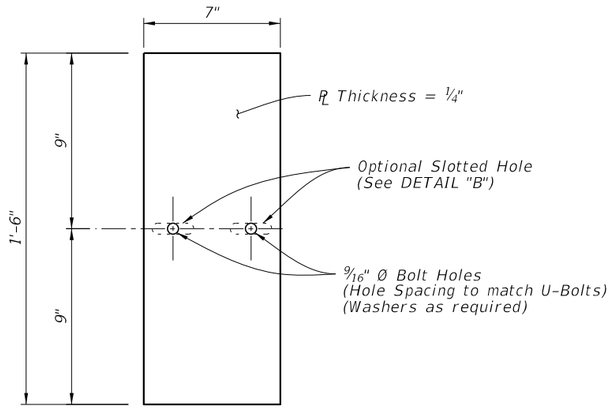

ALUMINUM SOIL PLATE DETAIL

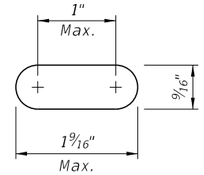

Optional Slotted Holes

DETAIL "B"

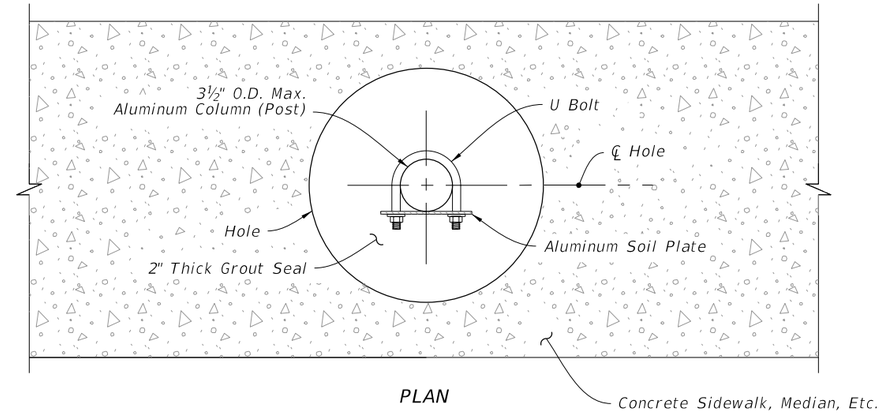

PLAN

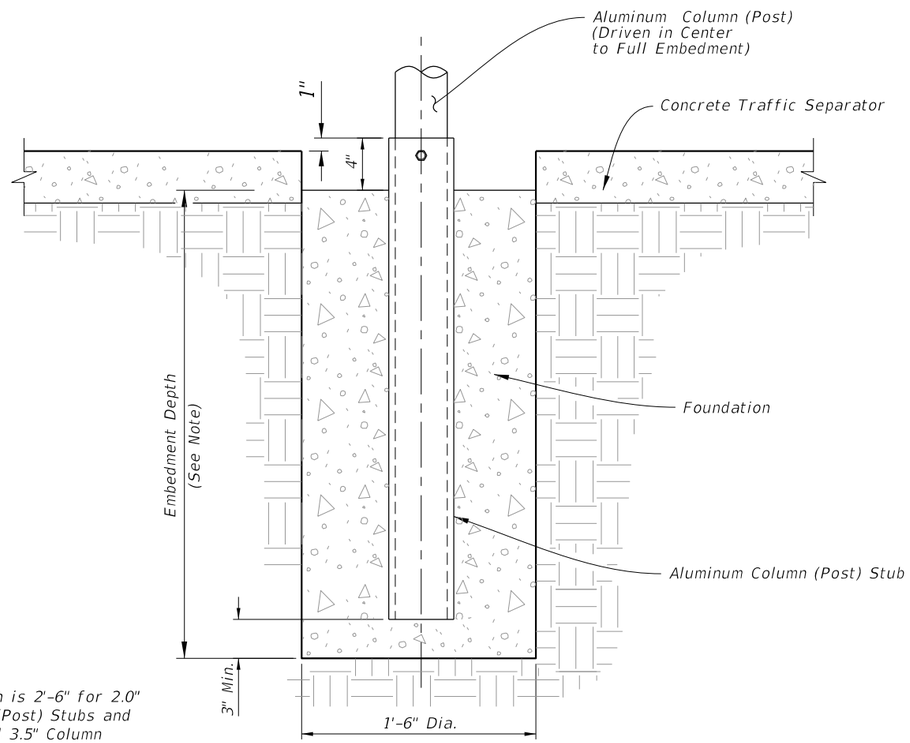

NOTE:
Embedment Depth is 2'-6" for 2.0" and 2.5" Column (Post) Stubs and 3'-6" for 3.0" and 3.5" Column (Post) Stubs.

ELEVATION

CONCRETE/STUB DETAIL
(Traffic Separator)

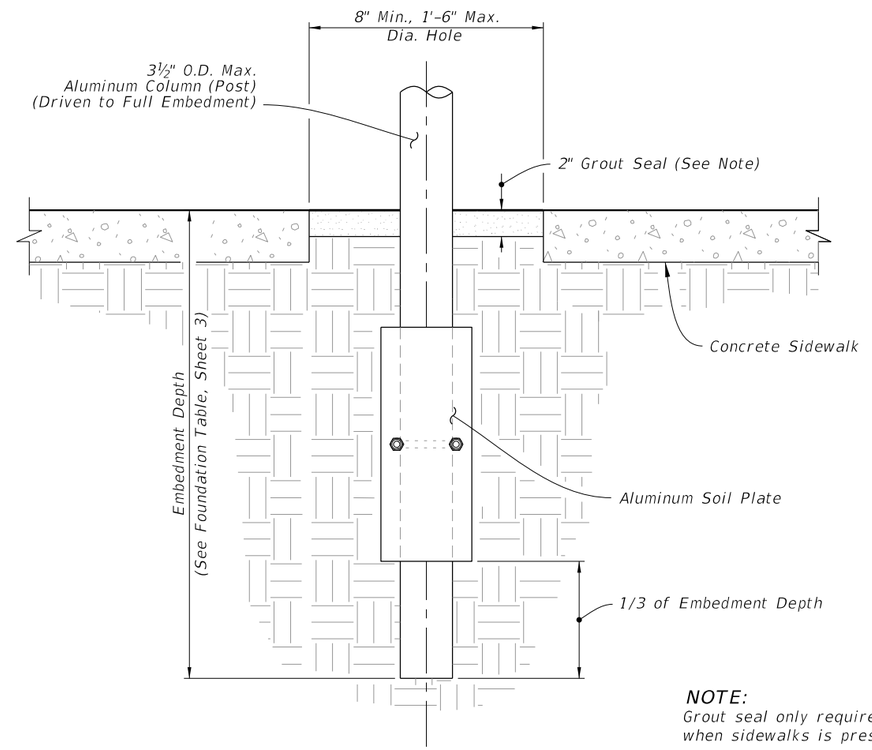

NOTE:
Grout seal only required when sidewalks is present.

ELEVATION

DRIVEN POST DETAIL
(Frangible Post In Through Sidewalk Shown
Installations without Sidewalk Similar)

DRIVEN POST, CONCRETE/STUB, AND SOIL PLATE DETAILS

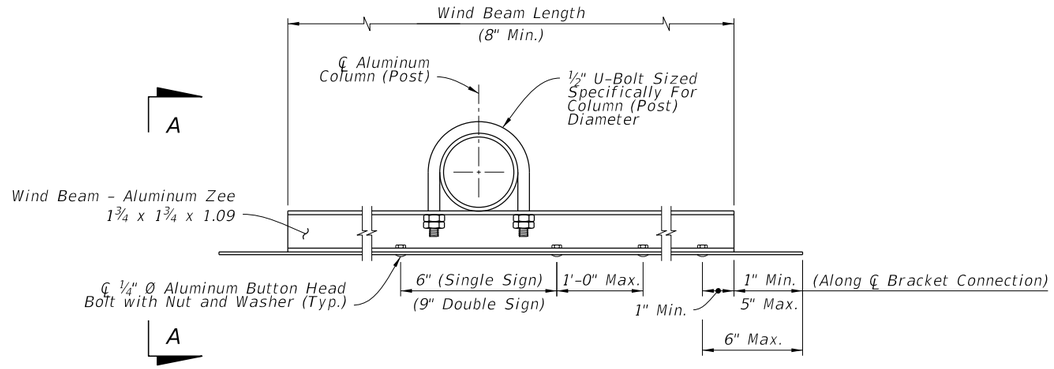

NOTES:

1. 5/16" Ø stainless steel hex head bolts with nylon washer under head and washer under nut may be used in lieu of ¼" Ø aluminum button or flat head bolts.
2. Use nylon washers (provided by the sheeting supplier) under the bolt heads to protect sign sheeting.
3. Slots up to 2" long are allowed in wind beams to accommodate U-Bolts for varying Column (Post) diameters.
4. Wind beams may be oriented in either direction.
5. For signs greater than 66" in height, install a third wind beam evenly spaced between the top and bottom wind beams. For signs up to 12" in height, use only one wind beam at ℄ Sign. Install two wind beams on signs with heights greater than 12" and less than or equal to 66".

WIND BEAM CONNECTIONS DETAILS

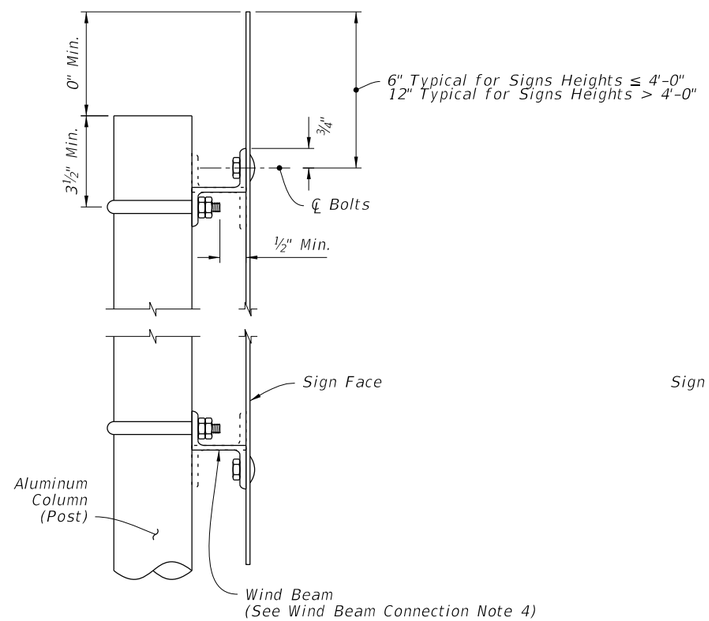

SINGLE SIGN DETAIL

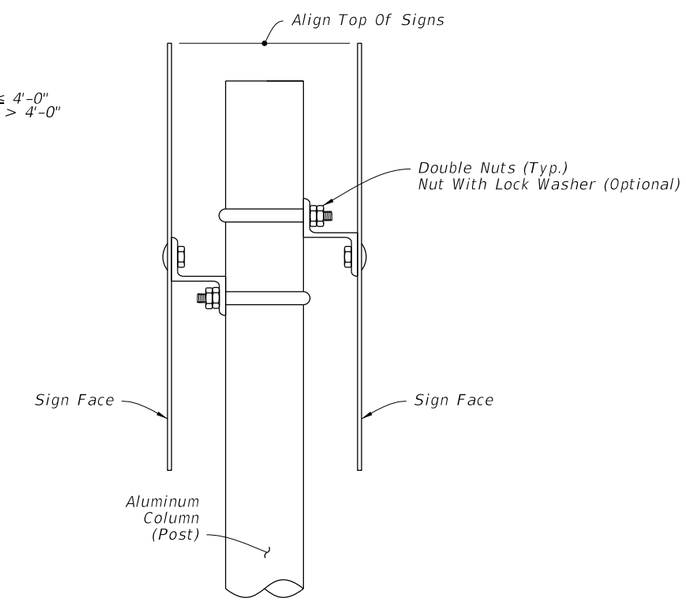

NOTE: Use the area and the centroid location of the largest sign to determine aluminum column (post) size.

BACK-TO-BACK SIGN DETAIL

VIEW A-A

WIND BEAM CONNECTION

LAST REVISION	REVISION	DESCRIPTION:	FY 2023-24 STANDARD PLANS	SINGLE COLUMN GROUND SIGNS	INDEX	SHEET
11/01/22					700-010	6 of 11

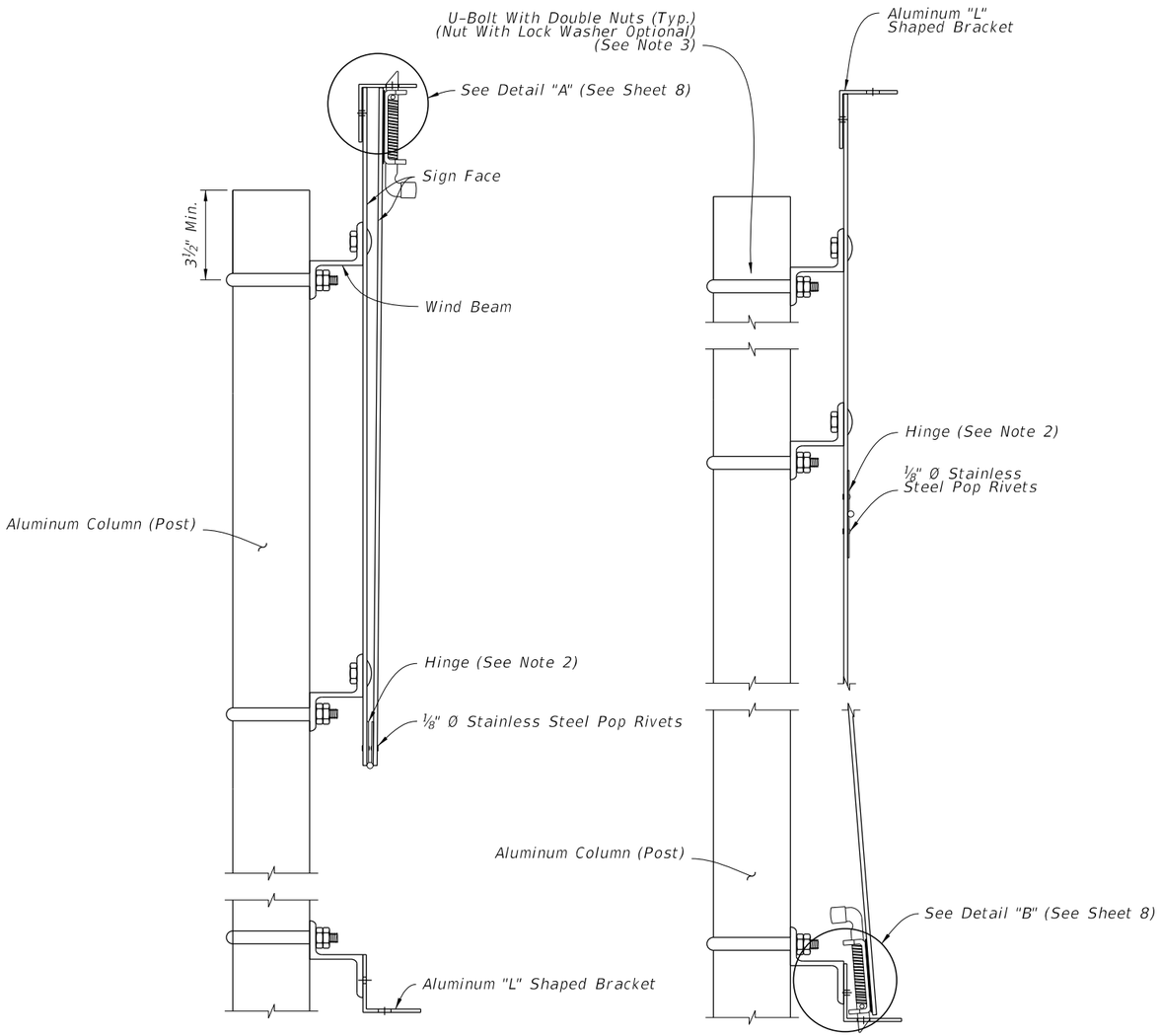

SIGN PANEL SIDE VIEW

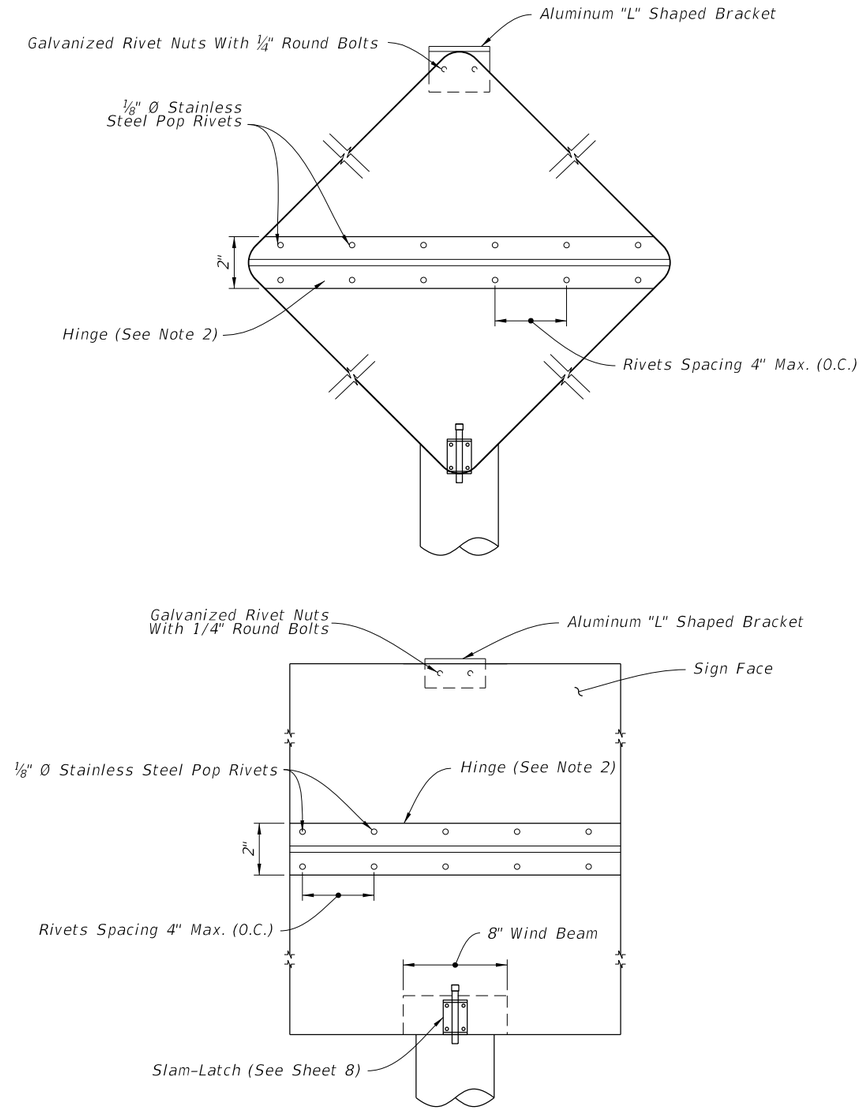

SIGN PANEL FRONT VIEW

NOTES:

1. Install sign in the undeployed (up) position.
2. Provide a continuous stainless steel hinge with minimum 0.060" leaf thickness, 2" open width and 0.120" pin diameter. Stake the hinge at both ends to prevent pin movement.
3. Install Stainless Steel Spring Loaded Slam-Latch with cover to bottom face of flip sign per manufacturer's recommendations.
4. Punch or drill a 3/4" diameter hole in the "L" shaped bracket on site to match location of 1/2" wide slam-latch pin. Remove any burs or sharp edges.

WIND BEAM CONNECTION FOR FLIP DOWN SIGN

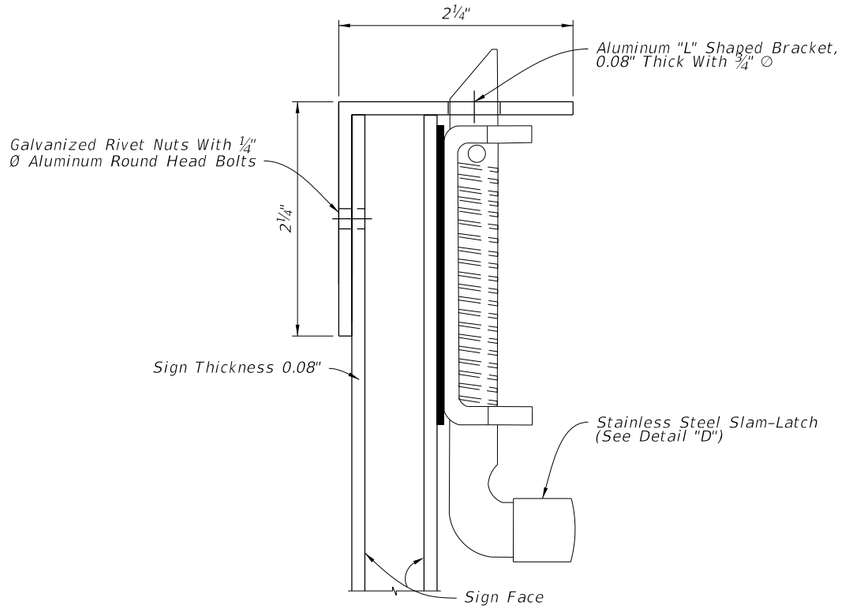

DETAIL "A"

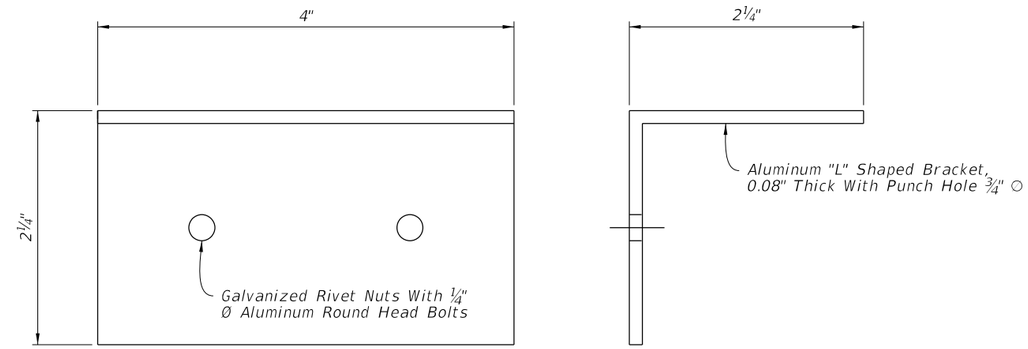

"L" Shaped Bracket

DETAIL "C"

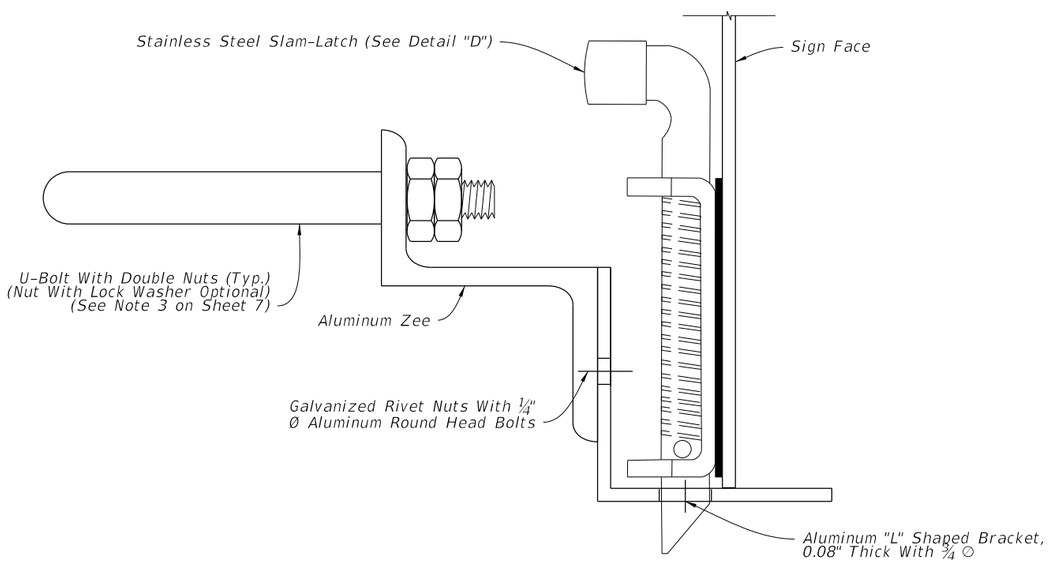

DETAIL "B"

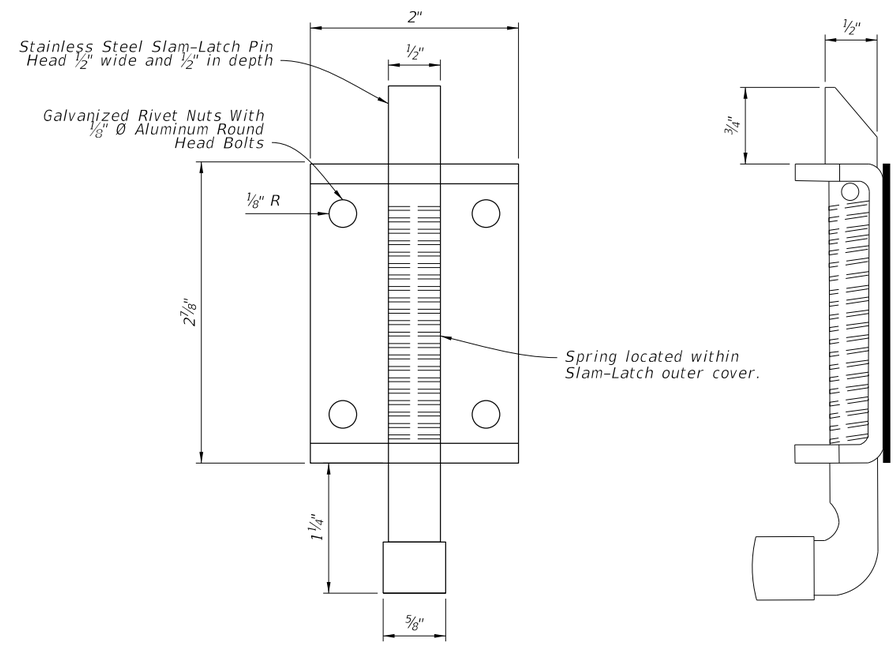

Stainless Steel Slam-Latch

DETAIL "D"

SLAM-LATCH DETAIL

8:56:33 AM

10/20/2022

LAST REVISION	REVISION	DESCRIPTION:			INDEX	SHEET
11/01/22			FY 2023-24 STANDARD PLANS	SINGLE COLUMN GROUND SIGNS	700-010	8 of 11

Size	Area	Total Area	Centroid
36x12	3.00 SF	6.31 SF	1.75 Ft.
24x24	3.31 SF		

Size	Area	Total Area	Centroid
36x12	3.00 SF	8.18 SF	1.92 Ft.
30x30	5.18 SF		

Size	Area	Total Area	Centroid
36x12	3.00 SF	10.46 SF	2.10 Ft.
36x36	7.46 SF		

Size	Area	Total Area	Centroid
36x12	3.00 SF	16.25 SF	2.48 Ft.
48x48	13.25 SF		

Size	Area	Total Area	Centroid
24x24	3.31 SF	6.31 SF	1.71 Ft.
24x18	3.00 SF		

Size	Area	Total Area	Centroid
30x30	5.18 SF	10.18 SF	2.19 Ft.
30x24	5.00 SF		

Size	Area	Total Area	Centroid
36x36	7.46 SF	12.46 SF	2.55 Ft.
30x24	5.00 SF		

Size	Area	Total Area	Centroid
36x12	3.00 SF	13.18 SF	2.87 Ft.
30x30	5.18 SF		
30x24	5.00 SF		

Size	Area	Total Area	Centroid
36x12	3.00 SF	15.46 SF	3.15 Ft.
36x36	7.46 SF		
30x24	5.00 SF		

Size	Area	Total Area	Centroid
21x15	2.19 SF	6.19 SF	1.60 Ft.
24x24	4.00 SF		

Size	Area	Total Area	Centroid
21x15	2.19 SF	7.19 SF	1.52 Ft.
30x24	5.00 SF		

Size	Area	Total Area	Centroid
24x12	2.00 SF	6.00 SF	1.53 Ft.
24x24	4.00 SF		

Size	Area	Total Area	Centroid
24x12	2.00 SF	7.00 SF	1.45 Ft.
30x24	5.00 SF		

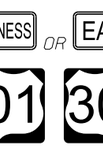

Size	Area	Total Area	Centroid
30x15	3.13 SF	8.13 SF	1.66 Ft.
30x24	5.00 SF		

Size	Area	Total Area	Centroid
24x24	4.00 SF	6.19 SF	1.73 Ft.
21x15	2.19 SF		

Size	Area	Total Area	Centroid
30x24	5.00 SF	7.19 SF	1.81 Ft.
21x15	2.19 SF		

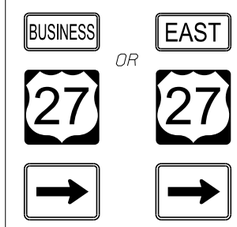

Size	Area	Total Area	Centroid
24x12	2.00 SF	8.19 SF	2.26 Ft.
24x24	4.00 SF		
21x15	2.19 SF		

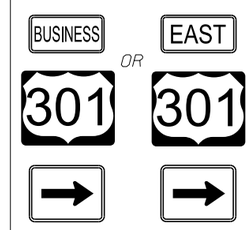

Size	Area	Total Area	Centroid
24x12	2.00 SF	9.19 SF	2.27 Ft.
30x24	5.00 SF		
21x15	2.19 SF		

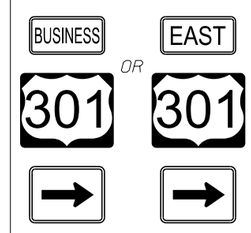

Size	Area	Total Area	Centroid
30x15	3.13 SF	10.32 SF	2.49 Ft.
30x24	5.00 SF		
21x15	2.19 SF		

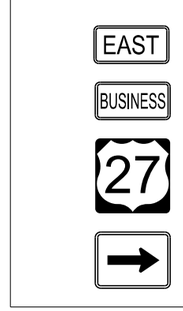

Size	Area	Total Area	Centroid
24x12	2.00 SF	10.19 SF	2.80 Ft.
24x12	2.00 SF		
24x24	4.00 SF		
21x15	2.19 SF		

8:56:34 AM

10/20/2022

LAST REVISION	REVISION	DESCRIPTION:				
11/01/22			FY 2023-24 STANDARD PLANS	SINGLE COLUMN GROUND SIGNS	INDEX 700-010	SHEET 9 of 11

Size	Area	Total Area	Centroid
24x12	2.00 SF	11.19 SF	2.76 Ft.
24x12	2.00 SF		
30x24	5.00 SF		
21x15	2.19 SF		

Size	Area	Total Area	Centroid
30x15	3.13 SF	13.45 SF	3.16 Ft.
30x15	3.13 SF		
30x24	5.00 SF		
21x15	2.19 SF		

Size	Area	Total Area	Centroid
21x15	2.19 SF	3.90 SF	1.57 Ft.
18x18	1.71 SF		

Size	Area	Total Area	Centroid
21x15	2.19 SF	5.22 SF	1.72 Ft.
24x24	3.03 SF		

Size	Area	Total Area	Centroid
21x15	2.19 SF	6.95 SF	1.87 Ft.
30x30	4.76 SF		

Size	Area	Total Area	Centroid
18x18	1.71 SF	3.90 SF	1.26 Ft.
21x15	2.19 SF		

Size	Area	Total Area	Centroid
24x24	3.03 SF	5.22 SF	1.62 Ft.
21x15	2.19 SF		

Size	Area	Total Area	Centroid
30x30	4.76 SF	6.95 SF	1.97 Ft.
21x15	2.19 SF		

Size	Area	Total Area	Centroid
24x12	2.00 SF	9.39 SF	2.87 Ft.
24x12	2.00 SF		
24x24	3.20 SF		
21x15	2.19 SF		

Size	Area	Total Area	Centroid
24x12	2.00 SF	10.18 SF	2.84 Ft.
24x12	2.00 SF		
30x24	3.99 SF		
21x15	2.19 SF		

Size	Area	Total Area	Centroid
30x15	3.13 SF	12.44 SF	3.26 Ft.
30x15	3.13 SF		
30x24	3.99 SF		
21x15	2.19 SF		

Size	Area	Total Area	Centroid
21x15	2.19 SF	5.39 SF	1.75 Ft.
24x24	3.20 SF		

Size	Area	Total Area	Centroid
21x15	2.19 SF	6.18 SF	1.67 Ft.
30x24	3.99 SF		

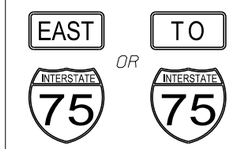

Size	Area	Total Area	Centroid
24x12	2.00 SF	5.20 SF	1.67 Ft.
24x24	3.20 SF		

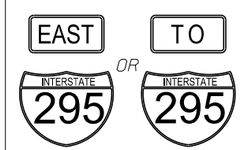

Size	Area	Total Area	Centroid
24x12	2.00 SF	5.99 SF	1.60 Ft.
30x24	3.99 SF		

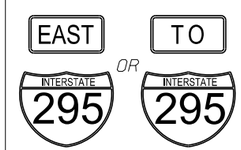

Size	Area	Total Area	Centroid
30x15	3.13 SF	7.12 SF	1.81 Ft.
30x24	3.99 SF		

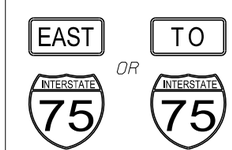

Size	Area	Total Area	Centroid
30x15	3.13 SF	10.33 SF	2.27 Ft.
36x36	7.20 SF		

10/20/2022 8:56:34 AM

LAST REVISION	REVISION	DESCRIPTION:			INDEX	SHEET
11/01/22			FDOT FY 2023-24 STANDARD PLANS	SINGLE COLUMN GROUND SIGNS	700-010	10 of 11

Size	Area	Total Area	Centroid
30x15	3.13 SF	12.12 SF	2.18 Ft.
45x36	8.99 SF		

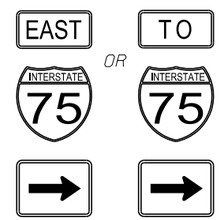

Size	Area	Total Area	Centroid
24x12	2.00 SF	7.39 SF	2.30 Ft.
24x24	3.20 SF		
21x15	2.19 SF		

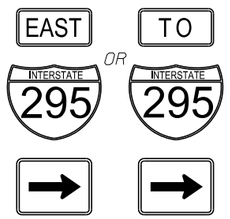

Size	Area	Total Area	Centroid
24x12	2.00 SF	8.18 SF	2.31 Ft.
30x24	3.99 SF		
21x15	2.19 SF		

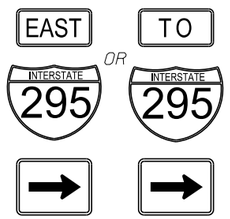

Size	Area	Total Area	Centroid
30x15	3.13 SF	9.31 SF	2.55 Ft.
30x24	3.99 SF		
21x15	2.19 SF		

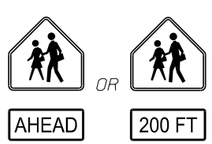

Size	Area	Total Area	Centroid
30x30	4.69 SF	6.69 SF	1.61 Ft.
24x12	2.00 SF		

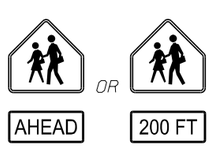

Size	Area	Total Area	Centroid
30x30	4.69 SF	8.44 SF	1.77 Ft.
30x18	3.75 SF		

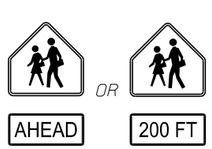

Size	Area	Total Area	Centroid
36x36	6.75 SF	10.50 SF	2.06 Ft.
30x18	3.75 SF		

Size	Area	Total Area	Centroid
30X30	4.69 SF	6.69 SF	1.61 Ft.
24X12	2.00 SF		

Size	Area	Total Area	Centroid
30X30	4.69 SF	8.44 SF	1.77 Ft.
30X18	3.75 SF		

Size	Area	Total Area	Centroid
36X36	6.75 SF	10.50 SF	2.06 Ft.
30X18	3.75 SF		

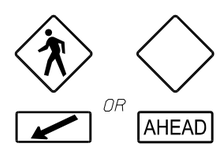

Size	Area	Total Area	Centroid
30X30	6.25 SF	8.25 SF	2.28 Ft.
24X12	2.00 SF		

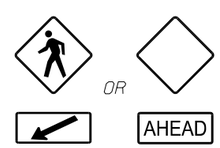

Size	Area	Total Area	Centroid
36X36	9.00 SF	12.75 SF	2.84 Ft.
30X18	3.75 SF		

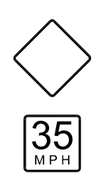

Size	Area	Total Area	Centroid
30X30	6.25 SF	10.25 SF	2.74 Ft.
24X24	4.00 SF		

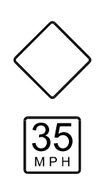

Size	Area	Total Area	Centroid
36X36	9.00 SF	15.25 SF	3.29 Ft.
30X30	6.25 SF		

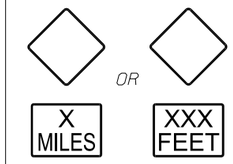

Size	Area	Total Area	Centroid
30X30	6.25 SF	9.25 SF	2.51 Ft.
24X18	3.00 SF		

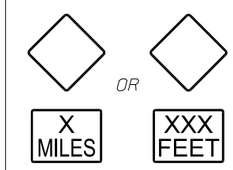

Size	Area	Total Area	Centroid
36X36	9.00 SF	14.00 SF	3.06 Ft.
30X24	5.00 SF		

10/20/2022 8:56:35 AM

LAST REVISION	REVISION	DESCRIPTION:			INDEX	SHEET
11/01/22			FY 2023-24 STANDARD PLANS	SINGLE COLUMN GROUND SIGNS	700-010	11 of 11

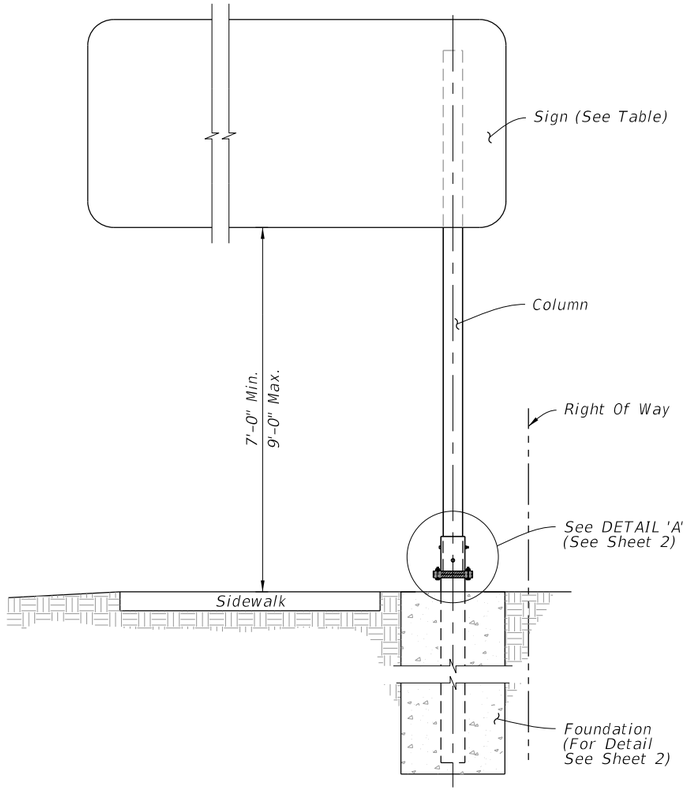

TYPICAL SECTION

GENERAL NOTES:

1. Work with Index 700-010 for additional notes and the assembly of base connection.
2. Meet the requirements of Specification 700.
3. Place galvanized steel shims between the Sleeve and Post to obtain a tight fit between the Post and Sleeve.
4. Wind Beam and Vertical Brace: Aluminum Z 3 x 2 11/16 x 3.38. Install Vertical Brace on 7'-0" to 8'-0" signs only.
5. Use Brass shims to plumb the post.
6. Use nylon washers under the button bolt heads to protect sign sheeting. Use aluminum washers under nut.
7. Aluminum Columns: ASTM B429 Alloy 6061-T6.

COLUMN SELECTION AND FOOTING SIZE TABLE

Sign Size Height x Length	Column Size Diameter x Thickness	Sleeve Size Diameter x Thickness	U-bolt Diameter	Base Bolt Diameter x Length	Torque lbs./in	Base Plate Thickness	
4'-0" x 5'-0"	4 NPS Schedule 80 (4.5" x 0.337")	5 NPS Schedule 120 (5.563" x 0.5")	1/2"	5/8" x 3 1/2"	270 +/- 45		6'-0"
4'-0" x 6'-0"							
4'-0" x 7'-0"	5 NPS Schedule 80 (5.563" x 0.375")	6 NPS Schedule 80 (6.625" x 0.432")	5/8"	3/4" x 4"	445 +/- 75	1 1/8"	6'-6"
4'-0" x 8'-0"							7'-0"

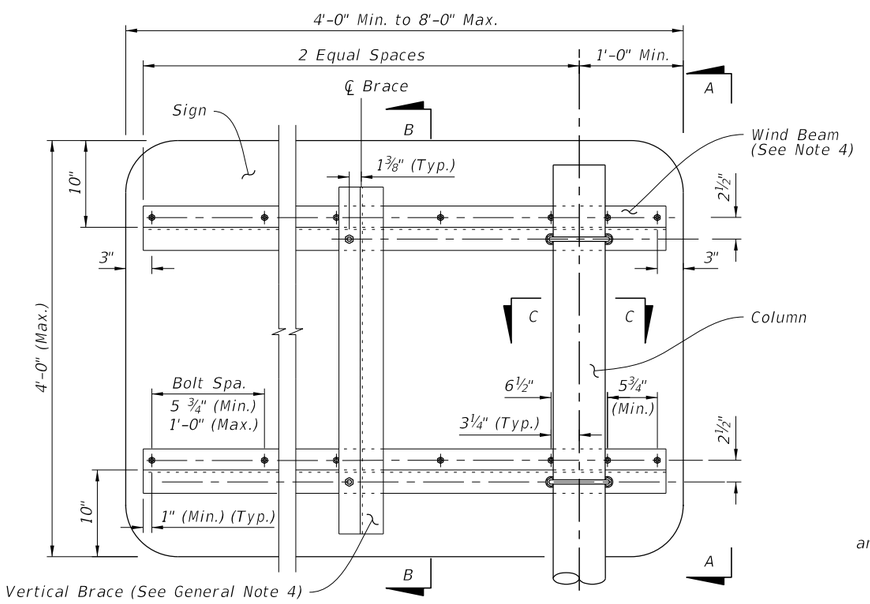

SIGN DETAIL

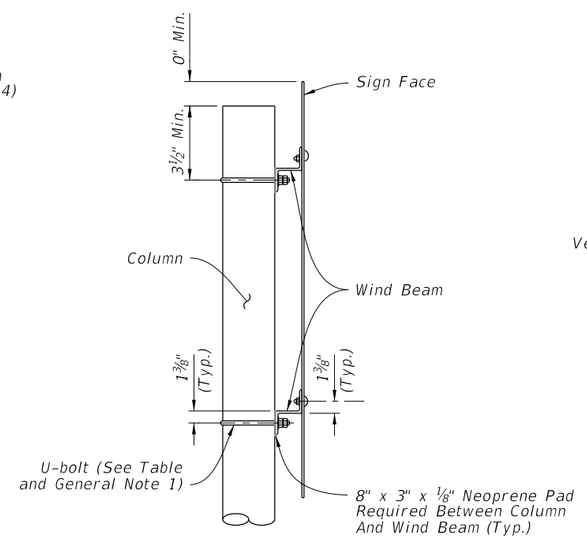

VIEW A-A

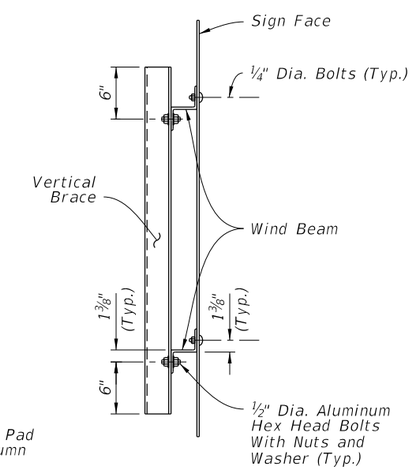

SECTION B-B

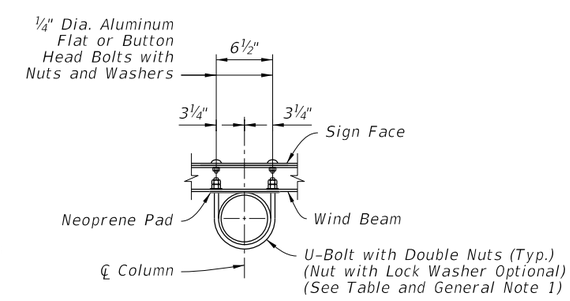

SECTION C-C

LAST REVISION	REVISION	DESCRIPTION:			INDEX	SHEET
11/01/22			FY 2023-24 STANDARD PLANS	SINGLE COLUMN CANTILEVER GROUND MOUNTED SIGN	700-011	1 of 2

5/14/2024 11:20:20 AM

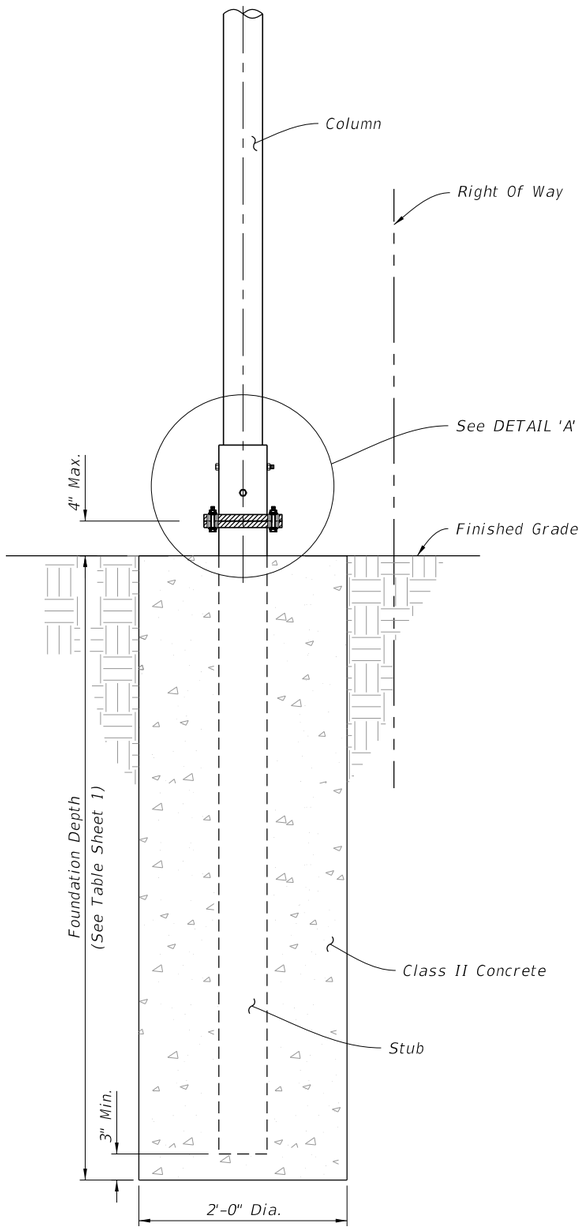

BASE AND FOUNDATION DETAIL

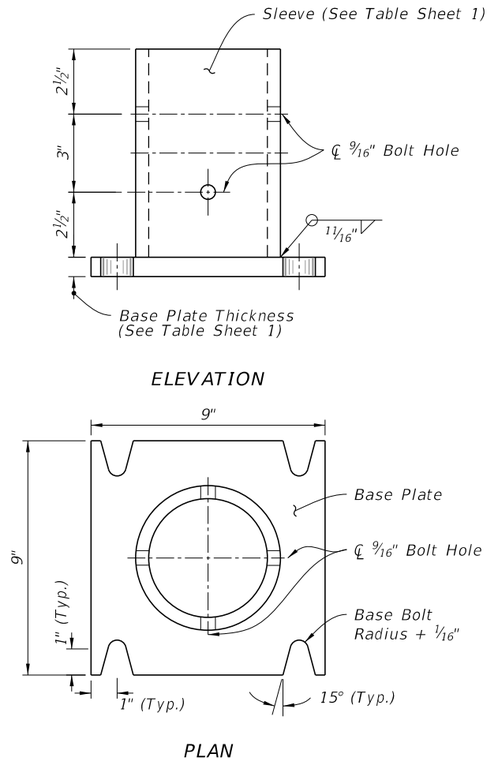

SLEEVE & BASE PLATE DETAILS

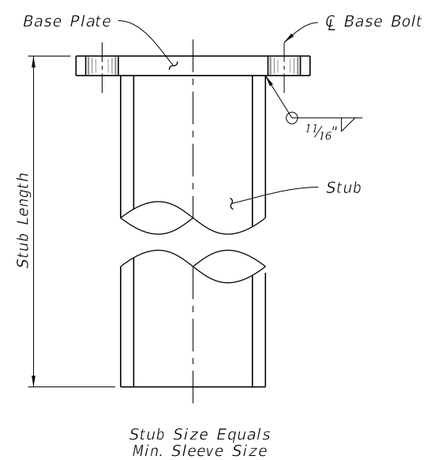

STUB DETAIL

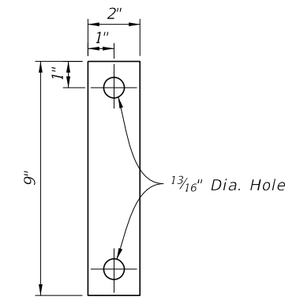

BOLT KEEPER PLATE DETAIL

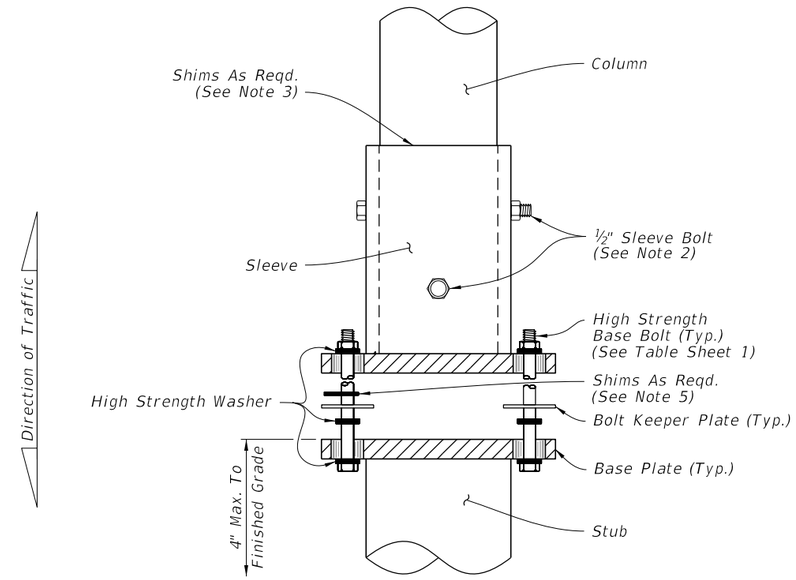

DETAIL 'A'

10/20/2022 8:56:37 AM

LAST REVISION	REVISION	DESCRIPTION:				
11/01/21			FY 2023-24 STANDARD PLANS	SINGLE COLUMN CANTILEVER GROUND MOUNTED SIGN	INDEX 700-011	SHEET 2 of 2

GENERAL NOTES:

1. Meet the requirements of Specification 700.

2. Work with Index 700-010.

3. Shop Drawings: Not required.

4. Construction:

   A. Locate Sign Support a minimum of 5 feet from an open joint or transition (sign stationing may be adjusted to accommodate this requirement.
   B. Base plate must be flush with back of Traffic Railing
   C. Anchors in Traffic Railings:
      a. Install Adhesive Anchors in accordance with Specification 416 except perform field test on one anchor per sign support location.
      b. Use templates and tie anchors as necessary to maintain correct placement of C-I-P Embedded Anchors
      c. Do not drill into existing conduit
   D. Temporary Signs on Permanent Traffic Railings: Same as Permanent except Field testing of anchors is not required

5. Removal of Temporary Signs on Permanent Traffic Railings:

   A. Cut anchor rods flush with the top of the traffic railing
   B. Coat anchors with Type F-1 epoxy to prevent corrosion
      a. Extend coating 2 inches beyond edge of cut anchor rods
      b. Epoxy coating 1/16" thick minimum

6. Bridge deck shown. Approach slabs, junction slabs, and miscellaneous structures are similar.

7. Traffic railings are shown. Concrete barriers and parapets are similar.

8. Materials:

   A. Steel Plate: ASTM A36 or ASTM A709 Grade 36
   B. Steel Pipe (Support Post): ASTM A501 Schedule 40
   C. Aluminum Pipe: ASTM B429 Alloy 6061-T6
   D. Galvanized U-Bolts, Nuts and Plate Washer
      a. U-Bolts: ASTM A449
      b. Hex Nuts: ASTM A 563 Lock Nuts
      c. Plate Washer: ASTM A 36 or ASTM A709 Grade 36 or 50
   E. Galvanized Anchor bolts, Nuts and Washers:
      a. Anchor Rod: ASTM F1554 Grade 55 fully threaded (for Adhesive Anchors)
      b. Anchor Bolts: ASTM F1554 Grade 55 Grade A Hex
      c. Nuts: ASTM A563 Heavy Hex Locking
      d. Washers: ASTM F436

SIGN LIMITATIONS TABLE	
MAX. SIGN AREA (SF)	MAX. SIGN CENTROID HEIGHT (DIM. A + DIM. C)
25	9'-7"

Dimension A = Distance from centerline of the Support Post to the bottom of the sign or sign cluster.

Dimension C = Vertical distance from the bottom of the sign or sign cluster to the Centroid of the sign or sign cluster.

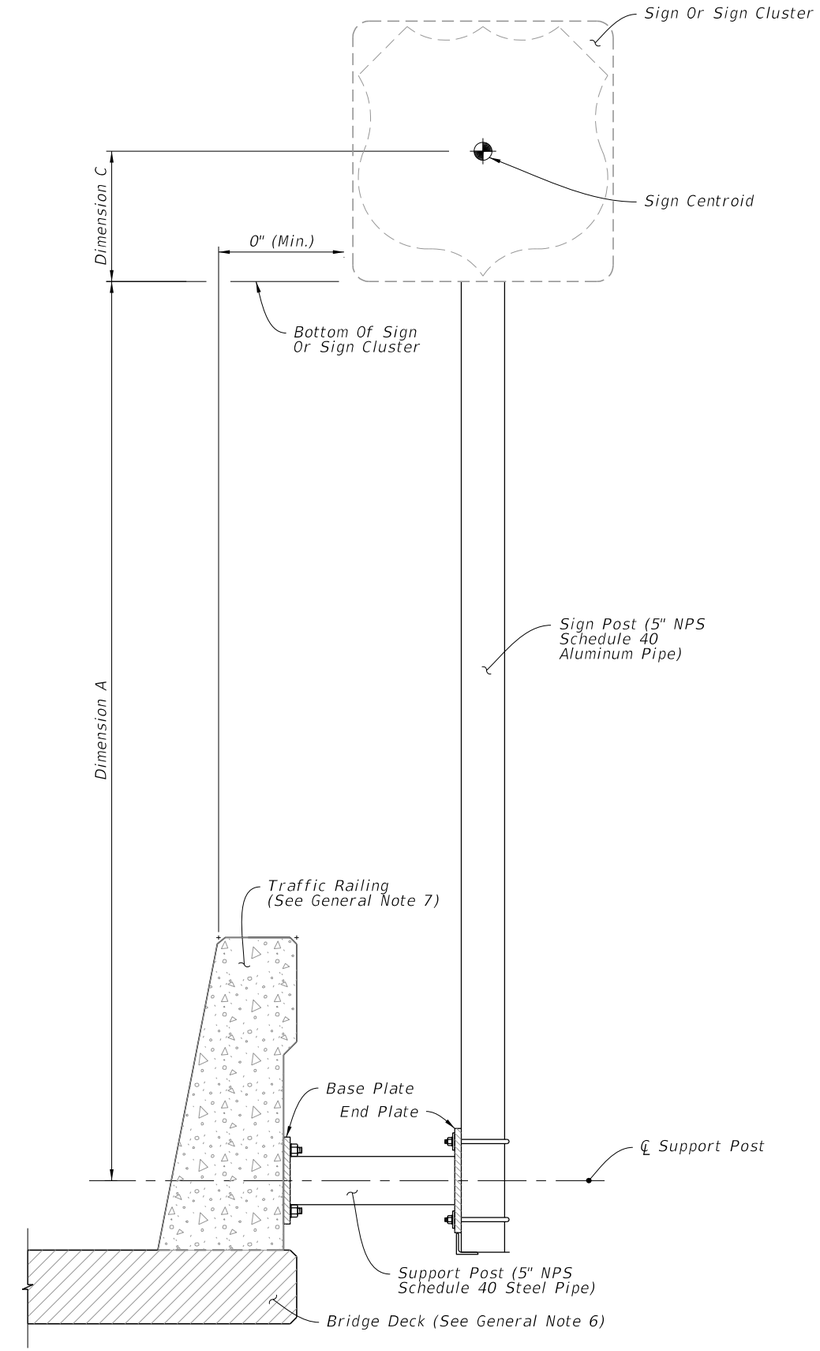

SIGN SUPPORT ASSEMBLY

5/14/2024 11:39:29 AM

LAST REVISION	REVISION	DESCRIPTION:			INDEX	SHEET
11/01/22			FY 2023-24 STANDARD PLANS	SINGLE POST SIGN SUPPORT BARRIER SIDE-MOUNTED	700-012	1 of 3

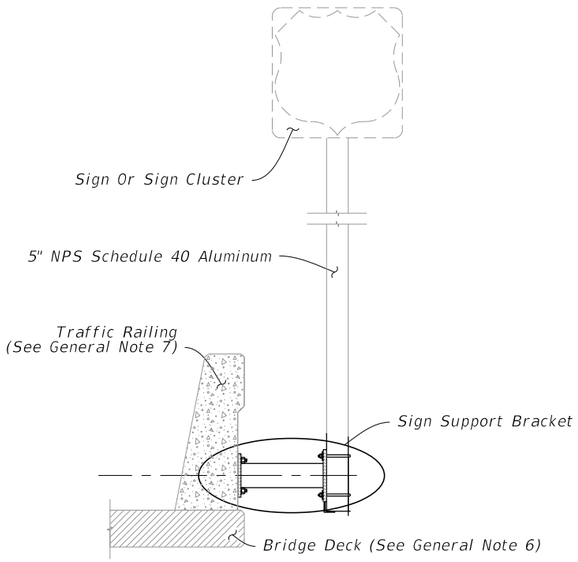

SIGN SUPPORT ASSEMBLY

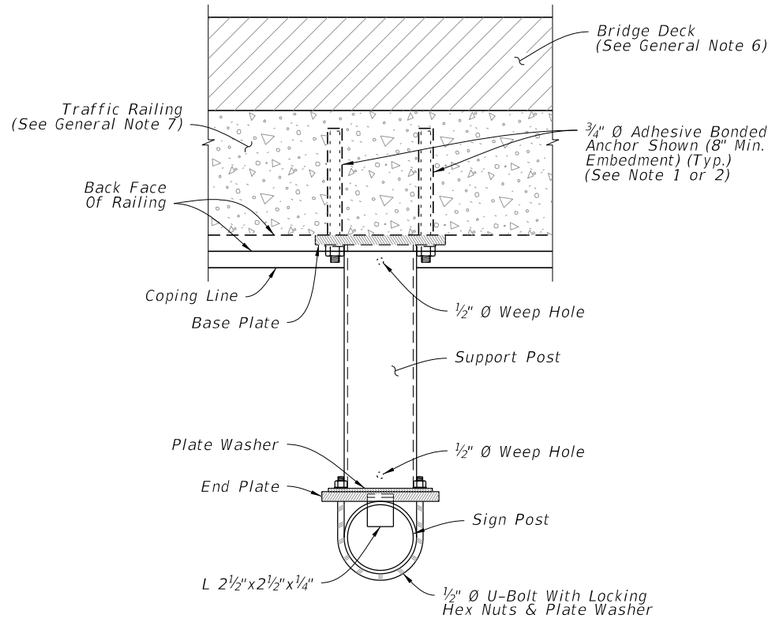

PLAN

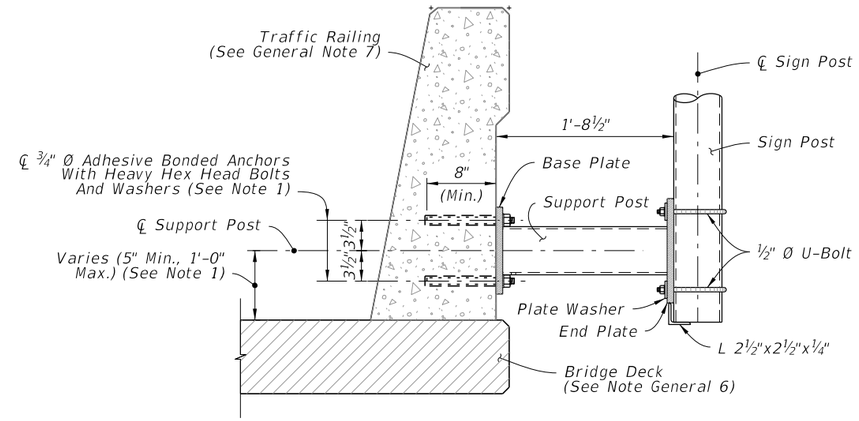

ADHESIVE BOND

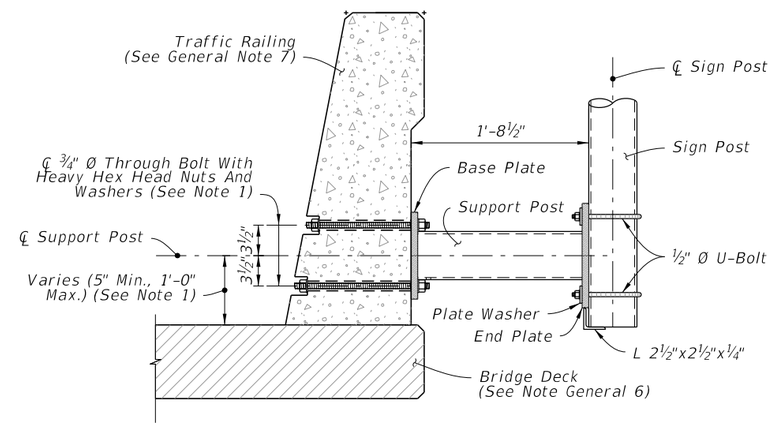

THROUGH BOLTING

TYPICAL SECTION - EXISTING RAILING

NOTES:

1. Existing Traffic Railings:

   A. Locate existing conduit prior to drilling and adjust placement of base plate as necessary to avoid damaging existing conduit. Base plate must be flush with back of traffic railing. Maintain a minimum cover 2" from face of traffic railing to tip of Adhesive Anchor.

   B. For concrete parapets less than 10" thick, through bolt ¾" Ø Heavy Hex Head Bolts with Nuts and Washers in lieu of Adhesive Bonded Anchors. Bolt heads shall not protrude more than 1½" beyond traffic face of railing.

   C. For through bolting, countersink the nut and washer so that the bolt and nut does not extend beyond the face of the traffic railing. Do not exceed a countersink depth and diameter of 2½".

2. New Traffic Railings:

   A. Optional Couplers are shown for slipforming; keep Anchor Bolt coupler threads free of concrete.

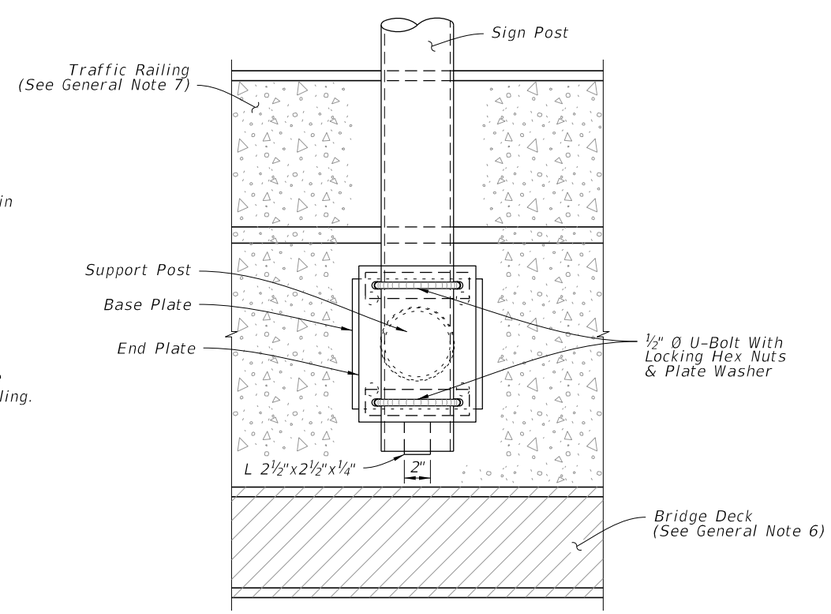

ELEVATION

SIGN SUPPORT BRACKET

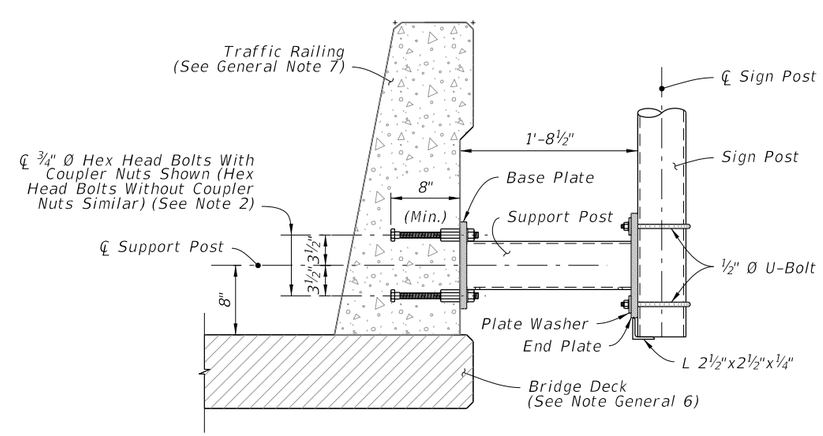

TYPICAL SECTION - NEW CONSTRUCTION

10/20/2022 8:56:38 AM

LAST REVISION	REVISION	DESCRIPTION:			INDEX	SHEET
11/01/22			FY 2023-24 STANDARD PLANS	SINGLE POST SIGN SUPPORT BARRIER SIDE-MOUNTED	700-012	2 of 3

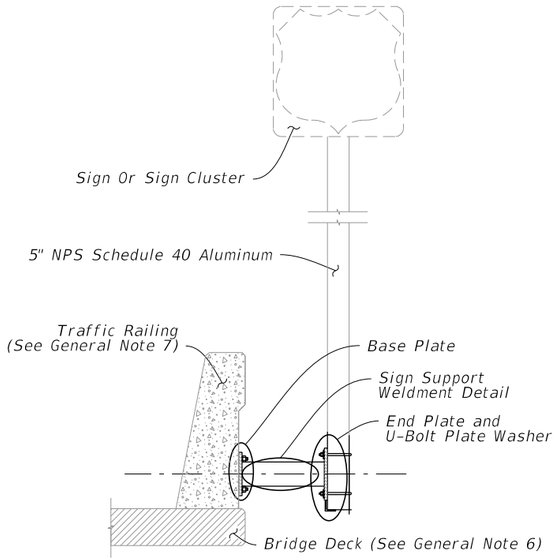

SIGN SUPPORT ASSEMBLY

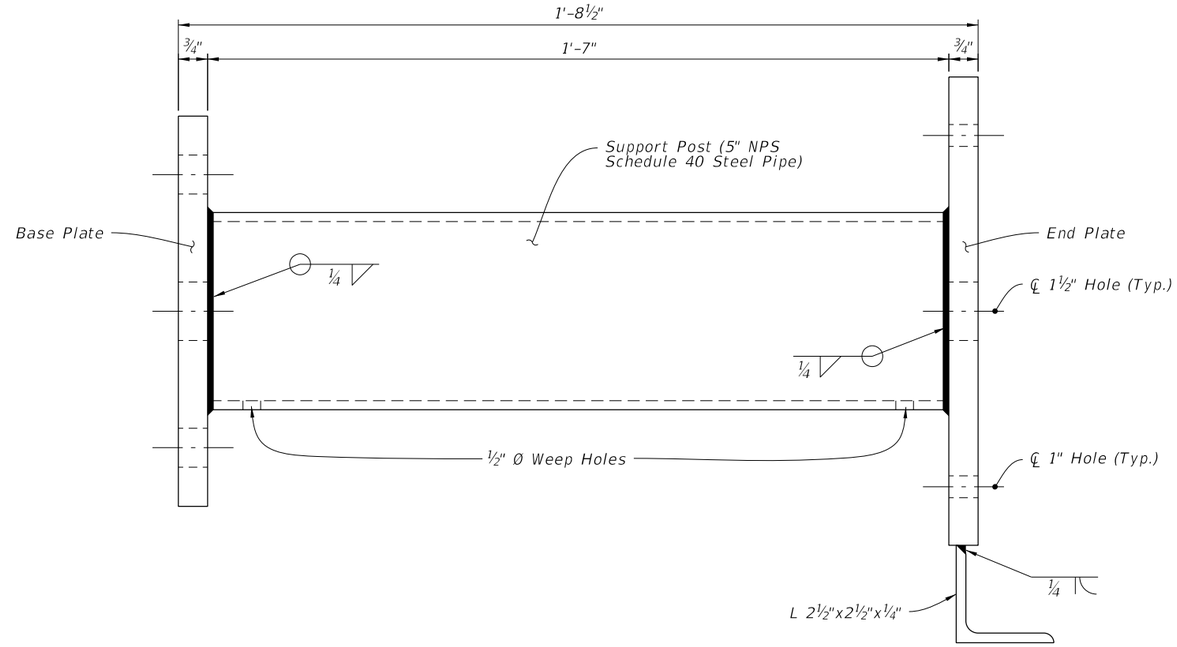

SIGN SUPPORT WELDMENT DETAIL

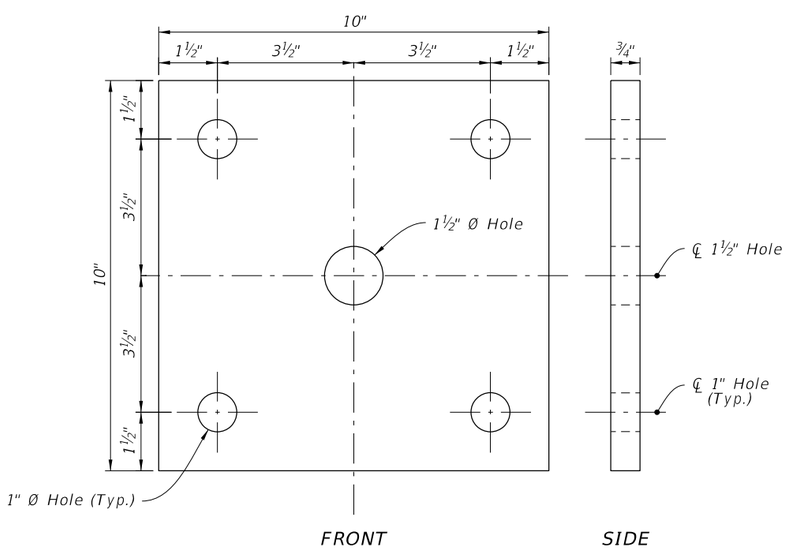

BASE PLATE

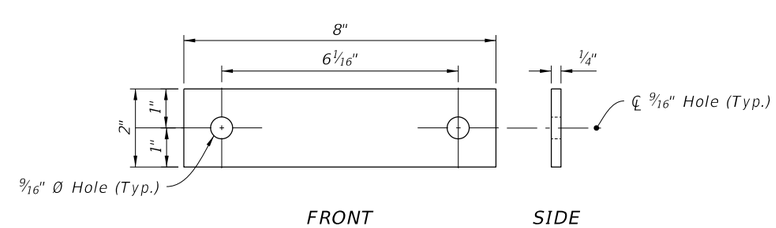

U-BOLT PLATE WASHER

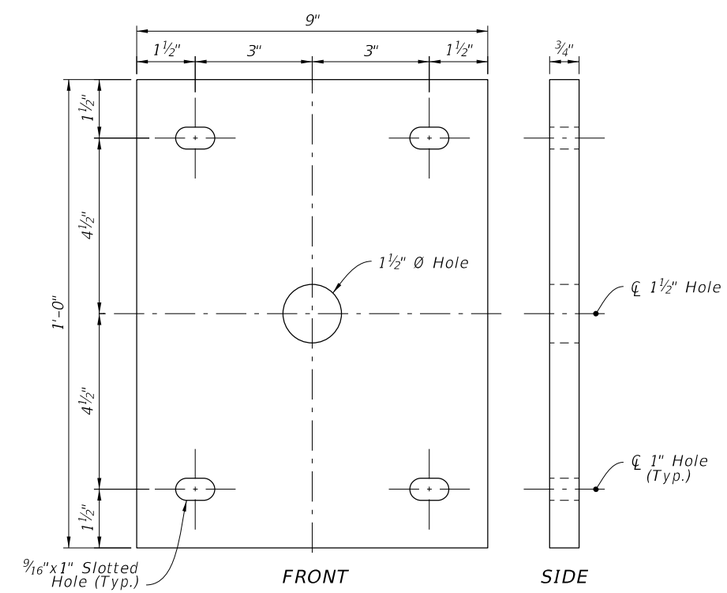

END PLATE

8:56:39 AM

10/20/2022

LAST REVISION	REVISION	DESCRIPTION:			INDEX	SHEET
11/01/22			FY 2023-24 STANDARD PLANS	SINGLE POST SIGN SUPPORT BARRIER SIDE-MOUNTED	700-012	3 of 3

GENERAL NOTES:

1. Meet the requirements of Specification 700.

2. Work with Index 700-010.

3. Shop Drawings: Not required.

4. Construction:

   A. Locate Sign Support a minimum of 5 feet from an open joint or transition (sign stationing may be adjusted to accommodate this requirement
   B. Base plate must be flush with top of Railing
   C. Anchors in Traffic Railings:
      a. Install Adhesive Anchors in accordance with Specification 416 except perform field test on one anchor per sign support location
      b. Use template and tie anchors as necessary to maintain correct placement of C-I-P Embedded Anchors
      c. Do not drill into existing reinforcing
   D. Temporary Signs on Permanent Traffic Railings, Same as Permanent except field testing of anchors is not required
   E. Temporary Signs on Temporary Railings/Barriers:
      a. Install Sign Supports at the midpoint along the length of a single segment
      b. Avoid drilling through existing reinforcement; use of metal detector not required.
      c. Field testing of anchors is not required

5. Removal of Temporary Signs on Permanent Traffic Railings:

   A. Cut anchor rods flush with the top of the railing
   B. Coat anchors with Type F-1 epoxy to prevent corrosion
      a. Extend coating 2 inches beyond edge of cut anchor rods
      b. Epoxy coating 1/16" thick minimum

6. Materials:

   A. Steel Plate: ASTM A36 or ASTM A709 Grade 36
   B. Steel Pipe (Support Post): ASTM A53 Grade B Schedule 40
   C. Galvanized U-Bolts, Nuts and Plate Washer
      a. U-Bolts: ASTM A449
      b. Hex Nuts: ASTM A 563 Lock Nuts
      c. Plate Washer: ASTM A 36 or ASTM A709 Grade 36 or 50
   D. Galvanized Anchor Bolts, Nuts and Washers:
      a. Anchor Rod: ASTM F1554 Grade 55 fully threaded (for Adhesive Anchors)
      b. Anchor Bolts: ASTM F1554 Grade 55 Grade A Hex
      c. Nuts: ASTM A563 Heavy Hex Locking
      d. Washers: ASTM F436

TABLE 1 - SIGN PANEL AND POST SIZING		
	Max. Sign Area (SF)	Post (NPS)
Temporary Signs	≤ 24	3.0
Permanent Signs	< 13.5	3.0
	13.5 < Sign < 20	3.5

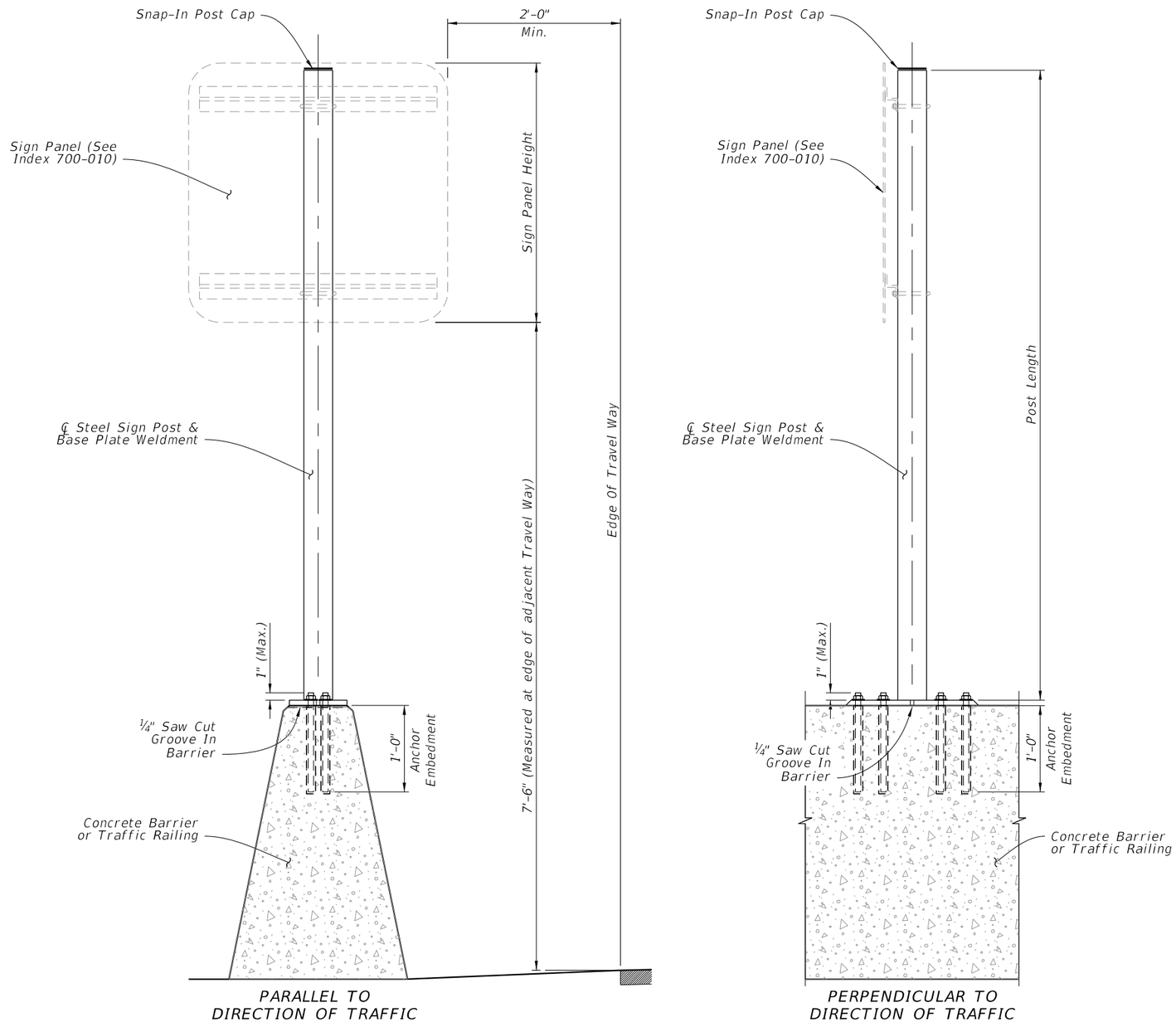

PARALLEL TO DIRECTION OF TRAFFIC

PERPENDICULAR TO DIRECTION OF TRAFFIC

(Index 521-001 Median Barrier shown; others similar)

ELEVATION

5/13/2024 2:15:47 PM

LAST REVISION	REVISION	DESCRIPTION:			INDEX	SHEET
11/01/22			FY 2023-24 STANDARD PLANS	SINGLE POST SIGN SUPPORT BARRIER TOP-MOUNTED	700-013	1 of 2

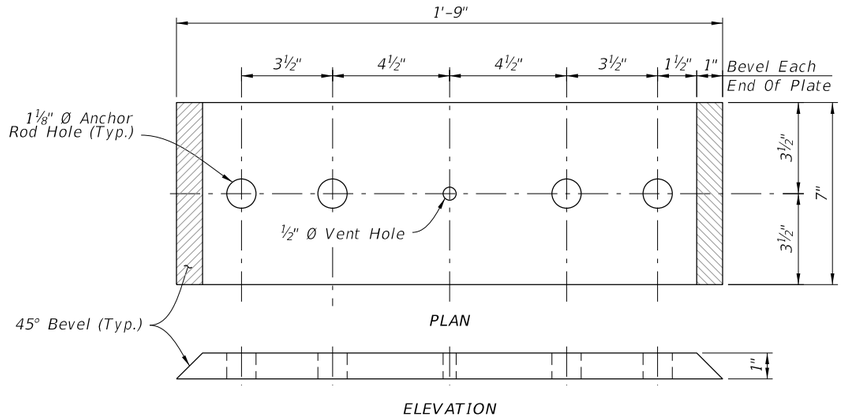

BASE PLATE TYPE A
(Linear Anchor Rod Pattern)

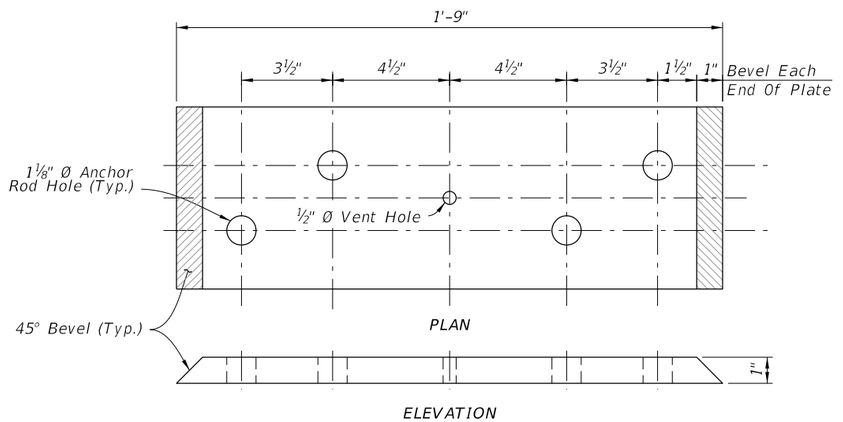

BASE PLATE TYPE B
(Staggered Anchor Rod Pattern)

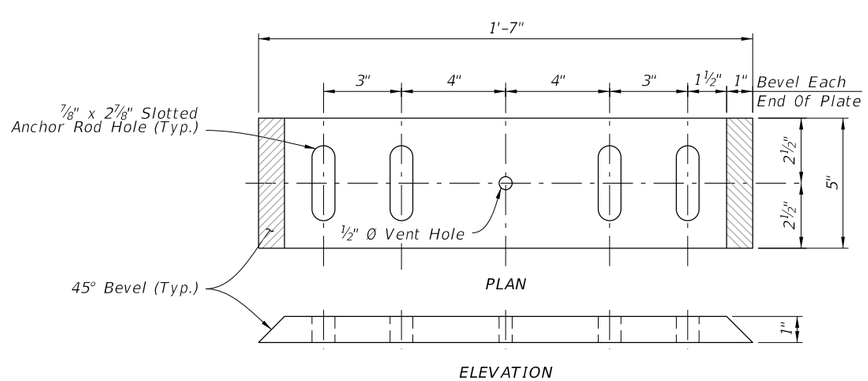

BASE PLATE TYPE C

NOTES:

1. Place anchor rods in a staggered or linear pattern as necessary to avoid reinforcing.
2. Use a staggered pattern for all temporary barriers.

TABLE 2 - BASE PLATE TYPE AND ANCHOR ROD SIZING			
Index	Type/Application	Base Plate Type	Anchor Rod Ø
521-001	Full Wall	B	1"
521-001	Cantilever or L-Wall	A	
All listed above Plus 102-110 & 102-100	Temporary Signs	C	¾"

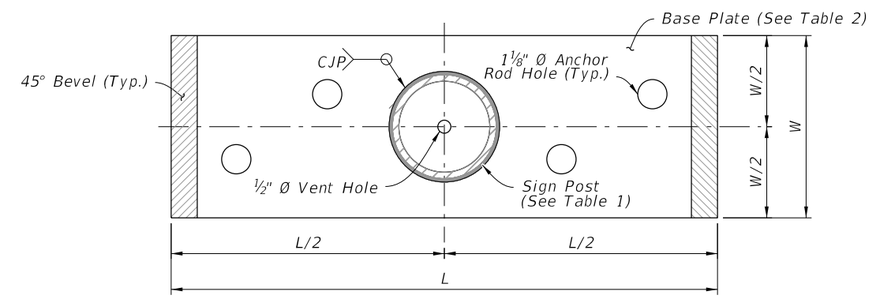

PLAN

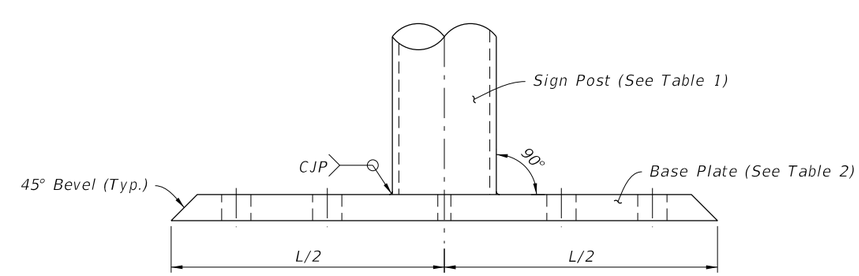

ELEVATION

SIGN SUPPORT WELDMENT DETAIL
(Staggered Anchor Rod Pattern shown)

10/20/2022 8:56:41 AM

LAST REVISION	REVISION	DESCRIPTION:			INDEX	SHEET
11/01/22			FY 2023-24 STANDARD PLANS	SINGLE POST SIGN SUPPORT BARRIER TOP-MOUNTED	700-013	2 of 2

GENERAL NOTES:

1. Meet the requirements of Specification 700.

2. Verify Column lengths in the field prior to fabrication.

3. Shop drawings:

   A. Sign Support Shop drawings are not required when fabricated in accordance with this Index and support columns do not exceed the length shown in the plans by more than 2'-0".

   B. Sign Panels: Horizontal panel splices are allowed at interior wind beams for sign panels with a depth ("D") greater than 10 feet. Shop drawings required for horizontal panel splice details.

   C. When shop drawings are required, obtain approval prior to fabrication.

4. Materials:

   A. Sign Panel Mounting Materials:
      a. Aluminum Bars, and Extruded Shapes: ASTM B221, Alloy 6061-T6 or Alloy 6351-T5
      b. Aluminum Structural Shapes: ASTM B221, Alloy 6061-T6
   B. Sign Support Structure Materials:
      a. Steel Plates and Structural Shapes: ASTM A36 or ASTM A709, Grade 36
      b. Steel Weld Metal: E70XX
      c. Shims: Brass ASTM B36 or Galvanized Steel
   C. Aluminum Bolts, Nuts and Washers:
      a. Flat Head and Button Head Bolts: ASTM F 468, Alloy 2024-T4
      b. Hex Nuts: ASTM F467, 2024-T4
      c. Washers: ASTM B221, Alloy 2024-T4
   D. Stainless Steel Bolts, Nuts and Washers Alloy Group 2, Condition A, may be substituted for the Aluminum bolts as follows:
      a. Bolts: ASTM F593, CW1 or SH1
      b. Nuts: ASTM F594,
   E. High Strength (H.S.) Steel Bolts, Nuts and Washers:
      a. Galvanized Hex Head Bolts: ASTM F3125, Grade A325, Type 1
      b. Galvanized Nuts: ASTM A563 Hex, Grade DH
      c. Galvanized Washers: ASTM F436
   F. Concrete: Class II.

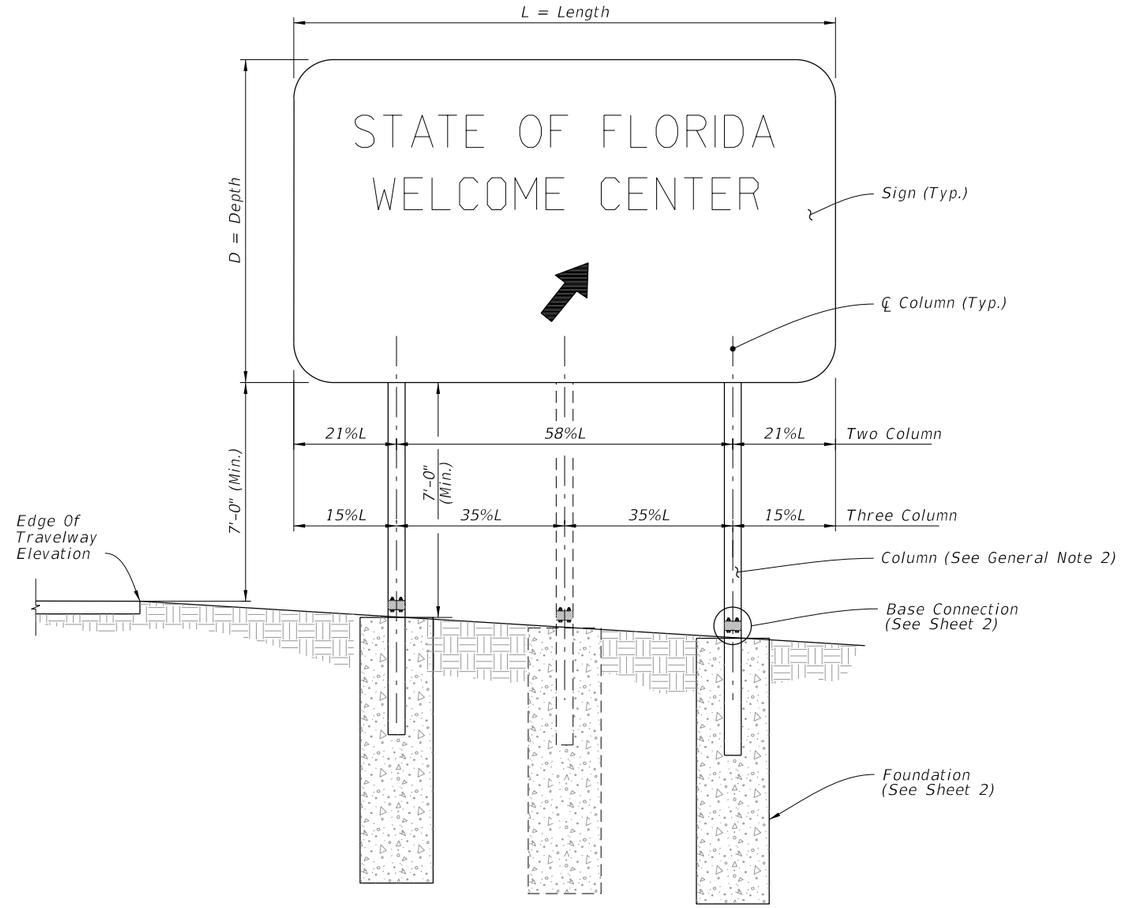

FRONT ELEVATION

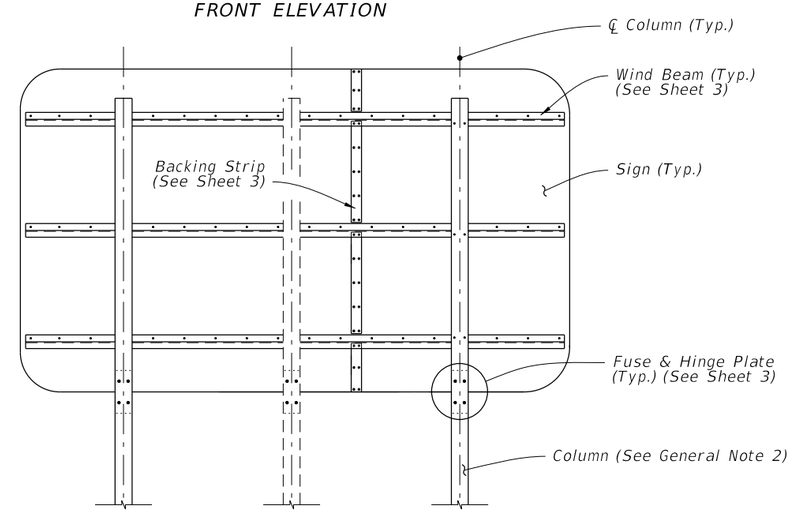

BACK ELEVATION

MULTI-COLUMN SIGN ASSEMBLY

5/14/2024 1:46:39 PM

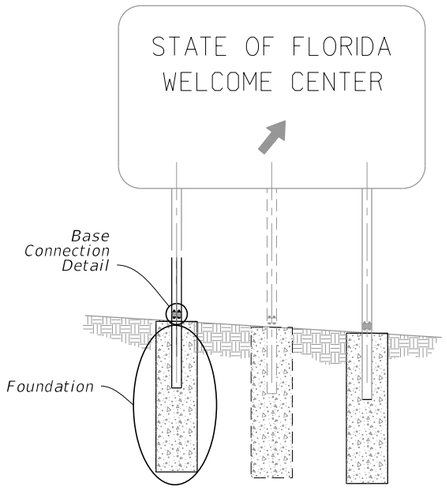

MULTI-COLUMN SIGN ASSEMBLY

FOUNDATION DATA				
Steel Post & Stub Section*	Dia.	Depth	Stub Column Length	Reinf. Bars V
S 3x5.7	2'-0"	4'-0"	3'-0"	10-#6
W 6x12	2'-0"	6'-0"	3'-0"	10-#6
W 8x18	2'-4"	7'-6"	4'-0"	8-#8
W 8x24	2'-4"	8'-6"	4'-0"	8-#8
W 10x33	2'-4"	10'-3"	4'-0"	8-#8
W 12x45	2'-8"	11'-3"	5'-0"	10-#8

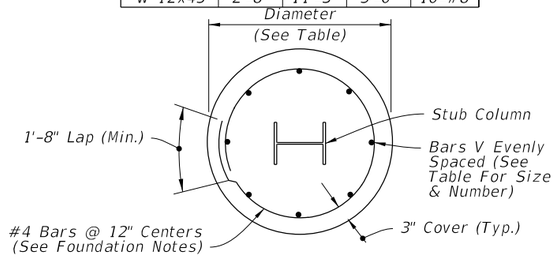

PLAN

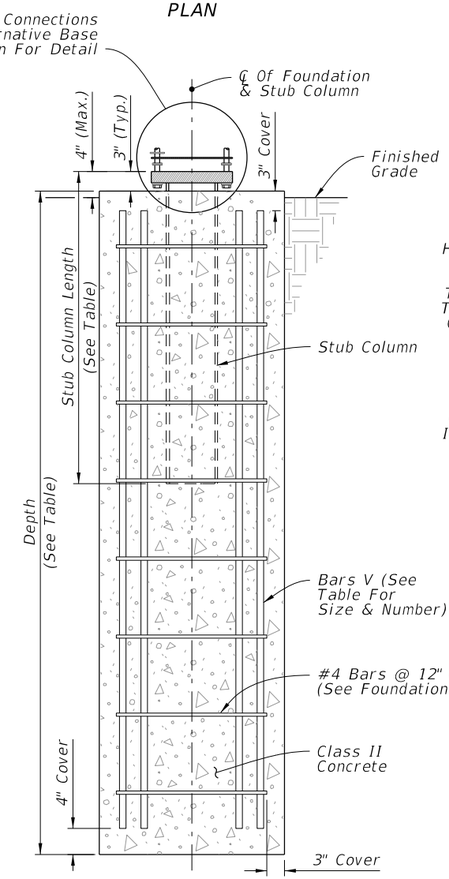

ELEVATION

FOUNDATION

FOUNDATION NOTES:

The Contractor may use Welded Wire Reinforcement (WWR) for foundation reinforcing.

At the Contractors option, the #4 tie bars at 12" o.c. may be replaced by D10 Spiral Wire @ 6" pitch, with three flat turns at the top and one flat turn at the bottom in accordance with Specification 415.

BASE CONNECTION NOTES:

1. Assembly of Base Instructions:

   A. Place one washer on each Base Bolt between the Bottom Base Plate and the head of high strength Base Bolt; place the next washer between the Bottom Base Plate and the Bolt Keeper Plate; add the Top Base Plate section and place the third washer between the Top Base Plate and the Nut.

   B. Shim as required to plumb column. Provide 2-0.0149" thick (28 gauge) and 2-0.0329" thick (21 gauge) shims per column.

2. H.S. Base Bolt L Tightening Instructions:

   A. Tighten Base Bolts to the maximum possible with a 12" to 15" wrench (this will bed the washers and shims and clear the bolt threads).

   B. Loosen each Base Bolt one turn.

   C. Under the supervision of the Engineer, use a calibrated wrench to tighten bolts to the torque prescribed in the Table. Over tightened Base Bolts will not be permitted.

   D. Burr threads at junction with nut to prevent nut loosening. Treat damaged galvanizing.

3. Assemble Post to Stub with Base Bolts and three flat washers per bolt (See Base Connection Details). Tighten Base Bolts in accordance with Instructions with Note 2.

4. Weld Base Plate to Post & Stub or if using the Alternate Connection Detail weld Base Plate and Stiffeners to Post and Stub.

5. Orient Stub Post according to direction of traffic.

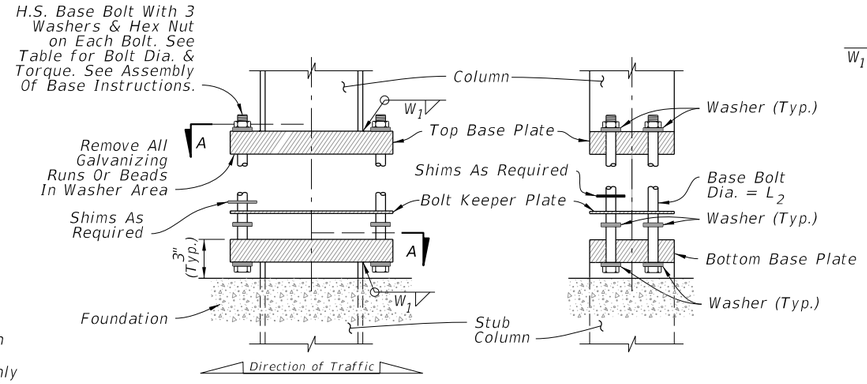

SIDE ELEVATION FRONT ELEVATION

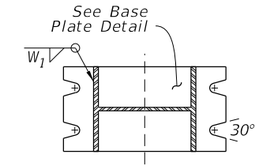

SECTION A-A

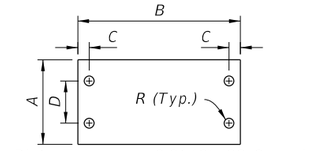

BOLT KEEPER PLATE DETAIL

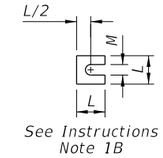

SHIM DETAIL

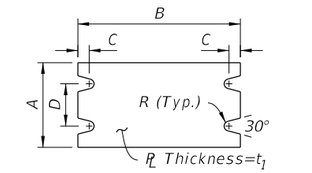

BASE PLATE DETAIL

	BASE CONNECTION DATA									SHIM	
Steel Post & Stub Section*	A	B	C	D	R	t_1	L_2	W_1	Torque (lbf*in)	L	M
S 3x5.7	4"	7"	3/4"	2"	5/16"	1"	1/2"	1/4"	90 ± 20	1-1/4"	9/16"
W 6x12	4"	10"	3/4"	2"	3/8"	1-5/8"	5/8"	1/4"	270 ± 45	1-3/8"	11/16"
W 8x18	5-1/4"	12-1/2"	7/8"	2-3/4"	7/16"	1-3/4"	3/4"	3/8"	445 ± 75	1-3/4"	13/16"
W 8x24	6-1/2"	12-1/2"	7/8"	3-1/4"	7/16"	1-3/4"	3/4"	3/8"	445 ± 75	2-1/8"	13/16"
W 10x33	8"	16"	1-1/4"	4-3/4"	9/16"	2"	1"	1/2"	580 ± 90	2-3/8"	1-1/16"
W 12x45	10"	18"	1-1/4"	6"	9/16"	2"	1"	1/2"	580 ± 90	2-3/4"	1-1/16"

* Designations: (Nominal Depth in inches) x (weight in pounds per linear foot).

BASE CONNECTION

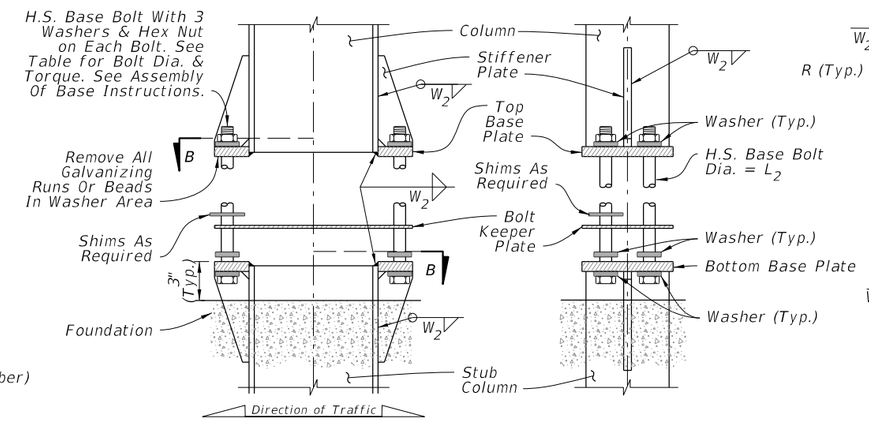

SIDE ELEVATION FRONT ELEVATION

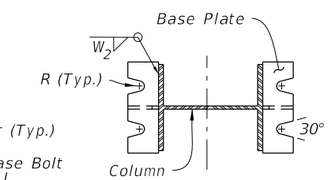

SECTION B-B

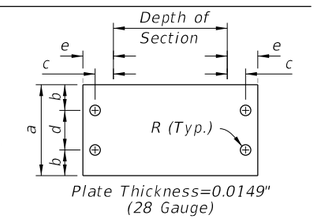

BOLT KEEPER PLATE DETAIL

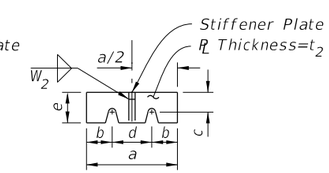

BASE PLATE DETAIL

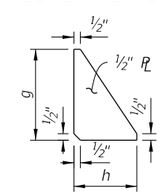

STIFFENER PLATE DETAIL

ALTERNATIVE BASE CONNECTION DATA												
Steel Section*	a	b	c	d	e	t_2	L_2	R	Torque (lbf*in)	g	h	W_2
W 6x12	4-3/4"	1-1/8"	1-3/16"	2-1/2"	2"	1/2"	5/8"	3/8"	270±45	5-1/8"	2"	1/4"
W 8x18	5-3/4"	1-1/2"	1-3/8"	2-3/4"	2-3/16"	5/8"	3/4"	7/16"	445±75	6-1/4"	2-3/16"	1/4"
W 8x24	7"	1-3/4"	1-3/8"	3-1/2"	2-3/8"	3/4"	3/4"	7/16"	445±75	8"	2-3/8"	5/16"
W 10x33	8"	2"	1-9/16"	4"	2-3/4"	3/4"	1"	9/16"	580±90	8"	2-3/4"	5/16"
W 12x45	8"	2"	1-9/16"	4"	3"	3/4"	1"	9/16"	580±90	8"	3"	5/16"

* Designations: (Nominal Depth in inches) x (weight in pounds per linear foot).

ALTERNATIVE BASE CONNECTION

FOUNDATION AND BASE CONNECTION DETAILS

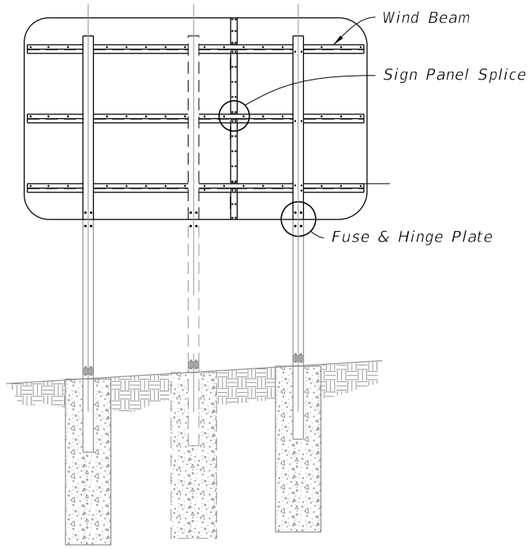

BACK ELEVATION

MULTI-COLUMN SIGN ASSEMBLY

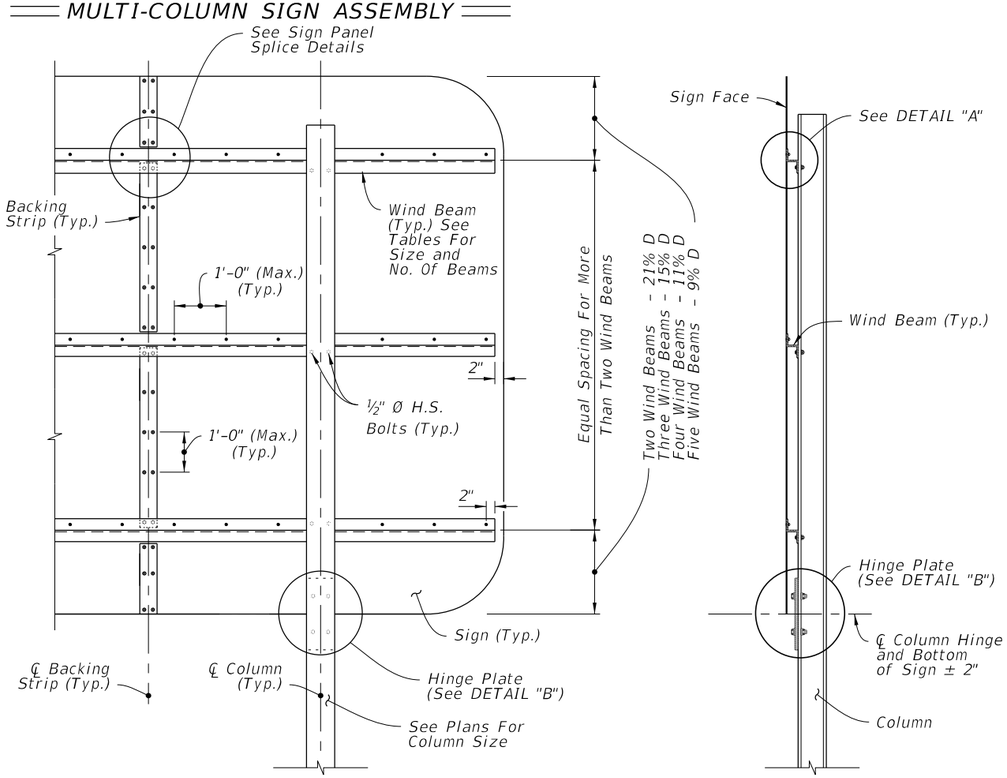

BACK ELEVATION

SIDE ELEVATION

MULTI-COLUMN SIGN BACK PANEL

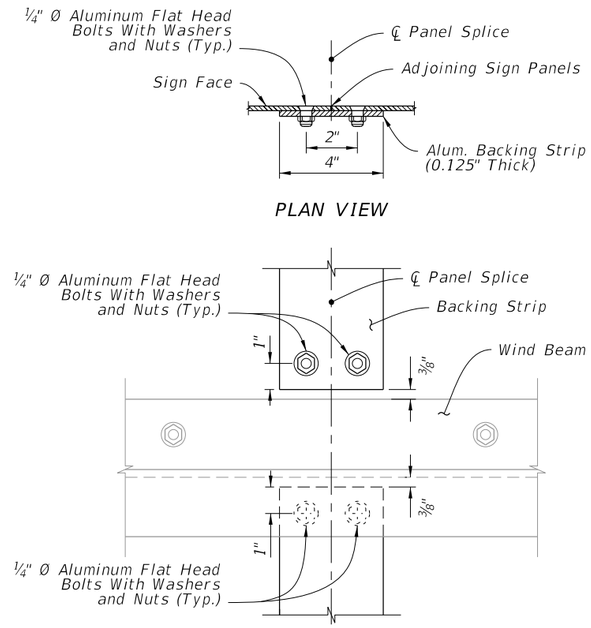

PLAN VIEW

ELEVATION

SIGN PANEL SPLICE

NUMBER OF WIND BEAMS BASED ON SIGN DEPTH (D)			
2 Beams	3 Beams	4 Beams	5 Beams
D ≤ 8'	8' < D ≤ 12'	12' < D ≤ 16'	16' < D ≤ 20'

WIND BEAM SIZE BASED ON SIGN LENGTH (L)		
2 Columns	3 Columns	Aluminum Beam Size **
L ≤ 12'	L ≤ 18'	Z 1-¾ x 1-¾ x 1.09
12' < L ≤ 20'	18' < L ≤ 30'	Z 3 x 2-11/16 x 2.33
20' < L ≤ 25'	30' < L ≤ 39'	Z 4-1/16 x 3-⅛ x 3.57

**Designation gives (Member Depth in inches) x (Flange Width in inches) x (lb/ft)

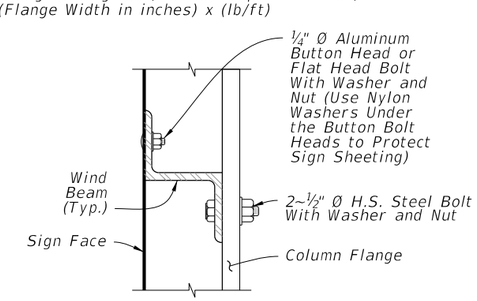

DETAIL "A"

FUSE (HINGE) PLATE DATA									
Steel Section*	a	b	c	d	e	t_2	D_1	D_2	L_1
S 3x5.7	7-1/4"	2-3/8"	1-1/4"	1/2"	9/16"	3/8"	7/16"	9/16"	1/2"
W 6x12	7-1/4"	4"	1-1/4"	7/8"	15/16"	3/8"	13/16"	11/16"	5/8"
W 8x18	8-1/4"	5-1/4"	1-3/8"	1-1/8"	1-1/4"	3/8"	1"	13/16"	3/4"
W 8x24	8-1/4"	6-1/2"	1-3/8"	1-1/2"	1-1/2"	1/2"	1"	13/16"	3/4"
W 10x33	9-1/4"	8"	2"	1-3/4"	1-3/4"	5/8"	1-1/8"	1-1/16"	1"
W 12x45	11"	8"	2"	1-3/4"	1-3/4"	3/4"	1-5/16"	1-1/16"	1"

* Designations: (Nominal Depth in inches) x (Weight in Pounds Per Linear Foot)

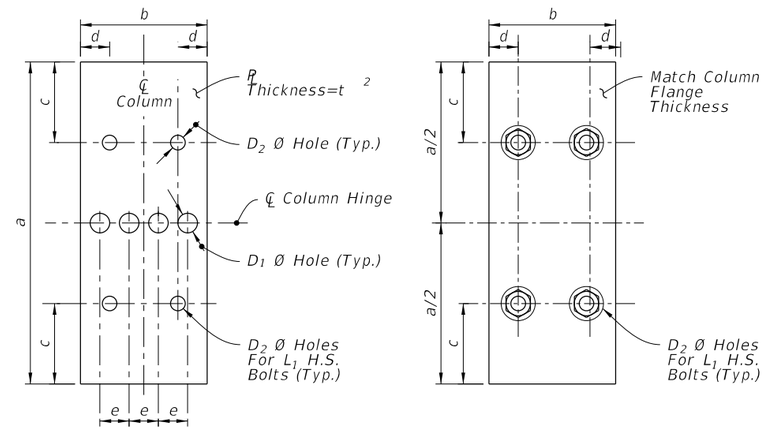

FUSE PLATE

HINGE PLATE

FUSE & HINGE PLATE

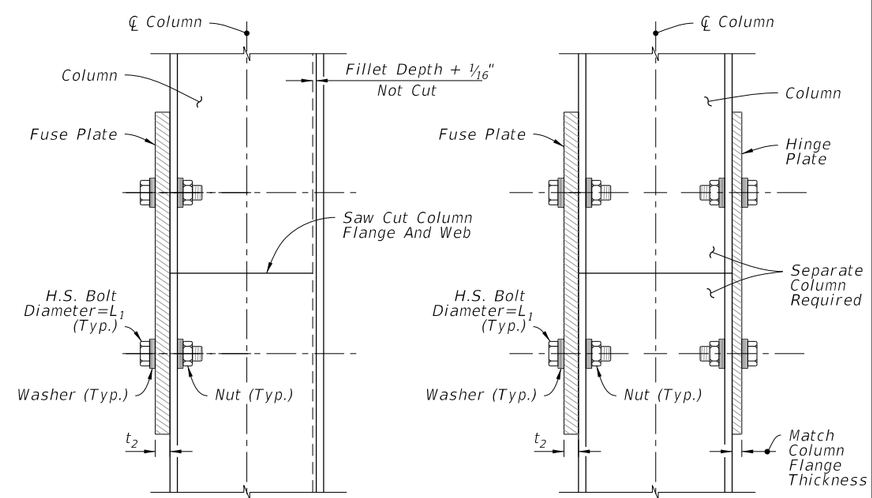

Side Elevation

TYPICAL HINGE

Side Elevation

OPTIONAL HINGE

DETAIL "B"

WIND BEAM, BACKING STRIP & FUSE/HINGE PLATE DETAILS

11:11:26 AM

5/13/2024

LAST REVISION	REVISION	DESCRIPTION:			INDEX	SHEET
11/01/22			FY 2023-24 STANDARD PLANS	MULTI-COLUMN GROUND SIGN	700-020	3 of 3

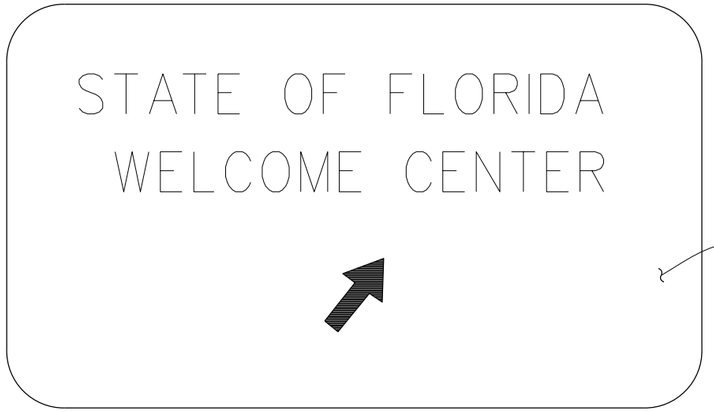

FRONT ELEVATION

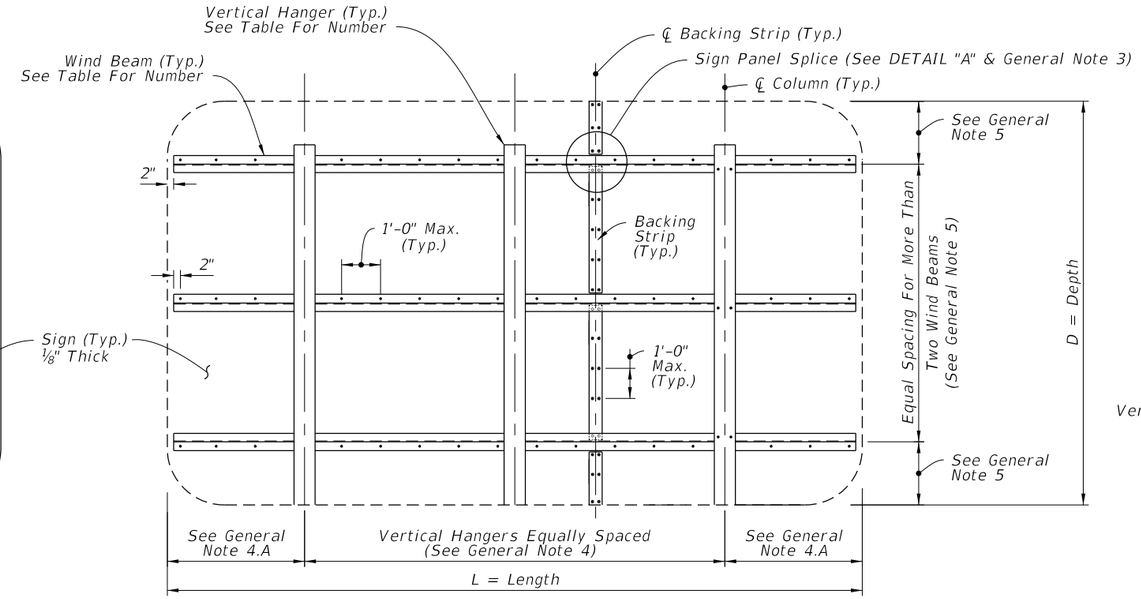

BACK ELEVATION

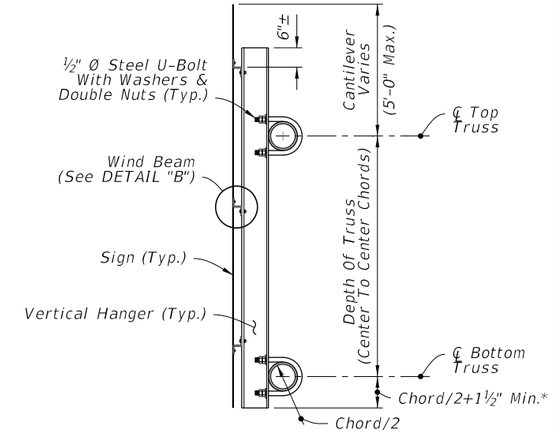

*Bottom Justified Shown, Center Justified Similar.

SIDE ELEVATION

TYPICAL SIGN FOR OVERHEAD TRUSS

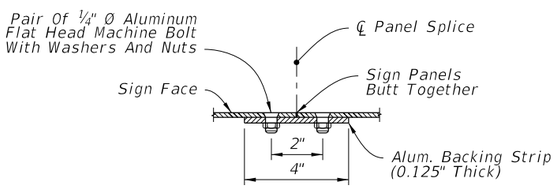

PLAN VIEW

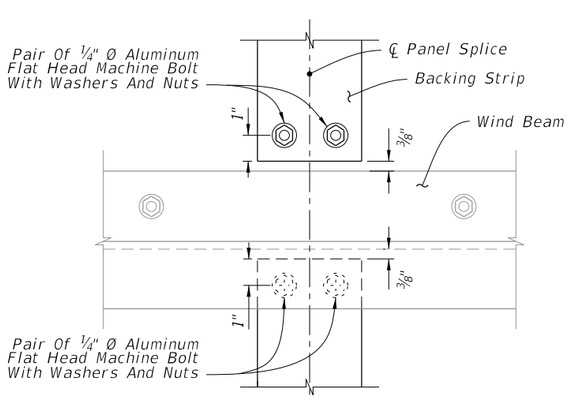

ELEVATION

SIGN PANEL SPLICE

DETAIL "A"

WIND BEAM TABLE (Z 3 x 2 11/16 x 2.33)				
Number of Horizontal Wind Beams Based on Sign Depth (D)				
2 Beams	3 Beams	4 Beams	5 Beams	6 Beams
D ≤ 5'	5' < D ≤ 9'	9' < D ≤ 12'	12' < D ≤ 15'	15' < D ≤ 18'

HANGER TABLE (I 6 X 4 x 4.69 or Z 5 x 3¼ x 4.01)					
Number of Vertical Hanger Beams Based on Wind Speed and Sign Length (L)					
	2 Hangers	3 Hangers	4 Hangers	5 Hangers	6 Hangers
130 mph	L ≤ 20'	20' < L ≤ 30'	30' < L ≤ 40'	40' < L ≤ 50'	--
150 mph	L ≤ 18'	18' < L ≤ 27'	27' < L ≤ 35'	35' < L ≤ 45'	45' < L ≤ 50'
170 mph	L ≤ 15'	15' < L ≤ 20'	20' < L ≤ 28'	28' < L ≤ 35'	35' < L ≤ 43'

NOTE: For Monroe County designs, use 170 mph values but with Z 5 x 3-¼ x 6.19 vertical hanger beams only.

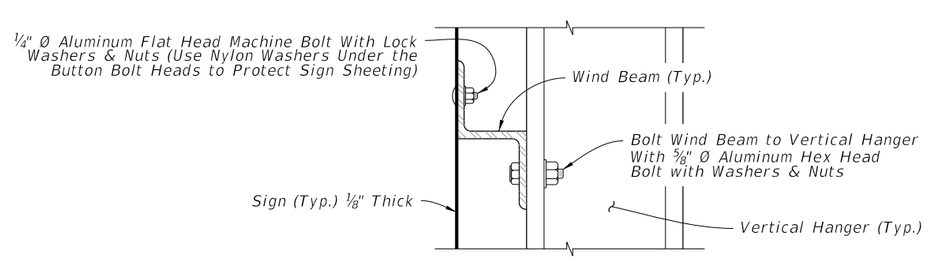

DETAIL "B"

GENERAL NOTES

1. Meet the requirements of Specification 700.
2. Work this Index with Index 700-040 and 700-041.
3. The number and location of the Panel Splices are determined by the Sign Face supplier.
4. Spacing of Vertical Hangers:
   A. Two Vertical Hanger = 21.0% L
      Three Vertical Hanger = 15.0% L
      Four Vertical Hanger = 11.0% L
      Five Vertical Hanger = 9.0% L
      Six Vertical Hanger = 7.0% L
   B. Spacing of vertical hangers may be varied slightly as necessary to clear the truss struts and diagonals at panel points
5. Spacing of Wind Beams:
   Two Wind Beams = 21.0% D
   Three Wind Beams = 15.0% D
   Four Wind Beams = 11.0% D
   Five Wind Beams = 9.0% D
   Six Wind Beams = 7.0% D
6. Shop Drawings:
   A. Required for Sign Panels deeper than 10'-0" with a horizontal panel splice.
   B. Splice must be located in between interior Zee Supports and only allowed on signs greater than 10'-0".
7. Wind Speed by county: see Index 715-010.
8. Materials:
   A. Aluminum:
      a. Bars, and Extruded Shapes: ASTM B221, Alloy 6061-T6 or Alloy 6351-T5
      b. Structural Shapes: ASTM B221, Alloy 6061-T6
      c. Flat Head and Hex Head Machine Bolts: ASTM F468, Alloy 2024-T4
      d. Hex Nuts: ASTM F467, Alloy 6061-T6 or Alloy 6262-T9
      e. Washers: ASTM B221, Alclad 2024-T4
   B. Steel:
      a. U-Bolts: ASTM A449 or ASTM A193 B7
      b. Nuts: ASTM A563, 2 per leg
      c. Washers: ASTM F436, (Flat Washers)

5/13/2024 11:18:49 AM

LAST REVISION	REVISION	DESCRIPTION:			INDEX	SHEET
11/01/22			FY 2023-24 STANDARD PLANS	WIND AND HANGER BEAMS FOR OVERHEAD SIGNS	700-030	1 of 1

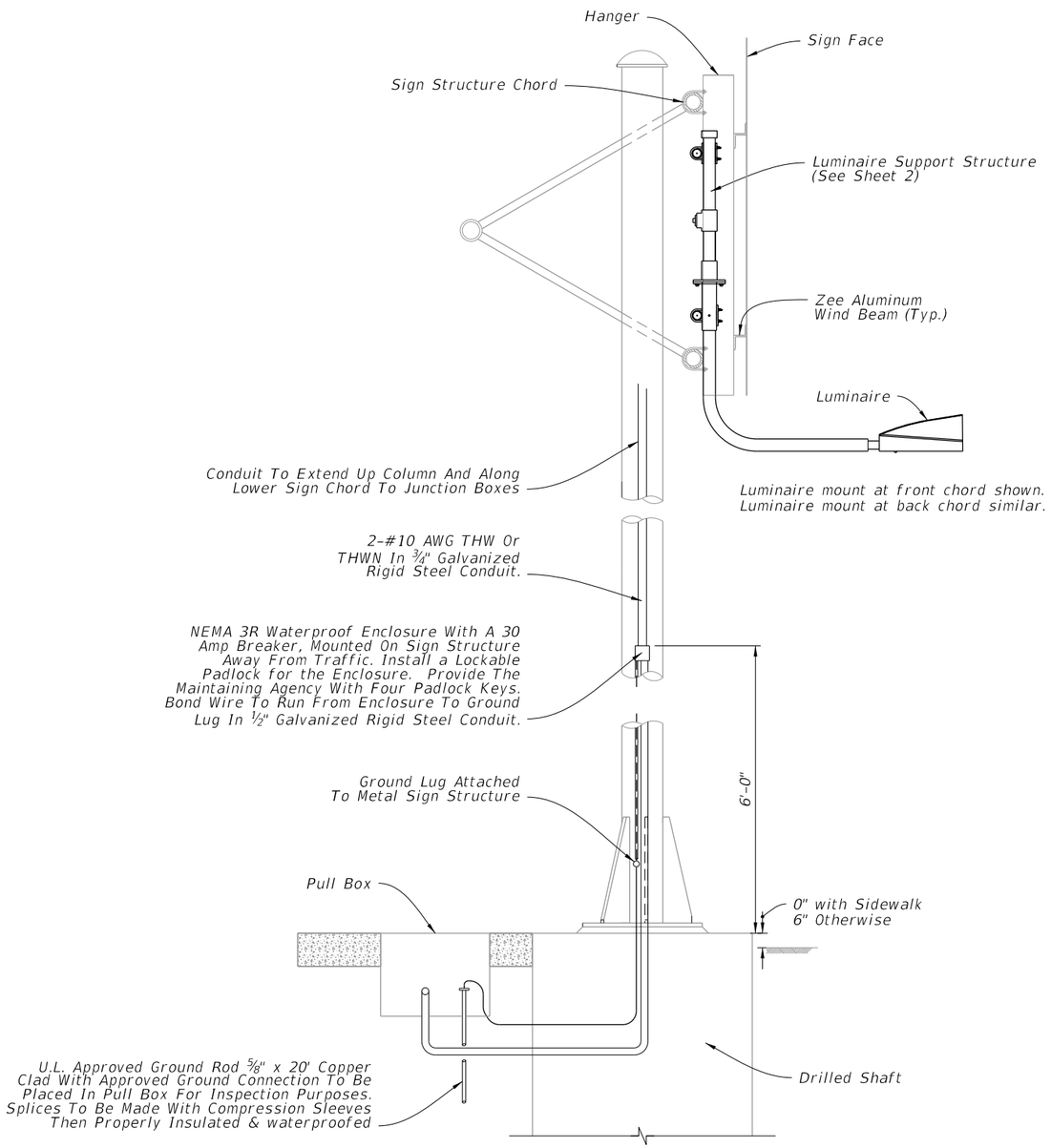

SIDE VIEW

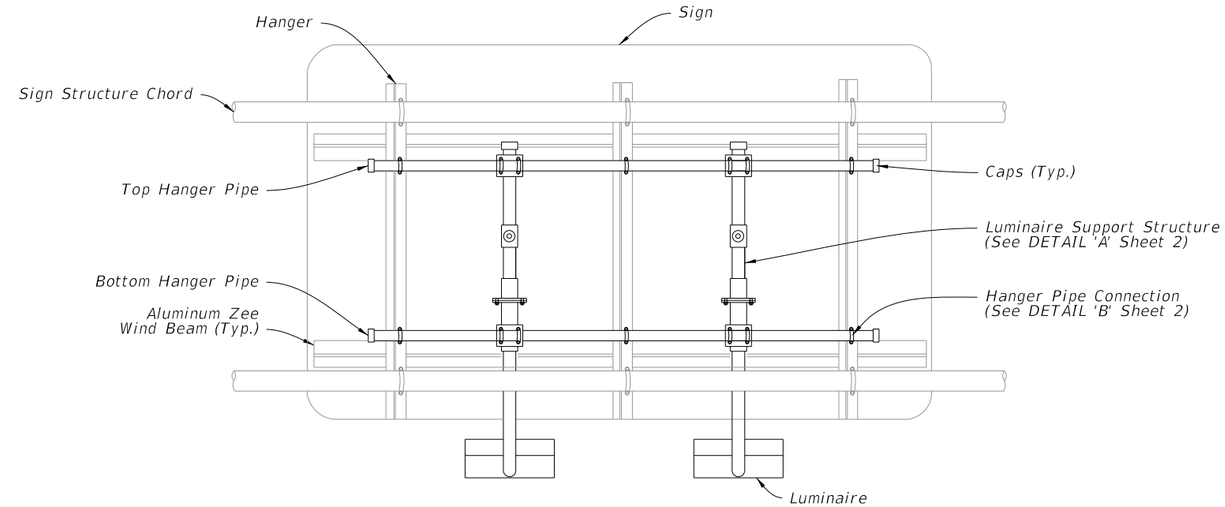

BACK VIEW

PLACEMENT OF SIGN LIGHTS

1. This Index details a bottom luminaire support structure. For signs requiring top luminaire support structures, the detail can be reversed.
2. Luminaire spacing and arm length is shown on Guide Sign Worksheet.
3. The Guide Sign Worksheet indicates the sign luminaire used for basis of design. The contractor may propose a different luminaire by submitting photometric calculations for each lighted sign for review by the Engineer.

SIGN LIGHTING INSTALLATION

Roadway Lighting included in contract:

1. Power for the sign lighting provided from the roadway lighting circuit.
2. Indicate sign location and a pull box location for connection to the sign lights in the lighting plans.
3. Lighting contractor installs pull box and loop 2' of lighting circuit conductors in the pull box for connection by the signing contractor.
4. Signing contractor furnishes and installs the Luminaires, NEMA 3R enclosure, 30 amp breaker, conduit, conductors and all other electrical equipment necessary for connection to the lighting circuit.

Roadway Lighting not included in contract:

1. Signing plans include the pay item numbers to furnish and install conduit, conductors, ground rods, pull boxes and service point equipment.
2. Signing plans indicate the location of the service point equipment and circuit runs.
3. Signing contractor provides all electrical equipment necessary for connection of the sign lights.

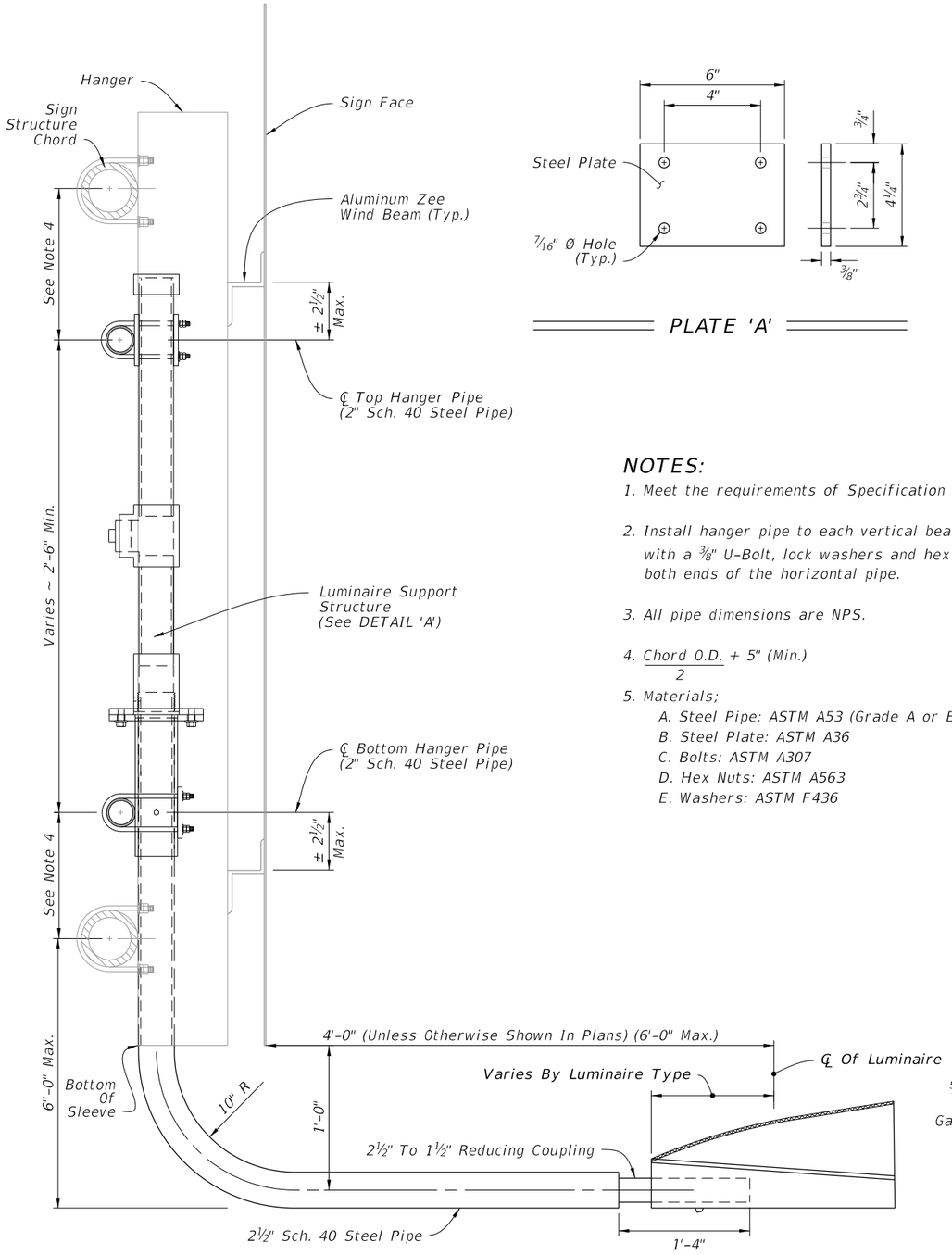

LUMINAIRE SUPPORT STRUCTURE

PLATE 'A'

NOTES:

1. Meet the requirements of Specification 700.
2. Install hanger pipe to each vertical beam crossed with a ⅜" U-Bolt, lock washers and hex nuts. Cap both ends of the horizontal pipe.
3. All pipe dimensions are NPS.
4. $\frac{\text{Chord O.D.}}{2}$ + 5" (Min.)
5. Materials;
   - A. Steel Pipe: ASTM A53 (Grade A or B)
   - B. Steel Plate: ASTM A36
   - C. Bolts: ASTM A307
   - D. Hex Nuts: ASTM A563
   - E. Washers: ASTM F436

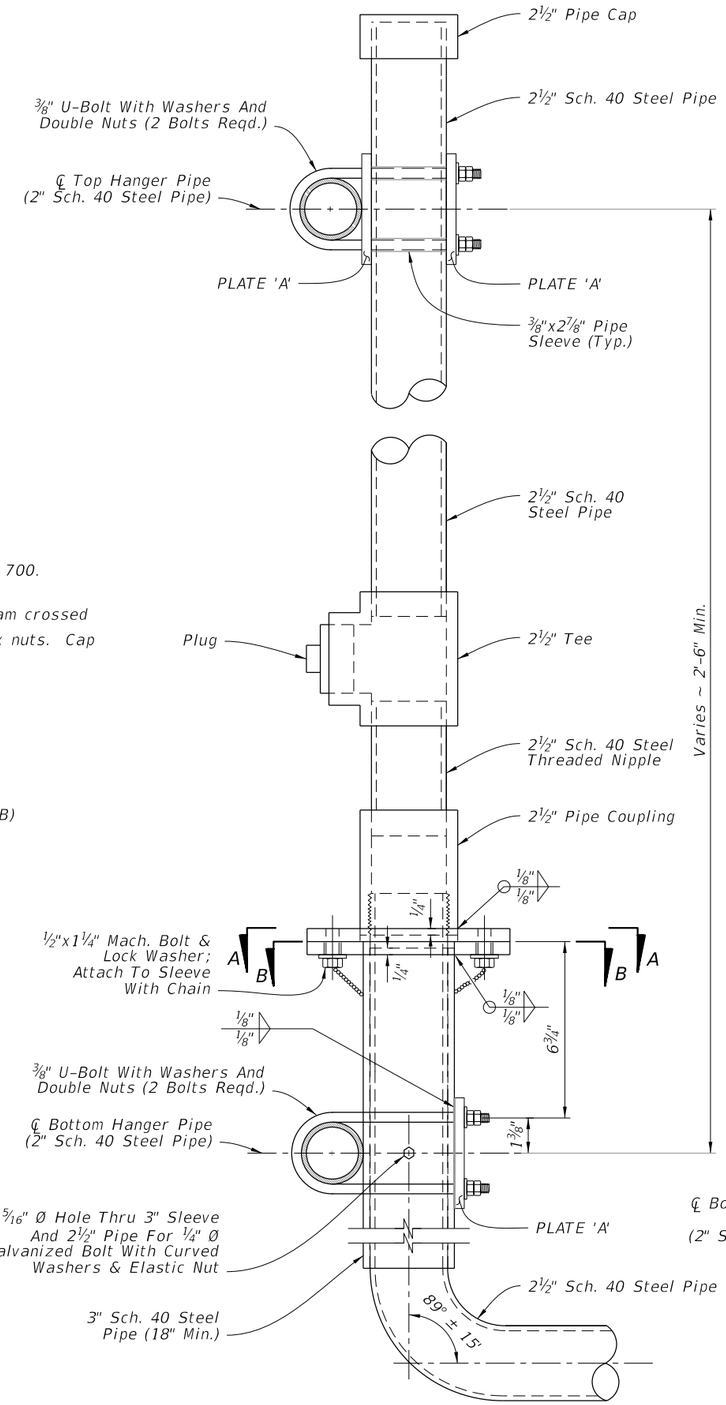

DETAIL 'A'
(Luminaire Support Structure)

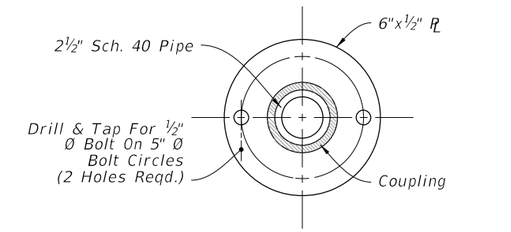

SECTION A-A

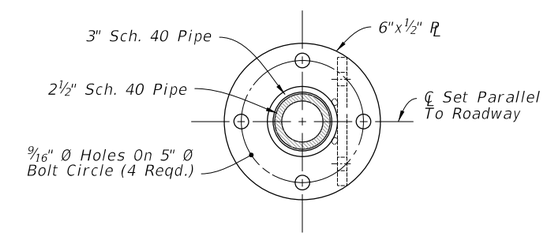

SECTION B-B

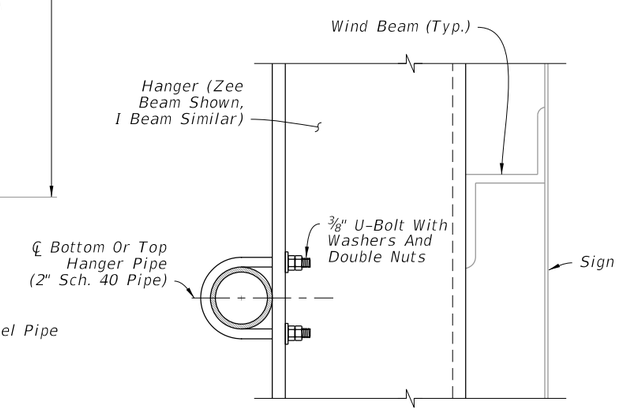

DETAIL 'B'
(Hanger Pipe Connection)

5/13/2024 11:25:09 AM

LAST REVISION	REVISION	DESCRIPTION:			INDEX	SHEET
11/01/22			FY 2023-24 STANDARD PLANS	EXTERNAL LIGHTING FOR SIGNS	700-031	2 of 2

GENERAL NOTES:

1. Meet the requirements of Specification 700.

2. Work this Index in conjunction with CANTILEVER SIGN STRUCTURE DATA TABLES in the Plans and Index 700-030.

3. Handholes are required at pole base for DMS Structures. Refer to Index 700-090 for Handhole Details.

4. Shop Drawings are required.

   Obtain Shop Drawing approval prior to fabrication. Include the following:
   A. Upright Pipe height ('A') and Foundation elevations: Verify dimension in the field prior to submittal to ensure minimum vertical clearances of the sign panel over the roadway.
   B. Height of the foundation above adjacent ground.
   C. Anchor bolt orientation with respect to centerline of truss and the direction of traffic.
   D. Chord Splices
   E. Handholes at pole base (when required).

5. Materials:

   A. Sign Structure:
      a. Upright and Chords (Steel Pipe): API 5L X42 PSL2, 42 ksi yield or ASTM A500, Grade B (Min.)
      b. Steel Angles and Structural Plates and Bars: ASTM A709 Grade 36
   B. Bolts, Nuts and Washers:
      a. High Strength Bolts: ASTM F3125, Grade A325 Type 1
      b. Nuts: ASTM A563 Grade DH Heavy-Hex
      c. Washers: ASTM F436 Type 1, one under turned element
   C. Anchor Bolts, Nuts and Washers
      a. Anchor Bolts: ASTM F1554 Grade 55
      b. Nuts: ASTM A563 Grade A Heavy-Hex (5 per bolt)
      c. Plate Washers: ASTM A36 (2 per bolt)

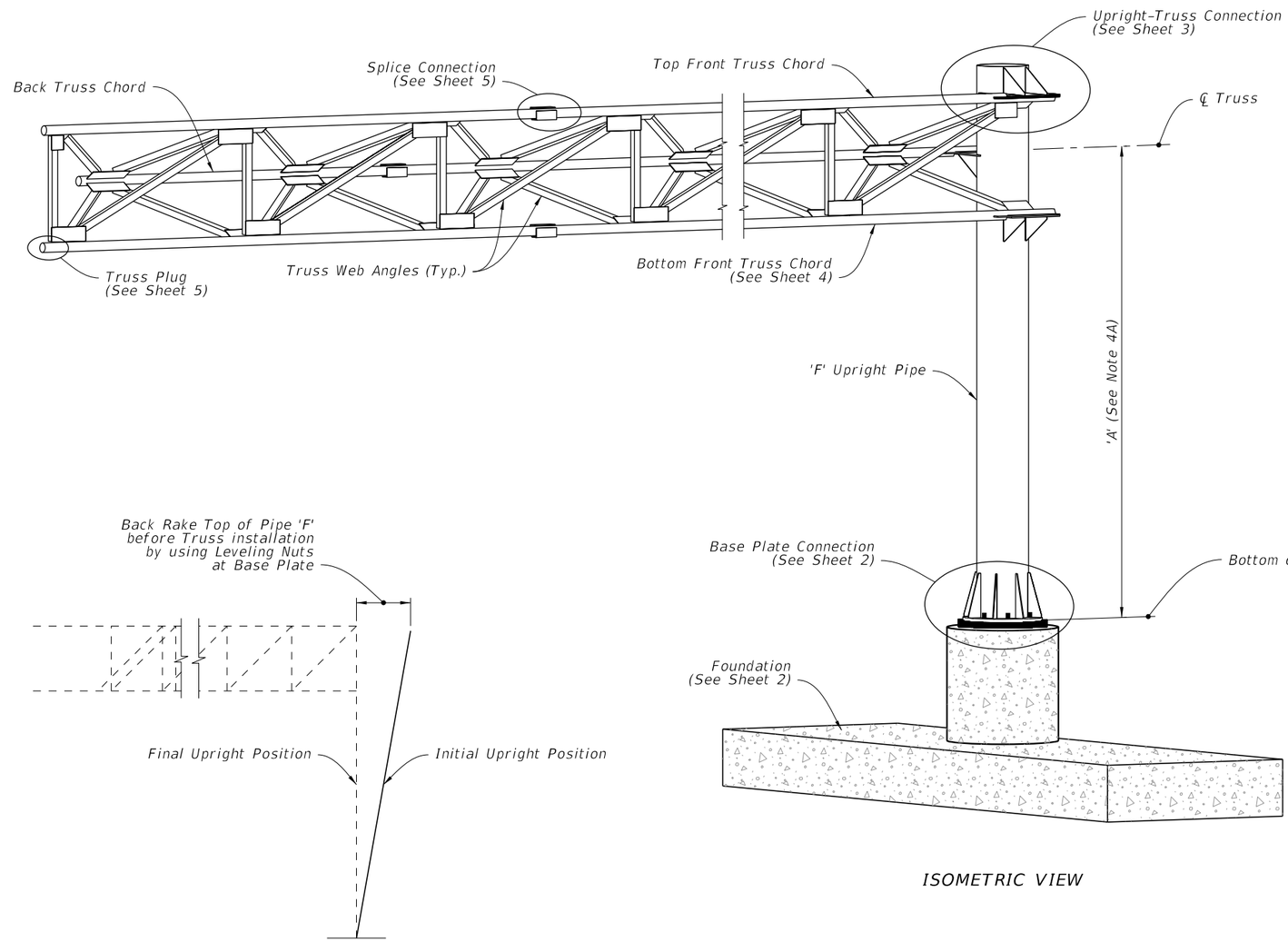

CAMBER DIAGRAM

ISOMETRIC VIEW

CANTILEVER SIGN ASSEMBLY

5/13/2024 11:29:58 AM

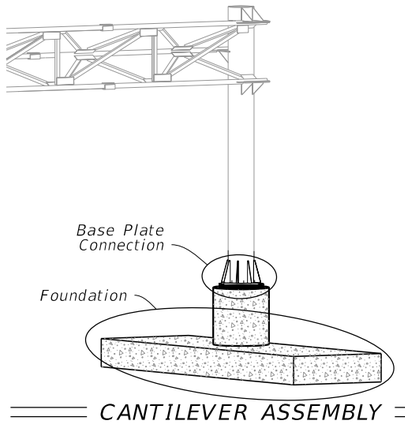

CANTILEVER ASSEMBLY

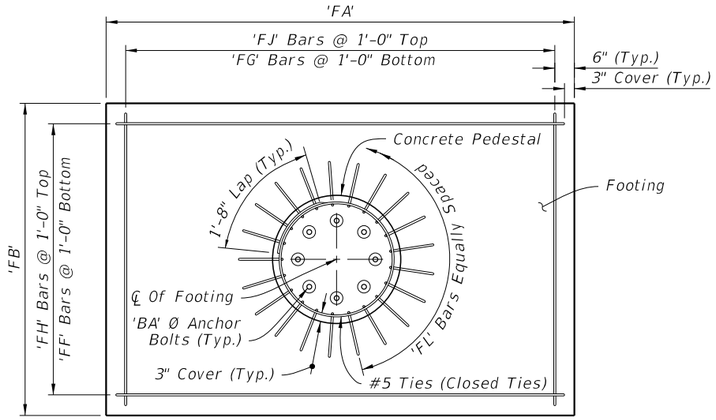

PLAN

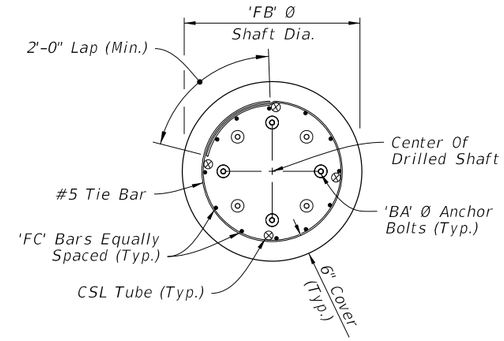

PLAN

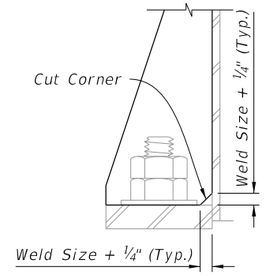

DETAIL 'A'

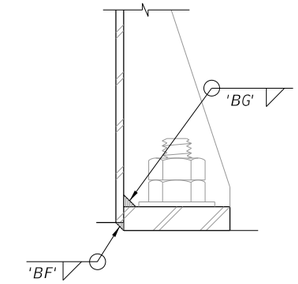

DETAIL 'B'

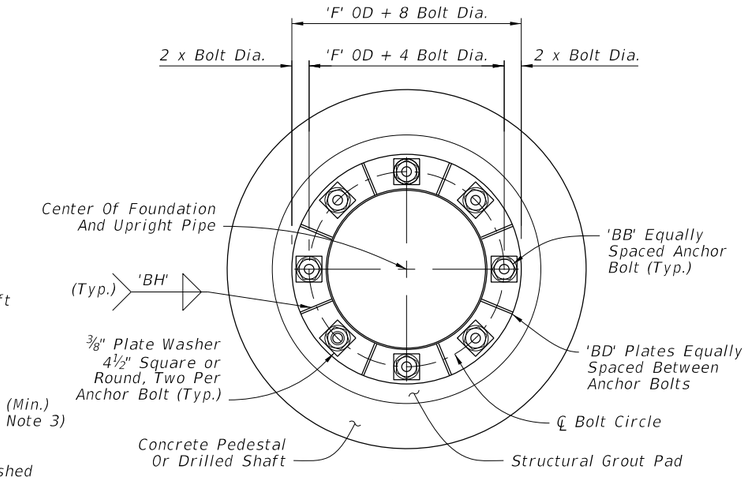

PLAN

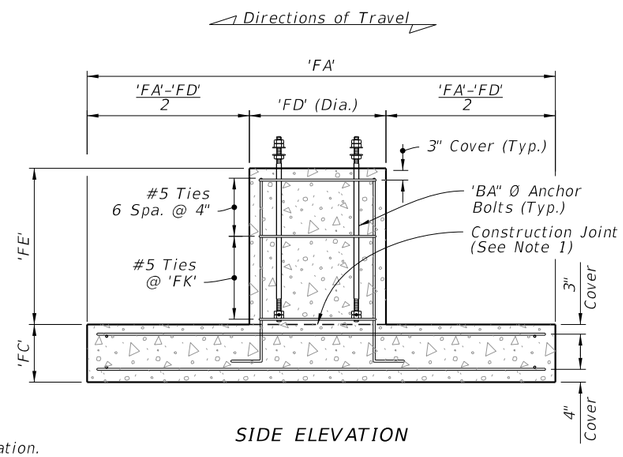

SIDE ELEVATION

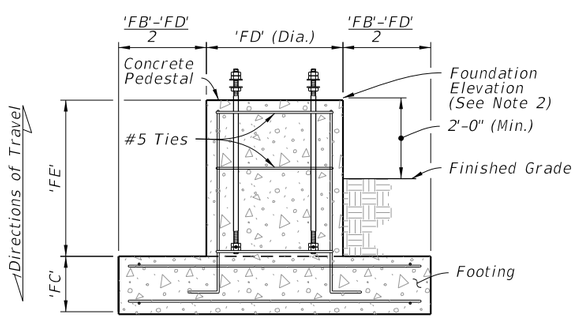

FRONT ELEVATION

FOOTING AND PEDESTAL

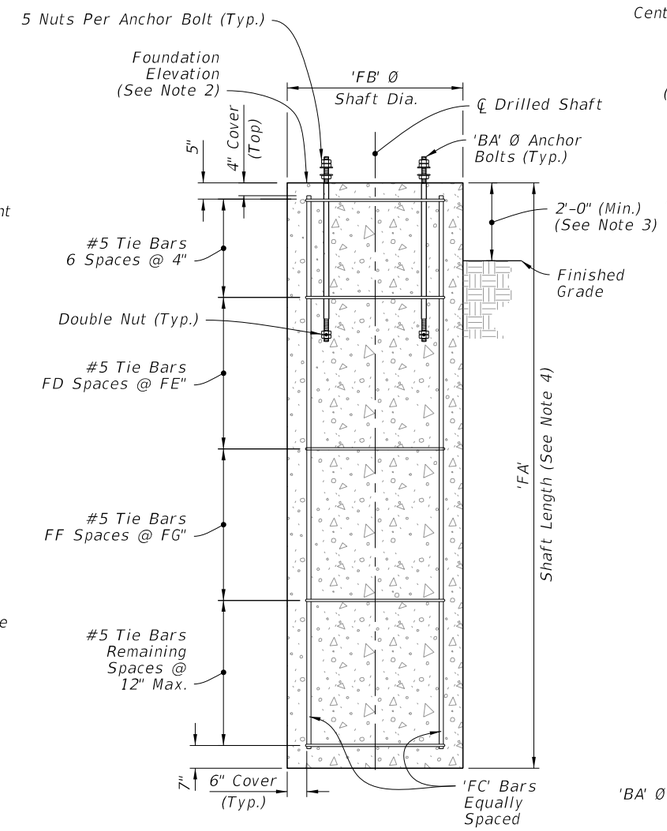

ELEVATION

DRILLED SHAFT
(Alternate Foundation)

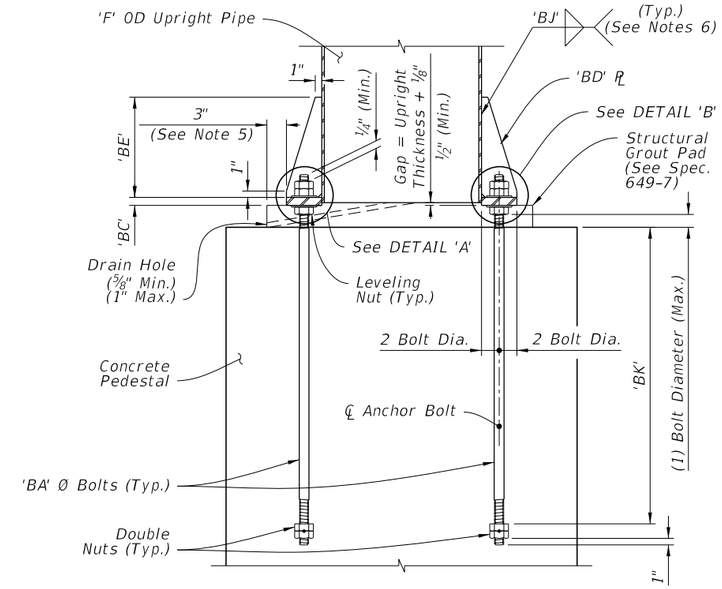

ELEVATION

NOTES:

1. Construction joint allowed, roughen surface to 1/4" minimum amplitude prior to pour.
2. See Traffic Plans for elevation at top of Foundation.
3. Install Drilled Shaft with a 2'-0" minimum from top elevation of the drilled shaft to the finished grade, unless specified otherwise in the plans.
4. The shaft length is based on 2'-0" height above finished grade.
5. Structural Grout Pad dimension may be modified to be less than 3" where the footprint of the Structural Grout Pad does not provide adequate clearance for accessibility considerations.
6. Wrap fillet weld around the stiffener termination on the tube wall.
7. Weld plates 'BD' in a star pattern. A star pattern is one in which the plates on opposite and near opposite sides of the pole circle are successively welded in a pattern resembling a star. For an 8 plate circle with plates sequentially numbered 1 to 8, weld the plates in the following order: (1, 5, 7, 3, 8, 4, 6, 2).

FOUNDATION

BASE PLATE CONNECTION

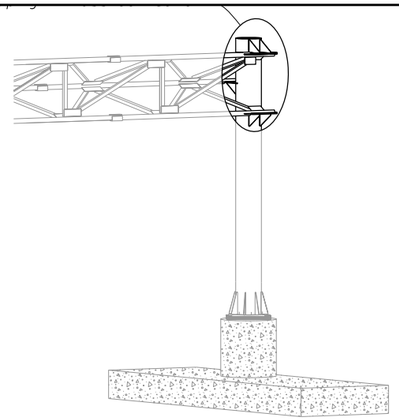

CANTILEVER ASSEMBLY

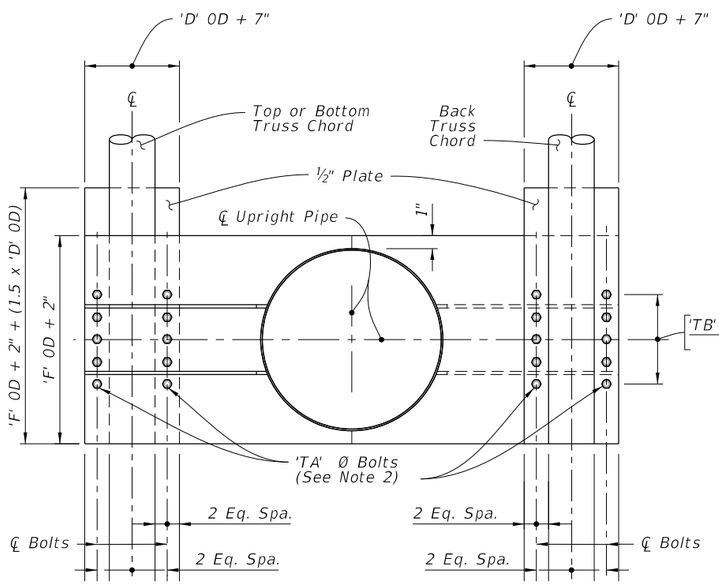

SECTION A-A

(With Gusset Plates And Web Angles Omitted For Clarity)

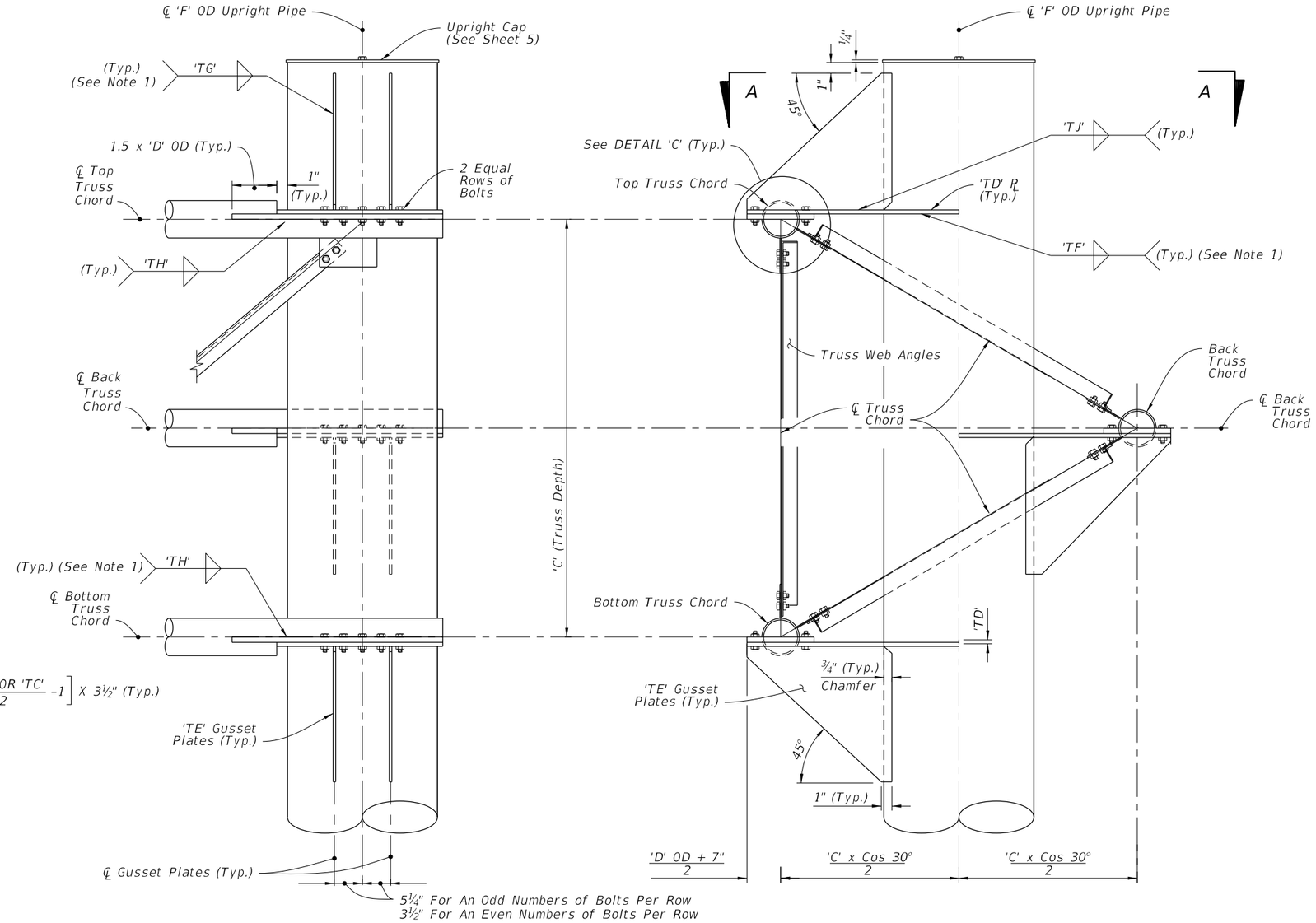

UPRIGHT-TRUSS CONNECTION DETAIL

(Web Members From Back Truss Chord Omitted For Clarity)

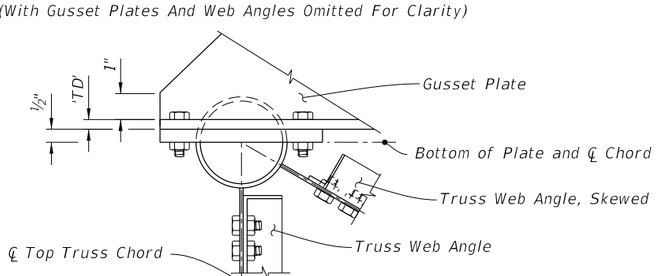

DETAIL 'C'

NOTES:

1. Wrap fillet weld around the stiffener termination on the tube wall.

2. Truss Chord Bolts:
   A. Top and Bottom: Install 'TC' hex head bolts.
   B. Back: Install 'TB' hex head bolts.

10/20/2022 8:56:50 AM

LAST REVISION	REVISION	DESCRIPTION:			INDEX	SHEET
11/01/22			FY 2023-24 STANDARD PLANS	CANTILEVER SIGN STRUCTURE	700-040	3 of 5

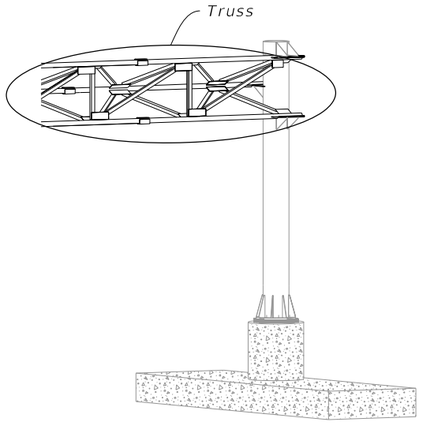

CANTILEVER ASSEMBLY

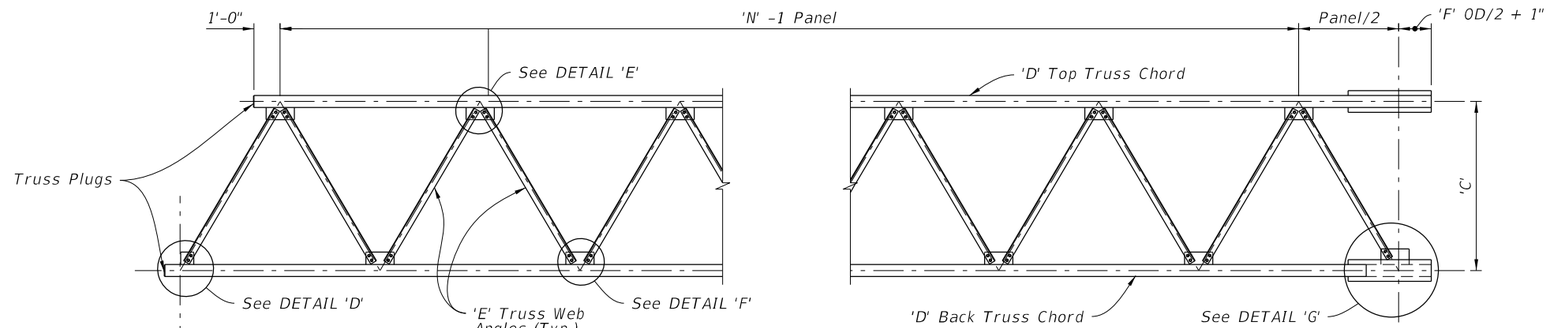

Section B-B (Section C-C Similar)
(See Note 1 & 3)

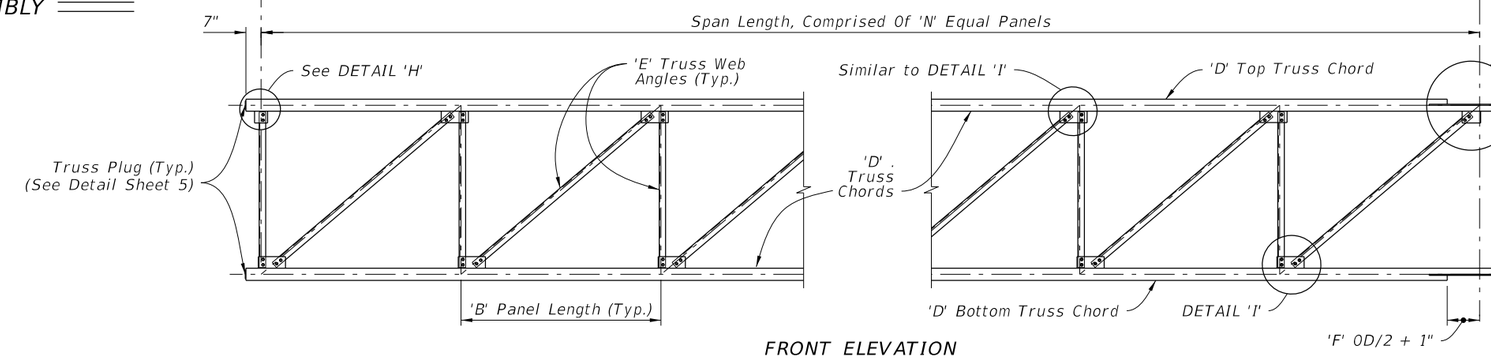

FRONT ELEVATION
(See Note 1 & 3)

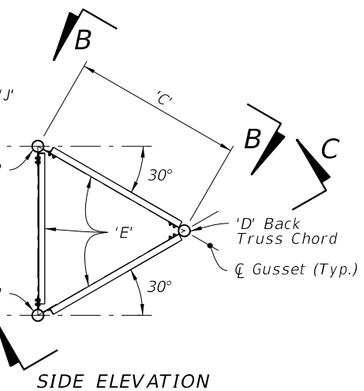

SIDE ELEVATION

TRUSS

TRUSS NOTES:

1. Out-of-plane members are not shown for clarity.
2. Wrap fillet weld around plate termination on the tube wall.
3. Chord Splices not shown.

Bolt Size	Distance	
	EA	EB
1¼" Ø	4⅜"	2¼"
1" Ø	3½"	1¾"
⅞" Ø	3"	1½"
¾" Ø	2½"	1¼"
⅝" Ø	2¼"	1⅛"

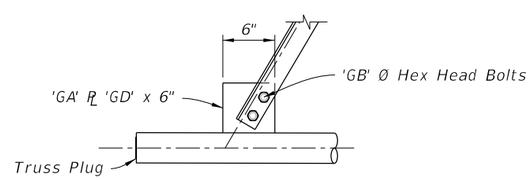

DETAIL 'D'

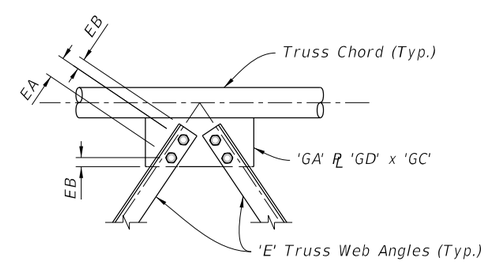

DETAIL 'E'

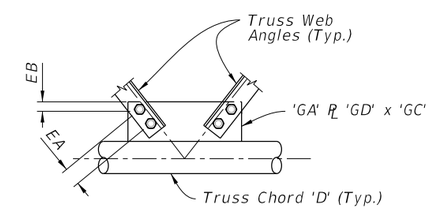

DETAIL 'F'

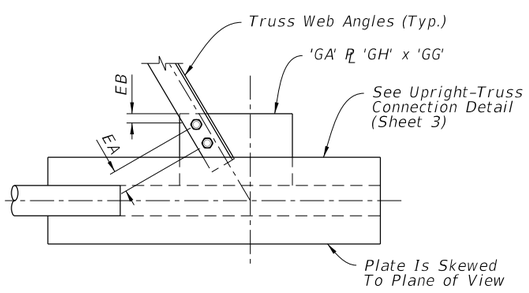

DETAIL 'G'

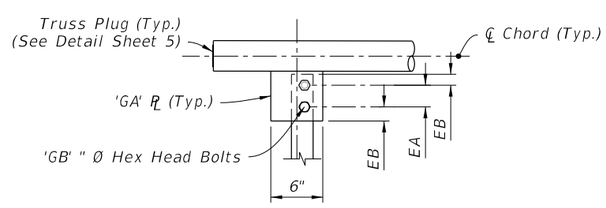

DETAIL 'H'

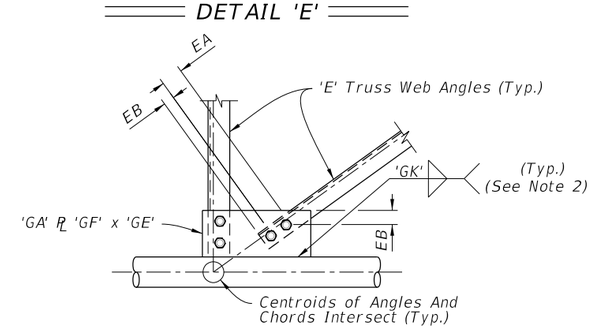

DETAIL 'I'

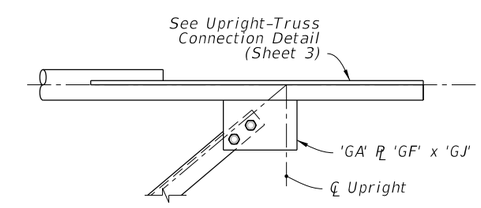

DETAIL 'J'

8:56:51 AM
10/20/2022

LAST REVISION	REVISION	DESCRIPTION:			INDEX	SHEET
11/01/22			FY 2023-24 STANDARD PLANS	CANTILEVER SIGN STRUCTURE	700-040	4 of 5

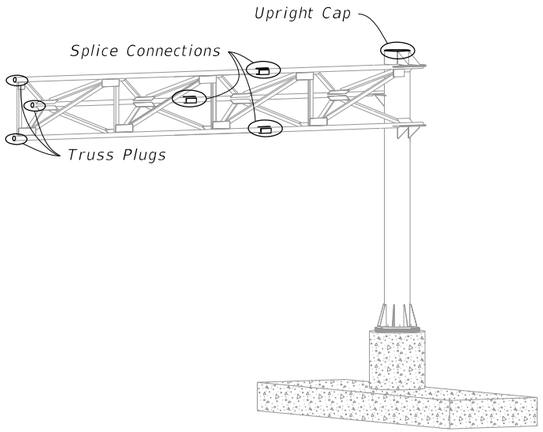

CANTILEVER ASSEMBLY

Bolt Size	Distance	
	A	B
1" Ø	1¾"	3½"
⅞" Ø	1½"	3"
¾" Ø	1¼"	2½"

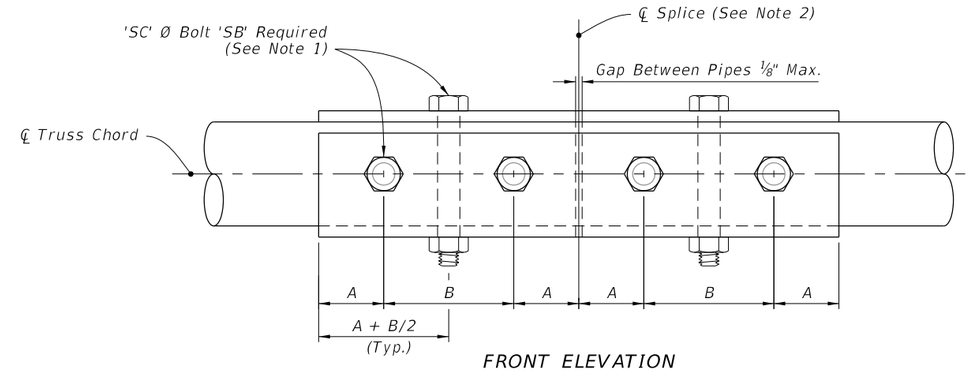

FRONT ELEVATION

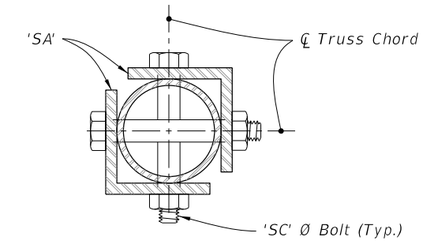

SIDE ELEVATION

SPLICE CONNECTION DETAIL

SPLICE CONNECTION NOTES:

1. Only 6 bolts are shown in detail for clarity. (One Half Each Side Of Splice)
2. Splices are not permitted for trusses less than or equal to 40', Splice optional for trusses greater than 40'.
3. Chord Splices: "SD" Panel from upright is the closest panel in which a chord splice may be used. See Plans for CANTILEVER SIGN STRUCTURE DATA TABLE. Minimum splice spacing is two truss panel lengths apart.

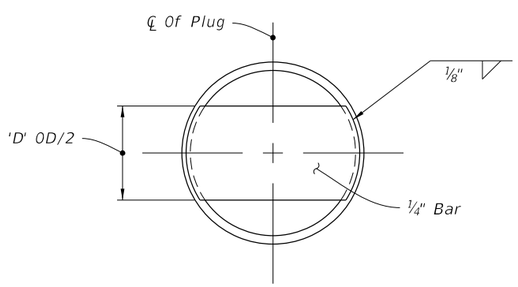

TRUSS PLUG DETAIL

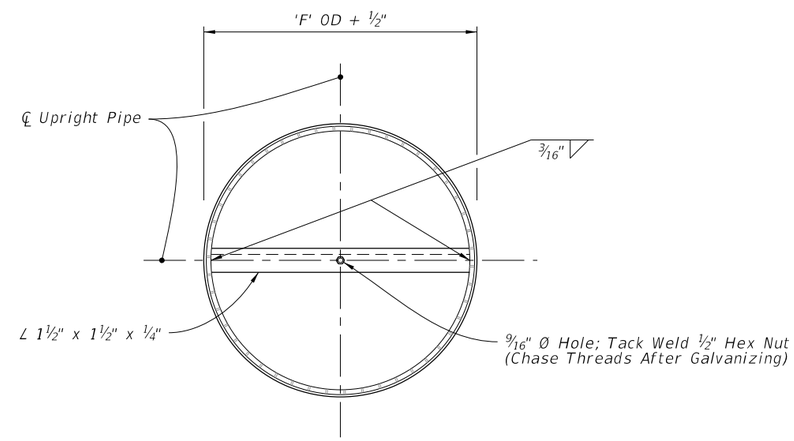

PLAN

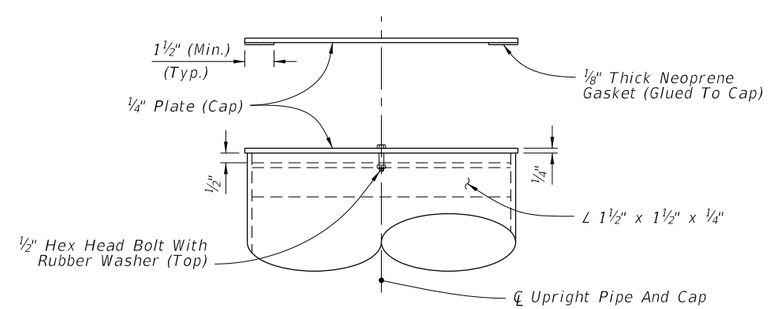

ELEVATION

UPRIGHT CAP DETAIL

10/20/2022 8:56:52 AM

LAST REVISION	REVISION	DESCRIPTION:	FY 2023-24 STANDARD PLANS	CANTILEVER SIGN STRUCTURE	INDEX	SHEET
11/01/22					700-040	5 of 5

GENERAL NOTES:

1. Meet the requirements of Specification 700.

2. Work this Index in conjunction with SPAN SIGN STRUCTURE DATA TABLES in the Plans and Index 700-030.

3. Handholes at the pole base are required for DMS Structures. Refer to Index 700-090 for Handhole Details.

4. Shop Drawings are required.

   Obtain Shop Drawing approval prior to fabrication. Include the following:
   A. Upright Pipe height ('C' & 'B') and foundation elevations: Verify dimensions in the field prior to submittal to ensure minimum vertical clearances of the sign panel over the roadway.
   B. Height of the foundation above adjacent ground.
   C. Anchor bolt orientation with respect to centerline of truss and the direction of traffic.
   D. Method to be used to provide the required parabolic camber (see Camber Diagram).
   E. Handholes at pole base (when required).

5. Provide a parabolic camber with the required upward deflection as shown on the Camber Diagram.

6. Materials:

   A. Sign Structure:
      a. Upright and Chords (Steel Pipe): API 5L X42 PSL2, 42 ksi yield or ASTM A500, Grade B (Min.)
      b. Steel Angles and Plates: ASTM A709 grade 36
   B. Bolts, Nuts and Washers:
      a. High Strength Bolts: ASTM F3125, Grade A325, Type 1
      b. Nuts: ASTM A563, Grade DH Heavy-Hex
      c. Washers: ASTM F436, Type 1, one under turned element
   C. Anchor Bolts, Nuts and Washers
      a. Anchor Bolts: ASTM F1554 Grade 55
      b. Nuts: ASTM A563 Grade A Heavy-Hex (5 per bolt)
      c. Plate Washers: ASTM A36 (2 per bolt)

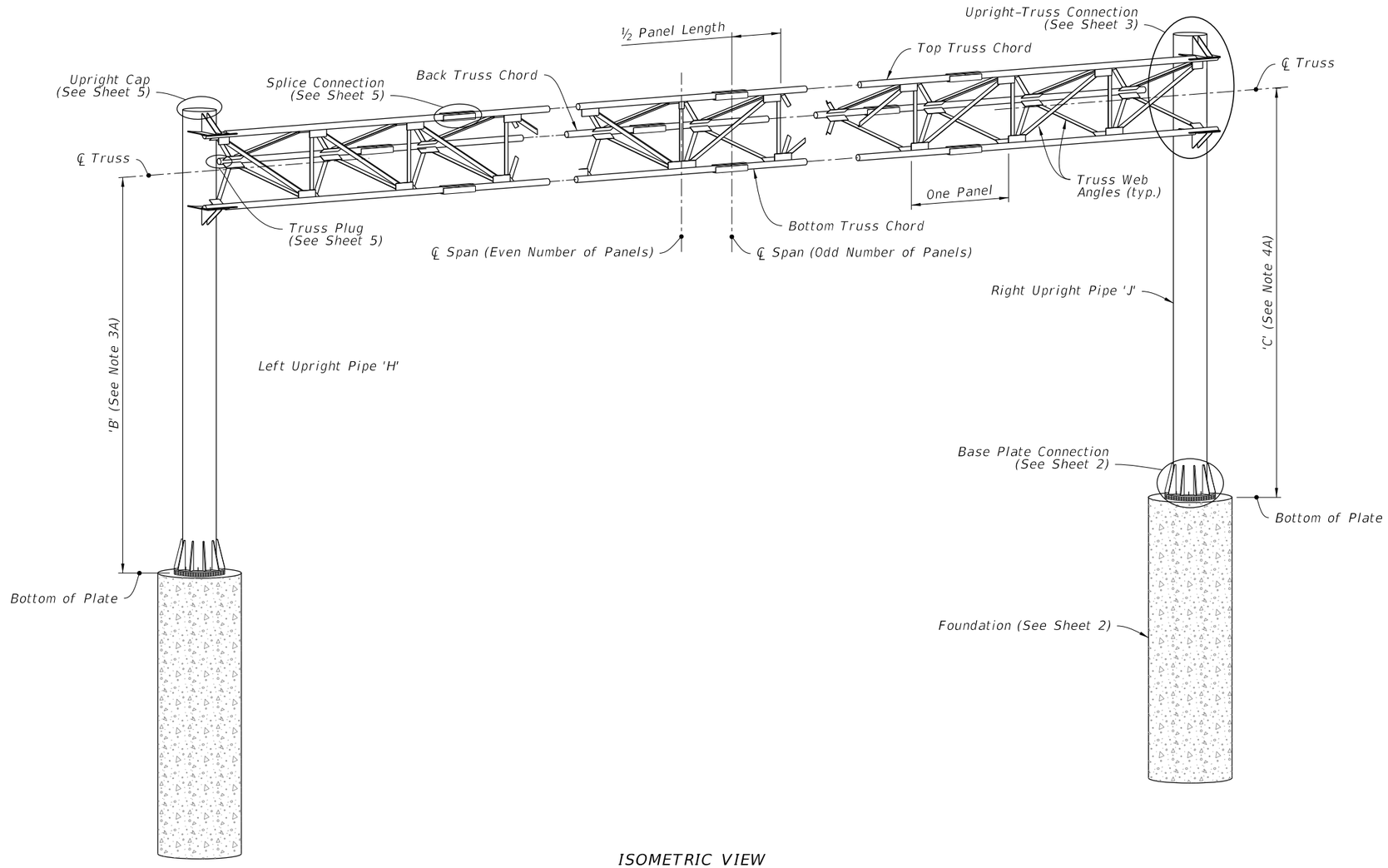

ISOMETRIC VIEW

SPAN SIGN ASSEMBLY

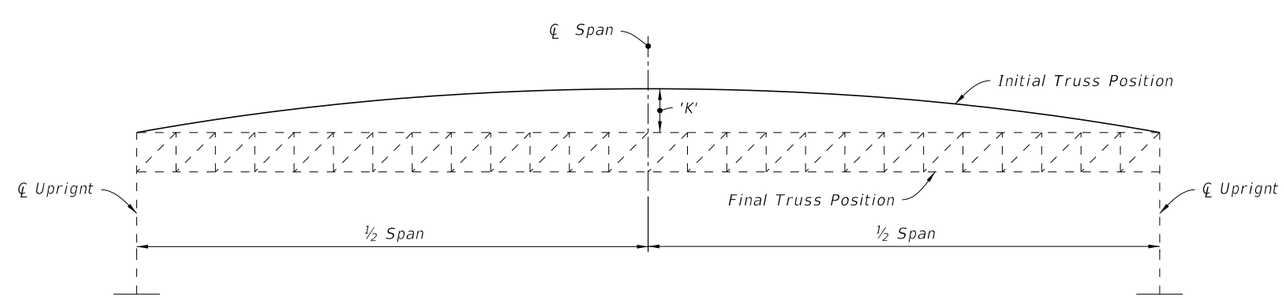

CAMBER DIAGRAM

5/13/2024 1:54:49 PM

LAST REVISION	REVISION	DESCRIPTION:			INDEX	SHEET
11/01/22			FY 2023-24 STANDARD PLANS	SPAN SIGN STRUCTURE	700-041	1 of 5

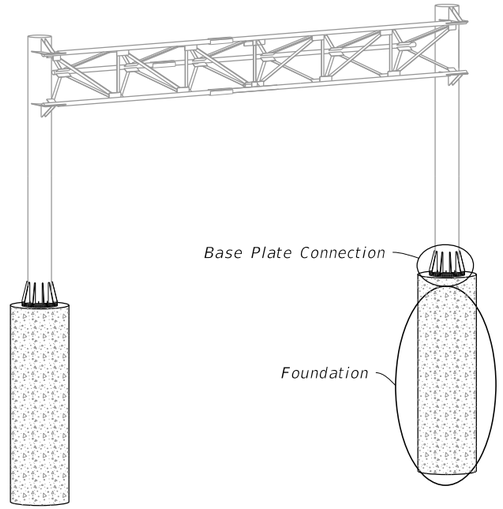

SPAN SIGN ASSEMBLY

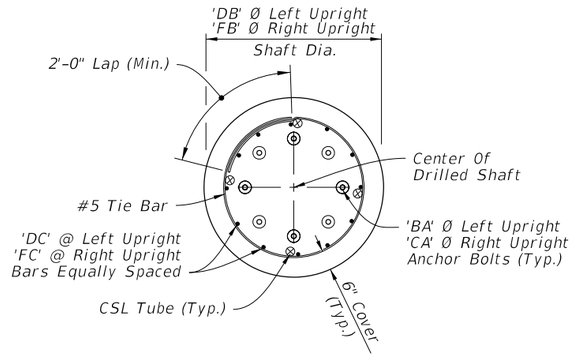

PLAN

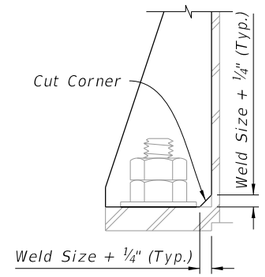

DETAIL "A"

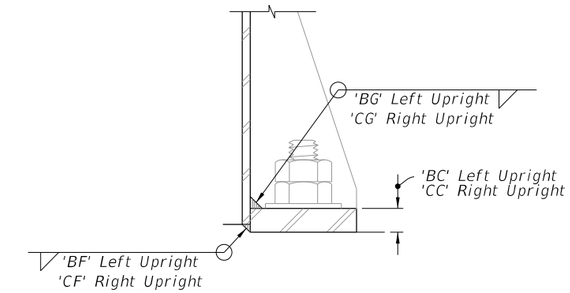

DETAIL "B"

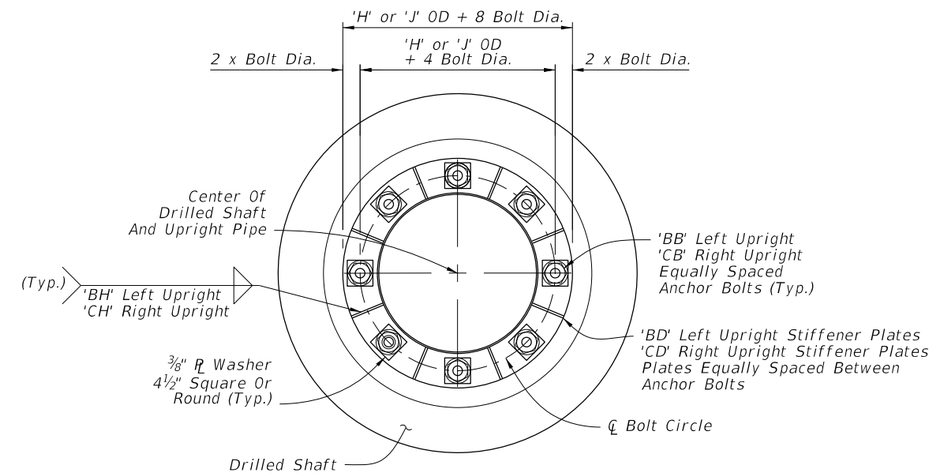

PLAN

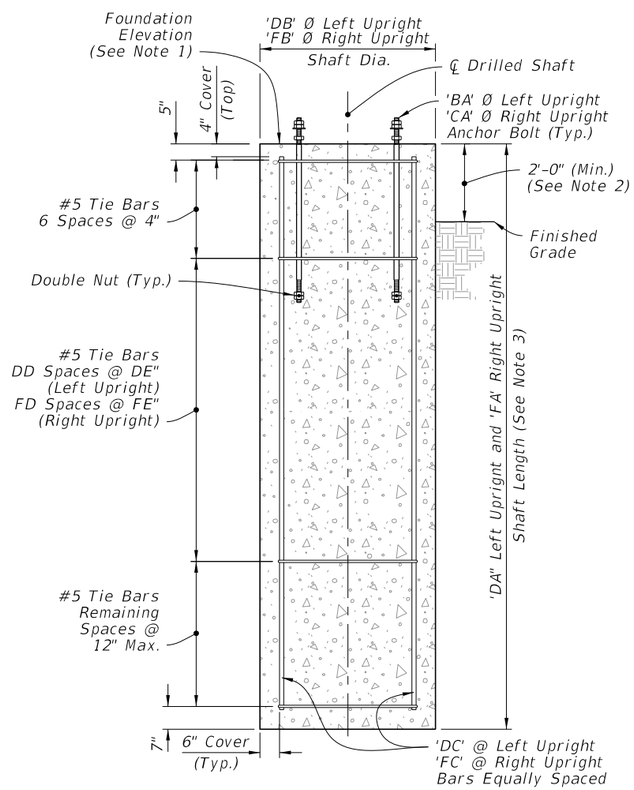

ELEVATION

DRILLED SHAFT

FOUNDATION

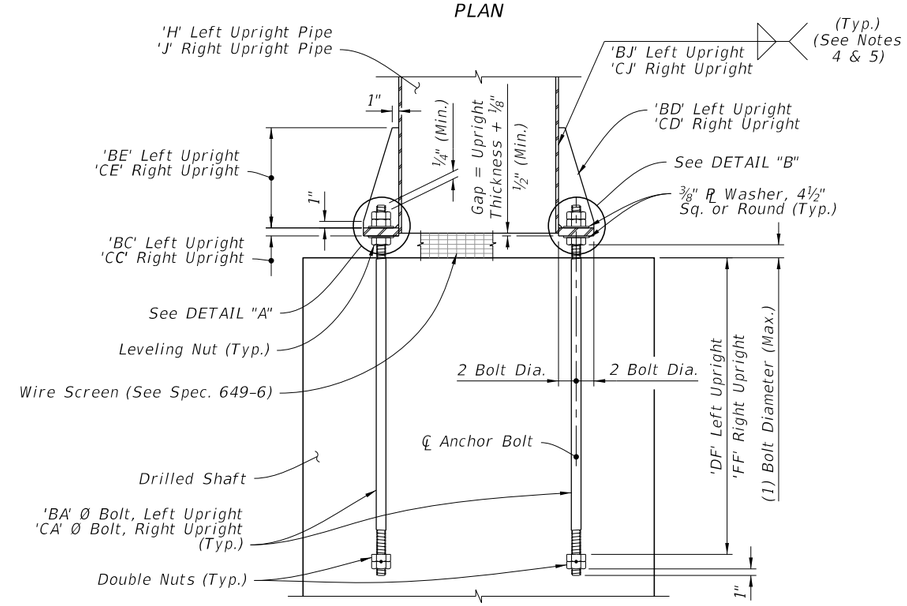

ELEVATION

BASE PLATE CONNECTION

NOTES:

1. See Traffic Plans for elevation at top of Foundation.
2. Install Drilled Shaft with a 2'-0" minimum from top elevation of the drill shaft to the finished grade, unless specified otherwise in the plans.
3. The shaft length is based on 2'-0" height above finished grade.
4. Wrap fillet weld around the stiffener termination on the tube wall (Typ).
5. After galvanizing, provide magnetic particle testing on 100% of upright fillet welds.
6. Weld plates 'BD' and 'CD' in a star pattern. A star pattern is one in which the plates on opposite and near opposite sides of the pole circle are successively welded in a pattern resembling a star. For an 8 plate circle with plates sequentially numbered 1 to 8, weld the plates in the following order: (1, 5, 7, 3, 8, 4, 6, 2).

10/20/2022 8:56:54 AM

LAST REVISION	REVISION	DESCRIPTION:			INDEX	SHEET
11/01/22			FY 2023-24 STANDARD PLANS	SPAN SIGN STRUCTURE	700-041	2 of 5

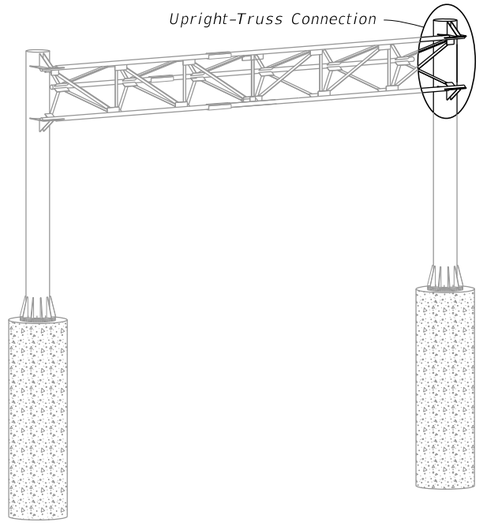

SPAN SIGN ASSEMBLY

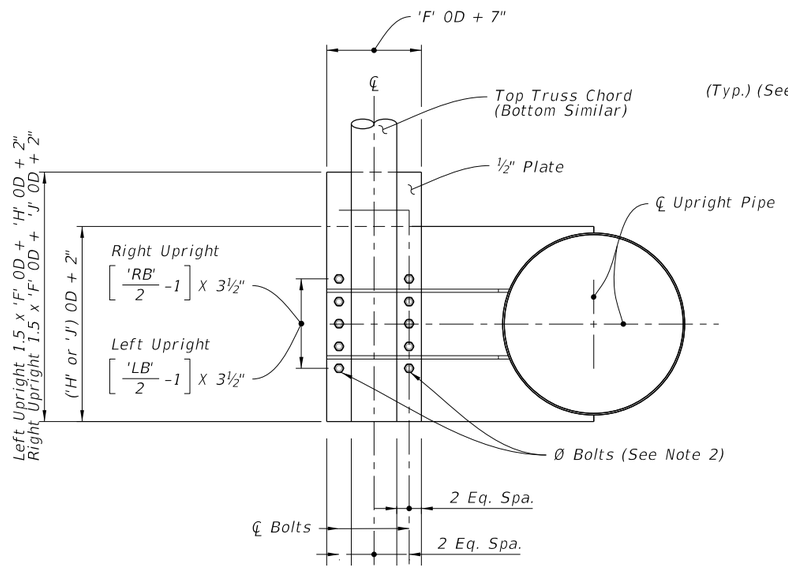

SECTION A-A

(With Gusset Plates And Web Angles Omitted For Clarity)

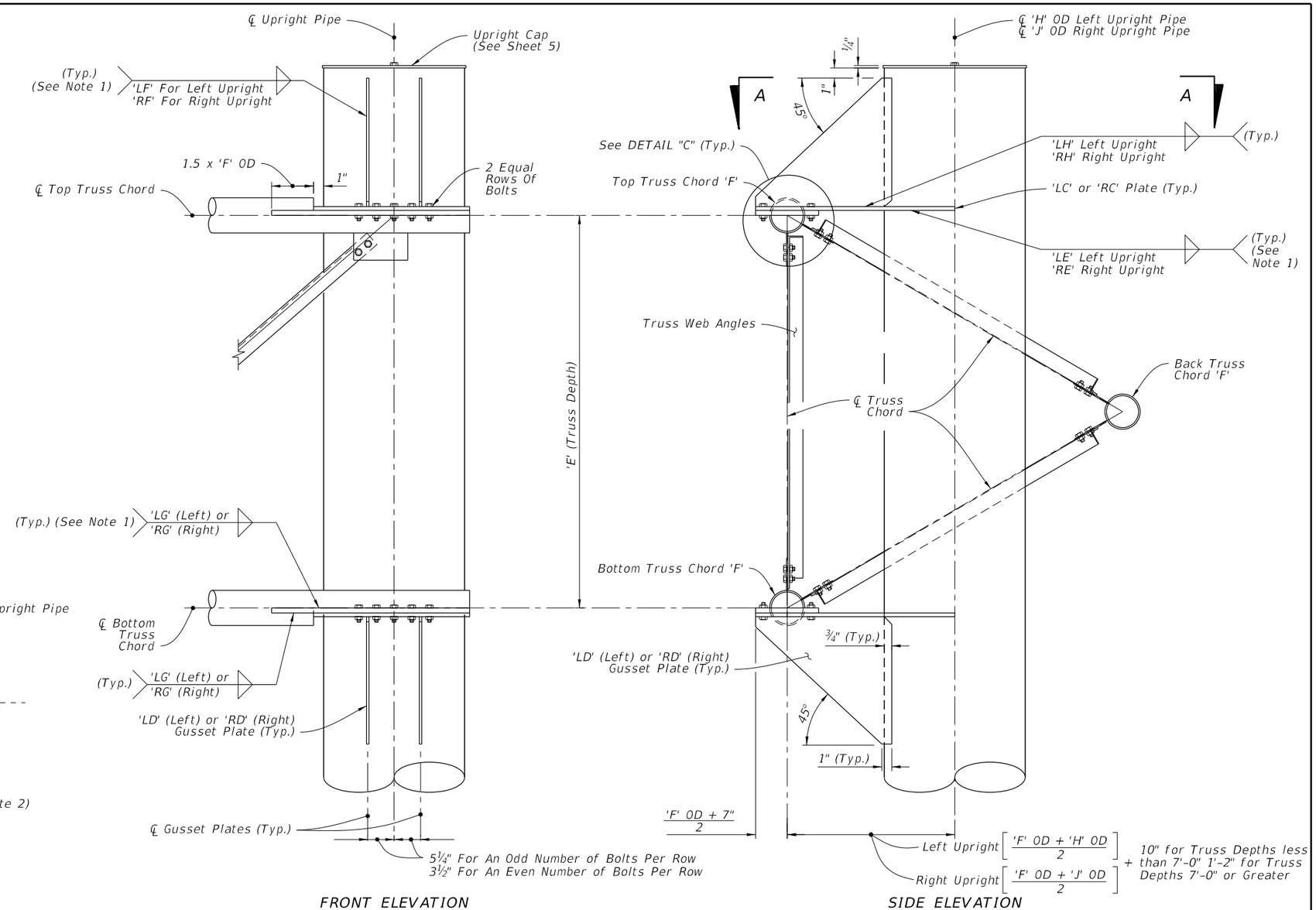

UPRIGHT-TRUSS CONNECTION DETAIL

(Web Members From Back Truss Chord Omitted For Clarity, See Note 3)

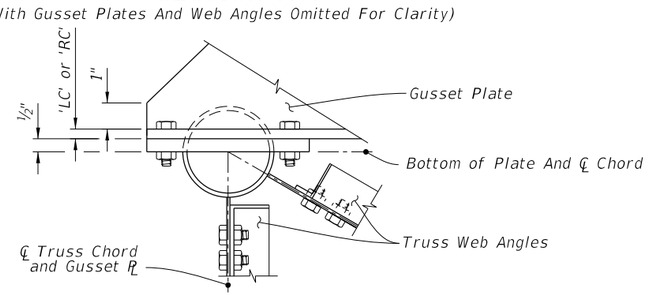

DETAIL "C"

NOTES:

1. Wrap fillet weld around the stiffener termination on the tube wall.
2. Truss Chord Bolts: 'LB' or 'RB' Hex Head Bolts 'LA' or RA' Ø.
3. Right Upright Truss connection shown, Left Upright Truss connection similar.

10/20/2022 8:56:55 AM

LAST REVISION	REVISION	DESCRIPTION:			INDEX	SHEET
11/01/22			FY 2023-24 STANDARD PLANS	SPAN SIGN STRUCTURE	700-041	3 of 5

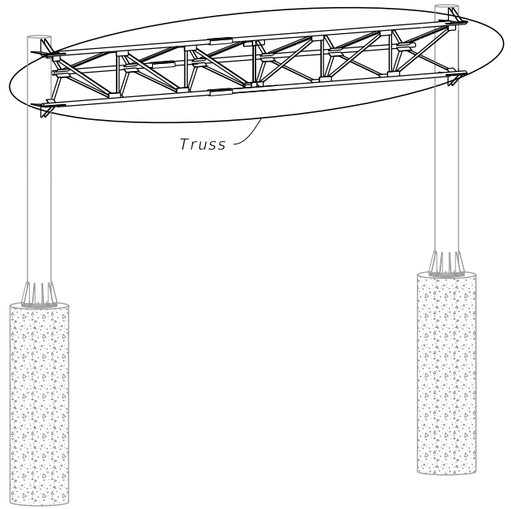

SPAN SIGN ASSEMBLY

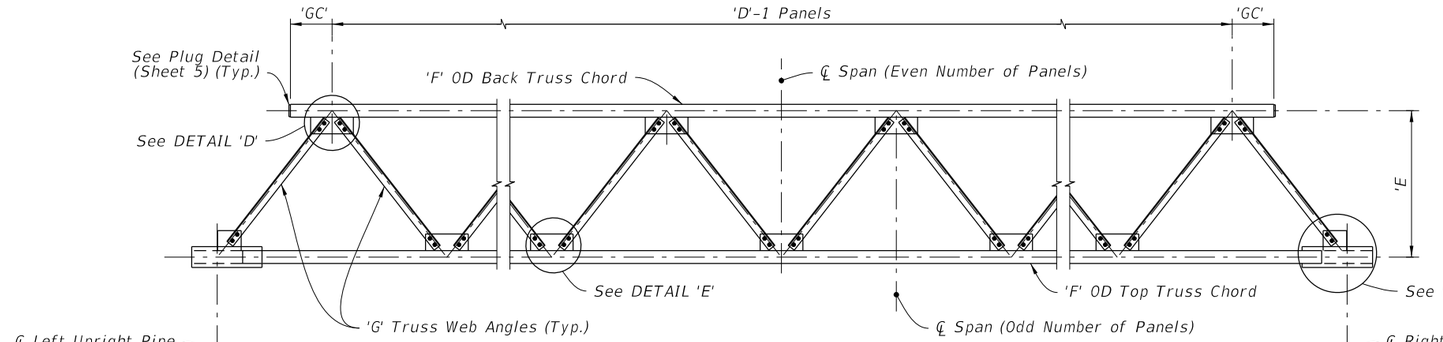

Section B-B (Section C-C Similar)
(See Note 1)

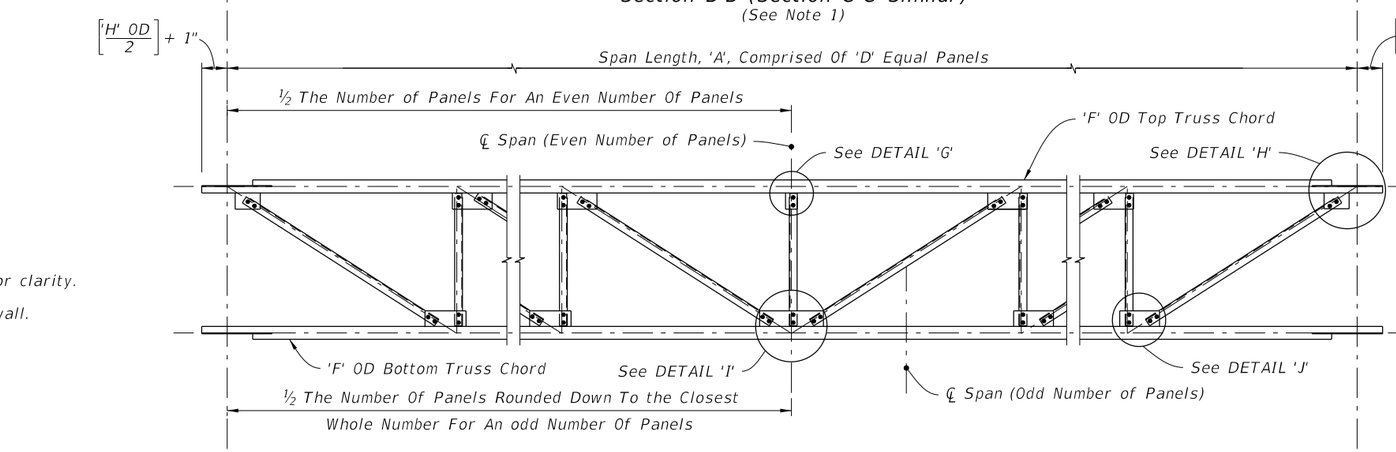

FRONT ELEVATION
(See Note 2)

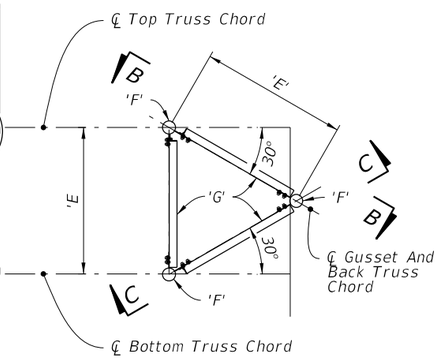

SIDE ELEVATION

NOTES:
1. Out-of-plane members are not shown for clarity.
2. Back truss chord and attached angles are not shown for clarity.
3. Wrap fillet weld around plate termination on the tube wall.

Bolt Diameter (in.)	Distance (in.)	
	EA	EB
1¼	4⅜	2¼"
1	3½	1¾
⅞	3	1½
¾	2½	1¼
⅝	2¼	1⅛

TRUSS

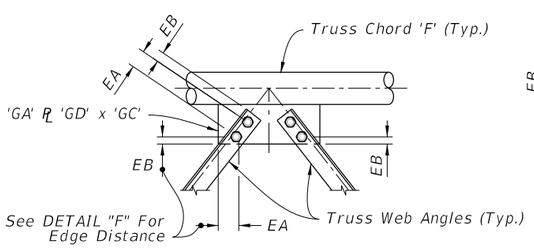

DETAIL 'D'

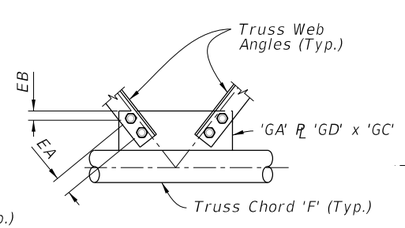

DETAIL 'E'

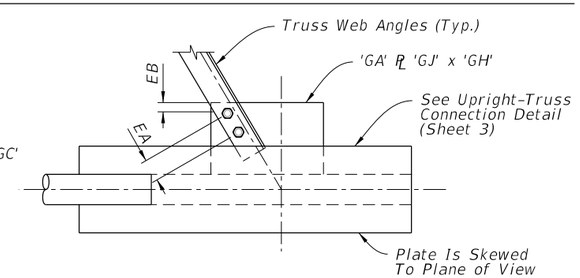

DETAIL 'F'

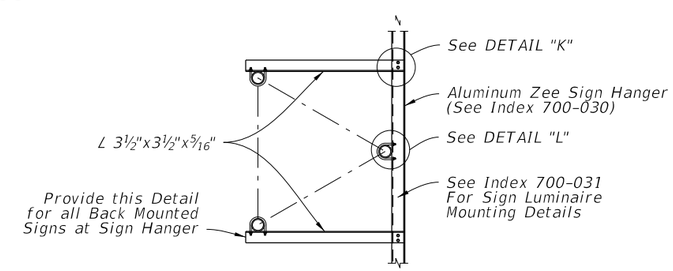

BACK-SIDE SIGN MOUNTING

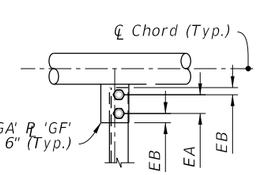

DETAIL 'G'

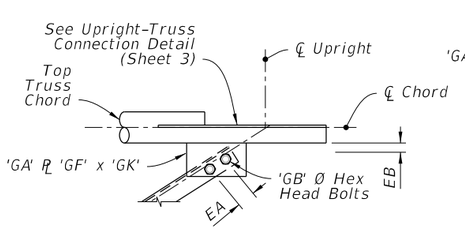

DETAIL 'H'

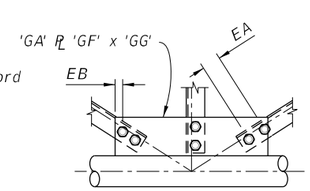

DETAIL 'I'

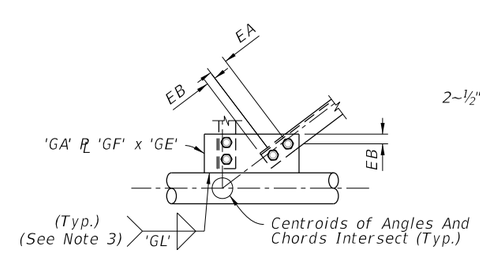

DETAIL 'J'

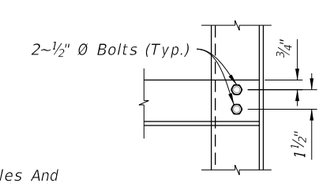

DETAIL 'K'

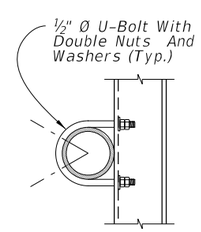

DETAIL 'L'

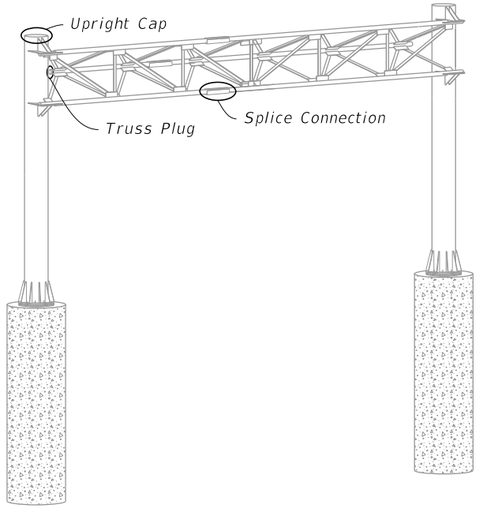

SPAN SIGN ASSEMBLY

Bolt Diameter (in.)	Distance (in.)	
	A	B
1	1¾	3½
⅞	1½	3
¾	1¼	2½

SPLICE CONNECTION NOTE:

1. Only 6 bolts are shown in detail for clarity. (One Half Each End Of Splice)
2. Chord Splices: Minimum splice spacing is three truss panel lengths apart and three truss panel lengths from the uprights when panel lengths are 10'-0" or less. Chord Splices may be either the Standard Splice or the Alternate Splice, but not both on the same structure.
3. Upright splice: Not allowed unless the upright exceeds available mill lengths (35' – 40').

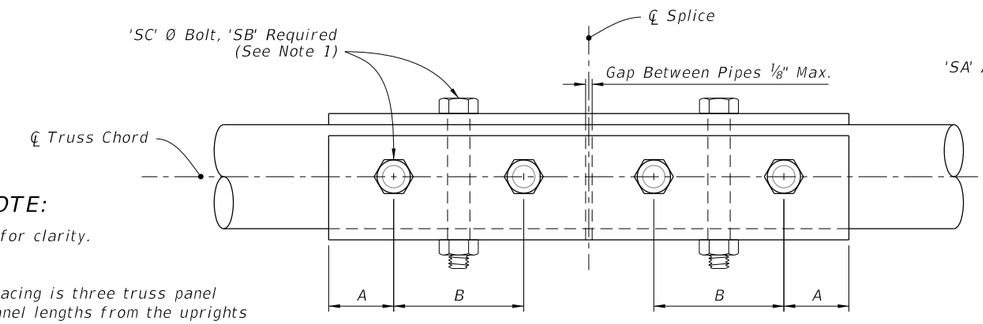

FRONT ELEVATION

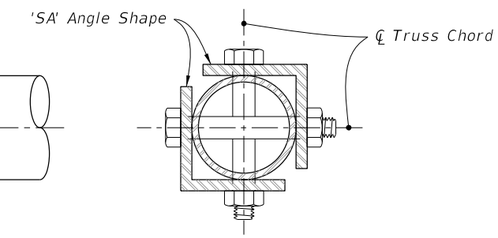

SIDE ELEVATION

SPLICE CONNECTION DETAIL

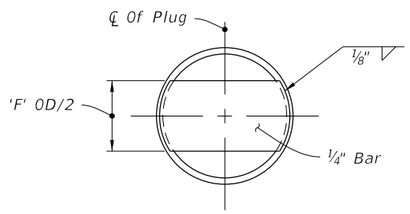

(Each End Of Back Truss Chord)

TRUSS PLUG DETAIL

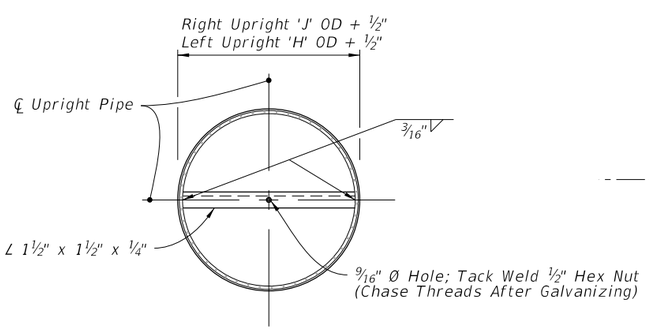

PLAN

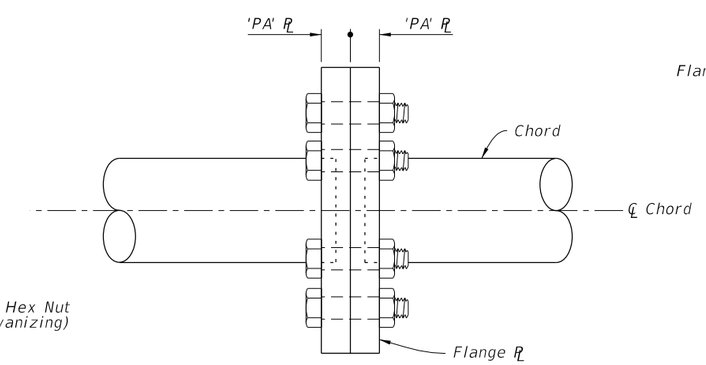

FRONT ELEVATION

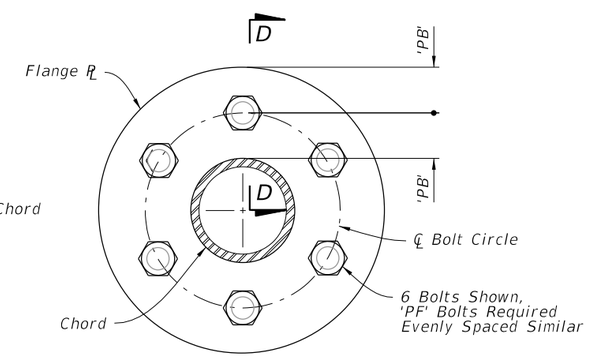

SIDE ELEVATION

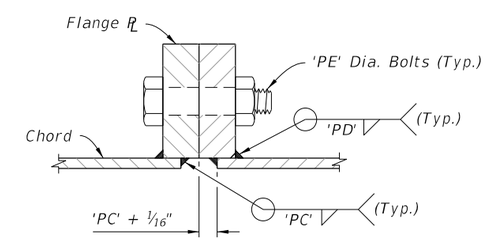

SECTION D-D

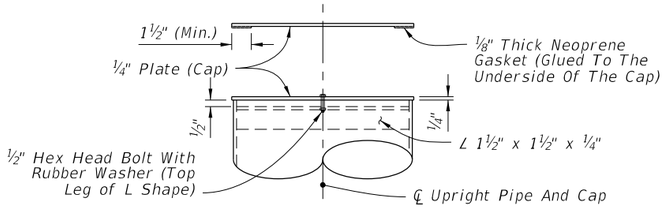

ELEVATION

UPRIGHT CAP DETAIL

ALTERNATE SPLICE CONNECTION DETAIL

8:56:57 AM

10/20/2022

LAST REVISION	REVISION	DESCRIPTION:			INDEX	SHEET
11/01/22			FY 2023-24 STANDARD PLANS	SPAN SIGN STRUCTURE	700-041	5 of 5

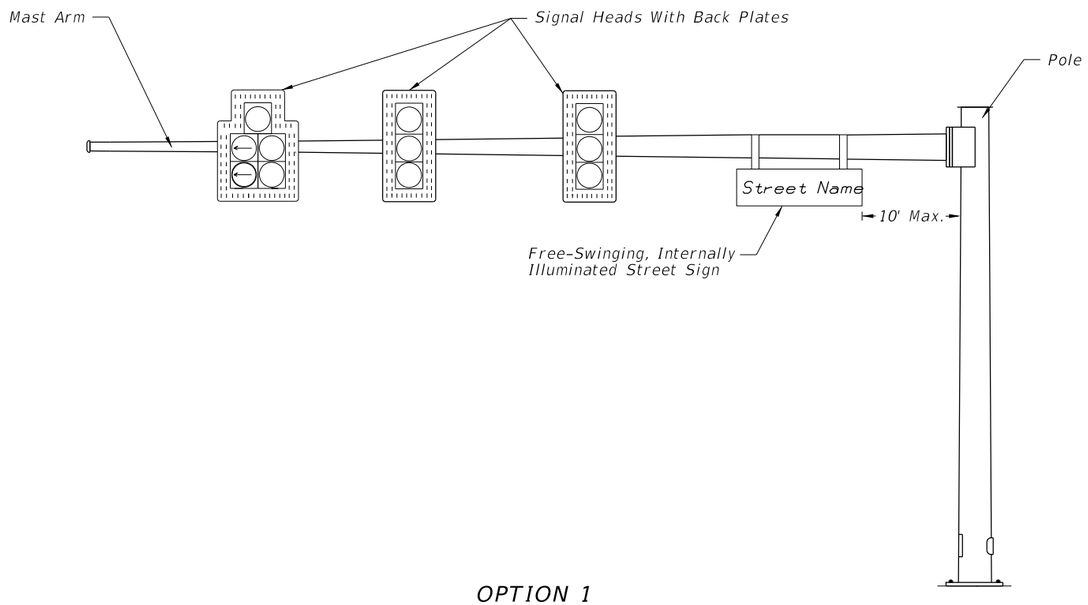

OPTION 1

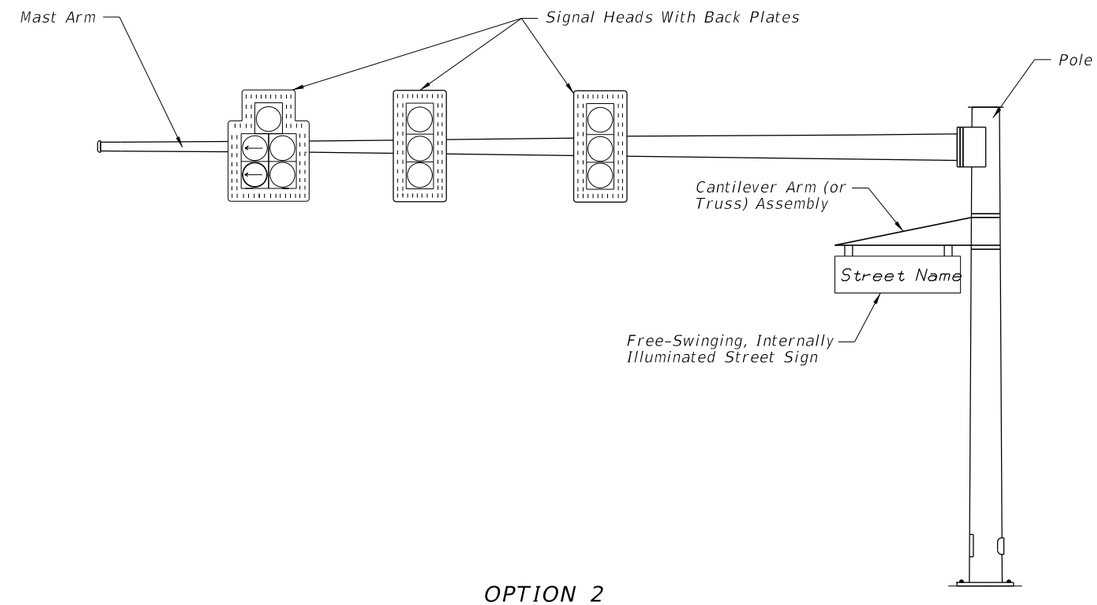

OPTION 2

MAST ARM ASSEMBLY

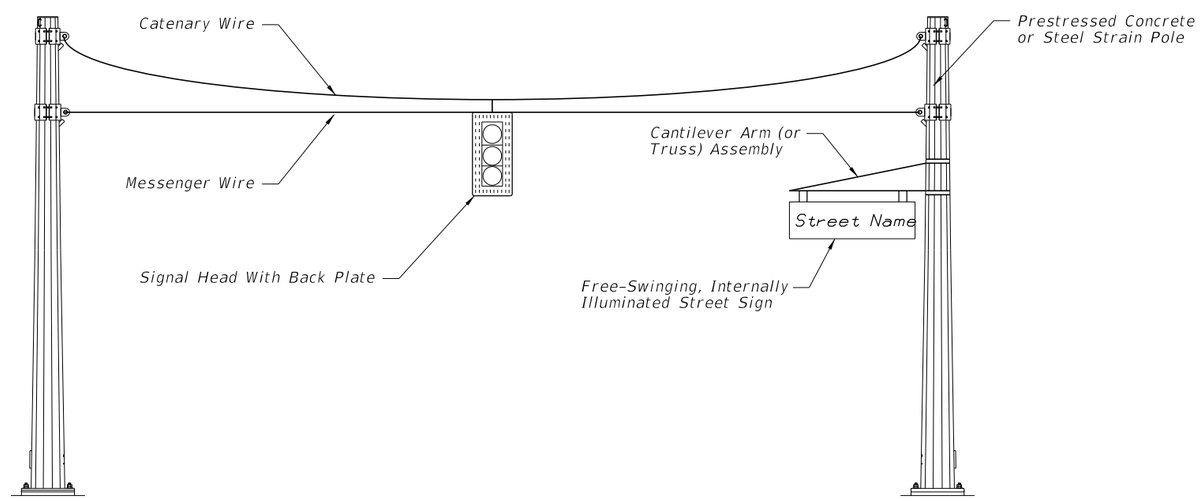

SPAN WIRE ASSEMBLY

NOTES:

1. Free-swinging, internally-illuminated street signs shall only be installed on the signal pole for span wire assemblies. For mast arm assemblies the street sign may be installed on the arm or pole.

2. Free-swinging, internally-illuminated street signs meet the requirements of Specification 700.

3. Pole attachments and cantilever arm (or truss) assemblies may be accepted by Contractor certification provided the signs being supported meet the weight and area limitations included in Specification 700 for "Acceptance by Certification".

4. Pole attachments and cantilever arm (or truss) assemblies supporting signs not meeting the weight or area limitations included in Specification 700 for "Acceptance by Certification" require the submittal of structural calculations and Shop Drawings that have been prepared by and sealed by the Specialty Engineer.

10/20/2022 8:56:58 AM

LAST REVISION	REVISION	DESCRIPTION:				
11/01/17			FY 2023-24 STANDARD PLANS	FREE-SWINGING, INTERNALLY-ILLUMINATED STREET SIGN ASSEMBLIES	INDEX 700-050	SHEET 1 of 1

GENERAL NOTES:

1. Meet the requirements of Specification 700.

2. Furnish and install the Dynamic Message Sign (DMS), sign structure in accordance with Index 700-040 or 700-041. Locate foundations at locations shown in the Plans.

3. Shop Drawings are required:

   A. Include the DMS connection
   B. Do not start fabrication until the shop drawings are approved

4. If required, install guardrail at location show in the Plans and in accordance with Index 536-001.

5. Installation:

   A. See project requirements for location of DMS Cabinet.
   B. Field Adjust pole-mounted DMS cabinet height to achieve best access for maintenance personnel given site condition as directed by the Engineer. Avoid conflicts with stiffeners, handhole and maintenance of anchor bolts.
   C. Locate the sign horizontal on the structure as shown in the Plans. Vertically center the sign enclosure with the centerline of the truss.
   D. Before erection, field drill the bolt holes in the vertical hangers and horizontal mounting member attached to the sign enclosure. Field locate holes to allow vertical hanger placement as shown on the Plans with no conflicts with gusset or splice plates.
   E. Locate threaded couplings on sign side of upright above the sign truss
   F. Connect grounding conductors to the steel framework that has been cleaned to base metal by use of bonding plates having contact area of not less than 8 square inches or by welding or brazing. Drilling and tapping the steel structure to accept a threaded connector is also an acceptable method
   G. If steel framework is to be drilled and tapped to accept threaded connector, the threaded connector shall be galvanized and have at least 5 threads fully engaged and secured with a jam nut to the steel framework.
   H. Bends in the conduit must be greater than the minimum bending radius for the cable contained in the conduit.
   I. Completely encase all data, fiber optic and power cables for the DMS within the sign structure or in conduit.
   J. Permanently stamp/mark foundation to indicate conduit locations.
   K. Transition conduit in foundation to indicate underground conduit with appropriate reducer outside the limits of the foundation.

6. Materials (Sign Mounting Components):

   A. Aluminum Structural Shapes: ASTM B221, Alloy 6061-T6
   B. Vertical Hangers: ASTM A709, Grade 36
   C. U-Bolts: ASTM A449 or A193 B7
   D. Steel Bolts, Nuts, and Washers:
      1. High Strength Bolts: ASTM F3125, Grade A325, Type 1
      2. Nuts: ASTM F563
      3. Washers: ASTM F463 (Flat Washer)

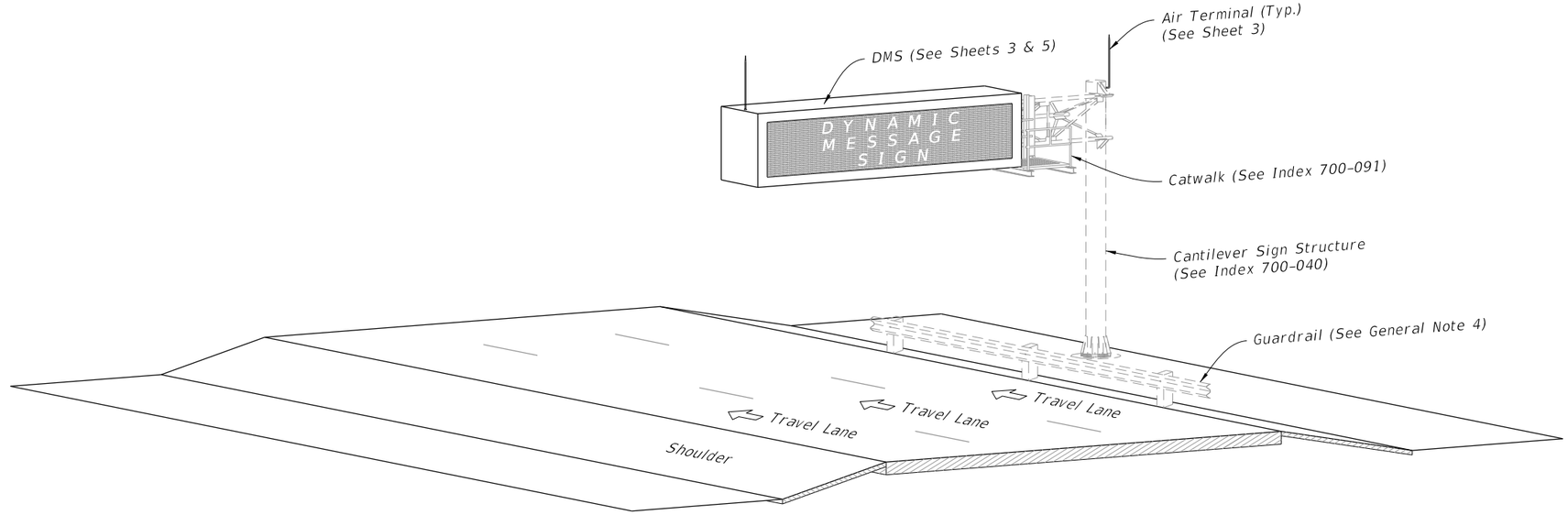

CANTILEVER ISOMETRIC VIEW

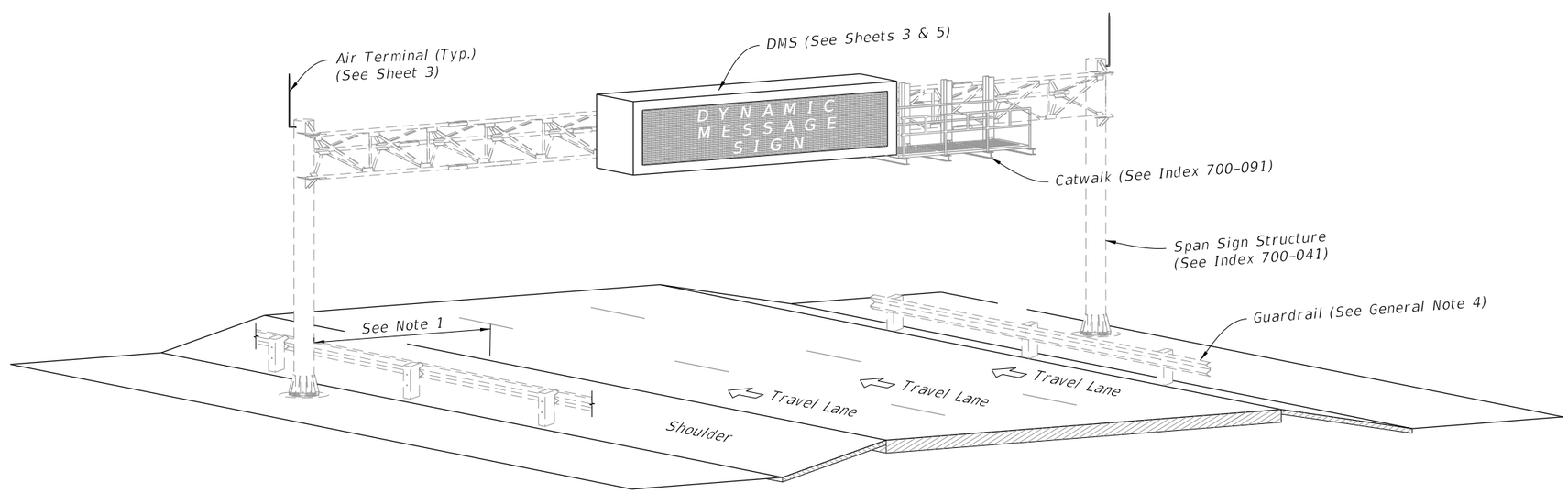

SPAN ISOMETRIC VIEW

DYNAMIC MESSAGE SIGN ASSEMBLY

5/14/2024 2:10:01 PM

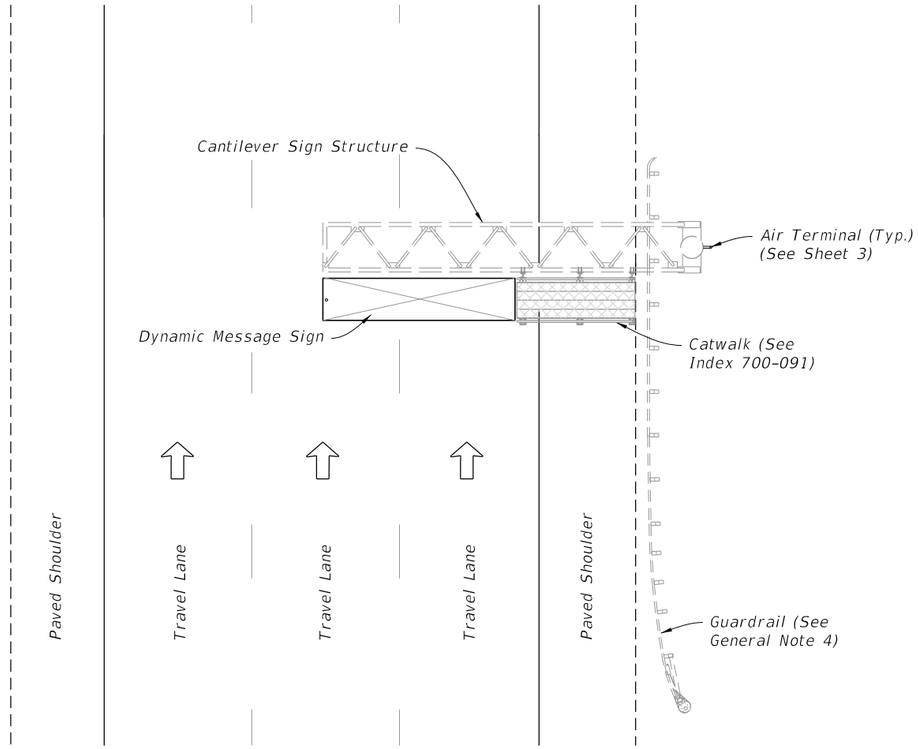

CANTILEVER STRUCTURE PLAN VIEW

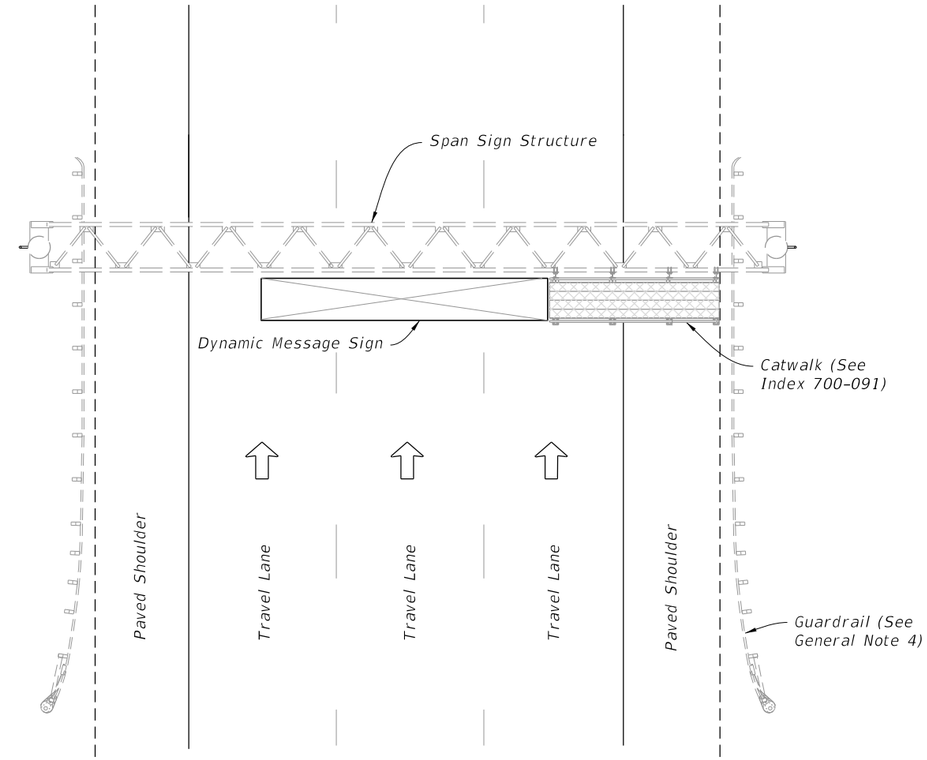

SPAN STRUCTURE PLAN VIEW

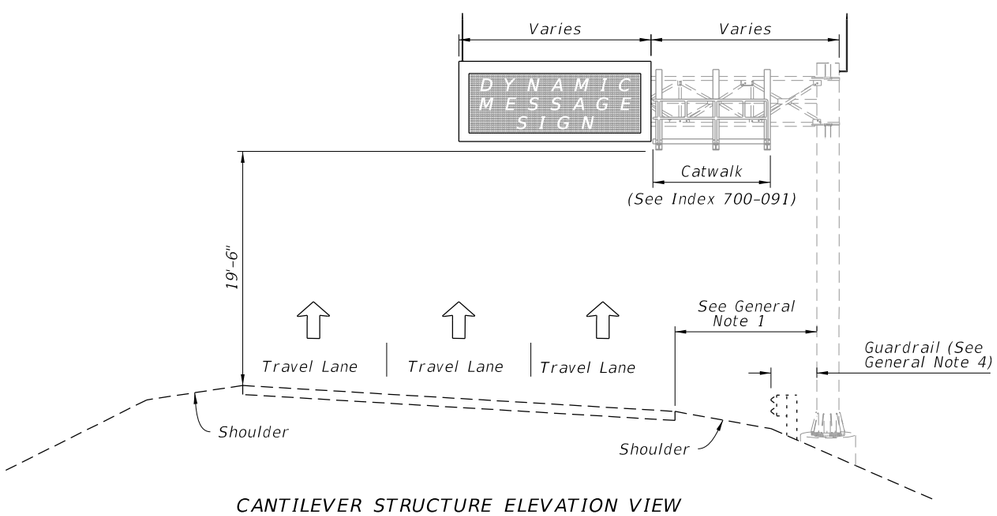

CANTILEVER STRUCTURE ELEVATION VIEW

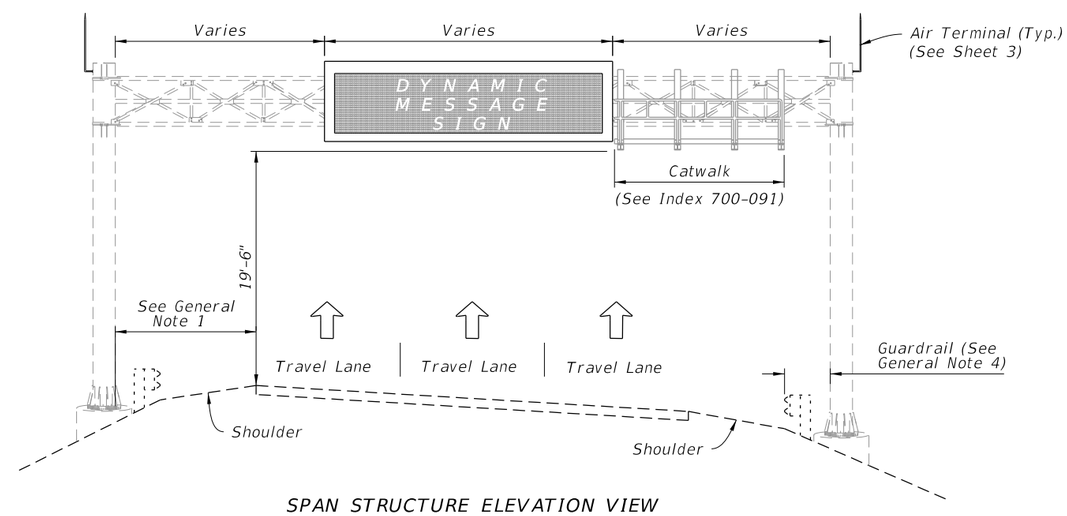

SPAN STRUCTURE ELEVATION VIEW

DYNAMIC MESSAGE SIGN GENERAL LAYOUT

NOTE: Actual number and direction of travel lanes varies.

8:57:00 AM

10/20/2022

LAST REVISION	REVISION	DESCRIPTION:			INDEX	SHEET
11/01/19			FDOT FY 2023-24 STANDARD PLANS	DYNAMIC MESSAGE SIGN WALK-IN	700-090	2 of 5

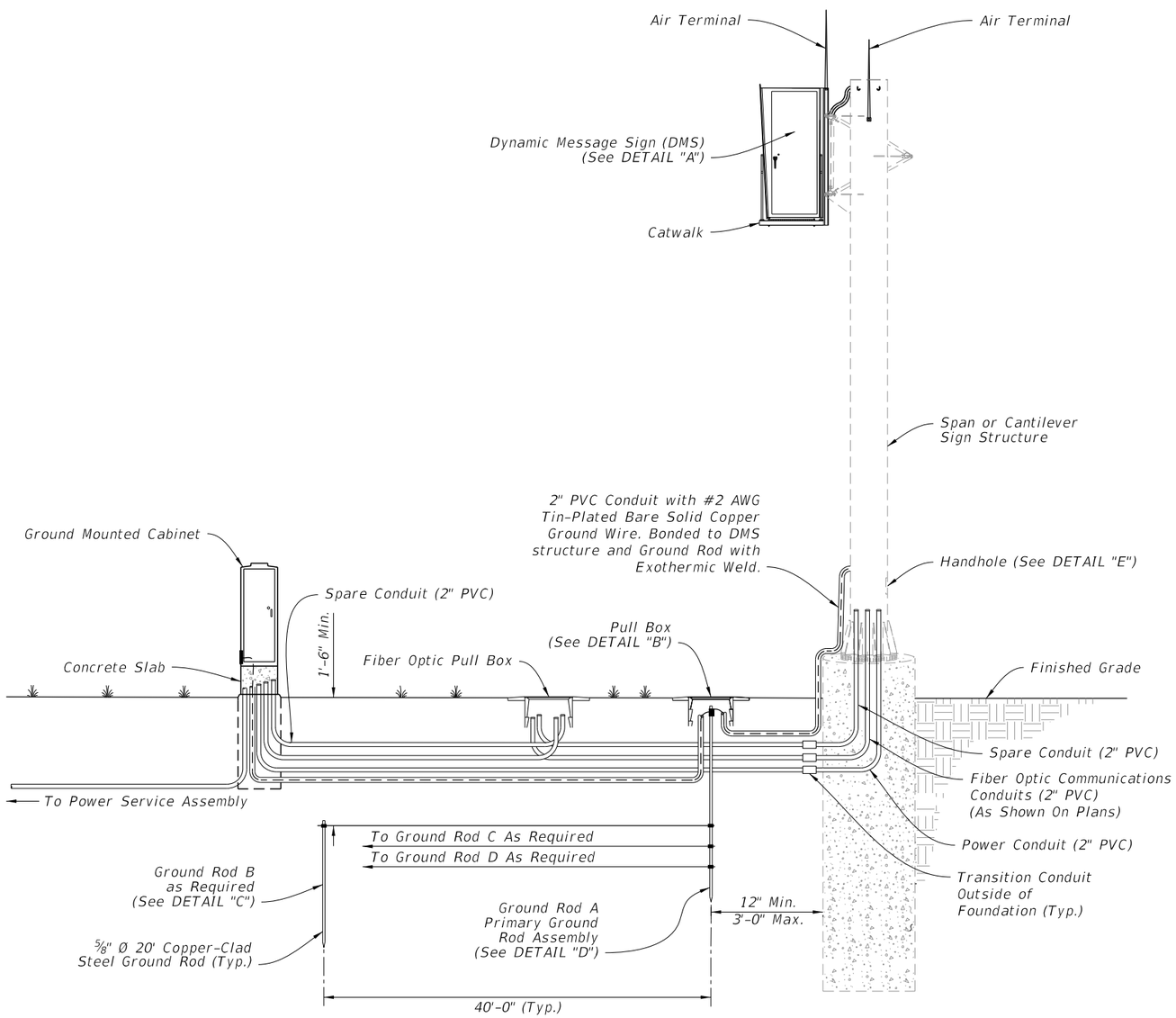

GROUND MOUNTED CABINET

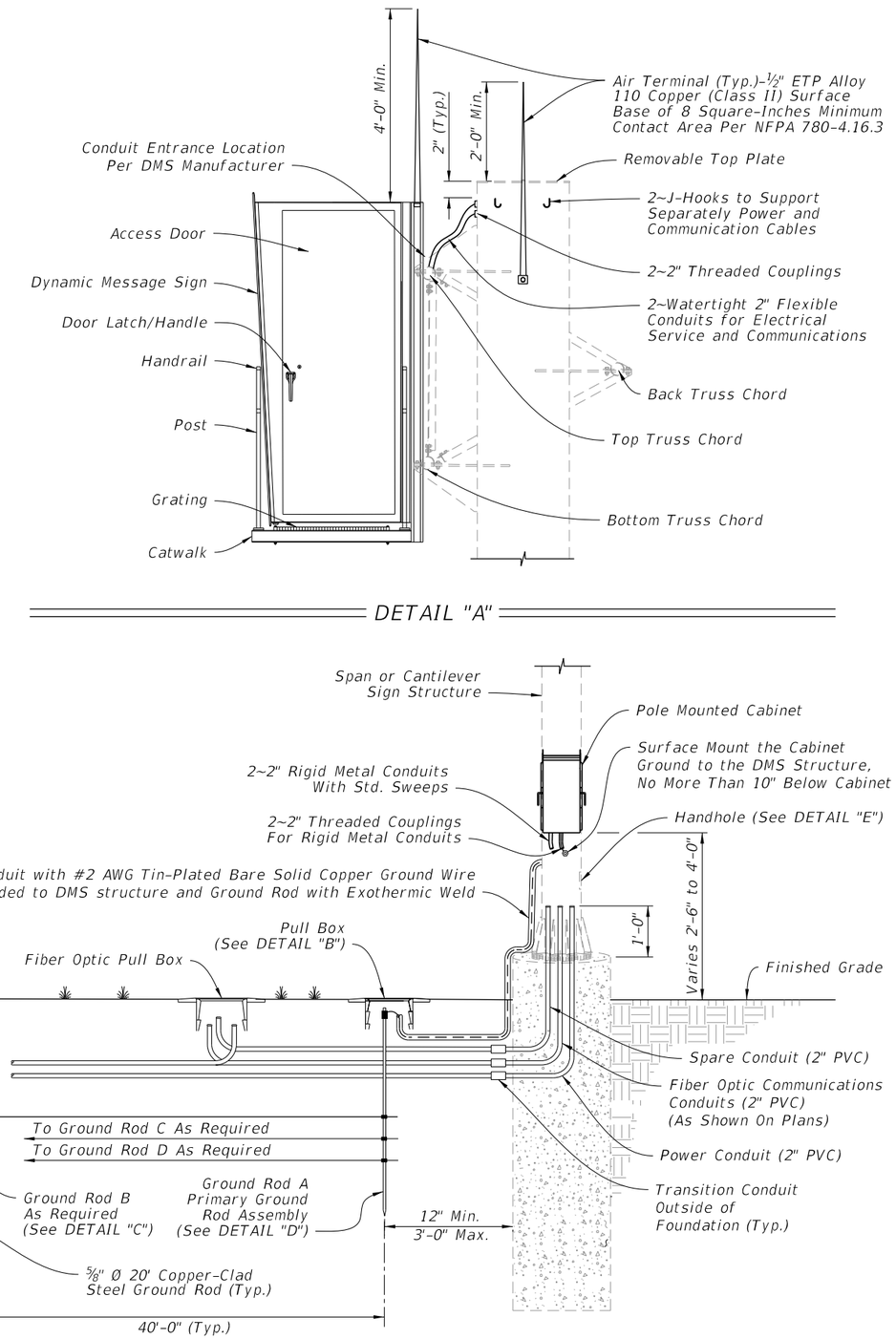

POLE MOUNTED CABINET

DYNAMIC MESSAGE SIGN GROUNDING AND CONDUIT DETAIL

10/20/2022 8:57:01 AM

LAST REVISION	REVISION	DESCRIPTION:			INDEX	SHEET
11/01/17			FY 2023-24 STANDARD PLANS	DYNAMIC MESSAGE SIGN WALK-IN	700-090	3 of 5

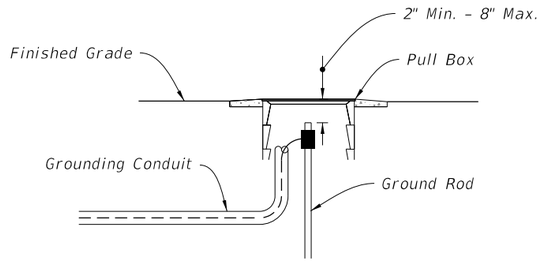

(Pole Mounted Cabinet Configuration Shown)

DETAIL "B"

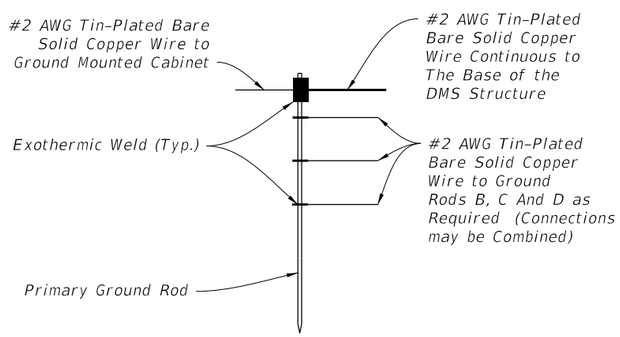

DETAIL "C"

20' Radius Each "Sphere Of Influence"

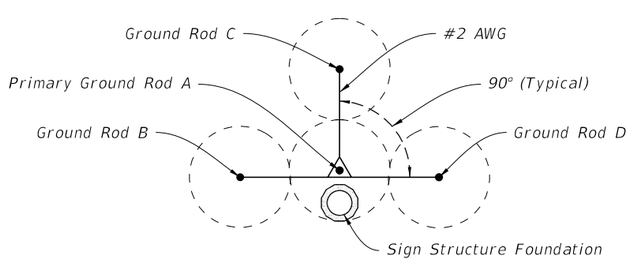

TYPICAL
(20' Rods, 40' Spacing)

GROUND ROD ARRAY DETAIL

DETAIL "D"

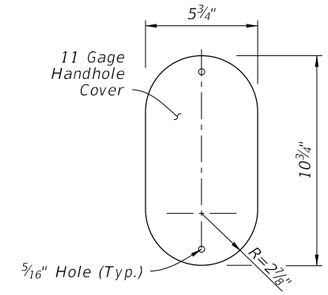

COVER

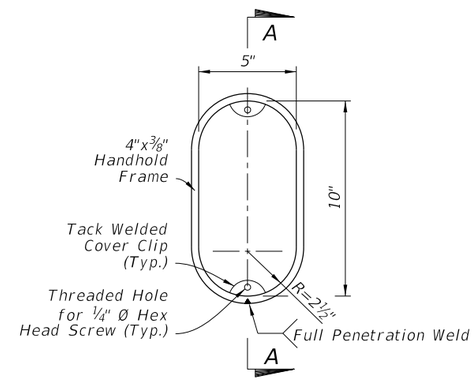

FRAME

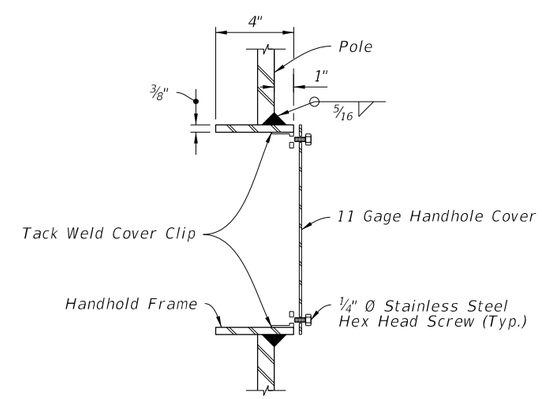

(Thru Handhole)

SECTION A-A

DETAIL "E"

10/20/2022 8:57:02 AM

LAST REVISION	REVISION	DESCRIPTION:			INDEX	SHEET
11/01/20			FY 2023-24 STANDARD PLANS	DYNAMIC MESSAGE SIGN WALK-IN	700-090	4 of 5

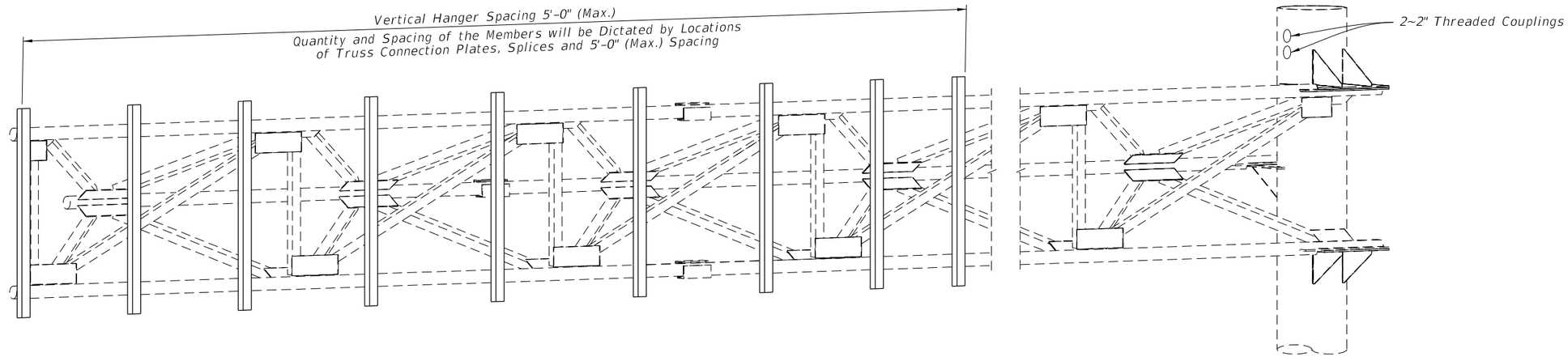

(Cantilever Sign Structure Shown, Span Sign Structure Similar)

HANGER LOCATION DETAIL

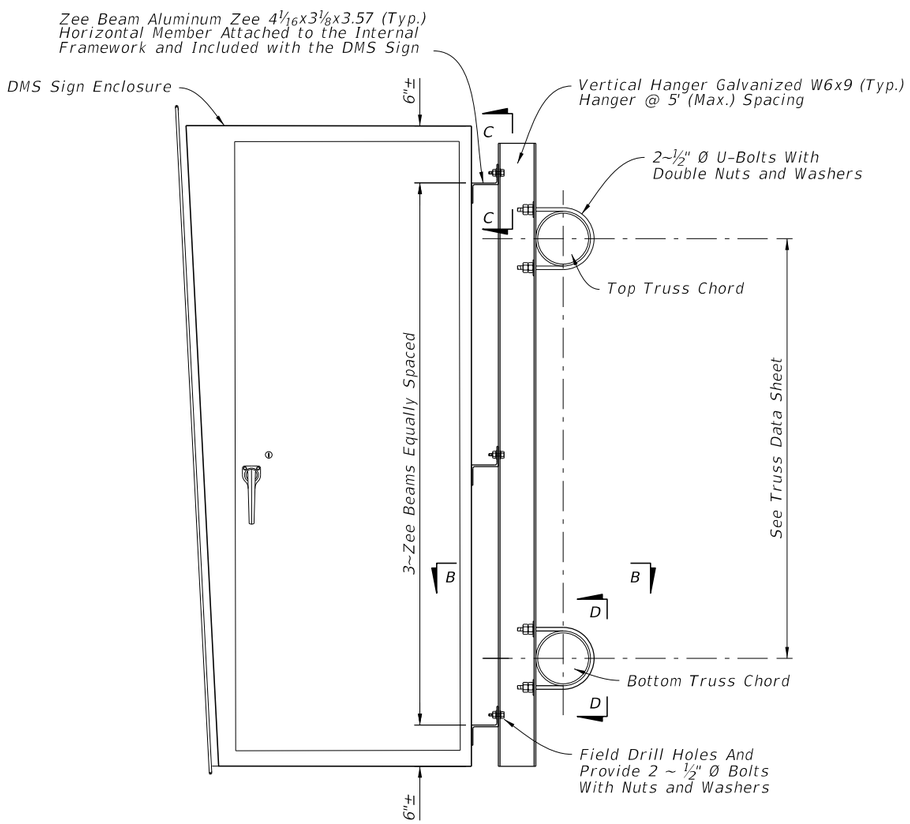

DYNAMIC MESSAGE SIGN END VIEW

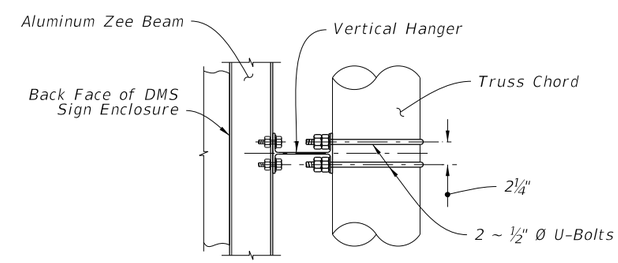

SECTION B-B

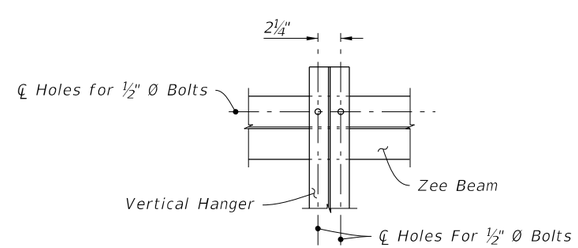

SECTION C-C

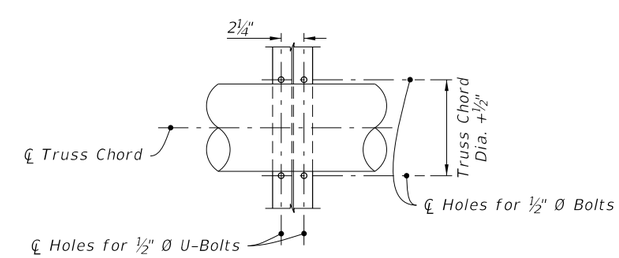

SECTION D-D

LAST REVISION	REVISION	DESCRIPTION:			INDEX	SHEET
11/01/17			FY 2023-24 STANDARD PLANS	DYNAMIC MESSAGE SIGN WALK-IN	700-090	5 of 5

12/13/2022 8:39:13 AM

GENERAL NOTES:

1. Meet the requirements of Specification 700.

2. Shop Drawings are required:

   A. Provide length as shown in the Plans
   B. Design in accordance with AISC, AASHTO, and OSHA requirements
   B. Do not start fabrication until the shop drawings are approved

3. Catwalk hangers must be positioned to avoid conflicts with the sign structure truss and gusset plates. Place walkway close to the sign with a maximum open distance from walkway grate to DMS sign of ½".

4. Maximum spacing of Catwalk hanger supports is 5'-0". Cantilever ends of grating is 8".

5. Galvanized steel catwalk grating meeting the requirements of Specification 504-2.3. Must Support a 90 psf load and have a 3½" minimum toe kick. Attach grating in accordance with the manufacturer's instructions using stainless steel or galvanized fasteners.

6. Supply and install an OSHA 1910 compliant, self closing, hot dip galvanized safety gate. Install per manufactures instructions.

7. Chain link fabric options (2" mesh with knuckled selvage top and bottom for all options):

   A. AASHTO M181 Type I - Zinc Coated Steel, No. 9 gage (coated wire diameter), coated at the rate of 1.8 oz/ft². (M181 Class D 2.0 oz./ft². modified to 1.8 oz./ft².).
   B. AASHTO M181 Type II - Aluminum Coated Steel, No. 9 gage (coated wire diameter), coated at the rate of 0.40 oz./ft².

8. Install 2" NPS (Sch. 40) guiderail and posts: ASTM A53 Grade B for standard weight pipe.

9. Materials:

   A. Steel plates ASTM A 36 or A709 Grade 36.
   B. W-Sections: ASTM A572 Grade 36 or 50.

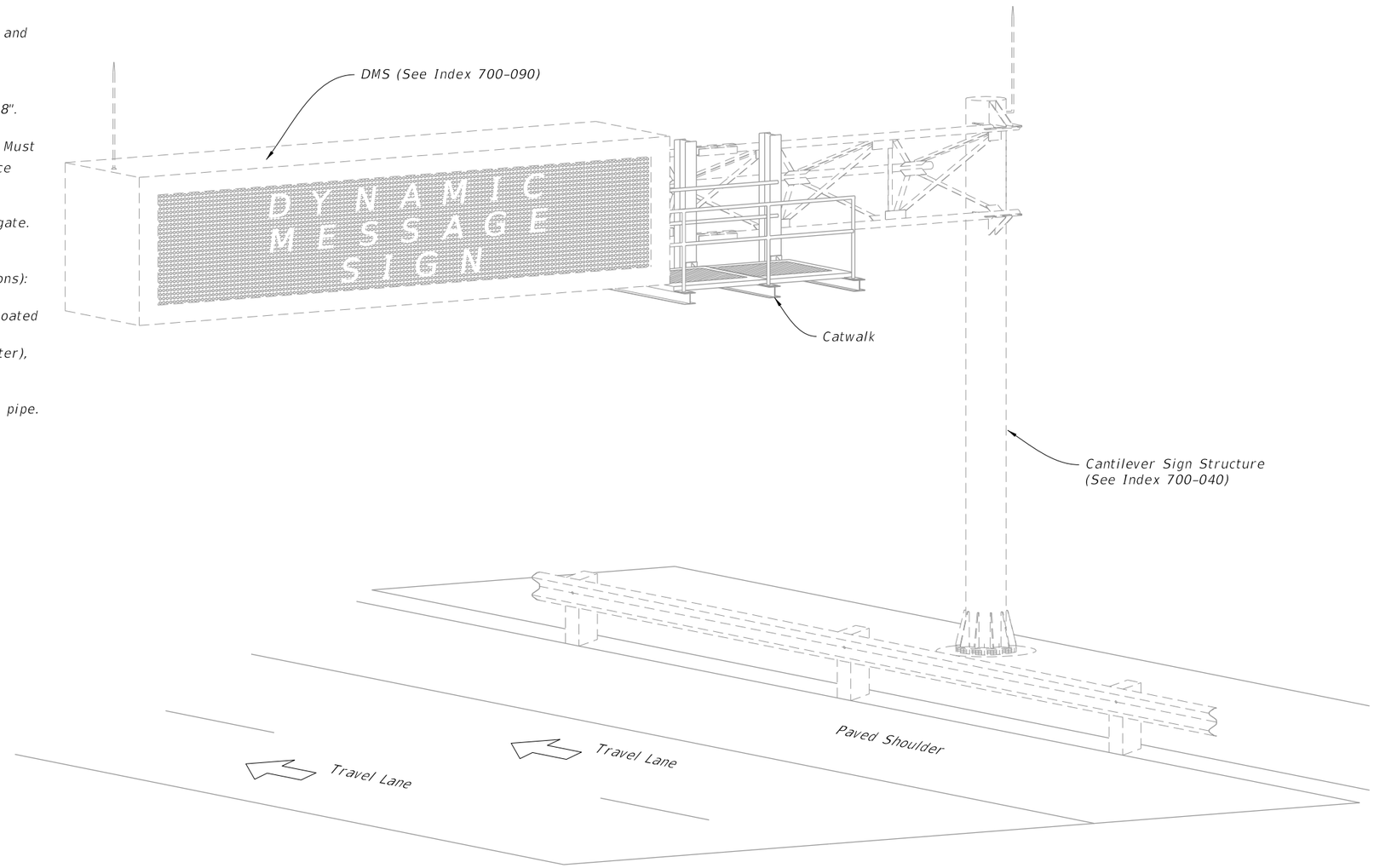

CATWALK ASSEMBLY
(Cantilever Shown, Span Similar)

TABLE OF CONTENTS:

Sheet	Description
1	General Notes and Content
2	General Assembly and Fixed Base Details
3	Walkway Support Details

5/13/2024 1:42:36 PM

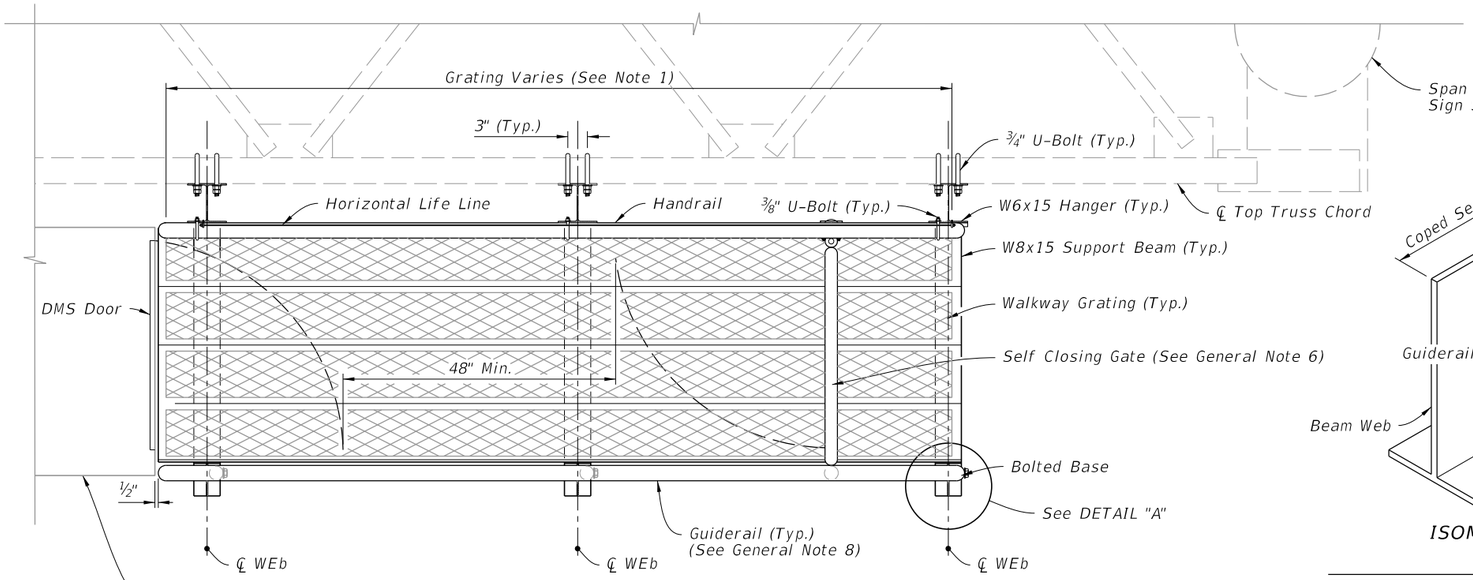

PLAN

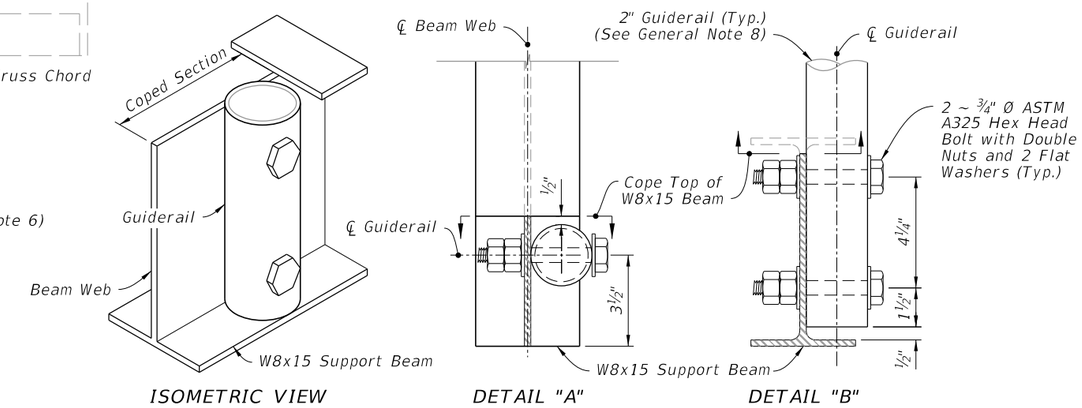

ISOMETRIC VIEW DETAIL "A" DETAIL "B"

BOLTED BASE DETAILS

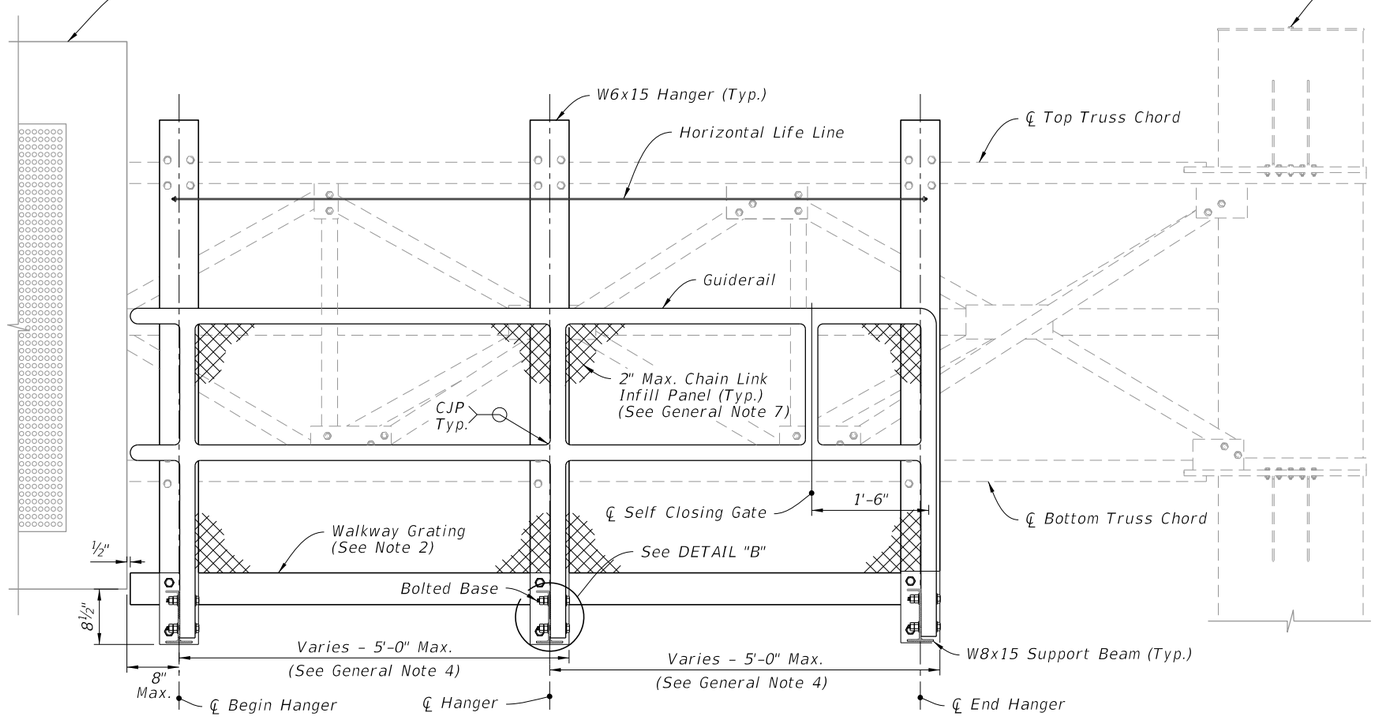

FRONT ELEVATION

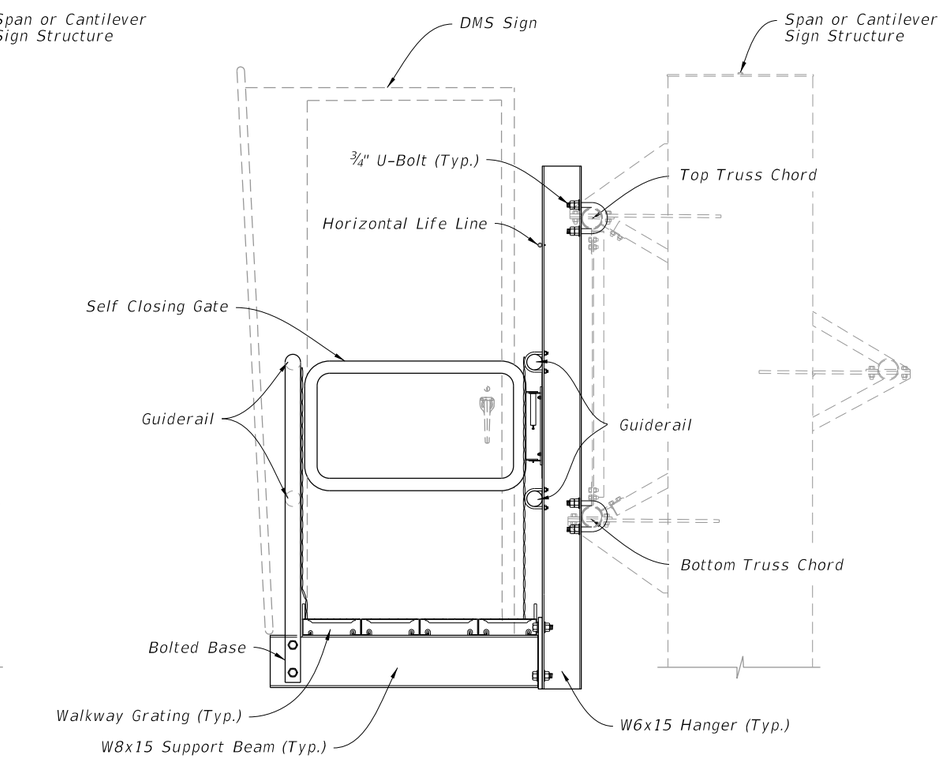

SIDE ELEVATION

GENERAL ASSEMBLY

NOTES:

1. See manufacturer details for walkway planks and bolting criteria.
2. Fasten securely. See grating manufactures details.

GENERAL ASSEMBLY AND FIXED BASE DETAILS

LAST REVISION	REVISION	DESCRIPTION:			INDEX	SHEET
11/01/19			FY 2023-24 STANDARD PLANS	CATWALK DETAILS	700-091	2 of 3

10/20/2022 8:57:04 AM

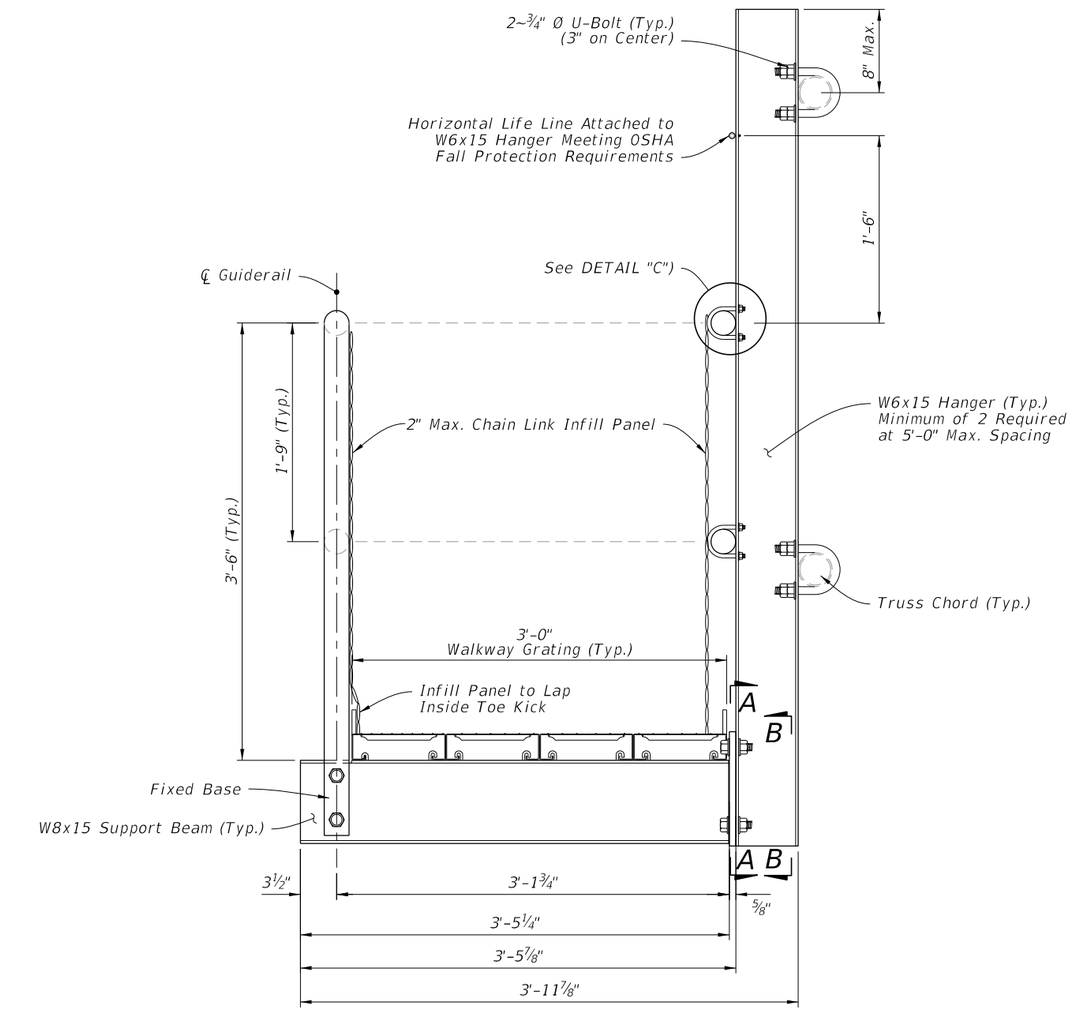

WALKWAY SUPPORT DETAILS

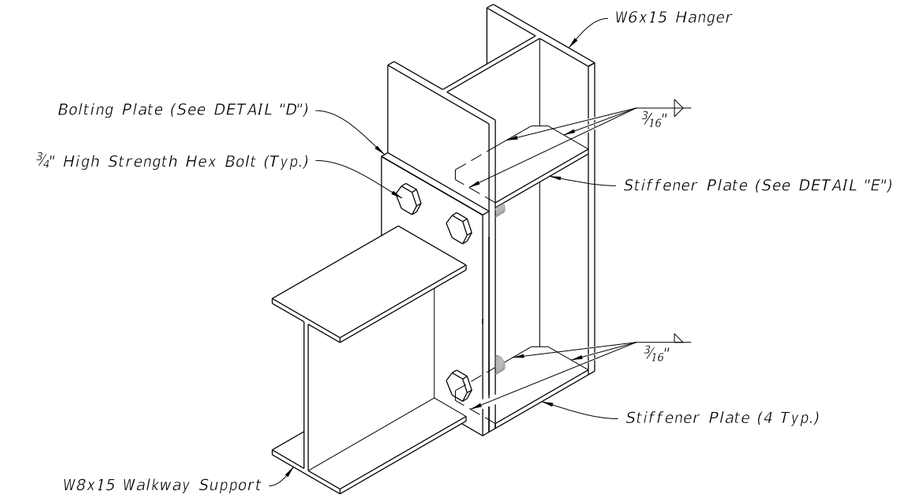

ISOMETRIC VIEW

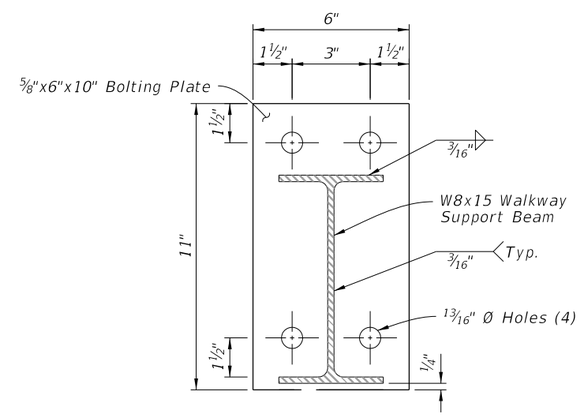

SECTION A-A

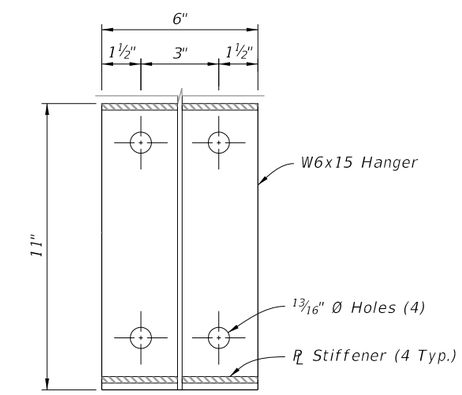

SECTION B-B

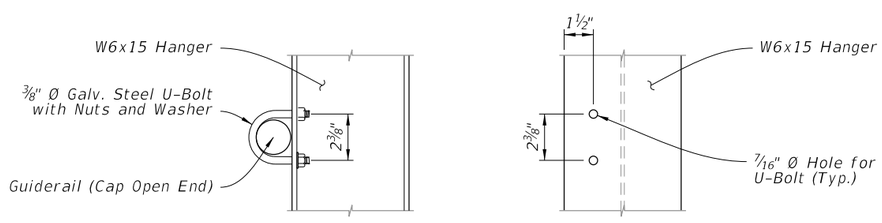

SIDE ELEVATION

FRONT ELEVATION

DETAIL "C"
(Guiderail Attachment)

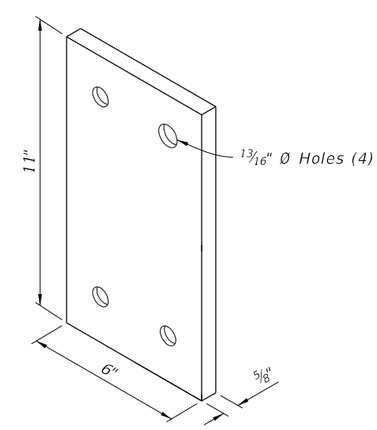

DETAIL "D"
(Bolting Plate)

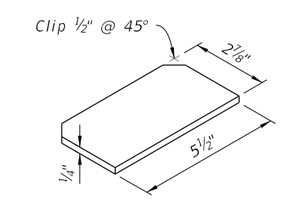

DETAIL "E"
(Stiffener Plate)

WALKWAY SUPPORT DETAILS

10/20/2022 8:57:05 AM

LAST REVISION	REVISION	DESCRIPTION:			INDEX	SHEET
11/01/19			FY 2023-24 STANDARD PLANS	CATWALK DETAILS	700-091	3 of 3

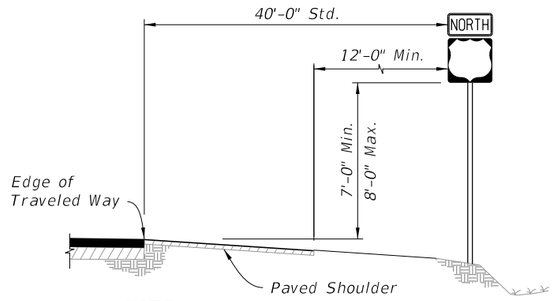

NOTE:
If median width does not allow standard offset from both roadway, center sign in median.

CASE I
Use on Limited Access Roadways

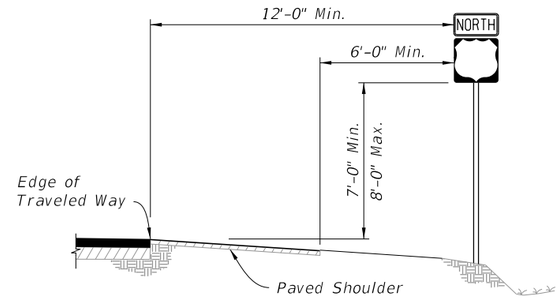

CASE II
Use on Arterial and Collector Roadways, and Limited Access Ramps

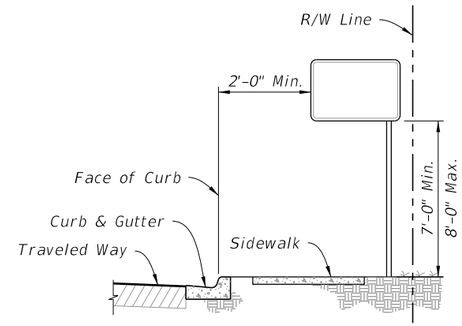

CASE III
Use on Arterial and Collector Roadways

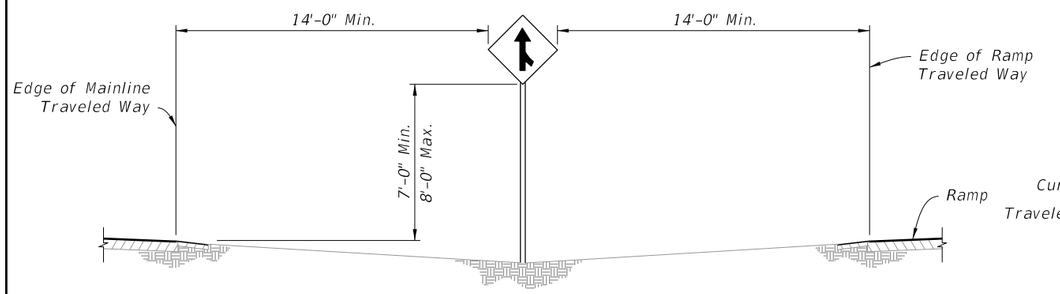

CASE IV
Use on Limited Access Roadways

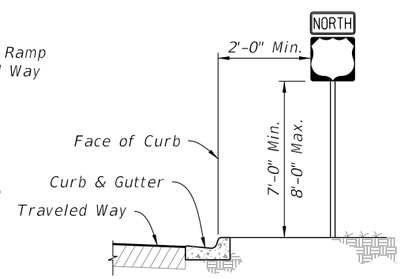

CASE V
Use in Business or Residential Areas Only

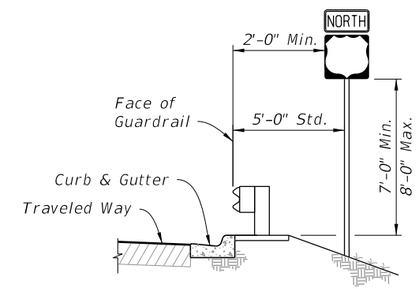

CASE VI
Use on Roadways With Signs Behind Guardrail

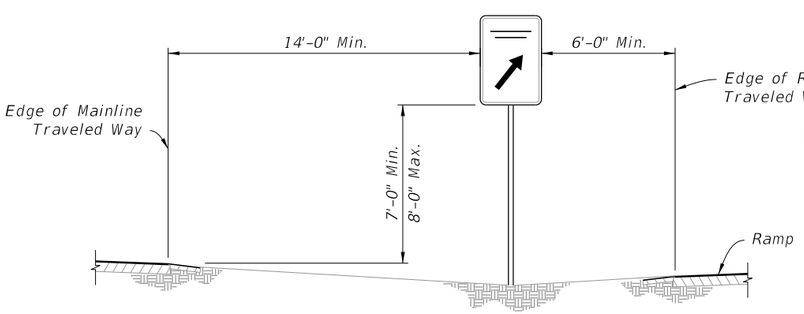

CASE VII
REST AREA AND EXIT GORE SIGNS
Use on Limited Access Roadways

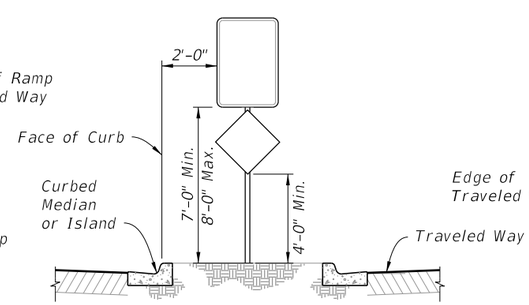

NOTES:
1. For separators <6'-0", center the sign within the separator, center sign column on island.
2. Offset 6'-0" Std. (2'-0" Min.) from Median or Island Nose.

CASE VIII
Use on Island or Curbed Median

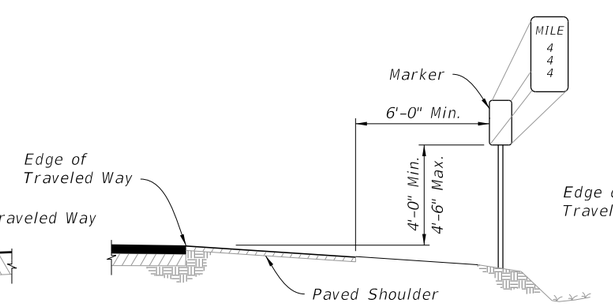

NOTE:
For more information refer to Section 2H of the MUTCD.

CASE IX
MILE POST MARKER
Use on Limited Access Roadways

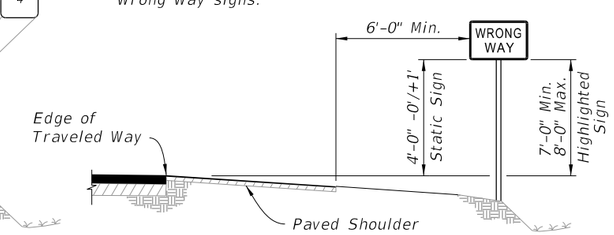

CASE X
WRONG WAY SIGNS
(See Note 8)

GENERAL NOTES:

1. Single-Column Signs Shown, Multi-Column Signs similar. These typical sections serve as a guide for locating the traffic signs required under various roadside conditions. For size and details of sign construction and footing, refer to the appropriate Index and Plans.

2. Verify the length of sign supports in the field prior to fabrication.

3. Install ground signs at an angle of 1 to 4 degrees away from the traffic flow (see illustration). Install shoulder mounted signs rotated counterclockwise and median mounted signs rotated clockwise. Install signs on a curve as noted above from the perpendicular to the motorist line of sight.

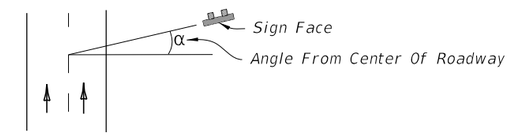

4. The setback for Stop and Yield signs may be reduced to 3' minimum from the Edge of Traveled Way if required for visibility in business or residential sections with no curb and speeds of 30 MPH or less.

5. The mounting heights are measured from the bottom of the sign panel to a horizontal line extended from the Edge of Traveled Way or from the ground surface at the back of curb. If the standard heights cannot be met, the minimum heights are as follows:

   Limited Access Roadways - 7'

   Arterial and Collector Roadways:
   5' - Rural
   7' - Urban (including residential with parking and/or pedestrian activity)

   Limited Access Roadways:
   If a secondary sign is mounted below the major sign, mount the major sign so that the bottom of the sign is at least 8' above the edge of the traveled way and the secondary sign at least 5' above the edge of the traveled way.

   Arterial and Collector Roadways:
   Rural, mount the secondary sign at least 5' above the edge of the traveled way.
   Urban, mount the secondary sign at least 7' above the edge of the traveled way.

6. Do not install sign supports in the bottom of ditches.

7. Install sign supports so they do not reduce the accessible Width of Sidewalks or Shared Use Paths to less than 4' min. clear width.

8. CASE X sign placement is for Interstate Exit Ramps only. Use CASE I through Case VIII as appropriate for all other Wrong Way signs.

10/20/2022 8:57:06 AM

LAST REVISION	REVISION	DESCRIPTION:			INDEX	SHEET
11/01/21			FY 2023-24 STANDARD PLANS	TYPICAL SECTIONS FOR PLACEMENT OF SINGLE AND MULTI-COLUMN SIGNS	700-101	1 of 1

FREEWAY USE

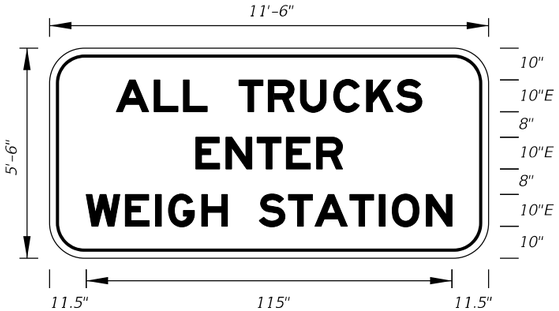

FTP-1-06
11'-6" X 5'-6"
9" Radii 2" Border

10" Series E Legend
White Background
Black Legend and Border

OTHER THAN FREEWAY USE

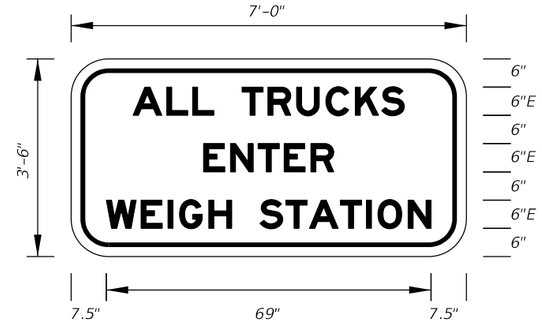

FTP-2-06
7' X 3'-6"
6" Radii 2" Border

6" Series E Legend
White Background
Black Legend and Border

OTHER THAN FREEWAY USE

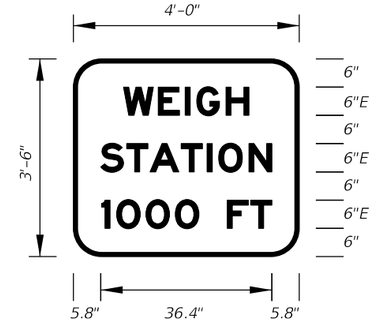

FTP-3-06
4' X 3'-6"
6" Radii 2" Border

6" Series E Legend
Green Background
White Legend and Border

OTHER THAN FREEWAY USE

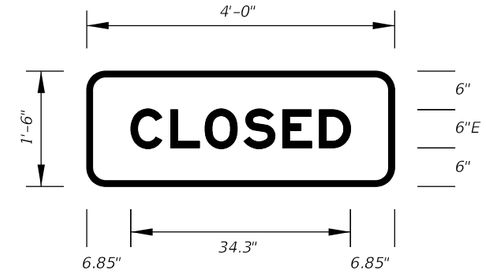

FTP-4-06
4' X 1'-6"
3" Radii 2" Border

6" Series E Legend
Green Background
White Legend and Border

Note:
FTP-4-06 to be
used with FTP-3-06

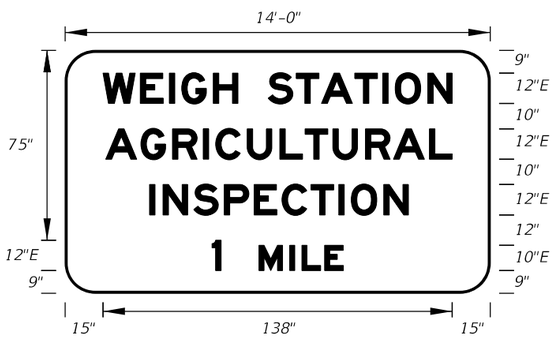

FTP-5-06
14' X 8'
12" Radii 2" Border

12" and 10" Series E Legend
Green Background
White Legend and Border

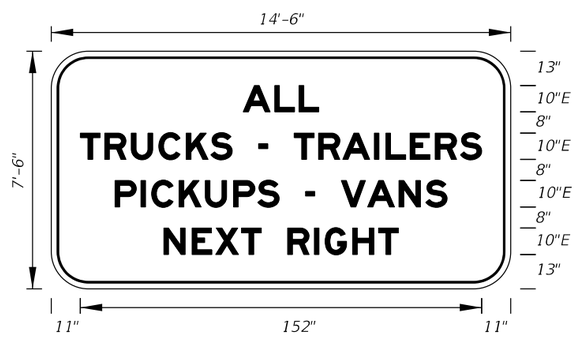

FTP-6A-06
14'-6" X 7'-6"
12" Radii 2" Border

10" Series E Legend
White Background
Black Legend and Border

On Interstate Station
Delete Pickups-Vans,
and reduce Sign height
accordingly.

FTP-6B-06
14'-6" X 7'-6"
12" Radii 2" Border

10" Series E Legend
White Background
Black Legend and Border

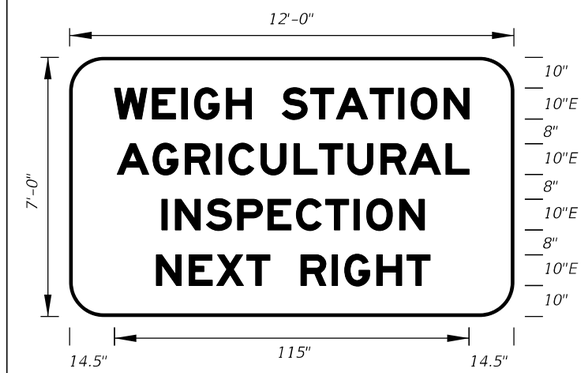

FTP-7A-06
12' X 7'
11" Radii 2" Border

10" Series E Legend
Green Background
White Legend and Border

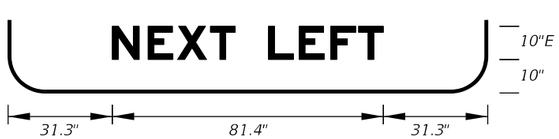

FTP-7B-06
12' X 7'
11" Radii 2" Border
10" Series E Legend
Green Background
White Legend and Border

FREEWAY USE

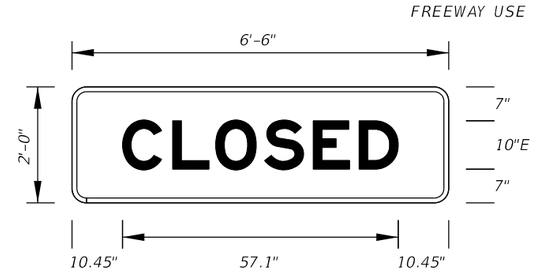

FTP-8-06
6'-6"X 2'
3" Radii 2" Border
10" Series E Legend
Green Background
White Legend and Border

Note:
FTP-8-06 to be
used with FTP-7A-06
& FTP-7B-06.

FTP-9B-06-LEFT ARROW

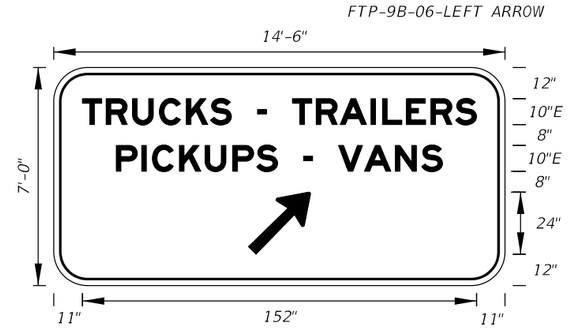

FTP-9A-06
14'-6" X 7'
11" Radii 2" Border

10" Series E Legend
Green Background
White Legend and Border

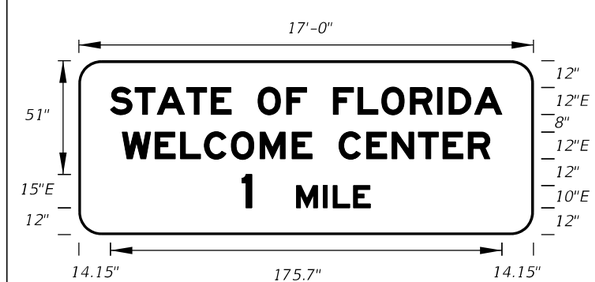

FTP-10-06
17' X 6'-6"
10" Radii 2" Border

12", 10" and 15" Series E Legend
Blue Background
White Legend and Border

10/20/2022 8:57:07 AM

LAST REVISION	REVISION	DESCRIPTION:			INDEX	SHEET
11/01/20			FY 2023-24 STANDARD PLANS	SPECIAL SIGN DETAILS	700-102	1 of 12

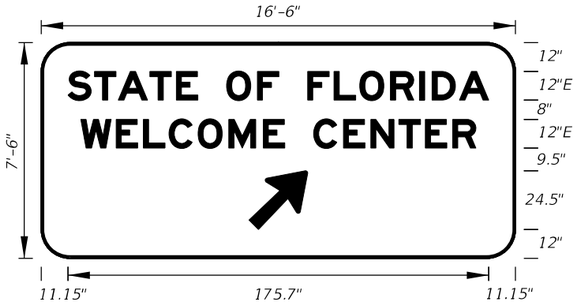

FTP-11-06
16'-6" X 7'-6"
12" Radii 2" Border
12" Series E Legend
Blue Background
White Legend and Border

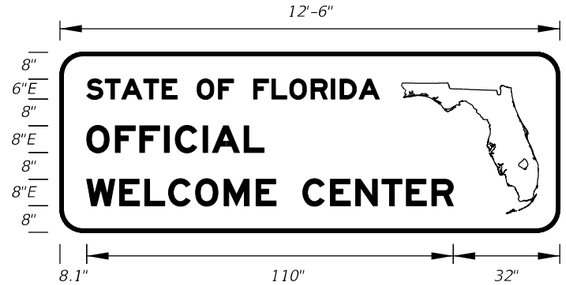

FTP-12-06
12'-6" X 4'-6"
7" Radii 2" Border
6" and 8" Series E Legend
Blue Background
White Legend and Border

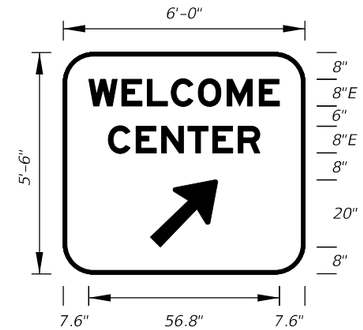

FTP-13-06
6' 0" X 5'-6"
9" Radii 2" Border
8" Series E Legend
Blue Background
White Legend and Border

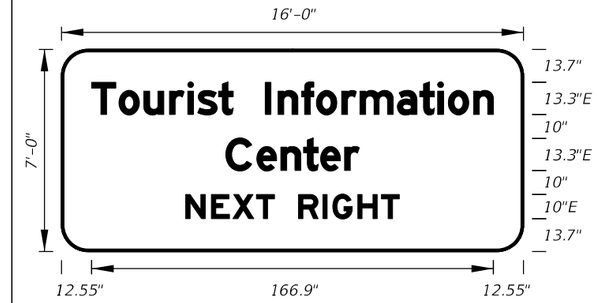

FTP-14-06
16'-0" X 7'-0"
11" Radii 2" Border
13.3 and 10" Series E Legend
Blue Background
White Legend and Border

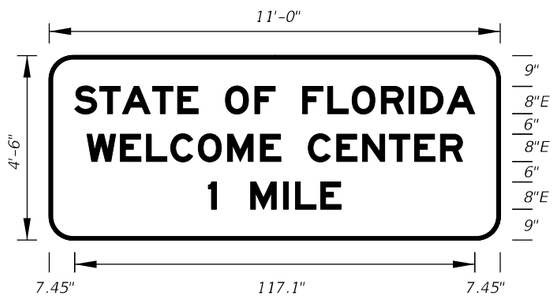

FTP-15A-06
11'-0" X 4'-6"
7" Radii 2" Border
8" Series E Legend
Blue Background
White Legend and Border

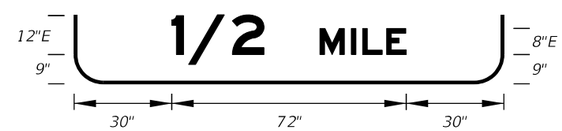

FTP-15B-06
11'-0" X 5'-0"
8" Radii 2" Border
8" and 12" Series E Legend
Blue Background
White Legend and Border

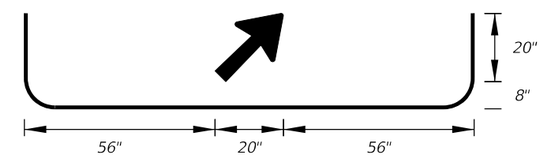

FTP-15C-06
11'-0" X 5'-6"
9" Radii 2" Border
8" Series E Legend
Blue Background
White Legend and Border

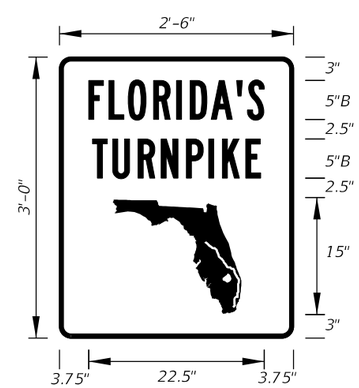

FTP-16-10
2'-6" X 3'-0"
1.5" Radii 3/4" Border
5" Series B Legend
Green Background
White Legend, Border,
and Florida Symbol

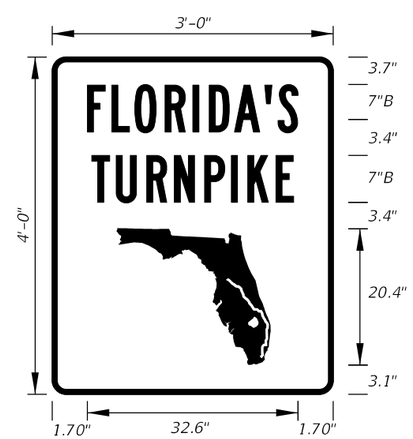

FTP-17-10
3'-0" X 4'-0"
1.5" Radii 3/4" Border
7" Series B Legend
Green Background
White Legend, Border,
and Florida Symbol

FTP-18-10
4'-0" X 5'-0"
3" Radii 1 1/4" Border
8" Series B Legend
Green Background
White Legend, Border,
and Florida Symbol

10/20/2022 8:57:08 AM

LAST REVISION	REVISION	DESCRIPTION:			INDEX	SHEET
11/01/20			FY 2023-24 STANDARD PLANS	SPECIAL SIGN DETAILS	700-102	2 of 12

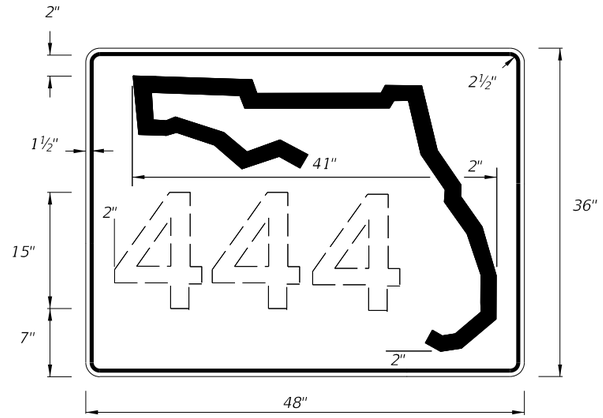

DIGITS	NUMERAL SIZE	SERIES LEGEND	PANEL SIZE
1-3	15"	C	48" x 36"
4	12"	C	48" x 36"

NOTES:

1. Stroke width of State Outline shall be 1".
2. 2½" Radii

INDEPENDENT USE FOR FREEWAY

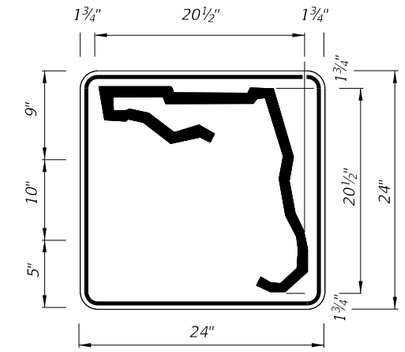

1 or 2 DIGITS

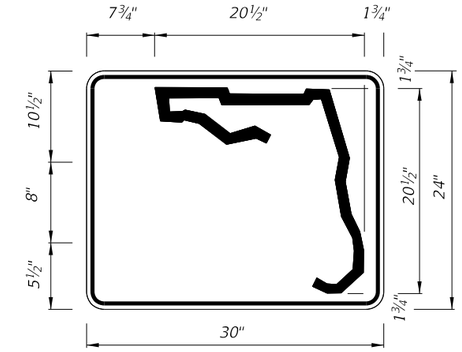

3 or 4 DIGITS

DIGITS	NUMERAL SIZE	SERIES LEGEND	PANEL SIZE
1-2	10"	D	24" x 24"

DIGITS	NUMERAL SIZE	SERIES LEGEND	PANEL SIZE
3	8"	D	30" x 24"
4	8"	C	30" x 24"

NOTES:

1. Stroke width of State Outline shall be 1".
2. The 24" X 24" panel shall only be used for a 3 digit route when the panel is to be used on a sign cluster with other 24" X 24" panels.
3. 1½" Radii

INDEPENDENT USE OTHER THAN FREEWAY

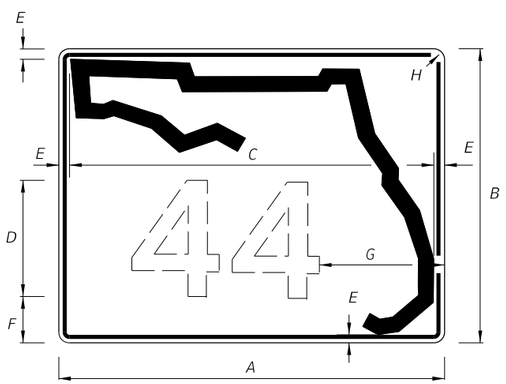

1 OR 2 DIGITS

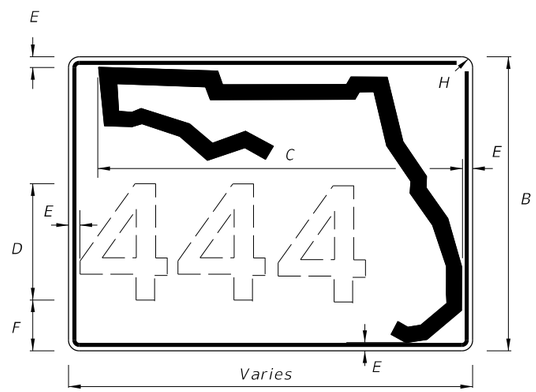

3 OR MORE DIGITS

NOTES:

1. Florida marker shall have Black Legend with White Background.
2. Stroke width of State outline shall be 1¾" for Guide Sign.
3. Series D Legend.
4. ⅝" Border

A	B	C	D	E	F	G	H
30"	24"	26"	12"	1¼"	2¾"	8¼"	1¼"
36"	30"	32"	15"	1¼"	3¼"	8¾"	1¼"
42"	36"	38"	15"	1¼"	6¼"	11"	1¼"

GUIDE SIGN USE

FTP-17-06 - FLORIDA ROUTE MARKER

NOTES:

1. Series D Legend.
2. Color: Yellow Legend and Border on Blue Background.
3. When used on a guide sign, marker must be overlaid on a rectangular Yellow Background as shown in chart.
4. When two or more County Route Markers are mounted together, use the dimensions of the largest marker for all other markers.

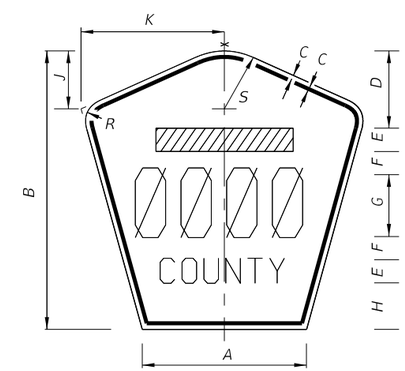

SIGN	DIMENSIONS												Rectangular Yellow Background Dimensions (See Note 3)
	A	B	C	D	E	F	G	H	J	K	R	S	
4 DIGIT POST MOUNTED	25⅛"	42"	¾"	10"	4"	4"	8"	8"	8⅜"	22"	5"	8¾"	
2 DIGIT OVERHEAD	21½"	36"	½"	7½"	3"	3"	12"	4½"	7⅛"	18⅞"	4¼"	7½"	42"x 42"
3 DIGIT OVERHEAD	25⅛"	42"	¾"	8"	4"	4"	12"	6"	8⅜"	22"	5"	8¾"	48"x 48"
4 DIGIT OVERHEAD	29⅞"	48"	¾"	8"	5"	5"	12"	8"	9¾"	25⅝"	5¾"	10¼"	52"x 52"

FTP-18-06 - COUNTY ROUTE MARKER (M1-6)

FTP-19-06
1' X 1'-6"
4" Radii 3/8" Border
Top 4" Series D
Bottom 2" Series C
White Background
Green Legend and Border

All Letters
1" Series C
1" Spacing
Between Lines
of Text

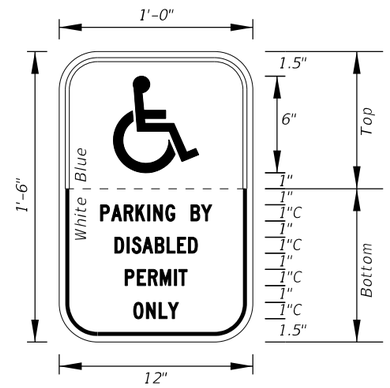

FTP-20-06
1' X 1'-6"
2" Radii 3/8" Border
1" Series C Legend
Color
Background
Legend and Border

Top	Bottom
Blue	White
White	Black

All Letters
1.5" Series C
1" Spacing
Between Lines
of Text

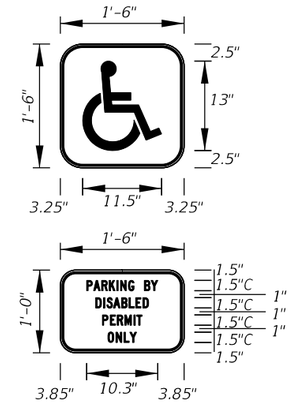

FTP-21-06
1'-6" X 2'-6"
2" Radii 3/8" Border
1.5" Series C Legend
Color
Background
Legend and Border

Top	Bottom
Blue	White
White	Black

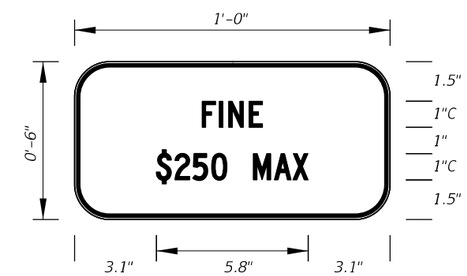

FTP-22-06
1' X 6"
1" Radii 3/8" Border
1" Series C Legend
White Background
Black Legend and Border

Supplemental Panel
for the FTP-20-06
and FTP-21-06 signs

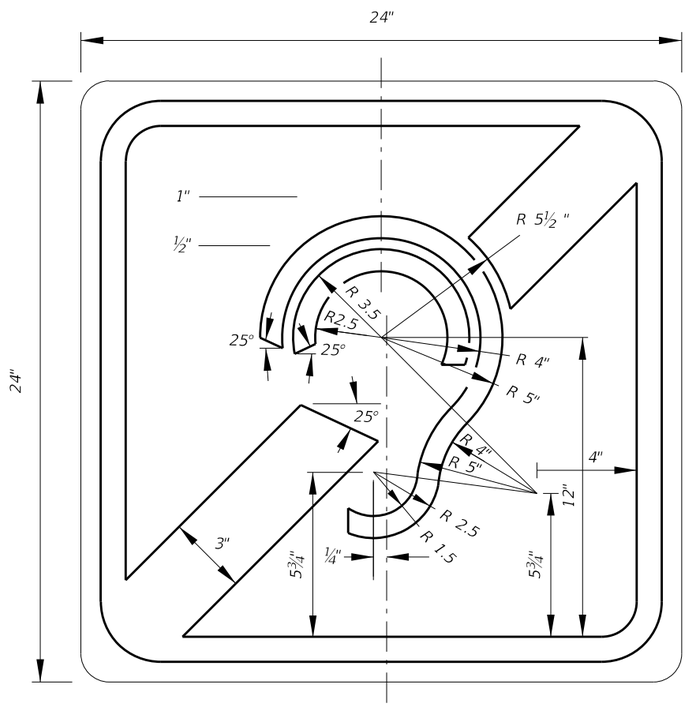

FTP-23-06
2' X 2'
1.5" Radii 5/8" Border
Blue Background
White Legend and Border

INTERNATIONAL SYMBOL OF
ACCESS FOR HEARING LOSS

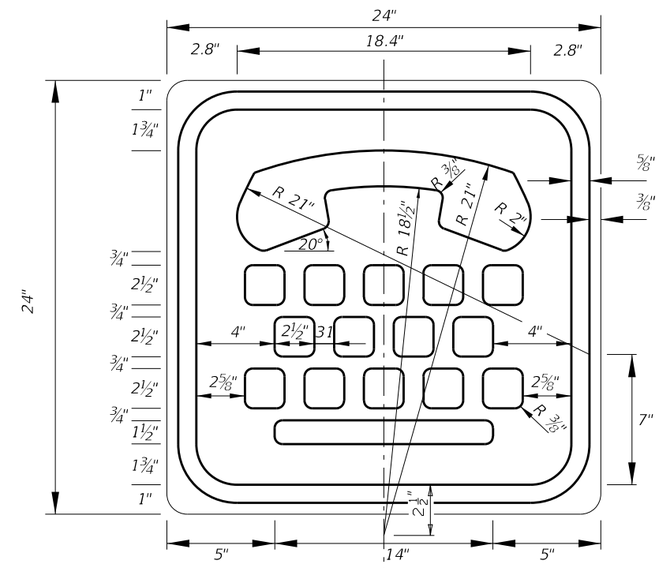

FTP-24-06
2' X 2'
1.5" Radii 5/8" Border
Blue Background
White Legend and Border

INTERNATIONAL TDD SYMBOL

10/20/2022 8:57:10 AM

LAST REVISION	REVISION	DESCRIPTION:	FY 2023-24 STANDARD PLANS	SPECIAL SIGN DETAILS	INDEX	SHEET
11/01/20					700-102	4 of 12

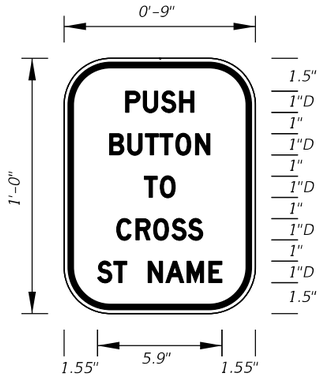

FTP-25-06
9" X 1'-0"
2" Radii ⅜" Border
1" Series D Legend
White Background
Black Legend and Border

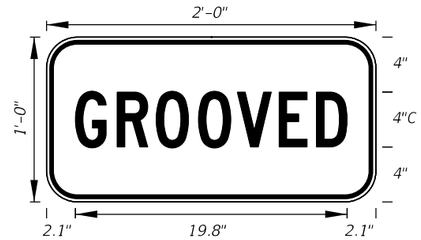

FTP-29-06
2'-0" X 1'-0"
2" Radii ⅝" Border
4" Series C Legend
Yellow Background
Black Legend and Border

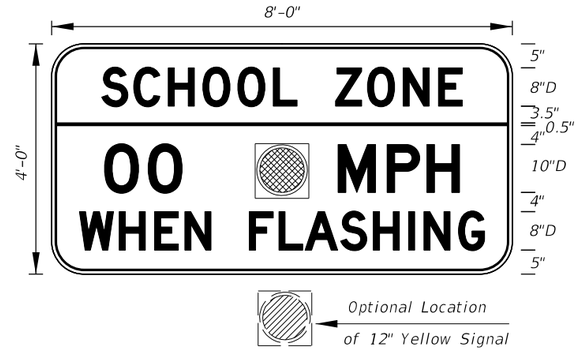

FTP-31-06
8' X 4'
6" Radii ¾" Border
Series D Legend
Fluorescent Yellow-Green Background Top
White Background Bottom
Black Legend and Border

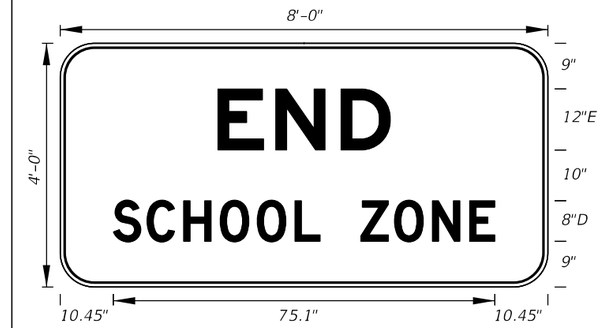

FTP-32-06
8' X 4'
6" Radii ¾" Border
12" Series E and 8" Series D Legend
White Background
Black Legend and Border

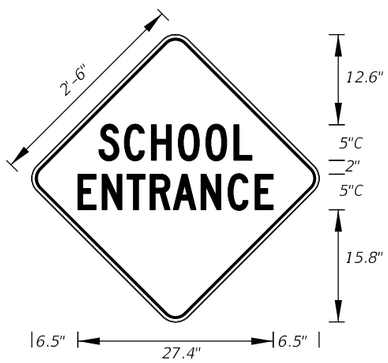

FTP-33-06
2'-6" X 2'-6"
2" Radii ¾" Border
5" Series C Legend
Fluorescent Yellow-Green Background
Black Legend and Border

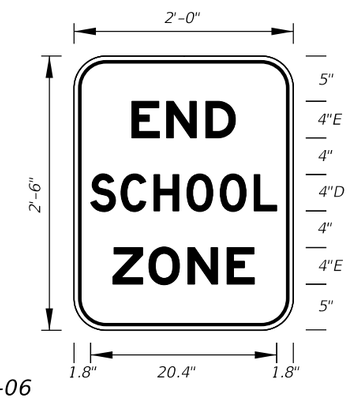

FTP-34-06
2' X 2'-6"
3" Radii ⅝" Border
4"Series D and E Legend
White Background
Black Legend and Border

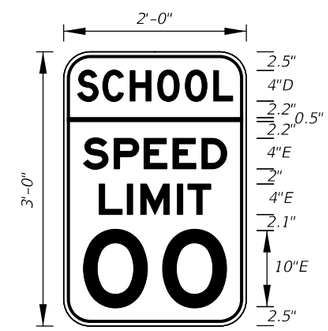

FTP-35-06
2' X 3'
3" Radii ⅝" Border
Top 4" Series D Legend
Bottom 4" and 10" Series E Legend
Fluorescent Yellow-Green Background Top
White Background Bottom
Black Legend and Border

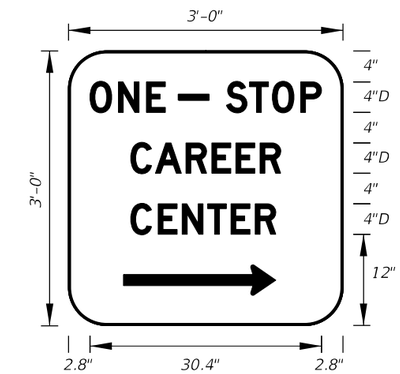

FTP-36-06
3' X 3'
5" Radii
4" Series D Legend
Green Background
White Legend and Border

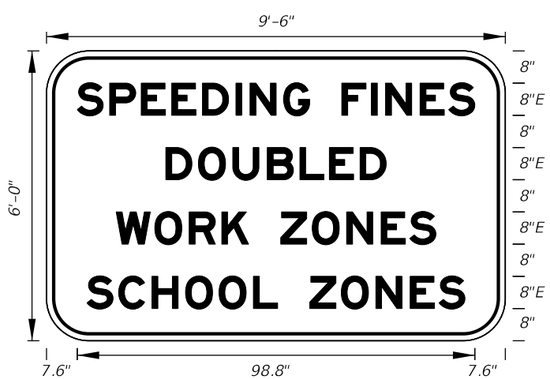

FTP-37-06
9'-6"X 6'
9" Radii 2" Border
8" Series E Legend
White Background
Black Legend and Border
State Line Sign

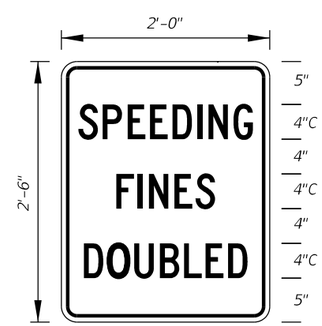

FTP-38-22
2' X 2'-6"
1.5" Radii ½" Border
4" Series C Legend 80% Spacing
White Background
Black Legend and Border

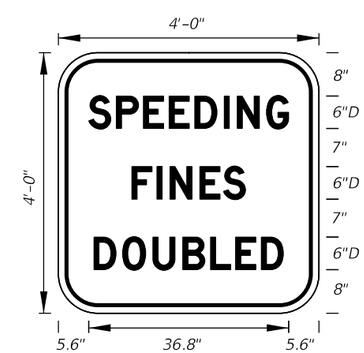

FTP-39-06
4' X 4'
6" Radii ¾" Border
6" Series D Legend
White Background
Black Legend and Border
Freeway Sign

FTP-40-21
3'-6" X 4'
6" Radii ¾" Border
3" and 6" Series C Legend
White Background
Black Legend and Border

10/20/2022 8:57:11 AM

LAST REVISION	REVISION	DESCRIPTION:			INDEX	SHEET
11/01/21			FY 2023-24 STANDARD PLANS	SPECIAL SIGN DETAILS	700-102	5 of 12

FTP-41-21
2'-6"X 3'
4" Radii ¾" Border

2" and 4" Series C Legend
White Background
Black Legend and Border

FTP-42-06
4'X 2'-6"
3" Radii
Top 4" Series C Legend

Bottom 2" Series EM Legend
White Background
Blue Legend and Border

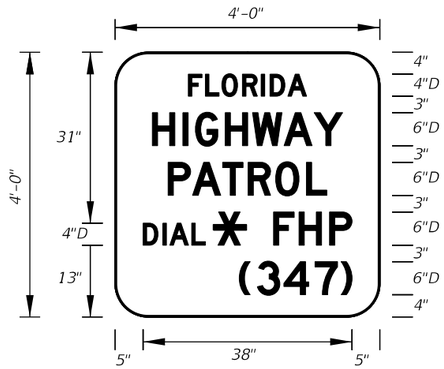

FTP-43-06
4' X 4'
6" Radii 1" Border
Top 4" Series D Legend

Bottom 6" Series D Legend
Blue Background
White Legend and Border

FTP-44-06
9' X 6'
9" Radii ¾" Border

8" Series D Legend
White Background
Black Legend and Border

FTP-45-06
4' X 3'
5" Radii ¾" Border

4" Series C Legend
White Background
Black Legend and Border

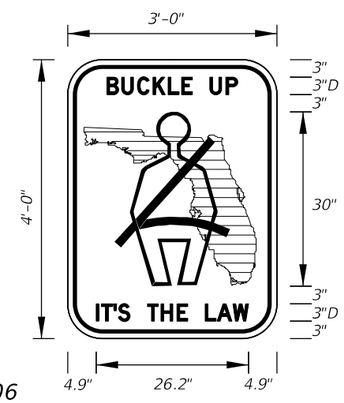

FTP-46-06
3' X 4'
5" Radii ¾" Border
3" Series D Legend
White Background Green Florida Symbol
Black Legend, Border and Man Belt Symbol

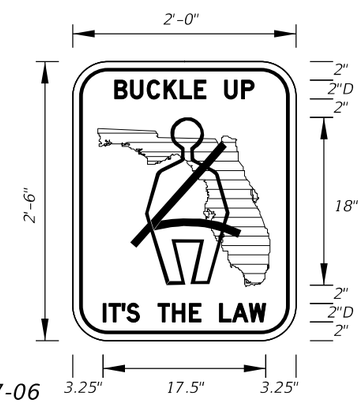

FTP-47-06
2' X 2'-6"
3" Radii ⅝" Border
2" Series D Legend
White Background Green Florida Symbol
Black Legend, Border and Man Belt Symbol

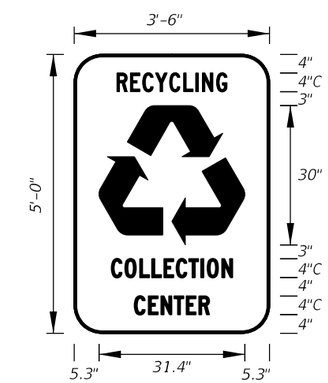

FTP-48-06
3'-6" X 5'
6" Radii
4" Series C Legend
Green Background
White Legend, Border and Symbol

FTP-49-06
3'-6" X 5'-6"
6" Radii
4" Series C Legend
Green Background Municipality Name Optional
White Legend, Border and Symbol

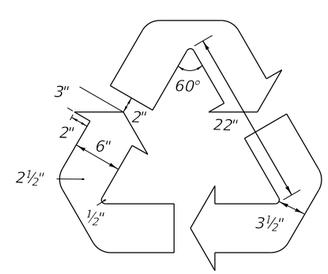

Detail for **FTP-48-06** and **FTP-49-06**

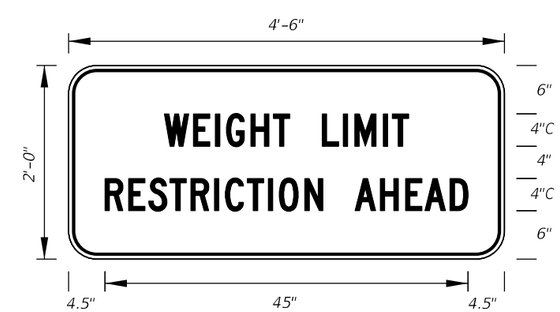

FTP-50-06
4'-6" X 2'
3" Radii ¾" Border
4" Series C Legend
Yellow Background
Black Legend and Border

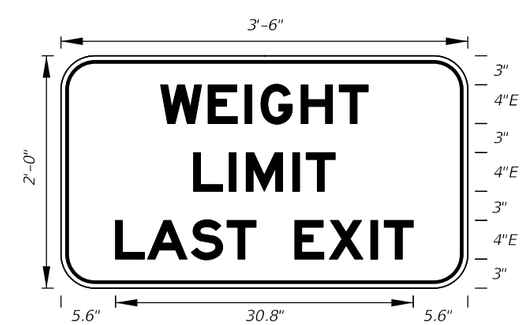

FTP-51-06
3' X 2'
3" Radii ¾" Border

4" Series E Legend
White Background
Black Legend and Border

10/20/2022 8:57:12 AM

LAST REVISION	REVISION	DESCRIPTION:			INDEX	SHEET
11/01/21			FDOT FY 2023-24 STANDARD PLANS	SPECIAL SIGN DETAILS	700-102	6 of 12

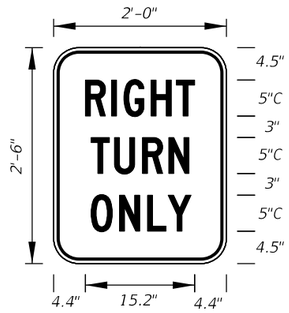

FTP-52-06
2' X 2'-6"
3" Radii 5/8" Border

5" Series C Legend
White Background
Black Legend and Border

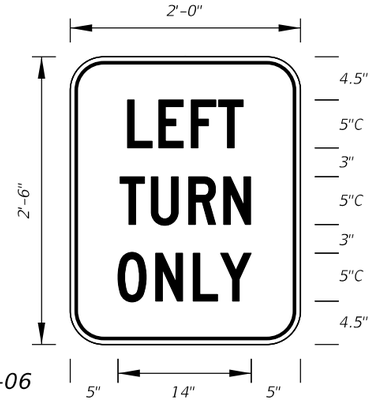

FTP-53-06
2' X 2'-6"
3" Radii 5/8" Border
5" Series C Legend
White Background
Black Legend and Border

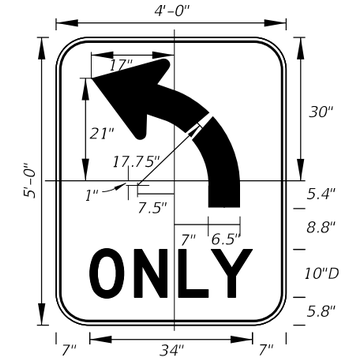

FTP-54L-06
4' X 5'
6" Radii 3/4" Border
10" Series D Legend
White Background
Black Legend and Border

FTP-54R-06 for
(Right Turn Arrow)

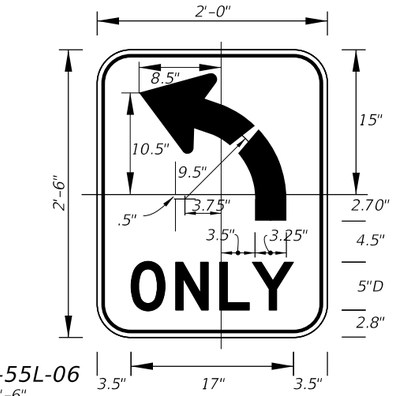

FTP-55L-06
2' X 2'-6"
3" Radii 3/8" Border
5" Series D Legend
White Background
Black Legend and Border

FTP-55R-06 for
(Right Turn Arrow)

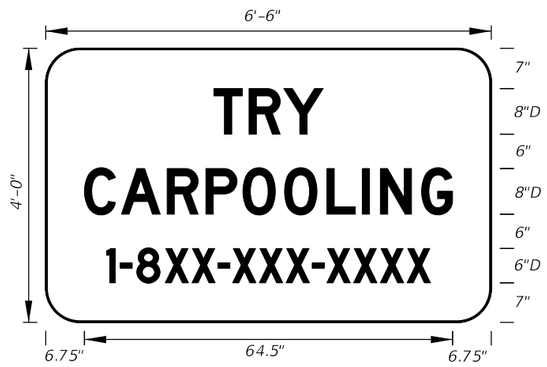

FTP-56-06
6'-6"X 4'
6" Radii 3/4" Border
8" and 6" Series D Legend
Blue Background
White Legend and Border

Design Project Manager
or Transit Administrator
will supply correct 1-8XX
number.

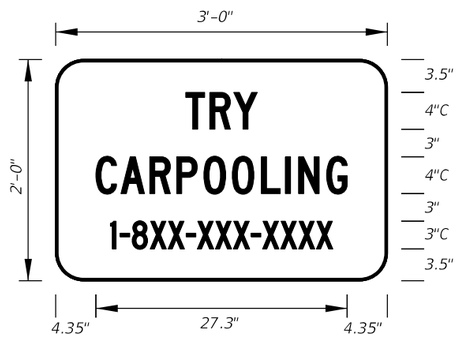

FTP-56A-06
3' X 2'
3" Radii
4" and 3" Series C Legend
Blue Background
White Legend and Border

Design Project Manager
or Transit Administrator
will supply correct 1-8XX
number.

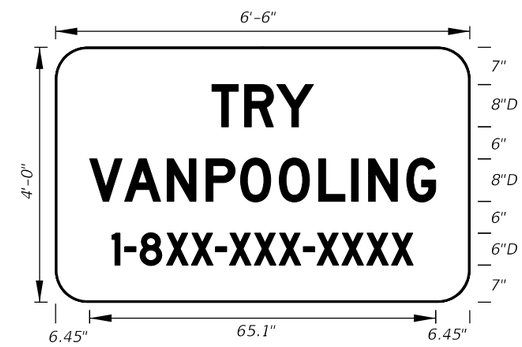

FTP-57-06
6'-6" X 4'
6" Radii
8"and 6" Series D Legend
Blue Background
White Legend and Border

Design Project Manager
or Transit Administrator
will supply correct 1-8XX
number.

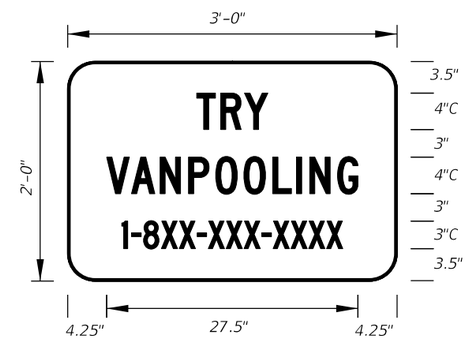

FTP-58-06
3' X 2'
3" Radii
4" and 3" Series C Legend
Blue Background
White Legend and Border

Design Project Manager
or Transit Administrator
will supply correct 1-8XX
number.

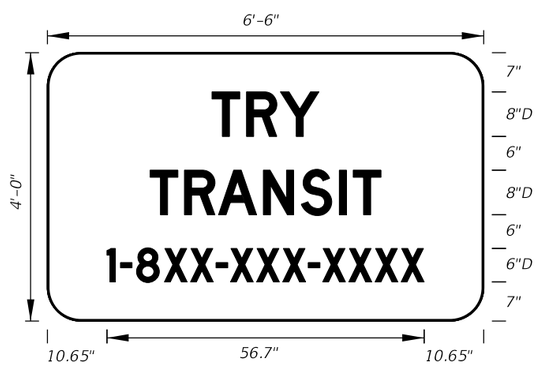

FTP-59-06
6'-6" X 4'
6" Radii
8" and 6" Series D Legend
Blue Background
White Legend and Border

Design Project Manager
or Transit Administrator
will supply correct 1-8XX
number.

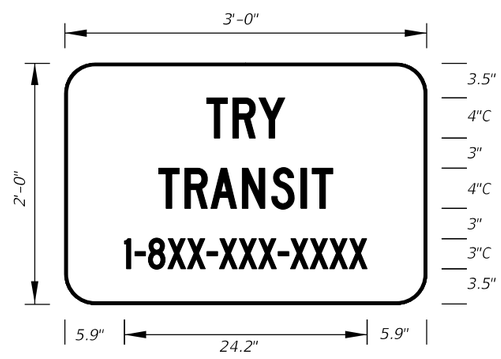

FTP-60-06
3' X 2'
3" Radii
4"and 3" Series C Legend
Blue Background
White Legend and Border

Design Project Manager
or Transit Administrator
will supply correct 1-8XX
number.

FTP-61-06
3' X 2'
3" Radii 3/4" Border
4" and 3" Series C Legend
Yellow Background
Black Legend and Border

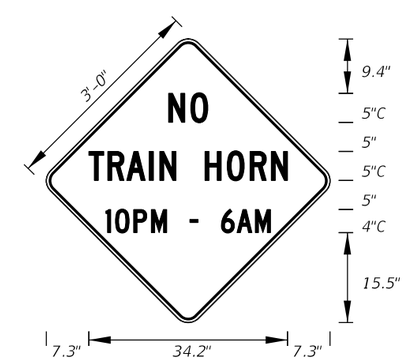

FTP-62-06
3' X 3'
2" Radii 3/4" Border 4"and 5" Series C Legend
Yellow Background Black Legend and Border

10/20/2022 8:57:13 AM

LAST REVISION	REVISION	DESCRIPTION:			INDEX	SHEET
11/01/20			FY 2023-24 STANDARD PLANS	SPECIAL SIGN DETAILS	700-102	7 of 12

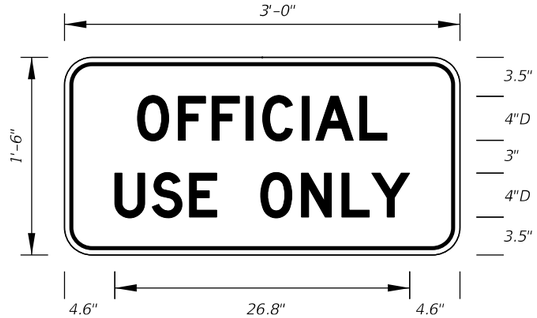

FTP-65-06
3' X 1'-6"
2" Radii ¾" Border
4" Series D Legend
White Background
Black Legend and Border

FTP-66-21
4'X5'
3" Radii 1" Border
6" Series D Legend
Blue Background
White Legend and Border

FTP-67-21
5.5' X 6'
3" Radii 1" Border
8" Series D Legend
Blue Background
White Legend and Border

DETAIL for FTP-66 AND FTP-67

Sign Mounting Holes Can Be Punched Or Field Drilled With No Obstruction To Text Or Symbols From Holes Or Bolts.

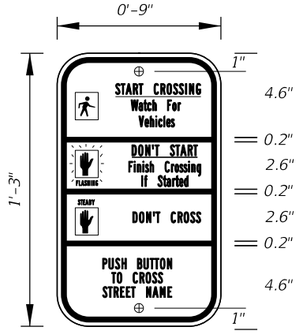

FTP-68A-06
9" X 1'-3"
1.5" Radii ¾" Border
Series B Legend
White Background
Black Legend and Border

See Standard Highway Signs Manual, Sign R10-3b For Letter Size Spacing And Symbol Sizes.

Sign Mounting Holes Can Be Punched Or Field Drilled With No Obstruction To Text Or Symbols From Holes Or Bolts.

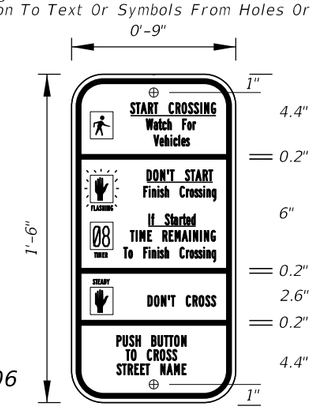

FTP-68B-06
9" X 1'-6"
1.5" Radii ¾" Border
Series B Legend
White Background
Black Legend and Border

See Standard Highway Signs Manual, Sign R10-3b For Letter Size Spacing And Symbol Sizes.

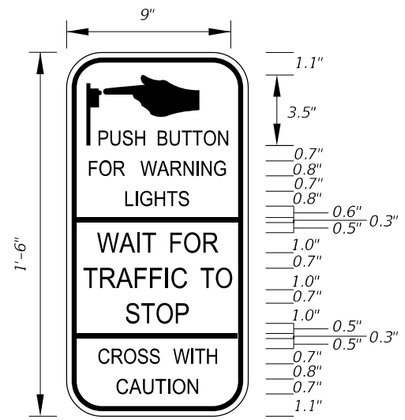

FTP-68C-21
9" X 1'-6"
1.5" Radii ¼" Border

Series D Legend
White Background
Black Legend and Border

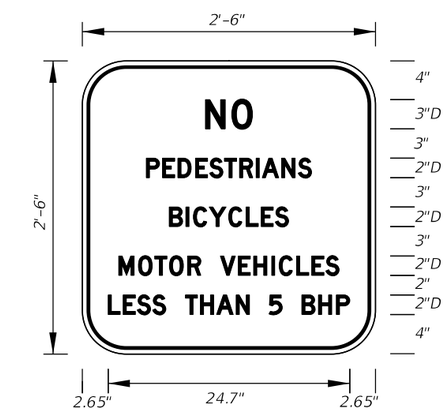

FTP-69-06
2'-6" X 2'-6"
4" Radii ¾" Border

2" and 3" Series D Legend
White Background
Black Legend and Border

FTP-70-06
3'-6" X 2'-6"
2.25" Radii ¾" Border
5" Series C and 7" Series C Legend
Blue Background
White Legend and Border

FTP-71-06
4' X 4'
2" Radii ¾" Border
8" Series C Legend
Yellow Background
Black Legend and Border

FTP-72-06
3' X 3'
2" Radii ¾" Border

6" Series C Legend
Yellow Background
Black Legend and Border

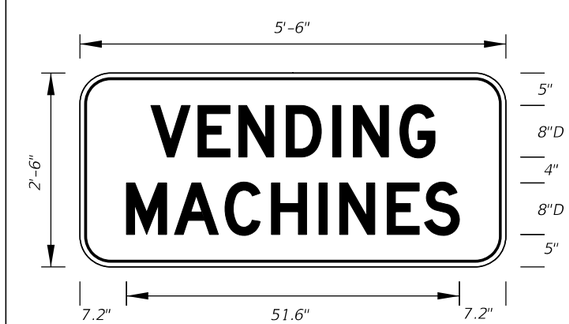

FTP-73-06
5'-6" X 2'-6"
4" Radii ¾" Border

8" Series D Legend
Blue Background
White Legend and Border

10/20/2022 8:57:14 AM

LAST REVISION	REVISION	DESCRIPTION:			INDEX	SHEET
11/01/20			FDOT FY 2023-24 STANDARD PLANS	SPECIAL SIGN DETAILS	700-102	8 of 12

FTP-74-06
5'-6" X 2'-6"
4" Radii ¾" Border
6" Series D Legend
Blue Background
White Legend and Border

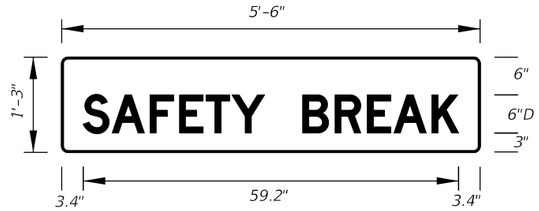

FTP-75-06
5'-6" X 1'-3"
1" Radii
6" Series D Legend
Blue Background
White Legend

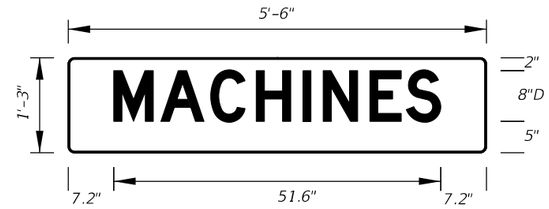

FTP-76-06
5'-6" X 1'-3"
1" Radii
8" Series D Legend
Blue Background
White Legend

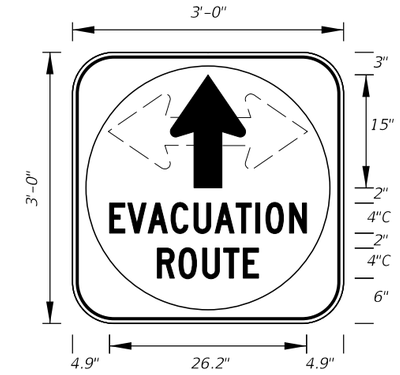

FTP-77-06
3' X 3'
5" Radii ¾" Border
4" Series C Legend
White Background with Blue Circle Background
White Legend and Black Border

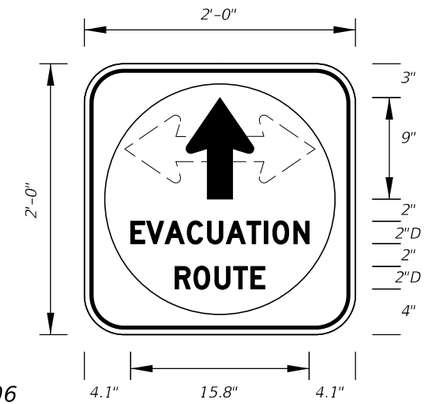

FTP-78-06
2' X 2'
3" Radii ¾" Border
2" Series D Legend
White Background with Blue Circle Background
White Legend and Black Border

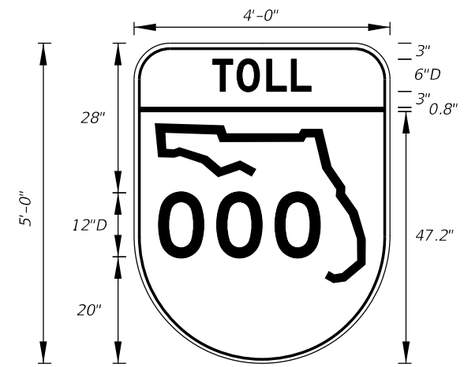

FTP-79-06
4' X 5'
6" Radii ¾" Border
6" and 12" Series D Legend
Top Yellow Background with Black Legend and Black Border
Bottom White Background with Black Legend and Border

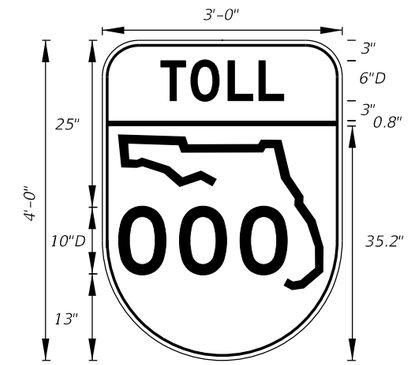

FTP-80-06
3' X 4'
5" Radii ¾" Border
6"and 10" Series D Legend
Top Yellow Background with Black Legend and Black Border
Bottom White Background with Black Legend and Border

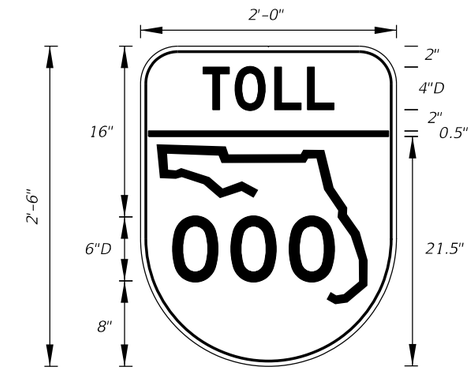

FTP-81-06
2' X 2'-6"
3" Radii ¾" Border
4" and 6" Series D Legend
Top Yellow Background with Black Legend and Black Border
Bottom White Background with Black Legend and Border

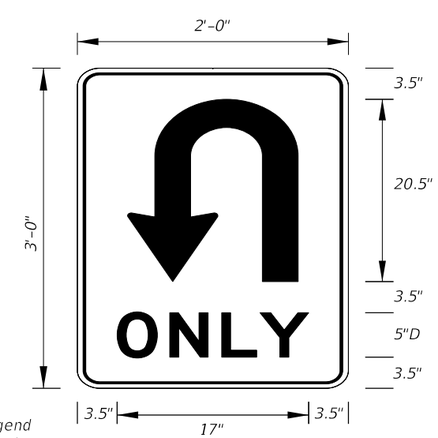

FTP-82-08
2' X 3'
1.5" Radii
5" Series D Legend
White Background
Black Legend and Border

ARROW HEAD

A	3.125
B	3.625
C	6.375
D	.5
E	.625

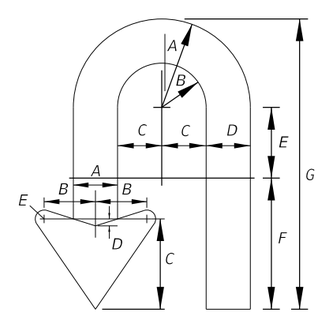

ARROW BODY

A	B	C	D	E	F	G
6.25	3.125	3.125	3.125	5	9.25	20.5

FTP-82-08
Details

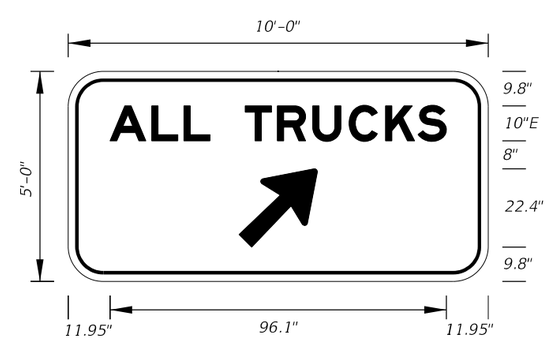

FTP-83-08
10'-0" X 5'-0"
8" Radii

10" Series E Legend
Green Background
White Legend

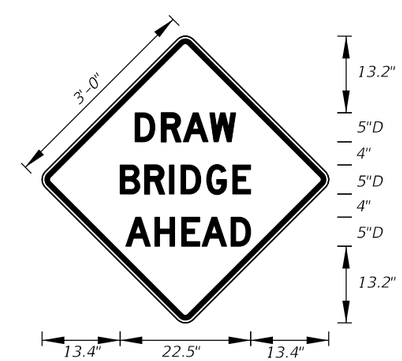

FTP-84-09
3' X 3'
1.5" Radii

5" Series D Legend
Yellow Background
Black Legend and Border

10/20/2022 8:57:15 AM

LAST REVISION	REVISION	DESCRIPTION:
11/01/20		

FY 2023-24
STANDARD PLANS

SPECIAL SIGN DETAILS

INDEX	SHEET
700-102	9 of 12

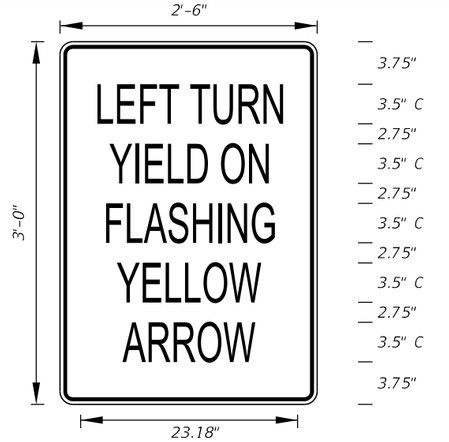

FTP-85-13
2'-6" X 3'
1.875" Radii ¾" Border

3.5" Series C Legend
White Background
Black Legend and Border

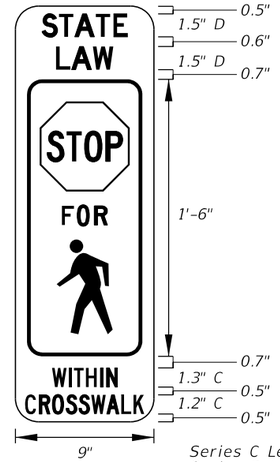

FTP-86-21
9" X 2'-3"
1.5" Radii No Border

Series C Legend and
Series D Legend
White on Yellow
Black Legend and Border

FTP-87-21
15'-6" X 8'-6"
12" Radii 2" Border

Series D Legend
Series EM Legend
Blue Background
White Legend and Border

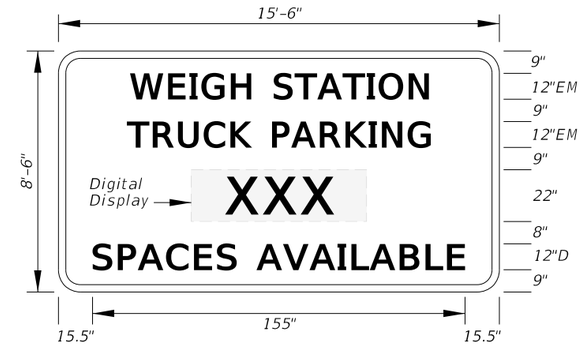

FTP-88-21
15'-6" X 8'-6"
12" Radii 2" Border

Series D Legend
Series EM Legend
Blue Background
White Legend and Border

FTP-89-21
16'-6" X 8'-6"
12" Radii 2" Border

Series D Legend
Series EM Legend
Blue Background
White Legend and Border

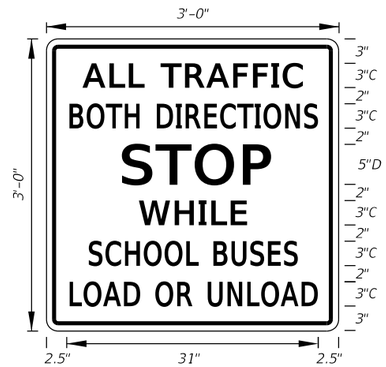

FTP-90-22
3'-0" X 3'-0"
1.5" Radii ¾" Border

3" Series C Legend and
5" Series D Legend
White Background
Black Legend and Border

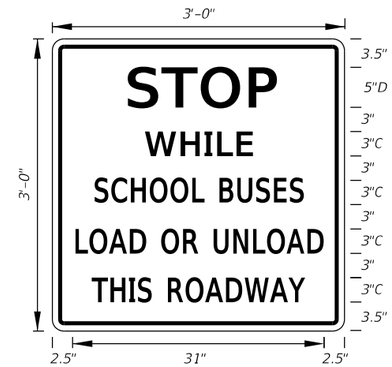

FTP-91-22
3'-0" X 3'-0"
1.5" Radii ¾" Border

3" Series C Legend and
5" Series D Legend
White Background
Black Legend and Border

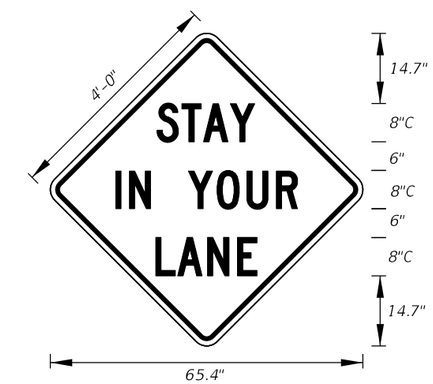

MOT-1-22
4' X 4'
3" Radii ¾" Border

8" Series C Legend
Orange Background
Black Legend and Border

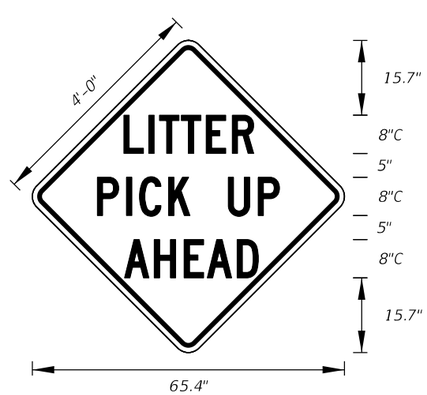

MOT-4-22
4' X 4'
3" Radii ¾" Border

8" Series C Legend
Orange Background
Black Legend and Border

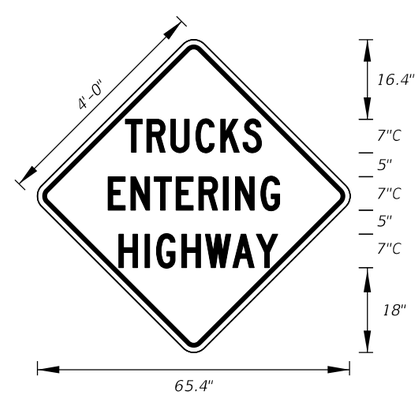

MOT-5-22
4' X 4'
3" Radii ¾" Border

7" Series C Legend
Orange Background
Black Legend and Border

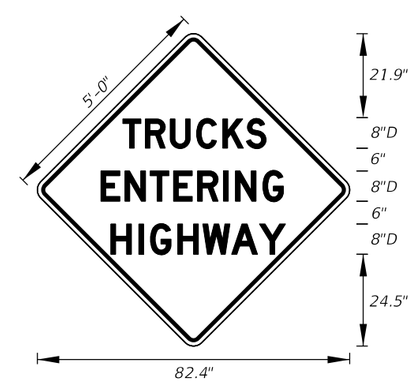

MOT-6-22
5' X 5'
3" Radii ¾" Border

8" Series D Legend
Orange Background
Black Legend and Border

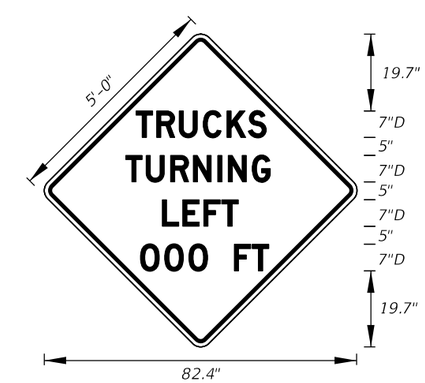

MOT-7-22
5' X 5'
3" Radii ¾" Border

7" Series D Legend
Orange Background
Black Legend and Border

10/20/2022 8:57:16 AM

LAST REVISION	REVISION	DESCRIPTION:			INDEX	SHEET
11/01/21			FDOT FY 2023-24 STANDARD PLANS	SPECIAL SIGN DETAILS	700-102	10 of 12

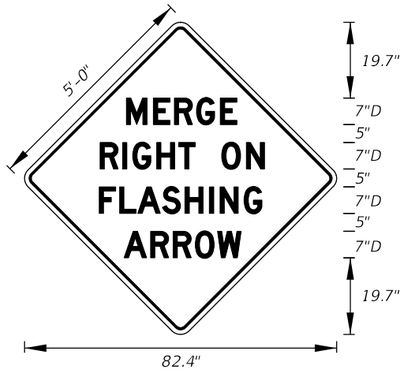

MOT-8-22
5' X 5'
3" Radii ¾" Border

7" Series D Legend
Orange Background
Black Legend and Border

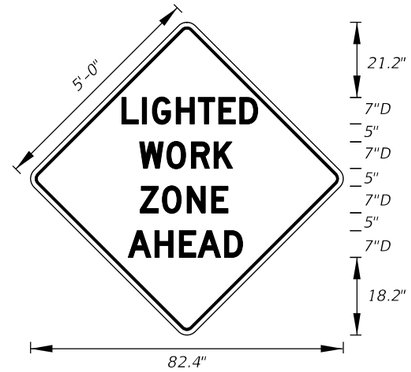

MOT-9-22
5' X 5'
3" Radii ¾" Border

7" Series D Legend
Orange Background
Black Legend and Border

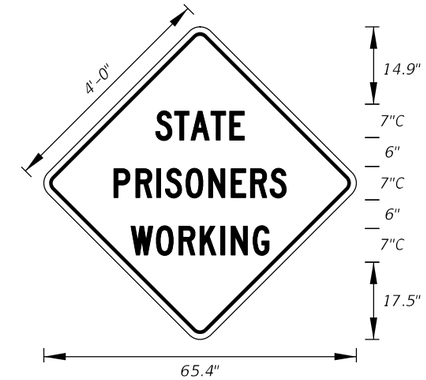

MOT-10-22
4' X 4'
3" Radii ¾" Border

7" Series C Legend
Orange Background
Black Legend and Border

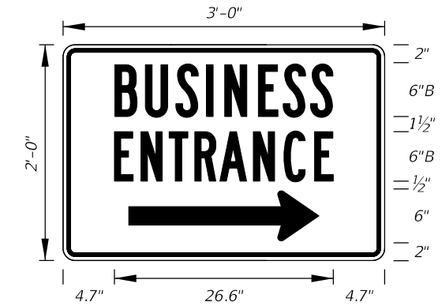

MOT-11-06
3' X 2'
2" Radii ¾" Border

6" Series B Legend
Blue Background
White Legend and Border

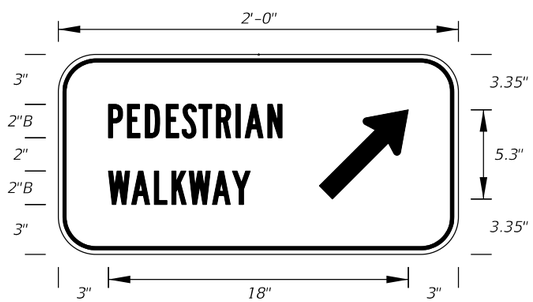

MOT-12R-06
2' X 1'
2" Radii ¾" Border
2" Series B Legend
White Background
Black Legend and Border

MOT-12L-06
For Diversion
to the left

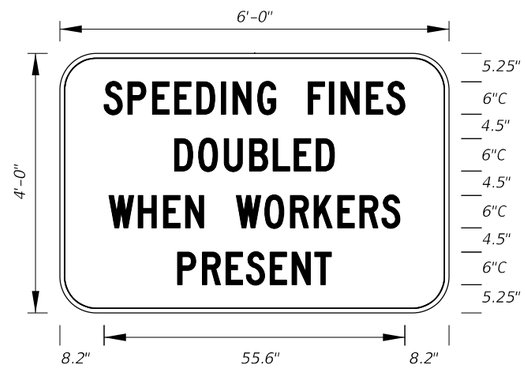

MOT-13-06
Freeway Sign
6' X 4'
6" Radii ¾" Border

6" Series C Legend
White Background
Black Legend and Border

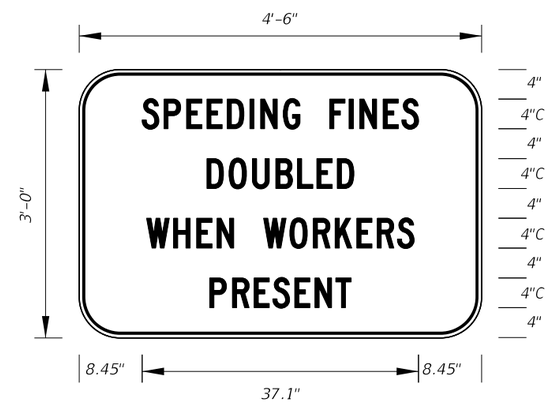

MOT-14-06
Arterial Sign
4'-6" X 3'
5" Radii ¾" Border

4" Series C Legend
White Background
Black Legend and Border

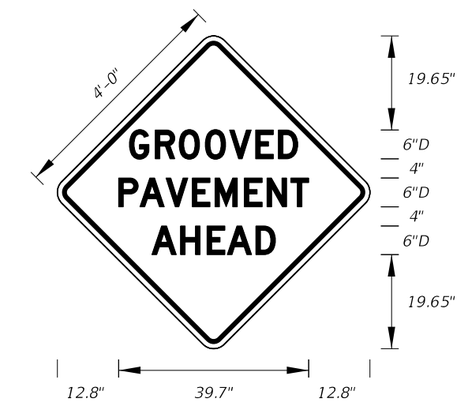

MOT-15-06
4' X 4'
2" Radii ¾" Border

6" Series D Legend
Orange Background
Black Legend and Border

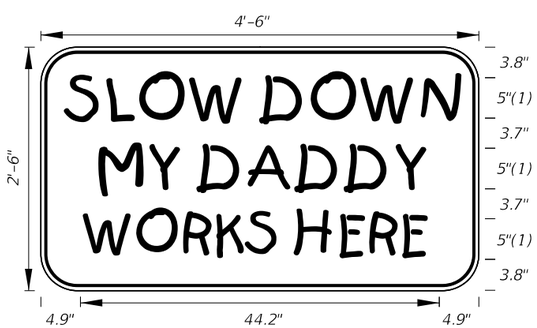

MOT-16-06
4'-6" X 2'-6"
4" Radii ¾" Border

5" Kids Series Legend
Orange Background
Black Legend and Border

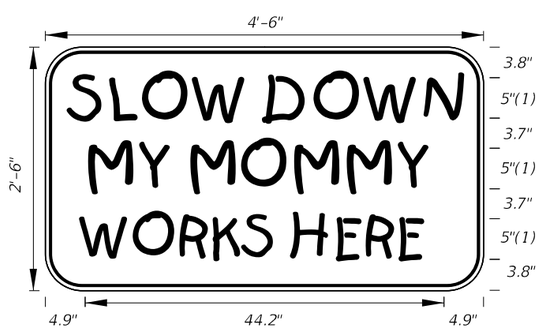

MOT-17-06
4'-6" X 2'-6"
4" Radii ¾" Border

5" Kids Series Legend
Orange Background
Black Legend and Border

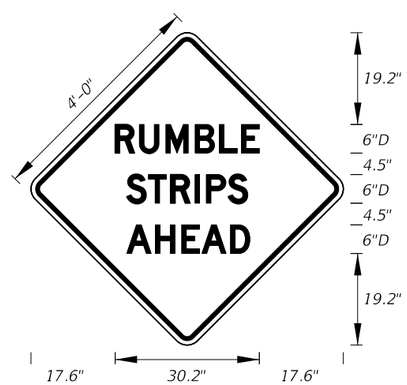

MOT-18-10
4' X 4'
2" Radii ¾" Border

6" Series D Legend
Orange Background
Black Legend and Border

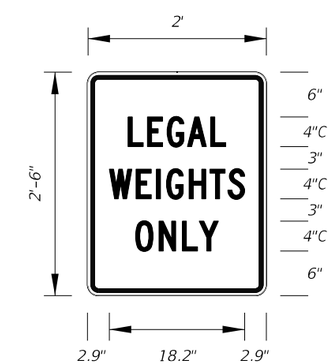

MOT-19-11
2' X 2'-6"
1.13" Radii ¾" Border

4" Series C Legend
White Background
Red Legend and Border

10/20/2022 8:57:17 AM

LAST REVISION	REVISION	DESCRIPTION:			INDEX	SHEET
11/01/21			FY 2023-24 STANDARD PLANS	SPECIAL SIGN DETAILS	700-102	11 of 12

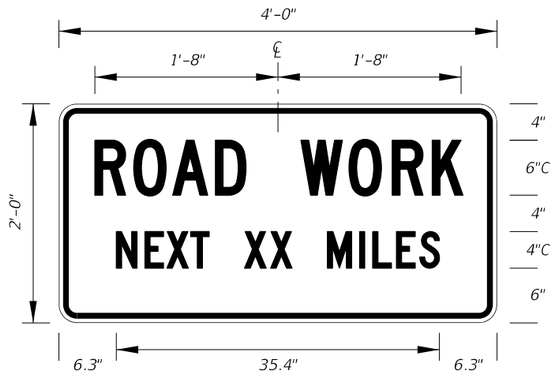

G20-1
2' X 4'
1.5" Radii ¾" Border

Orange Background
Black Legend and Border

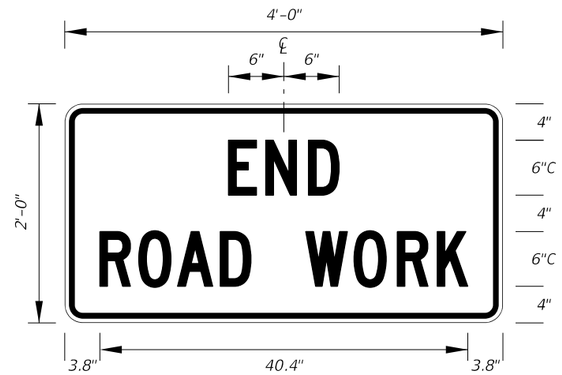

G20-2
2' X 4'
1.5" Radii ¾" Border

Orange Background
Black Legend and Border

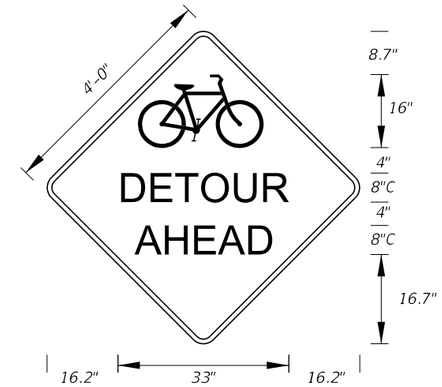

MOT-20-21
4' X 4'
3" Radii ¾" Border

8" Series C Legend
Orange Background
Black Legend and Border

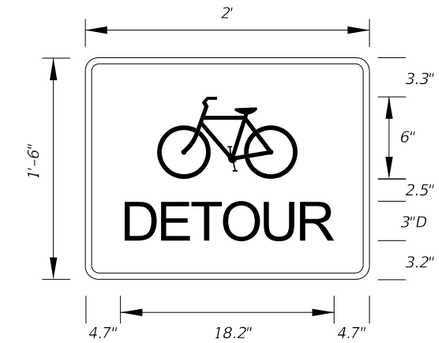

MOT-21-21
2' X 1'-6"
1.5" Radii ½" Border

3" Series D Legend
Orange Background
Black Legend and Border

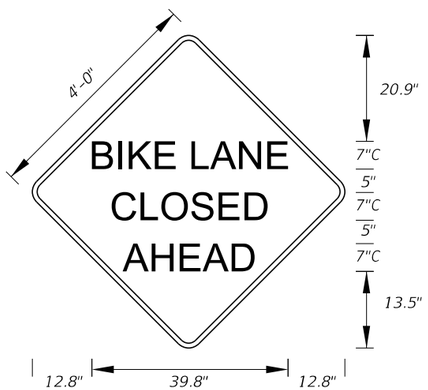

MOT-22-21
4' X 4'
3" Radii ¾" Border

7" Series C Legend
Orange Background
Black Legend and Border

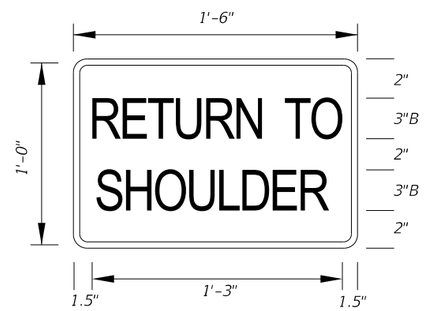

MOT-23-21
1'-6" X 1'-0"
1.5" Radii ¼" Border

3" Series B Legend
Orange Background
Black Legend and Border

MOT-24-21
2'-6" X 1'-6"
1.5" Radii ½" Border

4" Series C Legend
White Background
Black Legend and Border

MOT-25-21
2'-0" X 1'-6"
1.5" Radii ½" Border

4" Series B Legend
White Background
Black Legend and Border

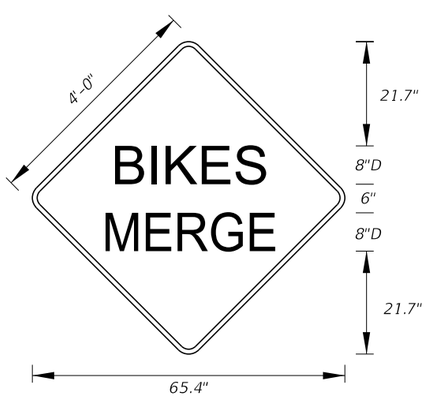

MOT-26A-22
4' X 4'
3" Radii ¾" Border

8" Series D Legend
Orange Background
Black Legend and Border

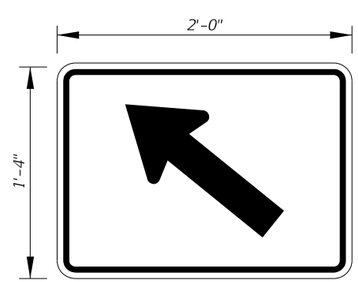

MOT-26B-22
2'-0" X 1'-4"
1.5" Radii ⅝" Border

Orange Background
Black Legend and Border

10/20/2022 8:57:19 AM

LAST REVISION	REVISION	DESCRIPTION:	FY 2023-24 STANDARD PLANS	SPECIAL SIGN DETAILS	INDEX	SHEET
11/01/21					700-102	12 of 12

** Note:

Two assemblies are required; one for each side of the ramp, showing those services in each particular direction from the ramp terminal.

Ramp mounted signs shall be installed to avoid conflict with existing signs and in no case should they be placed within 100' of another sign.

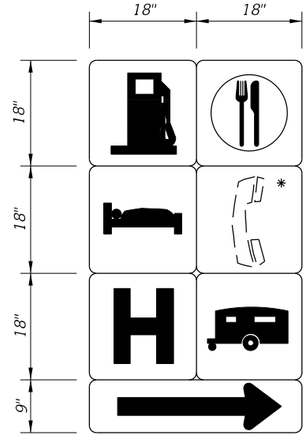

DETAIL "D"

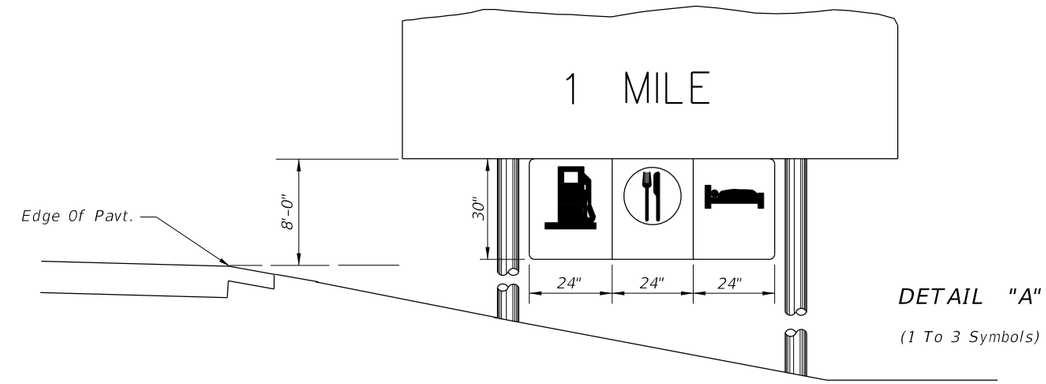

DETAIL "A"

(1 To 3 Symbols)

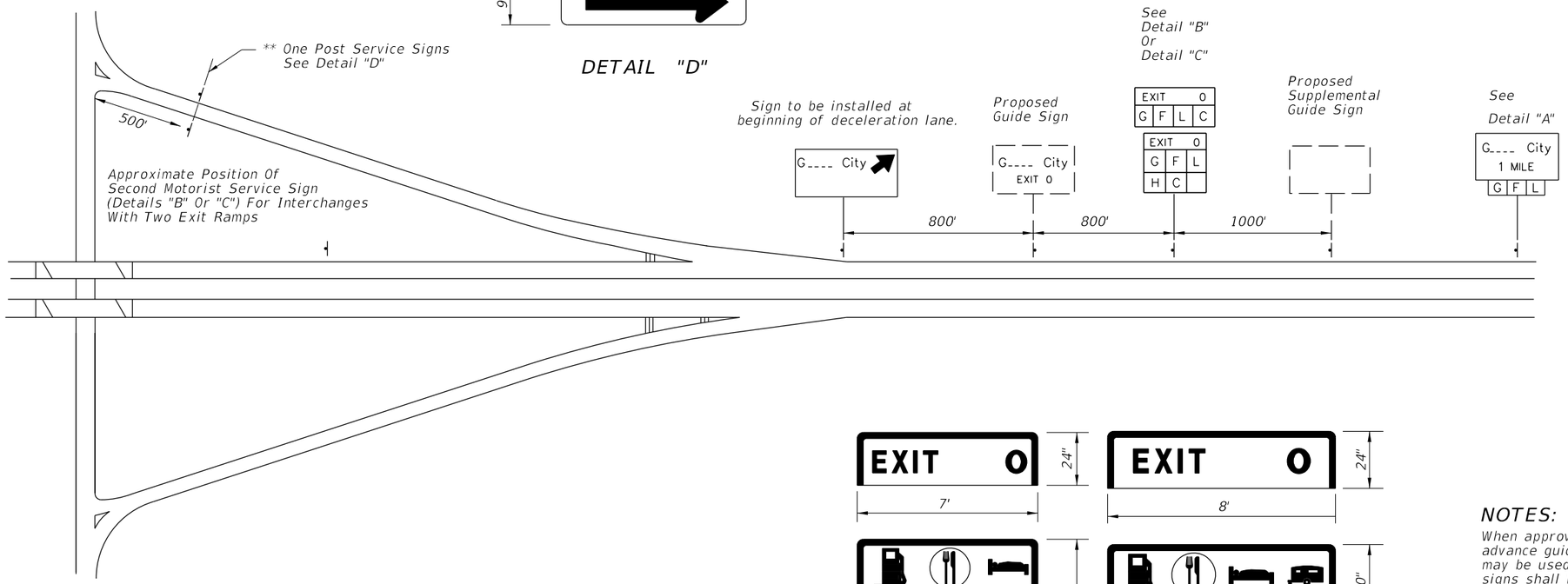

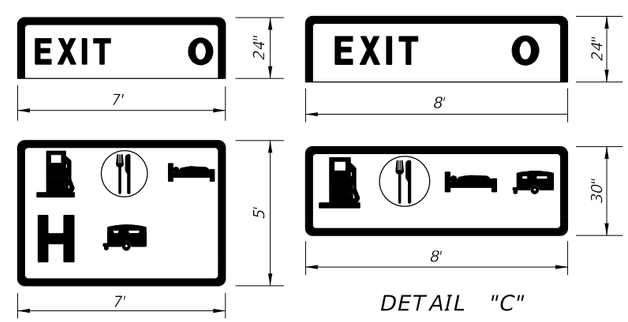

DETAIL "B"

(4 To 6 Symbols)

DETAIL "C"

(4 Symbols)

GENERAL NOTES:

1. Only those services meeting criteria established by the Department and approved by the State Traffic Operations Engineer for each interchange shall be shown. Symbol signs for motorist services shall always appear in the following order reading from left to right and top to bottom: Gas, Food, Lodging, Phone * , Hospital, Camping.

   * The phone symbol shall not be shown whenever any Gas, Food, Lodging or Camping symbol appears.

2. Symbols shall appear consecutively on the sign with no positions left blank or reserved for intermediate symbols not currently approved for a particular interchange.

3. All motorist service signs to have White Legend and Border with Blue Background.

4. For mounting details see Index 700-010 for Single-column Ground Signs or Index 700-020 for Multi-column Ground Signs.

NOTES:

When approved for attachment to the advance guide signs, up to 3 services may be used for an exit. The symbol signs shall be suspended from the guide sign panel or existing wind beams. Symbol signs are not to be connected to existing sign posts.

The mounting height of the advance guide sign shall be increased, where necessary, to provide 8' between the level of the pavement edge and the bottom of the guide sign, prior to mounting the supplementary panel.

10/20/2022 8:57:20 AM

LAST REVISION	REVISION	DESCRIPTION:			INDEX	SHEET
11/01/19			FY 2023-24 STANDARD PLANS	SIGNING FOR MOTORIST SERVICES	700-104	1 of 1

Sign FTP-10-06

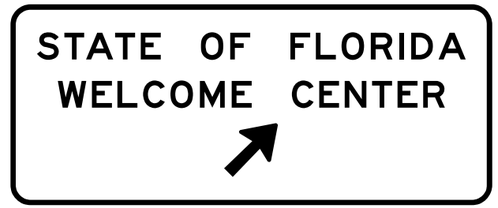

Sign FTP-11-06

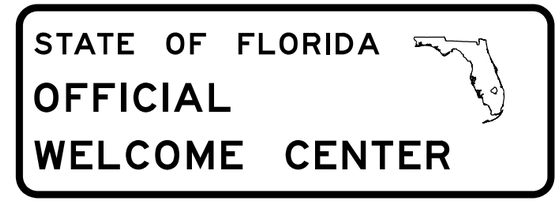

Sign FTP-12-06

Sign FTP-13-06

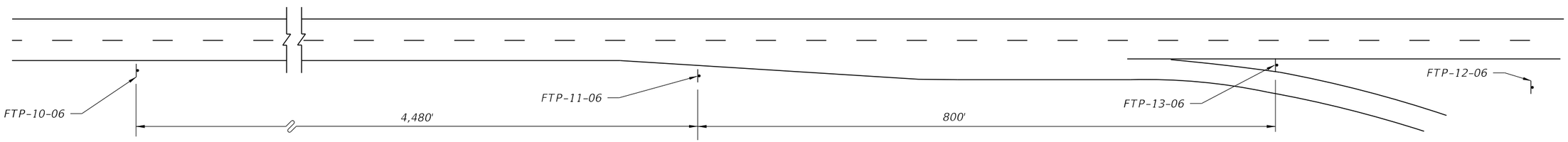

Note: Roadway not drawn to scale
Distances shown are adequate for driver communication but may be altered slightly if conditions require.

Sign FTP-14-06

Note: Sign FTP-14-06 shall be used as a supplemental guide sign at interchanges which have a Tourist Information Center approved for such signing (locate half-way between normal guide signs)

Notes:

1. Signs and sign structures shall be erected in accordance with the details shown on Index 700-020.
2. Sign FTP-12-06 shall be located on the Welcome Center grounds in proximity to the building and as far from the main line roadway as possible (2 signs back to back).
3. Sign FTP-10-06, 11-06, 12-06 shall be located as limited access highways only.
4. All legend to be Series E.
5. See Index 700-102 for sign details.

FOR LIMITED ACCESS HIGHWAYS

SIGN FTP-15A-06

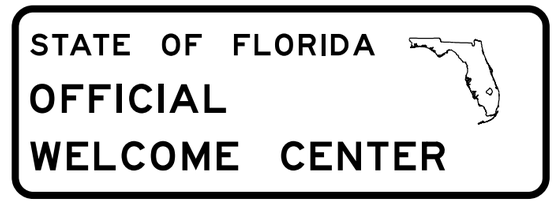

SIGN FTP-12-06

SIGN FTP-15B-06

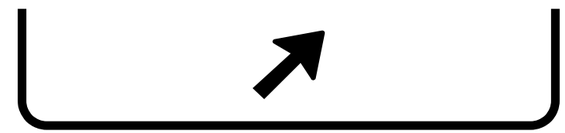

SIGN FTP-15C-06

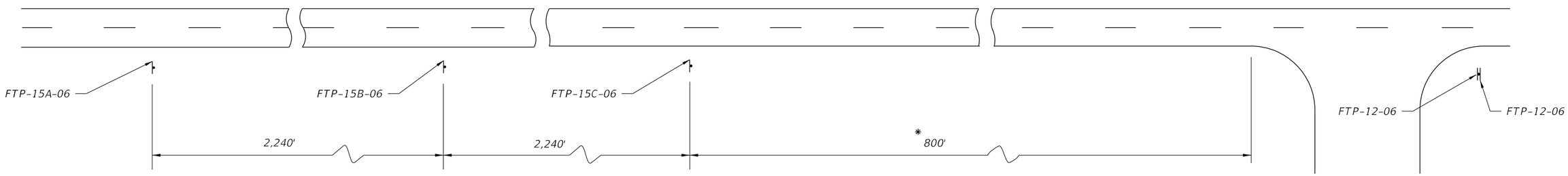

* 800' Maximum For Rural Conditions
50' Minimum For Rural Conditions

NOTES:

1. Signs and sign structures shall be erected in accordance with the details shown on Index 700-020.
2. Sign FTP-12-06 shall be located on the Welcome Center grounds in proximity to the building and as far from the Main Line Roadway as possible (2 signs back to back).
3. All legend to be Series E.
4. One sign FTP-15A-06 or 15B-06 should be used depending on speed, roadside development & geometric conditions.

FOR PRIMARY HIGHWAYS

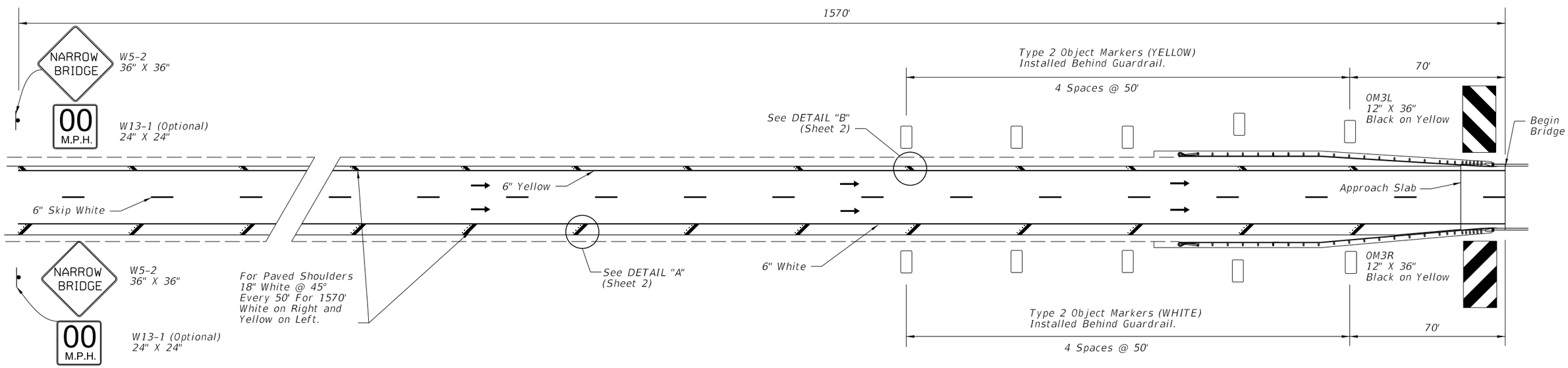

ONE-WAY TRAFFIC

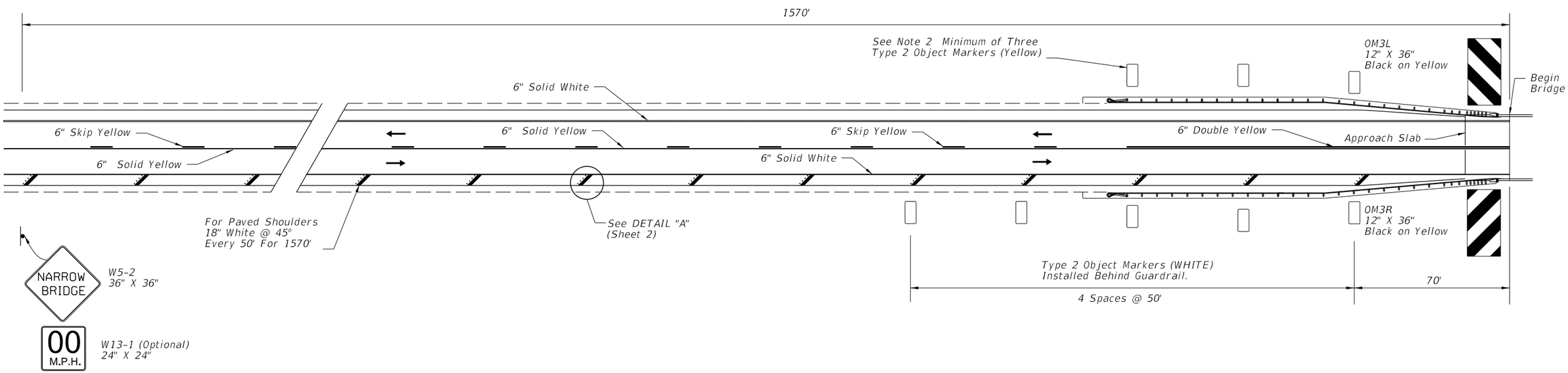

2-WAY TRAFFIC

8:57:22 AM

10/20/2022

LAST REVISION	REVISION	DESCRIPTION:				
11/01/20			FY 2023-24 STANDARD PLANS	RURAL NARROW BRIDGE TREATMENT	INDEX 700-106	SHEET 1 of 2

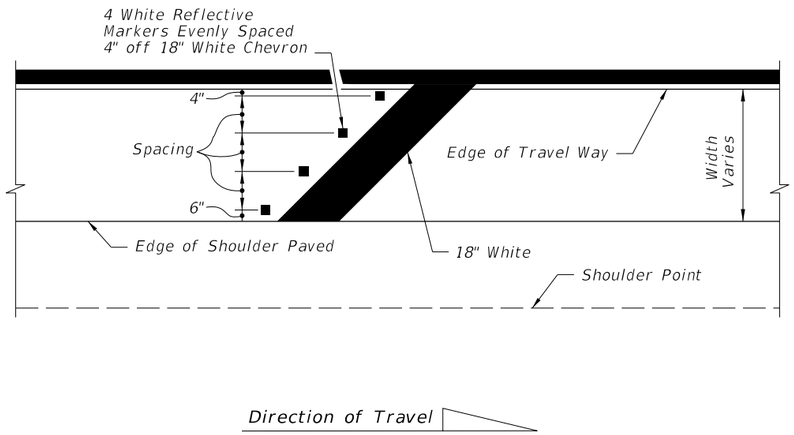

Outside Shoulder

DETAIL "A"

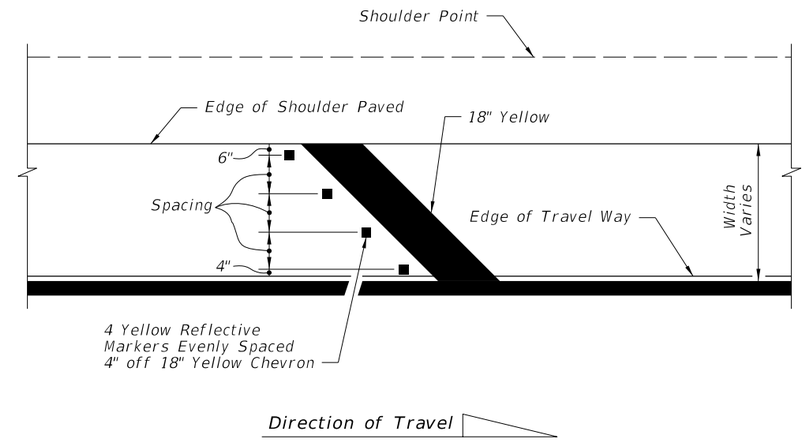

Median Shoulder

DEATIL "B"

NOTES:

1. Roadways with Two-Way Traffic:
   No passing zone should be extended 1570' in advance of narrow bridge.

2. If the bridge or the approach is on a curve, delineators shall be installed for a distance of 1570' in advance of narrow bridge on the outside portion of the roadway. Spacing shall be 100' between delineators. Delineators are to be placed not less than 2' or not more than 8' outside the outer edge of pavement.

3. Object markers and delineators on both sides of roadway shall face traffic approaching bridge

4. The OM-3R & OM-3L object markers shall be installed 4' above the roadway edge. The panels may be post mounted at the bridges.

5. Install Audible and Vibratory treatments (e.g., ground-in rumble strips or profiled thermoplastic) in accordance with the Plans.

Shoulder Width	No. of RPM's	Spacing
2'	2	14"
3'	3	13"
4'	3	19"
5'	4	16.67"

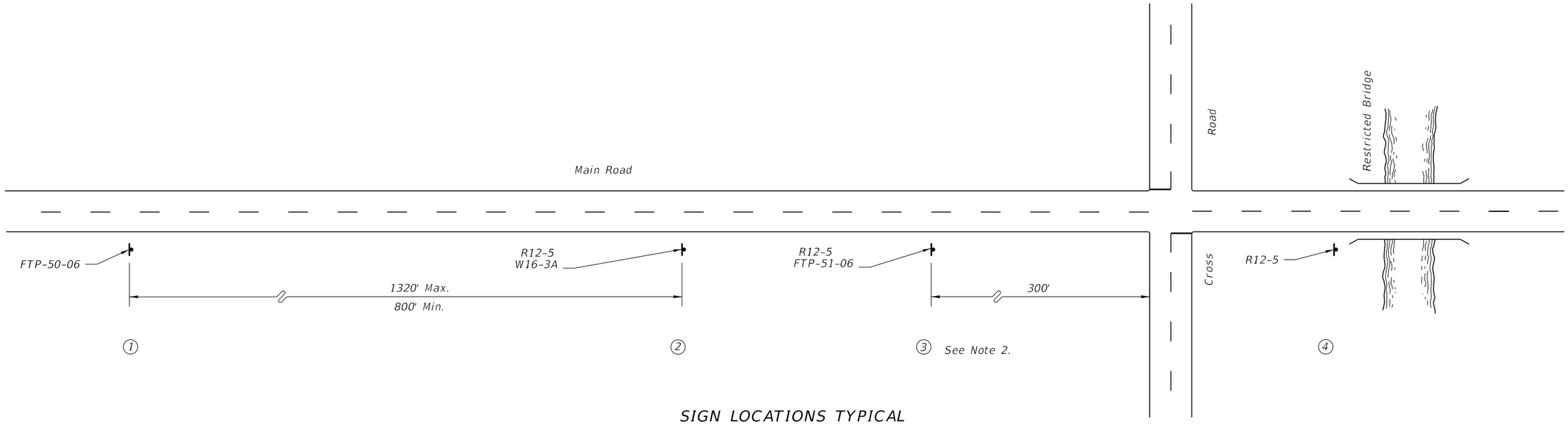

SIGN LOCATIONS TYPICAL

1

WEIGHT LIMIT
RESTRICTION AHEAD

FTP-50-06

2

WEIGHT
LIMIT
8T
12T
16T

R12-5 (24" X 36")

X MILES

W 16-3A

3

WEIGHT
LIMIT
8T
12T
16T

R12-5 (24" X 36")

WEIGHT
LIMIT
LAST EXIT

FTP-51-06

4

WEIGHT
LIMIT
8T
12T
16T

R12-5 (24" X 36")

NOTES:

1. See Standard Highway Signs for sign R12-5 and W16-3 details.
2. Location of Sign 3 may require some field adjustment.
3. The Cross Road is the last detour to route around the restricted bridge.
4. Location of Sign 2 should be established from the Cross Road the following approximate distances; Interstate-1 Mile Non- Interstate-1/2 Mile.
5. See Index 700-102 for sign details.

10/20/2022 8:57:24 AM

LAST REVISION	REVISION	DESCRIPTION:				INDEX	SHEET
11/01/17			FDOT	FY 2023-24 STANDARD PLANS	BRIDGE WEIGHT RESTRICTIONS	700-107	1 of 1

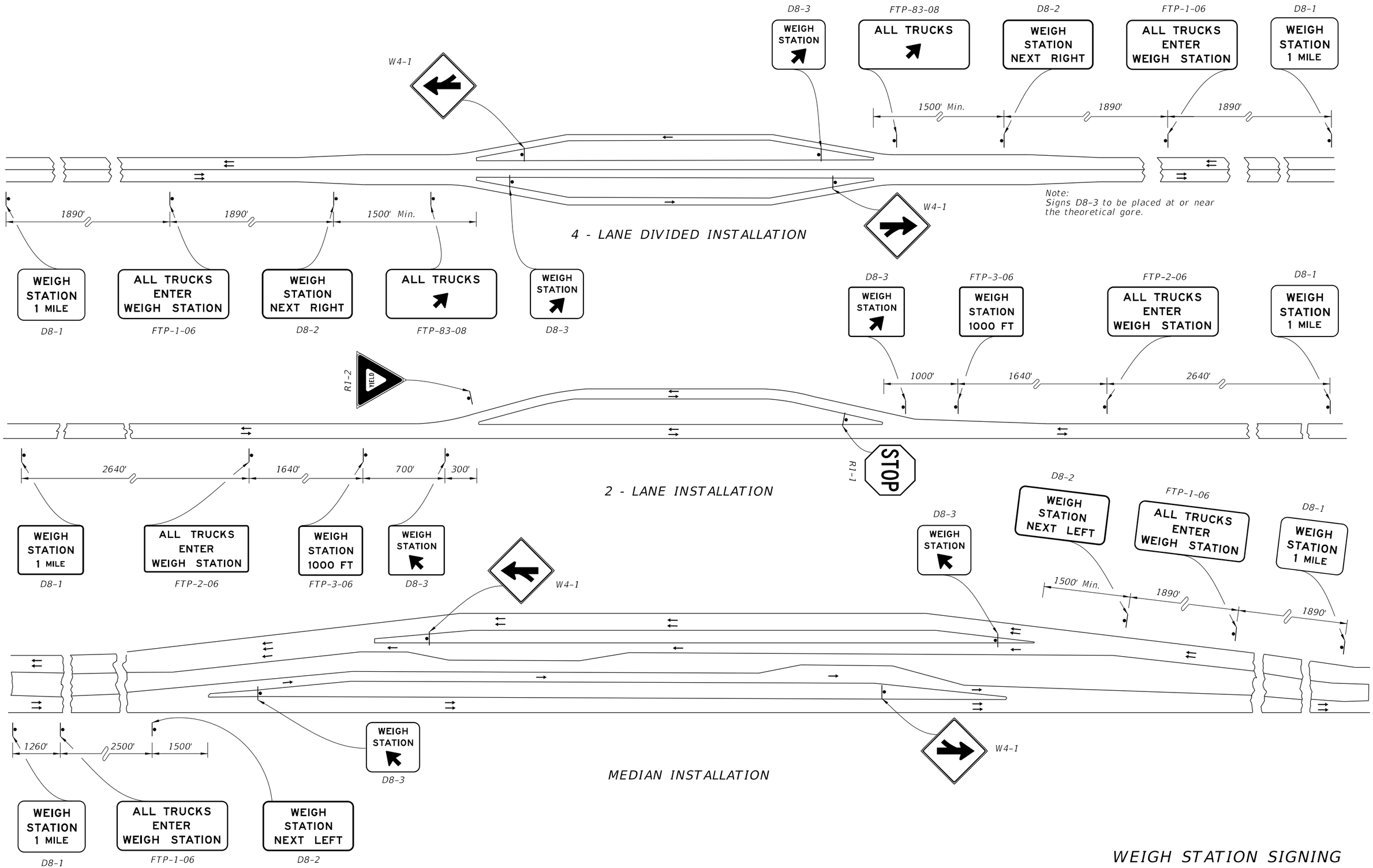

WEIGH STATION SIGNING

10/20/2022 8:57:25 AM

LAST REVISION	REVISION	DESCRIPTION:				INDEX	SHEET
11/01/17			FDOT	FY 2023-24 STANDARD PLANS	TYPICAL SIGNING FOR TRUCK WEIGH AND INSPECTION STATIONS	700-108	1 of 2

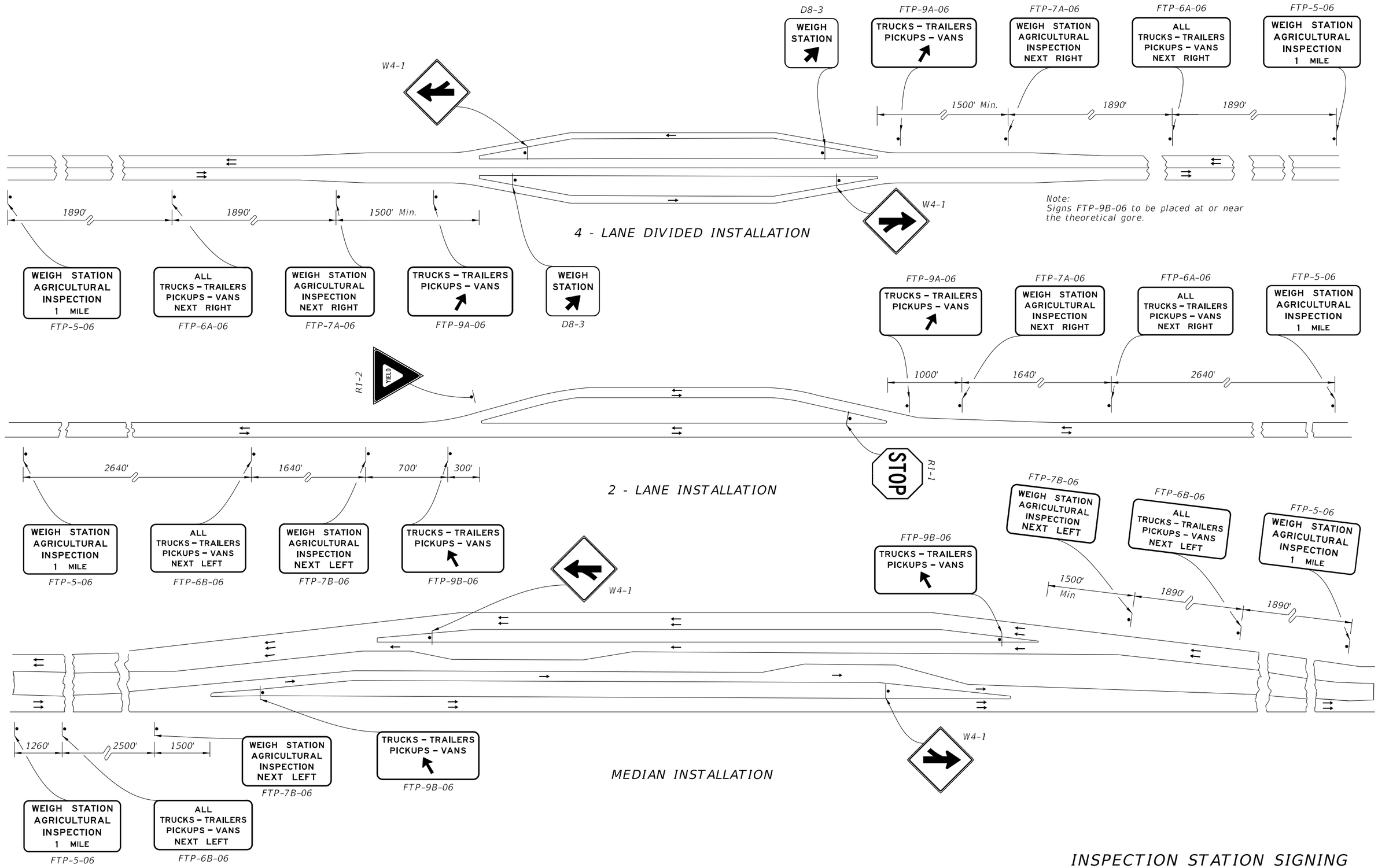

INSPECTION STATION SIGNING

10/20/2022 8:57:25 AM

LAST REVISION	REVISION	DESCRIPTION:			INDEX	SHEET
11/01/17			FY 2023-24 STANDARD PLANS	TYPICAL SIGNING FOR TRUCK WEIGH AND INSPECTION STATIONS	700-108	2 of 2

GENERAL NOTES:

1. Meet the requirements of Specification 700.

2. Work with Indexes 700-020 and 700-030.

3. Fabrication:
   See sign layout sheet for dimension "L" and sign face details in the Plans.

4. For right exits, install the Exit Numbering Panel to the top right side of the Highway Sign.

5. For left exits, install the Exit Numbering Panel to the top left side of the Highway Sign.

6. Materials (Aluminum):

   A Sheets and Plates: ASTM B209 Alloy 6061-T6
   B. Extruded and Standard Structural Shapes: ASTM B221 Alloy 6061-T6
   C. For Bolts, Nuts, and Washers requirements see Index 700-020 or 700-030.

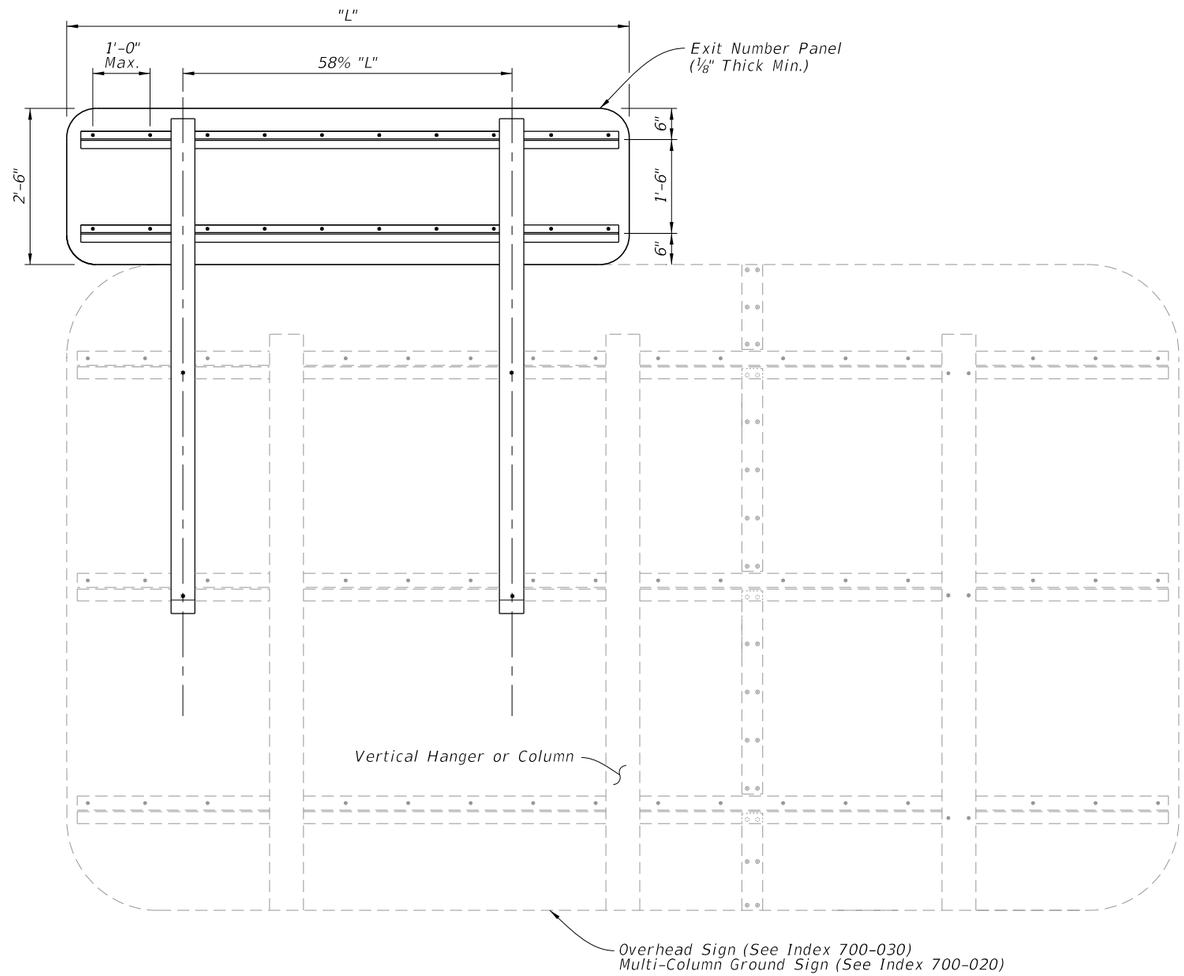

BACK ELEVATION

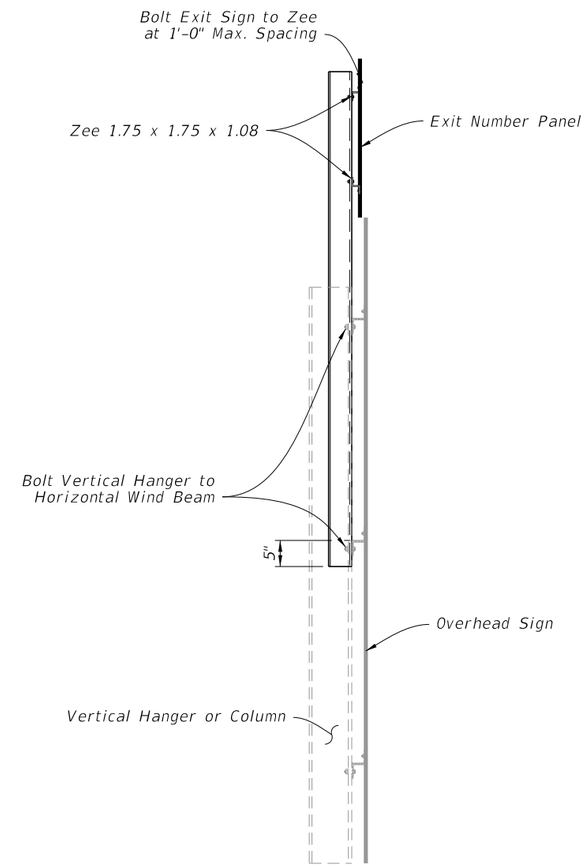

SIDE ELEVATION

5/13/2024 1:46:13 PM

LAST REVISION	REVISION	DESCRIPTION:			INDEX	SHEET
11/01/22			FDOT FY 2023-24 STANDARD PLANS	MOUNTING EXIT NUMBER PANELS TO SIGNS	700-110	1 of 1

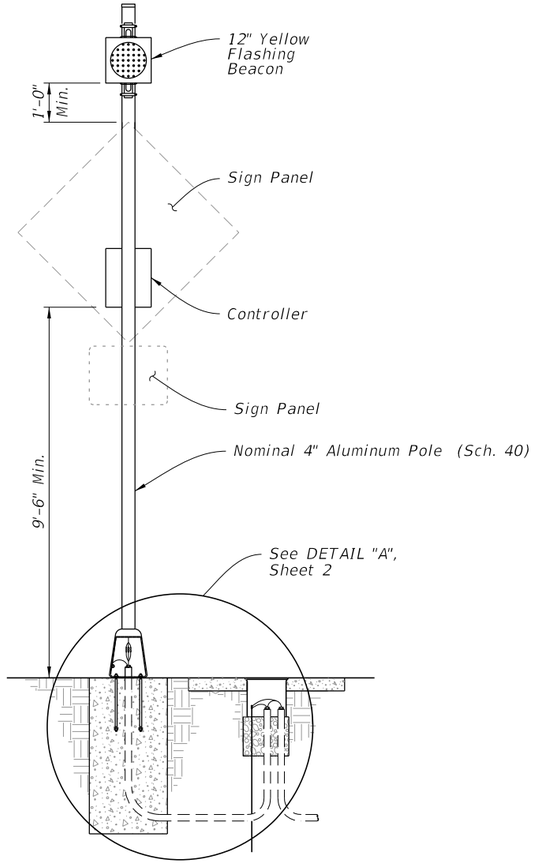

FRONT ELEVATION

POWER CONFIGURATION 'A'
CONVENTIONALLY POWERED
(Type A1 Shown)

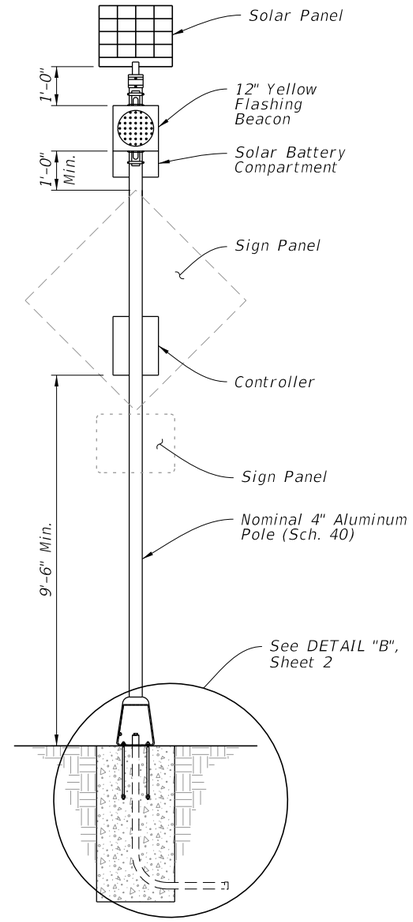

FRONT ELEVATION

WITHOUT AUXILIARY POLE

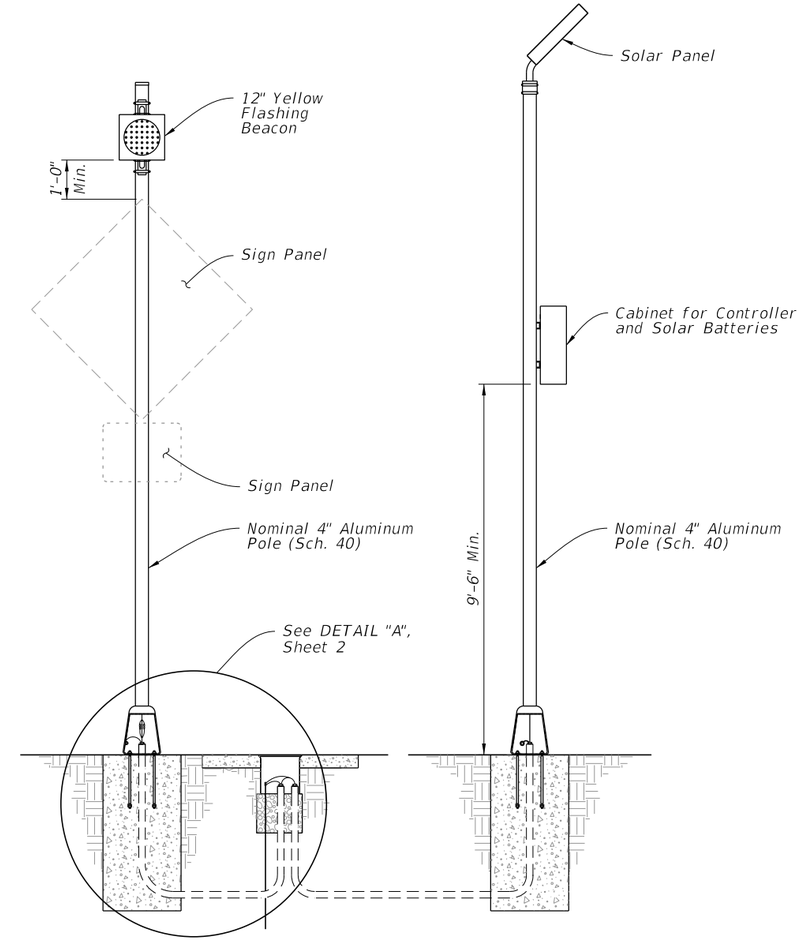

SIGN ASSEMBLY FRONT ELEVATION

AUXILIARY POLE ELEVATION

WITH AUXILIARY POLE

POWER CONFIGURATION 'B'
SOLAR POWERED
(Type B1 Shown)

GENERAL NOTES:

1. Meet the reqirements of Specifications 646 and 700.
2. Engage all threads on the transformer base and post unless the aluminum post is fully seated into base.
3. Install a concrete slab around all roadside assemblies on slopes 6:1 or greater. The minimum slab dimension is 6" by 4'-0" by 5'-0".
4. When wire entry holes are drilled in the sign column, use a bushing or rubber grommet to protect conductors.

POWER CONFIGURATION 'B' NOTES:

1. Install a separate pole for mounting the solar panel, controller and batteries for all roadside assemblies with solar panels, controllers and batteries weighing more than 170 lbs.
2. Install the auxiliary pole as close to the right of way boundary as possible.
3. Install the auxiliary pole so that the height is the same as the column for the roadside assembly.
4. Orient solar panel to face South for optimal exposure to sunlight.
5. The controller and the solar batteries may be located in the same compartment.

TABLE OF CONTENTS:

Sheet	Description
1	General Notes and Contents
2	Conduit, Wiring, and Foundation Details
3	Roadside Sign Assembly-1
4	Roadside Sign Assembly-2
5	Roadside Sign Assembly-3
6	Roadside Sign Assembly-4
7	Roadside Sign Assembly-5
8	Roadside Sign Assembly-6
9	Roadside Sign Assembly-7
10	Roadside Sign Assembly-8
11	Overhead Sign Assembly

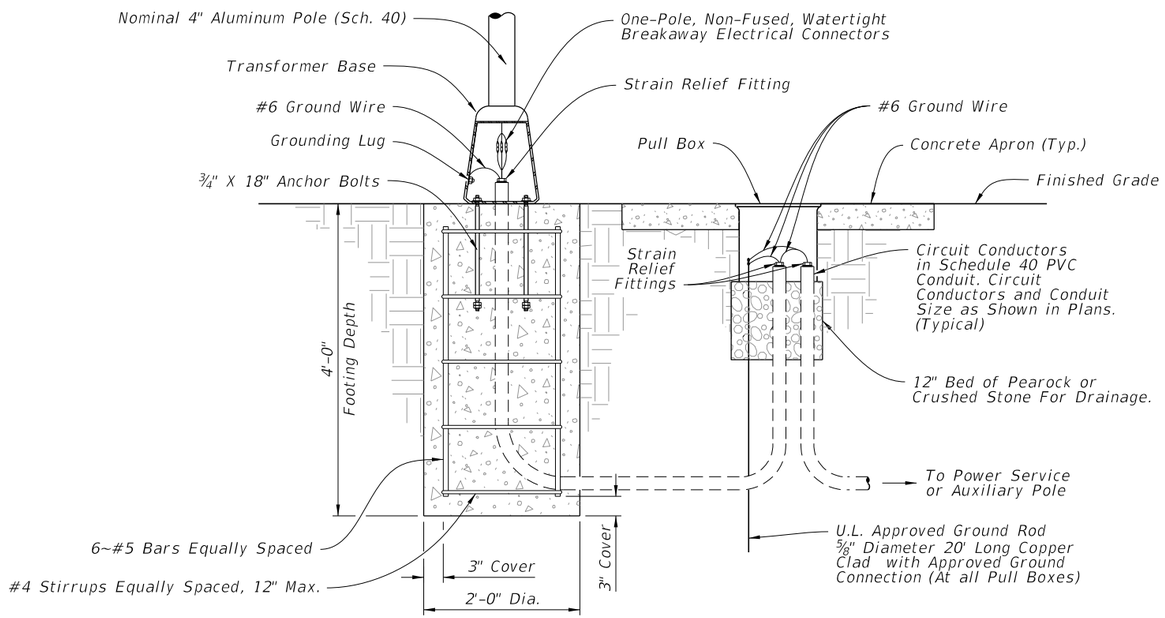

DETAIL "A"

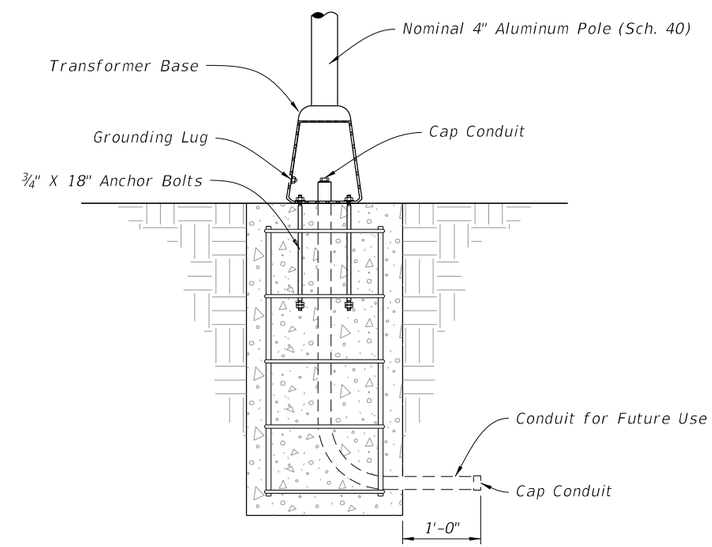

DETAIL "B"

CONDUIT, WIRING, AND FOUNDATION DETAILS

LAST REVISION	REVISION	DESCRIPTION:			INDEX	SHEET
11/01/21			FY 2023-24 STANDARD PLANS	ENHANCED HIGHWAY SIGNING ASSEMBLIES	700-120	2 of 11

10/20/2022 8:57:28 AM

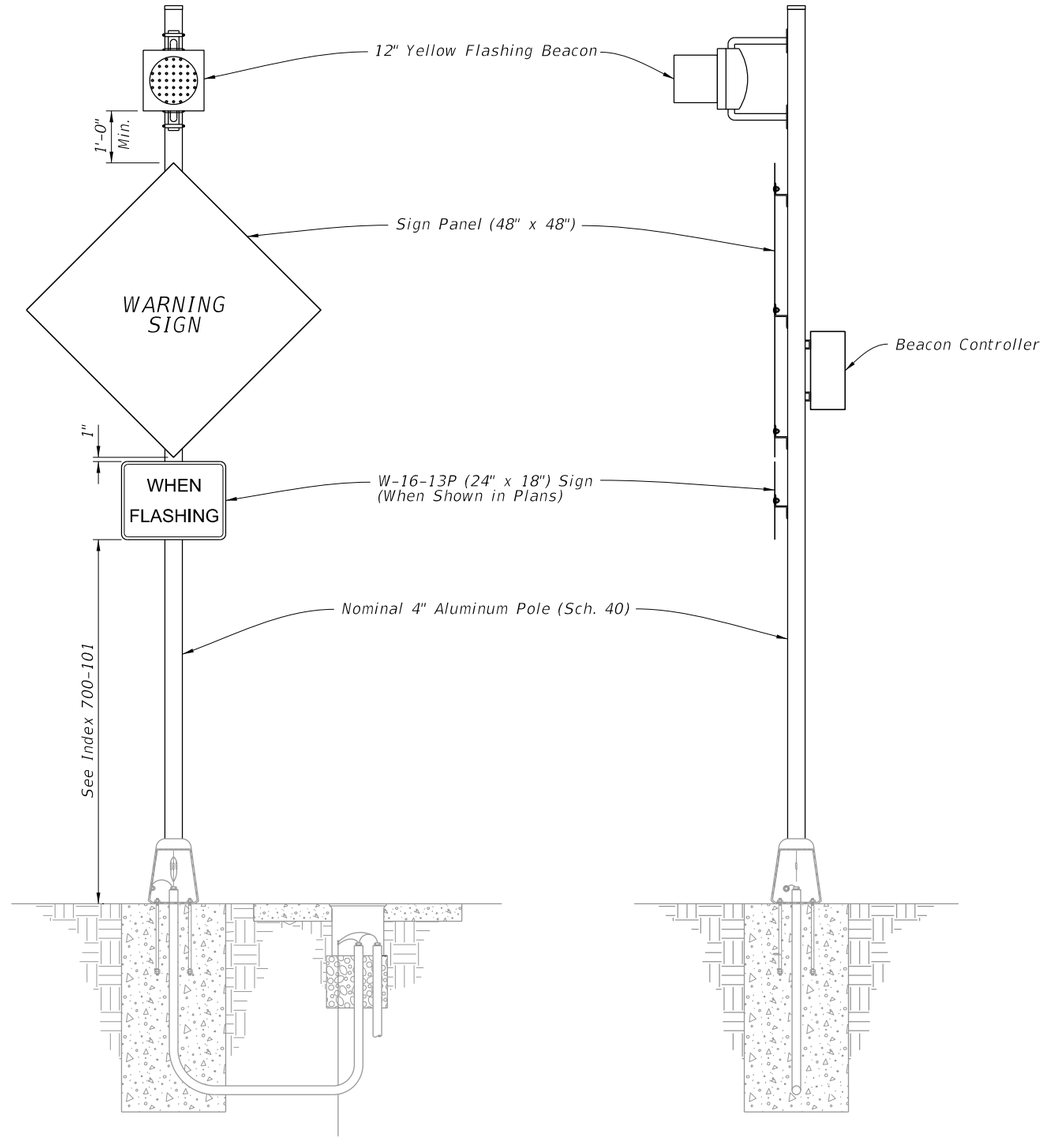

NOTES:

1. Type A1 Assembly (conventionally powered) is shown. Type B1 Assemblies (solar powered) similar.

2. Foundation reinforcement not shown.

10/20/2022 8:57:29 AM

ROADSIDE SIGN ASSEMBLY-1

LAST REVISION	REVISION	DESCRIPTION:			INDEX	SHEET
11/01/21			FDOT FY 2023-24 STANDARD PLANS	ENHANCED HIGHWAY SIGNING ASSEMBLIES	700-120	3 of 11

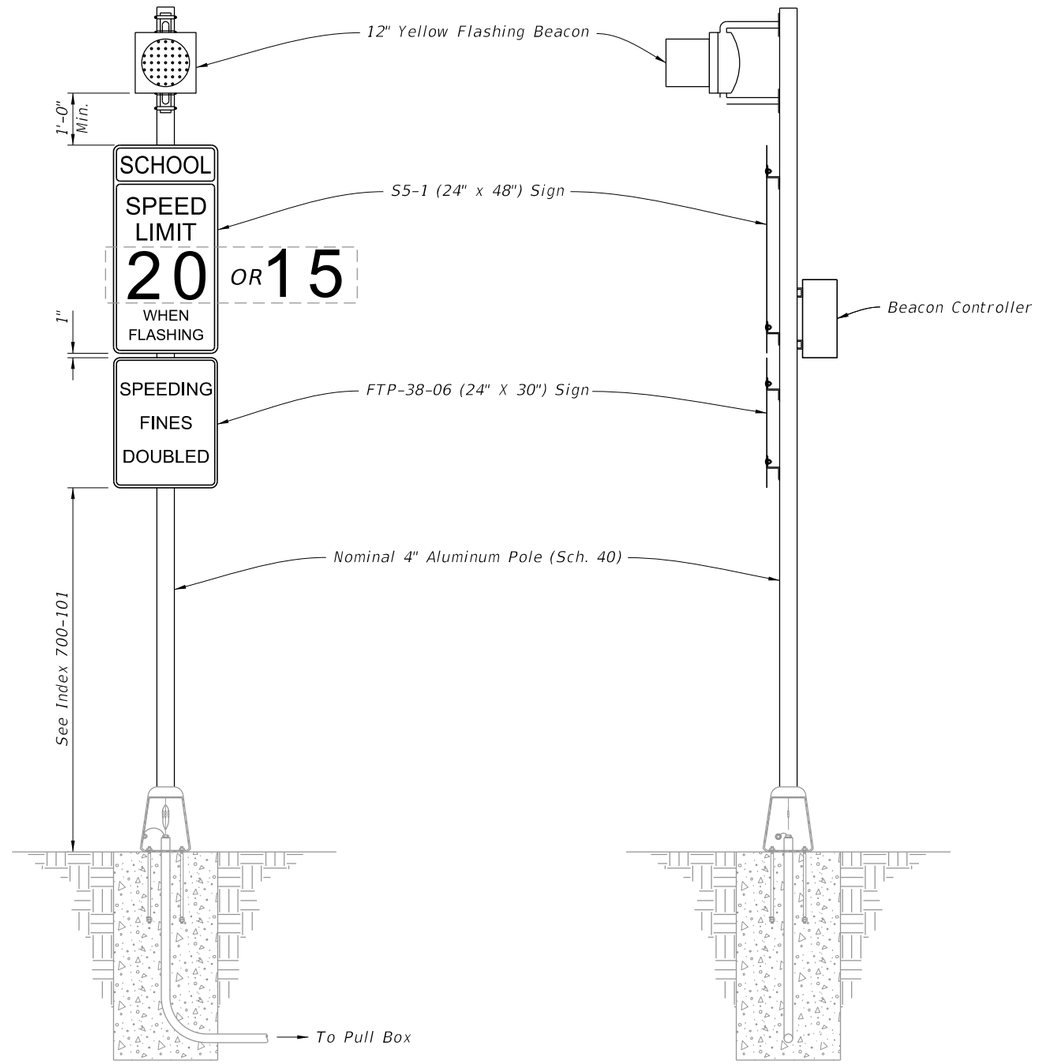

FRONT ELEVATION

SIDE ELEVATION

NOTES:

1. Type A2 Assembly (conventionally powered) is shown. Type B2 Assemblies (solar powered) similar.
2. Foundation reinforcement not shown.

ROADSIDE SIGN ASSEMBLY-2

LAST REVISION	REVISION	DESCRIPTION:	FY 2023-24 STANDARD PLANS	ENHANCED HIGHWAY SIGNING ASSEMBLIES	INDEX	SHEET
11/01/21					700-120	4 of 11

10/20/2022 8:57:30 AM

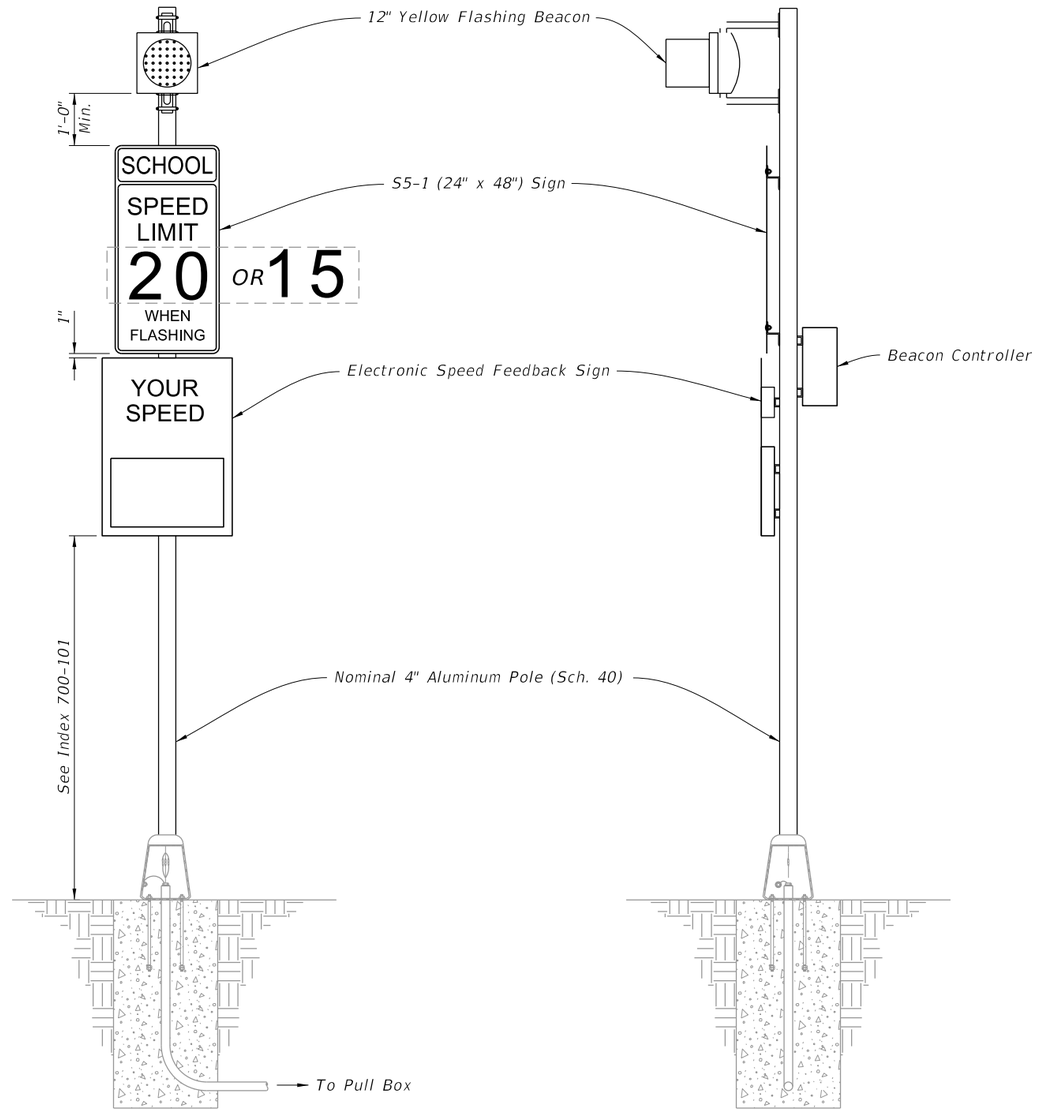

FRONT ELEVATION

SIDE ELEVATION

NOTES:

1. Type A3 Assembly (conventionally powered) is shown. Type B3 Assemblies (solar powered) similar.
2. Use electronic speed feedback sign with 15" high numerals for posted speed of 45 mph or less, and 18" high numerals for posted speeds greater than 45 mph.
3. Foundation reinforcement not shown.

ROADSIDE SIGN ASSEMBLY-3

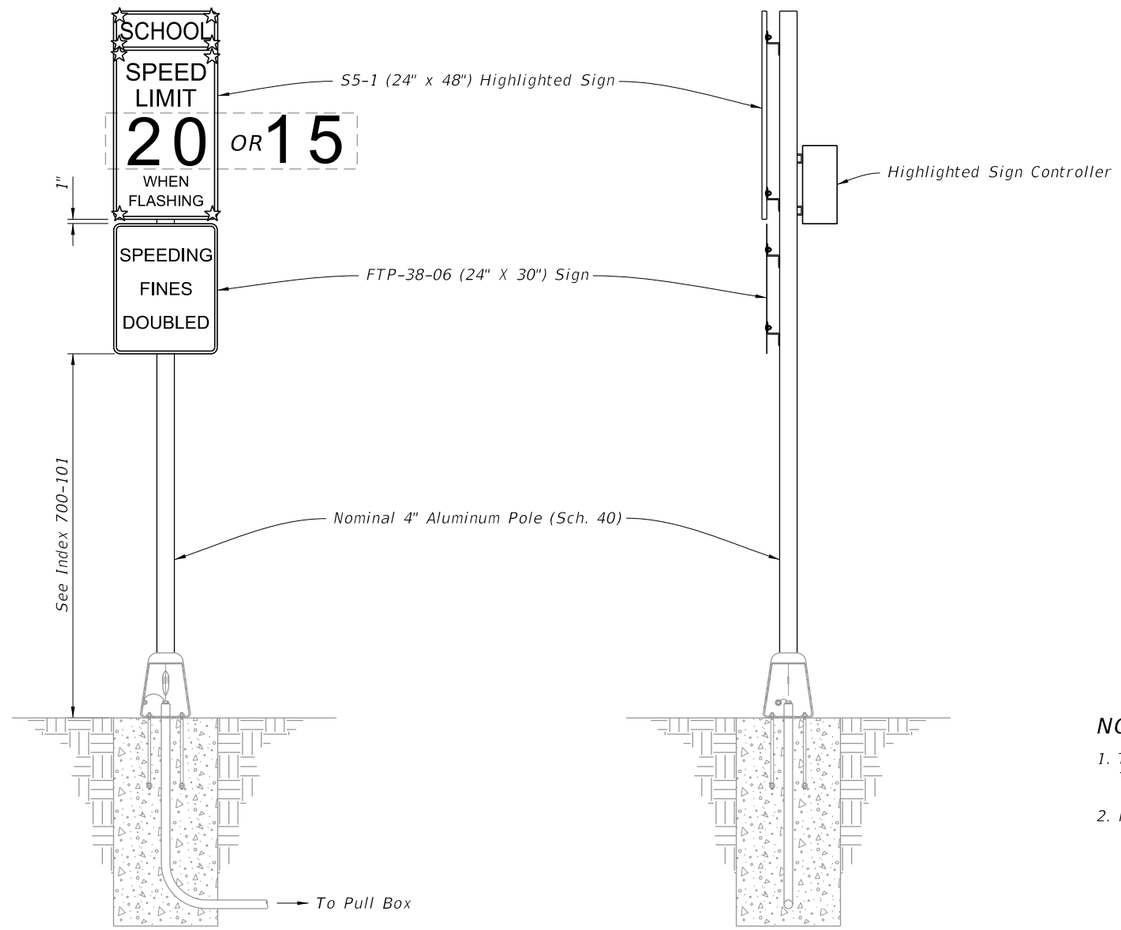

FRONT ELEVATION

SIDE ELEVATION

NOTES:

1. Type A4 Assembly (conventionally powered) is shown. Type B4 Assemblies (solar powered) similar.

2. Foundation reinforcement not shown.

ROADSIDE SIGN ASSEMBLY-4

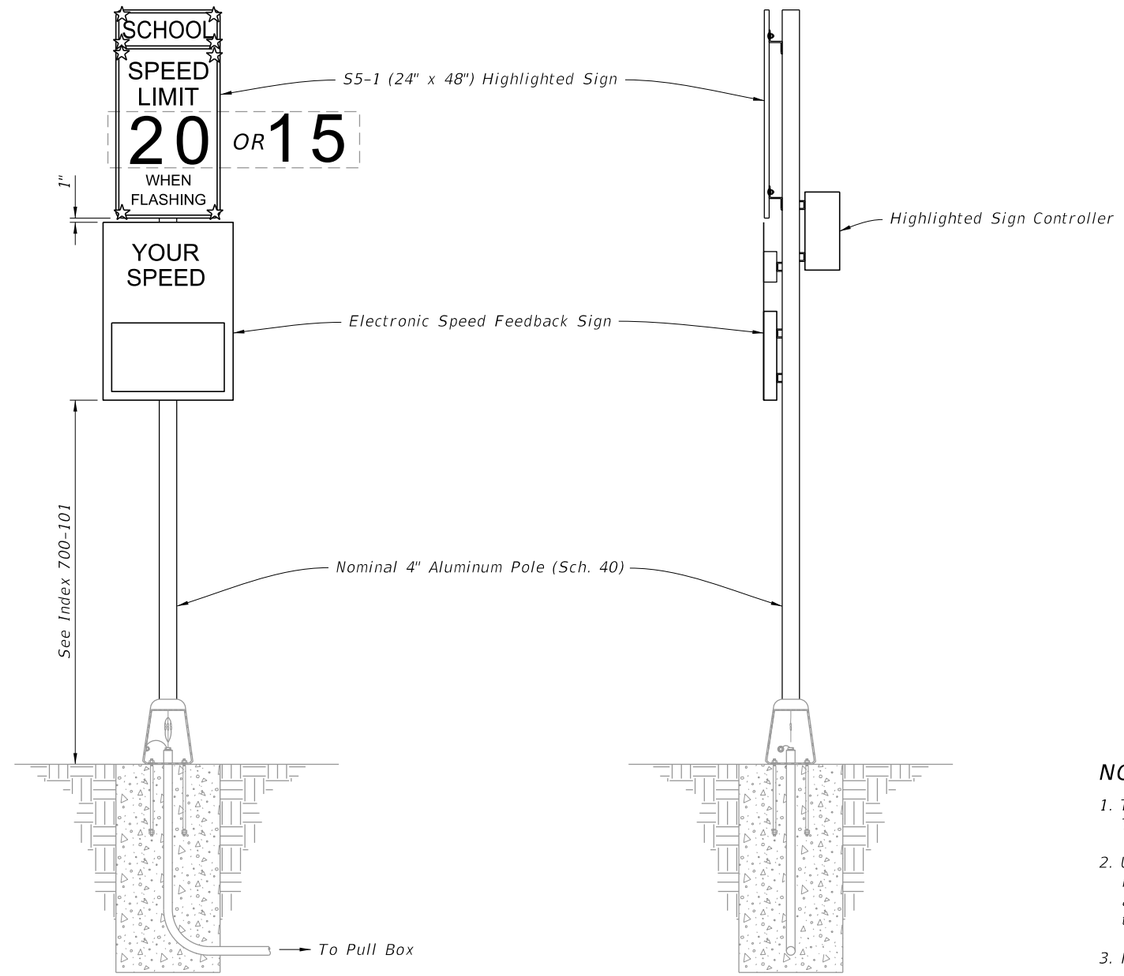

FRONT ELEVATION

SIDE ELEVATION

NOTES:

1. Type A5 Assembly (conventionally powered) is shown. Type B5 Assemblies (solar powered) similar.
2. Use electronic speed feedback sign with 15" high numerals for posted speed of 45 mph or less, and 18" high numerals for posted speeds greater than 45 mph.
3. Foundation reinforcement not shown.

ROADSIDE SIGN ASSEMBLY-5

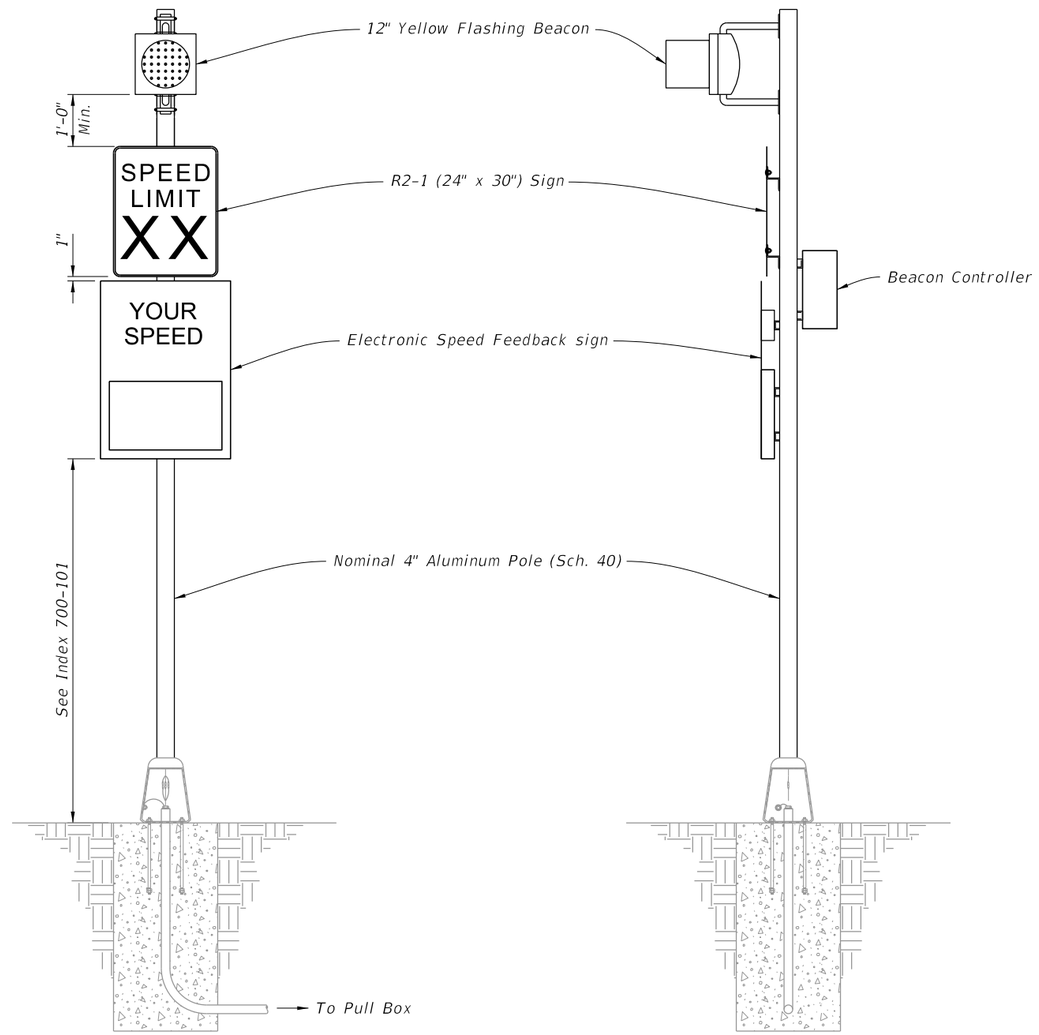

FRONT ELEVATION

SIDE ELEVATION

NOTES:

1. Type A6 Assembly (conventionally powered) is shown. Type B6 Assemblies (solar powered) similar.
2. Use electronic speed feedback sign with 15" high numerals for posted speed of 45 mph or less, and 18" high numerals for posted speeds greater than 45 mph.
3. Foundation reinforcement not shown.

ROADSIDE SIGN ASSEMBLY-6

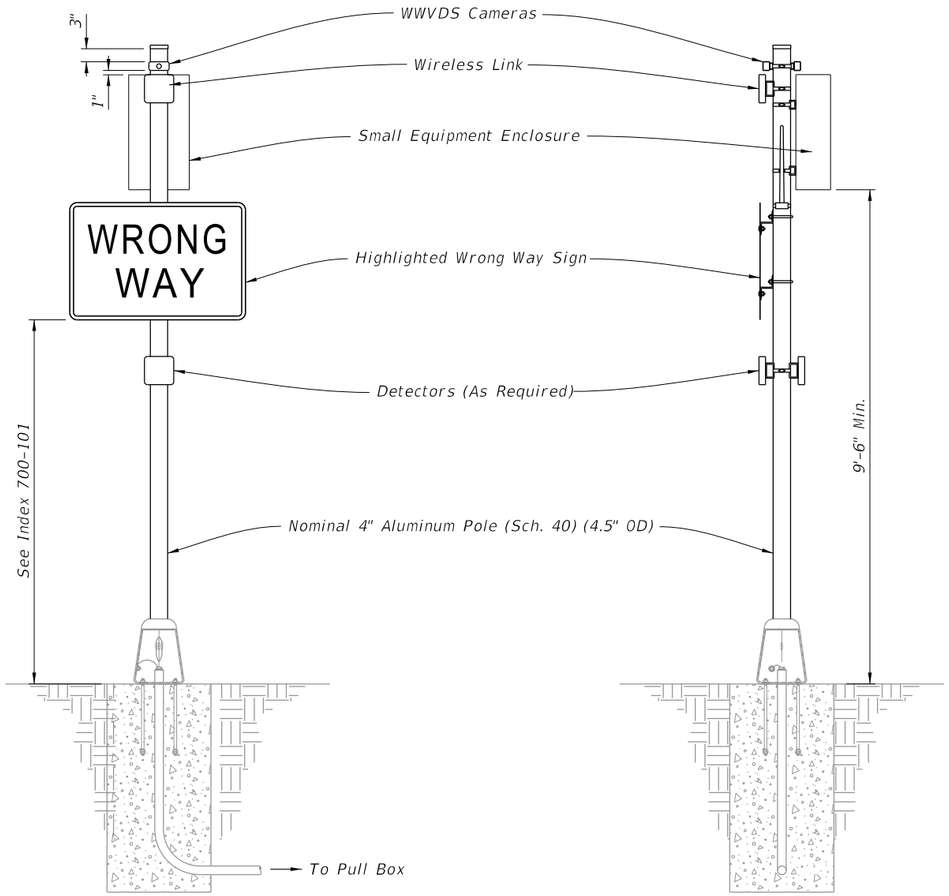

FRONT ELEVATION

SIDE ELEVATION

WRONG WAY HIGHLIGHTED SIGN ASSEMBLY

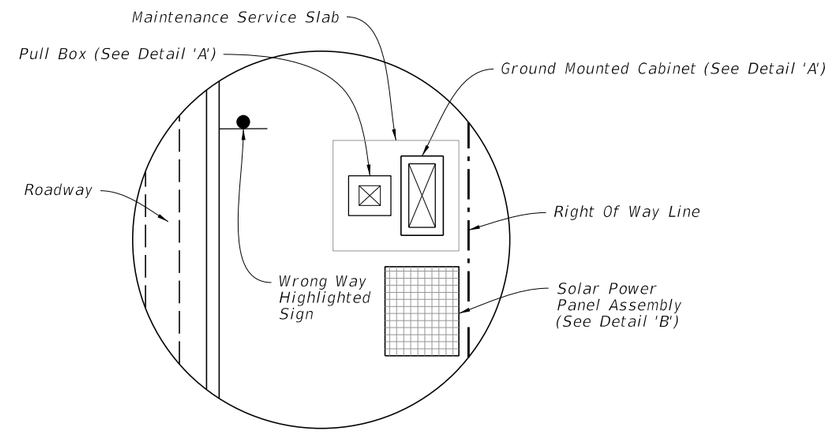

PLAN VIEW

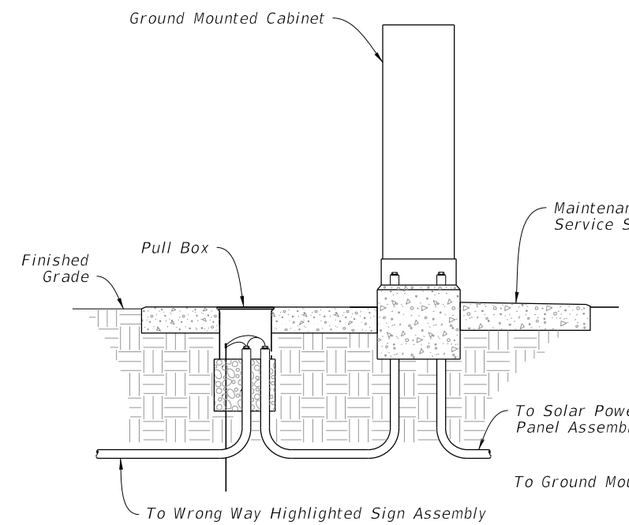

DETAIL 'A'

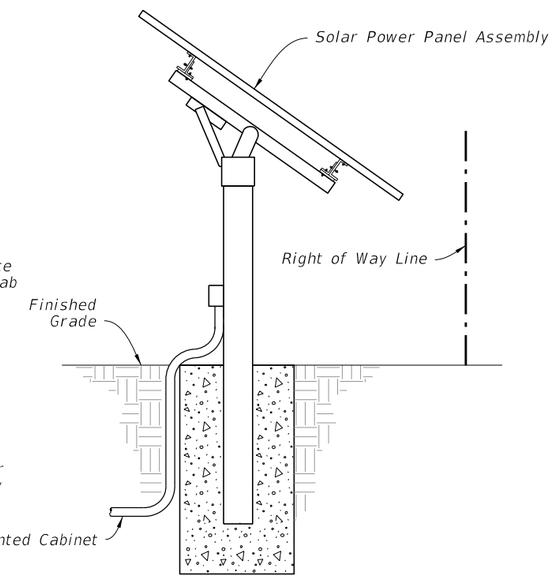

DETAIL 'B'

SOLAR POWER ASSEMBLY

NOTES:

1. Install Wrong Way Vehicle Detection System (WWVDS) devices including cameras, detectors, wireless links, antennas, enclosures, and electronics in accordance with the manufacturer's instructions.

2. When a solar powered configuration (Type B7) is called for in the Plans, install a ground mounted cabinet and solar power panel assembly. Install the solar charge controller and batteries in the same ground mounted cabinet. Provide a separate pole for mounting the solar panel (DETAIL 'B' shown for illustration purposes only) and install in accordance with manufacturer's instructions. Locate the Solar Power Assembly as close to the right of way as possible. Orient the solar panel to face South.

3. Foundation reinforcement not shown.

4. Install cabinets in accordance with Index 676-010.

10/20/2022 8:57:34 AM

ROADSIDE SIGN ASSEMBLY-7

LAST REVISION	REVISION	DESCRIPTION:			INDEX	SHEET
11/01/22			FY 2023-24 STANDARD PLANS	ENHANCED HIGHWAY SIGNING ASSEMBLIES	700-120	9 of 11

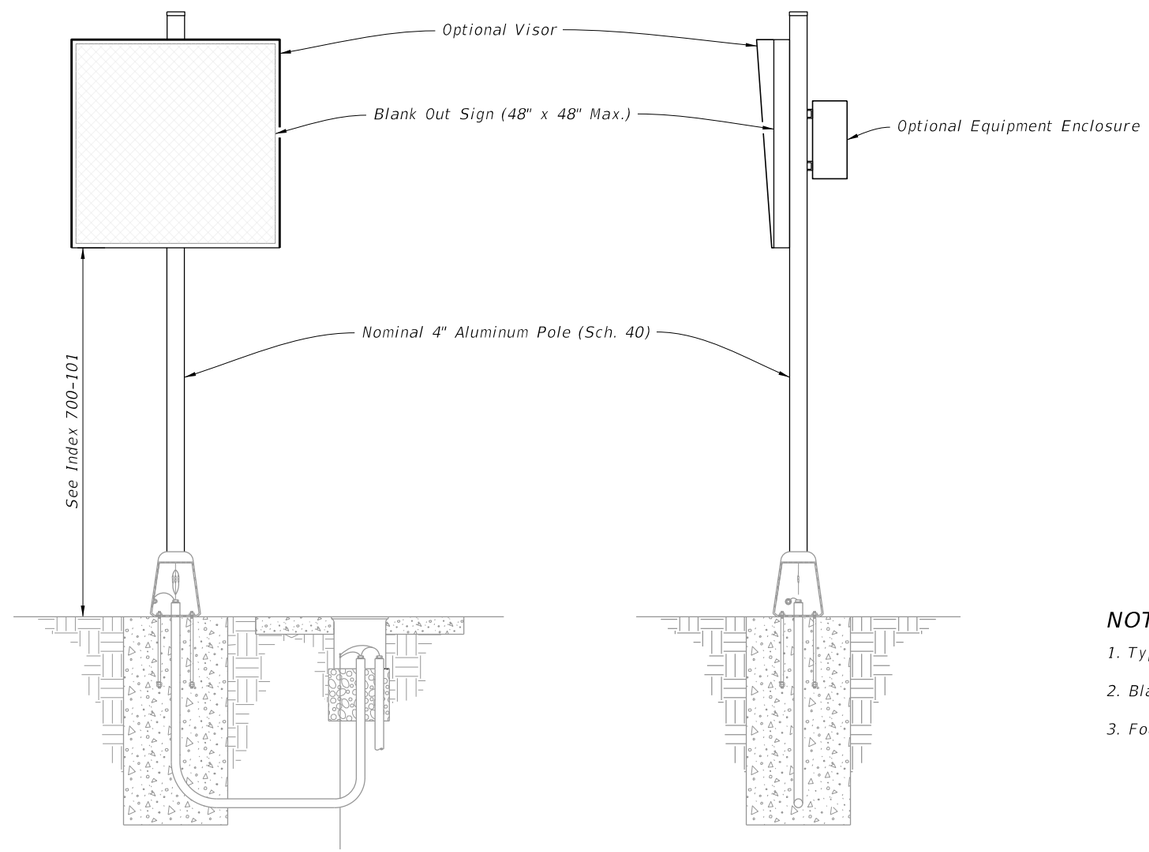

FRONT ELEVATION

SIDE ELEVATION

NOTES:

1. Type A1 Assembly (conventionally powered) is shown.
2. Blank Out Sign visors are optional.
3. Foundation reinforcement not shown.

ROADSIDE SIGN ASSEMBLY-8

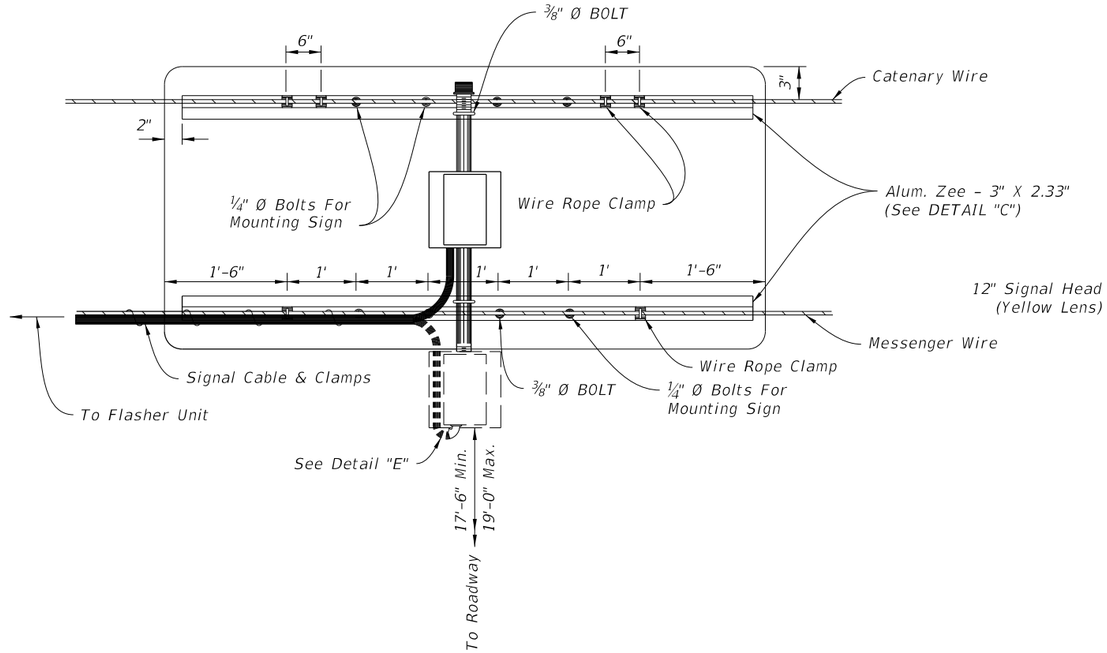

REAR VIEW

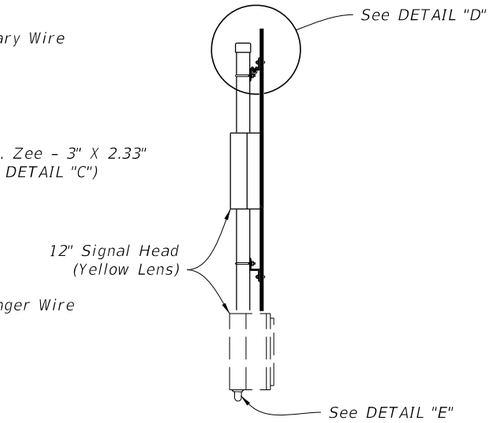

SIDE VIEW

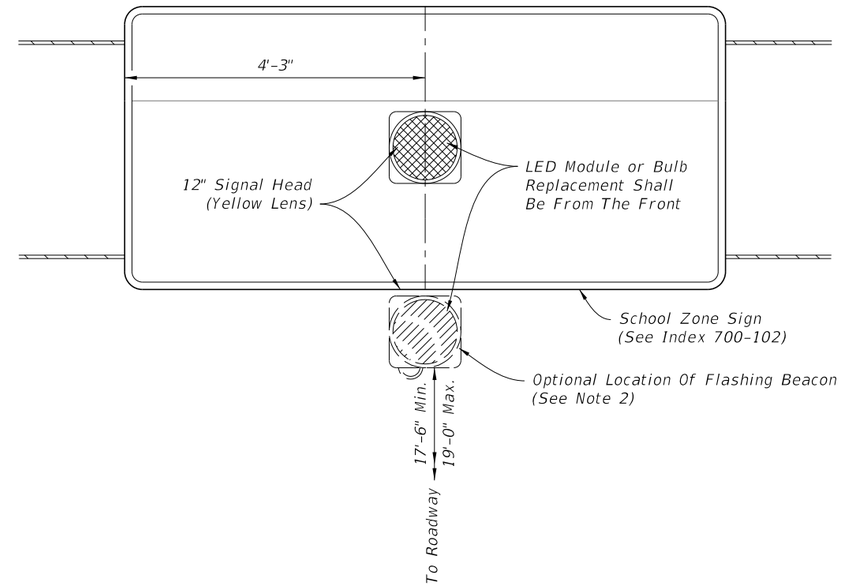

FRONT VIEW

OVERHEAD SCHOOL SIGN ASSEMBLY

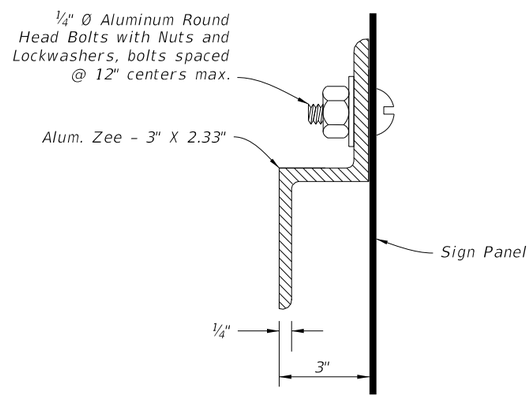

ZEE SECTION DETAIL

DETAIL "C"

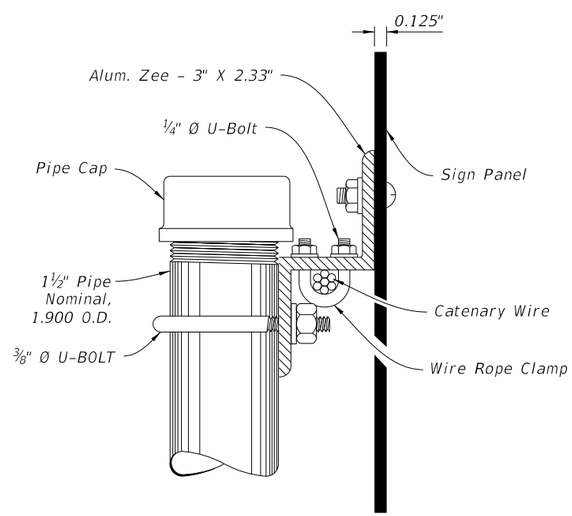

MOUNTING DETAIL

DETAIL "D"

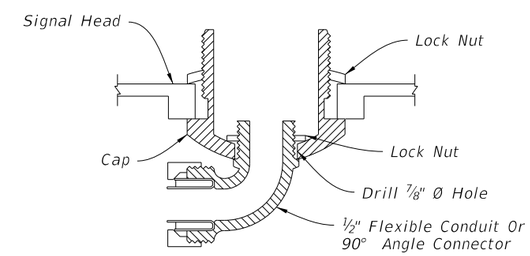

CABLE ENTRY DETAIL

DETAIL "E"

NOTES:

1. Flasher unit and cabinet to be placed on the strain pole supporting overhead sign assembly or on service pole. The flasher unit not to overhang private property or sidewalk.
2. Optional flashing beacon will be called for in the Plans. They may be placed within or below the panel, or face to the rear.

OVERHEAD SIGN ASSEMBLY

LAST REVISION	REVISION	DESCRIPTION:			INDEX	SHEET
11/01/21			FY 2023-24 STANDARD PLANS	ENHANCED HIGHWAY SIGNING ASSEMBLIES	700-120	11 of 11

10/20/2022 8:57:35 AM

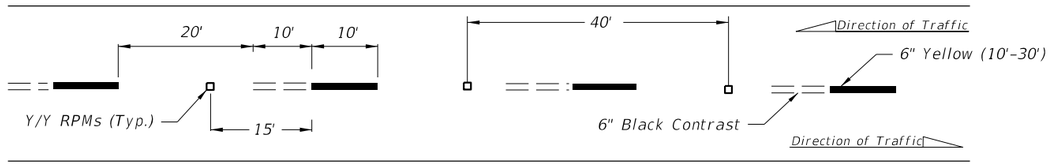

ALTERNATING SKIP LINE

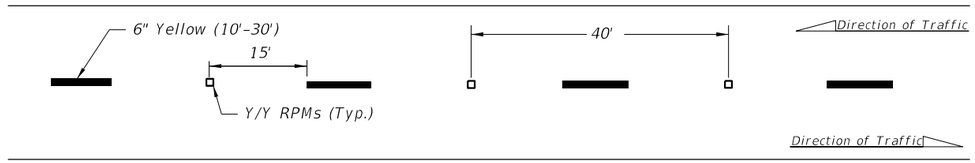

SKIP LINE

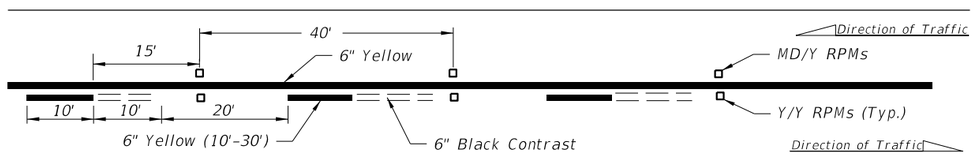

SOLID LINE WITH ALTERNATING SKIP

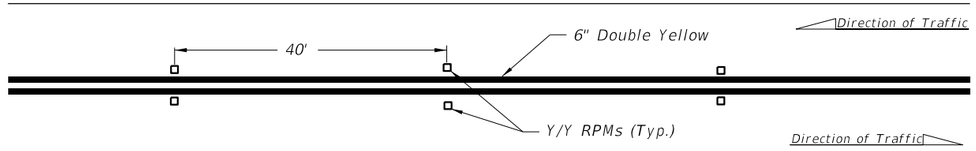

DOUBLE SOLID LINE

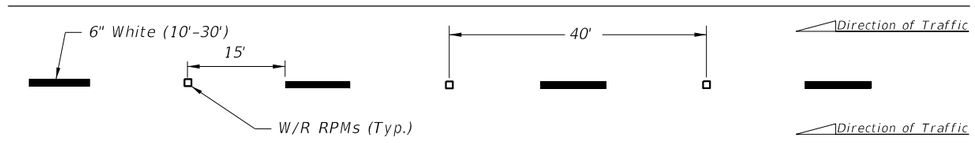

MULTILANE

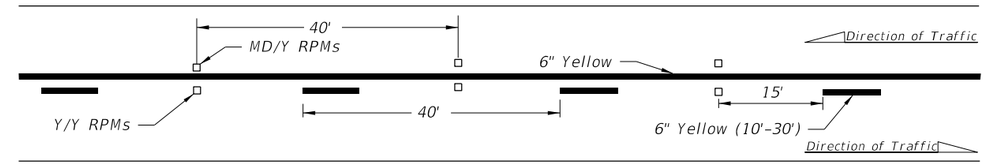

SOLID LINE WITH SKIP

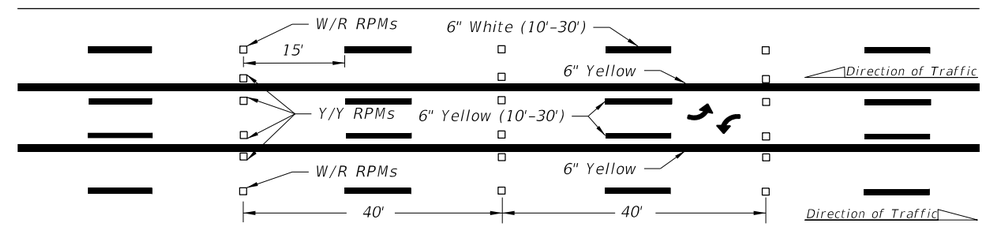

SKIP LINE WITH TWO-WAY LEFT TURN LANE

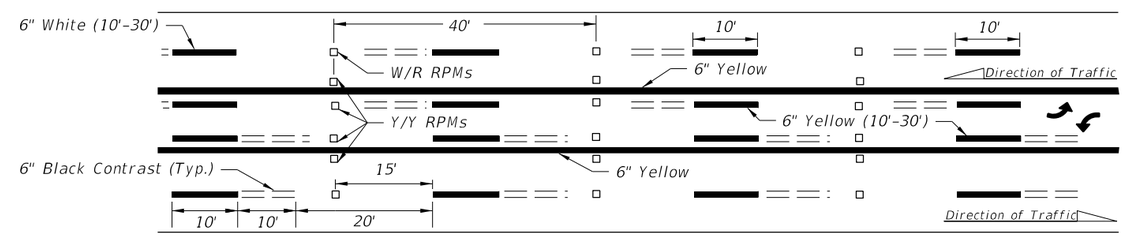

ALTERNATING SKIP LINE WITH TWO-WAY LEFT TURN LANE

NOTES:

1. Offset all RPMs 1" from solid longitudinal lines unless otherwise noted or shown.
2. Spacing may be reduced for sharp curves if required.
3. For placement of RPMs on ramps, see Index 711-003.
4. Make the traffic face of the RPM the same color as the pavement marking that it is supplementing.

LEGEND:

B/C = BACK OF CURB

EOP = EDGE OF PAVEMENT

RPM = RAISED PAVEMENT MARKER

W/R = WHITE/RED RPM

Y/Y = YELLOW/YELLOW RPM

Y/R = YELLOW/RED RPM

MD/Y = MONO-DIRECTIONAL YELLOW RPM

10/20/2022 8:57:36 AM

LAST REVISION	REVISION	DESCRIPTION:			INDEX	SHEET
11/01/18			FY 2023-24 STANDARD PLANS	TYPICAL PLACEMENT OF RAISED PAVEMENT MARKERS	706-001	1 of 6

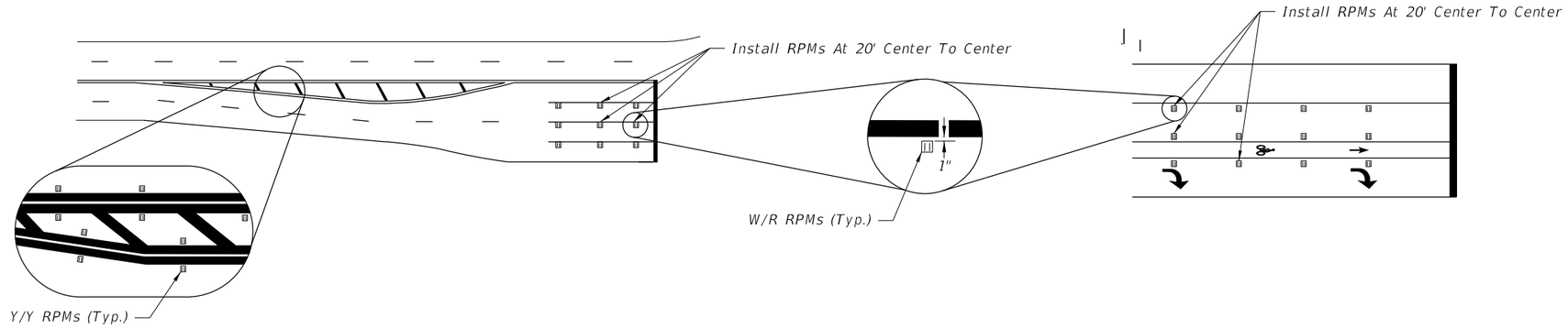

RPM PLACEMENT AT INTERSECTIONS

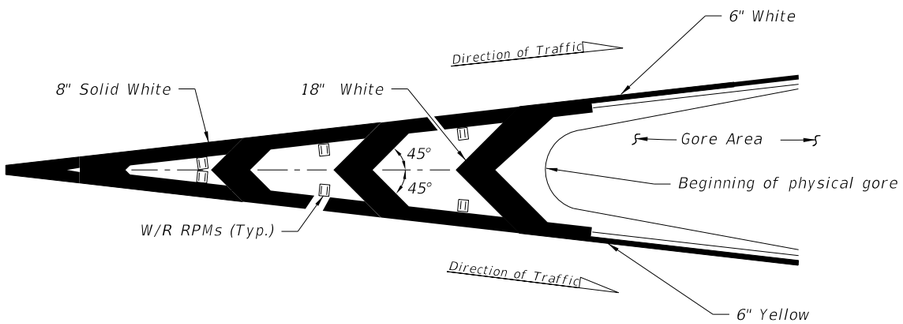

RPM PLACEMENT AT TRAFFIC CHANNELIZATION AT GORE
(Traffic Flows In Same Direction)

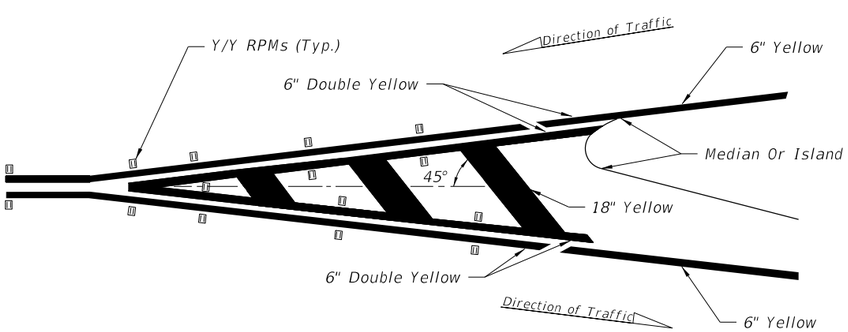

RPM PLACEMENT AT TRAFFIC SEPARATION
(Traffic Flows In Opposite Direction)

NOTE:

Center the Raised Pavement Markers between chevrons and crosshatching.

LEGEND:

B/C = BACK OF CURB

EOP = EDGE OF PAVEMENT

RPM = RAISED PAVEMENT MARKER

W/R = WHITE/RED RPM

Y/Y = YELLOW/YELLOW RPM

Y/R = YELLOW/RED RPM

MD/Y = MONO-DIRECTIONAL YELLOW RPM

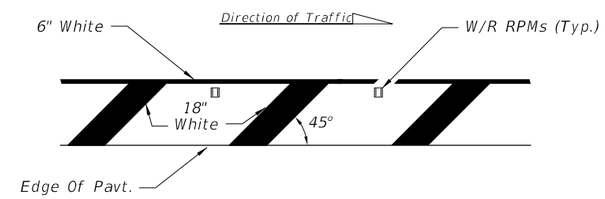

Right side of the roadway shown. For the left side of roadway, the pavement marking is yellow and oriented opposite hand.

RPM PLACEMENT AT ROADSIDE CROSSHATCHING

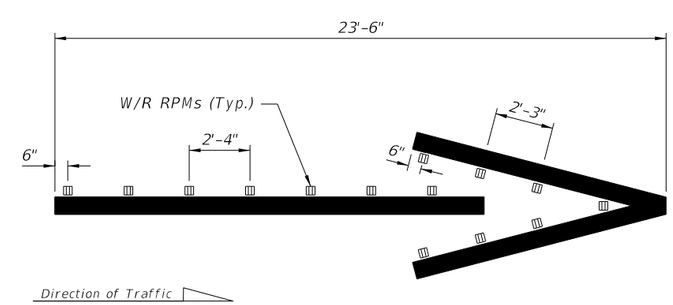

WRONG-WAY ARROW

LAST REVISION	REVISION	DESCRIPTION:			INDEX	SHEET
11/01/21			FY 2023-24 STANDARD PLANS	TYPICAL PLACEMENT OF RAISED PAVEMENT MARKERS	706-001	2 of 6

6/8/2023 7:25:06 AM

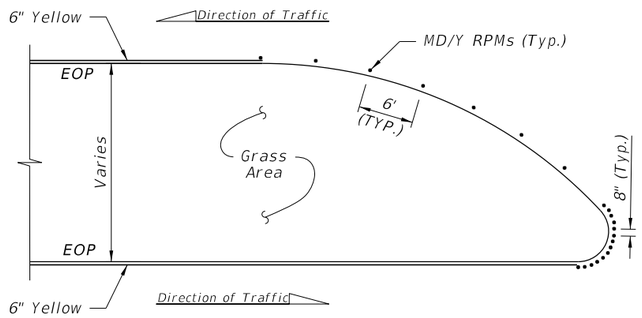

DETAIL "A"

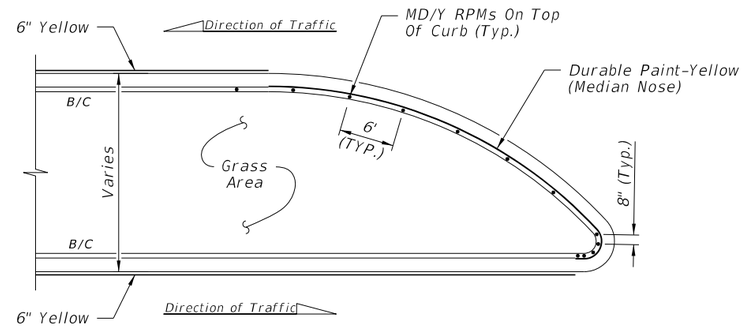

DETAIL "D"

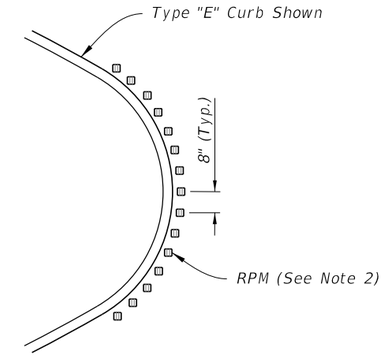

RPM ORIENTATION DETAIL

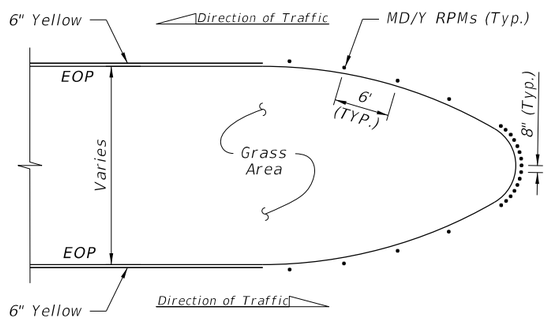

DETAIL "B"

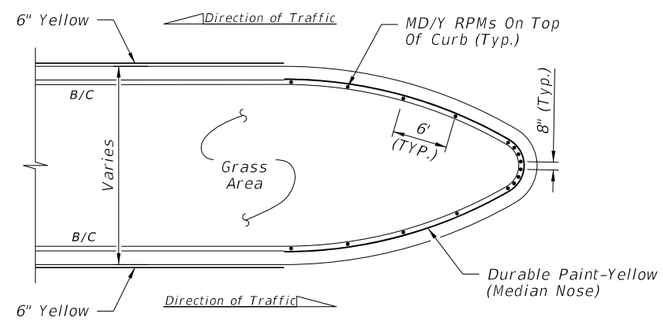

DETAIL "E"

POSTED SPEED LIMIT MPH	"Y" FEET
30 OR LESS	10
35	20
40	20
45	30
50 OR MORE	40

LEGEND:

B/C = BACK OF CURB

EOP = EDGE OF PAVEMENT

RPM = RAISED PAVEMENT MARKER

W/R = WHITE/RED RPM

Y/Y = YELLOW/YELLOW RPM

Y/R = YELLOW/RED RPM

MD/Y = MONO-DIRECTIONAL YELLOW RPM

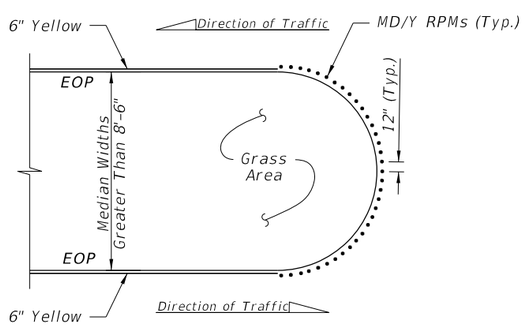

DETAIL "C"

FLUSH MEDIAN OPENINGS

(Type "E" Curb Similar. See Note 1)

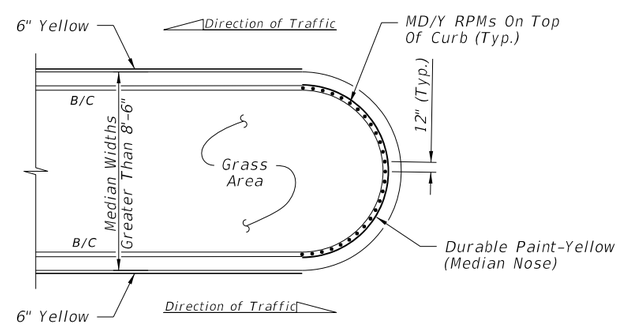

DETAIL "F"

TYPE "D" OR "F" CURB

NOTES:

1. For Type "E" Curb, install RPMs along the pavement edge marking using the same spacing shown.
2. Orient traffic faces of RPMs in curb median radii to be parallel to direction of travel lanes.
3. Use epoxy adhesive to install RPMs on concrete median nose curbs.
4. Install RPMs on clean, unpainted surface. Do not paint curb surface where RPMs will be placed.

RPM PLACEMENT AT MEDIAN OPENINGS

(When called for in the Plans)

10/20/2022 8:57:38 AM

LAST REVISION	REVISION	DESCRIPTION:			INDEX	SHEET
11/01/21			FY 2023-24 STANDARD PLANS	TYPICAL PLACEMENT OF RAISED PAVEMENT MARKERS	706-001	3 of 6

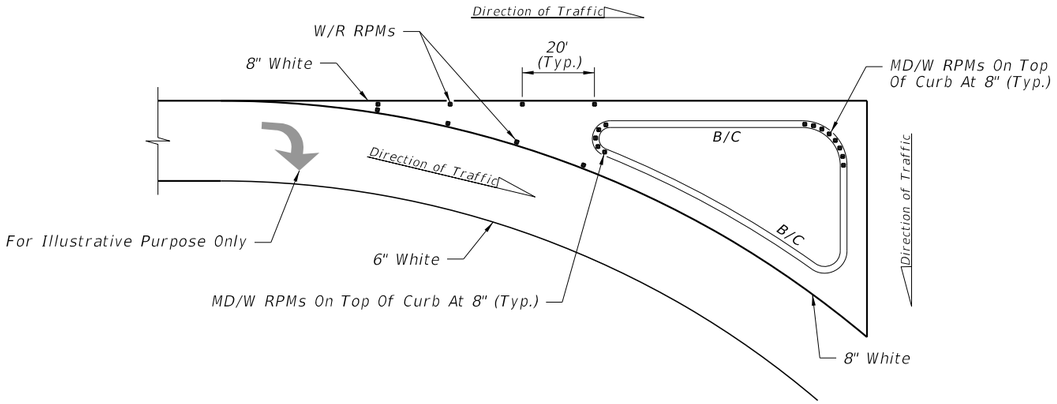

DETAIL "G"

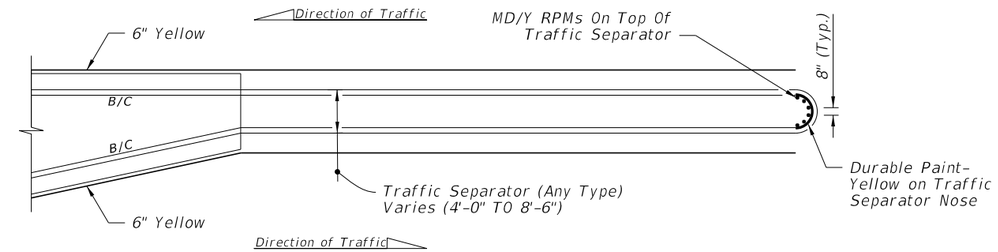

DETAIL "J"

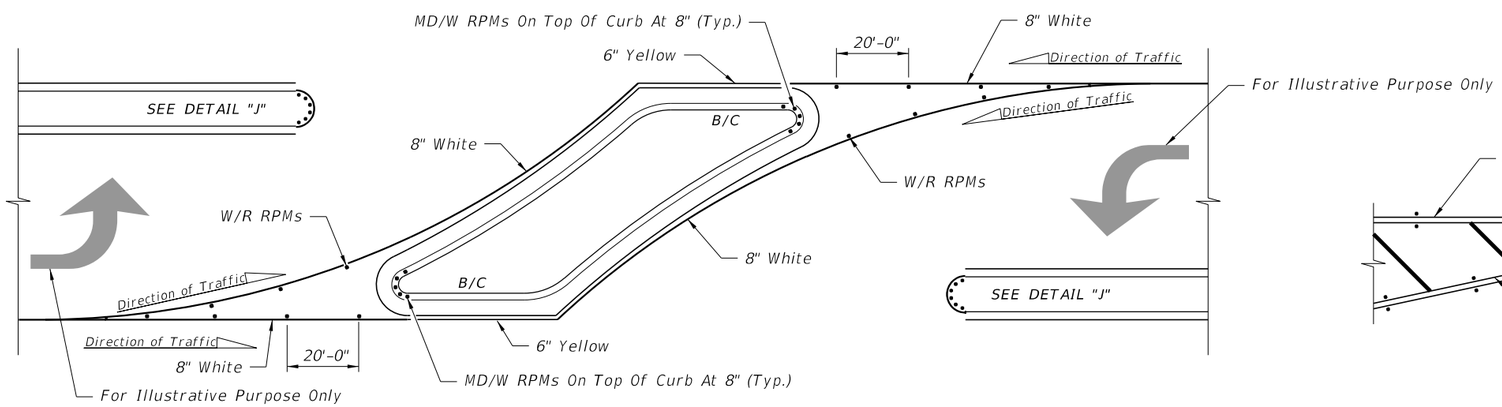

DETAIL "H"

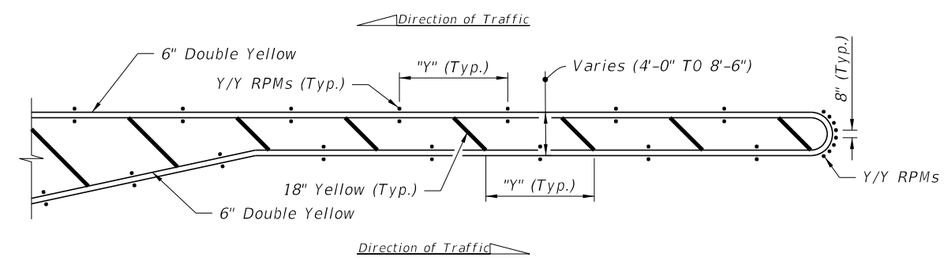

DETAIL "K"

RPM PLACEMENT AT ISLANDS
(When called for in the Plans)

RPM PLACEMENT AT TRAFFIC SEPARATORS
(When called for in the Plans)

POSTED SPEED LIMIT MPH	"Y" FEET
30 OR LESS	10
35	20
40	20
45	30
50 OR MORE	40

NOTES:

1. For Type "E" Curb install RPMs along the pavement edge marking using the same spacing shown.
2. Orient traffic faces of RPMs in median radii to be parallel to direction of travel lanes.

LEGEND:

B/C = BACK OF CURB

EOP = EDGE OF PAVEMENT

RPM = RAISED PAVEMENT MARKER

W/R = WHITE/RED RPM

Y/Y = YELLOW/YELLOW RPM

Y/R = YELLOW/RED RPM

MD/Y = MONO-DIRECTIONAL YELLOW RPM

MD/W = MONO-DIRECTIONAL WHITE RPM

10/20/2022 8:57:39 AM

LAST REVISION	REVISION	DESCRIPTION:				
11/01/21			FY 2023-24 STANDARD PLANS	TYPICAL PLACEMENT OF RAISED PAVEMENT MARKERS	INDEX 706-001	SHEET 4 of 6

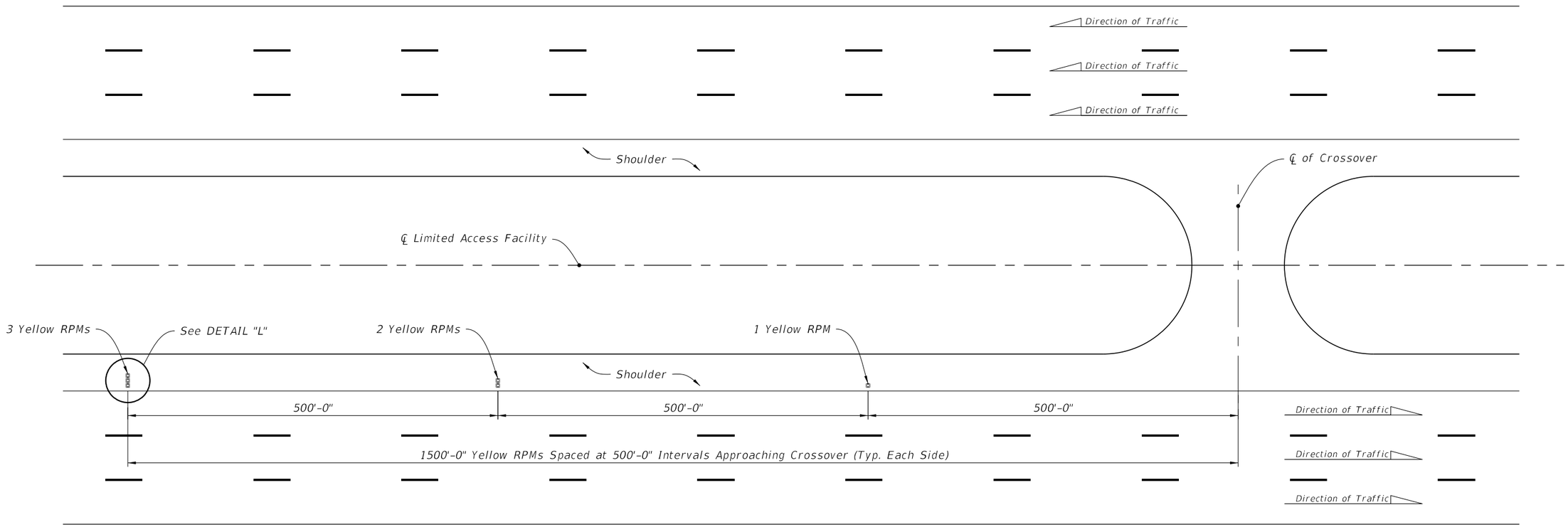

RPM PLACEMENT FOR CROSSOVERS ON LIMITED ACCESS ROADWAYS

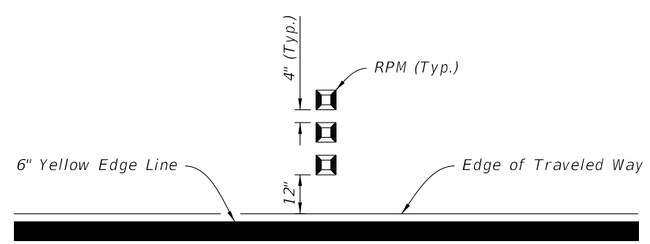

DETAIL "L"

10/20/2022 8:57:40 AM

LAST REVISION	REVISION	DESCRIPTION:			INDEX	SHEET
11/01/18			FY 2023-24 STANDARD PLANS	TYPICAL PLACEMENT OF RAISED PAVEMENT MARKERS	706-001	5 of 6

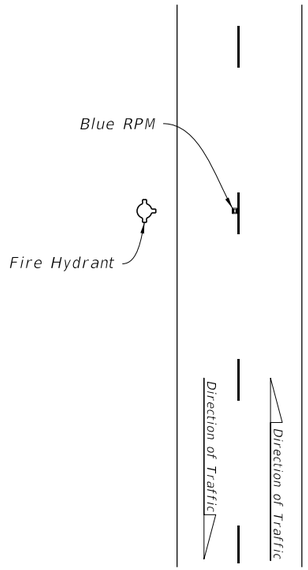

TWO-LANE ROADWAY

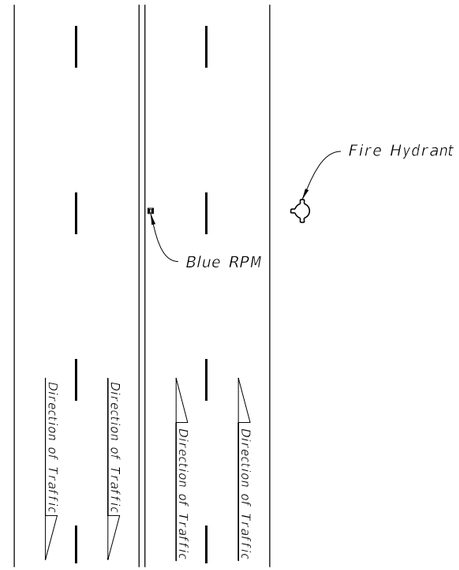

MULTILANE ROADWAY

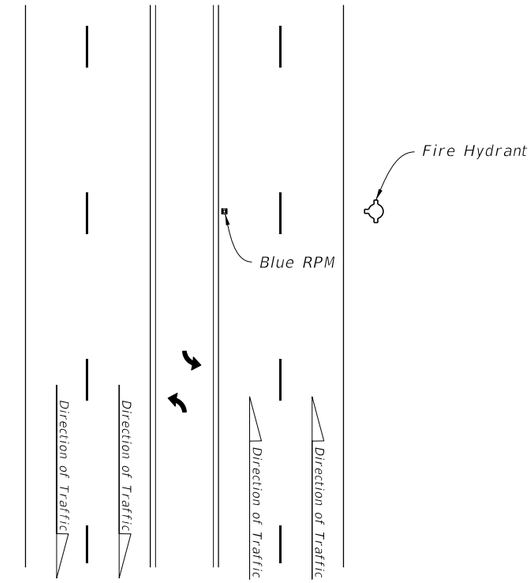

MULTILANE ROADWAY
WITH TURN LANE

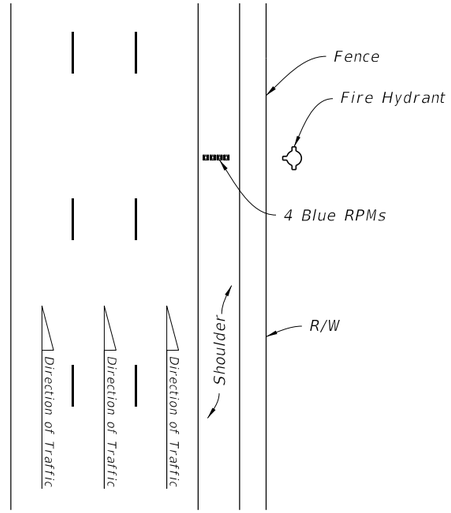

LIMITED ACCESS ROADWAY

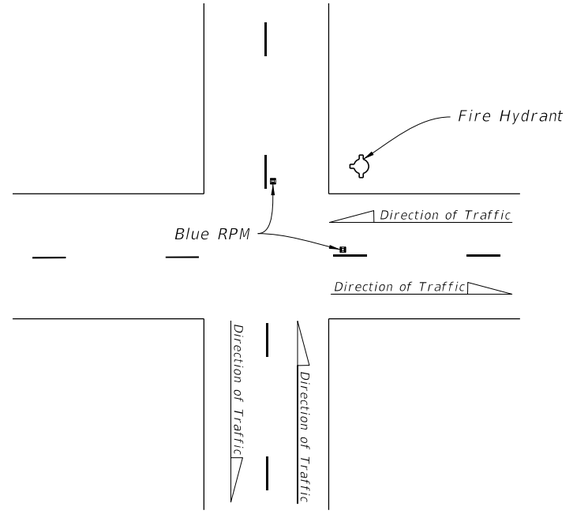

TWO-LANE ROADWAY
AT INTERSECTION

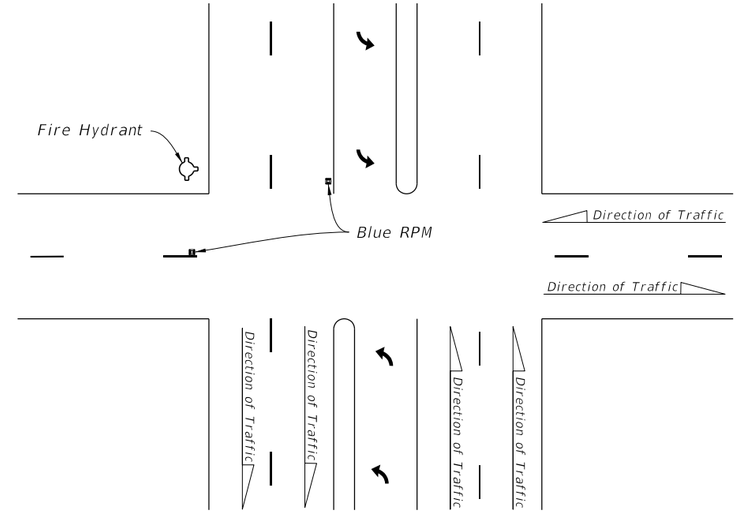

MULTILANE ROADWAY AT INTERSECTION

BLUE RPM PLACEMENT

10/20/2022 8:57:40 AM

LAST REVISION	REVISION	DESCRIPTION:			INDEX	SHEET
11/01/18			FDOT FY 2023-24 STANDARD PLANS	TYPICAL PLACEMENT OF RAISED PAVEMENT MARKERS	706-001	6 of 6

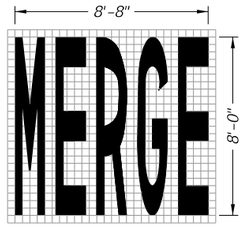

34 S.F.

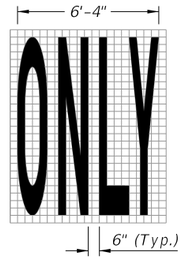

22 S.F.

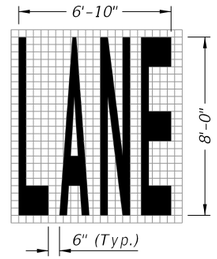

23 S.F.

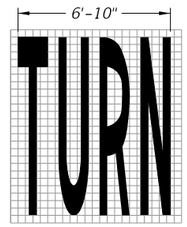

24 S.F.

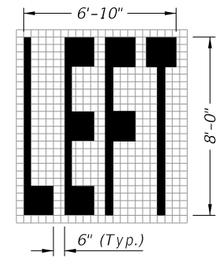

20 S.F.

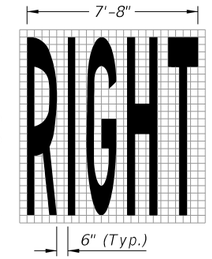

26 S.F.

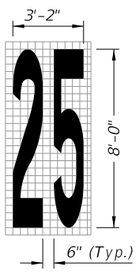

13 S.F.

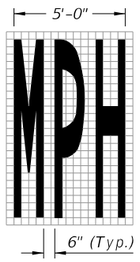

20 S.F.

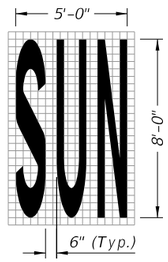

20 S.F.

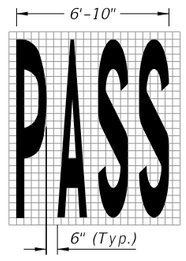

23 S.F.

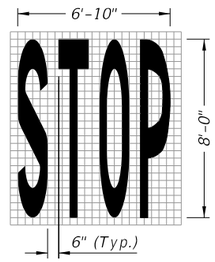

22 S.F.

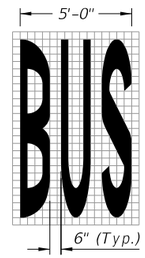

20 S.F.

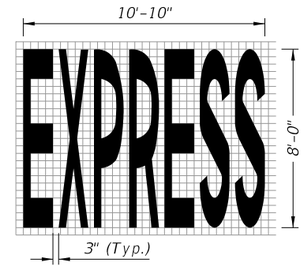

43 S.F.

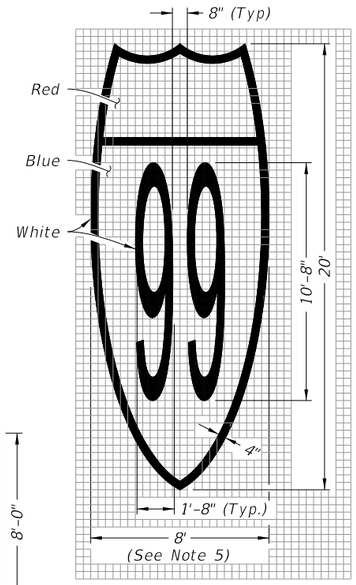

Route Shield for Limited Access Roadways (Interstate Route Shield Shown; U.S. and State Route Shield Similar)

128 S.F.

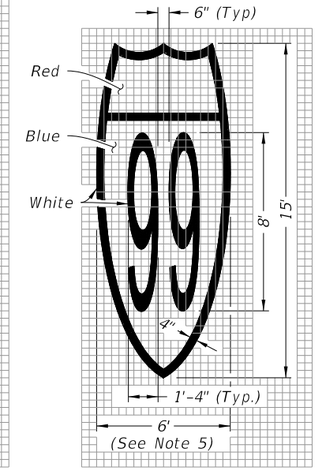

Route Shield for Arterials and Collectors (Interstate Route Shield Shown; U.S. and State Route Shield Similar)

72 S.F.

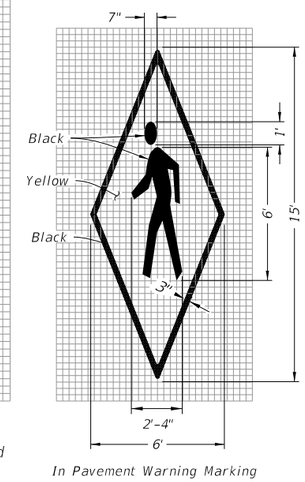

In Pavement Warning Marking

45 S.F.

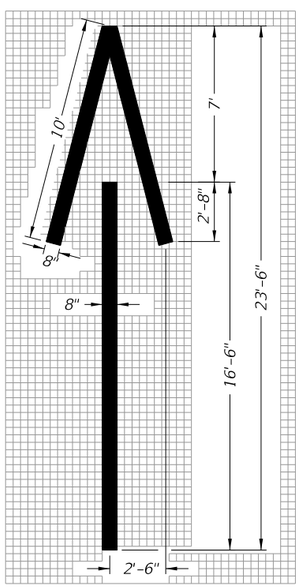

Wrong-Way Arrow

24 S.F.

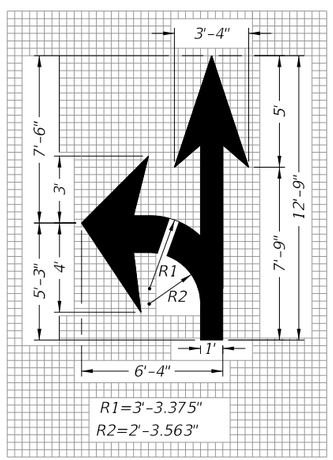

Turn and Through Lane-Use Arrow

29 S.F.

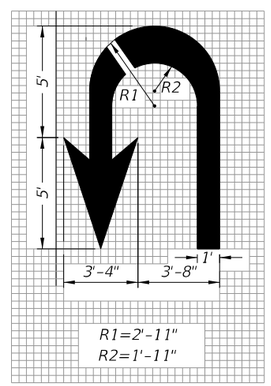

U Turn Lane-Use Arrow

27 S.F.

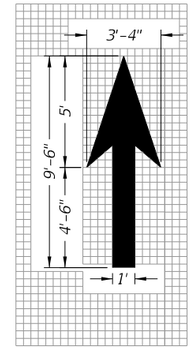

Through Lane-Use Arrow

12 S.F.

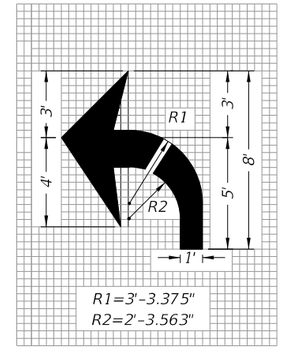

Turn Lane-Use Arrow (Left Turn Shown - Right Turn Similar)

17 S.F.

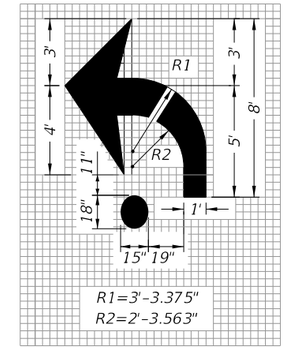

Roundabout Approach Arrow

19 S.F.

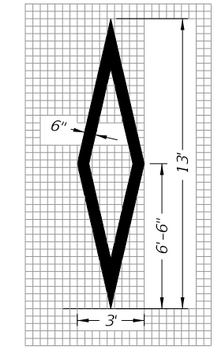

Preferential Lane Symbol

11 S.F.

PAVEMENT MESSAGES NOTES:

1. Place all pavement messages 25' back from the stop line.
2. Dimensions are within 1" ±.
3. All grids are 4" x 4".
4. All pavement messages must be white except Route Shields and In Pavement Warning Markings.
5. Increase width of route shield for routes with three digits.

PAVEMENT MESSAGE AND ARROW DETAILS

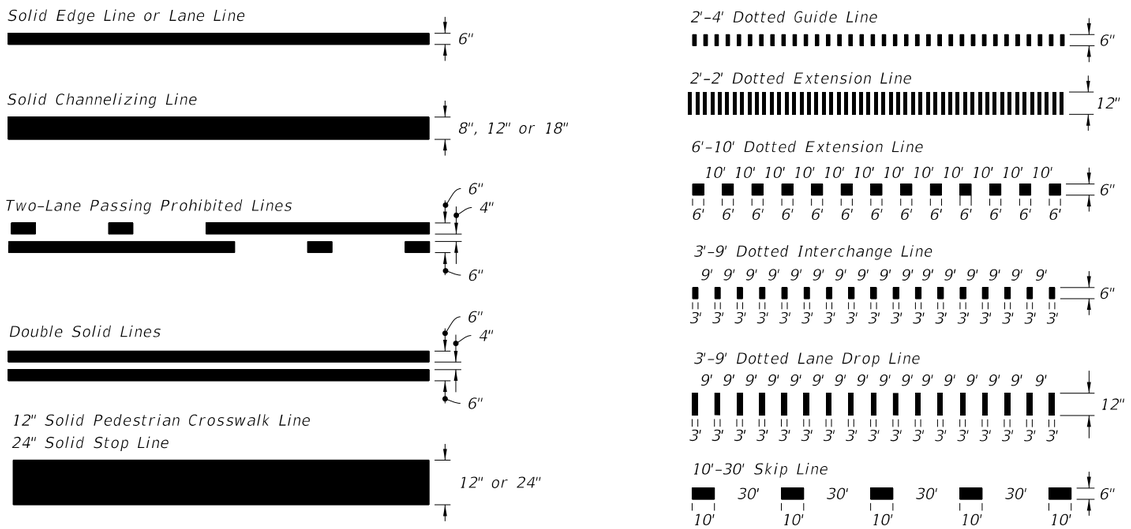

PAVEMENT MARKING LINES

10'-30' SKIP LINE WITH CONTRAST MARKINGS

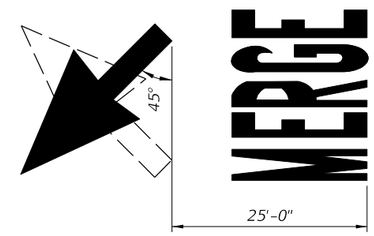

MARKINGS FOR MERGE

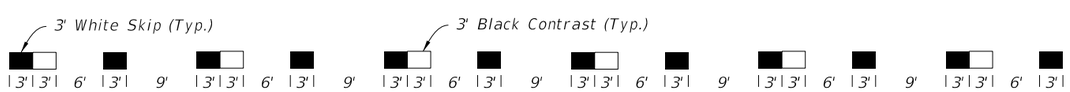

DOTTED LINE WITH ALTERNATING CONTRAST MARKINGS

(3'-9' Dotted Line Shown, Other Dotted Lines Similar)

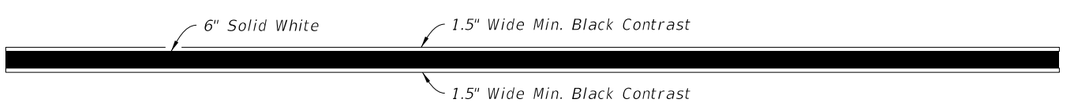

LONGITUDINAL SOLID LANE LINE WITH CONTRAST MARKINGS

(Not For Use On Edge Lines)

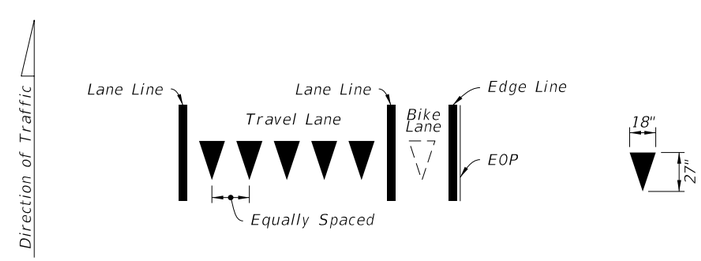

Yield Lines consist of five - 18" X 27" white triangles which face traffic. Equally space triangles within traffic lane. When a bike lane is present, add one additional triangle in the center of the bike lane.

YIELD LINES

10/20/2022 8:57:43 AM

LAST REVISION	REVISION	DESCRIPTION:	FY 2023-24 STANDARD PLANS	PAVEMENT MARKINGS	INDEX	SHEET
11/01/22					711-001	2 of 13

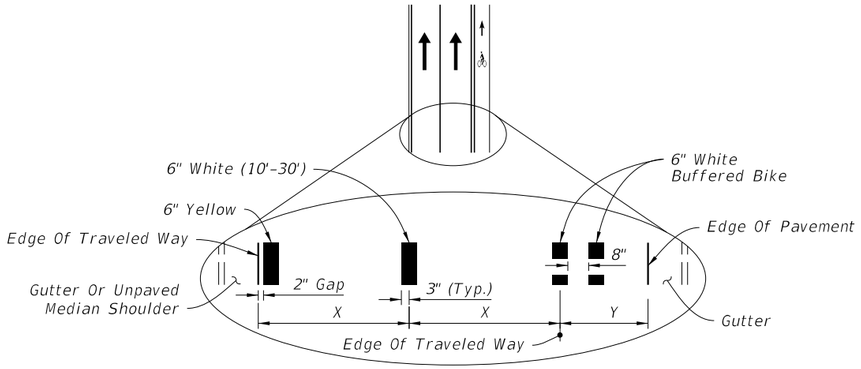

CURB AND GUTTER

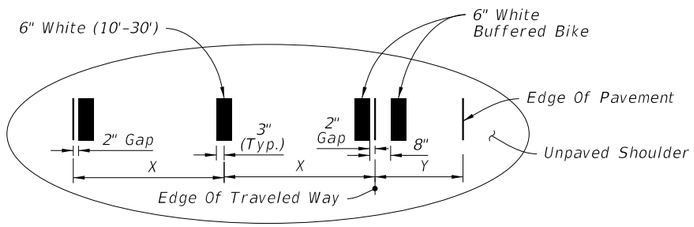

FLUSH SHOULDER

X = LANE WIDTH (FT.)

Y = BUFFERED BIKE LANE WIDTH (FT.)

STRIPING FOR BUFFERED BIKE LANE

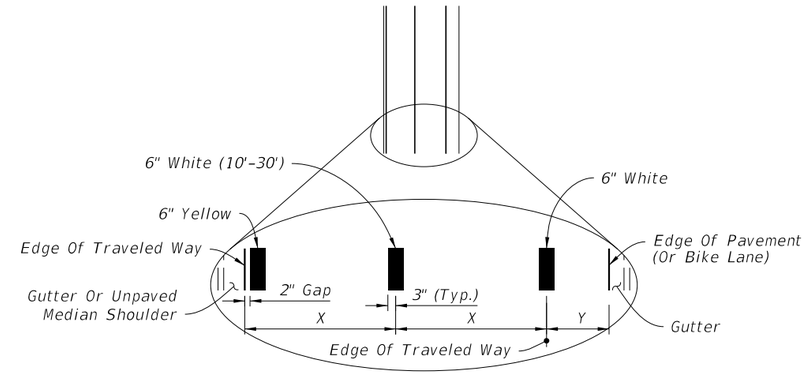

CURB AND GUTTER

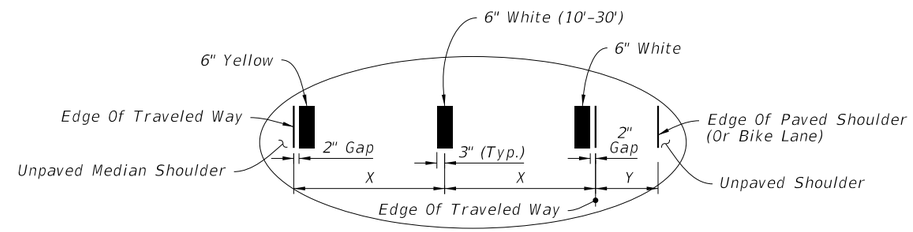

FLUSH SHOULDER

X = LANE WIDTH (FT.)

Y = PAVED SHOULDER / BIKE LANE

STRIPING WITH SHOULDER OR NON-BUFFERED BIKE LANE

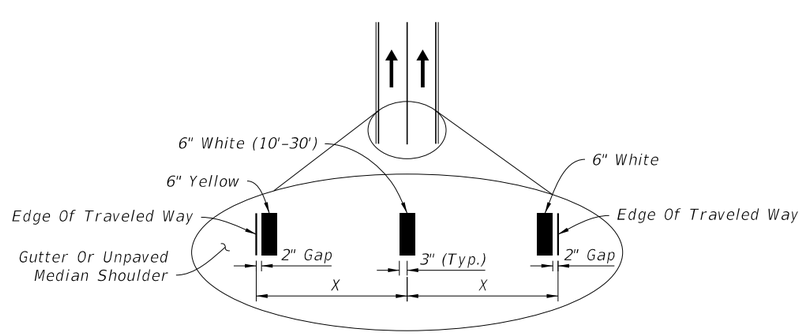

X = LANE WIDTH (FT.)

STRIPING WITH NO SHOULDER OR BIKE LANE

NOTES:

1. Lane widths (X) may not be same for each lane in the section.
2. For placement of RPMs, see Index 706-001.

PLACEMENT OF LONGITUDINAL PAVEMENT MARKINGS

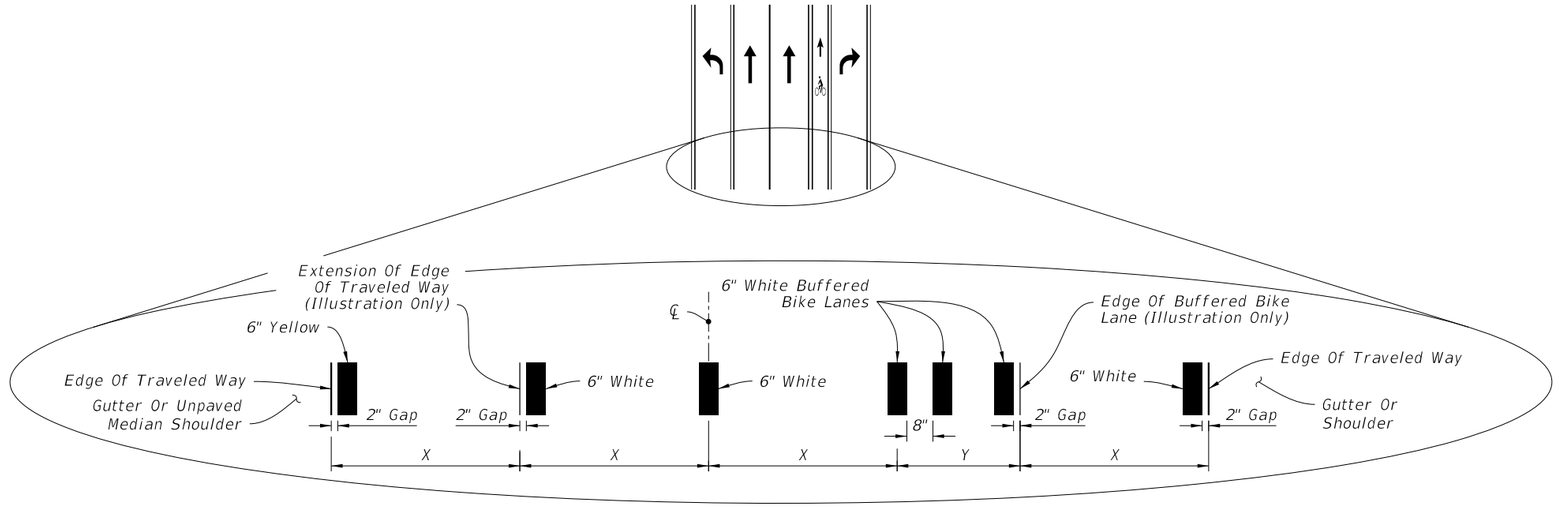

X = LANE WIDTH (FT.)
Y = BUFFERED BIKE LANE WIDTH (FT.)

INTERSECTION APPROACH STRIPING WITH TURN LANES AND BUFFERED BIKE LANE KEY HOLE

NOTES:

1. Lane widths (X) may not be same for each lane in the section.
3. For placement of RPMs, see Index 706-001.
4. For placement of Express Lane markers and associated RPMs, see the Plans.

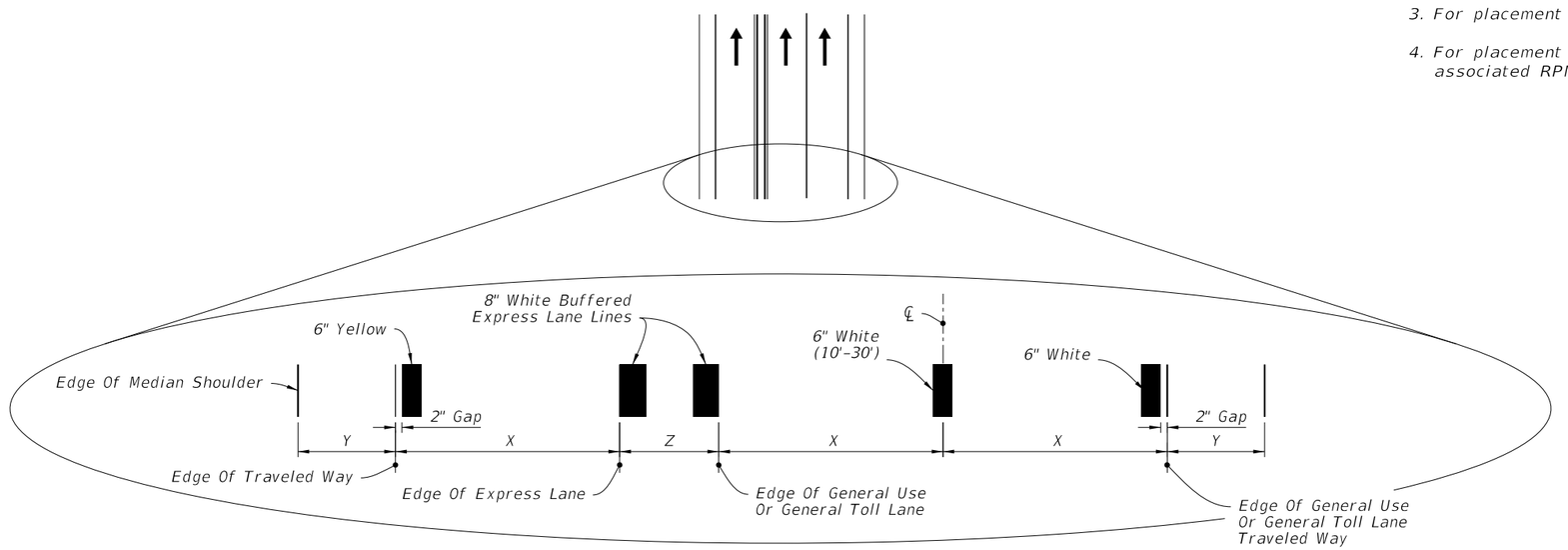

X = LANE WIDTH (FT.)
Y = PAVED SHOULDER
Z = EXPRESS LANE BUFFER

BUFFERED EXPRESS LANE STRIPING

PLACEMENT OF LONGITUDINAL PAVEMENT MARKINGS

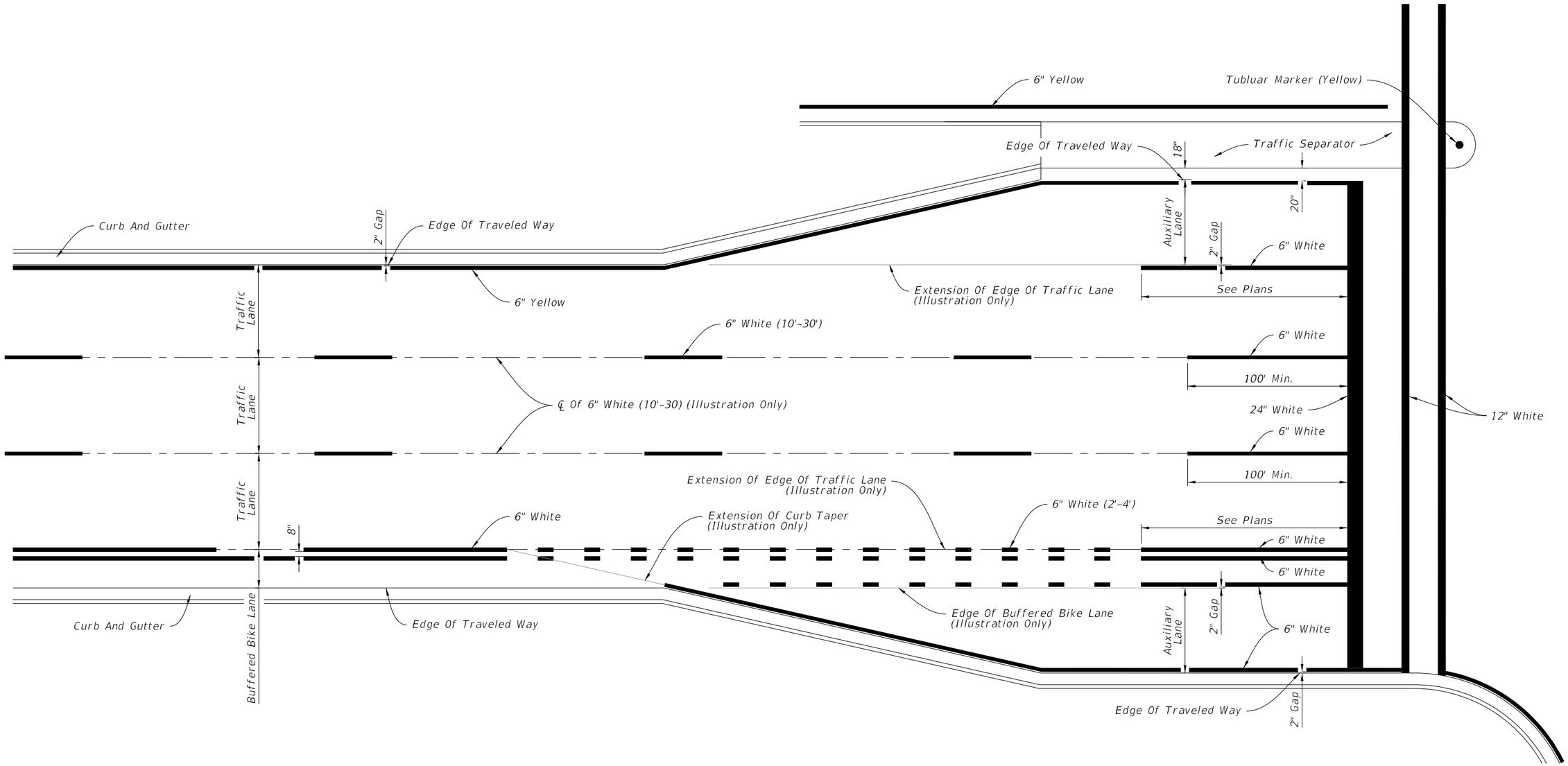

PLACEMENT OF LONGITUDINAL PAVEMENT MARKINGS

LAST REVISION	REVISION	DESCRIPTION:			INDEX	SHEET
11/01/21			FY 2023-24 STANDARD PLANS	PAVEMENT MARKINGS	711-001	5 of 13

10/20/2022 8:57:45 AM

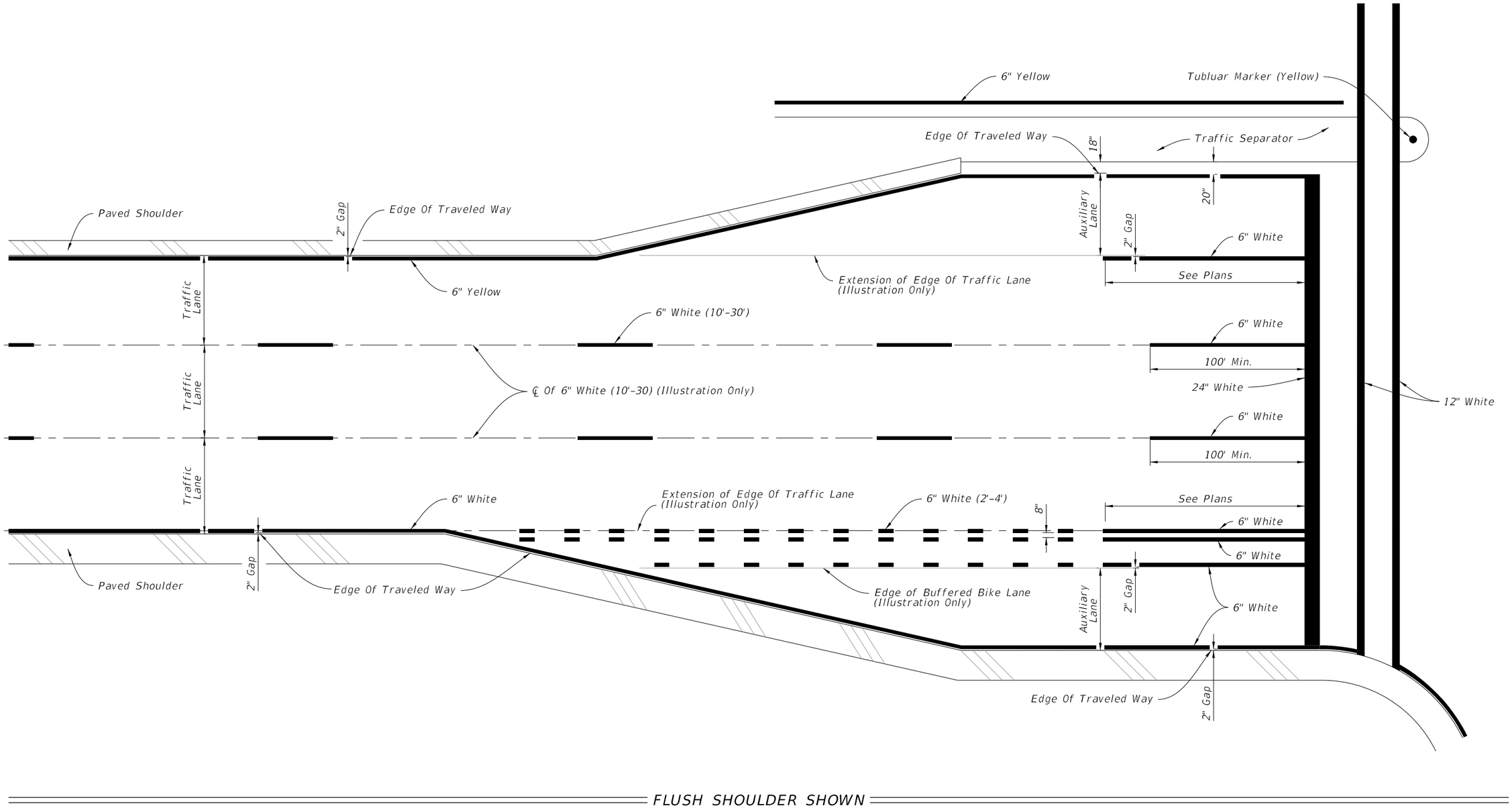

PLACEMENT OF LONGITUDINAL PAVEMENT MARKINGS

LAST REVISION	REVISION	DESCRIPTION:			INDEX	SHEET
11/01/21			FY 2023-24 STANDARD PLANS	PAVEMENT MARKINGS	711-001	6 of 13

10/20/2022 8:57:46 AM

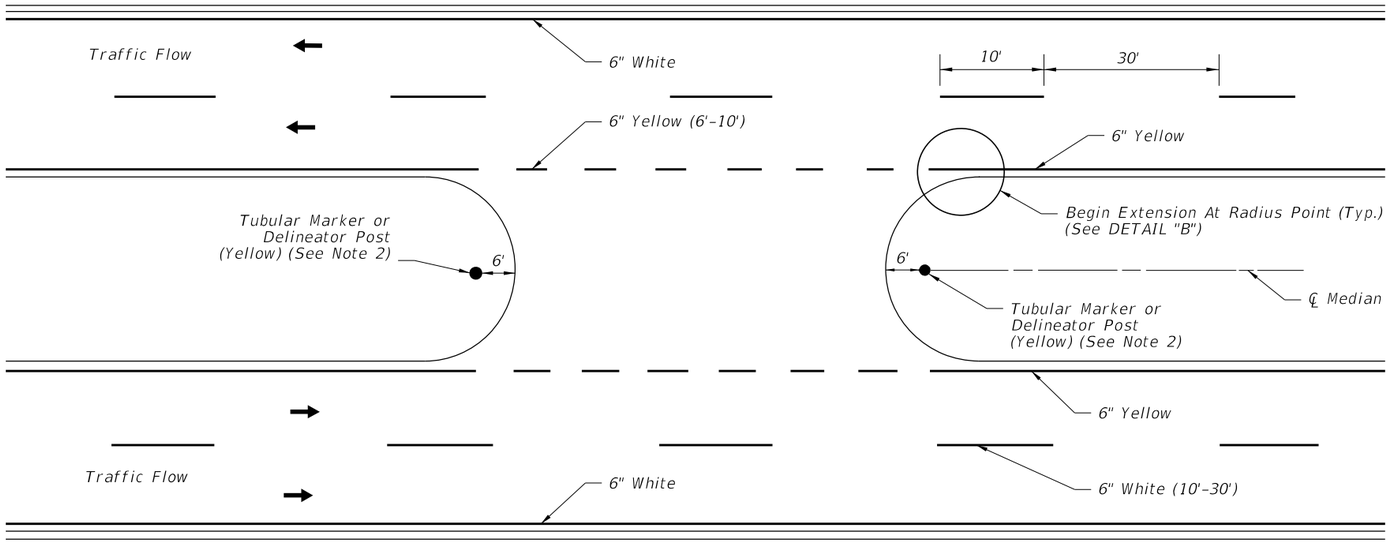

PAVEMENT MARKINGS AND DELINEATORS FOR MEDIAN CROSSOVER

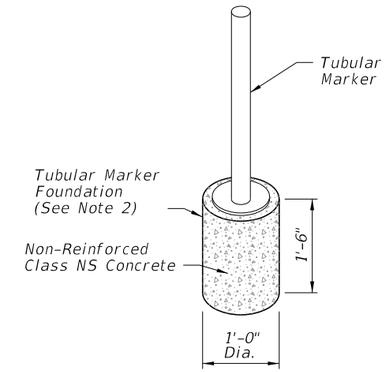

Non-Paved Surface Foundation

DETAIL "A"

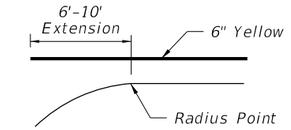

DETAIL "B"

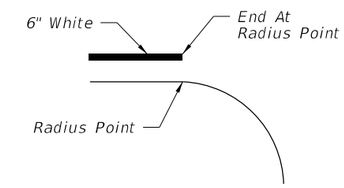

DETAIL "C"

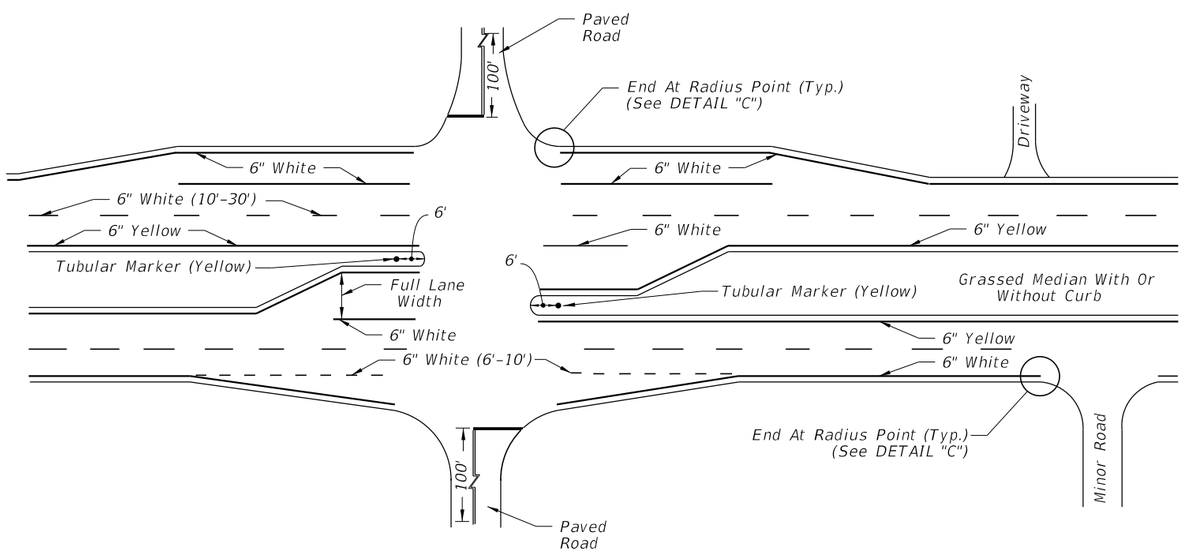

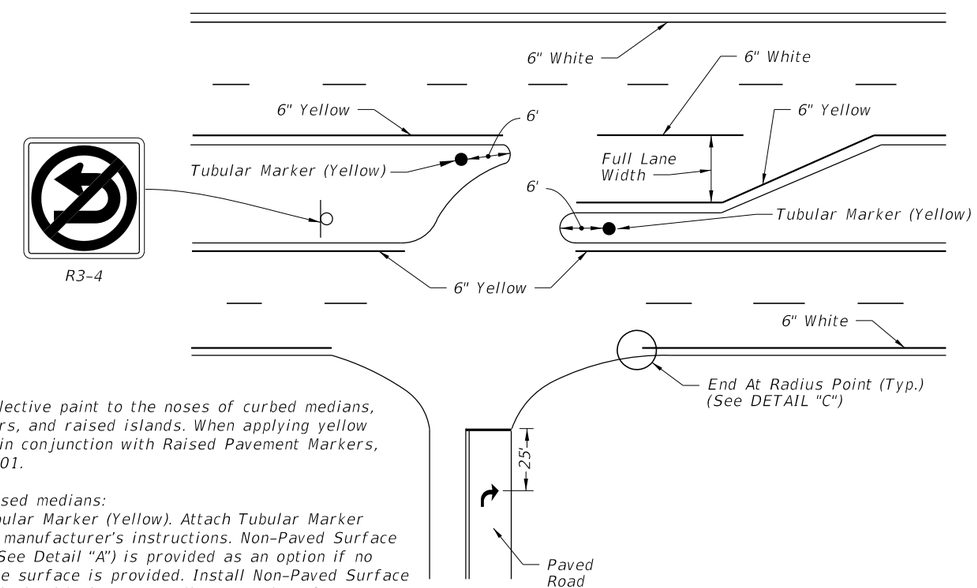

R3-4

NOTES:

1. Apply yellow reflective paint to the noses of curbed medians, traffic separators, and raised islands. When applying yellow reflective paint in conjunction with Raised Pavement Markers, see Index 706-001.

2. Options for grassed medians:
   A. Option 1: Tubular Marker (Yellow). Attach Tubular Marker according to manufacturer's instructions. Non-Paved Surface Foundation (See Detail "A") is provided as an option if no other suitable surface is provided. Install Non-Paved Surface Foundation flush with the surrounding ground surface.
   B. Option 2: Delineator Post. Use yellow retro-reflective sheeting on both sides of the delineator. Install the post so that the top is 4'-0"above the grade at the edge of the pavement.

3. Extend double yellow centerlines 100' back from intersection on all approaches or 50' for unmarked cross roads.

PAVEMENT MARKINGS FOR INTERSECTIONS WITH MAJOR AND MINOR ROADS

10/20/2022 8:57:47 AM

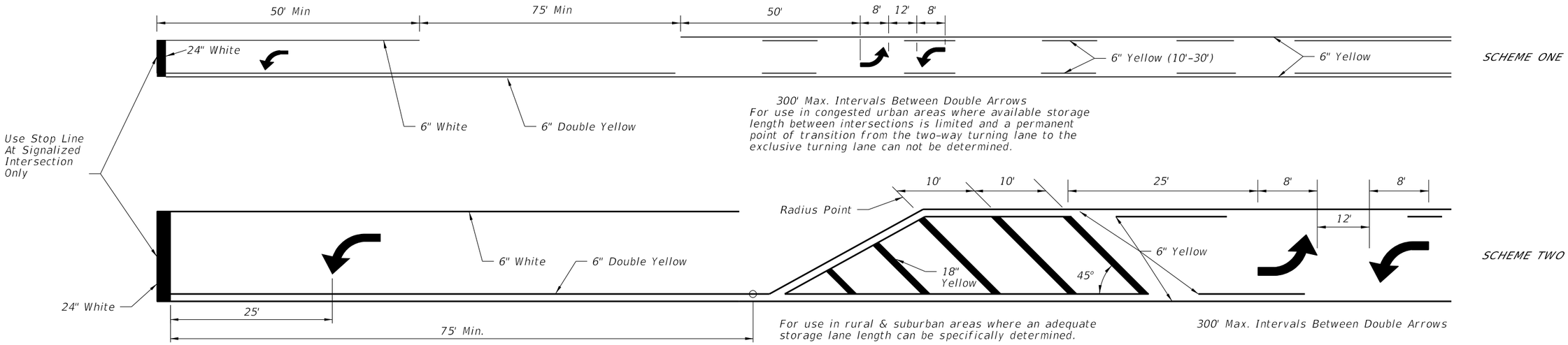

TWO WAY LEFT TURN LANE

(With Single Lane Left Turn Channelization)

POSTED SPEED LIMIT MPH	"Y" (FT.)
30 OR LESS	10
35	20
40	20
45	30
50 OR MORE	40

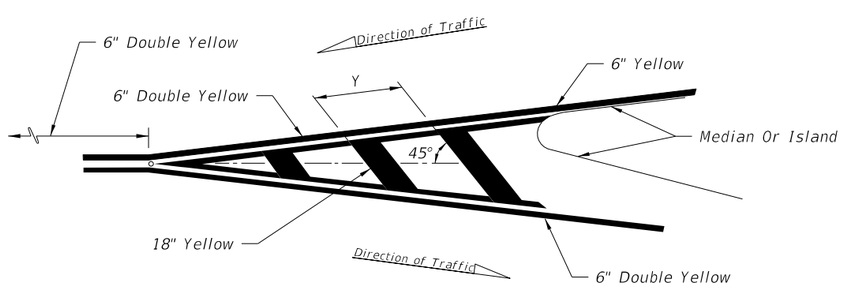

MARKINGS FOR TRAFFIC SEPARATION

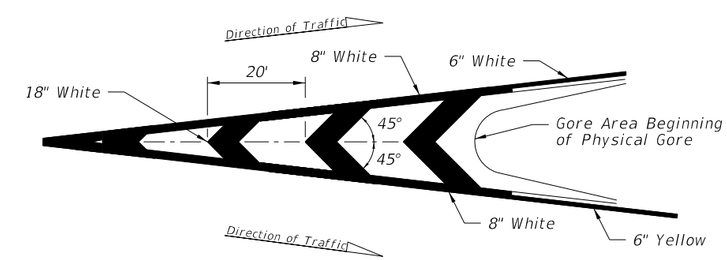

TRAFFIC CHANNELIZATION AT GORE

10/20/2022 8:57:48 AM

LAST REVISION	REVISION	DESCRIPTION:			INDEX	SHEET
11/01/21			FY 2023-24 STANDARD PLANS	PAVEMENT MARKINGS	711-001	8 of 13

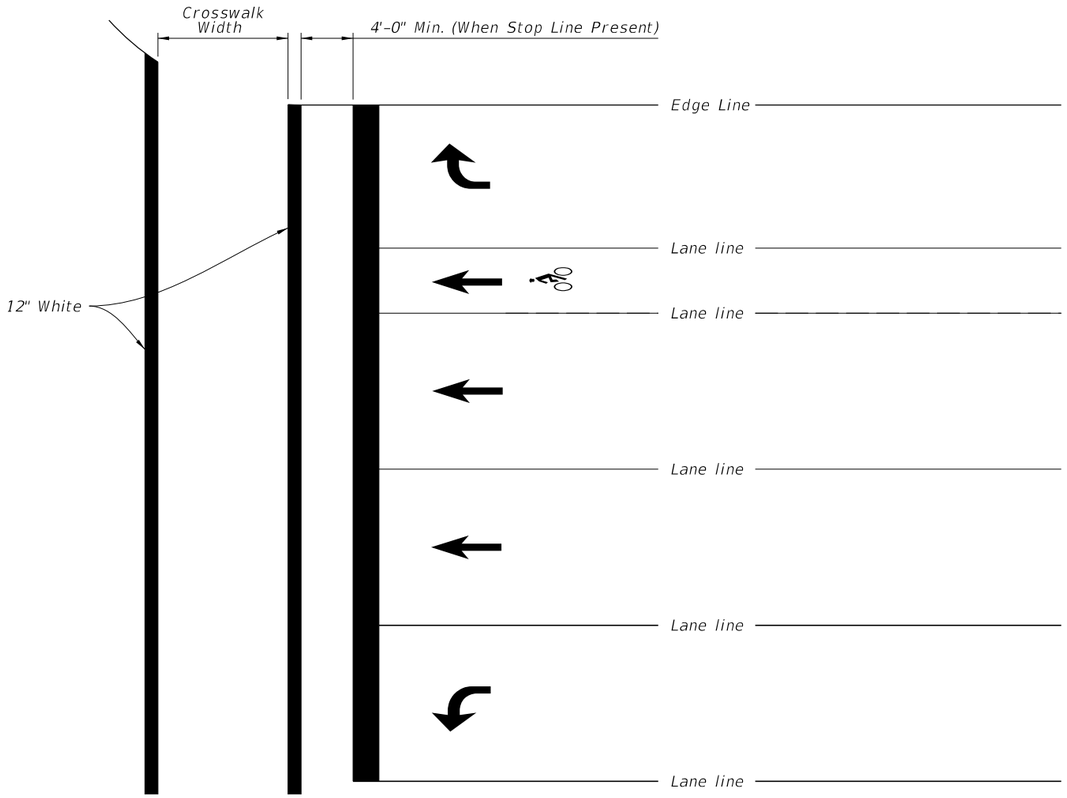

STANDARD CROSSWALK DETAILS

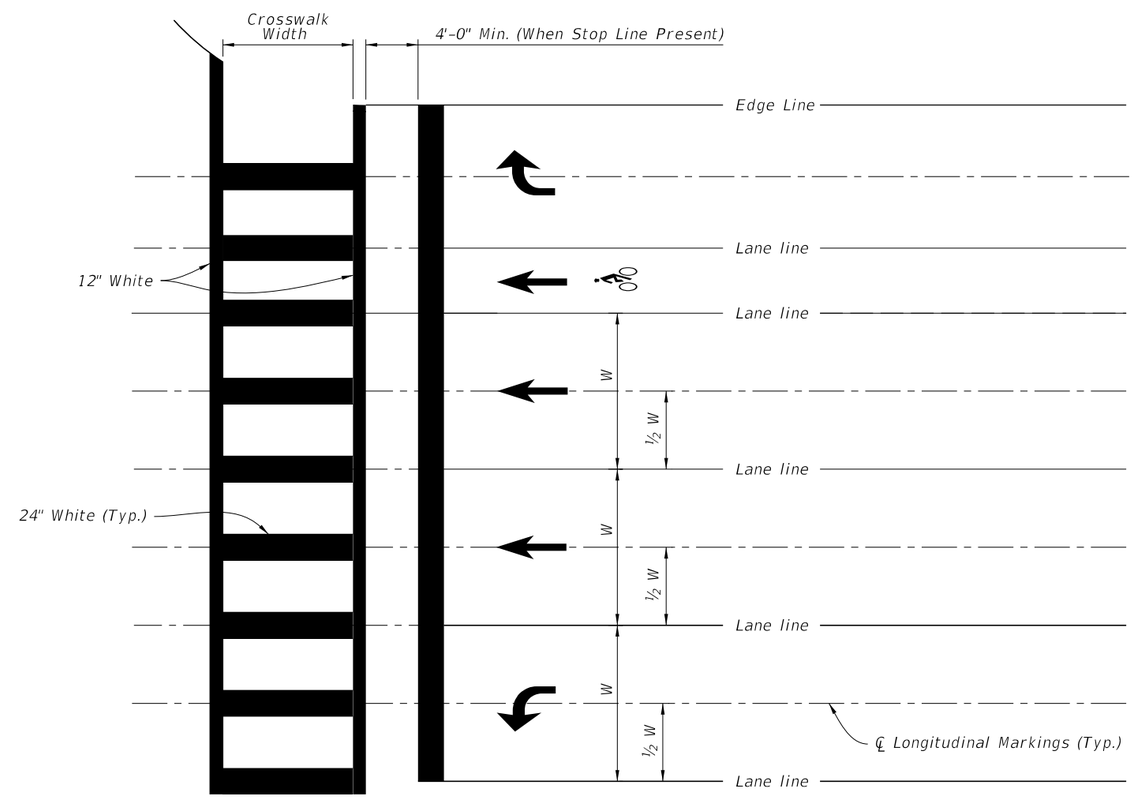

SPECIAL EMPHASIS CROSSWALK DETAILS

NOTES:

1. For crosswalk width, exceed width of the adjacent sidewalk, but do not make width less than 6' for intersection crosswalks and 10' for midblock crosswalks. Measure width from the inside of the transverse crosswalk markings.

2. When the Special Emphasis Crosswalk is not perpendicular to the lane lines, make the longitudinal markings parallel to the lane lines.

3. Refer to Index 522-002 when Curb Ramps are present.

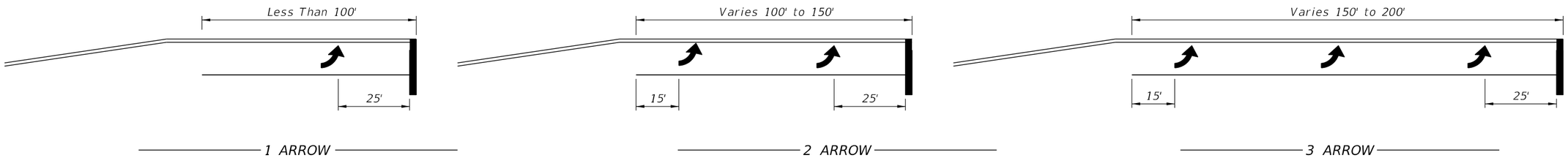

Arrow should be evenly spaced between first and last arrow. Turn lanes longer than 200' add one arrow for each 100' additional length.

ARROW SPACING

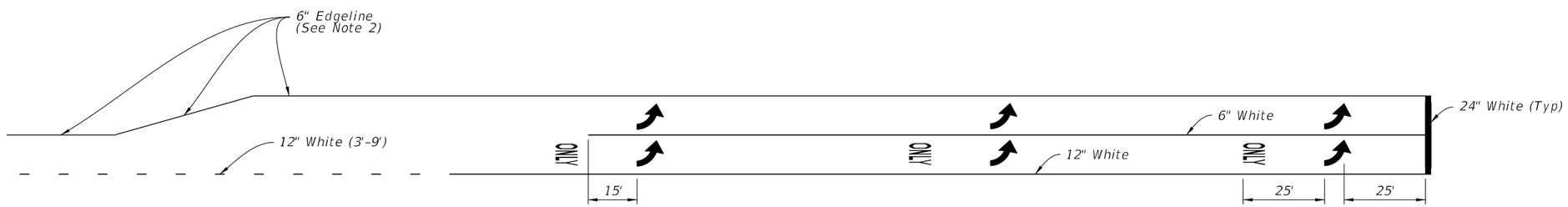

Through Lane Becomes Exclusive Left Turn (Drop Lane)

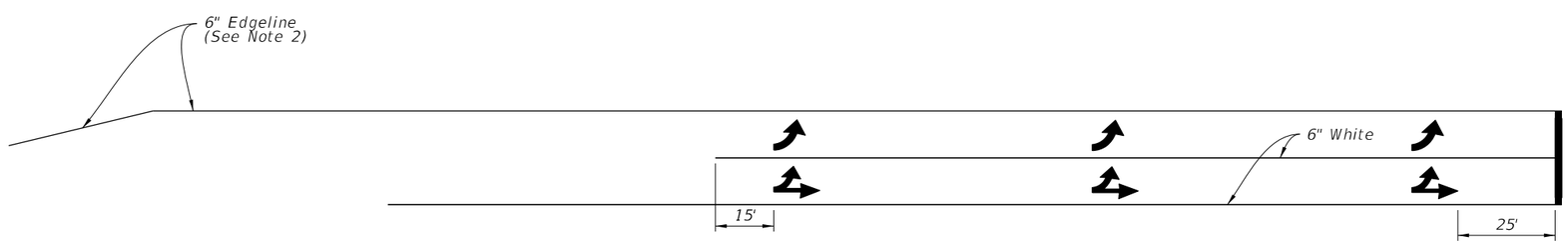

Through Lane Becomes Optional Left Turn

TURNS LANE MARKINGS

NOTES:

1. This Index also applies to right turn lanes.
2. Make Edgeline pavement markings yellow for left-turn lanes and white for right-turn lanes.

ARROW SPACING AND TURN LANE MARKINGS

LAST REVISION	REVISION	DESCRIPTION:	FY 2023-24 STANDARD PLANS	PAVEMENT MARKINGS	INDEX	SHEET
11/01/21					711-001	10 of 13

10/20/2022 8:57:49 AM

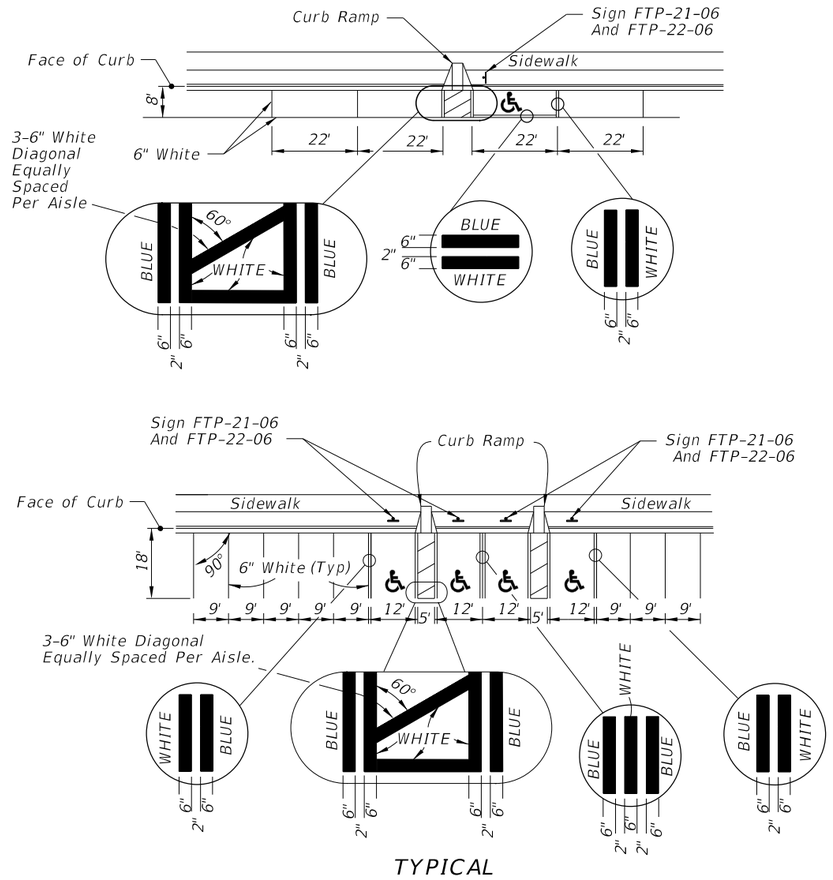

TYPICAL

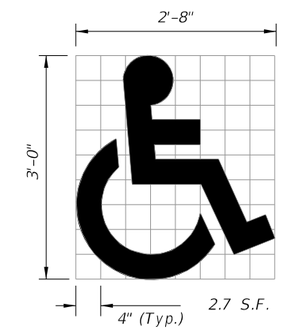

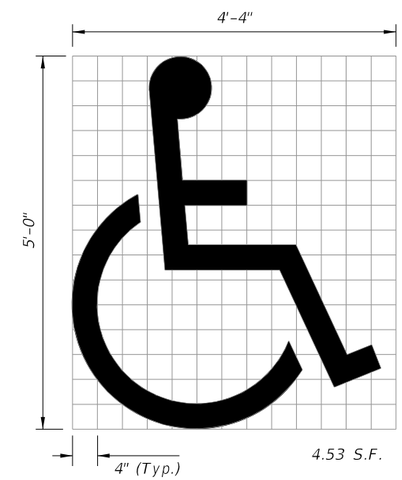

(See Note 5)

UNIVERSAL SYMBOL OF ACCESSIBILITY

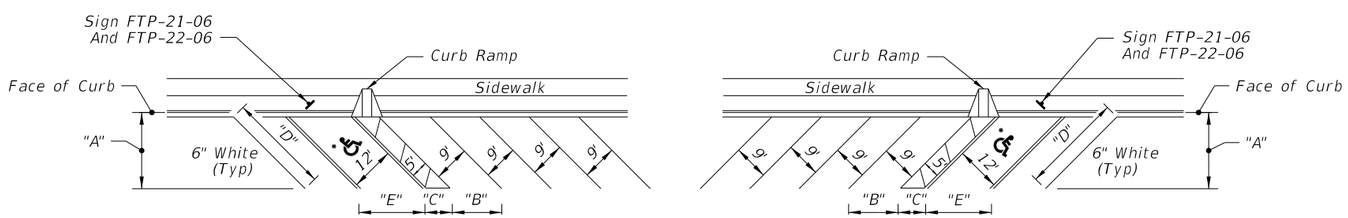

FORWARD-IN PARKING

REVERSE-IN PARKING

*FOR ACCESSIBLE MARKINGS - SEE ABOVE

DIMENSIONS					
∠ θ	"A"	"B"	"C"	"D"	"E"
45°	17'-0"	12'-9"	7'-0"	24'-0"	17'-0"

PAVEMENT MARKING FOR PARKING

NOTES:

1. Dimensions are to the centerline of markings.
2. An Access Aisle is required for each accessible space when angle parking is used.
3. Criteria for pavement markings only, not public sidewalk curb ramp locations. For ramp locations refer to plans.
4. Mount FTP-22-06 sign below the FTP-21-06 sign.
5. Use of the pavement symbol in accessible parking spaces is optional. When pavement symbol is used, the symbol is either 3'-0" or 5'-0" high and white in color.

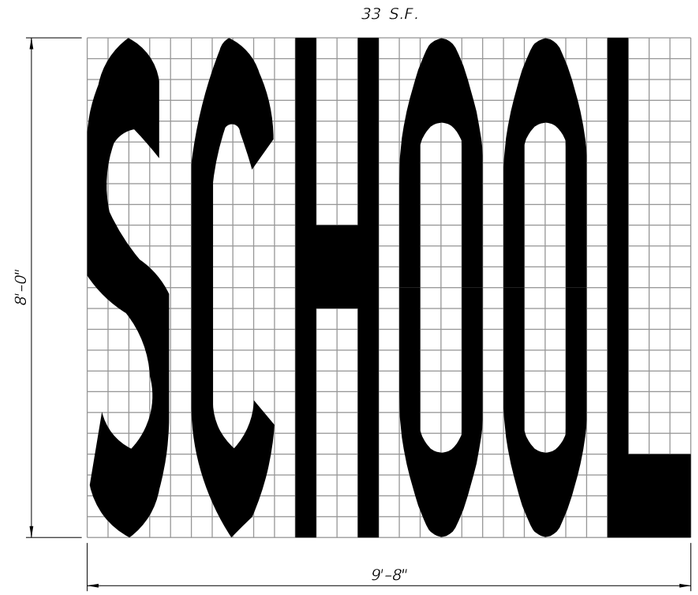

SCHOOL PAVEMENT MARKING

NOTES:

1. All grids are 4" x 4".
2. Pavement Marking Should Not Extend Into Opposing Lane.
3. Center School Pavement Marking in lane.

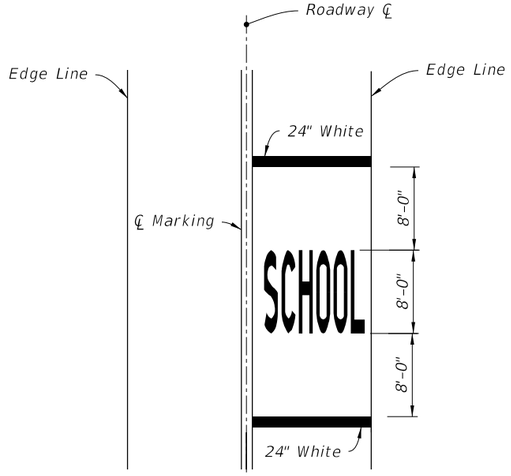

SINGLE-LANE APPROACH

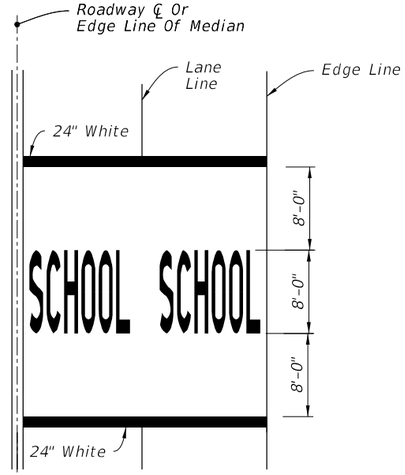

TWO-LANE APPROACH

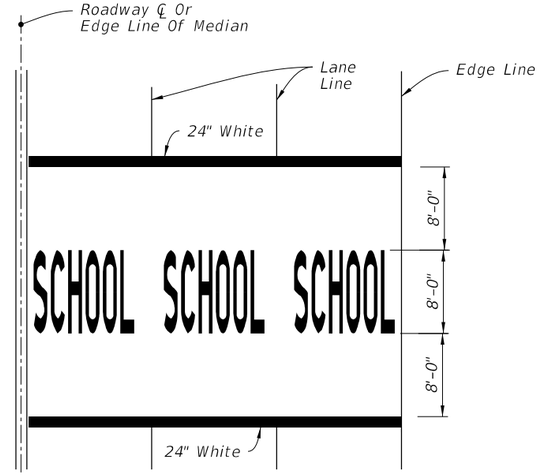

MULTI-LANE APPROACH
(Three or More)

MARKINGS FOR SCHOOL ZONES

10/20/2022 8:57:51 AM

LAST REVISION	REVISION	DESCRIPTION:				INDEX	SHEET
11/01/21			FDOT	FY 2023-24 STANDARD PLANS	PAVEMENT MARKINGS	711-001	12 of 13

NOTE:

Orient Railroad Dynamic Envelope Marking as shown in the Plans.

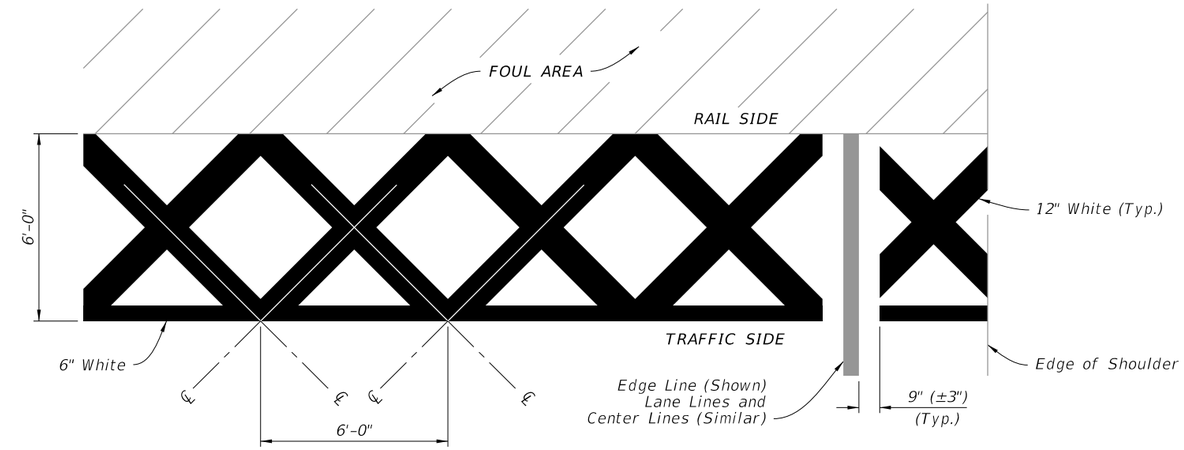

RAILROAD DYNAMIC ENVELOPE (RDE) PAVEMENT MARKING DETAIL

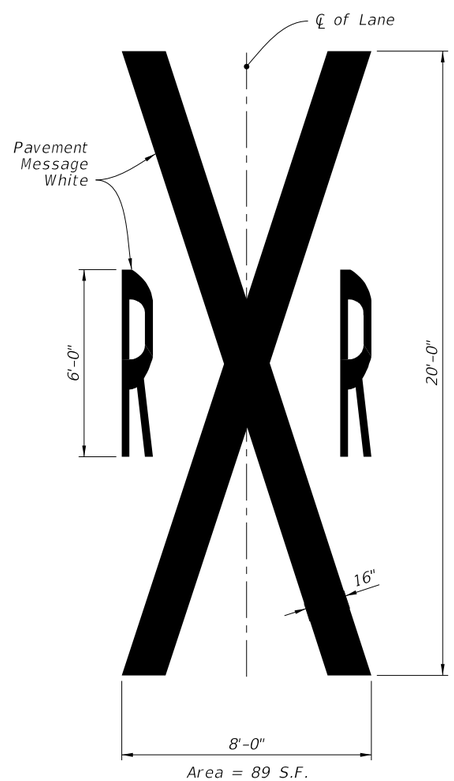

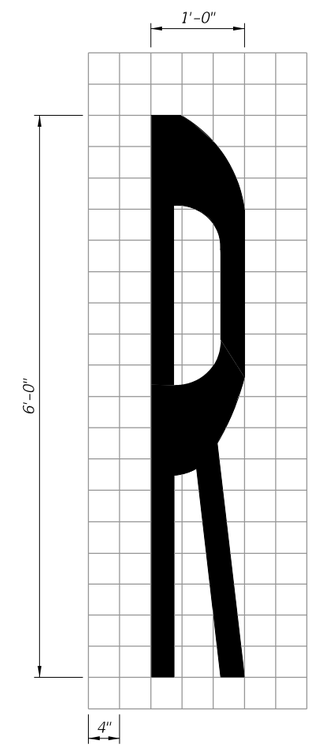

RAILROAD CROSSING PAVEMENT MESSAGE

10/20/2022 8:57:51 AM

LAST REVISION	REVISION	DESCRIPTION:			INDEX	SHEET
11/01/21			FY 2023-24 STANDARD PLANS	PAVEMENT MARKINGS	711-001	13 of 13

8.1 S.F.

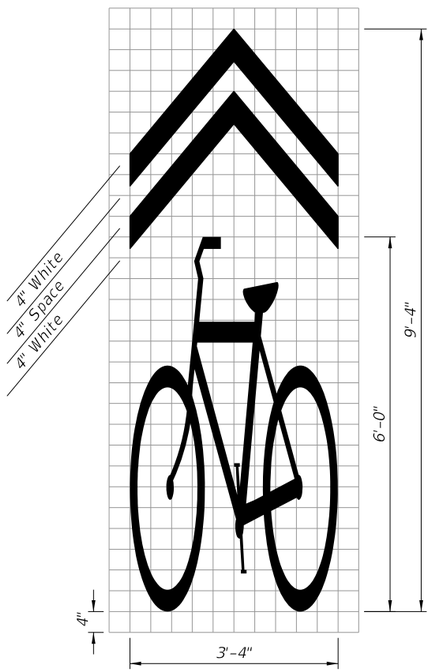

SHARED LANE MARKING (SLM)

6.3 S.F.

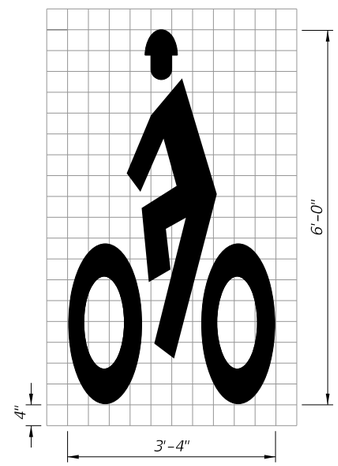

HELMETED BICYCLIST SYMBOL

4.2 S.F.

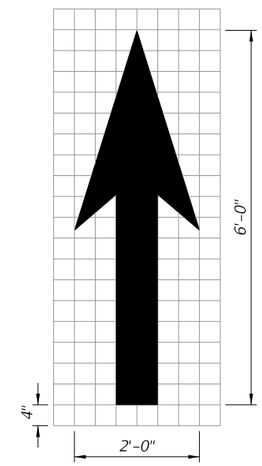

BIKE LANE ARROW

9.0 S.F.

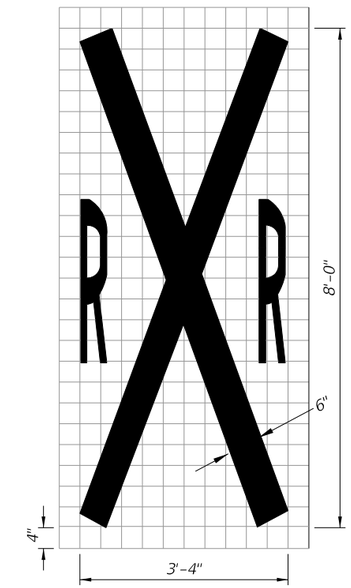

RAILROAD CROSSING

NOTES:

1. All bicycle markings and pavement messages shall be White.
2. All bicycle markings shall be preformed thermoplastic.
3. All grids are 4" x 4".

STANDARD PAVEMENT MARKING MESSAGE LAYOUTS

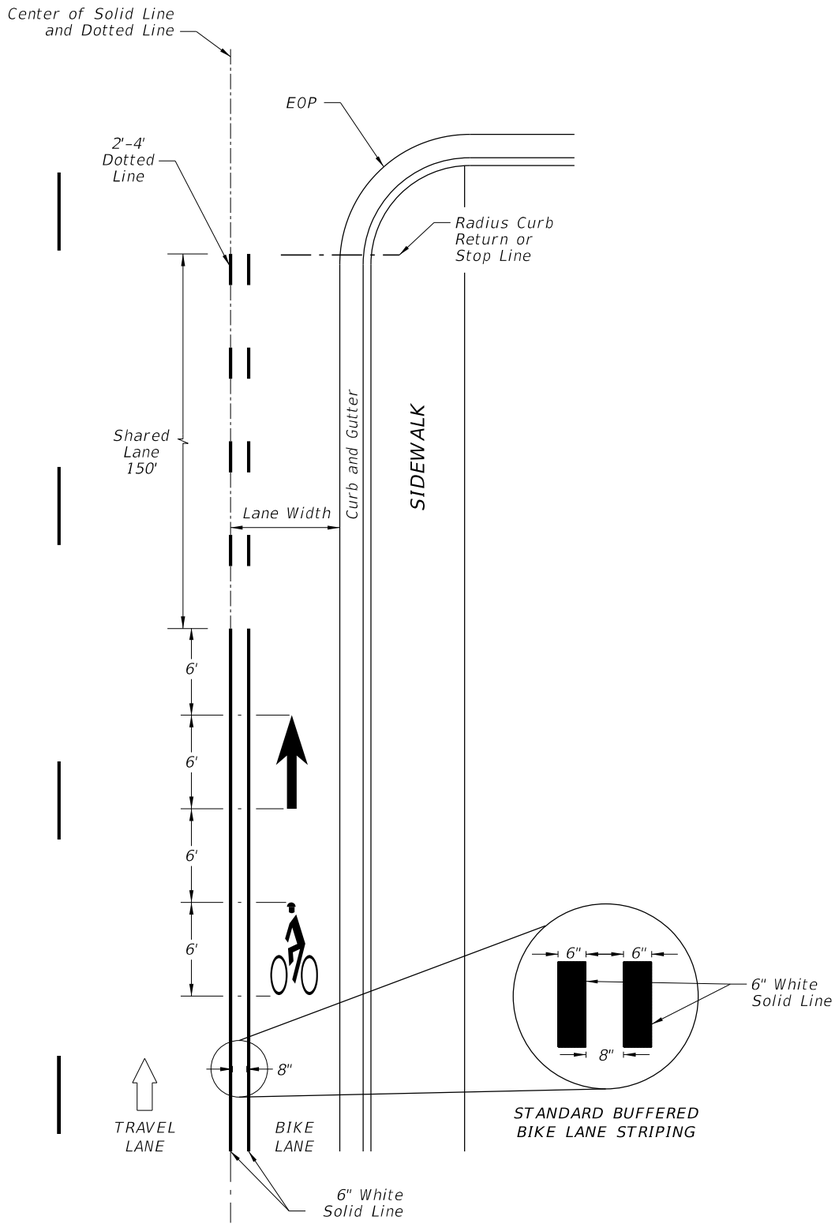

APPROACH TO INTERSECTIONS DETAILS

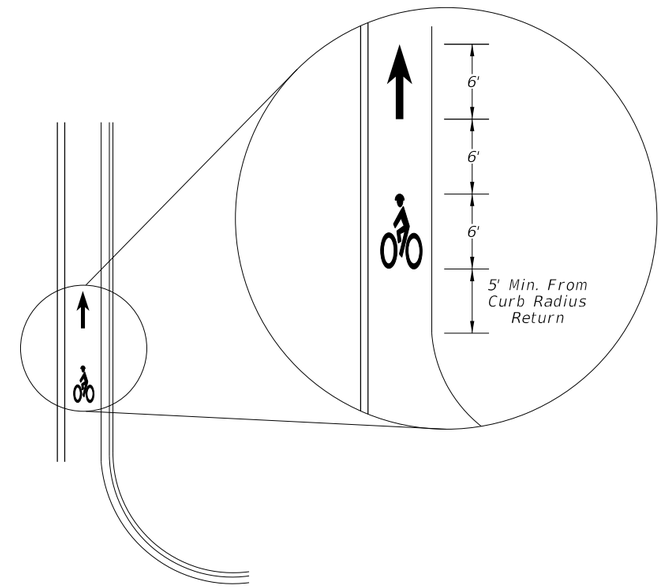

FAR SIDE OF INTERSECTION DETAIL

BUFFERED BIKE LANES

2/14/2023 8:01:57 AM

LAST REVISION	REVISION	DESCRIPTION:			INDEX	SHEET
11/01/17			FY 2023-24 STANDARD PLANS	BICYCLE MARKINGS	711-002	2 of 2

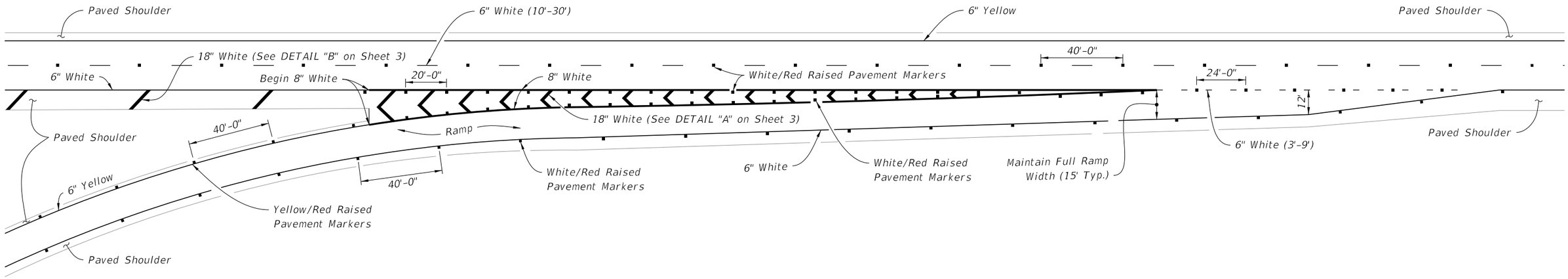

TAPER - TYPE ENTRANCE

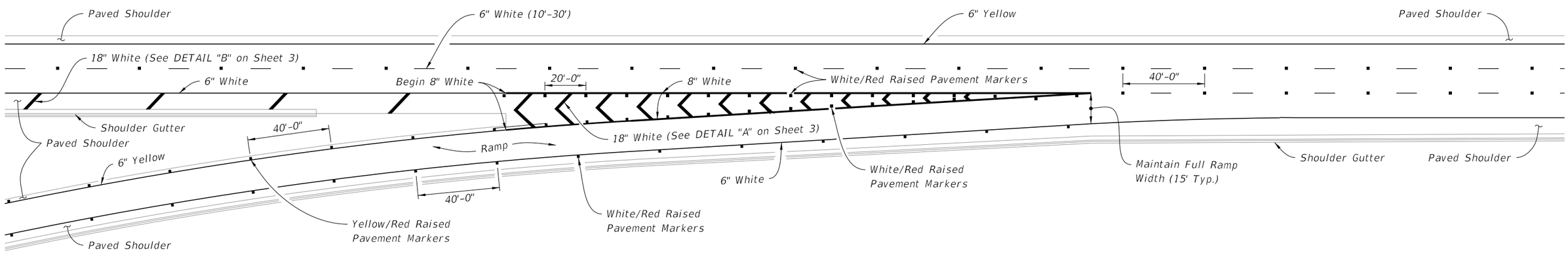

PARALLEL - TYPE ENTRANCE

GENERAL NOTES:

1. Make the traffic face of the raised pavement marker (RPM) the same color as the pavement marking that it is supplementing.

2. See Index 706-001 for additional Raised Pavement Markers (RPM) requirements.

12/13/2022 8:41:01 AM

SINGLE LANE RAMPS - ENTRANCE TERMINALS

LAST REVISION	REVISION	DESCRIPTION:			INDEX	SHEET
11/01/21			FY 2023-24 STANDARD PLANS	INTERCHANGE MARKINGS	711-003	1 of 8

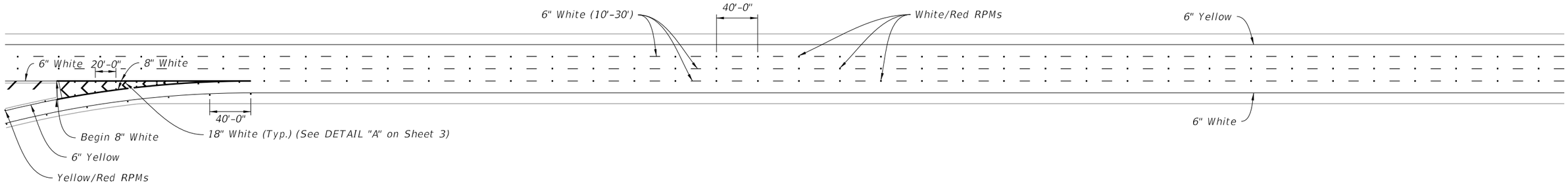

PARALLEL-TYPE ENTRANCE WITH ADDED LANE

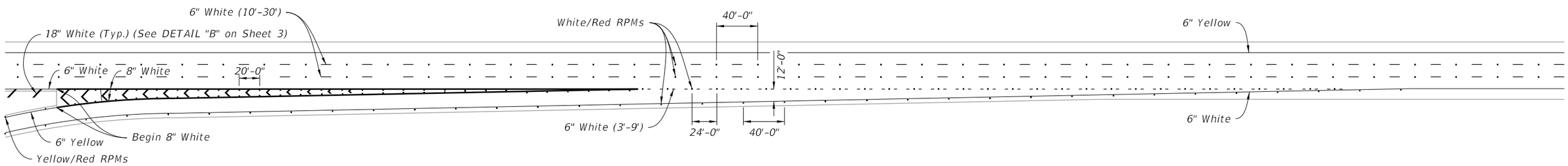

TAPER-TYPE ENTRANCE

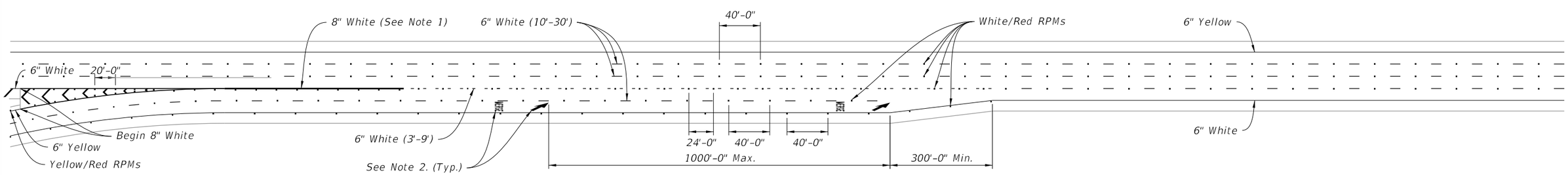

TWO-LANE PARALLEL-TYPE ENTRANCE WITH ADDED LANE
(Single-Lane Parallel-Type Entrance Without Added Lane Similar, See Note 3)

NOTES:

1. Extend this 8" white Pavement Marker one-fourth the length of the acceleration lane from the gore markings.
2. See Index 711-001 for pavement message dimensions and details.
3. Merge Pavement Message and Arrow only used for Two-Lane Entrances.

TYPICAL PAVEMENT MARKINGS AT ENTRANCE RAMPS

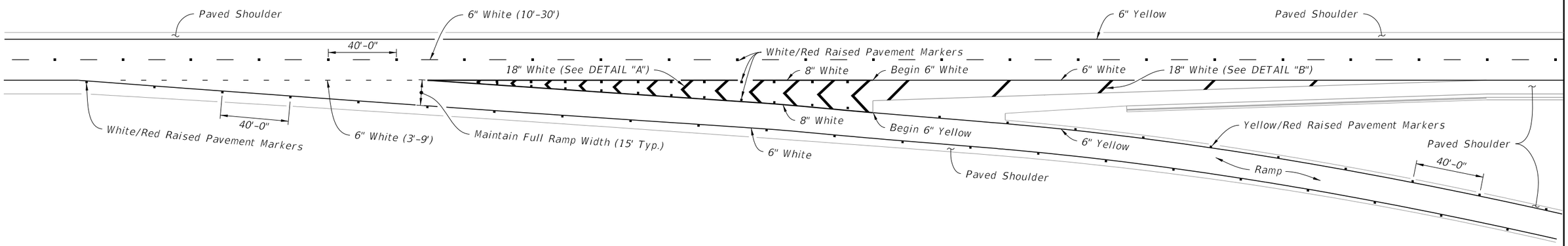

TWO THRU LANES

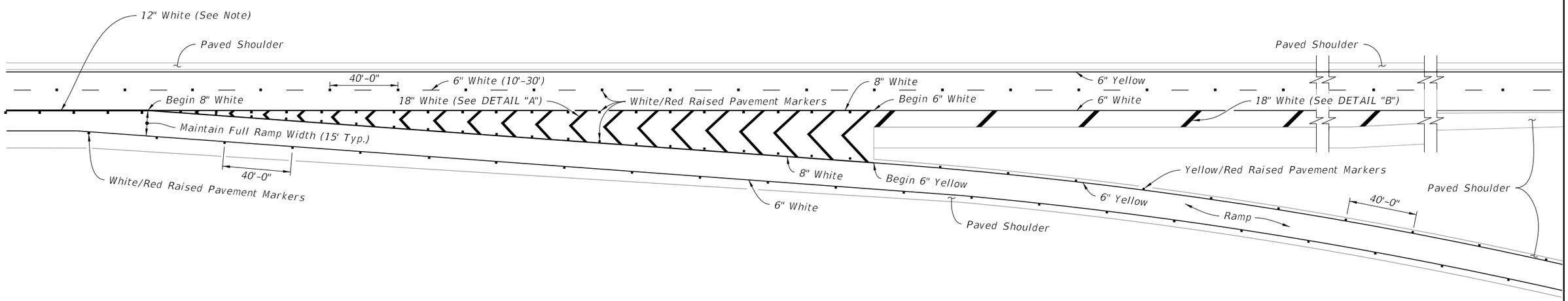

THREE APPROACH LANES - TWO THRU LANES

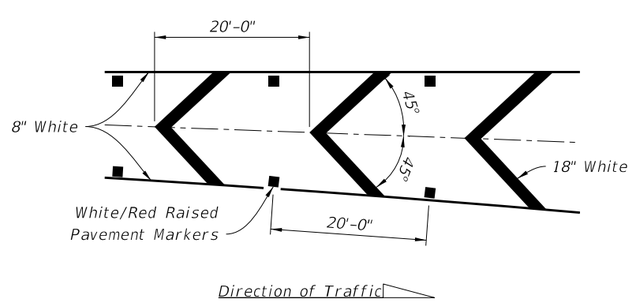

DETAIL "A"

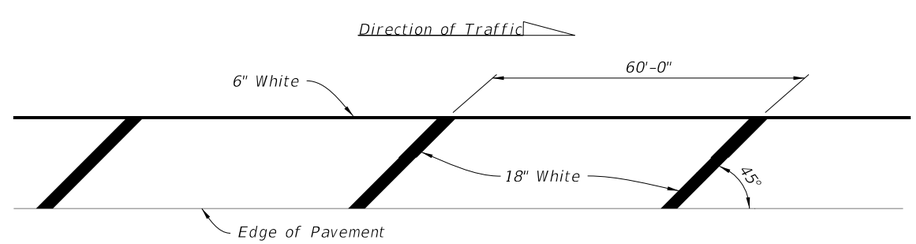

DETAIL "B"

NOTE:

Extend 12" White 300' from the gore markings.

SINGLE LANE RAMPS - EXIT TERMINALS

10/20/2022 8:57:55 AM

LAST REVISION	REVISION	DESCRIPTION:			INDEX	SHEET
11/01/21			FDOT FY 2023-24 STANDARD PLANS	INTERCHANGE MARKINGS	711-003	3 of 8

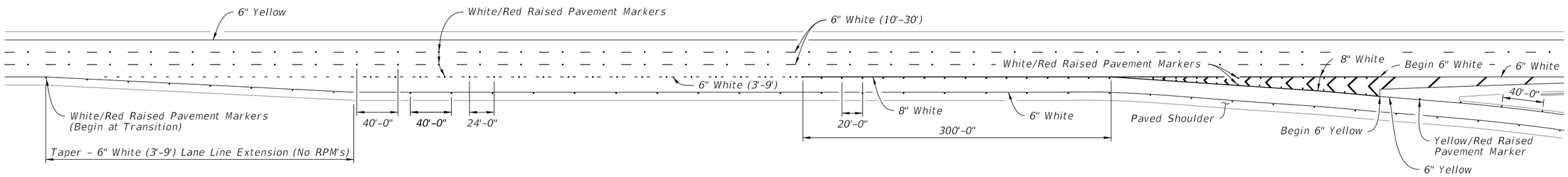

PARALLEL DECELERATION LANE

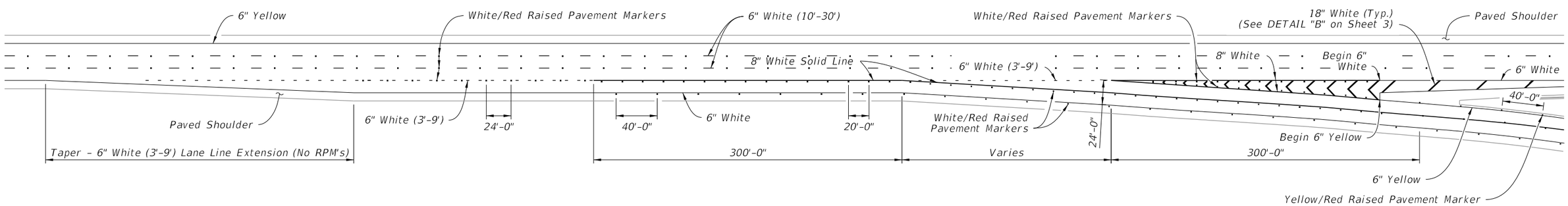

MARKINGS AT DUAL LANE EXITS

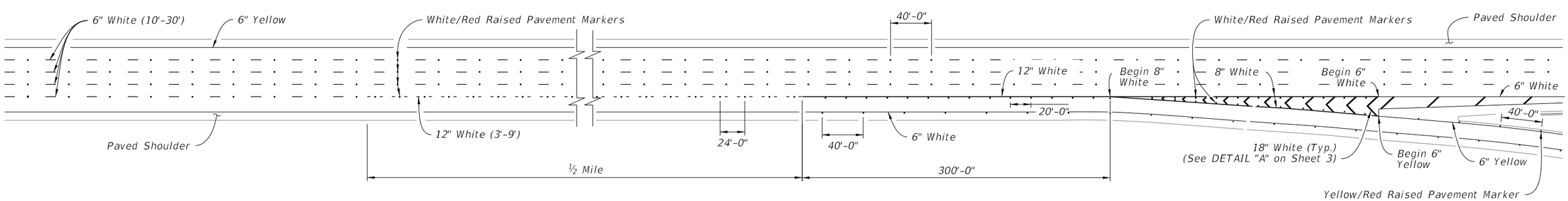

LANE DROP MARKINGS AT EXIT RAMPS

10/20/2022 8:57:56 AM

TYPICAL PAVEMENT MARKINGS AT EXIT RAMPS

LAST REVISION	REVISION	DESCRIPTION:			INDEX	SHEET
11/01/21			FY 2023-24 STANDARD PLANS	INTERCHANGE MARKINGS	711-003	4 of 8

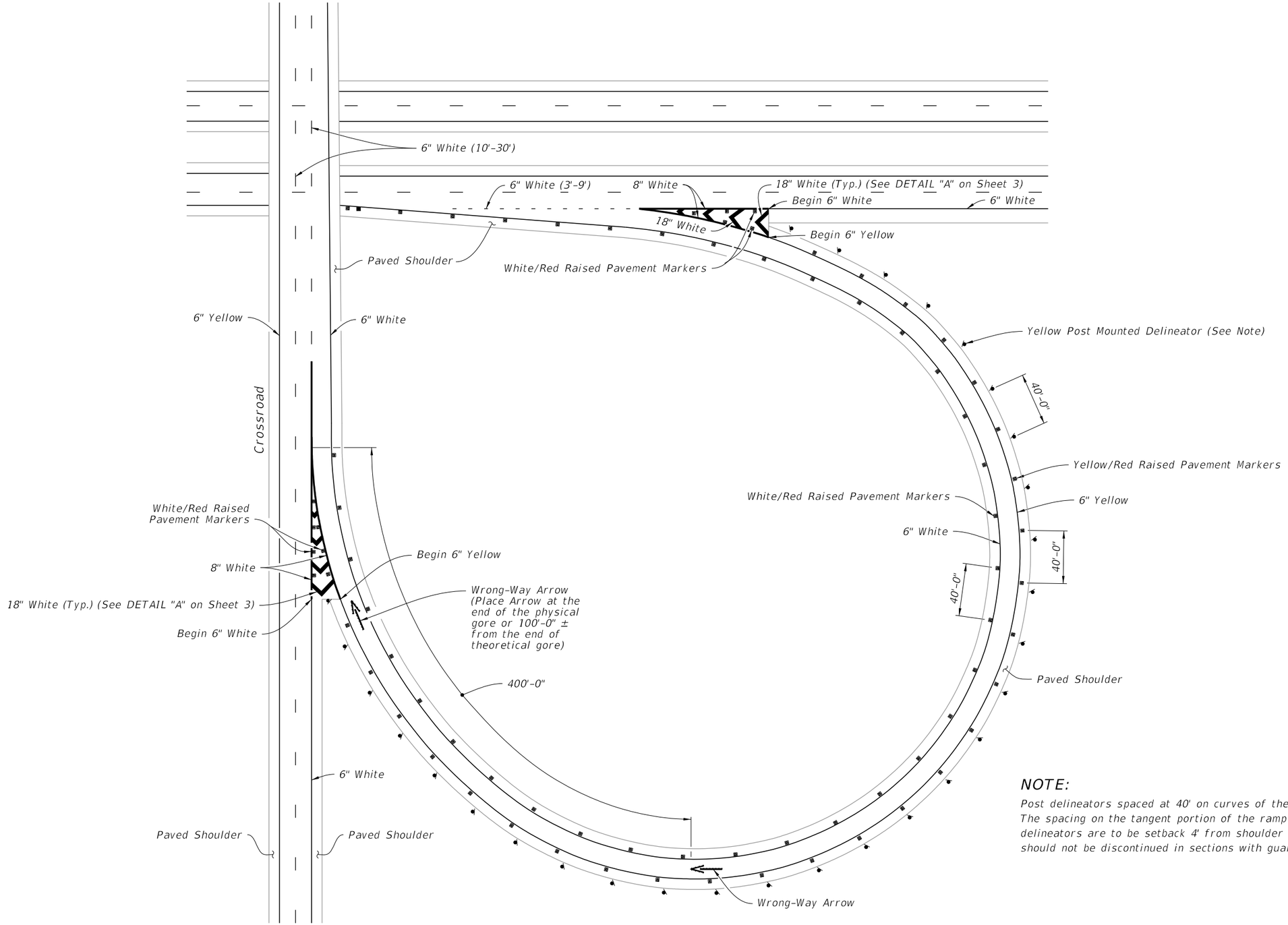

NOTE:

Post delineators spaced at 40' on curves of the entrance and exit of ramps. The spacing on the tangent portion of the ramp section is 300'-0". All delineators are to be setback 4' from shoulder break. Post delineators should not be discontinued in sections with guardrail.

TYPICAL CURVED EXIT RAMP

10/20/2022 8:57:57 AM

TYPICAL CURVED EXIT RAMP

LAST REVISION	REVISION	DESCRIPTION:	FY 2023-24 STANDARD PLANS	INTERCHANGE MARKINGS	INDEX	SHEET
11/01/21					711-003	5 of 8

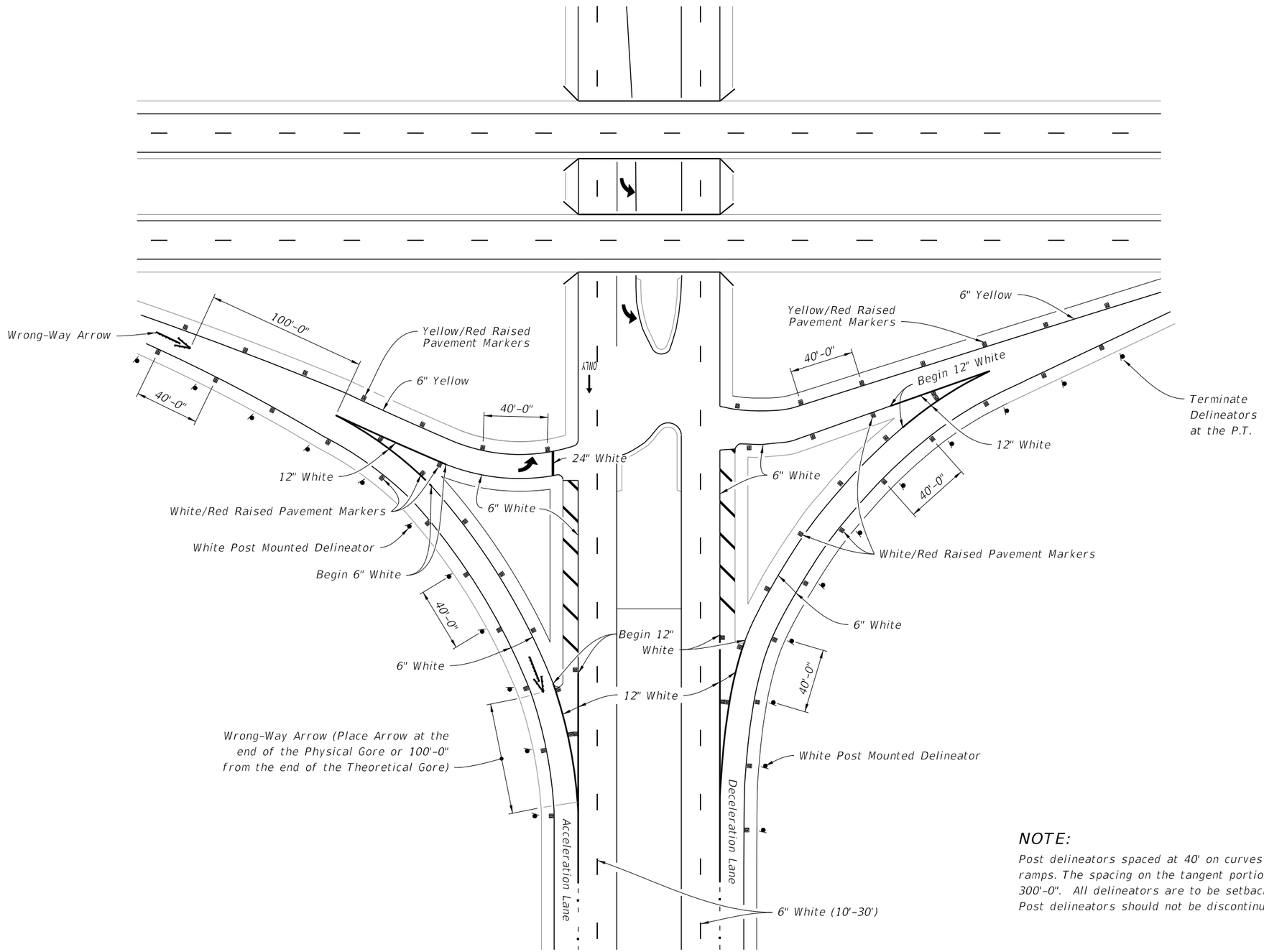

NOTE:

Post delineators spaced at 40' on curves of the entrance and exit of ramps. The spacing on the tangent portion of the ramp section is 300'-0". All delineators are to be setback 4' from shoulder break. Post delineators should not be discontinued in sections with guardrail.

TYPICAL INTERSECTION

LAST REVISION	REVISION	DESCRIPTION:			INDEX	SHEET
11/01/21			FY 2023-24 STANDARD PLANS	INTERCHANGE MARKINGS	711-003	6 of 8

10/20/2022 8:58:27 AM

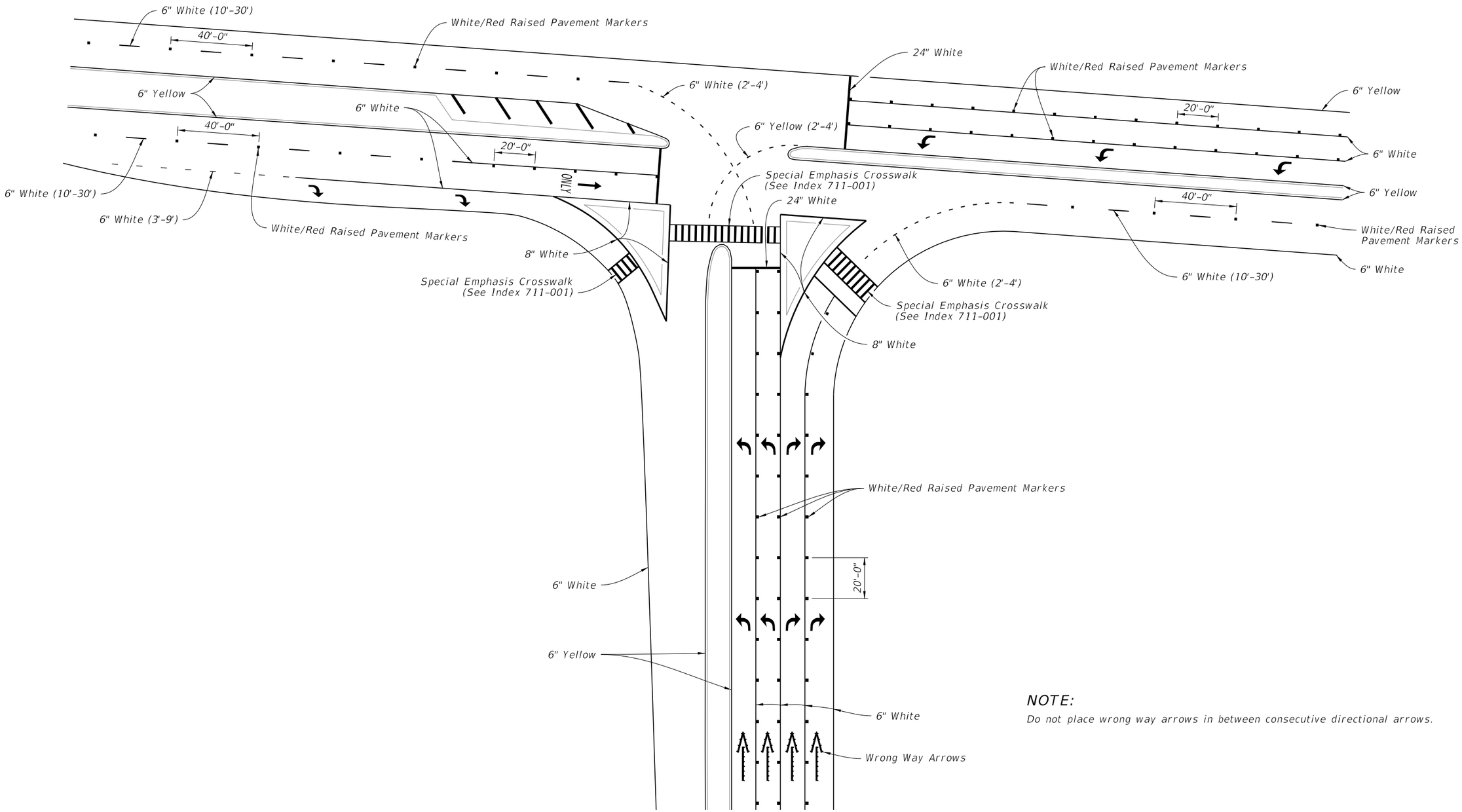

NOTE:

Do not place wrong way arrows in between consecutive directional arrows.

TYPICAL PARTIAL CLOVERLEAF/TRUMPET EXIT RAMP

LAST REVISION	REVISION	DESCRIPTION:	FY 2023-24 STANDARD PLANS	INTERCHANGE MARKINGS	INDEX	SHEET
11/01/21					711-003	7 of 8

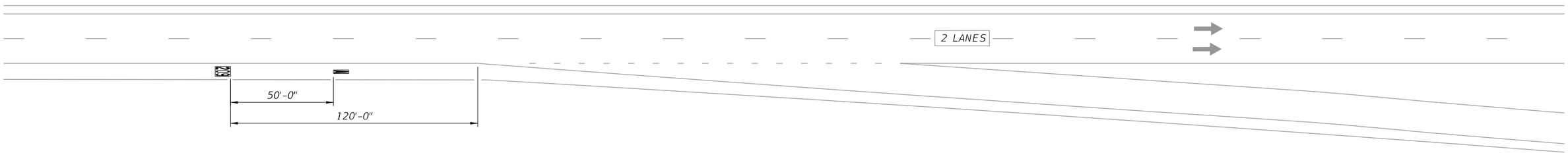

EXIT RAMP WITHOUT AUXILIARY LANE

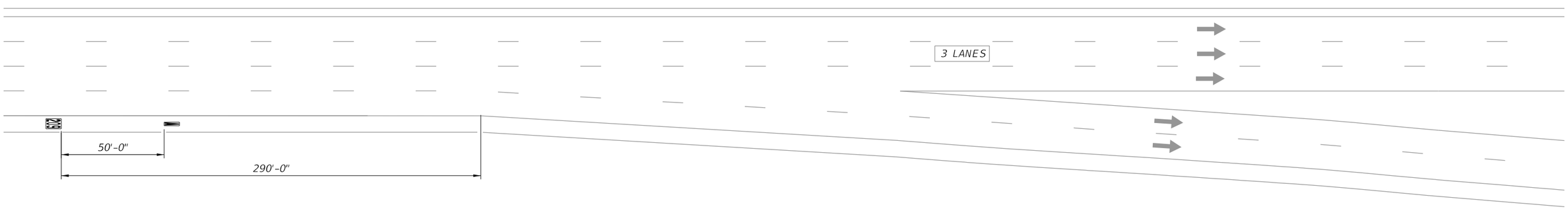

EXIT RAMP WITH AUXILIARY LANE

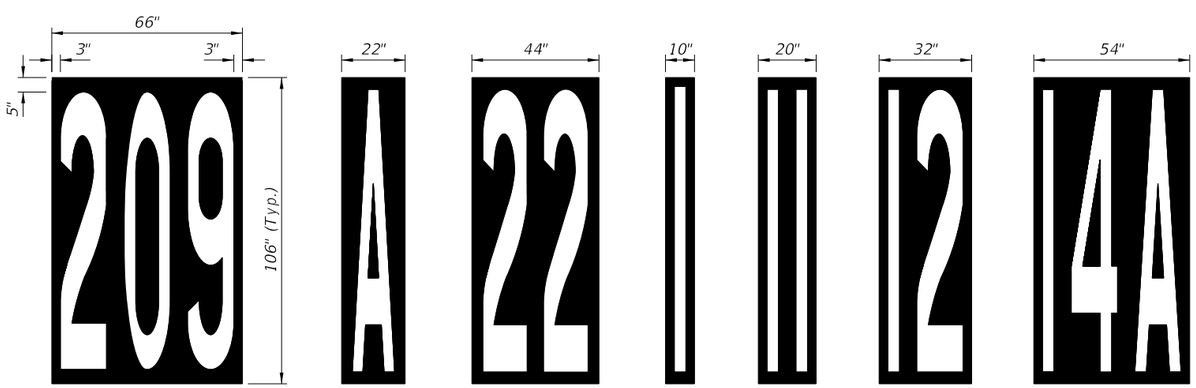

MAT DIMENSIONS

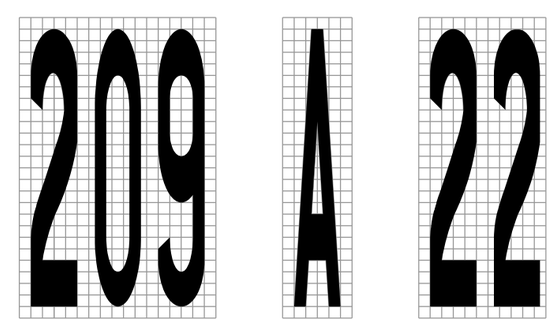

MESSAGE SIZE AND SPACING

NOTES:

1. This Index shows layouts for 1, 2, and 3 digit numbers and letters.
2. The message consist of white letters and numbers with black contrasting material.
3. The "EXIT NUMBER" position remains the same distance from the beginning of taper regardless of the number of lines of information.
4. All Grids are 4" x4".

EXIT RAMP MESSAGING

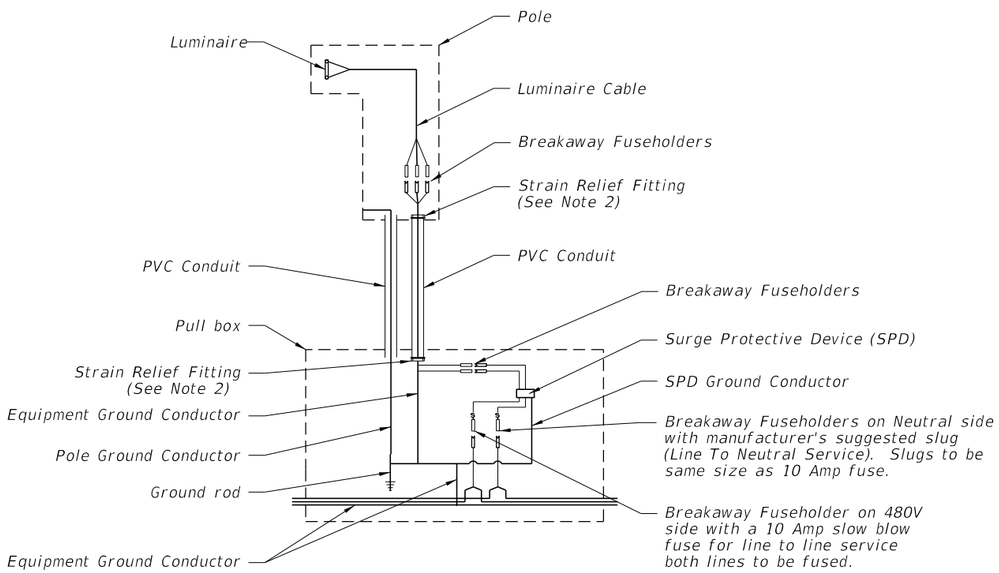

WIRING DIAGRAM

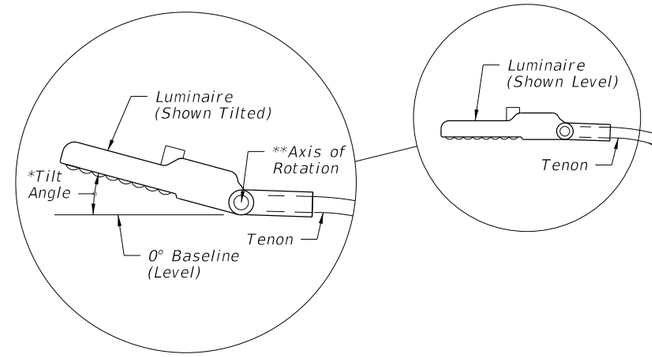

LUMINAIRE TILT DETAIL
(Side View)

*Tilt angle is 0° (level) unless otherwise shown in the Plans
**Axis of rotation is level and perpendicular to the tenon. The location shown is approximate and may be either a hinge or a tenon connection adjustment.

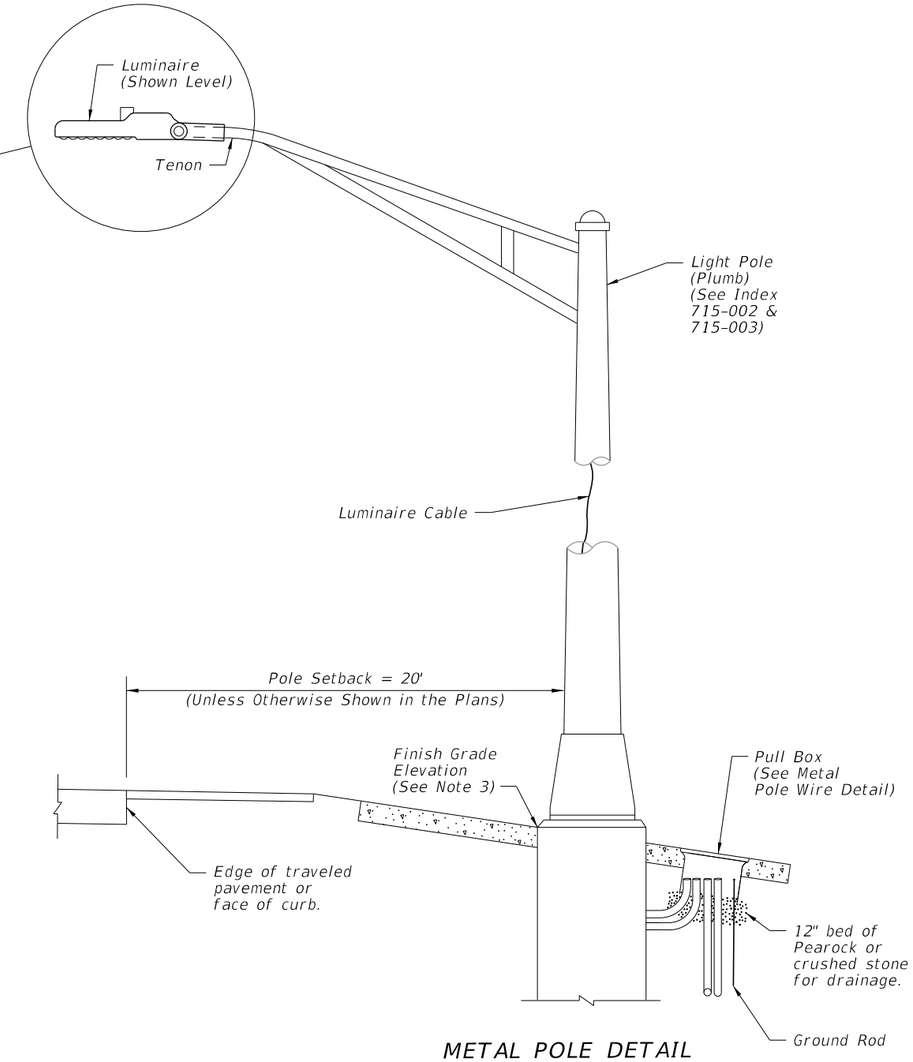

METAL POLE DETAIL

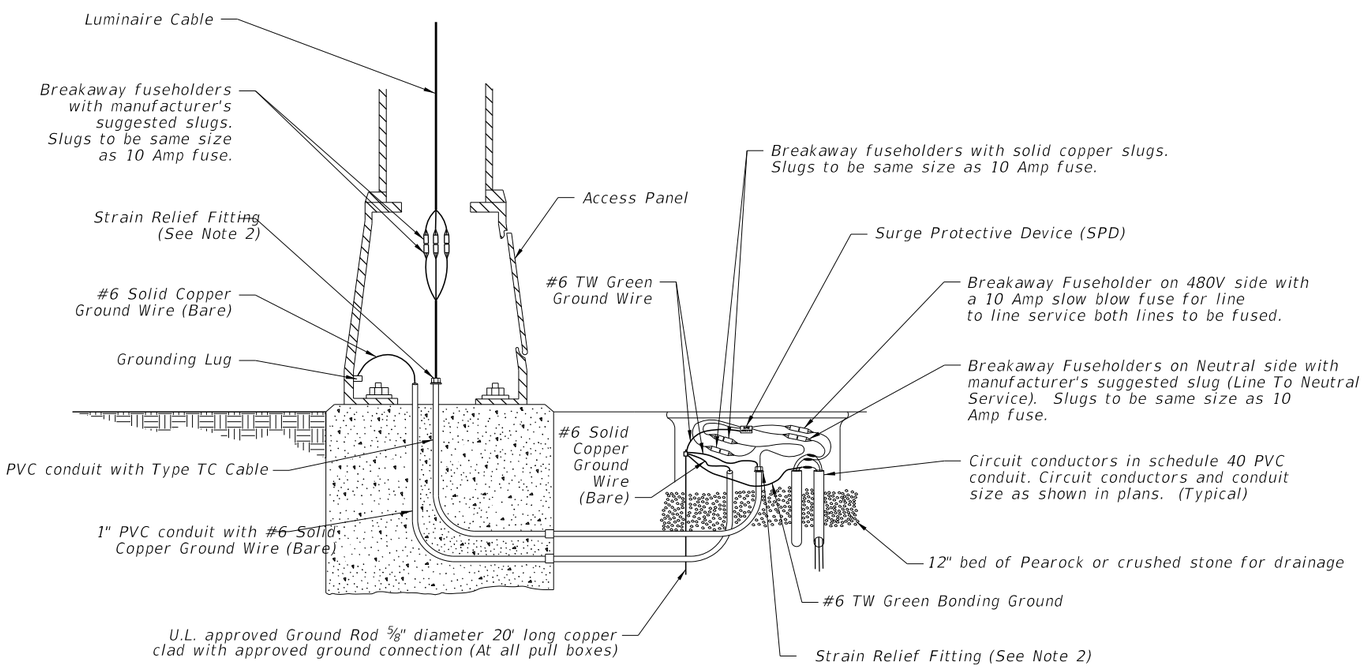

METAL POLE WIRING DETAIL

NOTES:

1. Concrete Barrier and Bridge Mounted Poles: Place wiring system following conduit layouts and requirements of Index 715-002. Follow additional requirements of Specification 992. For wiring and devices shown inside of pull boxes on this sheet, place inside of embedded junction boxes instead. Place the vertical breakaway fuseholders inside the pole, at the handhole location.

2. Provide enough cable length to allow for removal of fuseholders from the transformer base, pole base, or pullbox for maintenance. Remove slack from the luminaire cable to provide tension on the fuseholders in breakaway pole designs. Pull excess cable into pull box tighten strain relief fittings or cable clamps at both ends of conduit to prevent cable from slipping.

3. Align the top, outside edge of the concrete foundation with the finish grade elevation on the side nearest the traffic lane. Relative to the finish grade elevation, this foundation alignment has a vertical tolerance of plus 2 inches to minus 0 inches.

WIRING AND INSTALLATION DETAILS

10/20/2022 8:58:29 AM

NOTES:

1. Use compacted select material in accordance with Index 120-001.
2. Concrete shall be Class NS with a minimum strength at 28 days of f'c=2.5 ksi.
3. Outside edge of slab shall be cast against formwork.
4. The pull box shown is 13" x 24"; others approved under Specification 635 may be used.
5. Slabs to be placed around all Poles and Pull Boxes in rural locations. In urban areas or where space is limited slab dimensions may be adjusted as shown in the plans.
6. Concrete for slabs around pull boxes shall be included in the price of pull box.

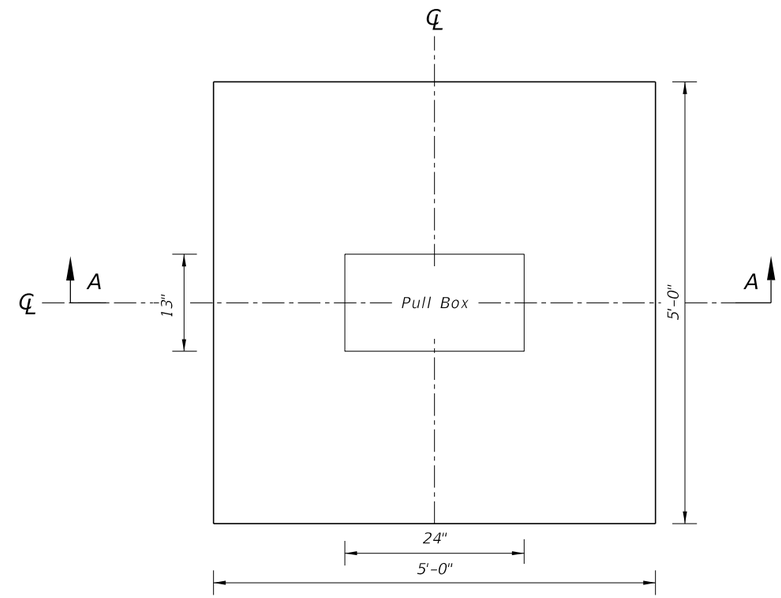

SLAB DIMENSIONS

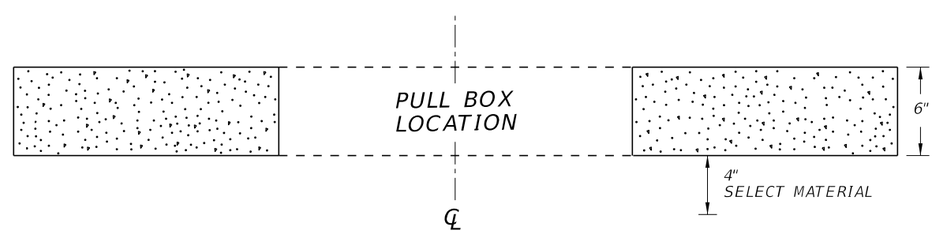

SECTION A-A

SLAB DETAILS FOR INTERMEDIATE PULLBOX LOCATIONS

NOTES:

1. Use compacted select material in accordance with Index 120-001.
2. Concrete shall be Class NS with a minimum strength at 28 days of f'c=2.5 ksi.
3. Outside edge of slab shall be cast against formwork.
4. The pull box shown is 13" x 24"; others approved under Specification 635 may be used.
5. Slabs to be placed around all Poles and Pull Boxes. In urban areas or where space is limited slab dimensions may be adjusted as shown in the plans.
6. Concrete for slabs around poles and pull boxes shall be included in the price of pole or pull box.
7. The expansion joint shall consist of ½" of closed-cell polyethylene foam expansion material. The top ½" of expansion material shall be removed after pouring the slab and sealed with an APL approved Type A sealant meeting the requirements of Specification 932.

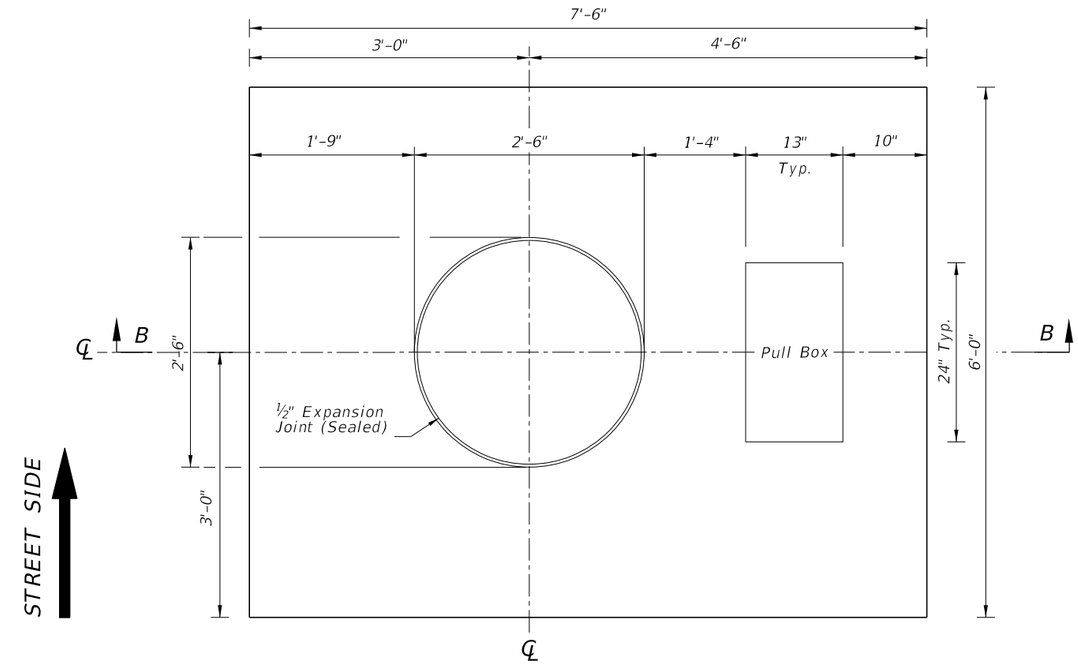

SLAB DIMENSIONS

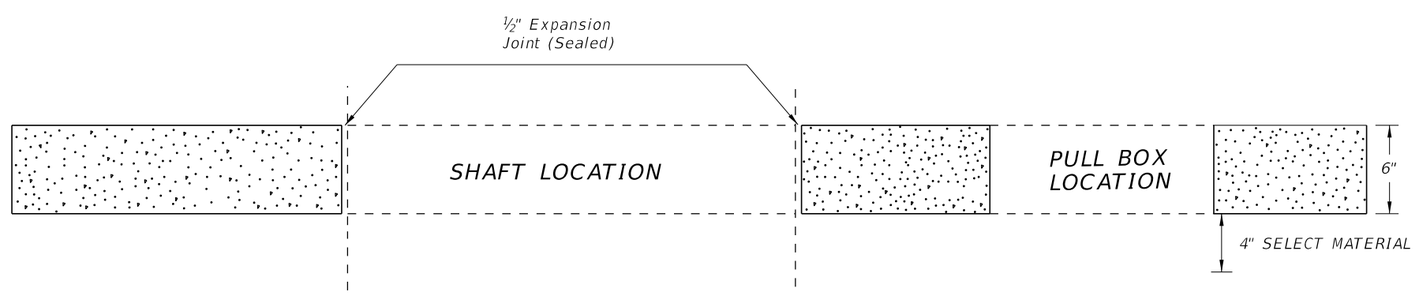

SECTION B-B

SLAB DETAILS
FOR POLE AND PULL BOX LOCATIONS

10/20/2022 8:58:30 AM

LAST REVISION	REVISION	DESCRIPTION:			INDEX	SHEET
11/01/17			FY 2023-24 STANDARD PLANS	CONVENTIONAL LIGHTING	715-001	3 of 3

GENERAL NOTES:

1. Poles are designed to support the following:
   A. Luminaire Effective Projected Area (EPA): 1.55 SF
   B. Weight: 75 lb.

2. Shop Drawings: This Index is considered fully detailed, only submit shop drawings for minor modifications not included in the Plans.

3. Materials:
   A. Pole, Pole Connection Extrusions and Arm Extrusions: ASTM B221, Alloy 6063-T6 or Alloy 6061-T6
   B. Bars, Plates, Stiffeners and Backer Ring: ASTM B221, Alloy 6063-T6
   C. Caps and Covers: ASTM B-26, Alloy 319-F
   D. Steel Bearing Plate: ASTM A709 or ASTM A36 Grade 36
   E. Aluminum Weld Material: ER 4043
   F. Transformer and Frangible Base Materials: ASTM B26 or ASTM B108, Alloy 356-T6
   G. Bolts, Nuts and Washers:
      a. Shoe Base Bolts: ASTM F3125, Grade A325, Type 1
      b. Nuts: ASTM A563 Grade DH Heavy-Hex
      c. Washer: ASTM F436 Type 1
   H. Anchor Bolts, Nuts, and Washers:
      a. Anchor Bolts: ASTM F1554 Grade 55
      b. Nuts: ASTM A563 Grade A Heavy-Hex
      c. Plate Washer: ASTM A36
   I. Stainless Steel Fasteners: ASTM F593 Alloy Group 2, Condition A, CW1 or SH1
   J. Nut Covers: ASTM B26 (319-F)
   K. Concrete: Class II
   L. Reinforcing Steel: Specification 415

4. Fabrication:
   A. Weld Arm and Pole (Alloy 6063) in the T4 temper using 4043 filler. Age the Arm and Pole artificially to the T6 temper after welding.
   B. Transverse welds are only allowed at the base.
   C. Roadway Light Pole Taper: Taper as required to provide a round top O.D. of 6" and a base O.D. of 8" for 20' and 25' mounting heights and 10" O.D. for poles with 30' to 50' mounting heights. Portions of the pole near the base shoe and at the arm connections may be held constant to simplify fabrication.
   D. Median Barrier Mounted Light Pole Taper: Taper as required to provide a 6" O.D. round top with an 11" x 7" O.D. oblong base. Portions of the pole near the base and at the arm connections may be held constant at 11"x 7" oblong and 6" round respectively to simplify fabrication.
   E. Provide 'J', 'S' or 'C' hook at top of pole for electrical wires.
   F. Equip poles located on bridges, walls and concrete median barriers/Traffic Railings with a vibration damper.
   G. Perform all welding in accordance with AWS D1.2.
   H. Embedded Junction Box (EJB):
      a. Weld all seams continuously and grind smooth.
      b. Hot Dip Galvanize after Fabrication.
      c. Provide a watertight cover with neoprene gasket and secure cover with galvanized screws.
   I. For Median Barrier Mounted Aluminum Light Poles, the fabricator must demonstrate the ability to produce a crack free pole. The fabricator's Department-approved QC Plan must contain the following information prior to fabrication:
      a. Tests demonstrating a pole with a ¼" wall thickness achieves and ultimate moment capacity of 36 kip*ft in the strong axis and 30 kip*ft in the weak axis.
      b. Tests demonstrating a pole with a 15/16" wall thickness achieves an ultimate moment capacity of 44 kip*ft in the strong axis and 37 kip*ft in the weak axis.
      c. Test results showing the pole does not buckle at the shape transition area under the ultimate moment capacity loads.
      d. Complete details and calculations for the reinforced 4"x 6" (Min.) handhole located 1'-6" above the base plate.
   J. Identification Tag: (Submit details for approval.)
      a. 2" x 4" (Max.) aluminum identification tag.
      b. Locate on the inside of the transformer base and visible from the door opening.
      c. Secure to transformer base with ⅛" diameter stainless steel rivets or screws.
      d. Include the following information on the ID Tag:
         1. Financial Project ID
         2. Pole Height
         3. Manufacturer's Name

5. Coatings/Finish:
   A. Pole and Arm Finish: 50 grit satin rubbed.
   B. Galvanize Steel Bolts, Screws, Nuts and Washers: ASTM F2329
   C. Hot Dip Galvanize EJB and other steel items including poles and plate washers: ASTM A123

6. Construction:
   A. Foundation: Specification 455, except payment for the foundation is included in the cost of the pole.
   B. Frangible Base, Base Shoe, and Clamp:
      a. Certify that the Clamp, Frangible Transformer Base, and Base Shoe Design are capable of providing the required capacity.
      b. Certify the Base conforms to the current FHWA required AASHTO Frangibility Requirements, tested under NCHRP Report 350 Guidelines (e.g. Akron Foundry TB1-17).
      c. Do not erect pole without Luminaire attached.

7. Embedded Junction Box (EJB): Install EJBs per Note 4 and in accordance with Specification 635, as shown on the following Sheets.

8. Wind Speed by County:

   120 MPH
   Alachua, Baker, Bradford, Calhoun, Clay, Columbia, Dixie, Duval, Gadsden, Gilchrist, Hamilton, Jackson, Jefferson, Lafayette, Leon, Liberty, Nassau, Madison, Putnam, Suwannee, Taylor, Union and Wakulla Counties.

   140 MPH
   Bay, Citrus, De Soto, Flagler, Franklin, Glades, Gulf, Hardee, Hendry, Hernando, Highlands, Hillsborough, Holmes, Lake, Levy, Manatee, Marion, Okaloosa, Okeechobee, Orange, Osceola, Pasco, Pinellas, Polk, Santa Rosa, Seminole, St. Johns, Sumter, Volusia, Walton and Washington Counties.

   160 MPH
   Brevard, Broward, Charlotte, Collier, Escambia, Indian River, Lee, Martin, Miami-Dade, Monroe, Palm Beach, Sarasota and St. Lucie Counties.

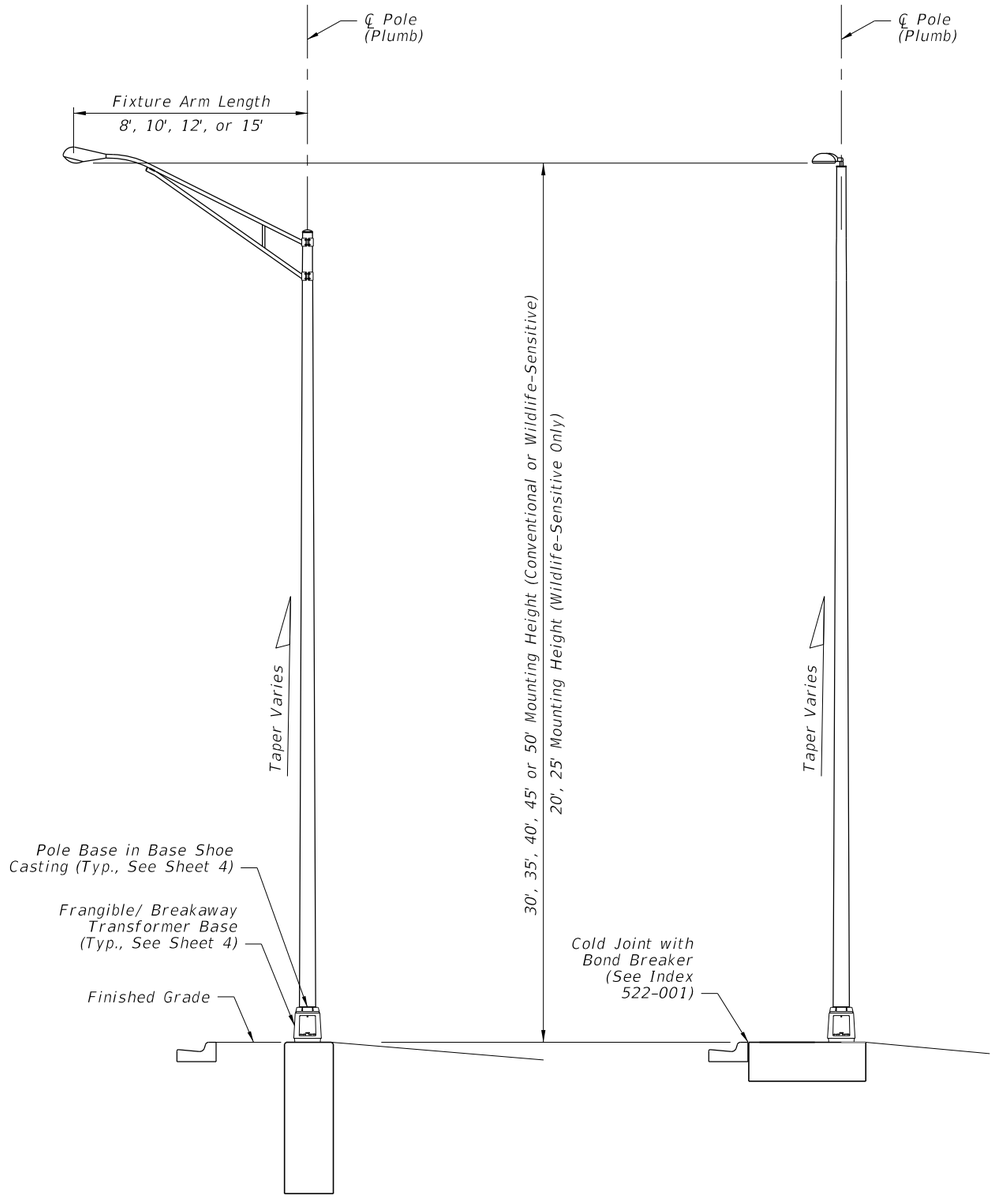

STANDARD ROADWAY
ALUMINUM LIGHT POLE W/ARM
(Shaft Foundation Option Shown,
Spread Footing Option Similar)

STANDARD ROADWAY
ALUMINUM LIGHT POLE W/TOP MOUNT
(Spread Footing Option Shown,
Shaft Foundation Option Similar)

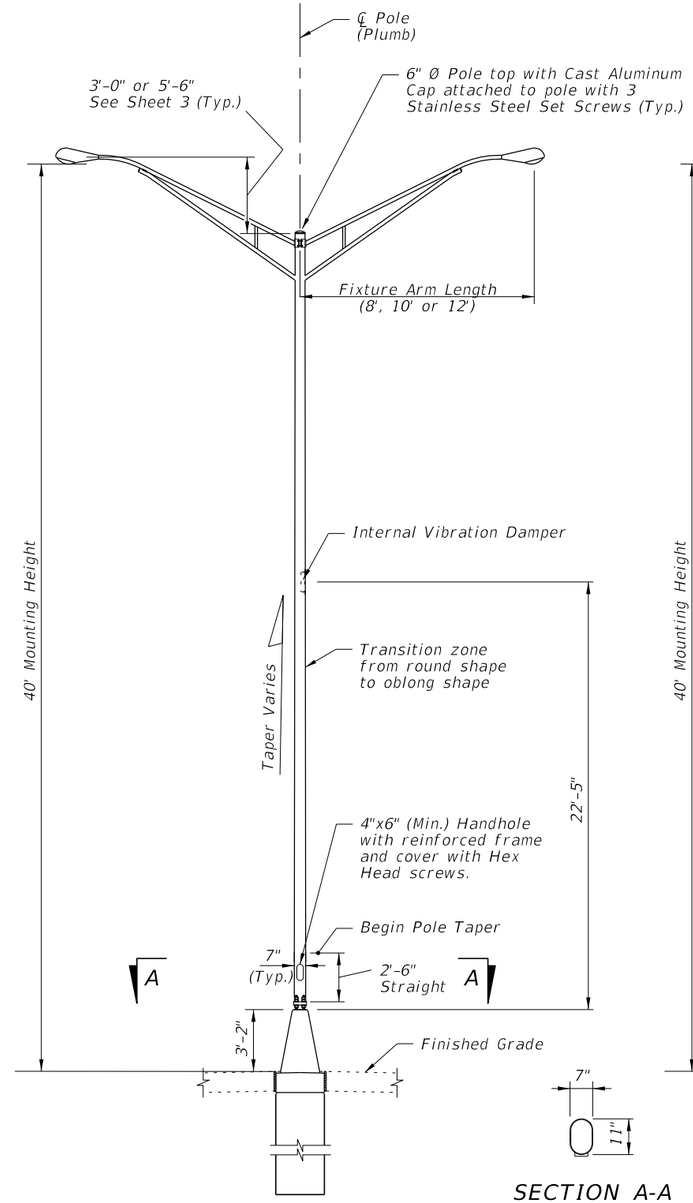

SECTION A-A

MEDIAN BARRIER MOUNTED
ALUMINUM LIGHT POLE
ON CYLINDRICAL FOUNDATION

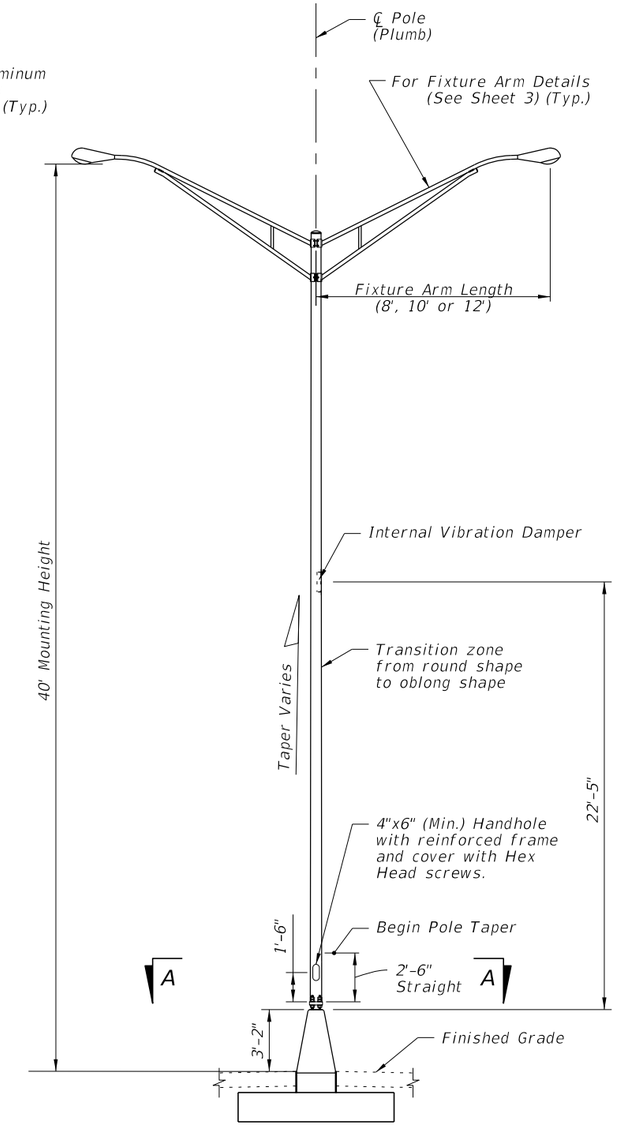

MEDIAN BARRIER MOUNTED
ALUMINUM LIGHT POLE
ON SPREAD FOOTING FOUNDATION

ELEVATIONS

10/20/2022 8:58:32 AM

LAST REVISION	REVISION	DESCRIPTION:			INDEX	SHEET
11/01/22			FY 2023-24 STANDARD PLANS	STANDARD ALUMINUM LIGHTING	715-002	2 of 9

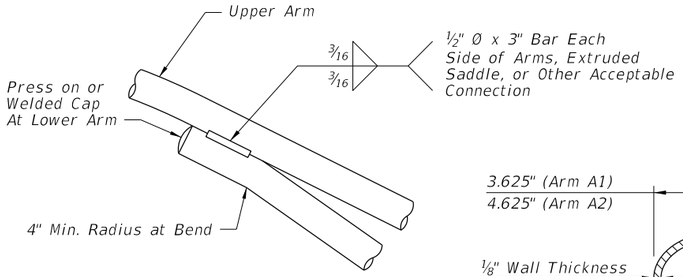

ARM CONNECTION DETAIL

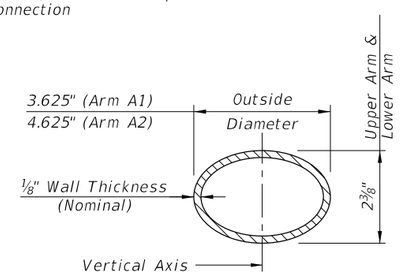

ARM SECTION

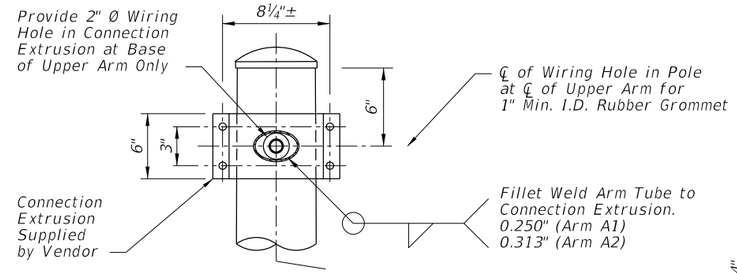

VIEW A-A
(Connection At Lower Arm Similar)

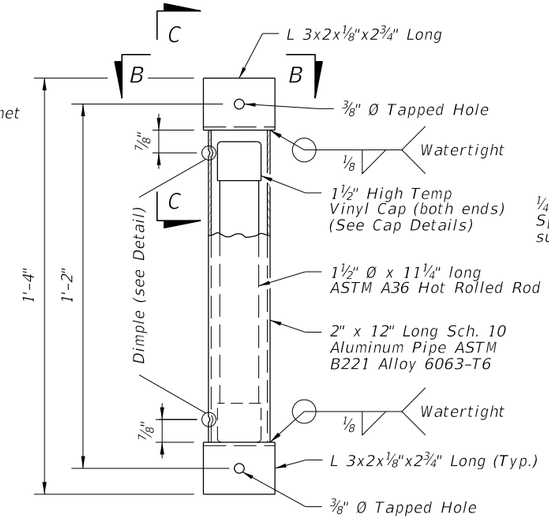

VIBRATION DAMPER ELEVATION

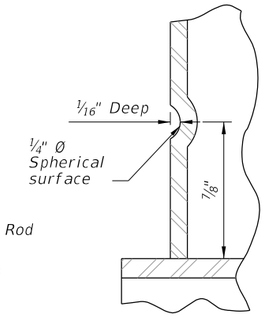

DIMPLE DETAIL

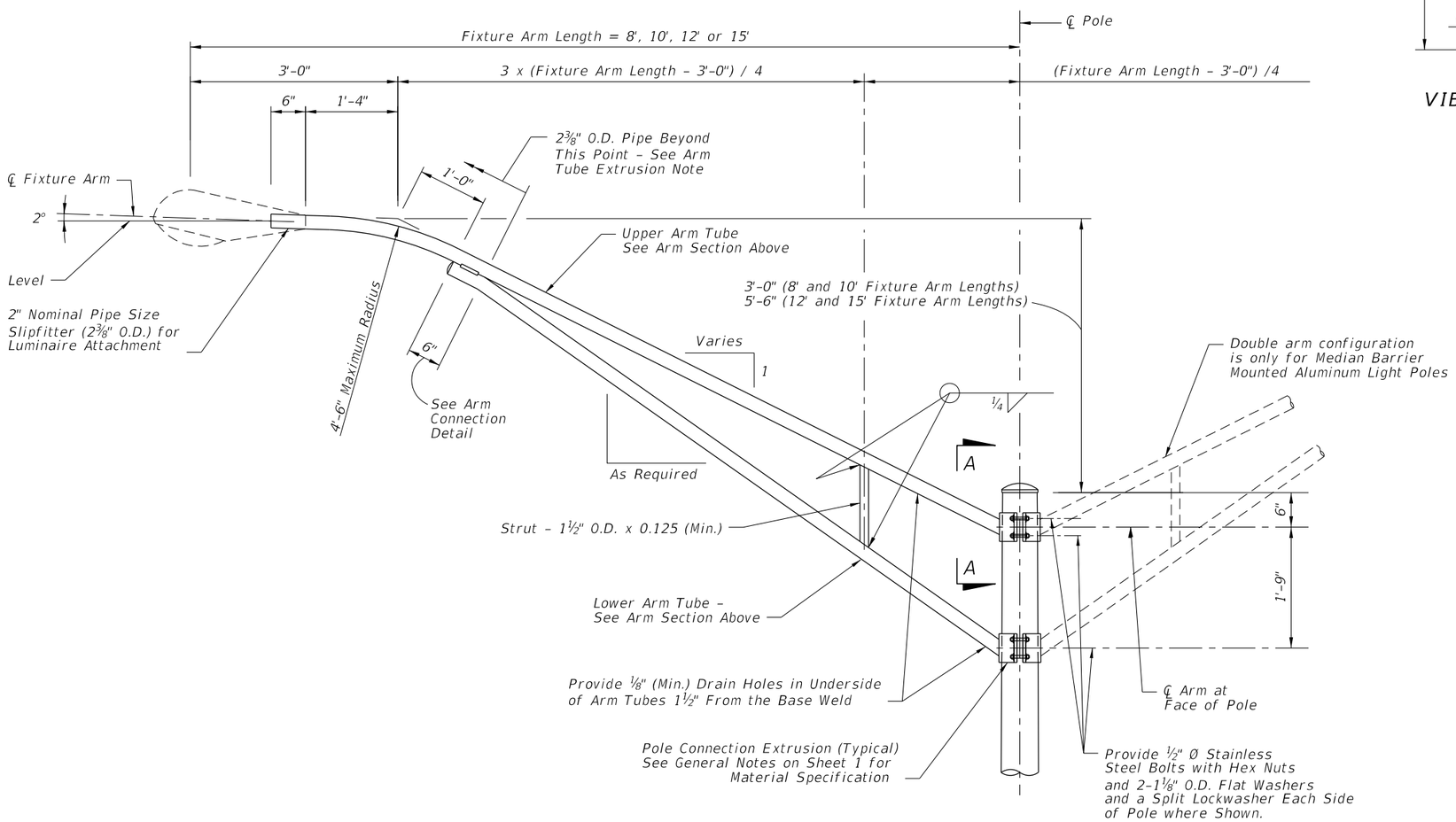

ARM ELEVATION

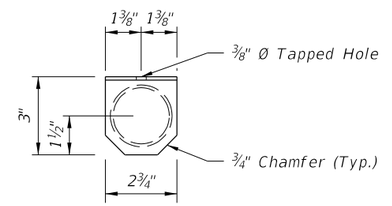

VIEW B-B

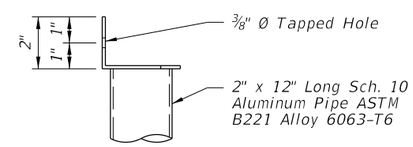

VIEW C-C

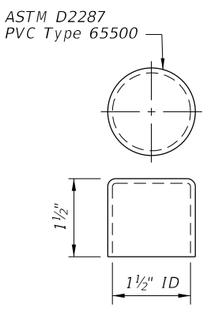

HIGH TEMP VINYL CAP DETAIL

ARM TUBE EXTRUSIONS NOTES:

At the pole connections, provide arm tube extrusions with dimensions as shown. Uniformly transition elliptical section to a cylindrical section at the arm connection.

The fabricator may substitute elliptical cross sections other than those tabulated, provided the section properties about the vertical axis and the area of the section equal or exceed that of the required section, and provide minimum wall thickness of ⅛" nominal and within the Aluminum Association Tolerances.

The outside diameter about the minor axis should be held at 2⅜" at the upper and lower arms.

10/20/2022 8:58:33 AM

ARM & DAMPER DETAILS

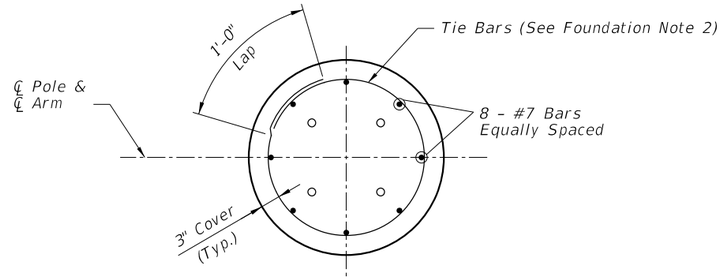

SECTION C-C

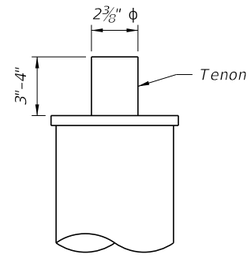

TOP MOUNT TENON

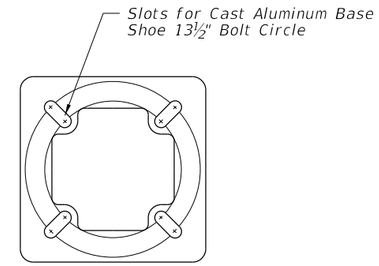

TOP VIEW
TRANSFORMER BASE

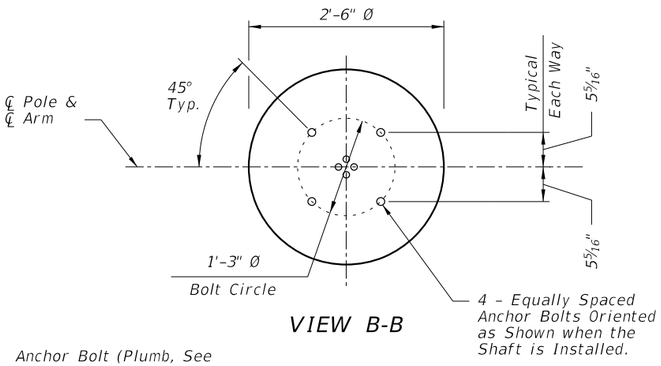

VIEW B-B

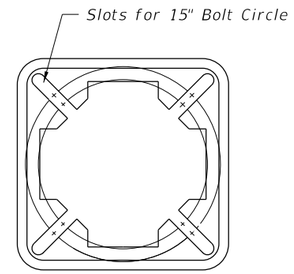

BOTTOM VIEW
TRANSFORMER BASE

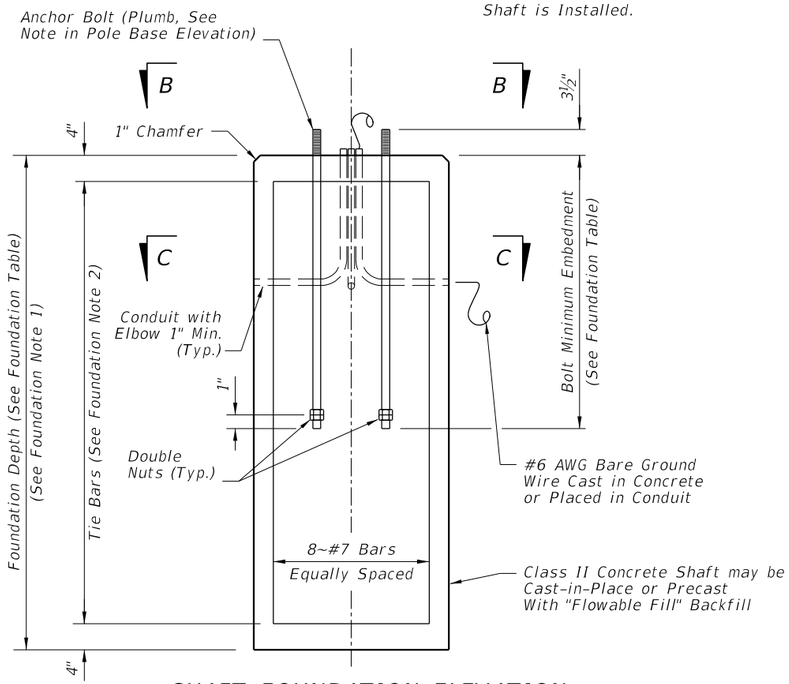

SHAFT FOUNDATION ELEVATION

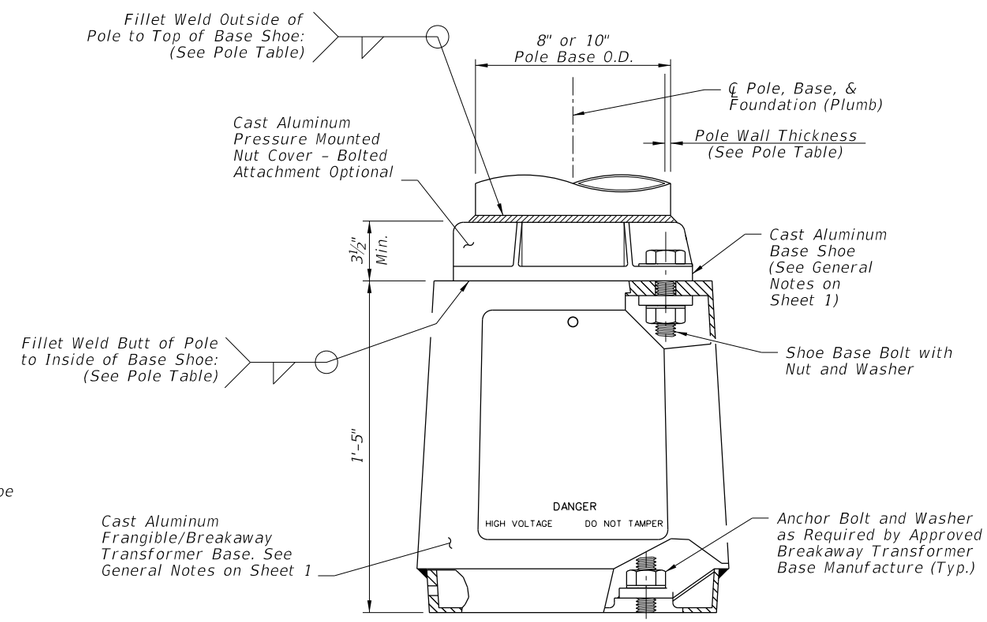

POLE BASE ELEVATION

ARM-POLE TABLE

FOR STANDARD ALUMINUM LIGHT POLES WITH ARM

Mounting Height (Ft.)	Wind Speed and Arm Lengths (Ft.)				
	120 mph	140 mph		160 mph	
	8, 10, 12, 15	8, 10, 12	15	8, 10	12, 15
30	A1-P1	A1-P1	A2-P1	A1-P1	A2-P1
35					
40				A1-P2	A2-P2
45	A1-P2	A1-P2	A2-P2		
50				A1-P3	A2-P3

ARM POLE NOTES:

1. See ARM SECTION detail on Sheet 3 for all A1 and A2 Values.
2. See Pole Table for all P1, P2, and P3 values.
3. For Median Barrier Mounted Pole, Use Arm A1.
4. For 20' and 25' assembly heights use only 8' or 10' arm A1 with P0.

POLE TABLE

Pole	Pole Wall Thickness	Top of Base Shoe Weld	Inside of Base Shoe Weld
P0	0.156	3/16"	5/32"
P1	0.156	3/16"	5/32"
P2	0.250	¼"	¼"
P3	0.313	5/16"	5/16"

POLE NOTES:

1. Pole wall thicknesses shown are nominal and must be within the Aluminum Association tolerances.
2. Thicker walls are permitted and tapered walls may be used in accordance with the minimum Aluminum Association thicknesses.

TOP MOUNT POLE TABLE

FOR STANDARD ALUMINUM LIGHT POLES WITH TOP MOUNT

Mounting Height (Ft.)	Wind Speed and Arm Lengths (Ft.)		
	120 mph	140 mph	160 mph
20	Pole P0	Pole P0	Pole P0
25			
30	Pole P1	Pole P1	Pole P1
35			
40			Pole P2
45	Pole P2	Pole P2	
50			

SHAFT FOUNDATION TABLE

Pole	P0	P1	P2	P3
Depth	6'-0"	7'-0"	8'-0"	8'-0"
Bolt Min. Embedment	2'-6"	3'-6"	3'-6"	3'-6"

SHAFT FOUNDATION NOTES:

1. Depths shown are for slopes equal to or flatter than 1:4. For slopes steeper than 1:4 and equal to or flatter than 1:2 add 2'-6" to foundation depths shown.
2. Foundation Tie Bars: #4 Tie Bars @ 12" centers (max.) or D10 (or W10) spiral @ 6" pitch, 3 flat turns top and 1 flat turn bottom.

SHAFT FOUNDATION OPTION WITH LIGHT POLE & BASE DETAILS

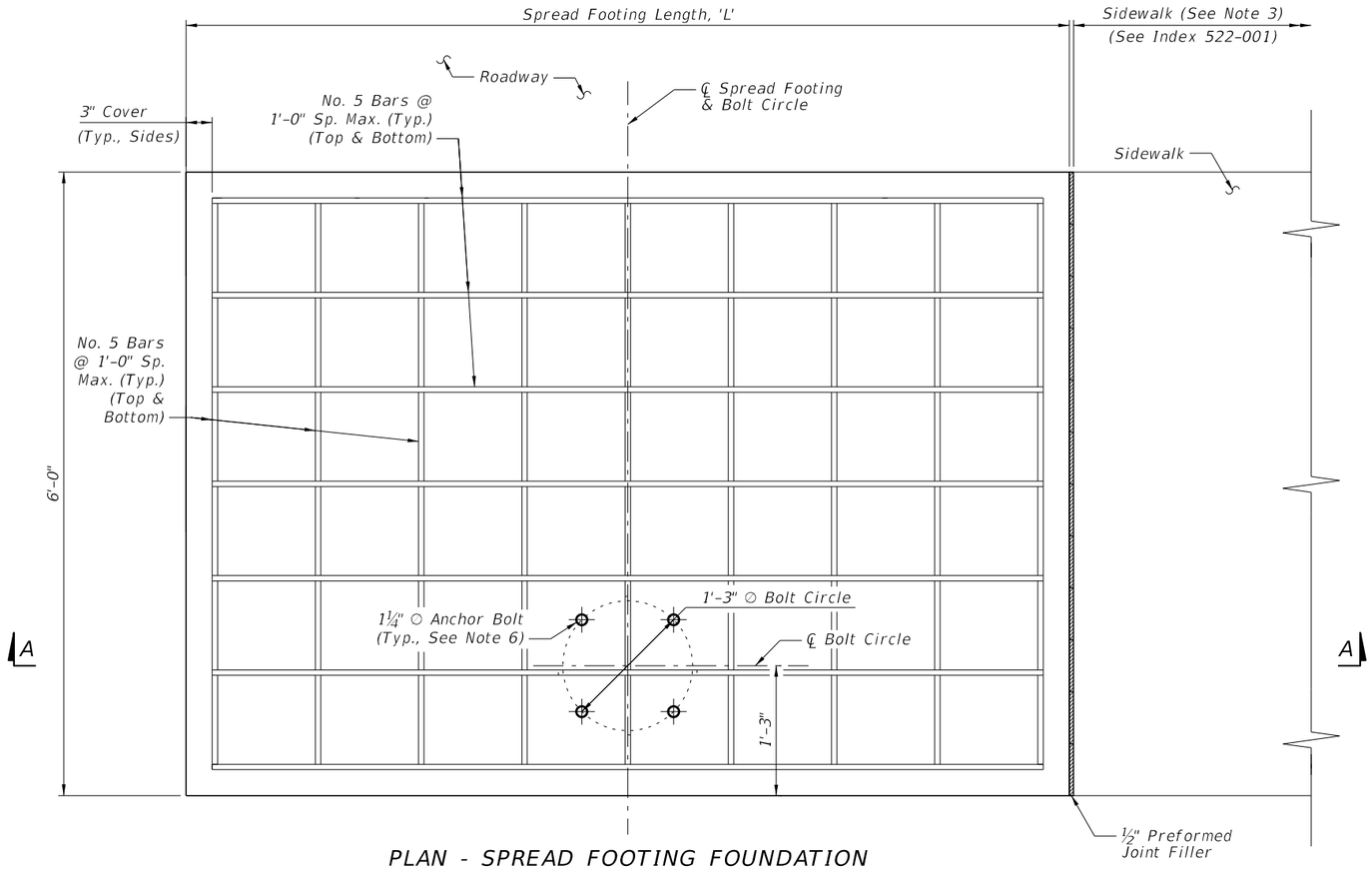

PLAN - SPREAD FOOTING FOUNDATION

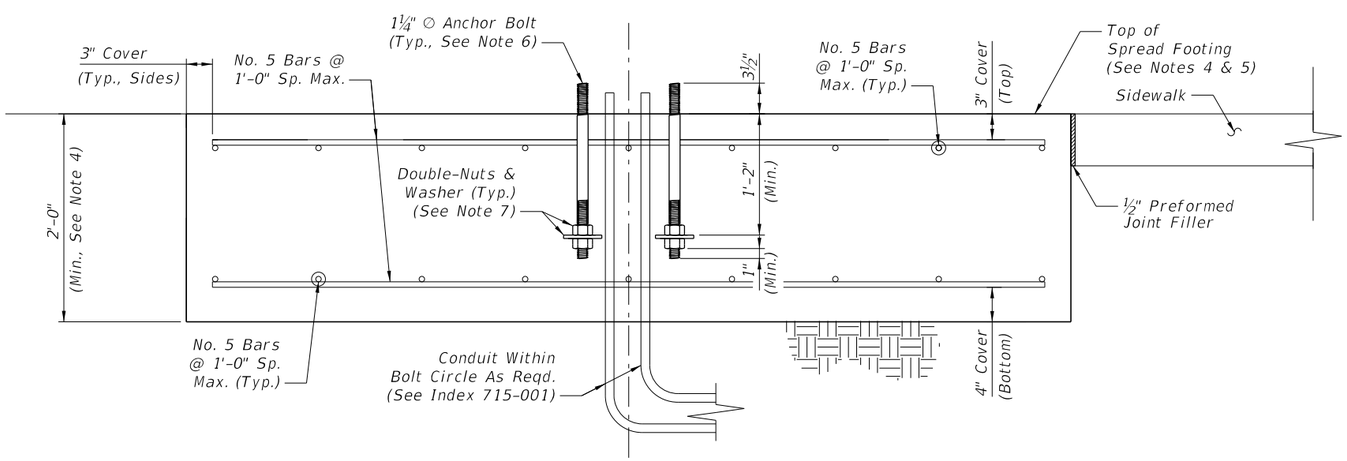

SECTION A-A - SPREAD FOOTING FOUNDATION ELEVATION

SPREAD FOOTING LENGTH, 'L'			
Mounting Height (Ft.)	Wind Speed (All Arm Lengths)		
	120 mph	140 mph	160 mph
20	4'-6"	5'-0"	6'-0"
25	4'-6"	5'-0"	6'-0"
30	7'-0"	7'-0"	7'-0"
35	7'-0"	7'-0"	7'-0"
40	7'-0"	7'-0"	10'-0"
45	8'-6"	10'-0"	10'-0"
50	8'-6"	10'-0"	11'-6"

NOTES:

1. Install the Spread Footing Foundation Option only where called for in the Plans.
2. The Spread Footing Foundation Option is only permitted for use with single arm or top mount light poles. Where applicable, the pole arm must be oriented towards the roadway side of the footing as shown. Double arm configurations are not permitted.
3. Sidewalk placed on the other side or both sides of the spread footing is permitted where shown in the Plans. The sidewalk connection to spread footing requires the ½" expansion joint shown regardless of the side.
4. The top of the spread footing must match the cross slope of the adjacent sidewalk where applicable per the Plans. The nominal bottom of the spread footing must remain level.
5. Apply concrete surface finish to the top of the spread footing in accordance with Specification 522-7.
6. Mount the anchor bolts plumb. For the corresponding pole base details, see Sheet 4.
7. Place zinc-plated steel washers with 1 5/16" or 1 3/8" I.D. and a minimum thickness of ¼". Use either 4" ∅ fender washers or 3"x3" square washers.
8. Where raised curb is called for in the Plans, provide a tooled cold joint with bond breaker between the foundation and back of raised curb. See Sheet 2 and the connection between concrete sidewalk and raised curb per Index 522-001.

SPREAD FOOTING FOUNDATION OPTION

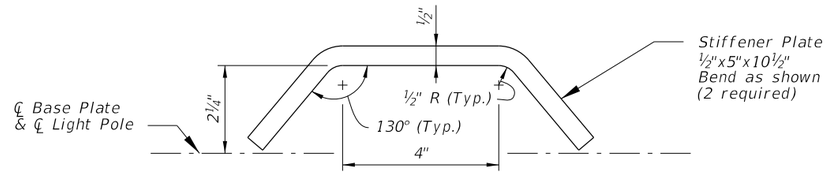

STIFFENER PLATE DETAIL

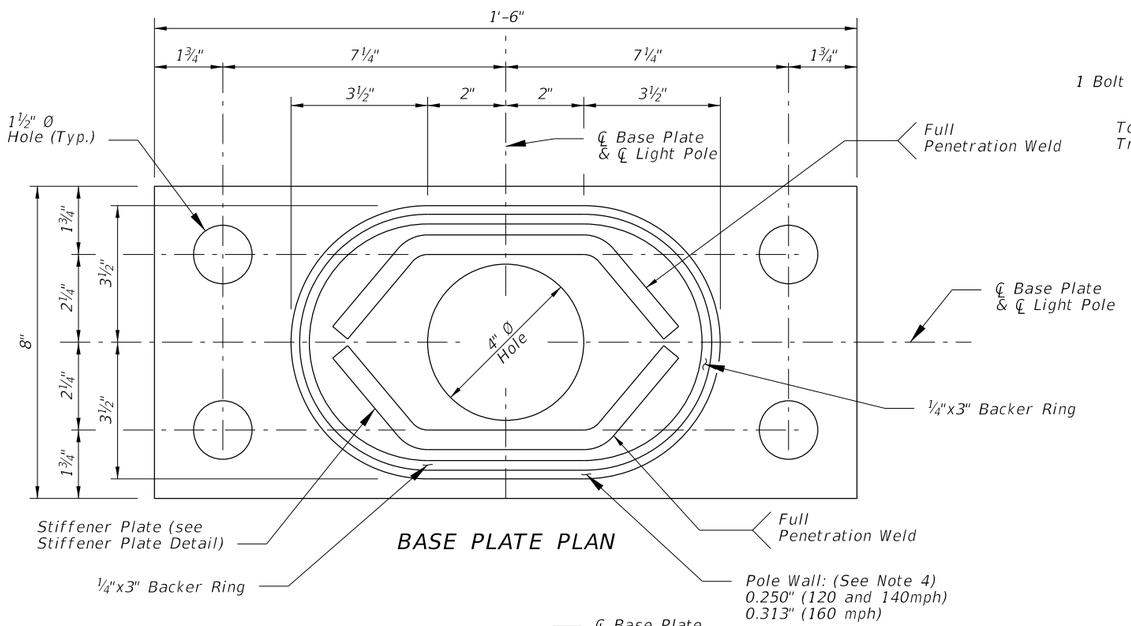

BASE PLATE PLAN

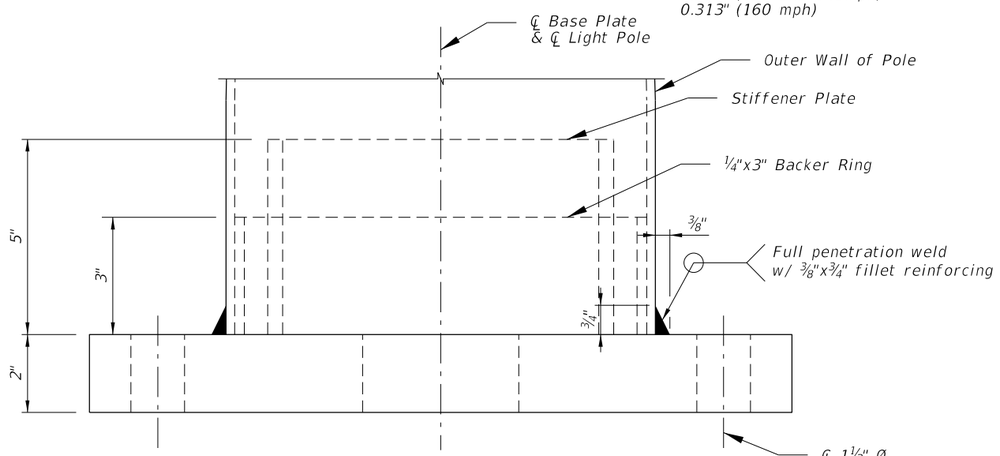

BASE PLATE ELEVATION

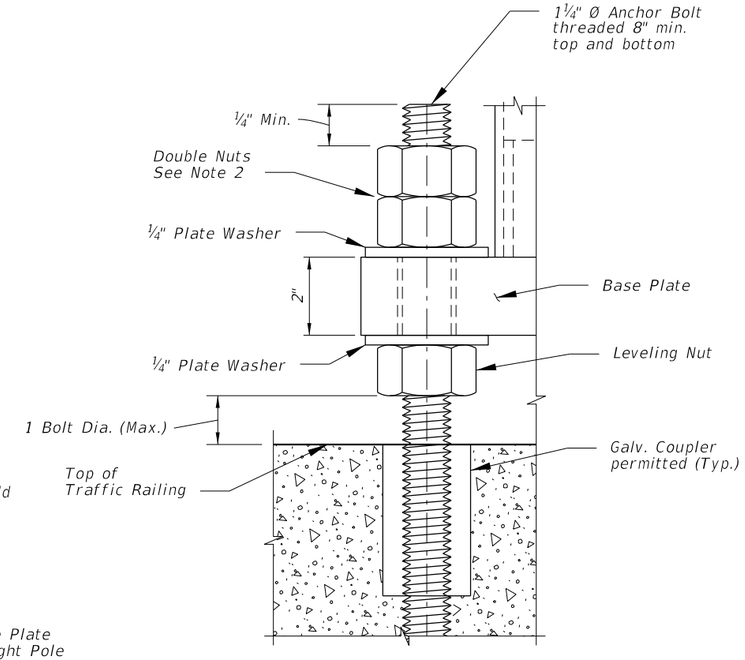

DETAIL 'A'

NOTES:

1. For locations of Bearing Plates, Base Plates and Detail 'A' see Sheets 7 thru 9.
2. Double Nuts: The bottom hex nut may be substituted by a half-height 'jam' nut.
3. Provide individual nut covers (not shown) for each bolt.
4. Pole wall thicknesses shown are nominal and shall be within the Aluminum Association Tolerances. Thicker walls are permitted and tapered walls may be used in accordance with the minimum Aluminum Association thicknesses.

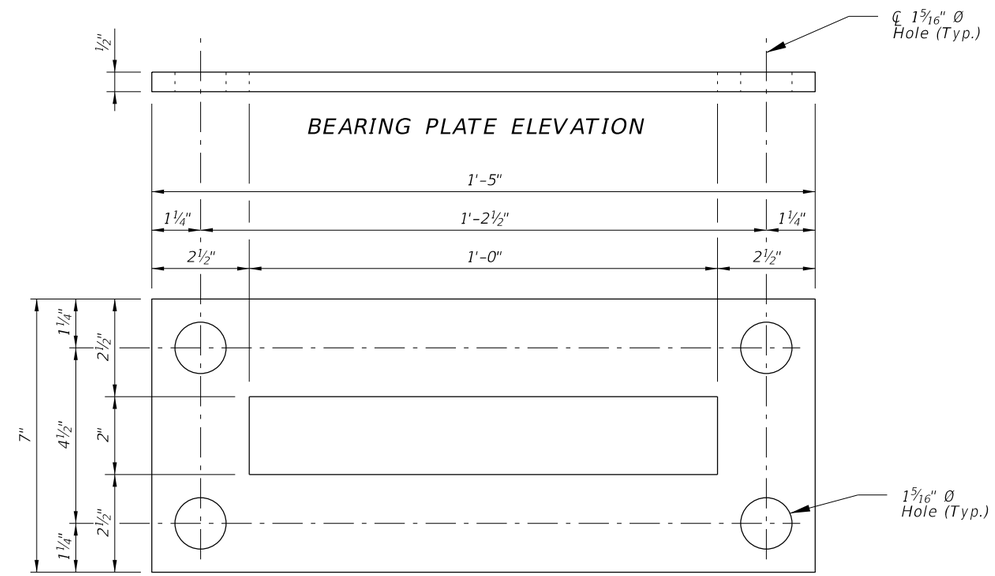

BEARING PLATE ELEVATION

BEARING PLATE PLAN

10/20/2022 8:58:36 AM

BASE PLATE DETAILS FOR MEDIAN BARRIER MOUNTED ALUMINUM LIGHT POLE

LAST REVISION	REVISION	DESCRIPTION:	FDOT	FY 2023-24 STANDARD PLANS	STANDARD ALUMINUM LIGHTING	INDEX	SHEET
11/01/22						715-002	6 of 9

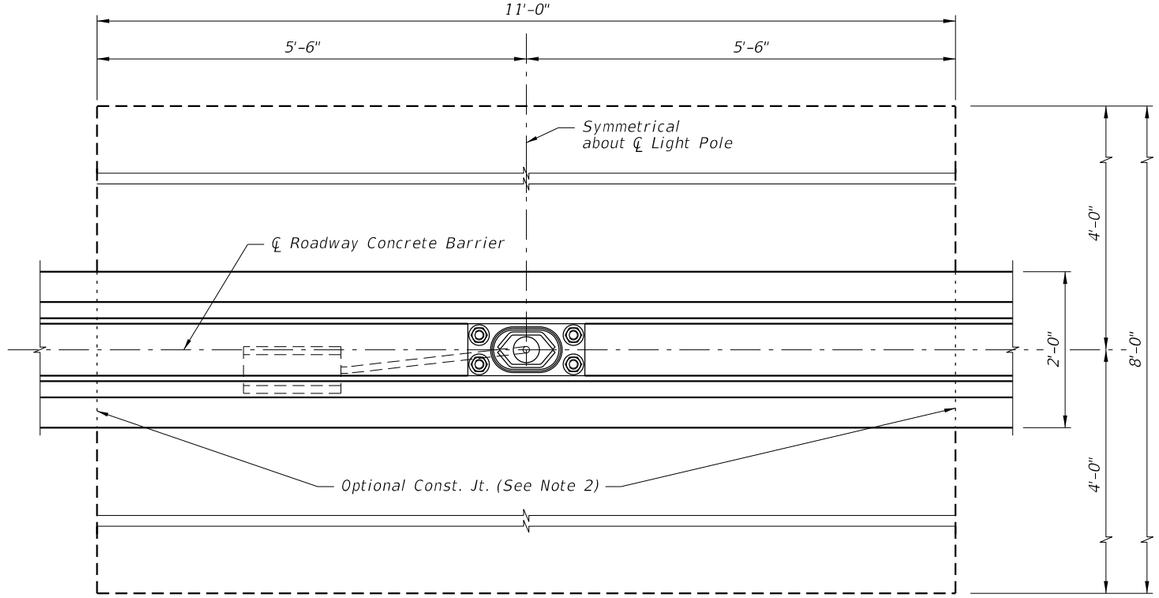

PLAN
(Reinforcing steel not shown)

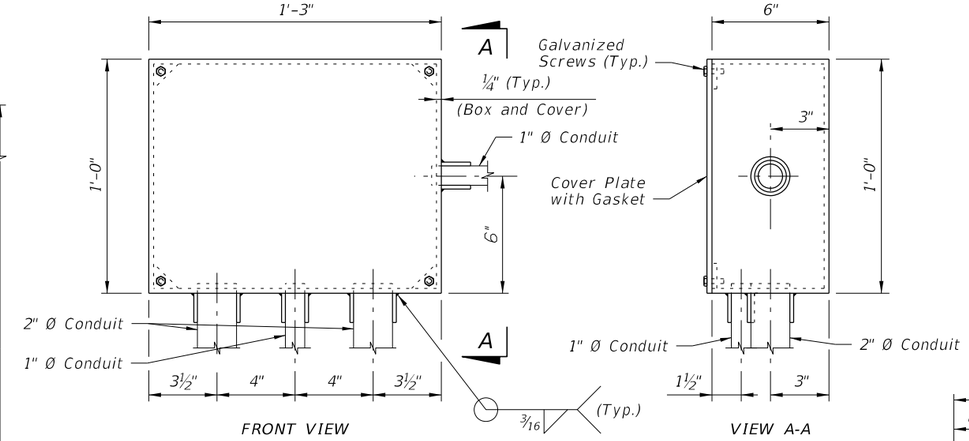

EMBEDDED JUNCTION BOX DETAILS

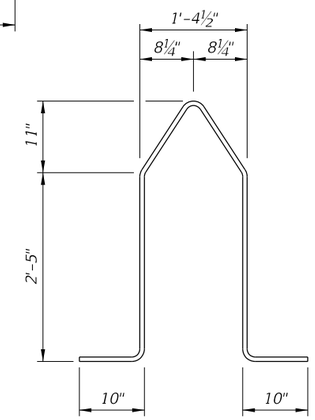

BAR 5W1

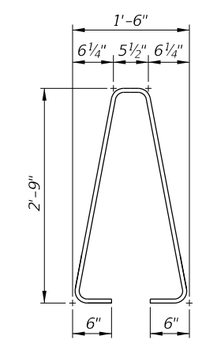

BAR 5V

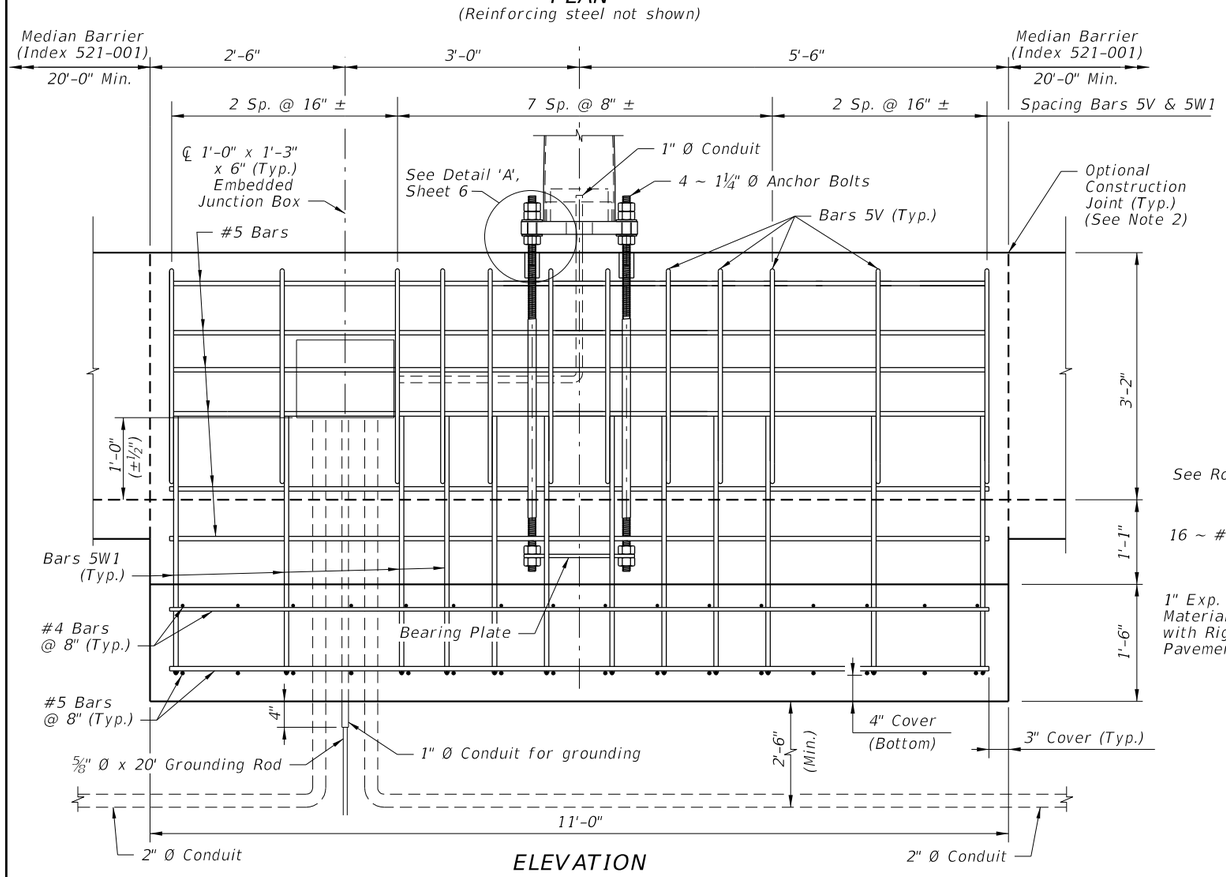

ELEVATION

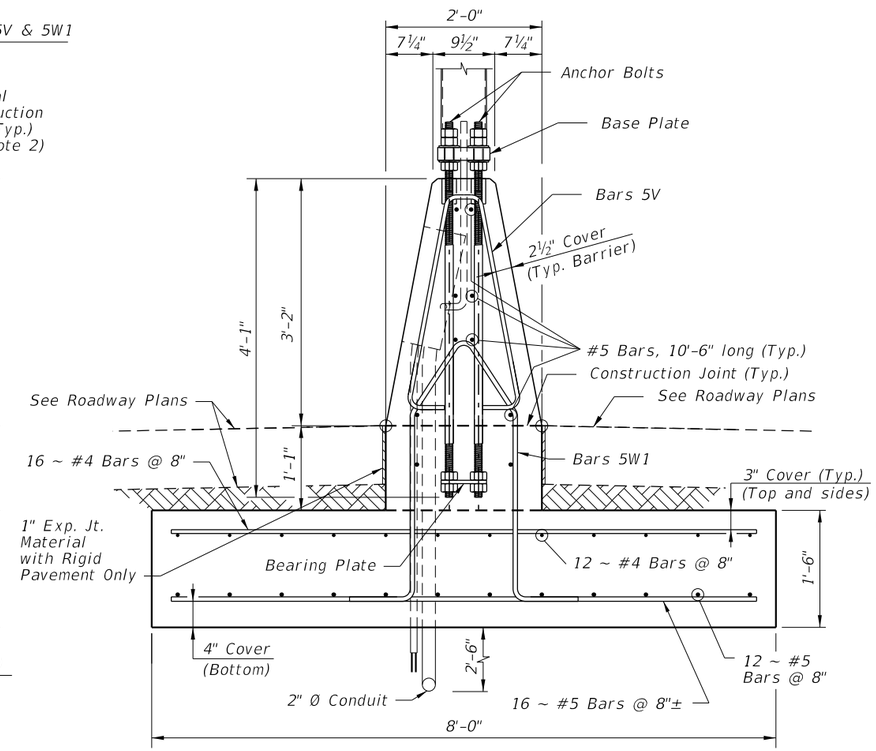

END VIEW

NOTES:

1. For Bearing Plate and Base Plate Details, see Sheet 6.
2. For connections to adjacent Median Barrier, use the Doweled Joint detail per Index 521-001. Alternatively, a continuous concrete pour or a construction joint may be substituted; these alternatives require the Median Barrier's longitudinal steel to lap a minimum of 2'-0" with the longitudinal steel shown herein.

SPREAD FOOTING DETAILS FOR MEDIAN BARRIER MOUNTED ALUMINUM LIGHT POLE

10/20/2022 8:58:36 AM

LAST REVISION	REVISION	DESCRIPTION:			INDEX	SHEET
11/01/22			FY 2023-24 STANDARD PLANS	STANDARD ALUMINUM LIGHTING	715-002	7 of 9

FOUNDATION TABLE		
WIND SPEED (MPH)	DESIGN MOUNTING HEIGHT (FT)	FOUNDATION DEPTH (FT)
120	40	8
140	40	9
160	40	9

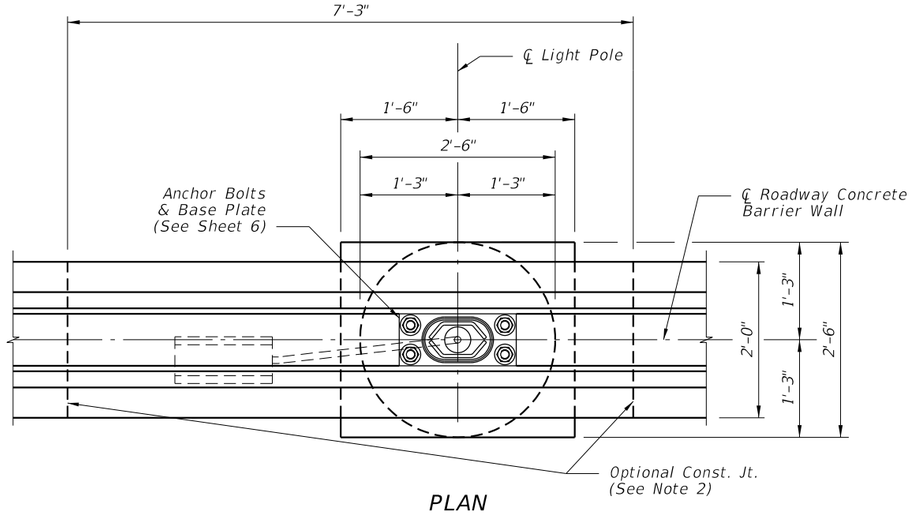

PLAN
(Reinforcing steel not shown)
Provide dowel bars @ construction joint

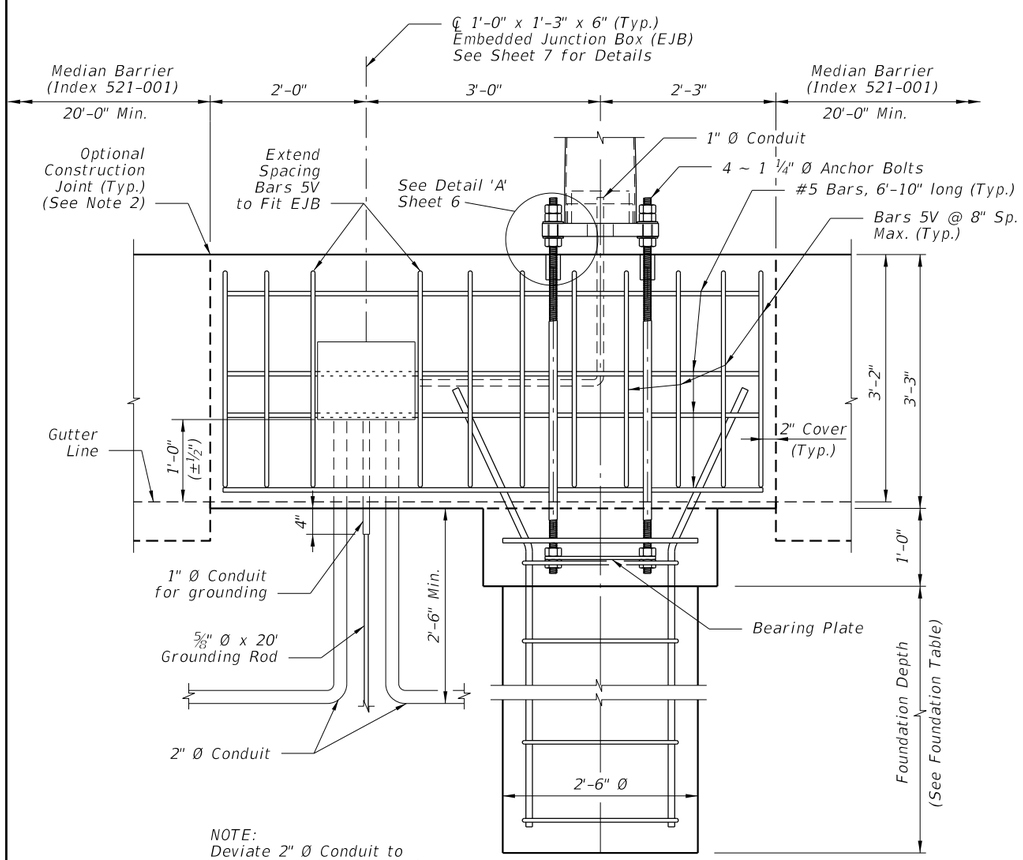

NOTE:
Deviate 2" Ø Conduit to avoid cylindrical foundation.

ELEVATION

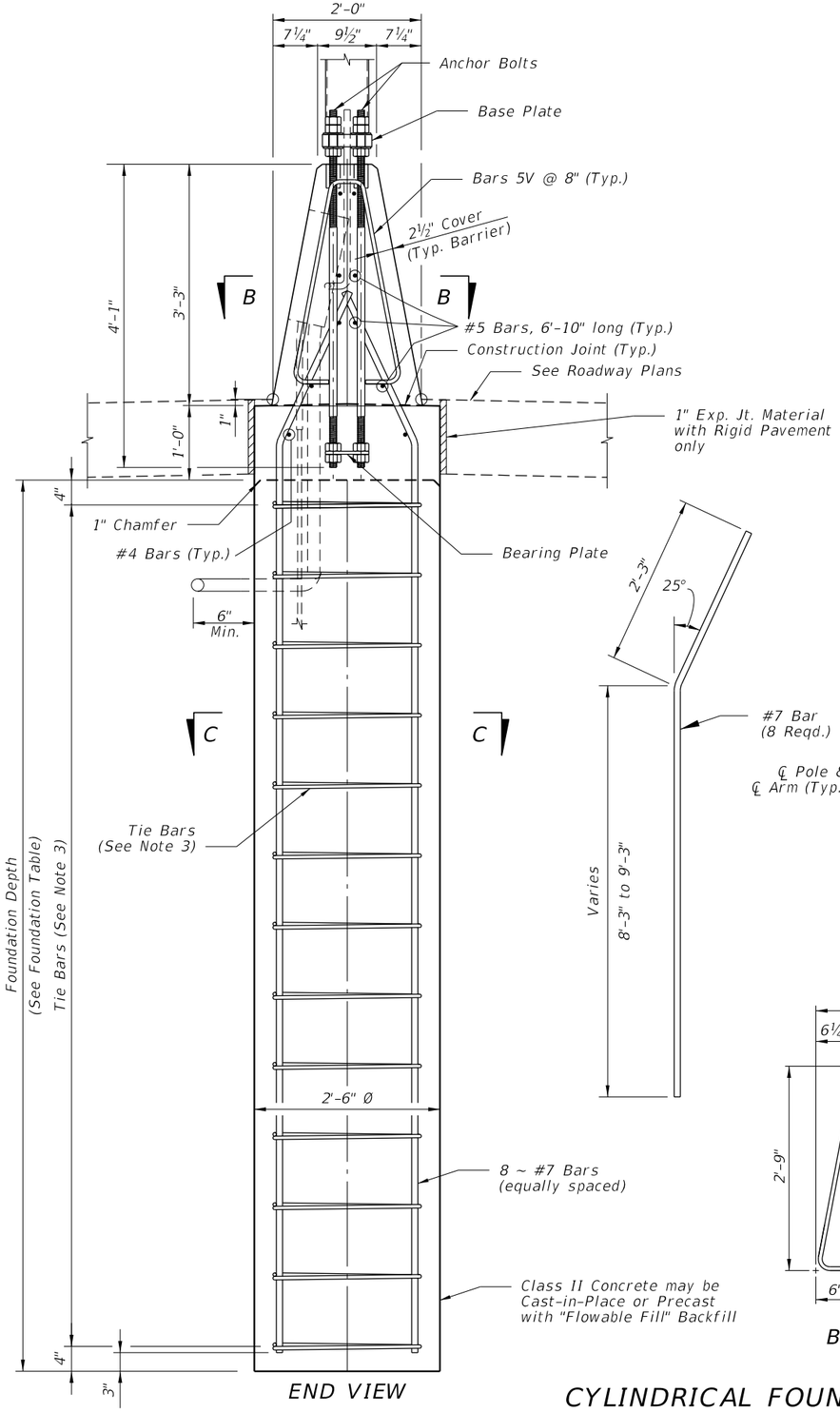

END VIEW

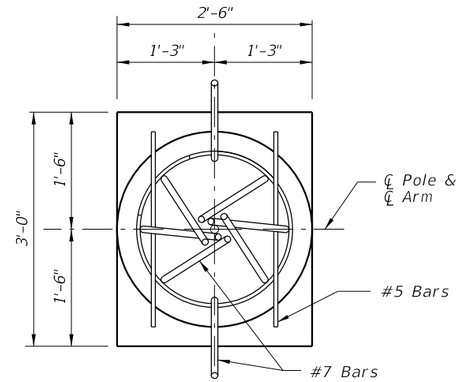

VIEW B-B
(Anchor Bolts and Barrier Longitudinal Steel & Stirrups Not Shown)

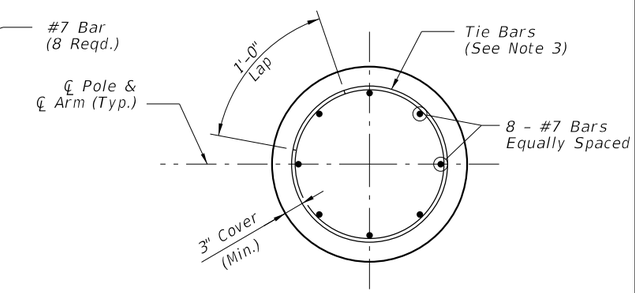

SECTION C-C

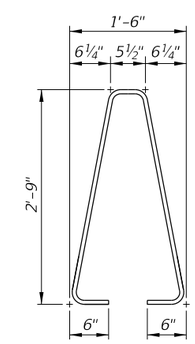

BAR 5V

NOTES:

1. For Bearing Plate and Base Plate Details, see Sheet 6.
2. For connections to adjacent Median Barrier, use the Doweled Joint detail per Index 521-001. Alternatively, a continuous concrete pour or a construction joint may be substituted; these alternatives require the Median Barrier's longitudinal steel to lap a minimum of 2'-0" with the longitudinal steel shown herein.
3. #4 Tie Bars @ 12" centers (max.) or D10 (or W10) spiral @ 6" pitch, 3 flat turns top and 1 flat turn bottom.

CYLINDRICAL FOUNDATION DETAILS FOR MEDIAN BARRIER MOUNTED ALUMINUM LIGHT POLE

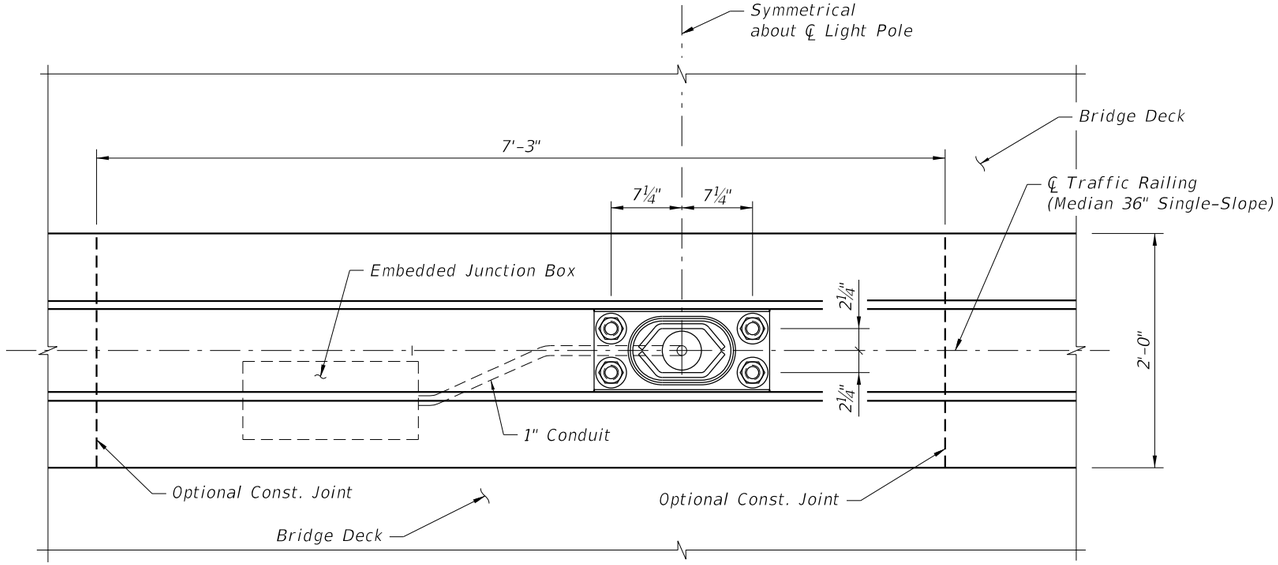

PLAN
(Reinforcing steel and 2" Ø Conduit not shown)

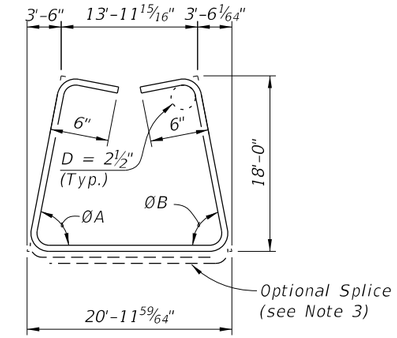

BAR 5W
(See Note 4)

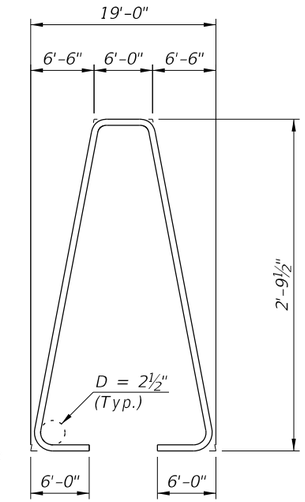

BAR 5R

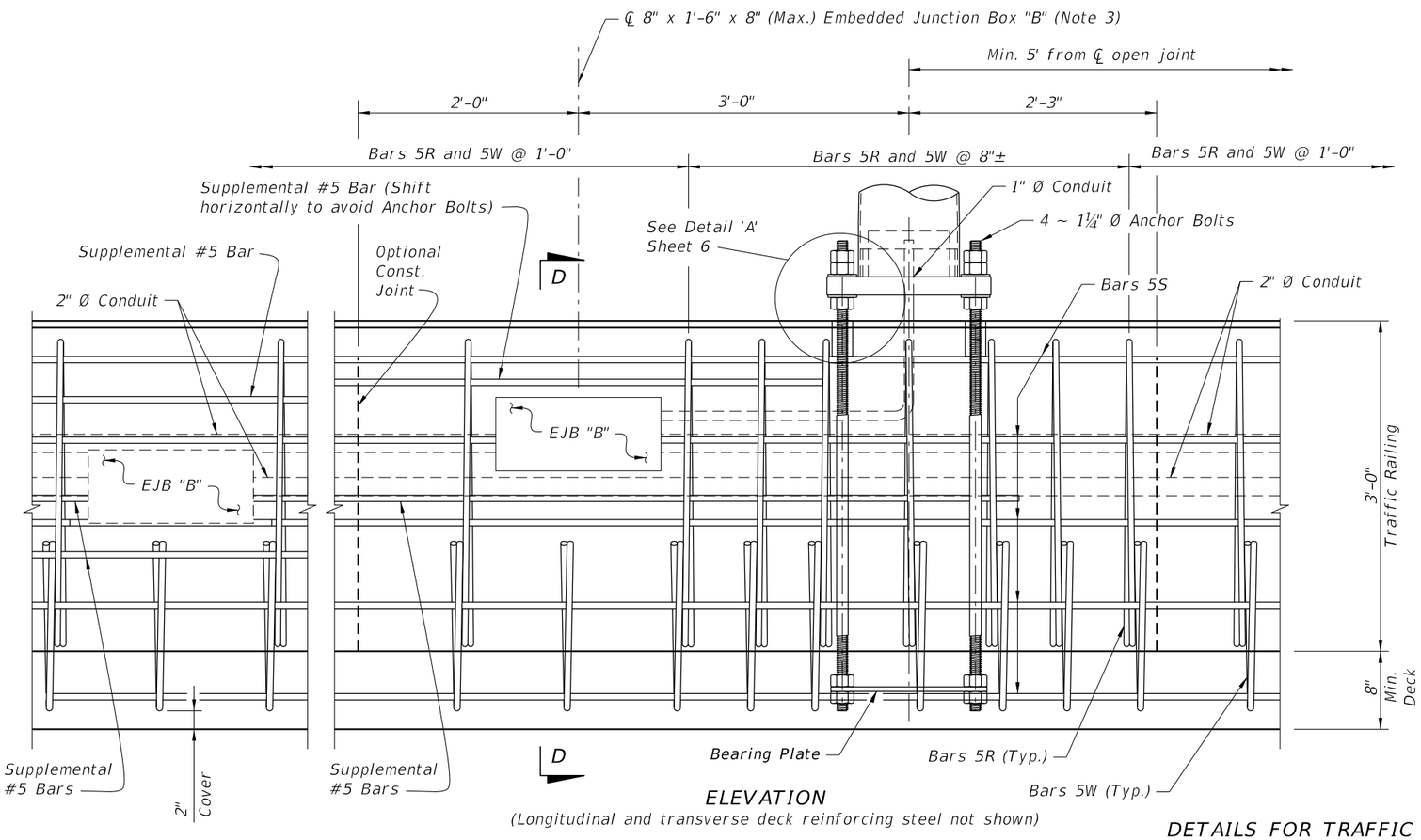

ELEVATION
(Longitudinal and transverse deck reinforcing steel not shown)

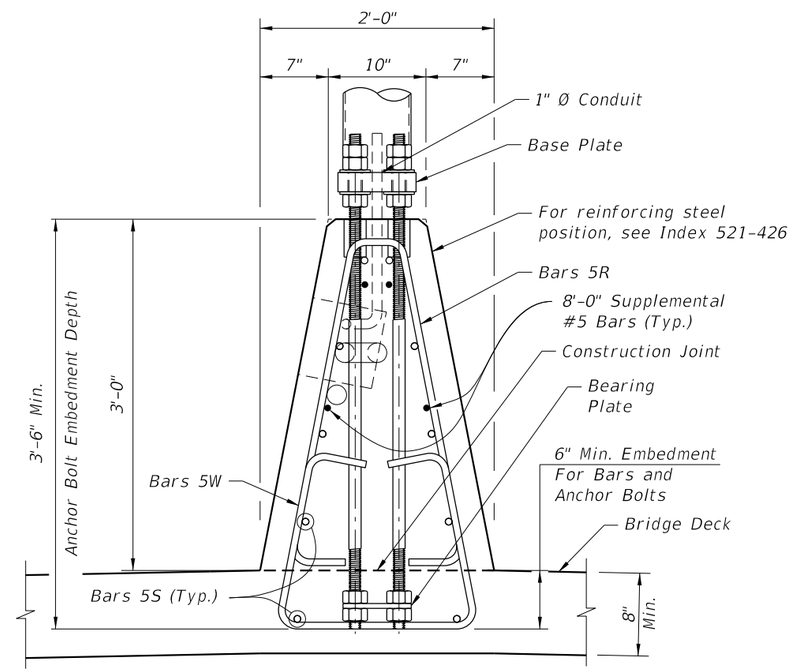

SECTION D-D
(Longitudinal and transverse deck reinforcing steel not shown)

NOTES:

1. For Base Plate Details, Bearing Plate Details, and Detail 'A', see Sheet 6.
2. See Index 521-426 for details of adjacent Traffic Railing (Median 36" Single-Slope) and for angles ∅A and ∅B.
3. See Index 630-010 for Conduit, EJB and supplemental reinforcing details.
4. At the Contractor's option, Bars 5W may be fabricated as a two piece bar with a 1'-2" lap splice at the bottom legs.

DETAILS FOR TRAFFIC RAILING (MEDIAN 36" SINGLE-SLOPE) MOUNTED ALUMINUM LIGHT POLE

GENERAL NOTES:

1. LUMINAIRE LOAD: Poles are designed to support the following:
   A. Luminaire Effective Projected Area (EPA): 1.55 SF
   B. Luminaire Weight: 75 lb.

2. SHOP DRAWINGS: This Index is considered fully detailed; only submit shop drawings for minor modifications not included in the Plans.

3. MATERIALS:
   A. Pole, Arm Tubes, Strut Tubes, Bars, Plates, Stiffeners: ASTM B221, Alloy 6063-T6 or Alloy 6061-T6
   B. Pole Connection Extrusion Clamp: ASTM B221, Alloy 6061-T6
   C. Caps and Covers: ASTM B-26, Alloy 319-F
   D. Aluminum Weld Material: ER 4043
   E. Transformer and Frangible Base Materials: ASTM B26 or ASTM B108, Alloy 356-T6
   F. Base Bolts, Nuts and Washers:
      a. Shoe Base Bolts: ASTM F3125, Grade A325, Type 1
      b. Nuts: ASTM A563 Grade DH Heavy-Hex
      c. Washer: ASTM F436 Type 1
   G. Anchor Bolts, Nuts, and Washers:
      a. Anchor Bolts: ASTM F1554 Grade 55
      b. Nuts: ASTM A563 Grade A Heavy-Hex
   H. Clamp Hardware: See Sheet 2
   I. Stainless Steel Cap Fasteners: ASTM F593 Alloy Group 2, Condition A, CW1 or SH1
   J. Nut Covers: ASTM B26 (319-F)
   K. Concrete: Class II
   L. Reinforcing Steel: Specification 415

4. FABRICATION:
   A. Weld Arm and Pole Alloy in the T4 temper using 4043 filler. Age the Arm and Pole artificially to the T6 temper after welding.
   B. Transverse welds are only allowed at the base.
   C. Light Pole Properties: Taper as required to provide a round top O.D. of 8" and a base O.D. of 10" for all pole heights. Portions of the pole near the base shoe and at the arm connections may be held constant to simplify fabrication. Maintain pole wall thickness of 0.313" Min.
   D. Fixture Arm Tube Properties: See Sheet 2.
   E. Provide 'J', 'S' or 'C' hook at top of pole for electrical wires.
   F. Perform all welding in accordance with AWS D1.2.
   G. Identification Tag: (Submit details for approval.)
      a. 2" x 4" (Max.) aluminum identification tag.
      b. Locate on the inside of the transformer base and visible from the door opening.
      c. Secure to transformer base with ⅛" diameter stainless steel rivets or screws.
      d. Include the following information on the ID Tag:
         1. Financial Project ID
         2. Pole Height
         3. Manufacturer's Name

5. COATINGS/FINISH:
   A. Pole and Arm Finish: 50 grit satin rubbed.
   B. Galvanize Steel Bolts, Screws, Nuts and Washers: ASTM F2329
   C. Hot Dip Galvanize miscellaneous steel items: ASTM A123

6. CONSTRUCTION:
   A. Foundation: Specification 455, except payment for the foundation is included in the cost of the pole.
   B. Frangible Base, Base Shoe, and Pole Connection Extrusion Clamp:
      a. Certify that the Pole Connection Extrusion Clamp, Frangible Transformer Base, and Base Shoe Design are capable of providing the required capacity, assuming a design wind speed of 160 MPH.
      b. Certify the Base conforms to the FHWA required AASHTO Frangibility Requirements, tested under NCHRP Report 350 Guidelines (e.g. Akron Foundry TB1-17).
      c. Do not erect pole without Luminaire attached.

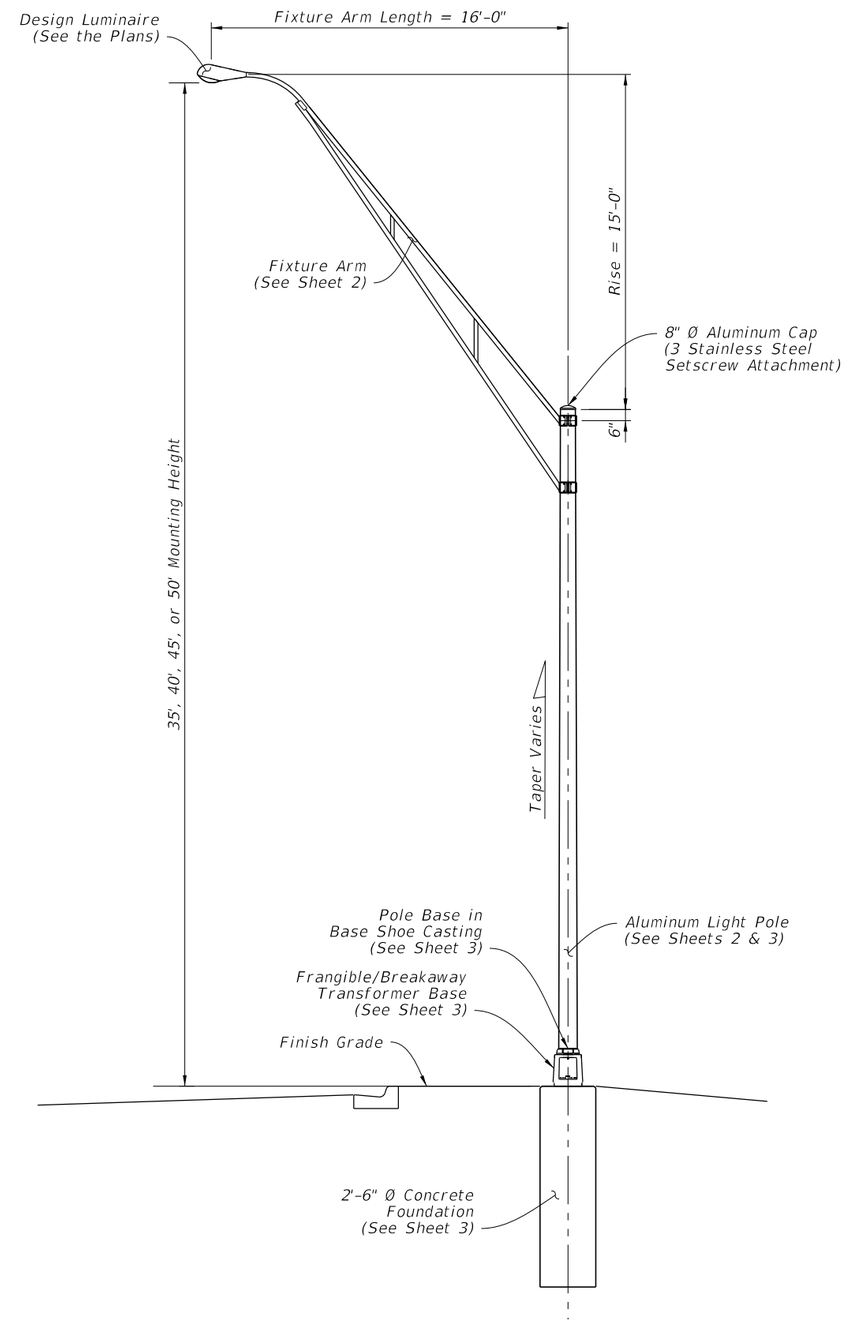

LIGHT POLE - ELEVATION

10/20/2022 8:58:39 AM

LAST REVISION	REVISION	DESCRIPTION:			INDEX	SHEET
11/01/21			FY 2023-24 STANDARD PLANS	UTILITY CONFLICT POLE	715-003	1 of 3

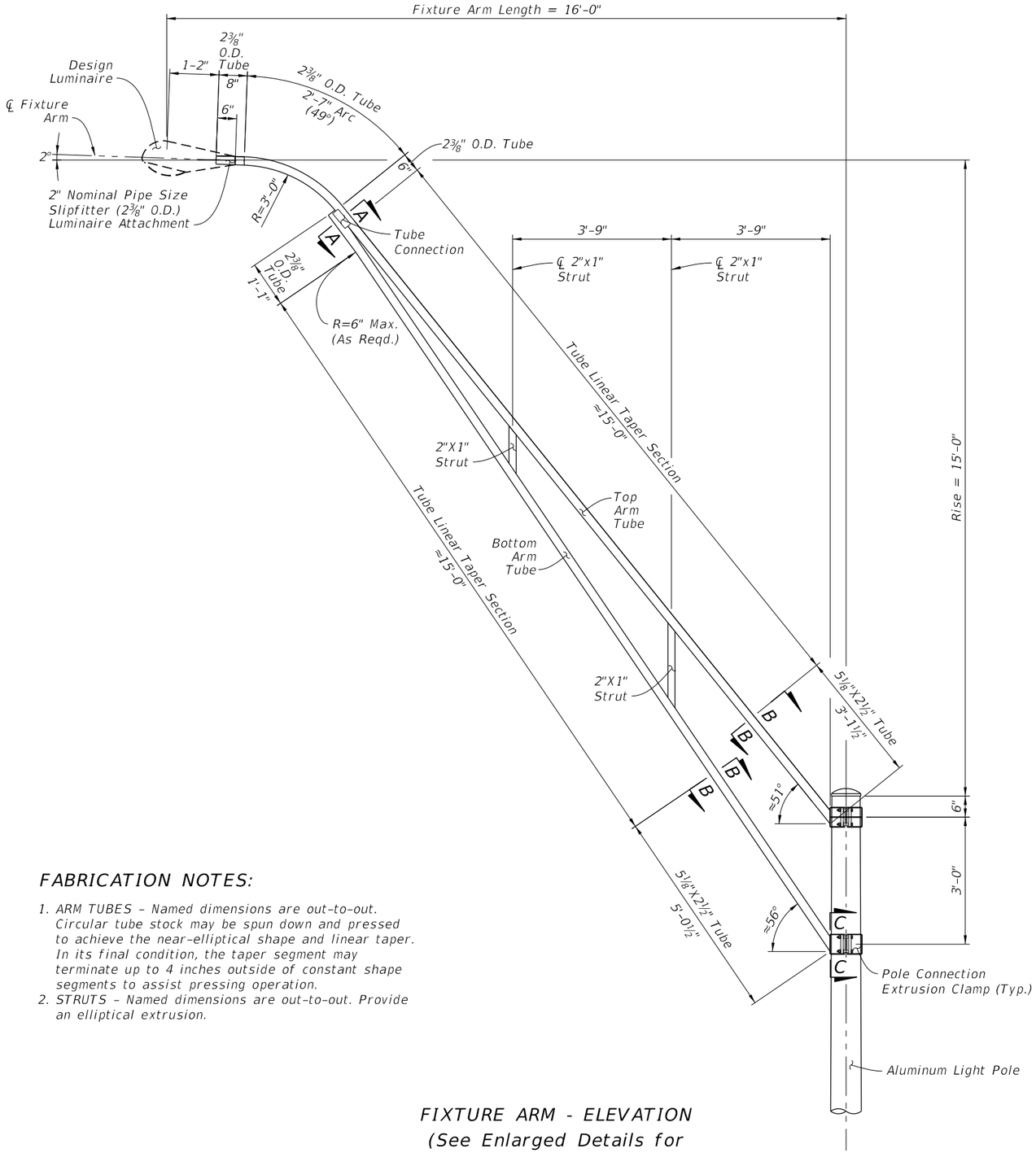

FIXTURE ARM - ELEVATION
(See Enlarged Details for Welding Requirements)

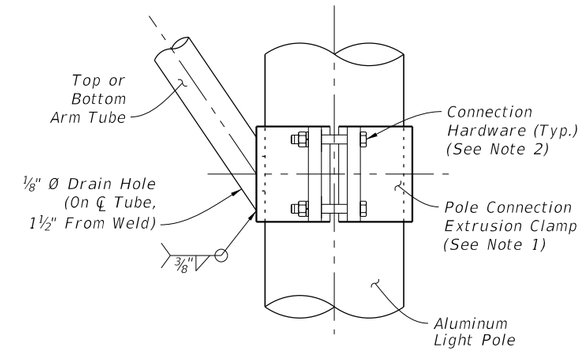

ELEVATION

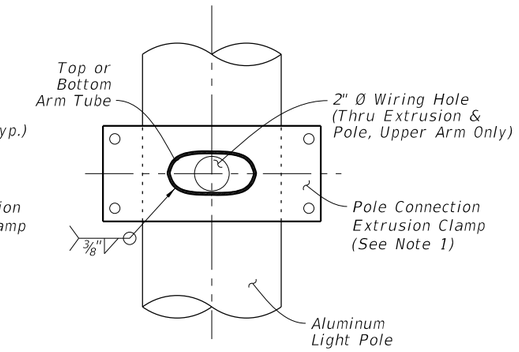

SECTION C-C

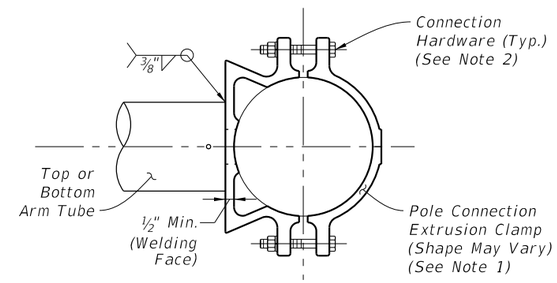

PLAN

POLE CONNECTION NOTES:

1. The Pole Connection Extrusion Clamp shown may vary by manufacturer. Provide a design that meets the requirements of General Note 6.B.a., including the connection hardware sizing.
2. Provide connection hardware with 13NC AISI Grade 316 stainless steel ½" min. bolts, nuts, and spring lock washers. Use flat washers per ASTM F593G & F594G, Alloy Group 2, Condition CW1.

POLE CONNECTION DETAILS

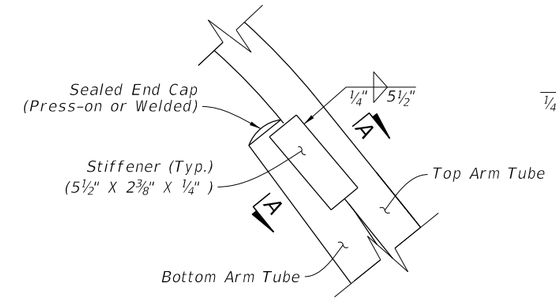

ELEVATION

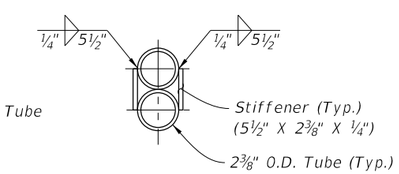

SECTION A-A

TUBE CONNECTION DETAILS

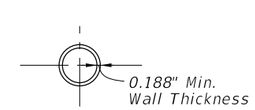

2⅜" O.D. TUBE

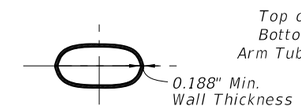

5⅛"X2½" TUBE
SECTION B-B

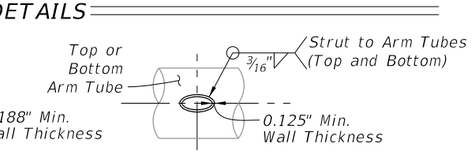

2"X1" STRUT
PLAN VIEW

TUBE SECTION DETAILS

FABRICATION NOTES:

1. ARM TUBES - Named dimensions are out-to-out. Circular tube stock may be spun down and pressed to achieve the near-elliptical shape and linear taper. In its final condition, the taper segment may terminate up to 4 inches outside of constant shape segments to assist pressing operation.
2. STRUTS - Named dimensions are out-to-out. Provide an elliptical extrusion.

FIXTURE ARM ASSEMBLY

10/20/2022 8:58:40 AM

LAST REVISION	REVISION	DESCRIPTION:			INDEX	SHEET
11/01/21			FY 2023-24 STANDARD PLANS	UTILITY CONFLICT POLE	715-003	2 of 3

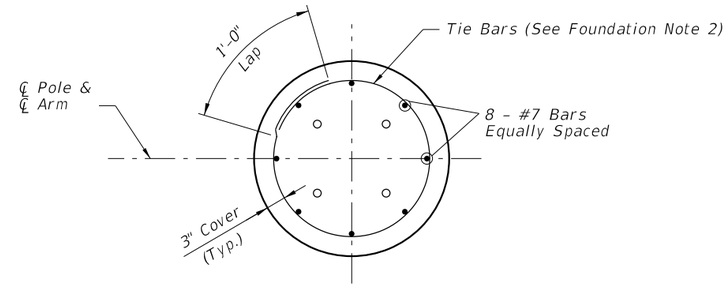

SECTION C-C

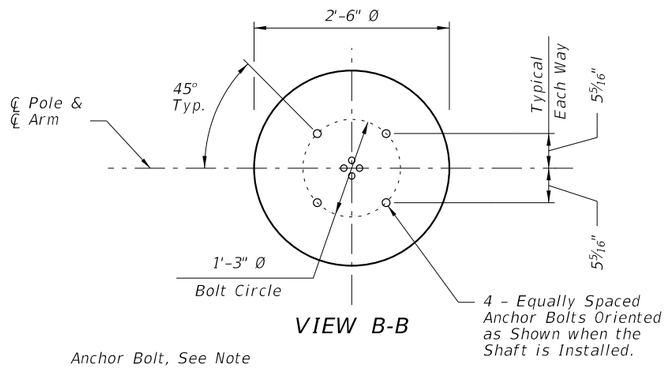

VIEW B-B

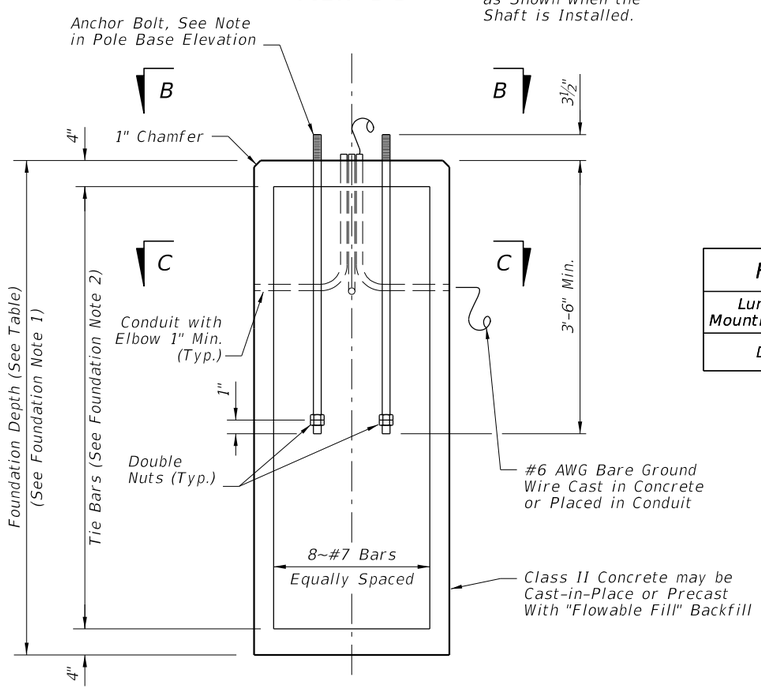

FOUNDATION ELEVATION

FOUNDATION DEPTHS		
Luminaire Mounting Height	≤ 40 Ft.	45-50 Ft.
Depth	8'-0"	9'-0"

FOUNDATION NOTES:

1. Depths shown are for slopes equal to or flatter than 1:4. For slopes steeper than 1:4 and equal to or flatter than 1:2 add 2'-6" to foundation depths shown.

2. Foundation Tie Bars: #4 Tie Bars @ 12" centers (max.) or D10 (or W10) spiral @ 6" pitch, 3 flat turns top and 1 flat turn bottom.

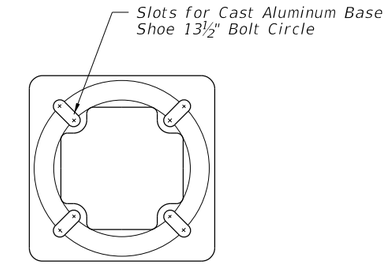

TOP VIEW
TRANSFORMER BASE

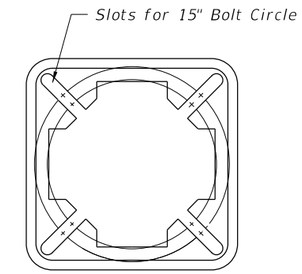

BOTTOM VIEW
TRANSFORMER BASE

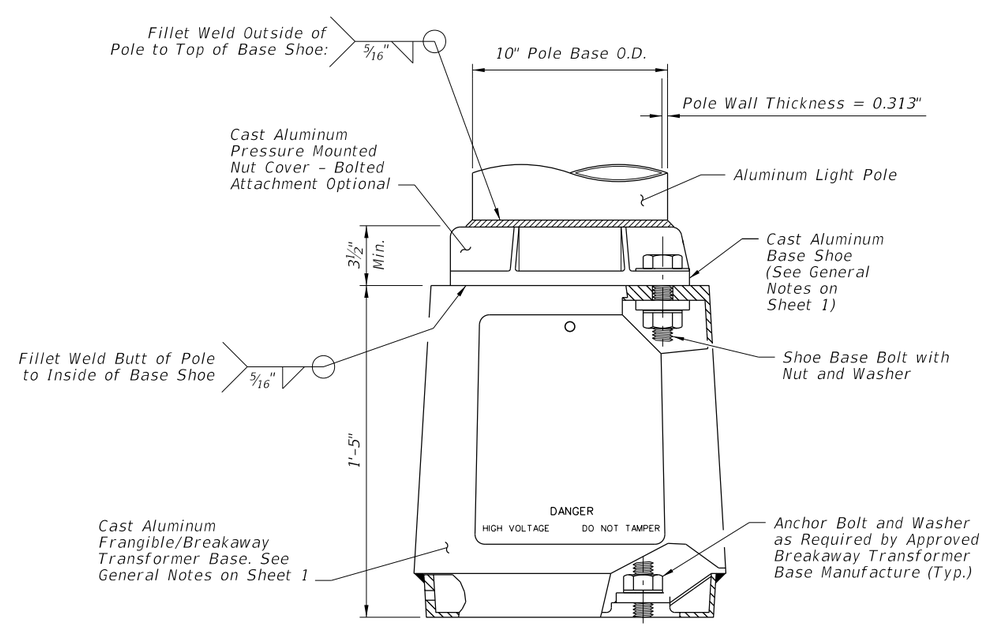

POLE BASE ELEVATION

FOUNDATION AND BASE DETAILS

LAST REVISION	REVISION	DESCRIPTION:			INDEX	SHEET
11/01/21			FY 2023-24 STANDARD PLANS	UTILITY CONFLICT POLE	715-003	3 of 3

10/20/2022 8:58:41 AM

HIGHMAST LIGHTING NOTES:

1. Poles are designed to support the following:
   - A. One (1) cylindrical head assembly with a maximum effective projected area of 6 sf and 340 lbs (Max.)
   - B. Eight (8) cylindrical luminaires with a maximum effective projected are of 1.5 sf and 77 lbs each.

2. Shop Drawings: This Index is considered fully detailed, only submit shop drawings for minor modifications not detailed in the Plans.

3. High Mast Structure Materials:
   - A. Poles and Backing Rings:
     - a. Less than 3/16": ASTM A1011 Grade 50, 55, 60 or 65
     - b. Greater than or equal to 3/16": ASTM A572 Grade 50, 55, 60 or 65
     - c. ASTM A595 Grade A (55 ksi yield) or Grade B (60 ksi yield)
   - B. Steel Plates: ASTM A709 or ASTM A36
   - C. Pole Caps: ASTM A1011 Grade 50, 55, 60, or 65 or ASTM B209
   - D. Weld Metal: E70XX
   - E. Stainless Steel Screws: AISI 316
   - F. Anchor Bolts, Nuts and Washers:
     - a. Anchor Bolts: ASTM F1554 Grade 55
     - b. Nuts: ASTM A563 Grade A Heavy-Hex (5 per anchor bolt)
     - c. Plate Washer: ASTM A36 (2 per anchor bolt)
   - G. Nut Covers: ASTM B26 (319-F)
   - H. Concrete: Class IV (Drilled Shaft)
   - I. Reinforcing Steel: Specification 415

4. Fabrication:
   - A. Welding:
     - a. Specification Section 460-6.4 and
     - b. AASHTO LRFD Specification for Structural Supports for Highway Signs, Luminaires, and Traffic Signals Section 14.4.4
   - B. Poles:
     - a. Round or 16-sided (Min.)
     - b. Taper pole diameter at 0.14 inches per foot
     - c. Pole shaft may be up to three sections (using telescopic field splices)
     - d. Circumferentially welded pole shafts and laminated pole shafts are not permitted
     - e. Fabricate Pole longitudinal seam welds (2 maximum) with 60 percent minimum penetration or fusion welds except as follows:
       - i. Use a full-penetration groove weld within 6 inches of the circumferential tube-to-plate connection and
       - ii. Use full-penetration groove welds on the female end section of telescopic (i.e., slip type) field splices for a minimum length of 42 inches.
   - C. Identification Tag: (Submit details for approval)
     - a. 2"x 4" (Max.) aluminum tag
     - b. Locate on the inside of the pole and visible from the handhole
     - c. Secure with 1/8" diameter stainless steel rivets or screws.
     - d. Include the following information on the ID Tag:
       1. Financial Project ID
       2. Pole Type
       3. Pole Height
       4. Manufacturers' Name
       5. Yield Strength (Fy of Steel)
       6. Base Wall Thickness
   - D. Except for Anchor Bolts, bolt hole diameters are bolt diameter plus 1/16" and anchor bolts holes are bolt diameter plus ½" (Max) prior to galvanizing.
   - E. Hot Dip Galvanize after fabrication

5. Coating:
   - A. Galvanize Anchor Bolts, Nuts and Washers: ASTM F2329
   - B. Hot Dip Galvanize all other steel items including plate washers: ASTM A123

6. Construction:
   - A. Foundation: Specification 455 Drilled Shaft, except that payment is included in the cost of the Structure.
   - B. After Installation: Place wire screen between top of foundation and bottom of baseplate in accordance with Specification 649-6.

7. Wind Speed by County:

   130 MPH
   Alachua, Baker, Bradford, Calhoun, Clay, Columbia, Dixie, Duval, Gadsden, Gilchrist, Hamilton, Jackson, Jefferson, Lafayette, Leon, Liberty, Nassau, Madison, Putnam, Suwannee, Taylor, Union and Wakulla Counties.

   150 MPH
   Bay, Citrus, De Soto, Flagler, Franklin, Glades, Gulf, Hardee, Hendry, Hernando, Highlands, Hillsborough, Holmes, Lake, Levy, Manatee, Marion, Okaloosa, Okeechobee, Orange, Osceola, Pasco, Pinellas, Polk, Santa Rosa, Seminole, St. Johns, Sumter, Volusia, Walton and Washington Counties.

   170 MPH
   Brevard, Broward, Charlotte, Collier, Escambia, Indian River, Lee, Martin, Miami-Dade, Monroe, Palm Beach, Sarasota and St. Lucie Counties.

STANDARD POLE DESIGN NOTES

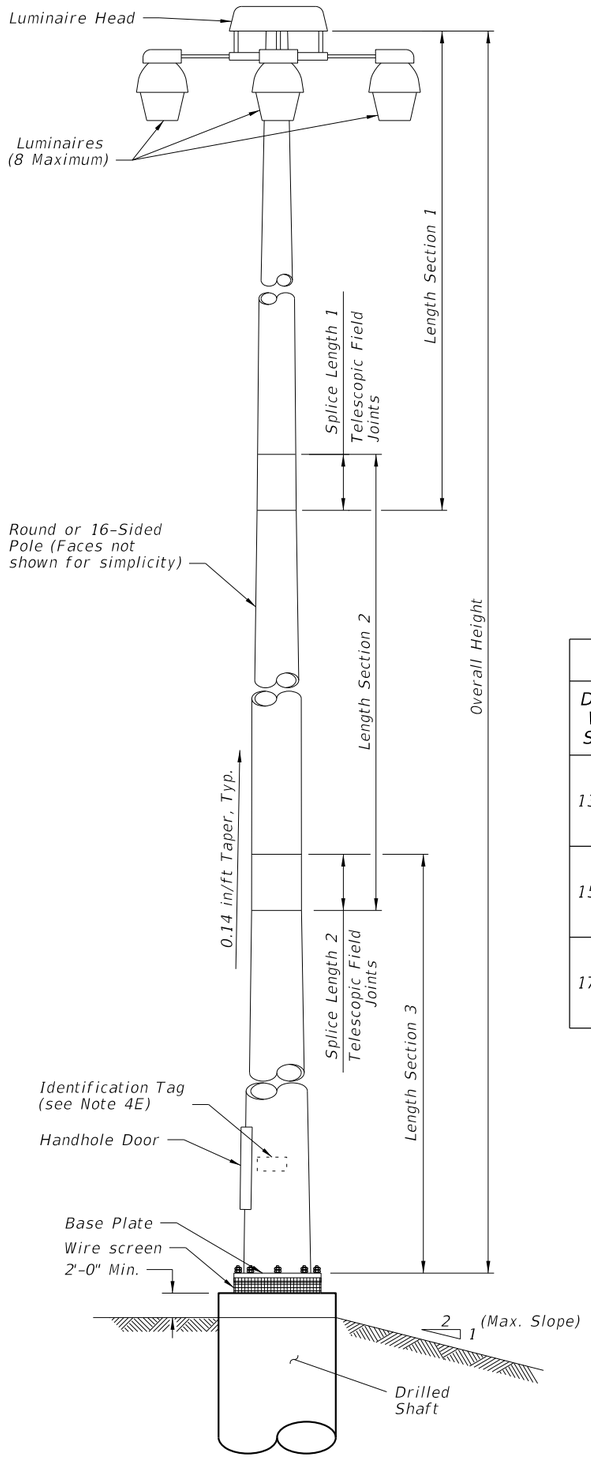

ELEVATION

POLE DESIGN TABLE*												
Design Wind Speed	Pole Overall Height (ft)	SECTION 1 (TOP)				SECTION 2				SECTION 3		
		Length	Wall Thickness (in.)	Minimum Splice Length 1	Base Dia. (in.)	Length	Wall Thickness (in.)	Minimum Splice Length 2	Base Dia. (in.)	Length	Wall Thickness (in.)	Base Dia. (in.)
130 mph	80	41'-0"	0.250	2'-0"	11	42'-0"	0.250	--	16	—	—	—
	100	23'-0"	0.179	2'-0"	10	41'-0"	0.250	2'-6"	15	43'-0"	0.250	20
	120	41'-0"	0.250	2'-0"	12	43'-0"	0.250	2'-9"	17	43'-0"	0.313	22
150 mph	80	41'-0"	0.250	2'-0"	11	42'-0"	0.313	--	16	—	—	—
	100	23'-0"	0.179	2'-0"	10	41'-0"	0.250	2'-6"	15	43'-0"	0.313	20
	120	41'-0"	0.250	2'-6"	16	43'-0"	0.250	3'-0"	21	44'-0"	0.375	26
170 mph	80	40'-0"	0.250	2'-3"	13	43'-0"	0.313	--	18	--	--	—
	100	23'-0"	0.250	2'-0"	11	42'-0"	0.313	2'-6"	16	44'-0"	0.375	21
	120	41'-0"	0.250	3'-0"	18	44'-0"	0.313	3'-6"	23	45'-0"	0.375	28

* Diameter Measured Flat to Flat

BASE PLATE AND BOLTS DESIGN TABLE							
Design Wind Speed	Pole Overall Height (ft)	Base Plate Diameter (in.)	Base Plate Thickness (in.)	Bolt Circle (in.)	No. Bolts	Bolt Diameter (in.)	Bolt Embedment (in.)
130 mph	80	30.0	3.000	23.0	8	1.75	38
	100	34.0	3.000	27.0	8	1.75	42
	120	38.0	3.875	30.0	8	2.00	48
150 mph	80	30.0	3.000	23.0	8	1.75	43
	100	36.0	3.875	28.0	8	2.00	47
	120	44.0	3.875	35.0	8	2.25	52
170 mph	80	32.0	3.000	25.0	8	1.75	47
	100	37.0	3.000	29.0	8	2.00	54
	120	46.0	3.875	37.0	10	2.25	58

SHAFT DESIGN TABLE				
Design Wind Speed	Pole Overall Height (ft)	Shaft Diameter	Shaft Length	Longitudinal Reinforcement
130 mph	80	4'-0"	13'-0"	14- #11
	100	4'-6"	14'-0"	16- #11
	120	4'-6"	16'-0"	16- #11
150 mph	80	4'-0"	14'-0"	14- #11
	100	4'-6"	16'-0"	16- #11
	120	5'-0"	18'-0"	18- #11
170 mph	80	4'-6"	15'-0"	16- #11
	100	4'-6"	17'-0"	16- #11
	120	5'-0"	20'-0"	18- #11

NOTE:
Shaft Design Table Shaft Length is based on level ground (flatter than 1:5). Increase the shaft depth in accordance with the Additional Shaft Depth Due to Ground Slope table for foundations with slopes 1:5 and steeper. Use the higher value for slope or diameter values that fall between those shown on the table.

ADDITIONAL SHAFT DEPTH DUE TO GROUND SLOPE		
Ground Slope	4'-0" Shaft Diameter	5'-0" Shaft Diameter
1:5	3'-0"	4'-0"
1:4	4'-0"	5'-0"
1:3	5'-0"	6'-0"
1:2	7'-0"	9'-0"

POLE DESIGN TABLES

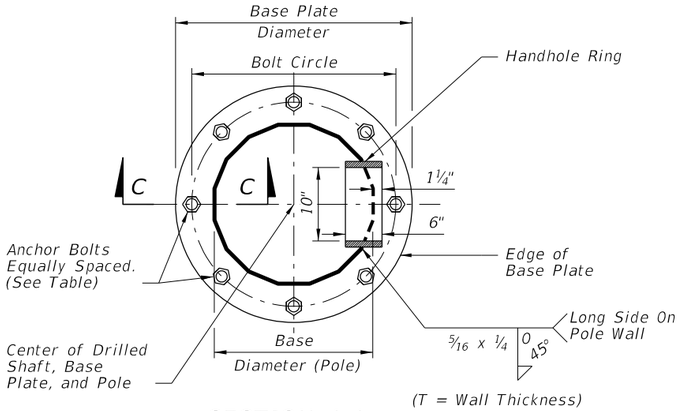

SECTION A-A

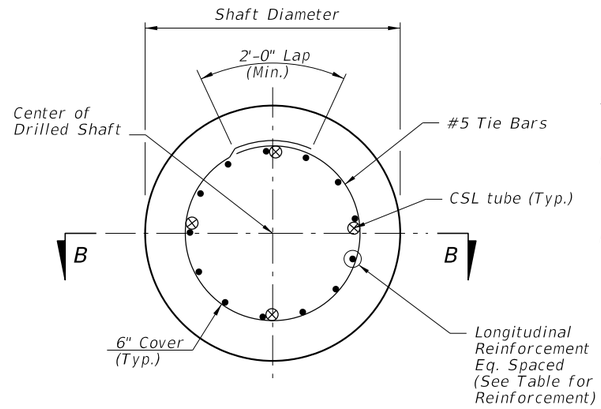

FOUNDATION PLAN

(Anchor Bolts and Conduits Not Shown)

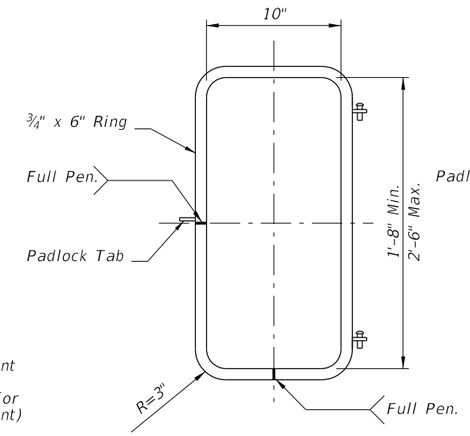

HANDHOLE RING

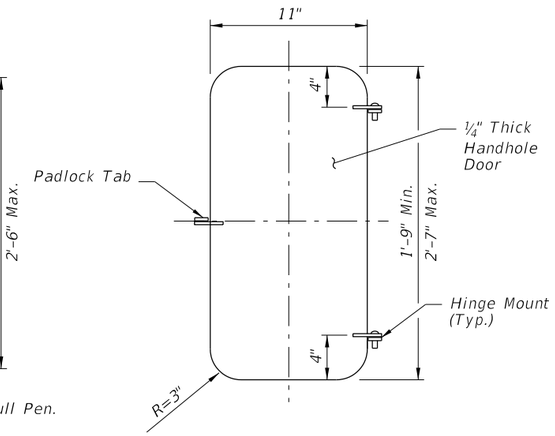

HANDHOLE DOOR

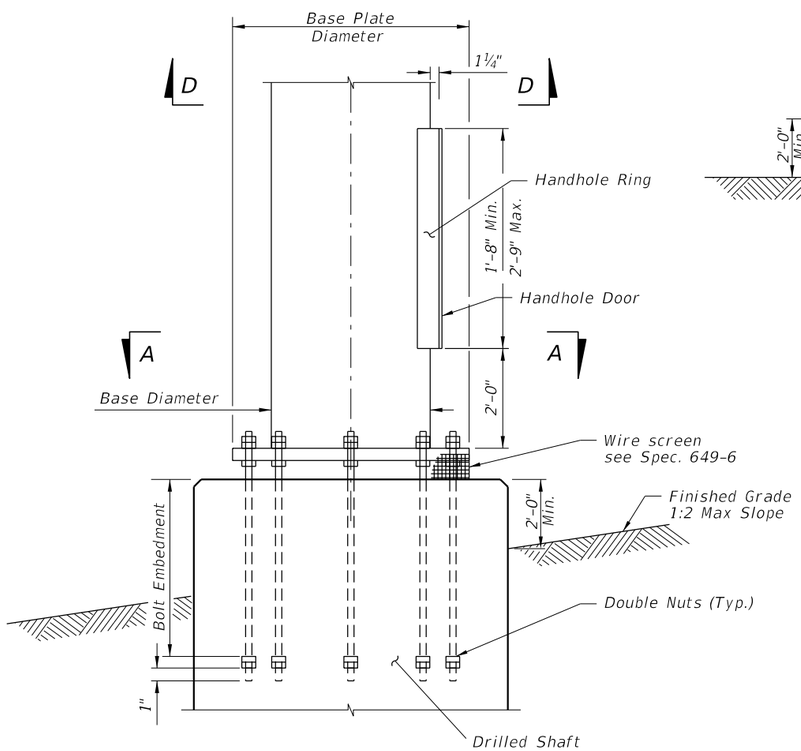

BASE PLATE AND ANCHORAGE ELEVATION

(Conduits Not Shown)

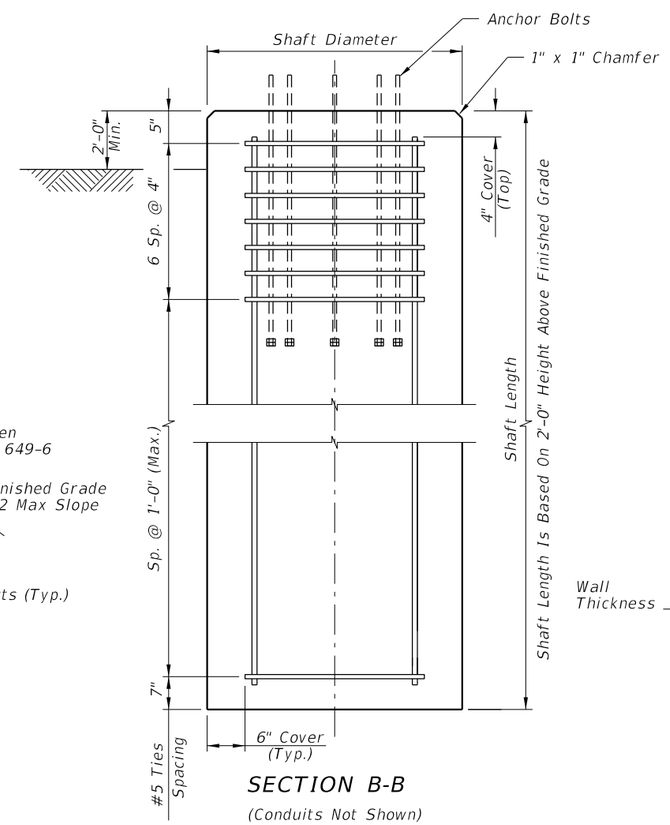

SECTION B-B

(Conduits Not Shown)

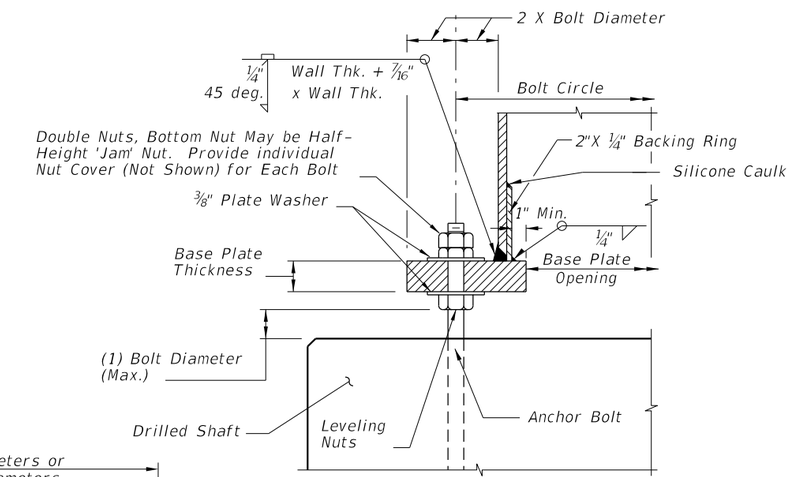

SECTION C-C

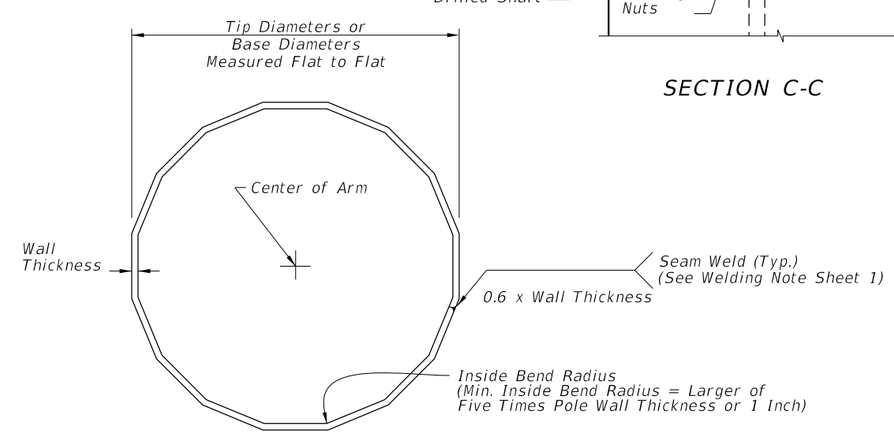

SECTION D-D

POLE FOUNDATION

LAST REVISION	REVISION	DESCRIPTION:			INDEX	SHEET
11/01/20			FY 2023-24 STANDARD PLANS	HIGH MAST LIGHTING	715-010	3 of 6

10/20/2022 8:58:43 AM

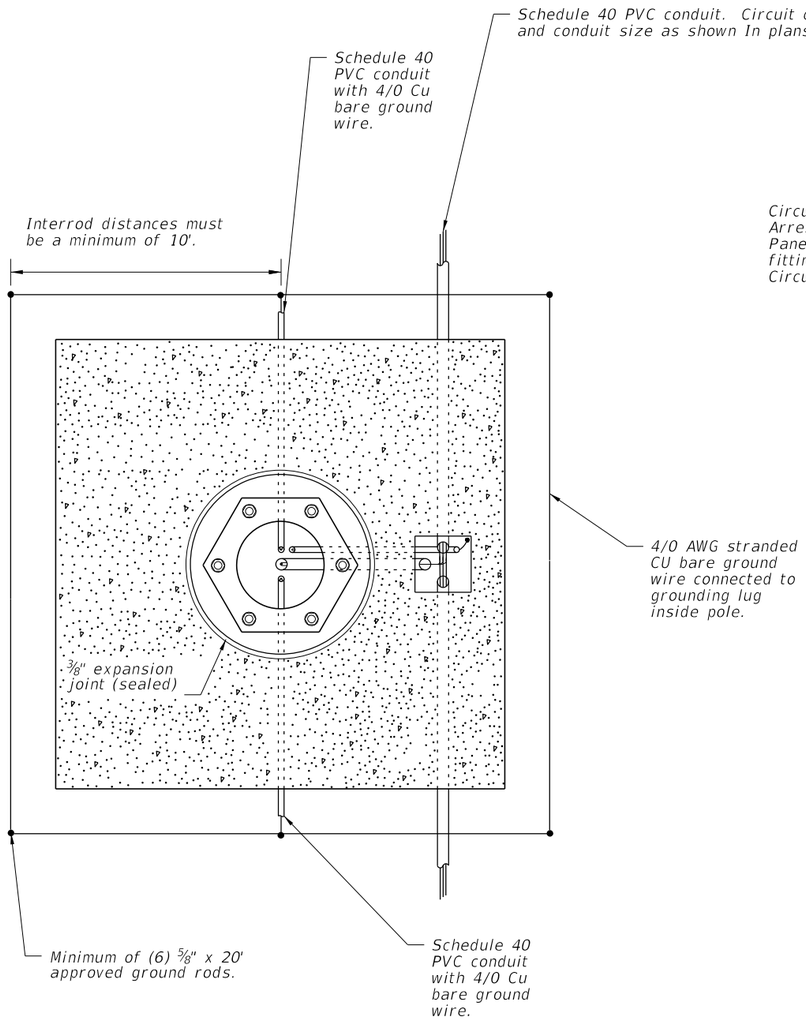

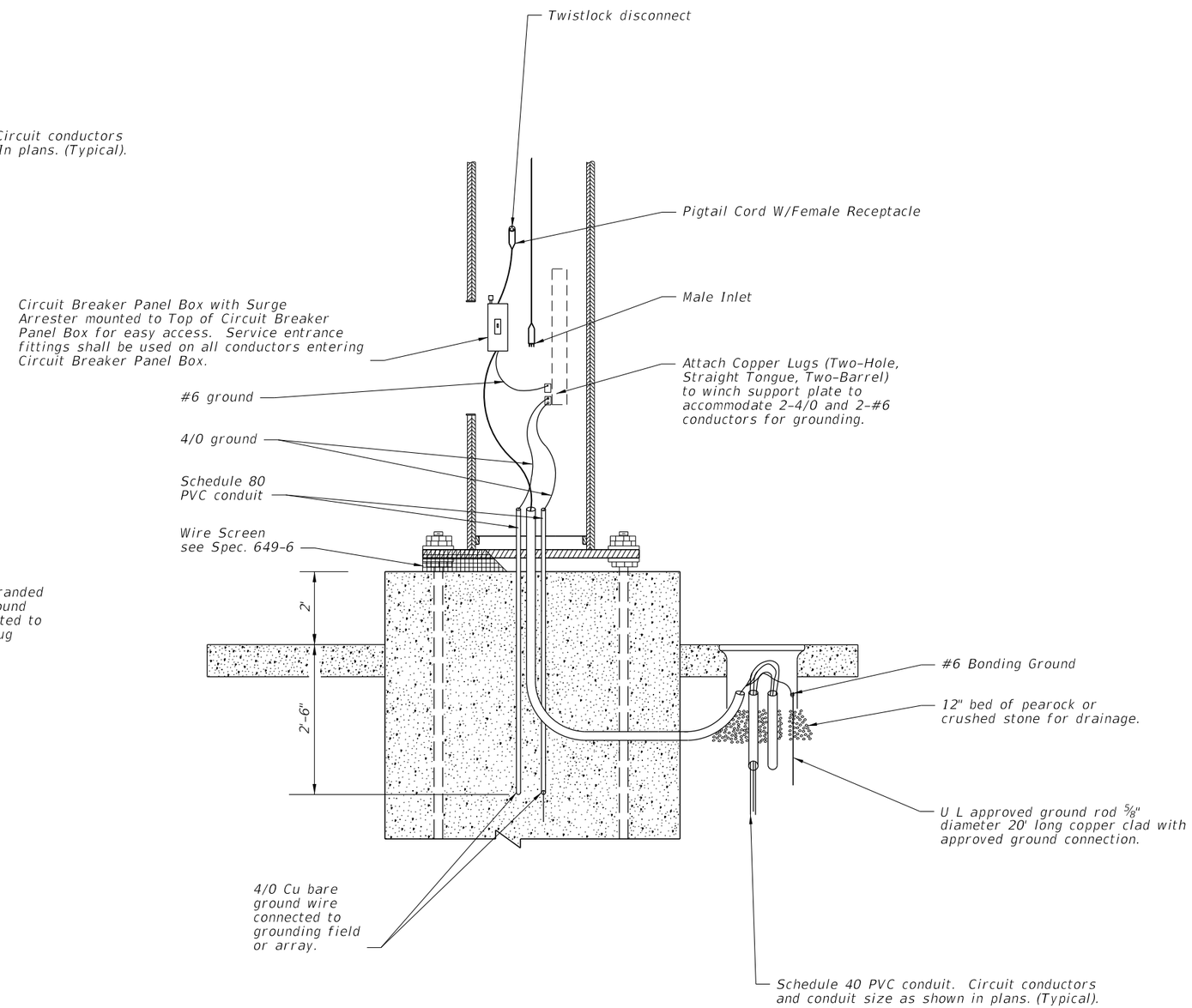

NOTES:

1. At all pull boxes and pole bases, ends of conduit shall be sealed in accordance with Specification 630.
2. Slabs to be placed around all Poles and Pull Boxes.
3. For Pull Boxes between Poles refer to Index 715-001.

WIRING DETAILS

LAST REVISION	REVISION	DESCRIPTION:			INDEX	SHEET
11/01/17			FY 2023-24 STANDARD PLANS	HIGH MAST LIGHTING	715-010	4 of 6

NOTE:
The contractor's attention is directed to those plan sheets detailing the mounting of luminaires at the pole top. Particular attention is directed to alignment of luminaire light distributions. Special attention must be exercised in the physical alignment of these luminaires to ensure that the approved photometric layout is physically produced at each lighting standard in the field. A marking shall be placed on the external face of the refractor to allow visual inspection of alignment. The marking shall correspond to the 0° axis of the refractor.

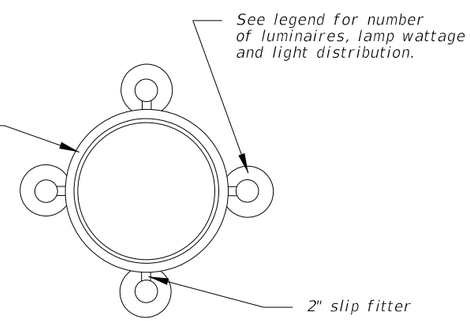

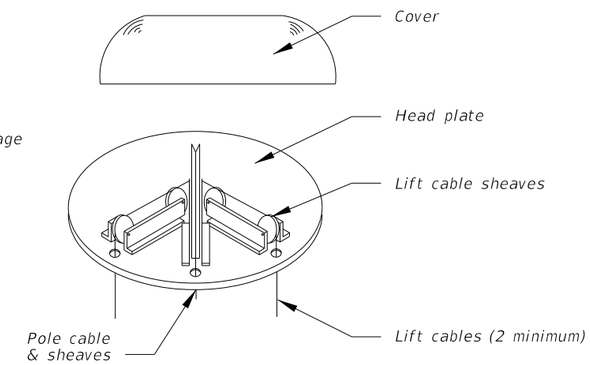

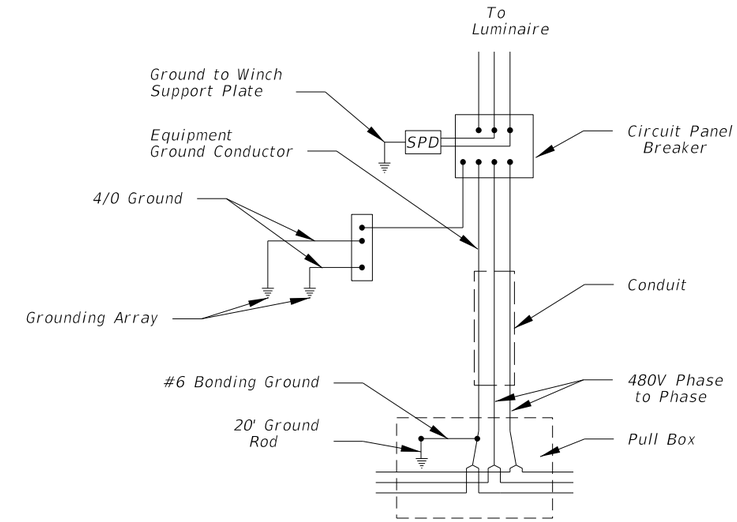

HIGH MAST POLE WIRING DIAGRAM

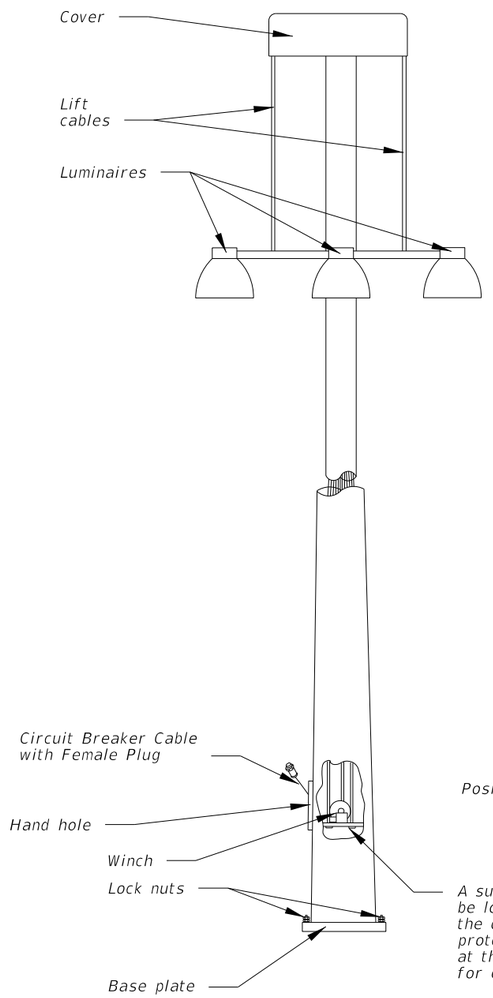

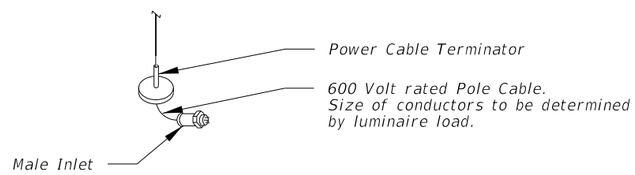

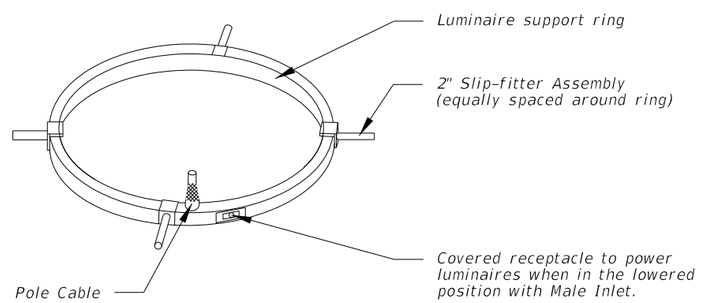

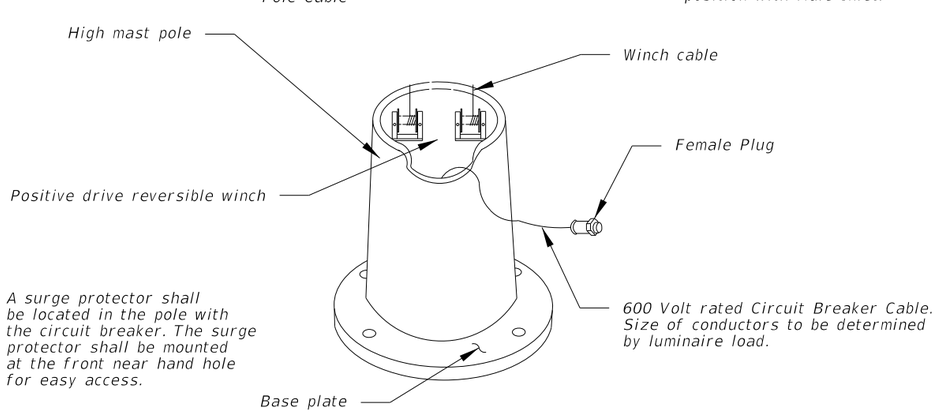

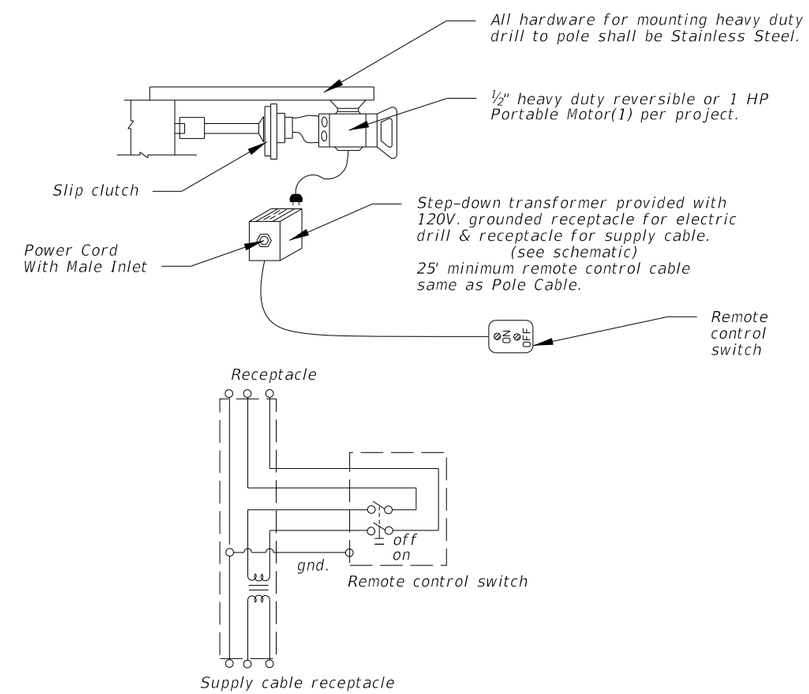

SCHEMATIC OF REMOTE AUXILIARY POWER UNIT

LOWERING DETAILS

LAST REVISION	REVISION	DESCRIPTION:			INDEX	SHEET
11/01/17			FY 2023-24 STANDARD PLANS	HIGH MAST LIGHTING	715-010	5 of 6

NOTES:

1. Use compacted select material in accordance with Index 120-001.
2. Concrete shall be Class NS with a minimum strength at 28 days of f'c=2.5 ksi.
3. Outside edge of slab shall be cast against formwork.
4. The pull box shown is 13" x 24"; others approved under Specification 635 may be used.
5. Slabs to be placed around all Poles and Pull Boxes. In urban areas or where space is limited slab dimensions may be adjusted as shown in the plans.
6. Concrete for slabs around poles and pull boxes shall be included in the price of pole or pull box.
7. The expansion joint shall consist of ½" of closed-cell polyethylene foam expansion material. The top ½" of expansion material shall be removed after pouring the slab and sealed with an APL approved Type A sealant meeting the requirements of Specification 932.

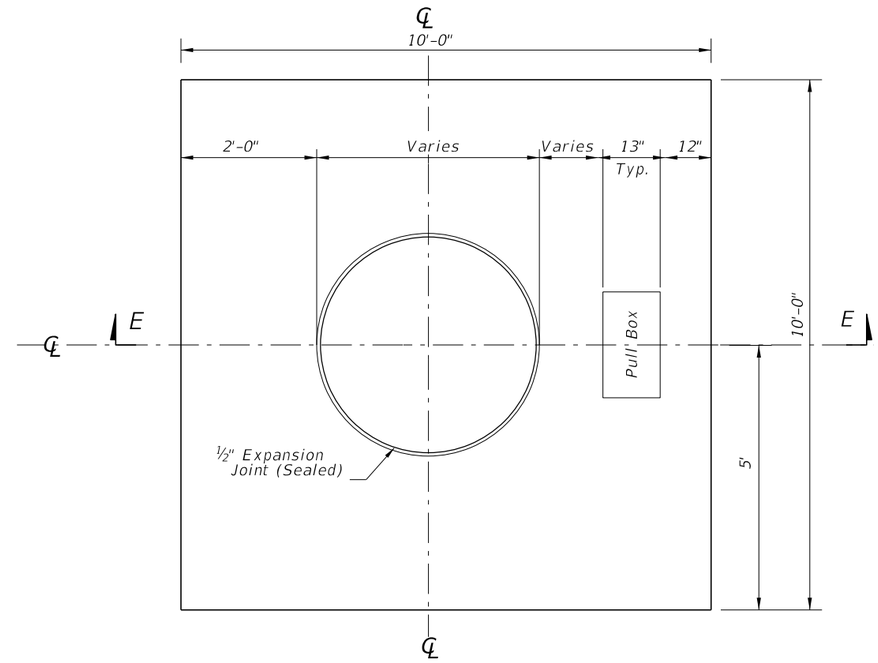

SLAB DIMENSIONS

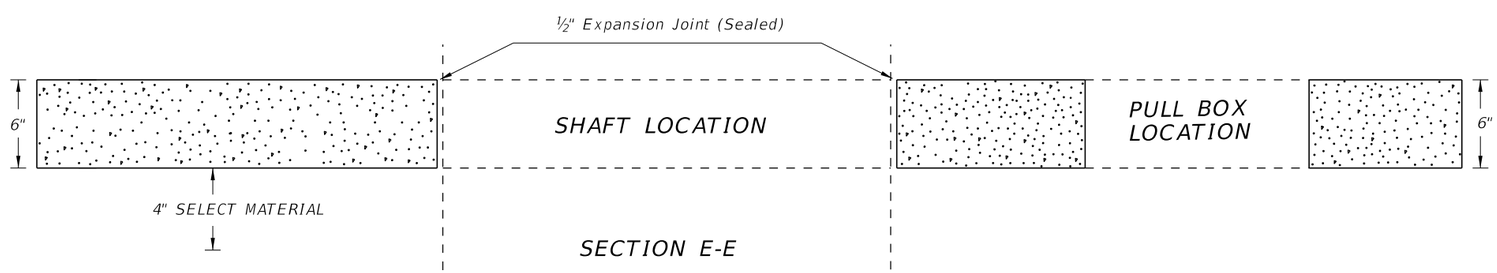

SECTION E-E

SLAB DETAILS

LAST REVISION	REVISION	DESCRIPTION:			INDEX	SHEET
11/01/17			FY 2023-24 STANDARD PLANS	HIGH MAST LIGHTING	715-010	6 of 6

10/20/2022 8:58:45 AM

CROSSING SURFACES	
Type	Definition
C	Concrete
R	Rubber
RA	Rubber/Asphalt
TA	Timber/Asphalt

STOP ZONE FOR RUBBER CROSSING	
Design Speed (mph)	Zone Length (Distance From Stop)
45 Or Less	250'
50 - 55	350'
60 - 65	500'
70	600'

Notes:

1. Type R Crossings are NOT to be used for multiple track crossings within zones for an existing or scheduled future vehicular stop. Zone lengths are charted above.

2. Single track Type R Crossings within the zones on the chart may be used unless engineering or safety considerations dictate otherwise.

GENERAL NOTES:

1. The Railroad Company will furnish and install all track bed (ballast), crossties, rails, crossing surface panels and accessory components. All pavement material, including that through the crossing, will be furnished and installed by the Department or its Contractor, unless negotiated otherwise.

2. When a railroad grade crossing is located within the limits of a highway construction project, a transition pavement will be maintained at the approaches of the crossing to reduce vehicular impacts to the crossing. The transition pavement will be maintained as appropriate to protect the crossing from low clearance vehicles and vehicular impacts until the construction project is completed and the final highway surface is constructed.

3. The Central Rail Office will maintain a list of currently used Railroad Crossing Products and will periodically distribute the current list to the District Offices as the list is updated.

4. The Railroad Company shall submit engineering drawings for the proposed crossing surface type to the Construction Project Engineer and/or the District Rail Office for concurrence along with the List of Railroad Crossing Products. The approved engineering drawings of the crossing surface type shall be made a part of the installation agreement.

5. Sidewalks shall be constructed through the crossing between approach sidewalks of the crossing. Sidewalks shall be constructed with appropriate material to allow unobstructed travel through the crossing in accordance with ADA requirements.

6. Install pavement in accordance with the Specifications.

7. The Department will participate in crossing work, that requires adjustments to rail outside of the crossing, no more than 50 feet from the edge of the travel way.

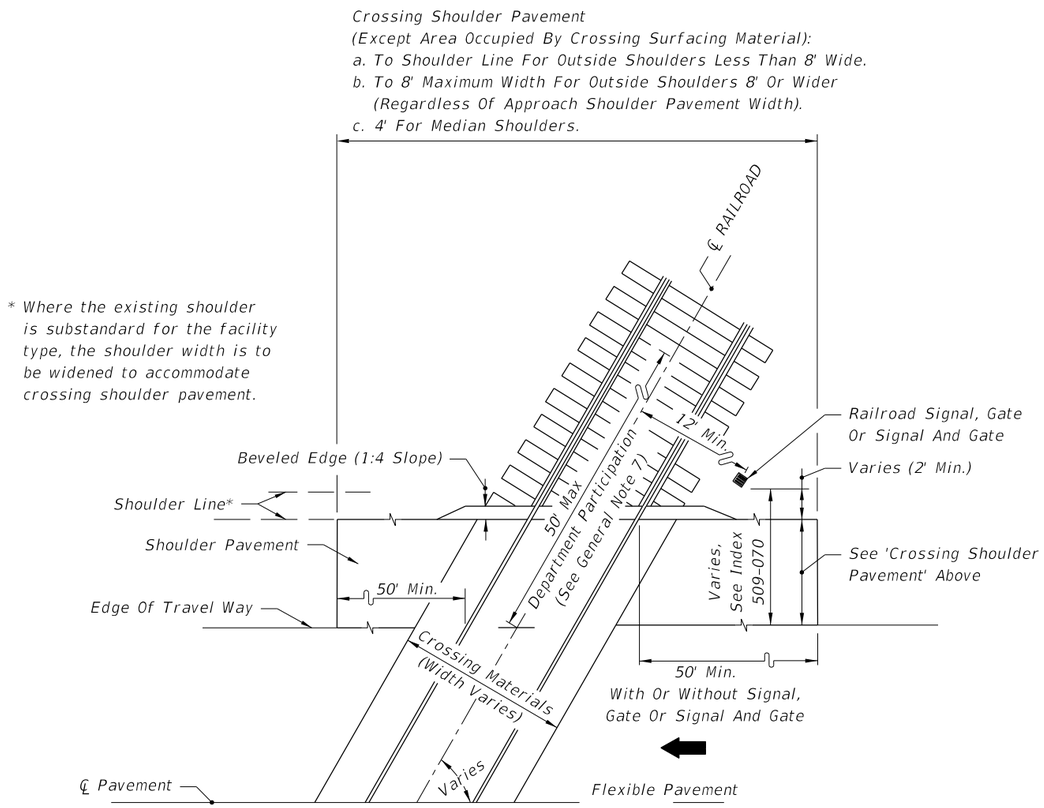

HALF PLAN
ROADWAYS WITH FLUSH SHOULDERS

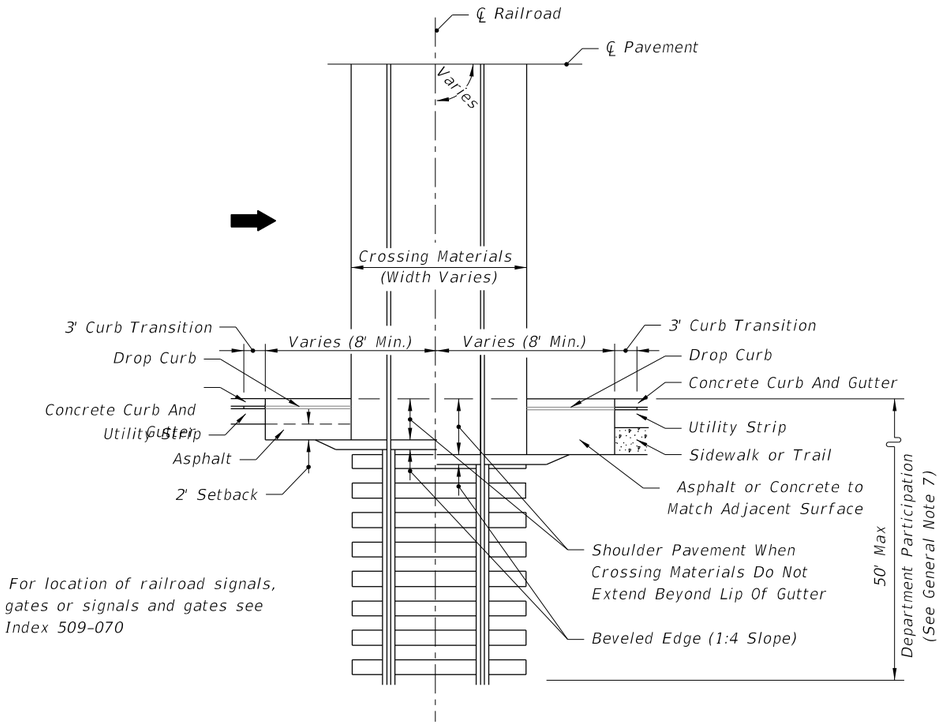

Note: For location of railroad signals, gates or signals and gates see Index 509-070

HALF PLAN
CURBED ROADWAYS

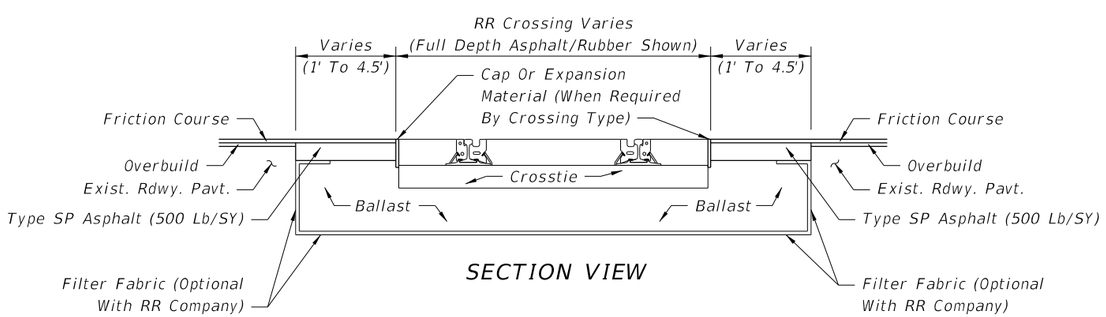

SECTION VIEW

TYPICAL CROSSING MATERIAL REPLACEMENT AT RR CROSSINGS

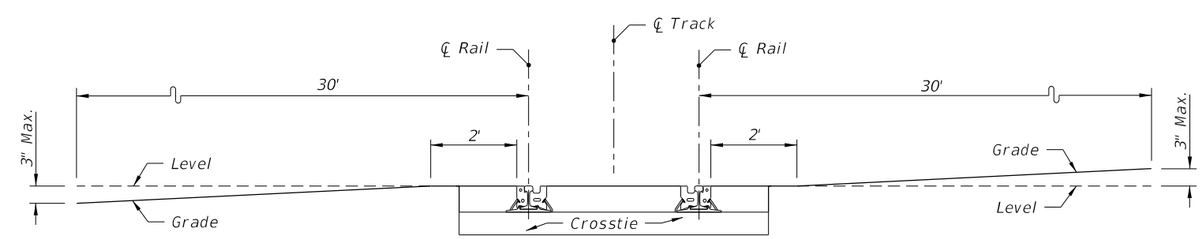

To prevent low-clearance vehicles from becoming caught on the tracks, the crossing surface should be at the same plane as the top of the rails for a distance of 2 feet outside the rails. The surface of the highway should also not be more than 3 inches higher or lower than the top of the nearest rail at a point 30 feet from the rail unless track superelevation makes a different level appropriate. Vertical curves should be used to traverse from the highway grade to a level plane at the elevation of the rails. Rails that are superelevated, or a roadway approach section that is not level, will necessitate a site specific analysis for rail clearances.

VERTICAL ROADWAY ALIGNMENT THROUGH A RAILROAD CROSSING

10/20/2022 8:58:47 AM

LAST REVISION	REVISION	DESCRIPTION:			INDEX	SHEET
11/01/19			FY 2023-24 STANDARD PLANS	RAILROAD (GRADE) CROSSING	830-T01	2 of 2