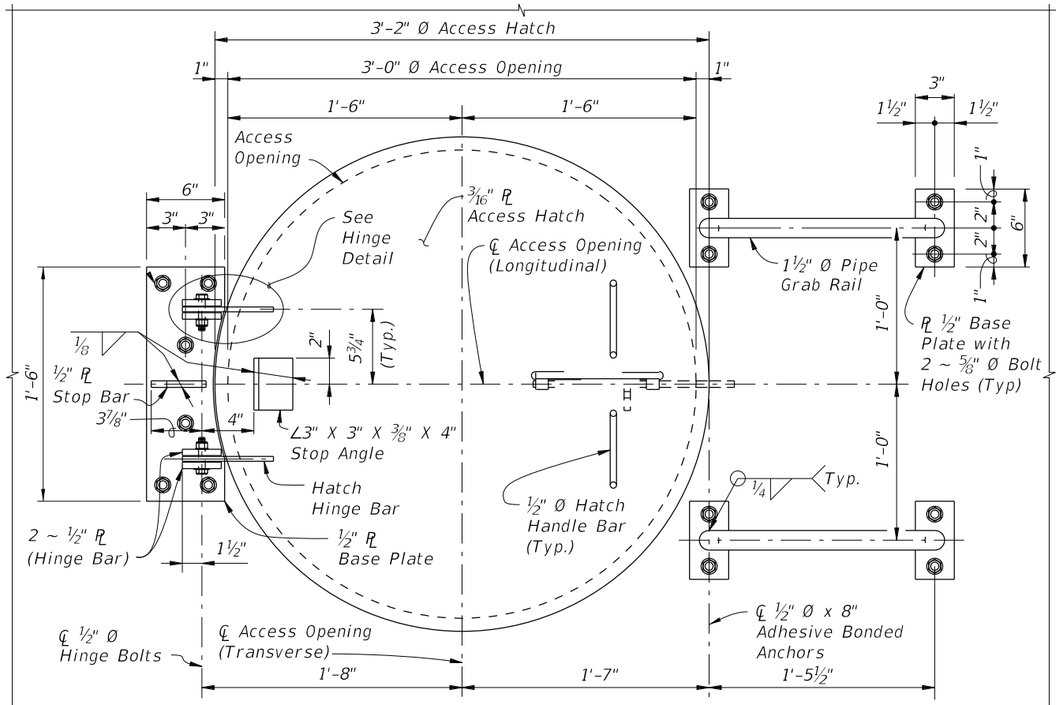

PLAN VIEW OF ACCESS HATCH ASSEMBLY

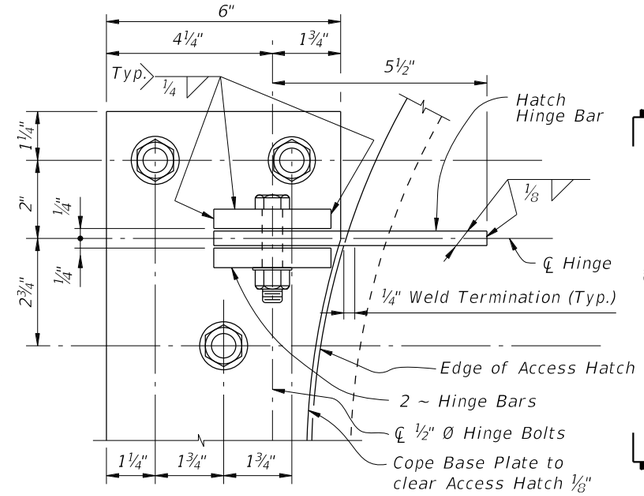

HINGE DETAIL

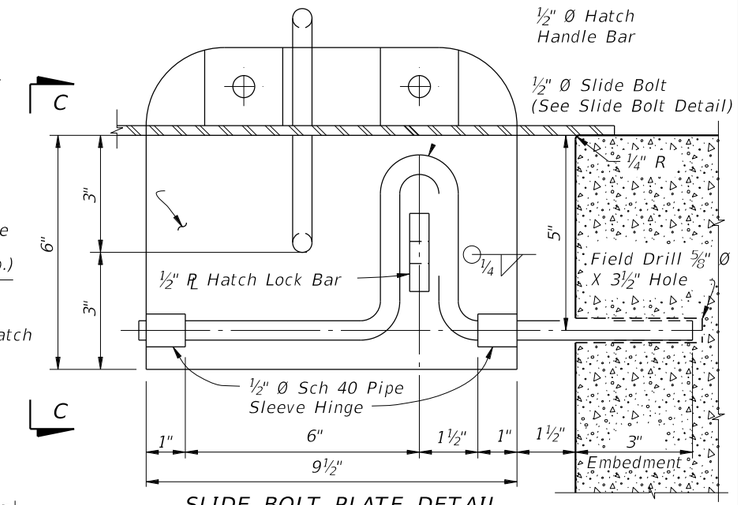

SLIDE BOLT PLATE DETAIL

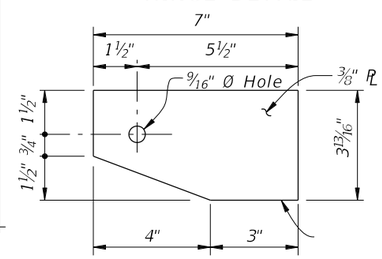

HATCH HINGE BAR DETAIL

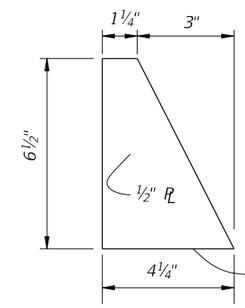

STOP BAR DETAIL

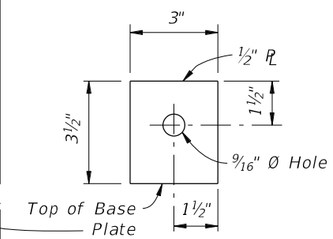

HINGE BAR DETAIL

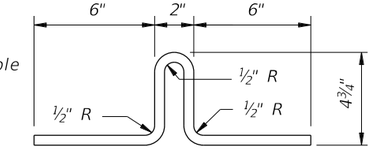

SLIDE BOLT DETAIL

HINGE NOTE:
1. Orient the Access Hatch so that the hinges are located down-grade.

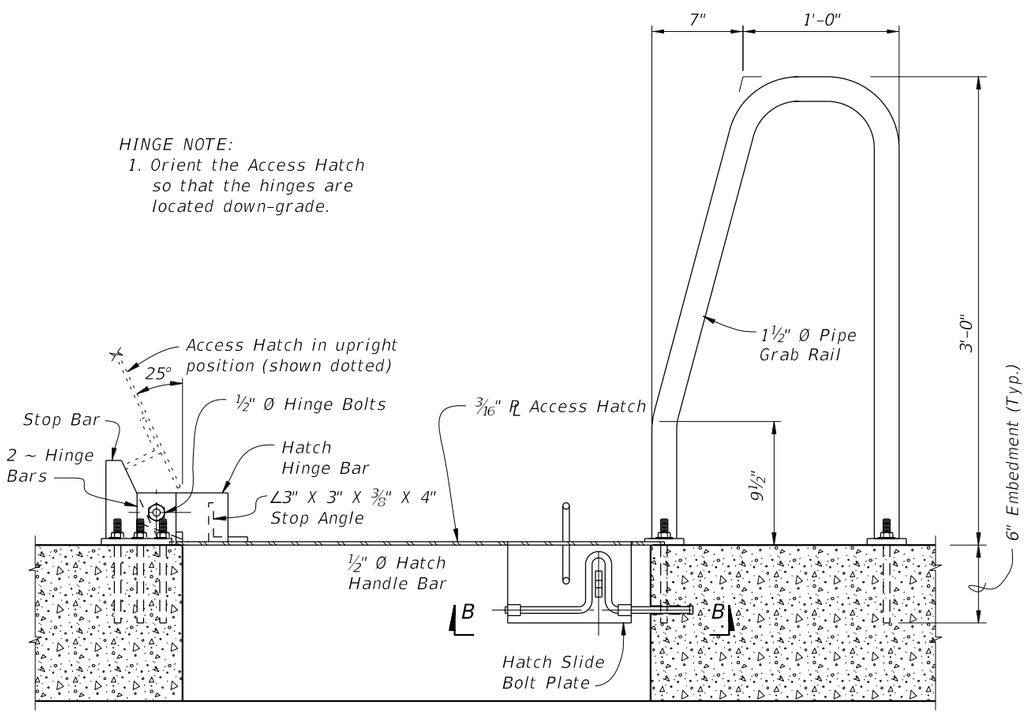

SECTION THRU ACCESS OPENING

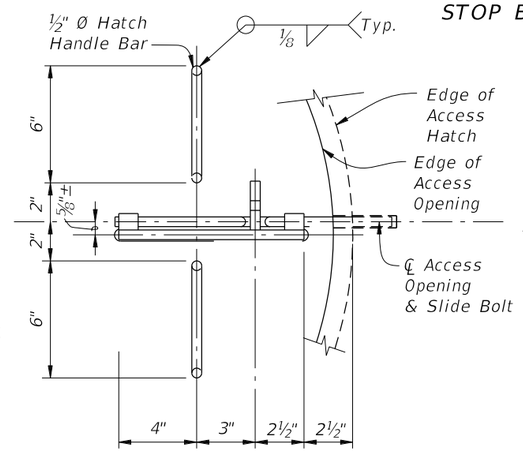

VIEW B-B

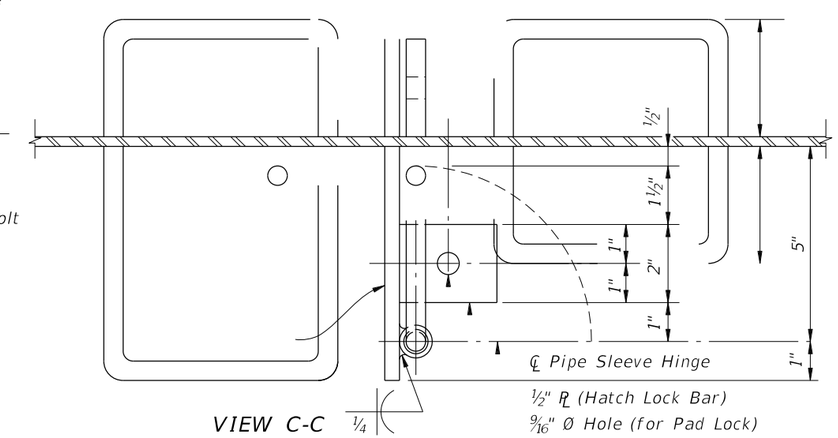

VIEW C-C

LAST REVISION	REVISION	DESCRIPTION:			INDEX	SHEET
07/01/15			FY 2023-24 STANDARD PLANS	ACCESS HATCH ASSEMBLY FOR CONCRETE BOX SECTIONS	460-251	1 of 1

10/6/2022 11:11:52 AM